NORTHEAST SITE SOLUTIONS
Turnkey Wireless Development

Northeast Site Solutions
Denise Sabo
4 Angela's Way, Burlington CT 06013
203-435-3640
denise@northeastsitesolutions.com

December 3, 2021

Members of the Siting Council
Connecticut Siting Council
Ten Franklin Square
New Britain, CT 06051

RE: Exempt Modification Application
64 Hungerford Road, Harwinton CT, 06791
Latitude: 41.757264
Longitude: -73.052556
Site#: 876369_ Crown_VZW

Dear Ms. Bachman:

Verizon Wireless is requesting to file an exempt modification for an existing tower located at 64 Hungerford Road, Harwinton CT, 06791. Verizon Wireless currently maintains twelve (12) antennas at the 170-foot level of the existing 178-foot tower. The property is owned by Red Wolf Broadcasting Corporation and the tower is owned by Crown Castle. Verizon now intends to add three (3) antenna. The new antennas would be installed at the 170-foot level of the tower. This modification includes B2, B5 hardware that is both 4G (LTE), and **5G** capable. Antenna mount medications will be completed as per the attached Maser mount analysis dated May 21, 2021.

Verizon Planned Modifications:
Remove: NONE

Remove and Replace:
(3) Antel-BXA-70063-6CF Antenna (REMOVE) - (3) Quintel QS6656-5D Antenna
(3) Antel-BXA-171065-12BF-2 Antenna (REMOVE) - (3) Samsung MT6407-77A Antenna

Install New:
(3) Quintel QS6656-5D Antenna
(1) Raycap
(3) Samsung B2/B66A -BRO49 – RFV01U-D1A RRU
(3) Samsung B5/B13 -BRO4C – RFV01U-D2A RRU
(1) 1-5/8" Hybrid

Existing to Remain:
(6) LPA-80080-6CF-5 Antenna
(6) Coax Lines

NORTHEAST SITE SOLUTIONS

Turnkey Wireless Development

The facility was approved by the Town of Harwinton Building Official by way of permit on May 29, 2001. Please see attached. Verizon Wireless completed a Tower Share TS-VER-066-030918 on October 15, 2003. Please see attached.

Please accept this letter as notification pursuant to Regulations of Connecticut State Agencies§ 16- SOj-73, for construction that constitutes an exempt modification pursuant to R.C.S.A. § 16-50j-72(b)(2). In accordance with R.C.SA. § 16-SOj-73, a copy of this letter is being sent to Michael R. Criss, First Selectman, and Jeffrey Neumann, Building Official, for the Town of Harwinton. A copy is also being sent to the tower owner, and property owner.

The planned modifications to the facility fall squarely within those activities explicitly provided for in R.C.S.A. § 16-50j-72(b)(2).

1. The proposed modifications will not result in an increase in the height of the existing structure.

2. The proposed modifications will not require the extension of the site boundary.

3. The proposed modifications will not increase noise levels at the facility by six decibels or more, or to levels that exceed state and local criteria.

4. The operation of the replacement antennas will not increase radio frequency emissions at the facility to a level at or above the Federal Communications Commission safety standard.

5. The proposed modifications will not cause a change or alteration in the physical or environmental characteristics of the site.

6. The existing structure and its foundation can support the proposed loading.

For the foregoing reasons, Verizon Wireless respectfully submits that the proposed modifications to the above referenced telecommunications facility constitute an exempt modification under R.C.S.A. § 16-50j-72(b)(2).

Sincerely,

Denise Sabo
Mobile: 203-435-3640
Fax: 413-521-0558
Office: 4 Angela's Way, Burlington CT 06013
Email: denise@northeastsitesolutions.com

NORTHEAST SITE SOLUTIONS
Turnkey Wireless Development

Attachments

cc: Michael R. Criss, First Selectman
Town of Harwinton 100 Bentley Drive Harwinton CT, 06791

Jeffrey Neumann, Building Official
Polly Redmond, Land Use Coordinator
Town of Harwinton 100 Bentley Drive Harwinton CT, 06791

Red Wolf Broadcasting Corporation
758 Colonel Ledyard Highway Ledyard, CT 06339
(860) 464-1065

Crown Castle Tower Owner

Exhibit A

Original Facility Approval

Building Permit

09

TOWN OF HARWINTON

MINIMUM FEE: $.

DATE: 5/29/01

TYPE OF INSTALLATION

ELECTRICAL SERVICE-NEW OR CHANGE ____
ELECTRICAL INSTALLATION ____
ELECTRICAL-SWIMMING POOL ____
PLUMBING INSTALLATION ____
HEATING INSTALLATION ____
AIR CONDITIONING ____
OIL BURNER-GAS BURNER ____
WOODBURNING STOVE ____
CHIMNEY INSTALLATION ____

WATER HEATER ____
ROOFING ____
RE-ROOFING: ____
HOW MANY LAYERS? ____
SIDING ____
OTHER ____

Steve Florio 485-

NAME OF CONTRACTOR Baron Utility Corporation
ADDRESS OF CONTRACTOR 24 Corporate Circle Albany NY 12203
LICENSE # 009-00-019 EXPIRATION DATE ____ TELE. # 518-456-8114
REQUEST PERMISSION TO PERFORM ____
AT: LOT # 21A-21-B STREET ADDRESS Hungerford Lane
ESTIMATED COST $272,000.00

REMARKS: ____

OWNER Tower owner: Sprint Spectrum LP
ADDRESS One International Blvd.
3rd Floor
Mahwah NJ 07495

VALUATION OF WORK $272,000.00
FEE $4 per $1000.00
PERMIT # 4587

Frank Rybak 4
BUILDING OFFICIAL

PAID DATE 5-29-01

10-15-2001

BUILDING INSPECTION DIVISION HARWINTON, CONN.

CERTIFICATE OF OCCUPANCY

Sprint Spectrum L.P

This is to certify that the ~~new house~~ at Tele Communication Tower Lot as constructed under Permit No conforms substantially to the requirements of the State Building Code and is hereby approved for occupancy as indicated below. At the date and time this Certificate is issued the house is owned by

Approved for occupancy: Sprint Spectrum L.P

Basement

•

Towers ok

First Floor

•

Second Floor

•

Use Group:
Type of Construction:

Frank Lyle

This certificate is VOID unless signed by the Building Official

Exhibit B

Property Card

qPublic.net™ Town of Harwinton, CT

Summary

ParcelId	341
Account Number	595
Location Address	64 HUNGERFORD LA
Map-Block-Lot	D5 /02 /0032
Use Class/Description	2-1 COMM LAND
Assessing Neighborhood	0001A
Census Tract	2984
Acreage	40.28
Utilities	

Owner

RED WOLF BROADCASTING CORPORATION
758 COLONEL LEDYARD HIGHWAY
LEDYARD, CT 06339

Current Appraised Value

		2019	2018	2017
+	Building Value	$76,360	$76,360	$35,280
+	XF Value	$0	$0	$0
+	OB Value	$2,950	$2,950	$3,950
+	Land Value	$3,139,960	$3,139,960	$367,850
+	Special Land Value			
+	Total Appraised Value	$3,219,270	$3,219,270	$407,080
+	Net Appraised Value	$3,219,270	$3,219,270	$407,080
+	Current Assessment	$293,590	$293,590	$284,960

Assessment History

		2018	2017	2016	2015
+	Building Value	$53,450	$24,700	$24,700	$24,700
+	OB/Misc	$2,060	$2,760	$2,760	$2,760
+	Land	$238,080	$257,500	$257,500	$257,500
+	Total Assessment	$293,590	$284,960	$284,960	$284,960

Land

Use	Class	Zoning	Area	Value
2-1 COMM LAND	C	CR2	1 AC	$74,330
5-2V EX COMM V	C		10.97 AC	$78,980
3-1 IND LAND	I		1 BL	$180,000
6-2 FOREST LD	R		28.31 AC	$2,806,650

Commercial Building

Building #	1
Style	Office Bldg
Actual Year Built	1964
Effective Year Built	1965
Gross Area	1230
Stories	1
Grade	Below Average
Exterior Wall	Brick/Masonry
Interior Wall	Drywall/Sheet
Wall Height	8
Units	1
Roof Cover	Asph/F Gls/Cmp
Roof Structure	Gable/Hip
Floor Type	Quarry Tile
Heat Type	Oil
Heat Fuel	Forced Air-Duc
AC Type	HEAT/AC PKGS
Sprinkler	03

Construction	MASONRY
Plumbing	AVERAGE
Comm Walls	0

Building Sub Areas

Code	Description	Living Area	Gross Area	Effective Area
BAS		1200	1200	1200
FEP	Enclosed Porch	0	30	20
	Totals	1200	1230	1220

Out Buildings\Extra Features

Description	Sub Description	Area	Year Built	Value
SHED FRAME AVE		360S.F.	2004	$2,790
PATIO GOOD		36S.F.	2000	$160

Sales History

Sales Date	Type of Document	Grantee	Vacant/Improved	Book/Page	Amount
04-04-2018		RED WOLF BROADCASTING CORPORATION	Improved	0256/0776	$407,080
07-09-2014		CONNOISSEUR MEDIA OF CONNECTICUT LLC	Improved	0243/1029	$407,080
07-23-1997		BUCKLEY BROADCASTING CORP OF CT	Improved	0145/0372	$0
01-09-1997		USA	Improved	0145/0216	$0
07-24-1985		CONSUMER SERVICE RADIO INC	Improved	0101/0665	$0

Permit Information

Permit ID	Issue Date	Type	Description	Amount	Inspection Date	% Complete	Date Complete	Comments
17126B	09-11-2017		3 ANTENNAS	$20,000		100		
	11-30-2015		CERTIFCATE OF APPROV	$0		0		
9417	10-24-2014		MODIFICATIONS	$20,000		0		
8721	11-29-2012		CELL TOWER MODIFICAT	$25,000		0		
8703	11-21-2012		ANTENNAS	$12,000		0		
8619	10-02-2012		REPLACE 6 ANTENNAS O	$10,000		0		
CO	04-17-2006		CO ISSUED	$0		0		
6239	01-17-2006			$50,000		0		PREFAB CONCRETE SHELTER

Sketch

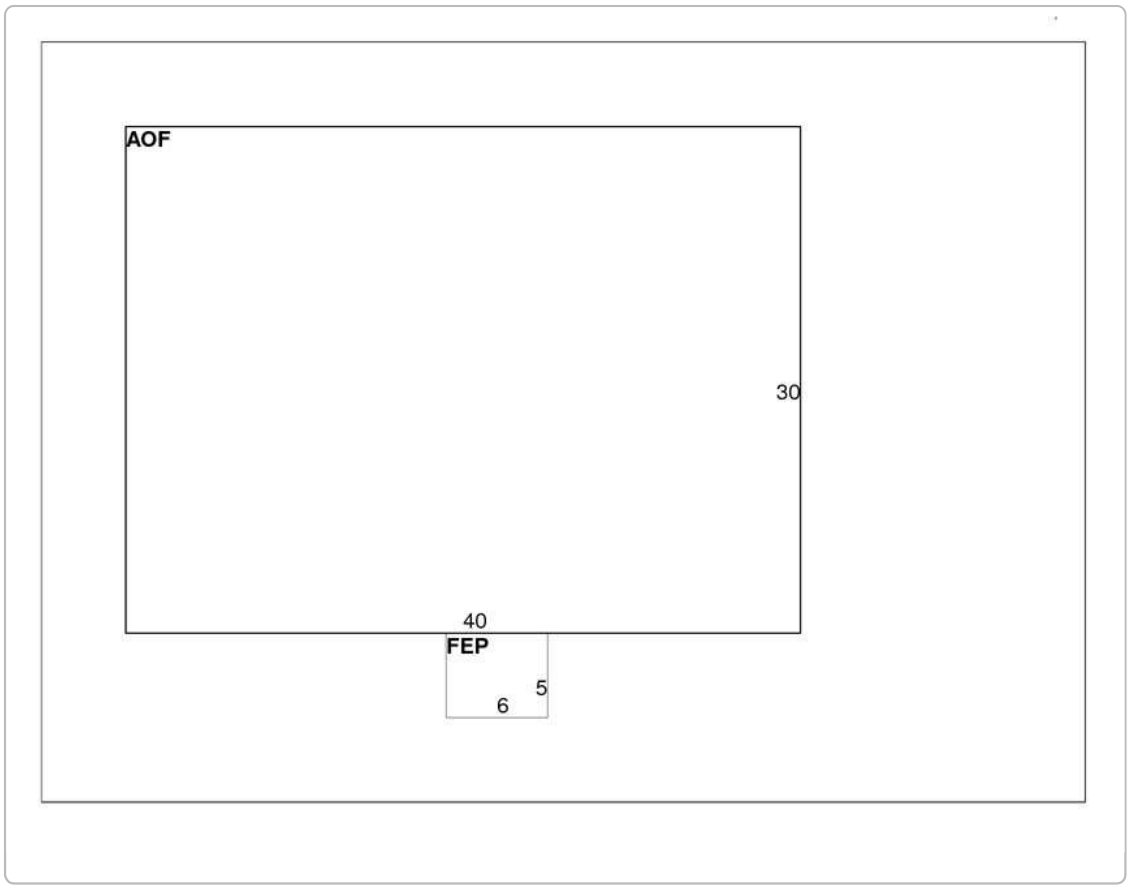

Photos

No data available for the following modules: Building Data.

The Town of Harwinton Assessor makes every effort to produce the most accurate information possible. No warranties, expressed or implied are provided for the data herein, its use or interpretation. The assessment information is from the last certified tax roll. All other data is subject to change.
User Privacy Policy
GDPR Privacy Notice

Developed by Schneider GEOSPATIAL

Last Data Upload: 4/26/2021, 8:21:54 PM

Version 2.3.118

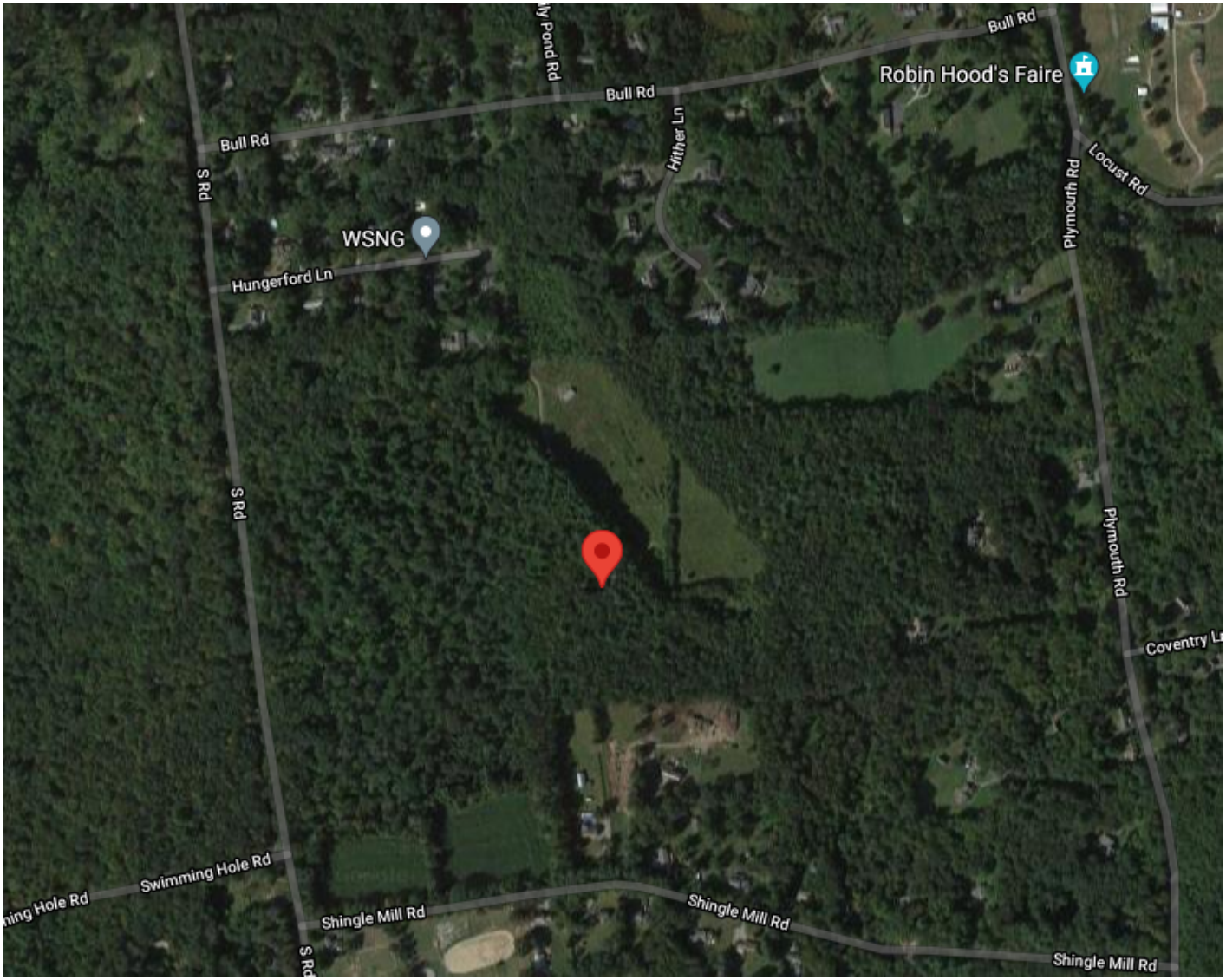
Bull Rd
Robin Hood's Faire
Bull Rd
Bull Rd
Hither Ln
Locust Rd
Plymouth Rd
S Rd
WSNG
Hungerford Ln
S Rd
Plymouth Rd
Coventry Ln
Swimming Hole Rd
Shingle Mill Rd
Shingle Mill Rd
Shingle Mill Rd

Exhibit C

Construction Drawings

verizon

VERIZON SITE NUMBER:	**469283**	**BUSINESS UNIT #:**	**876369**
VERIZON SITE NAME:	**HARWINTON 1 CT**	**SITE ADDRESS:**	**64 HUNGERFORD LANE HARWINTON, CT 06794**
SITE TYPE:	**MONOPOLE**	**COUNTY:**	**LITCHFIELD**
TOWER HEIGHT:	**178'-0"**	**JURISDICTION:**	**LITCHFIELD COUNTY**
VERIZON ORDER NUMBER:	**552649**		

VERIZON FUZE PROJECT #: 16271948

SITE INFORMATION

CROWN CASTLE USA INC. SITE NAME:	HARWINTON / BUCKLEY BROADCASTI
SITE ADDRESS:	64 HUNGERFORD LANE HARWINTON, CT 06794
COUNTY:	LITCHFIELD
MAP/PARCEL #:	D5/02/0032
AREA OF CONSTRUCTION:	EXISTING
LATITUDE:	41° 45' 26.1504" N (41.757264°)
LONGITUDE:	73° 3' 9.2016" W (-73.052556°)
LAT/LONG TYPE:	NAD83
GROUND ELEVATION:	847.0'
CURRENT ZONING:	2-1 COMM LAND
JURISDICTION:	LITCHFIELD COUNTY
OCCUPANCY CLASSIFICATION:	U
TYPE OF CONSTRUCTION:	IIB
A.D.A. COMPLIANCE:	FACILITY IS UNMANNED AND NOT FOR HUMAN HABITATION
PROPERTY OWNER:	RED WOLF BROADCASTING CORPORATION 758 COLONEL LEDYARD HIGHWAY LEDYARD, CT 06339
TOWER OWNER:	CCATT LLC 1500 CORPORATE DRIVE CANONSBURG, PA 15317
CARRIER/APPLICANT:	VERIZON WIRELESS 180 WASHINGTON VALLEY ROAD BEDMINSTER, NJ 07921
ELECTRIC PROVIDER:	TBD --
TELCO PROVIDER:	TBD --

PROJECT TEAM

A&E FIRM:	CROWN CASTLE USA INC. 2000 CORPORATE DRIVE CANONSBURG, PA 15317 CROWNAE.APPROVAL@CROWNCASTLE.COM
CROWN CASTLE USA INC. DISTRICT CONTACTS:	1500 CORPORATE DRIVE CANONSBURG, PA 15317 TBD - PROJECT MANAGER -- TBD - CONSTRUCTION MANAGER --
VERIZON CONTACT:	TIMOTHY PARKS TIMOTHY.PARKS@VERIZONWIRELESS.COM

DRAWING INDEX

SHEET #	SHEET DESCRIPTION
T-1	TITLE SHEET
T-2	GENERAL NOTES
C-1	SITE PLAN
C-2	TOWER ELEVATION & ANTENNA PLANS
C-3	EQUIPMENT SCHEDULES
C-4	EQUIPMENT DETAILS
C-5	EQUIPMENT DETAILS
C-6	PLUMBING DIAGRAM
G-1	GROUNDING DETAILS
G-2	GROUNDING DETAILS

ALL DRAWINGS CONTAINED HEREIN ARE FORMATTED FOR 11X17. CONTRACTOR SHALL VERIFY ALL PLANS AND EXISTING DIMENSIONS AND CONDITIONS ON THE JOB SITE AND SHALL IMMEDIATELY NOTIFY THE ENGINEER IN WRITING OF ANY DISCREPANCIES BEFORE PROCEEDING WITH THE WORK OR BE RESPONSIBLE FOR SAME.

APPROVALS

SIGNATURE	DATE

CONTRACTOR PMI REQUIREMENTS

PMI ACCESSED AT	https://pmi.vxwsmart.com
SMART TOOL VENDOR PROJECT NUMBER	10063413
VzW LOCATION CODE (PSLC)	469283

*** PMI AND REQUIREMENTS ALSO EMBEDDED IN MOUNT ANALYSIS REPORT

MOUNT MODIFICATION REQUIRED	**Y**

VzW APPROVED SMART KIT VENDORS

REFER TO MOUNT MODIFICATION DRAWINGS PAGE FOR VzW SMART KIT APPROVED VENDORS

LOCATION MAP

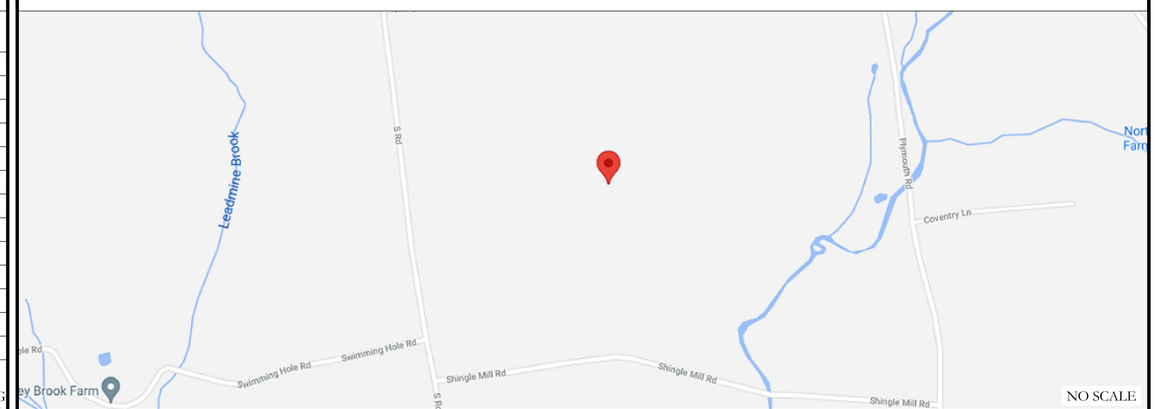

NO SCALE

DRIVING DIRECTIONS FROM VERIZON LOCAL OFFICE (180 WASHINGTON VALLEY RD, BEDMINSTER, NJ 07921) DEPART AND HEAD TOWARD WASHINGTON VALLEY RD / COUNTY HWY-620, TURN LEFT ONTO WASHINGTON VALLEY RD / COUNTY HWY-620, BEAR RIGHT ONTO US-206 N / US-202 N / US HIGHWAY 202 206 BEAR RIGHT ONTO US-202 N / US-206 N / US HIGHWAY 202 206, TURN RIGHT ONTO SCHLEY MOUNTAIN RD, TAKE THE RAMP ON THE LEFT FOR I-287 N, KEEP STRAIGHT TO GET ONTO I-95 N / NEW JERSEY TPKE N, KEEP LEFT TO STAY ON I-95 N, TAKE THE RAMP ON THE RIGHT FOR CT-8 NORTH AND HEAD TOWARD SHELTON / WATERBURY, TAKE THE RAMP ON THE RIGHT FOR RIVERSIDE ST, TAKE THE RAMP ON THE LEFT FOR CT-8 NORTH AND HEAD TOWARD TORRINGTON / WATERTOWN, KEEP STRAIGHT TO GET ONTO US-6 E / CT-8 N / JAMES H DARCEY MEMORIAL HWY N, KEEP STRAIGHT TO GET ONTO CT-8 N / JAMES H DARCEY MEMORIAL HWY N, TURN RIGHT ONTO CT-118 / LITCHFIELD RD TOWARD HARWINTON, KEEP STRAIGHT TO GET ONTO CT-4 / LITCHFIELD RD, TURN RIGHT THEN BEAR RIGHT ONTO SOUTH RD, TURN LEFT ONTO HUNGERFORD LN, ARRIVE AT 64 HUNGERFORD LANE, HARWINTON CT, 06794

APPLICABLE CODES/REFERENCE DOCUMENTS

ALL WORK SHALL BE PERFORMED AND MATERIALS INSTALLED IN ACCORDANCE WITH THE CURRENT EDITIONS OF THE FOLLOWING CODES AS ADOPTED BY THE LOCAL GOVERNING AUTHORITIES. NOTHING IN THESE PLANS IS TO BE CONSTRUED TO PERMIT WORK NOT CONFORMING TO THESE CODES:

CODE TYPE	CODE
BUILDING	2018 CT STATE BUILDING CODE
MECHANICAL	2015 IMC
ELECTRICAL	2017 NEC

REFERENCE DOCUMENTS:

STRUCTURAL ANALYSIS:	TOWER ENGINEERING PROFESSIONALS
DATED:	05/04/2021
MOUNT ANALYSIS:	MASER CONSULTING CONNECTICUT
DATED:	05/21/2021
RFDS REVISION:	1
DATED:	03/18/2021
ORDER ID:	552649
REVISION:	0

CALL CONNECTICUT ONE CALL
(800) 922-4455 CBYD.COM
CALL 2 WORKING DAYS
BEFORE YOU DIG!

PROJECT DESCRIPTION

THE PURPOSE OF THIS PROJECT IS TO ENHANCE BROADBAND CONNECTIVITY AND CAPACITY TO THE EXISTING ELIGIBLE WIRELESS FACILITY.

TOWER SCOPE OF WORK:
- REMOVE (6) ANTENNAS
- INSTALL (9) ANTENNAS
- INSTALL (6) RRHs
- INSTALL (1) OVP
- INSTALL (1) HYBRID CABLE
- INSTALL ANTENNA MOUNT MODIFICATIONS

GROUND SCOPE OF WORK:
- REMOVE (3) RRHs

NOTE:
PRIOR TO ACCESSING/ENTERING THE SITE YOU MUST CONTACT THE CROWN NOC AT (800) 788-7011 & CROWN CONSTRUCTION MANAGER

verizon
180 WASHINGTON VALLEY ROAD
BEDMINSTER, NJ 07921

CROWN CASTLE
1500 CORPORATE DRIVE
CANONSBURG, PA 15317

INFINIGY
FROM ZERO TO INFINIGY
the solutions are endless
BELLEVUE, WA 98004

VERIZON SITE NUMBER:
469283

BU #: **876369**
HARWINTON / BUCKLEY BROADCASTI

64 HUNGERFORD LANE
HARWINTON, CT 06794

EXISTING 178'-0" MONOPOLE

ISSUED FOR:

REV	DATE	DRWN	DESCRIPTION	DES./QA
0	06/04/2021	RCD	FINAL CDs	--
1	08/03/2021	RCD	FINAL CDs	--
2	09/29/2021	CB	FINAL CDs	--

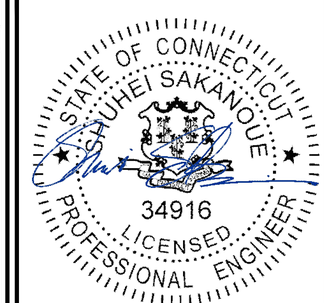

10/4/2021

IT IS A VIOLATION OF LAW FOR ANY PERSON, UNLESS THEY ARE ACTING UNDER THE DIRECTION OF A LICENSED PROFESSIONAL ENGINEER, TO ALTER THIS DOCUMENT.

SHEET NUMBER:	REVISION:
T-1	2

CROWN CASTLE USA INC. SITE ACTIVITY REQUIREMENTS:

1. NOTICE TO PROCEED– NO WORK SHALL COMMENCE PRIOR TO CROWN CASTLE USA INC. WRITTEN NOTICE TO PROCEED (NTP) AND THE ISSUANCE OF A PURCHASE ORDER. PRIOR TO ACCESSING/ENTERING THE SITE YOU MUST CONTACT THE CROWN CASTLE USA INC. NOC AT 800–788–7011 & THE CROWN CASTLE USA INC. CONSTRUCTION MANAGER.
2. "LOOK UP" – CROWN CASTLE USA INC. SAFETY CLIMB REQUIREMENT:
THE INTEGRITY OF THE SAFETY CLIMB AND ALL COMPONENTS OF THE CLIMBING FACILITY SHALL BE CONSIDERED DURING ALL STAGES OF DESIGN, INSTALLATION, AND INSPECTION. TOWER MODIFICATION, MOUNT REINFORCEMENTS, AND/OR EQUIPMENT INSTALLATIONS SHALL NOT COMPROMISE THE INTEGRITY OR FUNCTIONAL USE OF THE SAFETY CLIMB OR ANY COMPONENTS OF THE CLIMBING FACILITY ON THE STRUCTURE. THIS SHALL INCLUDE, BUT NOT BE LIMITED TO: PINCHING OF THE WIRE ROPE, BENDING OF THE WIRE ROPE FROM ITS SUPPORTS, DIRECT CONTACT OR CLOSE PROXIMITY TO THE WIRE ROPE WHICH MAY CAUSE FRICTIONAL WEAR, IMPACT TO THE ANCHORAGE POINTS IN ANY WAY, OR TO IMPEDE/BLOCK ITS INTENDED USE. ANY COMPROMISED SAFETY CLIMB, INCLUDING EXISTING CONDITIONS MUST BE TAGGED OUT AND REPORTED TO YOUR CROWN CASTLE USA INC. POC OR CALL THE NOC TO GENERATE A SAFETY CLIMB MAINTENANCE AND CONTRACTOR NOTICE TICKET.
3. PRIOR TO THE START OF CONSTRUCTION, ALL REQUIRED JURISDICTIONAL PERMITS SHALL BE OBTAINED. THIS INCLUDES, BUT IS NOT LIMITED TO, BUILDING, ELECTRICAL, MECHANICAL, FIRE, FLOOD ZONE, ENVIRONMENTAL, AND ZONING. AFTER ONSITE ACTIVITIES AND CONSTRUCTION ARE COMPLETED, ALL REQUIRED PERMITS SHALL BE SATISFIED AND CLOSED OUT ACCORDING TO LOCAL JURISDICTIONAL REQUIREMENTS.
4. ALL CONSTRUCTION MEANS AND METHODS; INCLUDING BUT NOT LIMITED TO, ERECTION PLANS, RIGGING PLANS, CLIMBING PLANS, AND RESCUE PLANS SHALL BE THE RESPONSIBILITY OF THE GENERAL CONTRACTOR RESPONSIBLE FOR THE EXECUTION OF THE WORK CONTAINED HEREIN, AND SHALL MEET ANSI/ASSE A10.48 (LATEST EDITION); FEDERAL, STATE, AND LOCAL REGULATIONS; AND ANY APPLICABLE INDUSTRY CONSENSUS STANDARDS RELATED TO THE CONSTRUCTION ACTIVITIES BEING PERFORMED. ALL RIGGING PLANS SHALL ADHERE TO ANSI/ASSE A10.48 (LATEST EDITION) AND CROWN CASTLE USA INC. STANDARD CED–STD–10253, INCLUDING THE REQUIRED INVOLVEMENT OF A QUALIFIED ENGINEER FOR CLASS IV CONSTRUCTION, TO CERTIFY THE SUPPORTING STRUCTURE(S) IN ACCORDANCE WITH ANSI/TIA–322 (LATEST EDITION).
5. ALL SITE WORK TO COMPLY WITH QAS–STD–10068 "INSTALLATION STANDARDS FOR CONSTRUCTION ACTIVITIES ON CROWN CASTLE USA INC. TOWER SITE," CED–STD–10294 "STANDARD FOR INSTALLATION OF MOUNTS AND APPURTENANCES," AND LATEST VERSION OF ANSI/TIA–1019–A–2012 "STANDARD FOR INSTALLATION, ALTERATION, AND MAINTENANCE OF ANTENNA SUPPORTING STRUCTURES AND ANTENNAS."
6. IF THE SPECIFIED EQUIPMENT CAN NOT BE INSTALLED AS SHOWN ON THESE DRAWINGS, THE CONTRACTOR SHALL PROPOSE AN ALTERNATIVE INSTALLATION FOR APPROVAL BY CROWN CASTLE USA INC. PRIOR TO PROCEEDING WITH ANY SUCH CHANGE OF INSTALLATION.
7. ALL MATERIALS FURNISHED AND INSTALLED SHALL BE IN STRICT ACCORDANCE WITH ALL APPLICABLE CODES, REGULATIONS AND ORDINANCES. CONTRACTOR SHALL ISSUE ALL APPROPRIATE NOTICES AND COMPLY WITH ALL LAWS, ORDINANCES, RULES, REGULATIONS AND LAWFUL ORDERS OF ANY PUBLIC AUTHORITY REGARDING THE PERFORMANCE OF THE WORK. ALL WORK CARRIED OUT SHALL COMPLY WITH ALL APPLICABLE MUNICIPAL AND UTILITY COMPANY SPECIFICATIONS AND LOCAL JURISDICTIONAL CODES, ORDINANCES AND APPLICABLE REGULATIONS.
8. THE CONTRACTOR SHALL INSTALL ALL EQUIPMENT AND MATERIALS IN ACCORDANCE WITH MANUFACTURER'S RECOMMENDATIONS UNLESS SPECIFICALLY STATED OTHERWISE.
9. THE CONTRACTOR SHALL CONTACT UTILITY LOCATING SERVICES PRIOR TO THE START OF CONSTRUCTION.
10. ALL EXISTING ACTIVE SEWER, WATER, GAS, ELECTRIC AND OTHER UTILITIES WHERE ENCOUNTERED IN THE WORK, SHALL BE PROTECTED AT ALL TIMES AND WHERE REQUIRED FOR THE PROPER EXECUTION OF THE WORK, SHALL BE RELOCATED AS DIRECTED BY CONTRACTOR. EXTREME CAUTION SHOULD BE USED BY THE CONTRACTOR WHEN EXCAVATING OR DRILLING PIERS AROUND OR NEAR UTILITIES. CONTRACTOR SHALL PROVIDE SAFETY TRAINING FOR THE WORKING CREW. THIS WILL INCLUDE BUT NOT BE LIMITED TO A) FALL PROTECTION B) CONFINED SPACE C) ELECTRICAL SAFETY D) TRENCHING AND EXCAVATION E) CONSTRUCTION SAFETY PROCEDURES.
11. ALL SITE WORK SHALL BE AS INDICATED ON THE STAMPED CONSTRUCTION DRAWINGS AND PROJECT SPECIFICATIONS, LATEST APPROVED REVISION.
12. CONTRACTOR SHALL KEEP THE SITE FREE FROM ACCUMULATING WASTE MATERIAL, DEBRIS, AND TRASH AT THE COMPLETION OF THE WORK. IF NECESSARY, RUBBISH, STUMPS, DEBRIS, STICKS, STONES AND OTHER REFUSE SHALL BE REMOVED FROM THE SITE AND DISPOSED OF LEGALLY.
13. ALL EXISTING INACTIVE SEWER, WATER, GAS, ELECTRIC AND OTHER UTILITIES, WHICH INTERFERE WITH THE EXECUTION OF THE WORK, SHALL BE REMOVED AND/OR CAPPED, PLUGGED OR OTHERWISE DISCONTINUED AT POINTS WHICH WILL NOT INTERFERE WITH THE EXECUTION OF THE WORK, SUBJECT TO THE APPROVAL OF CONTRACTOR, TOWER OWNER, CROWN CASTLE USA INC., AND/OR LOCAL UTILITIES.
14. THE CONTRACTOR SHALL PROVIDE SITE SIGNAGE IN ACCORDANCE WITH THE TECHNICAL SPECIFICATION FOR SITE SIGNAGE REQUIRED BY LOCAL JURISDICTION AND SIGNAGE REQUIRED ON INDIVIDUAL PIECES OF EQUIPMENT, ROOMS, AND SHELTERS.
15. THE SITE SHALL BE GRADED TO CAUSE SURFACE WATER TO FLOW AWAY FROM THE CARRIER'S EQUIPMENT AND TOWER AREAS.
16. THE SUB GRADE SHALL BE COMPACTED AND BROUGHT TO A SMOOTH UNIFORM GRADE PRIOR TO FINISHED SURFACE APPLICATION.
17. THE AREAS OF THE OWNERS PROPERTY DISTURBED BY THE WORK AND NOT COVERED BY THE TOWER, EQUIPMENT OR DRIVEWAY, SHALL BE GRADED TO A UNIFORM SLOPE, AND STABILIZED TO PREVENT EROSION AS SPECIFIED ON THE CONSTRUCTION DRAWINGS AND/OR PROJECT SPECIFICATIONS.
18. CONTRACTOR SHALL MINIMIZE DISTURBANCE TO EXISTING SITE DURING CONSTRUCTION. EROSION CONTROL MEASURES, IF REQUIRED DURING CONSTRUCTION, SHALL BE IN CONFORMANCE WITH THE LOCAL GUIDELINES FOR EROSION AND SEDIMENT CONTROL.
19. THE CONTRACTOR SHALL PROTECT EXISTING IMPROVEMENTS, PAVEMENTS, CURBS, LANDSCAPING AND STRUCTURES. ANY DAMAGED PART SHALL BE REPAIRED AT CONTRACTOR'S EXPENSE TO THE SATISFACTION OF OWNER.
20. CONTRACTOR SHALL LEGALLY AND PROPERLY DISPOSE OF ALL SCRAP MATERIALS SUCH AS COAXIAL CABLES AND OTHER ITEMS REMOVED FROM THE EXISTING FACILITY. ANTENNAS REMOVED SHALL BE RETURNED TO THE OWNER'S DESIGNATED LOCATION.
21. CONTRACTOR SHALL LEAVE PREMISES IN CLEAN CONDITION. TRASH AND DEBRIS SHOULD BE REMOVED FROM SITE ON A DAILY BASIS.
22. NO FILL OR EMBANKMENT MATERIAL SHALL BE PLACED ON FROZEN GROUND. FROZEN MATERIALS, SNOW OR ICE SHALL NOT BE PLACED IN ANY FILL OR EMBANKMENT.

GENERAL NOTES:

1. FOR THE PURPOSE OF CONSTRUCTION DRAWING, THE FOLLOWING DEFINITIONS SHALL APPLY:
   CONTRACTOR: GENERAL CONTRACTOR RESPONSIBLE FOR CONSTRUCTION
   CARRIER: VERIZON
   TOWER OWNER: CROWN CASTLE USA INC.
2. THESE DRAWINGS HAVE BEEN PREPARED USING STANDARDS OF PROFESSIONAL CARE AND COMPLETENESS NORMALLY EXERCISED UNDER SIMILAR CIRCUMSTANCES BY REPUTABLE ENGINEERS IN THIS OR SIMILAR LOCALITIES. IT IS ASSUMED THAT THE WORK DEPICTED WILL BE PERFORMED BY AN EXPERIENCED CONTRACTOR AND/OR WORKPEOPLE WHO HAVE A WORKING KNOWLEDGE OF THE APPLICABLE CODE STANDARDS AND REQUIREMENTS AND OF INDUSTRY ACCEPTED STANDARD GOOD PRACTICE. AS NOT EVERY CONDITION OR ELEMENT IS (OR CAN BE) EXPLICITLY SHOWN ON THESE DRAWINGS, THE CONTRACTOR SHALL USE INDUSTRY ACCEPTED STANDARD GOOD PRACTICE FOR MISCELLANEOUS WORK NOT EXPLICITLY SHOWN.
3. THESE DRAWINGS REPRESENT THE FINISHED STRUCTURE. THEY DO NOT INDICATE THE MEANS OR METHODS OF CONSTRUCTION. THE CONTRACTOR SHALL BE SOLELY RESPONSIBLE FOR THE CONSTRUCTION MEANS, METHODS, TECHNIQUES, SEQUENCES, AND PROCEDURES. THE CONTRACTOR SHALL PROVIDE ALL MEASURES NECESSARY FOR PROTECTION OF LIFE AND PROPERTY DURING CONSTRUCTION. SUCH MEASURES SHALL INCLUDE, BUT NOT BE LIMITED TO, BRACING, FORMWORK, SHORING, ETC. SITE VISITS BY THE ENGINEER OR HIS REPRESENTATIVE WILL NOT INCLUDE INSPECTION OF THESE ITEMS AND IS FOR STRUCTURAL OBSERVATION OF THE FINISHED STRUCTURE ONLY.
4. NOTES AND DETAILS IN THE CONSTRUCTION DRAWINGS SHALL TAKE PRECEDENCE OVER GENERAL NOTES AND TYPICAL DETAILS. WHERE NO DETAILS ARE SHOWN, CONSTRUCTION SHALL CONFORM TO SIMILAR WORK ON THE PROJECT, AND/OR AS PROVIDED FOR IN THE CONTRACT DOCUMENTS. WHERE DISCREPANCIES OCCUR BETWEEN PLANS, DETAILS, GENERAL NOTES, AND SPECIFICATIONS, THE GREATER, MORE STRICT REQUIREMENTS, SHALL GOVERN. IF FURTHER CLARIFICATION IS REQUIRED CONTACT THE ENGINEER OF RECORD.
5. SUBSTANTIAL EFFORT HAS BEEN MADE TO PROVIDE ACCURATE DIMENSIONS AND MEASUREMENTS ON THE DRAWINGS TO ASSIST IN THE FABRICATION AND/OR PLACEMENT OF CONSTRUCTION ELEMENTS BUT IT IS THE SOLE RESPONSIBILITY OF THE CONTRACTOR TO FIELD VERIFY THE DIMENSIONS, MEASUREMENTS, AND/OR CLEARANCES SHOWN IN THE CONSTRUCTION DRAWINGS PRIOR TO FABRICATION OR CUTTING OF ANY NEW OR EXISTING CONSTRUCTION ELEMENTS. IF IT IS DETERMINED THAT THERE ARE DISCREPANCIES AND/OR CONFLICTS WITH THE CONSTRUCTION DRAWINGS THE ENGINEER OF RECORD IS TO BE NOTIFIED AS SOON AS POSSIBLE.
6. PRIOR TO THE SUBMISSION OF BIDS, THE BIDDING CONTRACTOR SHALL VISIT THE CELL SITE TO FAMILIARIZE WITH THE EXISTING CONDITIONS AND TO CONFIRM THAT THE WORK CAN BE ACCOMPLISHED AS SHOWN ON THE CONSTRUCTION DRAWINGS. ANY DISCREPANCY FOUND SHALL BE BROUGHT TO THE ATTENTION OF CROWN CASTLE.
7. ALL MATERIALS FURNISHED AND INSTALLED SHALL BE IN STRICT ACCORDANCE WITH ALL APPLICABLE CODES, REGULATIONS AND ORDINANCES. CONTRACTOR SHALL ISSUE ALL APPROPRIATE NOTICES AND COMPLY WITH ALL LAWS, ORDINANCES, RULES, REGULATIONS AND LAWFUL ORDERS OF ANY PUBLIC AUTHORITY REGARDING THE PERFORMANCE OF THE WORK. ALL WORK CARRIED OUT SHALL COMPLY WITH ALL APPLICABLE MUNICIPAL AND UTILITY COMPANY SPECIFICATIONS AND LOCAL JURISDICTIONAL CODES, ORDINANCES AND APPLICABLE REGULATIONS.
8. UNLESS NOTED OTHERWISE, THE WORK SHALL INCLUDE FURNISHING MATERIALS, EQUIPMENT, APPURTENANCES AND LABOR NECESSARY TO COMPLETE ALL INSTALLATIONS AS INDICATED ON THE DRAWINGS.
9. THE CONTRACTOR SHALL INSTALL ALL EQUIPMENT AND MATERIALS IN ACCORDANCE WITH MANUFACTURER'S RECOMMENDATIONS UNLESS SPECIFICALLY STATED OTHERWISE.
10. IF THE SPECIFIED EQUIPMENT CAN NOT BE INSTALLED AS SHOWN ON THESE DRAWINGS, THE CONTRACTOR SHALL PROPOSE AN ALTERNATIVE INSTALLATION FOR APPROVAL BY THE CARRIER AND CROWN CASTLE PRIOR TO PROCEEDING WITH ANY SUCH CHANGE OF INSTALLATION.
11. CONTRACTOR IS TO PERFORM A SITE INVESTIGATION AND IS TO DETERMINE THE BEST ROUTING OF ALL CONDUITS FOR POWER, AND TELCO AND FOR GROUNDING CABLES AS SHOWN IN THE POWER, TELCO, AND GROUNDING PLAN DRAWINGS.
12. THE CONTRACTOR SHALL PROTECT EXISTING IMPROVEMENTS, PAVEMENTS, CURBS, LANDSCAPING AND STRUCTURES. ANY DAMAGED PART SHALL BE REPAIRED AT CONTRACTOR'S EXPENSE TO THE SATISFACTION OF CROWN CASTLE USA INC.
13. CONTRACTOR SHALL LEGALLY AND PROPERLY DISPOSE OF ALL SCRAP MATERIALS SUCH AS COAXIAL CABLES AND OTHER ITEMS REMOVED FROM THE EXISTING FACILITY. ANTENNAS REMOVED SHALL BE RETURNED TO THE OWNER'S DESIGNATED LOCATION.
14. CONTRACTOR SHALL LEAVE PREMISES IN CLEAN CONDITION. TRASH AND DEBRIS SHOULD BE REMOVED FROM SITE ON A DAILY BASIS.

CONCRETE, FOUNDATIONS, AND REINFORCING STEEL:

1. ALL CONCRETE WORK SHALL BE IN ACCORDANCE WITH THE ACI 301, ACI 318, ACI 336, ASTM A184, ASTM A185 AND THE DESIGN AND CONSTRUCTION SPECIFICATION FOR CAST–IN–PLACE CONCRETE.
2. UNLESS NOTED OTHERWISE, SOIL BEARING PRESSURE USED FOR DESIGN OF SLABS AND FOUNDATIONS IS ASSUMED TO BE 1000 psf.
3. ALL CONCRETE SHALL HAVE A MINIMUM COMPRESSIVE STRENGTH (f'c) OF 3000 psi AT 28 DAYS, UNLESS NOTED OTHERWISE. NO MORE THAN 90 MINUTES SHALL ELAPSE FROM BATCH TIME TO TIME OF PLACEMENT UNLESS APPROVED BY THE ENGINEER OF RECORD. TEMPERATURE OF CONCRETE SHALL NOT EXCEED 90°f AT TIME OF PLACEMENT.
4. CONCRETE EXPOSED TO FREEZE–THAW CYCLES SHALL CONTAIN AIR ENTRAINING ADMIXTURES. AMOUNT OF AIR ENTRAINMENT TO BE BASED ON SIZE OF AGGREGATE AND F3 CLASS EXPOSURE (VERY SEVERE). CEMENT USED TO BE TYPE II PORTLAND CEMENT WITH A MAXIMUM WATER–TO–CEMENT RATIO (W/C) OF 0.45.
5. ALL STEEL REINFORCING SHALL CONFORM TO ASTM A615. ALL WELDED WIRE FABRIC (WWF) SHALL CONFORM TO ASTM A185. ALL SPLICES SHALL BE CLASS "B" TENSION SPLICES, UNLESS NOTED OTHERWISE. ALL HOOKS SHALL BE STANDARD 90 DEGREE HOOKS, UNLESS NOTED OTHERWISE. YIELD STRENGTH (Fy) OF STANDARD DEFORMED BARS ARE AS FOLLOWS:
   #4 BARS AND SMALLER........40 ksi
   #5 BARS AND LARGER........60 ksi
6. THE FOLLOWING MINIMUM CONCRETE COVER SHALL BE PROVIDED FOR REINFORCING STEEL UNLESS SHOWN OTHERWISE ON DRAWINGS:
   CONCRETE CAST AGAINST AND PERMANENTLY EXPOSED TO EARTH........3"
   CONCRETE EXPOSED TO EARTH OR WEATHER:
   #6 BARS AND LARGER........2"
   #5 BARS AND SMALLER........1–1/2"
   CONCRETE NOT EXPOSED TO EARTH OR WEATHER:
   SLAB AND WALLS........3/4"
   BEAMS AND COLUMNS........1–1/2"
7. A TOOLED EDGE OR A 3/4" CHAMFER SHALL BE PROVIDED AT ALL EXPOSED EDGES OF CONCRETE, UNLESS NOTED OTHERWISE, IN ACCORDANCE WITH ACI 301 SECTION 4.2.4.

GREENFIELD GROUNDING NOTES:

1. ALL GROUND ELECTRODE SYSTEMS (INCLUDING TELECOMMUNICATION, RADIO, LIGHTNING PROTECTION AND AC POWER GES'S) SHALL BE BONDED TOGETHER AT OR BELOW GRADE, BY TWO OR MORE COPPER BONDING CONDUCTORS IN ACCORDANCE WITH THE NEC.
2. THE CONTRACTOR SHALL PERFORM IEEE FALL–OF–POTENTAL RESISTANCE TO EARTH TESTING (PER IEEE 1100 AND 81) FOR GROUND ELECTRODE SYSTEMS, THE CONTRACTOR SHALL FURNISH AND INSTALL SUPPLEMENTAL GROUND ELECTRODES AS NEEDED TO ACHIEVE A TEST RESULT OF 5 OHMS OR LESS.
3. THE CONTRACTOR IS RESPONSIBLE FOR PROPERLY SEQUENCING GROUNDING AND UNDERGROUND CONDUIT INSTALLATION AS TO PREVENT ANY LOSS OF CONTINUITY IN THE GROUNDING SYSTEM OR DAMAGE TO THE CONDUIT AND PROVIDE TESTING RESULTS.
4. METAL CONDUIT AND TRAY SHALL BE GROUNDED AND MADE ELECTRICALLY CONTINUOUS WITH LISTED BONDING FITTINGS OR BY BONDING ACROSS THE DISCONTINUITY WITH #6 COPPER WIRE UL APPROVED GROUNDING TYPE CONDUIT CLAMPS.
5. METAL RACEWAY SHALL NOT BE USED AS THE NEC REQUIRED EQUIPMENT GROUND CONDUCTOR. STRANDED COPPER CONDUCTORS WITH GREEN INSULATION, SIZED IN ACCORDANCE WITH THE NEC, SHALL BE FURNISHED AND INSTALLED WITH THE POWER CIRCUITS TO BTS EQUIPMENT.
6. EACH CABINET FRAME SHALL BE DIRECTLY CONNECTED TO THE MASTER GROUND BAR WITH GREEN INSULATED SUPPLEMENTAL EQUIPMENT GROUND WIRES, #6 STRANDED COPPER OR LARGER FOR INDOOR BTS; #2 BARE SOLID TINNED COPPER FOR OUTDOOR BTS.
7. CONNECTIONS TO THE GROUND BUS SHALL NOT BE DOUBLED UP OR STACKED BACK TO BACK CONNECTIONS ON OPPOSITE SIDE OF THE GROUND BUS ARE PERMITTED.
8. ALL EXTERIOR GROUND CONDUCTORS BETWEEN EQUIPMENT/GROUND BARS AND THE GROUND RING SHALL BE #2 SOLID TINNED COPPER UNLESS OTHERWISE INDICATED.
9. ALUMINUM CONDUCTOR OR COPPER CLAD STEEL CONDUCTOR SHALL NOT BE USED FOR GROUNDING CONNECTIONS.
10. USE OF 90° BENDS IN THE PROTECTION GROUNDING CONDUCTORS SHALL BE AVOIDED WHEN 45° BENDS CAN BE ADEQUATELY SUPPORTED.
11. EXOTHERMIC WELDS SHALL BE USED FOR ALL GROUNDING CONNECTIONS BELOW GRADE.
12. ALL GROUND CONNECTIONS ABOVE GRADE (INTERIOR AND EXTERIOR) SHALL BE FORMED USING HIGH PRESS CRIMPS.
13. COMPRESSION GROUND CONNECTIONS MAY BE REPLACED BY EXOTHERMIC WELD CONNECTIONS.
14. ICE BRIDGE BONDING CONDUCTORS SHALL BE EXOTHERMICALLY BONDED OR BOLTED TO THE BRIDGE AND THE TOWER GROUND BAR.
15. APPROVED ANTIOXIDANT COATINGS (i.e. CONDUCTIVE GEL OR PASTE) SHALL BE USED ON ALL COMPRESSION AND BOLTED GROUND CONNECTIONS.
16. ALL EXTERIOR GROUND CONNECTIONS SHALL BE COATED WITH A CORROSION RESISTANT MATERIAL.
17. MISCELLANEOUS ELECTRICAL AND NON–ELECTRICAL METAL BOXES, FRAMES AND SUPPORTS SHALL BE BONDED TO THE GROUND RING, IN ACCORDANCE WITH THE NEC.
18. BOND ALL METALLIC OBJECTS WITHIN 6 ft OF MAIN GROUND RING WITH (1) #2 BARE SOLID TINNED COPPER GROUND CONDUCTOR.
19. GROUND CONDUCTORS USED FOR THE FACILITY GROUNDING AND LIGHTNING PROTECTION SYSTEMS SHALL NOT BE ROUTED THROUGH METALLIC OBJECTS THAT FORM A RING AROUND THE CONDUCTOR, SUCH AS METALLIC CONDUITS, METAL SUPPORT CLIPS OR SLEEVES THROUGH WALLS OR FLOORS. WHEN IT IS REQUIRED TO BE HOUSED IN CONDUIT TO MEET CODE REQUIREMENTS OR LOCAL CONDITIONS, NON–METALLIC MATERIAL SUCH AS PVC CONDUIT SHALL BE USED. WHERE USE OF METAL CONDUIT IS UNAVOIDABLE (i.e., NONMETALLIC CONDUIT PROHIBITED BY LOCAL CODE) THE GROUND CONDUCTOR SHALL BE BONDED TO EACH END OF THE METAL CONDUIT.
20. ALL GROUNDS THAT TRANSITION FROM BELOW GRADE TO ABOVE GRADE MUST BE #2 BARE SOLID TINNED COPPER IN 3/4" NON–METALLIC, FLEXIBLE CONDUIT FROM 24" BELOW GRADE TO WITHIN 3" TO 6" OF CAD–WELD TERMINATION POINT. THE EXPOSED END OF THE CONDUIT MUST BE SEALED WITH SILICONE CAULK. (ADD TRANSITIONING GROUND STANDARD DETAIL AS WELL).
21. BUILDINGS WHERE THE MAIN GROUNDING CONDUCTORS ARE REQUIRED TO BE ROUTED TO GRADE, THE CONTRACTOR SHALL ROUTE TWO GROUNDING CONDUCTORS FROM THE ROOFTOP, TOWERS, AND WATER TOWERS GROUNDING RING, TO THE EXISTING GROUNDING SYSTEM, THE GROUNDING CONDUCTORS SHALL NOT BE SMALLER THAN 2/0 COPPER. ROOFTOP GROUNDING RING SHALL BE BONDED TO THE EXISTING GROUNDING SYSTEM, THE BUILDING STEEL COLUMNS, LIGHTNING PROTECTION SYSTEM, AND BUILDING MAIN WATER LINE (FERROUS OR NONFERROUS METAL PIPING ONLY).

ELECTRICAL INSTALLATION NOTES:

1. ALL ELECTRICAL WORK SHALL BE PERFORMED IN ACCORDANCE WITH THE PROJECT SPECIFICATIONS, NEC AND ALL APPLICABLE FEDERAL, STATE, AND LOCAL CODES/ORDINANCES.
2. CONDUIT ROUTINGS ARE SCHEMATIC. CONTRACTOR SHALL INSTALL CONDUITS SO THAT ACCESS TO EQUIPMENT IS NOT BLOCKED AND TRIP HAZARDS ARE ELIMINATED.
3. WIRING, RACEWAY AND SUPPORT METHODS AND MATERIALS SHALL COMPLY WITH THE REQUIREMENTS OF THE NEC.
4. ALL CIRCUITS SHALL BE SEGREGATED AND MAINTAIN MINIMUM CABLE SEPARATION AS REQUIRED BY THE NEC.
   4.1. ALL EQUIPMENT SHALL BEAR THE UNDERWRITERS LABORATORIES LABEL OF APPROVAL, AND SHALL CONFORM TO REQUIREMENT OF THE NATIONAL ELECTRICAL CODE.
   4.2. ALL OVERCURRENT DEVICES SHALL HAVE AN INTERRUPTING CURRENT RATING THAT SHALL BE GREATER THAN THE SHORT CIRCUIT CURRENT TO WHICH THEY ARE SUBJECTED, 22,000 AIC MINIMUM. VERYIFY AVAILABLE SHORT CIRCUIT CURRENT DOES NOT EXCEED THE RATING OF ELECTRICAL EQUIPMENT IN ACCORDANCE WITH ARTICLE 110.24 NEC OR THE MOST CURRENT ADOPTED CODE PRE THE GOVERNING JURISDICTION.
5. EACH END OF EVERY POWER PHASE CONDUCTOR, GROUNDING CONDUCTOR, AND TELCO CONDUCTOR OR CABLE SHALL BE LABELED WITH COLOR–CODED INSULATION OR ELECTRICAL TAPE (3M BRAND, 1/2" PLASTIC ELECTRICAL TAPE WITH UV PROTECTION, OR EQUAL). THE IDENTIFICATION METHOD SHALL CONFORM WITH NEC AND OSHA.
6. ALL ELECTRICAL COMPONENTS SHALL BE CLEARLY LABELED WITH LAMICOID TAGS SHOWING THEIR RATED VOLTAGE, PHASE CONFIGURATION, WIRE CONFIGURATION, POWER OR AMPACITY RATING AND BRANCH CIRCUIT ID NUMBERS (i.e. PANEL BOARD AND CIRCUIT ID'S).
7. PANEL BOARDS (ID NUMBERS) SHALL BE CLEARLY LABELED WITH PLASTIC LABELS.
8. ALL TIE WRAPS SHALL BE CUT FLUSH WITH APPROVED CUTTING TOOL TO REMOVE SHARP EDGES.
9. ALL POWER AND EQUIPMENT GROUND WIRING IN TUBING OR CONDUIT SHALL BE SINGLE COPPER CONDUCTOR (#14 OR LARGER) WITH TYPE THHW, THWN, THWN–2, XHHW, XHHW–2, THW, THW–2, RHW, OR RHW–2 INSULATION UNLESS OTHERWISE SPECIFIED.
10. SUPPLEMENTAL EQUIPMENT GROUND WIRING LOCATED INDOORS SHALL BE SINGLE COPPER CONDUCTOR (#6 OR LARGER) WITH TYPE THHW, THWN, THWN–2, XHHW, XHHW–2, THW, THW–2, RHW, OR RHW–2 INSULATION UNLESS OTHERWISE SPECIFIED.
11. POWER AND CONTROL WIRING IN FLEXIBLE CORD SHALL BE MULTI–CONDUCTOR, TYPE SOOW CORD (#14 OR LARGER) UNLESS OTHERWISE SPECIFIED.
12. POWER AND CONTROL WIRING FOR USE IN CABLE TRAY SHALL BE MULTI–CONDUCTOR, TYPE TC CABLE (#14 OR LARGER), WITH TYPE THHW, THWN, THWN–2, XHHW, XHHW–2, THW, THW–2, RHW, OR RHW–2 INSULATION UNLESS OTHERWISE SPECIFIED.
13. ALL POWER AND GROUNDING CONNECTIONS SHALL BE CRIMP–STYLE, COMPRESSION WIRE LUGS AND WIRE NUTS BY THOMAS AND BETTS (OR EQUAL). LUGS AND WIRE NUTS SHALL BE RATED FOR OPERATION NOT LESS THAN 75° C (90° C IF AVAILABLE).
14. RACEWAY AND CABLE TRAY SHALL BE LISTED OR LABELED FOR ELECTRICAL USE IN ACCORDANCE WITH NEMA, UL, ANSI/IEEE AND NEC.
15. ELECTRICAL METALLIC TUBING (EMT), INTERMEDIATE METAL CONDUIT (IMC), OR RIGID METAL CONDUIT (RMC) SHALL BE USED FOR EXPOSED INDOOR LOCATIONS.
16. ELECTRICAL METALLIC TUBING (EMT) OR METAL–CLAD CABLE (MC) SHALL BE USED FOR CONCEALED INDOOR LOCATIONS.
17. SCHEDULE 40 PVC UNDERGROUND ON STRAIGHTS AND SCHEDULE 80 PVC FOR ALL ELBOWS/90s AND ALL APPROVED ABOVE GRADE PVC CONDUIT.
18. LIQUID–TIGHT FLEXIBLE METALLIC CONDUIT (LIQUID–TITE FLEX) SHALL BE USED INDOORS AND OUTDOORS, WHERE VIBRATION OCCURS OR FLEXIBILITY IS NEEDED.
19. CONDUIT AND TUBING FITTINGS SHALL BE THREADED OR COMPRESSION–TYPE AND APPROVED FOR THE LOCATION USED. SET SCREW FITTINGS ARE NOT ACCEPTABLE.
20. CABINETS, BOXES AND WIRE WAYS SHALL BE LABELED FOR ELECTRICAL USE IN ACCORDANCE WITH NEMA, UL, ANSI/IEEE AND THE NEC.
21. WIREWAYS SHALL BE METAL WITH AN ENAMEL FINISH AND INCLUDE A HINGED COVER, DESIGNED TO SWING OPEN DOWNWARDS (WIREMOLD SPECMATE WIREWAY).
22. SLOTTED WIRING DUCT SHALL BE PVC AND INCLUDE COVER (PANDUIT TYPE E OR EQUAL).
23. CONDUITS SHALL BE FASTENED SECURELY IN PLACE WITH APPROVED NON–PERFORATED STRAPS AND HANGERS. EXPLOSIVE DEVICES (i.e. POWDER–ACTUATED) FOR ATTACHING HANGERS TO STRUCTURE WILL NOT BE PERMITTED. CLOSELY FOLLOW THE LINES OF THE STRUCTURE, MAINTAIN CLOSE PROXIMITY TO THE STRUCTURE AND KEEP CONDUITS IN TIGHT ENVELOPES. CHANGES IN DIRECTION TO ROUTE AROUND OBSTACLES SHALL BE MADE WITH CONDUIT OUTLET BODIES. CONDUIT SHALL BE INSTALLED IN A NEAT AND WORKMANLIKE MANNER. PARALLEL AND PERPENDICULAR TO STRUCTURE WALL AND CEILING LINES. ALL CONDUIT SHALL BE FISHED TO CLEAR OBSTRUCTIONS. ENDS OF CONDUITS SHALL BE TEMPORARILY CAPPED FLUSH TO FINISH GRADE TO PREVENT CONCRETE, PLASTER OR DIRT FROM ENTERING. CONDUITS SHALL BE RIGIDLY CLAMPED TO BOXES BY GALVANIZED MALLEABLE IRON BUSHING ON INSIDE AND GALVANIZED MALLEABLE IRON LOCKNUT ON OUTSIDE AND INSIDE.
24. EQUIPMENT CABINETS, TERMINAL BOXES, JUNCTION BOXES AND PULL BOXES SHALL BE GALVANIZED OR EPOXY–COATED SHEET STEEL. SHALL MEET OR EXCEED UL 50 AND BE RATED NEMA 1 (OR BETTER) FOR INTERIOR LOCATIONS AND NEMA 3R (OR BETTER) FOR EXTERIOR LOCATIONS.
25. METAL RECEPTACLE, SWITCH AND DEVICE BOXES SHALL BE GALVANIZED, EPOXY–COATED OR NON–CORRODING; SHALL MEET OR EXCEED UL 514A AND NEMA OS 1 AND BE RATED NEMA 1 (OR BETTER) FOR INTERIOR LOCATIONS AND WEATHER PROTECTED (WP OR BETTER) FOR EXTERIOR LOCATIONS.
26. NONMETALLIC RECEPTACLE, SWITCH AND DEVICE BOXES SHALL MEET OR EXCEED NEMA OS 2 (NEWEST REVISION) AND BE RATED NEMA 1 (OR BETTER) FOR INTERIOR LOCATIONS AND WEATHER PROTECTED (WP OR BETTER) FOR EXTERIOR LOCATIONS.
27. THE CONTRACTOR SHALL NOTIFY AND OBTAIN NECESSARY AUTHORIZATION FROM THE CARRIER AND/OR CROWN CASTLE USA INC. BEFORE COMMENCING WORK ON THE AC POWER DISTRIBUTION PANELS.
28. THE CONTRACTOR SHALL PROVIDE NECESSARY TAGGING ON THE BREAKERS, CABLES AND DISTRIBUTION PANELS IN ACCORDANCE WITH THE APPLICABLE CODES AND STANDARDS TO SAFEGUARD LIFE AND PROPERTY.
29. INSTALL LAMICOID LABEL ON THE METER CENTER TO SHOW "VERIZON".
30. ALL EMPTY/SPARE CONDUITS THAT ARE INSTALLED ARE TO HAVE A METERED MULE TAPE PULL CORD INSTALLED.

CONDUCTOR COLOR CODE

SYSTEM	CONDUCTOR	COLOR
120/240V, 1Ø	A PHASE	BLACK
	B PHASE	RED
	NEUTRAL	WHITE
	GROUND	GREEN
120/208V, 3Ø	A PHASE	BLACK
	B PHASE	RED
	C PHASE	BLUE
	NEUTRAL	WHITE
	GROUND	GREEN
277/480V, 3Ø	A PHASE	BROWN
	B PHASE	ORANGE OR PURPLE
	C PHASE	YELLOW
	NEUTRAL	GREY
	GROUND	GREEN
DC VOLTAGE	POS (+)	RED**
	NEG (–)	BLACK**

* SEE NEC 210.5(C)(1) AND (2)
** POLARITY MARKED AT TERMINATION

APWA UNIFORM COLOR CODE:

WHITE	PROPOSED EXCAVATION
PINK	TEMPORARY SURVEY MARKINGS
RED	ELECTRIC POWER LINES, CABLES, CONDUIT, AND LIGHTING CABLES
YELLOW	GAS, OIL, STEAM, PETROLEUM, OR GASEOUS MATERIALS
ORANGE	COMMUNICATION, ALARM OR SIGNAL LINES, CABLES, OR CONDUIT AND TRAFFIC LOOPS
BLUE	POTABLE WATER
PURPLE	RECLAIMED WATER, IRRIGATION, AND SLURRY LINES
GREEN	SEWERS AND DRAIN LINES

ABBREVIATIONS:

ANT	ANTENNA
(E)	EXISTING
FIF	FACILITY INTERFACE FRAME
GEN	GENERATOR
GPS	GLOBAL POSITIONING SYSTEM
GSM	GLOBAL SYSTEM FOR MOBILE
LTE	LONG TERM EVOLUTION
MGB	MASTER GROUND BAR
MW	MICROWAVE
(N)	NEW
NEC	NATIONAL ELECTRIC CODE
(P)	PROPOSED
PP	POWER PLANT
QTY	QUANTITY
RECT	RECTIFIER
RBS	RADIO BASE STATION
RET	REMOTE ELECTRIC TILT
RFDS	RADIO FREQUENCY DATA SHEET
RRH	REMOTE RADIO HEAD
RRU	REMOTE RADIO UNIT
SIAD	SMART INTEGRATED DEVICE
TMA	TOWER MOUNTED AMPLIFIER
TYP	TYPICAL
UMTS	UNIVERSAL MOBILE TELECOMMUNICATIONS SYSTEM
W.P.	WORK POINT

verizon
180 WASHINGTON VALLEY ROAD
BEDMINSTER, NJ 07921

CROWN CASTLE
1500 CORPORATE DRIVE
CANONSBURG, PA 15317

INFINIGY
FROM ZERO TO INFINIGY
the solutions are endless
BELLEVUE, WA 98004

VERIZON SITE NUMBER:
469283

BU #: **876369**
HARWINTON / BUCKLEY BROADCASTI

64 HUNGERFORD LANE
HARWINTON, CT 06794

EXISTING 178'-0" MONOPOLE

ISSUED FOR:

REV	DATE	DRWN	DESCRIPTION	DES./QA
0	06/04/2021	RCD	FINAL CDs	--
1	08/03/2021	RCD	FINAL CDs	--
2	09/29/2021	CB	FINAL CDs	--

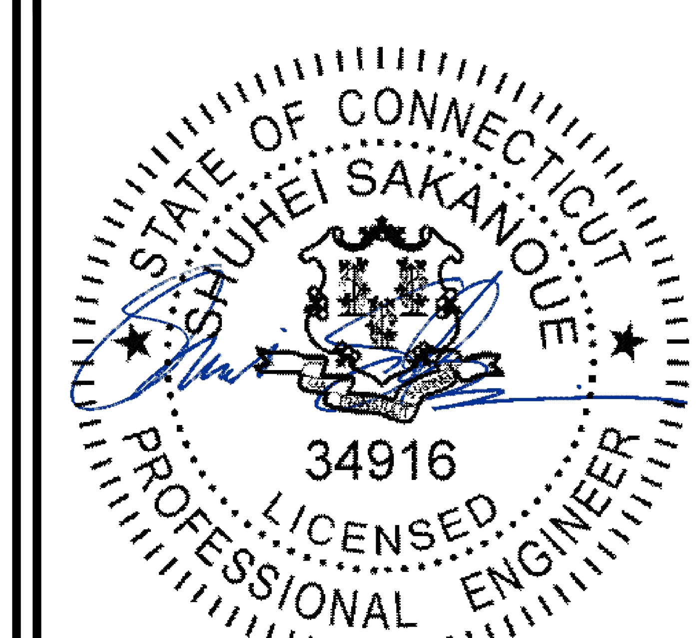

10/4/2021

IT IS A VIOLATION OF LAW FOR ANY PERSON, UNLESS THEY ARE ACTING UNDER THE DIRECTION OF A LICENSED PROFESSIONAL ENGINEER, TO ALTER THIS DOCUMENT.

SHEET NUMBER: T-2
REVISION: 2

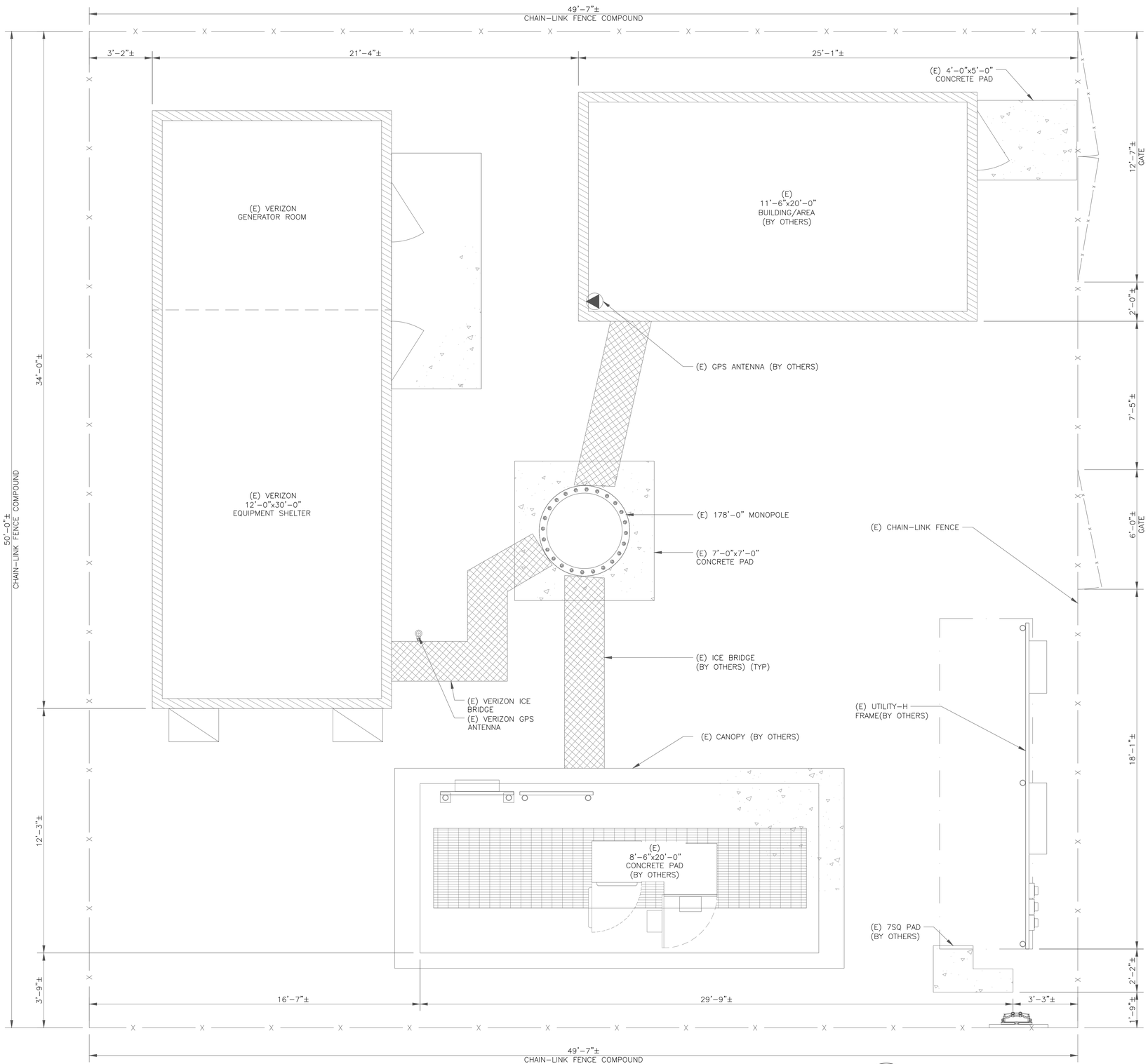

1 SITE PLAN

SCALE: 2' 1' 0 2' 3/8"=1'-0" (FULL SIZE) 3/16"=1'-0" (11x17)

verizon
180 WASHINGTON VALLEY ROAD
BEDMINSTER, NJ 07921

CROWN CASTLE
1500 CORPORATE DRIVE
CANONSBURG, PA 15317

INFINIGY
FROM ZERO TO INFINIGY
the solutions are endless
BELLEVUE, WA 98004

VERIZON SITE NUMBER:
469283

BU #: **876369**
HARWINTON / BUCKLEY BROADCASTI

64 HUNGERFORD LANE
HARWINTON, CT 06794

EXISTING 178'-0" MONOPOLE

ISSUED FOR:

REV	DATE	DRWN	DESCRIPTION	DES./QA
0	06/04/2021	RCD	FINAL CDs	--
1	08/03/2021	RCD	FINAL CDs	--
2	09/29/2021	CB	FINAL CDs	--

STATE OF CONNECTICUT
SHUHEI SAKANOUE
34916
LICENSED
PROFESSIONAL ENGINEER
10/4/2021

IT IS A VIOLATION OF LAW FOR ANY PERSON, UNLESS THEY ARE ACTING UNDER THE DIRECTION OF A LICENSED PROFESSIONAL ENGINEER, TO ALTER THIS DOCUMENT.

SHEET NUMBER: C-1

REVISION: 2

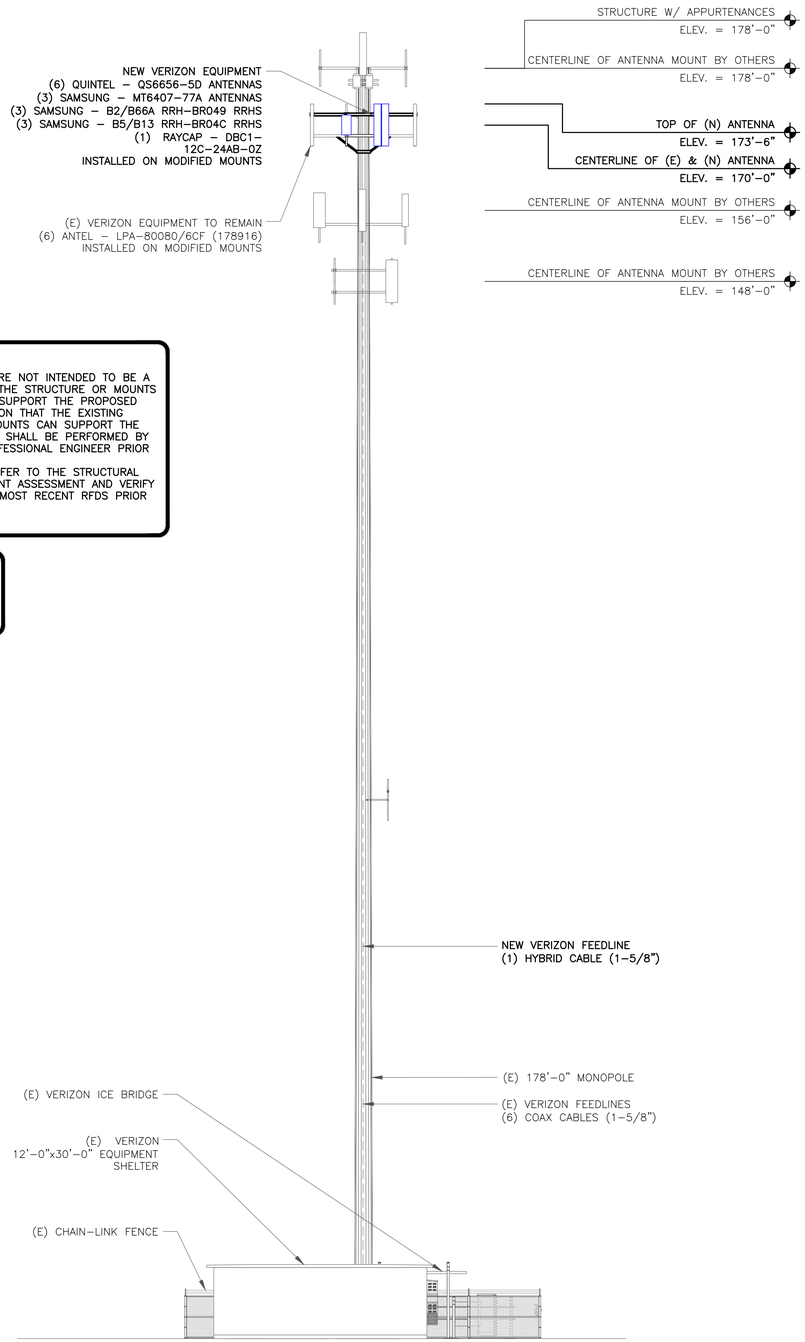

NOTES:

- THESE DRAWINGS ARE NOT INTENDED TO BE A VERIFICATION THAT THE STRUCTURE OR MOUNTS ARE ADEQUATE TO SUPPORT THE PROPOSED LOADING. VERIFICATION THAT THE EXISTING STRUCTURE AND MOUNTS CAN SUPPORT THE PROPOSED LOADING SHALL BE PERFORMED BY A REGISTERED PROFESSIONAL ENGINEER PRIOR TO CONSTRUCTION.
- CONTRACTOR TO REFER TO THE STRUCTURAL ANALYSIS AND MOUNT ASSESSMENT AND VERIFY LOADING WITH THE MOST RECENT RFDS PRIOR TO CONSTRUCTION

VERIZON EQUIPMENT

ANTENNA CL: 138'–0"
ANTENNA CL: 137'–0"
ANTENNA CL: 138'–11"
MOUNT CL: 138'–0"

1 TOWER ELEVATION
SCALE: NOT TO SCALE

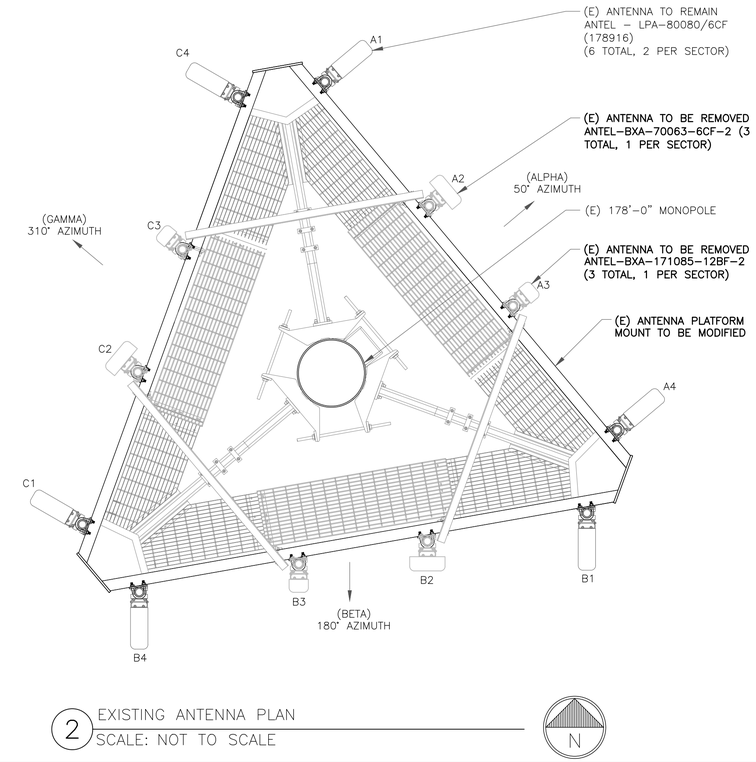

2 EXISTING ANTENNA PLAN
SCALE: NOT TO SCALE

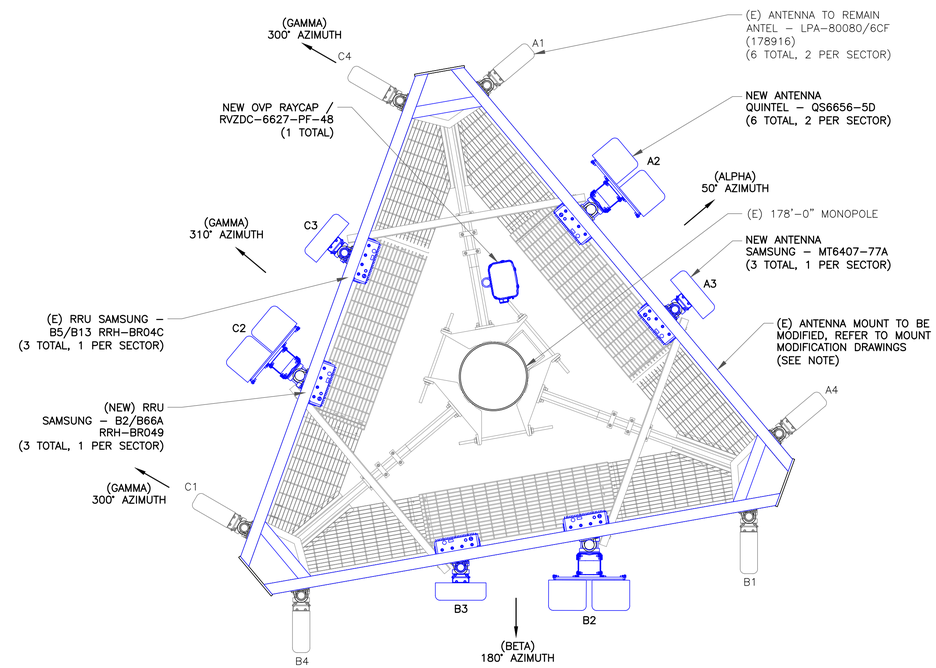

3 NEW ANTENNA PLAN
SCALE: NOT TO SCALE

verizon
180 WASHINGTON VALLEY ROAD
BEDMINSTER, NJ 07921

CROWN CASTLE
1500 CORPORATE DRIVE
CANONSBURG, PA 15317

INFINIGY
FROM ZERO TO INFINIGY
the solutions are endless
BELLEVUE, WA 98004

VERIZON SITE NUMBER:
469283

BU #: **876369**
HARWINTON / BUCKLEY BROADCASTI

64 HUNGERFORD LANE
HARWINTON, CT 06794

EXISTING 178'-0" MONOPOLE

ISSUED FOR:

REV	DATE	DRWN	DESCRIPTION	DES./QA
0	06/04/2021	RCD	FINAL CDs	--
1	08/03/2021	RCD	FINAL CDs	--
2	09/29/2021	CB	FINAL CDs	--

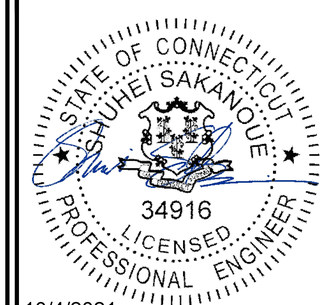

10/4/2021

IT IS A VIOLATION OF LAW FOR ANY PERSON, UNLESS THEY ARE ACTING UNDER THE DIRECTION OF A LICENSED PROFESSIONAL ENGINEER, TO ALTER THIS DOCUMENT.

SHEET NUMBER: C-2

REVISION: 2

ANTENNA/RRH SCHEDULE

SECTOR	STATUS	ANTENNA MANUFACTURER	ANTENNA MODEL	ANTENNA CENTERLINE	AZIMUTH	MECHANICAL DOWNTILTS	ELECTRICAL DOWNTILTS	TOWER EQUIPMENT MANUFACTURER	TOWER EQUIPMENT QTY/MODEL
A1	EXISTING	ANTEL	LPA-80080/6CF (178916)	138'-0"	50°	2°	0°	RFS/CELWAVE	(1) DBC1-12C-24AB-0Z
A2	NEW	QUINTEL	(2) QS6656-5D	138'-0"	50°	0°	2°/2°/0°/0°	SAMSUNG	(1) B2/B66A RRH-BR049 (RFV01U-D1A)
A3	NEW	SAMSUNG	MT6407-77A	138'-0"	50°	0°	6°	SAMSUNG	(1) B5/B13 RRH-BR04C (RFV01U-D2A)
A4	EXISTING	ANTEL	LPA-80080/6CF (178916)	138'-0"	50°	2°	0°	–	–
B1	EXISTING	ANTEL	LPA-80080/6CF (178916)	138'-0"	180°	3°	0°	–	–
B2	NEW	QUINTEL	(2) QS6656-5D	138'-0"	180°	0°	5°/5°/2°/2°	SAMSUNG	(1) B2/B66A RRH-BR049 (RFV01U-D1A)
B3	NEW	SAMSUNG	MT6407-77A	138'-0"	180°	0°	6°	SAMSUNG	(1) B5/B13 RRH-BR04C (RFV01U-D2A)
B4	EXISTING	ANTEL	LPA-80080/6CF (178916)	138'-0"	180°	3°	0°	–	–
C1	EXISTING	ANTEL	LPA-80080/6CF (178916)	138'-0"	300°	3°	0°	–	–
C2	NEW	QUINTEL	(2) QS6656-5D	138'-0"	310°	0°	5°/5°/2°/2°	SAMSUNG	(1) B2/B66A RRH-BR049 (RFV01U-D1A)
C3	NEW	SAMSUNG	MT6407-77A	138'-0"	310°	0°	6°	SAMSUNG	(1) B5/B13 RRH-BR04C (RFV01U-D2A)
C4	EXISTING	ANTEL	LPA-80080/6CF (178916)	138'-0"	300°	3°	0°	–	–

1 VERIZON TOWER EQUIPMENT SCHEDULE
SCALE: NOT TO SCALE

CABLE SCHEDULE

STATUS	CABLE TYPE	SIZE	LENGTH	QTY
EXISTING	COAX	1-5/8"	220'-0"±	6
NEW	HYBRID	1-5/8"	220'-0"±	1
TOTAL CABLE QTY:				7

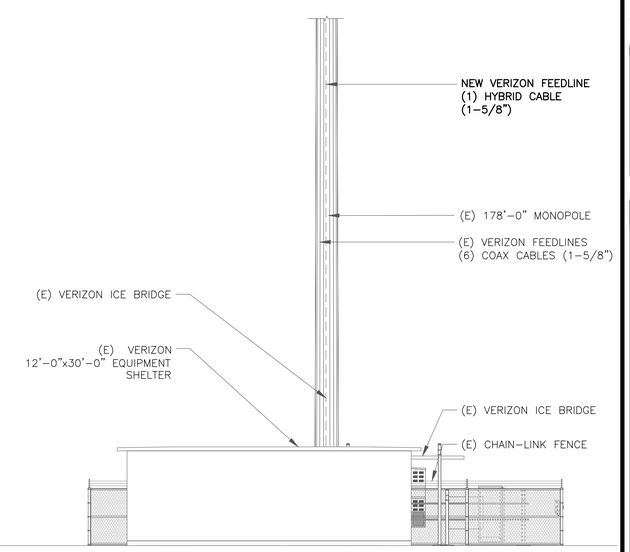

2 BASE LEVEL DETAIL
SCALE: NOT TO SCALE

N

verizon
180 WASHINGTON VALLEY ROAD
BEDMINSTER, NJ 07921

CROWN CASTLE
1500 CORPORATE DRIVE
CANONSBURG, PA 15317

INFINIGY
FROM ZERO TO INFINIGY
the solutions are endless
BELLEVUE, WA 98004

VERIZON SITE NUMBER:
469283

BU #: **876369**
HARWINTON / BUCKLEY BROADCASTI

64 HUNGERFORD LANE
HARWINTON, CT 06794

EXISTING 178'-0" MONOPOLE

ISSUED FOR:

REV	DATE	DRWN	DESCRIPTION	DES./QA
0	06/04/2021	RCD	FINAL CDs	--
1	08/03/2021	RCD	FINAL CDs	--
2	09/29/2021	CB	FINAL CDs	--

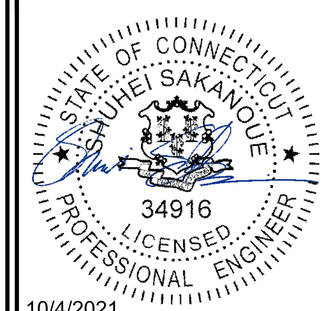

10/4/2021

IT IS A VIOLATION OF LAW FOR ANY PERSON, UNLESS THEY ARE ACTING UNDER THE DIRECTION OF A LICENSED PROFESSIONAL ENGINEER, TO ALTER THIS DOCUMENT.

SHEET NUMBER: C-3

REVISION: 2

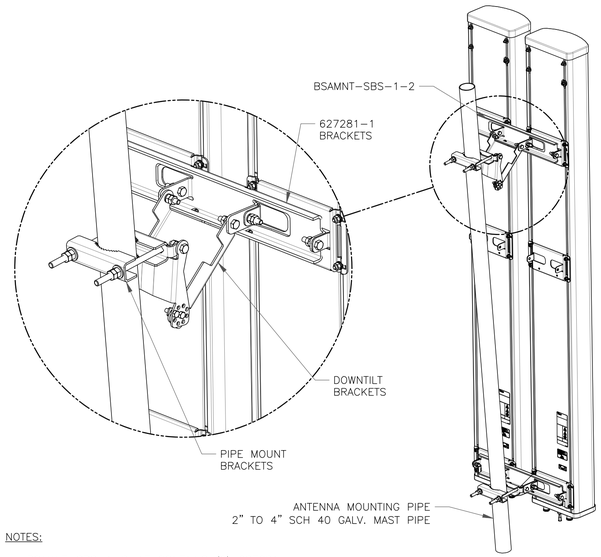

NOTES:

- BSAMNT-SBS-1-2 KIT CONTAINS (2) 627281 MOUNTING BRACKETS.
- TORQUE THE M10 BOLT ASSEMBLY TO 37 N.m. PER MANUFACTURE'S RECOMMENDATIONS.

1 COMMSCOPE – BSAMNT-SBS-1-2
SCALE: NOT TO SCALE

2 NOT USED
SCALE: NOT TO SCALE

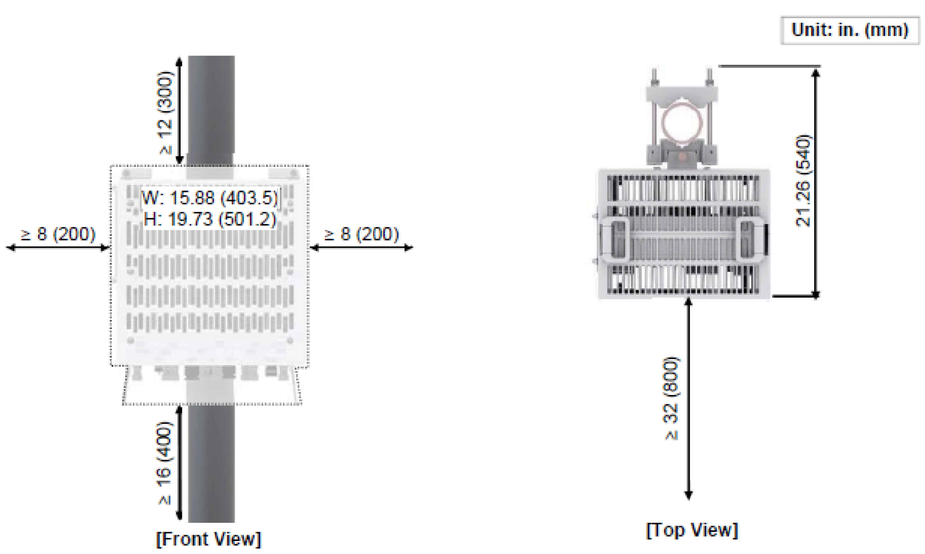

3 SAMSUNG – FPKA BRACKET MOUNTING DETAIL
SCALE: NOT TO SCALE

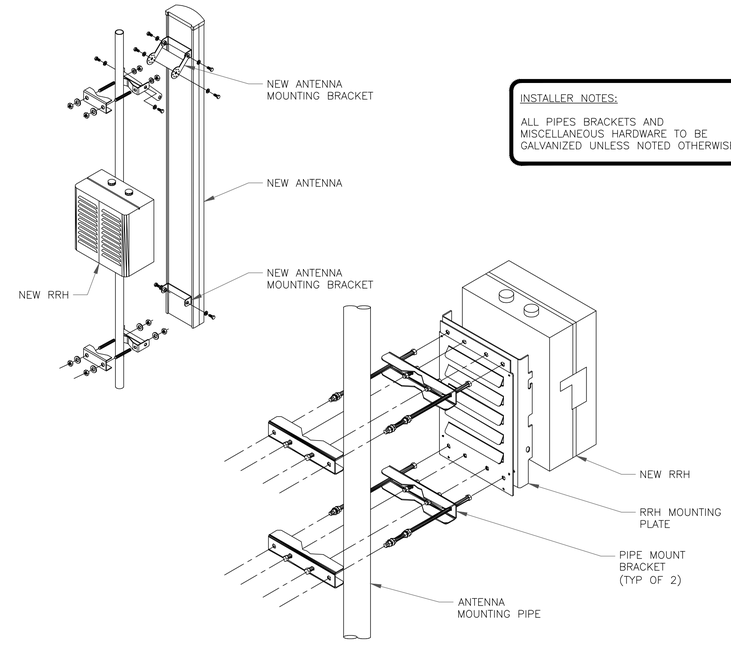

INSTALLER NOTES:

ALL PIPES BRACKETS AND MISCELLANEOUS HARDWARE TO BE GALVANIZED UNLESS NOTED OTHERWISE.

4 ANTENNA & RRH MOUNTING DETAIL
SCALE: NOT TO SCALE

verizon
180 WASHINGTON VALLEY ROAD
BEDMINSTER, NJ 07921

CROWN CASTLE
1500 CORPORATE DRIVE
CANONSBURG, PA 15317

INFINIGY
FROM ZERO TO INFINIGY
the solutions are endless
BELLEVUE, WA 98004

VERIZON SITE NUMBER:
469283

BU #: **876369**
HARWINTON / BUCKLEY BROADCASTI

64 HUNGERFORD LANE
HARWINTON, CT 06794

EXISTING 178'-0" MONOPOLE

ISSUED FOR:

REV	DATE	DRWN	DESCRIPTION	DES./QA
0	06/04/2021	RCD	FINAL CDs	--
1	08/03/2021	RCD	FINAL CDs	--
2	09/29/2021	CB	FINAL CDs	--

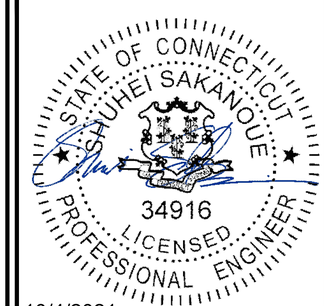

10/4/2021

IT IS A VIOLATION OF LAW FOR ANY PERSON, UNLESS THEY ARE ACTING UNDER THE DIRECTION OF A LICENSED PROFESSIONAL ENGINEER, TO ALTER THIS DOCUMENT.

SHEET NUMBER: C-4

REVISION: 2

VZW PANEL ANTENNA (MT6407-77A)

DIMENSIONS, HxWxD: 35.06"x16.06"x5.51"

WEIGHT, W/O BRACKETS: 81.57 lbs

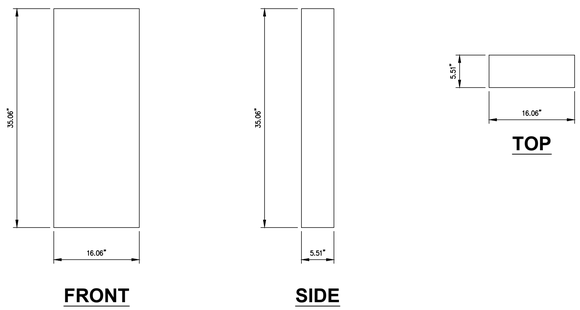

1 VZW SUB6 ANTENNA – VZS01 ANTENNA DETAIL
SCALE: NOT TO SCALE

SAMSUNG B2/B66A RRH-BR049 (RFV01U-D1A)

DIMENSIONS, WxDxH: 15.00" X 15.00" X 10.00"

TOTAL WEIGHT: 84.40 lbs

TEMPERATURE: -40° TO 55° C

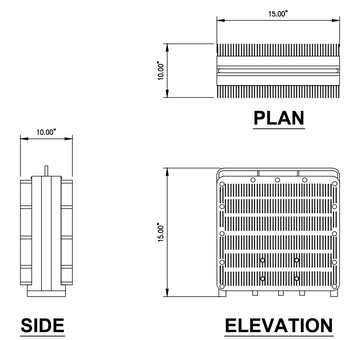

2 SAMSUNG B2/B66A RRH-BR049 DETAIL
SCALE: NOT TO SCALE

SAMSUNG B5/B13 RRH-BR04C (RFV01U-D2A)

DIMENSIONS, WxDxH: 15.00" X 15.00" X 8.10"

TOTAL WEIGHT: 70.30 lbs

TEMPERATURE: -40° TO 55° C

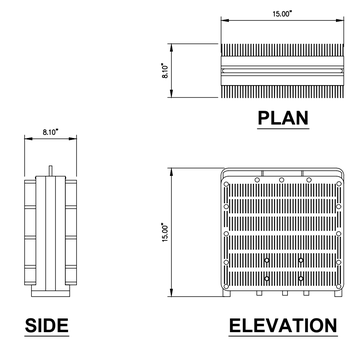

3 SAMSUNG B5/B13 RRH-BR04C DETAIL
SCALE: NOT TO SCALE

QUINTEL PANEL ANTENNA (QS6656-5D)

DIMENSIONS, HxWxD: 72.00"x11.90"x9.60"

WEIGHT, W/O BRACKETS: 88.00 lbs

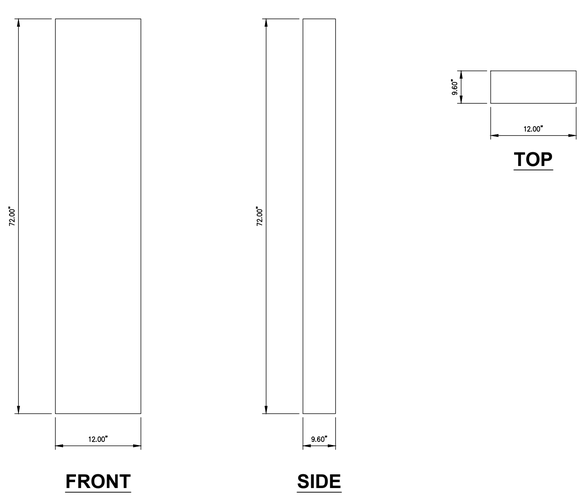

4 QUINTEL QS6656-5D ANTENNA DETAIL
SCALE: NOT TO SCALE

RAYCAP (RVZDC-6627-PF-48)

DIMENSIONS, HxWxD: 25.66"x15.73"x10.25"

WEIGHT, W/O BRACKETS: 21.40 lbs

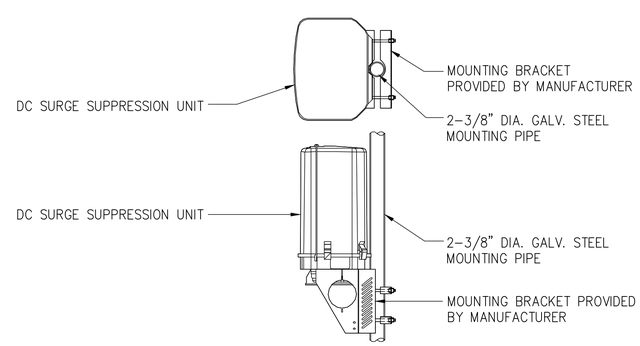

5 RVZDC-6627-PF-48 OVP DETAIL
SCALE: NOT TO SCALE

COMMSCOPE ANTENNA BRACKET (BSAMNT-SBS-2-2)

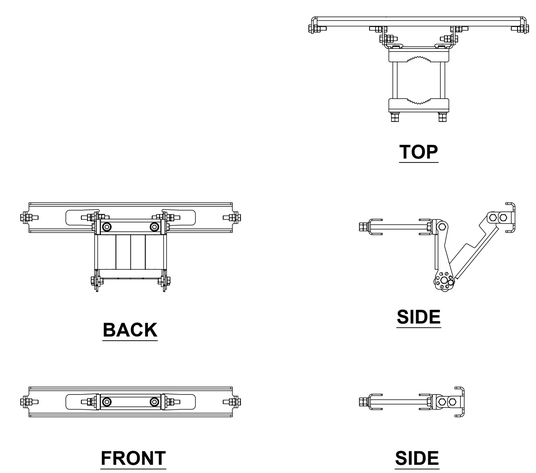

6 COMMSCOPE BSAMNT-SBS-2-2 ANTENNA BRACKET DETAIL
SCALE: NOT TO SCALE

verizon
180 WASHINGTON VALLEY ROAD
BEDMINSTER, NJ 07921

CROWN CASTLE
1500 CORPORATE DRIVE
CANONSBURG, PA 15317

INFINIGY
FROM ZERO TO INFINIGY
the solutions are endless
BELLEVUE, WA 98004

VERIZON SITE NUMBER:
469283

BU #: **876369**
HARWINTON / BUCKLEY BROADCASTI

64 HUNGERFORD LANE
HARWINTON, CT 06794

EXISTING 178'-0" MONOPOLE

ISSUED FOR:

REV	DATE	DRWN	DESCRIPTION	DES./QA
0	06/04/2021	RCD	FINAL CDs	--
1	08/03/2021	RCD	FINAL CDs	--
2	09/29/2021	CB	FINAL CDs	--

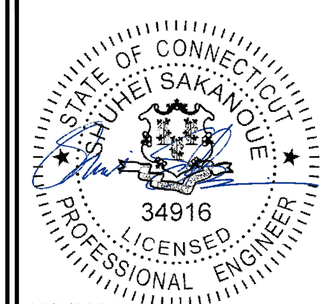

10/4/2021

IT IS A VIOLATION OF LAW FOR ANY PERSON, UNLESS THEY ARE ACTING UNDER THE DIRECTION OF A LICENSED PROFESSIONAL ENGINEER, TO ALTER THIS DOCUMENT.

SHEET NUMBER: C-5

REVISION: 2

- Port 1 & 2 are for low band (698-896 MHz).
- Port 3,4,5, & 6 are for high band (1695-2360 MHz).
- Antenna Smart Bias Tee (SBT) is through port 1 for low band and port 3 for high band.
- AISG cable is only needed when drawn in the diagrams below, if it is not drawn then SBT is enough to control all RET motors.
- Not all SBT ports are needed to control RET, only green port connection to green port will control RET.

RET DC signal pins for RET (Port that will control RET)

DC signal capable Port

AISG Cable

RET DC signal pins for RET (Port that will control RET)

Hybriflex cables

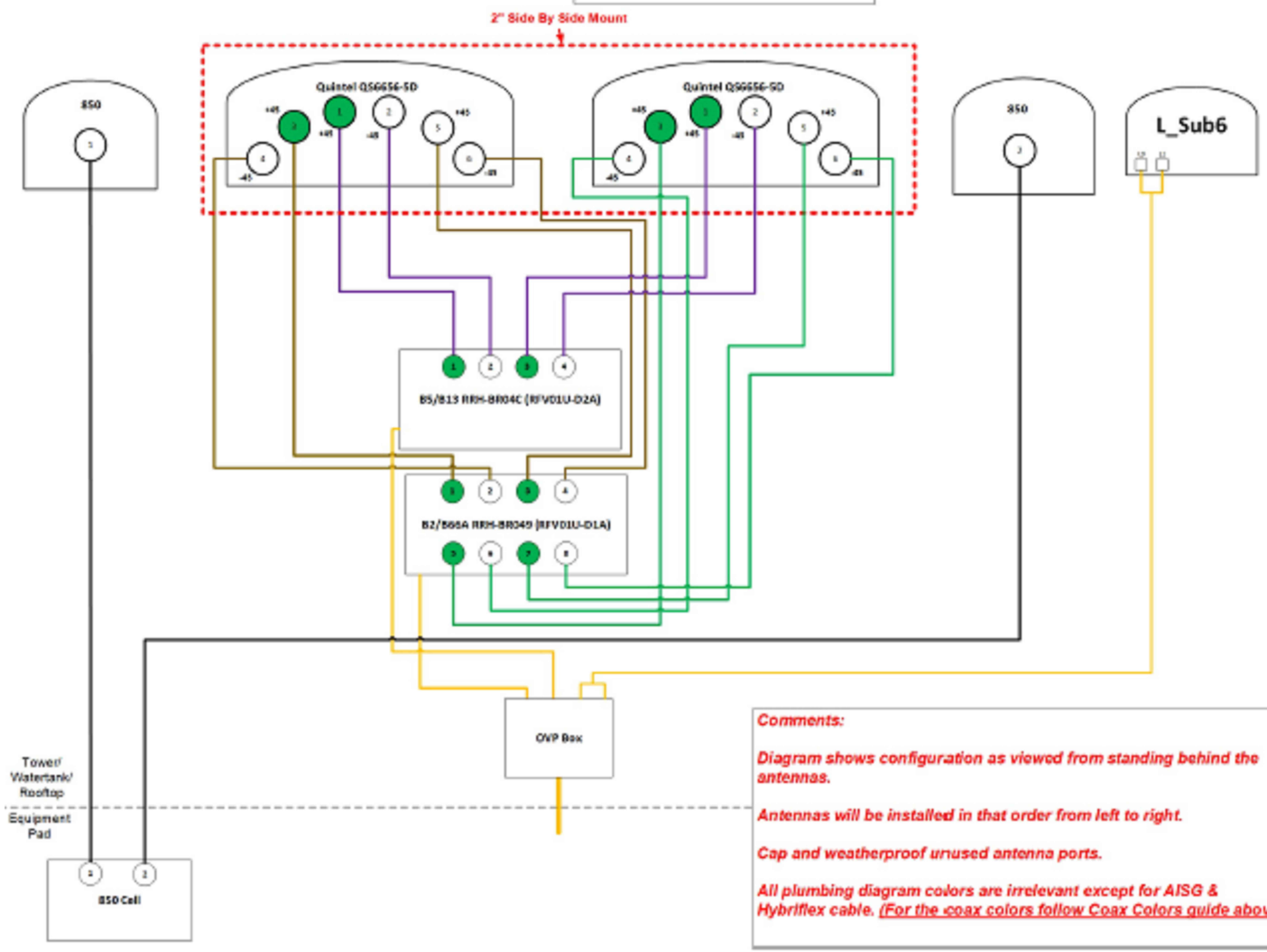

Comments:

Diagram shows configuration as viewed from standing behind the antennas.

Antennas will be installed in that order from left to right.

Cap and weatherproof unused antenna ports.

All plumbing diagram colors are irrelevant except for AISG & Hybriflex cable. (For the coax colors follow Coax Colors guide above)

1 PLUMBING DIAGRAM
SCALE: NOT TO SCALE

verizon
180 WASHINGTON VALLEY ROAD
BEDMINSTER, NJ 07921

CROWN CASTLE
1500 CORPORATE DRIVE
CANONSBURG, PA 15317

INFINIGY
FROM ZERO TO INFINIGY
the solutions are endless
BELLEVUE, WA 98004

VERIZON SITE NUMBER:
469283

BU #: **876369**
HARWINTON / BUCKLEY BROADCASTI

64 HUNGERFORD LANE
HARWINTON, CT 06794

EXISTING 178'-0" MONOPOLE

ISSUED FOR:

REV	DATE	DRWN	DESCRIPTION	DES./QA
0	06/04/2021	RCD	FINAL CDs	--
1	08/03/2021	RCD	FINAL CDs	--
2	09/29/2021	CB	FINAL CDs	--

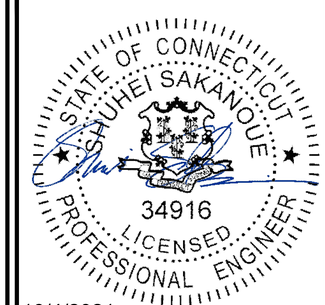

10/4/2021

IT IS A VIOLATION OF LAW FOR ANY PERSON, UNLESS THEY ARE ACTING UNDER THE DIRECTION OF A LICENSED PROFESSIONAL ENGINEER, TO ALTER THIS DOCUMENT.

SHEET NUMBER: C-6

REVISION: 2

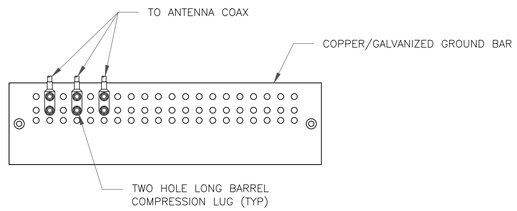

NOTES:

1. DOUBLING UP "OR STACKING" OF CONNECTIONS IS NOT PERMITTED.
2. EXTERIOR ANTIOXIDANT JOINT COMPOUND TO BE USED ON ALL EXTERIOR CONNECTIONS.
3. GROUND BAR SHALL NOT BE ISOLATED FROM TOWER. MOUNT DIRECTLY TO ANTENNA MOUNT STEEL.

1 ANTENNA SECTOR GROUND BAR DETAIL
SCALE: NOT TO SCALE

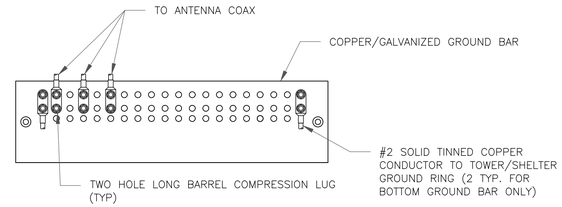

NOTES:

1. EXTERIOR ANTIOXIDANT JOINT COMPOUND TO BE USED ON ALL EXTERIOR CONNECTIONS.
2. GROUND BAR SHALL NOT BE ISOLATED FROM TOWER. MOUNT DIRECTLY TO TOWER STEEL (TOWER ONLY).
3. GROUND BAR SHALL BE ISOLATED FROM BUILDING OR SHELTER.

2 TOWER/SHELTER GROUND BAR DETAIL
SCALE: NOT TO SCALE

3 NOT USED
SCALE: NOT TO SCALE

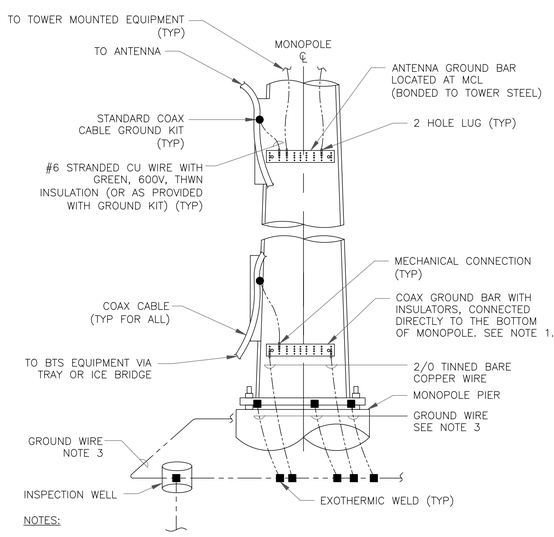

NOTES:

1. NUMBER OF GROUNDING BARS MAY VARY DEPENDING ON THE TYPE OF TOWER, ANTENNA LOCATIONS AND CONNECTION ORIENTATION. COAXIAL CABLES EXCEEDING 200 FEET ON THE TOWER SHALL HAVE GROUND KITS AT THE MIDPOINT. PROVIDE AS REQUIRED.
2. ONLY MECHANICAL CONNECTIONS ARE ALLOWED TO BE MADE TO CROWN CASTLE USA INC. TOWERS. ALL MECHANICAL CONNECTIONS SHALL BE TREATED WITH AN ANTI-OXIDANT COATING.
3. ALL TOWER GROUNDING SYSTEMS SHALL COMPLY WITH THE REQUIREMENTS OF THE RECOGNIZED EDITION OF ANSI/TIA 222 AND NFPA 780.

4 TYPICAL ANTENNA CABLE GROUNDING
SCALE: NOT TO SCALE

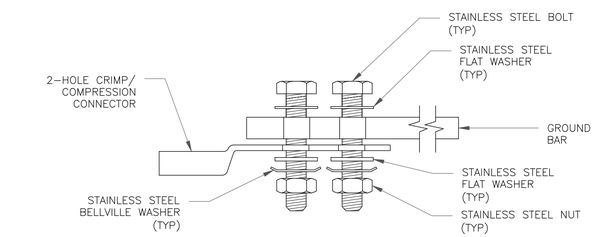

SINGLE CONNECTOR AT GROUND BARS

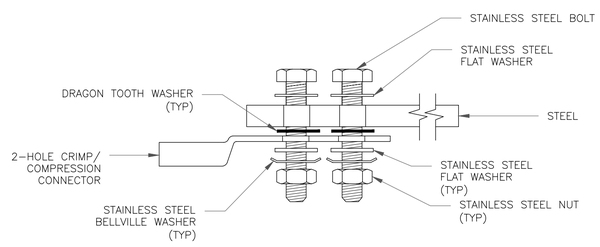

SINGLE CONNECTOR AT STEEL OBJECTS

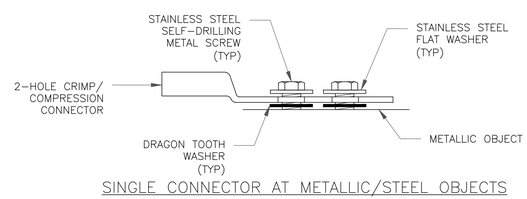

SINGLE CONNECTOR AT METALLIC/STEEL OBJECTS

5 HARDWARE DETAIL FOR EXTERIOR CONNECTIONS
SCALE: NOT TO SCALE

6 NOT USED
SCALE: NOT TO SCALE

verizon
180 WASHINGTON VALLEY ROAD
BEDMINSTER, NJ 07921

CROWN CASTLE
1500 CORPORATE DRIVE
CANONSBURG, PA 15317

INFINIGY
FROM ZERO TO INFINIGY
the solutions are endless
BELLEVUE, WA 98004

VERIZON SITE NUMBER:
469283

BU #: **876369**
HARWINTON / BUCKLEY BROADCASTI

64 HUNGERFORD LANE
HARWINTON, CT 06794

EXISTING 178'-0" MONOPOLE

ISSUED FOR:

REV	DATE	DRWN	DESCRIPTION	DES./QA
0	06/04/2021	RCD	FINAL CDs	--
1	08/03/2021	RCD	FINAL CDs	--
2	09/29/2021	CB	FINAL CDs	--

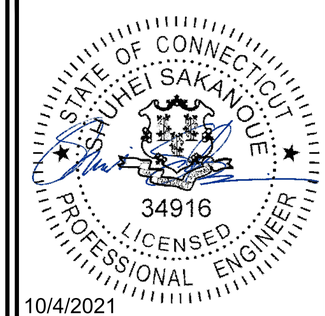

10/4/2021

IT IS A VIOLATION OF LAW FOR ANY PERSON, UNLESS THEY ARE ACTING UNDER THE DIRECTION OF A LICENSED PROFESSIONAL ENGINEER, TO ALTER THIS DOCUMENT.

SHEET NUMBER: G-1
REVISION: 2

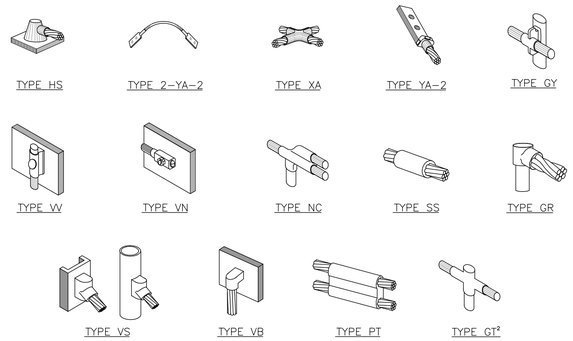

NOTE:

1. ERICO EXOTHERMIC "MOLD TYPES" SHOWN HERE ARE EXAMPLES. CONSULT WITH CONSTRUCTION MANAGER FOR SPECIFIC MOLDS TO BE USED FOR THIS PROJECT.
2. MOLD TYPE ONLY TO BE USED BELOW GRADE WHEN CONNECTING GROUND RING TO GROUND ROD.

1 CADWELD GROUNDING CONNECTIONS
SCALE: NOT TO SCALE

WIRE SIZE	BURNDY LUG	BOLT SIZE
#6 AWG GREEN INSULATED	YA6C-2TC38	3/8" - 16 NC S 2 BOLT
#2 AWG SOLID TINNED	YA3C-2TC38	3/8" - 16 NC S 2 BOLT
#2 AWG STRANDED	YA2C-2TC38	3/8" - 16 NC S 2 BOLT
#2/0 AWG STRANDED	YA26-2TC38	3/8" - 16 NC S 2 BOLT
#4/0 AWG STRANDED	YA28-2N	1/2" - 16 NC S 2 BOLT

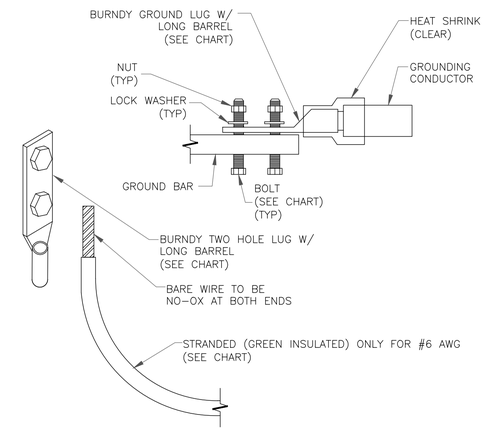

NOTES:

1. ALL GROUNDING LUGS ARE TO BE INSTALLED PER MANUFACTURER'S SPECIFICATIONS. ALL HARDWARE BOLTS, NUTS, LOCK WASHERS SHALL BE STAINLESS STEEL. ALL HARDWARE ARE TO BE AS FOLLOWS: BOLT, FLAT WASHER,GROUND BAR, GROUND LUG, FLAT WASHER AND NUT.

2 MECHANICAL LUG CONNECTION
SCALE: NOT TO SCALE

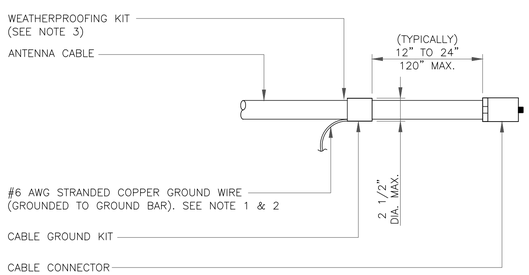

NOTES:

1. DO NOT INSTALL CABLE GROUND KIT AT A BEND AND ALWAYS DIRECT GROUND WIRE DOWN TO GROUND BAR.
2. GROUNDING KIT SHALL BE TYPE AND PART NUMBER AS SUPPLIED OR RECOMMENDED BY CABLE MANUFACTURER.
3. WEATHER PROOFING SHALL BE TWO-PART TAPE KIT, COLD SHRINK SHALL NOT BE USED.

3 CABLE GROUND KIT CONNECTION
SCALE: NOT TO SCALE

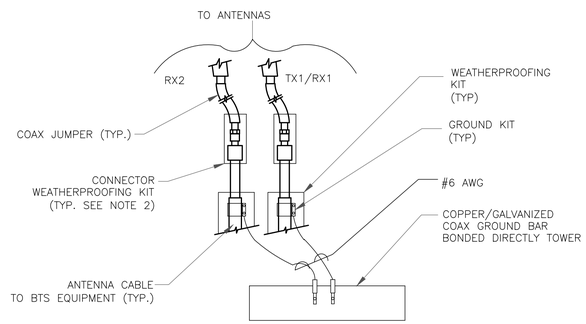

NOTES:

1. DO NOT INSTALL CABLE GROUND KIT AT A BEND AND ALWAYS DIRECT GROUND WIRE DOWN TO ANTENNA GROUND BAR.
2. WEATHER PROOFING SHALL BE TWO-PART TAPE KIT. COLD SHRINK SHALL NOT BE USED.

4 GROUND CABLE CONNECTION
SCALE: NOT TO SCALE

5 NOT USED
SCALE: NOT TO SCALE

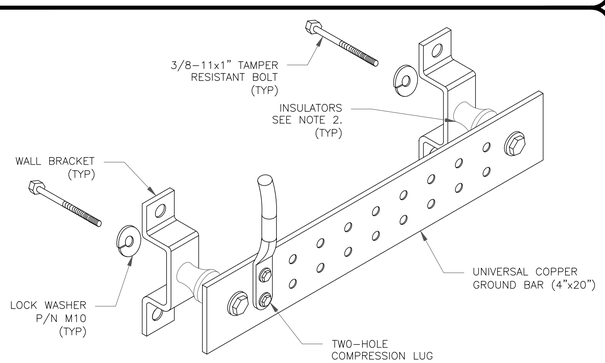

NOTES:

1. DOWN LEAD (HOME RUN) CONDUCTORS ARE NOT TO BE INSTALLED ON CROWN CASTLE USA INC. TOWER, PER THE GROUNDING DOWN CONDUCTOR POLICY QAS-STD-10091. NO MODIFICATION OR DRILLING TO TOWER STEEL IS ALLOWED IN ANY FORM OR FASHION, CAD-WELDING ON THE TOWER AND/OR IN THE AIR ARE NOT PERMITTED.
2. OMIT INSULATOR WHEN MOUNTING TO TOWER STEEL OR PLATFORM STEEL USE INSULATORS WHEN ATTACHING TO BUILDING OR SHELTERS.

6 GROUND BAR DETAIL
SCALE: NOT TO SCALE

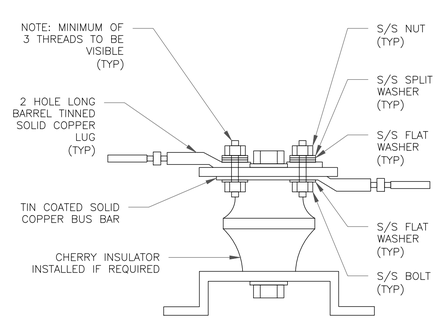

7 LUG DETAIL
SCALE: NOT TO SCALE

8 NOT USED
SCALE: NOT TO SCALE

verizon
180 WASHINGTON VALLEY ROAD
BEDMINSTER, NJ 07921

CROWN CASTLE
1500 CORPORATE DRIVE
CANONSBURG, PA 15317

INFINIGY
FROM ZERO TO INFINIGY
the solutions are endless
BELLEVUE, WA 98004

VERIZON SITE NUMBER:
469283

BU #: **876369**
HARWINTON / BUCKLEY BROADCASTI

64 HUNGERFORD LANE
HARWINTON, CT 06794

EXISTING 178'-0" MONOPOLE

ISSUED FOR:

REV	DATE	DRWN	DESCRIPTION	DES./QA
0	06/04/2021	RCD	FINAL CDs	--
1	08/03/2021	RCD	FINAL CDs	--
2	09/29/2021	CB	FINAL CDs	--

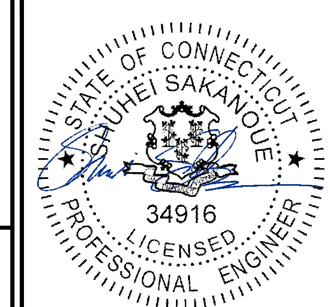

10/4/2021

IT IS A VIOLATION OF LAW FOR ANY PERSON, UNLESS THEY ARE ACTING UNDER THE DIRECTION OF A LICENSED PROFESSIONAL ENGINEER, TO ALTER THIS DOCUMENT.

SHEET NUMBER: G-2
REVISION: 2

Exhibit D

Structural Analysis Report

Date: **May 4, 2021**

Tower Engineering Professionals
326 Tryon Road
Raleigh, NC 27603
(919) 661-6351

Subject: Structural Analysis Report

Carrier Designation:	***Verizon Wireless* Co-Locate**	
	Site Number:	469283
	Site Name:	Harwinton 1 CT
Crown Castle Designation:	**BU Number:**	876369
	Site Name:	Harwinton / Buckley Broadcasti
	JDE Job Number:	644650
	Work Order Number:	1957191
	Order Number:	552649 Rev. 1
Engineering Firm Designation:	**TEP Project Number:**	217429.537478
Site Data:	**64 Hungerford Lane, Harwinton, Litchfield County, CT 06791** **Latitude *41° 45' 26.15"*, Longitude *-73° 3' 9.20"*** **178 Foot - Monopole Tower**	

Tower Engineering Professionals is pleased to submit this **"Structural Analysis Report"** to determine the structural integrity of the above-mentioned tower.

The purpose of the analysis is to determine acceptability of the tower stress level. Based on our analysis we have determined the tower stress level for the structure and foundation, under the following load case, to be:

LC7: Proposed Equipment Configuration **Sufficient Capacity - 73.3%**

This analysis utilizes an ultimate 3-second gust wind speed of 118 mph as required by the 2015 International Building Code. Applicable Standard references and design criteria are listed in Section 2 - Analysis Criteria.

Structural analysis prepared by: Adam J. Schutt / RAL

Respectfully submitted by:

Aaron T. Rucker, P.E.

STATE OF CONNECTICUT
AARON THOMAS RUCKER
32608
LICENSED
PROFESSIONAL ENGINEER

Electronic Copy

05/04/2021

TABLE OF CONTENTS

1) INTRODUCTION

2) ANALYSIS CRITERIA
- Table 1 - Proposed Equipment Configuration
- Table 2 - Other Considered Equipment

3) ANALYSIS PROCEDURE
- Table 3 - Documents Provided
- 3.1) Analysis Method
- 3.2) Assumptions

4) ANALYSIS RESULTS
- Table 4 - Section Capacity (Summary)
- Table 5 - Tower Component Stresses vs. Capacity
- 4.1) Recommendations

5) APPENDIX A
- tnxTower Output

6) APPENDIX B
- Base Level Drawing

7) APPENDIX C
- Additional Calculations

1) INTRODUCTION

This tower is a 178-ft monopole tower designed by Engineered Endeavors, Inc.

2) ANALYSIS CRITERIA

TIA-222 Revision:	TIA-222-H
Risk Category:	II
Wind Speed:	118 mph
Exposure Category:	C
Topographic Factor:	1.0
Ice Thickness:	1.5 in
Wind Speed with Ice:	50 mph
Service Wind Speed:	60 mph

Table 1 - Proposed Equipment Configuration

Mounting Level (ft)	Center Line Elevation (ft)	Number of Antennas	Antenna Manufacturer	Antenna Model	Number of Feed Lines	Feed Line Size (in)
168.0	170.0	6	Antel	LPA-80080/6CF w/ Mount Pipe	7	1-5/8
		6	Quintel Technology	QS6656-5D w/ Mount Pipe		
		3	Samsung Telecom.	MT6407-77A w/ Mount Pipe		
		1	RFS Celwave	DB-C1-12C-24AB-0Z		
		3	Samsung Telecom.	RFV01U-D1A		
		3	Samsung Telecom.	RFV01U-D2A		
	168.0	1	Tower Mounts	Platform Mount [LP 403-1]		

Table 2 - Other Considered Equipment

Mounting Level (ft)	Center Line Elevation (ft)	Number of Antennas	Antenna Manufacturer	Antenna Model	Number of Feed Lines	Feed Line Size (in)
178.0	180.0	3	RFS Celwave	APX16DWV-16DWV-S-E-A20 w/ Mount Pipe	4	1-5/8
		3	RFS Celwave	APXVAALL24_43-U-NA20_TMO w/ Mount Pipe		
		3	Ericsson	AIR6449 B41_T-MOBILE w/ Mount Pipe		
		3	Ericsson	RADIO 4415 B66A_CCIV3		
		3	Ericsson	RADIO 4449 B71 B85A_T-MOBILE		
		3	Ericsson	RADIO 4424 B25_TMO		
	178.0	1	SitePro1	RMQP-496-HK Platform Mount		
		3	SitePro1	PRK-1245 Kicker Kit		
		1	SitePro1	HRK12 Support Rail		

Mounting Level (ft)	Center Line Elevation (ft)	Number of Antennas	Antenna Manufacturer	Antenna Model	Number of Feed Lines	Feed Line Size (in)
156.0	158.0	3	Powerwave Tech.	7770.00 w/ Mount Pipe	12 2 2 2	1-5/8 3/8 7/16 3/4
		1	CCI Antennas	HPA65R-BU6A w/ Mount Pipe		
		2	Commscope	SBNHH-1D65A w/ Mount Pipe		
		3	Kathrein	80010964 w/ Mount Pipe		
		6	Powerwave Tech.	LGP21401		
		3	Ericsson	RRUS 4449 B5/B12		
		3	Ericsson	RRUS 8843 B2/B66A		
		1	Raycap	DC6-48-60-18-8C-EV		
		1	Raycap	DC6-48-60-18-8F		
	156.0	1	Tower Mounts	Platform Mount [LP 303-1]		
75.0	76.0	1	Lucent	KS24019-L112A	1	1/2
	75.0	1	Tower Mount	Side Arm Mount [SO 701-1]		

3) ANALYSIS PROCEDURE

Table 3 - Documents Provided

Document	Reference	Source
Geotechnical Report	1532983	CCISites
Tower Foundation Drawings	2150286	CCISites
Tower Manufacturer Drawings	2150280	CCISites

3.1) Analysis Method

tnxTower (version 8.0.9.0), a commercially available analysis software package, was used to create a three-dimensional model of the tower and calculate member stresses for various loading cases. Selected output from the analysis is included in Appendix A. When applicable, Crown Castle has calculated and provided the effective area for panel antennas using approved methods following the intent of the TIA-222 Standard.

3.2) Assumptions

1) The tower and structures were maintained in accordance with the TIA-222 Standard.
2) The configuration of antennas, transmission cables, mounts and other appurtenances are as specified in Tables 1 and 2, and the referenced drawings.

This analysis may be affected if any assumptions are not valid or have been made in error. Tower Engineering Professionals should be notified to determine the effect on the structural integrity of the tower.

4) ANALYSIS RESULTS

Table 4 - Section Capacity (Summary)

Section No.	Elevation (ft)	Component Type	Size	Critical Element	P (k)	ϕP_{allow} (k)	% Capacity	Pass / Fail
L1	178 - 129.87	Pole	TP29.64x19.5x0.25	1	-14.01	1388.85	60.8	Pass
L2	129.87 - 84.83	Pole	TP38.5x28.2446x0.375	2	-23.19	2706.23	56.6	Pass
L3	84.83 - 41.2833	Pole	TP46.8x36.6403x0.4375	3	-35.99	3840.78	56.1	Pass
L4	41.2833 - 0	Pole	TP54.5x44.5913x0.5	4	-55.10	5264.00	53.2	Pass
							Summary	
						Pole (L1)	60.8	Pass
						RATING =	**60.8**	**Pass**

Table 5 - Tower Component Stresses vs. Capacity - LC7

Notes	Component	Elevation (ft)	% Capacity	Pass / Fail
1,2	Anchor Rods	-	54.5	Pass
1,2	Base Plate	-	60.2	Pass
1,2	Base Foundation Soil Interaction	-	65.4	Pass
1,2	Base Foundation Structural	-	73.3	Pass

Structure Rating (max from all components) =	**73.3%**

Notes:
1) See additional documentation in "Appendix C - Additional Calculations" for calculations supporting the % capacity listed.
2) Rating per TIA-222-H Section 15.5

4.1) Recommendations

1) The tower and its foundation have sufficient capacity to carry the proposed load configuration. No modifications are required at this time.

APPENDIX A

TNXTOWER OUTPUT

Section	Length (ft)	Number of Sides	Thickness (in)	Socket Length (ft)	Top Dia (in)	Bot Dia (in)	Grade	Weight (K)
1	48.13	18	0.2500	4.25	19.5000	29.6400	A572-65	3.2
2	49.29	18	0.3750	5.33	28.2446	38.5000	A572-65	6.6
3	48.88	18	0.4375	6.42	36.6403	46.8000	A572-65	9.5
4	47.70	18	0.5000		44.5913	54.5000	A572-65	12.6
								31.9

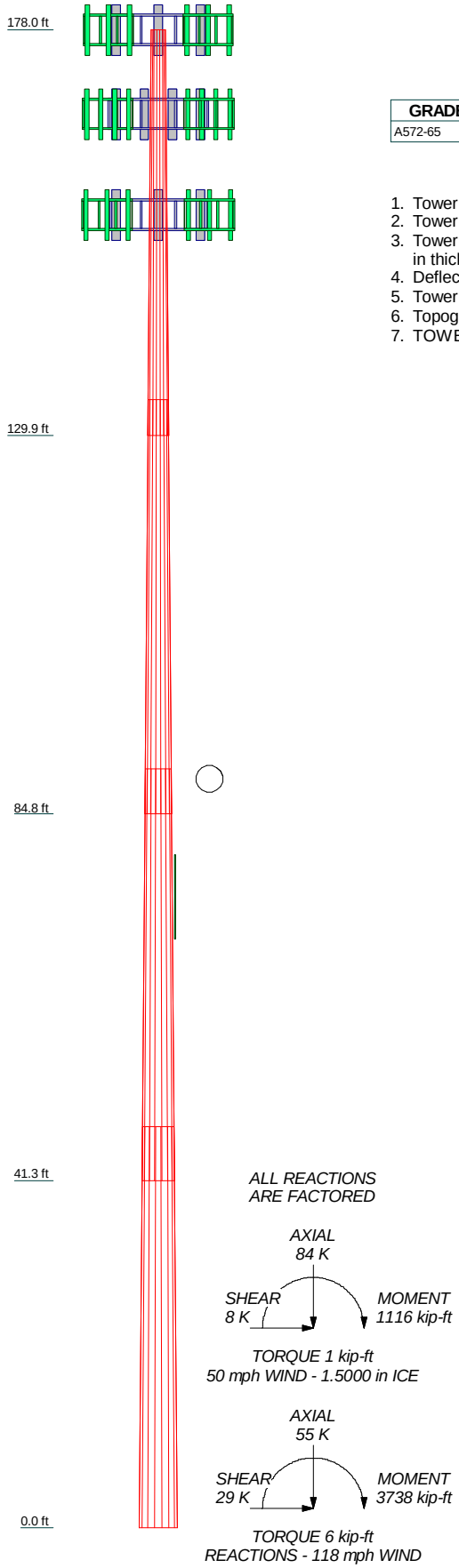

MATERIAL STRENGTH

GRADE	Fy	Fu	GRADE	Fy	Fu
A572-65	65 ksi	80 ksi			

TOWER DESIGN NOTES

1. Tower designed for Exposure C to the TIA-222-H Standard.
2. Tower designed for a 118 mph basic wind in accordance with the TIA-222-H Standard.
3. Tower is also designed for a 50 mph basic wind with 1.50 in ice. Ice is considered to increase in thickness with height.
4. Deflections are based upon a 60 mph wind.
5. Tower Risk Category II.
6. Topographic Category 1 with Crest Height of 0.00 ft
7. TOWER RATING: 60.8%

Tower Engineering Professionals
326 Tryon Road
Raleigh, NC 27603
Phone: (919) 661-6351
FAX: (919) 661-6350

Tower Engineering Professionals

Job: **Harwinton/ Buckley Broadcasti (BU 876369)**			
Project: **TEP No. 217429.537478**			
Client: Crown Castle	Drawn by: Julie C. Ryland	App'd:	
Code: TIA-222-H	Date: 05/03/21	Scale: NTS	
Path:		Dwg No. E-1	

Tower Input Data

The tower is a monopole.
This tower is designed using the TIA-222-H standard.
The following design criteria apply:

Tower base elevation above sea level: 841.00 ft.
Basic wind speed of 118 mph.
Risk Category II.
Exposure Category C.
Simplified Topographic Factor Procedure for wind speed-up calculations is used.
Topographic Category: 1.
Crest Height: 0.00 ft.
Nominal ice thickness of 1.5000 in.
Ice thickness is considered to increase with height.
Ice density of 56 pcf.
A wind speed of 50 mph is used in combination with ice.
Temperature drop of 50 °F.
Deflections calculated using a wind speed of 60 mph.
A non-linear (P-delta) analysis was used.
Pressures are calculated at each section.
Stress ratio used in pole design is 1.
Tower analysis based on target reliabilities in accordance with Annex S.
Load Modification Factors used: $K_{es}(F_w) = 0.95$, $K_{es}(t_i) = 0.85$.
Maximum demand-capacity ratio is: 1.05.
Local bending stresses due to climbing loads, feed line supports, and appurtenance mounts are not considered.

Options

Consider Moments - Legs
Consider Moments - Horizontals
Consider Moments - Diagonals
Use Moment Magnification
√ Use Code Stress Ratios
√ Use Code Safety Factors - Guys
Escalate Ice
Always Use Max Kz
Use Special Wind Profile
Include Bolts In Member Capacity
Leg Bolts Are At Top Of Section
Secondary Horizontal Braces Leg
Use Diamond Inner Bracing (4 Sided)
SR Members Have Cut Ends
SR Members Are Concentric

Distribute Leg Loads As Uniform
Assume Legs Pinned
√ Assume Rigid Index Plate
√ Use Clear Spans For Wind Area
Use Clear Spans For KL/r
Retension Guys To Initial Tension
√ Bypass Mast Stability Checks
√ Use Azimuth Dish Coefficients
√ Project Wind Area of Appurt.
Autocalc Torque Arm Areas
Add IBC .6D+W Combination
√ Sort Capacity Reports By Component
Triangulate Diamond Inner Bracing
Treat Feed Line Bundles As Cylinder
Ignore KL/ry For 60 Deg. Angle Legs

Use ASCE 10 X-Brace Ly Rules
Calculate Redundant Bracing Forces
Ignore Redundant Members in FEA
SR Leg Bolts Resist Compression
All Leg Panels Have Same Allowable
Offset Girt At Foundation
√ Consider Feed Line Torque
Include Angle Block Shear Check
Use TIA-222-H Bracing Resist. Exemption
Use TIA-222-H Tension Splice Exemption

Poles

√ Include Shear-Torsion Interaction
Always Use Sub-Critical Flow
Use Top Mounted Sockets
Pole Without Linear Attachments
Pole With Shroud Or No Appurtenances
Outside and Inside Corner Radii Are Known

Tapered Pole Section Geometry

Section	Elevation ft	Section Length ft	Splice Length ft	Number of Sides	Top Diameter in	Bottom Diameter in	Wall Thickness in	Bend Radius in	Pole Grade
L1	178.00-129.87	48.13	4.25	18	19.5000	29.6400	0.2500	1.0000	A572-65 (65 ksi)
L2	129.87-84.83	49.29	5.33	18	28.2446	38.5000	0.3750	1.5000	A572-65 (65 ksi)
L3	84.83-41.28	48.88	6.42	18	36.6403	46.8000	0.4375	1.7500	A572-65 (65 ksi)
L4	41.28-0.00	47.70		18	44.5913	54.5000	0.5000	2.0000	A572-65 (65 ksi)

Tapered Pole Properties

Section	Tip Dia. in	Area in^2	I in^4	r in	C in	I/C in^3	J in^4	It/Q in^2	w in	w/t
L1	19.7623	15.2749	715.1161	6.8338	9.9060	72.1902	1431.1733	7.6389	2.9920	11.968
	30.0587	23.3210	2544.9728	10.4335	15.0571	169.0212	5093.2943	11.6627	4.7766	19.107
L2	29.5204	33.1718	3255.1309	9.8937	14.3483	226.8658	6514.5449	16.5891	4.3111	11.496
	39.0361	45.3783	8333.0732	13.5344	19.5580	426.0698	16677.1113	22.6935	6.1160	16.309
L3	38.2637	50.2722	8324.3518	12.8520	18.6133	447.2262	16659.6570	25.1409	5.6787	12.98
	47.4545	64.3801	17483.2823	16.4587	23.7744	735.3827	34989.5695	32.1962	7.4668	17.067
L4	46.5556	69.9729	17185.9261	15.6524	22.6524	758.6809	34394.4660	34.9931	6.9681	13.936
	55.2636	85.6980	31571.5320	19.1700	27.6860	1140.3428	63184.6066	42.8571	8.7120	17.424

Tower Elevation ft	Gusset Area (per face) ft^2	Gusset Thickness in	Gusset Grade	Adjust. Factor A_f	Adjust. Factor A_r	Weight Mult.	Double Angle Stitch Bolt Spacing Diagonals in	Double Angle Stitch Bolt Spacing Horizontals in	Double Angle Stitch Bolt Spacing Redundants in
L1 178.00-129.87				1	1	1			
L2 129.87-84.83				1	1	1			
L3 84.83-41.28				1	1	1			
L4 41.28-0.00				1	1	1			

Feed Line/Linear Appurtenances - Entered As Round Or Flat

Description	Sector	Exclude From Torque Calculation	Component Type	Placement ft	Total Number	Number Per Row	Start/End Position	Width or Diameter in	Perimeter in	Weight plf
Safety Line 3/8 ***	C	No	Surface Ar (CaAa)	178.00 - 10.00	1	1	0.000 0.000	0.3750		0.22
LDF7-50A(1-5/8) ***	B	No	Surface Ar (CaAa)	168.00 - 0.00	3	3	0.350 0.350	1.9800		0.82
LDF4-50A(1/2) ***	B	No	Surface Ar (CaAa)	75.00 - 8.00	1	1	-0.250 -0.250	0.6250		0.15

Feed Line/Linear Appurtenances - Entered As Area

Description	Face or Leg	Allow Shield	Exclude From Torque Calculation	Component Type	Placement ft	Total Number		C_AA_A ft^2/ft	Weight plf
***									
HB158-21U6S24-xx M_TMO(1-5/8)	C	No	No	Inside Pole	178.00 - 0.00	4	No Ice	0.00	2.50
							1/2" Ice	0.00	2.50
							1" Ice	0.00	2.50
							2" Ice	0.00	2.50
LDF7-50A(1-5/8)	C	No	No	Inside Pole	168.00 - 0.00	4	No Ice	0.00	0.82
							1/2" Ice	0.00	0.82
							1" Ice	0.00	0.82
							2" Ice	0.00	0.82
***									
2" innerduct conduit	C	No	No	Inside Pole	156.00 - 0.00	1	No Ice	0.00	0.20
							1/2" Ice	0.00	0.20
							1" Ice	0.00	0.20
							2" Ice	0.00	0.20
LDF7-50A(1-5/8)	C	No	No	Inside Pole	156.00 - 0.00	12	No Ice	0.00	0.82
							1/2" Ice	0.00	0.82
							1" Ice	0.00	0.82
							2" Ice	0.00	0.82
FB-L98B-002-75000 (3/8)	C	No	No	Inside Pole	156.00 - 0.00	2	No Ice	0.00	0.06
							1/2" Ice	0.00	0.06
							1" Ice	0.00	0.06
							2" Ice	0.00	0.06
WR-VG122ST-BRD A(7/16)	C	No	No	Inside Pole	156.00 - 0.00	2	No Ice	0.00	0.14
							1/2" Ice	0.00	0.14
							1" Ice	0.00	0.14
							2" Ice	0.00	0.14
WR-VG86ST-BRD(3/4)	C	No	No	Inside Pole	156.00 - 0.00	2	No Ice	0.00	0.58
							1/2" Ice	0.00	0.58
							1" Ice	0.00	0.58
							2" Ice	0.00	0.58
***									

Feed Line/Linear Appurtenances Section Areas

Tower Section	Tower Elevation ft	Face	A_R ft^2	A_F ft^2	C_AA_A In Face ft^2	C_AA_A Out Face ft^2	Weight K
L1	178.00-129.87	A	0.000	0.000	0.000	0.000	0.00
		B	0.000	0.000	22.649	0.000	0.09
		C	0.000	0.000	1.805	0.000	0.92
L2	129.87-84.83	A	0.000	0.000	0.000	0.000	0.00
		B	0.000	0.000	26.754	0.000	0.11
		C	0.000	0.000	1.689	0.000	1.13
L3	84.83-41.28	A	0.000	0.000	0.000	0.000	0.00
		B	0.000	0.000	27.974	0.000	0.11
		C	0.000	0.000	1.633	0.000	1.09
L4	41.28-0.00	A	0.000	0.000	0.000	0.000	0.00
		B	0.000	0.000	26.602	0.000	0.11
		C	0.000	0.000	1.173	0.000	1.03

Feed Line/Linear Appurtenances Section Areas - With Ice

Tower Section	Tower Elevation ft	Face or Leg	Ice Thickness in	A_R ft^2	A_F ft^2	C_AA_A In Face ft^2	C_AA_A Out Face ft^2	Weight K
L1	178.00-129.87	A	1.486	0.000	0.000	0.000	0.000	0.00
		B		0.000	0.000	42.475	0.000	0.53
		C		0.000	0.000	16.108	0.000	1.08
L2	129.87-84.83	A	1.434	0.000	0.000	0.000	0.000	0.00
		B		0.000	0.000	50.173	0.000	0.63
		C		0.000	0.000	15.074	0.000	1.28
L3	84.83-41.28	A	1.359	0.000	0.000	0.000	0.000	0.00
		B		0.000	0.000	59.714	0.000	0.71
		C		0.000	0.000	14.118	0.000	1.23
L4	41.28-0.00	A	1.218	0.000	0.000	0.000	0.000	0.00
		B		0.000	0.000	55.813	0.000	0.65
		C		0.000	0.000	9.679	0.000	1.12

Feed Line Center of Pressure

Section	Elevation ft	CP_X in	CP_Z in	CP_X Ice in	CP_Z Ice in
L1	178.00-129.87	3.1396	0.8985	2.6501	1.4918
L2	129.87-84.83	3.8276	1.0495	3.3727	1.7063
L3	84.83-41.28	4.0727	0.7946	3.9066	0.9966
L4	41.28-0.00	4.1891	0.7522	4.1286	0.7782

Note: For pole sections, center of pressure calculations do not consider feed line shielding.

Shielding Factor Ka

Tower Section	Feed Line Record No.	Description	Feed Line Segment Elev.	K_a No Ice	K_a Ice
L1	1	Safety Line 3/8	129.87 - 178.00	1.0000	1.0000
L1	7	LDF7-50A(1-5/8)	129.87 - 168.00	1.0000	1.0000
L2	1	Safety Line 3/8	84.83 - 129.87	1.0000	1.0000
L2	7	LDF7-50A(1-5/8)	84.83 - 129.87	1.0000	1.0000
L3	1	Safety Line 3/8	41.28 - 84.83	1.0000	1.0000
L3	7	LDF7-50A(1-5/8)	41.28 - 84.83	1.0000	1.0000
L3	16	LDF4-50A(1/2)	41.28 - 75.00	1.0000	1.0000
L4	1	Safety Line 3/8	10.00 - 41.28	1.0000	1.0000
L4	7	LDF7-50A(1-5/8)	0.00 - 41.28	1.0000	1.0000
L4	16	LDF4-50A(1/2)	8.00 - 41.28	1.0000	1.0000

Discrete Tower Loads

Description	Face or Leg	Offset Type	Offsets: Horz Lateral Vert ft ft ft	Azimuth Adjustment °	Placement ft		C_AA_A Front ft^2	C_AA_A Side ft^2	Weight K
178									
APX16DWV-16DWV-S-E-A20 w/ Mount Pipe	A	From Centroid-Face	4.00 0.00 2.00	0.0000	178.00	No Ice 1/2" Ice 1" Ice 2" Ice	6.29 6.86 7.45 8.68	2.76 3.27 3.79 4.90	0.06 0.11 0.16 0.29
APX16DWV-16DWV-S-E-A20 w/ Mount Pipe	B	From Centroid-Face	4.00 0.00 2.00	0.0000	178.00	No Ice 1/2" Ice 1" Ice 2" Ice	6.29 6.86 7.45 8.68	2.76 3.27 3.79 4.90	0.06 0.11 0.16 0.29
APX16DWV-16DWV-S-E-A20 w/ Mount Pipe	C	From Centroid-Face	4.00 0.00 2.00	0.0000	178.00	No Ice 1/2" Ice 1" Ice 2" Ice	6.29 6.86 7.45 8.68	2.76 3.27 3.79 4.90	0.06 0.11 0.16 0.29
APXVAALL24_43-U-NA20_TMO w/ Mount Pipe	A	From Centroid-Face	4.00 0.00 2.00	0.0000	178.00	No Ice 1/2" Ice 1" Ice 2" Ice	14.69 15.46 16.23 17.82	6.87 7.55 8.25 9.67	0.18 0.31 0.45 0.78
APXVAALL24_43-U-NA20_TMO w/ Mount Pipe	B	From Centroid-Face	4.00 0.00 2.00	0.0000	178.00	No Ice 1/2" Ice 1" Ice 2" Ice	14.69 15.46 16.23 17.82	6.87 7.55 8.25 9.67	0.18 0.31 0.45 0.78
APXVAALL24_43-U-NA20_TMO w/ Mount Pipe	C	From Centroid-Face	4.00 0.00 2.00	0.0000	178.00	No Ice 1/2" Ice 1" Ice 2" Ice	14.69 15.46 16.23 17.82	6.87 7.55 8.25 9.67	0.18 0.31 0.45 0.78
AIR6449 B41_T-MOBILE w/ Mount Pipe	A	From Centroid-Face	4.00 0.00 2.00	0.0000	178.00	No Ice 1/2" Ice 1" Ice 2" Ice	5.19 5.59 6.02 6.90	2.71 3.04 3.38 4.12	0.13 0.17 0.23 0.35
AIR6449 B41_T-MOBILE w/ Mount Pipe	B	From Centroid-Face	4.00 0.00 2.00	0.0000	178.00	No Ice 1/2" Ice 1" Ice 2" Ice	5.19 5.59 6.02 6.90	2.71 3.04 3.38 4.12	0.13 0.17 0.23 0.35
AIR6449 B41_T-MOBILE w/ Mount Pipe	C	From Centroid-Face	4.00 0.00 2.00	0.0000	178.00	No Ice 1/2" Ice 1" Ice 2" Ice	5.19 5.59 6.02 6.90	2.71 3.04 3.38 4.12	0.13 0.17 0.23 0.35
RADIO 4415 B66A_CCIV3	A	From Centroid-Face	4.00 0.00 2.00	0.0000	178.00	No Ice 1/2" Ice 1" Ice 2" Ice	1.64 1.80 1.97 2.32	0.68 0.79 0.91 1.18	0.05 0.06 0.07 0.11
RADIO 4415 B66A_CCIV3	B	From Centroid-Face	4.00 0.00 2.00	0.0000	178.00	No Ice 1/2" Ice 1" Ice 2" Ice	1.64 1.80 1.97 2.32	0.68 0.79 0.91 1.18	0.05 0.06 0.07 0.11
RADIO 4415 B66A_CCIV3	C	From Centroid-Face	4.00 0.00 2.00	0.0000	178.00	No Ice 1/2" Ice 1" Ice 2" Ice	1.64 1.80 1.97 2.32	0.68 0.79 0.91 1.18	0.05 0.06 0.07 0.11
RADIO 4449 B71	A	From	4.00	0.0000	178.00	No Ice	1.97	1.59	0.07

Description	Face or Leg	Offset Type	Offsets: Horz Lateral Vert ft ft ft	Azimuth Adjustment °	Placement ft		C_AA_A Front ft^2	C_AA_A Side ft^2	Weight K
B85A_T-MOBILE		Centroid-Fa	0.00			1/2" Ice	2.15	1.75	0.09
		ce	2.00			1" Ice	2.33	1.92	0.12
						2" Ice	2.72	2.28	0.17
RADIO 4449 B71	B	From	4.00	0.0000	178.00	No Ice	1.97	1.59	0.07
B85A_T-MOBILE		Centroid-Fa	0.00			1/2" Ice	2.15	1.75	0.09
		ce	2.00			1" Ice	2.33	1.92	0.12
						2" Ice	2.72	2.28	0.17
RADIO 4449 B71	C	From	4.00	0.0000	178.00	No Ice	1.97	1.59	0.07
B85A_T-MOBILE		Centroid-Fa	0.00			1/2" Ice	2.15	1.75	0.09
		ce	2.00			1" Ice	2.33	1.92	0.12
						2" Ice	2.72	2.28	0.17
RADIO 4424 B25_TMO	A	From	4.00	0.0000	178.00	No Ice	2.05	1.61	0.09
		Centroid-Fa	0.00			1/2" Ice	2.23	1.77	0.11
		ce	2.00			1" Ice	2.42	1.94	0.13
						2" Ice	2.81	2.30	0.19
RADIO 4424 B25_TMO	B	From	4.00	0.0000	178.00	No Ice	2.05	1.61	0.09
		Centroid-Fa	0.00			1/2" Ice	2.23	1.77	0.11
		ce	2.00			1" Ice	2.42	1.94	0.13
						2" Ice	2.81	2.30	0.19
RADIO 4424 B25_TMO	C	From	4.00	0.0000	178.00	No Ice	2.05	1.61	0.09
		Centroid-Fa	0.00			1/2" Ice	2.23	1.77	0.11
		ce	2.00			1" Ice	2.42	1.94	0.13
						2" Ice	2.81	2.30	0.19
Site Pro 1 RMQP-496-HK +	C	None		0.0000	178.00	No Ice	28.31	28.31	1.77
PRK-1245 + HRK12						1/2" Ice	35.69	35.69	2.30
						1" Ice	43.11	43.11	2.94
						2" Ice	58.21	58.21	4.60
***									
168									
(2) LPA-80080/6CF w/	A	From	4.00	0.0000	168.00	No Ice	4.56	10.26	0.05
Mount Pipe		Centroid-Fa	0.00			1/2" Ice	5.11	11.43	0.11
		ce	2.00			1" Ice	5.61	12.31	0.19
						2" Ice	6.65	14.13	0.36
(2) LPA-80080/6CF w/	B	From	4.00	0.0000	168.00	No Ice	4.56	10.26	0.05
Mount Pipe		Centroid-Fa	0.00			1/2" Ice	5.11	11.43	0.11
		ce	2.00			1" Ice	5.61	12.31	0.19
						2" Ice	6.65	14.13	0.36
(2) LPA-80080/6CF w/	B	From	4.00	0.0000	168.00	No Ice	4.56	10.26	0.05
Mount Pipe		Centroid-Fa	0.00			1/2" Ice	5.11	11.43	0.11
		ce	2.00			1" Ice	5.61	12.31	0.19
						2" Ice	6.65	14.13	0.36
(2) QS6656-5D w/ Mount	A	From	4.00	0.0000	168.00	No Ice	4.04	4.18	0.11
Pipe		Centroid-Fa	0.00			1/2" Ice	4.42	4.57	0.18
		ce	2.00			1" Ice	4.82	4.97	0.26
						2" Ice	5.63	5.79	0.46
(2) QS6656-5D w/ Mount	B	From	4.00	0.0000	168.00	No Ice	4.04	4.18	0.11
Pipe		Centroid-Fa	0.00			1/2" Ice	4.42	4.57	0.18
		ce	2.00			1" Ice	4.82	4.97	0.26
						2" Ice	5.63	5.79	0.46
(2) QS6656-5D w/ Mount	C	From	4.00	0.0000	168.00	No Ice	4.04	4.18	0.11
Pipe		Centroid-Fa	0.00			1/2" Ice	4.42	4.57	0.18
		ce	2.00			1" Ice	4.82	4.97	0.26
						2" Ice	5.63	5.79	0.46
MT6407-77A w/ Mount Pipe	A	From	4.00	0.0000	168.00	No Ice	4.91	2.68	0.10
		Centroid-Fa	0.00			1/2" Ice	5.26	3.14	0.14
		ce	2.00			1" Ice	5.61	3.62	0.18
						2" Ice	6.36	4.63	0.29

Description	Face or Leg	Offset Type	Offsets: Horz Lateral Vert ft ft ft	Azimuth Adjustment °	Placement ft		C_AA_A Front ft^2	C_AA_A Side ft^2	Weight K
MT6407-77A w/ Mount Pipe	B	From Centroid-Face	4.00 0.00 2.00	0.0000	168.00	No Ice 1/2" Ice 1" Ice 2" Ice	4.91 5.26 5.61 6.36	2.68 3.14 3.62 4.63	0.10 0.14 0.18 0.29
MT6407-77A w/ Mount Pipe	C	From Centroid-Face	4.00 0.00 2.00	0.0000	168.00	No Ice 1/2" Ice 1" Ice 2" Ice	4.91 5.26 5.61 6.36	2.68 3.14 3.62 4.63	0.10 0.14 0.18 0.29
DB-C1-12C-24AB-0Z	A	From Centroid-Face	4.00 0.00 2.00	0.0000	168.00	No Ice 1/2" Ice 1" Ice 2" Ice	4.06 4.32 4.58 5.14	3.10 3.34 3.58 4.09	0.03 0.07 0.11 0.20
RFV01U-D1A	A	From Centroid-Face	4.00 0.00 2.00	0.0000	168.00	No Ice 1/2" Ice 1" Ice 2" Ice	1.88 2.05 2.22 2.60	1.25 1.39 1.54 1.86	0.08 0.10 0.12 0.18
RFV01U-D1A	B	From Centroid-Face	4.00 0.00 2.00	0.0000	168.00	No Ice 1/2" Ice 1" Ice 2" Ice	1.88 2.05 2.22 2.60	1.25 1.39 1.54 1.86	0.08 0.10 0.12 0.18
RFV01U-D1A	C	From Centroid-Face	4.00 0.00 2.00	0.0000	168.00	No Ice 1/2" Ice 1" Ice 2" Ice	1.88 2.05 2.22 2.60	1.25 1.39 1.54 1.86	0.08 0.10 0.12 0.18
RFV01U-D2A	A	From Centroid-Face	4.00 0.00 2.00	0.0000	168.00	No Ice 1/2" Ice 1" Ice 2" Ice	1.88 2.05 2.22 2.60	1.01 1.14 1.28 1.59	0.07 0.09 0.11 0.15
RFV01U-D2A	B	From Centroid-Face	4.00 0.00 2.00	0.0000	168.00	No Ice 1/2" Ice 1" Ice 2" Ice	1.88 2.05 2.22 2.60	1.01 1.14 1.28 1.59	0.07 0.09 0.11 0.15
RFV01U-D2A	C	From Centroid-Face	4.00 0.00 2.00	0.0000	168.00	No Ice 1/2" Ice 1" Ice 2" Ice	1.88 2.05 2.22 2.60	1.01 1.14 1.28 1.59	0.07 0.09 0.11 0.15
Platform Mount [LP 403-1]	C	None		0.0000	168.00	No Ice 1/2" Ice 1" Ice 2" Ice	18.94 23.31 27.74 36.77	18.94 23.31 27.74 36.77	1.50 1.90 2.37 3.53
156									
7770.00 w/ Mount Pipe	A	From Centroid-Leg	4.00 0.00 2.00	0.0000	156.00	No Ice 1/2" Ice 1" Ice 2" Ice	5.75 6.18 6.61 7.49	4.25 5.01 5.71 7.16	0.06 0.10 0.16 0.29
7770.00 w/ Mount Pipe	B	From Centroid-Leg	4.00 0.00 2.00	0.0000	156.00	No Ice 1/2" Ice 1" Ice 2" Ice	5.75 6.18 6.61 7.49	4.25 5.01 5.71 7.16	0.06 0.10 0.16 0.29
7770.00 w/ Mount Pipe	C	From Centroid-Leg	4.00 0.00 2.00	0.0000	156.00	No Ice 1/2" Ice 1" Ice 2" Ice	5.75 6.18 6.61 7.49	4.25 5.01 5.71 7.16	0.06 0.10 0.16 0.29
HPA65R-BU6A w/ Mount Pipe	A	From Centroid-Leg	4.00 0.00 2.00	0.0000	156.00	No Ice 1/2" Ice 1" Ice 2" Ice	5.83 6.40 6.99 8.19	5.00 5.56 6.13 7.32	0.08 0.14 0.22 0.40

Description	Face or Leg	Offset Type	Offsets: Horz Lateral Vert ft ft ft	Azimuth Adjustment °	Placement ft		C_AA_A Front ft^2	C_AA_A Side ft^2	Weight K
SBNHH-1D65A w/ Mount Pipe	B	From Centroid-Leg	4.00 0.00 2.00	0.0000	156.00	No Ice 1/2" Ice 1" Ice 2" Ice	3.04 3.34 3.65 4.31	2.45 2.75 3.05 3.68	0.05 0.10 0.16 0.31
SBNHH-1D65A w/ Mount Pipe	C	From Centroid-Leg	4.00 0.00 2.00	0.0000	156.00	No Ice 1/2" Ice 1" Ice 2" Ice	3.04 3.34 3.65 4.31	2.45 2.75 3.05 3.68	0.05 0.10 0.16 0.31
80010964 w/ Mount Pipe	A	From Centroid-Leg	4.00 0.00 2.00	0.0000	156.00	No Ice 1/2" Ice 1" Ice 2" Ice	8.61 9.18 9.77 10.98	4.10 4.59 5.10 6.16	0.12 0.19 0.26 0.45
80010964 w/ Mount Pipe	B	From Centroid-Leg	4.00 0.00 2.00	0.0000	156.00	No Ice 1/2" Ice 1" Ice 2" Ice	8.61 9.18 9.77 10.98	4.10 4.59 5.10 6.16	0.12 0.19 0.26 0.45
80010964 w/ Mount Pipe	C	From Centroid-Leg	4.00 0.00 2.00	0.0000	156.00	No Ice 1/2" Ice 1" Ice 2" Ice	8.61 9.18 9.77 10.98	4.10 4.59 5.10 6.16	0.12 0.19 0.26 0.45
(2) LGP21401	A	From Centroid-Leg	4.00 0.00 2.00	0.0000	156.00	No Ice 1/2" Ice 1" Ice 2" Ice	1.10 1.24 1.38 1.69	0.21 0.27 0.35 0.52	0.01 0.02 0.03 0.05
(2) LGP21401	B	From Centroid-Leg	4.00 0.00 2.00	0.0000	156.00	No Ice 1/2" Ice 1" Ice 2" Ice	1.10 1.24 1.38 1.69	0.21 0.27 0.35 0.52	0.01 0.02 0.03 0.05
(2) LGP21401	C	From Centroid-Leg	4.00 0.00 2.00	0.0000	156.00	No Ice 1/2" Ice 1" Ice 2" Ice	1.10 1.24 1.38 1.69	0.21 0.27 0.35 0.52	0.01 0.02 0.03 0.05
RRUS 4449 B5/B12	A	From Centroid-Leg	4.00 0.00 2.00	0.0000	156.00	No Ice 1/2" Ice 1" Ice 2" Ice	1.97 2.14 2.33 2.72	1.41 1.56 1.73 2.07	0.07 0.09 0.11 0.16
RRUS 4449 B5/B12	B	From Centroid-Leg	4.00 0.00 2.00	0.0000	156.00	No Ice 1/2" Ice 1" Ice 2" Ice	1.97 2.14 2.33 2.72	1.41 1.56 1.73 2.07	0.07 0.09 0.11 0.16
RRUS 4449 B5/B12	C	From Centroid-Leg	4.00 0.00 2.00	0.0000	156.00	No Ice 1/2" Ice 1" Ice 2" Ice	1.97 2.14 2.33 2.72	1.41 1.56 1.73 2.07	0.07 0.09 0.11 0.16
RRUS 8843 B2/B66A	A	From Centroid-Leg	4.00 0.00 2.00	0.0000	156.00	No Ice 1/2" Ice 1" Ice 2" Ice	1.64 1.80 1.97 2.32	1.35 1.50 1.65 1.99	0.07 0.09 0.11 0.16
RRUS 8843 B2/B66A	B	From Centroid-Leg	4.00 0.00 2.00	0.0000	156.00	No Ice 1/2" Ice 1" Ice 2" Ice	1.64 1.80 1.97 2.32	1.35 1.50 1.65 1.99	0.07 0.09 0.11 0.16
RRUS 8843 B2/B66A	C	From Centroid-Leg	4.00 0.00 2.00	0.0000	156.00	No Ice 1/2" Ice 1" Ice 2" Ice	1.64 1.80 1.97 2.32	1.35 1.50 1.65 1.99	0.07 0.09 0.11 0.16
DC6-48-60-18-8C-EV	A	From	2.00	0.0000	156.00	No Ice	1.14	1.14	0.03

Description	Face or Leg	Offset Type	Offsets: Horz Lateral Vert ft ft ft	Azimuth Adjustment °	Placement ft		C_AA_A Front ft^2	C_AA_A Side ft^2	Weight K
		Centroid-Leg	0.00			1/2" Ice	1.79	1.79	0.05
			2.00			1" Ice	2.00	2.00	0.07
						2" Ice	2.45	2.45	0.13
DC6-48-60-18-8F	C	From Centroid-Leg	2.00	0.0000	156.00	No Ice	1.21	1.21	0.03
			0.00			1/2" Ice	1.89	1.89	0.05
			2.00			1" Ice	2.11	2.11	0.08
						2" Ice	2.57	2.57	0.14
Platform Mount [LP 303-1]	C	None		0.0000	156.00	No Ice	14.69	14.69	1.25
						1/2" Ice	18.01	18.01	1.57
						1" Ice	21.34	21.34	1.94
						2" Ice	28.08	28.08	2.85
1.9" Dia. x 6-ft	A	From Centroid-Leg	4.00	0.0000	156.00	No Ice	1.14	1.14	0.02
			0.00			1/2" Ice	1.76	1.76	0.03
			0.00			1" Ice	2.14	2.14	0.04
						2" Ice	2.90	2.90	0.08
1.9" Dia. x 6-ft	B	From Centroid-Leg	4.00	0.0000	156.00	No Ice	1.14	1.14	0.02
			0.00			1/2" Ice	1.76	1.76	0.03
			0.00			1" Ice	2.14	2.14	0.04
						2" Ice	2.90	2.90	0.08
1.9" Dia. x 6-ft	C	From Centroid-Leg	4.00	0.0000	156.00	No Ice	1.14	1.14	0.02
			0.00			1/2" Ice	1.76	1.76	0.03
			0.00			1" Ice	2.14	2.14	0.04
						2" Ice	2.90	2.90	0.08
75									
KS24019-L112A	C	From Face	3.00	0.0000	75.00	No Ice	0.08	0.08	0.01
			0.00			1/2" Ice	0.13	0.13	0.01
			1.00			1" Ice	0.19	0.19	0.01
						2" Ice	0.35	0.35	0.02
Side Arm Mount [SO 701-1]	C	From Face	1.50	0.0000	75.00	No Ice	0.85	1.67	0.07
			0.00			1/2" Ice	1.14	2.34	0.08
			0.00			1" Ice	1.43	3.01	0.09
						2" Ice	2.01	4.35	0.12
***									

Load Combinations

Comb. No.	Description
1	Dead Only
2	1.2 Dead+1.0 Wind 0 deg - No Ice
3	0.9 Dead+1.0 Wind 0 deg - No Ice
4	1.2 Dead+1.0 Wind 30 deg - No Ice
5	0.9 Dead+1.0 Wind 30 deg - No Ice
6	1.2 Dead+1.0 Wind 60 deg - No Ice
7	0.9 Dead+1.0 Wind 60 deg - No Ice
8	1.2 Dead+1.0 Wind 90 deg - No Ice
9	0.9 Dead+1.0 Wind 90 deg - No Ice
10	1.2 Dead+1.0 Wind 120 deg - No Ice
11	0.9 Dead+1.0 Wind 120 deg - No Ice
12	1.2 Dead+1.0 Wind 150 deg - No Ice
13	0.9 Dead+1.0 Wind 150 deg - No Ice

Comb. No.	Description
14	1.2 Dead+1.0 Wind 180 deg - No Ice
15	0.9 Dead+1.0 Wind 180 deg - No Ice
16	1.2 Dead+1.0 Wind 210 deg - No Ice
17	0.9 Dead+1.0 Wind 210 deg - No Ice
18	1.2 Dead+1.0 Wind 240 deg - No Ice
19	0.9 Dead+1.0 Wind 240 deg - No Ice
20	1.2 Dead+1.0 Wind 270 deg - No Ice
21	0.9 Dead+1.0 Wind 270 deg - No Ice
22	1.2 Dead+1.0 Wind 300 deg - No Ice
23	0.9 Dead+1.0 Wind 300 deg - No Ice
24	1.2 Dead+1.0 Wind 330 deg - No Ice
25	0.9 Dead+1.0 Wind 330 deg - No Ice
26	1.2 Dead+1.0 Ice+1.0 Temp
27	1.2 Dead+1.0 Wind 0 deg+1.0 Ice+1.0 Temp
28	1.2 Dead+1.0 Wind 30 deg+1.0 Ice+1.0 Temp
29	1.2 Dead+1.0 Wind 60 deg+1.0 Ice+1.0 Temp
30	1.2 Dead+1.0 Wind 90 deg+1.0 Ice+1.0 Temp
31	1.2 Dead+1.0 Wind 120 deg+1.0 Ice+1.0 Temp
32	1.2 Dead+1.0 Wind 150 deg+1.0 Ice+1.0 Temp
33	1.2 Dead+1.0 Wind 180 deg+1.0 Ice+1.0 Temp
34	1.2 Dead+1.0 Wind 210 deg+1.0 Ice+1.0 Temp
35	1.2 Dead+1.0 Wind 240 deg+1.0 Ice+1.0 Temp
36	1.2 Dead+1.0 Wind 270 deg+1.0 Ice+1.0 Temp
37	1.2 Dead+1.0 Wind 300 deg+1.0 Ice+1.0 Temp
38	1.2 Dead+1.0 Wind 330 deg+1.0 Ice+1.0 Temp
39	Dead+Wind 0 deg - Service
40	Dead+Wind 30 deg - Service
41	Dead+Wind 60 deg - Service
42	Dead+Wind 90 deg - Service
43	Dead+Wind 120 deg - Service
44	Dead+Wind 150 deg - Service
45	Dead+Wind 180 deg - Service
46	Dead+Wind 210 deg - Service
47	Dead+Wind 240 deg - Service
48	Dead+Wind 270 deg - Service
49	Dead+Wind 300 deg - Service
50	Dead+Wind 330 deg - Service

Maximum Tower Deflections - Service Wind

Section No.	Elevation ft	Horz. Deflection in	Gov. Load Comb.	Tilt °	Twist °
L1	178 - 129.87	33.481	50	1.8498	0.0192
L2	134.12 - 84.83	17.988	50	1.3925	0.0074
L3	90.1633 - 41.2833	7.605	50	0.8399	0.0028
L4	47.7 - 0	2.041	50	0.3953	0.0010

Critical Deflections and Radius of Curvature - Service Wind

Elevation ft	Appurtenance	Gov. Load Comb.	Deflection in	Tilt °	Twist °	Radius of Curvature ft
178.00	APX16DWV-16DWV-S-E-A20 w/ Mount Pipe	50	33.481	1.8498	0.0194	30553

Elevation ft	Appurtenance	Gov. Load Comb.	Deflection in	Tilt °	Twist °	Radius of Curvature ft
168.00	(2) LPA-80080/6CF w/ Mount Pipe	50	29.711	1.7520	0.0163	15276
156.00	7770.00 w/ Mount Pipe	50	25.298	1.6318	0.0128	6943
75.00	KS24019-L112A	50	5.145	0.6667	0.0021	5297

Maximum Tower Deflections - Design Wind

Section No.	Elevation ft	Horz. Deflection in	Gov. Load Comb.	Tilt °	Twist °
L1	178 - 129.87	138.353	2	7.6540	0.0767
L2	134.12 - 84.83	74.434	24	5.7702	0.0292
L3	90.1633 - 41.2833	31.491	24	3.4808	0.0112
L4	47.7 - 0	8.450	24	1.6373	0.0040

Critical Deflections and Radius of Curvature - Design Wind

Elevation ft	Appurtenance	Gov. Load Comb.	Deflection in	Tilt °	Twist °	Radius of Curvature ft
178.00	APX16DWV-16DWV-S-E-A20 w/ Mount Pipe	2	138.353	7.6540	0.0798	7628
168.00	(2) LPA-80080/6CF w/ Mount Pipe	2	122.797	7.2524	0.0671	3812
156.00	7770.00 w/ Mount Pipe	24	104.594	6.7577	0.0526	1730
75.00	KS24019-L112A	24	21.301	2.7624	0.0084	1283

Compression Checks

Pole Design Data

Section No.	Elevation ft	Size	L ft	L_u ft	Kl/r	A in^2	P_u K	ϕP_n K	Ratio $\frac{P_u}{\phi P_n}$
L1	178 - 129.87 (1)	TP29.64x19.5x0.25	48.13	0.00	0.0	22.6105	-14.01	1322.71	0.011
L2	129.87 - 84.83 (2)	TP38.5x28.2446x0.375	49.29	0.00	0.0	44.0575	-23.19	2577.36	0.009
L3	84.83 - 41.2833 (3)	TP46.8x36.6403x0.4375	48.88	0.00	0.0	62.5281	-35.99	3657.89	0.010
L4	41.2833 - 0 (4)	TP54.5x44.5913x0.5	47.70	0.00	0.0	85.6980	-55.10	5013.33	0.011

Pole Bending Design Data

Section No.	Elevation ft	Size	M_{ux} kip-ft	ϕM_{nx} kip-ft	Ratio $\frac{M_{ux}}{\phi M_{nx}}$	M_{uy} kip-ft	ϕM_{ny} kip-ft	Ratio $\frac{M_{uy}}{\phi M_{ny}}$
L1	178 - 129.87 (1)	TP29.64x19.5x0.25	586.15	936.75	0.626	0.00	936.75	0.000
L2	129.87 - 84.83 (2)	TP38.5x28.2446x0.375	1440.72	2463.13	0.585	0.00	2463.13	0.000
L3	84.83 - 41.2833 (3)	TP46.8x36.6403x0.4375	2435.18	4208.93	0.579	0.00	4208.93	0.000
L4	41.2833 - 0 (4)	TP54.5x44.5913x0.5	3737.99	6831.09	0.547	0.00	6831.09	0.000

Pole Shear Design Data

Section No.	Elevation ft	Size	Actual V_u K	ϕV_n K	Ratio $\frac{V_u}{\phi V_n}$	Actual T_u kip-ft	ϕT_n kip-ft	Ratio $\frac{T_u}{\phi T_n}$
L1	178 - 129.87 (1)	TP29.64x19.5x0.25	17.50	396.81	0.044	4.95	990.22	0.005
L2	129.87 - 84.83 (2)	TP38.5x28.2446x0.375	21.41	773.21	0.028	4.93	2506.45	0.002
L3	84.83 - 41.2833 (3)	TP46.8x36.6403x0.4375	25.35	1097.37	0.023	4.80	4327.36	0.001
L4	41.2833 - 0 (4)	TP54.5x44.5913x0.5	29.02	1504.00	0.019	4.79	7112.49	0.001

Pole Interaction Design Data

Section No.	Elevation ft	Ratio $\frac{P_u}{\phi P_n}$	Ratio $\frac{M_{ux}}{\phi M_{nx}}$	Ratio $\frac{M_{uy}}{\phi M_{ny}}$	Ratio $\frac{V_u}{\phi V_n}$	Ratio $\frac{T_u}{\phi T_n}$	Comb. Stress Ratio	Allow. Stress Ratio	Criteria
L1	178 - 129.87 (1)	0.011	0.626	0.000	0.044	0.005	0.639	1.050	4.8.2
L2	129.87 - 84.83 (2)	0.009	0.585	0.000	0.028	0.002	0.595	1.050	4.8.2
L3	84.83 - 41.2833 (3)	0.010	0.579	0.000	0.023	0.001	0.589	1.050	4.8.2
L4	41.2833 - 0 (4)	0.011	0.547	0.000	0.019	0.001	0.559	1.050	4.8.2

Section Capacity Table

Section No.	Elevation ft	Component Type	Size	Critical Element	P K	ϕP_{allow} K	% Capacity	Pass Fail
L1	178 - 129.87	Pole	TP29.64x19.5x0.25	1	-14.01	1388.85	60.8	Pass
L2	129.87 - 84.83	Pole	TP38.5x28.2446x0.375	2	-23.19	2706.23	56.6	Pass
L3	84.83 - 41.2833	Pole	TP46.8x36.6403x0.4375	3	-35.99	3840.78	56.1	Pass
L4	41.2833 - 0	Pole	TP54.5x44.5913x0.5	4	-55.10	5264.00	53.2	Pass
							Summary	
						Pole (L1)	60.8	Pass
						RATING =	**60.8**	**Pass**

APPENDIX B

BASE LEVEL DRAWING

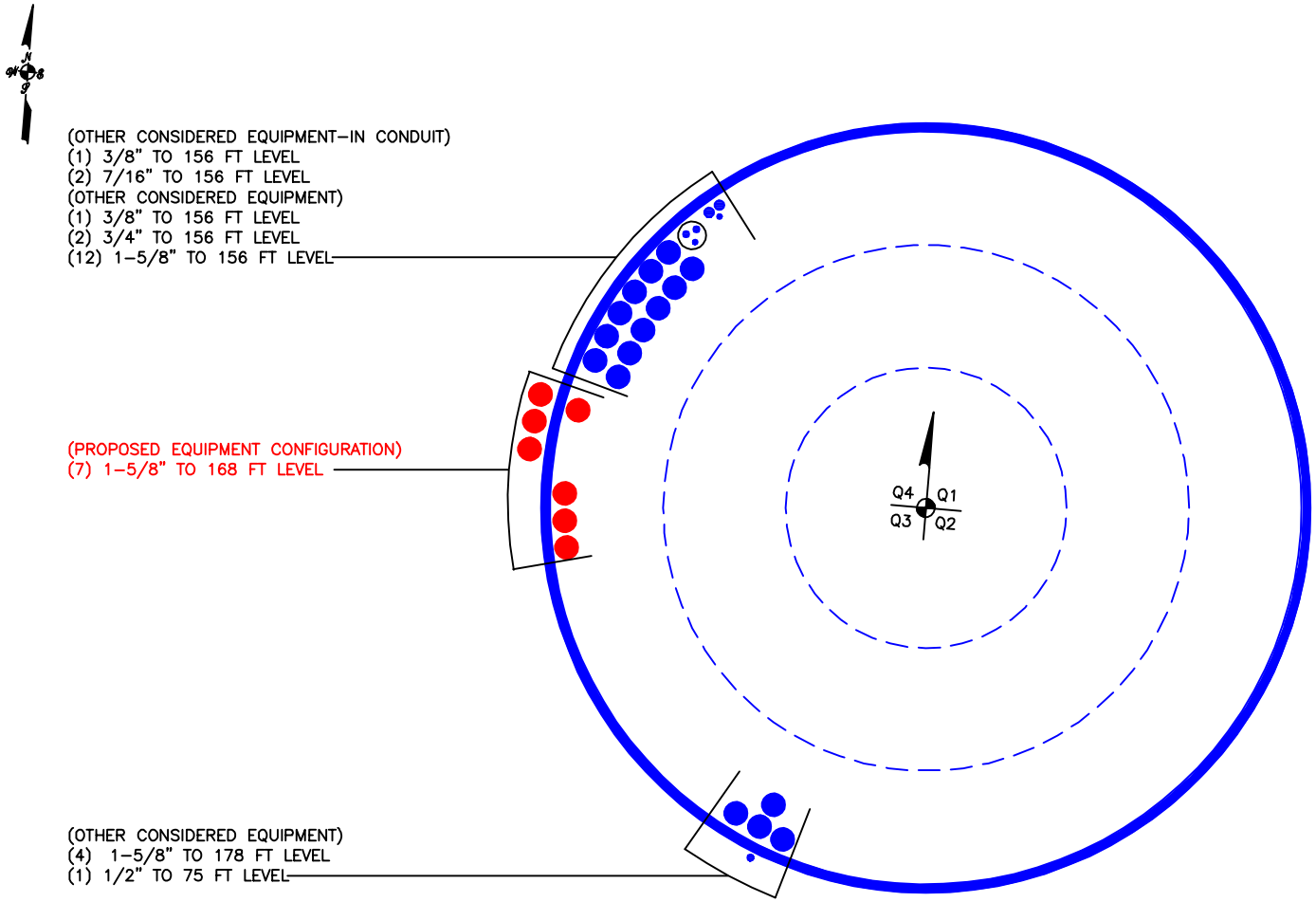
N
W
E
S
(OTHER CONSIDERED EQUIPMENT–IN CONDUIT)
(1) 3/8" TO 156 FT LEVEL
(2) 7/16" TO 156 FT LEVEL
(OTHER CONSIDERED EQUIPMENT)
(1) 3/8" TO 156 FT LEVEL
(2) 3/4" TO 156 FT LEVEL
(12) 1–5/8" TO 156 FT LEVEL
(PROPOSED EQUIPMENT CONFIGURATION)
(7) 1–5/8" TO 168 FT LEVEL
Q4
Q1
Q3
Q2
(OTHER CONSIDERED EQUIPMENT)
(4) 1–5/8" TO 178 FT LEVEL
(1) 1/2" TO 75 FT LEVEL

APPENDIX C

ADDITIONAL CALCULATIONS

ASCE 7 Hazards Report

Address:
No Address at This Location

Standard: ASCE/SEI 7-10
Risk Category: II
Soil Class: D - Stiff Soil

Elevation: 840.53 ft (NAVD 88)
Latitude: 41.757264
Longitude: -73.052556

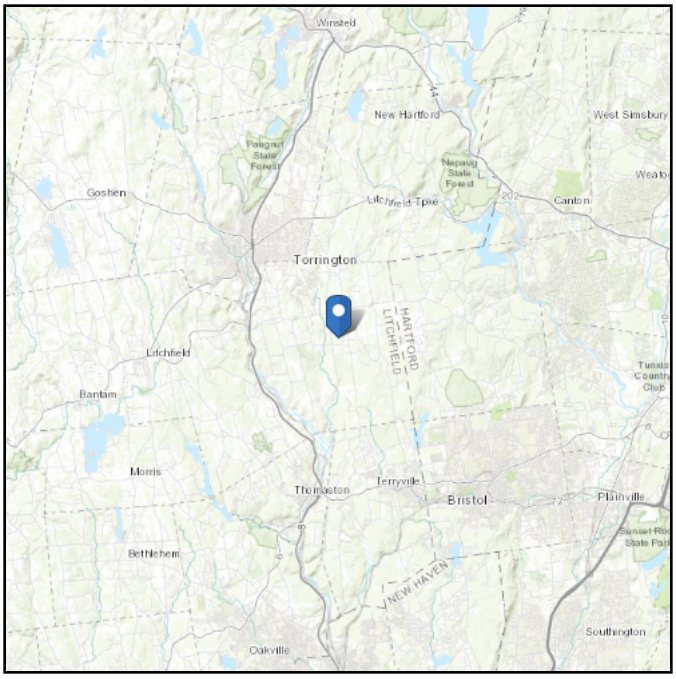

Wind

Results:

Wind Speed:	118 Vmph
10-year MRI	76 Vmph
25-year MRI	85 Vmph
50-year MRI	90 Vmph
100-year MRI	97 Vmph

Data Accessed: Sat Apr 30 2021

Data Source: ASCE/SEI 7-10, Fig. 26.5-1A and Figs. CC-1–CC-4, and Section 26.5.2, incorporating errata of March 12, 2014

Value provided is 3-second gust wind speeds at 33 ft above ground for Exposure C Category, based on linear interpolation between contours. Wind speeds are interpolated in accordance with the 7-10 Standard. Wind speeds correspond to approximately a 7% probability of exceedance in 50 years (annual exceedance probability = 0.00143, MRI = 700 years).

Site is in a hurricane-prone region as defined in ASCE/SEI 7-10 Section 26.2. Glazed openings need not be protected against wind-borne debris.

Seismic

Site Soil Class: D - Stiff Soil

Results:

S_S :	0.183	S_{DS} :	0.195
S_1 :	0.065	S_{D1} :	0.103
F_a :	1.6	T_L :	6
F_v :	2.4	PGA :	0.093
S_{MS} :	0.293	PGA_M :	0.148
S_{M1} :	0.155	F_{PGA} :	1.6
		I_e :	1

Seismic Design Category B

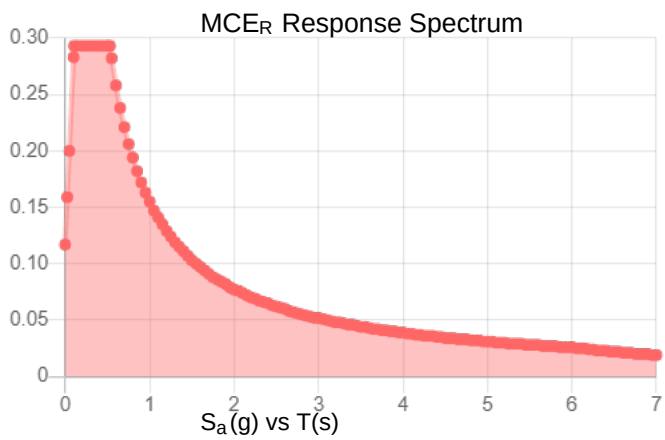

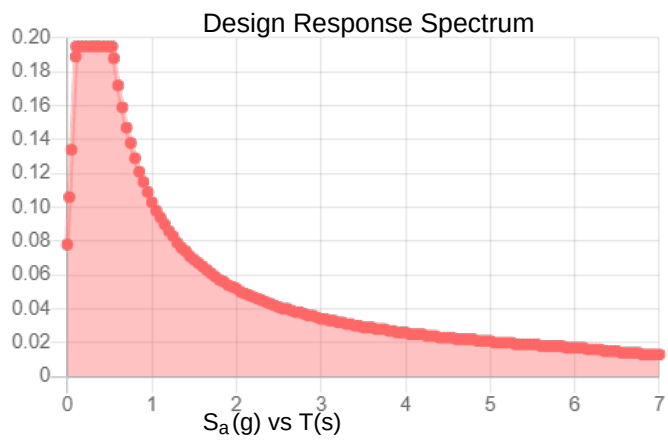

Data Accessed: Fri Apr 30 2021

Date Source: USGS Seismic Design Maps based on ASCE/SEI 7-10, incorporating Supplement 1 and errata of March 31, 2013, and ASCE/SEI 7-10 Table 1.5-2. Additional data for site-specific ground motion procedures in accordance with ASCE/SEI 7-10 Ch. 21 are available from USGS.

Ice

Results:

Ice Thickness:	0.75 in.
Concurrent Temperature:	5 F
Gust Speed:	50 mph
Data Source:	Standard ASCE/SEI 7-10, Figs. 10-2 through 10-8
Date Accessed:	Fri Apr 30 2021

Ice thicknesses on structures in exposed locations at elevations higher than the surrounding terrain and in valleys and gorges may exceed the mapped values.

Values provided are equivalent radial ice thicknesses due to freezing rain with concurrent 3-second gust speeds, for a 50-year mean recurrence interval, and temperatures concurrent with ice thicknesses due to freezing rain. Thicknesses for ice accretions caused by other sources shall be obtained from local meteorological studies. Ice thicknesses in exposed locations at elevations higher than the surrounding terrain and in valleys and gorges may exceed the mapped values.

The ASCE 7 Hazard Tool is provided for your convenience, for informational purposes only, and is provided “as is” and without warranties of any kind. The location data included herein has been obtained from information developed, produced, and maintained by third party providers; or has been extrapolated from maps incorporated in the ASCE 7 standard. While ASCE has made every effort to use data obtained from reliable sources or methodologies, ASCE does not make any representations or warranties as to the accuracy, completeness, reliability, currency, or quality of any data provided herein. Any third-party links provided by this Tool should not be construed as an endorsement, affiliation, relationship, or sponsorship of such third-party content by or from ASCE.

ASCE does not intend, nor should anyone interpret, the results provided by this Tool to replace the sound judgment of a competent professional, having knowledge and experience in the appropriate field(s) of practice, nor to substitute for the standard of care required of such professionals in interpreting and applying the contents of this Tool or the ASCE 7 standard.

In using this Tool, you expressly assume all risks associated with your use. Under no circumstances shall ASCE or its officers, directors, employees, members, affiliates, or agents be liable to you or any other person for any direct, indirect, special, incidental, or consequential damages arising from or related to your use of, or reliance on, the Tool or any information obtained therein. To the fullest extent permitted by law, you agree to release and hold harmless ASCE from any and all liability of any nature arising out of or resulting from any use of data provided by the ASCE 7 Hazard Tool.

Monopole Base Plate Connection

Site Info	
BU #	876369
Site Name	winton/Buckley Broadc
Order #	552649 Rev. 1

Analysis Considerations	
TIA-222 Revision	H
Grout Considered:	No
l_{ar} (in)	1

Applied Loads	
Moment (kip-ft)	3738.00
Axial Force (kips)	55.00
Shear Force (kips)	29.00

*TIA-222-H Section 15.5 Applied

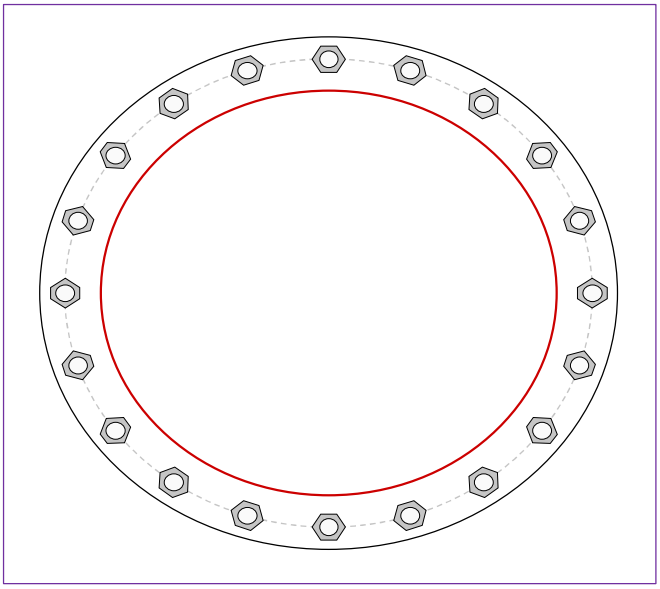

Connection Properties

Anchor Rod Data

(20) 2-1/4" ø bolts (A615-75 N; Fy=75 ksi, Fu=100 ksi) on 63" BC

Base Plate Data

69" OD x 2.25" Plate (A871 GR60; Fy=60 ksi, Fu=75 ksi)

Stiffener Data

N/A

Pole Data

54.5" x 0.5" 18-sided pole (A572-65; Fy=65 ksi, Fu=80 ksi)

Analysis Results

Anchor Rod Summary (units of kips, kip-in)

Pu_t = 139.58	ϕPn_t = 243.75	Stress Rating
Vu = 1.45	ϕVn = 149.1	54.5%
Mu = n/a	ϕMn = n/a	Pass

Base Plate Summary

Max Stress (ksi):	34.12	(Flexural)
Allowable Stress (ksi):	54	
Stress Rating:	60.2%	Pass

Pier and Pad Foundation

BU # :	876369
Site Name:	Harwinton/Buckley
App. Number:	552649 Rev. 1

TIA-222 Revision:	H
Tower Type:	Monopole

Top & Bot. Pad Rein. Different?:	☑
Block Foundation?:	☐
Rectangular Pad?:	☐

Superstructure Analysis Reactions

Compression, P_{comp}:	55	kips
Base Shear, Vu_comp:	29	kips
Moment, M_u:	3738	ft-kips
Tower Height, **H**:	178	ft
BP Dist. Above Fdn, bp_{dist}:	3.25	in

Foundation Analysis Checks

	Capacity	Demand	Rating*	Check
Lateral (Sliding) (kips)	315.99	29.00	**8.7%**	**Pass**
Bearing Pressure (ksf)	6.00	1.64	**27.4%**	**Pass**
*Overturning (kip*ft)*	6057.81	3963.35	**65.4%**	**Pass**
*Pier Flexure (Comp.) (kip*ft)*	5906.74	3868.50	**62.4%**	**Pass**
Pier Compression (kip)	31187.52	89.19	**0.3%**	**Pass**
*Pad Flexure (kip*ft)*	3722.15	1604.86	**41.1%**	**Pass**
Pad Shear - 1-way (kips)	1004.09	218.11	**20.7%**	**Pass**
Pad Shear - 2-way (Comp) (ksi)	0.190	0.038	**18.9%**	**Pass**
*Flexural 2-way (Comp) (kip*ft)*	3015.04	2321.10	**73.3%**	**Pass**

**Rating per TIA-222-H Section 15.5*

Soil Rating*:	**65.4%**
Structural Rating*:	**73.3%**

Pier Properties

Pier Shape:	Square	
Pier Diameter, **dpier**:	7	ft
Ext. Above Grade, **E**:	1	ft
Pier Rebar Size, **Sc**:	8	
Pier Rebar Quantity, **mc**:	46	
Pier Tie/Spiral Size, **St**:	4	
Pier Tie/Spiral Quantity, **mt**:	13	
Pier Reinforcement Type:	Tie	
Pier Clear Cover, cc_{pier}:	3	in

Pad Properties

Depth, **D**:	6.5	ft
Pad Width, W_1:	28	ft
Pad Thickness, **T**:	3	ft
Pad Rebar Size (Top dir.2), Sp_{top2}:	8	
Pad Rebar Quantity (Top dir. 2), mp_{top2}:	15	
Pad Rebar Size (Bottom dir. 2), Sp_2:	8	
Pad Rebar Quantity (Bottom dir. 2), mp_2:	34	
Pad Clear Cover, cc_{pad}:	3	in

Material Properties

Rebar Grade, **Fy**:	60	ksi
Concrete Compressive Strength, **F'c**:	4	ksi
Dry Concrete Density, δc:	150	pcf

Soil Properties

Total Soil Unit Weight, γ:	125	pcf
Ultimate Gross Bearing, Qult:	8.000	ksf
Cohesion, **Cu**:	0.000	ksf
Friction Angle, φ:	38	degrees
SPT Blow Count, N_{blows}:		
Base Friction, μ:	0.6	
Neglected Depth, **N**:	4.00	ft
Foundation Bearing on Rock?	No	
Groundwater Depth, **gw**:	2	ft

<--Toggle between Gross and Net

Exhibit E

Mount Analysis

Maser Consulting Connecticut
2000 Midlantic Drive, Suite 100
Mt. Laurel, NJ 08054
(856) 797-0412
peter.albano@colliersengineering.com

Post-Mod Antenna Mount Analysis Report and PMI Requirements

Mount Fix

SMART Tool Project #: 10063413
Maser Consulting Connecticut Project #: 21777068A

May 21, 2021

Site Information	*Site ID:*	*469283-VZW / HARWINTON 1 CT*
	Site Name:	*HARWINTON 1 CT*
	Carrier Name:	*Verizon Wireless*
	Address:	*64 Hungerford Lane* *Harwinton, Connecticut 06794* *Litchfield County*
	Latitude:	*41.757264°*
	Longitude:	*-73.052556°*
Structure Information	*Tower Type:*	*Monopole*
	Mount Type:	*14.67-Ft Platform*

FUZE ID # 16271948

Analysis Results

Platform: **78.4% Pass**

******Contractor PMI Requirements*:**
Included at the end of this MA report
Available & Submitted via portal at https://pmi.vzwsmart.com
Contractor - Please Review Specific Site PMI Requirements Upon Award
Requirements also Noted on Mount Modification Drawings
Requirements may also be Noted on A & E drawings

Report Prepared By: Selene Chen

Executive Summary:

The objective of this report is to summarize the analysis results of the antenna support mount including the proposed modifications at the subject facility for the final wireless telecommunications configuration, per the applicable codes and standards.

This analysis is inclusive of the mount structure only and does not address the structural capacity of the supporting structure. This mounting frame was not analyzed as an anchor attachment point for fall protection. All climbing activities are required to have a fall protection plan completed by a competent person.

Sources of Information:

Document Type	Remarks
Radio Frequency Data Sheet (RFDS)	*Verizon RFDS, Site ID: 324067, dated March 18, 2021*
Mount Mapping Report	*Hudson Design Group, LLC., Site ID: 469283, dated February 12, 2021*
Mount Analysis Report	*Maser Consulting Connecticut, Project #: 21777068A, dated April 9, 2021*
Mount Modification Drawings	*Maser Consulting Connecticut, Project #: 21777068A, dated May 21, 2021*

Analysis Criteria:

Codes and Standards:	ANSI/TIA-222-H	
Wind Parameters:	Basic Wind Speed (Ultimate 3-sec. Gust), V_{ULT}:	115 mph
	Ice Wind Speed (3-sec. Gust):	50 mph
	Design Ice Thickness:	1.00 in
	Risk Category:	II
	Exposure Category:	C
	Topographic Category:	1
	Topographic Feature Considered:	N/A
	Topographic Method:	N/A
	Ground Elevation Factor, K_e:	0.970
Seismic Parameters:	S_S:	0.179
	S_1:	0.054
Maintenance Parameters:	Wind Speed (3-sec. Gust):	30 mph
	Maintenance Live Load, Lv:	250 lbs.
	Maintenance Live Load, Lm:	500 lbs.
Analysis Software:	RISA-3D (V17)	

Final Loading Configuration:

The following equipment has been considered for the analysis of the mount:

Mount Elevation (ft)	Equipment Elevation (ft)	Quantity	Manufacturer	Model	Status
168.00	170.00	6	Quintel	QS6656-5D	Added
		3	Samsung	MT6407-77A	
		3	Samsung	B2/B66A RRH-BR049	
		3	Samsung	B5/B13 RRH-BR04C	
		1	RFS	DB-C1-12C-24AB-0Z	
		6	Antel	LPA-80080/6CF	Retained

The recent mount mapping did not report existing OVP units. However, it is acceptable to install up to any three (3) of the OVP model numbers listed below as required at any location other than the mount face without affecting the structural capacity of the mount. If OVP units are installed on the mount face, a mount re-analysis may be required.

Model Number	Ports	AKA
DB-B1-6C-12AB-0Z	6	OVP-6
RVZDC-6627-PF-48	12	OVP-12

Standard Conditions:

1. All engineering services are performed on the basis that the information provided to Maser Consulting Connecticut and used in this analysis is current and correct. The existing equipment loading has been applied at locations determined from the supplied documentation. Any deviation from the loading locations specified in this report shall be communicated to Maser Consulting Connecticut to verify deviation will not adversely impact the analysis.

2. Mounts are assumed to have been properly fabricated, installed and maintained in good condition, twist free and plumb in accordance with its original design and manufacturer's specifications.

   Obvious safety and structural issues/deficiencies noticed at the time of the mount mapping and reported in the Mount Mapping Report are assumed to be corrected and documented as part of the PMI process and are not considered in the mount analysis.

   The mount analysis and the mount mapping are not a condition assessment of the mount. Proper maintenance and condition assessments are still required post analysis.

3. For mount analyses completed from other data sources (including new replacement mounts) and not specifically mapped by Maser Consulting Connecticut, the mounts are assumed to have been properly fabricated, installed and maintained in good condition, twist free and plumb in accordance with its original design and manufacturer's specifications.

4. All member connections are assumed to have been designed to meet or exceed the load carrying capacity of the connected member unless otherwise specified in this report.

5. The mount was checked up to, and including, the bolts that fasten it to the mount collar/attachment and threaded rod connections in collar members if applicable. Local deformation and interaction between the mount collar/attachment and the supporting tower structure are outside the scope of this analysis.

6. All services are performed, results obtained, and recommendations made in accordance with generally accepted engineering principles and practices. Maser Consulting Connecticut is not responsible for the conclusion, opinions, and recommendations made by others based on the information supplied.

7. Structural Steel Grades have been assumed as follows, if applicable, unless otherwise noted in this analysis:
   - Channel, Solid Round, Angle, Plate — ASTM A36 (Gr. 36)
   - HSS (Rectangular) — ASTM 500 (Gr. B-46)
   - Pipe — ASTM A53 (Gr. B-35)
   - Threaded Rod — F1554 (Gr. 36)
   - Bolts — ASTM A325

8. Any mount modifications listed under Sources of Information are assumed to have been installed per the design specifications.

Discrepancies between in-field conditions and the assumptions listed above may render this analysis invalid unless explicitly approved by Maser Consulting Connecticut.

Analysis Results:

Component	Utilization %	Pass/Fail
Standoff Pipe	*16.1%*	*Pass*
Standoff Angle	*15.1%*	*Pass*
Standoff Channel	*78.4%*	*Pass*
Standoff Plate	*24.9%*	*Pass*
Face Horizontal	*51.4%*	*Pass*
Cross Member	*31.2%*	*Pass*
Corner Plate	*29.7%*	*Pass*
Grating Angle	*9.6%*	*Pass*
Mount Pipe	*42.4%*	*Pass*
HSS Crossmember	*45.9%*	*Pass*
Kicker	*9.8%*	*Pass*
Mount Connection	*15.2%*	*Pass*

Structure Rating – *(Controlling Utilization of all Components)*	**78.4%**

Recommendation:

The existing mount will be **SUFFICIENT** for the final loading after the proposed modifications are successfully completed.

ANSI/ASSP rigging plan review services compliant with the requirements of ANSI/TIA 322 are available for a Construction Class IV site or other, if required. Separate review fees will apply.

Attachments:

1. Mount Photos
2. Mount Mapping Report (for reference only)
3. Analysis Calculations
4. **Contractor Required PMI Report Deliverables**
5. Antenna Placement Diagrams
6. TIA Adoption and Wind Speed Usage Letter

V3.0 Updated on 8-31-2020

Antenna Mount Mapping Form (PATENT PENDING)

Tower Owner:	CROWN CASTLE	**Mapping Date:**	2/12/2021
Site Name:	HARWINTON 1 CT	**Tower Type:**	Monopole
Site Number or ID:	469283	**Tower Height (Ft.):**	
Mapping Contractor:	HUDSON DESIGN GROUP, LLC.	**Mount Elevation (Ft.):**	165.25

FCC #

This antenna mapping form is the property of TES and under **PATENT PENDING**. The formation contained herein is considered confidential in nature and is to be used only for the specific customer it was intended for. Reproduction, transmission, publication, modification or disclosure by any method is prohibited except by express written permission of TES. All means and methods are the responsibility of the contractor and the work shall be compliant with ANSI/ASSE A 10.48, OSHA, FCC, FAA and other safety requirements that may apply. TES is not warrantying the usability of the safety climb as it must be assessed prior to each use in compliance with OSHA requirements.

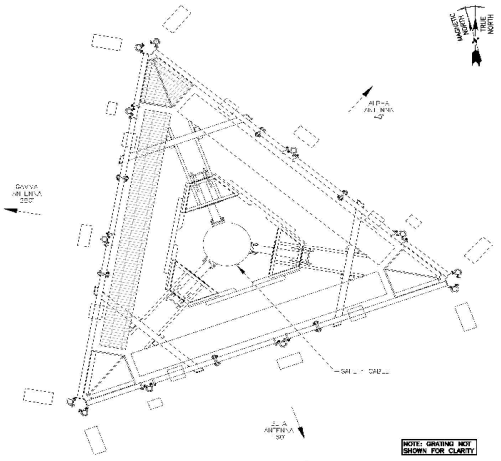

ANTENNA PLAN
SCALE: N.T.S

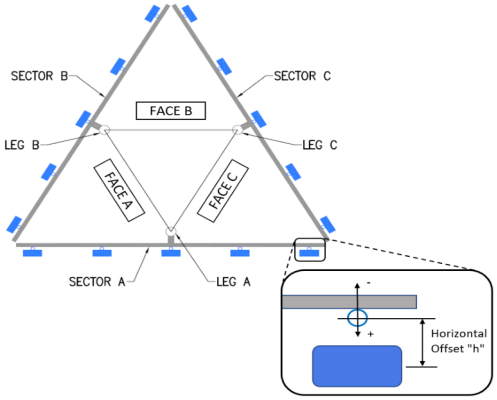

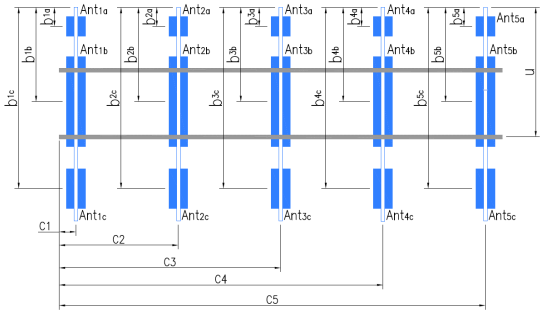

Antenna Layout (Looking Out From Tower)

Mount Pipe Configuration and Geometries [Unit = Inches]

Sector / Position	Mount Pipe Size & Length	Vertical Offset Dimension "u"	Horizontal Offset "C1, C2, C3, etc."	Sector / Position	Mount Pipe Size & Length	Vertical Offset Dimension "u"	Horizontal Offset "C1, C2, C3, etc."
A1	PIPE 2" STD. X 72" LONG	50.00	0.00	C1	PIPE 2" STD. X 72" LONG	50.00	0.00
A2	PIPE 2" STD. X 72" LONG	50.00	83.00	C2	PIPE 2" STD. X 72" LONG	50.00	83.00
A3	PIPE 2" STD. X 72" LONG	50.00	148.00	C3	PIPE 2" STD. X 72" LONG	50.00	148.00
A4	PIPE 2" STD. X 72" LONG	50.00	180.00	C4	PIPE 2" STD. X 72" LONG	50.00	180.00
A5				C5			
A6				C6			
B1	PIPE 2" STD. X 72" LONG	50.00	0.00	D1			
B2	PIPE 2" STD. X 72" LONG	50.00	83.00	D2			
B3	PIPE 2" STD. X 72" LONG	50.00	148.00	D3			
B4	PIPE 2" STD. X 72" LONG	50.00	180.00	D4			
B5				D5			
B6				D6			

Distance between bottom rail and mount CL elevation (dim d). Unit is inches. See 'Mount Elev Ref' tab for details. :	0.00
Distance from top of bottom support rail to lowest tip of ant./eqpt. of Carrier above. (N/A if > 10 ft.) :	4.5
Distance from top of bottom support rail to highest tip of ant./eqpt. of Carrier below. (N/A if > 10 ft.) :	5

Please enter additional infomation or comments below.

Tower Face Width at Mount Elev. (ft.):		Tower Leg Size or Pole Shaft Diameter at Mount Elev. (in.):	22

	Enter antenna model. If not labeled, enter "Unknown".						Mounting Locations [Units are inches and degrees]			Photos of antennas
Ants. Items	Antenna Models if Known	Width (in.)	Depth (in.)	Height (in.)	Coax Size and Qty	Antenna Center-line (Ft.)	Vertical Distances"b_{1a}, b_{2a}, b_{3a}, b_{1b}...." (Inches)	Horiz. Offset "h" (Use "-" if Ant. is behind)	Antenna Azimuth (Degrees)	Photo Numbers
Sector A										
Ant_{1a}										
Ant_{1b}	LPA-80080-6CF	6.00	13.00	72.00		166.417	36.00	15.00	40.00	107
Ant_{1c}										
Ant_{2a}										
Ant_{2b}	BXA-70063-6CF	11.00	5.00	71.00		166.5	35.00	9.00	40.00	108
Ant_{2c}										
Ant_{3a}										
Ant_{3b}	BXA-171085-12BF	6.00	4.00	72.00		166.5	35.00	8.00	40.00	109
Ant_{3c}										
Ant_{4a}										
Ant_{4b}	LPA-80080-6CF	6.00	13.00	72.00		166.417	36.00	15.00	40.00	109
Ant_{4c}										
Ant_{5a}										
Ant_{5b}										
Ant_{5c}										
Ant on Standoff	(2) RFSM2018439	6.00	1.50	7.00						60 & 61
Ant on Standoff										
Ant on Tower										
Ant on Tower										

Mount Azimuth (Degree) for Each Sector			Tower Leg Azimuth (Degree) for Each Sector		
Sector A:	40.00	Deg	Leg A:		Deg
Sector B:	160.00	Deg	Leg B:		Deg
Sector C:	280.00	Deg	Leg C:		Deg
Sector D:		Deg	Leg D:		Deg

Climbing Facility Information			
Location:	155.00	Deg	
Climbing Facility	Corrosion Type:		Good condition.
	Access:		Climbing path was unobstructed.
	Condition:		Good condition.

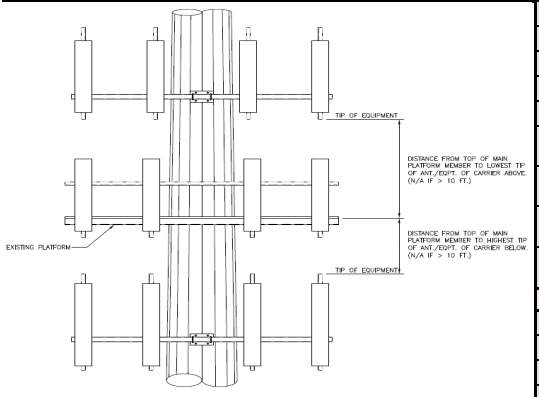

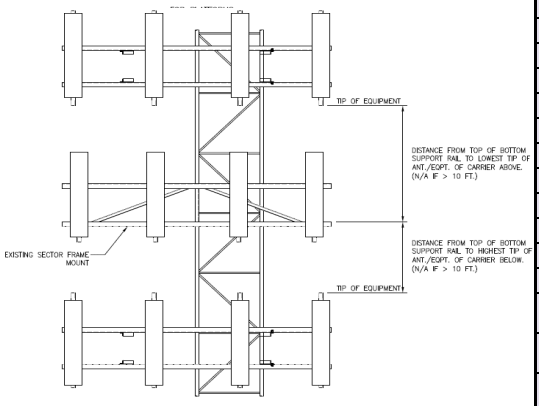

Sector B										
Ant_{1a}										
Ant_{1b}	LPA-80080-6CF	6.00	13.00	72.00		166.417	36.00	15.00	160.00	109
Ant_{1c}										
Ant_{2a}										
Ant_{2b}	BXA-70063-6CF	11.00	5.00	71.00		166.5	35.00	9.00	160.00	110
Ant_{2c}										
Ant_{3a}										
Ant_{3b}	BXA-171085-12BF	6.00	4.00	72.00		166.5	35.00	8.00	160.00	111
Ant_{3c}										
Ant_{4a}										
Ant_{4b}	LPA-80080-6CF	6.00	13.00	72.00		166.417	36.00	15.00	160.00	111
Ant_{4c}										
Ant_{5a}										
Ant_{5b}										
Ant_{5c}										
Ant on Standoff	(2) RFSM2018439	6.00	1.50	7.00						110
Ant on Standoff										
Ant on Tower										
Ant on Tower										
Sector C										
Ant_{1a}										
Ant_{1b}	LPA-80080-6CF	6.00	13.00	72.00		166.417	36.00	15.00	280.00	111
Ant_{1c}										
Ant_{2a}										
Ant_{2b}	BXA-70063-6CF	11.00	5.00	71.00		166.5	35.00	9.00	280.00	113
Ant_{2c}										
Ant_{3a}										
Ant_{3b}	BXA-171085-12BF	6.00	4.00	72.00		166.5	35.00	8.00	280.00	114
Ant_{3c}										
Ant_{4a}										
Ant_{4b}	LPA-80080-6CF	6.00	13.00	72.00		166.417	36.00	15.00	280.00	114
Ant_{4c}										
Ant_{5a}										
Ant_{5b}										
Ant_{5c}										
Ant on Standoff	(2) RFSM2018439	6.00	1.50	7.00						113
Ant on Standoff										
Ant on Tower										
Ant on Tower										
Sector D										
Ant_{1a}										
Ant_{1b}										
Ant_{1c}										
Ant_{2a}										
Ant_{2b}										
Ant_{2c}										
Ant_{3a}										
Ant_{3b}										
Ant_{3c}										
Ant_{4a}										
Ant_{4b}										
Ant_{4c}										
Ant_{5a}										
Ant_{5b}										
Ant_{5c}										
Ant on Standoff										
Ant on Standoff										
Ant on Tower										
Ant on Tower										

Observed Safety and Structural Issues During the Mount Mapping		
Issue #	Description of Issue	Photo #

1		
2	(12) 1-5/8" COAX CABLES.	32 (GRD)
3	TOWER TAG: REF NO. GS52975	5 (GRD)
4		
5		
6		
7		
8		

Mapping Notes
1. Please report any visible structural or safety issues observed on the antenna mounts (Damaged members, loose connections, tilting mounts, safety climb issues, etc.)
2. If the thickness of the existing pipes or tubing can't be obtained from a general tool (such as Caliper), please use an ultrasonic measurement tool (thickness gauge) to measure the thickness.
3. Please create all required detail sketches of the mounts and insert them into the "Sketches" tab.
4. Please measure and enter the bolt sizes and types under the Members Box in the spreadsheet of the mount type.
5. Take and label the photos of the tower, mounts, connections, antennas and all measurements. Minimum 50 photos are required.
6. Please measure and report the size and length of all existing antenna mounting pipes.
7. Please measure and report the antenna information for all sectors.
8. Don't delete or rearrange any sheet or contents of any sheet from this mapping form.

Standard Conditions
1. Obvious safety and structural issues/deficiencies noticed at the time of the mount mapping are to be reported in this mapping. However, this mount mapping is not a condition assessment of the mount.

V3.0 Updated on 8-31-2020

Antenna Mount Mapping Form (PATENT PENDING)

FCC #

Tower Owner:	CROWN CASTLE	**Mapping Date:**	2/12/2021
Site Name:	HARWINTON 1 CT	**Tower Type:**	Monopole
Site Number or ID:	469283	**Tower Height (Ft.):**	
Mapping Contractor:	HUDSON DESIGN GROUP, LLC.	**Mount Elevation (Ft.):**	165.25

This antenna mapping form is the property of TES and under **PATENT PENDING**. The formation contained herein is considered confidential in nature and is to be used only for the specific customer it was intended for. Reproduction, transmission, publication, modification or disclosure by any method is prohibited except by express written permission of TES. All means and methods are the responsibility of the contractor and the work shall be compliant with ANSI/ASSE A 10.48, OSHA, FCC, FAA and other safety requirements that may apply. TES is not warrantying the usability of the safety climb as it must be assessed prior to each use in compliance with OSHA requirements.

Please Insert Sketches of the Antenna Mount

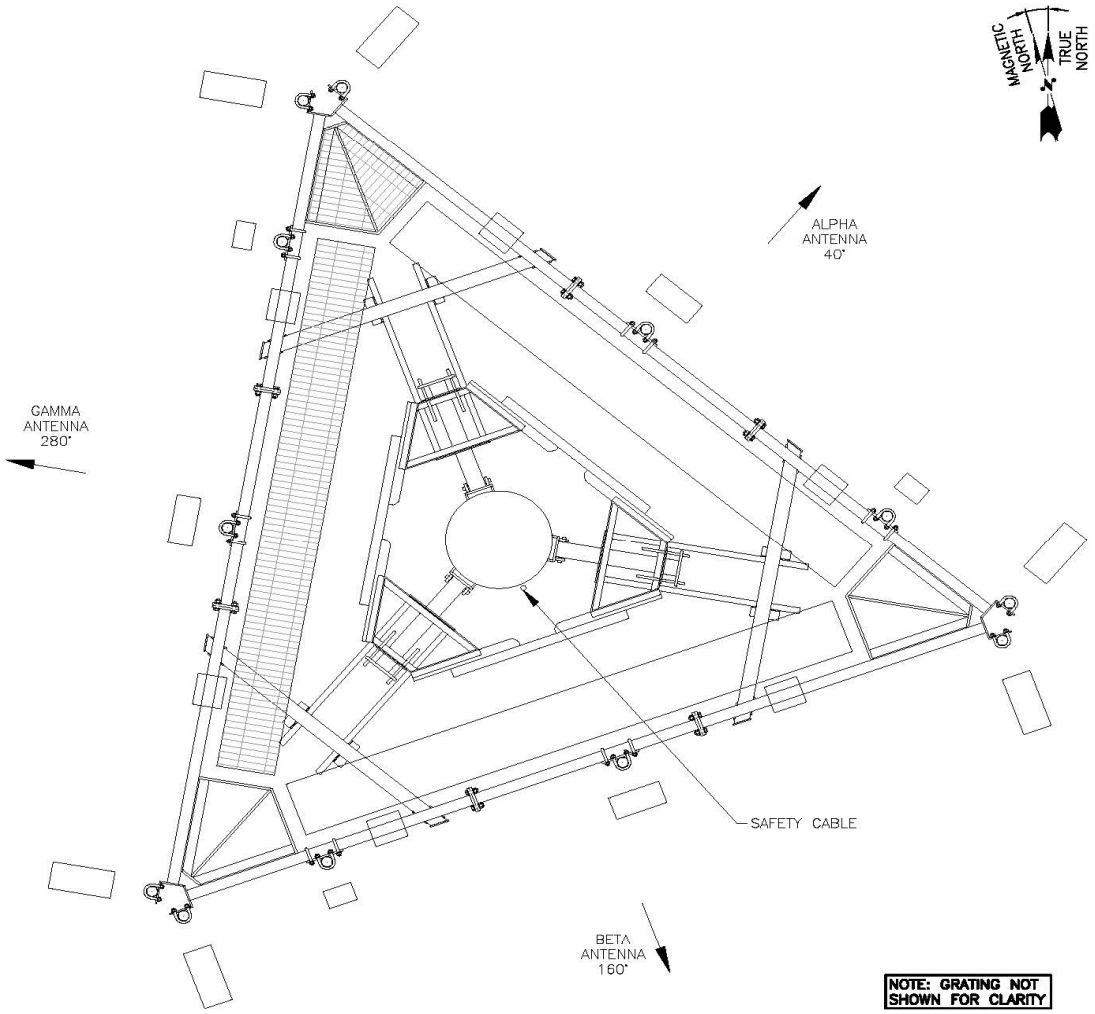

ANTENNA PLAN (1 / SK–1)

SCALE: N.T.S

Please Insert Sketches of the Antenna Mount, cont'd

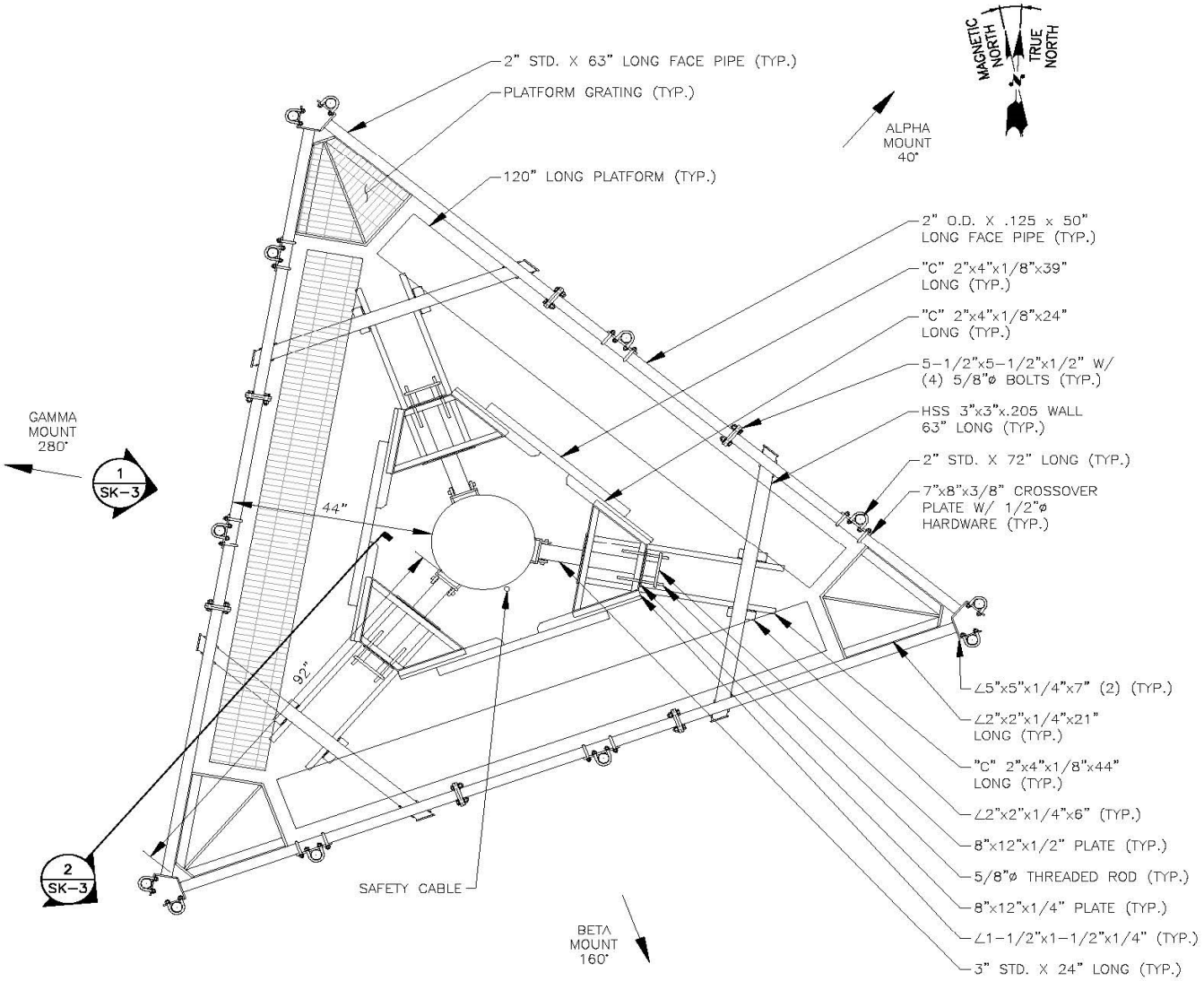

MOUNT PLAN 1 SK-2
SCALE: N.T.S

Please Insert Sketches of the Antenna Mount, cont'd

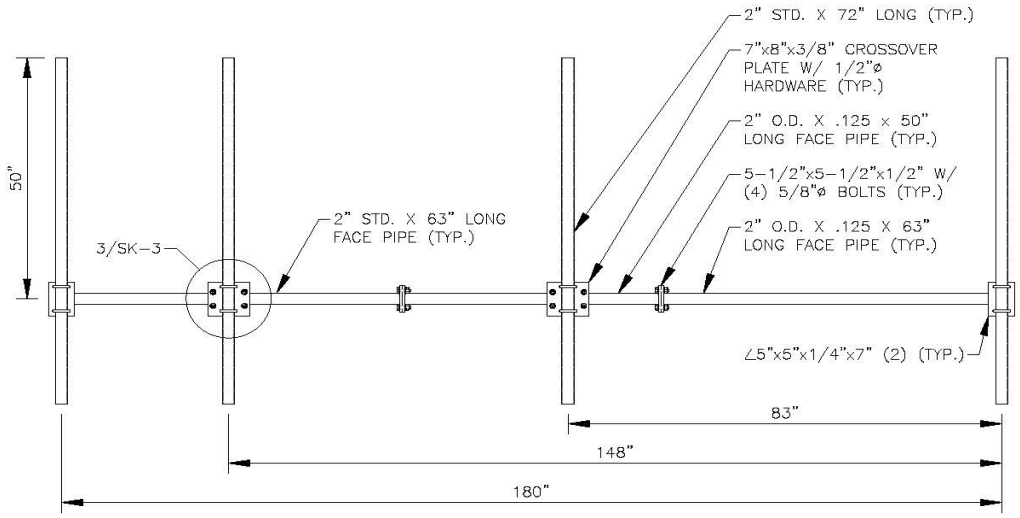

FRONT ELEVATION (1 / SK-3)
SCALE: N.T.S

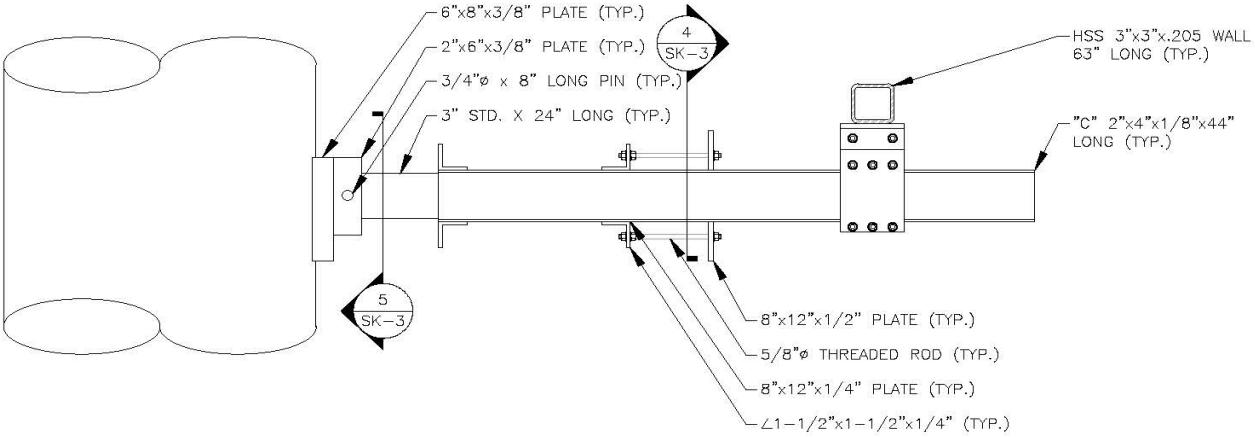

MOUNT SIDE ELEVATION (2 / SK-3)
SCALE: N.T.S

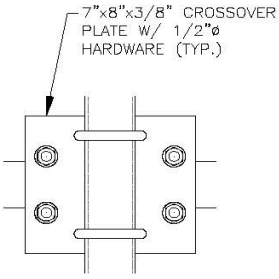

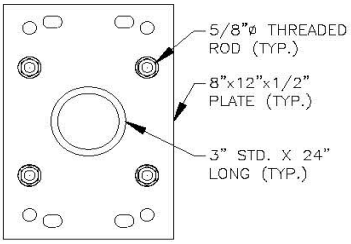

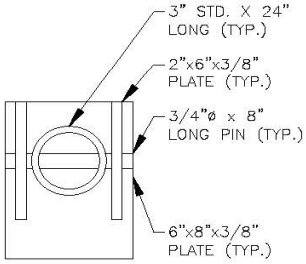

DETAIL - A (3 / SK-3)
SCALE: N.T.S

DETAIL - B (4 / SK-3)
SCALE: N.T.S

DETAIL - C (5 / SK-3)
SCALE: N.T.S

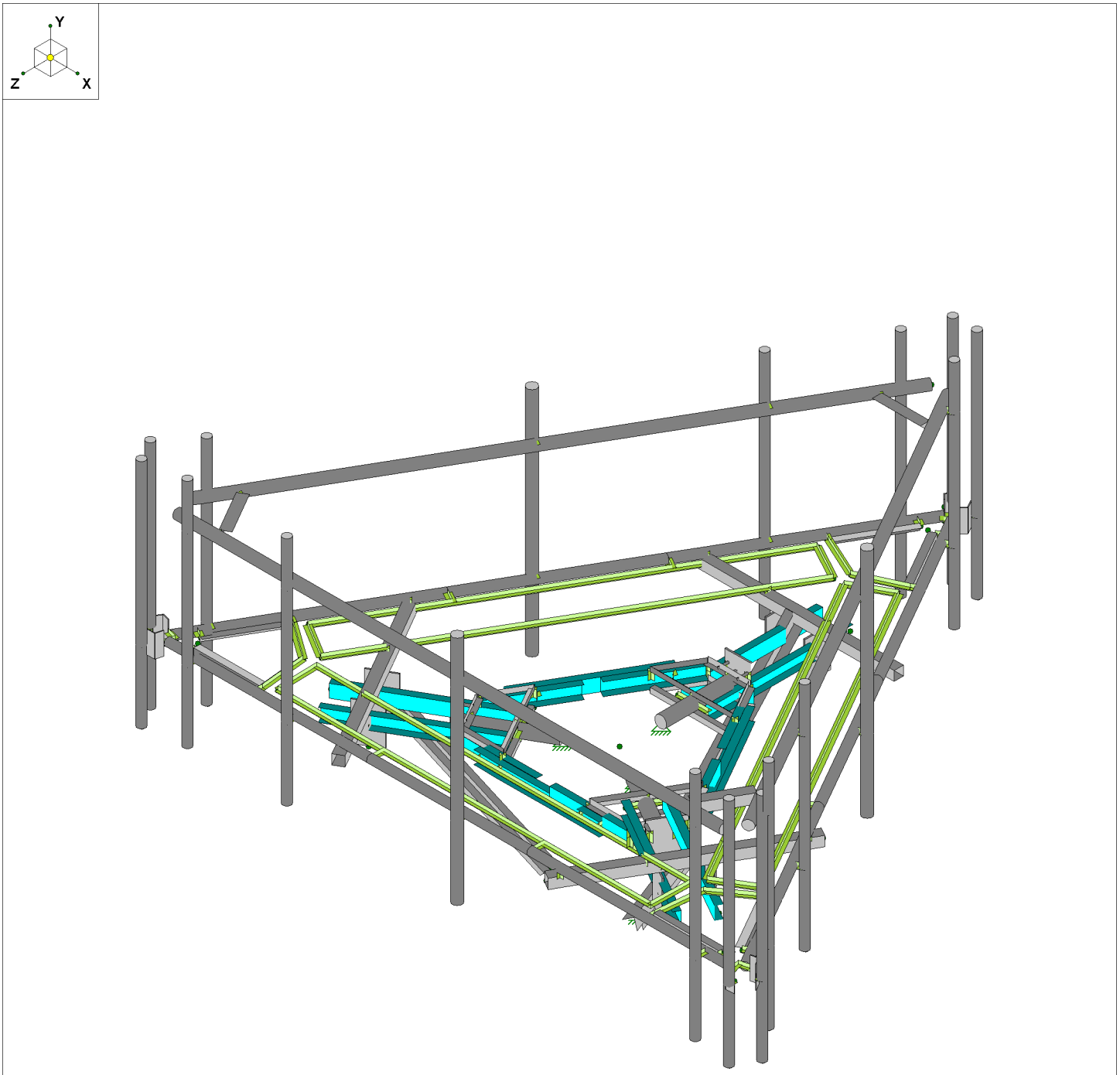

Tower Engineering Solutio...	469283-VZW_MT_LO_H	SK - 1
PD		May 20, 2021 at 12:06 PM
Project No. 10037960		469283-VZW_MT_LO_H.r3d

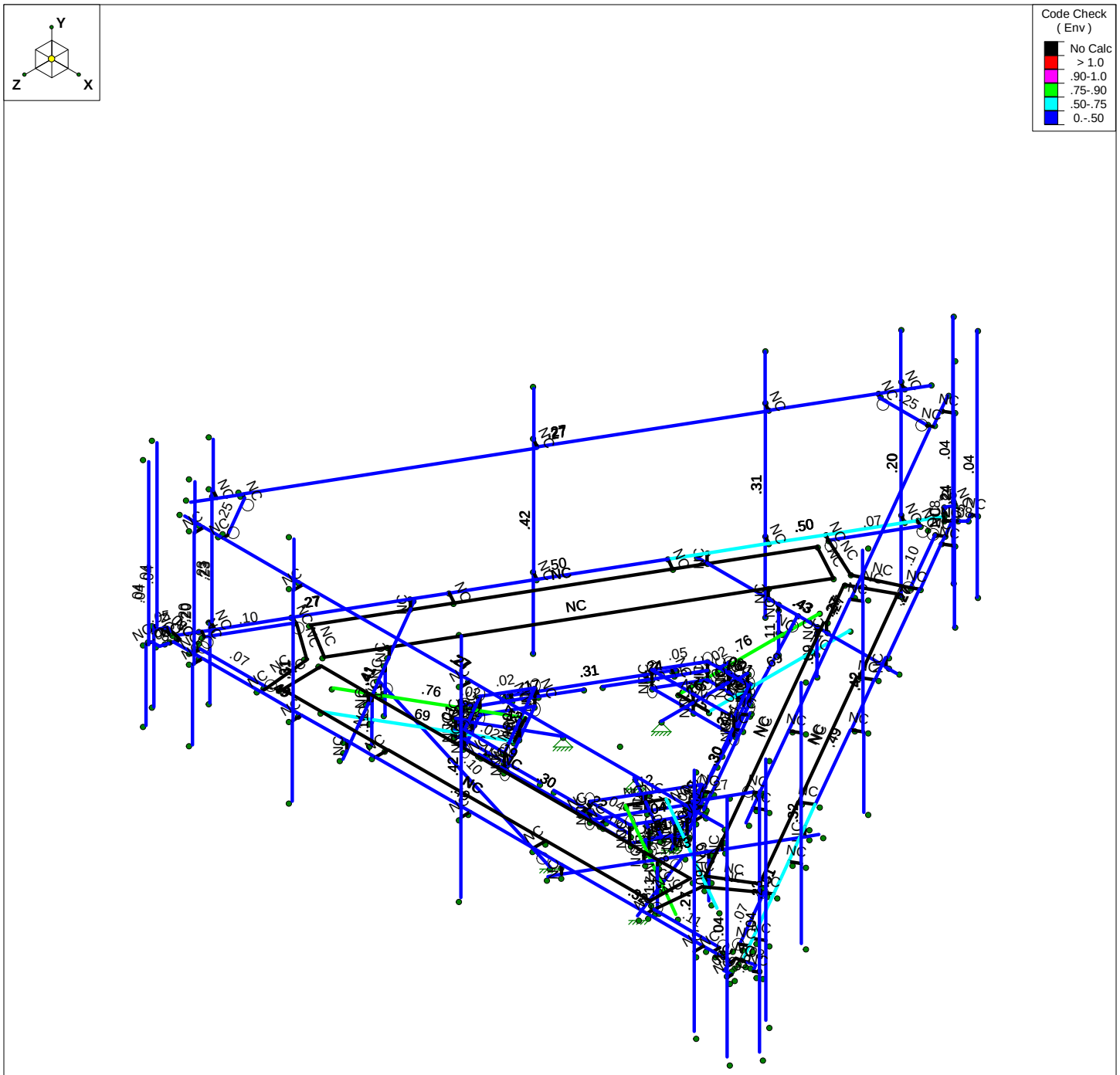

Member Code Checks Displayed (Enveloped)
Envelope Only Solution

Tower Engineering Solutio...	469283-VZW_MT_LO_H	SK - 2
PD		May 20, 2021 at 12:08 PM
Project No. 10037960		469283-VZW_MT_LO_H.r3d

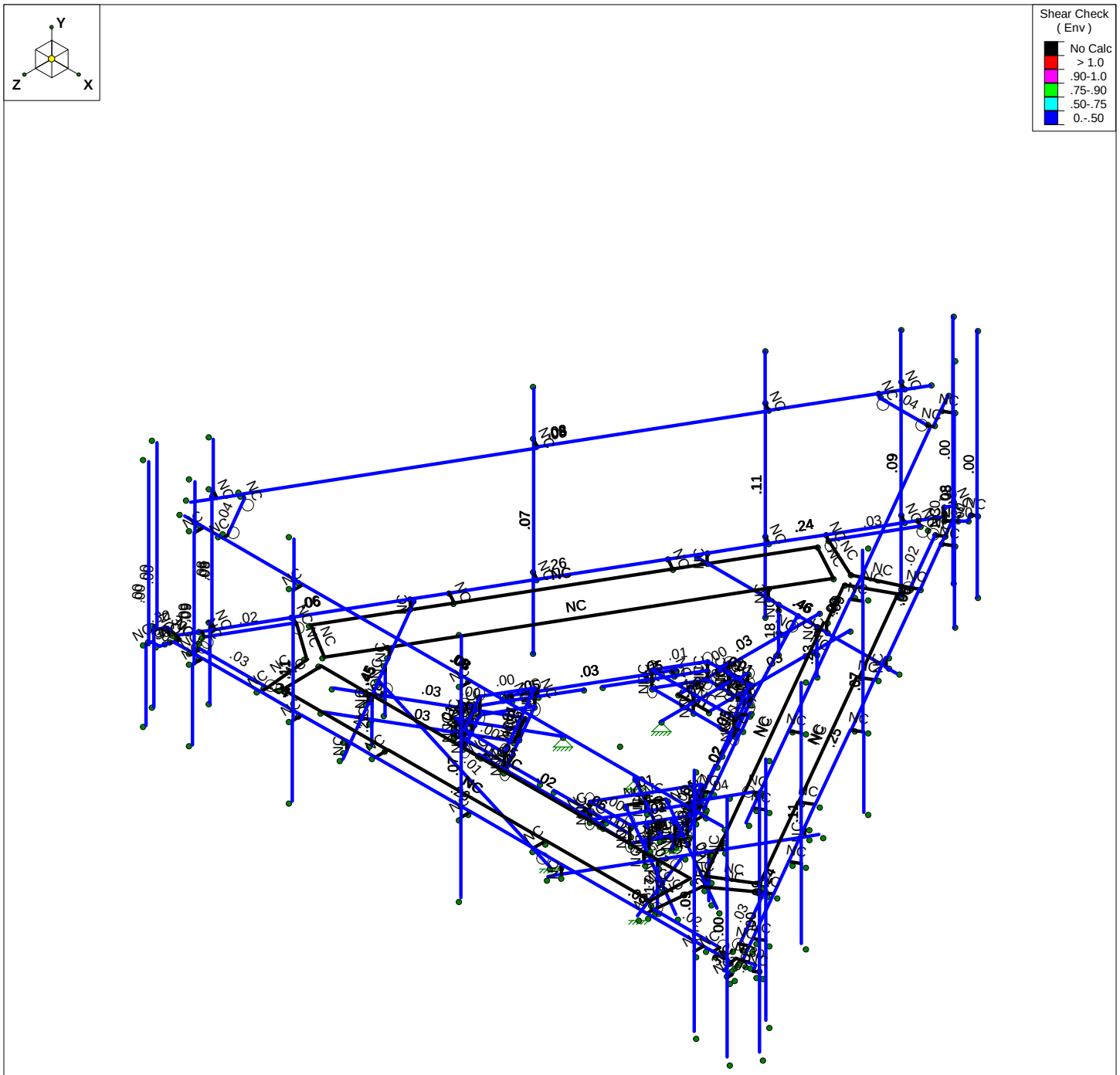

Member Shear Checks Displayed (Enveloped)
Envelope Only Solution

Tower Engineering Solutio...	469283-VZW_MT_LO_H	SK - 3
PD		May 20, 2021 at 12:08 PM
Project No. 10037960		469283-VZW_MT_LO_H.r3d

Basic Load Cases

	BLC Description	Category	X Gravity	Y Gravity	Z Gravity	Joint	Point	Distributed	Area(Me...	Surface(P...
1	Antenna D	None					111			
2	Antenna Di	None					111			
3	Antenna Wo (0 Deg)	None					111			
4	Antenna Wo (30 Deg)	None					111			
5	Antenna Wo (60 Deg)	None					111			
6	Antenna Wo (90 Deg)	None					111			
7	Antenna Wo (120 Deg)	None					111			
8	Antenna Wo (150 Deg)	None					111			
9	Antenna Wo (180 Deg)	None					111			
10	Antenna Wo (210 Deg)	None					111			
11	Antenna Wo (240 Deg)	None					111			
12	Antenna Wo (270 Deg)	None					111			
13	Antenna Wo (300 Deg)	None					111			
14	Antenna Wo (330 Deg)	None					111			
15	Antenna Wi (0 Deg)	None					111			
16	Antenna Wi (30 Deg)	None					111			
17	Antenna Wi (60 Deg)	None					111			
18	Antenna Wi (90 Deg)	None					111			
19	Antenna Wi (120 Deg)	None					111			
20	Antenna Wi (150 Deg)	None					111			
21	Antenna Wi (180 Deg)	None					111			
22	Antenna Wi (210 Deg)	None					111			
23	Antenna Wi (240 Deg)	None					111			
24	Antenna Wi (270 Deg)	None					111			
25	Antenna Wi (300 Deg)	None					111			
26	Antenna Wi (330 Deg)	None					111			
27	Antenna Wm (0 Deg)	None					111			
28	Antenna Wm (30 Deg)	None					111			
29	Antenna Wm (60 Deg)	None					111			
30	Antenna Wm (90 Deg)	None					111			
31	Antenna Wm (120 De...	None					111			
32	Antenna Wm (150 De...	None					111			
33	Antenna Wm (180 De...	None					111			
34	Antenna Wm (210 De...	None					111			
35	Antenna Wm (240 De...	None					111			
36	Antenna Wm (270 De...	None					111			
37	Antenna Wm (300 De...	None					111			
38	Antenna Wm (330 De...	None					111			
39	Structure D	None		-1					9	
40	Structure Di	None						120	9	
41	Structure Wo (0 Deg)	None						240		
42	Structure Wo (30 Deg)	None						240		
43	Structure Wo (60 Deg)	None						240		
44	Structure Wo (90 Deg)	None						240		
45	Structure Wo (120 D...	None						240		
46	Structure Wo (150 D...	None						240		
47	Structure Wo (180 D...	None						240		
48	Structure Wo (210 D...	None						240		
49	Structure Wo (240 D...	None						240		
50	Structure Wo (270 D...	None						240		
51	Structure Wo (300 D...	None						240		

Basic Load Cases (Continued)

	BLC Description	Category	X Gravity	Y Gravity	Z Gravity	Joint	Point	Distributed	Area(Me...	Surface(P...
52	Structure Wo (330 D...	None						240		
53	Structure Wi (0 Deg)	None						240		
54	Structure Wi (30 Deg)	None						240		
55	Structure Wi (60 Deg)	None						240		
56	Structure Wi (90 Deg)	None						240		
57	Structure Wi (120 De...	None						240		
58	Structure Wi (150 De...	None						240		
59	Structure Wi (180 De...	None						240		
60	Structure Wi (210 De...	None						240		
61	Structure Wi (240 De...	None						240		
62	Structure Wi (270 De...	None						240		
63	Structure Wi (300 De...	None						240		
64	Structure Wi (330 De...	None						240		
65	Structure Wm (0 Deg)	None						240		
66	Structure Wm (30 D...	None						240		
67	Structure Wm (60 D...	None						240		
68	Structure Wm (90 D...	None						240		
69	Structure Wm (120 ...	None						240		
70	Structure Wm (150 ...	None						240		
71	Structure Wm (180 ...	None						240		
72	Structure Wm (210 ...	None						240		
73	Structure Wm (240 ...	None						240		
74	Structure Wm (270 ...	None						240		
75	Structure Wm (300 ...	None						240		
76	Structure Wm (330 ...	None						240		
77	Lm1	None					1			
78	Lm2	None					1			
79	Lv1	None					1			
80	Lv2	None					1			
81	BLC 39 Transient Are...	None						48		
82	BLC 40 Transient Are...	None						48		

Load Combinations

	Description	Solve	PDelta	S...	BLC	Fac...	BLC	Fac...	BLC	Fac...	BLC	Fac...	BLC	Fac...	BLC	Fac...	BLC	Fac...	BLC	Fac...	BLC	Fac...	BLC	Fac...
1	1.2D+1.0Wo (0...	Yes	Y		1	1.2	39	1.2	3	1	41	1												
2	1.2D+1.0Wo (3...	Yes	Y		1	1.2	39	1.2	4	1	42	1												
3	1.2D+1.0Wo (6...	Yes	Y		1	1.2	39	1.2	5	1	43	1												
4	1.2D+1.0Wo (9...	Yes	Y		1	1.2	39	1.2	6	1	44	1												
5	1.2D+1.0Wo (1...	Yes	Y		1	1.2	39	1.2	7	1	45	1												
6	1.2D+1.0Wo (1...	Yes	Y		1	1.2	39	1.2	8	1	46	1												
7	1.2D+1.0Wo (1...	Yes	Y		1	1.2	39	1.2	9	1	47	1												
8	1.2D+1.0Wo (2...	Yes	Y		1	1.2	39	1.2	10	1	48	1												
9	1.2D+1.0Wo (2...	Yes	Y		1	1.2	39	1.2	11	1	49	1												
10	1.2D+1.0Wo (2...	Yes	Y		1	1.2	39	1.2	12	1	50	1												
11	1.2D+1.0Wo (3...	Yes	Y		1	1.2	39	1.2	13	1	51	1												
12	1.2D+1.0Wo (3...	Yes	Y		1	1.2	39	1.2	14	1	52	1												
13	1.2D + 1.0Di + ...	Yes	Y		1	1.2	39	1.2	2	1	40	1	15	1	53	1								
14	1.2D + 1.0Di + ...	Yes	Y		1	1.2	39	1.2	2	1	40	1	16	1	54	1								
15	1.2D + 1.0Di + ...	Yes	Y		1	1.2	39	1.2	2	1	40	1	17	1	55	1								
16	1.2D + 1.0Di + ...	Yes	Y		1	1.2	39	1.2	2	1	40	1	18	1	56	1								

Load Combinations (Continued)

	Description	Solve	PDelta	S...	BLC	Fac...	BLC	Fac...	BLC	Fac...	BLC	Fac...	BLC	Fac...	BLC	Fac...	BLC	Fac...	BLC	Fac...	BLC	Fac...	BLC	Fac...
17	1.2D + 1.0Di + ...	Yes	Y		1	1.2	39	1.2	2	1	40	1	19	1	57	1								
18	1.2D + 1.0Di + ...	Yes	Y		1	1.2	39	1.2	2	1	40	1	20	1	58	1								
19	1.2D + 1.0Di + ...	Yes	Y		1	1.2	39	1.2	2	1	40	1	21	1	59	1								
20	1.2D + 1.0Di + ...	Yes	Y		1	1.2	39	1.2	2	1	40	1	22	1	60	1								
21	1.2D + 1.0Di + ...	Yes	Y		1	1.2	39	1.2	2	1	40	1	23	1	61	1								
22	1.2D + 1.0Di + ...	Yes	Y		1	1.2	39	1.2	2	1	40	1	24	1	62	1								
23	1.2D + 1.0Di + ...	Yes	Y		1	1.2	39	1.2	2	1	40	1	25	1	63	1								
24	1.2D + 1.0Di + ...	Yes	Y		1	1.2	39	1.2	2	1	40	1	26	1	64	1								
25	1.2D + 1.5Lm1 ...	Yes	Y		1	1.2	39	1.2	77	1.5	27	1	65	1										
26	1.2D + 1.5Lm1 ...	Yes	Y		1	1.2	39	1.2	77	1.5	28	1	66	1										
27	1.2D + 1.5Lm1 ...	Yes	Y		1	1.2	39	1.2	77	1.5	29	1	67	1										
28	1.2D + 1.5Lm1 ...	Yes	Y		1	1.2	39	1.2	77	1.5	30	1	68	1										
29	1.2D + 1.5Lm1 ...	Yes	Y		1	1.2	39	1.2	77	1.5	31	1	69	1										
30	1.2D + 1.5Lm1 ...	Yes	Y		1	1.2	39	1.2	77	1.5	32	1	70	1										
31	1.2D + 1.5Lm1 ...	Yes	Y		1	1.2	39	1.2	77	1.5	33	1	71	1										
32	1.2D + 1.5Lm1 ...	Yes	Y		1	1.2	39	1.2	77	1.5	34	1	72	1										
33	1.2D + 1.5Lm1 ...	Yes	Y		1	1.2	39	1.2	77	1.5	35	1	73	1										
34	1.2D + 1.5Lm1 ...	Yes	Y		1	1.2	39	1.2	77	1.5	36	1	74	1										
35	1.2D + 1.5Lm1 ...	Yes	Y		1	1.2	39	1.2	77	1.5	37	1	75	1										
36	1.2D + 1.5Lm1 ...	Yes	Y		1	1.2	39	1.2	77	1.5	38	1	76	1										
37	1.2D + 1.5Lm2 ...	Yes	Y		1	1.2	39	1.2	78	1.5	27	1	65	1										
38	1.2D + 1.5Lm2 ...	Yes	Y		1	1.2	39	1.2	78	1.5	28	1	66	1										
39	1.2D + 1.5Lm2 ...	Yes	Y		1	1.2	39	1.2	78	1.5	29	1	67	1										
40	1.2D + 1.5Lm2 ...	Yes	Y		1	1.2	39	1.2	78	1.5	30	1	68	1										
41	1.2D + 1.5Lm2 ...	Yes	Y		1	1.2	39	1.2	78	1.5	31	1	69	1										
42	1.2D + 1.5Lm2 ...	Yes	Y		1	1.2	39	1.2	78	1.5	32	1	70	1										
43	1.2D + 1.5Lm2 ...	Yes	Y		1	1.2	39	1.2	78	1.5	33	1	71	1										
44	1.2D + 1.5Lm2 ...	Yes	Y		1	1.2	39	1.2	78	1.5	34	1	72	1										
45	1.2D + 1.5Lm2 ...	Yes	Y		1	1.2	39	1.2	78	1.5	35	1	73	1										
46	1.2D + 1.5Lm2 ...	Yes	Y		1	1.2	39	1.2	78	1.5	36	1	74	1										
47	1.2D + 1.5Lm2 ...	Yes	Y		1	1.2	39	1.2	78	1.5	37	1	75	1										
48	1.2D + 1.5Lm2 ...	Yes	Y		1	1.2	39	1.2	78	1.5	38	1	76	1										
49	1.2D + 1.5Lv1	Yes	Y		1	1.2	39	1.2	79	1.5														
50	1.2D + 1.5Lv2	Yes	Y		1	1.2	39	1.2	80	1.5														
51	1.4D	Yes	Y		1	1.4	39	1.4																
52	Seismic Mass		Y		1	1	39	1																
53	1.2D + 1.0Ev + ...		Y		1	1.2	39	1.2	SX		SY	1	SZ	-1										
54	1.2D + 1.0Ev + ...		Y		1	1.2	39	1.2	SX	.5	SY	1	SZ	-.866										
55	1.2D + 1.0Ev + ...		Y		1	1.2	39	1.2	SX	.866	SY	1	SZ	-.5										
56	1.2D + 1.0Ev + ...		Y		1	1.2	39	1.2	SX	1	SY	1	SZ											
57	1.2D + 1.0Ev + ...		Y		1	1.2	39	1.2	SX	.866	SY	1	SZ	.5										
58	1.2D + 1.0Ev + ...		Y		1	1.2	39	1.2	SX	.5	SY	1	SZ	.866										
59	1.2D + 1.0Ev + ...		Y		1	1.2	39	1.2	SX		SY	1	SZ	1										
60	1.2D + 1.0Ev + ...		Y		1	1.2	39	1.2	SX	-.5	SY	1	SZ	.866										
61	1.2D + 1.0Ev + ...		Y		1	1.2	39	1.2	SX	-.866	SY	1	SZ	.5										
62	1.2D + 1.0Ev + ...		Y		1	1.2	39	1.2	SX	-1	SY	1	SZ											
63	1.2D + 1.0Ev + ...		Y		1	1.2	39	1.2	SX	-.866	SY	1	SZ	-.5										
64	1.2D + 1.0Ev + ...		Y		1	1.2	39	1.2	SX	-.5	SY	1	SZ	-.866										

Joint Coordinates and Temperatures

	Label	X [ft]	Y [ft]	Z [ft]	Temp [F]	Detach From Diap...
1	CP	0	0	0	0	
2	N2	-0.	0	-1.083333	0	
3	N3	-0.	0	-3.083333	0	
4	N4	-0.	0	-1.916667	0	
5	N5	-0.	0	-2.833333	0	
6	N6	-0.	0.208333	-1.916667	0	
7	N7	-0.	0.208333	-2.833333	0	
8	N8	-0.	-0.208333	-1.916667	0	
9	N9	-0.	-0.208333	-2.833333	0	
10	N11	-1.083333	-0.208333	-1.916667	0	
11	N12	1.083333	0.208333	-1.916667	0	
12	N13	-1.083333	0.208333	-1.916667	0	
13	N14	0.333333	0	-3.083333	0	
14	N15	-0.333333	0	-3.083333	0	
15	N16	.25	0	-3.083333	0	
16	N18	.25	-0.208333	-3.083333	0	
17	N22	.25	-0.208333	-2.833333	0	
18	N24	.25	0.208333	-3.083333	0	
19	N28	.25	0.208333	-2.833333	0	
20	N30	0.395833	0	-1.916667	0	
21	N31	-0.395833	0	-1.916667	0	
22	N33	0.395833	0	-5.583333	0	
23	N34	-0.395833	0	-5.583333	0	
24	N39	1.083333	0	-1.916667	0	
25	N52	1.083333	-0.208333	-1.916667	0	
26	N53	-.25	0	-3.083333	0	
27	N54A	-.25	-0.208333	-3.083333	0	
28	N55A	-.25	-0.208333	-2.833333	0	
29	N56	-.25	0.208333	-3.083333	0	
30	N57	-.25	0.208333	-2.833333	0	
31	N59A	0.554096	-0.208333	-2.833333	0	
32	N58B	-0.554096	-0.208333	-2.833333	0	
33	N49	0.554096	0.208333	-2.833333	0	
34	N50	-0.554096	0.208333	-2.833333	0	
35	N46	-1.083333	0	-1.916667	0	
36	N47	0.554096	0	-2.833333	0	
37	N40A	1.554096	0	-1.101283	0	
38	N51	-0.554096	0	-2.833333	0	
39	N52A	-1.554096	0	-1.101283	0	
40	N49A	-0.938194	0	0.541667	0	
41	N50B	-2.670245	0	1.541667	0	
42	N51A	-1.659882	0	0.958333	0	
43	N52B	-2.453739	0	1.416667	0	
44	N53A	-1.659882	0.208333	0.958333	0	
45	N54	-2.453739	0.208333	1.416667	0	
46	N55	-1.659882	-0.208333	0.958333	0	
47	N56A	-2.453739	-0.208333	1.416667	0	
48	N57A	-1.118215	-0.208333	1.896528	0	
49	N58	-2.201549	0.208333	0.020139	0	
50	N59	-1.118215	0.208333	1.896528	0	
51	N60	-2.836912	0	1.252992	0	

Joint Coordinates and Temperatures (Continued)

	Label	X [ft]	Y [ft]	Z [ft]	Temp [F]	Detach From Diap...
52	N61	-2.503578	0	1.830342	0	
53	N62	-2.795245	0	1.32516	0	
54	N63	-2.795245	-0.208333	1.32516	0	
55	N64	-2.578739	-0.208333	1.20016	0	
56	N65	-2.795245	0.208333	1.32516	0	
57	N66	-2.578739	0.208333	1.20016	0	
58	N67	-1.857799	0	0.615532	0	
59	N68	-1.461965	0	1.301135	0	
60	N70	-5.033225	0	2.448865	0	
61	N71	-4.637392	0	3.134468	0	
62	N73	-2.201549	0	0.020139	0	
63	N74	-2.201549	-0.208333	0.020139	0	
64	N75	-2.545245	0	1.758173	0	
65	N76	-2.545245	-0.208333	1.758173	0	
66	N77	-2.328739	-0.208333	1.633173	0	
67	N78	-2.545245	0.208333	1.758173	0	
68	N79	-2.328739	0.208333	1.633173	0	
69	N80	-2.730786	-0.208333	0.936806	0	
70	N81	-2.176691	-0.208333	1.896528	0	
71	N82	-2.730786	0.208333	0.936806	0	
72	N83	-2.176691	0.208333	1.896528	0	
73	N84	-1.118215	0	1.896528	0	
74	N85	-2.730786	0	0.936806	0	
75	N86	-1.730786	0	-0.795245	0	
76	N93	-2.176691	0	1.896528	0	
77	N94	-0.176691	0	1.896528	0	
78	N96	0.938194	0	0.541667	0	
79	N97	2.670245	0	1.541667	0	
80	N98	1.659882	0	0.958333	0	
81	N99	2.453739	0	1.416667	0	
82	N100	1.659882	0.208333	0.958333	0	
83	N101	2.453739	0.208333	1.416667	0	
84	N102	1.659882	-0.208333	0.958333	0	
85	N103	2.453739	-0.208333	1.416667	0	
86	N104	2.201549	-0.208333	0.020139	0	
87	N105	1.118215	0.208333	1.896528	0	
88	N106	2.201549	0.208333	0.020139	0	
89	N107	2.503578	0	1.830342	0	
90	N108	2.836912	0	1.252992	0	
91	N109	2.545245	0	1.758173	0	
92	N110	2.545245	-0.208333	1.758173	0	
93	N111	2.328739	-0.208333	1.633173	0	
94	N112	2.545245	0.208333	1.758173	0	
95	N113	2.328739	0.208333	1.633173	0	
96	N114	1.461965	0	1.301135	0	
97	N115	1.857799	0	0.615532	0	
98	N117	4.637392	0	3.134468	0	
99	N118	5.033225	0	2.448865	0	
100	N120	1.118215	0	1.896528	0	
101	N121	1.118215	-0.208333	1.896528	0	
102	N122	2.795245	0	1.32516	0	
103	N123	2.795245	-0.208333	1.32516	0	

Joint Coordinates and Temperatures (Continued)

	Label	X [ft]	Y [ft]	Z [ft]	Temp [F]	Detach From Diap...
104	N124	2.578739	-0.208333	1.20016	0	
105	N125	2.795245	0.208333	1.32516	0	
106	N126	2.578739	0.208333	1.20016	0	
107	N127	2.176691	-0.208333	1.896528	0	
108	N128	2.730786	-0.208333	0.936806	0	
109	N129	2.176691	0.208333	1.896528	0	
110	N130	2.730786	0.208333	0.936806	0	
111	N131	2.201549	0	0.020139	0	
112	N132	2.176691	0	1.896528	0	
113	N133	0.176691	0	1.896528	0	
114	N134	1.541668	0	1.896528	0	
115	N136	1.541668	0	2.063194	0	
116	N138	1.625001	0	2.063194	0	
117	N139	-1.624999	0	2.063194	0	
118	N140	2.730786	0	0.936806	0	
119	N141	1.730786	0	-0.795245	0	
120	N126A	1.041668	0	1.896528	0	
121	N127A	1.041668	0	2.063194	0	
122	N128A	-1.541668	0	1.896528	0	
123	N129A	-1.541668	0	2.063194	0	
124	N130A	-1.041668	0	1.896528	0	
125	N131A	-1.041668	0	2.063194	0	
126	N132A	0.871607	0	-2.283387	0	
127	N133A	1.015945	0	-2.36672	0	
128	N134A	0.974278	0	-2.438889	0	
129	N135	2.599278	0	0.375693	0	
130	N136A	1.121607	0	-1.850374	0	
131	N137	1.265945	0	-1.933708	0	
132	N138A	2.413275	0	0.386859	0	
133	N139A	2.557612	0	0.303526	0	
134	N140A	2.163275	0	-0.046153	0	
135	N141A	2.307612	0	-0.129487	0	
136	N142	-2.413275	0	0.386859	0	
137	N143	-2.557612	0	0.303526	0	
138	N144	-2.599279	0	0.375695	0	
139	N145	-0.974279	0	-2.438888	0	
140	N146	-2.163275	0	-0.046153	0	
141	N147	-2.307612	0	-0.129487	0	
142	N148	-0.871607	0	-2.283387	0	
143	N149	-1.015945	0	-2.36672	0	
144	N150	-1.121607	0	-1.850374	0	
145	N151	-1.265945	0	-1.933708	0	
146	N153	0.395833	0	-4.625	0	
147	N154	-0.395833	0	-4.625	0	
148	N154A	.5	0	-4.625	0	
149	N155	.5	.5	-4.625	0	
150	N156	.5	-.5	-4.625	0	
151	N157	.5	.625	-4.625	0	
152	N159	-.5	0	-4.625	0	
153	N160	-.5	.5	-4.625	0	
154	N161	-.5	-.5	-4.625	0	
155	N162	-.5	.625	-4.625	0	

Joint Coordinates and Temperatures (Continued)

	Label	X [ft]	Y [ft]	Z [ft]	Temp [F]	Detach From Diap...
156	N180A	7.333333	0.854167	4.354167	0	
157	N181A	-7.333333	0.854167	4.354167	0	
158	N198	2.357514	0.854167	-4.625	0	
159	N199	-2.357514	0.854167	-4.625	0	
160	N200	2.357514	.625	-4.625	0	
161	N201A	-2.357514	.625	-4.625	0	
162	N199A	-2.625014	.625	-4.625	0	
163	N200A	2.624986	.625	-4.625	0	
164	N206A	7.408822	0.854167	4.635895	0	
165	N207A	7.295211	0.854167	4.211892	0	
166	N206B	7.719214	0.854167	4.098281	0	
167	N203	0.104152	0.854167	-8.527936	0	
168	N204A	7.437486	0.854167	4.17377	0	
169	N205A	0.310392	0.854167	-8.734176	0	
170	N207B	-0.310392	0.854167	-8.734176	0	
171	N208A	-7.437486	0.854167	4.17377	0	
172	N209A	-0.104152	0.854167	-8.527936	0	
173	N210A	-7.719214	0.854167	4.098281	0	
174	N212A	-7.408822	0.854167	4.635895	0	
175	N218A	-2.083333	0.854167	4.354167	0	
176	N219	4.812486	0.854167	-0.372864	0	
177	N220	-2.729152	0.854167	-3.981303	0	
178	N221A	2.083333	0.854167	4.354167	0	
179	N222A	2.729152	0.854167	-3.981303	0	
180	N223	-4.812486	0.854167	-0.372864	0	
181	N224	6.833333	0.854167	4.354167	0	
182	N225	5.083333	0.854167	4.354167	0	
183	N226	6.833333	0.854167	4.166667	0	
184	N227	5.083333	0.854167	4.166667	0	
185	N228	-6.833333	0.854167	4.354167	0	
186	N229	-5.083333	0.854167	4.354167	0	
187	N230	-6.833333	0.854167	4.166667	0	
188	N231	-5.083333	0.854167	4.166667	0	
189	N232	0.354152	0.854167	-8.094924	0	
190	N233	1.229152	0.854167	-6.579379	0	
191	N234	0.191773	0.854167	-8.001174	0	
192	N235	1.066773	0.854167	-6.485629	0	
193	N236	7.187486	0.854167	3.740757	0	
194	N237	6.312486	0.854167	2.225212	0	
195	N238	7.025106	0.854167	3.834507	0	
196	N239	6.150106	0.854167	2.318962	0	
197	N240	-7.187486	0.854167	3.740757	0	
198	N241	-6.312486	0.854167	2.225212	0	
199	N242	-7.025106	0.854167	3.834507	0	
200	N243	-6.150106	0.854167	2.318962	0	
201	N244	-0.354152	0.854167	-8.094924	0	
202	N245	-1.229152	0.854167	-6.579379	0	
203	N246	-0.191773	0.854167	-8.001174	0	
204	N247	-1.066773	0.854167	-6.485629	0	
205	N249	-0.	0.854167	-6.001174	0	
206	N249A	-0.	0.854167	-8.001174	0	
207	N250	-5.197169	0.854167	3.000587	0	

Joint Coordinates and Temperatures (Continued)

	Label	X [ft]	Y [ft]	Z [ft]	Temp [F]	Detach From Diap...
208	N251	-6.92922	0.854167	4.000587	0	
209	N252	5.197169	0.854167	3.000587	0	
210	N253	6.92922	0.854167	4.000587	0	
211	N254	-4.833333	0.854167	4.020833	0	
212	N255	4.833333	0.854167	4.020833	0	
213	N262A	4.86089	0.854167	2.973103	0	
214	N262	-4.86089	0.854167	2.973103	0	
215	N258	-2.083333	0.854167	4.020833	0	
216	N259	2.083333	0.854167	4.020833	0	
217	N262B	5.89881	0.854167	2.175373	0	
218	N263	1.065477	0.854167	-6.196206	0	
219	N264	0.144338	0.854167	-5.696206	0	
220	N265	5.005228	0.854167	2.723103	0	
221	N266	4.52381	0.854167	-0.206197	0	
222	N267	2.440477	0.854167	-3.814636	0	
223	N270	-1.065477	0.854167	-6.196206	0	
224	N271	-5.89881	0.854167	2.175373	0	
225	N272	-5.005228	0.854167	2.723103	0	
226	N273	-0.144338	0.854167	-5.696206	0	
227	N274	-2.440477	0.854167	-3.814636	0	
228	N275	-4.52381	0.854167	-0.206197	0	
229	N274A	0.206225	0.854167	-8.914598	0	
230	N275A	0.314478	0.854167	-8.977098	0	
231	N274B	0.314478	5.020833	-8.977098	0	
232	N275B	0.314478	-0.979167	-8.977098	0	
233	N276	-0.206225	0.854167	-8.914598	0	
234	N277	-0.314478	0.854167	-8.977098	0	
235	N278	-0.314478	5.020833	-8.977098	0	
236	N279	-0.314478	-0.979167	-8.977098	0	
237	N280	-7.823381	0.854167	4.278703	0	
238	N281	-7.931634	0.854167	4.216203	0	
239	N282	-7.931634	5.020833	4.216203	0	
240	N283	-7.931634	-0.979167	4.216203	0	
241	N284	-7.617156	0.854167	4.635895	0	
242	N285	-7.617156	0.854167	4.760895	0	
243	N286	-7.617156	5.020833	4.760895	0	
244	N287	-7.617156	-0.979167	4.760895	0	
245	N288	7.617156	0.854167	4.635895	0	
246	N289	7.617156	0.854167	4.760895	0	
247	N290	7.617156	5.020833	4.760895	0	
248	N291	7.617156	-0.979167	4.760895	0	
249	N292	7.823381	0.854167	4.278703	0	
250	N293	7.931634	0.854167	4.216203	0	
251	N294	7.931634	5.020833	4.216203	0	
252	N295	7.931634	-0.979167	4.216203	0	
253	N296	0.416667	0.854167	4.354167	0	
254	N297	0.416667	0.854167	4.604167	0	
255	N298	0.416667	5.020833	4.604167	0	
256	N299	0.416667	-0.979167	4.604167	0	
257	N300	-4	0.854167	4.354167	0	
258	N301	-4	0.854167	4.604167	0	
259	N302	-4	5.020833	4.604167	0	

Joint Coordinates and Temperatures (Continued)

	Label	X [ft]	Y [ft]	Z [ft]	Temp [F]	Detach From Diap...
260	N303	-4	-0.979167	4.604167	0	
261	N304	3.562486	0.854167	-2.537927	0	
262	N305	3.778992	0.854167	-2.662927	0	
263	N306	3.778992	5.020833	-2.662927	0	
264	N307	3.778992	-0.979167	-2.662927	0	
265	N312	-3.979152	0.854167	-1.816239	0	
266	N313	-4.195659	0.854167	-1.941239	0	
267	N314	-4.195659	5.020833	-1.941239	0	
268	N315	-4.195659	-0.979167	-1.941239	0	
269	N289A	-4.203284	0	1.969698	0	
270	N290A	-3.807451	0	2.655302	0	
271	N291A	-4.255367	0	1.879487	0	
272	N292A	-4.255367	.5	1.879487	0	
273	N293A	-4.255367	-.5	1.879487	0	
274	N294A	-4.255367	.625	1.879487	0	
275	N295A	-3.755367	0	2.745513	0	
276	N296A	-3.755367	.5	2.745513	0	
277	N297A	-3.755367	-.5	2.745513	0	
278	N298A	-3.755367	.625	2.745513	0	
279	N299A	-5.184124	0.854167	0.270833	0	
280	N300A	-2.826611	0.854167	4.354167	0	
281	N301A	-5.184124	.625	0.270833	0	
282	N302A	-2.826611	.625	4.354167	0	
283	N303A	-2.692861	.625	4.585828	0	
284	N304A	-5.317861	.625	0.039195	0	
285	N305A	3.807451	0	2.655302	0	
286	N306A	4.203284	0	1.969698	0	
287	N307A	3.755367	0	2.745513	0	
288	N308A	3.755367	.5	2.745513	0	
289	N309A	3.755367	-.5	2.745513	0	
290	N310A	3.755367	.625	2.745513	0	
291	N311A	4.255367	0	1.879487	0	
292	N312A	4.255367	.5	1.879487	0	
293	N313A	4.255367	-.5	1.879487	0	
294	N314A	4.255367	.625	1.879487	0	
295	N315A	2.826611	0.854167	4.354167	0	
296	N316A	5.184124	0.854167	0.270833	0	
297	N317A	2.826611	.625	4.354167	0	
298	N318A	5.184124	.625	0.270833	0	
299	N319A	5.317874	.625	0.039172	0	
300	N320	2.692874	.625	4.585805	0	
301	N319B	0.762799	0.854167	-4.625	0	
302	N320A	-0.762799	0.854167	-4.625	0	
303	N319C	0.762799	.625	-4.625	0	
304	N320B	-0.762799	.625	-4.625	0	
305	N321	-4.386767	0.854167	1.651897	0	
306	N322	-3.623968	0.854167	2.973103	0	
307	N323	-4.386767	.625	1.651897	0	
308	N324	-3.623968	.625	2.973103	0	
309	N325	3.623968	0.854167	2.973103	0	
310	N326	4.386767	0.854167	1.651897	0	
311	N327	3.623968	.625	2.973103	0	

Joint Coordinates and Temperatures (Continued)

	Label	X [ft]	Y [ft]	Z [ft]	Temp [F]	Detach From Diap...
312	N328	4.386767	.625	1.651897	0	
313	N329	-0.	-3	-1.333333	0	
314	N330	0	.625	-4.625	0	
315	N331	-1.154701	-3	0.666667	0	
316	N332	-4.005367	.625	2.3125	0	
317	N333	1.154701	-3	0.666667	0	
318	N334	4.005367	.625	2.3125	0	
319	N336	0.416667	3.854167	4.354167	0	
320	N337	0.416667	3.854167	4.604167	0	
321	N338	-4	3.854167	4.354167	0	
322	N339	-4	3.854167	4.604167	0	
323	N341	7.083333	3.854167	4.354167	0	
324	N342	-7.083333	3.854167	4.354167	0	
325	N342A	6.583333	0.854167	4.354167	0	
326	N343	6.583333	0.854167	4.604167	0	
327	N344	6.583333	5.020833	4.604167	0	
328	N345	6.583333	-0.979167	4.604167	0	
329	N346	6.583333	3.854167	4.354167	0	
330	N347	6.583333	3.854167	4.604167	0	
331	N348	6.083333	3.854167	4.354167	0	
332	N349	6.083333	3.854167	4.229167	0	
333	N366A	3.562486	3.854167	-2.537927	0	
334	N367A	3.778992	3.854167	-2.662927	0	
335	N368A	-3.979152	3.854167	-1.816239	0	
336	N369A	-4.195659	3.854167	-1.941239	0	
337	N377A	7.360294	0.854167	4.454784	0	
338	N381A	-7.360294	0.854167	4.454784	0	
339	N385	0.177809	0.854167	-8.601593	0	
340	N387	7.538103	0.854167	4.146809	0	
341	N393	-7.538103	0.854167	4.146809	0	
342	N395	-0.177809	0.854167	-8.601593	0	
343	N381B	-7.295211	0.854167	4.211892	0	
344	N382A	0.	0.854167	-8.423784	0	
345	N358	0.229152	3.854167	-8.31143	0	
346	N359	7.312486	3.854167	3.957263	0	
347	N360	-7.312486	3.854167	3.957263	0	
348	N361	-0.229152	3.854167	-8.31143	0	
349	N362	-6.583333	0.854167	4.354167	0	
350	N363	-6.583333	0.854167	4.604167	0	
351	N364	-6.583333	5.020833	4.604167	0	
352	N365	-6.583333	-0.979167	4.604167	0	
353	N366	-6.583333	3.854167	4.354167	0	
354	N367	-6.583333	3.854167	4.604167	0	
355	N356	5.770819	0.854167	1.287018	0	
356	N357	5.987325	0.854167	1.162018	0	
357	N358A	5.987325	5.020833	1.162018	0	
358	N359A	5.987325	-0.979167	1.162018	0	
359	N360A	5.770819	3.854167	1.287018	0	
360	N361A	5.987325	3.854167	1.162018	0	
361	N362A	-1.770819	0.854167	-5.641185	0	
362	N363A	-1.987325	0.854167	-5.766185	0	
363	N364A	-1.987325	5.020833	-5.766185	0	

Joint Coordinates and Temperatures (Continued)

	Label	X [ft]	Y [ft]	Z [ft]	Temp [F]	Detach From Diap...
364	N365A	-1.987325	-0.979167	-5.766185	0	
365	N366B	-1.770819	3.854167	-5.641185	0	
366	N367B	-1.987325	3.854167	-5.766185	0	
367	N368	0.479152	0.854167	-7.878417	0	
368	N369	0.695659	0.854167	-8.003417	0	
369	N370	0.695659	5.020833	-8.003417	0	
370	N371	0.695659	-0.979167	-8.003417	0	
371	N372	0.479152	3.854167	-7.878417	0	
372	N373	0.695659	3.854167	-8.003417	0	
373	N374	7.062486	0.854167	3.524251	0	
374	N375	7.278992	0.854167	3.399251	0	
375	N376	7.278992	5.020833	3.399251	0	
376	N377	7.278992	-0.979167	3.399251	0	
377	N378	7.062486	3.854167	3.524251	0	
378	N379	7.278992	3.854167	3.399251	0	
379	N380A	-7.062486	0.854167	3.524251	0	
380	N381	-7.278992	0.854167	3.399251	0	
381	N382	-7.278992	5.020833	3.399251	0	
382	N383	-7.278992	-0.979167	3.399251	0	
383	N384	-7.062486	3.854167	3.524251	0	
384	N385A	-7.278992	3.854167	3.399251	0	
385	N386	-0.479152	0.854167	-7.878417	0	
386	N387A	-0.695659	0.854167	-8.003417	0	
387	N388	-0.695659	5.020833	-8.003417	0	
388	N389	-0.695659	-0.979167	-8.003417	0	
389	N390	-0.479152	3.854167	-7.878417	0	
390	N391	-0.695659	3.854167	-8.003417	0	
391	N392	-6.083333	3.854167	4.354167	0	
392	N393A	-6.083333	3.854167	4.229167	0	
393	N394	0.729152	3.854167	-7.445405	0	
394	N395A	0.620899	3.854167	-7.382905	0	
395	N396	6.812486	3.854167	3.091238	0	
396	N397	6.704232	3.854167	3.153738	0	
397	N398	-6.812486	3.854167	3.091238	0	
398	N399	-6.704232	3.854167	3.153738	0	
399	N400	-0.729152	3.854167	-7.445405	0	
400	N401	-0.620899	3.854167	-7.382905	0	

Hot Rolled Steel Section Sets

	Label	Shape	Type	Design List	Material	Design Rul...	A [in2]	Iyy [in4]	Izz [in4]	J [in4]
1	Mount Pipe	PIPE 2.0	Column	Pipe	A53 Gr. B	Typical	1.02	.627	.627	1.25
2	Mount Pipe P2.5	PIPE 2.5	Column	Pipe	A53 Gr. B	Typical	1.61	1.45	1.45	2.89
3	Face Horizontal	PIPE 2.0	Beam	Pipe	A53 Gr. B	Typical	1.02	.627	.627	1.25
4	Standoff Pipe	PIPE 3.0	Beam	Pipe	A53 Gr. B	Typical	2.07	2.85	2.85	5.69
5	TES Standoff Channel	C3X4.1	Beam	Channel	A36 Gr.36	Typical	1.2	.191	1.65	.027
6	Standoff Angle	L1.5x1.5x4	Beam	Channel	A36 Gr.36	Typical	.688	.139	.139	.013
7	Cross Member	HSS3X3X3	Beam	SquareTube	A500 Gr. B...	Typical	1.89	2.46	2.46	4.03
8	Standoff Plate 1 (Ch...	PL1/2x8	Beam	RECT	A36 Gr.36	Typical	4	.083	21.333	.32
9	Standoff Plate 2 (Pip...	PL1/2X12_...	Beam	RECT	A36 Gr.36	Typical	6	.125	72	.487
10	Corner Plate	PL1/4x7_H...	Beam	RECT	A36 Gr.36	Typical	1.75	.009	7.146	.036

Hot Rolled Steel Section Sets (Continued)

	Label	Shape	Type	Design List	Material	Design Rul...	A [in2]	Iyy [in4]	Izz [in4]	J [in4]
11	Threaded Rod	SR 0.625	Beam	BAR	A36 Gr.36	Typical	.307	.007	.007	.015
12	Grating Angle	L2x2x4	Beam	Single Angle	A36 Gr.36	Typical	.944	.346	.346	.021
13	Mod Kicker	LL3x3x3x6	Column	Double Angle (3...	A36 Gr.36	Typical	2.18	4.97	1.9	.027
14	Mod Support Rail	PIPE 2.5	Beam	Pipe	A53 Gr. B	Typical	1.61	1.45	1.45	2.89
15	Mod Support Rail An...	L3X3X4	Beam	Single Angle	A36 Gr.36	Typical	1.44	1.23	1.23	.031

Cold Formed Steel Section Sets

	Label	Shape	Type	Design List	Material	Design Rules	A [in2]	Iyy [in4]	Izz [in4]	J [in4]
1	Standoff Ch...	4CU2X0125	Beam	CU	A570 Gr. 36	Typical	.941	.371	2.314	.005

Hot Rolled Steel Properties

	Label	E [ksi]	G [ksi]	Nu	Therm (/1E...	Density[k/ft...	Yield[ksi]	Ry	Fu[ksi]	Rt
1	A36 Gr.36	29000	11154	.3	.65	.49	36	1.5	58	1.2
2	A53 Gr. B	29000	11154	.3	.65	.49	35	1.5	60	1.2
3	A572 Gr.50	29000	11154	.3	.65	.49	50	1.1	65	1.1
4	A992	29000	11154	.3	.65	.49	50	1.1	65	1.1
5	A500 Gr. B 42	29000	11154	.3	.65	.49	42	1.4	58	1.3
6	A500 Gr. B 46	29000	11154	.3	.65	.49	46	1.4	58	1.3

Cold Formed Steel Properties

	Label	E [ksi]	G [ksi]	Nu	Therm (/1E5 F)	Density[k/ft^3]	Yield[ksi]	Fu[ksi]
1	A570 Gr.33	29500	11346	.3	.65	.49	33	52
2	A607 C1 Gr.55	29500	11346	.3	.65	.49	55	70
3	A570 Gr. 36	29500	11346	.3	.65	.49	36	58

Member Primary Data

	Label	I Joint	J Joint	K Joint	Rotate(deg)	Section/Shape	Type	Design List	Material	Design Rules
1	M1	N2	N3			Standoff Pipe	Beam	Pipe	A53 Gr. B	Typical
2	M2	N6	N4			RIGID	None	None	RIGID	Typical
3	M3	N7	N5			RIGID	None	None	RIGID	Typical
4	M4	N4	N8			RIGID	None	None	RIGID	Typical
5	M5	N5	N9			RIGID	None	None	RIGID	Typical
6	M7	N13	N12		270	Standoff Angle	Beam	Channel	A36 Gr.36	Typical
7	M8	N15	N14			Standoff Plate ...	Beam	RECT	A36 Gr.36	Typical
8	M10	N16	N18			RIGID	None	None	RIGID	Typical
9	M13	N11	N58B		180	Standoff Angle	Beam	Channel	A36 Gr.36	Typical
10	M14	N22	N18			Threaded Rod	Beam	BAR	A36 Gr.36	Typical
11	M17	N24	N16			RIGID	None	None	RIGID	Typical
12	M18	N28	N24			Threaded Rod	Beam	BAR	A36 Gr.36	Typical
13	M23	N31	N4			RIGID	None	None	RIGID	Typical
14	M24	N4	N30			RIGID	None	None	RIGID	Typical
15	M25	N31	N34		180	Standoff Chan...	Beam	CU	A570 Gr. 36	Typical
16	M26	N30	N33			Standoff Chan...	Beam	CU	A570 Gr. 36	Typical
17	M29	N12	N39			RIGID	None	None	RIGID	Typical
18	M31	N47	N40A			Standoff Chan...	Beam	CU	A570 Gr. 36	Typical
19	M41A	N39	N52			RIGID	None	None	RIGID	Typical

Member Primary Data (Continued)

	Label	I Joint	J Joint	K Joint	Rotate(deg)	Section/Shape	Type	Design List	Material	Design Rules
20	M42A	N11	N52		180	Standoff Angle	Beam	Channel	A36 Gr.36	Typical
21	M44A	N52	N59A		90	Standoff Angle	Beam	Channel	A36 Gr.36	Typical
22	M43	N53	N54A			RIGID	None	None	RIGID	Typical
23	M44	N55A	N54A			Threaded Rod	Beam	BAR	A36 Gr.36	Typical
24	M45B	N56	N53			RIGID	None	None	RIGID	Typical
25	M46A	N57	N56			Threaded Rod	Beam	BAR	A36 Gr.36	Typical
26	M46B	N58B	N59A			Standoff Angle	Beam	Channel	A36 Gr.36	Typical
27	M34A	N13	N50		270	Standoff Angle	Beam	Channel	A36 Gr.36	Typical
28	M35	N12	N49			Standoff Angle	Beam	Channel	A36 Gr.36	Typical
29	M36	N50	N49			Standoff Angle	Beam	Channel	A36 Gr.36	Typical
30	M35A	N13	N46			RIGID	None	None	RIGID	Typical
31	M36A	N46	N11			RIGID	None	None	RIGID	Typical
32	M37	N47	N59A			RIGID	None	None	RIGID	Typical
33	M37A	N49	N47			RIGID	None	None	RIGID	Typical
34	M38	N51	N52A		180	Standoff Chan...	Beam	CU	A570 Gr. 36	Typical
35	M40	N51	N58B			RIGID	None	None	RIGID	Typical
36	M41	N50	N51			RIGID	None	None	RIGID	Typical
37	M42	N49A	N50B			Standoff Pipe	Beam	Pipe	A53 Gr. B	Typical
38	M43A	N53A	N51A			RIGID	None	None	RIGID	Typical
39	M44B	N54	N52B			RIGID	None	None	RIGID	Typical
40	M45	N51A	N55			RIGID	None	None	RIGID	Typical
41	M46	N52B	N56A			RIGID	None	None	RIGID	Typical
42	M47	N59	N58		270	Standoff Angle	Beam	Channel	A36 Gr.36	Typical
43	M48	N61	N60			Standoff Plate ...	Beam	RECT	A36 Gr.36	Typical
44	M49	N62	N63			RIGID	None	None	RIGID	Typical
45	M50	N57A	N81		180	Standoff Angle	Beam	Channel	A36 Gr.36	Typical
46	M51	N64	N63			Threaded Rod	Beam	BAR	A36 Gr.36	Typical
47	M52	N65	N62			RIGID	None	None	RIGID	Typical
48	M53	N66	N65			Threaded Rod	Beam	BAR	A36 Gr.36	Typical
49	M54	N68	N51A			RIGID	None	None	RIGID	Typical
50	M55	N51A	N67			RIGID	None	None	RIGID	Typical
51	M56	N68	N71		180	Standoff Chan...	Beam	CU	A570 Gr. 36	Typical
52	M57	N67	N70			Standoff Chan...	Beam	CU	A570 Gr. 36	Typical
53	M58	N58	N73			RIGID	None	None	RIGID	Typical
54	M59	N85	N86			Standoff Chan...	Beam	CU	A570 Gr. 36	Typical
55	M60	N73	N74			RIGID	None	None	RIGID	Typical
56	M61	N57A	N74		180	Standoff Angle	Beam	Channel	A36 Gr.36	Typical
57	M62	N74	N80		90	Standoff Angle	Beam	Channel	A36 Gr.36	Typical
58	M63	N75	N76			RIGID	None	None	RIGID	Typical
59	M64	N77	N76			Threaded Rod	Beam	BAR	A36 Gr.36	Typical
60	M65	N78	N75			RIGID	None	None	RIGID	Typical
61	M66	N79	N78			Threaded Rod	Beam	BAR	A36 Gr.36	Typical
62	M67	N81	N80			Standoff Angle	Beam	Channel	A36 Gr.36	Typical
63	M68	N59	N83		270	Standoff Angle	Beam	Channel	A36 Gr.36	Typical
64	M69	N58	N82			Standoff Angle	Beam	Channel	A36 Gr.36	Typical
65	M70	N83	N82			Standoff Angle	Beam	Channel	A36 Gr.36	Typical
66	M71	N59	N84			RIGID	None	None	RIGID	Typical
67	M72	N84	N57A			RIGID	None	None	RIGID	Typical
68	M73	N85	N80			RIGID	None	None	RIGID	Typical
69	M74	N82	N85			RIGID	None	None	RIGID	Typical
70	M79	N93	N94		180	Standoff Chan...	Beam	CU	A570 Gr. 36	Typical
71	M81	N93	N81			RIGID	None	None	RIGID	Typical

Member Primary Data (Continued)

	Label	I Joint	J Joint	K Joint	Rotate(deg)	Section/Shape	Type	Design List	Material	Design Rules
72	M82	N83	N93			RIGID	None	None	RIGID	Typical
73	M83	N96	N97			Standoff Pipe	Beam	Pipe	A53 Gr. B	Typical
74	M84	N100	N98			RIGID	None	None	RIGID	Typical
75	M85	N101	N99			RIGID	None	None	RIGID	Typical
76	M86	N98	N102			RIGID	None	None	RIGID	Typical
77	M87	N99	N103			RIGID	None	None	RIGID	Typical
78	M88	N106	N105		270	Standoff Angle	Beam	Channel	A36 Gr.36	Typical
79	M89	N108	N107			Standoff Plate ...	Beam	RECT	A36 Gr.36	Typical
80	M90	N109	N110			RIGID	None	None	RIGID	Typical
81	M91	N104	N128		180	Standoff Angle	Beam	Channel	A36 Gr.36	Typical
82	M92	N111	N110			Threaded Rod	Beam	BAR	A36 Gr.36	Typical
83	M93	N112	N109			RIGID	None	None	RIGID	Typical
84	M94	N113	N112			Threaded Rod	Beam	BAR	A36 Gr.36	Typical
85	M95	N115	N98			RIGID	None	None	RIGID	Typical
86	M96	N98	N114			RIGID	None	None	RIGID	Typical
87	M97	N115	N118		180	Standoff Chan...	Beam	CU	A570 Gr. 36	Typical
88	M98	N114	N117			Standoff Chan...	Beam	CU	A570 Gr. 36	Typical
89	M99	N105	N120			RIGID	None	None	RIGID	Typical
90	M100	N132	N133			Standoff Chan...	Beam	CU	A570 Gr. 36	Typical
91	M101	N120	N121			RIGID	None	None	RIGID	Typical
92	M102	N104	N121		180	Standoff Angle	Beam	Channel	A36 Gr.36	Typical
93	M103	N121	N127		90	Standoff Angle	Beam	Channel	A36 Gr.36	Typical
94	M104	N122	N123			RIGID	None	None	RIGID	Typical
95	M105	N124	N123			Threaded Rod	Beam	BAR	A36 Gr.36	Typical
96	M106	N125	N122			RIGID	None	None	RIGID	Typical
97	M107	N126	N125			Threaded Rod	Beam	BAR	A36 Gr.36	Typical
98	M108	N128	N127			Standoff Angle	Beam	Channel	A36 Gr.36	Typical
99	M109	N106	N130		270	Standoff Angle	Beam	Channel	A36 Gr.36	Typical
100	M110	N105	N129			Standoff Angle	Beam	Channel	A36 Gr.36	Typical
101	M111	N130	N129			Standoff Angle	Beam	Channel	A36 Gr.36	Typical
102	M112	N106	N131			RIGID	None	None	RIGID	Typical
103	M113	N131	N104			RIGID	None	None	RIGID	Typical
104	M114	N132	N127			RIGID	None	None	RIGID	Typical
105	M115	N129	N132			RIGID	None	None	RIGID	Typical
106	M116	N134	N136			RIGID	None	None	RIGID	Typical
107	M118	N138	N139		180	Standoff Chan...	Beam	CU	A570 Gr. 36	Typical
108	M120	N140	N141		180	Standoff Chan...	Beam	CU	A570 Gr. 36	Typical
109	M122	N140	N128			RIGID	None	None	RIGID	Typical
110	M123	N130	N140			RIGID	None	None	RIGID	Typical
111	M117	N126A	N127A			RIGID	None	None	RIGID	Typical
112	M118A	N128A	N129A			RIGID	None	None	RIGID	Typical
113	M119A	N130A	N131A			RIGID	None	None	RIGID	Typical
114	M120A	N132A	N133A			RIGID	None	None	RIGID	Typical
115	M121A	N134A	N135		180	Standoff Chan...	Beam	CU	A570 Gr. 36	Typical
116	M122A	N136A	N137			RIGID	None	None	RIGID	Typical
117	M123A	N138A	N139A			RIGID	None	None	RIGID	Typical
118	M124	N140A	N141A			RIGID	None	None	RIGID	Typical
119	M125	N142	N143			RIGID	None	None	RIGID	Typical
120	M126	N144	N145		180	Standoff Chan...	Beam	CU	A570 Gr. 36	Typical
121	M127	N146	N147			RIGID	None	None	RIGID	Typical
122	M128	N148	N149			RIGID	None	None	RIGID	Typical
123	M129	N150	N151			RIGID	None	None	RIGID	Typical

Member Primary Data (Continued)

	Label	I Joint	J Joint	K Joint	Rotate(deg)	Section/Shape	Type	Design List	Material	Design Rules
124	M130	N153	N154A			RIGID	None	None	RIGID	Typical
125	M131	N155	N156		90	Standoff Plate ...	Beam	RECT	A36 Gr.36	Typical
126	M132	N157	N155			RIGID	None	None	RIGID	Typical
127	M133	N154	N159			RIGID	None	None	RIGID	Typical
128	M134	N160	N161		90	Standoff Plate ...	Beam	RECT	A36 Gr.36	Typical
129	M135	N162	N160			RIGID	None	None	RIGID	Typical
130	M148	N181A	N218A			Face Horizontal	Beam	Pipe	A53 Gr. B	Typical
131	M152B	N199A	N200A			Cross Member	Beam	SquareTube	A500 Gr. ...	Typical
132	M152C	N199	N201A			RIGID	None	None	RIGID	Typical
133	M153A	N198	N200			RIGID	None	None	RIGID	Typical
134	M155	N206A	N377A			Corner Plate	Beam	RECT	A36 Gr.36	Typical
135	M154	N204A	N219			Face Horizontal	Beam	Pipe	A53 Gr. B	Typical
136	M157A	N209A	N220			Face Horizontal	Beam	Pipe	A53 Gr. B	Typical
137	M160	N206A	N288			Corner Plate	Beam	RECT	A36 Gr.36	Typical
138	M161	N212A	N284			Corner Plate	Beam	RECT	A36 Gr.36	Typical
139	M162	N205A	N274A			Corner Plate	Beam	RECT	A36 Gr.36	Typical
140	M163	N206B	N292			Corner Plate	Beam	RECT	A36 Gr.36	Typical
141	M164	N210A	N280			Corner Plate	Beam	RECT	A36 Gr.36	Typical
142	M165	N207B	N276			Corner Plate	Beam	RECT	A36 Gr.36	Typical
143	M166	N218A	N221A			Face Horizontal	Beam	Pipe	A53 Gr. B	Typical
144	M167	N219	N222A			Face Horizontal	Beam	Pipe	A53 Gr. B	Typical
145	M168	N220	N223			Face Horizontal	Beam	Pipe	A53 Gr. B	Typical
146	M169	N221A	N180A			Face Horizontal	Beam	Pipe	A53 Gr. B	Typical
147	M170	N222A	N203			Face Horizontal	Beam	Pipe	A53 Gr. B	Typical
148	M171	N223	N208A			Face Horizontal	Beam	Pipe	A53 Gr. B	Typical
149	M172	N225	N227			RIGID	None	None	RIGID	Typical
150	M173	N224	N226			RIGID	None	None	RIGID	Typical
151	M174	N227	N226		180	Grating Angle	Beam	Single Angle	A36 Gr.36	Typical
152	M175	N229	N231			RIGID	None	None	RIGID	Typical
153	M176	N228	N230			RIGID	None	None	RIGID	Typical
154	M177	N231	N230		90	Grating Angle	Beam	Single Angle	A36 Gr.36	Typical
155	M178	N233	N235			RIGID	None	None	RIGID	Typical
156	M179	N232	N234			RIGID	None	None	RIGID	Typical
157	M180	N235	N234		180	Grating Angle	Beam	Single Angle	A36 Gr.36	Typical
158	M181	N237	N239			RIGID	None	None	RIGID	Typical
159	M182	N236	N238			RIGID	None	None	RIGID	Typical
160	M183	N239	N238		90	Grating Angle	Beam	Single Angle	A36 Gr.36	Typical
161	M184	N241	N243			RIGID	None	None	RIGID	Typical
162	M185	N240	N242			RIGID	None	None	RIGID	Typical
163	M186	N243	N242		180	Grating Angle	Beam	Single Angle	A36 Gr.36	Typical
164	M187	N245	N247			RIGID	None	None	RIGID	Typical
165	M188	N244	N246			RIGID	None	None	RIGID	Typical
166	M189	N247	N246		90	Grating Angle	Beam	Single Angle	A36 Gr.36	Typical
167	M190	N231	N250			RIGID	None	None	RIGID	Typical
168	M191	N250	N243			RIGID	None	None	RIGID	Typical
169	M192	N254	N262			RIGID	None	None	RIGID	Typical
170	M193	N262	N262A			RIGID	None	None	RIGID	Typical
171	M194	N262A	N255			RIGID	None	None	RIGID	Typical
172	M195	N227	N252			RIGID	None	None	RIGID	Typical
173	M196	N252	N239			RIGID	None	None	RIGID	Typical
174	M197	N235	N249			RIGID	None	None	RIGID	Typical
175	M198	N249	N247			RIGID	None	None	RIGID	Typical

Member Primary Data (Continued)

	Label	I Joint	J Joint	K Joint	Rotate(deg)	Section/Shape	Type	Design List	Material	Design Rules
176	M199	N255	N254			RIGID	None	None	RIGID	Typical
177	M200	N259	N221A			RIGID	None	None	RIGID	Typical
178	M201	N258	N218A			RIGID	None	None	RIGID	Typical
179	M202	N262B	N265			RIGID	None	None	RIGID	Typical
180	M203	N265	N264			RIGID	None	None	RIGID	Typical
181	M204	N264	N263			RIGID	None	None	RIGID	Typical
182	M205	N263	N262B			RIGID	None	None	RIGID	Typical
183	M206	N267	N222A			RIGID	None	None	RIGID	Typical
184	M207	N266	N219			RIGID	None	None	RIGID	Typical
185	M208	N270	N273			RIGID	None	None	RIGID	Typical
186	M209	N273	N272			RIGID	None	None	RIGID	Typical
187	M210	N272	N271			RIGID	None	None	RIGID	Typical
188	M211	N271	N270			RIGID	None	None	RIGID	Typical
189	M212	N275	N223			RIGID	None	None	RIGID	Typical
190	M213	N274	N220			RIGID	None	None	RIGID	Typical
191	M214	N274A	N275A			RIGID	None	None	RIGID	Typical
192	M504	N274B	N275B			Mount Pipe	Column	Pipe	A53 Gr. B	Typical
193	M216	N276	N277			RIGID	None	None	RIGID	Typical
194	M502	N278	N279			Mount Pipe	Column	Pipe	A53 Gr. B	Typical
195	M218	N280	N281			RIGID	None	None	RIGID	Typical
196	M501	N282	N283			Mount Pipe	Column	Pipe	A53 Gr. B	Typical
197	M220	N284	N285			RIGID	None	None	RIGID	Typical
198	M500	N286	N287			Mount Pipe	Column	Pipe	A53 Gr. B	Typical
199	M222	N288	N289			RIGID	None	None	RIGID	Typical
200	M506	N290	N291			Mount Pipe	Column	Pipe	A53 Gr. B	Typical
201	M224	N292	N293			RIGID	None	None	RIGID	Typical
202	M505	N294	N295			Mount Pipe	Column	Pipe	A53 Gr. B	Typical
203	M226	N297	N296			RIGID	None	None	RIGID	Typical
204	MP2A	N298	N299			Mount Pipe P2.5	Column	Pipe	A53 Gr. B	Typical
205	M228	N301	N300			RIGID	None	None	RIGID	Typical
206	MP3A	N302	N303			Mount Pipe	Column	Pipe	A53 Gr. B	Typical
207	M230	N305	N304			RIGID	None	None	RIGID	Typical
208	MP2C	N306	N307			Mount Pipe P2.5	Column	Pipe	A53 Gr. B	Typical
209	M234	N313	N312			RIGID	None	None	RIGID	Typical
210	MP2B	N314	N315			Mount Pipe P2.5	Column	Pipe	A53 Gr. B	Typical
211	M222A	N289A	N291A			RIGID	None	None	RIGID	Typical
212	M223	N292A	N293A		330	Standoff Plate ...	Beam	RECT	A36 Gr.36	Typical
213	M224A	N294A	N292A			RIGID	None	None	RIGID	Typical
214	M225	N290A	N295A			RIGID	None	None	RIGID	Typical
215	M226A	N296A	N297A		330	Standoff Plate ...	Beam	RECT	A36 Gr.36	Typical
216	M227	N298A	N296A			RIGID	None	None	RIGID	Typical
217	M228A	N303A	N304A			Cross Member	Beam	SquareTube	A500 Gr. ...	Typical
218	M229	N300A	N302A			RIGID	None	None	RIGID	Typical
219	M230A	N299A	N301A			RIGID	None	None	RIGID	Typical
220	M231	N305A	N307A			RIGID	None	None	RIGID	Typical
221	M232A	N308A	N309A		30	Standoff Plate ...	Beam	RECT	A36 Gr.36	Typical
222	M233	N310A	N308A			RIGID	None	None	RIGID	Typical
223	M234A	N306A	N311A			RIGID	None	None	RIGID	Typical
224	M235	N312A	N313A		30	Standoff Plate ...	Beam	RECT	A36 Gr.36	Typical
225	M236A	N314A	N312A			RIGID	None	None	RIGID	Typical
226	M237	N319A	N320			Cross Member	Beam	SquareTube	A500 Gr. ...	Typical
227	M238A	N316A	N318A			RIGID	None	None	RIGID	Typical

Member Primary Data (Continued)

	Label	I Joint	J Joint	K Joint	Rotate(deg)	Section/Shape	Type	Design List	Material	Design Rules
228	M239	N315A	N317A			RIGID	None	None	RIGID	Typical
229	M238	N320A	N320B			RIGID	None	None	RIGID	Typical
230	M239A	N319B	N319C			RIGID	None	None	RIGID	Typical
231	M240	N322	N324			RIGID	None	None	RIGID	Typical
232	M241	N321	N323			RIGID	None	None	RIGID	Typical
233	M242	N326	N328			RIGID	None	None	RIGID	Typical
234	M243	N325	N327			RIGID	None	None	RIGID	Typical
235	M244	N329	N330			Mod Kicker	Column	Double Angle (...	A36 Gr.36	Typical
236	M245	N331	N332			Mod Kicker	Column	Double Angle (...	A36 Gr.36	Typical
237	M246	N333	N334			Mod Kicker	Column	Double Angle (...	A36 Gr.36	Typical
238	M247	N337	N336			RIGID	None	None	RIGID	Typical
239	M248	N339	N338			RIGID	None	None	RIGID	Typical
240	M249	N342	N341			Mod Support ...	Beam	Pipe	A53 Gr. B	Typical
241	M250	N343	N342A			RIGID	None	None	RIGID	Typical
242	MP1A	N344	N345			Mount Pipe	Column	Pipe	A53 Gr. B	Typical
243	M252	N347	N346			RIGID	None	None	RIGID	Typical
244	M253	N348	N349			RIGID	None	None	RIGID	Typical
245	M262A	N367A	N366A			RIGID	None	None	RIGID	Typical
246	M263A	N369A	N368A			RIGID	None	None	RIGID	Typical
247	M271	N349	N397		180	Mod Support ...	Beam	Single Angle	A36 Gr.36	Typical
248	M274	N377A	N207A			RIGID	None	None	RIGID	Typical
249	M271B	N212A	N381A			Corner Plate	Beam	RECT	A36 Gr.36	Typical
250	M274A	N205A	N385			Corner Plate	Beam	RECT	A36 Gr.36	Typical
251	M277	N206B	N387			Corner Plate	Beam	RECT	A36 Gr.36	Typical
252	M280	N210A	N393			Corner Plate	Beam	RECT	A36 Gr.36	Typical
253	M283	N207B	N395			Corner Plate	Beam	RECT	A36 Gr.36	Typical
254	M275	N381A	N381B			RIGID	None	None	RIGID	Typical
255	M276	N385	N382A			RIGID	None	None	RIGID	Typical
256	M277A	N387	N207A			RIGID	None	None	RIGID	Typical
257	M278	N393	N381B			RIGID	None	None	RIGID	Typical
258	M279	N395	N382A			RIGID	None	None	RIGID	Typical
259	M265	N359	N358			Mod Support ...	Beam	Pipe	A53 Gr. B	Typical
260	M266	N361	N360			Mod Support ...	Beam	Pipe	A53 Gr. B	Typical
261	M267	N363	N362			RIGID	None	None	RIGID	Typical
262	MP4A	N364	N365			Mount Pipe	Column	Pipe	A53 Gr. B	Typical
263	M269	N367	N366			RIGID	None	None	RIGID	Typical
264	M264	N357	N356			RIGID	None	None	RIGID	Typical
265	MP3C	N358A	N359A			Mount Pipe	Column	Pipe	A53 Gr. B	Typical
266	M266A	N361A	N360A			RIGID	None	None	RIGID	Typical
267	M267A	N363A	N362A			RIGID	None	None	RIGID	Typical
268	MP3B	N364A	N365A			Mount Pipe	Column	Pipe	A53 Gr. B	Typical
269	M269A	N367B	N366B			RIGID	None	None	RIGID	Typical
270	M270	N369	N368			RIGID	None	None	RIGID	Typical
271	MP1C	N370	N371			Mount Pipe	Column	Pipe	A53 Gr. B	Typical
272	M272	N373	N372			RIGID	None	None	RIGID	Typical
273	M273	N375	N374			RIGID	None	None	RIGID	Typical
274	MP4C	N376	N377			Mount Pipe	Column	Pipe	A53 Gr. B	Typical
275	M275A	N379	N378			RIGID	None	None	RIGID	Typical
276	M276A	N381	N380A			RIGID	None	None	RIGID	Typical
277	MP1B	N382	N383			Mount Pipe	Column	Pipe	A53 Gr. B	Typical
278	M278A	N385A	N384			RIGID	None	None	RIGID	Typical
279	M279A	N387A	N386			RIGID	None	None	RIGID	Typical

Member Primary Data (Continued)

	Label	I Joint	J Joint	K Joint	Rotate(deg)	Section/Shape	Type	Design List	Material	Design Rules
280	MP4B	N388	N389			Mount Pipe	Column	Pipe	A53 Gr. B	Typical
281	M281	N391	N390			RIGID	None	None	RIGID	Typical
282	M282	N392	N393A			RIGID	None	None	RIGID	Typical
283	M283A	N394	N395A			RIGID	None	None	RIGID	Typical
284	M284	N396	N397			RIGID	None	None	RIGID	Typical
285	M285	N398	N399			RIGID	None	None	RIGID	Typical
286	M286	N400	N401			RIGID	None	None	RIGID	Typical
287	M287	N395A	N401		180	Mod Support ...	Beam	Single Angle	A36 Gr.36	Typical
288	M288	N399	N393A		180	Mod Support ...	Beam	Single Angle	A36 Gr.36	Typical

Member Advanced Data

	Label	I Release	J Release	I Offset[in]	J Offset[in]	T/C Only	Physical	Defl Rat...	Analysis ...	Inactive	Seismic...
1	M1						Yes				None
2	M2						Yes	** NA **			None
3	M3						Yes	** NA **			None
4	M4						Yes	** NA **			None
5	M5						Yes	** NA **			None
6	M7						Yes				None
7	M8						Yes				None
8	M10						Yes	** NA **			None
9	M13						Yes				None
10	M14	BenPIN					Yes				None
11	M17						Yes	** NA **			None
12	M18	BenPIN					Yes	Default			None
13	M23						Yes	** NA **			None
14	M24						Yes	** NA **			None
15	M25						Yes				None
16	M26						Yes	Default			None
17	M29		OOOXOO				Yes	** NA **			None
18	M31						Yes				None
19	M41A	OOOXOO					Yes	** NA **			None
20	M42A						Yes				None
21	M44A						Yes				None
22	M43						Yes	** NA **			None
23	M44	BenPIN					Yes				None
24	M45B						Yes	** NA **			None
25	M46A	BenPIN					Yes	Default			None
26	M46B						Yes				None
27	M34A						Yes				None
28	M35						Yes				None
29	M36						Yes				None
30	M35A		OOOXOO				Yes	** NA **			None
31	M36A	OOOXOO					Yes	** NA **			None
32	M37	OOOXOO					Yes	** NA **			None
33	M37A		OOOXOO				Yes	** NA **			None
34	M38						Yes				None
35	M40	OOOXOO					Yes	** NA **			None
36	M41		OOOXOO				Yes	** NA **			None
37	M42						Yes				None
38	M43A						Yes	** NA **			None

Member Advanced Data (Continued)

	Label	I Release	J Release	I Offset[in]	J Offset[in]	T/C Only	Physical	Defl Rat...	Analysis ...	Inactive	Seismic...
39	M44B						Yes	** NA **			None
40	M45						Yes	** NA **			None
41	M46						Yes	** NA **			None
42	M47						Yes				None
43	M48						Yes				None
44	M49						Yes	** NA **			None
45	M50						Yes				None
46	M51	BenPIN					Yes				None
47	M52						Yes	** NA **			None
48	M53	BenPIN					Yes				None
49	M54						Yes	** NA **			None
50	M55						Yes	** NA **			None
51	M56						Yes				None
52	M57						Yes				None
53	M58		OOOXOO				Yes	** NA **			None
54	M59						Yes	Default			None
55	M60	OOOXOO					Yes	** NA **			None
56	M61						Yes				None
57	M62						Yes				None
58	M63						Yes	** NA **			None
59	M64	BenPIN					Yes				None
60	M65						Yes	** NA **			None
61	M66	BenPIN					Yes				None
62	M67						Yes				None
63	M68						Yes				None
64	M69						Yes				None
65	M70						Yes				None
66	M71		OOOXOO				Yes	** NA **			None
67	M72	OOOXOO					Yes	** NA **			None
68	M73	OOOXOO					Yes	** NA **			None
69	M74		OOOXOO				Yes	** NA **			None
70	M79						Yes				None
71	M81	OOOXOO					Yes	** NA **			None
72	M82		OOOXOO				Yes	** NA **			None
73	M83						Yes				None
74	M84						Yes	** NA **			None
75	M85						Yes	** NA **			None
76	M86						Yes	** NA **			None
77	M87						Yes	** NA **			None
78	M88						Yes				None
79	M89						Yes				None
80	M90						Yes	** NA **			None
81	M91						Yes				None
82	M92	BenPIN					Yes				None
83	M93						Yes	** NA **			None
84	M94	BenPIN					Yes				None
85	M95						Yes	** NA **			None
86	M96						Yes	** NA **			None
87	M97						Yes				None
88	M98						Yes				None
89	M99		OOOXOO				Yes	** NA **			None
90	M100						Yes				None

Member Advanced Data (Continued)

	Label	I Release	J Release	I Offset[in]	J Offset[in]	T/C Only	Physical	Defl Rat...	Analysis ...	Inactive	Seismic...
91	M101	OOOXOO					Yes	** NA **			None
92	M102						Yes				None
93	M103						Yes				None
94	M104						Yes	** NA **			None
95	M105	BenPIN					Yes				None
96	M106						Yes	** NA **			None
97	M107	BenPIN					Yes				None
98	M108						Yes				None
99	M109						Yes				None
100	M110						Yes				None
101	M111						Yes				None
102	M112		OOOXOO				Yes	** NA **			None
103	M113	OOOXOO					Yes	** NA **			None
104	M114	OOOXOO					Yes	** NA **			None
105	M115		OOOXOO				Yes	** NA **			None
106	M116						Yes	** NA **			None
107	M118						Yes				None
108	M120						Yes				None
109	M122	OOOXOO					Yes	** NA **			None
110	M123		OOOXOO				Yes	** NA **			None
111	M117						Yes	** NA **			None
112	M118A						Yes	** NA **			None
113	M119A						Yes	** NA **			None
114	M120A						Yes	** NA **			None
115	M121A						Yes				None
116	M122A						Yes	** NA **			None
117	M123A						Yes	** NA **			None
118	M124						Yes	** NA **			None
119	M125						Yes	** NA **			None
120	M126						Yes				None
121	M127						Yes	** NA **			None
122	M128						Yes	** NA **			None
123	M129						Yes	** NA **			None
124	M130						Yes	** NA **			None
125	M131						Yes				None
126	M132						Yes	** NA **			None
127	M133						Yes	** NA **			None
128	M134						Yes				None
129	M135						Yes	** NA **			None
130	M148						Yes				None
131	M152B						Yes				None
132	M152C						Yes	** NA **			None
133	M153A						Yes	** NA **			None
134	M155						Yes				None
135	M154						Yes				None
136	M157A						Yes				None
137	M160						Yes				None
138	M161						Yes				None
139	M162						Yes				None
140	M163						Yes				None
141	M164						Yes				None
142	M165						Yes	Default			None

Member Advanced Data (Continued)

	Label	I Release	J Release	I Offset[in]	J Offset[in]	T/C Only	Physical	Defl Rat...	Analysis ...	Inactive	Seismic...
143	M166						Yes				None
144	M167						Yes				None
145	M168						Yes				None
146	M169						Yes	Default			None
147	M170						Yes				None
148	M171						Yes				None
149	M172	BenPIN					Yes	** NA **			None
150	M173	BenPIN					Yes	** NA **			None
151	M174						Yes				None
152	M175	BenPIN					Yes	** NA **			None
153	M176	BenPIN					Yes	** NA **			None
154	M177						Yes				None
155	M178	BenPIN					Yes	** NA **			None
156	M179	BenPIN					Yes	** NA **			None
157	M180						Yes				None
158	M181	BenPIN					Yes	** NA **			None
159	M182	BenPIN					Yes	** NA **			None
160	M183						Yes				None
161	M184	BenPIN					Yes	** NA **			None
162	M185	BenPIN					Yes	** NA **			None
163	M186						Yes				None
164	M187	BenPIN					Yes	** NA **			None
165	M188	BenPIN					Yes	** NA **			None
166	M189						Yes				None
167	M190						Yes	** NA **			None
168	M191						Yes	** NA **			None
169	M192						Yes	** NA **			None
170	M193						Yes	** NA **			None
171	M194						Yes	** NA **			None
172	M195						Yes	** NA **			None
173	M196						Yes	** NA **			None
174	M197						Yes	** NA **			None
175	M198						Yes	** NA **			None
176	M199						Yes	** NA **			None
177	M200						Yes	** NA **			None
178	M201						Yes	** NA **			None
179	M202						Yes	** NA **			None
180	M203						Yes	** NA **			None
181	M204						Yes	** NA **			None
182	M205						Yes	** NA **			None
183	M206						Yes	** NA **			None
184	M207						Yes	** NA **			None
185	M208						Yes	** NA **			None
186	M209						Yes	** NA **			None
187	M210						Yes	** NA **			None
188	M211						Yes	** NA **			None
189	M212						Yes	** NA **			None
190	M213						Yes	** NA **			None
191	M214						Yes	** NA **			None
192	M504						Yes	** NA **			None
193	M216						Yes	** NA **			None
194	M502						Yes	** NA **			None

Member Advanced Data (Continued)

	Label	I Release	J Release	I Offset[in]	J Offset[in]	T/C Only	Physical	Defl Rat...	Analysis ...	Inactive	Seismic...
195	M218						Yes	** NA **			None
196	M501						Yes	** NA **			None
197	M220						Yes	** NA **			None
198	M500						Yes	** NA **			None
199	M222						Yes	** NA **			None
200	M506						Yes	** NA **			None
201	M224						Yes	** NA **			None
202	M505						Yes	** NA **			None
203	M226						Yes	** NA **			None
204	MP2A						Yes	** NA **			None
205	M228						Yes	** NA **			None
206	MP3A						Yes	** NA **			None
207	M230						Yes	** NA **			None
208	MP2C						Yes	** NA **			None
209	M234						Yes	** NA **			None
210	MP2B						Yes	** NA **			None
211	M222A						Yes	** NA **			None
212	M223						Yes				None
213	M224A						Yes	** NA **			None
214	M225						Yes	** NA **			None
215	M226A						Yes				None
216	M227						Yes	** NA **			None
217	M228A						Yes				None
218	M229						Yes	** NA **			None
219	M230A						Yes	** NA **			None
220	M231						Yes	** NA **			None
221	M232A						Yes				None
222	M233						Yes	** NA **			None
223	M234A						Yes	** NA **			None
224	M235						Yes				None
225	M236A						Yes	** NA **			None
226	M237						Yes				None
227	M238A						Yes	** NA **			None
228	M239						Yes	** NA **			None
229	M238						Yes	** NA **			None
230	M239A						Yes	** NA **			None
231	M240						Yes	** NA **			None
232	M241						Yes	** NA **			None
233	M242						Yes	** NA **			None
234	M243						Yes	** NA **			None
235	M244	BenPIN	BenPIN				Yes	** NA **			None
236	M245	BenPIN	BenPIN				Yes	** NA **			None
237	M246	BenPIN	BenPIN				Yes	** NA **			None
238	M247						Yes	** NA **			None
239	M248						Yes	** NA **			None
240	M249						Yes	Default			None
241	M250						Yes	** NA **			None
242	MP1A						Yes	** NA **			None
243	M252						Yes	** NA **			None
244	M253	OOOOOX					Yes	** NA **			None
245	M262A						Yes	** NA **			None
246	M263A						Yes	** NA **			None

Member Advanced Data (Continued)

	Label	I Release	J Release	I Offset[in]	J Offset[in]	T/C Only	Physical	Defl Rat...	Analysis ...	Inactive	Seismic...
247	M271						Yes	Default			None
248	M274						Yes	** NA **			None
249	M271B						Yes				None
250	M274A						Yes				None
251	M277						Yes				None
252	M280						Yes				None
253	M283						Yes				None
254	M275						Yes	** NA **			None
255	M276						Yes	** NA **			None
256	M277A						Yes	** NA **			None
257	M278						Yes	** NA **			None
258	M279						Yes	** NA **			None
259	M265						Yes	Default			None
260	M266						Yes	Default			None
261	M267						Yes	** NA **			None
262	MP4A						Yes	** NA **			None
263	M269						Yes	** NA **			None
264	M264						Yes	** NA **			None
265	MP3C						Yes	** NA **			None
266	M266A						Yes	** NA **			None
267	M267A						Yes	** NA **			None
268	MP3B						Yes	** NA **			None
269	M269A						Yes	** NA **			None
270	M270						Yes	** NA **			None
271	MP1C						Yes	** NA **			None
272	M272						Yes	** NA **			None
273	M273						Yes	** NA **			None
274	MP4C						Yes	** NA **			None
275	M275A						Yes	** NA **			None
276	M276A						Yes	** NA **			None
277	MP1B						Yes	** NA **			None
278	M278A						Yes	** NA **			None
279	M279A						Yes	** NA **			None
280	MP4B						Yes	** NA **			None
281	M281						Yes	** NA **			None
282	M282	OOOOOX					Yes	** NA **			None
283	M283A	OOOOOX					Yes	** NA **			None
284	M284	OOOOOX					Yes	** NA **			None
285	M285	OOOOOX					Yes	** NA **			None
286	M286	OOOOOX					Yes	** NA **			None
287	M287						Yes	Default			None
288	M288						Yes	Default			None

Member Point Loads (BLC 1 : Antenna D)

	Member Label	Direction	Magnitude[lb,k-ft]	Location[ft,%]
1	MP2A	Y	-32.5	.5
2	MP2A	My	-.019	.5
3	MP2A	Mz	.016	.5
4	MP2A	Y	-32.5	5
5	MP2A	My	-.019	5

Member Point Loads (BLC 1 : Antenna D) (Continued)

	Member Label	Direction	Magnitude[lb,k-ft]	Location[ft,%]
6	MP2A	Mz	.016	5
7	MP2B	Y	-32.5	.5
8	MP2B	My	.000262	.5
9	MP2B	Mz	-.025	.5
10	MP2B	Y	-32.5	5
11	MP2B	My	.000262	5
12	MP2B	Mz	-.025	5
13	MP2C	Y	-32.5	.5
14	MP2C	My	.019	.5
15	MP2C	Mz	.016	.5
16	MP2C	Y	-32.5	5
17	MP2C	My	.019	5
18	MP2C	Mz	.016	5
19	MP2A	Y	-32.5	.5
20	MP2A	My	-.013	.5
21	MP2A	Mz	-.021	.5
22	MP2A	Y	-32.5	5
23	MP2A	My	-.013	5
24	MP2A	Mz	-.021	5
25	MP2B	Y	-32.5	.5
26	MP2B	My	.025	.5
27	MP2B	Mz	.004	.5
28	MP2B	Y	-32.5	5
29	MP2B	My	.025	5
30	MP2B	Mz	.004	5
31	MP2C	Y	-32.5	.5
32	MP2C	My	-.019	.5
33	MP2C	Mz	.016	.5
34	MP2C	Y	-32.5	5
35	MP2C	My	-.019	5
36	MP2C	Mz	.016	5
37	MP3A	Y	-43.55	2
38	MP3A	My	-.021	2
39	MP3A	Mz	-.004	2
40	MP3A	Y	-43.55	3.5
41	MP3A	My	-.021	3.5
42	MP3A	Mz	-.004	3.5
43	MP3B	Y	-43.55	2
44	MP3B	My	.017	2
45	MP3B	Mz	-.014	2
46	MP3B	Y	-43.55	3.5
47	MP3B	My	.017	3.5
48	MP3B	Mz	-.014	3.5
49	MP3C	Y	-43.55	2
50	MP3C	My	0	2
51	MP3C	Mz	.022	2
52	MP3C	Y	-43.55	3.5
53	MP3C	My	0	3.5
54	MP3C	Mz	.022	3.5
55	MP1A	Y	-10.5	.5
56	MP1A	My	-.005	.5
57	MP1A	Mz	-.000912	.5

Member Point Loads (BLC 1 : Antenna D) (Continued)

	Member Label	Direction	Magnitude[lb,k-ft]	Location[ft,%]
58	MP1A	Y	-10.5	5
59	MP1A	My	-.005	5
60	MP1A	Mz	-.000912	5
61	MP1B	Y	-10.5	.5
62	MP1B	My	.004	.5
63	MP1B	Mz	-.003	.5
64	MP1B	Y	-10.5	5
65	MP1B	My	.004	5
66	MP1B	Mz	-.003	5
67	MP1C	Y	-10.5	.5
68	MP1C	My	.000912	.5
69	MP1C	Mz	.005	.5
70	MP1C	Y	-10.5	5
71	MP1C	My	.000912	5
72	MP1C	Mz	.005	5
73	MP4A	Y	-10.5	.5
74	MP4A	My	.004	.5
75	MP4A	Mz	-.003	.5
76	MP4A	Y	-10.5	5
77	MP4A	My	.004	5
78	MP4A	Mz	-.003	5
79	MP4B	Y	-10.5	.5
80	MP4B	My	.004	.5
81	MP4B	Mz	-.003	.5
82	MP4B	Y	-10.5	5
83	MP4B	My	.004	5
84	MP4B	Mz	-.003	5
85	MP4C	Y	-10.5	.5
86	MP4C	My	.000912	.5
87	MP4C	Mz	.005	.5
88	MP4C	Y	-10.5	5
89	MP4C	My	.000912	5
90	MP4C	Mz	.005	5
91	MP2A	Y	-84.4	3
92	MP2A	My	.042	3
93	MP2A	Mz	0	3
94	MP2B	Y	-84.4	3
95	MP2B	My	-.032	3
96	MP2B	Mz	.027	3
97	MP2C	Y	-84.4	3
98	MP2C	My	0	3
99	MP2C	Mz	-.042	3
100	MP3A	Y	-70.3	3
101	MP3A	My	.035	3
102	MP3A	Mz	0	3
103	MP3B	Y	-70.3	3
104	MP3B	My	-.027	3
105	MP3B	Mz	.023	3
106	MP3C	Y	-70.3	3
107	MP3C	My	0	3
108	MP3C	Mz	-.035	3
109	MP1A	Y	-32	2.5

Member Point Loads (BLC 1 : Antenna D) (Continued)

	Member Label	Direction	Magnitude[lb,k-ft]	Location[ft,%]
110	MP1A	My	.016	2.5
111	MP1A	Mz	0	2.5

Member Point Loads (BLC 2 : Antenna Di)

	Member Label	Direction	Magnitude[lb,k-ft]	Location[ft,%]
1	MP2A	Y	-70.546	.5
2	MP2A	My	-.042	.5
3	MP2A	Mz	.034	.5
4	MP2A	Y	-70.546	5
5	MP2A	My	-.042	5
6	MP2A	Mz	.034	5
7	MP2B	Y	-70.546	.5
8	MP2B	My	.000569	.5
9	MP2B	Mz	-.054	.5
10	MP2B	Y	-70.546	5
11	MP2B	My	.000569	5
12	MP2B	Mz	-.054	5
13	MP2C	Y	-70.546	.5
14	MP2C	My	.041	.5
15	MP2C	Mz	.035	.5
16	MP2C	Y	-70.546	5
17	MP2C	My	.041	5
18	MP2C	Mz	.035	5
19	MP2A	Y	-70.546	.5
20	MP2A	My	-.028	.5
21	MP2A	Mz	-.047	.5
22	MP2A	Y	-70.546	5
23	MP2A	My	-.028	5
24	MP2A	Mz	-.047	5
25	MP2B	Y	-70.546	.5
26	MP2B	My	.053	.5
27	MP2B	Mz	.009	.5
28	MP2B	Y	-70.546	5
29	MP2B	My	.053	5
30	MP2B	Mz	.009	5
31	MP2C	Y	-70.546	.5
32	MP2C	My	-.041	.5
33	MP2C	Mz	.035	.5
34	MP2C	Y	-70.546	5
35	MP2C	My	-.041	5
36	MP2C	Mz	.035	5
37	MP3A	Y	-36.469	2
38	MP3A	My	-.018	2
39	MP3A	Mz	-.003	2
40	MP3A	Y	-36.469	3.5
41	MP3A	My	-.018	3.5
42	MP3A	Mz	-.003	3.5
43	MP3B	Y	-36.469	2
44	MP3B	My	.014	2
45	MP3B	Mz	-.012	2
46	MP3B	Y	-36.469	3.5

Member Point Loads (BLC 2 : Antenna Di) (Continued)

	Member Label	Direction	Magnitude[lb,k-ft]	Location[ft,%]
47	MP3B	My	.014	3.5
48	MP3B	Mz	-.012	3.5
49	MP3C	Y	-36.469	2
50	MP3C	My	0	2
51	MP3C	Mz	.018	2
52	MP3C	Y	-36.469	3.5
53	MP3C	My	0	3.5
54	MP3C	Mz	.018	3.5
55	MP1A	Y	-59.873	.5
56	MP1A	My	-.029	.5
57	MP1A	Mz	-.005	.5
58	MP1A	Y	-59.873	5
59	MP1A	My	-.029	5
60	MP1A	Mz	-.005	5
61	MP1B	Y	-59.873	.5
62	MP1B	My	.023	.5
63	MP1B	Mz	-.019	.5
64	MP1B	Y	-59.873	5
65	MP1B	My	.023	5
66	MP1B	Mz	-.019	5
67	MP1C	Y	-59.873	.5
68	MP1C	My	.005	.5
69	MP1C	Mz	.029	.5
70	MP1C	Y	-59.873	5
71	MP1C	My	.005	5
72	MP1C	Mz	.029	5
73	MP4A	Y	-59.873	.5
74	MP4A	My	.023	.5
75	MP4A	Mz	-.019	.5
76	MP4A	Y	-59.873	5
77	MP4A	My	.023	5
78	MP4A	Mz	-.019	5
79	MP4B	Y	-59.873	.5
80	MP4B	My	.023	.5
81	MP4B	Mz	-.019	.5
82	MP4B	Y	-59.873	5
83	MP4B	My	.023	5
84	MP4B	Mz	-.019	5
85	MP4C	Y	-59.873	.5
86	MP4C	My	.005	.5
87	MP4C	Mz	.029	.5
88	MP4C	Y	-59.873	5
89	MP4C	My	.005	5
90	MP4C	Mz	.029	5
91	MP2A	Y	-45.902	3
92	MP2A	My	.023	3
93	MP2A	Mz	0	3
94	MP2B	Y	-45.902	3
95	MP2B	My	-.018	3
96	MP2B	Mz	.015	3
97	MP2C	Y	-45.902	3
98	MP2C	My	0	3

Member Point Loads (BLC 2 : Antenna Di) (Continued)

	Member Label	Direction	Magnitude[lb,k-ft]	Location[ft,%]
99	MP2C	Mz	-.023	3
100	MP3A	Y	-41.287	3
101	MP3A	My	.021	3
102	MP3A	Mz	0	3
103	MP3B	Y	-41.287	3
104	MP3B	My	-.016	3
105	MP3B	Mz	.013	3
106	MP3C	Y	-41.287	3
107	MP3C	My	0	3
108	MP3C	Mz	-.021	3
109	MP1A	Y	-89.813	2.5
110	MP1A	My	.045	2.5
111	MP1A	Mz	0	2.5

Member Point Loads (BLC 3 : Antenna Wo (0 Deg))

	Member Label	Direction	Magnitude[lb,k-ft]	Location[ft,%]
1	MP2A	X	0	.5
2	MP2A	Z	-160.937	.5
3	MP2A	Mx	-.078	.5
4	MP2A	X	0	5
5	MP2A	Z	-160.937	5
6	MP2A	Mx	-.078	5
7	MP2B	X	0	.5
8	MP2B	Z	-150.803	.5
9	MP2B	Mx	.116	.5
10	MP2B	X	0	5
11	MP2B	Z	-150.803	5
12	MP2B	Mx	.116	5
13	MP2C	X	0	.5
14	MP2C	Z	-135.277	.5
15	MP2C	Mx	-.068	.5
16	MP2C	X	0	5
17	MP2C	Z	-135.277	5
18	MP2C	Mx	-.068	5
19	MP2A	X	0	.5
20	MP2A	Z	-160.937	.5
21	MP2A	Mx	.106	.5
22	MP2A	X	0	5
23	MP2A	Z	-160.937	5
24	MP2A	Mx	.106	5
25	MP2B	X	0	.5
26	MP2B	Z	-150.803	.5
27	MP2B	Mx	-.019	.5
28	MP2B	X	0	5
29	MP2B	Z	-150.803	5
30	MP2B	Mx	-.019	5
31	MP2C	X	0	.5
32	MP2C	Z	-135.277	.5
33	MP2C	Mx	-.068	.5
34	MP2C	X	0	5
35	MP2C	Z	-135.277	5

Member Point Loads (BLC 3 : Antenna Wo (0 Deg)) (Continued)

	Member Label	Direction	Magnitude[lb,k-ft]	Location[ft,%]
36	MP2C	Mx	-.068	5
37	MP3A	X	0	2
38	MP3A	Z	-91.784	2
39	MP3A	Mx	.008	2
40	MP3A	X	0	3.5
41	MP3A	Z	-91.784	3.5
42	MP3A	Mx	.008	3.5
43	MP3B	X	0	2
44	MP3B	Z	-69.992	2
45	MP3B	Mx	.022	2
46	MP3B	X	0	3.5
47	MP3B	Z	-69.992	3.5
48	MP3B	Mx	.022	3.5
49	MP3C	X	0	2
50	MP3C	Z	-36.605	2
51	MP3C	Mx	-.018	2
52	MP3C	X	0	3.5
53	MP3C	Z	-36.605	3.5
54	MP3C	Mx	-.018	3.5
55	MP1A	X	0	.5
56	MP1A	Z	-88.718	.5
57	MP1A	Mx	.008	.5
58	MP1A	X	0	5
59	MP1A	Z	-88.718	5
60	MP1A	Mx	.008	5
61	MP1B	X	0	.5
62	MP1B	Z	-121.47	.5
63	MP1B	Mx	.039	.5
64	MP1B	X	0	5
65	MP1B	Z	-121.47	5
66	MP1B	Mx	.039	5
67	MP1C	X	0	.5
68	MP1C	Z	-169.071	.5
69	MP1C	Mx	-.083	.5
70	MP1C	X	0	5
71	MP1C	Z	-169.071	5
72	MP1C	Mx	-.083	5
73	MP4A	X	0	.5
74	MP4A	Z	-121.47	.5
75	MP4A	Mx	.039	.5
76	MP4A	X	0	5
77	MP4A	Z	-121.47	5
78	MP4A	Mx	.039	5
79	MP4B	X	0	.5
80	MP4B	Z	-121.47	.5
81	MP4B	Mx	.039	.5
82	MP4B	X	0	5
83	MP4B	Z	-121.47	5
84	MP4B	Mx	.039	5
85	MP4C	X	0	.5
86	MP4C	Z	-169.071	.5
87	MP4C	Mx	-.083	.5

Member Point Loads (BLC 3 : Antenna Wo (0 Deg)) (Continued)

	Member Label	Direction	Magnitude[lb,k-ft]	Location[ft,%]
88	MP4C	X	0	5
89	MP4C	Z	-169.071	5
90	MP4C	Mx	-.083	5
91	MP2A	X	0	3
92	MP2A	Z	-74.125	3
93	MP2A	Mx	0	3
94	MP2B	X	0	3
95	MP2B	Z	-63.971	3
96	MP2B	Mx	-.021	3
97	MP2C	X	0	3
98	MP2C	Z	-49.549	3
99	MP2C	Mx	.025	3
100	MP3A	X	0	3
101	MP3A	Z	-74.125	3
102	MP3A	Mx	0	3
103	MP3B	X	0	3
104	MP3B	Z	-60.081	3
105	MP3B	Mx	-.019	3
106	MP3C	X	0	3
107	MP3C	Z	-40.135	3
108	MP3C	Mx	.02	3
109	MP1A	X	0	2.5
110	MP1A	Z	-160.935	2.5
111	MP1A	Mx	0	2.5

Member Point Loads (BLC 4 : Antenna Wo (30 Deg))

	Member Label	Direction	Magnitude[lb,k-ft]	Location[ft,%]
1	MP2A	X	79.32	.5
2	MP2A	Z	-137.386	.5
3	MP2A	Mx	-.114	.5
4	MP2A	X	79.32	5
5	MP2A	Z	-137.386	5
6	MP2A	Mx	-.114	5
7	MP2B	X	69.186	.5
8	MP2B	Z	-119.833	.5
9	MP2B	Mx	.093	.5
10	MP2B	X	69.186	5
11	MP2B	Z	-119.833	5
12	MP2B	Mx	.093	5
13	MP2C	X	70.946	.5
14	MP2C	Z	-122.881	.5
15	MP2C	Mx	-.02	.5
16	MP2C	X	70.946	5
17	MP2C	Z	-122.881	5
18	MP2C	Mx	-.02	5
19	MP2A	X	79.32	.5
20	MP2A	Z	-137.386	.5
21	MP2A	Mx	.06	.5
22	MP2A	X	79.32	5
23	MP2A	Z	-137.386	5
24	MP2A	Mx	.06	5

Member Point Loads (BLC 4 : Antenna Wo (30 Deg)) (Continued)

	Member Label	Direction	Magnitude[lb,k-ft]	Location[ft,%]
25	MP2B	X	69.186	.5
26	MP2B	Z	-119.833	.5
27	MP2B	Mx	.037	.5
28	MP2B	X	69.186	5
29	MP2B	Z	-119.833	5
30	MP2B	Mx	.037	5
31	MP2C	X	70.946	.5
32	MP2C	Z	-122.881	.5
33	MP2C	Mx	-.103	.5
34	MP2C	X	70.946	5
35	MP2C	Z	-122.881	5
36	MP2C	Mx	-.103	5
37	MP3A	X	43.422	2
38	MP3A	Z	-75.21	2
39	MP3A	Mx	-.015	2
40	MP3A	X	43.422	3.5
41	MP3A	Z	-75.21	3.5
42	MP3A	Mx	-.015	3.5
43	MP3B	X	21.63	2
44	MP3B	Z	-37.465	2
45	MP3B	Mx	.02	2
46	MP3B	X	21.63	3.5
47	MP3B	Z	-37.465	3.5
48	MP3B	Mx	.02	3.5
49	MP3C	X	25.414	2
50	MP3C	Z	-44.019	2
51	MP3C	Mx	-.022	2
52	MP3C	X	25.414	3.5
53	MP3C	Z	-44.019	3.5
54	MP3C	Mx	-.022	3.5
55	MP1A	X	48.071	.5
56	MP1A	Z	-83.261	.5
57	MP1A	Mx	-.016	.5
58	MP1A	X	48.071	5
59	MP1A	Z	-83.261	5
60	MP1A	Mx	-.016	5
61	MP1B	X	80.823	.5
62	MP1B	Z	-139.99	.5
63	MP1B	Mx	.076	.5
64	MP1B	X	80.823	5
65	MP1B	Z	-139.99	5
66	MP1B	Mx	.076	5
67	MP1C	X	68.159	.5
68	MP1C	Z	-118.055	.5
69	MP1C	Mx	-.052	.5
70	MP1C	X	68.159	5
71	MP1C	Z	-118.055	5
72	MP1C	Mx	-.052	5
73	MP4A	X	80.823	.5
74	MP4A	Z	-139.99	.5
75	MP4A	Mx	.076	.5
76	MP4A	X	80.823	5

Member Point Loads (BLC 4 : Antenna Wo (30 Deg)) (Continued)

	Member Label	Direction	Magnitude[lb,k-ft]	Location[ft,%]
77	MP4A	Z	-139.99	5
78	MP4A	Mx	.076	5
79	MP4B	X	80.823	.5
80	MP4B	Z	-139.99	.5
81	MP4B	Mx	.076	.5
82	MP4B	X	80.823	5
83	MP4B	Z	-139.99	5
84	MP4B	Mx	.076	5
85	MP4C	X	68.159	.5
86	MP4C	Z	-118.055	.5
87	MP4C	Mx	-.052	.5
88	MP4C	X	68.159	5
89	MP4C	Z	-118.055	5
90	MP4C	Mx	-.052	5
91	MP2A	X	33.991	3
92	MP2A	Z	-58.874	3
93	MP2A	Mx	.017	3
94	MP2B	X	26.212	3
95	MP2B	Z	-45.4	3
96	MP2B	Mx	-.025	3
97	MP2C	X	27.847	3
98	MP2C	Z	-48.232	3
99	MP2C	Mx	.024	3
100	MP3A	X	32.814	3
101	MP3A	Z	-56.835	3
102	MP3A	Mx	.016	3
103	MP3B	X	22.055	3
104	MP3B	Z	-38.201	3
105	MP3B	Mx	-.021	3
106	MP3C	X	24.316	3
107	MP3C	Z	-42.117	3
108	MP3C	Mx	.021	3
109	MP1A	X	75.699	2.5
110	MP1A	Z	-131.114	2.5
111	MP1A	Mx	.038	2.5

Member Point Loads (BLC 5 : Antenna Wo (60 Deg))

	Member Label	Direction	Magnitude[lb,k-ft]	Location[ft,%]
1	MP2A	X	126.62	.5
2	MP2A	Z	-73.104	.5
3	MP2A	Mx	-.111	.5
4	MP2A	X	126.62	5
5	MP2A	Z	-73.104	5
6	MP2A	Mx	-.111	5
7	MP2B	X	117.844	.5
8	MP2B	Z	-68.037	.5
9	MP2B	Mx	.053	.5
10	MP2B	X	117.844	5
11	MP2B	Z	-68.037	5
12	MP2B	Mx	.053	5
13	MP2C	X	134.338	.5

Member Point Loads (BLC 5 : Antenna Wo (60 Deg)) (Continued)

	Member Label	Direction	Magnitude[lb,k-ft]	Location[ft,%]
14	MP2C	Z	-77.56	.5
15	MP2C	Mx	.04	.5
16	MP2C	X	134.338	5
17	MP2C	Z	-77.56	5
18	MP2C	Mx	.04	5
19	MP2A	X	126.62	.5
20	MP2A	Z	-73.104	.5
21	MP2A	Mx	-.001	.5
22	MP2A	X	126.62	5
23	MP2A	Z	-73.104	5
24	MP2A	Mx	-.001	5
25	MP2B	X	117.844	.5
26	MP2B	Z	-68.037	.5
27	MP2B	Mx	.081	.5
28	MP2B	X	117.844	5
29	MP2B	Z	-68.037	5
30	MP2B	Mx	.081	5
31	MP2C	X	134.338	.5
32	MP2C	Z	-77.56	.5
33	MP2C	Mx	-.117	.5
34	MP2C	X	134.338	5
35	MP2C	Z	-77.56	5
36	MP2C	Mx	-.117	5
37	MP3A	X	52.059	2
38	MP3A	Z	-30.056	2
39	MP3A	Mx	-.023	2
40	MP3A	X	52.059	3.5
41	MP3A	Z	-30.056	3.5
42	MP3A	Mx	-.023	3.5
43	MP3B	X	33.187	2
44	MP3B	Z	-19.16	2
45	MP3B	Mx	.019	2
46	MP3B	X	33.187	3.5
47	MP3B	Z	-19.16	3.5
48	MP3B	Mx	.019	3.5
49	MP3C	X	68.655	2
50	MP3C	Z	-39.638	2
51	MP3C	Mx	-.02	2
52	MP3C	X	68.655	3.5
53	MP3C	Z	-39.638	3.5
54	MP3C	Mx	-.02	3.5
55	MP1A	X	118.055	.5
56	MP1A	Z	-68.159	.5
57	MP1A	Mx	-.052	.5
58	MP1A	X	118.055	5
59	MP1A	Z	-68.159	5
60	MP1A	Mx	-.052	5
61	MP1B	X	146.419	.5
62	MP1B	Z	-84.535	.5
63	MP1B	Mx	.083	.5
64	MP1B	X	146.419	5
65	MP1B	Z	-84.535	5

Member Point Loads (BLC 5 : Antenna Wo (60 Deg)) (Continued)

	Member Label	Direction	Magnitude[lb,k-ft]	Location[ft,%]
66	MP1B	Mx	.083	5
67	MP1C	X	83.261	.5
68	MP1C	Z	-48.071	.5
69	MP1C	Mx	-.016	.5
70	MP1C	X	83.261	5
71	MP1C	Z	-48.071	5
72	MP1C	Mx	-.016	5
73	MP4A	X	146.419	.5
74	MP4A	Z	-84.535	.5
75	MP4A	Mx	.083	.5
76	MP4A	X	146.419	5
77	MP4A	Z	-84.535	5
78	MP4A	Mx	.083	5
79	MP4B	X	146.419	.5
80	MP4B	Z	-84.535	.5
81	MP4B	Mx	.083	.5
82	MP4B	X	146.419	5
83	MP4B	Z	-84.535	5
84	MP4B	Mx	.083	5
85	MP4C	X	83.261	.5
86	MP4C	Z	-48.071	.5
87	MP4C	Mx	-.016	.5
88	MP4C	X	83.261	5
89	MP4C	Z	-48.071	5
90	MP4C	Mx	-.016	5
91	MP2A	X	48.232	3
92	MP2A	Z	-27.847	3
93	MP2A	Mx	.024	3
94	MP2B	X	43.553	3
95	MP2B	Z	-25.145	3
96	MP2B	Mx	-.025	3
97	MP2C	X	58.874	3
98	MP2C	Z	-33.991	3
99	MP2C	Mx	.017	3
100	MP3A	X	42.117	3
101	MP3A	Z	-24.316	3
102	MP3A	Mx	.021	3
103	MP3B	X	35.645	3
104	MP3B	Z	-20.58	3
105	MP3B	Mx	-.02	3
106	MP3C	X	56.835	3
107	MP3C	Z	-32.814	3
108	MP3C	Mx	.016	3
109	MP1A	X	114.593	2.5
110	MP1A	Z	-66.16	2.5
111	MP1A	Mx	.057	2.5

Member Point Loads (BLC 6 : Antenna Wo (90 Deg))

	Member Label	Direction	Magnitude[lb,k-ft]	Location[ft,%]
1	MP2A	X	136.074	.5
2	MP2A	Z	0	.5

Member Point Loads (BLC 6 : Antenna Wo (90 Deg)) (Continued)

	Member Label	Direction	Magnitude[lb,k-ft]	Location[ft,%]
3	MP2A	Mx	-.081	.5
4	MP2A	X	136.074	5
5	MP2A	Z	0	5
6	MP2A	Mx	-.081	5
7	MP2B	X	146.209	.5
8	MP2B	Z	0	.5
9	MP2B	Mx	.001	.5
10	MP2B	X	146.209	5
11	MP2B	Z	0	5
12	MP2B	Mx	.001	5
13	MP2C	X	161.735	.5
14	MP2C	Z	0	.5
15	MP2C	Mx	.094	.5
16	MP2C	X	161.735	5
17	MP2C	Z	0	5
18	MP2C	Mx	.094	5
19	MP2A	X	136.074	.5
20	MP2A	Z	0	.5
21	MP2A	Mx	-.053	.5
22	MP2A	X	136.074	5
23	MP2A	Z	0	5
24	MP2A	Mx	-.053	5
25	MP2B	X	146.209	.5
26	MP2B	Z	0	.5
27	MP2B	Mx	.111	.5
28	MP2B	X	146.209	5
29	MP2B	Z	0	5
30	MP2B	Mx	.111	5
31	MP2C	X	161.735	.5
32	MP2C	Z	0	.5
33	MP2C	Mx	-.094	.5
34	MP2C	X	161.735	5
35	MP2C	Z	0	5
36	MP2C	Mx	-.094	5
37	MP3A	X	38.321	2
38	MP3A	Z	0	2
39	MP3A	Mx	-.019	2
40	MP3A	X	38.321	3.5
41	MP3A	Z	0	3.5
42	MP3A	Mx	-.019	3.5
43	MP3B	X	60.113	2
44	MP3B	Z	0	2
45	MP3B	Mx	.023	2
46	MP3B	X	60.113	3.5
47	MP3B	Z	0	3.5
48	MP3B	Mx	.023	3.5
49	MP3C	X	93.5	2
50	MP3C	Z	0	2
51	MP3C	Mx	0	2
52	MP3C	X	93.5	3.5
53	MP3C	Z	0	3.5
54	MP3C	Mx	0	3.5

Member Point Loads (BLC 6 : Antenna Wo (90 Deg)) (Continued)

	Member Label	Direction	Magnitude[lb,k-ft]	Location[ft,%]
55	MP1A	X	169.071	.5
56	MP1A	Z	0	.5
57	MP1A	Mx	-.083	.5
58	MP1A	X	169.071	5
59	MP1A	Z	0	5
60	MP1A	Mx	-.083	5
61	MP1B	X	136.319	.5
62	MP1B	Z	0	.5
63	MP1B	Mx	.052	.5
64	MP1B	X	136.319	5
65	MP1B	Z	0	5
66	MP1B	Mx	.052	5
67	MP1C	X	88.718	.5
68	MP1C	Z	0	.5
69	MP1C	Mx	.008	.5
70	MP1C	X	88.718	5
71	MP1C	Z	0	5
72	MP1C	Mx	.008	5
73	MP4A	X	136.319	.5
74	MP4A	Z	0	.5
75	MP4A	Mx	.052	.5
76	MP4A	X	136.319	5
77	MP4A	Z	0	5
78	MP4A	Mx	.052	5
79	MP4B	X	136.319	.5
80	MP4B	Z	0	.5
81	MP4B	Mx	.052	.5
82	MP4B	X	136.319	5
83	MP4B	Z	0	5
84	MP4B	Mx	.052	5
85	MP4C	X	88.718	.5
86	MP4C	Z	0	.5
87	MP4C	Mx	.008	.5
88	MP4C	X	88.718	5
89	MP4C	Z	0	5
90	MP4C	Mx	.008	5
91	MP2A	X	49.549	3
92	MP2A	Z	0	3
93	MP2A	Mx	.025	3
94	MP2B	X	59.703	3
95	MP2B	Z	0	3
96	MP2B	Mx	-.023	3
97	MP2C	X	74.125	3
98	MP2C	Z	0	3
99	MP2C	Mx	0	3
100	MP3A	X	40.135	3
101	MP3A	Z	0	3
102	MP3A	Mx	.02	3
103	MP3B	X	54.179	3
104	MP3B	Z	0	3
105	MP3B	Mx	-.021	3
106	MP3C	X	74.125	3

Member Point Loads (BLC 6 : Antenna Wo (90 Deg)) (Continued)

	Member Label	Direction	Magnitude[lb,k-ft]	Location[ft,%]
107	MP3C	Z	0	3
108	MP3C	Mx	0	3
109	MP1A	X	122.783	2.5
110	MP1A	Z	0	2.5
111	MP1A	Mx	.061	2.5

Member Point Loads (BLC 7 : Antenna Wo (120 Deg))

	Member Label	Direction	Magnitude[lb,k-ft]	Location[ft,%]
1	MP2A	X	119.833	.5
2	MP2A	Z	69.186	.5
3	MP2A	Mx	-.037	.5
4	MP2A	X	119.833	5
5	MP2A	Z	69.186	5
6	MP2A	Mx	-.037	5
7	MP2B	X	137.386	.5
8	MP2B	Z	79.32	.5
9	MP2B	Mx	-.06	.5
10	MP2B	X	137.386	5
11	MP2B	Z	79.32	5
12	MP2B	Mx	-.06	5
13	MP2C	X	134.338	.5
14	MP2C	Z	77.56	.5
15	MP2C	Mx	.117	.5
16	MP2C	X	134.338	5
17	MP2C	Z	77.56	5
18	MP2C	Mx	.117	5
19	MP2A	X	119.833	.5
20	MP2A	Z	69.186	.5
21	MP2A	Mx	-.093	.5
22	MP2A	X	119.833	5
23	MP2A	Z	69.186	5
24	MP2A	Mx	-.093	5
25	MP2B	X	137.386	.5
26	MP2B	Z	79.32	.5
27	MP2B	Mx	.114	.5
28	MP2B	X	137.386	5
29	MP2B	Z	79.32	5
30	MP2B	Mx	.114	5
31	MP2C	X	134.338	.5
32	MP2C	Z	77.56	.5
33	MP2C	Mx	-.04	.5
34	MP2C	X	134.338	5
35	MP2C	Z	77.56	5
36	MP2C	Mx	-.04	5
37	MP3A	X	37.465	2
38	MP3A	Z	21.63	2
39	MP3A	Mx	-.02	2
40	MP3A	X	37.465	3.5
41	MP3A	Z	21.63	3.5
42	MP3A	Mx	-.02	3.5
43	MP3B	X	75.21	2

Member Point Loads (BLC 7 : Antenna Wo (120 Deg)) (Continued)

	Member Label	Direction	Magnitude[lb,k-ft]	Location[ft,%]
44	MP3B	Z	43.422	2
45	MP3B	Mx	.015	2
46	MP3B	X	75.21	3.5
47	MP3B	Z	43.422	3.5
48	MP3B	Mx	.015	3.5
49	MP3C	X	68.655	2
50	MP3C	Z	39.638	2
51	MP3C	Mx	.02	2
52	MP3C	X	68.655	3.5
53	MP3C	Z	39.638	3.5
54	MP3C	Mx	.02	3.5
55	MP1A	X	139.99	.5
56	MP1A	Z	80.823	.5
57	MP1A	Mx	-.076	.5
58	MP1A	X	139.99	5
59	MP1A	Z	80.823	5
60	MP1A	Mx	-.076	5
61	MP1B	X	83.261	.5
62	MP1B	Z	48.071	.5
63	MP1B	Mx	.016	.5
64	MP1B	X	83.261	5
65	MP1B	Z	48.071	5
66	MP1B	Mx	.016	5
67	MP1C	X	105.196	.5
68	MP1C	Z	60.735	.5
69	MP1C	Mx	.039	.5
70	MP1C	X	105.196	5
71	MP1C	Z	60.735	5
72	MP1C	Mx	.039	5
73	MP4A	X	83.261	.5
74	MP4A	Z	48.071	.5
75	MP4A	Mx	.016	.5
76	MP4A	X	83.261	5
77	MP4A	Z	48.071	5
78	MP4A	Mx	.016	5
79	MP4B	X	83.261	.5
80	MP4B	Z	48.071	.5
81	MP4B	Mx	.016	.5
82	MP4B	X	83.261	5
83	MP4B	Z	48.071	5
84	MP4B	Mx	.016	5
85	MP4C	X	105.196	.5
86	MP4C	Z	60.735	.5
87	MP4C	Mx	.039	.5
88	MP4C	X	105.196	5
89	MP4C	Z	60.735	5
90	MP4C	Mx	.039	5
91	MP2A	X	48.232	3
92	MP2A	Z	27.847	3
93	MP2A	Mx	.024	3
94	MP2B	X	61.705	3
95	MP2B	Z	35.625	3

Member Point Loads (BLC 7 : Antenna Wo (120 Deg)) (Continued)

	Member Label	Direction	Magnitude[lb,k-ft]	Location[ft,%]
96	MP2B	Mx	-.012	3
97	MP2C	X	58.874	3
98	MP2C	Z	33.991	3
99	MP2C	Mx	-.017	3
100	MP3A	X	42.117	3
101	MP3A	Z	24.316	3
102	MP3A	Mx	.021	3
103	MP3B	X	60.751	3
104	MP3B	Z	35.075	3
105	MP3B	Mx	-.012	3
106	MP3C	X	56.835	3
107	MP3C	Z	32.814	3
108	MP3C	Mx	-.016	3
109	MP1A	X	114.593	2.5
110	MP1A	Z	66.16	2.5
111	MP1A	Mx	.057	2.5

Member Point Loads (BLC 8 : Antenna Wo (150 Deg))

	Member Label	Direction	Magnitude[lb,k-ft]	Location[ft,%]
1	MP2A	X	75.401	.5
2	MP2A	Z	130.599	.5
3	MP2A	Mx	.019	.5
4	MP2A	X	75.401	5
5	MP2A	Z	130.599	5
6	MP2A	Mx	.019	5
7	MP2B	X	80.469	.5
8	MP2B	Z	139.376	.5
9	MP2B	Mx	-.106	.5
10	MP2B	X	80.469	5
11	MP2B	Z	139.376	5
12	MP2B	Mx	-.106	5
13	MP2C	X	70.946	.5
14	MP2C	Z	122.881	.5
15	MP2C	Mx	.103	.5
16	MP2C	X	70.946	5
17	MP2C	Z	122.881	5
18	MP2C	Mx	.103	5
19	MP2A	X	75.401	.5
20	MP2A	Z	130.599	.5
21	MP2A	Mx	-.116	.5
22	MP2A	X	75.401	5
23	MP2A	Z	130.599	5
24	MP2A	Mx	-.116	5
25	MP2B	X	80.469	.5
26	MP2B	Z	139.376	.5
27	MP2B	Mx	.078	.5
28	MP2B	X	80.469	5
29	MP2B	Z	139.376	5
30	MP2B	Mx	.078	5
31	MP2C	X	70.946	.5
32	MP2C	Z	122.881	.5

Member Point Loads (BLC 8 : Antenna Wo (150 Deg)) (Continued)

	Member Label	Direction	Magnitude[lb,k-ft]	Location[ft,%]
33	MP2C	Mx	.02	.5
34	MP2C	X	70.946	5
35	MP2C	Z	122.881	5
36	MP2C	Mx	.02	5
37	MP3A	X	34.996	2
38	MP3A	Z	60.615	2
39	MP3A	Mx	-.022	2
40	MP3A	X	34.996	3.5
41	MP3A	Z	60.615	3.5
42	MP3A	Mx	-.022	3.5
43	MP3B	X	45.892	2
44	MP3B	Z	79.488	2
45	MP3B	Mx	-.008	2
46	MP3B	X	45.892	3.5
47	MP3B	Z	79.488	3.5
48	MP3B	Mx	-.008	3.5
49	MP3C	X	25.414	2
50	MP3C	Z	44.019	2
51	MP3C	Mx	.022	2
52	MP3C	X	25.414	3.5
53	MP3C	Z	44.019	3.5
54	MP3C	Mx	.022	3.5
55	MP1A	X	60.735	.5
56	MP1A	Z	105.196	.5
57	MP1A	Mx	-.039	.5
58	MP1A	X	60.735	5
59	MP1A	Z	105.196	5
60	MP1A	Mx	-.039	5
61	MP1B	X	44.359	.5
62	MP1B	Z	76.832	.5
63	MP1B	Mx	-.008	.5
64	MP1B	X	44.359	5
65	MP1B	Z	76.832	5
66	MP1B	Mx	-.008	5
67	MP1C	X	80.823	.5
68	MP1C	Z	139.99	.5
69	MP1C	Mx	.076	.5
70	MP1C	X	80.823	5
71	MP1C	Z	139.99	5
72	MP1C	Mx	.076	5
73	MP4A	X	44.359	.5
74	MP4A	Z	76.832	.5
75	MP4A	Mx	-.008	.5
76	MP4A	X	44.359	5
77	MP4A	Z	76.832	5
78	MP4A	Mx	-.008	5
79	MP4B	X	44.359	.5
80	MP4B	Z	76.832	.5
81	MP4B	Mx	-.008	.5
82	MP4B	X	44.359	5
83	MP4B	Z	76.832	5
84	MP4B	Mx	-.008	5

Member Point Loads (BLC 8 : Antenna Wo (150 Deg)) (Continued)

	Member Label	Direction	Magnitude[lb,k-ft]	Location[ft,%]
85	MP4C	X	80.823	.5
86	MP4C	Z	139.99	.5
87	MP4C	Mx	.076	.5
88	MP4C	X	80.823	5
89	MP4C	Z	139.99	5
90	MP4C	Mx	.076	5
91	MP2A	X	33.991	3
92	MP2A	Z	58.874	3
93	MP2A	Mx	.017	3
94	MP2B	X	36.692	3
95	MP2B	Z	63.553	3
96	MP2B	Mx	.006	3
97	MP2C	X	27.847	3
98	MP2C	Z	48.232	3
99	MP2C	Mx	-.024	3
100	MP3A	X	32.814	3
101	MP3A	Z	56.835	3
102	MP3A	Mx	.016	3
103	MP3B	X	36.55	3
104	MP3B	Z	63.307	3
105	MP3B	Mx	.006	3
106	MP3C	X	24.316	3
107	MP3C	Z	42.117	3
108	MP3C	Mx	-.021	3
109	MP1A	X	75.699	2.5
110	MP1A	Z	131.114	2.5
111	MP1A	Mx	.038	2.5

Member Point Loads (BLC 9 : Antenna Wo (180 Deg))

	Member Label	Direction	Magnitude[lb,k-ft]	Location[ft,%]
1	MP2A	X	0	.5
2	MP2A	Z	160.937	.5
3	MP2A	Mx	.078	.5
4	MP2A	X	0	5
5	MP2A	Z	160.937	5
6	MP2A	Mx	.078	5
7	MP2B	X	0	.5
8	MP2B	Z	150.803	.5
9	MP2B	Mx	-.116	.5
10	MP2B	X	0	5
11	MP2B	Z	150.803	5
12	MP2B	Mx	-.116	5
13	MP2C	X	0	.5
14	MP2C	Z	135.277	.5
15	MP2C	Mx	.068	.5
16	MP2C	X	0	5
17	MP2C	Z	135.277	5
18	MP2C	Mx	.068	5
19	MP2A	X	0	.5
20	MP2A	Z	160.937	.5
21	MP2A	Mx	-.106	.5

Member Point Loads (BLC 9 : Antenna Wo (180 Deg)) (Continued)

	Member Label	Direction	Magnitude[lb,k-ft]	Location[ft,%]
22	MP2A	X	0	5
23	MP2A	Z	160.937	5
24	MP2A	Mx	-.106	5
25	MP2B	X	0	.5
26	MP2B	Z	150.803	.5
27	MP2B	Mx	.019	.5
28	MP2B	X	0	5
29	MP2B	Z	150.803	5
30	MP2B	Mx	.019	5
31	MP2C	X	0	.5
32	MP2C	Z	135.277	.5
33	MP2C	Mx	.068	.5
34	MP2C	X	0	5
35	MP2C	Z	135.277	5
36	MP2C	Mx	.068	5
37	MP3A	X	0	2
38	MP3A	Z	91.784	2
39	MP3A	Mx	-.008	2
40	MP3A	X	0	3.5
41	MP3A	Z	91.784	3.5
42	MP3A	Mx	-.008	3.5
43	MP3B	X	0	2
44	MP3B	Z	69.992	2
45	MP3B	Mx	-.022	2
46	MP3B	X	0	3.5
47	MP3B	Z	69.992	3.5
48	MP3B	Mx	-.022	3.5
49	MP3C	X	0	2
50	MP3C	Z	36.605	2
51	MP3C	Mx	.018	2
52	MP3C	X	0	3.5
53	MP3C	Z	36.605	3.5
54	MP3C	Mx	.018	3.5
55	MP1A	X	0	.5
56	MP1A	Z	88.718	.5
57	MP1A	Mx	-.008	.5
58	MP1A	X	0	5
59	MP1A	Z	88.718	5
60	MP1A	Mx	-.008	5
61	MP1B	X	0	.5
62	MP1B	Z	121.47	.5
63	MP1B	Mx	-.039	.5
64	MP1B	X	0	5
65	MP1B	Z	121.47	5
66	MP1B	Mx	-.039	5
67	MP1C	X	0	.5
68	MP1C	Z	169.071	.5
69	MP1C	Mx	.083	.5
70	MP1C	X	0	5
71	MP1C	Z	169.071	5
72	MP1C	Mx	.083	5
73	MP4A	X	0	.5

Member Point Loads (BLC 9 : Antenna Wo (180 Deg)) (Continued)

	Member Label	Direction	Magnitude[lb,k-ft]	Location[ft,%]
74	MP4A	Z	121.47	.5
75	MP4A	Mx	-.039	.5
76	MP4A	X	0	5
77	MP4A	Z	121.47	5
78	MP4A	Mx	-.039	5
79	MP4B	X	0	.5
80	MP4B	Z	121.47	.5
81	MP4B	Mx	-.039	.5
82	MP4B	X	0	5
83	MP4B	Z	121.47	5
84	MP4B	Mx	-.039	5
85	MP4C	X	0	.5
86	MP4C	Z	169.071	.5
87	MP4C	Mx	.083	.5
88	MP4C	X	0	5
89	MP4C	Z	169.071	5
90	MP4C	Mx	.083	5
91	MP2A	X	0	3
92	MP2A	Z	74.125	3
93	MP2A	Mx	0	3
94	MP2B	X	0	3
95	MP2B	Z	63.971	3
96	MP2B	Mx	.021	3
97	MP2C	X	0	3
98	MP2C	Z	49.549	3
99	MP2C	Mx	-.025	3
100	MP3A	X	0	3
101	MP3A	Z	74.125	3
102	MP3A	Mx	0	3
103	MP3B	X	0	3
104	MP3B	Z	60.081	3
105	MP3B	Mx	.019	3
106	MP3C	X	0	3
107	MP3C	Z	40.135	3
108	MP3C	Mx	-.02	3
109	MP1A	X	0	2.5
110	MP1A	Z	160.935	2.5
111	MP1A	Mx	0	2.5

Member Point Loads (BLC 10 : Antenna Wo (210 Deg))

	Member Label	Direction	Magnitude[lb,k-ft]	Location[ft,%]
1	MP2A	X	-79.32	.5
2	MP2A	Z	137.386	.5
3	MP2A	Mx	.114	.5
4	MP2A	X	-79.32	5
5	MP2A	Z	137.386	5
6	MP2A	Mx	.114	5
7	MP2B	X	-69.186	.5
8	MP2B	Z	119.833	.5
9	MP2B	Mx	-.093	.5
10	MP2B	X	-69.186	5

Member Point Loads (BLC 10 : Antenna Wo (210 Deg)) (Continued)

	Member Label	Direction	Magnitude[lb,k-ft]	Location[ft,%]
11	MP2B	Z	119.833	5
12	MP2B	Mx	-.093	5
13	MP2C	X	-70.946	.5
14	MP2C	Z	122.881	.5
15	MP2C	Mx	.02	.5
16	MP2C	X	-70.946	5
17	MP2C	Z	122.881	5
18	MP2C	Mx	.02	5
19	MP2A	X	-79.32	.5
20	MP2A	Z	137.386	.5
21	MP2A	Mx	-.06	.5
22	MP2A	X	-79.32	5
23	MP2A	Z	137.386	5
24	MP2A	Mx	-.06	5
25	MP2B	X	-69.186	.5
26	MP2B	Z	119.833	.5
27	MP2B	Mx	-.037	.5
28	MP2B	X	-69.186	5
29	MP2B	Z	119.833	5
30	MP2B	Mx	-.037	5
31	MP2C	X	-70.946	.5
32	MP2C	Z	122.881	.5
33	MP2C	Mx	.103	.5
34	MP2C	X	-70.946	5
35	MP2C	Z	122.881	5
36	MP2C	Mx	.103	5
37	MP3A	X	-43.422	2
38	MP3A	Z	75.21	2
39	MP3A	Mx	.015	2
40	MP3A	X	-43.422	3.5
41	MP3A	Z	75.21	3.5
42	MP3A	Mx	.015	3.5
43	MP3B	X	-21.63	2
44	MP3B	Z	37.465	2
45	MP3B	Mx	-.02	2
46	MP3B	X	-21.63	3.5
47	MP3B	Z	37.465	3.5
48	MP3B	Mx	-.02	3.5
49	MP3C	X	-25.414	2
50	MP3C	Z	44.019	2
51	MP3C	Mx	.022	2
52	MP3C	X	-25.414	3.5
53	MP3C	Z	44.019	3.5
54	MP3C	Mx	.022	3.5
55	MP1A	X	-48.071	.5
56	MP1A	Z	83.261	.5
57	MP1A	Mx	.016	.5
58	MP1A	X	-48.071	5
59	MP1A	Z	83.261	5
60	MP1A	Mx	.016	5
61	MP1B	X	-80.823	.5
62	MP1B	Z	139.99	.5

Member Point Loads (BLC 10 : Antenna Wo (210 Deg)) (Continued)

	Member Label	Direction	Magnitude[lb,k-ft]	Location[ft,%]
63	MP1B	Mx	-.076	.5
64	MP1B	X	-80.823	5
65	MP1B	Z	139.99	5
66	MP1B	Mx	-.076	5
67	MP1C	X	-68.159	.5
68	MP1C	Z	118.055	.5
69	MP1C	Mx	.052	.5
70	MP1C	X	-68.159	5
71	MP1C	Z	118.055	5
72	MP1C	Mx	.052	5
73	MP4A	X	-80.823	.5
74	MP4A	Z	139.99	.5
75	MP4A	Mx	-.076	.5
76	MP4A	X	-80.823	5
77	MP4A	Z	139.99	5
78	MP4A	Mx	-.076	5
79	MP4B	X	-80.823	.5
80	MP4B	Z	139.99	.5
81	MP4B	Mx	-.076	.5
82	MP4B	X	-80.823	5
83	MP4B	Z	139.99	5
84	MP4B	Mx	-.076	5
85	MP4C	X	-68.159	.5
86	MP4C	Z	118.055	.5
87	MP4C	Mx	.052	.5
88	MP4C	X	-68.159	5
89	MP4C	Z	118.055	5
90	MP4C	Mx	.052	5
91	MP2A	X	-33.991	3
92	MP2A	Z	58.874	3
93	MP2A	Mx	-.017	3
94	MP2B	X	-26.212	3
95	MP2B	Z	45.4	3
96	MP2B	Mx	.025	3
97	MP2C	X	-27.847	3
98	MP2C	Z	48.232	3
99	MP2C	Mx	-.024	3
100	MP3A	X	-32.814	3
101	MP3A	Z	56.835	3
102	MP3A	Mx	-.016	3
103	MP3B	X	-22.055	3
104	MP3B	Z	38.201	3
105	MP3B	Mx	.021	3
106	MP3C	X	-24.316	3
107	MP3C	Z	42.117	3
108	MP3C	Mx	-.021	3
109	MP1A	X	-75.699	2.5
110	MP1A	Z	131.114	2.5
111	MP1A	Mx	-.038	2.5

Member Point Loads (BLC 11 : Antenna Wo (240 Deg))

Member Label	Direction	Magnitude[lb,k-ft]	Location[ft,%]

Member Point Loads (BLC 11 : Antenna Wo (240 Deg)) (Continued)

	Member Label	Direction	Magnitude[lb,k-ft]	Location[ft,%]
1	MP2A	X	-126.62	.5
2	MP2A	Z	73.104	.5
3	MP2A	Mx	.111	.5
4	MP2A	X	-126.62	5
5	MP2A	Z	73.104	5
6	MP2A	Mx	.111	5
7	MP2B	X	-117.844	.5
8	MP2B	Z	68.037	.5
9	MP2B	Mx	-.053	.5
10	MP2B	X	-117.844	5
11	MP2B	Z	68.037	5
12	MP2B	Mx	-.053	5
13	MP2C	X	-134.338	.5
14	MP2C	Z	77.56	.5
15	MP2C	Mx	-.04	.5
16	MP2C	X	-134.338	5
17	MP2C	Z	77.56	5
18	MP2C	Mx	-.04	5
19	MP2A	X	-126.62	.5
20	MP2A	Z	73.104	.5
21	MP2A	Mx	.001	.5
22	MP2A	X	-126.62	5
23	MP2A	Z	73.104	5
24	MP2A	Mx	.001	5
25	MP2B	X	-117.844	.5
26	MP2B	Z	68.037	.5
27	MP2B	Mx	-.081	.5
28	MP2B	X	-117.844	5
29	MP2B	Z	68.037	5
30	MP2B	Mx	-.081	5
31	MP2C	X	-134.338	.5
32	MP2C	Z	77.56	.5
33	MP2C	Mx	.117	.5
34	MP2C	X	-134.338	5
35	MP2C	Z	77.56	5
36	MP2C	Mx	.117	5
37	MP3A	X	-52.059	2
38	MP3A	Z	30.056	2
39	MP3A	Mx	.023	2
40	MP3A	X	-52.059	3.5
41	MP3A	Z	30.056	3.5
42	MP3A	Mx	.023	3.5
43	MP3B	X	-33.187	2
44	MP3B	Z	19.16	2
45	MP3B	Mx	-.019	2
46	MP3B	X	-33.187	3.5
47	MP3B	Z	19.16	3.5
48	MP3B	Mx	-.019	3.5
49	MP3C	X	-68.655	2
50	MP3C	Z	39.638	2
51	MP3C	Mx	.02	2
52	MP3C	X	-68.655	3.5

Member Point Loads (BLC 11 : Antenna Wo (240 Deg)) (Continued)

	Member Label	Direction	Magnitude[lb,k-ft]	Location[ft,%]
53	MP3C	Z	39.638	3.5
54	MP3C	Mx	.02	3.5
55	MP1A	X	-118.055	.5
56	MP1A	Z	68.159	.5
57	MP1A	Mx	.052	.5
58	MP1A	X	-118.055	5
59	MP1A	Z	68.159	5
60	MP1A	Mx	.052	5
61	MP1B	X	-146.419	.5
62	MP1B	Z	84.535	.5
63	MP1B	Mx	-.083	.5
64	MP1B	X	-146.419	5
65	MP1B	Z	84.535	5
66	MP1B	Mx	-.083	5
67	MP1C	X	-83.261	.5
68	MP1C	Z	48.071	.5
69	MP1C	Mx	.016	.5
70	MP1C	X	-83.261	5
71	MP1C	Z	48.071	5
72	MP1C	Mx	.016	5
73	MP4A	X	-146.419	.5
74	MP4A	Z	84.535	.5
75	MP4A	Mx	-.083	.5
76	MP4A	X	-146.419	5
77	MP4A	Z	84.535	5
78	MP4A	Mx	-.083	5
79	MP4B	X	-146.419	.5
80	MP4B	Z	84.535	.5
81	MP4B	Mx	-.083	.5
82	MP4B	X	-146.419	5
83	MP4B	Z	84.535	5
84	MP4B	Mx	-.083	5
85	MP4C	X	-83.261	.5
86	MP4C	Z	48.071	.5
87	MP4C	Mx	.016	.5
88	MP4C	X	-83.261	5
89	MP4C	Z	48.071	5
90	MP4C	Mx	.016	5
91	MP2A	X	-48.232	3
92	MP2A	Z	27.847	3
93	MP2A	Mx	-.024	3
94	MP2B	X	-43.553	3
95	MP2B	Z	25.145	3
96	MP2B	Mx	.025	3
97	MP2C	X	-58.874	3
98	MP2C	Z	33.991	3
99	MP2C	Mx	-.017	3
100	MP3A	X	-42.117	3
101	MP3A	Z	24.316	3
102	MP3A	Mx	-.021	3
103	MP3B	X	-35.645	3
104	MP3B	Z	20.58	3

Member Point Loads (BLC 11 : Antenna Wo (240 Deg)) (Continued)

	Member Label	Direction	Magnitude[lb,k-ft]	Location[ft,%]
105	MP3B	Mx	.02	3
106	MP3C	X	-56.835	3
107	MP3C	Z	32.814	3
108	MP3C	Mx	-.016	3
109	MP1A	X	-114.593	2.5
110	MP1A	Z	66.16	2.5
111	MP1A	Mx	-.057	2.5

Member Point Loads (BLC 12 : Antenna Wo (270 Deg))

	Member Label	Direction	Magnitude[lb,k-ft]	Location[ft,%]
1	MP2A	X	-136.074	.5
2	MP2A	Z	0	.5
3	MP2A	Mx	.081	.5
4	MP2A	X	-136.074	5
5	MP2A	Z	0	5
6	MP2A	Mx	.081	5
7	MP2B	X	-146.209	.5
8	MP2B	Z	0	.5
9	MP2B	Mx	-.001	.5
10	MP2B	X	-146.209	5
11	MP2B	Z	0	5
12	MP2B	Mx	-.001	5
13	MP2C	X	-161.735	.5
14	MP2C	Z	0	.5
15	MP2C	Mx	-.094	.5
16	MP2C	X	-161.735	5
17	MP2C	Z	0	5
18	MP2C	Mx	-.094	5
19	MP2A	X	-136.074	.5
20	MP2A	Z	0	.5
21	MP2A	Mx	.053	.5
22	MP2A	X	-136.074	5
23	MP2A	Z	0	5
24	MP2A	Mx	.053	5
25	MP2B	X	-146.209	.5
26	MP2B	Z	0	.5
27	MP2B	Mx	-.111	.5
28	MP2B	X	-146.209	5
29	MP2B	Z	0	5
30	MP2B	Mx	-.111	5
31	MP2C	X	-161.735	.5
32	MP2C	Z	0	.5
33	MP2C	Mx	.094	.5
34	MP2C	X	-161.735	5
35	MP2C	Z	0	5
36	MP2C	Mx	.094	5
37	MP3A	X	-38.321	2
38	MP3A	Z	0	2
39	MP3A	Mx	.019	2
40	MP3A	X	-38.321	3.5
41	MP3A	Z	0	3.5

Member Point Loads (BLC 12 : Antenna Wo (270 Deg)) (Continued)

	Member Label	Direction	Magnitude[lb,k-ft]	Location[ft,%]
42	MP3A	Mx	.019	3.5
43	MP3B	X	-60.113	2
44	MP3B	Z	0	2
45	MP3B	Mx	-.023	2
46	MP3B	X	-60.113	3.5
47	MP3B	Z	0	3.5
48	MP3B	Mx	-.023	3.5
49	MP3C	X	-93.5	2
50	MP3C	Z	0	2
51	MP3C	Mx	0	2
52	MP3C	X	-93.5	3.5
53	MP3C	Z	0	3.5
54	MP3C	Mx	0	3.5
55	MP1A	X	-169.071	.5
56	MP1A	Z	0	.5
57	MP1A	Mx	.083	.5
58	MP1A	X	-169.071	5
59	MP1A	Z	0	5
60	MP1A	Mx	.083	5
61	MP1B	X	-136.319	.5
62	MP1B	Z	0	.5
63	MP1B	Mx	-.052	.5
64	MP1B	X	-136.319	5
65	MP1B	Z	0	5
66	MP1B	Mx	-.052	5
67	MP1C	X	-88.718	.5
68	MP1C	Z	0	.5
69	MP1C	Mx	-.008	.5
70	MP1C	X	-88.718	5
71	MP1C	Z	0	5
72	MP1C	Mx	-.008	5
73	MP4A	X	-136.319	.5
74	MP4A	Z	0	.5
75	MP4A	Mx	-.052	.5
76	MP4A	X	-136.319	5
77	MP4A	Z	0	5
78	MP4A	Mx	-.052	5
79	MP4B	X	-136.319	.5
80	MP4B	Z	0	.5
81	MP4B	Mx	-.052	.5
82	MP4B	X	-136.319	5
83	MP4B	Z	0	5
84	MP4B	Mx	-.052	5
85	MP4C	X	-88.718	.5
86	MP4C	Z	0	.5
87	MP4C	Mx	-.008	.5
88	MP4C	X	-88.718	5
89	MP4C	Z	0	5
90	MP4C	Mx	-.008	5
91	MP2A	X	-49.549	3
92	MP2A	Z	0	3
93	MP2A	Mx	-.025	3

Member Point Loads (BLC 12 : Antenna Wo (270 Deg)) (Continued)

	Member Label	Direction	Magnitude[lb,k-ft]	Location[ft,%]
94	MP2B	X	-59.703	3
95	MP2B	Z	0	3
96	MP2B	Mx	.023	3
97	MP2C	X	-74.125	3
98	MP2C	Z	0	3
99	MP2C	Mx	0	3
100	MP3A	X	-40.135	3
101	MP3A	Z	0	3
102	MP3A	Mx	-.02	3
103	MP3B	X	-54.179	3
104	MP3B	Z	0	3
105	MP3B	Mx	.021	3
106	MP3C	X	-74.125	3
107	MP3C	Z	0	3
108	MP3C	Mx	0	3
109	MP1A	X	-122.783	2.5
110	MP1A	Z	0	2.5
111	MP1A	Mx	-.061	2.5

Member Point Loads (BLC 13 : Antenna Wo (300 Deg))

	Member Label	Direction	Magnitude[lb,k-ft]	Location[ft,%]
1	MP2A	X	-119.833	.5
2	MP2A	Z	-69.186	.5
3	MP2A	Mx	.037	.5
4	MP2A	X	-119.833	5
5	MP2A	Z	-69.186	5
6	MP2A	Mx	.037	5
7	MP2B	X	-137.386	.5
8	MP2B	Z	-79.32	.5
9	MP2B	Mx	.06	.5
10	MP2B	X	-137.386	5
11	MP2B	Z	-79.32	5
12	MP2B	Mx	.06	5
13	MP2C	X	-134.338	.5
14	MP2C	Z	-77.56	.5
15	MP2C	Mx	-.117	.5
16	MP2C	X	-134.338	5
17	MP2C	Z	-77.56	5
18	MP2C	Mx	-.117	5
19	MP2A	X	-119.833	.5
20	MP2A	Z	-69.186	.5
21	MP2A	Mx	.093	.5
22	MP2A	X	-119.833	5
23	MP2A	Z	-69.186	5
24	MP2A	Mx	.093	5
25	MP2B	X	-137.386	.5
26	MP2B	Z	-79.32	.5
27	MP2B	Mx	-.114	.5
28	MP2B	X	-137.386	5
29	MP2B	Z	-79.32	5
30	MP2B	Mx	-.114	5

Member Point Loads (BLC 13 : Antenna Wo (300 Deg)) (Continued)

	Member Label	Direction	Magnitude[lb,k-ft]	Location[ft,%]
31	MP2C	X	-134.338	.5
32	MP2C	Z	-77.56	.5
33	MP2C	Mx	.04	.5
34	MP2C	X	-134.338	5
35	MP2C	Z	-77.56	5
36	MP2C	Mx	.04	5
37	MP3A	X	-37.465	2
38	MP3A	Z	-21.63	2
39	MP3A	Mx	.02	2
40	MP3A	X	-37.465	3.5
41	MP3A	Z	-21.63	3.5
42	MP3A	Mx	.02	3.5
43	MP3B	X	-75.21	2
44	MP3B	Z	-43.422	2
45	MP3B	Mx	-.015	2
46	MP3B	X	-75.21	3.5
47	MP3B	Z	-43.422	3.5
48	MP3B	Mx	-.015	3.5
49	MP3C	X	-68.655	2
50	MP3C	Z	-39.638	2
51	MP3C	Mx	-.02	2
52	MP3C	X	-68.655	3.5
53	MP3C	Z	-39.638	3.5
54	MP3C	Mx	-.02	3.5
55	MP1A	X	-139.99	.5
56	MP1A	Z	-80.823	.5
57	MP1A	Mx	.076	.5
58	MP1A	X	-139.99	5
59	MP1A	Z	-80.823	5
60	MP1A	Mx	.076	5
61	MP1B	X	-83.261	.5
62	MP1B	Z	-48.071	.5
63	MP1B	Mx	-.016	.5
64	MP1B	X	-83.261	5
65	MP1B	Z	-48.071	5
66	MP1B	Mx	-.016	5
67	MP1C	X	-105.196	.5
68	MP1C	Z	-60.735	.5
69	MP1C	Mx	-.039	.5
70	MP1C	X	-105.196	5
71	MP1C	Z	-60.735	5
72	MP1C	Mx	-.039	5
73	MP4A	X	-83.261	.5
74	MP4A	Z	-48.071	.5
75	MP4A	Mx	-.016	.5
76	MP4A	X	-83.261	5
77	MP4A	Z	-48.071	5
78	MP4A	Mx	-.016	5
79	MP4B	X	-83.261	.5
80	MP4B	Z	-48.071	.5
81	MP4B	Mx	-.016	.5
82	MP4B	X	-83.261	5

Member Point Loads (BLC 13 : Antenna Wo (300 Deg)) (Continued)

	Member Label	Direction	Magnitude[lb,k-ft]	Location[ft,%]
83	MP4B	Z	-48.071	5
84	MP4B	Mx	-.016	5
85	MP4C	X	-105.196	.5
86	MP4C	Z	-60.735	.5
87	MP4C	Mx	-.039	.5
88	MP4C	X	-105.196	5
89	MP4C	Z	-60.735	5
90	MP4C	Mx	-.039	5
91	MP2A	X	-48.232	3
92	MP2A	Z	-27.847	3
93	MP2A	Mx	-.024	3
94	MP2B	X	-61.705	3
95	MP2B	Z	-35.625	3
96	MP2B	Mx	.012	3
97	MP2C	X	-58.874	3
98	MP2C	Z	-33.991	3
99	MP2C	Mx	.017	3
100	MP3A	X	-42.117	3
101	MP3A	Z	-24.316	3
102	MP3A	Mx	-.021	3
103	MP3B	X	-60.751	3
104	MP3B	Z	-35.075	3
105	MP3B	Mx	.012	3
106	MP3C	X	-56.835	3
107	MP3C	Z	-32.814	3
108	MP3C	Mx	.016	3
109	MP1A	X	-114.593	2.5
110	MP1A	Z	-66.16	2.5
111	MP1A	Mx	-.057	2.5

Member Point Loads (BLC 14 : Antenna Wo (330 Deg))

	Member Label	Direction	Magnitude[lb,k-ft]	Location[ft,%]
1	MP2A	X	-75.401	.5
2	MP2A	Z	-130.599	.5
3	MP2A	Mx	-.019	.5
4	MP2A	X	-75.401	5
5	MP2A	Z	-130.599	5
6	MP2A	Mx	-.019	5
7	MP2B	X	-80.469	.5
8	MP2B	Z	-139.376	.5
9	MP2B	Mx	.106	.5
10	MP2B	X	-80.469	5
11	MP2B	Z	-139.376	5
12	MP2B	Mx	.106	5
13	MP2C	X	-70.946	.5
14	MP2C	Z	-122.881	.5
15	MP2C	Mx	-.103	.5
16	MP2C	X	-70.946	5
17	MP2C	Z	-122.881	5
18	MP2C	Mx	-.103	5
19	MP2A	X	-75.401	.5

Member Point Loads (BLC 14 : Antenna Wo (330 Deg)) (Continued)

	Member Label	Direction	Magnitude[lb,k-ft]	Location[ft,%]
20	MP2A	Z	-130.599	.5
21	MP2A	Mx	.116	.5
22	MP2A	X	-75.401	5
23	MP2A	Z	-130.599	5
24	MP2A	Mx	.116	5
25	MP2B	X	-80.469	.5
26	MP2B	Z	-139.376	.5
27	MP2B	Mx	-.078	.5
28	MP2B	X	-80.469	5
29	MP2B	Z	-139.376	5
30	MP2B	Mx	-.078	5
31	MP2C	X	-70.946	.5
32	MP2C	Z	-122.881	.5
33	MP2C	Mx	-.02	.5
34	MP2C	X	-70.946	5
35	MP2C	Z	-122.881	5
36	MP2C	Mx	-.02	5
37	MP3A	X	-34.996	2
38	MP3A	Z	-60.615	2
39	MP3A	Mx	.022	2
40	MP3A	X	-34.996	3.5
41	MP3A	Z	-60.615	3.5
42	MP3A	Mx	.022	3.5
43	MP3B	X	-45.892	2
44	MP3B	Z	-79.488	2
45	MP3B	Mx	.008	2
46	MP3B	X	-45.892	3.5
47	MP3B	Z	-79.488	3.5
48	MP3B	Mx	.008	3.5
49	MP3C	X	-25.414	2
50	MP3C	Z	-44.019	2
51	MP3C	Mx	-.022	2
52	MP3C	X	-25.414	3.5
53	MP3C	Z	-44.019	3.5
54	MP3C	Mx	-.022	3.5
55	MP1A	X	-60.735	.5
56	MP1A	Z	-105.196	.5
57	MP1A	Mx	.039	.5
58	MP1A	X	-60.735	5
59	MP1A	Z	-105.196	5
60	MP1A	Mx	.039	5
61	MP1B	X	-44.359	.5
62	MP1B	Z	-76.832	.5
63	MP1B	Mx	.008	.5
64	MP1B	X	-44.359	5
65	MP1B	Z	-76.832	5
66	MP1B	Mx	.008	5
67	MP1C	X	-80.823	.5
68	MP1C	Z	-139.99	.5
69	MP1C	Mx	-.076	.5
70	MP1C	X	-80.823	5
71	MP1C	Z	-139.99	5

Member Point Loads (BLC 14 : Antenna Wo (330 Deg)) (Continued)

	Member Label	Direction	Magnitude[lb,k-ft]	Location[ft,%]
72	MP1C	Mx	-.076	5
73	MP4A	X	-44.359	.5
74	MP4A	Z	-76.832	.5
75	MP4A	Mx	.008	.5
76	MP4A	X	-44.359	5
77	MP4A	Z	-76.832	5
78	MP4A	Mx	.008	5
79	MP4B	X	-44.359	.5
80	MP4B	Z	-76.832	.5
81	MP4B	Mx	.008	.5
82	MP4B	X	-44.359	5
83	MP4B	Z	-76.832	5
84	MP4B	Mx	.008	5
85	MP4C	X	-80.823	.5
86	MP4C	Z	-139.99	.5
87	MP4C	Mx	-.076	.5
88	MP4C	X	-80.823	5
89	MP4C	Z	-139.99	5
90	MP4C	Mx	-.076	5
91	MP2A	X	-33.991	3
92	MP2A	Z	-58.874	3
93	MP2A	Mx	-.017	3
94	MP2B	X	-36.692	3
95	MP2B	Z	-63.553	3
96	MP2B	Mx	-.006	3
97	MP2C	X	-27.847	3
98	MP2C	Z	-48.232	3
99	MP2C	Mx	.024	3
100	MP3A	X	-32.814	3
101	MP3A	Z	-56.835	3
102	MP3A	Mx	-.016	3
103	MP3B	X	-36.55	3
104	MP3B	Z	-63.307	3
105	MP3B	Mx	-.006	3
106	MP3C	X	-24.316	3
107	MP3C	Z	-42.117	3
108	MP3C	Mx	.021	3
109	MP1A	X	-75.699	2.5
110	MP1A	Z	-131.114	2.5
111	MP1A	Mx	-.038	2.5

Member Point Loads (BLC 15 : Antenna Wi (0 Deg))

	Member Label	Direction	Magnitude[lb,k-ft]	Location[ft,%]
1	MP2A	X	0	.5
2	MP2A	Z	-33.647	.5
3	MP2A	Mx	-.016	.5
4	MP2A	X	0	5
5	MP2A	Z	-33.647	5
6	MP2A	Mx	-.016	5
7	MP2B	X	0	.5
8	MP2B	Z	-31.689	.5

Member Point Loads (BLC 15 : Antenna Wi (0 Deg)) (Continued)

	Member Label	Direction	Magnitude[lb,k-ft]	Location[ft,%]
9	MP2B	Mx	.024	.5
10	MP2B	X	0	5
11	MP2B	Z	-31.689	5
12	MP2B	Mx	.024	5
13	MP2C	X	0	.5
14	MP2C	Z	-28.69	.5
15	MP2C	Mx	-.014	.5
16	MP2C	X	0	5
17	MP2C	Z	-28.69	5
18	MP2C	Mx	-.014	5
19	MP2A	X	0	.5
20	MP2A	Z	-33.647	.5
21	MP2A	Mx	.022	.5
22	MP2A	X	0	5
23	MP2A	Z	-33.647	5
24	MP2A	Mx	.022	5
25	MP2B	X	0	.5
26	MP2B	Z	-31.689	.5
27	MP2B	Mx	-.004	.5
28	MP2B	X	0	5
29	MP2B	Z	-31.689	5
30	MP2B	Mx	-.004	5
31	MP2C	X	0	.5
32	MP2C	Z	-28.69	.5
33	MP2C	Mx	-.014	.5
34	MP2C	X	0	5
35	MP2C	Z	-28.69	5
36	MP2C	Mx	-.014	5
37	MP3A	X	0	2
38	MP3A	Z	-19.672	2
39	MP3A	Mx	.002	2
40	MP3A	X	0	3.5
41	MP3A	Z	-19.672	3.5
42	MP3A	Mx	.002	3.5
43	MP3B	X	0	2
44	MP3B	Z	-15.277	2
45	MP3B	Mx	.005	2
46	MP3B	X	0	3.5
47	MP3B	Z	-15.277	3.5
48	MP3B	Mx	.005	3.5
49	MP3C	X	0	2
50	MP3C	Z	-8.543	2
51	MP3C	Mx	-.004	2
52	MP3C	X	0	3.5
53	MP3C	Z	-8.543	3.5
54	MP3C	Mx	-.004	3.5
55	MP1A	X	0	.5
56	MP1A	Z	-19.674	.5
57	MP1A	Mx	.002	.5
58	MP1A	X	0	5
59	MP1A	Z	-19.674	5
60	MP1A	Mx	.002	5

Member Point Loads (BLC 15 : Antenna Wi (0 Deg)) (Continued)

	Member Label	Direction	Magnitude[lb,k-ft]	Location[ft,%]
61	MP1B	X	0	.5
62	MP1B	Z	-26.01	.5
63	MP1B	Mx	.008	.5
64	MP1B	X	0	5
65	MP1B	Z	-26.01	5
66	MP1B	Mx	.008	5
67	MP1C	X	0	.5
68	MP1C	Z	-35.217	.5
69	MP1C	Mx	-.017	.5
70	MP1C	X	0	5
71	MP1C	Z	-35.217	5
72	MP1C	Mx	-.017	5
73	MP4A	X	0	.5
74	MP4A	Z	-26.01	.5
75	MP4A	Mx	.008	.5
76	MP4A	X	0	5
77	MP4A	Z	-26.01	5
78	MP4A	Mx	.008	5
79	MP4B	X	0	.5
80	MP4B	Z	-26.01	.5
81	MP4B	Mx	.008	.5
82	MP4B	X	0	5
83	MP4B	Z	-26.01	5
84	MP4B	Mx	.008	5
85	MP4C	X	0	.5
86	MP4C	Z	-35.217	.5
87	MP4C	Mx	-.017	.5
88	MP4C	X	0	5
89	MP4C	Z	-35.217	5
90	MP4C	Mx	-.017	5
91	MP2A	X	0	3
92	MP2A	Z	-16.823	3
93	MP2A	Mx	0	3
94	MP2B	X	0	3
95	MP2B	Z	-14.711	3
96	MP2B	Mx	-.005	3
97	MP2C	X	0	3
98	MP2C	Z	-11.711	3
99	MP2C	Mx	.006	3
100	MP3A	X	0	3
101	MP3A	Z	-16.823	3
102	MP3A	Mx	0	3
103	MP3B	X	0	3
104	MP3B	Z	-13.909	3
105	MP3B	Mx	-.004	3
106	MP3C	X	0	3
107	MP3C	Z	-9.769	3
108	MP3C	Mx	.005	3
109	MP1A	X	0	2.5
110	MP1A	Z	-34.54	2.5
111	MP1A	Mx	0	2.5

Member Point Loads (BLC 16 : Antenna Wi (30 Deg))

	Member Label	Direction	Magnitude[lb,k-ft]	Location[ft,%]
1	MP2A	X	16.602	.5
2	MP2A	Z	-28.755	.5
3	MP2A	Mx	-.024	.5
4	MP2A	X	16.602	5
5	MP2A	Z	-28.755	5
6	MP2A	Mx	-.024	5
7	MP2B	X	14.644	.5
8	MP2B	Z	-25.364	.5
9	MP2B	Mx	.02	.5
10	MP2B	X	14.644	5
11	MP2B	Z	-25.364	5
12	MP2B	Mx	.02	5
13	MP2C	X	14.984	.5
14	MP2C	Z	-25.953	.5
15	MP2C	Mx	-.004	.5
16	MP2C	X	14.984	5
17	MP2C	Z	-25.953	5
18	MP2C	Mx	-.004	5
19	MP2A	X	16.602	.5
20	MP2A	Z	-28.755	.5
21	MP2A	Mx	.013	.5
22	MP2A	X	16.602	5
23	MP2A	Z	-28.755	5
24	MP2A	Mx	.013	5
25	MP2B	X	14.644	.5
26	MP2B	Z	-25.364	.5
27	MP2B	Mx	.008	.5
28	MP2B	X	14.644	5
29	MP2B	Z	-25.364	5
30	MP2B	Mx	.008	5
31	MP2C	X	14.984	.5
32	MP2C	Z	-25.953	.5
33	MP2C	Mx	-.022	.5
34	MP2C	X	14.984	5
35	MP2C	Z	-25.953	5
36	MP2C	Mx	-.022	5
37	MP3A	X	9.338	2
38	MP3A	Z	-16.174	2
39	MP3A	Mx	-.003	2
40	MP3A	X	9.338	3.5
41	MP3A	Z	-16.174	3.5
42	MP3A	Mx	-.003	3.5
43	MP3B	X	4.942	2
44	MP3B	Z	-8.561	2
45	MP3B	Mx	.005	2
46	MP3B	X	4.942	3.5
47	MP3B	Z	-8.561	3.5
48	MP3B	Mx	.005	3.5
49	MP3C	X	5.706	2
50	MP3C	Z	-9.883	2
51	MP3C	Mx	-.005	2
52	MP3C	X	5.706	3.5

Member Point Loads (BLC 16 : Antenna Wi (30 Deg)) (Continued)

	Member Label	Direction	Magnitude[lb,k-ft]	Location[ft,%]
53	MP3C	Z	-9.883	3.5
54	MP3C	Mx	-.005	3.5
55	MP1A	X	10.555	.5
56	MP1A	Z	-18.282	.5
57	MP1A	Mx	-.004	.5
58	MP1A	X	10.555	5
59	MP1A	Z	-18.282	5
60	MP1A	Mx	-.004	5
61	MP1B	X	16.89	.5
62	MP1B	Z	-29.255	.5
63	MP1B	Mx	.016	.5
64	MP1B	X	16.89	5
65	MP1B	Z	-29.255	5
66	MP1B	Mx	.016	5
67	MP1C	X	14.441	.5
68	MP1C	Z	-25.012	.5
69	MP1C	Mx	-.011	.5
70	MP1C	X	14.441	5
71	MP1C	Z	-25.012	5
72	MP1C	Mx	-.011	5
73	MP4A	X	16.89	.5
74	MP4A	Z	-29.255	.5
75	MP4A	Mx	.016	.5
76	MP4A	X	16.89	5
77	MP4A	Z	-29.255	5
78	MP4A	Mx	.016	5
79	MP4B	X	16.89	.5
80	MP4B	Z	-29.255	.5
81	MP4B	Mx	.016	.5
82	MP4B	X	16.89	5
83	MP4B	Z	-29.255	5
84	MP4B	Mx	.016	5
85	MP4C	X	14.441	.5
86	MP4C	Z	-25.012	.5
87	MP4C	Mx	-.011	.5
88	MP4C	X	14.441	5
89	MP4C	Z	-25.012	5
90	MP4C	Mx	-.011	5
91	MP2A	X	7.773	3
92	MP2A	Z	-13.463	3
93	MP2A	Mx	.004	3
94	MP2B	X	6.155	3
95	MP2B	Z	-10.66	3
96	MP2B	Mx	-.006	3
97	MP2C	X	6.495	3
98	MP2C	Z	-11.249	3
99	MP2C	Mx	.006	3
100	MP3A	X	7.53	3
101	MP3A	Z	-13.042	3
102	MP3A	Mx	.004	3
103	MP3B	X	5.297	3
104	MP3B	Z	-9.175	3

Member Point Loads (BLC 16 : Antenna Wi (30 Deg)) (Continued)

	Member Label	Direction	Magnitude[lb,k-ft]	Location[ft,%]
105	MP3B	Mx	-.005	3
106	MP3C	X	5.766	3
107	MP3C	Z	-9.987	3
108	MP3C	Mx	.005	3
109	MP1A	X	16.33	2.5
110	MP1A	Z	-28.284	2.5
111	MP1A	Mx	.008	2.5

Member Point Loads (BLC 17 : Antenna Wi (60 Deg))

	Member Label	Direction	Magnitude[lb,k-ft]	Location[ft,%]
1	MP2A	X	26.675	.5
2	MP2A	Z	-15.401	.5
3	MP2A	Mx	-.023	.5
4	MP2A	X	26.675	5
5	MP2A	Z	-15.401	5
6	MP2A	Mx	-.023	5
7	MP2B	X	24.98	.5
8	MP2B	Z	-14.422	.5
9	MP2B	Mx	.011	.5
10	MP2B	X	24.98	5
11	MP2B	Z	-14.422	5
12	MP2B	Mx	.011	5
13	MP2C	X	28.166	.5
14	MP2C	Z	-16.262	.5
15	MP2C	Mx	.008	.5
16	MP2C	X	28.166	5
17	MP2C	Z	-16.262	5
18	MP2C	Mx	.008	5
19	MP2A	X	26.675	.5
20	MP2A	Z	-15.401	.5
21	MP2A	Mx	-.000248	.5
22	MP2A	X	26.675	5
23	MP2A	Z	-15.401	5
24	MP2A	Mx	-.000248	5
25	MP2B	X	24.98	.5
26	MP2B	Z	-14.422	.5
27	MP2B	Mx	.017	.5
28	MP2B	X	24.98	5
29	MP2B	Z	-14.422	5
30	MP2B	Mx	.017	5
31	MP2C	X	28.166	.5
32	MP2C	Z	-16.262	.5
33	MP2C	Mx	-.025	.5
34	MP2C	X	28.166	5
35	MP2C	Z	-16.262	5
36	MP2C	Mx	-.025	5
37	MP3A	X	11.504	2
38	MP3A	Z	-6.642	2
39	MP3A	Mx	-.005	2
40	MP3A	X	11.504	3.5
41	MP3A	Z	-6.642	3.5

Member Point Loads (BLC 17 : Antenna Wi (60 Deg)) (Continued)

	Member Label	Direction	Magnitude[lb,k-ft]	Location[ft,%]
42	MP3A	Mx	-.005	3.5
43	MP3B	X	7.698	2
44	MP3B	Z	-4.444	2
45	MP3B	Mx	.004	2
46	MP3B	X	7.698	3.5
47	MP3B	Z	-4.444	3.5
48	MP3B	Mx	.004	3.5
49	MP3C	X	14.852	2
50	MP3C	Z	-8.575	2
51	MP3C	Mx	-.004	2
52	MP3C	X	14.852	3.5
53	MP3C	Z	-8.575	3.5
54	MP3C	Mx	-.004	3.5
55	MP1A	X	25.012	.5
56	MP1A	Z	-14.441	.5
57	MP1A	Mx	-.011	.5
58	MP1A	X	25.012	5
59	MP1A	Z	-14.441	5
60	MP1A	Mx	-.011	5
61	MP1B	X	30.499	.5
62	MP1B	Z	-17.609	.5
63	MP1B	Mx	.017	.5
64	MP1B	X	30.499	5
65	MP1B	Z	-17.609	5
66	MP1B	Mx	.017	5
67	MP1C	X	18.282	.5
68	MP1C	Z	-10.555	.5
69	MP1C	Mx	-.004	.5
70	MP1C	X	18.282	5
71	MP1C	Z	-10.555	5
72	MP1C	Mx	-.004	5
73	MP4A	X	30.499	.5
74	MP4A	Z	-17.609	.5
75	MP4A	Mx	.017	.5
76	MP4A	X	30.499	5
77	MP4A	Z	-17.609	5
78	MP4A	Mx	.017	5
79	MP4B	X	30.499	.5
80	MP4B	Z	-17.609	.5
81	MP4B	Mx	.017	.5
82	MP4B	X	30.499	5
83	MP4B	Z	-17.609	5
84	MP4B	Mx	.017	5
85	MP4C	X	18.282	.5
86	MP4C	Z	-10.555	.5
87	MP4C	Mx	-.004	.5
88	MP4C	X	18.282	5
89	MP4C	Z	-10.555	5
90	MP4C	Mx	-.004	5
91	MP2A	X	11.249	3
92	MP2A	Z	-6.495	3
93	MP2A	Mx	.006	3

Member Point Loads (BLC 17 : Antenna Wi (60 Deg)) (Continued)

	Member Label	Direction	Magnitude[lb,k-ft]	Location[ft,%]
94	MP2B	X	10.276	3
95	MP2B	Z	-5.933	3
96	MP2B	Mx	-.006	3
97	MP2C	X	13.463	3
98	MP2C	Z	-7.773	3
99	MP2C	Mx	.004	3
100	MP3A	X	9.987	3
101	MP3A	Z	-5.766	3
102	MP3A	Mx	.005	3
103	MP3B	X	8.644	3
104	MP3B	Z	-4.991	3
105	MP3B	Mx	-.005	3
106	MP3C	X	13.042	3
107	MP3C	Z	-7.53	3
108	MP3C	Mx	.004	3
109	MP1A	X	25.029	2.5
110	MP1A	Z	-14.45	2.5
111	MP1A	Mx	.013	2.5

Member Point Loads (BLC 18 : Antenna Wi (90 Deg))

	Member Label	Direction	Magnitude[lb,k-ft]	Location[ft,%]
1	MP2A	X	28.844	.5
2	MP2A	Z	0	.5
3	MP2A	Mx	-.017	.5
4	MP2A	X	28.844	5
5	MP2A	Z	0	5
6	MP2A	Mx	-.017	5
7	MP2B	X	30.802	.5
8	MP2B	Z	0	.5
9	MP2B	Mx	.000248	.5
10	MP2B	X	30.802	5
11	MP2B	Z	0	5
12	MP2B	Mx	.000248	5
13	MP2C	X	33.801	.5
14	MP2C	Z	0	.5
15	MP2C	Mx	.02	.5
16	MP2C	X	33.801	5
17	MP2C	Z	0	5
18	MP2C	Mx	.02	5
19	MP2A	X	28.844	.5
20	MP2A	Z	0	.5
21	MP2A	Mx	-.011	.5
22	MP2A	X	28.844	5
23	MP2A	Z	0	5
24	MP2A	Mx	-.011	5
25	MP2B	X	30.802	.5
26	MP2B	Z	0	.5
27	MP2B	Mx	.023	.5
28	MP2B	X	30.802	5
29	MP2B	Z	0	5
30	MP2B	Mx	.023	5

Member Point Loads (BLC 18 : Antenna Wi (90 Deg)) (Continued)

	Member Label	Direction	Magnitude[lb,k-ft]	Location[ft,%]
31	MP2C	X	33.801	.5
32	MP2C	Z	0	.5
33	MP2C	Mx	-.02	.5
34	MP2C	X	33.801	5
35	MP2C	Z	0	5
36	MP2C	Mx	-.02	5
37	MP3A	X	8.889	2
38	MP3A	Z	0	2
39	MP3A	Mx	-.004	2
40	MP3A	X	8.889	3.5
41	MP3A	Z	0	3.5
42	MP3A	Mx	-.004	3.5
43	MP3B	X	13.284	2
44	MP3B	Z	0	2
45	MP3B	Mx	.005	2
46	MP3B	X	13.284	3.5
47	MP3B	Z	0	3.5
48	MP3B	Mx	.005	3.5
49	MP3C	X	20.018	2
50	MP3C	Z	0	2
51	MP3C	Mx	0	2
52	MP3C	X	20.018	3.5
53	MP3C	Z	0	3.5
54	MP3C	Mx	0	3.5
55	MP1A	X	35.217	.5
56	MP1A	Z	0	.5
57	MP1A	Mx	-.017	.5
58	MP1A	X	35.217	5
59	MP1A	Z	0	5
60	MP1A	Mx	-.017	5
61	MP1B	X	28.882	.5
62	MP1B	Z	0	.5
63	MP1B	Mx	.011	.5
64	MP1B	X	28.882	5
65	MP1B	Z	0	5
66	MP1B	Mx	.011	5
67	MP1C	X	19.674	.5
68	MP1C	Z	0	.5
69	MP1C	Mx	.002	.5
70	MP1C	X	19.674	5
71	MP1C	Z	0	5
72	MP1C	Mx	.002	5
73	MP4A	X	28.882	.5
74	MP4A	Z	0	.5
75	MP4A	Mx	.011	.5
76	MP4A	X	28.882	5
77	MP4A	Z	0	5
78	MP4A	Mx	.011	5
79	MP4B	X	28.882	.5
80	MP4B	Z	0	.5
81	MP4B	Mx	.011	.5
82	MP4B	X	28.882	5

Member Point Loads (BLC 18 : Antenna Wi (90 Deg)) (Continued)

	Member Label	Direction	Magnitude[lb,k-ft]	Location[ft,%]
83	MP4B	Z	0	5
84	MP4B	Mx	.011	5
85	MP4C	X	19.674	.5
86	MP4C	Z	0	.5
87	MP4C	Mx	.002	.5
88	MP4C	X	19.674	5
89	MP4C	Z	0	5
90	MP4C	Mx	.002	5
91	MP2A	X	11.711	3
92	MP2A	Z	0	3
93	MP2A	Mx	.006	3
94	MP2B	X	13.824	3
95	MP2B	Z	0	3
96	MP2B	Mx	-.005	3
97	MP2C	X	16.823	3
98	MP2C	Z	0	3
99	MP2C	Mx	0	3
100	MP3A	X	9.769	3
101	MP3A	Z	0	3
102	MP3A	Mx	.005	3
103	MP3B	X	12.684	3
104	MP3B	Z	0	3
105	MP3B	Mx	-.005	3
106	MP3C	X	16.823	3
107	MP3C	Z	0	3
108	MP3C	Mx	0	3
109	MP1A	X	27.021	2.5
110	MP1A	Z	0	2.5
111	MP1A	Mx	.014	2.5

Member Point Loads (BLC 19 : Antenna Wi (120 Deg))

	Member Label	Direction	Magnitude[lb,k-ft]	Location[ft,%]
1	MP2A	X	25.364	.5
2	MP2A	Z	14.644	.5
3	MP2A	Mx	-.008	.5
4	MP2A	X	25.364	5
5	MP2A	Z	14.644	5
6	MP2A	Mx	-.008	5
7	MP2B	X	28.755	.5
8	MP2B	Z	16.602	.5
9	MP2B	Mx	-.013	.5
10	MP2B	X	28.755	5
11	MP2B	Z	16.602	5
12	MP2B	Mx	-.013	5
13	MP2C	X	28.166	.5
14	MP2C	Z	16.262	.5
15	MP2C	Mx	.025	.5
16	MP2C	X	28.166	5
17	MP2C	Z	16.262	5
18	MP2C	Mx	.025	5
19	MP2A	X	25.364	.5

Member Point Loads (BLC 19 : Antenna Wi (120 Deg)) (Continued)

	Member Label	Direction	Magnitude[lb,k-ft]	Location[ft,%]
20	MP2A	Z	14.644	.5
21	MP2A	Mx	-.02	.5
22	MP2A	X	25.364	5
23	MP2A	Z	14.644	5
24	MP2A	Mx	-.02	5
25	MP2B	X	28.755	.5
26	MP2B	Z	16.602	.5
27	MP2B	Mx	.024	.5
28	MP2B	X	28.755	5
29	MP2B	Z	16.602	5
30	MP2B	Mx	.024	5
31	MP2C	X	28.166	.5
32	MP2C	Z	16.262	.5
33	MP2C	Mx	-.008	.5
34	MP2C	X	28.166	5
35	MP2C	Z	16.262	5
36	MP2C	Mx	-.008	5
37	MP3A	X	8.561	2
38	MP3A	Z	4.942	2
39	MP3A	Mx	-.005	2
40	MP3A	X	8.561	3.5
41	MP3A	Z	4.942	3.5
42	MP3A	Mx	-.005	3.5
43	MP3B	X	16.174	2
44	MP3B	Z	9.338	2
45	MP3B	Mx	.003	2
46	MP3B	X	16.174	3.5
47	MP3B	Z	9.338	3.5
48	MP3B	Mx	.003	3.5
49	MP3C	X	14.852	2
50	MP3C	Z	8.575	2
51	MP3C	Mx	.004	2
52	MP3C	X	14.852	3.5
53	MP3C	Z	8.575	3.5
54	MP3C	Mx	.004	3.5
55	MP1A	X	29.255	.5
56	MP1A	Z	16.89	.5
57	MP1A	Mx	-.016	.5
58	MP1A	X	29.255	5
59	MP1A	Z	16.89	5
60	MP1A	Mx	-.016	5
61	MP1B	X	18.282	.5
62	MP1B	Z	10.555	.5
63	MP1B	Mx	.004	.5
64	MP1B	X	18.282	5
65	MP1B	Z	10.555	5
66	MP1B	Mx	.004	5
67	MP1C	X	22.525	.5
68	MP1C	Z	13.005	.5
69	MP1C	Mx	.008	.5
70	MP1C	X	22.525	5
71	MP1C	Z	13.005	5

Member Point Loads (BLC 19 : Antenna Wi (120 Deg)) (Continued)

	Member Label	Direction	Magnitude[lb,k-ft]	Location[ft,%]
72	MP1C	Mx	.008	5
73	MP4A	X	18.282	.5
74	MP4A	Z	10.555	.5
75	MP4A	Mx	.004	.5
76	MP4A	X	18.282	5
77	MP4A	Z	10.555	5
78	MP4A	Mx	.004	5
79	MP4B	X	18.282	.5
80	MP4B	Z	10.555	.5
81	MP4B	Mx	.004	.5
82	MP4B	X	18.282	5
83	MP4B	Z	10.555	5
84	MP4B	Mx	.004	5
85	MP4C	X	22.525	.5
86	MP4C	Z	13.005	.5
87	MP4C	Mx	.008	.5
88	MP4C	X	22.525	5
89	MP4C	Z	13.005	5
90	MP4C	Mx	.008	5
91	MP2A	X	11.249	3
92	MP2A	Z	6.495	3
93	MP2A	Mx	.006	3
94	MP2B	X	14.052	3
95	MP2B	Z	8.113	3
96	MP2B	Mx	-.003	3
97	MP2C	X	13.463	3
98	MP2C	Z	7.773	3
99	MP2C	Mx	-.004	3
100	MP3A	X	9.987	3
101	MP3A	Z	5.766	3
102	MP3A	Mx	.005	3
103	MP3B	X	13.855	3
104	MP3B	Z	7.999	3
105	MP3B	Mx	-.003	3
106	MP3C	X	13.042	3
107	MP3C	Z	7.53	3
108	MP3C	Mx	-.004	3
109	MP1A	X	25.029	2.5
110	MP1A	Z	14.45	2.5
111	MP1A	Mx	.013	2.5

Member Point Loads (BLC 20 : Antenna Wi (150 Deg))

	Member Label	Direction	Magnitude[lb,k-ft]	Location[ft,%]
1	MP2A	X	15.845	.5
2	MP2A	Z	27.444	.5
3	MP2A	Mx	.004	.5
4	MP2A	X	15.845	5
5	MP2A	Z	27.444	5
6	MP2A	Mx	.004	5
7	MP2B	X	16.824	.5
8	MP2B	Z	29.139	.5

Member Point Loads (BLC 20 : Antenna Wi (150 Deg)) (Continued)

	Member Label	Direction	Magnitude[lb,k-ft]	Location[ft,%]
9	MP2B	Mx	-.022	.5
10	MP2B	X	16.824	5
11	MP2B	Z	29.139	5
12	MP2B	Mx	-.022	5
13	MP2C	X	14.984	.5
14	MP2C	Z	25.953	.5
15	MP2C	Mx	.022	.5
16	MP2C	X	14.984	5
17	MP2C	Z	25.953	5
18	MP2C	Mx	.022	5
19	MP2A	X	15.845	.5
20	MP2A	Z	27.444	.5
21	MP2A	Mx	-.024	.5
22	MP2A	X	15.845	5
23	MP2A	Z	27.444	5
24	MP2A	Mx	-.024	5
25	MP2B	X	16.824	.5
26	MP2B	Z	29.139	.5
27	MP2B	Mx	.016	.5
28	MP2B	X	16.824	5
29	MP2B	Z	29.139	5
30	MP2B	Mx	.016	5
31	MP2C	X	14.984	.5
32	MP2C	Z	25.953	.5
33	MP2C	Mx	.004	.5
34	MP2C	X	14.984	5
35	MP2C	Z	25.953	5
36	MP2C	Mx	.004	5
37	MP3A	X	7.638	2
38	MP3A	Z	13.23	2
39	MP3A	Mx	-.005	2
40	MP3A	X	7.638	3.5
41	MP3A	Z	13.23	3.5
42	MP3A	Mx	-.005	3.5
43	MP3B	X	9.836	2
44	MP3B	Z	17.036	2
45	MP3B	Mx	-.002	2
46	MP3B	X	9.836	3.5
47	MP3B	Z	17.036	3.5
48	MP3B	Mx	-.002	3.5
49	MP3C	X	5.706	2
50	MP3C	Z	9.883	2
51	MP3C	Mx	.005	2
52	MP3C	X	5.706	3.5
53	MP3C	Z	9.883	3.5
54	MP3C	Mx	.005	3.5
55	MP1A	X	13.005	.5
56	MP1A	Z	22.525	.5
57	MP1A	Mx	-.008	.5
58	MP1A	X	13.005	5
59	MP1A	Z	22.525	5
60	MP1A	Mx	-.008	5

Member Point Loads (BLC 20 : Antenna Wi (150 Deg)) (Continued)

	Member Label	Direction	Magnitude[lb,k-ft]	Location[ft,%]
61	MP1B	X	9.837	.5
62	MP1B	Z	17.038	.5
63	MP1B	Mx	-.002	.5
64	MP1B	X	9.837	5
65	MP1B	Z	17.038	5
66	MP1B	Mx	-.002	5
67	MP1C	X	16.89	.5
68	MP1C	Z	29.255	.5
69	MP1C	Mx	.016	.5
70	MP1C	X	16.89	5
71	MP1C	Z	29.255	5
72	MP1C	Mx	.016	5
73	MP4A	X	9.837	.5
74	MP4A	Z	17.038	.5
75	MP4A	Mx	-.002	.5
76	MP4A	X	9.837	5
77	MP4A	Z	17.038	5
78	MP4A	Mx	-.002	5
79	MP4B	X	9.837	.5
80	MP4B	Z	17.038	.5
81	MP4B	Mx	-.002	.5
82	MP4B	X	9.837	5
83	MP4B	Z	17.038	5
84	MP4B	Mx	-.002	5
85	MP4C	X	16.89	.5
86	MP4C	Z	29.255	.5
87	MP4C	Mx	.016	.5
88	MP4C	X	16.89	5
89	MP4C	Z	29.255	5
90	MP4C	Mx	.016	5
91	MP2A	X	7.773	3
92	MP2A	Z	13.463	3
93	MP2A	Mx	.004	3
94	MP2B	X	8.335	3
95	MP2B	Z	14.436	3
96	MP2B	Mx	.001	3
97	MP2C	X	6.495	3
98	MP2C	Z	11.249	3
99	MP2C	Mx	-.006	3
100	MP3A	X	7.53	3
101	MP3A	Z	13.042	3
102	MP3A	Mx	.004	3
103	MP3B	X	8.305	3
104	MP3B	Z	14.385	3
105	MP3B	Mx	.001	3
106	MP3C	X	5.766	3
107	MP3C	Z	9.987	3
108	MP3C	Mx	-.005	3
109	MP1A	X	16.33	2.5
110	MP1A	Z	28.284	2.5
111	MP1A	Mx	.008	2.5

Member Point Loads (BLC 21 : Antenna Wi (180 Deg))

	Member Label	Direction	Magnitude[lb,k-ft]	Location[ft,%]
1	MP2A	X	0	.5
2	MP2A	Z	33.647	.5
3	MP2A	Mx	.016	.5
4	MP2A	X	0	5
5	MP2A	Z	33.647	5
6	MP2A	Mx	.016	5
7	MP2B	X	0	.5
8	MP2B	Z	31.689	.5
9	MP2B	Mx	-.024	.5
10	MP2B	X	0	5
11	MP2B	Z	31.689	5
12	MP2B	Mx	-.024	5
13	MP2C	X	0	.5
14	MP2C	Z	28.69	.5
15	MP2C	Mx	.014	.5
16	MP2C	X	0	5
17	MP2C	Z	28.69	5
18	MP2C	Mx	.014	5
19	MP2A	X	0	.5
20	MP2A	Z	33.647	.5
21	MP2A	Mx	-.022	.5
22	MP2A	X	0	5
23	MP2A	Z	33.647	5
24	MP2A	Mx	-.022	5
25	MP2B	X	0	.5
26	MP2B	Z	31.689	.5
27	MP2B	Mx	.004	.5
28	MP2B	X	0	5
29	MP2B	Z	31.689	5
30	MP2B	Mx	.004	5
31	MP2C	X	0	.5
32	MP2C	Z	28.69	.5
33	MP2C	Mx	.014	.5
34	MP2C	X	0	5
35	MP2C	Z	28.69	5
36	MP2C	Mx	.014	5
37	MP3A	X	0	2
38	MP3A	Z	19.672	2
39	MP3A	Mx	-.002	2
40	MP3A	X	0	3.5
41	MP3A	Z	19.672	3.5
42	MP3A	Mx	-.002	3.5
43	MP3B	X	0	2
44	MP3B	Z	15.277	2
45	MP3B	Mx	-.005	2
46	MP3B	X	0	3.5
47	MP3B	Z	15.277	3.5
48	MP3B	Mx	-.005	3.5
49	MP3C	X	0	2
50	MP3C	Z	8.543	2
51	MP3C	Mx	.004	2
52	MP3C	X	0	3.5

Member Point Loads (BLC 21 : Antenna Wi (180 Deg)) (Continued)

	Member Label	Direction	Magnitude[lb,k-ft]	Location[ft,%]
53	MP3C	Z	8.543	3.5
54	MP3C	Mx	.004	3.5
55	MP1A	X	0	.5
56	MP1A	Z	19.674	.5
57	MP1A	Mx	-.002	.5
58	MP1A	X	0	5
59	MP1A	Z	19.674	5
60	MP1A	Mx	-.002	5
61	MP1B	X	0	.5
62	MP1B	Z	26.01	.5
63	MP1B	Mx	-.008	.5
64	MP1B	X	0	5
65	MP1B	Z	26.01	5
66	MP1B	Mx	-.008	5
67	MP1C	X	0	.5
68	MP1C	Z	35.217	.5
69	MP1C	Mx	.017	.5
70	MP1C	X	0	5
71	MP1C	Z	35.217	5
72	MP1C	Mx	.017	5
73	MP4A	X	0	.5
74	MP4A	Z	26.01	.5
75	MP4A	Mx	-.008	.5
76	MP4A	X	0	5
77	MP4A	Z	26.01	5
78	MP4A	Mx	-.008	5
79	MP4B	X	0	.5
80	MP4B	Z	26.01	.5
81	MP4B	Mx	-.008	.5
82	MP4B	X	0	5
83	MP4B	Z	26.01	5
84	MP4B	Mx	-.008	5
85	MP4C	X	0	.5
86	MP4C	Z	35.217	.5
87	MP4C	Mx	.017	.5
88	MP4C	X	0	5
89	MP4C	Z	35.217	5
90	MP4C	Mx	.017	5
91	MP2A	X	0	3
92	MP2A	Z	16.823	3
93	MP2A	Mx	0	3
94	MP2B	X	0	3
95	MP2B	Z	14.711	3
96	MP2B	Mx	.005	3
97	MP2C	X	0	3
98	MP2C	Z	11.711	3
99	MP2C	Mx	-.006	3
100	MP3A	X	0	3
101	MP3A	Z	16.823	3
102	MP3A	Mx	0	3
103	MP3B	X	0	3
104	MP3B	Z	13.909	3

Member Point Loads (BLC 21 : Antenna Wi (180 Deg)) (Continued)

	Member Label	Direction	Magnitude[lb,k-ft]	Location[ft,%]
105	MP3B	Mx	.004	3
106	MP3C	X	0	3
107	MP3C	Z	9.769	3
108	MP3C	Mx	-.005	3
109	MP1A	X	0	2.5
110	MP1A	Z	34.54	2.5
111	MP1A	Mx	0	2.5

Member Point Loads (BLC 22 : Antenna Wi (210 Deg))

	Member Label	Direction	Magnitude[lb,k-ft]	Location[ft,%]
1	MP2A	X	-16.602	.5
2	MP2A	Z	28.755	.5
3	MP2A	Mx	.024	.5
4	MP2A	X	-16.602	5
5	MP2A	Z	28.755	5
6	MP2A	Mx	.024	5
7	MP2B	X	-14.644	.5
8	MP2B	Z	25.364	.5
9	MP2B	Mx	-.02	.5
10	MP2B	X	-14.644	5
11	MP2B	Z	25.364	5
12	MP2B	Mx	-.02	5
13	MP2C	X	-14.984	.5
14	MP2C	Z	25.953	.5
15	MP2C	Mx	.004	.5
16	MP2C	X	-14.984	5
17	MP2C	Z	25.953	5
18	MP2C	Mx	.004	5
19	MP2A	X	-16.602	.5
20	MP2A	Z	28.755	.5
21	MP2A	Mx	-.013	.5
22	MP2A	X	-16.602	5
23	MP2A	Z	28.755	5
24	MP2A	Mx	-.013	5
25	MP2B	X	-14.644	.5
26	MP2B	Z	25.364	.5
27	MP2B	Mx	-.008	.5
28	MP2B	X	-14.644	5
29	MP2B	Z	25.364	5
30	MP2B	Mx	-.008	5
31	MP2C	X	-14.984	.5
32	MP2C	Z	25.953	.5
33	MP2C	Mx	.022	.5
34	MP2C	X	-14.984	5
35	MP2C	Z	25.953	5
36	MP2C	Mx	.022	5
37	MP3A	X	-9.338	2
38	MP3A	Z	16.174	2
39	MP3A	Mx	.003	2
40	MP3A	X	-9.338	3.5
41	MP3A	Z	16.174	3.5

Member Point Loads (BLC 22 : Antenna Wi (210 Deg)) (Continued)

	Member Label	Direction	Magnitude[lb,k-ft]	Location[ft,%]
42	MP3A	Mx	.003	3.5
43	MP3B	X	-4.942	2
44	MP3B	Z	8.561	2
45	MP3B	Mx	-.005	2
46	MP3B	X	-4.942	3.5
47	MP3B	Z	8.561	3.5
48	MP3B	Mx	-.005	3.5
49	MP3C	X	-5.706	2
50	MP3C	Z	9.883	2
51	MP3C	Mx	.005	2
52	MP3C	X	-5.706	3.5
53	MP3C	Z	9.883	3.5
54	MP3C	Mx	.005	3.5
55	MP1A	X	-10.555	.5
56	MP1A	Z	18.282	.5
57	MP1A	Mx	.004	.5
58	MP1A	X	-10.555	5
59	MP1A	Z	18.282	5
60	MP1A	Mx	.004	5
61	MP1B	X	-16.89	.5
62	MP1B	Z	29.255	.5
63	MP1B	Mx	-.016	.5
64	MP1B	X	-16.89	5
65	MP1B	Z	29.255	5
66	MP1B	Mx	-.016	5
67	MP1C	X	-14.441	.5
68	MP1C	Z	25.012	.5
69	MP1C	Mx	.011	.5
70	MP1C	X	-14.441	5
71	MP1C	Z	25.012	5
72	MP1C	Mx	.011	5
73	MP4A	X	-16.89	.5
74	MP4A	Z	29.255	.5
75	MP4A	Mx	-.016	.5
76	MP4A	X	-16.89	5
77	MP4A	Z	29.255	5
78	MP4A	Mx	-.016	5
79	MP4B	X	-16.89	.5
80	MP4B	Z	29.255	.5
81	MP4B	Mx	-.016	.5
82	MP4B	X	-16.89	5
83	MP4B	Z	29.255	5
84	MP4B	Mx	-.016	5
85	MP4C	X	-14.441	.5
86	MP4C	Z	25.012	.5
87	MP4C	Mx	.011	.5
88	MP4C	X	-14.441	5
89	MP4C	Z	25.012	5
90	MP4C	Mx	.011	5
91	MP2A	X	-7.773	3
92	MP2A	Z	13.463	3
93	MP2A	Mx	-.004	3

Member Point Loads (BLC 22 : Antenna Wi (210 Deg)) (Continued)

	Member Label	Direction	Magnitude[lb,k-ft]	Location[ft,%]
94	MP2B	X	-6.155	3
95	MP2B	Z	10.66	3
96	MP2B	Mx	.006	3
97	MP2C	X	-6.495	3
98	MP2C	Z	11.249	3
99	MP2C	Mx	-.006	3
100	MP3A	X	-7.53	3
101	MP3A	Z	13.042	3
102	MP3A	Mx	-.004	3
103	MP3B	X	-5.297	3
104	MP3B	Z	9.175	3
105	MP3B	Mx	.005	3
106	MP3C	X	-5.766	3
107	MP3C	Z	9.987	3
108	MP3C	Mx	-.005	3
109	MP1A	X	-16.33	2.5
110	MP1A	Z	28.284	2.5
111	MP1A	Mx	-.008	2.5

Member Point Loads (BLC 23 : Antenna Wi (240 Deg))

	Member Label	Direction	Magnitude[lb,k-ft]	Location[ft,%]
1	MP2A	X	-26.675	.5
2	MP2A	Z	15.401	.5
3	MP2A	Mx	.023	.5
4	MP2A	X	-26.675	5
5	MP2A	Z	15.401	5
6	MP2A	Mx	.023	5
7	MP2B	X	-24.98	.5
8	MP2B	Z	14.422	.5
9	MP2B	Mx	-.011	.5
10	MP2B	X	-24.98	5
11	MP2B	Z	14.422	5
12	MP2B	Mx	-.011	5
13	MP2C	X	-28.166	.5
14	MP2C	Z	16.262	.5
15	MP2C	Mx	-.008	.5
16	MP2C	X	-28.166	5
17	MP2C	Z	16.262	5
18	MP2C	Mx	-.008	5
19	MP2A	X	-26.675	.5
20	MP2A	Z	15.401	.5
21	MP2A	Mx	.000248	.5
22	MP2A	X	-26.675	5
23	MP2A	Z	15.401	5
24	MP2A	Mx	.000248	5
25	MP2B	X	-24.98	.5
26	MP2B	Z	14.422	.5
27	MP2B	Mx	-.017	.5
28	MP2B	X	-24.98	5
29	MP2B	Z	14.422	5
30	MP2B	Mx	-.017	5

Member Point Loads (BLC 23 : Antenna Wi (240 Deg)) (Continued)

	Member Label	Direction	Magnitude[lb,k-ft]	Location[ft,%]
31	MP2C	X	-28.166	.5
32	MP2C	Z	16.262	.5
33	MP2C	Mx	.025	.5
34	MP2C	X	-28.166	5
35	MP2C	Z	16.262	5
36	MP2C	Mx	.025	5
37	MP3A	X	-11.504	2
38	MP3A	Z	6.642	2
39	MP3A	Mx	.005	2
40	MP3A	X	-11.504	3.5
41	MP3A	Z	6.642	3.5
42	MP3A	Mx	.005	3.5
43	MP3B	X	-7.698	2
44	MP3B	Z	4.444	2
45	MP3B	Mx	-.004	2
46	MP3B	X	-7.698	3.5
47	MP3B	Z	4.444	3.5
48	MP3B	Mx	-.004	3.5
49	MP3C	X	-14.852	2
50	MP3C	Z	8.575	2
51	MP3C	Mx	.004	2
52	MP3C	X	-14.852	3.5
53	MP3C	Z	8.575	3.5
54	MP3C	Mx	.004	3.5
55	MP1A	X	-25.012	.5
56	MP1A	Z	14.441	.5
57	MP1A	Mx	.011	.5
58	MP1A	X	-25.012	5
59	MP1A	Z	14.441	5
60	MP1A	Mx	.011	5
61	MP1B	X	-30.499	.5
62	MP1B	Z	17.609	.5
63	MP1B	Mx	-.017	.5
64	MP1B	X	-30.499	5
65	MP1B	Z	17.609	5
66	MP1B	Mx	-.017	5
67	MP1C	X	-18.282	.5
68	MP1C	Z	10.555	.5
69	MP1C	Mx	.004	.5
70	MP1C	X	-18.282	5
71	MP1C	Z	10.555	5
72	MP1C	Mx	.004	5
73	MP4A	X	-30.499	.5
74	MP4A	Z	17.609	.5
75	MP4A	Mx	-.017	.5
76	MP4A	X	-30.499	5
77	MP4A	Z	17.609	5
78	MP4A	Mx	-.017	5
79	MP4B	X	-30.499	.5
80	MP4B	Z	17.609	.5
81	MP4B	Mx	-.017	.5
82	MP4B	X	-30.499	5

Member Point Loads (BLC 23 : Antenna Wi (240 Deg)) (Continued)

	Member Label	Direction	Magnitude[lb,k-ft]	Location[ft,%]
83	MP4B	Z	17.609	5
84	MP4B	Mx	-.017	5
85	MP4C	X	-18.282	.5
86	MP4C	Z	10.555	.5
87	MP4C	Mx	.004	.5
88	MP4C	X	-18.282	5
89	MP4C	Z	10.555	5
90	MP4C	Mx	.004	5
91	MP2A	X	-11.249	3
92	MP2A	Z	6.495	3
93	MP2A	Mx	-.006	3
94	MP2B	X	-10.276	3
95	MP2B	Z	5.933	3
96	MP2B	Mx	.006	3
97	MP2C	X	-13.463	3
98	MP2C	Z	7.773	3
99	MP2C	Mx	-.004	3
100	MP3A	X	-9.987	3
101	MP3A	Z	5.766	3
102	MP3A	Mx	-.005	3
103	MP3B	X	-8.644	3
104	MP3B	Z	4.991	3
105	MP3B	Mx	.005	3
106	MP3C	X	-13.042	3
107	MP3C	Z	7.53	3
108	MP3C	Mx	-.004	3
109	MP1A	X	-25.029	2.5
110	MP1A	Z	14.45	2.5
111	MP1A	Mx	-.013	2.5

Member Point Loads (BLC 24 : Antenna Wi (270 Deg))

	Member Label	Direction	Magnitude[lb,k-ft]	Location[ft,%]
1	MP2A	X	-28.844	.5
2	MP2A	Z	0	.5
3	MP2A	Mx	.017	.5
4	MP2A	X	-28.844	5
5	MP2A	Z	0	5
6	MP2A	Mx	.017	5
7	MP2B	X	-30.802	.5
8	MP2B	Z	0	.5
9	MP2B	Mx	-.000248	.5
10	MP2B	X	-30.802	5
11	MP2B	Z	0	5
12	MP2B	Mx	-.000248	5
13	MP2C	X	-33.801	.5
14	MP2C	Z	0	.5
15	MP2C	Mx	-.02	.5
16	MP2C	X	-33.801	5
17	MP2C	Z	0	5
18	MP2C	Mx	-.02	5
19	MP2A	X	-28.844	.5

Member Point Loads (BLC 24 : Antenna Wi (270 Deg)) (Continued)

	Member Label	Direction	Magnitude[lb,k-ft]	Location[ft,%]
20	MP2A	Z	0	.5
21	MP2A	Mx	.011	.5
22	MP2A	X	-28.844	5
23	MP2A	Z	0	5
24	MP2A	Mx	.011	5
25	MP2B	X	-30.802	.5
26	MP2B	Z	0	.5
27	MP2B	Mx	-.023	.5
28	MP2B	X	-30.802	5
29	MP2B	Z	0	5
30	MP2B	Mx	-.023	5
31	MP2C	X	-33.801	.5
32	MP2C	Z	0	.5
33	MP2C	Mx	.02	.5
34	MP2C	X	-33.801	5
35	MP2C	Z	0	5
36	MP2C	Mx	.02	5
37	MP3A	X	-8.889	2
38	MP3A	Z	0	2
39	MP3A	Mx	.004	2
40	MP3A	X	-8.889	3.5
41	MP3A	Z	0	3.5
42	MP3A	Mx	.004	3.5
43	MP3B	X	-13.284	2
44	MP3B	Z	0	2
45	MP3B	Mx	-.005	2
46	MP3B	X	-13.284	3.5
47	MP3B	Z	0	3.5
48	MP3B	Mx	-.005	3.5
49	MP3C	X	-20.018	2
50	MP3C	Z	0	2
51	MP3C	Mx	0	2
52	MP3C	X	-20.018	3.5
53	MP3C	Z	0	3.5
54	MP3C	Mx	0	3.5
55	MP1A	X	-35.217	.5
56	MP1A	Z	0	.5
57	MP1A	Mx	.017	.5
58	MP1A	X	-35.217	5
59	MP1A	Z	0	5
60	MP1A	Mx	.017	5
61	MP1B	X	-28.882	.5
62	MP1B	Z	0	.5
63	MP1B	Mx	-.011	.5
64	MP1B	X	-28.882	5
65	MP1B	Z	0	5
66	MP1B	Mx	-.011	5
67	MP1C	X	-19.674	.5
68	MP1C	Z	0	.5
69	MP1C	Mx	-.002	.5
70	MP1C	X	-19.674	5
71	MP1C	Z	0	5

Member Point Loads (BLC 24 : Antenna Wi (270 Deg)) (Continued)

	Member Label	Direction	Magnitude[lb,k-ft]	Location[ft,%]
72	MP1C	Mx	-.002	5
73	MP4A	X	-28.882	.5
74	MP4A	Z	0	.5
75	MP4A	Mx	-.011	.5
76	MP4A	X	-28.882	5
77	MP4A	Z	0	5
78	MP4A	Mx	-.011	5
79	MP4B	X	-28.882	.5
80	MP4B	Z	0	.5
81	MP4B	Mx	-.011	.5
82	MP4B	X	-28.882	5
83	MP4B	Z	0	5
84	MP4B	Mx	-.011	5
85	MP4C	X	-19.674	.5
86	MP4C	Z	0	.5
87	MP4C	Mx	-.002	.5
88	MP4C	X	-19.674	5
89	MP4C	Z	0	5
90	MP4C	Mx	-.002	5
91	MP2A	X	-11.711	3
92	MP2A	Z	0	3
93	MP2A	Mx	-.006	3
94	MP2B	X	-13.824	3
95	MP2B	Z	0	3
96	MP2B	Mx	.005	3
97	MP2C	X	-16.823	3
98	MP2C	Z	0	3
99	MP2C	Mx	0	3
100	MP3A	X	-9.769	3
101	MP3A	Z	0	3
102	MP3A	Mx	-.005	3
103	MP3B	X	-12.684	3
104	MP3B	Z	0	3
105	MP3B	Mx	.005	3
106	MP3C	X	-16.823	3
107	MP3C	Z	0	3
108	MP3C	Mx	0	3
109	MP1A	X	-27.021	2.5
110	MP1A	Z	0	2.5
111	MP1A	Mx	-.014	2.5

Member Point Loads (BLC 25 : Antenna Wi (300 Deg))

	Member Label	Direction	Magnitude[lb,k-ft]	Location[ft,%]
1	MP2A	X	-25.364	.5
2	MP2A	Z	-14.644	.5
3	MP2A	Mx	.008	.5
4	MP2A	X	-25.364	5
5	MP2A	Z	-14.644	5
6	MP2A	Mx	.008	5
7	MP2B	X	-28.755	.5
8	MP2B	Z	-16.602	.5

Member Point Loads (BLC 25 : Antenna Wi (300 Deg)) (Continued)

	Member Label	Direction	Magnitude[lb,k-ft]	Location[ft,%]
9	MP2B	Mx	.013	.5
10	MP2B	X	-28.755	5
11	MP2B	Z	-16.602	5
12	MP2B	Mx	.013	5
13	MP2C	X	-28.166	.5
14	MP2C	Z	-16.262	.5
15	MP2C	Mx	-.025	.5
16	MP2C	X	-28.166	5
17	MP2C	Z	-16.262	5
18	MP2C	Mx	-.025	5
19	MP2A	X	-25.364	.5
20	MP2A	Z	-14.644	.5
21	MP2A	Mx	.02	.5
22	MP2A	X	-25.364	5
23	MP2A	Z	-14.644	5
24	MP2A	Mx	.02	5
25	MP2B	X	-28.755	.5
26	MP2B	Z	-16.602	.5
27	MP2B	Mx	-.024	.5
28	MP2B	X	-28.755	5
29	MP2B	Z	-16.602	5
30	MP2B	Mx	-.024	5
31	MP2C	X	-28.166	.5
32	MP2C	Z	-16.262	.5
33	MP2C	Mx	.008	.5
34	MP2C	X	-28.166	5
35	MP2C	Z	-16.262	5
36	MP2C	Mx	.008	5
37	MP3A	X	-8.561	2
38	MP3A	Z	-4.942	2
39	MP3A	Mx	.005	2
40	MP3A	X	-8.561	3.5
41	MP3A	Z	-4.942	3.5
42	MP3A	Mx	.005	3.5
43	MP3B	X	-16.174	2
44	MP3B	Z	-9.338	2
45	MP3B	Mx	-.003	2
46	MP3B	X	-16.174	3.5
47	MP3B	Z	-9.338	3.5
48	MP3B	Mx	-.003	3.5
49	MP3C	X	-14.852	2
50	MP3C	Z	-8.575	2
51	MP3C	Mx	-.004	2
52	MP3C	X	-14.852	3.5
53	MP3C	Z	-8.575	3.5
54	MP3C	Mx	-.004	3.5
55	MP1A	X	-29.255	.5
56	MP1A	Z	-16.89	.5
57	MP1A	Mx	.016	.5
58	MP1A	X	-29.255	5
59	MP1A	Z	-16.89	5
60	MP1A	Mx	.016	5

Member Point Loads (BLC 25 : Antenna Wi (300 Deg)) (Continued)

	Member Label	Direction	Magnitude[lb,k-ft]	Location[ft,%]
61	MP1B	X	-18.282	.5
62	MP1B	Z	-10.555	.5
63	MP1B	Mx	-.004	.5
64	MP1B	X	-18.282	5
65	MP1B	Z	-10.555	5
66	MP1B	Mx	-.004	5
67	MP1C	X	-22.525	.5
68	MP1C	Z	-13.005	.5
69	MP1C	Mx	-.008	.5
70	MP1C	X	-22.525	5
71	MP1C	Z	-13.005	5
72	MP1C	Mx	-.008	5
73	MP4A	X	-18.282	.5
74	MP4A	Z	-10.555	.5
75	MP4A	Mx	-.004	.5
76	MP4A	X	-18.282	5
77	MP4A	Z	-10.555	5
78	MP4A	Mx	-.004	5
79	MP4B	X	-18.282	.5
80	MP4B	Z	-10.555	.5
81	MP4B	Mx	-.004	.5
82	MP4B	X	-18.282	5
83	MP4B	Z	-10.555	5
84	MP4B	Mx	-.004	5
85	MP4C	X	-22.525	.5
86	MP4C	Z	-13.005	.5
87	MP4C	Mx	-.008	.5
88	MP4C	X	-22.525	5
89	MP4C	Z	-13.005	5
90	MP4C	Mx	-.008	5
91	MP2A	X	-11.249	3
92	MP2A	Z	-6.495	3
93	MP2A	Mx	-.006	3
94	MP2B	X	-14.052	3
95	MP2B	Z	-8.113	3
96	MP2B	Mx	.003	3
97	MP2C	X	-13.463	3
98	MP2C	Z	-7.773	3
99	MP2C	Mx	.004	3
100	MP3A	X	-9.987	3
101	MP3A	Z	-5.766	3
102	MP3A	Mx	-.005	3
103	MP3B	X	-13.855	3
104	MP3B	Z	-7.999	3
105	MP3B	Mx	.003	3
106	MP3C	X	-13.042	3
107	MP3C	Z	-7.53	3
108	MP3C	Mx	.004	3
109	MP1A	X	-25.029	2.5
110	MP1A	Z	-14.45	2.5
111	MP1A	Mx	-.013	2.5

Member Point Loads (BLC 26 : Antenna Wi (330 Deg))

	Member Label	Direction	Magnitude[lb,k-ft]	Location[ft,%]
1	MP2A	X	-15.845	.5
2	MP2A	Z	-27.444	.5
3	MP2A	Mx	-.004	.5
4	MP2A	X	-15.845	5
5	MP2A	Z	-27.444	5
6	MP2A	Mx	-.004	5
7	MP2B	X	-16.824	.5
8	MP2B	Z	-29.139	.5
9	MP2B	Mx	.022	.5
10	MP2B	X	-16.824	5
11	MP2B	Z	-29.139	5
12	MP2B	Mx	.022	5
13	MP2C	X	-14.984	.5
14	MP2C	Z	-25.953	.5
15	MP2C	Mx	-.022	.5
16	MP2C	X	-14.984	5
17	MP2C	Z	-25.953	5
18	MP2C	Mx	-.022	5
19	MP2A	X	-15.845	.5
20	MP2A	Z	-27.444	.5
21	MP2A	Mx	.024	.5
22	MP2A	X	-15.845	5
23	MP2A	Z	-27.444	5
24	MP2A	Mx	.024	5
25	MP2B	X	-16.824	.5
26	MP2B	Z	-29.139	.5
27	MP2B	Mx	-.016	.5
28	MP2B	X	-16.824	5
29	MP2B	Z	-29.139	5
30	MP2B	Mx	-.016	5
31	MP2C	X	-14.984	.5
32	MP2C	Z	-25.953	.5
33	MP2C	Mx	-.004	.5
34	MP2C	X	-14.984	5
35	MP2C	Z	-25.953	5
36	MP2C	Mx	-.004	5
37	MP3A	X	-7.638	2
38	MP3A	Z	-13.23	2
39	MP3A	Mx	.005	2
40	MP3A	X	-7.638	3.5
41	MP3A	Z	-13.23	3.5
42	MP3A	Mx	.005	3.5
43	MP3B	X	-9.836	2
44	MP3B	Z	-17.036	2
45	MP3B	Mx	.002	2
46	MP3B	X	-9.836	3.5
47	MP3B	Z	-17.036	3.5
48	MP3B	Mx	.002	3.5
49	MP3C	X	-5.706	2
50	MP3C	Z	-9.883	2
51	MP3C	Mx	-.005	2
52	MP3C	X	-5.706	3.5

Member Point Loads (BLC 26 : Antenna Wi (330 Deg)) (Continued)

	Member Label	Direction	Magnitude[lb,k-ft]	Location[ft,%]
53	MP3C	Z	-9.883	3.5
54	MP3C	Mx	-.005	3.5
55	MP1A	X	-13.005	.5
56	MP1A	Z	-22.525	.5
57	MP1A	Mx	.008	.5
58	MP1A	X	-13.005	5
59	MP1A	Z	-22.525	5
60	MP1A	Mx	.008	5
61	MP1B	X	-9.837	.5
62	MP1B	Z	-17.038	.5
63	MP1B	Mx	.002	.5
64	MP1B	X	-9.837	5
65	MP1B	Z	-17.038	5
66	MP1B	Mx	.002	5
67	MP1C	X	-16.89	.5
68	MP1C	Z	-29.255	.5
69	MP1C	Mx	-.016	.5
70	MP1C	X	-16.89	5
71	MP1C	Z	-29.255	5
72	MP1C	Mx	-.016	5
73	MP4A	X	-9.837	.5
74	MP4A	Z	-17.038	.5
75	MP4A	Mx	.002	.5
76	MP4A	X	-9.837	5
77	MP4A	Z	-17.038	5
78	MP4A	Mx	.002	5
79	MP4B	X	-9.837	.5
80	MP4B	Z	-17.038	.5
81	MP4B	Mx	.002	.5
82	MP4B	X	-9.837	5
83	MP4B	Z	-17.038	5
84	MP4B	Mx	.002	5
85	MP4C	X	-16.89	.5
86	MP4C	Z	-29.255	.5
87	MP4C	Mx	-.016	.5
88	MP4C	X	-16.89	5
89	MP4C	Z	-29.255	5
90	MP4C	Mx	-.016	5
91	MP2A	X	-7.773	3
92	MP2A	Z	-13.463	3
93	MP2A	Mx	-.004	3
94	MP2B	X	-8.335	3
95	MP2B	Z	-14.436	3
96	MP2B	Mx	-.001	3
97	MP2C	X	-6.495	3
98	MP2C	Z	-11.249	3
99	MP2C	Mx	.006	3
100	MP3A	X	-7.53	3
101	MP3A	Z	-13.042	3
102	MP3A	Mx	-.004	3
103	MP3B	X	-8.305	3
104	MP3B	Z	-14.385	3

Member Point Loads (BLC 26 : Antenna Wi (330 Deg)) (Continued)

	Member Label	Direction	Magnitude[lb,k-ft]	Location[ft,%]
105	MP3B	Mx	-.001	3
106	MP3C	X	-5.766	3
107	MP3C	Z	-9.987	3
108	MP3C	Mx	.005	3
109	MP1A	X	-16.33	2.5
110	MP1A	Z	-28.284	2.5
111	MP1A	Mx	-.008	2.5

Member Point Loads (BLC 27 : Antenna Wm (0 Deg))

	Member Label	Direction	Magnitude[lb,k-ft]	Location[ft,%]
1	MP2A	X	0	.5
2	MP2A	Z	-10.952	.5
3	MP2A	Mx	-.005	.5
4	MP2A	X	0	5
5	MP2A	Z	-10.952	5
6	MP2A	Mx	-.005	5
7	MP2B	X	0	.5
8	MP2B	Z	-10.263	.5
9	MP2B	Mx	.008	.5
10	MP2B	X	0	5
11	MP2B	Z	-10.263	5
12	MP2B	Mx	.008	5
13	MP2C	X	0	.5
14	MP2C	Z	-9.206	.5
15	MP2C	Mx	-.005	.5
16	MP2C	X	0	5
17	MP2C	Z	-9.206	5
18	MP2C	Mx	-.005	5
19	MP2A	X	0	.5
20	MP2A	Z	-10.952	.5
21	MP2A	Mx	.007	.5
22	MP2A	X	0	5
23	MP2A	Z	-10.952	5
24	MP2A	Mx	.007	5
25	MP2B	X	0	.5
26	MP2B	Z	-10.263	.5
27	MP2B	Mx	-.001	.5
28	MP2B	X	0	5
29	MP2B	Z	-10.263	5
30	MP2B	Mx	-.001	5
31	MP2C	X	0	.5
32	MP2C	Z	-9.206	.5
33	MP2C	Mx	-.005	.5
34	MP2C	X	0	5
35	MP2C	Z	-9.206	5
36	MP2C	Mx	-.005	5
37	MP3A	X	0	2
38	MP3A	Z	-6.246	2
39	MP3A	Mx	.000542	2
40	MP3A	X	0	3.5
41	MP3A	Z	-6.246	3.5

Member Point Loads (BLC 27 : Antenna Wm (0 Deg)) (Continued)

	Member Label	Direction	Magnitude[lb,k-ft]	Location[ft,%]
42	MP3A	Mx	.000542	3.5
43	MP3B	X	0	2
44	MP3B	Z	-4.763	2
45	MP3B	Mx	.002	2
46	MP3B	X	0	3.5
47	MP3B	Z	-4.763	3.5
48	MP3B	Mx	.002	3.5
49	MP3C	X	0	2
50	MP3C	Z	-2.491	2
51	MP3C	Mx	-.001	2
52	MP3C	X	0	3.5
53	MP3C	Z	-2.491	3.5
54	MP3C	Mx	-.001	3.5
55	MP1A	X	0	.5
56	MP1A	Z	-6.038	.5
57	MP1A	Mx	.000524	.5
58	MP1A	X	0	5
59	MP1A	Z	-6.038	5
60	MP1A	Mx	.000524	5
61	MP1B	X	0	.5
62	MP1B	Z	-8.266	.5
63	MP1B	Mx	.003	.5
64	MP1B	X	0	5
65	MP1B	Z	-8.266	5
66	MP1B	Mx	.003	5
67	MP1C	X	0	.5
68	MP1C	Z	-11.506	.5
69	MP1C	Mx	-.006	.5
70	MP1C	X	0	5
71	MP1C	Z	-11.506	5
72	MP1C	Mx	-.006	5
73	MP4A	X	0	.5
74	MP4A	Z	-8.266	.5
75	MP4A	Mx	.003	.5
76	MP4A	X	0	5
77	MP4A	Z	-8.266	5
78	MP4A	Mx	.003	5
79	MP4B	X	0	.5
80	MP4B	Z	-8.266	.5
81	MP4B	Mx	.003	.5
82	MP4B	X	0	5
83	MP4B	Z	-8.266	5
84	MP4B	Mx	.003	5
85	MP4C	X	0	.5
86	MP4C	Z	-11.506	.5
87	MP4C	Mx	-.006	.5
88	MP4C	X	0	5
89	MP4C	Z	-11.506	5
90	MP4C	Mx	-.006	5
91	MP2A	X	0	3
92	MP2A	Z	-5.044	3
93	MP2A	Mx	0	3

Member Point Loads (BLC 27 : Antenna Wm (0 Deg)) (Continued)

	Member Label	Direction	Magnitude[lb,k-ft]	Location[ft,%]
94	MP2B	X	0	3
95	MP2B	Z	-4.353	3
96	MP2B	Mx	-.001	3
97	MP2C	X	0	3
98	MP2C	Z	-3.372	3
99	MP2C	Mx	.002	3
100	MP3A	X	0	3
101	MP3A	Z	-5.044	3
102	MP3A	Mx	0	3
103	MP3B	X	0	3
104	MP3B	Z	-4.089	3
105	MP3B	Mx	-.001	3
106	MP3C	X	0	3
107	MP3C	Z	-2.731	3
108	MP3C	Mx	.001	3
109	MP1A	X	0	2.5
110	MP1A	Z	-10.952	2.5
111	MP1A	Mx	0	2.5

Member Point Loads (BLC 28 : Antenna Wm (30 Deg))

	Member Label	Direction	Magnitude[lb,k-ft]	Location[ft,%]
1	MP2A	X	5.398	.5
2	MP2A	Z	-9.35	.5
3	MP2A	Mx	-.008	.5
4	MP2A	X	5.398	5
5	MP2A	Z	-9.35	5
6	MP2A	Mx	-.008	5
7	MP2B	X	4.708	.5
8	MP2B	Z	-8.155	.5
9	MP2B	Mx	.006	.5
10	MP2B	X	4.708	5
11	MP2B	Z	-8.155	5
12	MP2B	Mx	.006	5
13	MP2C	X	4.828	.5
14	MP2C	Z	-8.362	.5
15	MP2C	Mx	-.001	.5
16	MP2C	X	4.828	5
17	MP2C	Z	-8.362	5
18	MP2C	Mx	-.001	5
19	MP2A	X	5.398	.5
20	MP2A	Z	-9.35	.5
21	MP2A	Mx	.004	.5
22	MP2A	X	5.398	5
23	MP2A	Z	-9.35	5
24	MP2A	Mx	.004	5
25	MP2B	X	4.708	.5
26	MP2B	Z	-8.155	.5
27	MP2B	Mx	.003	.5
28	MP2B	X	4.708	5
29	MP2B	Z	-8.155	5
30	MP2B	Mx	.003	5

Member Point Loads (BLC 28 : Antenna Wm (30 Deg)) (Continued)

	Member Label	Direction	Magnitude[lb,k-ft]	Location[ft,%]
31	MP2C	X	4.828	.5
32	MP2C	Z	-8.362	.5
33	MP2C	Mx	-.007	.5
34	MP2C	X	4.828	5
35	MP2C	Z	-8.362	5
36	MP2C	Mx	-.007	5
37	MP3A	X	2.955	2
38	MP3A	Z	-5.118	2
39	MP3A	Mx	-.001	2
40	MP3A	X	2.955	3.5
41	MP3A	Z	-5.118	3.5
42	MP3A	Mx	-.001	3.5
43	MP3B	X	1.472	2
44	MP3B	Z	-2.55	2
45	MP3B	Mx	.001	2
46	MP3B	X	1.472	3.5
47	MP3B	Z	-2.55	3.5
48	MP3B	Mx	.001	3.5
49	MP3C	X	1.73	2
50	MP3C	Z	-2.996	2
51	MP3C	Mx	-.001	2
52	MP3C	X	1.73	3.5
53	MP3C	Z	-2.996	3.5
54	MP3C	Mx	-.001	3.5
55	MP1A	X	3.271	.5
56	MP1A	Z	-5.666	.5
57	MP1A	Mx	-.001	.5
58	MP1A	X	3.271	5
59	MP1A	Z	-5.666	5
60	MP1A	Mx	-.001	5
61	MP1B	X	5.5	.5
62	MP1B	Z	-9.527	.5
63	MP1B	Mx	.005	.5
64	MP1B	X	5.5	5
65	MP1B	Z	-9.527	5
66	MP1B	Mx	.005	5
67	MP1C	X	4.638	.5
68	MP1C	Z	-8.034	.5
69	MP1C	Mx	-.004	.5
70	MP1C	X	4.638	5
71	MP1C	Z	-8.034	5
72	MP1C	Mx	-.004	5
73	MP4A	X	5.5	.5
74	MP4A	Z	-9.527	.5
75	MP4A	Mx	.005	.5
76	MP4A	X	5.5	5
77	MP4A	Z	-9.527	5
78	MP4A	Mx	.005	5
79	MP4B	X	5.5	.5
80	MP4B	Z	-9.527	.5
81	MP4B	Mx	.005	.5
82	MP4B	X	5.5	5

Member Point Loads (BLC 28 : Antenna Wm (30 Deg)) (Continued)

	Member Label	Direction	Magnitude[lb,k-ft]	Location[ft,%]
83	MP4B	Z	-9.527	5
84	MP4B	Mx	.005	5
85	MP4C	X	4.638	.5
86	MP4C	Z	-8.034	.5
87	MP4C	Mx	-.004	.5
88	MP4C	X	4.638	5
89	MP4C	Z	-8.034	5
90	MP4C	Mx	-.004	5
91	MP2A	X	2.313	3
92	MP2A	Z	-4.007	3
93	MP2A	Mx	.001	3
94	MP2B	X	1.784	3
95	MP2B	Z	-3.09	3
96	MP2B	Mx	-.002	3
97	MP2C	X	1.895	3
98	MP2C	Z	-3.282	3
99	MP2C	Mx	.002	3
100	MP3A	X	2.233	3
101	MP3A	Z	-3.868	3
102	MP3A	Mx	.001	3
103	MP3B	X	1.501	3
104	MP3B	Z	-2.6	3
105	MP3B	Mx	-.001	3
106	MP3C	X	1.655	3
107	MP3C	Z	-2.866	3
108	MP3C	Mx	.001	3
109	MP1A	X	5.152	2.5
110	MP1A	Z	-8.923	2.5
111	MP1A	Mx	.003	2.5

Member Point Loads (BLC 29 : Antenna Wm (60 Deg))

	Member Label	Direction	Magnitude[lb,k-ft]	Location[ft,%]
1	MP2A	X	8.617	.5
2	MP2A	Z	-4.975	.5
3	MP2A	Mx	-.008	.5
4	MP2A	X	8.617	5
5	MP2A	Z	-4.975	5
6	MP2A	Mx	-.008	5
7	MP2B	X	8.02	.5
8	MP2B	Z	-4.63	.5
9	MP2B	Mx	.004	.5
10	MP2B	X	8.02	5
11	MP2B	Z	-4.63	5
12	MP2B	Mx	.004	5
13	MP2C	X	9.142	.5
14	MP2C	Z	-5.278	.5
15	MP2C	Mx	.003	.5
16	MP2C	X	9.142	5
17	MP2C	Z	-5.278	5
18	MP2C	Mx	.003	5
19	MP2A	X	8.617	.5

Member Point Loads (BLC 29 : Antenna Wm (60 Deg)) (Continued)

	Member Label	Direction	Magnitude[lb,k-ft]	Location[ft,%]
20	MP2A	Z	-4.975	.5
21	MP2A	Mx	-8e-5	.5
22	MP2A	X	8.617	5
23	MP2A	Z	-4.975	5
24	MP2A	Mx	-8e-5	5
25	MP2B	X	8.02	.5
26	MP2B	Z	-4.63	.5
27	MP2B	Mx	.005	.5
28	MP2B	X	8.02	5
29	MP2B	Z	-4.63	5
30	MP2B	Mx	.005	5
31	MP2C	X	9.142	.5
32	MP2C	Z	-5.278	.5
33	MP2C	Mx	-.008	.5
34	MP2C	X	9.142	5
35	MP2C	Z	-5.278	5
36	MP2C	Mx	-.008	5
37	MP3A	X	3.543	2
38	MP3A	Z	-2.045	2
39	MP3A	Mx	-.002	2
40	MP3A	X	3.543	3.5
41	MP3A	Z	-2.045	3.5
42	MP3A	Mx	-.002	3.5
43	MP3B	X	2.258	2
44	MP3B	Z	-1.304	2
45	MP3B	Mx	.001	2
46	MP3B	X	2.258	3.5
47	MP3B	Z	-1.304	3.5
48	MP3B	Mx	.001	3.5
49	MP3C	X	4.672	2
50	MP3C	Z	-2.697	2
51	MP3C	Mx	-.001	2
52	MP3C	X	4.672	3.5
53	MP3C	Z	-2.697	3.5
54	MP3C	Mx	-.001	3.5
55	MP1A	X	8.034	.5
56	MP1A	Z	-4.638	.5
57	MP1A	Mx	-.004	.5
58	MP1A	X	8.034	5
59	MP1A	Z	-4.638	5
60	MP1A	Mx	-.004	5
61	MP1B	X	9.964	.5
62	MP1B	Z	-5.753	.5
63	MP1B	Mx	.006	.5
64	MP1B	X	9.964	5
65	MP1B	Z	-5.753	5
66	MP1B	Mx	.006	5
67	MP1C	X	5.666	.5
68	MP1C	Z	-3.271	.5
69	MP1C	Mx	-.001	.5
70	MP1C	X	5.666	5
71	MP1C	Z	-3.271	5

Member Point Loads (BLC 29 : Antenna Wm (60 Deg)) (Continued)

	Member Label	Direction	Magnitude[lb,k-ft]	Location[ft,%]
72	MP1C	Mx	-.001	5
73	MP4A	X	9.964	.5
74	MP4A	Z	-5.753	.5
75	MP4A	Mx	.006	.5
76	MP4A	X	9.964	5
77	MP4A	Z	-5.753	5
78	MP4A	Mx	.006	5
79	MP4B	X	9.964	.5
80	MP4B	Z	-5.753	.5
81	MP4B	Mx	.006	.5
82	MP4B	X	9.964	5
83	MP4B	Z	-5.753	5
84	MP4B	Mx	.006	5
85	MP4C	X	5.666	.5
86	MP4C	Z	-3.271	.5
87	MP4C	Mx	-.001	.5
88	MP4C	X	5.666	5
89	MP4C	Z	-3.271	5
90	MP4C	Mx	-.001	5
91	MP2A	X	3.282	3
92	MP2A	Z	-1.895	3
93	MP2A	Mx	.002	3
94	MP2B	X	2.964	3
95	MP2B	Z	-1.711	3
96	MP2B	Mx	-.002	3
97	MP2C	X	4.007	3
98	MP2C	Z	-2.313	3
99	MP2C	Mx	.001	3
100	MP3A	X	2.866	3
101	MP3A	Z	-1.655	3
102	MP3A	Mx	.001	3
103	MP3B	X	2.426	3
104	MP3B	Z	-1.401	3
105	MP3B	Mx	-.001	3
106	MP3C	X	3.868	3
107	MP3C	Z	-2.233	3
108	MP3C	Mx	.001	3
109	MP1A	X	7.798	2.5
110	MP1A	Z	-4.502	2.5
111	MP1A	Mx	.004	2.5

Member Point Loads (BLC 30 : Antenna Wm (90 Deg))

	Member Label	Direction	Magnitude[lb,k-ft]	Location[ft,%]
1	MP2A	X	9.26	.5
2	MP2A	Z	0	.5
3	MP2A	Mx	-.005	.5
4	MP2A	X	9.26	5
5	MP2A	Z	0	5
6	MP2A	Mx	-.005	5
7	MP2B	X	9.95	.5
8	MP2B	Z	0	.5

Member Point Loads (BLC 30 : Antenna Wm (90 Deg)) (Continued)

	Member Label	Direction	Magnitude[lb,k-ft]	Location[ft,%]
9	MP2B	Mx	8e-5	.5
10	MP2B	X	9.95	5
11	MP2B	Z	0	5
12	MP2B	Mx	8e-5	5
13	MP2C	X	11.007	.5
14	MP2C	Z	0	.5
15	MP2C	Mx	.006	.5
16	MP2C	X	11.007	5
17	MP2C	Z	0	5
18	MP2C	Mx	.006	5
19	MP2A	X	9.26	.5
20	MP2A	Z	0	.5
21	MP2A	Mx	-.004	.5
22	MP2A	X	9.26	5
23	MP2A	Z	0	5
24	MP2A	Mx	-.004	5
25	MP2B	X	9.95	.5
26	MP2B	Z	0	.5
27	MP2B	Mx	.008	.5
28	MP2B	X	9.95	5
29	MP2B	Z	0	5
30	MP2B	Mx	.008	5
31	MP2C	X	11.007	.5
32	MP2C	Z	0	.5
33	MP2C	Mx	-.006	.5
34	MP2C	X	11.007	5
35	MP2C	Z	0	5
36	MP2C	Mx	-.006	5
37	MP3A	X	2.608	2
38	MP3A	Z	0	2
39	MP3A	Mx	-.001	2
40	MP3A	X	2.608	3.5
41	MP3A	Z	0	3.5
42	MP3A	Mx	-.001	3.5
43	MP3B	X	4.091	2
44	MP3B	Z	0	2
45	MP3B	Mx	.002	2
46	MP3B	X	4.091	3.5
47	MP3B	Z	0	3.5
48	MP3B	Mx	.002	3.5
49	MP3C	X	6.363	2
50	MP3C	Z	0	2
51	MP3C	Mx	0	2
52	MP3C	X	6.363	3.5
53	MP3C	Z	0	3.5
54	MP3C	Mx	0	3.5
55	MP1A	X	11.506	.5
56	MP1A	Z	0	.5
57	MP1A	Mx	-.006	.5
58	MP1A	X	11.506	5
59	MP1A	Z	0	5
60	MP1A	Mx	-.006	5

Member Point Loads (BLC 30 : Antenna Wm (90 Deg)) (Continued)

	Member Label	Direction	Magnitude[lb,k-ft]	Location[ft,%]
61	MP1B	X	9.277	.5
62	MP1B	Z	0	.5
63	MP1B	Mx	.004	.5
64	MP1B	X	9.277	5
65	MP1B	Z	0	5
66	MP1B	Mx	.004	5
67	MP1C	X	6.038	.5
68	MP1C	Z	0	.5
69	MP1C	Mx	.000524	.5
70	MP1C	X	6.038	5
71	MP1C	Z	0	5
72	MP1C	Mx	.000524	5
73	MP4A	X	9.277	.5
74	MP4A	Z	0	.5
75	MP4A	Mx	.004	.5
76	MP4A	X	9.277	5
77	MP4A	Z	0	5
78	MP4A	Mx	.004	5
79	MP4B	X	9.277	.5
80	MP4B	Z	0	.5
81	MP4B	Mx	.004	.5
82	MP4B	X	9.277	5
83	MP4B	Z	0	5
84	MP4B	Mx	.004	5
85	MP4C	X	6.038	.5
86	MP4C	Z	0	.5
87	MP4C	Mx	.000524	.5
88	MP4C	X	6.038	5
89	MP4C	Z	0	5
90	MP4C	Mx	.000524	5
91	MP2A	X	3.372	3
92	MP2A	Z	0	3
93	MP2A	Mx	.002	3
94	MP2B	X	4.063	3
95	MP2B	Z	0	3
96	MP2B	Mx	-.002	3
97	MP2C	X	5.044	3
98	MP2C	Z	0	3
99	MP2C	Mx	0	3
100	MP3A	X	2.731	3
101	MP3A	Z	0	3
102	MP3A	Mx	.001	3
103	MP3B	X	3.687	3
104	MP3B	Z	0	3
105	MP3B	Mx	-.001	3
106	MP3C	X	5.044	3
107	MP3C	Z	0	3
108	MP3C	Mx	0	3
109	MP1A	X	8.356	2.5
110	MP1A	Z	0	2.5
111	MP1A	Mx	.004	2.5

Member Point Loads (BLC 31 : Antenna Wm (120 Deg))

	Member Label	Direction	Magnitude[lb,k-ft]	Location[ft,%]
1	MP2A	X	8.155	.5
2	MP2A	Z	4.708	.5
3	MP2A	Mx	-.003	.5
4	MP2A	X	8.155	5
5	MP2A	Z	4.708	5
6	MP2A	Mx	-.003	5
7	MP2B	X	9.35	.5
8	MP2B	Z	5.398	.5
9	MP2B	Mx	-.004	.5
10	MP2B	X	9.35	5
11	MP2B	Z	5.398	5
12	MP2B	Mx	-.004	5
13	MP2C	X	9.142	.5
14	MP2C	Z	5.278	.5
15	MP2C	Mx	.008	.5
16	MP2C	X	9.142	5
17	MP2C	Z	5.278	5
18	MP2C	Mx	.008	5
19	MP2A	X	8.155	.5
20	MP2A	Z	4.708	.5
21	MP2A	Mx	-.006	.5
22	MP2A	X	8.155	5
23	MP2A	Z	4.708	5
24	MP2A	Mx	-.006	5
25	MP2B	X	9.35	.5
26	MP2B	Z	5.398	.5
27	MP2B	Mx	.008	.5
28	MP2B	X	9.35	5
29	MP2B	Z	5.398	5
30	MP2B	Mx	.008	5
31	MP2C	X	9.142	.5
32	MP2C	Z	5.278	.5
33	MP2C	Mx	-.003	.5
34	MP2C	X	9.142	5
35	MP2C	Z	5.278	5
36	MP2C	Mx	-.003	5
37	MP3A	X	2.55	2
38	MP3A	Z	1.472	2
39	MP3A	Mx	-.001	2
40	MP3A	X	2.55	3.5
41	MP3A	Z	1.472	3.5
42	MP3A	Mx	-.001	3.5
43	MP3B	X	5.118	2
44	MP3B	Z	2.955	2
45	MP3B	Mx	.001	2
46	MP3B	X	5.118	3.5
47	MP3B	Z	2.955	3.5
48	MP3B	Mx	.001	3.5
49	MP3C	X	4.672	2
50	MP3C	Z	2.697	2
51	MP3C	Mx	.001	2
52	MP3C	X	4.672	3.5

Member Point Loads (BLC 31 : Antenna Wm (120 Deg)) (Continued)

	Member Label	Direction	Magnitude[lb,k-ft]	Location[ft,%]
53	MP3C	Z	2.697	3.5
54	MP3C	Mx	.001	3.5
55	MP1A	X	9.527	.5
56	MP1A	Z	5.5	.5
57	MP1A	Mx	-.005	.5
58	MP1A	X	9.527	5
59	MP1A	Z	5.5	5
60	MP1A	Mx	-.005	5
61	MP1B	X	5.666	.5
62	MP1B	Z	3.271	.5
63	MP1B	Mx	.001	.5
64	MP1B	X	5.666	5
65	MP1B	Z	3.271	5
66	MP1B	Mx	.001	5
67	MP1C	X	7.159	.5
68	MP1C	Z	4.133	.5
69	MP1C	Mx	.003	.5
70	MP1C	X	7.159	5
71	MP1C	Z	4.133	5
72	MP1C	Mx	.003	5
73	MP4A	X	5.666	.5
74	MP4A	Z	3.271	.5
75	MP4A	Mx	.001	.5
76	MP4A	X	5.666	5
77	MP4A	Z	3.271	5
78	MP4A	Mx	.001	5
79	MP4B	X	5.666	.5
80	MP4B	Z	3.271	.5
81	MP4B	Mx	.001	.5
82	MP4B	X	5.666	5
83	MP4B	Z	3.271	5
84	MP4B	Mx	.001	5
85	MP4C	X	7.159	.5
86	MP4C	Z	4.133	.5
87	MP4C	Mx	.003	.5
88	MP4C	X	7.159	5
89	MP4C	Z	4.133	5
90	MP4C	Mx	.003	5
91	MP2A	X	3.282	3
92	MP2A	Z	1.895	3
93	MP2A	Mx	.002	3
94	MP2B	X	4.199	3
95	MP2B	Z	2.424	3
96	MP2B	Mx	-.000829	3
97	MP2C	X	4.007	3
98	MP2C	Z	2.313	3
99	MP2C	Mx	-.001	3
100	MP3A	X	2.866	3
101	MP3A	Z	1.655	3
102	MP3A	Mx	.001	3
103	MP3B	X	4.134	3
104	MP3B	Z	2.387	3

Member Point Loads (BLC 31 : Antenna Wm (120 Deg)) (Continued)

	Member Label	Direction	Magnitude[lb,k-ft]	Location[ft,%]
105	MP3B	Mx	-.000816	3
106	MP3C	X	3.868	3
107	MP3C	Z	2.233	3
108	MP3C	Mx	-.001	3
109	MP1A	X	7.798	2.5
110	MP1A	Z	4.502	2.5
111	MP1A	Mx	.004	2.5

Member Point Loads (BLC 32 : Antenna Wm (150 Deg))

	Member Label	Direction	Magnitude[lb,k-ft]	Location[ft,%]
1	MP2A	X	5.131	.5
2	MP2A	Z	8.888	.5
3	MP2A	Mx	.001	.5
4	MP2A	X	5.131	5
5	MP2A	Z	8.888	5
6	MP2A	Mx	.001	5
7	MP2B	X	5.476	.5
8	MP2B	Z	9.485	.5
9	MP2B	Mx	-.007	.5
10	MP2B	X	5.476	5
11	MP2B	Z	9.485	5
12	MP2B	Mx	-.007	5
13	MP2C	X	4.828	.5
14	MP2C	Z	8.362	.5
15	MP2C	Mx	.007	.5
16	MP2C	X	4.828	5
17	MP2C	Z	8.362	5
18	MP2C	Mx	.007	5
19	MP2A	X	5.131	.5
20	MP2A	Z	8.888	.5
21	MP2A	Mx	-.008	.5
22	MP2A	X	5.131	5
23	MP2A	Z	8.888	5
24	MP2A	Mx	-.008	5
25	MP2B	X	5.476	.5
26	MP2B	Z	9.485	.5
27	MP2B	Mx	.005	.5
28	MP2B	X	5.476	5
29	MP2B	Z	9.485	5
30	MP2B	Mx	.005	5
31	MP2C	X	4.828	.5
32	MP2C	Z	8.362	.5
33	MP2C	Mx	.001	.5
34	MP2C	X	4.828	5
35	MP2C	Z	8.362	5
36	MP2C	Mx	.001	5
37	MP3A	X	2.382	2
38	MP3A	Z	4.125	2
39	MP3A	Mx	-.002	2
40	MP3A	X	2.382	3.5
41	MP3A	Z	4.125	3.5

Member Point Loads (BLC 32 : Antenna Wm (150 Deg)) (Continued)

	Member Label	Direction	Magnitude[lb,k-ft]	Location[ft,%]
42	MP3A	Mx	-.002	3.5
43	MP3B	X	3.123	2
44	MP3B	Z	5.409	2
45	MP3B	Mx	-.000542	2
46	MP3B	X	3.123	3.5
47	MP3B	Z	5.409	3.5
48	MP3B	Mx	-.000542	3.5
49	MP3C	X	1.73	2
50	MP3C	Z	2.996	2
51	MP3C	Mx	.001	2
52	MP3C	X	1.73	3.5
53	MP3C	Z	2.996	3.5
54	MP3C	Mx	.001	3.5
55	MP1A	X	4.133	.5
56	MP1A	Z	7.159	.5
57	MP1A	Mx	-.003	.5
58	MP1A	X	4.133	5
59	MP1A	Z	7.159	5
60	MP1A	Mx	-.003	5
61	MP1B	X	3.019	.5
62	MP1B	Z	5.229	.5
63	MP1B	Mx	-.000524	.5
64	MP1B	X	3.019	5
65	MP1B	Z	5.229	5
66	MP1B	Mx	-.000524	5
67	MP1C	X	5.5	.5
68	MP1C	Z	9.527	.5
69	MP1C	Mx	.005	.5
70	MP1C	X	5.5	5
71	MP1C	Z	9.527	5
72	MP1C	Mx	.005	5
73	MP4A	X	3.019	.5
74	MP4A	Z	5.229	.5
75	MP4A	Mx	-.000524	.5
76	MP4A	X	3.019	5
77	MP4A	Z	5.229	5
78	MP4A	Mx	-.000524	5
79	MP4B	X	3.019	.5
80	MP4B	Z	5.229	.5
81	MP4B	Mx	-.000524	.5
82	MP4B	X	3.019	5
83	MP4B	Z	5.229	5
84	MP4B	Mx	-.000524	5
85	MP4C	X	5.5	.5
86	MP4C	Z	9.527	.5
87	MP4C	Mx	.005	.5
88	MP4C	X	5.5	5
89	MP4C	Z	9.527	5
90	MP4C	Mx	.005	5
91	MP2A	X	2.313	3
92	MP2A	Z	4.007	3
93	MP2A	Mx	.001	3

Member Point Loads (BLC 32 : Antenna Wm (150 Deg)) (Continued)

	Member Label	Direction	Magnitude[lb,k-ft]	Location[ft,%]
94	MP2B	X	2.497	3
95	MP2B	Z	4.325	3
96	MP2B	Mx	.000434	3
97	MP2C	X	1.895	3
98	MP2C	Z	3.282	3
99	MP2C	Mx	-.002	3
100	MP3A	X	2.233	3
101	MP3A	Z	3.868	3
102	MP3A	Mx	.001	3
103	MP3B	X	2.487	3
104	MP3B	Z	4.308	3
105	MP3B	Mx	.000432	3
106	MP3C	X	1.655	3
107	MP3C	Z	2.866	3
108	MP3C	Mx	-.001	3
109	MP1A	X	5.152	2.5
110	MP1A	Z	8.923	2.5
111	MP1A	Mx	.003	2.5

Member Point Loads (BLC 33 : Antenna Wm (180 Deg))

	Member Label	Direction	Magnitude[lb,k-ft]	Location[ft,%]
1	MP2A	X	0	.5
2	MP2A	Z	10.952	.5
3	MP2A	Mx	.005	.5
4	MP2A	X	0	5
5	MP2A	Z	10.952	5
6	MP2A	Mx	.005	5
7	MP2B	X	0	.5
8	MP2B	Z	10.263	.5
9	MP2B	Mx	-.008	.5
10	MP2B	X	0	5
11	MP2B	Z	10.263	5
12	MP2B	Mx	-.008	5
13	MP2C	X	0	.5
14	MP2C	Z	9.206	.5
15	MP2C	Mx	.005	.5
16	MP2C	X	0	5
17	MP2C	Z	9.206	5
18	MP2C	Mx	.005	5
19	MP2A	X	0	.5
20	MP2A	Z	10.952	.5
21	MP2A	Mx	-.007	.5
22	MP2A	X	0	5
23	MP2A	Z	10.952	5
24	MP2A	Mx	-.007	5
25	MP2B	X	0	.5
26	MP2B	Z	10.263	.5
27	MP2B	Mx	.001	.5
28	MP2B	X	0	5
29	MP2B	Z	10.263	5
30	MP2B	Mx	.001	5

Member Point Loads (BLC 33 : Antenna Wm (180 Deg)) (Continued)

	Member Label	Direction	Magnitude[lb,k-ft]	Location[ft,%]
31	MP2C	X	0	.5
32	MP2C	Z	9.206	.5
33	MP2C	Mx	.005	.5
34	MP2C	X	0	5
35	MP2C	Z	9.206	5
36	MP2C	Mx	.005	5
37	MP3A	X	0	2
38	MP3A	Z	6.246	2
39	MP3A	Mx	-.000542	2
40	MP3A	X	0	3.5
41	MP3A	Z	6.246	3.5
42	MP3A	Mx	-.000542	3.5
43	MP3B	X	0	2
44	MP3B	Z	4.763	2
45	MP3B	Mx	-.002	2
46	MP3B	X	0	3.5
47	MP3B	Z	4.763	3.5
48	MP3B	Mx	-.002	3.5
49	MP3C	X	0	2
50	MP3C	Z	2.491	2
51	MP3C	Mx	.001	2
52	MP3C	X	0	3.5
53	MP3C	Z	2.491	3.5
54	MP3C	Mx	.001	3.5
55	MP1A	X	0	.5
56	MP1A	Z	6.038	.5
57	MP1A	Mx	-.000524	.5
58	MP1A	X	0	5
59	MP1A	Z	6.038	5
60	MP1A	Mx	-.000524	5
61	MP1B	X	0	.5
62	MP1B	Z	8.266	.5
63	MP1B	Mx	-.003	.5
64	MP1B	X	0	5
65	MP1B	Z	8.266	5
66	MP1B	Mx	-.003	5
67	MP1C	X	0	.5
68	MP1C	Z	11.506	.5
69	MP1C	Mx	.006	.5
70	MP1C	X	0	5
71	MP1C	Z	11.506	5
72	MP1C	Mx	.006	5
73	MP4A	X	0	.5
74	MP4A	Z	8.266	.5
75	MP4A	Mx	-.003	.5
76	MP4A	X	0	5
77	MP4A	Z	8.266	5
78	MP4A	Mx	-.003	5
79	MP4B	X	0	.5
80	MP4B	Z	8.266	.5
81	MP4B	Mx	-.003	.5
82	MP4B	X	0	5

Member Point Loads (BLC 33 : Antenna Wm (180 Deg)) (Continued)

	Member Label	Direction	Magnitude[lb,k-ft]	Location[ft,%]
83	MP4B	Z	8.266	5
84	MP4B	Mx	-.003	5
85	MP4C	X	0	.5
86	MP4C	Z	11.506	.5
87	MP4C	Mx	.006	.5
88	MP4C	X	0	5
89	MP4C	Z	11.506	5
90	MP4C	Mx	.006	5
91	MP2A	X	0	3
92	MP2A	Z	5.044	3
93	MP2A	Mx	0	3
94	MP2B	X	0	3
95	MP2B	Z	4.353	3
96	MP2B	Mx	.001	3
97	MP2C	X	0	3
98	MP2C	Z	3.372	3
99	MP2C	Mx	-.002	3
100	MP3A	X	0	3
101	MP3A	Z	5.044	3
102	MP3A	Mx	0	3
103	MP3B	X	0	3
104	MP3B	Z	4.089	3
105	MP3B	Mx	.001	3
106	MP3C	X	0	3
107	MP3C	Z	2.731	3
108	MP3C	Mx	-.001	3
109	MP1A	X	0	2.5
110	MP1A	Z	10.952	2.5
111	MP1A	Mx	0	2.5

Member Point Loads (BLC 34 : Antenna Wm (210 Deg))

	Member Label	Direction	Magnitude[lb,k-ft]	Location[ft,%]
1	MP2A	X	-5.398	.5
2	MP2A	Z	9.35	.5
3	MP2A	Mx	.008	.5
4	MP2A	X	-5.398	5
5	MP2A	Z	9.35	5
6	MP2A	Mx	.008	5
7	MP2B	X	-4.708	.5
8	MP2B	Z	8.155	.5
9	MP2B	Mx	-.006	.5
10	MP2B	X	-4.708	5
11	MP2B	Z	8.155	5
12	MP2B	Mx	-.006	5
13	MP2C	X	-4.828	.5
14	MP2C	Z	8.362	.5
15	MP2C	Mx	.001	.5
16	MP2C	X	-4.828	5
17	MP2C	Z	8.362	5
18	MP2C	Mx	.001	5
19	MP2A	X	-5.398	.5

Member Point Loads (BLC 34 : Antenna Wm (210 Deg)) (Continued)

	Member Label	Direction	Magnitude[lb,k-ft]	Location[ft,%]
20	MP2A	Z	9.35	.5
21	MP2A	Mx	-.004	.5
22	MP2A	X	-5.398	5
23	MP2A	Z	9.35	5
24	MP2A	Mx	-.004	5
25	MP2B	X	-4.708	.5
26	MP2B	Z	8.155	.5
27	MP2B	Mx	-.003	.5
28	MP2B	X	-4.708	5
29	MP2B	Z	8.155	5
30	MP2B	Mx	-.003	5
31	MP2C	X	-4.828	.5
32	MP2C	Z	8.362	.5
33	MP2C	Mx	.007	.5
34	MP2C	X	-4.828	5
35	MP2C	Z	8.362	5
36	MP2C	Mx	.007	5
37	MP3A	X	-2.955	2
38	MP3A	Z	5.118	2
39	MP3A	Mx	.001	2
40	MP3A	X	-2.955	3.5
41	MP3A	Z	5.118	3.5
42	MP3A	Mx	.001	3.5
43	MP3B	X	-1.472	2
44	MP3B	Z	2.55	2
45	MP3B	Mx	-.001	2
46	MP3B	X	-1.472	3.5
47	MP3B	Z	2.55	3.5
48	MP3B	Mx	-.001	3.5
49	MP3C	X	-1.73	2
50	MP3C	Z	2.996	2
51	MP3C	Mx	.001	2
52	MP3C	X	-1.73	3.5
53	MP3C	Z	2.996	3.5
54	MP3C	Mx	.001	3.5
55	MP1A	X	-3.271	.5
56	MP1A	Z	5.666	.5
57	MP1A	Mx	.001	.5
58	MP1A	X	-3.271	5
59	MP1A	Z	5.666	5
60	MP1A	Mx	.001	5
61	MP1B	X	-5.5	.5
62	MP1B	Z	9.527	.5
63	MP1B	Mx	-.005	.5
64	MP1B	X	-5.5	5
65	MP1B	Z	9.527	5
66	MP1B	Mx	-.005	5
67	MP1C	X	-4.638	.5
68	MP1C	Z	8.034	.5
69	MP1C	Mx	.004	.5
70	MP1C	X	-4.638	5
71	MP1C	Z	8.034	5

Member Point Loads (BLC 34 : Antenna Wm (210 Deg)) (Continued)

	Member Label	Direction	Magnitude[lb,k-ft]	Location[ft,%]
72	MP1C	Mx	.004	5
73	MP4A	X	-5.5	.5
74	MP4A	Z	9.527	.5
75	MP4A	Mx	-.005	.5
76	MP4A	X	-5.5	5
77	MP4A	Z	9.527	5
78	MP4A	Mx	-.005	5
79	MP4B	X	-5.5	.5
80	MP4B	Z	9.527	.5
81	MP4B	Mx	-.005	.5
82	MP4B	X	-5.5	5
83	MP4B	Z	9.527	5
84	MP4B	Mx	-.005	5
85	MP4C	X	-4.638	.5
86	MP4C	Z	8.034	.5
87	MP4C	Mx	.004	.5
88	MP4C	X	-4.638	5
89	MP4C	Z	8.034	5
90	MP4C	Mx	.004	5
91	MP2A	X	-2.313	3
92	MP2A	Z	4.007	3
93	MP2A	Mx	-.001	3
94	MP2B	X	-1.784	3
95	MP2B	Z	3.09	3
96	MP2B	Mx	.002	3
97	MP2C	X	-1.895	3
98	MP2C	Z	3.282	3
99	MP2C	Mx	-.002	3
100	MP3A	X	-2.233	3
101	MP3A	Z	3.868	3
102	MP3A	Mx	-.001	3
103	MP3B	X	-1.501	3
104	MP3B	Z	2.6	3
105	MP3B	Mx	.001	3
106	MP3C	X	-1.655	3
107	MP3C	Z	2.866	3
108	MP3C	Mx	-.001	3
109	MP1A	X	-5.152	2.5
110	MP1A	Z	8.923	2.5
111	MP1A	Mx	-.003	2.5

Member Point Loads (BLC 35 : Antenna Wm (240 Deg))

	Member Label	Direction	Magnitude[lb,k-ft]	Location[ft,%]
1	MP2A	X	-8.617	.5
2	MP2A	Z	4.975	.5
3	MP2A	Mx	.008	.5
4	MP2A	X	-8.617	5
5	MP2A	Z	4.975	5
6	MP2A	Mx	.008	5
7	MP2B	X	-8.02	.5
8	MP2B	Z	4.63	.5

Member Point Loads (BLC 35 : Antenna Wm (240 Deg)) (Continued)

	Member Label	Direction	Magnitude[lb,k-ft]	Location[ft,%]
9	MP2B	Mx	-.004	.5
10	MP2B	X	-8.02	5
11	MP2B	Z	4.63	5
12	MP2B	Mx	-.004	5
13	MP2C	X	-9.142	.5
14	MP2C	Z	5.278	.5
15	MP2C	Mx	-.003	.5
16	MP2C	X	-9.142	5
17	MP2C	Z	5.278	5
18	MP2C	Mx	-.003	5
19	MP2A	X	-8.617	.5
20	MP2A	Z	4.975	.5
21	MP2A	Mx	8e-5	.5
22	MP2A	X	-8.617	5
23	MP2A	Z	4.975	5
24	MP2A	Mx	8e-5	5
25	MP2B	X	-8.02	.5
26	MP2B	Z	4.63	.5
27	MP2B	Mx	-.005	.5
28	MP2B	X	-8.02	5
29	MP2B	Z	4.63	5
30	MP2B	Mx	-.005	5
31	MP2C	X	-9.142	.5
32	MP2C	Z	5.278	.5
33	MP2C	Mx	.008	.5
34	MP2C	X	-9.142	5
35	MP2C	Z	5.278	5
36	MP2C	Mx	.008	5
37	MP3A	X	-3.543	2
38	MP3A	Z	2.045	2
39	MP3A	Mx	.002	2
40	MP3A	X	-3.543	3.5
41	MP3A	Z	2.045	3.5
42	MP3A	Mx	.002	3.5
43	MP3B	X	-2.258	2
44	MP3B	Z	1.304	2
45	MP3B	Mx	-.001	2
46	MP3B	X	-2.258	3.5
47	MP3B	Z	1.304	3.5
48	MP3B	Mx	-.001	3.5
49	MP3C	X	-4.672	2
50	MP3C	Z	2.697	2
51	MP3C	Mx	.001	2
52	MP3C	X	-4.672	3.5
53	MP3C	Z	2.697	3.5
54	MP3C	Mx	.001	3.5
55	MP1A	X	-8.034	.5
56	MP1A	Z	4.638	.5
57	MP1A	Mx	.004	.5
58	MP1A	X	-8.034	5
59	MP1A	Z	4.638	5
60	MP1A	Mx	.004	5

Member Point Loads (BLC 35 : Antenna Wm (240 Deg)) (Continued)

	Member Label	Direction	Magnitude[lb,k-ft]	Location[ft,%]
61	MP1B	X	-9.964	.5
62	MP1B	Z	5.753	.5
63	MP1B	Mx	-.006	.5
64	MP1B	X	-9.964	5
65	MP1B	Z	5.753	5
66	MP1B	Mx	-.006	5
67	MP1C	X	-5.666	.5
68	MP1C	Z	3.271	.5
69	MP1C	Mx	.001	.5
70	MP1C	X	-5.666	5
71	MP1C	Z	3.271	5
72	MP1C	Mx	.001	5
73	MP4A	X	-9.964	.5
74	MP4A	Z	5.753	.5
75	MP4A	Mx	-.006	.5
76	MP4A	X	-9.964	5
77	MP4A	Z	5.753	5
78	MP4A	Mx	-.006	5
79	MP4B	X	-9.964	.5
80	MP4B	Z	5.753	.5
81	MP4B	Mx	-.006	.5
82	MP4B	X	-9.964	5
83	MP4B	Z	5.753	5
84	MP4B	Mx	-.006	5
85	MP4C	X	-5.666	.5
86	MP4C	Z	3.271	.5
87	MP4C	Mx	.001	.5
88	MP4C	X	-5.666	5
89	MP4C	Z	3.271	5
90	MP4C	Mx	.001	5
91	MP2A	X	-3.282	3
92	MP2A	Z	1.895	3
93	MP2A	Mx	-.002	3
94	MP2B	X	-2.964	3
95	MP2B	Z	1.711	3
96	MP2B	Mx	.002	3
97	MP2C	X	-4.007	3
98	MP2C	Z	2.313	3
99	MP2C	Mx	-.001	3
100	MP3A	X	-2.866	3
101	MP3A	Z	1.655	3
102	MP3A	Mx	-.001	3
103	MP3B	X	-2.426	3
104	MP3B	Z	1.401	3
105	MP3B	Mx	.001	3
106	MP3C	X	-3.868	3
107	MP3C	Z	2.233	3
108	MP3C	Mx	-.001	3
109	MP1A	X	-7.798	2.5
110	MP1A	Z	4.502	2.5
111	MP1A	Mx	-.004	2.5

Member Point Loads (BLC 36 : Antenna Wm (270 Deg))

	Member Label	Direction	Magnitude[lb,k-ft]	Location[ft,%]
1	MP2A	X	-9.26	.5
2	MP2A	Z	0	.5
3	MP2A	Mx	.005	.5
4	MP2A	X	-9.26	5
5	MP2A	Z	0	5
6	MP2A	Mx	.005	5
7	MP2B	X	-9.95	.5
8	MP2B	Z	0	.5
9	MP2B	Mx	-8e-5	.5
10	MP2B	X	-9.95	5
11	MP2B	Z	0	5
12	MP2B	Mx	-8e-5	5
13	MP2C	X	-11.007	.5
14	MP2C	Z	0	.5
15	MP2C	Mx	-.006	.5
16	MP2C	X	-11.007	5
17	MP2C	Z	0	5
18	MP2C	Mx	-.006	5
19	MP2A	X	-9.26	.5
20	MP2A	Z	0	.5
21	MP2A	Mx	.004	.5
22	MP2A	X	-9.26	5
23	MP2A	Z	0	5
24	MP2A	Mx	.004	5
25	MP2B	X	-9.95	.5
26	MP2B	Z	0	.5
27	MP2B	Mx	-.008	.5
28	MP2B	X	-9.95	5
29	MP2B	Z	0	5
30	MP2B	Mx	-.008	5
31	MP2C	X	-11.007	.5
32	MP2C	Z	0	.5
33	MP2C	Mx	.006	.5
34	MP2C	X	-11.007	5
35	MP2C	Z	0	5
36	MP2C	Mx	.006	5
37	MP3A	X	-2.608	2
38	MP3A	Z	0	2
39	MP3A	Mx	.001	2
40	MP3A	X	-2.608	3.5
41	MP3A	Z	0	3.5
42	MP3A	Mx	.001	3.5
43	MP3B	X	-4.091	2
44	MP3B	Z	0	2
45	MP3B	Mx	-.002	2
46	MP3B	X	-4.091	3.5
47	MP3B	Z	0	3.5
48	MP3B	Mx	-.002	3.5
49	MP3C	X	-6.363	2
50	MP3C	Z	0	2
51	MP3C	Mx	0	2
52	MP3C	X	-6.363	3.5

Member Point Loads (BLC 36 : Antenna Wm (270 Deg)) (Continued)

	Member Label	Direction	Magnitude[lb,k-ft]	Location[ft,%]
53	MP3C	Z	0	3.5
54	MP3C	Mx	0	3.5
55	MP1A	X	-11.506	.5
56	MP1A	Z	0	.5
57	MP1A	Mx	.006	.5
58	MP1A	X	-11.506	5
59	MP1A	Z	0	5
60	MP1A	Mx	.006	5
61	MP1B	X	-9.277	.5
62	MP1B	Z	0	.5
63	MP1B	Mx	-.004	.5
64	MP1B	X	-9.277	5
65	MP1B	Z	0	5
66	MP1B	Mx	-.004	5
67	MP1C	X	-6.038	.5
68	MP1C	Z	0	.5
69	MP1C	Mx	-.000524	.5
70	MP1C	X	-6.038	5
71	MP1C	Z	0	5
72	MP1C	Mx	-.000524	5
73	MP4A	X	-9.277	.5
74	MP4A	Z	0	.5
75	MP4A	Mx	-.004	.5
76	MP4A	X	-9.277	5
77	MP4A	Z	0	5
78	MP4A	Mx	-.004	5
79	MP4B	X	-9.277	.5
80	MP4B	Z	0	.5
81	MP4B	Mx	-.004	.5
82	MP4B	X	-9.277	5
83	MP4B	Z	0	5
84	MP4B	Mx	-.004	5
85	MP4C	X	-6.038	.5
86	MP4C	Z	0	.5
87	MP4C	Mx	-.000524	.5
88	MP4C	X	-6.038	5
89	MP4C	Z	0	5
90	MP4C	Mx	-.000524	5
91	MP2A	X	-3.372	3
92	MP2A	Z	0	3
93	MP2A	Mx	-.002	3
94	MP2B	X	-4.063	3
95	MP2B	Z	0	3
96	MP2B	Mx	.002	3
97	MP2C	X	-5.044	3
98	MP2C	Z	0	3
99	MP2C	Mx	0	3
100	MP3A	X	-2.731	3
101	MP3A	Z	0	3
102	MP3A	Mx	-.001	3
103	MP3B	X	-3.687	3
104	MP3B	Z	0	3

Member Point Loads (BLC 36 : Antenna Wm (270 Deg)) (Continued)

	Member Label	Direction	Magnitude[lb,k-ft]	Location[ft,%]
105	MP3B	Mx	.001	3
106	MP3C	X	-5.044	3
107	MP3C	Z	0	3
108	MP3C	Mx	0	3
109	MP1A	X	-8.356	2.5
110	MP1A	Z	0	2.5
111	MP1A	Mx	-.004	2.5

Member Point Loads (BLC 37 : Antenna Wm (300 Deg))

	Member Label	Direction	Magnitude[lb,k-ft]	Location[ft,%]
1	MP2A	X	-8.155	.5
2	MP2A	Z	-4.708	.5
3	MP2A	Mx	.003	.5
4	MP2A	X	-8.155	5
5	MP2A	Z	-4.708	5
6	MP2A	Mx	.003	5
7	MP2B	X	-9.35	.5
8	MP2B	Z	-5.398	.5
9	MP2B	Mx	.004	.5
10	MP2B	X	-9.35	5
11	MP2B	Z	-5.398	5
12	MP2B	Mx	.004	5
13	MP2C	X	-9.142	.5
14	MP2C	Z	-5.278	.5
15	MP2C	Mx	-.008	.5
16	MP2C	X	-9.142	5
17	MP2C	Z	-5.278	5
18	MP2C	Mx	-.008	5
19	MP2A	X	-8.155	.5
20	MP2A	Z	-4.708	.5
21	MP2A	Mx	.006	.5
22	MP2A	X	-8.155	5
23	MP2A	Z	-4.708	5
24	MP2A	Mx	.006	5
25	MP2B	X	-9.35	.5
26	MP2B	Z	-5.398	.5
27	MP2B	Mx	-.008	.5
28	MP2B	X	-9.35	5
29	MP2B	Z	-5.398	5
30	MP2B	Mx	-.008	5
31	MP2C	X	-9.142	.5
32	MP2C	Z	-5.278	.5
33	MP2C	Mx	.003	.5
34	MP2C	X	-9.142	5
35	MP2C	Z	-5.278	5
36	MP2C	Mx	.003	5
37	MP3A	X	-2.55	2
38	MP3A	Z	-1.472	2
39	MP3A	Mx	.001	2
40	MP3A	X	-2.55	3.5
41	MP3A	Z	-1.472	3.5

Member Point Loads (BLC 37 : Antenna Wm (300 Deg)) (Continued)

	Member Label	Direction	Magnitude[lb,k-ft]	Location[ft,%]
42	MP3A	Mx	.001	3.5
43	MP3B	X	-5.118	2
44	MP3B	Z	-2.955	2
45	MP3B	Mx	-.001	2
46	MP3B	X	-5.118	3.5
47	MP3B	Z	-2.955	3.5
48	MP3B	Mx	-.001	3.5
49	MP3C	X	-4.672	2
50	MP3C	Z	-2.697	2
51	MP3C	Mx	-.001	2
52	MP3C	X	-4.672	3.5
53	MP3C	Z	-2.697	3.5
54	MP3C	Mx	-.001	3.5
55	MP1A	X	-9.527	.5
56	MP1A	Z	-5.5	.5
57	MP1A	Mx	.005	.5
58	MP1A	X	-9.527	5
59	MP1A	Z	-5.5	5
60	MP1A	Mx	.005	5
61	MP1B	X	-5.666	.5
62	MP1B	Z	-3.271	.5
63	MP1B	Mx	-.001	.5
64	MP1B	X	-5.666	5
65	MP1B	Z	-3.271	5
66	MP1B	Mx	-.001	5
67	MP1C	X	-7.159	.5
68	MP1C	Z	-4.133	.5
69	MP1C	Mx	-.003	.5
70	MP1C	X	-7.159	5
71	MP1C	Z	-4.133	5
72	MP1C	Mx	-.003	5
73	MP4A	X	-5.666	.5
74	MP4A	Z	-3.271	.5
75	MP4A	Mx	-.001	.5
76	MP4A	X	-5.666	5
77	MP4A	Z	-3.271	5
78	MP4A	Mx	-.001	5
79	MP4B	X	-5.666	.5
80	MP4B	Z	-3.271	.5
81	MP4B	Mx	-.001	.5
82	MP4B	X	-5.666	5
83	MP4B	Z	-3.271	5
84	MP4B	Mx	-.001	5
85	MP4C	X	-7.159	.5
86	MP4C	Z	-4.133	.5
87	MP4C	Mx	-.003	.5
88	MP4C	X	-7.159	5
89	MP4C	Z	-4.133	5
90	MP4C	Mx	-.003	5
91	MP2A	X	-3.282	3
92	MP2A	Z	-1.895	3
93	MP2A	Mx	-.002	3

Member Point Loads (BLC 37 : Antenna Wm (300 Deg)) (Continued)

	Member Label	Direction	Magnitude[lb,k-ft]	Location[ft,%]
94	MP2B	X	-4.199	3
95	MP2B	Z	-2.424	3
96	MP2B	Mx	.000829	3
97	MP2C	X	-4.007	3
98	MP2C	Z	-2.313	3
99	MP2C	Mx	.001	3
100	MP3A	X	-2.866	3
101	MP3A	Z	-1.655	3
102	MP3A	Mx	-.001	3
103	MP3B	X	-4.134	3
104	MP3B	Z	-2.387	3
105	MP3B	Mx	.000816	3
106	MP3C	X	-3.868	3
107	MP3C	Z	-2.233	3
108	MP3C	Mx	.001	3
109	MP1A	X	-7.798	2.5
110	MP1A	Z	-4.502	2.5
111	MP1A	Mx	-.004	2.5

Member Point Loads (BLC 38 : Antenna Wm (330 Deg))

	Member Label	Direction	Magnitude[lb,k-ft]	Location[ft,%]
1	MP2A	X	-5.131	.5
2	MP2A	Z	-8.888	.5
3	MP2A	Mx	-.001	.5
4	MP2A	X	-5.131	5
5	MP2A	Z	-8.888	5
6	MP2A	Mx	-.001	5
7	MP2B	X	-5.476	.5
8	MP2B	Z	-9.485	.5
9	MP2B	Mx	.007	.5
10	MP2B	X	-5.476	5
11	MP2B	Z	-9.485	5
12	MP2B	Mx	.007	5
13	MP2C	X	-4.828	.5
14	MP2C	Z	-8.362	.5
15	MP2C	Mx	-.007	.5
16	MP2C	X	-4.828	5
17	MP2C	Z	-8.362	5
18	MP2C	Mx	-.007	5
19	MP2A	X	-5.131	.5
20	MP2A	Z	-8.888	.5
21	MP2A	Mx	.008	.5
22	MP2A	X	-5.131	5
23	MP2A	Z	-8.888	5
24	MP2A	Mx	.008	5
25	MP2B	X	-5.476	.5
26	MP2B	Z	-9.485	.5
27	MP2B	Mx	-.005	.5
28	MP2B	X	-5.476	5
29	MP2B	Z	-9.485	5
30	MP2B	Mx	-.005	5

Member Point Loads (BLC 38 : Antenna Wm (330 Deg)) (Continued)

	Member Label	Direction	Magnitude[lb,k-ft]	Location[ft,%]
31	MP2C	X	-4.828	.5
32	MP2C	Z	-8.362	.5
33	MP2C	Mx	-.001	.5
34	MP2C	X	-4.828	5
35	MP2C	Z	-8.362	5
36	MP2C	Mx	-.001	5
37	MP3A	X	-2.382	2
38	MP3A	Z	-4.125	2
39	MP3A	Mx	.002	2
40	MP3A	X	-2.382	3.5
41	MP3A	Z	-4.125	3.5
42	MP3A	Mx	.002	3.5
43	MP3B	X	-3.123	2
44	MP3B	Z	-5.409	2
45	MP3B	Mx	.000542	2
46	MP3B	X	-3.123	3.5
47	MP3B	Z	-5.409	3.5
48	MP3B	Mx	.000542	3.5
49	MP3C	X	-1.73	2
50	MP3C	Z	-2.996	2
51	MP3C	Mx	-.001	2
52	MP3C	X	-1.73	3.5
53	MP3C	Z	-2.996	3.5
54	MP3C	Mx	-.001	3.5
55	MP1A	X	-4.133	.5
56	MP1A	Z	-7.159	.5
57	MP1A	Mx	.003	.5
58	MP1A	X	-4.133	5
59	MP1A	Z	-7.159	5
60	MP1A	Mx	.003	5
61	MP1B	X	-3.019	.5
62	MP1B	Z	-5.229	.5
63	MP1B	Mx	.000524	.5
64	MP1B	X	-3.019	5
65	MP1B	Z	-5.229	5
66	MP1B	Mx	.000524	5
67	MP1C	X	-5.5	.5
68	MP1C	Z	-9.527	.5
69	MP1C	Mx	-.005	.5
70	MP1C	X	-5.5	5
71	MP1C	Z	-9.527	5
72	MP1C	Mx	-.005	5
73	MP4A	X	-3.019	.5
74	MP4A	Z	-5.229	.5
75	MP4A	Mx	.000524	.5
76	MP4A	X	-3.019	5
77	MP4A	Z	-5.229	5
78	MP4A	Mx	.000524	5
79	MP4B	X	-3.019	.5
80	MP4B	Z	-5.229	.5
81	MP4B	Mx	.000524	.5
82	MP4B	X	-3.019	5

Member Point Loads (BLC 38 : Antenna Wm (330 Deg)) (Continued)

	Member Label	Direction	Magnitude[lb,k-ft]	Location[ft,%]
83	MP4B	Z	-5.229	5
84	MP4B	Mx	.000524	5
85	MP4C	X	-5.5	.5
86	MP4C	Z	-9.527	.5
87	MP4C	Mx	-.005	.5
88	MP4C	X	-5.5	5
89	MP4C	Z	-9.527	5
90	MP4C	Mx	-.005	5
91	MP2A	X	-2.313	3
92	MP2A	Z	-4.007	3
93	MP2A	Mx	-.001	3
94	MP2B	X	-2.497	3
95	MP2B	Z	-4.325	3
96	MP2B	Mx	-.000434	3
97	MP2C	X	-1.895	3
98	MP2C	Z	-3.282	3
99	MP2C	Mx	.002	3
100	MP3A	X	-2.233	3
101	MP3A	Z	-3.868	3
102	MP3A	Mx	-.001	3
103	MP3B	X	-2.487	3
104	MP3B	Z	-4.308	3
105	MP3B	Mx	-.000432	3
106	MP3C	X	-1.655	3
107	MP3C	Z	-2.866	3
108	MP3C	Mx	.001	3
109	MP1A	X	-5.152	2.5
110	MP1A	Z	-8.923	2.5
111	MP1A	Mx	-.003	2.5

Member Point Loads (BLC 77 : Lm1)

	Member Label	Direction	Magnitude[lb,k-ft]	Location[ft,%]
1	M226	Y	-500	%100

Member Point Loads (BLC 78 : Lm2)

	Member Label	Direction	Magnitude[lb,k-ft]	Location[ft,%]
1	M228	Y	-500	%100

Member Point Loads (BLC 79 : Lv1)

	Member Label	Direction	Magnitude[lb,k-ft]	Location[ft,%]
1	M166	Y	-250	%50

Member Point Loads (BLC 80 : Lv2)

	Member Label	Direction	Magnitude[lb,k-ft]	Location[ft,%]
1	M148	Y	-250	0

Member Distributed Loads (BLC 40 : Structure Di)

	Member Label	Direction	Start Magnitude[lb/ft,...	End Magnitude[lb/ft,F...	Start Location[ft,%]	End Location[ft,%]
1	M1	Y	-6.724	-6.724	0	%100
2	M7	Y	-4.741	-4.741	0	%100
3	M8	Y	-18.959	-18.959	0	%100
4	M13	Y	-4.741	-4.741	0	%100
5	M14	Y	-2.59	-2.59	0	%100
6	M18	Y	-2.59	-2.59	0	%100
7	M25	Y	-6.457	-6.457	0	%100
8	M26	Y	-6.457	-6.457	0	%100
9	M31	Y	-6.457	-6.457	0	%100
10	M42A	Y	-4.741	-4.741	0	%100
11	M44A	Y	-4.741	-4.741	0	%100
12	M44	Y	-2.59	-2.59	0	%100
13	M46A	Y	-2.59	-2.59	0	%100
14	M46B	Y	-4.741	-4.741	0	%100
15	M34A	Y	-4.741	-4.741	0	%100
16	M35	Y	-4.741	-4.741	0	%100
17	M36	Y	-4.741	-4.741	0	%100
18	M38	Y	-6.457	-6.457	0	%100
19	M42	Y	-6.724	-6.724	0	%100
20	M47	Y	-4.741	-4.741	0	%100
21	M48	Y	-18.959	-18.959	0	%100
22	M50	Y	-4.741	-4.741	0	%100
23	M51	Y	-2.59	-2.59	0	%100
24	M53	Y	-2.59	-2.59	0	%100
25	M56	Y	-6.457	-6.457	0	%100
26	M57	Y	-6.457	-6.457	0	%100
27	M59	Y	-6.457	-6.457	0	%100
28	M61	Y	-4.741	-4.741	0	%100
29	M62	Y	-4.741	-4.741	0	%100
30	M64	Y	-2.59	-2.59	0	%100
31	M66	Y	-2.59	-2.59	0	%100
32	M67	Y	-4.741	-4.741	0	%100
33	M68	Y	-4.741	-4.741	0	%100
34	M69	Y	-4.741	-4.741	0	%100
35	M70	Y	-4.741	-4.741	0	%100
36	M79	Y	-6.457	-6.457	0	%100
37	M83	Y	-6.724	-6.724	0	%100
38	M88	Y	-4.741	-4.741	0	%100
39	M89	Y	-18.959	-18.959	0	%100
40	M91	Y	-4.741	-4.741	0	%100
41	M92	Y	-2.59	-2.59	0	%100
42	M94	Y	-2.59	-2.59	0	%100
43	M97	Y	-6.457	-6.457	0	%100
44	M98	Y	-6.457	-6.457	0	%100
45	M100	Y	-6.457	-6.457	0	%100
46	M102	Y	-4.741	-4.741	0	%100
47	M103	Y	-4.741	-4.741	0	%100
48	M105	Y	-2.59	-2.59	0	%100
49	M107	Y	-2.59	-2.59	0	%100
50	M108	Y	-4.741	-4.741	0	%100
51	M109	Y	-4.741	-4.741	0	%100

Member Distributed Loads (BLC 40 : Structure Di) (Continued)

	Member Label	Direction	Start Magnitude[lb/ft,...	End Magnitude[lb/ft,F...	Start Location[ft,%]	End Location[ft,%]
52	M110	Y	-4.741	-4.741	0	%100
53	M111	Y	-4.741	-4.741	0	%100
54	M118	Y	-6.457	-6.457	0	%100
55	M120	Y	-6.457	-6.457	0	%100
56	M121A	Y	-6.457	-6.457	0	%100
57	M126	Y	-6.457	-6.457	0	%100
58	M131	Y	-13.215	-13.215	0	%100
59	M134	Y	-13.215	-13.215	0	%100
60	M148	Y	-5.106	-5.106	0	%100
61	M152B	Y	-7.791	-7.791	0	%100
62	M155	Y	-11.762	-11.762	0	%100
63	M154	Y	-5.106	-5.106	0	%100
64	M157A	Y	-5.106	-5.106	0	%100
65	M160	Y	-11.762	-11.762	0	%100
66	M161	Y	-11.762	-11.762	0	%100
67	M162	Y	-11.762	-11.762	0	%100
68	M163	Y	-11.762	-11.762	0	%100
69	M164	Y	-11.762	-11.762	0	%100
70	M165	Y	-11.762	-11.762	0	%100
71	M166	Y	-5.106	-5.106	0	%100
72	M167	Y	-5.106	-5.106	0	%100
73	M168	Y	-5.106	-5.106	0	%100
74	M169	Y	-5.106	-5.106	0	%100
75	M170	Y	-5.106	-5.106	0	%100
76	M171	Y	-5.106	-5.106	0	%100
77	M174	Y	-5.758	-5.758	0	%100
78	M177	Y	-5.758	-5.758	0	%100
79	M180	Y	-5.758	-5.758	0	%100
80	M183	Y	-5.758	-5.758	0	%100
81	M186	Y	-5.758	-5.758	0	%100
82	M189	Y	-5.758	-5.758	0	%100
83	M504	Y	-5.106	-5.106	0	%100
84	M502	Y	-5.106	-5.106	0	%100
85	M501	Y	-5.106	-5.106	0	%100
86	M500	Y	-5.106	-5.106	0	%100
87	M506	Y	-5.106	-5.106	0	%100
88	M505	Y	-5.106	-5.106	0	%100
89	MP2A	Y	-5.825	-5.825	0	%100
90	MP3A	Y	-5.106	-5.106	0	%100
91	MP2C	Y	-5.825	-5.825	0	%100
92	MP2B	Y	-5.825	-5.825	0	%100
93	M223	Y	-13.215	-13.215	0	%100
94	M226A	Y	-13.215	-13.215	0	%100
95	M228A	Y	-7.791	-7.791	0	%100
96	M232A	Y	-13.215	-13.215	0	%100
97	M235	Y	-13.215	-13.215	0	%100
98	M237	Y	-7.791	-7.791	0	%100
99	M244	Y	-11.396	-11.396	0	%100
100	M245	Y	-11.396	-11.396	0	%100
101	M246	Y	-11.396	-11.396	0	%100
102	M249	Y	-5.825	-5.825	0	%100
103	MP1A	Y	-5.106	-5.106	0	%100

Member Distributed Loads (BLC 40 : Structure Di) (Continued)

	Member Label	Direction	Start Magnitude[lb/ft,...	End Magnitude[lb/ft,F...	Start Location[ft,%]	End Location[ft,%]
104	M271	Y	-7.791	-7.791	0	%100
105	M271B	Y	-11.762	-11.762	0	%100
106	M274A	Y	-11.762	-11.762	0	%100
107	M277	Y	-11.762	-11.762	0	%100
108	M280	Y	-11.762	-11.762	0	%100
109	M283	Y	-11.762	-11.762	0	%100
110	M265	Y	-5.825	-5.825	0	%100
111	M266	Y	-5.825	-5.825	0	%100
112	MP4A	Y	-5.106	-5.106	0	%100
113	MP3C	Y	-5.106	-5.106	0	%100
114	MP3B	Y	-5.106	-5.106	0	%100
115	MP1C	Y	-5.106	-5.106	0	%100
116	MP4C	Y	-5.106	-5.106	0	%100
117	MP1B	Y	-5.106	-5.106	0	%100
118	MP4B	Y	-5.106	-5.106	0	%100
119	M287	Y	-7.791	-7.791	0	%100
120	M288	Y	-7.791	-7.791	0	%100

Member Distributed Loads (BLC 41 : Structure Wo (0 Deg))

	Member Label	Direction	Start Magnitude[lb/ft,...	End Magnitude[lb/ft,F...	Start Location[ft,%]	End Location[ft,%]
1	M1	X	0	0	0	%100
2	M1	Z	0	0	0	%100
3	M7	X	0	0	0	%100
4	M7	Z	-8.644	-8.644	0	%100
5	M8	X	0	0	0	%100
6	M8	Z	-47.567	-47.567	0	%100
7	M13	X	0	0	0	%100
8	M13	Z	-1.795	-1.795	0	%100
9	M14	X	0	0	0	%100
10	M14	Z	0	0	0	%100
11	M18	X	0	0	0	%100
12	M18	Z	0	0	0	%100
13	M25	X	0	0	0	%100
14	M25	Z	0	0	0	%100
15	M26	X	0	0	0	%100
16	M26	Z	0	0	0	%100
17	M31	X	0	0	0	%100
18	M31	Z	-3.551	-3.551	0	%100
19	M42A	X	0	0	0	%100
20	M42A	Z	-8.644	-8.644	0	%100
21	M44A	X	0	0	0	%100
22	M44A	Z	-1.795	-1.795	0	%100
23	M44	X	0	0	0	%100
24	M44	Z	0	0	0	%100
25	M46A	X	0	0	0	%100
26	M46A	Z	0	0	0	%100
27	M46B	X	0	0	0	%100
28	M46B	Z	-7.245	-7.245	0	%100
29	M34A	X	0	0	0	%100
30	M34A	Z	-1.795	-1.795	0	%100
31	M35	X	0	0	0	%100

Member Distributed Loads (BLC 41 : Structure Wo (0 Deg)) (Continued)

	Member Label	Direction	Start Magnitude[lb/ft,...	End Magnitude[lb/ft,F...	Start Location[ft,%]	End Location[ft,%]
32	M35	Z	-1.795	-1.795	0	%100
33	M36	X	0	0	0	%100
34	M36	Z	-7.245	-7.245	0	%100
35	M38	X	0	0	0	%100
36	M38	Z	-3.551	-3.551	0	%100
37	M42	X	0	0	0	%100
38	M42	Z	-6.893	-6.893	0	%100
39	M47	X	0	0	0	%100
40	M47	Z	-2.161	-2.161	0	%100
41	M48	X	0	0	0	%100
42	M48	Z	-11.892	-11.892	0	%100
43	M50	X	0	0	0	%100
44	M50	Z	-7.179	-7.179	0	%100
45	M51	X	0	0	0	%100
46	M51	Z	-1.163	-1.163	0	%100
47	M53	X	0	0	0	%100
48	M53	Z	-1.163	-1.163	0	%100
49	M56	X	0	0	0	%100
50	M56	Z	-12.305	-12.305	0	%100
51	M57	X	0	0	0	%100
52	M57	Z	-12.305	-12.305	0	%100
53	M59	X	0	0	0	%100
54	M59	Z	-3.551	-3.551	0	%100
55	M61	X	0	0	0	%100
56	M61	Z	-2.161	-2.161	0	%100
57	M62	X	0	0	0	%100
58	M62	Z	-1.795	-1.795	0	%100
59	M64	X	0	0	0	%100
60	M64	Z	-1.163	-1.163	0	%100
61	M66	X	0	0	0	%100
62	M66	Z	-1.163	-1.163	0	%100
63	M67	X	0	0	0	%100
64	M67	Z	-1.811	-1.811	0	%100
65	M68	X	0	0	0	%100
66	M68	Z	-7.179	-7.179	0	%100
67	M69	X	0	0	0	%100
68	M69	Z	-1.795	-1.795	0	%100
69	M70	X	0	0	0	%100
70	M70	Z	-1.811	-1.811	0	%100
71	M79	X	0	0	0	%100
72	M79	Z	-14.204	-14.204	0	%100
73	M83	X	0	0	0	%100
74	M83	Z	-6.893	-6.893	0	%100
75	M88	X	0	0	0	%100
76	M88	Z	-2.161	-2.161	0	%100
77	M89	X	0	0	0	%100
78	M89	Z	-11.892	-11.892	0	%100
79	M91	X	0	0	0	%100
80	M91	Z	-1.795	-1.795	0	%100
81	M92	X	0	0	0	%100
82	M92	Z	-1.163	-1.163	0	%100
83	M94	X	0	0	0	%100

Member Distributed Loads (BLC 41 : Structure Wo (0 Deg)) (Continued)

	Member Label	Direction	Start Magnitude[lb/ft,...	End Magnitude[lb/ft,F...	Start Location[ft,%]	End Location[ft,%]
84	M94	Z	-1.163	-1.163	0	%100
85	M97	X	0	0	0	%100
86	M97	Z	-12.305	-12.305	0	%100
87	M98	X	0	0	0	%100
88	M98	Z	-12.305	-12.305	0	%100
89	M100	X	0	0	0	%100
90	M100	Z	-14.204	-14.204	0	%100
91	M102	X	0	0	0	%100
92	M102	Z	-2.161	-2.161	0	%100
93	M103	X	0	0	0	%100
94	M103	Z	-7.179	-7.179	0	%100
95	M105	X	0	0	0	%100
96	M105	Z	-1.163	-1.163	0	%100
97	M107	X	0	0	0	%100
98	M107	Z	-1.163	-1.163	0	%100
99	M108	X	0	0	0	%100
100	M108	Z	-1.811	-1.811	0	%100
101	M109	X	0	0	0	%100
102	M109	Z	-1.795	-1.795	0	%100
103	M110	X	0	0	0	%100
104	M110	Z	-7.179	-7.179	0	%100
105	M111	X	0	0	0	%100
106	M111	Z	-1.811	-1.811	0	%100
107	M118	X	0	0	0	%100
108	M118	Z	-15.856	-15.856	0	%100
109	M120	X	0	0	0	%100
110	M120	Z	-3.551	-3.551	0	%100
111	M121A	X	0	0	0	%100
112	M121A	Z	-3.964	-3.964	0	%100
113	M126	X	0	0	0	%100
114	M126	Z	-3.964	-3.964	0	%100
115	M131	X	0	0	0	%100
116	M131	Z	-1.982	-1.982	0	%100
117	M134	X	0	0	0	%100
118	M134	Z	-1.982	-1.982	0	%100
119	M148	X	0	0	0	%100
120	M148	Z	-9.414	-9.414	0	%100
121	M152B	X	0	0	0	%100
122	M152B	Z	-11.616	-11.616	0	%100
123	M155	X	0	0	0	%100
124	M155	Z	-1.901	-1.901	0	%100
125	M154	X	0	0	0	%100
126	M154	Z	-2.354	-2.354	0	%100
127	M157A	X	0	0	0	%100
128	M157A	Z	-2.354	-2.354	0	%100
129	M160	X	0	0	0	%100
130	M160	Z	-28.056	-28.056	0	%100
131	M161	X	0	0	0	%100
132	M161	Z	-28.056	-28.056	0	%100
133	M162	X	0	0	0	%100
134	M162	Z	-7.014	-7.014	0	%100
135	M163	X	0	0	0	%100

Member Distributed Loads (BLC 41 : Structure Wo (0 Deg)) (Continued)

	Member Label	Direction	Start Magnitude[lb/ft,...	End Magnitude[lb/ft,F...	Start Location[ft,%]	End Location[ft,%]
136	M163	Z	-7.014	-7.014	0	%100
137	M164	X	0	0	0	%100
138	M164	Z	-7.014	-7.014	0	%100
139	M165	X	0	0	0	%100
140	M165	Z	-7.014	-7.014	0	%100
141	M166	X	0	0	0	%100
142	M166	Z	-8.726	-8.726	0	%100
143	M167	X	0	0	0	%100
144	M167	Z	-2.182	-2.182	0	%100
145	M168	X	0	0	0	%100
146	M168	Z	-2.182	-2.182	0	%100
147	M169	X	0	0	0	%100
148	M169	Z	-9.414	-9.414	0	%100
149	M170	X	0	0	0	%100
150	M170	Z	-2.354	-2.354	0	%100
151	M171	X	0	0	0	%100
152	M171	Z	-2.354	-2.354	0	%100
153	M174	X	0	0	0	%100
154	M174	Z	-10.02	-10.02	0	%100
155	M177	X	0	0	0	%100
156	M177	Z	-10.02	-10.02	0	%100
157	M180	X	0	0	0	%100
158	M180	Z	-2.505	-2.505	0	%100
159	M183	X	0	0	0	%100
160	M183	Z	-2.505	-2.505	0	%100
161	M186	X	0	0	0	%100
162	M186	Z	-2.505	-2.505	0	%100
163	M189	X	0	0	0	%100
164	M189	Z	-2.505	-2.505	0	%100
165	M504	X	0	0	0	%100
166	M504	Z	-9.414	-9.414	0	%100
167	M502	X	0	0	0	%100
168	M502	Z	-9.414	-9.414	0	%100
169	M501	X	0	0	0	%100
170	M501	Z	-9.414	-9.414	0	%100
171	M500	X	0	0	0	%100
172	M500	Z	-9.414	-9.414	0	%100
173	M506	X	0	0	0	%100
174	M506	Z	-9.414	-9.414	0	%100
175	M505	X	0	0	0	%100
176	M505	Z	-9.414	-9.414	0	%100
177	MP2A	X	0	0	0	%100
178	MP2A	Z	-11.396	-11.396	0	%100
179	MP3A	X	0	0	0	%100
180	MP3A	Z	-9.414	-9.414	0	%100
181	MP2C	X	0	0	0	%100
182	MP2C	Z	-11.396	-11.396	0	%100
183	MP2B	X	0	0	0	%100
184	MP2B	Z	-11.396	-11.396	0	%100
185	M223	X	0	0	0	%100
186	M223	Z	-10.364	-10.364	0	%100
187	M226A	X	0	0	0	%100

Member Distributed Loads (BLC 41 : Structure Wo (0 Deg)) (Continued)

	Member Label	Direction	Start Magnitude[lb/ft,...	End Magnitude[lb/ft,F...	Start Location[ft,%]	End Location[ft,%]
188	M226A	Z	-10.364	-10.364	0	%100
189	M228A	X	0	0	0	%100
190	M228A	Z	-2.904	-2.904	0	%100
191	M232A	X	0	0	0	%100
192	M232A	Z	-10.364	-10.364	0	%100
193	M235	X	0	0	0	%100
194	M235	Z	-10.364	-10.364	0	%100
195	M237	X	0	0	0	%100
196	M237	Z	-2.904	-2.904	0	%100
197	M244	X	0	0	0	%100
198	M244	Z	-17.803	-17.803	0	%100
199	M245	X	0	0	0	%100
200	M245	Z	-17.974	-17.974	0	%100
201	M246	X	0	0	0	%100
202	M246	Z	-17.974	-17.974	0	%100
203	M249	X	0	0	0	%100
204	M249	Z	-11.396	-11.396	0	%100
205	MP1A	X	0	0	0	%100
206	MP1A	Z	-9.414	-9.414	0	%100
207	M271	X	0	0	0	%100
208	M271	Z	-3.245	-3.245	0	%100
209	M271B	X	0	0	0	%100
210	M271B	Z	-1.901	-1.901	0	%100
211	M274A	X	0	0	0	%100
212	M274A	Z	-14.188	-14.188	0	%100
213	M277	X	0	0	0	%100
214	M277	Z	-26.475	-26.475	0	%100
215	M280	X	0	0	0	%100
216	M280	Z	-26.475	-26.475	0	%100
217	M283	X	0	0	0	%100
218	M283	Z	-14.188	-14.188	0	%100
219	M265	X	0	0	0	%100
220	M265	Z	-2.849	-2.849	0	%100
221	M266	X	0	0	0	%100
222	M266	Z	-2.849	-2.849	0	%100
223	MP4A	X	0	0	0	%100
224	MP4A	Z	-9.414	-9.414	0	%100
225	MP3C	X	0	0	0	%100
226	MP3C	Z	-9.414	-9.414	0	%100
227	MP3B	X	0	0	0	%100
228	MP3B	Z	-9.414	-9.414	0	%100
229	MP1C	X	0	0	0	%100
230	MP1C	Z	-9.414	-9.414	0	%100
231	MP4C	X	0	0	0	%100
232	MP4C	Z	-9.414	-9.414	0	%100
233	MP1B	X	0	0	0	%100
234	MP1B	Z	-9.414	-9.414	0	%100
235	MP4B	X	0	0	0	%100
236	MP4B	Z	-9.414	-9.414	0	%100
237	M287	X	0	0	0	%100
238	M287	Z	-12.978	-12.978	0	%100
239	M288	X	0	0	0	%100

Member Distributed Loads (BLC 41 : Structure Wo (0 Deg)) (Continued)

	Member Label	Direction	Start Magnitude[lb/ft,...	End Magnitude[lb/ft,F...	Start Location[ft,%]	End Location[ft,%]
240	M288	Z	-3.245	-3.245	0	%100

Member Distributed Loads (BLC 42 : Structure Wo (30 Deg))

	Member Label	Direction	Start Magnitude[lb/ft,...	End Magnitude[lb/ft,F...	Start Location[ft,%]	End Location[ft,%]
1	M1	X	1.149	1.149	0	%100
2	M1	Z	-1.99	-1.99	0	%100
3	M7	X	3.241	3.241	0	%100
4	M7	Z	-5.614	-5.614	0	%100
5	M8	X	17.838	17.838	0	%100
6	M8	Z	-30.896	-30.896	0	%100
7	M13	X	0	0	0	%100
8	M13	Z	0	0	0	%100
9	M14	X	.194	.194	0	%100
10	M14	Z	-.336	-.336	0	%100
11	M18	X	.194	.194	0	%100
12	M18	Z	-.336	-.336	0	%100
13	M25	X	2.051	2.051	0	%100
14	M25	Z	-3.552	-3.552	0	%100
15	M26	X	2.051	2.051	0	%100
16	M26	Z	-3.552	-3.552	0	%100
17	M31	X	5.327	5.327	0	%100
18	M31	Z	-9.226	-9.226	0	%100
19	M42A	X	3.241	3.241	0	%100
20	M42A	Z	-5.614	-5.614	0	%100
21	M44A	X	2.692	2.692	0	%100
22	M44A	Z	-4.663	-4.663	0	%100
23	M44	X	.194	.194	0	%100
24	M44	Z	-.336	-.336	0	%100
25	M46A	X	.194	.194	0	%100
26	M46A	Z	-.336	-.336	0	%100
27	M46B	X	2.717	2.717	0	%100
28	M46B	Z	-4.706	-4.706	0	%100
29	M34A	X	0	0	0	%100
30	M34A	Z	0	0	0	%100
31	M35	X	2.692	2.692	0	%100
32	M35	Z	-4.663	-4.663	0	%100
33	M36	X	2.717	2.717	0	%100
34	M36	Z	-4.706	-4.706	0	%100
35	M38	X	0	0	0	%100
36	M38	Z	0	0	0	%100
37	M42	X	1.149	1.149	0	%100
38	M42	Z	-1.99	-1.99	0	%100
39	M47	X	3.241	3.241	0	%100
40	M47	Z	-5.614	-5.614	0	%100
41	M48	X	17.838	17.838	0	%100
42	M48	Z	-30.896	-30.896	0	%100
43	M50	X	2.692	2.692	0	%100
44	M50	Z	-4.663	-4.663	0	%100
45	M51	X	.194	.194	0	%100
46	M51	Z	-.336	-.336	0	%100
47	M53	X	.194	.194	0	%100

Member Distributed Loads (BLC 42 : Structure Wo (30 Deg)) (Continued)

	Member Label	Direction	Start Magnitude[lb/ft,...	End Magnitude[lb/ft,F...	Start Location[ft,%]	End Location[ft,%]
48	M53	Z	-.336	-.336	0	%100
49	M56	X	2.051	2.051	0	%100
50	M56	Z	-3.552	-3.552	0	%100
51	M57	X	2.051	2.051	0	%100
52	M57	Z	-3.552	-3.552	0	%100
53	M59	X	0	0	0	%100
54	M59	Z	0	0	0	%100
55	M61	X	3.241	3.241	0	%100
56	M61	Z	-5.614	-5.614	0	%100
57	M62	X	0	0	0	%100
58	M62	Z	0	0	0	%100
59	M64	X	.194	.194	0	%100
60	M64	Z	-.336	-.336	0	%100
61	M66	X	.194	.194	0	%100
62	M66	Z	-.336	-.336	0	%100
63	M67	X	2.717	2.717	0	%100
64	M67	Z	-4.706	-4.706	0	%100
65	M68	X	2.692	2.692	0	%100
66	M68	Z	-4.663	-4.663	0	%100
67	M69	X	0	0	0	%100
68	M69	Z	0	0	0	%100
69	M70	X	2.717	2.717	0	%100
70	M70	Z	-4.706	-4.706	0	%100
71	M79	X	5.327	5.327	0	%100
72	M79	Z	-9.226	-9.226	0	%100
73	M83	X	4.595	4.595	0	%100
74	M83	Z	-7.959	-7.959	0	%100
75	M88	X	0	0	0	%100
76	M88	Z	0	0	0	%100
77	M89	X	0	0	0	%100
78	M89	Z	0	0	0	%100
79	M91	X	2.692	2.692	0	%100
80	M91	Z	-4.663	-4.663	0	%100
81	M92	X	.775	.775	0	%100
82	M92	Z	-1.343	-1.343	0	%100
83	M94	X	.775	.775	0	%100
84	M94	Z	-1.343	-1.343	0	%100
85	M97	X	8.203	8.203	0	%100
86	M97	Z	-14.208	-14.208	0	%100
87	M98	X	8.203	8.203	0	%100
88	M98	Z	-14.208	-14.208	0	%100
89	M100	X	5.327	5.327	0	%100
90	M100	Z	-9.226	-9.226	0	%100
91	M102	X	0	0	0	%100
92	M102	Z	0	0	0	%100
93	M103	X	2.692	2.692	0	%100
94	M103	Z	-4.663	-4.663	0	%100
95	M105	X	.775	.775	0	%100
96	M105	Z	-1.343	-1.343	0	%100
97	M107	X	.775	.775	0	%100
98	M107	Z	-1.343	-1.343	0	%100
99	M108	X	0	0	0	%100

Member Distributed Loads (BLC 42 : Structure Wo (30 Deg)) (Continued)

	Member Label	Direction	Start Magnitude[lb/ft,...	End Magnitude[lb/ft,F...	Start Location[ft,%]	End Location[ft,%]
100	M108	Z	0	0	0	%100
101	M109	X	2.692	2.692	0	%100
102	M109	Z	-4.663	-4.663	0	%100
103	M110	X	2.692	2.692	0	%100
104	M110	Z	-4.663	-4.663	0	%100
105	M111	X	0	0	0	%100
106	M111	Z	0	0	0	%100
107	M118	X	5.946	5.946	0	%100
108	M118	Z	-10.299	-10.299	0	%100
109	M120	X	5.327	5.327	0	%100
110	M120	Z	-9.226	-9.226	0	%100
111	M121A	X	5.946	5.946	0	%100
112	M121A	Z	-10.299	-10.299	0	%100
113	M126	X	0	0	0	%100
114	M126	Z	0	0	0	%100
115	M131	X	7.24	7.24	0	%100
116	M131	Z	-12.539	-12.539	0	%100
117	M134	X	7.24	7.24	0	%100
118	M134	Z	-12.539	-12.539	0	%100
119	M148	X	3.53	3.53	0	%100
120	M148	Z	-6.115	-6.115	0	%100
121	M152B	X	4.356	4.356	0	%100
122	M152B	Z	-7.545	-7.545	0	%100
123	M155	X	7.094	7.094	0	%100
124	M155	Z	-12.287	-12.287	0	%100
125	M154	X	3.53	3.53	0	%100
126	M154	Z	-6.115	-6.115	0	%100
127	M157A	X	0	0	0	%100
128	M157A	Z	0	0	0	%100
129	M160	X	10.521	10.521	0	%100
130	M160	Z	-18.223	-18.223	0	%100
131	M161	X	10.521	10.521	0	%100
132	M161	Z	-18.223	-18.223	0	%100
133	M162	X	10.521	10.521	0	%100
134	M162	Z	-18.223	-18.223	0	%100
135	M163	X	10.521	10.521	0	%100
136	M163	Z	-18.223	-18.223	0	%100
137	M164	X	0	0	0	%100
138	M164	Z	0	0	0	%100
139	M165	X	0	0	0	%100
140	M165	Z	0	0	0	%100
141	M166	X	3.272	3.272	0	%100
142	M166	Z	-5.668	-5.668	0	%100
143	M167	X	3.272	3.272	0	%100
144	M167	Z	-5.668	-5.668	0	%100
145	M168	X	0	0	0	%100
146	M168	Z	0	0	0	%100
147	M169	X	3.53	3.53	0	%100
148	M169	Z	-6.115	-6.115	0	%100
149	M170	X	3.53	3.53	0	%100
150	M170	Z	-6.115	-6.115	0	%100
151	M171	X	0	0	0	%100

Member Distributed Loads (BLC 42 : Structure Wo (30 Deg)) (Continued)

	Member Label	Direction	Start Magnitude[lb/ft,...	End Magnitude[lb/ft,F...	Start Location[ft,%]	End Location[ft,%]
152	M171	Z	0	0	0	%100
153	M174	X	3.757	3.757	0	%100
154	M174	Z	-6.508	-6.508	0	%100
155	M177	X	3.757	3.757	0	%100
156	M177	Z	-6.508	-6.508	0	%100
157	M180	X	3.757	3.757	0	%100
158	M180	Z	-6.508	-6.508	0	%100
159	M183	X	3.757	3.757	0	%100
160	M183	Z	-6.508	-6.508	0	%100
161	M186	X	0	0	0	%100
162	M186	Z	0	0	0	%100
163	M189	X	0	0	0	%100
164	M189	Z	0	0	0	%100
165	M504	X	4.707	4.707	0	%100
166	M504	Z	-8.153	-8.153	0	%100
167	M502	X	4.707	4.707	0	%100
168	M502	Z	-8.153	-8.153	0	%100
169	M501	X	4.707	4.707	0	%100
170	M501	Z	-8.153	-8.153	0	%100
171	M500	X	4.707	4.707	0	%100
172	M500	Z	-8.153	-8.153	0	%100
173	M506	X	4.707	4.707	0	%100
174	M506	Z	-8.153	-8.153	0	%100
175	M505	X	4.707	4.707	0	%100
176	M505	Z	-8.153	-8.153	0	%100
177	MP2A	X	5.698	5.698	0	%100
178	MP2A	Z	-9.869	-9.869	0	%100
179	MP3A	X	4.707	4.707	0	%100
180	MP3A	Z	-8.153	-8.153	0	%100
181	MP2C	X	5.698	5.698	0	%100
182	MP2C	Z	-9.869	-9.869	0	%100
183	MP2B	X	5.698	5.698	0	%100
184	MP2B	Z	-9.869	-9.869	0	%100
185	M223	X	12.298	12.298	0	%100
186	M223	Z	-21.3	-21.3	0	%100
187	M226A	X	12.298	12.298	0	%100
188	M226A	Z	-21.3	-21.3	0	%100
189	M228A	X	4.356	4.356	0	%100
190	M228A	Z	-7.545	-7.545	0	%100
191	M232A	X	1.624	1.624	0	%100
192	M232A	Z	-2.813	-2.813	0	%100
193	M235	X	1.624	1.624	0	%100
194	M235	Z	-2.813	-2.813	0	%100
195	M237	X	0	0	0	%100
196	M237	Z	0	0	0	%100
197	M244	X	8.93	8.93	0	%100
198	M244	Z	-15.467	-15.467	0	%100
199	M245	X	8.93	8.93	0	%100
200	M245	Z	-15.467	-15.467	0	%100
201	M246	X	9.016	9.016	0	%100
202	M246	Z	-15.615	-15.615	0	%100
203	M249	X	4.274	4.274	0	%100

Member Distributed Loads (BLC 42 : Structure Wo (30 Deg)) (Continued)

	Member Label	Direction	Start Magnitude[lb/ft,...	End Magnitude[lb/ft,F...	Start Location[ft,%]	End Location[ft,%]
204	M249	Z	-7.402	-7.402	0	%100
205	MP1A	X	4.707	4.707	0	%100
206	MP1A	Z	-8.153	-8.153	0	%100
207	M271	X	0	0	0	%100
208	M271	Z	0	0	0	%100
209	M271B	X	.95	.95	0	%100
210	M271B	Z	-1.646	-1.646	0	%100
211	M274A	X	.95	.95	0	%100
212	M274A	Z	-1.646	-1.646	0	%100
213	M277	X	7.094	7.094	0	%100
214	M277	Z	-12.287	-12.287	0	%100
215	M280	X	13.237	13.237	0	%100
216	M280	Z	-22.928	-22.928	0	%100
217	M283	X	13.237	13.237	0	%100
218	M283	Z	-22.928	-22.928	0	%100
219	M265	X	4.274	4.274	0	%100
220	M265	Z	-7.402	-7.402	0	%100
221	M266	X	0	0	0	%100
222	M266	Z	0	0	0	%100
223	MP4A	X	4.707	4.707	0	%100
224	MP4A	Z	-8.153	-8.153	0	%100
225	MP3C	X	4.707	4.707	0	%100
226	MP3C	Z	-8.153	-8.153	0	%100
227	MP3B	X	4.707	4.707	0	%100
228	MP3B	Z	-8.153	-8.153	0	%100
229	MP1C	X	4.707	4.707	0	%100
230	MP1C	Z	-8.153	-8.153	0	%100
231	MP4C	X	4.707	4.707	0	%100
232	MP4C	Z	-8.153	-8.153	0	%100
233	MP1B	X	4.707	4.707	0	%100
234	MP1B	Z	-8.153	-8.153	0	%100
235	MP4B	X	4.707	4.707	0	%100
236	MP4B	Z	-8.153	-8.153	0	%100
237	M287	X	4.867	4.867	0	%100
238	M287	Z	-8.43	-8.43	0	%100
239	M288	X	4.867	4.867	0	%100
240	M288	Z	-8.43	-8.43	0	%100

Member Distributed Loads (BLC 43 : Structure Wo (60 Deg))

	Member Label	Direction	Start Magnitude[lb/ft,...	End Magnitude[lb/ft,F...	Start Location[ft,%]	End Location[ft,%]
1	M1	X	5.969	5.969	0	%100
2	M1	Z	-3.446	-3.446	0	%100
3	M7	X	1.871	1.871	0	%100
4	M7	Z	-1.08	-1.08	0	%100
5	M8	X	10.299	10.299	0	%100
6	M8	Z	-5.946	-5.946	0	%100
7	M13	X	1.554	1.554	0	%100
8	M13	Z	-.897	-.897	0	%100
9	M14	X	1.007	1.007	0	%100
10	M14	Z	-.582	-.582	0	%100
11	M18	X	1.007	1.007	0	%100

Member Distributed Loads (BLC 43 : Structure Wo (60 Deg)) (Continued)

	Member Label	Direction	Start Magnitude[lb/ft,...	End Magnitude[lb/ft,F...	Start Location[ft,%]	End Location[ft,%]
12	M18	Z	-.582	-.582	0	%100
13	M25	X	10.656	10.656	0	%100
14	M25	Z	-6.152	-6.152	0	%100
15	M26	X	10.656	10.656	0	%100
16	M26	Z	-6.152	-6.152	0	%100
17	M31	X	12.301	12.301	0	%100
18	M31	Z	-7.102	-7.102	0	%100
19	M42A	X	1.871	1.871	0	%100
20	M42A	Z	-1.08	-1.08	0	%100
21	M44A	X	6.217	6.217	0	%100
22	M44A	Z	-3.59	-3.59	0	%100
23	M44	X	1.007	1.007	0	%100
24	M44	Z	-.582	-.582	0	%100
25	M46A	X	1.007	1.007	0	%100
26	M46A	Z	-.582	-.582	0	%100
27	M46B	X	1.569	1.569	0	%100
28	M46B	Z	-.906	-.906	0	%100
29	M34A	X	1.554	1.554	0	%100
30	M34A	Z	-.897	-.897	0	%100
31	M35	X	6.217	6.217	0	%100
32	M35	Z	-3.59	-3.59	0	%100
33	M36	X	1.569	1.569	0	%100
34	M36	Z	-.906	-.906	0	%100
35	M38	X	3.075	3.075	0	%100
36	M38	Z	-1.776	-1.776	0	%100
37	M42	X	0	0	0	%100
38	M42	Z	0	0	0	%100
39	M47	X	7.486	7.486	0	%100
40	M47	Z	-4.322	-4.322	0	%100
41	M48	X	41.194	41.194	0	%100
42	M48	Z	-23.784	-23.784	0	%100
43	M50	X	1.554	1.554	0	%100
44	M50	Z	-.897	-.897	0	%100
45	M51	X	0	0	0	%100
46	M51	Z	0	0	0	%100
47	M53	X	0	0	0	%100
48	M53	Z	0	0	0	%100
49	M56	X	0	0	0	%100
50	M56	Z	0	0	0	%100
51	M57	X	0	0	0	%100
52	M57	Z	0	0	0	%100
53	M59	X	3.075	3.075	0	%100
54	M59	Z	-1.776	-1.776	0	%100
55	M61	X	7.486	7.486	0	%100
56	M61	Z	-4.322	-4.322	0	%100
57	M62	X	1.554	1.554	0	%100
58	M62	Z	-.897	-.897	0	%100
59	M64	X	0	0	0	%100
60	M64	Z	0	0	0	%100
61	M66	X	0	0	0	%100
62	M66	Z	0	0	0	%100
63	M67	X	6.274	6.274	0	%100

Member Distributed Loads (BLC 43 : Structure Wo (60 Deg)) (Continued)

	Member Label	Direction	Start Magnitude[lb/ft,...	End Magnitude[lb/ft,F...	Start Location[ft,%]	End Location[ft,%]
64	M67	Z	-3.622	-3.622	0	%100
65	M68	X	1.554	1.554	0	%100
66	M68	Z	-.897	-.897	0	%100
67	M69	X	1.554	1.554	0	%100
68	M69	Z	-.897	-.897	0	%100
69	M70	X	6.274	6.274	0	%100
70	M70	Z	-3.622	-3.622	0	%100
71	M79	X	3.075	3.075	0	%100
72	M79	Z	-1.776	-1.776	0	%100
73	M83	X	5.969	5.969	0	%100
74	M83	Z	-3.446	-3.446	0	%100
75	M88	X	1.871	1.871	0	%100
76	M88	Z	-1.08	-1.08	0	%100
77	M89	X	10.299	10.299	0	%100
78	M89	Z	-5.946	-5.946	0	%100
79	M91	X	6.217	6.217	0	%100
80	M91	Z	-3.59	-3.59	0	%100
81	M92	X	1.007	1.007	0	%100
82	M92	Z	-.582	-.582	0	%100
83	M94	X	1.007	1.007	0	%100
84	M94	Z	-.582	-.582	0	%100
85	M97	X	10.656	10.656	0	%100
86	M97	Z	-6.152	-6.152	0	%100
87	M98	X	10.656	10.656	0	%100
88	M98	Z	-6.152	-6.152	0	%100
89	M100	X	3.075	3.075	0	%100
90	M100	Z	-1.776	-1.776	0	%100
91	M102	X	1.871	1.871	0	%100
92	M102	Z	-1.08	-1.08	0	%100
93	M103	X	1.554	1.554	0	%100
94	M103	Z	-.897	-.897	0	%100
95	M105	X	1.007	1.007	0	%100
96	M105	Z	-.582	-.582	0	%100
97	M107	X	1.007	1.007	0	%100
98	M107	Z	-.582	-.582	0	%100
99	M108	X	1.569	1.569	0	%100
100	M108	Z	-.906	-.906	0	%100
101	M109	X	6.217	6.217	0	%100
102	M109	Z	-3.59	-3.59	0	%100
103	M110	X	1.554	1.554	0	%100
104	M110	Z	-.897	-.897	0	%100
105	M111	X	1.569	1.569	0	%100
106	M111	Z	-.906	-.906	0	%100
107	M118	X	3.433	3.433	0	%100
108	M118	Z	-1.982	-1.982	0	%100
109	M120	X	12.301	12.301	0	%100
110	M120	Z	-7.102	-7.102	0	%100
111	M121A	X	13.731	13.731	0	%100
112	M121A	Z	-7.928	-7.928	0	%100
113	M126	X	3.433	3.433	0	%100
114	M126	Z	-1.982	-1.982	0	%100
115	M131	X	34.186	34.186	0	%100

Member Distributed Loads (BLC 43 : Structure Wo (60 Deg)) (Continued)

	Member Label	Direction	Start Magnitude[lb/ft,...	End Magnitude[lb/ft,F...	Start Location[ft,%]	End Location[ft,%]
116	M131	Z	-19.737	-19.737	0	%100
117	M134	X	34.186	34.186	0	%100
118	M134	Z	-19.737	-19.737	0	%100
119	M148	X	2.038	2.038	0	%100
120	M148	Z	-1.177	-1.177	0	%100
121	M152B	X	2.515	2.515	0	%100
122	M152B	Z	-1.452	-1.452	0	%100
123	M155	X	22.928	22.928	0	%100
124	M155	Z	-13.237	-13.237	0	%100
125	M154	X	8.153	8.153	0	%100
126	M154	Z	-4.707	-4.707	0	%100
127	M157A	X	2.038	2.038	0	%100
128	M157A	Z	-1.177	-1.177	0	%100
129	M160	X	6.074	6.074	0	%100
130	M160	Z	-3.507	-3.507	0	%100
131	M161	X	6.074	6.074	0	%100
132	M161	Z	-3.507	-3.507	0	%100
133	M162	X	24.297	24.297	0	%100
134	M162	Z	-14.028	-14.028	0	%100
135	M163	X	24.297	24.297	0	%100
136	M163	Z	-14.028	-14.028	0	%100
137	M164	X	6.074	6.074	0	%100
138	M164	Z	-3.507	-3.507	0	%100
139	M165	X	6.074	6.074	0	%100
140	M165	Z	-3.507	-3.507	0	%100
141	M166	X	1.889	1.889	0	%100
142	M166	Z	-1.091	-1.091	0	%100
143	M167	X	7.557	7.557	0	%100
144	M167	Z	-4.363	-4.363	0	%100
145	M168	X	1.889	1.889	0	%100
146	M168	Z	-1.091	-1.091	0	%100
147	M169	X	2.038	2.038	0	%100
148	M169	Z	-1.177	-1.177	0	%100
149	M170	X	8.153	8.153	0	%100
150	M170	Z	-4.707	-4.707	0	%100
151	M171	X	2.038	2.038	0	%100
152	M171	Z	-1.177	-1.177	0	%100
153	M174	X	2.169	2.169	0	%100
154	M174	Z	-1.252	-1.252	0	%100
155	M177	X	2.169	2.169	0	%100
156	M177	Z	-1.252	-1.252	0	%100
157	M180	X	8.678	8.678	0	%100
158	M180	Z	-5.01	-5.01	0	%100
159	M183	X	8.678	8.678	0	%100
160	M183	Z	-5.01	-5.01	0	%100
161	M186	X	2.169	2.169	0	%100
162	M186	Z	-1.252	-1.252	0	%100
163	M189	X	2.169	2.169	0	%100
164	M189	Z	-1.252	-1.252	0	%100
165	M504	X	8.153	8.153	0	%100
166	M504	Z	-4.707	-4.707	0	%100
167	M502	X	8.153	8.153	0	%100

Member Distributed Loads (BLC 43 : Structure Wo (60 Deg)) (Continued)

	Member Label	Direction	Start Magnitude[lb/ft,...	End Magnitude[lb/ft,F...	Start Location[ft,%]	End Location[ft,%]
168	M502	Z	-4.707	-4.707	0	%100
169	M501	X	8.153	8.153	0	%100
170	M501	Z	-4.707	-4.707	0	%100
171	M500	X	8.153	8.153	0	%100
172	M500	Z	-4.707	-4.707	0	%100
173	M506	X	8.153	8.153	0	%100
174	M506	Z	-4.707	-4.707	0	%100
175	M505	X	8.153	8.153	0	%100
176	M505	Z	-4.707	-4.707	0	%100
177	MP2A	X	9.869	9.869	0	%100
178	MP2A	Z	-5.698	-5.698	0	%100
179	MP3A	X	8.153	8.153	0	%100
180	MP3A	Z	-4.707	-4.707	0	%100
181	MP2C	X	9.869	9.869	0	%100
182	MP2C	Z	-5.698	-5.698	0	%100
183	MP2B	X	9.869	9.869	0	%100
184	MP2B	Z	-5.698	-5.698	0	%100
185	M223	X	27.463	27.463	0	%100
186	M223	Z	-15.856	-15.856	0	%100
187	M226A	X	27.463	27.463	0	%100
188	M226A	Z	-15.856	-15.856	0	%100
189	M228A	X	10.06	10.06	0	%100
190	M228A	Z	-5.808	-5.808	0	%100
191	M232A	X	8.975	8.975	0	%100
192	M232A	Z	-5.182	-5.182	0	%100
193	M235	X	8.975	8.975	0	%100
194	M235	Z	-5.182	-5.182	0	%100
195	M237	X	2.515	2.515	0	%100
196	M237	Z	-1.452	-1.452	0	%100
197	M244	X	15.566	15.566	0	%100
198	M244	Z	-8.987	-8.987	0	%100
199	M245	X	15.418	15.418	0	%100
200	M245	Z	-8.902	-8.902	0	%100
201	M246	X	15.566	15.566	0	%100
202	M246	Z	-8.987	-8.987	0	%100
203	M249	X	2.467	2.467	0	%100
204	M249	Z	-1.425	-1.425	0	%100
205	MP1A	X	8.153	8.153	0	%100
206	MP1A	Z	-4.707	-4.707	0	%100
207	M271	X	2.81	2.81	0	%100
208	M271	Z	-1.622	-1.622	0	%100
209	M271B	X	12.287	12.287	0	%100
210	M271B	Z	-7.094	-7.094	0	%100
211	M274A	X	1.646	1.646	0	%100
212	M274A	Z	-.95	-.95	0	%100
213	M277	X	1.646	1.646	0	%100
214	M277	Z	-.95	-.95	0	%100
215	M280	X	12.287	12.287	0	%100
216	M280	Z	-7.094	-7.094	0	%100
217	M283	X	22.928	22.928	0	%100
218	M283	Z	-13.237	-13.237	0	%100
219	M265	X	9.869	9.869	0	%100

Member Distributed Loads (BLC 43 : Structure Wo (60 Deg)) (Continued)

	Member Label	Direction	Start Magnitude[lb/ft,...	End Magnitude[lb/ft,F...	Start Location[ft,%]	End Location[ft,%]
220	M265	Z	-5.698	-5.698	0	%100
221	M266	X	2.467	2.467	0	%100
222	M266	Z	-1.425	-1.425	0	%100
223	MP4A	X	8.153	8.153	0	%100
224	MP4A	Z	-4.707	-4.707	0	%100
225	MP3C	X	8.153	8.153	0	%100
226	MP3C	Z	-4.707	-4.707	0	%100
227	MP3B	X	8.153	8.153	0	%100
228	MP3B	Z	-4.707	-4.707	0	%100
229	MP1C	X	8.153	8.153	0	%100
230	MP1C	Z	-4.707	-4.707	0	%100
231	MP4C	X	8.153	8.153	0	%100
232	MP4C	Z	-4.707	-4.707	0	%100
233	MP1B	X	8.153	8.153	0	%100
234	MP1B	Z	-4.707	-4.707	0	%100
235	MP4B	X	8.153	8.153	0	%100
236	MP4B	Z	-4.707	-4.707	0	%100
237	M287	X	2.81	2.81	0	%100
238	M287	Z	-1.622	-1.622	0	%100
239	M288	X	11.24	11.24	0	%100
240	M288	Z	-6.489	-6.489	0	%100

Member Distributed Loads (BLC 44 : Structure Wo (90 Deg))

	Member Label	Direction	Start Magnitude[lb/ft,...	End Magnitude[lb/ft,F...	Start Location[ft,%]	End Location[ft,%]
1	M1	X	9.19	9.19	0	%100
2	M1	Z	0	0	0	%100
3	M7	X	0	0	0	%100
4	M7	Z	0	0	0	%100
5	M8	X	0	0	0	%100
6	M8	Z	0	0	0	%100
7	M13	X	5.384	5.384	0	%100
8	M13	Z	0	0	0	%100
9	M14	X	1.551	1.551	0	%100
10	M14	Z	0	0	0	%100
11	M18	X	1.551	1.551	0	%100
12	M18	Z	0	0	0	%100
13	M25	X	16.406	16.406	0	%100
14	M25	Z	0	0	0	%100
15	M26	X	16.406	16.406	0	%100
16	M26	Z	0	0	0	%100
17	M31	X	10.653	10.653	0	%100
18	M31	Z	0	0	0	%100
19	M42A	X	0	0	0	%100
20	M42A	Z	0	0	0	%100
21	M44A	X	5.384	5.384	0	%100
22	M44A	Z	0	0	0	%100
23	M44	X	1.551	1.551	0	%100
24	M44	Z	0	0	0	%100
25	M46A	X	1.551	1.551	0	%100
26	M46A	Z	0	0	0	%100
27	M46B	X	0	0	0	%100

Member Distributed Loads (BLC 44 : Structure Wo (90 Deg)) (Continued)

	Member Label	Direction	Start Magnitude[lb/ft,...	End Magnitude[lb/ft,F...	Start Location[ft,%]	End Location[ft,%]
28	M46B	Z	0	0	0	%100
29	M34A	X	5.384	5.384	0	%100
30	M34A	Z	0	0	0	%100
31	M35	X	5.384	5.384	0	%100
32	M35	Z	0	0	0	%100
33	M36	X	0	0	0	%100
34	M36	Z	0	0	0	%100
35	M38	X	10.653	10.653	0	%100
36	M38	Z	0	0	0	%100
37	M42	X	2.298	2.298	0	%100
38	M42	Z	0	0	0	%100
39	M47	X	6.483	6.483	0	%100
40	M47	Z	0	0	0	%100
41	M48	X	35.675	35.675	0	%100
42	M48	Z	0	0	0	%100
43	M50	X	0	0	0	%100
44	M50	Z	0	0	0	%100
45	M51	X	.388	.388	0	%100
46	M51	Z	0	0	0	%100
47	M53	X	.388	.388	0	%100
48	M53	Z	0	0	0	%100
49	M56	X	4.102	4.102	0	%100
50	M56	Z	0	0	0	%100
51	M57	X	4.102	4.102	0	%100
52	M57	Z	0	0	0	%100
53	M59	X	10.653	10.653	0	%100
54	M59	Z	0	0	0	%100
55	M61	X	6.483	6.483	0	%100
56	M61	Z	0	0	0	%100
57	M62	X	5.384	5.384	0	%100
58	M62	Z	0	0	0	%100
59	M64	X	.388	.388	0	%100
60	M64	Z	0	0	0	%100
61	M66	X	.388	.388	0	%100
62	M66	Z	0	0	0	%100
63	M67	X	5.434	5.434	0	%100
64	M67	Z	0	0	0	%100
65	M68	X	0	0	0	%100
66	M68	Z	0	0	0	%100
67	M69	X	5.384	5.384	0	%100
68	M69	Z	0	0	0	%100
69	M70	X	5.434	5.434	0	%100
70	M70	Z	0	0	0	%100
71	M79	X	0	0	0	%100
72	M79	Z	0	0	0	%100
73	M83	X	2.298	2.298	0	%100
74	M83	Z	0	0	0	%100
75	M88	X	6.483	6.483	0	%100
76	M88	Z	0	0	0	%100
77	M89	X	35.675	35.675	0	%100
78	M89	Z	0	0	0	%100
79	M91	X	5.384	5.384	0	%100

Member Distributed Loads (BLC 44 : Structure Wo (90 Deg)) (Continued)

	Member Label	Direction	Start Magnitude[lb/ft,...	End Magnitude[lb/ft,F...	Start Location[ft,%]	End Location[ft,%]
80	M91	Z	0	0	0	%100
81	M92	X	.388	.388	0	%100
82	M92	Z	0	0	0	%100
83	M94	X	.388	.388	0	%100
84	M94	Z	0	0	0	%100
85	M97	X	4.102	4.102	0	%100
86	M97	Z	0	0	0	%100
87	M98	X	4.102	4.102	0	%100
88	M98	Z	0	0	0	%100
89	M100	X	0	0	0	%100
90	M100	Z	0	0	0	%100
91	M102	X	6.483	6.483	0	%100
92	M102	Z	0	0	0	%100
93	M103	X	0	0	0	%100
94	M103	Z	0	0	0	%100
95	M105	X	.388	.388	0	%100
96	M105	Z	0	0	0	%100
97	M107	X	.388	.388	0	%100
98	M107	Z	0	0	0	%100
99	M108	X	5.434	5.434	0	%100
100	M108	Z	0	0	0	%100
101	M109	X	5.384	5.384	0	%100
102	M109	Z	0	0	0	%100
103	M110	X	0	0	0	%100
104	M110	Z	0	0	0	%100
105	M111	X	5.434	5.434	0	%100
106	M111	Z	0	0	0	%100
107	M118	X	0	0	0	%100
108	M118	Z	0	0	0	%100
109	M120	X	10.653	10.653	0	%100
110	M120	Z	0	0	0	%100
111	M121A	X	11.892	11.892	0	%100
112	M121A	Z	0	0	0	%100
113	M126	X	11.892	11.892	0	%100
114	M126	Z	0	0	0	%100
115	M131	X	51.971	51.971	0	%100
116	M131	Z	0	0	0	%100
117	M134	X	51.971	51.971	0	%100
118	M134	Z	0	0	0	%100
119	M148	X	0	0	0	%100
120	M148	Z	0	0	0	%100
121	M152B	X	0	0	0	%100
122	M152B	Z	0	0	0	%100
123	M155	X	26.475	26.475	0	%100
124	M155	Z	0	0	0	%100
125	M154	X	7.061	7.061	0	%100
126	M154	Z	0	0	0	%100
127	M157A	X	7.061	7.061	0	%100
128	M157A	Z	0	0	0	%100
129	M160	X	0	0	0	%100
130	M160	Z	0	0	0	%100
131	M161	X	0	0	0	%100

Member Distributed Loads (BLC 44 : Structure Wo (90 Deg)) (Continued)

	Member Label	Direction	Start Magnitude[lb/ft,...	End Magnitude[lb/ft,F...	Start Location[ft,%]	End Location[ft,%]
132	M161	Z	0	0	0	%100
133	M162	X	21.042	21.042	0	%100
134	M162	Z	0	0	0	%100
135	M163	X	21.042	21.042	0	%100
136	M163	Z	0	0	0	%100
137	M164	X	21.042	21.042	0	%100
138	M164	Z	0	0	0	%100
139	M165	X	21.042	21.042	0	%100
140	M165	Z	0	0	0	%100
141	M166	X	0	0	0	%100
142	M166	Z	0	0	0	%100
143	M167	X	6.545	6.545	0	%100
144	M167	Z	0	0	0	%100
145	M168	X	6.545	6.545	0	%100
146	M168	Z	0	0	0	%100
147	M169	X	0	0	0	%100
148	M169	Z	0	0	0	%100
149	M170	X	7.061	7.061	0	%100
150	M170	Z	0	0	0	%100
151	M171	X	7.061	7.061	0	%100
152	M171	Z	0	0	0	%100
153	M174	X	0	0	0	%100
154	M174	Z	0	0	0	%100
155	M177	X	0	0	0	%100
156	M177	Z	0	0	0	%100
157	M180	X	7.515	7.515	0	%100
158	M180	Z	0	0	0	%100
159	M183	X	7.515	7.515	0	%100
160	M183	Z	0	0	0	%100
161	M186	X	7.515	7.515	0	%100
162	M186	Z	0	0	0	%100
163	M189	X	7.515	7.515	0	%100
164	M189	Z	0	0	0	%100
165	M504	X	9.414	9.414	0	%100
166	M504	Z	0	0	0	%100
167	M502	X	9.414	9.414	0	%100
168	M502	Z	0	0	0	%100
169	M501	X	9.414	9.414	0	%100
170	M501	Z	0	0	0	%100
171	M500	X	9.414	9.414	0	%100
172	M500	Z	0	0	0	%100
173	M506	X	9.414	9.414	0	%100
174	M506	Z	0	0	0	%100
175	M505	X	9.414	9.414	0	%100
176	M505	Z	0	0	0	%100
177	MP2A	X	11.396	11.396	0	%100
178	MP2A	Z	0	0	0	%100
179	MP3A	X	9.414	9.414	0	%100
180	MP3A	Z	0	0	0	%100
181	MP2C	X	11.396	11.396	0	%100
182	MP2C	Z	0	0	0	%100
183	MP2B	X	11.396	11.396	0	%100

Member Distributed Loads (BLC 44 : Structure Wo (90 Deg)) (Continued)

	Member Label	Direction	Start Magnitude[lb/ft,...	End Magnitude[lb/ft,F...	Start Location[ft,%]	End Location[ft,%]
184	MP2B	Z	0	0	0	%100
185	M223	X	24.596	24.596	0	%100
186	M223	Z	0	0	0	%100
187	M226A	X	24.596	24.596	0	%100
188	M226A	Z	0	0	0	%100
189	M228A	X	8.712	8.712	0	%100
190	M228A	Z	0	0	0	%100
191	M232A	X	24.596	24.596	0	%100
192	M232A	Z	0	0	0	%100
193	M235	X	24.596	24.596	0	%100
194	M235	Z	0	0	0	%100
195	M237	X	8.712	8.712	0	%100
196	M237	Z	0	0	0	%100
197	M244	X	18.031	18.031	0	%100
198	M244	Z	0	0	0	%100
199	M245	X	17.86	17.86	0	%100
200	M245	Z	0	0	0	%100
201	M246	X	17.86	17.86	0	%100
202	M246	Z	0	0	0	%100
203	M249	X	0	0	0	%100
204	M249	Z	0	0	0	%100
205	MP1A	X	9.414	9.414	0	%100
206	MP1A	Z	0	0	0	%100
207	M271	X	9.734	9.734	0	%100
208	M271	Z	0	0	0	%100
209	M271B	X	26.475	26.475	0	%100
210	M271B	Z	0	0	0	%100
211	M274A	X	14.188	14.188	0	%100
212	M274A	Z	0	0	0	%100
213	M277	X	1.901	1.901	0	%100
214	M277	Z	0	0	0	%100
215	M280	X	1.901	1.901	0	%100
216	M280	Z	0	0	0	%100
217	M283	X	14.188	14.188	0	%100
218	M283	Z	0	0	0	%100
219	M265	X	8.547	8.547	0	%100
220	M265	Z	0	0	0	%100
221	M266	X	8.547	8.547	0	%100
222	M266	Z	0	0	0	%100
223	MP4A	X	9.414	9.414	0	%100
224	MP4A	Z	0	0	0	%100
225	MP3C	X	9.414	9.414	0	%100
226	MP3C	Z	0	0	0	%100
227	MP3B	X	9.414	9.414	0	%100
228	MP3B	Z	0	0	0	%100
229	MP1C	X	9.414	9.414	0	%100
230	MP1C	Z	0	0	0	%100
231	MP4C	X	9.414	9.414	0	%100
232	MP4C	Z	0	0	0	%100
233	MP1B	X	9.414	9.414	0	%100
234	MP1B	Z	0	0	0	%100
235	MP4B	X	9.414	9.414	0	%100

Member Distributed Loads (BLC 44 : Structure Wo (90 Deg)) (Continued)

	Member Label	Direction	Start Magnitude[lb/ft,...	End Magnitude[lb/ft,F...	Start Location[ft,%]	End Location[ft,%]
236	MP4B	Z	0	0	0	%100
237	M287	X	0	0	0	%100
238	M287	Z	0	0	0	%100
239	M288	X	9.734	9.734	0	%100
240	M288	Z	0	0	0	%100

Member Distributed Loads (BLC 45 : Structure Wo (120 Deg))

	Member Label	Direction	Start Magnitude[lb/ft,...	End Magnitude[lb/ft,F...	Start Location[ft,%]	End Location[ft,%]
1	M1	X	5.969	5.969	0	%100
2	M1	Z	3.446	3.446	0	%100
3	M7	X	1.871	1.871	0	%100
4	M7	Z	1.08	1.08	0	%100
5	M8	X	10.299	10.299	0	%100
6	M8	Z	5.946	5.946	0	%100
7	M13	X	6.217	6.217	0	%100
8	M13	Z	3.59	3.59	0	%100
9	M14	X	1.007	1.007	0	%100
10	M14	Z	.582	.582	0	%100
11	M18	X	1.007	1.007	0	%100
12	M18	Z	.582	.582	0	%100
13	M25	X	10.656	10.656	0	%100
14	M25	Z	6.152	6.152	0	%100
15	M26	X	10.656	10.656	0	%100
16	M26	Z	6.152	6.152	0	%100
17	M31	X	3.075	3.075	0	%100
18	M31	Z	1.776	1.776	0	%100
19	M42A	X	1.871	1.871	0	%100
20	M42A	Z	1.08	1.08	0	%100
21	M44A	X	1.554	1.554	0	%100
22	M44A	Z	.897	.897	0	%100
23	M44	X	1.007	1.007	0	%100
24	M44	Z	.582	.582	0	%100
25	M46A	X	1.007	1.007	0	%100
26	M46A	Z	.582	.582	0	%100
27	M46B	X	1.569	1.569	0	%100
28	M46B	Z	.906	.906	0	%100
29	M34A	X	6.217	6.217	0	%100
30	M34A	Z	3.59	3.59	0	%100
31	M35	X	1.554	1.554	0	%100
32	M35	Z	.897	.897	0	%100
33	M36	X	1.569	1.569	0	%100
34	M36	Z	.906	.906	0	%100
35	M38	X	12.301	12.301	0	%100
36	M38	Z	7.102	7.102	0	%100
37	M42	X	5.969	5.969	0	%100
38	M42	Z	3.446	3.446	0	%100
39	M47	X	1.871	1.871	0	%100
40	M47	Z	1.08	1.08	0	%100
41	M48	X	10.299	10.299	0	%100
42	M48	Z	5.946	5.946	0	%100
43	M50	X	1.554	1.554	0	%100

Member Distributed Loads (BLC 45 : Structure Wo (120 Deg)) (Continued)

	Member Label	Direction	Start Magnitude[lb/ft,...	End Magnitude[lb/ft,F...	Start Location[ft,%]	End Location[ft,%]
44	M50	Z	.897	.897	0	%100
45	M51	X	1.007	1.007	0	%100
46	M51	Z	.582	.582	0	%100
47	M53	X	1.007	1.007	0	%100
48	M53	Z	.582	.582	0	%100
49	M56	X	10.656	10.656	0	%100
50	M56	Z	6.152	6.152	0	%100
51	M57	X	10.656	10.656	0	%100
52	M57	Z	6.152	6.152	0	%100
53	M59	X	12.301	12.301	0	%100
54	M59	Z	7.102	7.102	0	%100
55	M61	X	1.871	1.871	0	%100
56	M61	Z	1.08	1.08	0	%100
57	M62	X	6.217	6.217	0	%100
58	M62	Z	3.59	3.59	0	%100
59	M64	X	1.007	1.007	0	%100
60	M64	Z	.582	.582	0	%100
61	M66	X	1.007	1.007	0	%100
62	M66	Z	.582	.582	0	%100
63	M67	X	1.569	1.569	0	%100
64	M67	Z	.906	.906	0	%100
65	M68	X	1.554	1.554	0	%100
66	M68	Z	.897	.897	0	%100
67	M69	X	6.217	6.217	0	%100
68	M69	Z	3.59	3.59	0	%100
69	M70	X	1.569	1.569	0	%100
70	M70	Z	.906	.906	0	%100
71	M79	X	3.075	3.075	0	%100
72	M79	Z	1.776	1.776	0	%100
73	M83	X	0	0	0	%100
74	M83	Z	0	0	0	%100
75	M88	X	7.486	7.486	0	%100
76	M88	Z	4.322	4.322	0	%100
77	M89	X	41.194	41.194	0	%100
78	M89	Z	23.784	23.784	0	%100
79	M91	X	1.554	1.554	0	%100
80	M91	Z	.897	.897	0	%100
81	M92	X	0	0	0	%100
82	M92	Z	0	0	0	%100
83	M94	X	0	0	0	%100
84	M94	Z	0	0	0	%100
85	M97	X	0	0	0	%100
86	M97	Z	0	0	0	%100
87	M98	X	0	0	0	%100
88	M98	Z	0	0	0	%100
89	M100	X	3.075	3.075	0	%100
90	M100	Z	1.776	1.776	0	%100
91	M102	X	7.486	7.486	0	%100
92	M102	Z	4.322	4.322	0	%100
93	M103	X	1.554	1.554	0	%100
94	M103	Z	.897	.897	0	%100
95	M105	X	0	0	0	%100

Member Distributed Loads (BLC 45 : Structure Wo (120 Deg)) (Continued)

	Member Label	Direction	Start Magnitude[lb/ft,...	End Magnitude[lb/ft,F...	Start Location[ft,%]	End Location[ft,%]
96	M105	Z	0	0	0	%100
97	M107	X	0	0	0	%100
98	M107	Z	0	0	0	%100
99	M108	X	6.274	6.274	0	%100
100	M108	Z	3.622	3.622	0	%100
101	M109	X	1.554	1.554	0	%100
102	M109	Z	.897	.897	0	%100
103	M110	X	1.554	1.554	0	%100
104	M110	Z	.897	.897	0	%100
105	M111	X	6.274	6.274	0	%100
106	M111	Z	3.622	3.622	0	%100
107	M118	X	3.433	3.433	0	%100
108	M118	Z	1.982	1.982	0	%100
109	M120	X	3.075	3.075	0	%100
110	M120	Z	1.776	1.776	0	%100
111	M121A	X	3.433	3.433	0	%100
112	M121A	Z	1.982	1.982	0	%100
113	M126	X	13.731	13.731	0	%100
114	M126	Z	7.928	7.928	0	%100
115	M131	X	34.186	34.186	0	%100
116	M131	Z	19.737	19.737	0	%100
117	M134	X	34.186	34.186	0	%100
118	M134	Z	19.737	19.737	0	%100
119	M148	X	2.038	2.038	0	%100
120	M148	Z	1.177	1.177	0	%100
121	M152B	X	2.515	2.515	0	%100
122	M152B	Z	1.452	1.452	0	%100
123	M155	X	12.287	12.287	0	%100
124	M155	Z	7.094	7.094	0	%100
125	M154	X	2.038	2.038	0	%100
126	M154	Z	1.177	1.177	0	%100
127	M157A	X	8.153	8.153	0	%100
128	M157A	Z	4.707	4.707	0	%100
129	M160	X	6.074	6.074	0	%100
130	M160	Z	3.507	3.507	0	%100
131	M161	X	6.074	6.074	0	%100
132	M161	Z	3.507	3.507	0	%100
133	M162	X	6.074	6.074	0	%100
134	M162	Z	3.507	3.507	0	%100
135	M163	X	6.074	6.074	0	%100
136	M163	Z	3.507	3.507	0	%100
137	M164	X	24.297	24.297	0	%100
138	M164	Z	14.028	14.028	0	%100
139	M165	X	24.297	24.297	0	%100
140	M165	Z	14.028	14.028	0	%100
141	M166	X	1.889	1.889	0	%100
142	M166	Z	1.091	1.091	0	%100
143	M167	X	1.889	1.889	0	%100
144	M167	Z	1.091	1.091	0	%100
145	M168	X	7.557	7.557	0	%100
146	M168	Z	4.363	4.363	0	%100
147	M169	X	2.038	2.038	0	%100

Member Distributed Loads (BLC 45 : Structure Wo (120 Deg)) (Continued)

	Member Label	Direction	Start Magnitude[lb/ft,...	End Magnitude[lb/ft,F...	Start Location[ft,%]	End Location[ft,%]
148	M169	Z	1.177	1.177	0	%100
149	M170	X	2.038	2.038	0	%100
150	M170	Z	1.177	1.177	0	%100
151	M171	X	8.153	8.153	0	%100
152	M171	Z	4.707	4.707	0	%100
153	M174	X	2.169	2.169	0	%100
154	M174	Z	1.252	1.252	0	%100
155	M177	X	2.169	2.169	0	%100
156	M177	Z	1.252	1.252	0	%100
157	M180	X	2.169	2.169	0	%100
158	M180	Z	1.252	1.252	0	%100
159	M183	X	2.169	2.169	0	%100
160	M183	Z	1.252	1.252	0	%100
161	M186	X	8.678	8.678	0	%100
162	M186	Z	5.01	5.01	0	%100
163	M189	X	8.678	8.678	0	%100
164	M189	Z	5.01	5.01	0	%100
165	M504	X	8.153	8.153	0	%100
166	M504	Z	4.707	4.707	0	%100
167	M502	X	8.153	8.153	0	%100
168	M502	Z	4.707	4.707	0	%100
169	M501	X	8.153	8.153	0	%100
170	M501	Z	4.707	4.707	0	%100
171	M500	X	8.153	8.153	0	%100
172	M500	Z	4.707	4.707	0	%100
173	M506	X	8.153	8.153	0	%100
174	M506	Z	4.707	4.707	0	%100
175	M505	X	8.153	8.153	0	%100
176	M505	Z	4.707	4.707	0	%100
177	MP2A	X	9.869	9.869	0	%100
178	MP2A	Z	5.698	5.698	0	%100
179	MP3A	X	8.153	8.153	0	%100
180	MP3A	Z	4.707	4.707	0	%100
181	MP2C	X	9.869	9.869	0	%100
182	MP2C	Z	5.698	5.698	0	%100
183	MP2B	X	9.869	9.869	0	%100
184	MP2B	Z	5.698	5.698	0	%100
185	M223	X	8.975	8.975	0	%100
186	M223	Z	5.182	5.182	0	%100
187	M226A	X	8.975	8.975	0	%100
188	M226A	Z	5.182	5.182	0	%100
189	M228A	X	2.515	2.515	0	%100
190	M228A	Z	1.452	1.452	0	%100
191	M232A	X	27.463	27.463	0	%100
192	M232A	Z	15.856	15.856	0	%100
193	M235	X	27.463	27.463	0	%100
194	M235	Z	15.856	15.856	0	%100
195	M237	X	10.06	10.06	0	%100
196	M237	Z	5.808	5.808	0	%100
197	M244	X	15.566	15.566	0	%100
198	M244	Z	8.987	8.987	0	%100
199	M245	X	15.566	15.566	0	%100

Member Distributed Loads (BLC 45 : Structure Wo (120 Deg)) (Continued)

	Member Label	Direction	Start Magnitude[lb/ft,...	End Magnitude[lb/ft,F...	Start Location[ft,%]	End Location[ft,%]
200	M245	Z	8.987	8.987	0	%100
201	M246	X	15.418	15.418	0	%100
202	M246	Z	8.902	8.902	0	%100
203	M249	X	2.467	2.467	0	%100
204	M249	Z	1.425	1.425	0	%100
205	MP1A	X	8.153	8.153	0	%100
206	MP1A	Z	4.707	4.707	0	%100
207	M271	X	11.24	11.24	0	%100
208	M271	Z	6.489	6.489	0	%100
209	M271B	X	22.928	22.928	0	%100
210	M271B	Z	13.237	13.237	0	%100
211	M274A	X	22.928	22.928	0	%100
212	M274A	Z	13.237	13.237	0	%100
213	M277	X	12.287	12.287	0	%100
214	M277	Z	7.094	7.094	0	%100
215	M280	X	1.646	1.646	0	%100
216	M280	Z	.95	.95	0	%100
217	M283	X	1.646	1.646	0	%100
218	M283	Z	.95	.95	0	%100
219	M265	X	2.467	2.467	0	%100
220	M265	Z	1.425	1.425	0	%100
221	M266	X	9.869	9.869	0	%100
222	M266	Z	5.698	5.698	0	%100
223	MP4A	X	8.153	8.153	0	%100
224	MP4A	Z	4.707	4.707	0	%100
225	MP3C	X	8.153	8.153	0	%100
226	MP3C	Z	4.707	4.707	0	%100
227	MP3B	X	8.153	8.153	0	%100
228	MP3B	Z	4.707	4.707	0	%100
229	MP1C	X	8.153	8.153	0	%100
230	MP1C	Z	4.707	4.707	0	%100
231	MP4C	X	8.153	8.153	0	%100
232	MP4C	Z	4.707	4.707	0	%100
233	MP1B	X	8.153	8.153	0	%100
234	MP1B	Z	4.707	4.707	0	%100
235	MP4B	X	8.153	8.153	0	%100
236	MP4B	Z	4.707	4.707	0	%100
237	M287	X	2.81	2.81	0	%100
238	M287	Z	1.622	1.622	0	%100
239	M288	X	2.81	2.81	0	%100
240	M288	Z	1.622	1.622	0	%100

Member Distributed Loads (BLC 46 : Structure Wo (150 Deg))

	Member Label	Direction	Start Magnitude[lb/ft,...	End Magnitude[lb/ft,F...	Start Location[ft,%]	End Location[ft,%]
1	M1	X	1.149	1.149	0	%100
2	M1	Z	1.99	1.99	0	%100
3	M7	X	3.241	3.241	0	%100
4	M7	Z	5.614	5.614	0	%100
5	M8	X	17.838	17.838	0	%100
6	M8	Z	30.896	30.896	0	%100
7	M13	X	2.692	2.692	0	%100

Member Distributed Loads (BLC 46 : Structure Wo (150 Deg)) (Continued)

	Member Label	Direction	Start Magnitude[lb/ft,...	End Magnitude[lb/ft,F...	Start Location[ft,%]	End Location[ft,%]
8	M13	Z	4.663	4.663	0	%100
9	M14	X	.194	.194	0	%100
10	M14	Z	.336	.336	0	%100
11	M18	X	.194	.194	0	%100
12	M18	Z	.336	.336	0	%100
13	M25	X	2.051	2.051	0	%100
14	M25	Z	3.552	3.552	0	%100
15	M26	X	2.051	2.051	0	%100
16	M26	Z	3.552	3.552	0	%100
17	M31	X	0	0	0	%100
18	M31	Z	0	0	0	%100
19	M42A	X	3.241	3.241	0	%100
20	M42A	Z	5.614	5.614	0	%100
21	M44A	X	0	0	0	%100
22	M44A	Z	0	0	0	%100
23	M44	X	.194	.194	0	%100
24	M44	Z	.336	.336	0	%100
25	M46A	X	.194	.194	0	%100
26	M46A	Z	.336	.336	0	%100
27	M46B	X	2.717	2.717	0	%100
28	M46B	Z	4.706	4.706	0	%100
29	M34A	X	2.692	2.692	0	%100
30	M34A	Z	4.663	4.663	0	%100
31	M35	X	0	0	0	%100
32	M35	Z	0	0	0	%100
33	M36	X	2.717	2.717	0	%100
34	M36	Z	4.706	4.706	0	%100
35	M38	X	5.327	5.327	0	%100
36	M38	Z	9.226	9.226	0	%100
37	M42	X	4.595	4.595	0	%100
38	M42	Z	7.959	7.959	0	%100
39	M47	X	0	0	0	%100
40	M47	Z	0	0	0	%100
41	M48	X	0	0	0	%100
42	M48	Z	0	0	0	%100
43	M50	X	2.692	2.692	0	%100
44	M50	Z	4.663	4.663	0	%100
45	M51	X	.775	.775	0	%100
46	M51	Z	1.343	1.343	0	%100
47	M53	X	.775	.775	0	%100
48	M53	Z	1.343	1.343	0	%100
49	M56	X	8.203	8.203	0	%100
50	M56	Z	14.208	14.208	0	%100
51	M57	X	8.203	8.203	0	%100
52	M57	Z	14.208	14.208	0	%100
53	M59	X	5.327	5.327	0	%100
54	M59	Z	9.226	9.226	0	%100
55	M61	X	0	0	0	%100
56	M61	Z	0	0	0	%100
57	M62	X	2.692	2.692	0	%100
58	M62	Z	4.663	4.663	0	%100
59	M64	X	.775	.775	0	%100

Member Distributed Loads (BLC 46 : Structure Wo (150 Deg)) (Continued)

	Member Label	Direction	Start Magnitude[lb/ft,...	End Magnitude[lb/ft,F...	Start Location[ft,%]	End Location[ft,%]
60	M64	Z	1.343	1.343	0	%100
61	M66	X	.775	.775	0	%100
62	M66	Z	1.343	1.343	0	%100
63	M67	X	0	0	0	%100
64	M67	Z	0	0	0	%100
65	M68	X	2.692	2.692	0	%100
66	M68	Z	4.663	4.663	0	%100
67	M69	X	2.692	2.692	0	%100
68	M69	Z	4.663	4.663	0	%100
69	M70	X	0	0	0	%100
70	M70	Z	0	0	0	%100
71	M79	X	5.327	5.327	0	%100
72	M79	Z	9.226	9.226	0	%100
73	M83	X	1.149	1.149	0	%100
74	M83	Z	1.99	1.99	0	%100
75	M88	X	3.241	3.241	0	%100
76	M88	Z	5.614	5.614	0	%100
77	M89	X	17.838	17.838	0	%100
78	M89	Z	30.896	30.896	0	%100
79	M91	X	0	0	0	%100
80	M91	Z	0	0	0	%100
81	M92	X	.194	.194	0	%100
82	M92	Z	.336	.336	0	%100
83	M94	X	.194	.194	0	%100
84	M94	Z	.336	.336	0	%100
85	M97	X	2.051	2.051	0	%100
86	M97	Z	3.552	3.552	0	%100
87	M98	X	2.051	2.051	0	%100
88	M98	Z	3.552	3.552	0	%100
89	M100	X	5.327	5.327	0	%100
90	M100	Z	9.226	9.226	0	%100
91	M102	X	3.241	3.241	0	%100
92	M102	Z	5.614	5.614	0	%100
93	M103	X	2.692	2.692	0	%100
94	M103	Z	4.663	4.663	0	%100
95	M105	X	.194	.194	0	%100
96	M105	Z	.336	.336	0	%100
97	M107	X	.194	.194	0	%100
98	M107	Z	.336	.336	0	%100
99	M108	X	2.717	2.717	0	%100
100	M108	Z	4.706	4.706	0	%100
101	M109	X	0	0	0	%100
102	M109	Z	0	0	0	%100
103	M110	X	2.692	2.692	0	%100
104	M110	Z	4.663	4.663	0	%100
105	M111	X	2.717	2.717	0	%100
106	M111	Z	4.706	4.706	0	%100
107	M118	X	5.946	5.946	0	%100
108	M118	Z	10.299	10.299	0	%100
109	M120	X	0	0	0	%100
110	M120	Z	0	0	0	%100
111	M121A	X	0	0	0	%100

Member Distributed Loads (BLC 46 : Structure Wo (150 Deg)) (Continued)

	Member Label	Direction	Start Magnitude[lb/ft,...	End Magnitude[lb/ft,F...	Start Location[ft,%]	End Location[ft,%]
112	M121A	Z	0	0	0	%100
113	M126	X	5.946	5.946	0	%100
114	M126	Z	10.299	10.299	0	%100
115	M131	X	7.24	7.24	0	%100
116	M131	Z	12.539	12.539	0	%100
117	M134	X	7.24	7.24	0	%100
118	M134	Z	12.539	12.539	0	%100
119	M148	X	3.53	3.53	0	%100
120	M148	Z	6.115	6.115	0	%100
121	M152B	X	4.356	4.356	0	%100
122	M152B	Z	7.545	7.545	0	%100
123	M155	X	.95	.95	0	%100
124	M155	Z	1.646	1.646	0	%100
125	M154	X	0	0	0	%100
126	M154	Z	0	0	0	%100
127	M157A	X	3.53	3.53	0	%100
128	M157A	Z	6.115	6.115	0	%100
129	M160	X	10.521	10.521	0	%100
130	M160	Z	18.223	18.223	0	%100
131	M161	X	10.521	10.521	0	%100
132	M161	Z	18.223	18.223	0	%100
133	M162	X	0	0	0	%100
134	M162	Z	0	0	0	%100
135	M163	X	0	0	0	%100
136	M163	Z	0	0	0	%100
137	M164	X	10.521	10.521	0	%100
138	M164	Z	18.223	18.223	0	%100
139	M165	X	10.521	10.521	0	%100
140	M165	Z	18.223	18.223	0	%100
141	M166	X	3.272	3.272	0	%100
142	M166	Z	5.668	5.668	0	%100
143	M167	X	0	0	0	%100
144	M167	Z	0	0	0	%100
145	M168	X	3.272	3.272	0	%100
146	M168	Z	5.668	5.668	0	%100
147	M169	X	3.53	3.53	0	%100
148	M169	Z	6.115	6.115	0	%100
149	M170	X	0	0	0	%100
150	M170	Z	0	0	0	%100
151	M171	X	3.53	3.53	0	%100
152	M171	Z	6.115	6.115	0	%100
153	M174	X	3.757	3.757	0	%100
154	M174	Z	6.508	6.508	0	%100
155	M177	X	3.757	3.757	0	%100
156	M177	Z	6.508	6.508	0	%100
157	M180	X	0	0	0	%100
158	M180	Z	0	0	0	%100
159	M183	X	0	0	0	%100
160	M183	Z	0	0	0	%100
161	M186	X	3.757	3.757	0	%100
162	M186	Z	6.508	6.508	0	%100
163	M189	X	3.757	3.757	0	%100

Member Distributed Loads (BLC 46 : Structure Wo (150 Deg)) (Continued)

	Member Label	Direction	Start Magnitude[lb/ft,...	End Magnitude[lb/ft,F...	Start Location[ft,%]	End Location[ft,%]
164	M189	Z	6.508	6.508	0	%100
165	M504	X	4.707	4.707	0	%100
166	M504	Z	8.153	8.153	0	%100
167	M502	X	4.707	4.707	0	%100
168	M502	Z	8.153	8.153	0	%100
169	M501	X	4.707	4.707	0	%100
170	M501	Z	8.153	8.153	0	%100
171	M500	X	4.707	4.707	0	%100
172	M500	Z	8.153	8.153	0	%100
173	M506	X	4.707	4.707	0	%100
174	M506	Z	8.153	8.153	0	%100
175	M505	X	4.707	4.707	0	%100
176	M505	Z	8.153	8.153	0	%100
177	MP2A	X	5.698	5.698	0	%100
178	MP2A	Z	9.869	9.869	0	%100
179	MP3A	X	4.707	4.707	0	%100
180	MP3A	Z	8.153	8.153	0	%100
181	MP2C	X	5.698	5.698	0	%100
182	MP2C	Z	9.869	9.869	0	%100
183	MP2B	X	5.698	5.698	0	%100
184	MP2B	Z	9.869	9.869	0	%100
185	M223	X	1.624	1.624	0	%100
186	M223	Z	2.813	2.813	0	%100
187	M226A	X	1.624	1.624	0	%100
188	M226A	Z	2.813	2.813	0	%100
189	M228A	X	0	0	0	%100
190	M228A	Z	0	0	0	%100
191	M232A	X	12.298	12.298	0	%100
192	M232A	Z	21.3	21.3	0	%100
193	M235	X	12.298	12.298	0	%100
194	M235	Z	21.3	21.3	0	%100
195	M237	X	4.356	4.356	0	%100
196	M237	Z	7.545	7.545	0	%100
197	M244	X	8.93	8.93	0	%100
198	M244	Z	15.467	15.467	0	%100
199	M245	X	9.016	9.016	0	%100
200	M245	Z	15.615	15.615	0	%100
201	M246	X	8.93	8.93	0	%100
202	M246	Z	15.467	15.467	0	%100
203	M249	X	4.274	4.274	0	%100
204	M249	Z	7.402	7.402	0	%100
205	MP1A	X	4.707	4.707	0	%100
206	MP1A	Z	8.153	8.153	0	%100
207	M271	X	4.867	4.867	0	%100
208	M271	Z	8.43	8.43	0	%100
209	M271B	X	7.094	7.094	0	%100
210	M271B	Z	12.287	12.287	0	%100
211	M274A	X	13.237	13.237	0	%100
212	M274A	Z	22.928	22.928	0	%100
213	M277	X	13.237	13.237	0	%100
214	M277	Z	22.928	22.928	0	%100
215	M280	X	7.094	7.094	0	%100

Member Distributed Loads (BLC 46 : Structure Wo (150 Deg)) (Continued)

	Member Label	Direction	Start Magnitude[lb/ft,...	End Magnitude[lb/ft,F...	Start Location[ft,%]	End Location[ft,%]
216	M280	Z	12.287	12.287	0	%100
217	M283	X	.95	.95	0	%100
218	M283	Z	1.646	1.646	0	%100
219	M265	X	0	0	0	%100
220	M265	Z	0	0	0	%100
221	M266	X	4.274	4.274	0	%100
222	M266	Z	7.402	7.402	0	%100
223	MP4A	X	4.707	4.707	0	%100
224	MP4A	Z	8.153	8.153	0	%100
225	MP3C	X	4.707	4.707	0	%100
226	MP3C	Z	8.153	8.153	0	%100
227	MP3B	X	4.707	4.707	0	%100
228	MP3B	Z	8.153	8.153	0	%100
229	MP1C	X	4.707	4.707	0	%100
230	MP1C	Z	8.153	8.153	0	%100
231	MP4C	X	4.707	4.707	0	%100
232	MP4C	Z	8.153	8.153	0	%100
233	MP1B	X	4.707	4.707	0	%100
234	MP1B	Z	8.153	8.153	0	%100
235	MP4B	X	4.707	4.707	0	%100
236	MP4B	Z	8.153	8.153	0	%100
237	M287	X	4.867	4.867	0	%100
238	M287	Z	8.43	8.43	0	%100
239	M288	X	0	0	0	%100
240	M288	Z	0	0	0	%100

Member Distributed Loads (BLC 47 : Structure Wo (180 Deg))

	Member Label	Direction	Start Magnitude[lb/ft,...	End Magnitude[lb/ft,F...	Start Location[ft,%]	End Location[ft,%]
1	M1	X	0	0	0	%100
2	M1	Z	0	0	0	%100
3	M7	X	0	0	0	%100
4	M7	Z	8.644	8.644	0	%100
5	M8	X	0	0	0	%100
6	M8	Z	47.567	47.567	0	%100
7	M13	X	0	0	0	%100
8	M13	Z	1.795	1.795	0	%100
9	M14	X	0	0	0	%100
10	M14	Z	0	0	0	%100
11	M18	X	0	0	0	%100
12	M18	Z	0	0	0	%100
13	M25	X	0	0	0	%100
14	M25	Z	0	0	0	%100
15	M26	X	0	0	0	%100
16	M26	Z	0	0	0	%100
17	M31	X	0	0	0	%100
18	M31	Z	3.551	3.551	0	%100
19	M42A	X	0	0	0	%100
20	M42A	Z	8.644	8.644	0	%100
21	M44A	X	0	0	0	%100
22	M44A	Z	1.795	1.795	0	%100
23	M44	X	0	0	0	%100

Member Distributed Loads (BLC 47 : Structure Wo (180 Deg)) (Continued)

	Member Label	Direction	Start Magnitude[lb/ft,...	End Magnitude[lb/ft,F...	Start Location[ft,%]	End Location[ft,%]
24	M44	Z	0	0	0	%100
25	M46A	X	0	0	0	%100
26	M46A	Z	0	0	0	%100
27	M46B	X	0	0	0	%100
28	M46B	Z	7.245	7.245	0	%100
29	M34A	X	0	0	0	%100
30	M34A	Z	1.795	1.795	0	%100
31	M35	X	0	0	0	%100
32	M35	Z	1.795	1.795	0	%100
33	M36	X	0	0	0	%100
34	M36	Z	7.245	7.245	0	%100
35	M38	X	0	0	0	%100
36	M38	Z	3.551	3.551	0	%100
37	M42	X	0	0	0	%100
38	M42	Z	6.893	6.893	0	%100
39	M47	X	0	0	0	%100
40	M47	Z	2.161	2.161	0	%100
41	M48	X	0	0	0	%100
42	M48	Z	11.892	11.892	0	%100
43	M50	X	0	0	0	%100
44	M50	Z	7.179	7.179	0	%100
45	M51	X	0	0	0	%100
46	M51	Z	1.163	1.163	0	%100
47	M53	X	0	0	0	%100
48	M53	Z	1.163	1.163	0	%100
49	M56	X	0	0	0	%100
50	M56	Z	12.305	12.305	0	%100
51	M57	X	0	0	0	%100
52	M57	Z	12.305	12.305	0	%100
53	M59	X	0	0	0	%100
54	M59	Z	3.551	3.551	0	%100
55	M61	X	0	0	0	%100
56	M61	Z	2.161	2.161	0	%100
57	M62	X	0	0	0	%100
58	M62	Z	1.795	1.795	0	%100
59	M64	X	0	0	0	%100
60	M64	Z	1.163	1.163	0	%100
61	M66	X	0	0	0	%100
62	M66	Z	1.163	1.163	0	%100
63	M67	X	0	0	0	%100
64	M67	Z	1.811	1.811	0	%100
65	M68	X	0	0	0	%100
66	M68	Z	7.179	7.179	0	%100
67	M69	X	0	0	0	%100
68	M69	Z	1.795	1.795	0	%100
69	M70	X	0	0	0	%100
70	M70	Z	1.811	1.811	0	%100
71	M79	X	0	0	0	%100
72	M79	Z	14.204	14.204	0	%100
73	M83	X	0	0	0	%100
74	M83	Z	6.893	6.893	0	%100
75	M88	X	0	0	0	%100

Member Distributed Loads (BLC 47 : Structure Wo (180 Deg)) (Continued)

	Member Label	Direction	Start Magnitude[lb/ft,...	End Magnitude[lb/ft,F...	Start Location[ft,%]	End Location[ft,%]
76	M88	Z	2.161	2.161	0	%100
77	M89	X	0	0	0	%100
78	M89	Z	11.892	11.892	0	%100
79	M91	X	0	0	0	%100
80	M91	Z	1.795	1.795	0	%100
81	M92	X	0	0	0	%100
82	M92	Z	1.163	1.163	0	%100
83	M94	X	0	0	0	%100
84	M94	Z	1.163	1.163	0	%100
85	M97	X	0	0	0	%100
86	M97	Z	12.305	12.305	0	%100
87	M98	X	0	0	0	%100
88	M98	Z	12.305	12.305	0	%100
89	M100	X	0	0	0	%100
90	M100	Z	14.204	14.204	0	%100
91	M102	X	0	0	0	%100
92	M102	Z	2.161	2.161	0	%100
93	M103	X	0	0	0	%100
94	M103	Z	7.179	7.179	0	%100
95	M105	X	0	0	0	%100
96	M105	Z	1.163	1.163	0	%100
97	M107	X	0	0	0	%100
98	M107	Z	1.163	1.163	0	%100
99	M108	X	0	0	0	%100
100	M108	Z	1.811	1.811	0	%100
101	M109	X	0	0	0	%100
102	M109	Z	1.795	1.795	0	%100
103	M110	X	0	0	0	%100
104	M110	Z	7.179	7.179	0	%100
105	M111	X	0	0	0	%100
106	M111	Z	1.811	1.811	0	%100
107	M118	X	0	0	0	%100
108	M118	Z	15.856	15.856	0	%100
109	M120	X	0	0	0	%100
110	M120	Z	3.551	3.551	0	%100
111	M121A	X	0	0	0	%100
112	M121A	Z	3.964	3.964	0	%100
113	M126	X	0	0	0	%100
114	M126	Z	3.964	3.964	0	%100
115	M131	X	0	0	0	%100
116	M131	Z	1.982	1.982	0	%100
117	M134	X	0	0	0	%100
118	M134	Z	1.982	1.982	0	%100
119	M148	X	0	0	0	%100
120	M148	Z	9.414	9.414	0	%100
121	M152B	X	0	0	0	%100
122	M152B	Z	11.616	11.616	0	%100
123	M155	X	0	0	0	%100
124	M155	Z	1.901	1.901	0	%100
125	M154	X	0	0	0	%100
126	M154	Z	2.354	2.354	0	%100
127	M157A	X	0	0	0	%100

Member Distributed Loads (BLC 47 : Structure Wo (180 Deg)) (Continued)

	Member Label	Direction	Start Magnitude[lb/ft,...	End Magnitude[lb/ft,F...	Start Location[ft,%]	End Location[ft,%]
128	M157A	Z	2.354	2.354	0	%100
129	M160	X	0	0	0	%100
130	M160	Z	28.056	28.056	0	%100
131	M161	X	0	0	0	%100
132	M161	Z	28.056	28.056	0	%100
133	M162	X	0	0	0	%100
134	M162	Z	7.014	7.014	0	%100
135	M163	X	0	0	0	%100
136	M163	Z	7.014	7.014	0	%100
137	M164	X	0	0	0	%100
138	M164	Z	7.014	7.014	0	%100
139	M165	X	0	0	0	%100
140	M165	Z	7.014	7.014	0	%100
141	M166	X	0	0	0	%100
142	M166	Z	8.726	8.726	0	%100
143	M167	X	0	0	0	%100
144	M167	Z	2.182	2.182	0	%100
145	M168	X	0	0	0	%100
146	M168	Z	2.182	2.182	0	%100
147	M169	X	0	0	0	%100
148	M169	Z	9.414	9.414	0	%100
149	M170	X	0	0	0	%100
150	M170	Z	2.354	2.354	0	%100
151	M171	X	0	0	0	%100
152	M171	Z	2.354	2.354	0	%100
153	M174	X	0	0	0	%100
154	M174	Z	10.02	10.02	0	%100
155	M177	X	0	0	0	%100
156	M177	Z	10.02	10.02	0	%100
157	M180	X	0	0	0	%100
158	M180	Z	2.505	2.505	0	%100
159	M183	X	0	0	0	%100
160	M183	Z	2.505	2.505	0	%100
161	M186	X	0	0	0	%100
162	M186	Z	2.505	2.505	0	%100
163	M189	X	0	0	0	%100
164	M189	Z	2.505	2.505	0	%100
165	M504	X	0	0	0	%100
166	M504	Z	9.414	9.414	0	%100
167	M502	X	0	0	0	%100
168	M502	Z	9.414	9.414	0	%100
169	M501	X	0	0	0	%100
170	M501	Z	9.414	9.414	0	%100
171	M500	X	0	0	0	%100
172	M500	Z	9.414	9.414	0	%100
173	M506	X	0	0	0	%100
174	M506	Z	9.414	9.414	0	%100
175	M505	X	0	0	0	%100
176	M505	Z	9.414	9.414	0	%100
177	MP2A	X	0	0	0	%100
178	MP2A	Z	11.396	11.396	0	%100
179	MP3A	X	0	0	0	%100

Member Distributed Loads (BLC 47 : Structure Wo (180 Deg)) (Continued)

	Member Label	Direction	Start Magnitude[lb/ft,...	End Magnitude[lb/ft,F...	Start Location[ft,%]	End Location[ft,%]
180	MP3A	Z	9.414	9.414	0	%100
181	MP2C	X	0	0	0	%100
182	MP2C	Z	11.396	11.396	0	%100
183	MP2B	X	0	0	0	%100
184	MP2B	Z	11.396	11.396	0	%100
185	M223	X	0	0	0	%100
186	M223	Z	10.364	10.364	0	%100
187	M226A	X	0	0	0	%100
188	M226A	Z	10.364	10.364	0	%100
189	M228A	X	0	0	0	%100
190	M228A	Z	2.904	2.904	0	%100
191	M232A	X	0	0	0	%100
192	M232A	Z	10.364	10.364	0	%100
193	M235	X	0	0	0	%100
194	M235	Z	10.364	10.364	0	%100
195	M237	X	0	0	0	%100
196	M237	Z	2.904	2.904	0	%100
197	M244	X	0	0	0	%100
198	M244	Z	17.803	17.803	0	%100
199	M245	X	0	0	0	%100
200	M245	Z	17.974	17.974	0	%100
201	M246	X	0	0	0	%100
202	M246	Z	17.974	17.974	0	%100
203	M249	X	0	0	0	%100
204	M249	Z	11.396	11.396	0	%100
205	MP1A	X	0	0	0	%100
206	MP1A	Z	9.414	9.414	0	%100
207	M271	X	0	0	0	%100
208	M271	Z	3.245	3.245	0	%100
209	M271B	X	0	0	0	%100
210	M271B	Z	1.901	1.901	0	%100
211	M274A	X	0	0	0	%100
212	M274A	Z	14.188	14.188	0	%100
213	M277	X	0	0	0	%100
214	M277	Z	26.475	26.475	0	%100
215	M280	X	0	0	0	%100
216	M280	Z	26.475	26.475	0	%100
217	M283	X	0	0	0	%100
218	M283	Z	14.188	14.188	0	%100
219	M265	X	0	0	0	%100
220	M265	Z	2.849	2.849	0	%100
221	M266	X	0	0	0	%100
222	M266	Z	2.849	2.849	0	%100
223	MP4A	X	0	0	0	%100
224	MP4A	Z	9.414	9.414	0	%100
225	MP3C	X	0	0	0	%100
226	MP3C	Z	9.414	9.414	0	%100
227	MP3B	X	0	0	0	%100
228	MP3B	Z	9.414	9.414	0	%100
229	MP1C	X	0	0	0	%100
230	MP1C	Z	9.414	9.414	0	%100
231	MP4C	X	0	0	0	%100

Member Distributed Loads (BLC 47 : Structure Wo (180 Deg)) (Continued)

	Member Label	Direction	Start Magnitude[lb/ft,...	End Magnitude[lb/ft,F...	Start Location[ft,%]	End Location[ft,%]
232	MP4C	Z	9.414	9.414	0	%100
233	MP1B	X	0	0	0	%100
234	MP1B	Z	9.414	9.414	0	%100
235	MP4B	X	0	0	0	%100
236	MP4B	Z	9.414	9.414	0	%100
237	M287	X	0	0	0	%100
238	M287	Z	12.978	12.978	0	%100
239	M288	X	0	0	0	%100
240	M288	Z	3.245	3.245	0	%100

Member Distributed Loads (BLC 48 : Structure Wo (210 Deg))

	Member Label	Direction	Start Magnitude[lb/ft,...	End Magnitude[lb/ft,F...	Start Location[ft,%]	End Location[ft,%]
1	M1	X	-1.149	-1.149	0	%100
2	M1	Z	1.99	1.99	0	%100
3	M7	X	-3.241	-3.241	0	%100
4	M7	Z	5.614	5.614	0	%100
5	M8	X	-17.838	-17.838	0	%100
6	M8	Z	30.896	30.896	0	%100
7	M13	X	0	0	0	%100
8	M13	Z	0	0	0	%100
9	M14	X	-.194	-.194	0	%100
10	M14	Z	.336	.336	0	%100
11	M18	X	-.194	-.194	0	%100
12	M18	Z	.336	.336	0	%100
13	M25	X	-2.051	-2.051	0	%100
14	M25	Z	3.552	3.552	0	%100
15	M26	X	-2.051	-2.051	0	%100
16	M26	Z	3.552	3.552	0	%100
17	M31	X	-5.327	-5.327	0	%100
18	M31	Z	9.226	9.226	0	%100
19	M42A	X	-3.241	-3.241	0	%100
20	M42A	Z	5.614	5.614	0	%100
21	M44A	X	-2.692	-2.692	0	%100
22	M44A	Z	4.663	4.663	0	%100
23	M44	X	-.194	-.194	0	%100
24	M44	Z	.336	.336	0	%100
25	M46A	X	-.194	-.194	0	%100
26	M46A	Z	.336	.336	0	%100
27	M46B	X	-2.717	-2.717	0	%100
28	M46B	Z	4.706	4.706	0	%100
29	M34A	X	0	0	0	%100
30	M34A	Z	0	0	0	%100
31	M35	X	-2.692	-2.692	0	%100
32	M35	Z	4.663	4.663	0	%100
33	M36	X	-2.717	-2.717	0	%100
34	M36	Z	4.706	4.706	0	%100
35	M38	X	0	0	0	%100
36	M38	Z	0	0	0	%100
37	M42	X	-1.149	-1.149	0	%100
38	M42	Z	1.99	1.99	0	%100
39	M47	X	-3.241	-3.241	0	%100

Member Distributed Loads (BLC 48 : Structure Wo (210 Deg)) (Continued)

	Member Label	Direction	Start Magnitude[lb/ft,...	End Magnitude[lb/ft,F...	Start Location[ft,%]	End Location[ft,%]
40	M47	Z	5.614	5.614	0	%100
41	M48	X	-17.838	-17.838	0	%100
42	M48	Z	30.896	30.896	0	%100
43	M50	X	-2.692	-2.692	0	%100
44	M50	Z	4.663	4.663	0	%100
45	M51	X	-.194	-.194	0	%100
46	M51	Z	.336	.336	0	%100
47	M53	X	-.194	-.194	0	%100
48	M53	Z	.336	.336	0	%100
49	M56	X	-2.051	-2.051	0	%100
50	M56	Z	3.552	3.552	0	%100
51	M57	X	-2.051	-2.051	0	%100
52	M57	Z	3.552	3.552	0	%100
53	M59	X	0	0	0	%100
54	M59	Z	0	0	0	%100
55	M61	X	-3.241	-3.241	0	%100
56	M61	Z	5.614	5.614	0	%100
57	M62	X	0	0	0	%100
58	M62	Z	0	0	0	%100
59	M64	X	-.194	-.194	0	%100
60	M64	Z	.336	.336	0	%100
61	M66	X	-.194	-.194	0	%100
62	M66	Z	.336	.336	0	%100
63	M67	X	-2.717	-2.717	0	%100
64	M67	Z	4.706	4.706	0	%100
65	M68	X	-2.692	-2.692	0	%100
66	M68	Z	4.663	4.663	0	%100
67	M69	X	0	0	0	%100
68	M69	Z	0	0	0	%100
69	M70	X	-2.717	-2.717	0	%100
70	M70	Z	4.706	4.706	0	%100
71	M79	X	-5.327	-5.327	0	%100
72	M79	Z	9.226	9.226	0	%100
73	M83	X	-4.595	-4.595	0	%100
74	M83	Z	7.959	7.959	0	%100
75	M88	X	0	0	0	%100
76	M88	Z	0	0	0	%100
77	M89	X	0	0	0	%100
78	M89	Z	0	0	0	%100
79	M91	X	-2.692	-2.692	0	%100
80	M91	Z	4.663	4.663	0	%100
81	M92	X	-.775	-.775	0	%100
82	M92	Z	1.343	1.343	0	%100
83	M94	X	-.775	-.775	0	%100
84	M94	Z	1.343	1.343	0	%100
85	M97	X	-8.203	-8.203	0	%100
86	M97	Z	14.208	14.208	0	%100
87	M98	X	-8.203	-8.203	0	%100
88	M98	Z	14.208	14.208	0	%100
89	M100	X	-5.327	-5.327	0	%100
90	M100	Z	9.226	9.226	0	%100
91	M102	X	0	0	0	%100

Member Distributed Loads (BLC 48 : Structure Wo (210 Deg)) (Continued)

	Member Label	Direction	Start Magnitude[lb/ft,...	End Magnitude[lb/ft,F...	Start Location[ft,%]	End Location[ft,%]
92	M102	Z	0	0	0	%100
93	M103	X	-2.692	-2.692	0	%100
94	M103	Z	4.663	4.663	0	%100
95	M105	X	-.775	-.775	0	%100
96	M105	Z	1.343	1.343	0	%100
97	M107	X	-.775	-.775	0	%100
98	M107	Z	1.343	1.343	0	%100
99	M108	X	0	0	0	%100
100	M108	Z	0	0	0	%100
101	M109	X	-2.692	-2.692	0	%100
102	M109	Z	4.663	4.663	0	%100
103	M110	X	-2.692	-2.692	0	%100
104	M110	Z	4.663	4.663	0	%100
105	M111	X	0	0	0	%100
106	M111	Z	0	0	0	%100
107	M118	X	-5.946	-5.946	0	%100
108	M118	Z	10.299	10.299	0	%100
109	M120	X	-5.327	-5.327	0	%100
110	M120	Z	9.226	9.226	0	%100
111	M121A	X	-5.946	-5.946	0	%100
112	M121A	Z	10.299	10.299	0	%100
113	M126	X	0	0	0	%100
114	M126	Z	0	0	0	%100
115	M131	X	-7.24	-7.24	0	%100
116	M131	Z	12.539	12.539	0	%100
117	M134	X	-7.24	-7.24	0	%100
118	M134	Z	12.539	12.539	0	%100
119	M148	X	-3.53	-3.53	0	%100
120	M148	Z	6.115	6.115	0	%100
121	M152B	X	-4.356	-4.356	0	%100
122	M152B	Z	7.545	7.545	0	%100
123	M155	X	-7.094	-7.094	0	%100
124	M155	Z	12.287	12.287	0	%100
125	M154	X	-3.53	-3.53	0	%100
126	M154	Z	6.115	6.115	0	%100
127	M157A	X	0	0	0	%100
128	M157A	Z	0	0	0	%100
129	M160	X	-10.521	-10.521	0	%100
130	M160	Z	18.223	18.223	0	%100
131	M161	X	-10.521	-10.521	0	%100
132	M161	Z	18.223	18.223	0	%100
133	M162	X	-10.521	-10.521	0	%100
134	M162	Z	18.223	18.223	0	%100
135	M163	X	-10.521	-10.521	0	%100
136	M163	Z	18.223	18.223	0	%100
137	M164	X	0	0	0	%100
138	M164	Z	0	0	0	%100
139	M165	X	0	0	0	%100
140	M165	Z	0	0	0	%100
141	M166	X	-3.272	-3.272	0	%100
142	M166	Z	5.668	5.668	0	%100
143	M167	X	-3.272	-3.272	0	%100

Member Distributed Loads (BLC 48 : Structure Wo (210 Deg)) (Continued)

	Member Label	Direction	Start Magnitude[lb/ft,...	End Magnitude[lb/ft,F...	Start Location[ft,%]	End Location[ft,%]
144	M167	Z	5.668	5.668	0	%100
145	M168	X	0	0	0	%100
146	M168	Z	0	0	0	%100
147	M169	X	-3.53	-3.53	0	%100
148	M169	Z	6.115	6.115	0	%100
149	M170	X	-3.53	-3.53	0	%100
150	M170	Z	6.115	6.115	0	%100
151	M171	X	0	0	0	%100
152	M171	Z	0	0	0	%100
153	M174	X	-3.757	-3.757	0	%100
154	M174	Z	6.508	6.508	0	%100
155	M177	X	-3.757	-3.757	0	%100
156	M177	Z	6.508	6.508	0	%100
157	M180	X	-3.757	-3.757	0	%100
158	M180	Z	6.508	6.508	0	%100
159	M183	X	-3.757	-3.757	0	%100
160	M183	Z	6.508	6.508	0	%100
161	M186	X	0	0	0	%100
162	M186	Z	0	0	0	%100
163	M189	X	0	0	0	%100
164	M189	Z	0	0	0	%100
165	M504	X	-4.707	-4.707	0	%100
166	M504	Z	8.153	8.153	0	%100
167	M502	X	-4.707	-4.707	0	%100
168	M502	Z	8.153	8.153	0	%100
169	M501	X	-4.707	-4.707	0	%100
170	M501	Z	8.153	8.153	0	%100
171	M500	X	-4.707	-4.707	0	%100
172	M500	Z	8.153	8.153	0	%100
173	M506	X	-4.707	-4.707	0	%100
174	M506	Z	8.153	8.153	0	%100
175	M505	X	-4.707	-4.707	0	%100
176	M505	Z	8.153	8.153	0	%100
177	MP2A	X	-5.698	-5.698	0	%100
178	MP2A	Z	9.869	9.869	0	%100
179	MP3A	X	-4.707	-4.707	0	%100
180	MP3A	Z	8.153	8.153	0	%100
181	MP2C	X	-5.698	-5.698	0	%100
182	MP2C	Z	9.869	9.869	0	%100
183	MP2B	X	-5.698	-5.698	0	%100
184	MP2B	Z	9.869	9.869	0	%100
185	M223	X	-12.298	-12.298	0	%100
186	M223	Z	21.3	21.3	0	%100
187	M226A	X	-12.298	-12.298	0	%100
188	M226A	Z	21.3	21.3	0	%100
189	M228A	X	-4.356	-4.356	0	%100
190	M228A	Z	7.545	7.545	0	%100
191	M232A	X	-1.624	-1.624	0	%100
192	M232A	Z	2.813	2.813	0	%100
193	M235	X	-1.624	-1.624	0	%100
194	M235	Z	2.813	2.813	0	%100
195	M237	X	0	0	0	%100

Member Distributed Loads (BLC 48 : Structure Wo (210 Deg)) (Continued)

	Member Label	Direction	Start Magnitude[lb/ft,...	End Magnitude[lb/ft,F...	Start Location[ft,%]	End Location[ft,%]
196	M237	Z	0	0	0	%100
197	M244	X	-8.93	-8.93	0	%100
198	M244	Z	15.467	15.467	0	%100
199	M245	X	-8.93	-8.93	0	%100
200	M245	Z	15.467	15.467	0	%100
201	M246	X	-9.016	-9.016	0	%100
202	M246	Z	15.615	15.615	0	%100
203	M249	X	-4.274	-4.274	0	%100
204	M249	Z	7.402	7.402	0	%100
205	MP1A	X	-4.707	-4.707	0	%100
206	MP1A	Z	8.153	8.153	0	%100
207	M271	X	0	0	0	%100
208	M271	Z	0	0	0	%100
209	M271B	X	-.95	-.95	0	%100
210	M271B	Z	1.646	1.646	0	%100
211	M274A	X	-.95	-.95	0	%100
212	M274A	Z	1.646	1.646	0	%100
213	M277	X	-7.094	-7.094	0	%100
214	M277	Z	12.287	12.287	0	%100
215	M280	X	-13.237	-13.237	0	%100
216	M280	Z	22.928	22.928	0	%100
217	M283	X	-13.237	-13.237	0	%100
218	M283	Z	22.928	22.928	0	%100
219	M265	X	-4.274	-4.274	0	%100
220	M265	Z	7.402	7.402	0	%100
221	M266	X	0	0	0	%100
222	M266	Z	0	0	0	%100
223	MP4A	X	-4.707	-4.707	0	%100
224	MP4A	Z	8.153	8.153	0	%100
225	MP3C	X	-4.707	-4.707	0	%100
226	MP3C	Z	8.153	8.153	0	%100
227	MP3B	X	-4.707	-4.707	0	%100
228	MP3B	Z	8.153	8.153	0	%100
229	MP1C	X	-4.707	-4.707	0	%100
230	MP1C	Z	8.153	8.153	0	%100
231	MP4C	X	-4.707	-4.707	0	%100
232	MP4C	Z	8.153	8.153	0	%100
233	MP1B	X	-4.707	-4.707	0	%100
234	MP1B	Z	8.153	8.153	0	%100
235	MP4B	X	-4.707	-4.707	0	%100
236	MP4B	Z	8.153	8.153	0	%100
237	M287	X	-4.867	-4.867	0	%100
238	M287	Z	8.43	8.43	0	%100
239	M288	X	-4.867	-4.867	0	%100
240	M288	Z	8.43	8.43	0	%100

Member Distributed Loads (BLC 49 : Structure Wo (240 Deg))

	Member Label	Direction	Start Magnitude[lb/ft,...	End Magnitude[lb/ft,F...	Start Location[ft,%]	End Location[ft,%]
1	M1	X	-5.969	-5.969	0	%100
2	M1	Z	3.446	3.446	0	%100
3	M7	X	-1.871	-1.871	0	%100

Member Distributed Loads (BLC 49 : Structure Wo (240 Deg)) (Continued)

	Member Label	Direction	Start Magnitude[lb/ft,...	End Magnitude[lb/ft,F...	Start Location[ft,%]	End Location[ft,%]
4	M7	Z	1.08	1.08	0	%100
5	M8	X	-10.299	-10.299	0	%100
6	M8	Z	5.946	5.946	0	%100
7	M13	X	-1.554	-1.554	0	%100
8	M13	Z	.897	.897	0	%100
9	M14	X	-1.007	-1.007	0	%100
10	M14	Z	.582	.582	0	%100
11	M18	X	-1.007	-1.007	0	%100
12	M18	Z	.582	.582	0	%100
13	M25	X	-10.656	-10.656	0	%100
14	M25	Z	6.152	6.152	0	%100
15	M26	X	-10.656	-10.656	0	%100
16	M26	Z	6.152	6.152	0	%100
17	M31	X	-12.301	-12.301	0	%100
18	M31	Z	7.102	7.102	0	%100
19	M42A	X	-1.871	-1.871	0	%100
20	M42A	Z	1.08	1.08	0	%100
21	M44A	X	-6.217	-6.217	0	%100
22	M44A	Z	3.59	3.59	0	%100
23	M44	X	-1.007	-1.007	0	%100
24	M44	Z	.582	.582	0	%100
25	M46A	X	-1.007	-1.007	0	%100
26	M46A	Z	.582	.582	0	%100
27	M46B	X	-1.569	-1.569	0	%100
28	M46B	Z	.906	.906	0	%100
29	M34A	X	-1.554	-1.554	0	%100
30	M34A	Z	.897	.897	0	%100
31	M35	X	-6.217	-6.217	0	%100
32	M35	Z	3.59	3.59	0	%100
33	M36	X	-1.569	-1.569	0	%100
34	M36	Z	.906	.906	0	%100
35	M38	X	-3.075	-3.075	0	%100
36	M38	Z	1.776	1.776	0	%100
37	M42	X	0	0	0	%100
38	M42	Z	0	0	0	%100
39	M47	X	-7.486	-7.486	0	%100
40	M47	Z	4.322	4.322	0	%100
41	M48	X	-41.194	-41.194	0	%100
42	M48	Z	23.784	23.784	0	%100
43	M50	X	-1.554	-1.554	0	%100
44	M50	Z	.897	.897	0	%100
45	M51	X	0	0	0	%100
46	M51	Z	0	0	0	%100
47	M53	X	0	0	0	%100
48	M53	Z	0	0	0	%100
49	M56	X	0	0	0	%100
50	M56	Z	0	0	0	%100
51	M57	X	0	0	0	%100
52	M57	Z	0	0	0	%100
53	M59	X	-3.075	-3.075	0	%100
54	M59	Z	1.776	1.776	0	%100
55	M61	X	-7.486	-7.486	0	%100

Member Distributed Loads (BLC 49 : Structure Wo (240 Deg)) (Continued)

	Member Label	Direction	Start Magnitude[lb/ft,...	End Magnitude[lb/ft,F...	Start Location[ft,%]	End Location[ft,%]
56	M61	Z	4.322	4.322	0	%100
57	M62	X	-1.554	-1.554	0	%100
58	M62	Z	.897	.897	0	%100
59	M64	X	0	0	0	%100
60	M64	Z	0	0	0	%100
61	M66	X	0	0	0	%100
62	M66	Z	0	0	0	%100
63	M67	X	-6.274	-6.274	0	%100
64	M67	Z	3.622	3.622	0	%100
65	M68	X	-1.554	-1.554	0	%100
66	M68	Z	.897	.897	0	%100
67	M69	X	-1.554	-1.554	0	%100
68	M69	Z	.897	.897	0	%100
69	M70	X	-6.274	-6.274	0	%100
70	M70	Z	3.622	3.622	0	%100
71	M79	X	-3.075	-3.075	0	%100
72	M79	Z	1.776	1.776	0	%100
73	M83	X	-5.969	-5.969	0	%100
74	M83	Z	3.446	3.446	0	%100
75	M88	X	-1.871	-1.871	0	%100
76	M88	Z	1.08	1.08	0	%100
77	M89	X	-10.299	-10.299	0	%100
78	M89	Z	5.946	5.946	0	%100
79	M91	X	-6.217	-6.217	0	%100
80	M91	Z	3.59	3.59	0	%100
81	M92	X	-1.007	-1.007	0	%100
82	M92	Z	.582	.582	0	%100
83	M94	X	-1.007	-1.007	0	%100
84	M94	Z	.582	.582	0	%100
85	M97	X	-10.656	-10.656	0	%100
86	M97	Z	6.152	6.152	0	%100
87	M98	X	-10.656	-10.656	0	%100
88	M98	Z	6.152	6.152	0	%100
89	M100	X	-3.075	-3.075	0	%100
90	M100	Z	1.776	1.776	0	%100
91	M102	X	-1.871	-1.871	0	%100
92	M102	Z	1.08	1.08	0	%100
93	M103	X	-1.554	-1.554	0	%100
94	M103	Z	.897	.897	0	%100
95	M105	X	-1.007	-1.007	0	%100
96	M105	Z	.582	.582	0	%100
97	M107	X	-1.007	-1.007	0	%100
98	M107	Z	.582	.582	0	%100
99	M108	X	-1.569	-1.569	0	%100
100	M108	Z	.906	.906	0	%100
101	M109	X	-6.217	-6.217	0	%100
102	M109	Z	3.59	3.59	0	%100
103	M110	X	-1.554	-1.554	0	%100
104	M110	Z	.897	.897	0	%100
105	M111	X	-1.569	-1.569	0	%100
106	M111	Z	.906	.906	0	%100
107	M118	X	-3.433	-3.433	0	%100

Member Distributed Loads (BLC 49 : Structure Wo (240 Deg)) (Continued)

	Member Label	Direction	Start Magnitude[lb/ft,...	End Magnitude[lb/ft,F...	Start Location[ft,%]	End Location[ft,%]
108	M118	Z	1.982	1.982	0	%100
109	M120	X	-12.301	-12.301	0	%100
110	M120	Z	7.102	7.102	0	%100
111	M121A	X	-13.731	-13.731	0	%100
112	M121A	Z	7.928	7.928	0	%100
113	M126	X	-3.433	-3.433	0	%100
114	M126	Z	1.982	1.982	0	%100
115	M131	X	-34.186	-34.186	0	%100
116	M131	Z	19.737	19.737	0	%100
117	M134	X	-34.186	-34.186	0	%100
118	M134	Z	19.737	19.737	0	%100
119	M148	X	-2.038	-2.038	0	%100
120	M148	Z	1.177	1.177	0	%100
121	M152B	X	-2.515	-2.515	0	%100
122	M152B	Z	1.452	1.452	0	%100
123	M155	X	-22.928	-22.928	0	%100
124	M155	Z	13.237	13.237	0	%100
125	M154	X	-8.153	-8.153	0	%100
126	M154	Z	4.707	4.707	0	%100
127	M157A	X	-2.038	-2.038	0	%100
128	M157A	Z	1.177	1.177	0	%100
129	M160	X	-6.074	-6.074	0	%100
130	M160	Z	3.507	3.507	0	%100
131	M161	X	-6.074	-6.074	0	%100
132	M161	Z	3.507	3.507	0	%100
133	M162	X	-24.297	-24.297	0	%100
134	M162	Z	14.028	14.028	0	%100
135	M163	X	-24.297	-24.297	0	%100
136	M163	Z	14.028	14.028	0	%100
137	M164	X	-6.074	-6.074	0	%100
138	M164	Z	3.507	3.507	0	%100
139	M165	X	-6.074	-6.074	0	%100
140	M165	Z	3.507	3.507	0	%100
141	M166	X	-1.889	-1.889	0	%100
142	M166	Z	1.091	1.091	0	%100
143	M167	X	-7.557	-7.557	0	%100
144	M167	Z	4.363	4.363	0	%100
145	M168	X	-1.889	-1.889	0	%100
146	M168	Z	1.091	1.091	0	%100
147	M169	X	-2.038	-2.038	0	%100
148	M169	Z	1.177	1.177	0	%100
149	M170	X	-8.153	-8.153	0	%100
150	M170	Z	4.707	4.707	0	%100
151	M171	X	-2.038	-2.038	0	%100
152	M171	Z	1.177	1.177	0	%100
153	M174	X	-2.169	-2.169	0	%100
154	M174	Z	1.252	1.252	0	%100
155	M177	X	-2.169	-2.169	0	%100
156	M177	Z	1.252	1.252	0	%100
157	M180	X	-8.678	-8.678	0	%100
158	M180	Z	5.01	5.01	0	%100
159	M183	X	-8.678	-8.678	0	%100

Member Distributed Loads (BLC 49 : Structure Wo (240 Deg)) (Continued)

	Member Label	Direction	Start Magnitude[lb/ft,...	End Magnitude[lb/ft,F...	Start Location[ft,%]	End Location[ft,%]
160	M183	Z	5.01	5.01	0	%100
161	M186	X	-2.169	-2.169	0	%100
162	M186	Z	1.252	1.252	0	%100
163	M189	X	-2.169	-2.169	0	%100
164	M189	Z	1.252	1.252	0	%100
165	M504	X	-8.153	-8.153	0	%100
166	M504	Z	4.707	4.707	0	%100
167	M502	X	-8.153	-8.153	0	%100
168	M502	Z	4.707	4.707	0	%100
169	M501	X	-8.153	-8.153	0	%100
170	M501	Z	4.707	4.707	0	%100
171	M500	X	-8.153	-8.153	0	%100
172	M500	Z	4.707	4.707	0	%100
173	M506	X	-8.153	-8.153	0	%100
174	M506	Z	4.707	4.707	0	%100
175	M505	X	-8.153	-8.153	0	%100
176	M505	Z	4.707	4.707	0	%100
177	MP2A	X	-9.869	-9.869	0	%100
178	MP2A	Z	5.698	5.698	0	%100
179	MP3A	X	-8.153	-8.153	0	%100
180	MP3A	Z	4.707	4.707	0	%100
181	MP2C	X	-9.869	-9.869	0	%100
182	MP2C	Z	5.698	5.698	0	%100
183	MP2B	X	-9.869	-9.869	0	%100
184	MP2B	Z	5.698	5.698	0	%100
185	M223	X	-27.463	-27.463	0	%100
186	M223	Z	15.856	15.856	0	%100
187	M226A	X	-27.463	-27.463	0	%100
188	M226A	Z	15.856	15.856	0	%100
189	M228A	X	-10.06	-10.06	0	%100
190	M228A	Z	5.808	5.808	0	%100
191	M232A	X	-8.975	-8.975	0	%100
192	M232A	Z	5.182	5.182	0	%100
193	M235	X	-8.975	-8.975	0	%100
194	M235	Z	5.182	5.182	0	%100
195	M237	X	-2.515	-2.515	0	%100
196	M237	Z	1.452	1.452	0	%100
197	M244	X	-15.566	-15.566	0	%100
198	M244	Z	8.987	8.987	0	%100
199	M245	X	-15.418	-15.418	0	%100
200	M245	Z	8.902	8.902	0	%100
201	M246	X	-15.566	-15.566	0	%100
202	M246	Z	8.987	8.987	0	%100
203	M249	X	-2.467	-2.467	0	%100
204	M249	Z	1.425	1.425	0	%100
205	MP1A	X	-8.153	-8.153	0	%100
206	MP1A	Z	4.707	4.707	0	%100
207	M271	X	-2.81	-2.81	0	%100
208	M271	Z	1.622	1.622	0	%100
209	M271B	X	-12.287	-12.287	0	%100
210	M271B	Z	7.094	7.094	0	%100
211	M274A	X	-1.646	-1.646	0	%100

Member Distributed Loads (BLC 49 : Structure Wo (240 Deg)) (Continued)

	Member Label	Direction	Start Magnitude[lb/ft,...	End Magnitude[lb/ft,F...	Start Location[ft,%]	End Location[ft,%]
212	M274A	Z	.95	.95	0	%100
213	M277	X	-1.646	-1.646	0	%100
214	M277	Z	.95	.95	0	%100
215	M280	X	-12.287	-12.287	0	%100
216	M280	Z	7.094	7.094	0	%100
217	M283	X	-22.928	-22.928	0	%100
218	M283	Z	13.237	13.237	0	%100
219	M265	X	-9.869	-9.869	0	%100
220	M265	Z	5.698	5.698	0	%100
221	M266	X	-2.467	-2.467	0	%100
222	M266	Z	1.425	1.425	0	%100
223	MP4A	X	-8.153	-8.153	0	%100
224	MP4A	Z	4.707	4.707	0	%100
225	MP3C	X	-8.153	-8.153	0	%100
226	MP3C	Z	4.707	4.707	0	%100
227	MP3B	X	-8.153	-8.153	0	%100
228	MP3B	Z	4.707	4.707	0	%100
229	MP1C	X	-8.153	-8.153	0	%100
230	MP1C	Z	4.707	4.707	0	%100
231	MP4C	X	-8.153	-8.153	0	%100
232	MP4C	Z	4.707	4.707	0	%100
233	MP1B	X	-8.153	-8.153	0	%100
234	MP1B	Z	4.707	4.707	0	%100
235	MP4B	X	-8.153	-8.153	0	%100
236	MP4B	Z	4.707	4.707	0	%100
237	M287	X	-2.81	-2.81	0	%100
238	M287	Z	1.622	1.622	0	%100
239	M288	X	-11.24	-11.24	0	%100
240	M288	Z	6.489	6.489	0	%100

Member Distributed Loads (BLC 50 : Structure Wo (270 Deg))

	Member Label	Direction	Start Magnitude[lb/ft,...	End Magnitude[lb/ft,F...	Start Location[ft,%]	End Location[ft,%]
1	M1	X	-9.19	-9.19	0	%100
2	M1	Z	0	0	0	%100
3	M7	X	0	0	0	%100
4	M7	Z	0	0	0	%100
5	M8	X	0	0	0	%100
6	M8	Z	0	0	0	%100
7	M13	X	-5.384	-5.384	0	%100
8	M13	Z	0	0	0	%100
9	M14	X	-1.551	-1.551	0	%100
10	M14	Z	0	0	0	%100
11	M18	X	-1.551	-1.551	0	%100
12	M18	Z	0	0	0	%100
13	M25	X	-16.406	-16.406	0	%100
14	M25	Z	0	0	0	%100
15	M26	X	-16.406	-16.406	0	%100
16	M26	Z	0	0	0	%100
17	M31	X	-10.653	-10.653	0	%100
18	M31	Z	0	0	0	%100
19	M42A	X	0	0	0	%100

Member Distributed Loads (BLC 50 : Structure Wo (270 Deg)) (Continued)

	Member Label	Direction	Start Magnitude[lb/ft,...	End Magnitude[lb/ft,F...	Start Location[ft,%]	End Location[ft,%]
20	M42A	Z	0	0	0	%100
21	M44A	X	-5.384	-5.384	0	%100
22	M44A	Z	0	0	0	%100
23	M44	X	-1.551	-1.551	0	%100
24	M44	Z	0	0	0	%100
25	M46A	X	-1.551	-1.551	0	%100
26	M46A	Z	0	0	0	%100
27	M46B	X	0	0	0	%100
28	M46B	Z	0	0	0	%100
29	M34A	X	-5.384	-5.384	0	%100
30	M34A	Z	0	0	0	%100
31	M35	X	-5.384	-5.384	0	%100
32	M35	Z	0	0	0	%100
33	M36	X	0	0	0	%100
34	M36	Z	0	0	0	%100
35	M38	X	-10.653	-10.653	0	%100
36	M38	Z	0	0	0	%100
37	M42	X	-2.298	-2.298	0	%100
38	M42	Z	0	0	0	%100
39	M47	X	-6.483	-6.483	0	%100
40	M47	Z	0	0	0	%100
41	M48	X	-35.675	-35.675	0	%100
42	M48	Z	0	0	0	%100
43	M50	X	0	0	0	%100
44	M50	Z	0	0	0	%100
45	M51	X	-.388	-.388	0	%100
46	M51	Z	0	0	0	%100
47	M53	X	-.388	-.388	0	%100
48	M53	Z	0	0	0	%100
49	M56	X	-4.102	-4.102	0	%100
50	M56	Z	0	0	0	%100
51	M57	X	-4.102	-4.102	0	%100
52	M57	Z	0	0	0	%100
53	M59	X	-10.653	-10.653	0	%100
54	M59	Z	0	0	0	%100
55	M61	X	-6.483	-6.483	0	%100
56	M61	Z	0	0	0	%100
57	M62	X	-5.384	-5.384	0	%100
58	M62	Z	0	0	0	%100
59	M64	X	-.388	-.388	0	%100
60	M64	Z	0	0	0	%100
61	M66	X	-.388	-.388	0	%100
62	M66	Z	0	0	0	%100
63	M67	X	-5.434	-5.434	0	%100
64	M67	Z	0	0	0	%100
65	M68	X	0	0	0	%100
66	M68	Z	0	0	0	%100
67	M69	X	-5.384	-5.384	0	%100
68	M69	Z	0	0	0	%100
69	M70	X	-5.434	-5.434	0	%100
70	M70	Z	0	0	0	%100
71	M79	X	0	0	0	%100

Member Distributed Loads (BLC 50 : Structure Wo (270 Deg)) (Continued)

	Member Label	Direction	Start Magnitude[lb/ft,...	End Magnitude[lb/ft,F...	Start Location[ft,%]	End Location[ft,%]
72	M79	Z	0	0	0	%100
73	M83	X	-2.298	-2.298	0	%100
74	M83	Z	0	0	0	%100
75	M88	X	-6.483	-6.483	0	%100
76	M88	Z	0	0	0	%100
77	M89	X	-35.675	-35.675	0	%100
78	M89	Z	0	0	0	%100
79	M91	X	-5.384	-5.384	0	%100
80	M91	Z	0	0	0	%100
81	M92	X	-.388	-.388	0	%100
82	M92	Z	0	0	0	%100
83	M94	X	-.388	-.388	0	%100
84	M94	Z	0	0	0	%100
85	M97	X	-4.102	-4.102	0	%100
86	M97	Z	0	0	0	%100
87	M98	X	-4.102	-4.102	0	%100
88	M98	Z	0	0	0	%100
89	M100	X	0	0	0	%100
90	M100	Z	0	0	0	%100
91	M102	X	-6.483	-6.483	0	%100
92	M102	Z	0	0	0	%100
93	M103	X	0	0	0	%100
94	M103	Z	0	0	0	%100
95	M105	X	-.388	-.388	0	%100
96	M105	Z	0	0	0	%100
97	M107	X	-.388	-.388	0	%100
98	M107	Z	0	0	0	%100
99	M108	X	-5.434	-5.434	0	%100
100	M108	Z	0	0	0	%100
101	M109	X	-5.384	-5.384	0	%100
102	M109	Z	0	0	0	%100
103	M110	X	0	0	0	%100
104	M110	Z	0	0	0	%100
105	M111	X	-5.434	-5.434	0	%100
106	M111	Z	0	0	0	%100
107	M118	X	0	0	0	%100
108	M118	Z	0	0	0	%100
109	M120	X	-10.653	-10.653	0	%100
110	M120	Z	0	0	0	%100
111	M121A	X	-11.892	-11.892	0	%100
112	M121A	Z	0	0	0	%100
113	M126	X	-11.892	-11.892	0	%100
114	M126	Z	0	0	0	%100
115	M131	X	-51.971	-51.971	0	%100
116	M131	Z	0	0	0	%100
117	M134	X	-51.971	-51.971	0	%100
118	M134	Z	0	0	0	%100
119	M148	X	0	0	0	%100
120	M148	Z	0	0	0	%100
121	M152B	X	0	0	0	%100
122	M152B	Z	0	0	0	%100
123	M155	X	-26.475	-26.475	0	%100

Member Distributed Loads (BLC 50 : Structure Wo (270 Deg)) (Continued)

	Member Label	Direction	Start Magnitude[lb/ft,...	End Magnitude[lb/ft,F...	Start Location[ft,%]	End Location[ft,%]
124	M155	Z	0	0	0	%100
125	M154	X	-7.061	-7.061	0	%100
126	M154	Z	0	0	0	%100
127	M157A	X	-7.061	-7.061	0	%100
128	M157A	Z	0	0	0	%100
129	M160	X	0	0	0	%100
130	M160	Z	0	0	0	%100
131	M161	X	0	0	0	%100
132	M161	Z	0	0	0	%100
133	M162	X	-21.042	-21.042	0	%100
134	M162	Z	0	0	0	%100
135	M163	X	-21.042	-21.042	0	%100
136	M163	Z	0	0	0	%100
137	M164	X	-21.042	-21.042	0	%100
138	M164	Z	0	0	0	%100
139	M165	X	-21.042	-21.042	0	%100
140	M165	Z	0	0	0	%100
141	M166	X	0	0	0	%100
142	M166	Z	0	0	0	%100
143	M167	X	-6.545	-6.545	0	%100
144	M167	Z	0	0	0	%100
145	M168	X	-6.545	-6.545	0	%100
146	M168	Z	0	0	0	%100
147	M169	X	0	0	0	%100
148	M169	Z	0	0	0	%100
149	M170	X	-7.061	-7.061	0	%100
150	M170	Z	0	0	0	%100
151	M171	X	-7.061	-7.061	0	%100
152	M171	Z	0	0	0	%100
153	M174	X	0	0	0	%100
154	M174	Z	0	0	0	%100
155	M177	X	0	0	0	%100
156	M177	Z	0	0	0	%100
157	M180	X	-7.515	-7.515	0	%100
158	M180	Z	0	0	0	%100
159	M183	X	-7.515	-7.515	0	%100
160	M183	Z	0	0	0	%100
161	M186	X	-7.515	-7.515	0	%100
162	M186	Z	0	0	0	%100
163	M189	X	-7.515	-7.515	0	%100
164	M189	Z	0	0	0	%100
165	M504	X	-9.414	-9.414	0	%100
166	M504	Z	0	0	0	%100
167	M502	X	-9.414	-9.414	0	%100
168	M502	Z	0	0	0	%100
169	M501	X	-9.414	-9.414	0	%100
170	M501	Z	0	0	0	%100
171	M500	X	-9.414	-9.414	0	%100
172	M500	Z	0	0	0	%100
173	M506	X	-9.414	-9.414	0	%100
174	M506	Z	0	0	0	%100
175	M505	X	-9.414	-9.414	0	%100

Member Distributed Loads (BLC 50 : Structure Wo (270 Deg)) (Continued)

	Member Label	Direction	Start Magnitude[lb/ft,...	End Magnitude[lb/ft,F...	Start Location[ft,%]	End Location[ft,%]
176	M505	Z	0	0	0	%100
177	MP2A	X	-11.396	-11.396	0	%100
178	MP2A	Z	0	0	0	%100
179	MP3A	X	-9.414	-9.414	0	%100
180	MP3A	Z	0	0	0	%100
181	MP2C	X	-11.396	-11.396	0	%100
182	MP2C	Z	0	0	0	%100
183	MP2B	X	-11.396	-11.396	0	%100
184	MP2B	Z	0	0	0	%100
185	M223	X	-24.596	-24.596	0	%100
186	M223	Z	0	0	0	%100
187	M226A	X	-24.596	-24.596	0	%100
188	M226A	Z	0	0	0	%100
189	M228A	X	-8.712	-8.712	0	%100
190	M228A	Z	0	0	0	%100
191	M232A	X	-24.596	-24.596	0	%100
192	M232A	Z	0	0	0	%100
193	M235	X	-24.596	-24.596	0	%100
194	M235	Z	0	0	0	%100
195	M237	X	-8.712	-8.712	0	%100
196	M237	Z	0	0	0	%100
197	M244	X	-18.031	-18.031	0	%100
198	M244	Z	0	0	0	%100
199	M245	X	-17.86	-17.86	0	%100
200	M245	Z	0	0	0	%100
201	M246	X	-17.86	-17.86	0	%100
202	M246	Z	0	0	0	%100
203	M249	X	0	0	0	%100
204	M249	Z	0	0	0	%100
205	MP1A	X	-9.414	-9.414	0	%100
206	MP1A	Z	0	0	0	%100
207	M271	X	-9.734	-9.734	0	%100
208	M271	Z	0	0	0	%100
209	M271B	X	-26.475	-26.475	0	%100
210	M271B	Z	0	0	0	%100
211	M274A	X	-14.188	-14.188	0	%100
212	M274A	Z	0	0	0	%100
213	M277	X	-1.901	-1.901	0	%100
214	M277	Z	0	0	0	%100
215	M280	X	-1.901	-1.901	0	%100
216	M280	Z	0	0	0	%100
217	M283	X	-14.188	-14.188	0	%100
218	M283	Z	0	0	0	%100
219	M265	X	-8.547	-8.547	0	%100
220	M265	Z	0	0	0	%100
221	M266	X	-8.547	-8.547	0	%100
222	M266	Z	0	0	0	%100
223	MP4A	X	-9.414	-9.414	0	%100
224	MP4A	Z	0	0	0	%100
225	MP3C	X	-9.414	-9.414	0	%100
226	MP3C	Z	0	0	0	%100
227	MP3B	X	-9.414	-9.414	0	%100

Member Distributed Loads (BLC 50 : Structure Wo (270 Deg)) (Continued)

	Member Label	Direction	Start Magnitude[lb/ft,...	End Magnitude[lb/ft,F...	Start Location[ft,%]	End Location[ft,%]
228	MP3B	Z	0	0	0	%100
229	MP1C	X	-9.414	-9.414	0	%100
230	MP1C	Z	0	0	0	%100
231	MP4C	X	-9.414	-9.414	0	%100
232	MP4C	Z	0	0	0	%100
233	MP1B	X	-9.414	-9.414	0	%100
234	MP1B	Z	0	0	0	%100
235	MP4B	X	-9.414	-9.414	0	%100
236	MP4B	Z	0	0	0	%100
237	M287	X	0	0	0	%100
238	M287	Z	0	0	0	%100
239	M288	X	-9.734	-9.734	0	%100
240	M288	Z	0	0	0	%100

Member Distributed Loads (BLC 51 : Structure Wo (300 Deg))

	Member Label	Direction	Start Magnitude[lb/ft,...	End Magnitude[lb/ft,F...	Start Location[ft,%]	End Location[ft,%]
1	M1	X	-5.969	-5.969	0	%100
2	M1	Z	-3.446	-3.446	0	%100
3	M7	X	-1.871	-1.871	0	%100
4	M7	Z	-1.08	-1.08	0	%100
5	M8	X	-10.299	-10.299	0	%100
6	M8	Z	-5.946	-5.946	0	%100
7	M13	X	-6.217	-6.217	0	%100
8	M13	Z	-3.59	-3.59	0	%100
9	M14	X	-1.007	-1.007	0	%100
10	M14	Z	-.582	-.582	0	%100
11	M18	X	-1.007	-1.007	0	%100
12	M18	Z	-.582	-.582	0	%100
13	M25	X	-10.656	-10.656	0	%100
14	M25	Z	-6.152	-6.152	0	%100
15	M26	X	-10.656	-10.656	0	%100
16	M26	Z	-6.152	-6.152	0	%100
17	M31	X	-3.075	-3.075	0	%100
18	M31	Z	-1.776	-1.776	0	%100
19	M42A	X	-1.871	-1.871	0	%100
20	M42A	Z	-1.08	-1.08	0	%100
21	M44A	X	-1.554	-1.554	0	%100
22	M44A	Z	-.897	-.897	0	%100
23	M44	X	-1.007	-1.007	0	%100
24	M44	Z	-.582	-.582	0	%100
25	M46A	X	-1.007	-1.007	0	%100
26	M46A	Z	-.582	-.582	0	%100
27	M46B	X	-1.569	-1.569	0	%100
28	M46B	Z	-.906	-.906	0	%100
29	M34A	X	-6.217	-6.217	0	%100
30	M34A	Z	-3.59	-3.59	0	%100
31	M35	X	-1.554	-1.554	0	%100
32	M35	Z	-.897	-.897	0	%100
33	M36	X	-1.569	-1.569	0	%100
34	M36	Z	-.906	-.906	0	%100
35	M38	X	-12.301	-12.301	0	%100

Member Distributed Loads (BLC 51 : Structure Wo (300 Deg)) (Continued)

	Member Label	Direction	Start Magnitude[lb/ft,...	End Magnitude[lb/ft,F...	Start Location[ft,%]	End Location[ft,%]
36	M38	Z	-7.102	-7.102	0	%100
37	M42	X	-5.969	-5.969	0	%100
38	M42	Z	-3.446	-3.446	0	%100
39	M47	X	-1.871	-1.871	0	%100
40	M47	Z	-1.08	-1.08	0	%100
41	M48	X	-10.299	-10.299	0	%100
42	M48	Z	-5.946	-5.946	0	%100
43	M50	X	-1.554	-1.554	0	%100
44	M50	Z	-.897	-.897	0	%100
45	M51	X	-1.007	-1.007	0	%100
46	M51	Z	-.582	-.582	0	%100
47	M53	X	-1.007	-1.007	0	%100
48	M53	Z	-.582	-.582	0	%100
49	M56	X	-10.656	-10.656	0	%100
50	M56	Z	-6.152	-6.152	0	%100
51	M57	X	-10.656	-10.656	0	%100
52	M57	Z	-6.152	-6.152	0	%100
53	M59	X	-12.301	-12.301	0	%100
54	M59	Z	-7.102	-7.102	0	%100
55	M61	X	-1.871	-1.871	0	%100
56	M61	Z	-1.08	-1.08	0	%100
57	M62	X	-6.217	-6.217	0	%100
58	M62	Z	-3.59	-3.59	0	%100
59	M64	X	-1.007	-1.007	0	%100
60	M64	Z	-.582	-.582	0	%100
61	M66	X	-1.007	-1.007	0	%100
62	M66	Z	-.582	-.582	0	%100
63	M67	X	-1.569	-1.569	0	%100
64	M67	Z	-.906	-.906	0	%100
65	M68	X	-1.554	-1.554	0	%100
66	M68	Z	-.897	-.897	0	%100
67	M69	X	-6.217	-6.217	0	%100
68	M69	Z	-3.59	-3.59	0	%100
69	M70	X	-1.569	-1.569	0	%100
70	M70	Z	-.906	-.906	0	%100
71	M79	X	-3.075	-3.075	0	%100
72	M79	Z	-1.776	-1.776	0	%100
73	M83	X	0	0	0	%100
74	M83	Z	0	0	0	%100
75	M88	X	-7.486	-7.486	0	%100
76	M88	Z	-4.322	-4.322	0	%100
77	M89	X	-41.194	-41.194	0	%100
78	M89	Z	-23.784	-23.784	0	%100
79	M91	X	-1.554	-1.554	0	%100
80	M91	Z	-.897	-.897	0	%100
81	M92	X	0	0	0	%100
82	M92	Z	0	0	0	%100
83	M94	X	0	0	0	%100
84	M94	Z	0	0	0	%100
85	M97	X	0	0	0	%100
86	M97	Z	0	0	0	%100
87	M98	X	0	0	0	%100

Member Distributed Loads (BLC 51 : Structure Wo (300 Deg)) (Continued)

	Member Label	Direction	Start Magnitude[lb/ft,...	End Magnitude[lb/ft,F...	Start Location[ft,%]	End Location[ft,%]
88	M98	Z	0	0	0	%100
89	M100	X	-3.075	-3.075	0	%100
90	M100	Z	-1.776	-1.776	0	%100
91	M102	X	-7.486	-7.486	0	%100
92	M102	Z	-4.322	-4.322	0	%100
93	M103	X	-1.554	-1.554	0	%100
94	M103	Z	-.897	-.897	0	%100
95	M105	X	0	0	0	%100
96	M105	Z	0	0	0	%100
97	M107	X	0	0	0	%100
98	M107	Z	0	0	0	%100
99	M108	X	-6.274	-6.274	0	%100
100	M108	Z	-3.622	-3.622	0	%100
101	M109	X	-1.554	-1.554	0	%100
102	M109	Z	-.897	-.897	0	%100
103	M110	X	-1.554	-1.554	0	%100
104	M110	Z	-.897	-.897	0	%100
105	M111	X	-6.274	-6.274	0	%100
106	M111	Z	-3.622	-3.622	0	%100
107	M118	X	-3.433	-3.433	0	%100
108	M118	Z	-1.982	-1.982	0	%100
109	M120	X	-3.075	-3.075	0	%100
110	M120	Z	-1.776	-1.776	0	%100
111	M121A	X	-3.433	-3.433	0	%100
112	M121A	Z	-1.982	-1.982	0	%100
113	M126	X	-13.731	-13.731	0	%100
114	M126	Z	-7.928	-7.928	0	%100
115	M131	X	-34.186	-34.186	0	%100
116	M131	Z	-19.737	-19.737	0	%100
117	M134	X	-34.186	-34.186	0	%100
118	M134	Z	-19.737	-19.737	0	%100
119	M148	X	-2.038	-2.038	0	%100
120	M148	Z	-1.177	-1.177	0	%100
121	M152B	X	-2.515	-2.515	0	%100
122	M152B	Z	-1.452	-1.452	0	%100
123	M155	X	-12.287	-12.287	0	%100
124	M155	Z	-7.094	-7.094	0	%100
125	M154	X	-2.038	-2.038	0	%100
126	M154	Z	-1.177	-1.177	0	%100
127	M157A	X	-8.153	-8.153	0	%100
128	M157A	Z	-4.707	-4.707	0	%100
129	M160	X	-6.074	-6.074	0	%100
130	M160	Z	-3.507	-3.507	0	%100
131	M161	X	-6.074	-6.074	0	%100
132	M161	Z	-3.507	-3.507	0	%100
133	M162	X	-6.074	-6.074	0	%100
134	M162	Z	-3.507	-3.507	0	%100
135	M163	X	-6.074	-6.074	0	%100
136	M163	Z	-3.507	-3.507	0	%100
137	M164	X	-24.297	-24.297	0	%100
138	M164	Z	-14.028	-14.028	0	%100
139	M165	X	-24.297	-24.297	0	%100

Member Distributed Loads (BLC 51 : Structure Wo (300 Deg)) (Continued)

	Member Label	Direction	Start Magnitude[lb/ft,...	End Magnitude[lb/ft,F...	Start Location[ft,%]	End Location[ft,%]
140	M165	Z	-14.028	-14.028	0	%100
141	M166	X	-1.889	-1.889	0	%100
142	M166	Z	-1.091	-1.091	0	%100
143	M167	X	-1.889	-1.889	0	%100
144	M167	Z	-1.091	-1.091	0	%100
145	M168	X	-7.557	-7.557	0	%100
146	M168	Z	-4.363	-4.363	0	%100
147	M169	X	-2.038	-2.038	0	%100
148	M169	Z	-1.177	-1.177	0	%100
149	M170	X	-2.038	-2.038	0	%100
150	M170	Z	-1.177	-1.177	0	%100
151	M171	X	-8.153	-8.153	0	%100
152	M171	Z	-4.707	-4.707	0	%100
153	M174	X	-2.169	-2.169	0	%100
154	M174	Z	-1.252	-1.252	0	%100
155	M177	X	-2.169	-2.169	0	%100
156	M177	Z	-1.252	-1.252	0	%100
157	M180	X	-2.169	-2.169	0	%100
158	M180	Z	-1.252	-1.252	0	%100
159	M183	X	-2.169	-2.169	0	%100
160	M183	Z	-1.252	-1.252	0	%100
161	M186	X	-8.678	-8.678	0	%100
162	M186	Z	-5.01	-5.01	0	%100
163	M189	X	-8.678	-8.678	0	%100
164	M189	Z	-5.01	-5.01	0	%100
165	M504	X	-8.153	-8.153	0	%100
166	M504	Z	-4.707	-4.707	0	%100
167	M502	X	-8.153	-8.153	0	%100
168	M502	Z	-4.707	-4.707	0	%100
169	M501	X	-8.153	-8.153	0	%100
170	M501	Z	-4.707	-4.707	0	%100
171	M500	X	-8.153	-8.153	0	%100
172	M500	Z	-4.707	-4.707	0	%100
173	M506	X	-8.153	-8.153	0	%100
174	M506	Z	-4.707	-4.707	0	%100
175	M505	X	-8.153	-8.153	0	%100
176	M505	Z	-4.707	-4.707	0	%100
177	MP2A	X	-9.869	-9.869	0	%100
178	MP2A	Z	-5.698	-5.698	0	%100
179	MP3A	X	-8.153	-8.153	0	%100
180	MP3A	Z	-4.707	-4.707	0	%100
181	MP2C	X	-9.869	-9.869	0	%100
182	MP2C	Z	-5.698	-5.698	0	%100
183	MP2B	X	-9.869	-9.869	0	%100
184	MP2B	Z	-5.698	-5.698	0	%100
185	M223	X	-8.975	-8.975	0	%100
186	M223	Z	-5.182	-5.182	0	%100
187	M226A	X	-8.975	-8.975	0	%100
188	M226A	Z	-5.182	-5.182	0	%100
189	M228A	X	-2.515	-2.515	0	%100
190	M228A	Z	-1.452	-1.452	0	%100
191	M232A	X	-27.463	-27.463	0	%100

Member Distributed Loads (BLC 51 : Structure Wo (300 Deg)) (Continued)

	Member Label	Direction	Start Magnitude[lb/ft,...	End Magnitude[lb/ft,F...	Start Location[ft,%]	End Location[ft,%]
192	M232A	Z	-15.856	-15.856	0	%100
193	M235	X	-27.463	-27.463	0	%100
194	M235	Z	-15.856	-15.856	0	%100
195	M237	X	-10.06	-10.06	0	%100
196	M237	Z	-5.808	-5.808	0	%100
197	M244	X	-15.566	-15.566	0	%100
198	M244	Z	-8.987	-8.987	0	%100
199	M245	X	-15.566	-15.566	0	%100
200	M245	Z	-8.987	-8.987	0	%100
201	M246	X	-15.418	-15.418	0	%100
202	M246	Z	-8.902	-8.902	0	%100
203	M249	X	-2.467	-2.467	0	%100
204	M249	Z	-1.425	-1.425	0	%100
205	MP1A	X	-8.153	-8.153	0	%100
206	MP1A	Z	-4.707	-4.707	0	%100
207	M271	X	-11.24	-11.24	0	%100
208	M271	Z	-6.489	-6.489	0	%100
209	M271B	X	-22.928	-22.928	0	%100
210	M271B	Z	-13.237	-13.237	0	%100
211	M274A	X	-22.928	-22.928	0	%100
212	M274A	Z	-13.237	-13.237	0	%100
213	M277	X	-12.287	-12.287	0	%100
214	M277	Z	-7.094	-7.094	0	%100
215	M280	X	-1.646	-1.646	0	%100
216	M280	Z	-.95	-.95	0	%100
217	M283	X	-1.646	-1.646	0	%100
218	M283	Z	-.95	-.95	0	%100
219	M265	X	-2.467	-2.467	0	%100
220	M265	Z	-1.425	-1.425	0	%100
221	M266	X	-9.869	-9.869	0	%100
222	M266	Z	-5.698	-5.698	0	%100
223	MP4A	X	-8.153	-8.153	0	%100
224	MP4A	Z	-4.707	-4.707	0	%100
225	MP3C	X	-8.153	-8.153	0	%100
226	MP3C	Z	-4.707	-4.707	0	%100
227	MP3B	X	-8.153	-8.153	0	%100
228	MP3B	Z	-4.707	-4.707	0	%100
229	MP1C	X	-8.153	-8.153	0	%100
230	MP1C	Z	-4.707	-4.707	0	%100
231	MP4C	X	-8.153	-8.153	0	%100
232	MP4C	Z	-4.707	-4.707	0	%100
233	MP1B	X	-8.153	-8.153	0	%100
234	MP1B	Z	-4.707	-4.707	0	%100
235	MP4B	X	-8.153	-8.153	0	%100
236	MP4B	Z	-4.707	-4.707	0	%100
237	M287	X	-2.81	-2.81	0	%100
238	M287	Z	-1.622	-1.622	0	%100
239	M288	X	-2.81	-2.81	0	%100
240	M288	Z	-1.622	-1.622	0	%100

Member Distributed Loads (BLC 52 : Structure Wo (330 Deg))

	Member Label	Direction	Start Magnitude[lb/ft,...	End Magnitude[lb/ft,F...	Start Location[ft,%]	End Location[ft,%]

Member Distributed Loads (BLC 52 : Structure Wo (330 Deg)) (Continued)

	Member Label	Direction	Start Magnitude[lb/ft,...	End Magnitude[lb/ft,F...	Start Location[ft,%]	End Location[ft,%]
1	M1	X	-1.149	-1.149	0	%100
2	M1	Z	-1.99	-1.99	0	%100
3	M7	X	-3.241	-3.241	0	%100
4	M7	Z	-5.614	-5.614	0	%100
5	M8	X	-17.838	-17.838	0	%100
6	M8	Z	-30.896	-30.896	0	%100
7	M13	X	-2.692	-2.692	0	%100
8	M13	Z	-4.663	-4.663	0	%100
9	M14	X	-.194	-.194	0	%100
10	M14	Z	-.336	-.336	0	%100
11	M18	X	-.194	-.194	0	%100
12	M18	Z	-.336	-.336	0	%100
13	M25	X	-2.051	-2.051	0	%100
14	M25	Z	-3.552	-3.552	0	%100
15	M26	X	-2.051	-2.051	0	%100
16	M26	Z	-3.552	-3.552	0	%100
17	M31	X	0	0	0	%100
18	M31	Z	0	0	0	%100
19	M42A	X	-3.241	-3.241	0	%100
20	M42A	Z	-5.614	-5.614	0	%100
21	M44A	X	0	0	0	%100
22	M44A	Z	0	0	0	%100
23	M44	X	-.194	-.194	0	%100
24	M44	Z	-.336	-.336	0	%100
25	M46A	X	-.194	-.194	0	%100
26	M46A	Z	-.336	-.336	0	%100
27	M46B	X	-2.717	-2.717	0	%100
28	M46B	Z	-4.706	-4.706	0	%100
29	M34A	X	-2.692	-2.692	0	%100
30	M34A	Z	-4.663	-4.663	0	%100
31	M35	X	0	0	0	%100
32	M35	Z	0	0	0	%100
33	M36	X	-2.717	-2.717	0	%100
34	M36	Z	-4.706	-4.706	0	%100
35	M38	X	-5.327	-5.327	0	%100
36	M38	Z	-9.226	-9.226	0	%100
37	M42	X	-4.595	-4.595	0	%100
38	M42	Z	-7.959	-7.959	0	%100
39	M47	X	0	0	0	%100
40	M47	Z	0	0	0	%100
41	M48	X	0	0	0	%100
42	M48	Z	0	0	0	%100
43	M50	X	-2.692	-2.692	0	%100
44	M50	Z	-4.663	-4.663	0	%100
45	M51	X	-.775	-.775	0	%100
46	M51	Z	-1.343	-1.343	0	%100
47	M53	X	-.775	-.775	0	%100
48	M53	Z	-1.343	-1.343	0	%100
49	M56	X	-8.203	-8.203	0	%100
50	M56	Z	-14.208	-14.208	0	%100
51	M57	X	-8.203	-8.203	0	%100
52	M57	Z	-14.208	-14.208	0	%100

Member Distributed Loads (BLC 52 : Structure Wo (330 Deg)) (Continued)

	Member Label	Direction	Start Magnitude[lb/ft,...	End Magnitude[lb/ft,F...	Start Location[ft,%]	End Location[ft,%]
53	M59	X	-5.327	-5.327	0	%100
54	M59	Z	-9.226	-9.226	0	%100
55	M61	X	0	0	0	%100
56	M61	Z	0	0	0	%100
57	M62	X	-2.692	-2.692	0	%100
58	M62	Z	-4.663	-4.663	0	%100
59	M64	X	-.775	-.775	0	%100
60	M64	Z	-1.343	-1.343	0	%100
61	M66	X	-.775	-.775	0	%100
62	M66	Z	-1.343	-1.343	0	%100
63	M67	X	0	0	0	%100
64	M67	Z	0	0	0	%100
65	M68	X	-2.692	-2.692	0	%100
66	M68	Z	-4.663	-4.663	0	%100
67	M69	X	-2.692	-2.692	0	%100
68	M69	Z	-4.663	-4.663	0	%100
69	M70	X	0	0	0	%100
70	M70	Z	0	0	0	%100
71	M79	X	-5.327	-5.327	0	%100
72	M79	Z	-9.226	-9.226	0	%100
73	M83	X	-1.149	-1.149	0	%100
74	M83	Z	-1.99	-1.99	0	%100
75	M88	X	-3.241	-3.241	0	%100
76	M88	Z	-5.614	-5.614	0	%100
77	M89	X	-17.838	-17.838	0	%100
78	M89	Z	-30.896	-30.896	0	%100
79	M91	X	0	0	0	%100
80	M91	Z	0	0	0	%100
81	M92	X	-.194	-.194	0	%100
82	M92	Z	-.336	-.336	0	%100
83	M94	X	-.194	-.194	0	%100
84	M94	Z	-.336	-.336	0	%100
85	M97	X	-2.051	-2.051	0	%100
86	M97	Z	-3.552	-3.552	0	%100
87	M98	X	-2.051	-2.051	0	%100
88	M98	Z	-3.552	-3.552	0	%100
89	M100	X	-5.327	-5.327	0	%100
90	M100	Z	-9.226	-9.226	0	%100
91	M102	X	-3.241	-3.241	0	%100
92	M102	Z	-5.614	-5.614	0	%100
93	M103	X	-2.692	-2.692	0	%100
94	M103	Z	-4.663	-4.663	0	%100
95	M105	X	-.194	-.194	0	%100
96	M105	Z	-.336	-.336	0	%100
97	M107	X	-.194	-.194	0	%100
98	M107	Z	-.336	-.336	0	%100
99	M108	X	-2.717	-2.717	0	%100
100	M108	Z	-4.706	-4.706	0	%100
101	M109	X	0	0	0	%100
102	M109	Z	0	0	0	%100
103	M110	X	-2.692	-2.692	0	%100
104	M110	Z	-4.663	-4.663	0	%100

Member Distributed Loads (BLC 52 : Structure Wo (330 Deg)) (Continued)

	Member Label	Direction	Start Magnitude[lb/ft,...	End Magnitude[lb/ft,F...	Start Location[ft,%]	End Location[ft,%]
105	M111	X	-2.717	-2.717	0	%100
106	M111	Z	-4.706	-4.706	0	%100
107	M118	X	-5.946	-5.946	0	%100
108	M118	Z	-10.299	-10.299	0	%100
109	M120	X	0	0	0	%100
110	M120	Z	0	0	0	%100
111	M121A	X	0	0	0	%100
112	M121A	Z	0	0	0	%100
113	M126	X	-5.946	-5.946	0	%100
114	M126	Z	-10.299	-10.299	0	%100
115	M131	X	-7.24	-7.24	0	%100
116	M131	Z	-12.539	-12.539	0	%100
117	M134	X	-7.24	-7.24	0	%100
118	M134	Z	-12.539	-12.539	0	%100
119	M148	X	-3.53	-3.53	0	%100
120	M148	Z	-6.115	-6.115	0	%100
121	M152B	X	-4.356	-4.356	0	%100
122	M152B	Z	-7.545	-7.545	0	%100
123	M155	X	-.95	-.95	0	%100
124	M155	Z	-1.646	-1.646	0	%100
125	M154	X	0	0	0	%100
126	M154	Z	0	0	0	%100
127	M157A	X	-3.53	-3.53	0	%100
128	M157A	Z	-6.115	-6.115	0	%100
129	M160	X	-10.521	-10.521	0	%100
130	M160	Z	-18.223	-18.223	0	%100
131	M161	X	-10.521	-10.521	0	%100
132	M161	Z	-18.223	-18.223	0	%100
133	M162	X	0	0	0	%100
134	M162	Z	0	0	0	%100
135	M163	X	0	0	0	%100
136	M163	Z	0	0	0	%100
137	M164	X	-10.521	-10.521	0	%100
138	M164	Z	-18.223	-18.223	0	%100
139	M165	X	-10.521	-10.521	0	%100
140	M165	Z	-18.223	-18.223	0	%100
141	M166	X	-3.272	-3.272	0	%100
142	M166	Z	-5.668	-5.668	0	%100
143	M167	X	0	0	0	%100
144	M167	Z	0	0	0	%100
145	M168	X	-3.272	-3.272	0	%100
146	M168	Z	-5.668	-5.668	0	%100
147	M169	X	-3.53	-3.53	0	%100
148	M169	Z	-6.115	-6.115	0	%100
149	M170	X	0	0	0	%100
150	M170	Z	0	0	0	%100
151	M171	X	-3.53	-3.53	0	%100
152	M171	Z	-6.115	-6.115	0	%100
153	M174	X	-3.757	-3.757	0	%100
154	M174	Z	-6.508	-6.508	0	%100
155	M177	X	-3.757	-3.757	0	%100
156	M177	Z	-6.508	-6.508	0	%100

Member Distributed Loads (BLC 52 : Structure Wo (330 Deg)) (Continued)

	Member Label	Direction	Start Magnitude[lb/ft,...	End Magnitude[lb/ft,F...	Start Location[ft,%]	End Location[ft,%]
157	M180	X	0	0	0	%100
158	M180	Z	0	0	0	%100
159	M183	X	0	0	0	%100
160	M183	Z	0	0	0	%100
161	M186	X	-3.757	-3.757	0	%100
162	M186	Z	-6.508	-6.508	0	%100
163	M189	X	-3.757	-3.757	0	%100
164	M189	Z	-6.508	-6.508	0	%100
165	M504	X	-4.707	-4.707	0	%100
166	M504	Z	-8.153	-8.153	0	%100
167	M502	X	-4.707	-4.707	0	%100
168	M502	Z	-8.153	-8.153	0	%100
169	M501	X	-4.707	-4.707	0	%100
170	M501	Z	-8.153	-8.153	0	%100
171	M500	X	-4.707	-4.707	0	%100
172	M500	Z	-8.153	-8.153	0	%100
173	M506	X	-4.707	-4.707	0	%100
174	M506	Z	-8.153	-8.153	0	%100
175	M505	X	-4.707	-4.707	0	%100
176	M505	Z	-8.153	-8.153	0	%100
177	MP2A	X	-5.698	-5.698	0	%100
178	MP2A	Z	-9.869	-9.869	0	%100
179	MP3A	X	-4.707	-4.707	0	%100
180	MP3A	Z	-8.153	-8.153	0	%100
181	MP2C	X	-5.698	-5.698	0	%100
182	MP2C	Z	-9.869	-9.869	0	%100
183	MP2B	X	-5.698	-5.698	0	%100
184	MP2B	Z	-9.869	-9.869	0	%100
185	M223	X	-1.624	-1.624	0	%100
186	M223	Z	-2.813	-2.813	0	%100
187	M226A	X	-1.624	-1.624	0	%100
188	M226A	Z	-2.813	-2.813	0	%100
189	M228A	X	0	0	0	%100
190	M228A	Z	0	0	0	%100
191	M232A	X	-12.298	-12.298	0	%100
192	M232A	Z	-21.3	-21.3	0	%100
193	M235	X	-12.298	-12.298	0	%100
194	M235	Z	-21.3	-21.3	0	%100
195	M237	X	-4.356	-4.356	0	%100
196	M237	Z	-7.545	-7.545	0	%100
197	M244	X	-8.93	-8.93	0	%100
198	M244	Z	-15.467	-15.467	0	%100
199	M245	X	-9.016	-9.016	0	%100
200	M245	Z	-15.615	-15.615	0	%100
201	M246	X	-8.93	-8.93	0	%100
202	M246	Z	-15.467	-15.467	0	%100
203	M249	X	-4.274	-4.274	0	%100
204	M249	Z	-7.402	-7.402	0	%100
205	MP1A	X	-4.707	-4.707	0	%100
206	MP1A	Z	-8.153	-8.153	0	%100
207	M271	X	-4.867	-4.867	0	%100
208	M271	Z	-8.43	-8.43	0	%100

Member Distributed Loads (BLC 52 : Structure Wo (330 Deg)) (Continued)

	Member Label	Direction	Start Magnitude[lb/ft,...	End Magnitude[lb/ft,F...	Start Location[ft,%]	End Location[ft,%]
209	M271B	X	-7.094	-7.094	0	%100
210	M271B	Z	-12.287	-12.287	0	%100
211	M274A	X	-13.237	-13.237	0	%100
212	M274A	Z	-22.928	-22.928	0	%100
213	M277	X	-13.237	-13.237	0	%100
214	M277	Z	-22.928	-22.928	0	%100
215	M280	X	-7.094	-7.094	0	%100
216	M280	Z	-12.287	-12.287	0	%100
217	M283	X	-.95	-.95	0	%100
218	M283	Z	-1.646	-1.646	0	%100
219	M265	X	0	0	0	%100
220	M265	Z	0	0	0	%100
221	M266	X	-4.274	-4.274	0	%100
222	M266	Z	-7.402	-7.402	0	%100
223	MP4A	X	-4.707	-4.707	0	%100
224	MP4A	Z	-8.153	-8.153	0	%100
225	MP3C	X	-4.707	-4.707	0	%100
226	MP3C	Z	-8.153	-8.153	0	%100
227	MP3B	X	-4.707	-4.707	0	%100
228	MP3B	Z	-8.153	-8.153	0	%100
229	MP1C	X	-4.707	-4.707	0	%100
230	MP1C	Z	-8.153	-8.153	0	%100
231	MP4C	X	-4.707	-4.707	0	%100
232	MP4C	Z	-8.153	-8.153	0	%100
233	MP1B	X	-4.707	-4.707	0	%100
234	MP1B	Z	-8.153	-8.153	0	%100
235	MP4B	X	-4.707	-4.707	0	%100
236	MP4B	Z	-8.153	-8.153	0	%100
237	M287	X	-4.867	-4.867	0	%100
238	M287	Z	-8.43	-8.43	0	%100
239	M288	X	0	0	0	%100
240	M288	Z	0	0	0	%100

Member Distributed Loads (BLC 53 : Structure Wi (0 Deg))

	Member Label	Direction	Start Magnitude[lb/ft,...	End Magnitude[lb/ft,F...	Start Location[ft,%]	End Location[ft,%]
1	M1	X	0	0	0	%100
2	M1	Z	0	0	0	%100
3	M7	X	0	0	0	%100
4	M7	Z	-2.942	-2.942	0	%100
5	M8	X	0	0	0	%100
6	M8	Z	-10.05	-10.05	0	%100
7	M13	X	0	0	0	%100
8	M13	Z	-.62	-.62	0	%100
9	M14	X	0	0	0	%100
10	M14	Z	0	0	0	%100
11	M18	X	0	0	0	%100
12	M18	Z	0	0	0	%100
13	M25	X	0	0	0	%100
14	M25	Z	0	0	0	%100
15	M26	X	0	0	0	%100
16	M26	Z	0	0	0	%100

Member Distributed Loads (BLC 53 : Structure Wi (0 Deg)) (Continued)

	Member Label	Direction	Start Magnitude[lb/ft,...	End Magnitude[lb/ft,F...	Start Location[ft,%]	End Location[ft,%]
17	M31	X	0	0	0	%100
18	M31	Z	-.991	-.991	0	%100
19	M42A	X	0	0	0	%100
20	M42A	Z	-2.942	-2.942	0	%100
21	M44A	X	0	0	0	%100
22	M44A	Z	-.62	-.62	0	%100
23	M44	X	0	0	0	%100
24	M44	Z	0	0	0	%100
25	M46A	X	0	0	0	%100
26	M46A	Z	0	0	0	%100
27	M46B	X	0	0	0	%100
28	M46B	Z	-2.501	-2.501	0	%100
29	M34A	X	0	0	0	%100
30	M34A	Z	-.62	-.62	0	%100
31	M35	X	0	0	0	%100
32	M35	Z	-.62	-.62	0	%100
33	M36	X	0	0	0	%100
34	M36	Z	-2.501	-2.501	0	%100
35	M38	X	0	0	0	%100
36	M38	Z	-.991	-.991	0	%100
37	M42	X	0	0	0	%100
38	M42	Z	-2.266	-2.266	0	%100
39	M47	X	0	0	0	%100
40	M47	Z	-.735	-.735	0	%100
41	M48	X	0	0	0	%100
42	M48	Z	-2.512	-2.512	0	%100
43	M50	X	0	0	0	%100
44	M50	Z	-2.48	-2.48	0	%100
45	M51	X	0	0	0	%100
46	M51	Z	-.991	-.991	0	%100
47	M53	X	0	0	0	%100
48	M53	Z	-.991	-.991	0	%100
49	M56	X	0	0	0	%100
50	M56	Z	-3.494	-3.494	0	%100
51	M57	X	0	0	0	%100
52	M57	Z	-3.494	-3.494	0	%100
53	M59	X	0	0	0	%100
54	M59	Z	-.991	-.991	0	%100
55	M61	X	0	0	0	%100
56	M61	Z	-.735	-.735	0	%100
57	M62	X	0	0	0	%100
58	M62	Z	-.62	-.62	0	%100
59	M64	X	0	0	0	%100
60	M64	Z	-.991	-.991	0	%100
61	M66	X	0	0	0	%100
62	M66	Z	-.991	-.991	0	%100
63	M67	X	0	0	0	%100
64	M67	Z	-.625	-.625	0	%100
65	M68	X	0	0	0	%100
66	M68	Z	-2.48	-2.48	0	%100
67	M69	X	0	0	0	%100
68	M69	Z	-.62	-.62	0	%100

Member Distributed Loads (BLC 53 : Structure Wi (0 Deg)) (Continued)

	Member Label	Direction	Start Magnitude[lb/ft,...	End Magnitude[lb/ft,F...	Start Location[ft,%]	End Location[ft,%]
69	M70	X	0	0	0	%100
70	M70	Z	-.625	-.625	0	%100
71	M79	X	0	0	0	%100
72	M79	Z	-3.965	-3.965	0	%100
73	M83	X	0	0	0	%100
74	M83	Z	-2.266	-2.266	0	%100
75	M88	X	0	0	0	%100
76	M88	Z	-.735	-.735	0	%100
77	M89	X	0	0	0	%100
78	M89	Z	-2.512	-2.512	0	%100
79	M91	X	0	0	0	%100
80	M91	Z	-.62	-.62	0	%100
81	M92	X	0	0	0	%100
82	M92	Z	-.991	-.991	0	%100
83	M94	X	0	0	0	%100
84	M94	Z	-.991	-.991	0	%100
85	M97	X	0	0	0	%100
86	M97	Z	-3.494	-3.494	0	%100
87	M98	X	0	0	0	%100
88	M98	Z	-3.494	-3.494	0	%100
89	M100	X	0	0	0	%100
90	M100	Z	-3.965	-3.965	0	%100
91	M102	X	0	0	0	%100
92	M102	Z	-.735	-.735	0	%100
93	M103	X	0	0	0	%100
94	M103	Z	-2.48	-2.48	0	%100
95	M105	X	0	0	0	%100
96	M105	Z	-.991	-.991	0	%100
97	M107	X	0	0	0	%100
98	M107	Z	-.991	-.991	0	%100
99	M108	X	0	0	0	%100
100	M108	Z	-.625	-.625	0	%100
101	M109	X	0	0	0	%100
102	M109	Z	-.62	-.62	0	%100
103	M110	X	0	0	0	%100
104	M110	Z	-2.48	-2.48	0	%100
105	M111	X	0	0	0	%100
106	M111	Z	-.625	-.625	0	%100
107	M118	X	0	0	0	%100
108	M118	Z	-4.486	-4.486	0	%100
109	M120	X	0	0	0	%100
110	M120	Z	-.991	-.991	0	%100
111	M121A	X	0	0	0	%100
112	M121A	Z	-1.121	-1.121	0	%100
113	M126	X	0	0	0	%100
114	M126	Z	-1.121	-1.121	0	%100
115	M131	X	0	0	0	%100
116	M131	Z	-1.488	-1.488	0	%100
117	M134	X	0	0	0	%100
118	M134	Z	-1.488	-1.488	0	%100
119	M148	X	0	0	0	%100
120	M148	Z	-3.543	-3.543	0	%100

Member Distributed Loads (BLC 53 : Structure Wi (0 Deg)) (Continued)

	Member Label	Direction	Start Magnitude[lb/ft,...	End Magnitude[lb/ft,F...	Start Location[ft,%]	End Location[ft,%]
121	M152B	X	0	0	0	%100
122	M152B	Z	-3.959	-3.959	0	%100
123	M155	X	0	0	0	%100
124	M155	Z	-.428	-.428	0	%100
125	M154	X	0	0	0	%100
126	M154	Z	-.886	-.886	0	%100
127	M157A	X	0	0	0	%100
128	M157A	Z	-.886	-.886	0	%100
129	M160	X	0	0	0	%100
130	M160	Z	-6.332	-6.332	0	%100
131	M161	X	0	0	0	%100
132	M161	Z	-6.332	-6.332	0	%100
133	M162	X	0	0	0	%100
134	M162	Z	-1.583	-1.583	0	%100
135	M163	X	0	0	0	%100
136	M163	Z	-1.583	-1.583	0	%100
137	M164	X	0	0	0	%100
138	M164	Z	-1.583	-1.583	0	%100
139	M165	X	0	0	0	%100
140	M165	Z	-1.583	-1.583	0	%100
141	M166	X	0	0	0	%100
142	M166	Z	-3.29	-3.29	0	%100
143	M167	X	0	0	0	%100
144	M167	Z	-.823	-.823	0	%100
145	M168	X	0	0	0	%100
146	M168	Z	-.823	-.823	0	%100
147	M169	X	0	0	0	%100
148	M169	Z	-3.543	-3.543	0	%100
149	M170	X	0	0	0	%100
150	M170	Z	-.886	-.886	0	%100
151	M171	X	0	0	0	%100
152	M171	Z	-.886	-.886	0	%100
153	M174	X	0	0	0	%100
154	M174	Z	-3.133	-3.133	0	%100
155	M177	X	0	0	0	%100
156	M177	Z	-3.133	-3.133	0	%100
157	M180	X	0	0	0	%100
158	M180	Z	-.783	-.783	0	%100
159	M183	X	0	0	0	%100
160	M183	Z	-.783	-.783	0	%100
161	M186	X	0	0	0	%100
162	M186	Z	-.783	-.783	0	%100
163	M189	X	0	0	0	%100
164	M189	Z	-.783	-.783	0	%100
165	M504	X	0	0	0	%100
166	M504	Z	-3.543	-3.543	0	%100
167	M502	X	0	0	0	%100
168	M502	Z	-3.543	-3.543	0	%100
169	M501	X	0	0	0	%100
170	M501	Z	-3.543	-3.543	0	%100
171	M500	X	0	0	0	%100
172	M500	Z	-3.543	-3.543	0	%100

Member Distributed Loads (BLC 53 : Structure Wi (0 Deg)) (Continued)

	Member Label	Direction	Start Magnitude[lb/ft,...	End Magnitude[lb/ft,F...	Start Location[ft,%]	End Location[ft,%]
173	M506	X	0	0	0	%100
174	M506	Z	-3.543	-3.543	0	%100
175	M505	X	0	0	0	%100
176	M505	Z	-3.543	-3.543	0	%100
177	MP2A	X	0	0	0	%100
178	MP2A	Z	-3.918	-3.918	0	%100
179	MP3A	X	0	0	0	%100
180	MP3A	Z	-3.543	-3.543	0	%100
181	MP2C	X	0	0	0	%100
182	MP2C	Z	-3.918	-3.918	0	%100
183	MP2B	X	0	0	0	%100
184	MP2B	Z	-3.918	-3.918	0	%100
185	M223	X	0	0	0	%100
186	M223	Z	-3.073	-3.073	0	%100
187	M226A	X	0	0	0	%100
188	M226A	Z	-3.073	-3.073	0	%100
189	M228A	X	0	0	0	%100
190	M228A	Z	-.99	-.99	0	%100
191	M232A	X	0	0	0	%100
192	M232A	Z	-3.073	-3.073	0	%100
193	M235	X	0	0	0	%100
194	M235	Z	-3.073	-3.073	0	%100
195	M237	X	0	0	0	%100
196	M237	Z	-.99	-.99	0	%100
197	M244	X	0	0	0	%100
198	M244	Z	-4.331	-4.331	0	%100
199	M245	X	0	0	0	%100
200	M245	Z	-4.961	-4.961	0	%100
201	M246	X	0	0	0	%100
202	M246	Z	-4.961	-4.961	0	%100
203	M249	X	0	0	0	%100
204	M249	Z	-3.918	-3.918	0	%100
205	MP1A	X	0	0	0	%100
206	MP1A	Z	-3.543	-3.543	0	%100
207	M271	X	0	0	0	%100
208	M271	Z	-.902	-.902	0	%100
209	M271B	X	0	0	0	%100
210	M271B	Z	-.428	-.428	0	%100
211	M274A	X	0	0	0	%100
212	M274A	Z	-3.196	-3.196	0	%100
213	M277	X	0	0	0	%100
214	M277	Z	-5.964	-5.964	0	%100
215	M280	X	0	0	0	%100
216	M280	Z	-5.964	-5.964	0	%100
217	M283	X	0	0	0	%100
218	M283	Z	-3.196	-3.196	0	%100
219	M265	X	0	0	0	%100
220	M265	Z	-.979	-.979	0	%100
221	M266	X	0	0	0	%100
222	M266	Z	-.979	-.979	0	%100
223	MP4A	X	0	0	0	%100
224	MP4A	Z	-3.543	-3.543	0	%100

Member Distributed Loads (BLC 53 : Structure Wi (0 Deg)) (Continued)

	Member Label	Direction	Start Magnitude[lb/ft,...	End Magnitude[lb/ft,F...	Start Location[ft,%]	End Location[ft,%]
225	MP3C	X	0	0	0	%100
226	MP3C	Z	-3.543	-3.543	0	%100
227	MP3B	X	0	0	0	%100
228	MP3B	Z	-3.543	-3.543	0	%100
229	MP1C	X	0	0	0	%100
230	MP1C	Z	-3.543	-3.543	0	%100
231	MP4C	X	0	0	0	%100
232	MP4C	Z	-3.543	-3.543	0	%100
233	MP1B	X	0	0	0	%100
234	MP1B	Z	-3.543	-3.543	0	%100
235	MP4B	X	0	0	0	%100
236	MP4B	Z	-3.543	-3.543	0	%100
237	M287	X	0	0	0	%100
238	M287	Z	-3.607	-3.607	0	%100
239	M288	X	0	0	0	%100
240	M288	Z	-.902	-.902	0	%100

Member Distributed Loads (BLC 54 : Structure Wi (30 Deg))

	Member Label	Direction	Start Magnitude[lb/ft,...	End Magnitude[lb/ft,F...	Start Location[ft,%]	End Location[ft,%]
1	M1	X	.378	.378	0	%100
2	M1	Z	-.654	-.654	0	%100
3	M7	X	1.103	1.103	0	%100
4	M7	Z	-1.911	-1.911	0	%100
5	M8	X	3.769	3.769	0	%100
6	M8	Z	-6.528	-6.528	0	%100
7	M13	X	0	0	0	%100
8	M13	Z	0	0	0	%100
9	M14	X	.165	.165	0	%100
10	M14	Z	-.286	-.286	0	%100
11	M18	X	.165	.165	0	%100
12	M18	Z	-.286	-.286	0	%100
13	M25	X	.582	.582	0	%100
14	M25	Z	-1.009	-1.009	0	%100
15	M26	X	.582	.582	0	%100
16	M26	Z	-1.009	-1.009	0	%100
17	M31	X	1.487	1.487	0	%100
18	M31	Z	-2.575	-2.575	0	%100
19	M42A	X	1.103	1.103	0	%100
20	M42A	Z	-1.911	-1.911	0	%100
21	M44A	X	.93	.93	0	%100
22	M44A	Z	-1.611	-1.611	0	%100
23	M44	X	.165	.165	0	%100
24	M44	Z	-.286	-.286	0	%100
25	M46A	X	.165	.165	0	%100
26	M46A	Z	-.286	-.286	0	%100
27	M46B	X	.938	.938	0	%100
28	M46B	Z	-1.625	-1.625	0	%100
29	M34A	X	0	0	0	%100
30	M34A	Z	0	0	0	%100
31	M35	X	.93	.93	0	%100
32	M35	Z	-1.611	-1.611	0	%100

Member Distributed Loads (BLC 54 : Structure Wi (30 Deg)) (Continued)

	Member Label	Direction	Start Magnitude[lb/ft,...	End Magnitude[lb/ft,F...	Start Location[ft,%]	End Location[ft,%]
33	M36	X	.938	.938	0	%100
34	M36	Z	-1.625	-1.625	0	%100
35	M38	X	0	0	0	%100
36	M38	Z	0	0	0	%100
37	M42	X	.378	.378	0	%100
38	M42	Z	-.654	-.654	0	%100
39	M47	X	1.103	1.103	0	%100
40	M47	Z	-1.911	-1.911	0	%100
41	M48	X	3.769	3.769	0	%100
42	M48	Z	-6.528	-6.528	0	%100
43	M50	X	.93	.93	0	%100
44	M50	Z	-1.611	-1.611	0	%100
45	M51	X	.165	.165	0	%100
46	M51	Z	-.286	-.286	0	%100
47	M53	X	.165	.165	0	%100
48	M53	Z	-.286	-.286	0	%100
49	M56	X	.582	.582	0	%100
50	M56	Z	-1.009	-1.009	0	%100
51	M57	X	.582	.582	0	%100
52	M57	Z	-1.009	-1.009	0	%100
53	M59	X	0	0	0	%100
54	M59	Z	0	0	0	%100
55	M61	X	1.103	1.103	0	%100
56	M61	Z	-1.911	-1.911	0	%100
57	M62	X	0	0	0	%100
58	M62	Z	0	0	0	%100
59	M64	X	.165	.165	0	%100
60	M64	Z	-.286	-.286	0	%100
61	M66	X	.165	.165	0	%100
62	M66	Z	-.286	-.286	0	%100
63	M67	X	.938	.938	0	%100
64	M67	Z	-1.625	-1.625	0	%100
65	M68	X	.93	.93	0	%100
66	M68	Z	-1.611	-1.611	0	%100
67	M69	X	0	0	0	%100
68	M69	Z	0	0	0	%100
69	M70	X	.938	.938	0	%100
70	M70	Z	-1.625	-1.625	0	%100
71	M79	X	1.487	1.487	0	%100
72	M79	Z	-2.575	-2.575	0	%100
73	M83	X	1.511	1.511	0	%100
74	M83	Z	-2.617	-2.617	0	%100
75	M88	X	0	0	0	%100
76	M88	Z	0	0	0	%100
77	M89	X	0	0	0	%100
78	M89	Z	0	0	0	%100
79	M91	X	.93	.93	0	%100
80	M91	Z	-1.611	-1.611	0	%100
81	M92	X	.661	.661	0	%100
82	M92	Z	-1.145	-1.145	0	%100
83	M94	X	.661	.661	0	%100
84	M94	Z	-1.145	-1.145	0	%100

Member Distributed Loads (BLC 54 : Structure Wi (30 Deg)) (Continued)

	Member Label	Direction	Start Magnitude[lb/ft,...	End Magnitude[lb/ft,F...	Start Location[ft,%]	End Location[ft,%]
85	M97	X	2.329	2.329	0	%100
86	M97	Z	-4.035	-4.035	0	%100
87	M98	X	2.329	2.329	0	%100
88	M98	Z	-4.035	-4.035	0	%100
89	M100	X	1.487	1.487	0	%100
90	M100	Z	-2.575	-2.575	0	%100
91	M102	X	0	0	0	%100
92	M102	Z	0	0	0	%100
93	M103	X	.93	.93	0	%100
94	M103	Z	-1.611	-1.611	0	%100
95	M105	X	.661	.661	0	%100
96	M105	Z	-1.145	-1.145	0	%100
97	M107	X	.661	.661	0	%100
98	M107	Z	-1.145	-1.145	0	%100
99	M108	X	0	0	0	%100
100	M108	Z	0	0	0	%100
101	M109	X	.93	.93	0	%100
102	M109	Z	-1.611	-1.611	0	%100
103	M110	X	.93	.93	0	%100
104	M110	Z	-1.611	-1.611	0	%100
105	M111	X	0	0	0	%100
106	M111	Z	0	0	0	%100
107	M118	X	1.682	1.682	0	%100
108	M118	Z	-2.913	-2.913	0	%100
109	M120	X	1.487	1.487	0	%100
110	M120	Z	-2.575	-2.575	0	%100
111	M121A	X	1.682	1.682	0	%100
112	M121A	Z	-2.913	-2.913	0	%100
113	M126	X	0	0	0	%100
114	M126	Z	0	0	0	%100
115	M131	X	1.925	1.925	0	%100
116	M131	Z	-3.335	-3.335	0	%100
117	M134	X	1.925	1.925	0	%100
118	M134	Z	-3.335	-3.335	0	%100
119	M148	X	1.329	1.329	0	%100
120	M148	Z	-2.301	-2.301	0	%100
121	M152B	X	1.485	1.485	0	%100
122	M152B	Z	-2.572	-2.572	0	%100
123	M155	X	1.598	1.598	0	%100
124	M155	Z	-2.768	-2.768	0	%100
125	M154	X	1.329	1.329	0	%100
126	M154	Z	-2.301	-2.301	0	%100
127	M157A	X	0	0	0	%100
128	M157A	Z	0	0	0	%100
129	M160	X	2.375	2.375	0	%100
130	M160	Z	-4.113	-4.113	0	%100
131	M161	X	2.375	2.375	0	%100
132	M161	Z	-4.113	-4.113	0	%100
133	M162	X	2.375	2.375	0	%100
134	M162	Z	-4.113	-4.113	0	%100
135	M163	X	2.375	2.375	0	%100
136	M163	Z	-4.113	-4.113	0	%100

Member Distributed Loads (BLC 54 : Structure Wi (30 Deg)) (Continued)

	Member Label	Direction	Start Magnitude[lb/ft,...	End Magnitude[lb/ft,F...	Start Location[ft,%]	End Location[ft,%]
137	M164	X	0	0	0	%100
138	M164	Z	0	0	0	%100
139	M165	X	0	0	0	%100
140	M165	Z	0	0	0	%100
141	M166	X	1.234	1.234	0	%100
142	M166	Z	-2.137	-2.137	0	%100
143	M167	X	1.234	1.234	0	%100
144	M167	Z	-2.137	-2.137	0	%100
145	M168	X	0	0	0	%100
146	M168	Z	0	0	0	%100
147	M169	X	1.329	1.329	0	%100
148	M169	Z	-2.301	-2.301	0	%100
149	M170	X	1.329	1.329	0	%100
150	M170	Z	-2.301	-2.301	0	%100
151	M171	X	0	0	0	%100
152	M171	Z	0	0	0	%100
153	M174	X	1.175	1.175	0	%100
154	M174	Z	-2.035	-2.035	0	%100
155	M177	X	1.175	1.175	0	%100
156	M177	Z	-2.035	-2.035	0	%100
157	M180	X	1.175	1.175	0	%100
158	M180	Z	-2.035	-2.035	0	%100
159	M183	X	1.175	1.175	0	%100
160	M183	Z	-2.035	-2.035	0	%100
161	M186	X	0	0	0	%100
162	M186	Z	0	0	0	%100
163	M189	X	0	0	0	%100
164	M189	Z	0	0	0	%100
165	M504	X	1.772	1.772	0	%100
166	M504	Z	-3.068	-3.068	0	%100
167	M502	X	1.772	1.772	0	%100
168	M502	Z	-3.068	-3.068	0	%100
169	M501	X	1.772	1.772	0	%100
170	M501	Z	-3.068	-3.068	0	%100
171	M500	X	1.772	1.772	0	%100
172	M500	Z	-3.068	-3.068	0	%100
173	M506	X	1.772	1.772	0	%100
174	M506	Z	-3.068	-3.068	0	%100
175	M505	X	1.772	1.772	0	%100
176	M505	Z	-3.068	-3.068	0	%100
177	MP2A	X	1.959	1.959	0	%100
178	MP2A	Z	-3.393	-3.393	0	%100
179	MP3A	X	1.772	1.772	0	%100
180	MP3A	Z	-3.068	-3.068	0	%100
181	MP2C	X	1.959	1.959	0	%100
182	MP2C	Z	-3.393	-3.393	0	%100
183	MP2B	X	1.959	1.959	0	%100
184	MP2B	Z	-3.393	-3.393	0	%100
185	M223	X	2.882	2.882	0	%100
186	M223	Z	-4.991	-4.991	0	%100
187	M226A	X	2.882	2.882	0	%100
188	M226A	Z	-4.991	-4.991	0	%100

Member Distributed Loads (BLC 54 : Structure Wi (30 Deg)) (Continued)

	Member Label	Direction	Start Magnitude[lb/ft,...	End Magnitude[lb/ft,F...	Start Location[ft,%]	End Location[ft,%]
189	M228A	X	1.485	1.485	0	%100
190	M228A	Z	-2.572	-2.572	0	%100
191	M232A	X	.864	.864	0	%100
192	M232A	Z	-1.496	-1.496	0	%100
193	M235	X	.864	.864	0	%100
194	M235	Z	-1.496	-1.496	0	%100
195	M237	X	0	0	0	%100
196	M237	Z	0	0	0	%100
197	M244	X	2.271	2.271	0	%100
198	M244	Z	-3.933	-3.933	0	%100
199	M245	X	2.271	2.271	0	%100
200	M245	Z	-3.933	-3.933	0	%100
201	M246	X	2.585	2.585	0	%100
202	M246	Z	-4.478	-4.478	0	%100
203	M249	X	1.469	1.469	0	%100
204	M249	Z	-2.545	-2.545	0	%100
205	MP1A	X	1.772	1.772	0	%100
206	MP1A	Z	-3.068	-3.068	0	%100
207	M271	X	0	0	0	%100
208	M271	Z	0	0	0	%100
209	M271B	X	.214	.214	0	%100
210	M271B	Z	-.371	-.371	0	%100
211	M274A	X	.214	.214	0	%100
212	M274A	Z	-.371	-.371	0	%100
213	M277	X	1.598	1.598	0	%100
214	M277	Z	-2.768	-2.768	0	%100
215	M280	X	2.982	2.982	0	%100
216	M280	Z	-5.165	-5.165	0	%100
217	M283	X	2.982	2.982	0	%100
218	M283	Z	-5.165	-5.165	0	%100
219	M265	X	1.469	1.469	0	%100
220	M265	Z	-2.545	-2.545	0	%100
221	M266	X	0	0	0	%100
222	M266	Z	0	0	0	%100
223	MP4A	X	1.772	1.772	0	%100
224	MP4A	Z	-3.068	-3.068	0	%100
225	MP3C	X	1.772	1.772	0	%100
226	MP3C	Z	-3.068	-3.068	0	%100
227	MP3B	X	1.772	1.772	0	%100
228	MP3B	Z	-3.068	-3.068	0	%100
229	MP1C	X	1.772	1.772	0	%100
230	MP1C	Z	-3.068	-3.068	0	%100
231	MP4C	X	1.772	1.772	0	%100
232	MP4C	Z	-3.068	-3.068	0	%100
233	MP1B	X	1.772	1.772	0	%100
234	MP1B	Z	-3.068	-3.068	0	%100
235	MP4B	X	1.772	1.772	0	%100
236	MP4B	Z	-3.068	-3.068	0	%100
237	M287	X	1.353	1.353	0	%100
238	M287	Z	-2.343	-2.343	0	%100
239	M288	X	1.353	1.353	0	%100
240	M288	Z	-2.343	-2.343	0	%100

Member Distributed Loads (BLC 55 : Structure Wi (60 Deg))

	Member Label	Direction	Start Magnitude[lb/ft,...	End Magnitude[lb/ft,F...	Start Location[ft,%]	End Location[ft,%]
1	M1	X	1.963	1.963	0	%100
2	M1	Z	-1.133	-1.133	0	%100
3	M7	X	.637	.637	0	%100
4	M7	Z	-.368	-.368	0	%100
5	M8	X	2.176	2.176	0	%100
6	M8	Z	-1.256	-1.256	0	%100
7	M13	X	.537	.537	0	%100
8	M13	Z	-.31	-.31	0	%100
9	M14	X	.859	.859	0	%100
10	M14	Z	-.496	-.496	0	%100
11	M18	X	.859	.859	0	%100
12	M18	Z	-.496	-.496	0	%100
13	M25	X	3.026	3.026	0	%100
14	M25	Z	-1.747	-1.747	0	%100
15	M26	X	3.026	3.026	0	%100
16	M26	Z	-1.747	-1.747	0	%100
17	M31	X	3.434	3.434	0	%100
18	M31	Z	-1.983	-1.983	0	%100
19	M42A	X	.637	.637	0	%100
20	M42A	Z	-.368	-.368	0	%100
21	M44A	X	2.148	2.148	0	%100
22	M44A	Z	-1.24	-1.24	0	%100
23	M44	X	.859	.859	0	%100
24	M44	Z	-.496	-.496	0	%100
25	M46A	X	.859	.859	0	%100
26	M46A	Z	-.496	-.496	0	%100
27	M46B	X	.542	.542	0	%100
28	M46B	Z	-.313	-.313	0	%100
29	M34A	X	.537	.537	0	%100
30	M34A	Z	-.31	-.31	0	%100
31	M35	X	2.148	2.148	0	%100
32	M35	Z	-1.24	-1.24	0	%100
33	M36	X	.542	.542	0	%100
34	M36	Z	-.313	-.313	0	%100
35	M38	X	.858	.858	0	%100
36	M38	Z	-.496	-.496	0	%100
37	M42	X	0	0	0	%100
38	M42	Z	0	0	0	%100
39	M47	X	2.548	2.548	0	%100
40	M47	Z	-1.471	-1.471	0	%100
41	M48	X	8.704	8.704	0	%100
42	M48	Z	-5.025	-5.025	0	%100
43	M50	X	.537	.537	0	%100
44	M50	Z	-.31	-.31	0	%100
45	M51	X	0	0	0	%100
46	M51	Z	0	0	0	%100
47	M53	X	0	0	0	%100
48	M53	Z	0	0	0	%100
49	M56	X	0	0	0	%100
50	M56	Z	0	0	0	%100
51	M57	X	0	0	0	%100
52	M57	Z	0	0	0	%100

Member Distributed Loads (BLC 55 : Structure Wi (60 Deg)) (Continued)

	Member Label	Direction	Start Magnitude[lb/ft,...	End Magnitude[lb/ft,F...	Start Location[ft,%]	End Location[ft,%]
53	M59	X	.858	.858	0	%100
54	M59	Z	-.496	-.496	0	%100
55	M61	X	2.548	2.548	0	%100
56	M61	Z	-1.471	-1.471	0	%100
57	M62	X	.537	.537	0	%100
58	M62	Z	-.31	-.31	0	%100
59	M64	X	0	0	0	%100
60	M64	Z	0	0	0	%100
61	M66	X	0	0	0	%100
62	M66	Z	0	0	0	%100
63	M67	X	2.166	2.166	0	%100
64	M67	Z	-1.251	-1.251	0	%100
65	M68	X	.537	.537	0	%100
66	M68	Z	-.31	-.31	0	%100
67	M69	X	.537	.537	0	%100
68	M69	Z	-.31	-.31	0	%100
69	M70	X	2.166	2.166	0	%100
70	M70	Z	-1.251	-1.251	0	%100
71	M79	X	.858	.858	0	%100
72	M79	Z	-.496	-.496	0	%100
73	M83	X	1.963	1.963	0	%100
74	M83	Z	-1.133	-1.133	0	%100
75	M88	X	.637	.637	0	%100
76	M88	Z	-.368	-.368	0	%100
77	M89	X	2.176	2.176	0	%100
78	M89	Z	-1.256	-1.256	0	%100
79	M91	X	2.148	2.148	0	%100
80	M91	Z	-1.24	-1.24	0	%100
81	M92	X	.859	.859	0	%100
82	M92	Z	-.496	-.496	0	%100
83	M94	X	.859	.859	0	%100
84	M94	Z	-.496	-.496	0	%100
85	M97	X	3.026	3.026	0	%100
86	M97	Z	-1.747	-1.747	0	%100
87	M98	X	3.026	3.026	0	%100
88	M98	Z	-1.747	-1.747	0	%100
89	M100	X	.858	.858	0	%100
90	M100	Z	-.496	-.496	0	%100
91	M102	X	.637	.637	0	%100
92	M102	Z	-.368	-.368	0	%100
93	M103	X	.537	.537	0	%100
94	M103	Z	-.31	-.31	0	%100
95	M105	X	.859	.859	0	%100
96	M105	Z	-.496	-.496	0	%100
97	M107	X	.859	.859	0	%100
98	M107	Z	-.496	-.496	0	%100
99	M108	X	.542	.542	0	%100
100	M108	Z	-.313	-.313	0	%100
101	M109	X	2.148	2.148	0	%100
102	M109	Z	-1.24	-1.24	0	%100
103	M110	X	.537	.537	0	%100
104	M110	Z	-.31	-.31	0	%100

Member Distributed Loads (BLC 55 : Structure Wi (60 Deg)) (Continued)

	Member Label	Direction	Start Magnitude[lb/ft,...	End Magnitude[lb/ft,F...	Start Location[ft,%]	End Location[ft,%]
105	M111	X	.542	.542	0	%100
106	M111	Z	-.313	-.313	0	%100
107	M118	X	.971	.971	0	%100
108	M118	Z	-.561	-.561	0	%100
109	M120	X	3.434	3.434	0	%100
110	M120	Z	-1.983	-1.983	0	%100
111	M121A	X	3.885	3.885	0	%100
112	M121A	Z	-2.243	-2.243	0	%100
113	M126	X	.971	.971	0	%100
114	M126	Z	-.561	-.561	0	%100
115	M131	X	7.427	7.427	0	%100
116	M131	Z	-4.288	-4.288	0	%100
117	M134	X	7.427	7.427	0	%100
118	M134	Z	-4.288	-4.288	0	%100
119	M148	X	.767	.767	0	%100
120	M148	Z	-.443	-.443	0	%100
121	M152B	X	.857	.857	0	%100
122	M152B	Z	-.495	-.495	0	%100
123	M155	X	5.165	5.165	0	%100
124	M155	Z	-2.982	-2.982	0	%100
125	M154	X	3.068	3.068	0	%100
126	M154	Z	-1.772	-1.772	0	%100
127	M157A	X	.767	.767	0	%100
128	M157A	Z	-.443	-.443	0	%100
129	M160	X	1.371	1.371	0	%100
130	M160	Z	-.792	-.792	0	%100
131	M161	X	1.371	1.371	0	%100
132	M161	Z	-.792	-.792	0	%100
133	M162	X	5.484	5.484	0	%100
134	M162	Z	-3.166	-3.166	0	%100
135	M163	X	5.484	5.484	0	%100
136	M163	Z	-3.166	-3.166	0	%100
137	M164	X	1.371	1.371	0	%100
138	M164	Z	-.792	-.792	0	%100
139	M165	X	1.371	1.371	0	%100
140	M165	Z	-.792	-.792	0	%100
141	M166	X	.712	.712	0	%100
142	M166	Z	-.411	-.411	0	%100
143	M167	X	2.85	2.85	0	%100
144	M167	Z	-1.645	-1.645	0	%100
145	M168	X	.712	.712	0	%100
146	M168	Z	-.411	-.411	0	%100
147	M169	X	.767	.767	0	%100
148	M169	Z	-.443	-.443	0	%100
149	M170	X	3.068	3.068	0	%100
150	M170	Z	-1.772	-1.772	0	%100
151	M171	X	.767	.767	0	%100
152	M171	Z	-.443	-.443	0	%100
153	M174	X	.678	.678	0	%100
154	M174	Z	-.392	-.392	0	%100
155	M177	X	.678	.678	0	%100
156	M177	Z	-.392	-.392	0	%100

Member Distributed Loads (BLC 55 : Structure Wi (60 Deg)) (Continued)

	Member Label	Direction	Start Magnitude[lb/ft,...	End Magnitude[lb/ft,F...	Start Location[ft,%]	End Location[ft,%]
157	M180	X	2.713	2.713	0	%100
158	M180	Z	-1.566	-1.566	0	%100
159	M183	X	2.713	2.713	0	%100
160	M183	Z	-1.566	-1.566	0	%100
161	M186	X	.678	.678	0	%100
162	M186	Z	-.392	-.392	0	%100
163	M189	X	.678	.678	0	%100
164	M189	Z	-.392	-.392	0	%100
165	M504	X	3.068	3.068	0	%100
166	M504	Z	-1.772	-1.772	0	%100
167	M502	X	3.068	3.068	0	%100
168	M502	Z	-1.772	-1.772	0	%100
169	M501	X	3.068	3.068	0	%100
170	M501	Z	-1.772	-1.772	0	%100
171	M500	X	3.068	3.068	0	%100
172	M500	Z	-1.772	-1.772	0	%100
173	M506	X	3.068	3.068	0	%100
174	M506	Z	-1.772	-1.772	0	%100
175	M505	X	3.068	3.068	0	%100
176	M505	Z	-1.772	-1.772	0	%100
177	MP2A	X	3.393	3.393	0	%100
178	MP2A	Z	-1.959	-1.959	0	%100
179	MP3A	X	3.068	3.068	0	%100
180	MP3A	Z	-1.772	-1.772	0	%100
181	MP2C	X	3.393	3.393	0	%100
182	MP2C	Z	-1.959	-1.959	0	%100
183	MP2B	X	3.393	3.393	0	%100
184	MP2B	Z	-1.959	-1.959	0	%100
185	M223	X	6.156	6.156	0	%100
186	M223	Z	-3.554	-3.554	0	%100
187	M226A	X	6.156	6.156	0	%100
188	M226A	Z	-3.554	-3.554	0	%100
189	M228A	X	3.429	3.429	0	%100
190	M228A	Z	-1.98	-1.98	0	%100
191	M232A	X	2.661	2.661	0	%100
192	M232A	Z	-1.536	-1.536	0	%100
193	M235	X	2.661	2.661	0	%100
194	M235	Z	-1.536	-1.536	0	%100
195	M237	X	.857	.857	0	%100
196	M237	Z	-.495	-.495	0	%100
197	M244	X	4.296	4.296	0	%100
198	M244	Z	-2.481	-2.481	0	%100
199	M245	X	3.751	3.751	0	%100
200	M245	Z	-2.166	-2.166	0	%100
201	M246	X	4.296	4.296	0	%100
202	M246	Z	-2.481	-2.481	0	%100
203	M249	X	.848	.848	0	%100
204	M249	Z	-.49	-.49	0	%100
205	MP1A	X	3.068	3.068	0	%100
206	MP1A	Z	-1.772	-1.772	0	%100
207	M271	X	.781	.781	0	%100
208	M271	Z	-.451	-.451	0	%100

Member Distributed Loads (BLC 55 : Structure Wi (60 Deg)) (Continued)

	Member Label	Direction	Start Magnitude[lb/ft,...	End Magnitude[lb/ft,F...	Start Location[ft,%]	End Location[ft,%]
209	M271B	X	2.768	2.768	0	%100
210	M271B	Z	-1.598	-1.598	0	%100
211	M274A	X	.371	.371	0	%100
212	M274A	Z	-.214	-.214	0	%100
213	M277	X	.371	.371	0	%100
214	M277	Z	-.214	-.214	0	%100
215	M280	X	2.768	2.768	0	%100
216	M280	Z	-1.598	-1.598	0	%100
217	M283	X	5.165	5.165	0	%100
218	M283	Z	-2.982	-2.982	0	%100
219	M265	X	3.393	3.393	0	%100
220	M265	Z	-1.959	-1.959	0	%100
221	M266	X	.848	.848	0	%100
222	M266	Z	-.49	-.49	0	%100
223	MP4A	X	3.068	3.068	0	%100
224	MP4A	Z	-1.772	-1.772	0	%100
225	MP3C	X	3.068	3.068	0	%100
226	MP3C	Z	-1.772	-1.772	0	%100
227	MP3B	X	3.068	3.068	0	%100
228	MP3B	Z	-1.772	-1.772	0	%100
229	MP1C	X	3.068	3.068	0	%100
230	MP1C	Z	-1.772	-1.772	0	%100
231	MP4C	X	3.068	3.068	0	%100
232	MP4C	Z	-1.772	-1.772	0	%100
233	MP1B	X	3.068	3.068	0	%100
234	MP1B	Z	-1.772	-1.772	0	%100
235	MP4B	X	3.068	3.068	0	%100
236	MP4B	Z	-1.772	-1.772	0	%100
237	M287	X	.781	.781	0	%100
238	M287	Z	-.451	-.451	0	%100
239	M288	X	3.124	3.124	0	%100
240	M288	Z	-1.804	-1.804	0	%100

Member Distributed Loads (BLC 56 : Structure Wi (90 Deg))

	Member Label	Direction	Start Magnitude[lb/ft,...	End Magnitude[lb/ft,F...	Start Location[ft,%]	End Location[ft,%]
1	M1	X	3.022	3.022	0	%100
2	M1	Z	0	0	0	%100
3	M7	X	0	0	0	%100
4	M7	Z	0	0	0	%100
5	M8	X	0	0	0	%100
6	M8	Z	0	0	0	%100
7	M13	X	1.86	1.86	0	%100
8	M13	Z	0	0	0	%100
9	M14	X	1.322	1.322	0	%100
10	M14	Z	0	0	0	%100
11	M18	X	1.322	1.322	0	%100
12	M18	Z	0	0	0	%100
13	M25	X	4.659	4.659	0	%100
14	M25	Z	0	0	0	%100
15	M26	X	4.659	4.659	0	%100
16	M26	Z	0	0	0	%100

Member Distributed Loads (BLC 56 : Structure Wi (90 Deg)) (Continued)

	Member Label	Direction	Start Magnitude[lb/ft,...	End Magnitude[lb/ft,F...	Start Location[ft,%]	End Location[ft,%]
17	M31	X	2.974	2.974	0	%100
18	M31	Z	0	0	0	%100
19	M42A	X	0	0	0	%100
20	M42A	Z	0	0	0	%100
21	M44A	X	1.86	1.86	0	%100
22	M44A	Z	0	0	0	%100
23	M44	X	1.322	1.322	0	%100
24	M44	Z	0	0	0	%100
25	M46A	X	1.322	1.322	0	%100
26	M46A	Z	0	0	0	%100
27	M46B	X	0	0	0	%100
28	M46B	Z	0	0	0	%100
29	M34A	X	1.86	1.86	0	%100
30	M34A	Z	0	0	0	%100
31	M35	X	1.86	1.86	0	%100
32	M35	Z	0	0	0	%100
33	M36	X	0	0	0	%100
34	M36	Z	0	0	0	%100
35	M38	X	2.974	2.974	0	%100
36	M38	Z	0	0	0	%100
37	M42	X	.755	.755	0	%100
38	M42	Z	0	0	0	%100
39	M47	X	2.206	2.206	0	%100
40	M47	Z	0	0	0	%100
41	M48	X	7.537	7.537	0	%100
42	M48	Z	0	0	0	%100
43	M50	X	0	0	0	%100
44	M50	Z	0	0	0	%100
45	M51	X	.33	.33	0	%100
46	M51	Z	0	0	0	%100
47	M53	X	.33	.33	0	%100
48	M53	Z	0	0	0	%100
49	M56	X	1.165	1.165	0	%100
50	M56	Z	0	0	0	%100
51	M57	X	1.165	1.165	0	%100
52	M57	Z	0	0	0	%100
53	M59	X	2.974	2.974	0	%100
54	M59	Z	0	0	0	%100
55	M61	X	2.206	2.206	0	%100
56	M61	Z	0	0	0	%100
57	M62	X	1.86	1.86	0	%100
58	M62	Z	0	0	0	%100
59	M64	X	.33	.33	0	%100
60	M64	Z	0	0	0	%100
61	M66	X	.33	.33	0	%100
62	M66	Z	0	0	0	%100
63	M67	X	1.876	1.876	0	%100
64	M67	Z	0	0	0	%100
65	M68	X	0	0	0	%100
66	M68	Z	0	0	0	%100
67	M69	X	1.86	1.86	0	%100
68	M69	Z	0	0	0	%100

Member Distributed Loads (BLC 56 : Structure Wi (90 Deg)) (Continued)

	Member Label	Direction	Start Magnitude[lb/ft,...	End Magnitude[lb/ft,F...	Start Location[ft,%]	End Location[ft,%]
69	M70	X	1.876	1.876	0	%100
70	M70	Z	0	0	0	%100
71	M79	X	0	0	0	%100
72	M79	Z	0	0	0	%100
73	M83	X	.755	.755	0	%100
74	M83	Z	0	0	0	%100
75	M88	X	2.206	2.206	0	%100
76	M88	Z	0	0	0	%100
77	M89	X	7.537	7.537	0	%100
78	M89	Z	0	0	0	%100
79	M91	X	1.86	1.86	0	%100
80	M91	Z	0	0	0	%100
81	M92	X	.33	.33	0	%100
82	M92	Z	0	0	0	%100
83	M94	X	.33	.33	0	%100
84	M94	Z	0	0	0	%100
85	M97	X	1.165	1.165	0	%100
86	M97	Z	0	0	0	%100
87	M98	X	1.165	1.165	0	%100
88	M98	Z	0	0	0	%100
89	M100	X	0	0	0	%100
90	M100	Z	0	0	0	%100
91	M102	X	2.206	2.206	0	%100
92	M102	Z	0	0	0	%100
93	M103	X	0	0	0	%100
94	M103	Z	0	0	0	%100
95	M105	X	.33	.33	0	%100
96	M105	Z	0	0	0	%100
97	M107	X	.33	.33	0	%100
98	M107	Z	0	0	0	%100
99	M108	X	1.876	1.876	0	%100
100	M108	Z	0	0	0	%100
101	M109	X	1.86	1.86	0	%100
102	M109	Z	0	0	0	%100
103	M110	X	0	0	0	%100
104	M110	Z	0	0	0	%100
105	M111	X	1.876	1.876	0	%100
106	M111	Z	0	0	0	%100
107	M118	X	0	0	0	%100
108	M118	Z	0	0	0	%100
109	M120	X	2.974	2.974	0	%100
110	M120	Z	0	0	0	%100
111	M121A	X	3.364	3.364	0	%100
112	M121A	Z	0	0	0	%100
113	M126	X	3.364	3.364	0	%100
114	M126	Z	0	0	0	%100
115	M131	X	10.938	10.938	0	%100
116	M131	Z	0	0	0	%100
117	M134	X	10.938	10.938	0	%100
118	M134	Z	0	0	0	%100
119	M148	X	0	0	0	%100
120	M148	Z	0	0	0	%100

Member Distributed Loads (BLC 56 : Structure Wi (90 Deg)) (Continued)

	Member Label	Direction	Start Magnitude[lb/ft,...	End Magnitude[lb/ft,F...	Start Location[ft,%]	End Location[ft,%]
121	M152B	X	0	0	0	%100
122	M152B	Z	0	0	0	%100
123	M155	X	5.964	5.964	0	%100
124	M155	Z	0	0	0	%100
125	M154	X	2.657	2.657	0	%100
126	M154	Z	0	0	0	%100
127	M157A	X	2.657	2.657	0	%100
128	M157A	Z	0	0	0	%100
129	M160	X	0	0	0	%100
130	M160	Z	0	0	0	%100
131	M161	X	0	0	0	%100
132	M161	Z	0	0	0	%100
133	M162	X	4.749	4.749	0	%100
134	M162	Z	0	0	0	%100
135	M163	X	4.749	4.749	0	%100
136	M163	Z	0	0	0	%100
137	M164	X	4.749	4.749	0	%100
138	M164	Z	0	0	0	%100
139	M165	X	4.749	4.749	0	%100
140	M165	Z	0	0	0	%100
141	M166	X	0	0	0	%100
142	M166	Z	0	0	0	%100
143	M167	X	2.468	2.468	0	%100
144	M167	Z	0	0	0	%100
145	M168	X	2.468	2.468	0	%100
146	M168	Z	0	0	0	%100
147	M169	X	0	0	0	%100
148	M169	Z	0	0	0	%100
149	M170	X	2.657	2.657	0	%100
150	M170	Z	0	0	0	%100
151	M171	X	2.657	2.657	0	%100
152	M171	Z	0	0	0	%100
153	M174	X	0	0	0	%100
154	M174	Z	0	0	0	%100
155	M177	X	0	0	0	%100
156	M177	Z	0	0	0	%100
157	M180	X	2.349	2.349	0	%100
158	M180	Z	0	0	0	%100
159	M183	X	2.349	2.349	0	%100
160	M183	Z	0	0	0	%100
161	M186	X	2.349	2.349	0	%100
162	M186	Z	0	0	0	%100
163	M189	X	2.349	2.349	0	%100
164	M189	Z	0	0	0	%100
165	M504	X	3.543	3.543	0	%100
166	M504	Z	0	0	0	%100
167	M502	X	3.543	3.543	0	%100
168	M502	Z	0	0	0	%100
169	M501	X	3.543	3.543	0	%100
170	M501	Z	0	0	0	%100
171	M500	X	3.543	3.543	0	%100
172	M500	Z	0	0	0	%100

Member Distributed Loads (BLC 56 : Structure Wi (90 Deg)) (Continued)

	Member Label	Direction	Start Magnitude[lb/ft,...	End Magnitude[lb/ft,F...	Start Location[ft,%]	End Location[ft,%]
173	M506	X	3.543	3.543	0	%100
174	M506	Z	0	0	0	%100
175	M505	X	3.543	3.543	0	%100
176	M505	Z	0	0	0	%100
177	MP2A	X	3.918	3.918	0	%100
178	MP2A	Z	0	0	0	%100
179	MP3A	X	3.543	3.543	0	%100
180	MP3A	Z	0	0	0	%100
181	MP2C	X	3.918	3.918	0	%100
182	MP2C	Z	0	0	0	%100
183	MP2B	X	3.918	3.918	0	%100
184	MP2B	Z	0	0	0	%100
185	M223	X	5.763	5.763	0	%100
186	M223	Z	0	0	0	%100
187	M226A	X	5.763	5.763	0	%100
188	M226A	Z	0	0	0	%100
189	M228A	X	2.97	2.97	0	%100
190	M228A	Z	0	0	0	%100
191	M232A	X	5.763	5.763	0	%100
192	M232A	Z	0	0	0	%100
193	M235	X	5.763	5.763	0	%100
194	M235	Z	0	0	0	%100
195	M237	X	2.97	2.97	0	%100
196	M237	Z	0	0	0	%100
197	M244	X	5.171	5.171	0	%100
198	M244	Z	0	0	0	%100
199	M245	X	4.541	4.541	0	%100
200	M245	Z	0	0	0	%100
201	M246	X	4.541	4.541	0	%100
202	M246	Z	0	0	0	%100
203	M249	X	0	0	0	%100
204	M249	Z	0	0	0	%100
205	MP1A	X	3.543	3.543	0	%100
206	MP1A	Z	0	0	0	%100
207	M271	X	2.705	2.705	0	%100
208	M271	Z	0	0	0	%100
209	M271B	X	5.964	5.964	0	%100
210	M271B	Z	0	0	0	%100
211	M274A	X	3.196	3.196	0	%100
212	M274A	Z	0	0	0	%100
213	M277	X	.428	.428	0	%100
214	M277	Z	0	0	0	%100
215	M280	X	.428	.428	0	%100
216	M280	Z	0	0	0	%100
217	M283	X	3.196	3.196	0	%100
218	M283	Z	0	0	0	%100
219	M265	X	2.938	2.938	0	%100
220	M265	Z	0	0	0	%100
221	M266	X	2.938	2.938	0	%100
222	M266	Z	0	0	0	%100
223	MP4A	X	3.543	3.543	0	%100
224	MP4A	Z	0	0	0	%100

Member Distributed Loads (BLC 56 : Structure Wi (90 Deg)) (Continued)

	Member Label	Direction	Start Magnitude[lb/ft,...	End Magnitude[lb/ft,F...	Start Location[ft,%]	End Location[ft,%]
225	MP3C	X	3.543	3.543	0	%100
226	MP3C	Z	0	0	0	%100
227	MP3B	X	3.543	3.543	0	%100
228	MP3B	Z	0	0	0	%100
229	MP1C	X	3.543	3.543	0	%100
230	MP1C	Z	0	0	0	%100
231	MP4C	X	3.543	3.543	0	%100
232	MP4C	Z	0	0	0	%100
233	MP1B	X	3.543	3.543	0	%100
234	MP1B	Z	0	0	0	%100
235	MP4B	X	3.543	3.543	0	%100
236	MP4B	Z	0	0	0	%100
237	M287	X	0	0	0	%100
238	M287	Z	0	0	0	%100
239	M288	X	2.705	2.705	0	%100
240	M288	Z	0	0	0	%100

Member Distributed Loads (BLC 57 : Structure Wi (120 Deg))

	Member Label	Direction	Start Magnitude[lb/ft,...	End Magnitude[lb/ft,F...	Start Location[ft,%]	End Location[ft,%]
1	M1	X	1.963	1.963	0	%100
2	M1	Z	1.133	1.133	0	%100
3	M7	X	.637	.637	0	%100
4	M7	Z	.368	.368	0	%100
5	M8	X	2.176	2.176	0	%100
6	M8	Z	1.256	1.256	0	%100
7	M13	X	2.148	2.148	0	%100
8	M13	Z	1.24	1.24	0	%100
9	M14	X	.859	.859	0	%100
10	M14	Z	.496	.496	0	%100
11	M18	X	.859	.859	0	%100
12	M18	Z	.496	.496	0	%100
13	M25	X	3.026	3.026	0	%100
14	M25	Z	1.747	1.747	0	%100
15	M26	X	3.026	3.026	0	%100
16	M26	Z	1.747	1.747	0	%100
17	M31	X	.858	.858	0	%100
18	M31	Z	.496	.496	0	%100
19	M42A	X	.637	.637	0	%100
20	M42A	Z	.368	.368	0	%100
21	M44A	X	.537	.537	0	%100
22	M44A	Z	.31	.31	0	%100
23	M44	X	.859	.859	0	%100
24	M44	Z	.496	.496	0	%100
25	M46A	X	.859	.859	0	%100
26	M46A	Z	.496	.496	0	%100
27	M46B	X	.542	.542	0	%100
28	M46B	Z	.313	.313	0	%100
29	M34A	X	2.148	2.148	0	%100
30	M34A	Z	1.24	1.24	0	%100
31	M35	X	.537	.537	0	%100
32	M35	Z	.31	.31	0	%100

Member Distributed Loads (BLC 57 : Structure Wi (120 Deg)) (Continued)

	Member Label	Direction	Start Magnitude[lb/ft,...	End Magnitude[lb/ft,F...	Start Location[ft,%]	End Location[ft,%]
33	M36	X	.542	.542	0	%100
34	M36	Z	.313	.313	0	%100
35	M38	X	3.434	3.434	0	%100
36	M38	Z	1.983	1.983	0	%100
37	M42	X	1.963	1.963	0	%100
38	M42	Z	1.133	1.133	0	%100
39	M47	X	.637	.637	0	%100
40	M47	Z	.368	.368	0	%100
41	M48	X	2.176	2.176	0	%100
42	M48	Z	1.256	1.256	0	%100
43	M50	X	.537	.537	0	%100
44	M50	Z	.31	.31	0	%100
45	M51	X	.859	.859	0	%100
46	M51	Z	.496	.496	0	%100
47	M53	X	.859	.859	0	%100
48	M53	Z	.496	.496	0	%100
49	M56	X	3.026	3.026	0	%100
50	M56	Z	1.747	1.747	0	%100
51	M57	X	3.026	3.026	0	%100
52	M57	Z	1.747	1.747	0	%100
53	M59	X	3.434	3.434	0	%100
54	M59	Z	1.983	1.983	0	%100
55	M61	X	.637	.637	0	%100
56	M61	Z	.368	.368	0	%100
57	M62	X	2.148	2.148	0	%100
58	M62	Z	1.24	1.24	0	%100
59	M64	X	.859	.859	0	%100
60	M64	Z	.496	.496	0	%100
61	M66	X	.859	.859	0	%100
62	M66	Z	.496	.496	0	%100
63	M67	X	.542	.542	0	%100
64	M67	Z	.313	.313	0	%100
65	M68	X	.537	.537	0	%100
66	M68	Z	.31	.31	0	%100
67	M69	X	2.148	2.148	0	%100
68	M69	Z	1.24	1.24	0	%100
69	M70	X	.542	.542	0	%100
70	M70	Z	.313	.313	0	%100
71	M79	X	.858	.858	0	%100
72	M79	Z	.496	.496	0	%100
73	M83	X	0	0	0	%100
74	M83	Z	0	0	0	%100
75	M88	X	2.548	2.548	0	%100
76	M88	Z	1.471	1.471	0	%100
77	M89	X	8.704	8.704	0	%100
78	M89	Z	5.025	5.025	0	%100
79	M91	X	.537	.537	0	%100
80	M91	Z	.31	.31	0	%100
81	M92	X	0	0	0	%100
82	M92	Z	0	0	0	%100
83	M94	X	0	0	0	%100
84	M94	Z	0	0	0	%100

Member Distributed Loads (BLC 57 : Structure Wi (120 Deg)) (Continued)

	Member Label	Direction	Start Magnitude[lb/ft,...	End Magnitude[lb/ft,F...	Start Location[ft,%]	End Location[ft,%]
85	M97	X	0	0	0	%100
86	M97	Z	0	0	0	%100
87	M98	X	0	0	0	%100
88	M98	Z	0	0	0	%100
89	M100	X	.858	.858	0	%100
90	M100	Z	.496	.496	0	%100
91	M102	X	2.548	2.548	0	%100
92	M102	Z	1.471	1.471	0	%100
93	M103	X	.537	.537	0	%100
94	M103	Z	.31	.31	0	%100
95	M105	X	0	0	0	%100
96	M105	Z	0	0	0	%100
97	M107	X	0	0	0	%100
98	M107	Z	0	0	0	%100
99	M108	X	2.166	2.166	0	%100
100	M108	Z	1.251	1.251	0	%100
101	M109	X	.537	.537	0	%100
102	M109	Z	.31	.31	0	%100
103	M110	X	.537	.537	0	%100
104	M110	Z	.31	.31	0	%100
105	M111	X	2.166	2.166	0	%100
106	M111	Z	1.251	1.251	0	%100
107	M118	X	.971	.971	0	%100
108	M118	Z	.561	.561	0	%100
109	M120	X	.858	.858	0	%100
110	M120	Z	.496	.496	0	%100
111	M121A	X	.971	.971	0	%100
112	M121A	Z	.561	.561	0	%100
113	M126	X	3.885	3.885	0	%100
114	M126	Z	2.243	2.243	0	%100
115	M131	X	7.427	7.427	0	%100
116	M131	Z	4.288	4.288	0	%100
117	M134	X	7.427	7.427	0	%100
118	M134	Z	4.288	4.288	0	%100
119	M148	X	.767	.767	0	%100
120	M148	Z	.443	.443	0	%100
121	M152B	X	.857	.857	0	%100
122	M152B	Z	.495	.495	0	%100
123	M155	X	2.768	2.768	0	%100
124	M155	Z	1.598	1.598	0	%100
125	M154	X	.767	.767	0	%100
126	M154	Z	.443	.443	0	%100
127	M157A	X	3.068	3.068	0	%100
128	M157A	Z	1.772	1.772	0	%100
129	M160	X	1.371	1.371	0	%100
130	M160	Z	.792	.792	0	%100
131	M161	X	1.371	1.371	0	%100
132	M161	Z	.792	.792	0	%100
133	M162	X	1.371	1.371	0	%100
134	M162	Z	.792	.792	0	%100
135	M163	X	1.371	1.371	0	%100
136	M163	Z	.792	.792	0	%100

Member Distributed Loads (BLC 57 : Structure Wi (120 Deg)) (Continued)

	Member Label	Direction	Start Magnitude[lb/ft,...	End Magnitude[lb/ft,F...	Start Location[ft,%]	End Location[ft,%]
137	M164	X	5.484	5.484	0	%100
138	M164	Z	3.166	3.166	0	%100
139	M165	X	5.484	5.484	0	%100
140	M165	Z	3.166	3.166	0	%100
141	M166	X	.712	.712	0	%100
142	M166	Z	.411	.411	0	%100
143	M167	X	.712	.712	0	%100
144	M167	Z	.411	.411	0	%100
145	M168	X	2.85	2.85	0	%100
146	M168	Z	1.645	1.645	0	%100
147	M169	X	.767	.767	0	%100
148	M169	Z	.443	.443	0	%100
149	M170	X	.767	.767	0	%100
150	M170	Z	.443	.443	0	%100
151	M171	X	3.068	3.068	0	%100
152	M171	Z	1.772	1.772	0	%100
153	M174	X	.678	.678	0	%100
154	M174	Z	.392	.392	0	%100
155	M177	X	.678	.678	0	%100
156	M177	Z	.392	.392	0	%100
157	M180	X	.678	.678	0	%100
158	M180	Z	.392	.392	0	%100
159	M183	X	.678	.678	0	%100
160	M183	Z	.392	.392	0	%100
161	M186	X	2.713	2.713	0	%100
162	M186	Z	1.566	1.566	0	%100
163	M189	X	2.713	2.713	0	%100
164	M189	Z	1.566	1.566	0	%100
165	M504	X	3.068	3.068	0	%100
166	M504	Z	1.772	1.772	0	%100
167	M502	X	3.068	3.068	0	%100
168	M502	Z	1.772	1.772	0	%100
169	M501	X	3.068	3.068	0	%100
170	M501	Z	1.772	1.772	0	%100
171	M500	X	3.068	3.068	0	%100
172	M500	Z	1.772	1.772	0	%100
173	M506	X	3.068	3.068	0	%100
174	M506	Z	1.772	1.772	0	%100
175	M505	X	3.068	3.068	0	%100
176	M505	Z	1.772	1.772	0	%100
177	MP2A	X	3.393	3.393	0	%100
178	MP2A	Z	1.959	1.959	0	%100
179	MP3A	X	3.068	3.068	0	%100
180	MP3A	Z	1.772	1.772	0	%100
181	MP2C	X	3.393	3.393	0	%100
182	MP2C	Z	1.959	1.959	0	%100
183	MP2B	X	3.393	3.393	0	%100
184	MP2B	Z	1.959	1.959	0	%100
185	M223	X	2.661	2.661	0	%100
186	M223	Z	1.536	1.536	0	%100
187	M226A	X	2.661	2.661	0	%100
188	M226A	Z	1.536	1.536	0	%100

Member Distributed Loads (BLC 57 : Structure Wi (120 Deg)) (Continued)

	Member Label	Direction	Start Magnitude[lb/ft,...	End Magnitude[lb/ft,F...	Start Location[ft,%]	End Location[ft,%]
189	M228A	X	.857	.857	0	%100
190	M228A	Z	.495	.495	0	%100
191	M232A	X	6.156	6.156	0	%100
192	M232A	Z	3.554	3.554	0	%100
193	M235	X	6.156	6.156	0	%100
194	M235	Z	3.554	3.554	0	%100
195	M237	X	3.429	3.429	0	%100
196	M237	Z	1.98	1.98	0	%100
197	M244	X	4.296	4.296	0	%100
198	M244	Z	2.481	2.481	0	%100
199	M245	X	4.296	4.296	0	%100
200	M245	Z	2.481	2.481	0	%100
201	M246	X	3.751	3.751	0	%100
202	M246	Z	2.166	2.166	0	%100
203	M249	X	.848	.848	0	%100
204	M249	Z	.49	.49	0	%100
205	MP1A	X	3.068	3.068	0	%100
206	MP1A	Z	1.772	1.772	0	%100
207	M271	X	3.124	3.124	0	%100
208	M271	Z	1.804	1.804	0	%100
209	M271B	X	5.165	5.165	0	%100
210	M271B	Z	2.982	2.982	0	%100
211	M274A	X	5.165	5.165	0	%100
212	M274A	Z	2.982	2.982	0	%100
213	M277	X	2.768	2.768	0	%100
214	M277	Z	1.598	1.598	0	%100
215	M280	X	.371	.371	0	%100
216	M280	Z	.214	.214	0	%100
217	M283	X	.371	.371	0	%100
218	M283	Z	.214	.214	0	%100
219	M265	X	.848	.848	0	%100
220	M265	Z	.49	.49	0	%100
221	M266	X	3.393	3.393	0	%100
222	M266	Z	1.959	1.959	0	%100
223	MP4A	X	3.068	3.068	0	%100
224	MP4A	Z	1.772	1.772	0	%100
225	MP3C	X	3.068	3.068	0	%100
226	MP3C	Z	1.772	1.772	0	%100
227	MP3B	X	3.068	3.068	0	%100
228	MP3B	Z	1.772	1.772	0	%100
229	MP1C	X	3.068	3.068	0	%100
230	MP1C	Z	1.772	1.772	0	%100
231	MP4C	X	3.068	3.068	0	%100
232	MP4C	Z	1.772	1.772	0	%100
233	MP1B	X	3.068	3.068	0	%100
234	MP1B	Z	1.772	1.772	0	%100
235	MP4B	X	3.068	3.068	0	%100
236	MP4B	Z	1.772	1.772	0	%100
237	M287	X	.781	.781	0	%100
238	M287	Z	.451	.451	0	%100
239	M288	X	.781	.781	0	%100
240	M288	Z	.451	.451	0	%100

Member Distributed Loads (BLC 58 : Structure Wi (150 Deg))

	Member Label	Direction	Start Magnitude[lb/ft,...	End Magnitude[lb/ft,F...	Start Location[ft,%]	End Location[ft,%]
1	M1	X	.378	.378	0	%100
2	M1	Z	.654	.654	0	%100
3	M7	X	1.103	1.103	0	%100
4	M7	Z	1.911	1.911	0	%100
5	M8	X	3.769	3.769	0	%100
6	M8	Z	6.528	6.528	0	%100
7	M13	X	.93	.93	0	%100
8	M13	Z	1.611	1.611	0	%100
9	M14	X	.165	.165	0	%100
10	M14	Z	.286	.286	0	%100
11	M18	X	.165	.165	0	%100
12	M18	Z	.286	.286	0	%100
13	M25	X	.582	.582	0	%100
14	M25	Z	1.009	1.009	0	%100
15	M26	X	.582	.582	0	%100
16	M26	Z	1.009	1.009	0	%100
17	M31	X	0	0	0	%100
18	M31	Z	0	0	0	%100
19	M42A	X	1.103	1.103	0	%100
20	M42A	Z	1.911	1.911	0	%100
21	M44A	X	0	0	0	%100
22	M44A	Z	0	0	0	%100
23	M44	X	.165	.165	0	%100
24	M44	Z	.286	.286	0	%100
25	M46A	X	.165	.165	0	%100
26	M46A	Z	.286	.286	0	%100
27	M46B	X	.938	.938	0	%100
28	M46B	Z	1.625	1.625	0	%100
29	M34A	X	.93	.93	0	%100
30	M34A	Z	1.611	1.611	0	%100
31	M35	X	0	0	0	%100
32	M35	Z	0	0	0	%100
33	M36	X	.938	.938	0	%100
34	M36	Z	1.625	1.625	0	%100
35	M38	X	1.487	1.487	0	%100
36	M38	Z	2.575	2.575	0	%100
37	M42	X	1.511	1.511	0	%100
38	M42	Z	2.617	2.617	0	%100
39	M47	X	0	0	0	%100
40	M47	Z	0	0	0	%100
41	M48	X	0	0	0	%100
42	M48	Z	0	0	0	%100
43	M50	X	.93	.93	0	%100
44	M50	Z	1.611	1.611	0	%100
45	M51	X	.661	.661	0	%100
46	M51	Z	1.145	1.145	0	%100
47	M53	X	.661	.661	0	%100
48	M53	Z	1.145	1.145	0	%100
49	M56	X	2.329	2.329	0	%100
50	M56	Z	4.035	4.035	0	%100
51	M57	X	2.329	2.329	0	%100
52	M57	Z	4.035	4.035	0	%100

Member Distributed Loads (BLC 58 : Structure Wi (150 Deg)) (Continued)

	Member Label	Direction	Start Magnitude[lb/ft,...	End Magnitude[lb/ft,F...	Start Location[ft,%]	End Location[ft,%]
53	M59	X	1.487	1.487	0	%100
54	M59	Z	2.575	2.575	0	%100
55	M61	X	0	0	0	%100
56	M61	Z	0	0	0	%100
57	M62	X	.93	.93	0	%100
58	M62	Z	1.611	1.611	0	%100
59	M64	X	.661	.661	0	%100
60	M64	Z	1.145	1.145	0	%100
61	M66	X	.661	.661	0	%100
62	M66	Z	1.145	1.145	0	%100
63	M67	X	0	0	0	%100
64	M67	Z	0	0	0	%100
65	M68	X	.93	.93	0	%100
66	M68	Z	1.611	1.611	0	%100
67	M69	X	.93	.93	0	%100
68	M69	Z	1.611	1.611	0	%100
69	M70	X	0	0	0	%100
70	M70	Z	0	0	0	%100
71	M79	X	1.487	1.487	0	%100
72	M79	Z	2.575	2.575	0	%100
73	M83	X	.378	.378	0	%100
74	M83	Z	.654	.654	0	%100
75	M88	X	1.103	1.103	0	%100
76	M88	Z	1.911	1.911	0	%100
77	M89	X	3.769	3.769	0	%100
78	M89	Z	6.528	6.528	0	%100
79	M91	X	0	0	0	%100
80	M91	Z	0	0	0	%100
81	M92	X	.165	.165	0	%100
82	M92	Z	.286	.286	0	%100
83	M94	X	.165	.165	0	%100
84	M94	Z	.286	.286	0	%100
85	M97	X	.582	.582	0	%100
86	M97	Z	1.009	1.009	0	%100
87	M98	X	.582	.582	0	%100
88	M98	Z	1.009	1.009	0	%100
89	M100	X	1.487	1.487	0	%100
90	M100	Z	2.575	2.575	0	%100
91	M102	X	1.103	1.103	0	%100
92	M102	Z	1.911	1.911	0	%100
93	M103	X	.93	.93	0	%100
94	M103	Z	1.611	1.611	0	%100
95	M105	X	.165	.165	0	%100
96	M105	Z	.286	.286	0	%100
97	M107	X	.165	.165	0	%100
98	M107	Z	.286	.286	0	%100
99	M108	X	.938	.938	0	%100
100	M108	Z	1.625	1.625	0	%100
101	M109	X	0	0	0	%100
102	M109	Z	0	0	0	%100
103	M110	X	.93	.93	0	%100
104	M110	Z	1.611	1.611	0	%100

Member Distributed Loads (BLC 58 : Structure Wi (150 Deg)) (Continued)

	Member Label	Direction	Start Magnitude[lb/ft,...	End Magnitude[lb/ft,F...	Start Location[ft,%]	End Location[ft,%]
105	M111	X	.938	.938	0	%100
106	M111	Z	1.625	1.625	0	%100
107	M118	X	1.682	1.682	0	%100
108	M118	Z	2.913	2.913	0	%100
109	M120	X	0	0	0	%100
110	M120	Z	0	0	0	%100
111	M121A	X	0	0	0	%100
112	M121A	Z	0	0	0	%100
113	M126	X	1.682	1.682	0	%100
114	M126	Z	2.913	2.913	0	%100
115	M131	X	1.925	1.925	0	%100
116	M131	Z	3.335	3.335	0	%100
117	M134	X	1.925	1.925	0	%100
118	M134	Z	3.335	3.335	0	%100
119	M148	X	1.329	1.329	0	%100
120	M148	Z	2.301	2.301	0	%100
121	M152B	X	1.485	1.485	0	%100
122	M152B	Z	2.572	2.572	0	%100
123	M155	X	.214	.214	0	%100
124	M155	Z	.371	.371	0	%100
125	M154	X	0	0	0	%100
126	M154	Z	0	0	0	%100
127	M157A	X	1.329	1.329	0	%100
128	M157A	Z	2.301	2.301	0	%100
129	M160	X	2.375	2.375	0	%100
130	M160	Z	4.113	4.113	0	%100
131	M161	X	2.375	2.375	0	%100
132	M161	Z	4.113	4.113	0	%100
133	M162	X	0	0	0	%100
134	M162	Z	0	0	0	%100
135	M163	X	0	0	0	%100
136	M163	Z	0	0	0	%100
137	M164	X	2.375	2.375	0	%100
138	M164	Z	4.113	4.113	0	%100
139	M165	X	2.375	2.375	0	%100
140	M165	Z	4.113	4.113	0	%100
141	M166	X	1.234	1.234	0	%100
142	M166	Z	2.137	2.137	0	%100
143	M167	X	0	0	0	%100
144	M167	Z	0	0	0	%100
145	M168	X	1.234	1.234	0	%100
146	M168	Z	2.137	2.137	0	%100
147	M169	X	1.329	1.329	0	%100
148	M169	Z	2.301	2.301	0	%100
149	M170	X	0	0	0	%100
150	M170	Z	0	0	0	%100
151	M171	X	1.329	1.329	0	%100
152	M171	Z	2.301	2.301	0	%100
153	M174	X	1.175	1.175	0	%100
154	M174	Z	2.035	2.035	0	%100
155	M177	X	1.175	1.175	0	%100
156	M177	Z	2.035	2.035	0	%100

Member Distributed Loads (BLC 58 : Structure Wi (150 Deg)) (Continued)

	Member Label	Direction	Start Magnitude[lb/ft,...	End Magnitude[lb/ft,F...	Start Location[ft,%]	End Location[ft,%]
157	M180	X	0	0	0	%100
158	M180	Z	0	0	0	%100
159	M183	X	0	0	0	%100
160	M183	Z	0	0	0	%100
161	M186	X	1.175	1.175	0	%100
162	M186	Z	2.035	2.035	0	%100
163	M189	X	1.175	1.175	0	%100
164	M189	Z	2.035	2.035	0	%100
165	M504	X	1.772	1.772	0	%100
166	M504	Z	3.068	3.068	0	%100
167	M502	X	1.772	1.772	0	%100
168	M502	Z	3.068	3.068	0	%100
169	M501	X	1.772	1.772	0	%100
170	M501	Z	3.068	3.068	0	%100
171	M500	X	1.772	1.772	0	%100
172	M500	Z	3.068	3.068	0	%100
173	M506	X	1.772	1.772	0	%100
174	M506	Z	3.068	3.068	0	%100
175	M505	X	1.772	1.772	0	%100
176	M505	Z	3.068	3.068	0	%100
177	MP2A	X	1.959	1.959	0	%100
178	MP2A	Z	3.393	3.393	0	%100
179	MP3A	X	1.772	1.772	0	%100
180	MP3A	Z	3.068	3.068	0	%100
181	MP2C	X	1.959	1.959	0	%100
182	MP2C	Z	3.393	3.393	0	%100
183	MP2B	X	1.959	1.959	0	%100
184	MP2B	Z	3.393	3.393	0	%100
185	M223	X	.864	.864	0	%100
186	M223	Z	1.496	1.496	0	%100
187	M226A	X	.864	.864	0	%100
188	M226A	Z	1.496	1.496	0	%100
189	M228A	X	0	0	0	%100
190	M228A	Z	0	0	0	%100
191	M232A	X	2.882	2.882	0	%100
192	M232A	Z	4.991	4.991	0	%100
193	M235	X	2.882	2.882	0	%100
194	M235	Z	4.991	4.991	0	%100
195	M237	X	1.485	1.485	0	%100
196	M237	Z	2.572	2.572	0	%100
197	M244	X	2.271	2.271	0	%100
198	M244	Z	3.933	3.933	0	%100
199	M245	X	2.585	2.585	0	%100
200	M245	Z	4.478	4.478	0	%100
201	M246	X	2.271	2.271	0	%100
202	M246	Z	3.933	3.933	0	%100
203	M249	X	1.469	1.469	0	%100
204	M249	Z	2.545	2.545	0	%100
205	MP1A	X	1.772	1.772	0	%100
206	MP1A	Z	3.068	3.068	0	%100
207	M271	X	1.353	1.353	0	%100
208	M271	Z	2.343	2.343	0	%100

Member Distributed Loads (BLC 58 : Structure Wi (150 Deg)) (Continued)

	Member Label	Direction	Start Magnitude[lb/ft,...	End Magnitude[lb/ft,F...	Start Location[ft,%]	End Location[ft,%]
209	M271B	X	1.598	1.598	0	%100
210	M271B	Z	2.768	2.768	0	%100
211	M274A	X	2.982	2.982	0	%100
212	M274A	Z	5.165	5.165	0	%100
213	M277	X	2.982	2.982	0	%100
214	M277	Z	5.165	5.165	0	%100
215	M280	X	1.598	1.598	0	%100
216	M280	Z	2.768	2.768	0	%100
217	M283	X	.214	.214	0	%100
218	M283	Z	.371	.371	0	%100
219	M265	X	0	0	0	%100
220	M265	Z	0	0	0	%100
221	M266	X	1.469	1.469	0	%100
222	M266	Z	2.545	2.545	0	%100
223	MP4A	X	1.772	1.772	0	%100
224	MP4A	Z	3.068	3.068	0	%100
225	MP3C	X	1.772	1.772	0	%100
226	MP3C	Z	3.068	3.068	0	%100
227	MP3B	X	1.772	1.772	0	%100
228	MP3B	Z	3.068	3.068	0	%100
229	MP1C	X	1.772	1.772	0	%100
230	MP1C	Z	3.068	3.068	0	%100
231	MP4C	X	1.772	1.772	0	%100
232	MP4C	Z	3.068	3.068	0	%100
233	MP1B	X	1.772	1.772	0	%100
234	MP1B	Z	3.068	3.068	0	%100
235	MP4B	X	1.772	1.772	0	%100
236	MP4B	Z	3.068	3.068	0	%100
237	M287	X	1.353	1.353	0	%100
238	M287	Z	2.343	2.343	0	%100
239	M288	X	0	0	0	%100
240	M288	Z	0	0	0	%100

Member Distributed Loads (BLC 59 : Structure Wi (180 Deg))

	Member Label	Direction	Start Magnitude[lb/ft,...	End Magnitude[lb/ft,F...	Start Location[ft,%]	End Location[ft,%]
1	M1	X	0	0	0	%100
2	M1	Z	0	0	0	%100
3	M7	X	0	0	0	%100
4	M7	Z	2.942	2.942	0	%100
5	M8	X	0	0	0	%100
6	M8	Z	10.05	10.05	0	%100
7	M13	X	0	0	0	%100
8	M13	Z	.62	.62	0	%100
9	M14	X	0	0	0	%100
10	M14	Z	0	0	0	%100
11	M18	X	0	0	0	%100
12	M18	Z	0	0	0	%100
13	M25	X	0	0	0	%100
14	M25	Z	0	0	0	%100
15	M26	X	0	0	0	%100
16	M26	Z	0	0	0	%100

Member Distributed Loads (BLC 59 : Structure Wi (180 Deg)) (Continued)

	Member Label	Direction	Start Magnitude[lb/ft,...	End Magnitude[lb/ft,F...	Start Location[ft,%]	End Location[ft,%]
17	M31	X	0	0	0	%100
18	M31	Z	.991	.991	0	%100
19	M42A	X	0	0	0	%100
20	M42A	Z	2.942	2.942	0	%100
21	M44A	X	0	0	0	%100
22	M44A	Z	.62	.62	0	%100
23	M44	X	0	0	0	%100
24	M44	Z	0	0	0	%100
25	M46A	X	0	0	0	%100
26	M46A	Z	0	0	0	%100
27	M46B	X	0	0	0	%100
28	M46B	Z	2.501	2.501	0	%100
29	M34A	X	0	0	0	%100
30	M34A	Z	.62	.62	0	%100
31	M35	X	0	0	0	%100
32	M35	Z	.62	.62	0	%100
33	M36	X	0	0	0	%100
34	M36	Z	2.501	2.501	0	%100
35	M38	X	0	0	0	%100
36	M38	Z	.991	.991	0	%100
37	M42	X	0	0	0	%100
38	M42	Z	2.266	2.266	0	%100
39	M47	X	0	0	0	%100
40	M47	Z	.735	.735	0	%100
41	M48	X	0	0	0	%100
42	M48	Z	2.512	2.512	0	%100
43	M50	X	0	0	0	%100
44	M50	Z	2.48	2.48	0	%100
45	M51	X	0	0	0	%100
46	M51	Z	.991	.991	0	%100
47	M53	X	0	0	0	%100
48	M53	Z	.991	.991	0	%100
49	M56	X	0	0	0	%100
50	M56	Z	3.494	3.494	0	%100
51	M57	X	0	0	0	%100
52	M57	Z	3.494	3.494	0	%100
53	M59	X	0	0	0	%100
54	M59	Z	.991	.991	0	%100
55	M61	X	0	0	0	%100
56	M61	Z	.735	.735	0	%100
57	M62	X	0	0	0	%100
58	M62	Z	.62	.62	0	%100
59	M64	X	0	0	0	%100
60	M64	Z	.991	.991	0	%100
61	M66	X	0	0	0	%100
62	M66	Z	.991	.991	0	%100
63	M67	X	0	0	0	%100
64	M67	Z	.625	.625	0	%100
65	M68	X	0	0	0	%100
66	M68	Z	2.48	2.48	0	%100
67	M69	X	0	0	0	%100
68	M69	Z	.62	.62	0	%100

Member Distributed Loads (BLC 59 : Structure Wi (180 Deg)) (Continued)

	Member Label	Direction	Start Magnitude[lb/ft,...	End Magnitude[lb/ft,F...	Start Location[ft,%]	End Location[ft,%]
69	M70	X	0	0	0	%100
70	M70	Z	.625	.625	0	%100
71	M79	X	0	0	0	%100
72	M79	Z	3.965	3.965	0	%100
73	M83	X	0	0	0	%100
74	M83	Z	2.266	2.266	0	%100
75	M88	X	0	0	0	%100
76	M88	Z	.735	.735	0	%100
77	M89	X	0	0	0	%100
78	M89	Z	2.512	2.512	0	%100
79	M91	X	0	0	0	%100
80	M91	Z	.62	.62	0	%100
81	M92	X	0	0	0	%100
82	M92	Z	.991	.991	0	%100
83	M94	X	0	0	0	%100
84	M94	Z	.991	.991	0	%100
85	M97	X	0	0	0	%100
86	M97	Z	3.494	3.494	0	%100
87	M98	X	0	0	0	%100
88	M98	Z	3.494	3.494	0	%100
89	M100	X	0	0	0	%100
90	M100	Z	3.965	3.965	0	%100
91	M102	X	0	0	0	%100
92	M102	Z	.735	.735	0	%100
93	M103	X	0	0	0	%100
94	M103	Z	2.48	2.48	0	%100
95	M105	X	0	0	0	%100
96	M105	Z	.991	.991	0	%100
97	M107	X	0	0	0	%100
98	M107	Z	.991	.991	0	%100
99	M108	X	0	0	0	%100
100	M108	Z	.625	.625	0	%100
101	M109	X	0	0	0	%100
102	M109	Z	.62	.62	0	%100
103	M110	X	0	0	0	%100
104	M110	Z	2.48	2.48	0	%100
105	M111	X	0	0	0	%100
106	M111	Z	.625	.625	0	%100
107	M118	X	0	0	0	%100
108	M118	Z	4.486	4.486	0	%100
109	M120	X	0	0	0	%100
110	M120	Z	.991	.991	0	%100
111	M121A	X	0	0	0	%100
112	M121A	Z	1.121	1.121	0	%100
113	M126	X	0	0	0	%100
114	M126	Z	1.121	1.121	0	%100
115	M131	X	0	0	0	%100
116	M131	Z	1.488	1.488	0	%100
117	M134	X	0	0	0	%100
118	M134	Z	1.488	1.488	0	%100
119	M148	X	0	0	0	%100
120	M148	Z	3.543	3.543	0	%100

Member Distributed Loads (BLC 59 : Structure Wi (180 Deg)) (Continued)

	Member Label	Direction	Start Magnitude[lb/ft,...	End Magnitude[lb/ft,F...	Start Location[ft,%]	End Location[ft,%]
121	M152B	X	0	0	0	%100
122	M152B	Z	3.959	3.959	0	%100
123	M155	X	0	0	0	%100
124	M155	Z	.428	.428	0	%100
125	M154	X	0	0	0	%100
126	M154	Z	.886	.886	0	%100
127	M157A	X	0	0	0	%100
128	M157A	Z	.886	.886	0	%100
129	M160	X	0	0	0	%100
130	M160	Z	6.332	6.332	0	%100
131	M161	X	0	0	0	%100
132	M161	Z	6.332	6.332	0	%100
133	M162	X	0	0	0	%100
134	M162	Z	1.583	1.583	0	%100
135	M163	X	0	0	0	%100
136	M163	Z	1.583	1.583	0	%100
137	M164	X	0	0	0	%100
138	M164	Z	1.583	1.583	0	%100
139	M165	X	0	0	0	%100
140	M165	Z	1.583	1.583	0	%100
141	M166	X	0	0	0	%100
142	M166	Z	3.29	3.29	0	%100
143	M167	X	0	0	0	%100
144	M167	Z	.823	.823	0	%100
145	M168	X	0	0	0	%100
146	M168	Z	.823	.823	0	%100
147	M169	X	0	0	0	%100
148	M169	Z	3.543	3.543	0	%100
149	M170	X	0	0	0	%100
150	M170	Z	.886	.886	0	%100
151	M171	X	0	0	0	%100
152	M171	Z	.886	.886	0	%100
153	M174	X	0	0	0	%100
154	M174	Z	3.133	3.133	0	%100
155	M177	X	0	0	0	%100
156	M177	Z	3.133	3.133	0	%100
157	M180	X	0	0	0	%100
158	M180	Z	.783	.783	0	%100
159	M183	X	0	0	0	%100
160	M183	Z	.783	.783	0	%100
161	M186	X	0	0	0	%100
162	M186	Z	.783	.783	0	%100
163	M189	X	0	0	0	%100
164	M189	Z	.783	.783	0	%100
165	M504	X	0	0	0	%100
166	M504	Z	3.543	3.543	0	%100
167	M502	X	0	0	0	%100
168	M502	Z	3.543	3.543	0	%100
169	M501	X	0	0	0	%100
170	M501	Z	3.543	3.543	0	%100
171	M500	X	0	0	0	%100
172	M500	Z	3.543	3.543	0	%100

Member Distributed Loads (BLC 59 : Structure Wi (180 Deg)) (Continued)

	Member Label	Direction	Start Magnitude[lb/ft,...	End Magnitude[lb/ft,F...	Start Location[ft,%]	End Location[ft,%]
173	M506	X	0	0	0	%100
174	M506	Z	3.543	3.543	0	%100
175	M505	X	0	0	0	%100
176	M505	Z	3.543	3.543	0	%100
177	MP2A	X	0	0	0	%100
178	MP2A	Z	3.918	3.918	0	%100
179	MP3A	X	0	0	0	%100
180	MP3A	Z	3.543	3.543	0	%100
181	MP2C	X	0	0	0	%100
182	MP2C	Z	3.918	3.918	0	%100
183	MP2B	X	0	0	0	%100
184	MP2B	Z	3.918	3.918	0	%100
185	M223	X	0	0	0	%100
186	M223	Z	3.073	3.073	0	%100
187	M226A	X	0	0	0	%100
188	M226A	Z	3.073	3.073	0	%100
189	M228A	X	0	0	0	%100
190	M228A	Z	.99	.99	0	%100
191	M232A	X	0	0	0	%100
192	M232A	Z	3.073	3.073	0	%100
193	M235	X	0	0	0	%100
194	M235	Z	3.073	3.073	0	%100
195	M237	X	0	0	0	%100
196	M237	Z	.99	.99	0	%100
197	M244	X	0	0	0	%100
198	M244	Z	4.331	4.331	0	%100
199	M245	X	0	0	0	%100
200	M245	Z	4.961	4.961	0	%100
201	M246	X	0	0	0	%100
202	M246	Z	4.961	4.961	0	%100
203	M249	X	0	0	0	%100
204	M249	Z	3.918	3.918	0	%100
205	MP1A	X	0	0	0	%100
206	MP1A	Z	3.543	3.543	0	%100
207	M271	X	0	0	0	%100
208	M271	Z	.902	.902	0	%100
209	M271B	X	0	0	0	%100
210	M271B	Z	.428	.428	0	%100
211	M274A	X	0	0	0	%100
212	M274A	Z	3.196	3.196	0	%100
213	M277	X	0	0	0	%100
214	M277	Z	5.964	5.964	0	%100
215	M280	X	0	0	0	%100
216	M280	Z	5.964	5.964	0	%100
217	M283	X	0	0	0	%100
218	M283	Z	3.196	3.196	0	%100
219	M265	X	0	0	0	%100
220	M265	Z	.979	.979	0	%100
221	M266	X	0	0	0	%100
222	M266	Z	.979	.979	0	%100
223	MP4A	X	0	0	0	%100
224	MP4A	Z	3.543	3.543	0	%100

Member Distributed Loads (BLC 59 : Structure Wi (180 Deg)) (Continued)

	Member Label	Direction	Start Magnitude[lb/ft,...	End Magnitude[lb/ft,F...	Start Location[ft,%]	End Location[ft,%]
225	MP3C	X	0	0	0	%100
226	MP3C	Z	3.543	3.543	0	%100
227	MP3B	X	0	0	0	%100
228	MP3B	Z	3.543	3.543	0	%100
229	MP1C	X	0	0	0	%100
230	MP1C	Z	3.543	3.543	0	%100
231	MP4C	X	0	0	0	%100
232	MP4C	Z	3.543	3.543	0	%100
233	MP1B	X	0	0	0	%100
234	MP1B	Z	3.543	3.543	0	%100
235	MP4B	X	0	0	0	%100
236	MP4B	Z	3.543	3.543	0	%100
237	M287	X	0	0	0	%100
238	M287	Z	3.607	3.607	0	%100
239	M288	X	0	0	0	%100
240	M288	Z	.902	.902	0	%100

Member Distributed Loads (BLC 60 : Structure Wi (210 Deg))

	Member Label	Direction	Start Magnitude[lb/ft,...	End Magnitude[lb/ft,F...	Start Location[ft,%]	End Location[ft,%]
1	M1	X	-.378	-.378	0	%100
2	M1	Z	.654	.654	0	%100
3	M7	X	-1.103	-1.103	0	%100
4	M7	Z	1.911	1.911	0	%100
5	M8	X	-3.769	-3.769	0	%100
6	M8	Z	6.528	6.528	0	%100
7	M13	X	0	0	0	%100
8	M13	Z	0	0	0	%100
9	M14	X	-.165	-.165	0	%100
10	M14	Z	.286	.286	0	%100
11	M18	X	-.165	-.165	0	%100
12	M18	Z	.286	.286	0	%100
13	M25	X	-.582	-.582	0	%100
14	M25	Z	1.009	1.009	0	%100
15	M26	X	-.582	-.582	0	%100
16	M26	Z	1.009	1.009	0	%100
17	M31	X	-1.487	-1.487	0	%100
18	M31	Z	2.575	2.575	0	%100
19	M42A	X	-1.103	-1.103	0	%100
20	M42A	Z	1.911	1.911	0	%100
21	M44A	X	-.93	-.93	0	%100
22	M44A	Z	1.611	1.611	0	%100
23	M44	X	-.165	-.165	0	%100
24	M44	Z	.286	.286	0	%100
25	M46A	X	-.165	-.165	0	%100
26	M46A	Z	.286	.286	0	%100
27	M46B	X	-.938	-.938	0	%100
28	M46B	Z	1.625	1.625	0	%100
29	M34A	X	0	0	0	%100
30	M34A	Z	0	0	0	%100
31	M35	X	-.93	-.93	0	%100
32	M35	Z	1.611	1.611	0	%100

Member Distributed Loads (BLC 60 : Structure Wi (210 Deg)) (Continued)

	Member Label	Direction	Start Magnitude[lb/ft,...	End Magnitude[lb/ft,F...	Start Location[ft,%]	End Location[ft,%]
33	M36	X	-.938	-.938	0	%100
34	M36	Z	1.625	1.625	0	%100
35	M38	X	0	0	0	%100
36	M38	Z	0	0	0	%100
37	M42	X	-.378	-.378	0	%100
38	M42	Z	.654	.654	0	%100
39	M47	X	-1.103	-1.103	0	%100
40	M47	Z	1.911	1.911	0	%100
41	M48	X	-3.769	-3.769	0	%100
42	M48	Z	6.528	6.528	0	%100
43	M50	X	-.93	-.93	0	%100
44	M50	Z	1.611	1.611	0	%100
45	M51	X	-.165	-.165	0	%100
46	M51	Z	.286	.286	0	%100
47	M53	X	-.165	-.165	0	%100
48	M53	Z	.286	.286	0	%100
49	M56	X	-.582	-.582	0	%100
50	M56	Z	1.009	1.009	0	%100
51	M57	X	-.582	-.582	0	%100
52	M57	Z	1.009	1.009	0	%100
53	M59	X	0	0	0	%100
54	M59	Z	0	0	0	%100
55	M61	X	-1.103	-1.103	0	%100
56	M61	Z	1.911	1.911	0	%100
57	M62	X	0	0	0	%100
58	M62	Z	0	0	0	%100
59	M64	X	-.165	-.165	0	%100
60	M64	Z	.286	.286	0	%100
61	M66	X	-.165	-.165	0	%100
62	M66	Z	.286	.286	0	%100
63	M67	X	-.938	-.938	0	%100
64	M67	Z	1.625	1.625	0	%100
65	M68	X	-.93	-.93	0	%100
66	M68	Z	1.611	1.611	0	%100
67	M69	X	0	0	0	%100
68	M69	Z	0	0	0	%100
69	M70	X	-.938	-.938	0	%100
70	M70	Z	1.625	1.625	0	%100
71	M79	X	-1.487	-1.487	0	%100
72	M79	Z	2.575	2.575	0	%100
73	M83	X	-1.511	-1.511	0	%100
74	M83	Z	2.617	2.617	0	%100
75	M88	X	0	0	0	%100
76	M88	Z	0	0	0	%100
77	M89	X	0	0	0	%100
78	M89	Z	0	0	0	%100
79	M91	X	-.93	-.93	0	%100
80	M91	Z	1.611	1.611	0	%100
81	M92	X	-.661	-.661	0	%100
82	M92	Z	1.145	1.145	0	%100
83	M94	X	-.661	-.661	0	%100
84	M94	Z	1.145	1.145	0	%100

Member Distributed Loads (BLC 60 : Structure Wi (210 Deg)) (Continued)

	Member Label	Direction	Start Magnitude[lb/ft,...	End Magnitude[lb/ft,F...	Start Location[ft,%]	End Location[ft,%]
85	M97	X	-2.329	-2.329	0	%100
86	M97	Z	4.035	4.035	0	%100
87	M98	X	-2.329	-2.329	0	%100
88	M98	Z	4.035	4.035	0	%100
89	M100	X	-1.487	-1.487	0	%100
90	M100	Z	2.575	2.575	0	%100
91	M102	X	0	0	0	%100
92	M102	Z	0	0	0	%100
93	M103	X	-.93	-.93	0	%100
94	M103	Z	1.611	1.611	0	%100
95	M105	X	-.661	-.661	0	%100
96	M105	Z	1.145	1.145	0	%100
97	M107	X	-.661	-.661	0	%100
98	M107	Z	1.145	1.145	0	%100
99	M108	X	0	0	0	%100
100	M108	Z	0	0	0	%100
101	M109	X	-.93	-.93	0	%100
102	M109	Z	1.611	1.611	0	%100
103	M110	X	-.93	-.93	0	%100
104	M110	Z	1.611	1.611	0	%100
105	M111	X	0	0	0	%100
106	M111	Z	0	0	0	%100
107	M118	X	-1.682	-1.682	0	%100
108	M118	Z	2.913	2.913	0	%100
109	M120	X	-1.487	-1.487	0	%100
110	M120	Z	2.575	2.575	0	%100
111	M121A	X	-1.682	-1.682	0	%100
112	M121A	Z	2.913	2.913	0	%100
113	M126	X	0	0	0	%100
114	M126	Z	0	0	0	%100
115	M131	X	-1.925	-1.925	0	%100
116	M131	Z	3.335	3.335	0	%100
117	M134	X	-1.925	-1.925	0	%100
118	M134	Z	3.335	3.335	0	%100
119	M148	X	-1.329	-1.329	0	%100
120	M148	Z	2.301	2.301	0	%100
121	M152B	X	-1.485	-1.485	0	%100
122	M152B	Z	2.572	2.572	0	%100
123	M155	X	-1.598	-1.598	0	%100
124	M155	Z	2.768	2.768	0	%100
125	M154	X	-1.329	-1.329	0	%100
126	M154	Z	2.301	2.301	0	%100
127	M157A	X	0	0	0	%100
128	M157A	Z	0	0	0	%100
129	M160	X	-2.375	-2.375	0	%100
130	M160	Z	4.113	4.113	0	%100
131	M161	X	-2.375	-2.375	0	%100
132	M161	Z	4.113	4.113	0	%100
133	M162	X	-2.375	-2.375	0	%100
134	M162	Z	4.113	4.113	0	%100
135	M163	X	-2.375	-2.375	0	%100
136	M163	Z	4.113	4.113	0	%100

Member Distributed Loads (BLC 60 : Structure Wi (210 Deg)) (Continued)

	Member Label	Direction	Start Magnitude[lb/ft,...	End Magnitude[lb/ft,F...	Start Location[ft,%]	End Location[ft,%]
137	M164	X	0	0	0	%100
138	M164	Z	0	0	0	%100
139	M165	X	0	0	0	%100
140	M165	Z	0	0	0	%100
141	M166	X	-1.234	-1.234	0	%100
142	M166	Z	2.137	2.137	0	%100
143	M167	X	-1.234	-1.234	0	%100
144	M167	Z	2.137	2.137	0	%100
145	M168	X	0	0	0	%100
146	M168	Z	0	0	0	%100
147	M169	X	-1.329	-1.329	0	%100
148	M169	Z	2.301	2.301	0	%100
149	M170	X	-1.329	-1.329	0	%100
150	M170	Z	2.301	2.301	0	%100
151	M171	X	0	0	0	%100
152	M171	Z	0	0	0	%100
153	M174	X	-1.175	-1.175	0	%100
154	M174	Z	2.035	2.035	0	%100
155	M177	X	-1.175	-1.175	0	%100
156	M177	Z	2.035	2.035	0	%100
157	M180	X	-1.175	-1.175	0	%100
158	M180	Z	2.035	2.035	0	%100
159	M183	X	-1.175	-1.175	0	%100
160	M183	Z	2.035	2.035	0	%100
161	M186	X	0	0	0	%100
162	M186	Z	0	0	0	%100
163	M189	X	0	0	0	%100
164	M189	Z	0	0	0	%100
165	M504	X	-1.772	-1.772	0	%100
166	M504	Z	3.068	3.068	0	%100
167	M502	X	-1.772	-1.772	0	%100
168	M502	Z	3.068	3.068	0	%100
169	M501	X	-1.772	-1.772	0	%100
170	M501	Z	3.068	3.068	0	%100
171	M500	X	-1.772	-1.772	0	%100
172	M500	Z	3.068	3.068	0	%100
173	M506	X	-1.772	-1.772	0	%100
174	M506	Z	3.068	3.068	0	%100
175	M505	X	-1.772	-1.772	0	%100
176	M505	Z	3.068	3.068	0	%100
177	MP2A	X	-1.959	-1.959	0	%100
178	MP2A	Z	3.393	3.393	0	%100
179	MP3A	X	-1.772	-1.772	0	%100
180	MP3A	Z	3.068	3.068	0	%100
181	MP2C	X	-1.959	-1.959	0	%100
182	MP2C	Z	3.393	3.393	0	%100
183	MP2B	X	-1.959	-1.959	0	%100
184	MP2B	Z	3.393	3.393	0	%100
185	M223	X	-2.882	-2.882	0	%100
186	M223	Z	4.991	4.991	0	%100
187	M226A	X	-2.882	-2.882	0	%100
188	M226A	Z	4.991	4.991	0	%100

Member Distributed Loads (BLC 60 : Structure Wi (210 Deg)) (Continued)

	Member Label	Direction	Start Magnitude[lb/ft,...	End Magnitude[lb/ft,F...	Start Location[ft,%]	End Location[ft,%]
189	M228A	X	-1.485	-1.485	0	%100
190	M228A	Z	2.572	2.572	0	%100
191	M232A	X	-.864	-.864	0	%100
192	M232A	Z	1.496	1.496	0	%100
193	M235	X	-.864	-.864	0	%100
194	M235	Z	1.496	1.496	0	%100
195	M237	X	0	0	0	%100
196	M237	Z	0	0	0	%100
197	M244	X	-2.271	-2.271	0	%100
198	M244	Z	3.933	3.933	0	%100
199	M245	X	-2.271	-2.271	0	%100
200	M245	Z	3.933	3.933	0	%100
201	M246	X	-2.585	-2.585	0	%100
202	M246	Z	4.478	4.478	0	%100
203	M249	X	-1.469	-1.469	0	%100
204	M249	Z	2.545	2.545	0	%100
205	MP1A	X	-1.772	-1.772	0	%100
206	MP1A	Z	3.068	3.068	0	%100
207	M271	X	0	0	0	%100
208	M271	Z	0	0	0	%100
209	M271B	X	-.214	-.214	0	%100
210	M271B	Z	.371	.371	0	%100
211	M274A	X	-.214	-.214	0	%100
212	M274A	Z	.371	.371	0	%100
213	M277	X	-1.598	-1.598	0	%100
214	M277	Z	2.768	2.768	0	%100
215	M280	X	-2.982	-2.982	0	%100
216	M280	Z	5.165	5.165	0	%100
217	M283	X	-2.982	-2.982	0	%100
218	M283	Z	5.165	5.165	0	%100
219	M265	X	-1.469	-1.469	0	%100
220	M265	Z	2.545	2.545	0	%100
221	M266	X	0	0	0	%100
222	M266	Z	0	0	0	%100
223	MP4A	X	-1.772	-1.772	0	%100
224	MP4A	Z	3.068	3.068	0	%100
225	MP3C	X	-1.772	-1.772	0	%100
226	MP3C	Z	3.068	3.068	0	%100
227	MP3B	X	-1.772	-1.772	0	%100
228	MP3B	Z	3.068	3.068	0	%100
229	MP1C	X	-1.772	-1.772	0	%100
230	MP1C	Z	3.068	3.068	0	%100
231	MP4C	X	-1.772	-1.772	0	%100
232	MP4C	Z	3.068	3.068	0	%100
233	MP1B	X	-1.772	-1.772	0	%100
234	MP1B	Z	3.068	3.068	0	%100
235	MP4B	X	-1.772	-1.772	0	%100
236	MP4B	Z	3.068	3.068	0	%100
237	M287	X	-1.353	-1.353	0	%100
238	M287	Z	2.343	2.343	0	%100
239	M288	X	-1.353	-1.353	0	%100
240	M288	Z	2.343	2.343	0	%100

Member Distributed Loads (BLC 61 : Structure Wi (240 Deg))

	Member Label	Direction	Start Magnitude[lb/ft,...	End Magnitude[lb/ft,F...	Start Location[ft,%]	End Location[ft,%]
1	M1	X	-1.963	-1.963	0	%100
2	M1	Z	1.133	1.133	0	%100
3	M7	X	-.637	-.637	0	%100
4	M7	Z	.368	.368	0	%100
5	M8	X	-2.176	-2.176	0	%100
6	M8	Z	1.256	1.256	0	%100
7	M13	X	-.537	-.537	0	%100
8	M13	Z	.31	.31	0	%100
9	M14	X	-.859	-.859	0	%100
10	M14	Z	.496	.496	0	%100
11	M18	X	-.859	-.859	0	%100
12	M18	Z	.496	.496	0	%100
13	M25	X	-3.026	-3.026	0	%100
14	M25	Z	1.747	1.747	0	%100
15	M26	X	-3.026	-3.026	0	%100
16	M26	Z	1.747	1.747	0	%100
17	M31	X	-3.434	-3.434	0	%100
18	M31	Z	1.983	1.983	0	%100
19	M42A	X	-.637	-.637	0	%100
20	M42A	Z	.368	.368	0	%100
21	M44A	X	-2.148	-2.148	0	%100
22	M44A	Z	1.24	1.24	0	%100
23	M44	X	-.859	-.859	0	%100
24	M44	Z	.496	.496	0	%100
25	M46A	X	-.859	-.859	0	%100
26	M46A	Z	.496	.496	0	%100
27	M46B	X	-.542	-.542	0	%100
28	M46B	Z	.313	.313	0	%100
29	M34A	X	-.537	-.537	0	%100
30	M34A	Z	.31	.31	0	%100
31	M35	X	-2.148	-2.148	0	%100
32	M35	Z	1.24	1.24	0	%100
33	M36	X	-.542	-.542	0	%100
34	M36	Z	.313	.313	0	%100
35	M38	X	-.858	-.858	0	%100
36	M38	Z	.496	.496	0	%100
37	M42	X	0	0	0	%100
38	M42	Z	0	0	0	%100
39	M47	X	-2.548	-2.548	0	%100
40	M47	Z	1.471	1.471	0	%100
41	M48	X	-8.704	-8.704	0	%100
42	M48	Z	5.025	5.025	0	%100
43	M50	X	-.537	-.537	0	%100
44	M50	Z	.31	.31	0	%100
45	M51	X	0	0	0	%100
46	M51	Z	0	0	0	%100
47	M53	X	0	0	0	%100
48	M53	Z	0	0	0	%100
49	M56	X	0	0	0	%100
50	M56	Z	0	0	0	%100
51	M57	X	0	0	0	%100
52	M57	Z	0	0	0	%100

Member Distributed Loads (BLC 61 : Structure Wi (240 Deg)) (Continued)

	Member Label	Direction	Start Magnitude[lb/ft,...	End Magnitude[lb/ft,F...	Start Location[ft,%]	End Location[ft,%]
53	M59	X	-.858	-.858	0	%100
54	M59	Z	.496	.496	0	%100
55	M61	X	-2.548	-2.548	0	%100
56	M61	Z	1.471	1.471	0	%100
57	M62	X	-.537	-.537	0	%100
58	M62	Z	.31	.31	0	%100
59	M64	X	0	0	0	%100
60	M64	Z	0	0	0	%100
61	M66	X	0	0	0	%100
62	M66	Z	0	0	0	%100
63	M67	X	-2.166	-2.166	0	%100
64	M67	Z	1.251	1.251	0	%100
65	M68	X	-.537	-.537	0	%100
66	M68	Z	.31	.31	0	%100
67	M69	X	-.537	-.537	0	%100
68	M69	Z	.31	.31	0	%100
69	M70	X	-2.166	-2.166	0	%100
70	M70	Z	1.251	1.251	0	%100
71	M79	X	-.858	-.858	0	%100
72	M79	Z	.496	.496	0	%100
73	M83	X	-1.963	-1.963	0	%100
74	M83	Z	1.133	1.133	0	%100
75	M88	X	-.637	-.637	0	%100
76	M88	Z	.368	.368	0	%100
77	M89	X	-2.176	-2.176	0	%100
78	M89	Z	1.256	1.256	0	%100
79	M91	X	-2.148	-2.148	0	%100
80	M91	Z	1.24	1.24	0	%100
81	M92	X	-.859	-.859	0	%100
82	M92	Z	.496	.496	0	%100
83	M94	X	-.859	-.859	0	%100
84	M94	Z	.496	.496	0	%100
85	M97	X	-3.026	-3.026	0	%100
86	M97	Z	1.747	1.747	0	%100
87	M98	X	-3.026	-3.026	0	%100
88	M98	Z	1.747	1.747	0	%100
89	M100	X	-.858	-.858	0	%100
90	M100	Z	.496	.496	0	%100
91	M102	X	-.637	-.637	0	%100
92	M102	Z	.368	.368	0	%100
93	M103	X	-.537	-.537	0	%100
94	M103	Z	.31	.31	0	%100
95	M105	X	-.859	-.859	0	%100
96	M105	Z	.496	.496	0	%100
97	M107	X	-.859	-.859	0	%100
98	M107	Z	.496	.496	0	%100
99	M108	X	-.542	-.542	0	%100
100	M108	Z	.313	.313	0	%100
101	M109	X	-2.148	-2.148	0	%100
102	M109	Z	1.24	1.24	0	%100
103	M110	X	-.537	-.537	0	%100
104	M110	Z	.31	.31	0	%100

Member Distributed Loads (BLC 61 : Structure Wi (240 Deg)) (Continued)

	Member Label	Direction	Start Magnitude[lb/ft,...	End Magnitude[lb/ft,F...	Start Location[ft,%]	End Location[ft,%]
105	M111	X	-.542	-.542	0	%100
106	M111	Z	.313	.313	0	%100
107	M118	X	-.971	-.971	0	%100
108	M118	Z	.561	.561	0	%100
109	M120	X	-3.434	-3.434	0	%100
110	M120	Z	1.983	1.983	0	%100
111	M121A	X	-3.885	-3.885	0	%100
112	M121A	Z	2.243	2.243	0	%100
113	M126	X	-.971	-.971	0	%100
114	M126	Z	.561	.561	0	%100
115	M131	X	-7.427	-7.427	0	%100
116	M131	Z	4.288	4.288	0	%100
117	M134	X	-7.427	-7.427	0	%100
118	M134	Z	4.288	4.288	0	%100
119	M148	X	-.767	-.767	0	%100
120	M148	Z	.443	.443	0	%100
121	M152B	X	-.857	-.857	0	%100
122	M152B	Z	.495	.495	0	%100
123	M155	X	-5.165	-5.165	0	%100
124	M155	Z	2.982	2.982	0	%100
125	M154	X	-3.068	-3.068	0	%100
126	M154	Z	1.772	1.772	0	%100
127	M157A	X	-.767	-.767	0	%100
128	M157A	Z	.443	.443	0	%100
129	M160	X	-1.371	-1.371	0	%100
130	M160	Z	.792	.792	0	%100
131	M161	X	-1.371	-1.371	0	%100
132	M161	Z	.792	.792	0	%100
133	M162	X	-5.484	-5.484	0	%100
134	M162	Z	3.166	3.166	0	%100
135	M163	X	-5.484	-5.484	0	%100
136	M163	Z	3.166	3.166	0	%100
137	M164	X	-1.371	-1.371	0	%100
138	M164	Z	.792	.792	0	%100
139	M165	X	-1.371	-1.371	0	%100
140	M165	Z	.792	.792	0	%100
141	M166	X	-.712	-.712	0	%100
142	M166	Z	.411	.411	0	%100
143	M167	X	-2.85	-2.85	0	%100
144	M167	Z	1.645	1.645	0	%100
145	M168	X	-.712	-.712	0	%100
146	M168	Z	.411	.411	0	%100
147	M169	X	-.767	-.767	0	%100
148	M169	Z	.443	.443	0	%100
149	M170	X	-3.068	-3.068	0	%100
150	M170	Z	1.772	1.772	0	%100
151	M171	X	-.767	-.767	0	%100
152	M171	Z	.443	.443	0	%100
153	M174	X	-.678	-.678	0	%100
154	M174	Z	.392	.392	0	%100
155	M177	X	-.678	-.678	0	%100
156	M177	Z	.392	.392	0	%100

Member Distributed Loads (BLC 61 : Structure Wi (240 Deg)) (Continued)

	Member Label	Direction	Start Magnitude[lb/ft,...	End Magnitude[lb/ft,F...	Start Location[ft,%]	End Location[ft,%]
157	M180	X	-2.713	-2.713	0	%100
158	M180	Z	1.566	1.566	0	%100
159	M183	X	-2.713	-2.713	0	%100
160	M183	Z	1.566	1.566	0	%100
161	M186	X	-.678	-.678	0	%100
162	M186	Z	.392	.392	0	%100
163	M189	X	-.678	-.678	0	%100
164	M189	Z	.392	.392	0	%100
165	M504	X	-3.068	-3.068	0	%100
166	M504	Z	1.772	1.772	0	%100
167	M502	X	-3.068	-3.068	0	%100
168	M502	Z	1.772	1.772	0	%100
169	M501	X	-3.068	-3.068	0	%100
170	M501	Z	1.772	1.772	0	%100
171	M500	X	-3.068	-3.068	0	%100
172	M500	Z	1.772	1.772	0	%100
173	M506	X	-3.068	-3.068	0	%100
174	M506	Z	1.772	1.772	0	%100
175	M505	X	-3.068	-3.068	0	%100
176	M505	Z	1.772	1.772	0	%100
177	MP2A	X	-3.393	-3.393	0	%100
178	MP2A	Z	1.959	1.959	0	%100
179	MP3A	X	-3.068	-3.068	0	%100
180	MP3A	Z	1.772	1.772	0	%100
181	MP2C	X	-3.393	-3.393	0	%100
182	MP2C	Z	1.959	1.959	0	%100
183	MP2B	X	-3.393	-3.393	0	%100
184	MP2B	Z	1.959	1.959	0	%100
185	M223	X	-6.156	-6.156	0	%100
186	M223	Z	3.554	3.554	0	%100
187	M226A	X	-6.156	-6.156	0	%100
188	M226A	Z	3.554	3.554	0	%100
189	M228A	X	-3.429	-3.429	0	%100
190	M228A	Z	1.98	1.98	0	%100
191	M232A	X	-2.661	-2.661	0	%100
192	M232A	Z	1.536	1.536	0	%100
193	M235	X	-2.661	-2.661	0	%100
194	M235	Z	1.536	1.536	0	%100
195	M237	X	-.857	-.857	0	%100
196	M237	Z	.495	.495	0	%100
197	M244	X	-4.296	-4.296	0	%100
198	M244	Z	2.481	2.481	0	%100
199	M245	X	-3.751	-3.751	0	%100
200	M245	Z	2.166	2.166	0	%100
201	M246	X	-4.296	-4.296	0	%100
202	M246	Z	2.481	2.481	0	%100
203	M249	X	-.848	-.848	0	%100
204	M249	Z	.49	.49	0	%100
205	MP1A	X	-3.068	-3.068	0	%100
206	MP1A	Z	1.772	1.772	0	%100
207	M271	X	-.781	-.781	0	%100
208	M271	Z	.451	.451	0	%100

Member Distributed Loads (BLC 61 : Structure Wi (240 Deg)) (Continued)

	Member Label	Direction	Start Magnitude[lb/ft,...	End Magnitude[lb/ft,F...	Start Location[ft,%]	End Location[ft,%]
209	M271B	X	-2.768	-2.768	0	%100
210	M271B	Z	1.598	1.598	0	%100
211	M274A	X	-.371	-.371	0	%100
212	M274A	Z	.214	.214	0	%100
213	M277	X	-.371	-.371	0	%100
214	M277	Z	.214	.214	0	%100
215	M280	X	-2.768	-2.768	0	%100
216	M280	Z	1.598	1.598	0	%100
217	M283	X	-5.165	-5.165	0	%100
218	M283	Z	2.982	2.982	0	%100
219	M265	X	-3.393	-3.393	0	%100
220	M265	Z	1.959	1.959	0	%100
221	M266	X	-.848	-.848	0	%100
222	M266	Z	.49	.49	0	%100
223	MP4A	X	-3.068	-3.068	0	%100
224	MP4A	Z	1.772	1.772	0	%100
225	MP3C	X	-3.068	-3.068	0	%100
226	MP3C	Z	1.772	1.772	0	%100
227	MP3B	X	-3.068	-3.068	0	%100
228	MP3B	Z	1.772	1.772	0	%100
229	MP1C	X	-3.068	-3.068	0	%100
230	MP1C	Z	1.772	1.772	0	%100
231	MP4C	X	-3.068	-3.068	0	%100
232	MP4C	Z	1.772	1.772	0	%100
233	MP1B	X	-3.068	-3.068	0	%100
234	MP1B	Z	1.772	1.772	0	%100
235	MP4B	X	-3.068	-3.068	0	%100
236	MP4B	Z	1.772	1.772	0	%100
237	M287	X	-.781	-.781	0	%100
238	M287	Z	.451	.451	0	%100
239	M288	X	-3.124	-3.124	0	%100
240	M288	Z	1.804	1.804	0	%100

Member Distributed Loads (BLC 62 : Structure Wi (270 Deg))

	Member Label	Direction	Start Magnitude[lb/ft,...	End Magnitude[lb/ft,F...	Start Location[ft,%]	End Location[ft,%]
1	M1	X	-3.022	-3.022	0	%100
2	M1	Z	0	0	0	%100
3	M7	X	0	0	0	%100
4	M7	Z	0	0	0	%100
5	M8	X	0	0	0	%100
6	M8	Z	0	0	0	%100
7	M13	X	-1.86	-1.86	0	%100
8	M13	Z	0	0	0	%100
9	M14	X	-1.322	-1.322	0	%100
10	M14	Z	0	0	0	%100
11	M18	X	-1.322	-1.322	0	%100
12	M18	Z	0	0	0	%100
13	M25	X	-4.659	-4.659	0	%100
14	M25	Z	0	0	0	%100
15	M26	X	-4.659	-4.659	0	%100
16	M26	Z	0	0	0	%100

Member Distributed Loads (BLC 62 : Structure Wi (270 Deg)) (Continued)

	Member Label	Direction	Start Magnitude[lb/ft,...	End Magnitude[lb/ft,F...	Start Location[ft,%]	End Location[ft,%]
17	M31	X	-2.974	-2.974	0	%100
18	M31	Z	0	0	0	%100
19	M42A	X	0	0	0	%100
20	M42A	Z	0	0	0	%100
21	M44A	X	-1.86	-1.86	0	%100
22	M44A	Z	0	0	0	%100
23	M44	X	-1.322	-1.322	0	%100
24	M44	Z	0	0	0	%100
25	M46A	X	-1.322	-1.322	0	%100
26	M46A	Z	0	0	0	%100
27	M46B	X	0	0	0	%100
28	M46B	Z	0	0	0	%100
29	M34A	X	-1.86	-1.86	0	%100
30	M34A	Z	0	0	0	%100
31	M35	X	-1.86	-1.86	0	%100
32	M35	Z	0	0	0	%100
33	M36	X	0	0	0	%100
34	M36	Z	0	0	0	%100
35	M38	X	-2.974	-2.974	0	%100
36	M38	Z	0	0	0	%100
37	M42	X	-.755	-.755	0	%100
38	M42	Z	0	0	0	%100
39	M47	X	-2.206	-2.206	0	%100
40	M47	Z	0	0	0	%100
41	M48	X	-7.537	-7.537	0	%100
42	M48	Z	0	0	0	%100
43	M50	X	0	0	0	%100
44	M50	Z	0	0	0	%100
45	M51	X	-.33	-.33	0	%100
46	M51	Z	0	0	0	%100
47	M53	X	-.33	-.33	0	%100
48	M53	Z	0	0	0	%100
49	M56	X	-1.165	-1.165	0	%100
50	M56	Z	0	0	0	%100
51	M57	X	-1.165	-1.165	0	%100
52	M57	Z	0	0	0	%100
53	M59	X	-2.974	-2.974	0	%100
54	M59	Z	0	0	0	%100
55	M61	X	-2.206	-2.206	0	%100
56	M61	Z	0	0	0	%100
57	M62	X	-1.86	-1.86	0	%100
58	M62	Z	0	0	0	%100
59	M64	X	-.33	-.33	0	%100
60	M64	Z	0	0	0	%100
61	M66	X	-.33	-.33	0	%100
62	M66	Z	0	0	0	%100
63	M67	X	-1.876	-1.876	0	%100
64	M67	Z	0	0	0	%100
65	M68	X	0	0	0	%100
66	M68	Z	0	0	0	%100
67	M69	X	-1.86	-1.86	0	%100
68	M69	Z	0	0	0	%100

Member Distributed Loads (BLC 62 : Structure Wi (270 Deg)) (Continued)

	Member Label	Direction	Start Magnitude[lb/ft,...	End Magnitude[lb/ft,F...	Start Location[ft,%]	End Location[ft,%]
69	M70	X	-1.876	-1.876	0	%100
70	M70	Z	0	0	0	%100
71	M79	X	0	0	0	%100
72	M79	Z	0	0	0	%100
73	M83	X	-.755	-.755	0	%100
74	M83	Z	0	0	0	%100
75	M88	X	-2.206	-2.206	0	%100
76	M88	Z	0	0	0	%100
77	M89	X	-7.537	-7.537	0	%100
78	M89	Z	0	0	0	%100
79	M91	X	-1.86	-1.86	0	%100
80	M91	Z	0	0	0	%100
81	M92	X	-.33	-.33	0	%100
82	M92	Z	0	0	0	%100
83	M94	X	-.33	-.33	0	%100
84	M94	Z	0	0	0	%100
85	M97	X	-1.165	-1.165	0	%100
86	M97	Z	0	0	0	%100
87	M98	X	-1.165	-1.165	0	%100
88	M98	Z	0	0	0	%100
89	M100	X	0	0	0	%100
90	M100	Z	0	0	0	%100
91	M102	X	-2.206	-2.206	0	%100
92	M102	Z	0	0	0	%100
93	M103	X	0	0	0	%100
94	M103	Z	0	0	0	%100
95	M105	X	-.33	-.33	0	%100
96	M105	Z	0	0	0	%100
97	M107	X	-.33	-.33	0	%100
98	M107	Z	0	0	0	%100
99	M108	X	-1.876	-1.876	0	%100
100	M108	Z	0	0	0	%100
101	M109	X	-1.86	-1.86	0	%100
102	M109	Z	0	0	0	%100
103	M110	X	0	0	0	%100
104	M110	Z	0	0	0	%100
105	M111	X	-1.876	-1.876	0	%100
106	M111	Z	0	0	0	%100
107	M118	X	0	0	0	%100
108	M118	Z	0	0	0	%100
109	M120	X	-2.974	-2.974	0	%100
110	M120	Z	0	0	0	%100
111	M121A	X	-3.364	-3.364	0	%100
112	M121A	Z	0	0	0	%100
113	M126	X	-3.364	-3.364	0	%100
114	M126	Z	0	0	0	%100
115	M131	X	-10.938	-10.938	0	%100
116	M131	Z	0	0	0	%100
117	M134	X	-10.938	-10.938	0	%100
118	M134	Z	0	0	0	%100
119	M148	X	0	0	0	%100
120	M148	Z	0	0	0	%100

Member Distributed Loads (BLC 62 : Structure Wi (270 Deg)) (Continued)

	Member Label	Direction	Start Magnitude[lb/ft,...	End Magnitude[lb/ft,F...	Start Location[ft,%]	End Location[ft,%]
121	M152B	X	0	0	0	%100
122	M152B	Z	0	0	0	%100
123	M155	X	-5.964	-5.964	0	%100
124	M155	Z	0	0	0	%100
125	M154	X	-2.657	-2.657	0	%100
126	M154	Z	0	0	0	%100
127	M157A	X	-2.657	-2.657	0	%100
128	M157A	Z	0	0	0	%100
129	M160	X	0	0	0	%100
130	M160	Z	0	0	0	%100
131	M161	X	0	0	0	%100
132	M161	Z	0	0	0	%100
133	M162	X	-4.749	-4.749	0	%100
134	M162	Z	0	0	0	%100
135	M163	X	-4.749	-4.749	0	%100
136	M163	Z	0	0	0	%100
137	M164	X	-4.749	-4.749	0	%100
138	M164	Z	0	0	0	%100
139	M165	X	-4.749	-4.749	0	%100
140	M165	Z	0	0	0	%100
141	M166	X	0	0	0	%100
142	M166	Z	0	0	0	%100
143	M167	X	-2.468	-2.468	0	%100
144	M167	Z	0	0	0	%100
145	M168	X	-2.468	-2.468	0	%100
146	M168	Z	0	0	0	%100
147	M169	X	0	0	0	%100
148	M169	Z	0	0	0	%100
149	M170	X	-2.657	-2.657	0	%100
150	M170	Z	0	0	0	%100
151	M171	X	-2.657	-2.657	0	%100
152	M171	Z	0	0	0	%100
153	M174	X	0	0	0	%100
154	M174	Z	0	0	0	%100
155	M177	X	0	0	0	%100
156	M177	Z	0	0	0	%100
157	M180	X	-2.349	-2.349	0	%100
158	M180	Z	0	0	0	%100
159	M183	X	-2.349	-2.349	0	%100
160	M183	Z	0	0	0	%100
161	M186	X	-2.349	-2.349	0	%100
162	M186	Z	0	0	0	%100
163	M189	X	-2.349	-2.349	0	%100
164	M189	Z	0	0	0	%100
165	M504	X	-3.543	-3.543	0	%100
166	M504	Z	0	0	0	%100
167	M502	X	-3.543	-3.543	0	%100
168	M502	Z	0	0	0	%100
169	M501	X	-3.543	-3.543	0	%100
170	M501	Z	0	0	0	%100
171	M500	X	-3.543	-3.543	0	%100
172	M500	Z	0	0	0	%100

Member Distributed Loads (BLC 62 : Structure Wi (270 Deg)) (Continued)

	Member Label	Direction	Start Magnitude[lb/ft,...	End Magnitude[lb/ft,F...	Start Location[ft,%]	End Location[ft,%]
173	M506	X	-3.543	-3.543	0	%100
174	M506	Z	0	0	0	%100
175	M505	X	-3.543	-3.543	0	%100
176	M505	Z	0	0	0	%100
177	MP2A	X	-3.918	-3.918	0	%100
178	MP2A	Z	0	0	0	%100
179	MP3A	X	-3.543	-3.543	0	%100
180	MP3A	Z	0	0	0	%100
181	MP2C	X	-3.918	-3.918	0	%100
182	MP2C	Z	0	0	0	%100
183	MP2B	X	-3.918	-3.918	0	%100
184	MP2B	Z	0	0	0	%100
185	M223	X	-5.763	-5.763	0	%100
186	M223	Z	0	0	0	%100
187	M226A	X	-5.763	-5.763	0	%100
188	M226A	Z	0	0	0	%100
189	M228A	X	-2.97	-2.97	0	%100
190	M228A	Z	0	0	0	%100
191	M232A	X	-5.763	-5.763	0	%100
192	M232A	Z	0	0	0	%100
193	M235	X	-5.763	-5.763	0	%100
194	M235	Z	0	0	0	%100
195	M237	X	-2.97	-2.97	0	%100
196	M237	Z	0	0	0	%100
197	M244	X	-5.171	-5.171	0	%100
198	M244	Z	0	0	0	%100
199	M245	X	-4.541	-4.541	0	%100
200	M245	Z	0	0	0	%100
201	M246	X	-4.541	-4.541	0	%100
202	M246	Z	0	0	0	%100
203	M249	X	0	0	0	%100
204	M249	Z	0	0	0	%100
205	MP1A	X	-3.543	-3.543	0	%100
206	MP1A	Z	0	0	0	%100
207	M271	X	-2.705	-2.705	0	%100
208	M271	Z	0	0	0	%100
209	M271B	X	-5.964	-5.964	0	%100
210	M271B	Z	0	0	0	%100
211	M274A	X	-3.196	-3.196	0	%100
212	M274A	Z	0	0	0	%100
213	M277	X	-.428	-.428	0	%100
214	M277	Z	0	0	0	%100
215	M280	X	-.428	-.428	0	%100
216	M280	Z	0	0	0	%100
217	M283	X	-3.196	-3.196	0	%100
218	M283	Z	0	0	0	%100
219	M265	X	-2.938	-2.938	0	%100
220	M265	Z	0	0	0	%100
221	M266	X	-2.938	-2.938	0	%100
222	M266	Z	0	0	0	%100
223	MP4A	X	-3.543	-3.543	0	%100
224	MP4A	Z	0	0	0	%100

Member Distributed Loads (BLC 62 : Structure Wi (270 Deg)) (Continued)

	Member Label	Direction	Start Magnitude[lb/ft,...	End Magnitude[lb/ft,F...	Start Location[ft,%]	End Location[ft,%]
225	MP3C	X	-3.543	-3.543	0	%100
226	MP3C	Z	0	0	0	%100
227	MP3B	X	-3.543	-3.543	0	%100
228	MP3B	Z	0	0	0	%100
229	MP1C	X	-3.543	-3.543	0	%100
230	MP1C	Z	0	0	0	%100
231	MP4C	X	-3.543	-3.543	0	%100
232	MP4C	Z	0	0	0	%100
233	MP1B	X	-3.543	-3.543	0	%100
234	MP1B	Z	0	0	0	%100
235	MP4B	X	-3.543	-3.543	0	%100
236	MP4B	Z	0	0	0	%100
237	M287	X	0	0	0	%100
238	M287	Z	0	0	0	%100
239	M288	X	-2.705	-2.705	0	%100
240	M288	Z	0	0	0	%100

Member Distributed Loads (BLC 63 : Structure Wi (300 Deg))

	Member Label	Direction	Start Magnitude[lb/ft,...	End Magnitude[lb/ft,F...	Start Location[ft,%]	End Location[ft,%]
1	M1	X	-1.963	-1.963	0	%100
2	M1	Z	-1.133	-1.133	0	%100
3	M7	X	-.637	-.637	0	%100
4	M7	Z	-.368	-.368	0	%100
5	M8	X	-2.176	-2.176	0	%100
6	M8	Z	-1.256	-1.256	0	%100
7	M13	X	-2.148	-2.148	0	%100
8	M13	Z	-1.24	-1.24	0	%100
9	M14	X	-.859	-.859	0	%100
10	M14	Z	-.496	-.496	0	%100
11	M18	X	-.859	-.859	0	%100
12	M18	Z	-.496	-.496	0	%100
13	M25	X	-3.026	-3.026	0	%100
14	M25	Z	-1.747	-1.747	0	%100
15	M26	X	-3.026	-3.026	0	%100
16	M26	Z	-1.747	-1.747	0	%100
17	M31	X	-.858	-.858	0	%100
18	M31	Z	-.496	-.496	0	%100
19	M42A	X	-.637	-.637	0	%100
20	M42A	Z	-.368	-.368	0	%100
21	M44A	X	-.537	-.537	0	%100
22	M44A	Z	-.31	-.31	0	%100
23	M44	X	-.859	-.859	0	%100
24	M44	Z	-.496	-.496	0	%100
25	M46A	X	-.859	-.859	0	%100
26	M46A	Z	-.496	-.496	0	%100
27	M46B	X	-.542	-.542	0	%100
28	M46B	Z	-.313	-.313	0	%100
29	M34A	X	-2.148	-2.148	0	%100
30	M34A	Z	-1.24	-1.24	0	%100
31	M35	X	-.537	-.537	0	%100
32	M35	Z	-.31	-.31	0	%100

Member Distributed Loads (BLC 63 : Structure Wi (300 Deg)) (Continued)

	Member Label	Direction	Start Magnitude[lb/ft,...	End Magnitude[lb/ft,F...	Start Location[ft,%]	End Location[ft,%]
33	M36	X	-.542	-.542	0	%100
34	M36	Z	-.313	-.313	0	%100
35	M38	X	-3.434	-3.434	0	%100
36	M38	Z	-1.983	-1.983	0	%100
37	M42	X	-1.963	-1.963	0	%100
38	M42	Z	-1.133	-1.133	0	%100
39	M47	X	-.637	-.637	0	%100
40	M47	Z	-.368	-.368	0	%100
41	M48	X	-2.176	-2.176	0	%100
42	M48	Z	-1.256	-1.256	0	%100
43	M50	X	-.537	-.537	0	%100
44	M50	Z	-.31	-.31	0	%100
45	M51	X	-.859	-.859	0	%100
46	M51	Z	-.496	-.496	0	%100
47	M53	X	-.859	-.859	0	%100
48	M53	Z	-.496	-.496	0	%100
49	M56	X	-3.026	-3.026	0	%100
50	M56	Z	-1.747	-1.747	0	%100
51	M57	X	-3.026	-3.026	0	%100
52	M57	Z	-1.747	-1.747	0	%100
53	M59	X	-3.434	-3.434	0	%100
54	M59	Z	-1.983	-1.983	0	%100
55	M61	X	-.637	-.637	0	%100
56	M61	Z	-.368	-.368	0	%100
57	M62	X	-2.148	-2.148	0	%100
58	M62	Z	-1.24	-1.24	0	%100
59	M64	X	-.859	-.859	0	%100
60	M64	Z	-.496	-.496	0	%100
61	M66	X	-.859	-.859	0	%100
62	M66	Z	-.496	-.496	0	%100
63	M67	X	-.542	-.542	0	%100
64	M67	Z	-.313	-.313	0	%100
65	M68	X	-.537	-.537	0	%100
66	M68	Z	-.31	-.31	0	%100
67	M69	X	-2.148	-2.148	0	%100
68	M69	Z	-1.24	-1.24	0	%100
69	M70	X	-.542	-.542	0	%100
70	M70	Z	-.313	-.313	0	%100
71	M79	X	-.858	-.858	0	%100
72	M79	Z	-.496	-.496	0	%100
73	M83	X	0	0	0	%100
74	M83	Z	0	0	0	%100
75	M88	X	-2.548	-2.548	0	%100
76	M88	Z	-1.471	-1.471	0	%100
77	M89	X	-8.704	-8.704	0	%100
78	M89	Z	-5.025	-5.025	0	%100
79	M91	X	-.537	-.537	0	%100
80	M91	Z	-.31	-.31	0	%100
81	M92	X	0	0	0	%100
82	M92	Z	0	0	0	%100
83	M94	X	0	0	0	%100
84	M94	Z	0	0	0	%100

Member Distributed Loads (BLC 63 : Structure Wi (300 Deg)) (Continued)

	Member Label	Direction	Start Magnitude[lb/ft,...	End Magnitude[lb/ft,F...	Start Location[ft,%]	End Location[ft,%]
85	M97	X	0	0	0	%100
86	M97	Z	0	0	0	%100
87	M98	X	0	0	0	%100
88	M98	Z	0	0	0	%100
89	M100	X	-.858	-.858	0	%100
90	M100	Z	-.496	-.496	0	%100
91	M102	X	-2.548	-2.548	0	%100
92	M102	Z	-1.471	-1.471	0	%100
93	M103	X	-.537	-.537	0	%100
94	M103	Z	-.31	-.31	0	%100
95	M105	X	0	0	0	%100
96	M105	Z	0	0	0	%100
97	M107	X	0	0	0	%100
98	M107	Z	0	0	0	%100
99	M108	X	-2.166	-2.166	0	%100
100	M108	Z	-1.251	-1.251	0	%100
101	M109	X	-.537	-.537	0	%100
102	M109	Z	-.31	-.31	0	%100
103	M110	X	-.537	-.537	0	%100
104	M110	Z	-.31	-.31	0	%100
105	M111	X	-2.166	-2.166	0	%100
106	M111	Z	-1.251	-1.251	0	%100
107	M118	X	-.971	-.971	0	%100
108	M118	Z	-.561	-.561	0	%100
109	M120	X	-.858	-.858	0	%100
110	M120	Z	-.496	-.496	0	%100
111	M121A	X	-.971	-.971	0	%100
112	M121A	Z	-.561	-.561	0	%100
113	M126	X	-3.885	-3.885	0	%100
114	M126	Z	-2.243	-2.243	0	%100
115	M131	X	-7.427	-7.427	0	%100
116	M131	Z	-4.288	-4.288	0	%100
117	M134	X	-7.427	-7.427	0	%100
118	M134	Z	-4.288	-4.288	0	%100
119	M148	X	-.767	-.767	0	%100
120	M148	Z	-.443	-.443	0	%100
121	M152B	X	-.857	-.857	0	%100
122	M152B	Z	-.495	-.495	0	%100
123	M155	X	-2.768	-2.768	0	%100
124	M155	Z	-1.598	-1.598	0	%100
125	M154	X	-.767	-.767	0	%100
126	M154	Z	-.443	-.443	0	%100
127	M157A	X	-3.068	-3.068	0	%100
128	M157A	Z	-1.772	-1.772	0	%100
129	M160	X	-1.371	-1.371	0	%100
130	M160	Z	-.792	-.792	0	%100
131	M161	X	-1.371	-1.371	0	%100
132	M161	Z	-.792	-.792	0	%100
133	M162	X	-1.371	-1.371	0	%100
134	M162	Z	-.792	-.792	0	%100
135	M163	X	-1.371	-1.371	0	%100
136	M163	Z	-.792	-.792	0	%100

Member Distributed Loads (BLC 63 : Structure Wi (300 Deg)) (Continued)

	Member Label	Direction	Start Magnitude[lb/ft,...	End Magnitude[lb/ft,F...	Start Location[ft,%]	End Location[ft,%]
137	M164	X	-5.484	-5.484	0	%100
138	M164	Z	-3.166	-3.166	0	%100
139	M165	X	-5.484	-5.484	0	%100
140	M165	Z	-3.166	-3.166	0	%100
141	M166	X	-.712	-.712	0	%100
142	M166	Z	-.411	-.411	0	%100
143	M167	X	-.712	-.712	0	%100
144	M167	Z	-.411	-.411	0	%100
145	M168	X	-2.85	-2.85	0	%100
146	M168	Z	-1.645	-1.645	0	%100
147	M169	X	-.767	-.767	0	%100
148	M169	Z	-.443	-.443	0	%100
149	M170	X	-.767	-.767	0	%100
150	M170	Z	-.443	-.443	0	%100
151	M171	X	-3.068	-3.068	0	%100
152	M171	Z	-1.772	-1.772	0	%100
153	M174	X	-.678	-.678	0	%100
154	M174	Z	-.392	-.392	0	%100
155	M177	X	-.678	-.678	0	%100
156	M177	Z	-.392	-.392	0	%100
157	M180	X	-.678	-.678	0	%100
158	M180	Z	-.392	-.392	0	%100
159	M183	X	-.678	-.678	0	%100
160	M183	Z	-.392	-.392	0	%100
161	M186	X	-2.713	-2.713	0	%100
162	M186	Z	-1.566	-1.566	0	%100
163	M189	X	-2.713	-2.713	0	%100
164	M189	Z	-1.566	-1.566	0	%100
165	M504	X	-3.068	-3.068	0	%100
166	M504	Z	-1.772	-1.772	0	%100
167	M502	X	-3.068	-3.068	0	%100
168	M502	Z	-1.772	-1.772	0	%100
169	M501	X	-3.068	-3.068	0	%100
170	M501	Z	-1.772	-1.772	0	%100
171	M500	X	-3.068	-3.068	0	%100
172	M500	Z	-1.772	-1.772	0	%100
173	M506	X	-3.068	-3.068	0	%100
174	M506	Z	-1.772	-1.772	0	%100
175	M505	X	-3.068	-3.068	0	%100
176	M505	Z	-1.772	-1.772	0	%100
177	MP2A	X	-3.393	-3.393	0	%100
178	MP2A	Z	-1.959	-1.959	0	%100
179	MP3A	X	-3.068	-3.068	0	%100
180	MP3A	Z	-1.772	-1.772	0	%100
181	MP2C	X	-3.393	-3.393	0	%100
182	MP2C	Z	-1.959	-1.959	0	%100
183	MP2B	X	-3.393	-3.393	0	%100
184	MP2B	Z	-1.959	-1.959	0	%100
185	M223	X	-2.661	-2.661	0	%100
186	M223	Z	-1.536	-1.536	0	%100
187	M226A	X	-2.661	-2.661	0	%100
188	M226A	Z	-1.536	-1.536	0	%100

Member Distributed Loads (BLC 63 : Structure Wi (300 Deg)) (Continued)

	Member Label	Direction	Start Magnitude[lb/ft,...	End Magnitude[lb/ft,F...	Start Location[ft,%]	End Location[ft,%]
189	M228A	X	-.857	-.857	0	%100
190	M228A	Z	-.495	-.495	0	%100
191	M232A	X	-6.156	-6.156	0	%100
192	M232A	Z	-3.554	-3.554	0	%100
193	M235	X	-6.156	-6.156	0	%100
194	M235	Z	-3.554	-3.554	0	%100
195	M237	X	-3.429	-3.429	0	%100
196	M237	Z	-1.98	-1.98	0	%100
197	M244	X	-4.296	-4.296	0	%100
198	M244	Z	-2.481	-2.481	0	%100
199	M245	X	-4.296	-4.296	0	%100
200	M245	Z	-2.481	-2.481	0	%100
201	M246	X	-3.751	-3.751	0	%100
202	M246	Z	-2.166	-2.166	0	%100
203	M249	X	-.848	-.848	0	%100
204	M249	Z	-.49	-.49	0	%100
205	MP1A	X	-3.068	-3.068	0	%100
206	MP1A	Z	-1.772	-1.772	0	%100
207	M271	X	-3.124	-3.124	0	%100
208	M271	Z	-1.804	-1.804	0	%100
209	M271B	X	-5.165	-5.165	0	%100
210	M271B	Z	-2.982	-2.982	0	%100
211	M274A	X	-5.165	-5.165	0	%100
212	M274A	Z	-2.982	-2.982	0	%100
213	M277	X	-2.768	-2.768	0	%100
214	M277	Z	-1.598	-1.598	0	%100
215	M280	X	-.371	-.371	0	%100
216	M280	Z	-.214	-.214	0	%100
217	M283	X	-.371	-.371	0	%100
218	M283	Z	-.214	-.214	0	%100
219	M265	X	-.848	-.848	0	%100
220	M265	Z	-.49	-.49	0	%100
221	M266	X	-3.393	-3.393	0	%100
222	M266	Z	-1.959	-1.959	0	%100
223	MP4A	X	-3.068	-3.068	0	%100
224	MP4A	Z	-1.772	-1.772	0	%100
225	MP3C	X	-3.068	-3.068	0	%100
226	MP3C	Z	-1.772	-1.772	0	%100
227	MP3B	X	-3.068	-3.068	0	%100
228	MP3B	Z	-1.772	-1.772	0	%100
229	MP1C	X	-3.068	-3.068	0	%100
230	MP1C	Z	-1.772	-1.772	0	%100
231	MP4C	X	-3.068	-3.068	0	%100
232	MP4C	Z	-1.772	-1.772	0	%100
233	MP1B	X	-3.068	-3.068	0	%100
234	MP1B	Z	-1.772	-1.772	0	%100
235	MP4B	X	-3.068	-3.068	0	%100
236	MP4B	Z	-1.772	-1.772	0	%100
237	M287	X	-.781	-.781	0	%100
238	M287	Z	-.451	-.451	0	%100
239	M288	X	-.781	-.781	0	%100
240	M288	Z	-.451	-.451	0	%100

Member Distributed Loads (BLC 64 : Structure Wi (330 Deg))

	Member Label	Direction	Start Magnitude[lb/ft,...	End Magnitude[lb/ft,F...	Start Location[ft,%]	End Location[ft,%]
1	M1	X	-.378	-.378	0	%100
2	M1	Z	-.654	-.654	0	%100
3	M7	X	-1.103	-1.103	0	%100
4	M7	Z	-1.911	-1.911	0	%100
5	M8	X	-3.769	-3.769	0	%100
6	M8	Z	-6.528	-6.528	0	%100
7	M13	X	-.93	-.93	0	%100
8	M13	Z	-1.611	-1.611	0	%100
9	M14	X	-.165	-.165	0	%100
10	M14	Z	-.286	-.286	0	%100
11	M18	X	-.165	-.165	0	%100
12	M18	Z	-.286	-.286	0	%100
13	M25	X	-.582	-.582	0	%100
14	M25	Z	-1.009	-1.009	0	%100
15	M26	X	-.582	-.582	0	%100
16	M26	Z	-1.009	-1.009	0	%100
17	M31	X	0	0	0	%100
18	M31	Z	0	0	0	%100
19	M42A	X	-1.103	-1.103	0	%100
20	M42A	Z	-1.911	-1.911	0	%100
21	M44A	X	0	0	0	%100
22	M44A	Z	0	0	0	%100
23	M44	X	-.165	-.165	0	%100
24	M44	Z	-.286	-.286	0	%100
25	M46A	X	-.165	-.165	0	%100
26	M46A	Z	-.286	-.286	0	%100
27	M46B	X	-.938	-.938	0	%100
28	M46B	Z	-1.625	-1.625	0	%100
29	M34A	X	-.93	-.93	0	%100
30	M34A	Z	-1.611	-1.611	0	%100
31	M35	X	0	0	0	%100
32	M35	Z	0	0	0	%100
33	M36	X	-.938	-.938	0	%100
34	M36	Z	-1.625	-1.625	0	%100
35	M38	X	-1.487	-1.487	0	%100
36	M38	Z	-2.575	-2.575	0	%100
37	M42	X	-1.511	-1.511	0	%100
38	M42	Z	-2.617	-2.617	0	%100
39	M47	X	0	0	0	%100
40	M47	Z	0	0	0	%100
41	M48	X	0	0	0	%100
42	M48	Z	0	0	0	%100
43	M50	X	-.93	-.93	0	%100
44	M50	Z	-1.611	-1.611	0	%100
45	M51	X	-.661	-.661	0	%100
46	M51	Z	-1.145	-1.145	0	%100
47	M53	X	-.661	-.661	0	%100
48	M53	Z	-1.145	-1.145	0	%100
49	M56	X	-2.329	-2.329	0	%100
50	M56	Z	-4.035	-4.035	0	%100
51	M57	X	-2.329	-2.329	0	%100
52	M57	Z	-4.035	-4.035	0	%100

Member Distributed Loads (BLC 64 : Structure Wi (330 Deg)) (Continued)

	Member Label	Direction	Start Magnitude[lb/ft,...	End Magnitude[lb/ft,F...	Start Location[ft,%]	End Location[ft,%]
53	M59	X	-1.487	-1.487	0	%100
54	M59	Z	-2.575	-2.575	0	%100
55	M61	X	0	0	0	%100
56	M61	Z	0	0	0	%100
57	M62	X	-.93	-.93	0	%100
58	M62	Z	-1.611	-1.611	0	%100
59	M64	X	-.661	-.661	0	%100
60	M64	Z	-1.145	-1.145	0	%100
61	M66	X	-.661	-.661	0	%100
62	M66	Z	-1.145	-1.145	0	%100
63	M67	X	0	0	0	%100
64	M67	Z	0	0	0	%100
65	M68	X	-.93	-.93	0	%100
66	M68	Z	-1.611	-1.611	0	%100
67	M69	X	-.93	-.93	0	%100
68	M69	Z	-1.611	-1.611	0	%100
69	M70	X	0	0	0	%100
70	M70	Z	0	0	0	%100
71	M79	X	-1.487	-1.487	0	%100
72	M79	Z	-2.575	-2.575	0	%100
73	M83	X	-.378	-.378	0	%100
74	M83	Z	-.654	-.654	0	%100
75	M88	X	-1.103	-1.103	0	%100
76	M88	Z	-1.911	-1.911	0	%100
77	M89	X	-3.769	-3.769	0	%100
78	M89	Z	-6.528	-6.528	0	%100
79	M91	X	0	0	0	%100
80	M91	Z	0	0	0	%100
81	M92	X	-.165	-.165	0	%100
82	M92	Z	-.286	-.286	0	%100
83	M94	X	-.165	-.165	0	%100
84	M94	Z	-.286	-.286	0	%100
85	M97	X	-.582	-.582	0	%100
86	M97	Z	-1.009	-1.009	0	%100
87	M98	X	-.582	-.582	0	%100
88	M98	Z	-1.009	-1.009	0	%100
89	M100	X	-1.487	-1.487	0	%100
90	M100	Z	-2.575	-2.575	0	%100
91	M102	X	-1.103	-1.103	0	%100
92	M102	Z	-1.911	-1.911	0	%100
93	M103	X	-.93	-.93	0	%100
94	M103	Z	-1.611	-1.611	0	%100
95	M105	X	-.165	-.165	0	%100
96	M105	Z	-.286	-.286	0	%100
97	M107	X	-.165	-.165	0	%100
98	M107	Z	-.286	-.286	0	%100
99	M108	X	-.938	-.938	0	%100
100	M108	Z	-1.625	-1.625	0	%100
101	M109	X	0	0	0	%100
102	M109	Z	0	0	0	%100
103	M110	X	-.93	-.93	0	%100
104	M110	Z	-1.611	-1.611	0	%100

Member Distributed Loads (BLC 64 : Structure Wi (330 Deg)) (Continued)

	Member Label	Direction	Start Magnitude[lb/ft,...	End Magnitude[lb/ft,F...	Start Location[ft,%]	End Location[ft,%]
105	M111	X	-.938	-.938	0	%100
106	M111	Z	-1.625	-1.625	0	%100
107	M118	X	-1.682	-1.682	0	%100
108	M118	Z	-2.913	-2.913	0	%100
109	M120	X	0	0	0	%100
110	M120	Z	0	0	0	%100
111	M121A	X	0	0	0	%100
112	M121A	Z	0	0	0	%100
113	M126	X	-1.682	-1.682	0	%100
114	M126	Z	-2.913	-2.913	0	%100
115	M131	X	-1.925	-1.925	0	%100
116	M131	Z	-3.335	-3.335	0	%100
117	M134	X	-1.925	-1.925	0	%100
118	M134	Z	-3.335	-3.335	0	%100
119	M148	X	-1.329	-1.329	0	%100
120	M148	Z	-2.301	-2.301	0	%100
121	M152B	X	-1.485	-1.485	0	%100
122	M152B	Z	-2.572	-2.572	0	%100
123	M155	X	-.214	-.214	0	%100
124	M155	Z	-.371	-.371	0	%100
125	M154	X	0	0	0	%100
126	M154	Z	0	0	0	%100
127	M157A	X	-1.329	-1.329	0	%100
128	M157A	Z	-2.301	-2.301	0	%100
129	M160	X	-2.375	-2.375	0	%100
130	M160	Z	-4.113	-4.113	0	%100
131	M161	X	-2.375	-2.375	0	%100
132	M161	Z	-4.113	-4.113	0	%100
133	M162	X	0	0	0	%100
134	M162	Z	0	0	0	%100
135	M163	X	0	0	0	%100
136	M163	Z	0	0	0	%100
137	M164	X	-2.375	-2.375	0	%100
138	M164	Z	-4.113	-4.113	0	%100
139	M165	X	-2.375	-2.375	0	%100
140	M165	Z	-4.113	-4.113	0	%100
141	M166	X	-1.234	-1.234	0	%100
142	M166	Z	-2.137	-2.137	0	%100
143	M167	X	0	0	0	%100
144	M167	Z	0	0	0	%100
145	M168	X	-1.234	-1.234	0	%100
146	M168	Z	-2.137	-2.137	0	%100
147	M169	X	-1.329	-1.329	0	%100
148	M169	Z	-2.301	-2.301	0	%100
149	M170	X	0	0	0	%100
150	M170	Z	0	0	0	%100
151	M171	X	-1.329	-1.329	0	%100
152	M171	Z	-2.301	-2.301	0	%100
153	M174	X	-1.175	-1.175	0	%100
154	M174	Z	-2.035	-2.035	0	%100
155	M177	X	-1.175	-1.175	0	%100
156	M177	Z	-2.035	-2.035	0	%100

Member Distributed Loads (BLC 64 : Structure Wi (330 Deg)) (Continued)

	Member Label	Direction	Start Magnitude[lb/ft,...	End Magnitude[lb/ft,F...	Start Location[ft,%]	End Location[ft,%]
157	M180	X	0	0	0	%100
158	M180	Z	0	0	0	%100
159	M183	X	0	0	0	%100
160	M183	Z	0	0	0	%100
161	M186	X	-1.175	-1.175	0	%100
162	M186	Z	-2.035	-2.035	0	%100
163	M189	X	-1.175	-1.175	0	%100
164	M189	Z	-2.035	-2.035	0	%100
165	M504	X	-1.772	-1.772	0	%100
166	M504	Z	-3.068	-3.068	0	%100
167	M502	X	-1.772	-1.772	0	%100
168	M502	Z	-3.068	-3.068	0	%100
169	M501	X	-1.772	-1.772	0	%100
170	M501	Z	-3.068	-3.068	0	%100
171	M500	X	-1.772	-1.772	0	%100
172	M500	Z	-3.068	-3.068	0	%100
173	M506	X	-1.772	-1.772	0	%100
174	M506	Z	-3.068	-3.068	0	%100
175	M505	X	-1.772	-1.772	0	%100
176	M505	Z	-3.068	-3.068	0	%100
177	MP2A	X	-1.959	-1.959	0	%100
178	MP2A	Z	-3.393	-3.393	0	%100
179	MP3A	X	-1.772	-1.772	0	%100
180	MP3A	Z	-3.068	-3.068	0	%100
181	MP2C	X	-1.959	-1.959	0	%100
182	MP2C	Z	-3.393	-3.393	0	%100
183	MP2B	X	-1.959	-1.959	0	%100
184	MP2B	Z	-3.393	-3.393	0	%100
185	M223	X	-.864	-.864	0	%100
186	M223	Z	-1.496	-1.496	0	%100
187	M226A	X	-.864	-.864	0	%100
188	M226A	Z	-1.496	-1.496	0	%100
189	M228A	X	0	0	0	%100
190	M228A	Z	0	0	0	%100
191	M232A	X	-2.882	-2.882	0	%100
192	M232A	Z	-4.991	-4.991	0	%100
193	M235	X	-2.882	-2.882	0	%100
194	M235	Z	-4.991	-4.991	0	%100
195	M237	X	-1.485	-1.485	0	%100
196	M237	Z	-2.572	-2.572	0	%100
197	M244	X	-2.271	-2.271	0	%100
198	M244	Z	-3.933	-3.933	0	%100
199	M245	X	-2.585	-2.585	0	%100
200	M245	Z	-4.478	-4.478	0	%100
201	M246	X	-2.271	-2.271	0	%100
202	M246	Z	-3.933	-3.933	0	%100
203	M249	X	-1.469	-1.469	0	%100
204	M249	Z	-2.545	-2.545	0	%100
205	MP1A	X	-1.772	-1.772	0	%100
206	MP1A	Z	-3.068	-3.068	0	%100
207	M271	X	-1.353	-1.353	0	%100
208	M271	Z	-2.343	-2.343	0	%100

Member Distributed Loads (BLC 64 : Structure Wi (330 Deg)) (Continued)

	Member Label	Direction	Start Magnitude[lb/ft,...	End Magnitude[lb/ft,F...	Start Location[ft,%]	End Location[ft,%]
209	M271B	X	-1.598	-1.598	0	%100
210	M271B	Z	-2.768	-2.768	0	%100
211	M274A	X	-2.982	-2.982	0	%100
212	M274A	Z	-5.165	-5.165	0	%100
213	M277	X	-2.982	-2.982	0	%100
214	M277	Z	-5.165	-5.165	0	%100
215	M280	X	-1.598	-1.598	0	%100
216	M280	Z	-2.768	-2.768	0	%100
217	M283	X	-.214	-.214	0	%100
218	M283	Z	-.371	-.371	0	%100
219	M265	X	0	0	0	%100
220	M265	Z	0	0	0	%100
221	M266	X	-1.469	-1.469	0	%100
222	M266	Z	-2.545	-2.545	0	%100
223	MP4A	X	-1.772	-1.772	0	%100
224	MP4A	Z	-3.068	-3.068	0	%100
225	MP3C	X	-1.772	-1.772	0	%100
226	MP3C	Z	-3.068	-3.068	0	%100
227	MP3B	X	-1.772	-1.772	0	%100
228	MP3B	Z	-3.068	-3.068	0	%100
229	MP1C	X	-1.772	-1.772	0	%100
230	MP1C	Z	-3.068	-3.068	0	%100
231	MP4C	X	-1.772	-1.772	0	%100
232	MP4C	Z	-3.068	-3.068	0	%100
233	MP1B	X	-1.772	-1.772	0	%100
234	MP1B	Z	-3.068	-3.068	0	%100
235	MP4B	X	-1.772	-1.772	0	%100
236	MP4B	Z	-3.068	-3.068	0	%100
237	M287	X	-1.353	-1.353	0	%100
238	M287	Z	-2.343	-2.343	0	%100
239	M288	X	0	0	0	%100
240	M288	Z	0	0	0	%100

Member Distributed Loads (BLC 65 : Structure Wm (0 Deg))

	Member Label	Direction	Start Magnitude[lb/ft,...	End Magnitude[lb/ft,F...	Start Location[ft,%]	End Location[ft,%]
1	M1	X	0	0	0	%100
2	M1	Z	0	0	0	%100
3	M7	X	0	0	0	%100
4	M7	Z	-.588	-.588	0	%100
5	M8	X	0	0	0	%100
6	M8	Z	-3.237	-3.237	0	%100
7	M13	X	0	0	0	%100
8	M13	Z	-.122	-.122	0	%100
9	M14	X	0	0	0	%100
10	M14	Z	0	0	0	%100
11	M18	X	0	0	0	%100
12	M18	Z	0	0	0	%100
13	M25	X	0	0	0	%100
14	M25	Z	0	0	0	%100
15	M26	X	0	0	0	%100
16	M26	Z	0	0	0	%100

Member Distributed Loads (BLC 65 : Structure Wm (0 Deg)) (Continued)

	Member Label	Direction	Start Magnitude[lb/ft,...	End Magnitude[lb/ft,F...	Start Location[ft,%]	End Location[ft,%]
17	M31	X	0	0	0	%100
18	M31	Z	-.242	-.242	0	%100
19	M42A	X	0	0	0	%100
20	M42A	Z	-.588	-.588	0	%100
21	M44A	X	0	0	0	%100
22	M44A	Z	-.122	-.122	0	%100
23	M44	X	0	0	0	%100
24	M44	Z	0	0	0	%100
25	M46A	X	0	0	0	%100
26	M46A	Z	0	0	0	%100
27	M46B	X	0	0	0	%100
28	M46B	Z	-.493	-.493	0	%100
29	M34A	X	0	0	0	%100
30	M34A	Z	-.122	-.122	0	%100
31	M35	X	0	0	0	%100
32	M35	Z	-.122	-.122	0	%100
33	M36	X	0	0	0	%100
34	M36	Z	-.493	-.493	0	%100
35	M38	X	0	0	0	%100
36	M38	Z	-.242	-.242	0	%100
37	M42	X	0	0	0	%100
38	M42	Z	-.469	-.469	0	%100
39	M47	X	0	0	0	%100
40	M47	Z	-.147	-.147	0	%100
41	M48	X	0	0	0	%100
42	M48	Z	-.809	-.809	0	%100
43	M50	X	0	0	0	%100
44	M50	Z	-.489	-.489	0	%100
45	M51	X	0	0	0	%100
46	M51	Z	-.079	-.079	0	%100
47	M53	X	0	0	0	%100
48	M53	Z	-.079	-.079	0	%100
49	M56	X	0	0	0	%100
50	M56	Z	-.837	-.837	0	%100
51	M57	X	0	0	0	%100
52	M57	Z	-.837	-.837	0	%100
53	M59	X	0	0	0	%100
54	M59	Z	-.242	-.242	0	%100
55	M61	X	0	0	0	%100
56	M61	Z	-.147	-.147	0	%100
57	M62	X	0	0	0	%100
58	M62	Z	-.122	-.122	0	%100
59	M64	X	0	0	0	%100
60	M64	Z	-.079	-.079	0	%100
61	M66	X	0	0	0	%100
62	M66	Z	-.079	-.079	0	%100
63	M67	X	0	0	0	%100
64	M67	Z	-.123	-.123	0	%100
65	M68	X	0	0	0	%100
66	M68	Z	-.489	-.489	0	%100
67	M69	X	0	0	0	%100
68	M69	Z	-.122	-.122	0	%100

Member Distributed Loads (BLC 65 : Structure Wm (0 Deg)) (Continued)

	Member Label	Direction	Start Magnitude[lb/ft,...	End Magnitude[lb/ft,F...	Start Location[ft,%]	End Location[ft,%]
69	M70	X	0	0	0	%100
70	M70	Z	-.123	-.123	0	%100
71	M79	X	0	0	0	%100
72	M79	Z	-.967	-.967	0	%100
73	M83	X	0	0	0	%100
74	M83	Z	-.469	-.469	0	%100
75	M88	X	0	0	0	%100
76	M88	Z	-.147	-.147	0	%100
77	M89	X	0	0	0	%100
78	M89	Z	-.809	-.809	0	%100
79	M91	X	0	0	0	%100
80	M91	Z	-.122	-.122	0	%100
81	M92	X	0	0	0	%100
82	M92	Z	-.079	-.079	0	%100
83	M94	X	0	0	0	%100
84	M94	Z	-.079	-.079	0	%100
85	M97	X	0	0	0	%100
86	M97	Z	-.837	-.837	0	%100
87	M98	X	0	0	0	%100
88	M98	Z	-.837	-.837	0	%100
89	M100	X	0	0	0	%100
90	M100	Z	-.967	-.967	0	%100
91	M102	X	0	0	0	%100
92	M102	Z	-.147	-.147	0	%100
93	M103	X	0	0	0	%100
94	M103	Z	-.489	-.489	0	%100
95	M105	X	0	0	0	%100
96	M105	Z	-.079	-.079	0	%100
97	M107	X	0	0	0	%100
98	M107	Z	-.079	-.079	0	%100
99	M108	X	0	0	0	%100
100	M108	Z	-.123	-.123	0	%100
101	M109	X	0	0	0	%100
102	M109	Z	-.122	-.122	0	%100
103	M110	X	0	0	0	%100
104	M110	Z	-.489	-.489	0	%100
105	M111	X	0	0	0	%100
106	M111	Z	-.123	-.123	0	%100
107	M118	X	0	0	0	%100
108	M118	Z	-1.079	-1.079	0	%100
109	M120	X	0	0	0	%100
110	M120	Z	-.242	-.242	0	%100
111	M121A	X	0	0	0	%100
112	M121A	Z	-.27	-.27	0	%100
113	M126	X	0	0	0	%100
114	M126	Z	-.27	-.27	0	%100
115	M131	X	0	0	0	%100
116	M131	Z	-.135	-.135	0	%100
117	M134	X	0	0	0	%100
118	M134	Z	-.135	-.135	0	%100
119	M148	X	0	0	0	%100
120	M148	Z	-.641	-.641	0	%100

Member Distributed Loads (BLC 65 : Structure Wm (0 Deg)) (Continued)

	Member Label	Direction	Start Magnitude[lb/ft,...	End Magnitude[lb/ft,F...	Start Location[ft,%]	End Location[ft,%]
121	M152B	X	0	0	0	%100
122	M152B	Z	-.791	-.791	0	%100
123	M155	X	0	0	0	%100
124	M155	Z	-.129	-.129	0	%100
125	M154	X	0	0	0	%100
126	M154	Z	-.16	-.16	0	%100
127	M157A	X	0	0	0	%100
128	M157A	Z	-.16	-.16	0	%100
129	M160	X	0	0	0	%100
130	M160	Z	-1.909	-1.909	0	%100
131	M161	X	0	0	0	%100
132	M161	Z	-1.909	-1.909	0	%100
133	M162	X	0	0	0	%100
134	M162	Z	-.477	-.477	0	%100
135	M163	X	0	0	0	%100
136	M163	Z	-.477	-.477	0	%100
137	M164	X	0	0	0	%100
138	M164	Z	-.477	-.477	0	%100
139	M165	X	0	0	0	%100
140	M165	Z	-.477	-.477	0	%100
141	M166	X	0	0	0	%100
142	M166	Z	-.594	-.594	0	%100
143	M167	X	0	0	0	%100
144	M167	Z	-.148	-.148	0	%100
145	M168	X	0	0	0	%100
146	M168	Z	-.148	-.148	0	%100
147	M169	X	0	0	0	%100
148	M169	Z	-.641	-.641	0	%100
149	M170	X	0	0	0	%100
150	M170	Z	-.16	-.16	0	%100
151	M171	X	0	0	0	%100
152	M171	Z	-.16	-.16	0	%100
153	M174	X	0	0	0	%100
154	M174	Z	-.682	-.682	0	%100
155	M177	X	0	0	0	%100
156	M177	Z	-.682	-.682	0	%100
157	M180	X	0	0	0	%100
158	M180	Z	-.17	-.17	0	%100
159	M183	X	0	0	0	%100
160	M183	Z	-.17	-.17	0	%100
161	M186	X	0	0	0	%100
162	M186	Z	-.17	-.17	0	%100
163	M189	X	0	0	0	%100
164	M189	Z	-.17	-.17	0	%100
165	M504	X	0	0	0	%100
166	M504	Z	-.641	-.641	0	%100
167	M502	X	0	0	0	%100
168	M502	Z	-.641	-.641	0	%100
169	M501	X	0	0	0	%100
170	M501	Z	-.641	-.641	0	%100
171	M500	X	0	0	0	%100
172	M500	Z	-.641	-.641	0	%100

Member Distributed Loads (BLC 65 : Structure Wm (0 Deg)) (Continued)

	Member Label	Direction	Start Magnitude[lb/ft,...	End Magnitude[lb/ft,F...	Start Location[ft,%]	End Location[ft,%]
173	M506	X	0	0	0	%100
174	M506	Z	-.641	-.641	0	%100
175	M505	X	0	0	0	%100
176	M505	Z	-.641	-.641	0	%100
177	MP2A	X	0	0	0	%100
178	MP2A	Z	-.776	-.776	0	%100
179	MP3A	X	0	0	0	%100
180	MP3A	Z	-.641	-.641	0	%100
181	MP2C	X	0	0	0	%100
182	MP2C	Z	-.776	-.776	0	%100
183	MP2B	X	0	0	0	%100
184	MP2B	Z	-.776	-.776	0	%100
185	M223	X	0	0	0	%100
186	M223	Z	-.705	-.705	0	%100
187	M226A	X	0	0	0	%100
188	M226A	Z	-.705	-.705	0	%100
189	M228A	X	0	0	0	%100
190	M228A	Z	-.198	-.198	0	%100
191	M232A	X	0	0	0	%100
192	M232A	Z	-.705	-.705	0	%100
193	M235	X	0	0	0	%100
194	M235	Z	-.705	-.705	0	%100
195	M237	X	0	0	0	%100
196	M237	Z	-.198	-.198	0	%100
197	M244	X	0	0	0	%100
198	M244	Z	-1.212	-1.212	0	%100
199	M245	X	0	0	0	%100
200	M245	Z	-1.223	-1.223	0	%100
201	M246	X	0	0	0	%100
202	M246	Z	-1.223	-1.223	0	%100
203	M249	X	0	0	0	%100
204	M249	Z	-.776	-.776	0	%100
205	MP1A	X	0	0	0	%100
206	MP1A	Z	-.641	-.641	0	%100
207	M271	X	0	0	0	%100
208	M271	Z	-.221	-.221	0	%100
209	M271B	X	0	0	0	%100
210	M271B	Z	-.129	-.129	0	%100
211	M274A	X	0	0	0	%100
212	M274A	Z	-.966	-.966	0	%100
213	M277	X	0	0	0	%100
214	M277	Z	-1.802	-1.802	0	%100
215	M280	X	0	0	0	%100
216	M280	Z	-1.802	-1.802	0	%100
217	M283	X	0	0	0	%100
218	M283	Z	-.966	-.966	0	%100
219	M265	X	0	0	0	%100
220	M265	Z	-.194	-.194	0	%100
221	M266	X	0	0	0	%100
222	M266	Z	-.194	-.194	0	%100
223	MP4A	X	0	0	0	%100
224	MP4A	Z	-.641	-.641	0	%100

Member Distributed Loads (BLC 65 : Structure Wm (0 Deg)) (Continued)

	Member Label	Direction	Start Magnitude[lb/ft,...	End Magnitude[lb/ft,F...	Start Location[ft,%]	End Location[ft,%]
225	MP3C	X	0	0	0	%100
226	MP3C	Z	-.641	-.641	0	%100
227	MP3B	X	0	0	0	%100
228	MP3B	Z	-.641	-.641	0	%100
229	MP1C	X	0	0	0	%100
230	MP1C	Z	-.641	-.641	0	%100
231	MP4C	X	0	0	0	%100
232	MP4C	Z	-.641	-.641	0	%100
233	MP1B	X	0	0	0	%100
234	MP1B	Z	-.641	-.641	0	%100
235	MP4B	X	0	0	0	%100
236	MP4B	Z	-.641	-.641	0	%100
237	M287	X	0	0	0	%100
238	M287	Z	-.883	-.883	0	%100
239	M288	X	0	0	0	%100
240	M288	Z	-.221	-.221	0	%100

Member Distributed Loads (BLC 66 : Structure Wm (30 Deg))

	Member Label	Direction	Start Magnitude[lb/ft,...	End Magnitude[lb/ft,F...	Start Location[ft,%]	End Location[ft,%]
1	M1	X	.078	.078	0	%100
2	M1	Z	-.135	-.135	0	%100
3	M7	X	.221	.221	0	%100
4	M7	Z	-.382	-.382	0	%100
5	M8	X	1.214	1.214	0	%100
6	M8	Z	-2.103	-2.103	0	%100
7	M13	X	0	0	0	%100
8	M13	Z	0	0	0	%100
9	M14	X	.013	.013	0	%100
10	M14	Z	-.023	-.023	0	%100
11	M18	X	.013	.013	0	%100
12	M18	Z	-.023	-.023	0	%100
13	M25	X	.14	.14	0	%100
14	M25	Z	-.242	-.242	0	%100
15	M26	X	.14	.14	0	%100
16	M26	Z	-.242	-.242	0	%100
17	M31	X	.362	.362	0	%100
18	M31	Z	-.628	-.628	0	%100
19	M42A	X	.221	.221	0	%100
20	M42A	Z	-.382	-.382	0	%100
21	M44A	X	.183	.183	0	%100
22	M44A	Z	-.317	-.317	0	%100
23	M44	X	.013	.013	0	%100
24	M44	Z	-.023	-.023	0	%100
25	M46A	X	.013	.013	0	%100
26	M46A	Z	-.023	-.023	0	%100
27	M46B	X	.185	.185	0	%100
28	M46B	Z	-.32	-.32	0	%100
29	M34A	X	0	0	0	%100
30	M34A	Z	0	0	0	%100
31	M35	X	.183	.183	0	%100
32	M35	Z	-.317	-.317	0	%100

Member Distributed Loads (BLC 66 : Structure Wm (30 Deg)) (Continued)

	Member Label	Direction	Start Magnitude[lb/ft,...	End Magnitude[lb/ft,F...	Start Location[ft,%]	End Location[ft,%]
33	M36	X	.185	.185	0	%100
34	M36	Z	-.32	-.32	0	%100
35	M38	X	0	0	0	%100
36	M38	Z	0	0	0	%100
37	M42	X	.078	.078	0	%100
38	M42	Z	-.135	-.135	0	%100
39	M47	X	.221	.221	0	%100
40	M47	Z	-.382	-.382	0	%100
41	M48	X	1.214	1.214	0	%100
42	M48	Z	-2.103	-2.103	0	%100
43	M50	X	.183	.183	0	%100
44	M50	Z	-.317	-.317	0	%100
45	M51	X	.013	.013	0	%100
46	M51	Z	-.023	-.023	0	%100
47	M53	X	.013	.013	0	%100
48	M53	Z	-.023	-.023	0	%100
49	M56	X	.14	.14	0	%100
50	M56	Z	-.242	-.242	0	%100
51	M57	X	.14	.14	0	%100
52	M57	Z	-.242	-.242	0	%100
53	M59	X	0	0	0	%100
54	M59	Z	0	0	0	%100
55	M61	X	.221	.221	0	%100
56	M61	Z	-.382	-.382	0	%100
57	M62	X	0	0	0	%100
58	M62	Z	0	0	0	%100
59	M64	X	.013	.013	0	%100
60	M64	Z	-.023	-.023	0	%100
61	M66	X	.013	.013	0	%100
62	M66	Z	-.023	-.023	0	%100
63	M67	X	.185	.185	0	%100
64	M67	Z	-.32	-.32	0	%100
65	M68	X	.183	.183	0	%100
66	M68	Z	-.317	-.317	0	%100
67	M69	X	0	0	0	%100
68	M69	Z	0	0	0	%100
69	M70	X	.185	.185	0	%100
70	M70	Z	-.32	-.32	0	%100
71	M79	X	.362	.362	0	%100
72	M79	Z	-.628	-.628	0	%100
73	M83	X	.313	.313	0	%100
74	M83	Z	-.542	-.542	0	%100
75	M88	X	0	0	0	%100
76	M88	Z	0	0	0	%100
77	M89	X	0	0	0	%100
78	M89	Z	0	0	0	%100
79	M91	X	.183	.183	0	%100
80	M91	Z	-.317	-.317	0	%100
81	M92	X	.053	.053	0	%100
82	M92	Z	-.091	-.091	0	%100
83	M94	X	.053	.053	0	%100
84	M94	Z	-.091	-.091	0	%100

Member Distributed Loads (BLC 66 : Structure Wm (30 Deg)) (Continued)

	Member Label	Direction	Start Magnitude[lb/ft,...	End Magnitude[lb/ft,F...	Start Location[ft,%]	End Location[ft,%]
85	M97	X	.558	.558	0	%100
86	M97	Z	-.967	-.967	0	%100
87	M98	X	.558	.558	0	%100
88	M98	Z	-.967	-.967	0	%100
89	M100	X	.362	.362	0	%100
90	M100	Z	-.628	-.628	0	%100
91	M102	X	0	0	0	%100
92	M102	Z	0	0	0	%100
93	M103	X	.183	.183	0	%100
94	M103	Z	-.317	-.317	0	%100
95	M105	X	.053	.053	0	%100
96	M105	Z	-.091	-.091	0	%100
97	M107	X	.053	.053	0	%100
98	M107	Z	-.091	-.091	0	%100
99	M108	X	0	0	0	%100
100	M108	Z	0	0	0	%100
101	M109	X	.183	.183	0	%100
102	M109	Z	-.317	-.317	0	%100
103	M110	X	.183	.183	0	%100
104	M110	Z	-.317	-.317	0	%100
105	M111	X	0	0	0	%100
106	M111	Z	0	0	0	%100
107	M118	X	.405	.405	0	%100
108	M118	Z	-.701	-.701	0	%100
109	M120	X	.362	.362	0	%100
110	M120	Z	-.628	-.628	0	%100
111	M121A	X	.405	.405	0	%100
112	M121A	Z	-.701	-.701	0	%100
113	M126	X	0	0	0	%100
114	M126	Z	0	0	0	%100
115	M131	X	.493	.493	0	%100
116	M131	Z	-.853	-.853	0	%100
117	M134	X	.493	.493	0	%100
118	M134	Z	-.853	-.853	0	%100
119	M148	X	.24	.24	0	%100
120	M148	Z	-.416	-.416	0	%100
121	M152B	X	.296	.296	0	%100
122	M152B	Z	-.513	-.513	0	%100
123	M155	X	.483	.483	0	%100
124	M155	Z	-.836	-.836	0	%100
125	M154	X	.24	.24	0	%100
126	M154	Z	-.416	-.416	0	%100
127	M157A	X	0	0	0	%100
128	M157A	Z	0	0	0	%100
129	M160	X	.716	.716	0	%100
130	M160	Z	-1.24	-1.24	0	%100
131	M161	X	.716	.716	0	%100
132	M161	Z	-1.24	-1.24	0	%100
133	M162	X	.716	.716	0	%100
134	M162	Z	-1.24	-1.24	0	%100
135	M163	X	.716	.716	0	%100
136	M163	Z	-1.24	-1.24	0	%100

Member Distributed Loads (BLC 66 : Structure Wm (30 Deg)) (Continued)

	Member Label	Direction	Start Magnitude[lb/ft,...	End Magnitude[lb/ft,F...	Start Location[ft,%]	End Location[ft,%]
137	M164	X	0	0	0	%100
138	M164	Z	0	0	0	%100
139	M165	X	0	0	0	%100
140	M165	Z	0	0	0	%100
141	M166	X	.223	.223	0	%100
142	M166	Z	-.386	-.386	0	%100
143	M167	X	.223	.223	0	%100
144	M167	Z	-.386	-.386	0	%100
145	M168	X	0	0	0	%100
146	M168	Z	0	0	0	%100
147	M169	X	.24	.24	0	%100
148	M169	Z	-.416	-.416	0	%100
149	M170	X	.24	.24	0	%100
150	M170	Z	-.416	-.416	0	%100
151	M171	X	0	0	0	%100
152	M171	Z	0	0	0	%100
153	M174	X	.256	.256	0	%100
154	M174	Z	-.443	-.443	0	%100
155	M177	X	.256	.256	0	%100
156	M177	Z	-.443	-.443	0	%100
157	M180	X	.256	.256	0	%100
158	M180	Z	-.443	-.443	0	%100
159	M183	X	.256	.256	0	%100
160	M183	Z	-.443	-.443	0	%100
161	M186	X	0	0	0	%100
162	M186	Z	0	0	0	%100
163	M189	X	0	0	0	%100
164	M189	Z	0	0	0	%100
165	M504	X	.32	.32	0	%100
166	M504	Z	-.555	-.555	0	%100
167	M502	X	.32	.32	0	%100
168	M502	Z	-.555	-.555	0	%100
169	M501	X	.32	.32	0	%100
170	M501	Z	-.555	-.555	0	%100
171	M500	X	.32	.32	0	%100
172	M500	Z	-.555	-.555	0	%100
173	M506	X	.32	.32	0	%100
174	M506	Z	-.555	-.555	0	%100
175	M505	X	.32	.32	0	%100
176	M505	Z	-.555	-.555	0	%100
177	MP2A	X	.388	.388	0	%100
178	MP2A	Z	-.672	-.672	0	%100
179	MP3A	X	.32	.32	0	%100
180	MP3A	Z	-.555	-.555	0	%100
181	MP2C	X	.388	.388	0	%100
182	MP2C	Z	-.672	-.672	0	%100
183	MP2B	X	.388	.388	0	%100
184	MP2B	Z	-.672	-.672	0	%100
185	M223	X	.837	.837	0	%100
186	M223	Z	-1.45	-1.45	0	%100
187	M226A	X	.837	.837	0	%100
188	M226A	Z	-1.45	-1.45	0	%100

Member Distributed Loads (BLC 66 : Structure Wm (30 Deg)) (Continued)

	Member Label	Direction	Start Magnitude[lb/ft,...	End Magnitude[lb/ft,F...	Start Location[ft,%]	End Location[ft,%]
189	M228A	X	.296	.296	0	%100
190	M228A	Z	-.513	-.513	0	%100
191	M232A	X	.111	.111	0	%100
192	M232A	Z	-.191	-.191	0	%100
193	M235	X	.111	.111	0	%100
194	M235	Z	-.191	-.191	0	%100
195	M237	X	0	0	0	%100
196	M237	Z	0	0	0	%100
197	M244	X	.608	.608	0	%100
198	M244	Z	-1.053	-1.053	0	%100
199	M245	X	.608	.608	0	%100
200	M245	Z	-1.053	-1.053	0	%100
201	M246	X	.614	.614	0	%100
202	M246	Z	-1.063	-1.063	0	%100
203	M249	X	.291	.291	0	%100
204	M249	Z	-.504	-.504	0	%100
205	MP1A	X	.32	.32	0	%100
206	MP1A	Z	-.555	-.555	0	%100
207	M271	X	0	0	0	%100
208	M271	Z	0	0	0	%100
209	M271B	X	.065	.065	0	%100
210	M271B	Z	-.112	-.112	0	%100
211	M274A	X	.065	.065	0	%100
212	M274A	Z	-.112	-.112	0	%100
213	M277	X	.483	.483	0	%100
214	M277	Z	-.836	-.836	0	%100
215	M280	X	.901	.901	0	%100
216	M280	Z	-1.56	-1.56	0	%100
217	M283	X	.901	.901	0	%100
218	M283	Z	-1.56	-1.56	0	%100
219	M265	X	.291	.291	0	%100
220	M265	Z	-.504	-.504	0	%100
221	M266	X	0	0	0	%100
222	M266	Z	0	0	0	%100
223	MP4A	X	.32	.32	0	%100
224	MP4A	Z	-.555	-.555	0	%100
225	MP3C	X	.32	.32	0	%100
226	MP3C	Z	-.555	-.555	0	%100
227	MP3B	X	.32	.32	0	%100
228	MP3B	Z	-.555	-.555	0	%100
229	MP1C	X	.32	.32	0	%100
230	MP1C	Z	-.555	-.555	0	%100
231	MP4C	X	.32	.32	0	%100
232	MP4C	Z	-.555	-.555	0	%100
233	MP1B	X	.32	.32	0	%100
234	MP1B	Z	-.555	-.555	0	%100
235	MP4B	X	.32	.32	0	%100
236	MP4B	Z	-.555	-.555	0	%100
237	M287	X	.331	.331	0	%100
238	M287	Z	-.574	-.574	0	%100
239	M288	X	.331	.331	0	%100
240	M288	Z	-.574	-.574	0	%100

Member Distributed Loads (BLC 67 : Structure Wm (60 Deg))

	Member Label	Direction	Start Magnitude[lb/ft,...	End Magnitude[lb/ft,F...	Start Location[ft,%]	End Location[ft,%]
1	M1	X	.406	.406	0	%100
2	M1	Z	-.235	-.235	0	%100
3	M7	X	.127	.127	0	%100
4	M7	Z	-.074	-.074	0	%100
5	M8	X	.701	.701	0	%100
6	M8	Z	-.405	-.405	0	%100
7	M13	X	.106	.106	0	%100
8	M13	Z	-.061	-.061	0	%100
9	M14	X	.069	.069	0	%100
10	M14	Z	-.04	-.04	0	%100
11	M18	X	.069	.069	0	%100
12	M18	Z	-.04	-.04	0	%100
13	M25	X	.725	.725	0	%100
14	M25	Z	-.419	-.419	0	%100
15	M26	X	.725	.725	0	%100
16	M26	Z	-.419	-.419	0	%100
17	M31	X	.837	.837	0	%100
18	M31	Z	-.483	-.483	0	%100
19	M42A	X	.127	.127	0	%100
20	M42A	Z	-.074	-.074	0	%100
21	M44A	X	.423	.423	0	%100
22	M44A	Z	-.244	-.244	0	%100
23	M44	X	.069	.069	0	%100
24	M44	Z	-.04	-.04	0	%100
25	M46A	X	.069	.069	0	%100
26	M46A	Z	-.04	-.04	0	%100
27	M46B	X	.107	.107	0	%100
28	M46B	Z	-.062	-.062	0	%100
29	M34A	X	.106	.106	0	%100
30	M34A	Z	-.061	-.061	0	%100
31	M35	X	.423	.423	0	%100
32	M35	Z	-.244	-.244	0	%100
33	M36	X	.107	.107	0	%100
34	M36	Z	-.062	-.062	0	%100
35	M38	X	.209	.209	0	%100
36	M38	Z	-.121	-.121	0	%100
37	M42	X	0	0	0	%100
38	M42	Z	0	0	0	%100
39	M47	X	.509	.509	0	%100
40	M47	Z	-.294	-.294	0	%100
41	M48	X	2.803	2.803	0	%100
42	M48	Z	-1.619	-1.619	0	%100
43	M50	X	.106	.106	0	%100
44	M50	Z	-.061	-.061	0	%100
45	M51	X	0	0	0	%100
46	M51	Z	0	0	0	%100
47	M53	X	0	0	0	%100
48	M53	Z	0	0	0	%100
49	M56	X	0	0	0	%100
50	M56	Z	0	0	0	%100
51	M57	X	0	0	0	%100
52	M57	Z	0	0	0	%100

Member Distributed Loads (BLC 67 : Structure Wm (60 Deg)) (Continued)

	Member Label	Direction	Start Magnitude[lb/ft,...	End Magnitude[lb/ft,F...	Start Location[ft,%]	End Location[ft,%]
53	M59	X	.209	.209	0	%100
54	M59	Z	-.121	-.121	0	%100
55	M61	X	.509	.509	0	%100
56	M61	Z	-.294	-.294	0	%100
57	M62	X	.106	.106	0	%100
58	M62	Z	-.061	-.061	0	%100
59	M64	X	0	0	0	%100
60	M64	Z	0	0	0	%100
61	M66	X	0	0	0	%100
62	M66	Z	0	0	0	%100
63	M67	X	.427	.427	0	%100
64	M67	Z	-.247	-.247	0	%100
65	M68	X	.106	.106	0	%100
66	M68	Z	-.061	-.061	0	%100
67	M69	X	.106	.106	0	%100
68	M69	Z	-.061	-.061	0	%100
69	M70	X	.427	.427	0	%100
70	M70	Z	-.247	-.247	0	%100
71	M79	X	.209	.209	0	%100
72	M79	Z	-.121	-.121	0	%100
73	M83	X	.406	.406	0	%100
74	M83	Z	-.235	-.235	0	%100
75	M88	X	.127	.127	0	%100
76	M88	Z	-.074	-.074	0	%100
77	M89	X	.701	.701	0	%100
78	M89	Z	-.405	-.405	0	%100
79	M91	X	.423	.423	0	%100
80	M91	Z	-.244	-.244	0	%100
81	M92	X	.069	.069	0	%100
82	M92	Z	-.04	-.04	0	%100
83	M94	X	.069	.069	0	%100
84	M94	Z	-.04	-.04	0	%100
85	M97	X	.725	.725	0	%100
86	M97	Z	-.419	-.419	0	%100
87	M98	X	.725	.725	0	%100
88	M98	Z	-.419	-.419	0	%100
89	M100	X	.209	.209	0	%100
90	M100	Z	-.121	-.121	0	%100
91	M102	X	.127	.127	0	%100
92	M102	Z	-.074	-.074	0	%100
93	M103	X	.106	.106	0	%100
94	M103	Z	-.061	-.061	0	%100
95	M105	X	.069	.069	0	%100
96	M105	Z	-.04	-.04	0	%100
97	M107	X	.069	.069	0	%100
98	M107	Z	-.04	-.04	0	%100
99	M108	X	.107	.107	0	%100
100	M108	Z	-.062	-.062	0	%100
101	M109	X	.423	.423	0	%100
102	M109	Z	-.244	-.244	0	%100
103	M110	X	.106	.106	0	%100
104	M110	Z	-.061	-.061	0	%100

Member Distributed Loads (BLC 67 : Structure Wm (60 Deg)) (Continued)

	Member Label	Direction	Start Magnitude[lb/ft,...	End Magnitude[lb/ft,F...	Start Location[ft,%]	End Location[ft,%]
105	M111	X	.107	.107	0	%100
106	M111	Z	-.062	-.062	0	%100
107	M118	X	.234	.234	0	%100
108	M118	Z	-.135	-.135	0	%100
109	M120	X	.837	.837	0	%100
110	M120	Z	-.483	-.483	0	%100
111	M121A	X	.934	.934	0	%100
112	M121A	Z	-.54	-.54	0	%100
113	M126	X	.234	.234	0	%100
114	M126	Z	-.135	-.135	0	%100
115	M131	X	2.326	2.326	0	%100
116	M131	Z	-1.343	-1.343	0	%100
117	M134	X	2.326	2.326	0	%100
118	M134	Z	-1.343	-1.343	0	%100
119	M148	X	.139	.139	0	%100
120	M148	Z	-.08	-.08	0	%100
121	M152B	X	.171	.171	0	%100
122	M152B	Z	-.099	-.099	0	%100
123	M155	X	1.56	1.56	0	%100
124	M155	Z	-.901	-.901	0	%100
125	M154	X	.555	.555	0	%100
126	M154	Z	-.32	-.32	0	%100
127	M157A	X	.139	.139	0	%100
128	M157A	Z	-.08	-.08	0	%100
129	M160	X	.413	.413	0	%100
130	M160	Z	-.239	-.239	0	%100
131	M161	X	.413	.413	0	%100
132	M161	Z	-.239	-.239	0	%100
133	M162	X	1.653	1.653	0	%100
134	M162	Z	-.955	-.955	0	%100
135	M163	X	1.653	1.653	0	%100
136	M163	Z	-.955	-.955	0	%100
137	M164	X	.413	.413	0	%100
138	M164	Z	-.239	-.239	0	%100
139	M165	X	.413	.413	0	%100
140	M165	Z	-.239	-.239	0	%100
141	M166	X	.129	.129	0	%100
142	M166	Z	-.074	-.074	0	%100
143	M167	X	.514	.514	0	%100
144	M167	Z	-.297	-.297	0	%100
145	M168	X	.129	.129	0	%100
146	M168	Z	-.074	-.074	0	%100
147	M169	X	.139	.139	0	%100
148	M169	Z	-.08	-.08	0	%100
149	M170	X	.555	.555	0	%100
150	M170	Z	-.32	-.32	0	%100
151	M171	X	.139	.139	0	%100
152	M171	Z	-.08	-.08	0	%100
153	M174	X	.148	.148	0	%100
154	M174	Z	-.085	-.085	0	%100
155	M177	X	.148	.148	0	%100
156	M177	Z	-.085	-.085	0	%100

Member Distributed Loads (BLC 67 : Structure Wm (60 Deg)) (Continued)

	Member Label	Direction	Start Magnitude[lb/ft,...	End Magnitude[lb/ft,F...	Start Location[ft,%]	End Location[ft,%]
157	M180	X	.591	.591	0	%100
158	M180	Z	-.341	-.341	0	%100
159	M183	X	.591	.591	0	%100
160	M183	Z	-.341	-.341	0	%100
161	M186	X	.148	.148	0	%100
162	M186	Z	-.085	-.085	0	%100
163	M189	X	.148	.148	0	%100
164	M189	Z	-.085	-.085	0	%100
165	M504	X	.555	.555	0	%100
166	M504	Z	-.32	-.32	0	%100
167	M502	X	.555	.555	0	%100
168	M502	Z	-.32	-.32	0	%100
169	M501	X	.555	.555	0	%100
170	M501	Z	-.32	-.32	0	%100
171	M500	X	.555	.555	0	%100
172	M500	Z	-.32	-.32	0	%100
173	M506	X	.555	.555	0	%100
174	M506	Z	-.32	-.32	0	%100
175	M505	X	.555	.555	0	%100
176	M505	Z	-.32	-.32	0	%100
177	MP2A	X	.672	.672	0	%100
178	MP2A	Z	-.388	-.388	0	%100
179	MP3A	X	.555	.555	0	%100
180	MP3A	Z	-.32	-.32	0	%100
181	MP2C	X	.672	.672	0	%100
182	MP2C	Z	-.388	-.388	0	%100
183	MP2B	X	.672	.672	0	%100
184	MP2B	Z	-.388	-.388	0	%100
185	M223	X	1.869	1.869	0	%100
186	M223	Z	-1.079	-1.079	0	%100
187	M226A	X	1.869	1.869	0	%100
188	M226A	Z	-1.079	-1.079	0	%100
189	M228A	X	.685	.685	0	%100
190	M228A	Z	-.395	-.395	0	%100
191	M232A	X	.611	.611	0	%100
192	M232A	Z	-.353	-.353	0	%100
193	M235	X	.611	.611	0	%100
194	M235	Z	-.353	-.353	0	%100
195	M237	X	.171	.171	0	%100
196	M237	Z	-.099	-.099	0	%100
197	M244	X	1.059	1.059	0	%100
198	M244	Z	-.612	-.612	0	%100
199	M245	X	1.049	1.049	0	%100
200	M245	Z	-.606	-.606	0	%100
201	M246	X	1.059	1.059	0	%100
202	M246	Z	-.612	-.612	0	%100
203	M249	X	.168	.168	0	%100
204	M249	Z	-.097	-.097	0	%100
205	MP1A	X	.555	.555	0	%100
206	MP1A	Z	-.32	-.32	0	%100
207	M271	X	.191	.191	0	%100
208	M271	Z	-.11	-.11	0	%100

Member Distributed Loads (BLC 67 : Structure Wm (60 Deg)) (Continued)

	Member Label	Direction	Start Magnitude[lb/ft,...	End Magnitude[lb/ft,F...	Start Location[ft,%]	End Location[ft,%]
209	M271B	X	.836	.836	0	%100
210	M271B	Z	-.483	-.483	0	%100
211	M274A	X	.112	.112	0	%100
212	M274A	Z	-.065	-.065	0	%100
213	M277	X	.112	.112	0	%100
214	M277	Z	-.065	-.065	0	%100
215	M280	X	.836	.836	0	%100
216	M280	Z	-.483	-.483	0	%100
217	M283	X	1.56	1.56	0	%100
218	M283	Z	-.901	-.901	0	%100
219	M265	X	.672	.672	0	%100
220	M265	Z	-.388	-.388	0	%100
221	M266	X	.168	.168	0	%100
222	M266	Z	-.097	-.097	0	%100
223	MP4A	X	.555	.555	0	%100
224	MP4A	Z	-.32	-.32	0	%100
225	MP3C	X	.555	.555	0	%100
226	MP3C	Z	-.32	-.32	0	%100
227	MP3B	X	.555	.555	0	%100
228	MP3B	Z	-.32	-.32	0	%100
229	MP1C	X	.555	.555	0	%100
230	MP1C	Z	-.32	-.32	0	%100
231	MP4C	X	.555	.555	0	%100
232	MP4C	Z	-.32	-.32	0	%100
233	MP1B	X	.555	.555	0	%100
234	MP1B	Z	-.32	-.32	0	%100
235	MP4B	X	.555	.555	0	%100
236	MP4B	Z	-.32	-.32	0	%100
237	M287	X	.191	.191	0	%100
238	M287	Z	-.11	-.11	0	%100
239	M288	X	.765	.765	0	%100
240	M288	Z	-.442	-.442	0	%100

Member Distributed Loads (BLC 68 : Structure Wm (90 Deg))

	Member Label	Direction	Start Magnitude[lb/ft,...	End Magnitude[lb/ft,F...	Start Location[ft,%]	End Location[ft,%]
1	M1	X	.625	.625	0	%100
2	M1	Z	0	0	0	%100
3	M7	X	0	0	0	%100
4	M7	Z	0	0	0	%100
5	M8	X	0	0	0	%100
6	M8	Z	0	0	0	%100
7	M13	X	.366	.366	0	%100
8	M13	Z	0	0	0	%100
9	M14	X	.106	.106	0	%100
10	M14	Z	0	0	0	%100
11	M18	X	.106	.106	0	%100
12	M18	Z	0	0	0	%100
13	M25	X	1.116	1.116	0	%100
14	M25	Z	0	0	0	%100
15	M26	X	1.116	1.116	0	%100
16	M26	Z	0	0	0	%100

Member Distributed Loads (BLC 68 : Structure Wm (90 Deg)) (Continued)

	Member Label	Direction	Start Magnitude[lb/ft,...	End Magnitude[lb/ft,F...	Start Location[ft,%]	End Location[ft,%]
17	M31	X	.725	.725	0	%100
18	M31	Z	0	0	0	%100
19	M42A	X	0	0	0	%100
20	M42A	Z	0	0	0	%100
21	M44A	X	.366	.366	0	%100
22	M44A	Z	0	0	0	%100
23	M44	X	.106	.106	0	%100
24	M44	Z	0	0	0	%100
25	M46A	X	.106	.106	0	%100
26	M46A	Z	0	0	0	%100
27	M46B	X	0	0	0	%100
28	M46B	Z	0	0	0	%100
29	M34A	X	.366	.366	0	%100
30	M34A	Z	0	0	0	%100
31	M35	X	.366	.366	0	%100
32	M35	Z	0	0	0	%100
33	M36	X	0	0	0	%100
34	M36	Z	0	0	0	%100
35	M38	X	.725	.725	0	%100
36	M38	Z	0	0	0	%100
37	M42	X	.156	.156	0	%100
38	M42	Z	0	0	0	%100
39	M47	X	.441	.441	0	%100
40	M47	Z	0	0	0	%100
41	M48	X	2.428	2.428	0	%100
42	M48	Z	0	0	0	%100
43	M50	X	0	0	0	%100
44	M50	Z	0	0	0	%100
45	M51	X	.026	.026	0	%100
46	M51	Z	0	0	0	%100
47	M53	X	.026	.026	0	%100
48	M53	Z	0	0	0	%100
49	M56	X	.279	.279	0	%100
50	M56	Z	0	0	0	%100
51	M57	X	.279	.279	0	%100
52	M57	Z	0	0	0	%100
53	M59	X	.725	.725	0	%100
54	M59	Z	0	0	0	%100
55	M61	X	.441	.441	0	%100
56	M61	Z	0	0	0	%100
57	M62	X	.366	.366	0	%100
58	M62	Z	0	0	0	%100
59	M64	X	.026	.026	0	%100
60	M64	Z	0	0	0	%100
61	M66	X	.026	.026	0	%100
62	M66	Z	0	0	0	%100
63	M67	X	.37	.37	0	%100
64	M67	Z	0	0	0	%100
65	M68	X	0	0	0	%100
66	M68	Z	0	0	0	%100
67	M69	X	.366	.366	0	%100
68	M69	Z	0	0	0	%100

Member Distributed Loads (BLC 68 : Structure Wm (90 Deg)) (Continued)

	Member Label	Direction	Start Magnitude[lb/ft,...	End Magnitude[lb/ft,F...	Start Location[ft,%]	End Location[ft,%]
69	M70	X	.37	.37	0	%100
70	M70	Z	0	0	0	%100
71	M79	X	0	0	0	%100
72	M79	Z	0	0	0	%100
73	M83	X	.156	.156	0	%100
74	M83	Z	0	0	0	%100
75	M88	X	.441	.441	0	%100
76	M88	Z	0	0	0	%100
77	M89	X	2.428	2.428	0	%100
78	M89	Z	0	0	0	%100
79	M91	X	.366	.366	0	%100
80	M91	Z	0	0	0	%100
81	M92	X	.026	.026	0	%100
82	M92	Z	0	0	0	%100
83	M94	X	.026	.026	0	%100
84	M94	Z	0	0	0	%100
85	M97	X	.279	.279	0	%100
86	M97	Z	0	0	0	%100
87	M98	X	.279	.279	0	%100
88	M98	Z	0	0	0	%100
89	M100	X	0	0	0	%100
90	M100	Z	0	0	0	%100
91	M102	X	.441	.441	0	%100
92	M102	Z	0	0	0	%100
93	M103	X	0	0	0	%100
94	M103	Z	0	0	0	%100
95	M105	X	.026	.026	0	%100
96	M105	Z	0	0	0	%100
97	M107	X	.026	.026	0	%100
98	M107	Z	0	0	0	%100
99	M108	X	.37	.37	0	%100
100	M108	Z	0	0	0	%100
101	M109	X	.366	.366	0	%100
102	M109	Z	0	0	0	%100
103	M110	X	0	0	0	%100
104	M110	Z	0	0	0	%100
105	M111	X	.37	.37	0	%100
106	M111	Z	0	0	0	%100
107	M118	X	0	0	0	%100
108	M118	Z	0	0	0	%100
109	M120	X	.725	.725	0	%100
110	M120	Z	0	0	0	%100
111	M121A	X	.809	.809	0	%100
112	M121A	Z	0	0	0	%100
113	M126	X	.809	.809	0	%100
114	M126	Z	0	0	0	%100
115	M131	X	3.537	3.537	0	%100
116	M131	Z	0	0	0	%100
117	M134	X	3.537	3.537	0	%100
118	M134	Z	0	0	0	%100
119	M148	X	0	0	0	%100
120	M148	Z	0	0	0	%100

Member Distributed Loads (BLC 68 : Structure Wm (90 Deg)) (Continued)

	Member Label	Direction	Start Magnitude[lb/ft,...	End Magnitude[lb/ft,F...	Start Location[ft,%]	End Location[ft,%]
121	M152B	X	0	0	0	%100
122	M152B	Z	0	0	0	%100
123	M155	X	1.802	1.802	0	%100
124	M155	Z	0	0	0	%100
125	M154	X	.481	.481	0	%100
126	M154	Z	0	0	0	%100
127	M157A	X	.481	.481	0	%100
128	M157A	Z	0	0	0	%100
129	M160	X	0	0	0	%100
130	M160	Z	0	0	0	%100
131	M161	X	0	0	0	%100
132	M161	Z	0	0	0	%100
133	M162	X	1.432	1.432	0	%100
134	M162	Z	0	0	0	%100
135	M163	X	1.432	1.432	0	%100
136	M163	Z	0	0	0	%100
137	M164	X	1.432	1.432	0	%100
138	M164	Z	0	0	0	%100
139	M165	X	1.432	1.432	0	%100
140	M165	Z	0	0	0	%100
141	M166	X	0	0	0	%100
142	M166	Z	0	0	0	%100
143	M167	X	.445	.445	0	%100
144	M167	Z	0	0	0	%100
145	M168	X	.445	.445	0	%100
146	M168	Z	0	0	0	%100
147	M169	X	0	0	0	%100
148	M169	Z	0	0	0	%100
149	M170	X	.481	.481	0	%100
150	M170	Z	0	0	0	%100
151	M171	X	.481	.481	0	%100
152	M171	Z	0	0	0	%100
153	M174	X	0	0	0	%100
154	M174	Z	0	0	0	%100
155	M177	X	0	0	0	%100
156	M177	Z	0	0	0	%100
157	M180	X	.511	.511	0	%100
158	M180	Z	0	0	0	%100
159	M183	X	.511	.511	0	%100
160	M183	Z	0	0	0	%100
161	M186	X	.511	.511	0	%100
162	M186	Z	0	0	0	%100
163	M189	X	.511	.511	0	%100
164	M189	Z	0	0	0	%100
165	M504	X	.641	.641	0	%100
166	M504	Z	0	0	0	%100
167	M502	X	.641	.641	0	%100
168	M502	Z	0	0	0	%100
169	M501	X	.641	.641	0	%100
170	M501	Z	0	0	0	%100
171	M500	X	.641	.641	0	%100
172	M500	Z	0	0	0	%100

Member Distributed Loads (BLC 68 : Structure Wm (90 Deg)) (Continued)

	Member Label	Direction	Start Magnitude[lb/ft,...	End Magnitude[lb/ft,F...	Start Location[ft,%]	End Location[ft,%]
173	M506	X	.641	.641	0	%100
174	M506	Z	0	0	0	%100
175	M505	X	.641	.641	0	%100
176	M505	Z	0	0	0	%100
177	MP2A	X	.776	.776	0	%100
178	MP2A	Z	0	0	0	%100
179	MP3A	X	.641	.641	0	%100
180	MP3A	Z	0	0	0	%100
181	MP2C	X	.776	.776	0	%100
182	MP2C	Z	0	0	0	%100
183	MP2B	X	.776	.776	0	%100
184	MP2B	Z	0	0	0	%100
185	M223	X	1.674	1.674	0	%100
186	M223	Z	0	0	0	%100
187	M226A	X	1.674	1.674	0	%100
188	M226A	Z	0	0	0	%100
189	M228A	X	.593	.593	0	%100
190	M228A	Z	0	0	0	%100
191	M232A	X	1.674	1.674	0	%100
192	M232A	Z	0	0	0	%100
193	M235	X	1.674	1.674	0	%100
194	M235	Z	0	0	0	%100
195	M237	X	.593	.593	0	%100
196	M237	Z	0	0	0	%100
197	M244	X	1.227	1.227	0	%100
198	M244	Z	0	0	0	%100
199	M245	X	1.215	1.215	0	%100
200	M245	Z	0	0	0	%100
201	M246	X	1.215	1.215	0	%100
202	M246	Z	0	0	0	%100
203	M249	X	0	0	0	%100
204	M249	Z	0	0	0	%100
205	MP1A	X	.641	.641	0	%100
206	MP1A	Z	0	0	0	%100
207	M271	X	.662	.662	0	%100
208	M271	Z	0	0	0	%100
209	M271B	X	1.802	1.802	0	%100
210	M271B	Z	0	0	0	%100
211	M274A	X	.966	.966	0	%100
212	M274A	Z	0	0	0	%100
213	M277	X	.129	.129	0	%100
214	M277	Z	0	0	0	%100
215	M280	X	.129	.129	0	%100
216	M280	Z	0	0	0	%100
217	M283	X	.966	.966	0	%100
218	M283	Z	0	0	0	%100
219	M265	X	.582	.582	0	%100
220	M265	Z	0	0	0	%100
221	M266	X	.582	.582	0	%100
222	M266	Z	0	0	0	%100
223	MP4A	X	.641	.641	0	%100
224	MP4A	Z	0	0	0	%100

Member Distributed Loads (BLC 68 : Structure Wm (90 Deg)) (Continued)

	Member Label	Direction	Start Magnitude[lb/ft,...	End Magnitude[lb/ft,F...	Start Location[ft,%]	End Location[ft,%]
225	MP3C	X	.641	.641	0	%100
226	MP3C	Z	0	0	0	%100
227	MP3B	X	.641	.641	0	%100
228	MP3B	Z	0	0	0	%100
229	MP1C	X	.641	.641	0	%100
230	MP1C	Z	0	0	0	%100
231	MP4C	X	.641	.641	0	%100
232	MP4C	Z	0	0	0	%100
233	MP1B	X	.641	.641	0	%100
234	MP1B	Z	0	0	0	%100
235	MP4B	X	.641	.641	0	%100
236	MP4B	Z	0	0	0	%100
237	M287	X	0	0	0	%100
238	M287	Z	0	0	0	%100
239	M288	X	.662	.662	0	%100
240	M288	Z	0	0	0	%100

Member Distributed Loads (BLC 69 : Structure Wm (120 Deg))

	Member Label	Direction	Start Magnitude[lb/ft,...	End Magnitude[lb/ft,F...	Start Location[ft,%]	End Location[ft,%]
1	M1	X	.406	.406	0	%100
2	M1	Z	.235	.235	0	%100
3	M7	X	.127	.127	0	%100
4	M7	Z	.074	.074	0	%100
5	M8	X	.701	.701	0	%100
6	M8	Z	.405	.405	0	%100
7	M13	X	.423	.423	0	%100
8	M13	Z	.244	.244	0	%100
9	M14	X	.069	.069	0	%100
10	M14	Z	.04	.04	0	%100
11	M18	X	.069	.069	0	%100
12	M18	Z	.04	.04	0	%100
13	M25	X	.725	.725	0	%100
14	M25	Z	.419	.419	0	%100
15	M26	X	.725	.725	0	%100
16	M26	Z	.419	.419	0	%100
17	M31	X	.209	.209	0	%100
18	M31	Z	.121	.121	0	%100
19	M42A	X	.127	.127	0	%100
20	M42A	Z	.074	.074	0	%100
21	M44A	X	.106	.106	0	%100
22	M44A	Z	.061	.061	0	%100
23	M44	X	.069	.069	0	%100
24	M44	Z	.04	.04	0	%100
25	M46A	X	.069	.069	0	%100
26	M46A	Z	.04	.04	0	%100
27	M46B	X	.107	.107	0	%100
28	M46B	Z	.062	.062	0	%100
29	M34A	X	.423	.423	0	%100
30	M34A	Z	.244	.244	0	%100
31	M35	X	.106	.106	0	%100
32	M35	Z	.061	.061	0	%100

Member Distributed Loads (BLC 69 : Structure Wm (120 Deg)) (Continued)

	Member Label	Direction	Start Magnitude[lb/ft,...	End Magnitude[lb/ft,F...	Start Location[ft,%]	End Location[ft,%]
33	M36	X	.107	.107	0	%100
34	M36	Z	.062	.062	0	%100
35	M38	X	.837	.837	0	%100
36	M38	Z	.483	.483	0	%100
37	M42	X	.406	.406	0	%100
38	M42	Z	.235	.235	0	%100
39	M47	X	.127	.127	0	%100
40	M47	Z	.074	.074	0	%100
41	M48	X	.701	.701	0	%100
42	M48	Z	.405	.405	0	%100
43	M50	X	.106	.106	0	%100
44	M50	Z	.061	.061	0	%100
45	M51	X	.069	.069	0	%100
46	M51	Z	.04	.04	0	%100
47	M53	X	.069	.069	0	%100
48	M53	Z	.04	.04	0	%100
49	M56	X	.725	.725	0	%100
50	M56	Z	.419	.419	0	%100
51	M57	X	.725	.725	0	%100
52	M57	Z	.419	.419	0	%100
53	M59	X	.837	.837	0	%100
54	M59	Z	.483	.483	0	%100
55	M61	X	.127	.127	0	%100
56	M61	Z	.074	.074	0	%100
57	M62	X	.423	.423	0	%100
58	M62	Z	.244	.244	0	%100
59	M64	X	.069	.069	0	%100
60	M64	Z	.04	.04	0	%100
61	M66	X	.069	.069	0	%100
62	M66	Z	.04	.04	0	%100
63	M67	X	.107	.107	0	%100
64	M67	Z	.062	.062	0	%100
65	M68	X	.106	.106	0	%100
66	M68	Z	.061	.061	0	%100
67	M69	X	.423	.423	0	%100
68	M69	Z	.244	.244	0	%100
69	M70	X	.107	.107	0	%100
70	M70	Z	.062	.062	0	%100
71	M79	X	.209	.209	0	%100
72	M79	Z	.121	.121	0	%100
73	M83	X	0	0	0	%100
74	M83	Z	0	0	0	%100
75	M88	X	.509	.509	0	%100
76	M88	Z	.294	.294	0	%100
77	M89	X	2.803	2.803	0	%100
78	M89	Z	1.619	1.619	0	%100
79	M91	X	.106	.106	0	%100
80	M91	Z	.061	.061	0	%100
81	M92	X	0	0	0	%100
82	M92	Z	0	0	0	%100
83	M94	X	0	0	0	%100
84	M94	Z	0	0	0	%100

Member Distributed Loads (BLC 69 : Structure Wm (120 Deg)) (Continued)

	Member Label	Direction	Start Magnitude[lb/ft,...	End Magnitude[lb/ft,F...	Start Location[ft,%]	End Location[ft,%]
85	M97	X	0	0	0	%100
86	M97	Z	0	0	0	%100
87	M98	X	0	0	0	%100
88	M98	Z	0	0	0	%100
89	M100	X	.209	.209	0	%100
90	M100	Z	.121	.121	0	%100
91	M102	X	.509	.509	0	%100
92	M102	Z	.294	.294	0	%100
93	M103	X	.106	.106	0	%100
94	M103	Z	.061	.061	0	%100
95	M105	X	0	0	0	%100
96	M105	Z	0	0	0	%100
97	M107	X	0	0	0	%100
98	M107	Z	0	0	0	%100
99	M108	X	.427	.427	0	%100
100	M108	Z	.247	.247	0	%100
101	M109	X	.106	.106	0	%100
102	M109	Z	.061	.061	0	%100
103	M110	X	.106	.106	0	%100
104	M110	Z	.061	.061	0	%100
105	M111	X	.427	.427	0	%100
106	M111	Z	.247	.247	0	%100
107	M118	X	.234	.234	0	%100
108	M118	Z	.135	.135	0	%100
109	M120	X	.209	.209	0	%100
110	M120	Z	.121	.121	0	%100
111	M121A	X	.234	.234	0	%100
112	M121A	Z	.135	.135	0	%100
113	M126	X	.934	.934	0	%100
114	M126	Z	.54	.54	0	%100
115	M131	X	2.326	2.326	0	%100
116	M131	Z	1.343	1.343	0	%100
117	M134	X	2.326	2.326	0	%100
118	M134	Z	1.343	1.343	0	%100
119	M148	X	.139	.139	0	%100
120	M148	Z	.08	.08	0	%100
121	M152B	X	.171	.171	0	%100
122	M152B	Z	.099	.099	0	%100
123	M155	X	.836	.836	0	%100
124	M155	Z	.483	.483	0	%100
125	M154	X	.139	.139	0	%100
126	M154	Z	.08	.08	0	%100
127	M157A	X	.555	.555	0	%100
128	M157A	Z	.32	.32	0	%100
129	M160	X	.413	.413	0	%100
130	M160	Z	.239	.239	0	%100
131	M161	X	.413	.413	0	%100
132	M161	Z	.239	.239	0	%100
133	M162	X	.413	.413	0	%100
134	M162	Z	.239	.239	0	%100
135	M163	X	.413	.413	0	%100
136	M163	Z	.239	.239	0	%100

Member Distributed Loads (BLC 69 : Structure Wm (120 Deg)) (Continued)

	Member Label	Direction	Start Magnitude[lb/ft,...	End Magnitude[lb/ft,F...	Start Location[ft,%]	End Location[ft,%]
137	M164	X	1.653	1.653	0	%100
138	M164	Z	.955	.955	0	%100
139	M165	X	1.653	1.653	0	%100
140	M165	Z	.955	.955	0	%100
141	M166	X	.129	.129	0	%100
142	M166	Z	.074	.074	0	%100
143	M167	X	.129	.129	0	%100
144	M167	Z	.074	.074	0	%100
145	M168	X	.514	.514	0	%100
146	M168	Z	.297	.297	0	%100
147	M169	X	.139	.139	0	%100
148	M169	Z	.08	.08	0	%100
149	M170	X	.139	.139	0	%100
150	M170	Z	.08	.08	0	%100
151	M171	X	.555	.555	0	%100
152	M171	Z	.32	.32	0	%100
153	M174	X	.148	.148	0	%100
154	M174	Z	.085	.085	0	%100
155	M177	X	.148	.148	0	%100
156	M177	Z	.085	.085	0	%100
157	M180	X	.148	.148	0	%100
158	M180	Z	.085	.085	0	%100
159	M183	X	.148	.148	0	%100
160	M183	Z	.085	.085	0	%100
161	M186	X	.591	.591	0	%100
162	M186	Z	.341	.341	0	%100
163	M189	X	.591	.591	0	%100
164	M189	Z	.341	.341	0	%100
165	M504	X	.555	.555	0	%100
166	M504	Z	.32	.32	0	%100
167	M502	X	.555	.555	0	%100
168	M502	Z	.32	.32	0	%100
169	M501	X	.555	.555	0	%100
170	M501	Z	.32	.32	0	%100
171	M500	X	.555	.555	0	%100
172	M500	Z	.32	.32	0	%100
173	M506	X	.555	.555	0	%100
174	M506	Z	.32	.32	0	%100
175	M505	X	.555	.555	0	%100
176	M505	Z	.32	.32	0	%100
177	MP2A	X	.672	.672	0	%100
178	MP2A	Z	.388	.388	0	%100
179	MP3A	X	.555	.555	0	%100
180	MP3A	Z	.32	.32	0	%100
181	MP2C	X	.672	.672	0	%100
182	MP2C	Z	.388	.388	0	%100
183	MP2B	X	.672	.672	0	%100
184	MP2B	Z	.388	.388	0	%100
185	M223	X	.611	.611	0	%100
186	M223	Z	.353	.353	0	%100
187	M226A	X	.611	.611	0	%100
188	M226A	Z	.353	.353	0	%100

Member Distributed Loads (BLC 69 : Structure Wm (120 Deg)) (Continued)

	Member Label	Direction	Start Magnitude[lb/ft,...	End Magnitude[lb/ft,F...	Start Location[ft,%]	End Location[ft,%]
189	M228A	X	.171	.171	0	%100
190	M228A	Z	.099	.099	0	%100
191	M232A	X	1.869	1.869	0	%100
192	M232A	Z	1.079	1.079	0	%100
193	M235	X	1.869	1.869	0	%100
194	M235	Z	1.079	1.079	0	%100
195	M237	X	.685	.685	0	%100
196	M237	Z	.395	.395	0	%100
197	M244	X	1.059	1.059	0	%100
198	M244	Z	.612	.612	0	%100
199	M245	X	1.059	1.059	0	%100
200	M245	Z	.612	.612	0	%100
201	M246	X	1.049	1.049	0	%100
202	M246	Z	.606	.606	0	%100
203	M249	X	.168	.168	0	%100
204	M249	Z	.097	.097	0	%100
205	MP1A	X	.555	.555	0	%100
206	MP1A	Z	.32	.32	0	%100
207	M271	X	.765	.765	0	%100
208	M271	Z	.442	.442	0	%100
209	M271B	X	1.56	1.56	0	%100
210	M271B	Z	.901	.901	0	%100
211	M274A	X	1.56	1.56	0	%100
212	M274A	Z	.901	.901	0	%100
213	M277	X	.836	.836	0	%100
214	M277	Z	.483	.483	0	%100
215	M280	X	.112	.112	0	%100
216	M280	Z	.065	.065	0	%100
217	M283	X	.112	.112	0	%100
218	M283	Z	.065	.065	0	%100
219	M265	X	.168	.168	0	%100
220	M265	Z	.097	.097	0	%100
221	M266	X	.672	.672	0	%100
222	M266	Z	.388	.388	0	%100
223	MP4A	X	.555	.555	0	%100
224	MP4A	Z	.32	.32	0	%100
225	MP3C	X	.555	.555	0	%100
226	MP3C	Z	.32	.32	0	%100
227	MP3B	X	.555	.555	0	%100
228	MP3B	Z	.32	.32	0	%100
229	MP1C	X	.555	.555	0	%100
230	MP1C	Z	.32	.32	0	%100
231	MP4C	X	.555	.555	0	%100
232	MP4C	Z	.32	.32	0	%100
233	MP1B	X	.555	.555	0	%100
234	MP1B	Z	.32	.32	0	%100
235	MP4B	X	.555	.555	0	%100
236	MP4B	Z	.32	.32	0	%100
237	M287	X	.191	.191	0	%100
238	M287	Z	.11	.11	0	%100
239	M288	X	.191	.191	0	%100
240	M288	Z	.11	.11	0	%100

Member Distributed Loads (BLC 70 : Structure Wm (150 Deg))

	Member Label	Direction	Start Magnitude[lb/ft,...	End Magnitude[lb/ft,F...	Start Location[ft,%]	End Location[ft,%]
1	M1	X	.078	.078	0	%100
2	M1	Z	.135	.135	0	%100
3	M7	X	.221	.221	0	%100
4	M7	Z	.382	.382	0	%100
5	M8	X	1.214	1.214	0	%100
6	M8	Z	2.103	2.103	0	%100
7	M13	X	.183	.183	0	%100
8	M13	Z	.317	.317	0	%100
9	M14	X	.013	.013	0	%100
10	M14	Z	.023	.023	0	%100
11	M18	X	.013	.013	0	%100
12	M18	Z	.023	.023	0	%100
13	M25	X	.14	.14	0	%100
14	M25	Z	.242	.242	0	%100
15	M26	X	.14	.14	0	%100
16	M26	Z	.242	.242	0	%100
17	M31	X	0	0	0	%100
18	M31	Z	0	0	0	%100
19	M42A	X	.221	.221	0	%100
20	M42A	Z	.382	.382	0	%100
21	M44A	X	0	0	0	%100
22	M44A	Z	0	0	0	%100
23	M44	X	.013	.013	0	%100
24	M44	Z	.023	.023	0	%100
25	M46A	X	.013	.013	0	%100
26	M46A	Z	.023	.023	0	%100
27	M46B	X	.185	.185	0	%100
28	M46B	Z	.32	.32	0	%100
29	M34A	X	.183	.183	0	%100
30	M34A	Z	.317	.317	0	%100
31	M35	X	0	0	0	%100
32	M35	Z	0	0	0	%100
33	M36	X	.185	.185	0	%100
34	M36	Z	.32	.32	0	%100
35	M38	X	.362	.362	0	%100
36	M38	Z	.628	.628	0	%100
37	M42	X	.313	.313	0	%100
38	M42	Z	.542	.542	0	%100
39	M47	X	0	0	0	%100
40	M47	Z	0	0	0	%100
41	M48	X	0	0	0	%100
42	M48	Z	0	0	0	%100
43	M50	X	.183	.183	0	%100
44	M50	Z	.317	.317	0	%100
45	M51	X	.053	.053	0	%100
46	M51	Z	.091	.091	0	%100
47	M53	X	.053	.053	0	%100
48	M53	Z	.091	.091	0	%100
49	M56	X	.558	.558	0	%100
50	M56	Z	.967	.967	0	%100
51	M57	X	.558	.558	0	%100
52	M57	Z	.967	.967	0	%100

Member Distributed Loads (BLC 70 : Structure Wm (150 Deg)) (Continued)

	Member Label	Direction	Start Magnitude[lb/ft,...	End Magnitude[lb/ft,F...	Start Location[ft,%]	End Location[ft,%]
53	M59	X	.362	.362	0	%100
54	M59	Z	.628	.628	0	%100
55	M61	X	0	0	0	%100
56	M61	Z	0	0	0	%100
57	M62	X	.183	.183	0	%100
58	M62	Z	.317	.317	0	%100
59	M64	X	.053	.053	0	%100
60	M64	Z	.091	.091	0	%100
61	M66	X	.053	.053	0	%100
62	M66	Z	.091	.091	0	%100
63	M67	X	0	0	0	%100
64	M67	Z	0	0	0	%100
65	M68	X	.183	.183	0	%100
66	M68	Z	.317	.317	0	%100
67	M69	X	.183	.183	0	%100
68	M69	Z	.317	.317	0	%100
69	M70	X	0	0	0	%100
70	M70	Z	0	0	0	%100
71	M79	X	.362	.362	0	%100
72	M79	Z	.628	.628	0	%100
73	M83	X	.078	.078	0	%100
74	M83	Z	.135	.135	0	%100
75	M88	X	.221	.221	0	%100
76	M88	Z	.382	.382	0	%100
77	M89	X	1.214	1.214	0	%100
78	M89	Z	2.103	2.103	0	%100
79	M91	X	0	0	0	%100
80	M91	Z	0	0	0	%100
81	M92	X	.013	.013	0	%100
82	M92	Z	.023	.023	0	%100
83	M94	X	.013	.013	0	%100
84	M94	Z	.023	.023	0	%100
85	M97	X	.14	.14	0	%100
86	M97	Z	.242	.242	0	%100
87	M98	X	.14	.14	0	%100
88	M98	Z	.242	.242	0	%100
89	M100	X	.362	.362	0	%100
90	M100	Z	.628	.628	0	%100
91	M102	X	.221	.221	0	%100
92	M102	Z	.382	.382	0	%100
93	M103	X	.183	.183	0	%100
94	M103	Z	.317	.317	0	%100
95	M105	X	.013	.013	0	%100
96	M105	Z	.023	.023	0	%100
97	M107	X	.013	.013	0	%100
98	M107	Z	.023	.023	0	%100
99	M108	X	.185	.185	0	%100
100	M108	Z	.32	.32	0	%100
101	M109	X	0	0	0	%100
102	M109	Z	0	0	0	%100
103	M110	X	.183	.183	0	%100
104	M110	Z	.317	.317	0	%100

Member Distributed Loads (BLC 70 : Structure Wm (150 Deg)) (Continued)

	Member Label	Direction	Start Magnitude[lb/ft,...	End Magnitude[lb/ft,F...	Start Location[ft,%]	End Location[ft,%]
105	M111	X	.185	.185	0	%100
106	M111	Z	.32	.32	0	%100
107	M118	X	.405	.405	0	%100
108	M118	Z	.701	.701	0	%100
109	M120	X	0	0	0	%100
110	M120	Z	0	0	0	%100
111	M121A	X	0	0	0	%100
112	M121A	Z	0	0	0	%100
113	M126	X	.405	.405	0	%100
114	M126	Z	.701	.701	0	%100
115	M131	X	.493	.493	0	%100
116	M131	Z	.853	.853	0	%100
117	M134	X	.493	.493	0	%100
118	M134	Z	.853	.853	0	%100
119	M148	X	.24	.24	0	%100
120	M148	Z	.416	.416	0	%100
121	M152B	X	.296	.296	0	%100
122	M152B	Z	.513	.513	0	%100
123	M155	X	.065	.065	0	%100
124	M155	Z	.112	.112	0	%100
125	M154	X	0	0	0	%100
126	M154	Z	0	0	0	%100
127	M157A	X	.24	.24	0	%100
128	M157A	Z	.416	.416	0	%100
129	M160	X	.716	.716	0	%100
130	M160	Z	1.24	1.24	0	%100
131	M161	X	.716	.716	0	%100
132	M161	Z	1.24	1.24	0	%100
133	M162	X	0	0	0	%100
134	M162	Z	0	0	0	%100
135	M163	X	0	0	0	%100
136	M163	Z	0	0	0	%100
137	M164	X	.716	.716	0	%100
138	M164	Z	1.24	1.24	0	%100
139	M165	X	.716	.716	0	%100
140	M165	Z	1.24	1.24	0	%100
141	M166	X	.223	.223	0	%100
142	M166	Z	.386	.386	0	%100
143	M167	X	0	0	0	%100
144	M167	Z	0	0	0	%100
145	M168	X	.223	.223	0	%100
146	M168	Z	.386	.386	0	%100
147	M169	X	.24	.24	0	%100
148	M169	Z	.416	.416	0	%100
149	M170	X	0	0	0	%100
150	M170	Z	0	0	0	%100
151	M171	X	.24	.24	0	%100
152	M171	Z	.416	.416	0	%100
153	M174	X	.256	.256	0	%100
154	M174	Z	.443	.443	0	%100
155	M177	X	.256	.256	0	%100
156	M177	Z	.443	.443	0	%100

Member Distributed Loads (BLC 70 : Structure Wm (150 Deg)) (Continued)

	Member Label	Direction	Start Magnitude[lb/ft,...	End Magnitude[lb/ft,F...	Start Location[ft,%]	End Location[ft,%]
157	M180	X	0	0	0	%100
158	M180	Z	0	0	0	%100
159	M183	X	0	0	0	%100
160	M183	Z	0	0	0	%100
161	M186	X	.256	.256	0	%100
162	M186	Z	.443	.443	0	%100
163	M189	X	.256	.256	0	%100
164	M189	Z	.443	.443	0	%100
165	M504	X	.32	.32	0	%100
166	M504	Z	.555	.555	0	%100
167	M502	X	.32	.32	0	%100
168	M502	Z	.555	.555	0	%100
169	M501	X	.32	.32	0	%100
170	M501	Z	.555	.555	0	%100
171	M500	X	.32	.32	0	%100
172	M500	Z	.555	.555	0	%100
173	M506	X	.32	.32	0	%100
174	M506	Z	.555	.555	0	%100
175	M505	X	.32	.32	0	%100
176	M505	Z	.555	.555	0	%100
177	MP2A	X	.388	.388	0	%100
178	MP2A	Z	.672	.672	0	%100
179	MP3A	X	.32	.32	0	%100
180	MP3A	Z	.555	.555	0	%100
181	MP2C	X	.388	.388	0	%100
182	MP2C	Z	.672	.672	0	%100
183	MP2B	X	.388	.388	0	%100
184	MP2B	Z	.672	.672	0	%100
185	M223	X	.111	.111	0	%100
186	M223	Z	.191	.191	0	%100
187	M226A	X	.111	.111	0	%100
188	M226A	Z	.191	.191	0	%100
189	M228A	X	0	0	0	%100
190	M228A	Z	0	0	0	%100
191	M232A	X	.837	.837	0	%100
192	M232A	Z	1.45	1.45	0	%100
193	M235	X	.837	.837	0	%100
194	M235	Z	1.45	1.45	0	%100
195	M237	X	.296	.296	0	%100
196	M237	Z	.513	.513	0	%100
197	M244	X	.608	.608	0	%100
198	M244	Z	1.053	1.053	0	%100
199	M245	X	.614	.614	0	%100
200	M245	Z	1.063	1.063	0	%100
201	M246	X	.608	.608	0	%100
202	M246	Z	1.053	1.053	0	%100
203	M249	X	.291	.291	0	%100
204	M249	Z	.504	.504	0	%100
205	MP1A	X	.32	.32	0	%100
206	MP1A	Z	.555	.555	0	%100
207	M271	X	.331	.331	0	%100
208	M271	Z	.574	.574	0	%100

Member Distributed Loads (BLC 70 : Structure Wm (150 Deg)) (Continued)

	Member Label	Direction	Start Magnitude[lb/ft,...	End Magnitude[lb/ft,F...	Start Location[ft,%]	End Location[ft,%]
209	M271B	X	.483	.483	0	%100
210	M271B	Z	.836	.836	0	%100
211	M274A	X	.901	.901	0	%100
212	M274A	Z	1.56	1.56	0	%100
213	M277	X	.901	.901	0	%100
214	M277	Z	1.56	1.56	0	%100
215	M280	X	.483	.483	0	%100
216	M280	Z	.836	.836	0	%100
217	M283	X	.065	.065	0	%100
218	M283	Z	.112	.112	0	%100
219	M265	X	0	0	0	%100
220	M265	Z	0	0	0	%100
221	M266	X	.291	.291	0	%100
222	M266	Z	.504	.504	0	%100
223	MP4A	X	.32	.32	0	%100
224	MP4A	Z	.555	.555	0	%100
225	MP3C	X	.32	.32	0	%100
226	MP3C	Z	.555	.555	0	%100
227	MP3B	X	.32	.32	0	%100
228	MP3B	Z	.555	.555	0	%100
229	MP1C	X	.32	.32	0	%100
230	MP1C	Z	.555	.555	0	%100
231	MP4C	X	.32	.32	0	%100
232	MP4C	Z	.555	.555	0	%100
233	MP1B	X	.32	.32	0	%100
234	MP1B	Z	.555	.555	0	%100
235	MP4B	X	.32	.32	0	%100
236	MP4B	Z	.555	.555	0	%100
237	M287	X	.331	.331	0	%100
238	M287	Z	.574	.574	0	%100
239	M288	X	0	0	0	%100
240	M288	Z	0	0	0	%100

Member Distributed Loads (BLC 71 : Structure Wm (180 Deg))

	Member Label	Direction	Start Magnitude[lb/ft,...	End Magnitude[lb/ft,F...	Start Location[ft,%]	End Location[ft,%]
1	M1	X	0	0	0	%100
2	M1	Z	0	0	0	%100
3	M7	X	0	0	0	%100
4	M7	Z	.588	.588	0	%100
5	M8	X	0	0	0	%100
6	M8	Z	3.237	3.237	0	%100
7	M13	X	0	0	0	%100
8	M13	Z	.122	.122	0	%100
9	M14	X	0	0	0	%100
10	M14	Z	0	0	0	%100
11	M18	X	0	0	0	%100
12	M18	Z	0	0	0	%100
13	M25	X	0	0	0	%100
14	M25	Z	0	0	0	%100
15	M26	X	0	0	0	%100
16	M26	Z	0	0	0	%100

Member Distributed Loads (BLC 71 : Structure Wm (180 Deg)) (Continued)

	Member Label	Direction	Start Magnitude[lb/ft,...	End Magnitude[lb/ft,F...	Start Location[ft,%]	End Location[ft,%]
17	M31	X	0	0	0	%100
18	M31	Z	.242	.242	0	%100
19	M42A	X	0	0	0	%100
20	M42A	Z	.588	.588	0	%100
21	M44A	X	0	0	0	%100
22	M44A	Z	.122	.122	0	%100
23	M44	X	0	0	0	%100
24	M44	Z	0	0	0	%100
25	M46A	X	0	0	0	%100
26	M46A	Z	0	0	0	%100
27	M46B	X	0	0	0	%100
28	M46B	Z	.493	.493	0	%100
29	M34A	X	0	0	0	%100
30	M34A	Z	.122	.122	0	%100
31	M35	X	0	0	0	%100
32	M35	Z	.122	.122	0	%100
33	M36	X	0	0	0	%100
34	M36	Z	.493	.493	0	%100
35	M38	X	0	0	0	%100
36	M38	Z	.242	.242	0	%100
37	M42	X	0	0	0	%100
38	M42	Z	.469	.469	0	%100
39	M47	X	0	0	0	%100
40	M47	Z	.147	.147	0	%100
41	M48	X	0	0	0	%100
42	M48	Z	.809	.809	0	%100
43	M50	X	0	0	0	%100
44	M50	Z	.489	.489	0	%100
45	M51	X	0	0	0	%100
46	M51	Z	.079	.079	0	%100
47	M53	X	0	0	0	%100
48	M53	Z	.079	.079	0	%100
49	M56	X	0	0	0	%100
50	M56	Z	.837	.837	0	%100
51	M57	X	0	0	0	%100
52	M57	Z	.837	.837	0	%100
53	M59	X	0	0	0	%100
54	M59	Z	.242	.242	0	%100
55	M61	X	0	0	0	%100
56	M61	Z	.147	.147	0	%100
57	M62	X	0	0	0	%100
58	M62	Z	.122	.122	0	%100
59	M64	X	0	0	0	%100
60	M64	Z	.079	.079	0	%100
61	M66	X	0	0	0	%100
62	M66	Z	.079	.079	0	%100
63	M67	X	0	0	0	%100
64	M67	Z	.123	.123	0	%100
65	M68	X	0	0	0	%100
66	M68	Z	.489	.489	0	%100
67	M69	X	0	0	0	%100
68	M69	Z	.122	.122	0	%100

Member Distributed Loads (BLC 71 : Structure Wm (180 Deg)) (Continued)

	Member Label	Direction	Start Magnitude[lb/ft,...	End Magnitude[lb/ft,F...	Start Location[ft,%]	End Location[ft,%]
69	M70	X	0	0	0	%100
70	M70	Z	.123	.123	0	%100
71	M79	X	0	0	0	%100
72	M79	Z	.967	.967	0	%100
73	M83	X	0	0	0	%100
74	M83	Z	.469	.469	0	%100
75	M88	X	0	0	0	%100
76	M88	Z	.147	.147	0	%100
77	M89	X	0	0	0	%100
78	M89	Z	.809	.809	0	%100
79	M91	X	0	0	0	%100
80	M91	Z	.122	.122	0	%100
81	M92	X	0	0	0	%100
82	M92	Z	.079	.079	0	%100
83	M94	X	0	0	0	%100
84	M94	Z	.079	.079	0	%100
85	M97	X	0	0	0	%100
86	M97	Z	.837	.837	0	%100
87	M98	X	0	0	0	%100
88	M98	Z	.837	.837	0	%100
89	M100	X	0	0	0	%100
90	M100	Z	.967	.967	0	%100
91	M102	X	0	0	0	%100
92	M102	Z	.147	.147	0	%100
93	M103	X	0	0	0	%100
94	M103	Z	.489	.489	0	%100
95	M105	X	0	0	0	%100
96	M105	Z	.079	.079	0	%100
97	M107	X	0	0	0	%100
98	M107	Z	.079	.079	0	%100
99	M108	X	0	0	0	%100
100	M108	Z	.123	.123	0	%100
101	M109	X	0	0	0	%100
102	M109	Z	.122	.122	0	%100
103	M110	X	0	0	0	%100
104	M110	Z	.489	.489	0	%100
105	M111	X	0	0	0	%100
106	M111	Z	.123	.123	0	%100
107	M118	X	0	0	0	%100
108	M118	Z	1.079	1.079	0	%100
109	M120	X	0	0	0	%100
110	M120	Z	.242	.242	0	%100
111	M121A	X	0	0	0	%100
112	M121A	Z	.27	.27	0	%100
113	M126	X	0	0	0	%100
114	M126	Z	.27	.27	0	%100
115	M131	X	0	0	0	%100
116	M131	Z	.135	.135	0	%100
117	M134	X	0	0	0	%100
118	M134	Z	.135	.135	0	%100
119	M148	X	0	0	0	%100
120	M148	Z	.641	.641	0	%100

Member Distributed Loads (BLC 71 : Structure Wm (180 Deg)) (Continued)

	Member Label	Direction	Start Magnitude[lb/ft,...	End Magnitude[lb/ft,F...	Start Location[ft,%]	End Location[ft,%]
121	M152B	X	0	0	0	%100
122	M152B	Z	.791	.791	0	%100
123	M155	X	0	0	0	%100
124	M155	Z	.129	.129	0	%100
125	M154	X	0	0	0	%100
126	M154	Z	.16	.16	0	%100
127	M157A	X	0	0	0	%100
128	M157A	Z	.16	.16	0	%100
129	M160	X	0	0	0	%100
130	M160	Z	1.909	1.909	0	%100
131	M161	X	0	0	0	%100
132	M161	Z	1.909	1.909	0	%100
133	M162	X	0	0	0	%100
134	M162	Z	.477	.477	0	%100
135	M163	X	0	0	0	%100
136	M163	Z	.477	.477	0	%100
137	M164	X	0	0	0	%100
138	M164	Z	.477	.477	0	%100
139	M165	X	0	0	0	%100
140	M165	Z	.477	.477	0	%100
141	M166	X	0	0	0	%100
142	M166	Z	.594	.594	0	%100
143	M167	X	0	0	0	%100
144	M167	Z	.148	.148	0	%100
145	M168	X	0	0	0	%100
146	M168	Z	.148	.148	0	%100
147	M169	X	0	0	0	%100
148	M169	Z	.641	.641	0	%100
149	M170	X	0	0	0	%100
150	M170	Z	.16	.16	0	%100
151	M171	X	0	0	0	%100
152	M171	Z	.16	.16	0	%100
153	M174	X	0	0	0	%100
154	M174	Z	.682	.682	0	%100
155	M177	X	0	0	0	%100
156	M177	Z	.682	.682	0	%100
157	M180	X	0	0	0	%100
158	M180	Z	.17	.17	0	%100
159	M183	X	0	0	0	%100
160	M183	Z	.17	.17	0	%100
161	M186	X	0	0	0	%100
162	M186	Z	.17	.17	0	%100
163	M189	X	0	0	0	%100
164	M189	Z	.17	.17	0	%100
165	M504	X	0	0	0	%100
166	M504	Z	.641	.641	0	%100
167	M502	X	0	0	0	%100
168	M502	Z	.641	.641	0	%100
169	M501	X	0	0	0	%100
170	M501	Z	.641	.641	0	%100
171	M500	X	0	0	0	%100
172	M500	Z	.641	.641	0	%100

Member Distributed Loads (BLC 71 : Structure Wm (180 Deg)) (Continued)

	Member Label	Direction	Start Magnitude[lb/ft,...	End Magnitude[lb/ft,F...	Start Location[ft,%]	End Location[ft,%]
173	M506	X	0	0	0	%100
174	M506	Z	.641	.641	0	%100
175	M505	X	0	0	0	%100
176	M505	Z	.641	.641	0	%100
177	MP2A	X	0	0	0	%100
178	MP2A	Z	.776	.776	0	%100
179	MP3A	X	0	0	0	%100
180	MP3A	Z	.641	.641	0	%100
181	MP2C	X	0	0	0	%100
182	MP2C	Z	.776	.776	0	%100
183	MP2B	X	0	0	0	%100
184	MP2B	Z	.776	.776	0	%100
185	M223	X	0	0	0	%100
186	M223	Z	.705	.705	0	%100
187	M226A	X	0	0	0	%100
188	M226A	Z	.705	.705	0	%100
189	M228A	X	0	0	0	%100
190	M228A	Z	.198	.198	0	%100
191	M232A	X	0	0	0	%100
192	M232A	Z	.705	.705	0	%100
193	M235	X	0	0	0	%100
194	M235	Z	.705	.705	0	%100
195	M237	X	0	0	0	%100
196	M237	Z	.198	.198	0	%100
197	M244	X	0	0	0	%100
198	M244	Z	1.212	1.212	0	%100
199	M245	X	0	0	0	%100
200	M245	Z	1.223	1.223	0	%100
201	M246	X	0	0	0	%100
202	M246	Z	1.223	1.223	0	%100
203	M249	X	0	0	0	%100
204	M249	Z	.776	.776	0	%100
205	MP1A	X	0	0	0	%100
206	MP1A	Z	.641	.641	0	%100
207	M271	X	0	0	0	%100
208	M271	Z	.221	.221	0	%100
209	M271B	X	0	0	0	%100
210	M271B	Z	.129	.129	0	%100
211	M274A	X	0	0	0	%100
212	M274A	Z	.966	.966	0	%100
213	M277	X	0	0	0	%100
214	M277	Z	1.802	1.802	0	%100
215	M280	X	0	0	0	%100
216	M280	Z	1.802	1.802	0	%100
217	M283	X	0	0	0	%100
218	M283	Z	.966	.966	0	%100
219	M265	X	0	0	0	%100
220	M265	Z	.194	.194	0	%100
221	M266	X	0	0	0	%100
222	M266	Z	.194	.194	0	%100
223	MP4A	X	0	0	0	%100
224	MP4A	Z	.641	.641	0	%100

Member Distributed Loads (BLC 71 : Structure Wm (180 Deg)) (Continued)

	Member Label	Direction	Start Magnitude[lb/ft,...	End Magnitude[lb/ft,F...	Start Location[ft,%]	End Location[ft,%]
225	MP3C	X	0	0	0	%100
226	MP3C	Z	.641	.641	0	%100
227	MP3B	X	0	0	0	%100
228	MP3B	Z	.641	.641	0	%100
229	MP1C	X	0	0	0	%100
230	MP1C	Z	.641	.641	0	%100
231	MP4C	X	0	0	0	%100
232	MP4C	Z	.641	.641	0	%100
233	MP1B	X	0	0	0	%100
234	MP1B	Z	.641	.641	0	%100
235	MP4B	X	0	0	0	%100
236	MP4B	Z	.641	.641	0	%100
237	M287	X	0	0	0	%100
238	M287	Z	.883	.883	0	%100
239	M288	X	0	0	0	%100
240	M288	Z	.221	.221	0	%100

Member Distributed Loads (BLC 72 : Structure Wm (210 Deg))

	Member Label	Direction	Start Magnitude[lb/ft,...	End Magnitude[lb/ft,F...	Start Location[ft,%]	End Location[ft,%]
1	M1	X	-.078	-.078	0	%100
2	M1	Z	.135	.135	0	%100
3	M7	X	-.221	-.221	0	%100
4	M7	Z	.382	.382	0	%100
5	M8	X	-1.214	-1.214	0	%100
6	M8	Z	2.103	2.103	0	%100
7	M13	X	0	0	0	%100
8	M13	Z	0	0	0	%100
9	M14	X	-.013	-.013	0	%100
10	M14	Z	.023	.023	0	%100
11	M18	X	-.013	-.013	0	%100
12	M18	Z	.023	.023	0	%100
13	M25	X	-.14	-.14	0	%100
14	M25	Z	.242	.242	0	%100
15	M26	X	-.14	-.14	0	%100
16	M26	Z	.242	.242	0	%100
17	M31	X	-.362	-.362	0	%100
18	M31	Z	.628	.628	0	%100
19	M42A	X	-.221	-.221	0	%100
20	M42A	Z	.382	.382	0	%100
21	M44A	X	-.183	-.183	0	%100
22	M44A	Z	.317	.317	0	%100
23	M44	X	-.013	-.013	0	%100
24	M44	Z	.023	.023	0	%100
25	M46A	X	-.013	-.013	0	%100
26	M46A	Z	.023	.023	0	%100
27	M46B	X	-.185	-.185	0	%100
28	M46B	Z	.32	.32	0	%100
29	M34A	X	0	0	0	%100
30	M34A	Z	0	0	0	%100
31	M35	X	-.183	-.183	0	%100
32	M35	Z	.317	.317	0	%100

Member Distributed Loads (BLC 72 : Structure Wm (210 Deg)) (Continued)

	Member Label	Direction	Start Magnitude[lb/ft,...	End Magnitude[lb/ft,F...	Start Location[ft,%]	End Location[ft,%]
33	M36	X	-.185	-.185	0	%100
34	M36	Z	.32	.32	0	%100
35	M38	X	0	0	0	%100
36	M38	Z	0	0	0	%100
37	M42	X	-.078	-.078	0	%100
38	M42	Z	.135	.135	0	%100
39	M47	X	-.221	-.221	0	%100
40	M47	Z	.382	.382	0	%100
41	M48	X	-1.214	-1.214	0	%100
42	M48	Z	2.103	2.103	0	%100
43	M50	X	-.183	-.183	0	%100
44	M50	Z	.317	.317	0	%100
45	M51	X	-.013	-.013	0	%100
46	M51	Z	.023	.023	0	%100
47	M53	X	-.013	-.013	0	%100
48	M53	Z	.023	.023	0	%100
49	M56	X	-.14	-.14	0	%100
50	M56	Z	.242	.242	0	%100
51	M57	X	-.14	-.14	0	%100
52	M57	Z	.242	.242	0	%100
53	M59	X	0	0	0	%100
54	M59	Z	0	0	0	%100
55	M61	X	-.221	-.221	0	%100
56	M61	Z	.382	.382	0	%100
57	M62	X	0	0	0	%100
58	M62	Z	0	0	0	%100
59	M64	X	-.013	-.013	0	%100
60	M64	Z	.023	.023	0	%100
61	M66	X	-.013	-.013	0	%100
62	M66	Z	.023	.023	0	%100
63	M67	X	-.185	-.185	0	%100
64	M67	Z	.32	.32	0	%100
65	M68	X	-.183	-.183	0	%100
66	M68	Z	.317	.317	0	%100
67	M69	X	0	0	0	%100
68	M69	Z	0	0	0	%100
69	M70	X	-.185	-.185	0	%100
70	M70	Z	.32	.32	0	%100
71	M79	X	-.362	-.362	0	%100
72	M79	Z	.628	.628	0	%100
73	M83	X	-.313	-.313	0	%100
74	M83	Z	.542	.542	0	%100
75	M88	X	0	0	0	%100
76	M88	Z	0	0	0	%100
77	M89	X	0	0	0	%100
78	M89	Z	0	0	0	%100
79	M91	X	-.183	-.183	0	%100
80	M91	Z	.317	.317	0	%100
81	M92	X	-.053	-.053	0	%100
82	M92	Z	.091	.091	0	%100
83	M94	X	-.053	-.053	0	%100
84	M94	Z	.091	.091	0	%100

Member Distributed Loads (BLC 72 : Structure Wm (210 Deg)) (Continued)

	Member Label	Direction	Start Magnitude[lb/ft,...	End Magnitude[lb/ft,F...	Start Location[ft,%]	End Location[ft,%]
85	M97	X	-.558	-.558	0	%100
86	M97	Z	.967	.967	0	%100
87	M98	X	-.558	-.558	0	%100
88	M98	Z	.967	.967	0	%100
89	M100	X	-.362	-.362	0	%100
90	M100	Z	.628	.628	0	%100
91	M102	X	0	0	0	%100
92	M102	Z	0	0	0	%100
93	M103	X	-.183	-.183	0	%100
94	M103	Z	.317	.317	0	%100
95	M105	X	-.053	-.053	0	%100
96	M105	Z	.091	.091	0	%100
97	M107	X	-.053	-.053	0	%100
98	M107	Z	.091	.091	0	%100
99	M108	X	0	0	0	%100
100	M108	Z	0	0	0	%100
101	M109	X	-.183	-.183	0	%100
102	M109	Z	.317	.317	0	%100
103	M110	X	-.183	-.183	0	%100
104	M110	Z	.317	.317	0	%100
105	M111	X	0	0	0	%100
106	M111	Z	0	0	0	%100
107	M118	X	-.405	-.405	0	%100
108	M118	Z	.701	.701	0	%100
109	M120	X	-.362	-.362	0	%100
110	M120	Z	.628	.628	0	%100
111	M121A	X	-.405	-.405	0	%100
112	M121A	Z	.701	.701	0	%100
113	M126	X	0	0	0	%100
114	M126	Z	0	0	0	%100
115	M131	X	-.493	-.493	0	%100
116	M131	Z	.853	.853	0	%100
117	M134	X	-.493	-.493	0	%100
118	M134	Z	.853	.853	0	%100
119	M148	X	-.24	-.24	0	%100
120	M148	Z	.416	.416	0	%100
121	M152B	X	-.296	-.296	0	%100
122	M152B	Z	.513	.513	0	%100
123	M155	X	-.483	-.483	0	%100
124	M155	Z	.836	.836	0	%100
125	M154	X	-.24	-.24	0	%100
126	M154	Z	.416	.416	0	%100
127	M157A	X	0	0	0	%100
128	M157A	Z	0	0	0	%100
129	M160	X	-.716	-.716	0	%100
130	M160	Z	1.24	1.24	0	%100
131	M161	X	-.716	-.716	0	%100
132	M161	Z	1.24	1.24	0	%100
133	M162	X	-.716	-.716	0	%100
134	M162	Z	1.24	1.24	0	%100
135	M163	X	-.716	-.716	0	%100
136	M163	Z	1.24	1.24	0	%100

Member Distributed Loads (BLC 72 : Structure Wm (210 Deg)) (Continued)

	Member Label	Direction	Start Magnitude[lb/ft,...	End Magnitude[lb/ft,F...	Start Location[ft,%]	End Location[ft,%]
137	M164	X	0	0	0	%100
138	M164	Z	0	0	0	%100
139	M165	X	0	0	0	%100
140	M165	Z	0	0	0	%100
141	M166	X	-.223	-.223	0	%100
142	M166	Z	.386	.386	0	%100
143	M167	X	-.223	-.223	0	%100
144	M167	Z	.386	.386	0	%100
145	M168	X	0	0	0	%100
146	M168	Z	0	0	0	%100
147	M169	X	-.24	-.24	0	%100
148	M169	Z	.416	.416	0	%100
149	M170	X	-.24	-.24	0	%100
150	M170	Z	.416	.416	0	%100
151	M171	X	0	0	0	%100
152	M171	Z	0	0	0	%100
153	M174	X	-.256	-.256	0	%100
154	M174	Z	.443	.443	0	%100
155	M177	X	-.256	-.256	0	%100
156	M177	Z	.443	.443	0	%100
157	M180	X	-.256	-.256	0	%100
158	M180	Z	.443	.443	0	%100
159	M183	X	-.256	-.256	0	%100
160	M183	Z	.443	.443	0	%100
161	M186	X	0	0	0	%100
162	M186	Z	0	0	0	%100
163	M189	X	0	0	0	%100
164	M189	Z	0	0	0	%100
165	M504	X	-.32	-.32	0	%100
166	M504	Z	.555	.555	0	%100
167	M502	X	-.32	-.32	0	%100
168	M502	Z	.555	.555	0	%100
169	M501	X	-.32	-.32	0	%100
170	M501	Z	.555	.555	0	%100
171	M500	X	-.32	-.32	0	%100
172	M500	Z	.555	.555	0	%100
173	M506	X	-.32	-.32	0	%100
174	M506	Z	.555	.555	0	%100
175	M505	X	-.32	-.32	0	%100
176	M505	Z	.555	.555	0	%100
177	MP2A	X	-.388	-.388	0	%100
178	MP2A	Z	.672	.672	0	%100
179	MP3A	X	-.32	-.32	0	%100
180	MP3A	Z	.555	.555	0	%100
181	MP2C	X	-.388	-.388	0	%100
182	MP2C	Z	.672	.672	0	%100
183	MP2B	X	-.388	-.388	0	%100
184	MP2B	Z	.672	.672	0	%100
185	M223	X	-.837	-.837	0	%100
186	M223	Z	1.45	1.45	0	%100
187	M226A	X	-.837	-.837	0	%100
188	M226A	Z	1.45	1.45	0	%100

Member Distributed Loads (BLC 72 : Structure Wm (210 Deg)) (Continued)

	Member Label	Direction	Start Magnitude[lb/ft,...	End Magnitude[lb/ft,F...	Start Location[ft,%]	End Location[ft,%]
189	M228A	X	-.296	-.296	0	%100
190	M228A	Z	.513	.513	0	%100
191	M232A	X	-.111	-.111	0	%100
192	M232A	Z	.191	.191	0	%100
193	M235	X	-.111	-.111	0	%100
194	M235	Z	.191	.191	0	%100
195	M237	X	0	0	0	%100
196	M237	Z	0	0	0	%100
197	M244	X	-.608	-.608	0	%100
198	M244	Z	1.053	1.053	0	%100
199	M245	X	-.608	-.608	0	%100
200	M245	Z	1.053	1.053	0	%100
201	M246	X	-.614	-.614	0	%100
202	M246	Z	1.063	1.063	0	%100
203	M249	X	-.291	-.291	0	%100
204	M249	Z	.504	.504	0	%100
205	MP1A	X	-.32	-.32	0	%100
206	MP1A	Z	.555	.555	0	%100
207	M271	X	0	0	0	%100
208	M271	Z	0	0	0	%100
209	M271B	X	-.065	-.065	0	%100
210	M271B	Z	.112	.112	0	%100
211	M274A	X	-.065	-.065	0	%100
212	M274A	Z	.112	.112	0	%100
213	M277	X	-.483	-.483	0	%100
214	M277	Z	.836	.836	0	%100
215	M280	X	-.901	-.901	0	%100
216	M280	Z	1.56	1.56	0	%100
217	M283	X	-.901	-.901	0	%100
218	M283	Z	1.56	1.56	0	%100
219	M265	X	-.291	-.291	0	%100
220	M265	Z	.504	.504	0	%100
221	M266	X	0	0	0	%100
222	M266	Z	0	0	0	%100
223	MP4A	X	-.32	-.32	0	%100
224	MP4A	Z	.555	.555	0	%100
225	MP3C	X	-.32	-.32	0	%100
226	MP3C	Z	.555	.555	0	%100
227	MP3B	X	-.32	-.32	0	%100
228	MP3B	Z	.555	.555	0	%100
229	MP1C	X	-.32	-.32	0	%100
230	MP1C	Z	.555	.555	0	%100
231	MP4C	X	-.32	-.32	0	%100
232	MP4C	Z	.555	.555	0	%100
233	MP1B	X	-.32	-.32	0	%100
234	MP1B	Z	.555	.555	0	%100
235	MP4B	X	-.32	-.32	0	%100
236	MP4B	Z	.555	.555	0	%100
237	M287	X	-.331	-.331	0	%100
238	M287	Z	.574	.574	0	%100
239	M288	X	-.331	-.331	0	%100
240	M288	Z	.574	.574	0	%100

Member Distributed Loads (BLC 73 : Structure Wm (240 Deg))

	Member Label	Direction	Start Magnitude[lb/ft,...	End Magnitude[lb/ft,F...	Start Location[ft,%]	End Location[ft,%]
1	M1	X	-.406	-.406	0	%100
2	M1	Z	.235	.235	0	%100
3	M7	X	-.127	-.127	0	%100
4	M7	Z	.074	.074	0	%100
5	M8	X	-.701	-.701	0	%100
6	M8	Z	.405	.405	0	%100
7	M13	X	-.106	-.106	0	%100
8	M13	Z	.061	.061	0	%100
9	M14	X	-.069	-.069	0	%100
10	M14	Z	.04	.04	0	%100
11	M18	X	-.069	-.069	0	%100
12	M18	Z	.04	.04	0	%100
13	M25	X	-.725	-.725	0	%100
14	M25	Z	.419	.419	0	%100
15	M26	X	-.725	-.725	0	%100
16	M26	Z	.419	.419	0	%100
17	M31	X	-.837	-.837	0	%100
18	M31	Z	.483	.483	0	%100
19	M42A	X	-.127	-.127	0	%100
20	M42A	Z	.074	.074	0	%100
21	M44A	X	-.423	-.423	0	%100
22	M44A	Z	.244	.244	0	%100
23	M44	X	-.069	-.069	0	%100
24	M44	Z	.04	.04	0	%100
25	M46A	X	-.069	-.069	0	%100
26	M46A	Z	.04	.04	0	%100
27	M46B	X	-.107	-.107	0	%100
28	M46B	Z	.062	.062	0	%100
29	M34A	X	-.106	-.106	0	%100
30	M34A	Z	.061	.061	0	%100
31	M35	X	-.423	-.423	0	%100
32	M35	Z	.244	.244	0	%100
33	M36	X	-.107	-.107	0	%100
34	M36	Z	.062	.062	0	%100
35	M38	X	-.209	-.209	0	%100
36	M38	Z	.121	.121	0	%100
37	M42	X	0	0	0	%100
38	M42	Z	0	0	0	%100
39	M47	X	-.509	-.509	0	%100
40	M47	Z	.294	.294	0	%100
41	M48	X	-2.803	-2.803	0	%100
42	M48	Z	1.619	1.619	0	%100
43	M50	X	-.106	-.106	0	%100
44	M50	Z	.061	.061	0	%100
45	M51	X	0	0	0	%100
46	M51	Z	0	0	0	%100
47	M53	X	0	0	0	%100
48	M53	Z	0	0	0	%100
49	M56	X	0	0	0	%100
50	M56	Z	0	0	0	%100
51	M57	X	0	0	0	%100
52	M57	Z	0	0	0	%100

Member Distributed Loads (BLC 73 : Structure Wm (240 Deg)) (Continued)

	Member Label	Direction	Start Magnitude[lb/ft,...	End Magnitude[lb/ft,F...	Start Location[ft,%]	End Location[ft,%]
53	M59	X	-.209	-.209	0	%100
54	M59	Z	.121	.121	0	%100
55	M61	X	-.509	-.509	0	%100
56	M61	Z	.294	.294	0	%100
57	M62	X	-.106	-.106	0	%100
58	M62	Z	.061	.061	0	%100
59	M64	X	0	0	0	%100
60	M64	Z	0	0	0	%100
61	M66	X	0	0	0	%100
62	M66	Z	0	0	0	%100
63	M67	X	-.427	-.427	0	%100
64	M67	Z	.247	.247	0	%100
65	M68	X	-.106	-.106	0	%100
66	M68	Z	.061	.061	0	%100
67	M69	X	-.106	-.106	0	%100
68	M69	Z	.061	.061	0	%100
69	M70	X	-.427	-.427	0	%100
70	M70	Z	.247	.247	0	%100
71	M79	X	-.209	-.209	0	%100
72	M79	Z	.121	.121	0	%100
73	M83	X	-.406	-.406	0	%100
74	M83	Z	.235	.235	0	%100
75	M88	X	-.127	-.127	0	%100
76	M88	Z	.074	.074	0	%100
77	M89	X	-.701	-.701	0	%100
78	M89	Z	.405	.405	0	%100
79	M91	X	-.423	-.423	0	%100
80	M91	Z	.244	.244	0	%100
81	M92	X	-.069	-.069	0	%100
82	M92	Z	.04	.04	0	%100
83	M94	X	-.069	-.069	0	%100
84	M94	Z	.04	.04	0	%100
85	M97	X	-.725	-.725	0	%100
86	M97	Z	.419	.419	0	%100
87	M98	X	-.725	-.725	0	%100
88	M98	Z	.419	.419	0	%100
89	M100	X	-.209	-.209	0	%100
90	M100	Z	.121	.121	0	%100
91	M102	X	-.127	-.127	0	%100
92	M102	Z	.074	.074	0	%100
93	M103	X	-.106	-.106	0	%100
94	M103	Z	.061	.061	0	%100
95	M105	X	-.069	-.069	0	%100
96	M105	Z	.04	.04	0	%100
97	M107	X	-.069	-.069	0	%100
98	M107	Z	.04	.04	0	%100
99	M108	X	-.107	-.107	0	%100
100	M108	Z	.062	.062	0	%100
101	M109	X	-.423	-.423	0	%100
102	M109	Z	.244	.244	0	%100
103	M110	X	-.106	-.106	0	%100
104	M110	Z	.061	.061	0	%100

Member Distributed Loads (BLC 73 : Structure Wm (240 Deg)) (Continued)

	Member Label	Direction	Start Magnitude[lb/ft,...	End Magnitude[lb/ft,F...	Start Location[ft,%]	End Location[ft,%]
105	M111	X	-.107	-.107	0	%100
106	M111	Z	.062	.062	0	%100
107	M118	X	-.234	-.234	0	%100
108	M118	Z	.135	.135	0	%100
109	M120	X	-.837	-.837	0	%100
110	M120	Z	.483	.483	0	%100
111	M121A	X	-.934	-.934	0	%100
112	M121A	Z	.54	.54	0	%100
113	M126	X	-.234	-.234	0	%100
114	M126	Z	.135	.135	0	%100
115	M131	X	-2.326	-2.326	0	%100
116	M131	Z	1.343	1.343	0	%100
117	M134	X	-2.326	-2.326	0	%100
118	M134	Z	1.343	1.343	0	%100
119	M148	X	-.139	-.139	0	%100
120	M148	Z	.08	.08	0	%100
121	M152B	X	-.171	-.171	0	%100
122	M152B	Z	.099	.099	0	%100
123	M155	X	-1.56	-1.56	0	%100
124	M155	Z	.901	.901	0	%100
125	M154	X	-.555	-.555	0	%100
126	M154	Z	.32	.32	0	%100
127	M157A	X	-.139	-.139	0	%100
128	M157A	Z	.08	.08	0	%100
129	M160	X	-.413	-.413	0	%100
130	M160	Z	.239	.239	0	%100
131	M161	X	-.413	-.413	0	%100
132	M161	Z	.239	.239	0	%100
133	M162	X	-1.653	-1.653	0	%100
134	M162	Z	.955	.955	0	%100
135	M163	X	-1.653	-1.653	0	%100
136	M163	Z	.955	.955	0	%100
137	M164	X	-.413	-.413	0	%100
138	M164	Z	.239	.239	0	%100
139	M165	X	-.413	-.413	0	%100
140	M165	Z	.239	.239	0	%100
141	M166	X	-.129	-.129	0	%100
142	M166	Z	.074	.074	0	%100
143	M167	X	-.514	-.514	0	%100
144	M167	Z	.297	.297	0	%100
145	M168	X	-.129	-.129	0	%100
146	M168	Z	.074	.074	0	%100
147	M169	X	-.139	-.139	0	%100
148	M169	Z	.08	.08	0	%100
149	M170	X	-.555	-.555	0	%100
150	M170	Z	.32	.32	0	%100
151	M171	X	-.139	-.139	0	%100
152	M171	Z	.08	.08	0	%100
153	M174	X	-.148	-.148	0	%100
154	M174	Z	.085	.085	0	%100
155	M177	X	-.148	-.148	0	%100
156	M177	Z	.085	.085	0	%100

Member Distributed Loads (BLC 73 : Structure Wm (240 Deg)) (Continued)

	Member Label	Direction	Start Magnitude[lb/ft,...	End Magnitude[lb/ft,F...	Start Location[ft,%]	End Location[ft,%]
157	M180	X	-.591	-.591	0	%100
158	M180	Z	.341	.341	0	%100
159	M183	X	-.591	-.591	0	%100
160	M183	Z	.341	.341	0	%100
161	M186	X	-.148	-.148	0	%100
162	M186	Z	.085	.085	0	%100
163	M189	X	-.148	-.148	0	%100
164	M189	Z	.085	.085	0	%100
165	M504	X	-.555	-.555	0	%100
166	M504	Z	.32	.32	0	%100
167	M502	X	-.555	-.555	0	%100
168	M502	Z	.32	.32	0	%100
169	M501	X	-.555	-.555	0	%100
170	M501	Z	.32	.32	0	%100
171	M500	X	-.555	-.555	0	%100
172	M500	Z	.32	.32	0	%100
173	M506	X	-.555	-.555	0	%100
174	M506	Z	.32	.32	0	%100
175	M505	X	-.555	-.555	0	%100
176	M505	Z	.32	.32	0	%100
177	MP2A	X	-.672	-.672	0	%100
178	MP2A	Z	.388	.388	0	%100
179	MP3A	X	-.555	-.555	0	%100
180	MP3A	Z	.32	.32	0	%100
181	MP2C	X	-.672	-.672	0	%100
182	MP2C	Z	.388	.388	0	%100
183	MP2B	X	-.672	-.672	0	%100
184	MP2B	Z	.388	.388	0	%100
185	M223	X	-1.869	-1.869	0	%100
186	M223	Z	1.079	1.079	0	%100
187	M226A	X	-1.869	-1.869	0	%100
188	M226A	Z	1.079	1.079	0	%100
189	M228A	X	-.685	-.685	0	%100
190	M228A	Z	.395	.395	0	%100
191	M232A	X	-.611	-.611	0	%100
192	M232A	Z	.353	.353	0	%100
193	M235	X	-.611	-.611	0	%100
194	M235	Z	.353	.353	0	%100
195	M237	X	-.171	-.171	0	%100
196	M237	Z	.099	.099	0	%100
197	M244	X	-1.059	-1.059	0	%100
198	M244	Z	.612	.612	0	%100
199	M245	X	-1.049	-1.049	0	%100
200	M245	Z	.606	.606	0	%100
201	M246	X	-1.059	-1.059	0	%100
202	M246	Z	.612	.612	0	%100
203	M249	X	-.168	-.168	0	%100
204	M249	Z	.097	.097	0	%100
205	MP1A	X	-.555	-.555	0	%100
206	MP1A	Z	.32	.32	0	%100
207	M271	X	-.191	-.191	0	%100
208	M271	Z	.11	.11	0	%100

Member Distributed Loads (BLC 73 : Structure Wm (240 Deg)) (Continued)

	Member Label	Direction	Start Magnitude[lb/ft,...	End Magnitude[lb/ft,F...	Start Location[ft,%]	End Location[ft,%]
209	M271B	X	-.836	-.836	0	%100
210	M271B	Z	.483	.483	0	%100
211	M274A	X	-.112	-.112	0	%100
212	M274A	Z	.065	.065	0	%100
213	M277	X	-.112	-.112	0	%100
214	M277	Z	.065	.065	0	%100
215	M280	X	-.836	-.836	0	%100
216	M280	Z	.483	.483	0	%100
217	M283	X	-1.56	-1.56	0	%100
218	M283	Z	.901	.901	0	%100
219	M265	X	-.672	-.672	0	%100
220	M265	Z	.388	.388	0	%100
221	M266	X	-.168	-.168	0	%100
222	M266	Z	.097	.097	0	%100
223	MP4A	X	-.555	-.555	0	%100
224	MP4A	Z	.32	.32	0	%100
225	MP3C	X	-.555	-.555	0	%100
226	MP3C	Z	.32	.32	0	%100
227	MP3B	X	-.555	-.555	0	%100
228	MP3B	Z	.32	.32	0	%100
229	MP1C	X	-.555	-.555	0	%100
230	MP1C	Z	.32	.32	0	%100
231	MP4C	X	-.555	-.555	0	%100
232	MP4C	Z	.32	.32	0	%100
233	MP1B	X	-.555	-.555	0	%100
234	MP1B	Z	.32	.32	0	%100
235	MP4B	X	-.555	-.555	0	%100
236	MP4B	Z	.32	.32	0	%100
237	M287	X	-.191	-.191	0	%100
238	M287	Z	.11	.11	0	%100
239	M288	X	-.765	-.765	0	%100
240	M288	Z	.442	.442	0	%100

Member Distributed Loads (BLC 74 : Structure Wm (270 Deg))

	Member Label	Direction	Start Magnitude[lb/ft,...	End Magnitude[lb/ft,F...	Start Location[ft,%]	End Location[ft,%]
1	M1	X	-.625	-.625	0	%100
2	M1	Z	0	0	0	%100
3	M7	X	0	0	0	%100
4	M7	Z	0	0	0	%100
5	M8	X	0	0	0	%100
6	M8	Z	0	0	0	%100
7	M13	X	-.366	-.366	0	%100
8	M13	Z	0	0	0	%100
9	M14	X	-.106	-.106	0	%100
10	M14	Z	0	0	0	%100
11	M18	X	-.106	-.106	0	%100
12	M18	Z	0	0	0	%100
13	M25	X	-1.116	-1.116	0	%100
14	M25	Z	0	0	0	%100
15	M26	X	-1.116	-1.116	0	%100
16	M26	Z	0	0	0	%100

Member Distributed Loads (BLC 74 : Structure Wm (270 Deg)) (Continued)

	Member Label	Direction	Start Magnitude[lb/ft,...	End Magnitude[lb/ft,F...	Start Location[ft,%]	End Location[ft,%]
17	M31	X	-.725	-.725	0	%100
18	M31	Z	0	0	0	%100
19	M42A	X	0	0	0	%100
20	M42A	Z	0	0	0	%100
21	M44A	X	-.366	-.366	0	%100
22	M44A	Z	0	0	0	%100
23	M44	X	-.106	-.106	0	%100
24	M44	Z	0	0	0	%100
25	M46A	X	-.106	-.106	0	%100
26	M46A	Z	0	0	0	%100
27	M46B	X	0	0	0	%100
28	M46B	Z	0	0	0	%100
29	M34A	X	-.366	-.366	0	%100
30	M34A	Z	0	0	0	%100
31	M35	X	-.366	-.366	0	%100
32	M35	Z	0	0	0	%100
33	M36	X	0	0	0	%100
34	M36	Z	0	0	0	%100
35	M38	X	-.725	-.725	0	%100
36	M38	Z	0	0	0	%100
37	M42	X	-.156	-.156	0	%100
38	M42	Z	0	0	0	%100
39	M47	X	-.441	-.441	0	%100
40	M47	Z	0	0	0	%100
41	M48	X	-2.428	-2.428	0	%100
42	M48	Z	0	0	0	%100
43	M50	X	0	0	0	%100
44	M50	Z	0	0	0	%100
45	M51	X	-.026	-.026	0	%100
46	M51	Z	0	0	0	%100
47	M53	X	-.026	-.026	0	%100
48	M53	Z	0	0	0	%100
49	M56	X	-.279	-.279	0	%100
50	M56	Z	0	0	0	%100
51	M57	X	-.279	-.279	0	%100
52	M57	Z	0	0	0	%100
53	M59	X	-.725	-.725	0	%100
54	M59	Z	0	0	0	%100
55	M61	X	-.441	-.441	0	%100
56	M61	Z	0	0	0	%100
57	M62	X	-.366	-.366	0	%100
58	M62	Z	0	0	0	%100
59	M64	X	-.026	-.026	0	%100
60	M64	Z	0	0	0	%100
61	M66	X	-.026	-.026	0	%100
62	M66	Z	0	0	0	%100
63	M67	X	-.37	-.37	0	%100
64	M67	Z	0	0	0	%100
65	M68	X	0	0	0	%100
66	M68	Z	0	0	0	%100
67	M69	X	-.366	-.366	0	%100
68	M69	Z	0	0	0	%100

Member Distributed Loads (BLC 74 : Structure Wm (270 Deg)) (Continued)

	Member Label	Direction	Start Magnitude[lb/ft,...	End Magnitude[lb/ft,F...	Start Location[ft,%]	End Location[ft,%]
69	M70	X	-.37	-.37	0	%100
70	M70	Z	0	0	0	%100
71	M79	X	0	0	0	%100
72	M79	Z	0	0	0	%100
73	M83	X	-.156	-.156	0	%100
74	M83	Z	0	0	0	%100
75	M88	X	-.441	-.441	0	%100
76	M88	Z	0	0	0	%100
77	M89	X	-2.428	-2.428	0	%100
78	M89	Z	0	0	0	%100
79	M91	X	-.366	-.366	0	%100
80	M91	Z	0	0	0	%100
81	M92	X	-.026	-.026	0	%100
82	M92	Z	0	0	0	%100
83	M94	X	-.026	-.026	0	%100
84	M94	Z	0	0	0	%100
85	M97	X	-.279	-.279	0	%100
86	M97	Z	0	0	0	%100
87	M98	X	-.279	-.279	0	%100
88	M98	Z	0	0	0	%100
89	M100	X	0	0	0	%100
90	M100	Z	0	0	0	%100
91	M102	X	-.441	-.441	0	%100
92	M102	Z	0	0	0	%100
93	M103	X	0	0	0	%100
94	M103	Z	0	0	0	%100
95	M105	X	-.026	-.026	0	%100
96	M105	Z	0	0	0	%100
97	M107	X	-.026	-.026	0	%100
98	M107	Z	0	0	0	%100
99	M108	X	-.37	-.37	0	%100
100	M108	Z	0	0	0	%100
101	M109	X	-.366	-.366	0	%100
102	M109	Z	0	0	0	%100
103	M110	X	0	0	0	%100
104	M110	Z	0	0	0	%100
105	M111	X	-.37	-.37	0	%100
106	M111	Z	0	0	0	%100
107	M118	X	0	0	0	%100
108	M118	Z	0	0	0	%100
109	M120	X	-.725	-.725	0	%100
110	M120	Z	0	0	0	%100
111	M121A	X	-.809	-.809	0	%100
112	M121A	Z	0	0	0	%100
113	M126	X	-.809	-.809	0	%100
114	M126	Z	0	0	0	%100
115	M131	X	-3.537	-3.537	0	%100
116	M131	Z	0	0	0	%100
117	M134	X	-3.537	-3.537	0	%100
118	M134	Z	0	0	0	%100
119	M148	X	0	0	0	%100
120	M148	Z	0	0	0	%100

Member Distributed Loads (BLC 74 : Structure Wm (270 Deg)) (Continued)

	Member Label	Direction	Start Magnitude[lb/ft,...	End Magnitude[lb/ft,F...	Start Location[ft,%]	End Location[ft,%]
121	M152B	X	0	0	0	%100
122	M152B	Z	0	0	0	%100
123	M155	X	-1.802	-1.802	0	%100
124	M155	Z	0	0	0	%100
125	M154	X	-.481	-.481	0	%100
126	M154	Z	0	0	0	%100
127	M157A	X	-.481	-.481	0	%100
128	M157A	Z	0	0	0	%100
129	M160	X	0	0	0	%100
130	M160	Z	0	0	0	%100
131	M161	X	0	0	0	%100
132	M161	Z	0	0	0	%100
133	M162	X	-1.432	-1.432	0	%100
134	M162	Z	0	0	0	%100
135	M163	X	-1.432	-1.432	0	%100
136	M163	Z	0	0	0	%100
137	M164	X	-1.432	-1.432	0	%100
138	M164	Z	0	0	0	%100
139	M165	X	-1.432	-1.432	0	%100
140	M165	Z	0	0	0	%100
141	M166	X	0	0	0	%100
142	M166	Z	0	0	0	%100
143	M167	X	-.445	-.445	0	%100
144	M167	Z	0	0	0	%100
145	M168	X	-.445	-.445	0	%100
146	M168	Z	0	0	0	%100
147	M169	X	0	0	0	%100
148	M169	Z	0	0	0	%100
149	M170	X	-.481	-.481	0	%100
150	M170	Z	0	0	0	%100
151	M171	X	-.481	-.481	0	%100
152	M171	Z	0	0	0	%100
153	M174	X	0	0	0	%100
154	M174	Z	0	0	0	%100
155	M177	X	0	0	0	%100
156	M177	Z	0	0	0	%100
157	M180	X	-.511	-.511	0	%100
158	M180	Z	0	0	0	%100
159	M183	X	-.511	-.511	0	%100
160	M183	Z	0	0	0	%100
161	M186	X	-.511	-.511	0	%100
162	M186	Z	0	0	0	%100
163	M189	X	-.511	-.511	0	%100
164	M189	Z	0	0	0	%100
165	M504	X	-.641	-.641	0	%100
166	M504	Z	0	0	0	%100
167	M502	X	-.641	-.641	0	%100
168	M502	Z	0	0	0	%100
169	M501	X	-.641	-.641	0	%100
170	M501	Z	0	0	0	%100
171	M500	X	-.641	-.641	0	%100
172	M500	Z	0	0	0	%100

Member Distributed Loads (BLC 74 : Structure Wm (270 Deg)) (Continued)

	Member Label	Direction	Start Magnitude[lb/ft,...	End Magnitude[lb/ft,F...	Start Location[ft,%]	End Location[ft,%]
173	M506	X	-.641	-.641	0	%100
174	M506	Z	0	0	0	%100
175	M505	X	-.641	-.641	0	%100
176	M505	Z	0	0	0	%100
177	MP2A	X	-.776	-.776	0	%100
178	MP2A	Z	0	0	0	%100
179	MP3A	X	-.641	-.641	0	%100
180	MP3A	Z	0	0	0	%100
181	MP2C	X	-.776	-.776	0	%100
182	MP2C	Z	0	0	0	%100
183	MP2B	X	-.776	-.776	0	%100
184	MP2B	Z	0	0	0	%100
185	M223	X	-1.674	-1.674	0	%100
186	M223	Z	0	0	0	%100
187	M226A	X	-1.674	-1.674	0	%100
188	M226A	Z	0	0	0	%100
189	M228A	X	-.593	-.593	0	%100
190	M228A	Z	0	0	0	%100
191	M232A	X	-1.674	-1.674	0	%100
192	M232A	Z	0	0	0	%100
193	M235	X	-1.674	-1.674	0	%100
194	M235	Z	0	0	0	%100
195	M237	X	-.593	-.593	0	%100
196	M237	Z	0	0	0	%100
197	M244	X	-1.227	-1.227	0	%100
198	M244	Z	0	0	0	%100
199	M245	X	-1.215	-1.215	0	%100
200	M245	Z	0	0	0	%100
201	M246	X	-1.215	-1.215	0	%100
202	M246	Z	0	0	0	%100
203	M249	X	0	0	0	%100
204	M249	Z	0	0	0	%100
205	MP1A	X	-.641	-.641	0	%100
206	MP1A	Z	0	0	0	%100
207	M271	X	-.662	-.662	0	%100
208	M271	Z	0	0	0	%100
209	M271B	X	-1.802	-1.802	0	%100
210	M271B	Z	0	0	0	%100
211	M274A	X	-.966	-.966	0	%100
212	M274A	Z	0	0	0	%100
213	M277	X	-.129	-.129	0	%100
214	M277	Z	0	0	0	%100
215	M280	X	-.129	-.129	0	%100
216	M280	Z	0	0	0	%100
217	M283	X	-.966	-.966	0	%100
218	M283	Z	0	0	0	%100
219	M265	X	-.582	-.582	0	%100
220	M265	Z	0	0	0	%100
221	M266	X	-.582	-.582	0	%100
222	M266	Z	0	0	0	%100
223	MP4A	X	-.641	-.641	0	%100
224	MP4A	Z	0	0	0	%100

Member Distributed Loads (BLC 74 : Structure Wm (270 Deg)) (Continued)

	Member Label	Direction	Start Magnitude[lb/ft,...	End Magnitude[lb/ft,F...	Start Location[ft,%]	End Location[ft,%]
225	MP3C	X	-.641	-.641	0	%100
226	MP3C	Z	0	0	0	%100
227	MP3B	X	-.641	-.641	0	%100
228	MP3B	Z	0	0	0	%100
229	MP1C	X	-.641	-.641	0	%100
230	MP1C	Z	0	0	0	%100
231	MP4C	X	-.641	-.641	0	%100
232	MP4C	Z	0	0	0	%100
233	MP1B	X	-.641	-.641	0	%100
234	MP1B	Z	0	0	0	%100
235	MP4B	X	-.641	-.641	0	%100
236	MP4B	Z	0	0	0	%100
237	M287	X	0	0	0	%100
238	M287	Z	0	0	0	%100
239	M288	X	-.662	-.662	0	%100
240	M288	Z	0	0	0	%100

Member Distributed Loads (BLC 75 : Structure Wm (300 Deg))

	Member Label	Direction	Start Magnitude[lb/ft,...	End Magnitude[lb/ft,F...	Start Location[ft,%]	End Location[ft,%]
1	M1	X	-.406	-.406	0	%100
2	M1	Z	-.235	-.235	0	%100
3	M7	X	-.127	-.127	0	%100
4	M7	Z	-.074	-.074	0	%100
5	M8	X	-.701	-.701	0	%100
6	M8	Z	-.405	-.405	0	%100
7	M13	X	-.423	-.423	0	%100
8	M13	Z	-.244	-.244	0	%100
9	M14	X	-.069	-.069	0	%100
10	M14	Z	-.04	-.04	0	%100
11	M18	X	-.069	-.069	0	%100
12	M18	Z	-.04	-.04	0	%100
13	M25	X	-.725	-.725	0	%100
14	M25	Z	-.419	-.419	0	%100
15	M26	X	-.725	-.725	0	%100
16	M26	Z	-.419	-.419	0	%100
17	M31	X	-.209	-.209	0	%100
18	M31	Z	-.121	-.121	0	%100
19	M42A	X	-.127	-.127	0	%100
20	M42A	Z	-.074	-.074	0	%100
21	M44A	X	-.106	-.106	0	%100
22	M44A	Z	-.061	-.061	0	%100
23	M44	X	-.069	-.069	0	%100
24	M44	Z	-.04	-.04	0	%100
25	M46A	X	-.069	-.069	0	%100
26	M46A	Z	-.04	-.04	0	%100
27	M46B	X	-.107	-.107	0	%100
28	M46B	Z	-.062	-.062	0	%100
29	M34A	X	-.423	-.423	0	%100
30	M34A	Z	-.244	-.244	0	%100
31	M35	X	-.106	-.106	0	%100
32	M35	Z	-.061	-.061	0	%100

Member Distributed Loads (BLC 75 : Structure Wm (300 Deg)) (Continued)

	Member Label	Direction	Start Magnitude[lb/ft,...	End Magnitude[lb/ft,F...	Start Location[ft,%]	End Location[ft,%]
33	M36	X	-.107	-.107	0	%100
34	M36	Z	-.062	-.062	0	%100
35	M38	X	-.837	-.837	0	%100
36	M38	Z	-.483	-.483	0	%100
37	M42	X	-.406	-.406	0	%100
38	M42	Z	-.235	-.235	0	%100
39	M47	X	-.127	-.127	0	%100
40	M47	Z	-.074	-.074	0	%100
41	M48	X	-.701	-.701	0	%100
42	M48	Z	-.405	-.405	0	%100
43	M50	X	-.106	-.106	0	%100
44	M50	Z	-.061	-.061	0	%100
45	M51	X	-.069	-.069	0	%100
46	M51	Z	-.04	-.04	0	%100
47	M53	X	-.069	-.069	0	%100
48	M53	Z	-.04	-.04	0	%100
49	M56	X	-.725	-.725	0	%100
50	M56	Z	-.419	-.419	0	%100
51	M57	X	-.725	-.725	0	%100
52	M57	Z	-.419	-.419	0	%100
53	M59	X	-.837	-.837	0	%100
54	M59	Z	-.483	-.483	0	%100
55	M61	X	-.127	-.127	0	%100
56	M61	Z	-.074	-.074	0	%100
57	M62	X	-.423	-.423	0	%100
58	M62	Z	-.244	-.244	0	%100
59	M64	X	-.069	-.069	0	%100
60	M64	Z	-.04	-.04	0	%100
61	M66	X	-.069	-.069	0	%100
62	M66	Z	-.04	-.04	0	%100
63	M67	X	-.107	-.107	0	%100
64	M67	Z	-.062	-.062	0	%100
65	M68	X	-.106	-.106	0	%100
66	M68	Z	-.061	-.061	0	%100
67	M69	X	-.423	-.423	0	%100
68	M69	Z	-.244	-.244	0	%100
69	M70	X	-.107	-.107	0	%100
70	M70	Z	-.062	-.062	0	%100
71	M79	X	-.209	-.209	0	%100
72	M79	Z	-.121	-.121	0	%100
73	M83	X	0	0	0	%100
74	M83	Z	0	0	0	%100
75	M88	X	-.509	-.509	0	%100
76	M88	Z	-.294	-.294	0	%100
77	M89	X	-2.803	-2.803	0	%100
78	M89	Z	-1.619	-1.619	0	%100
79	M91	X	-.106	-.106	0	%100
80	M91	Z	-.061	-.061	0	%100
81	M92	X	0	0	0	%100
82	M92	Z	0	0	0	%100
83	M94	X	0	0	0	%100
84	M94	Z	0	0	0	%100

Member Distributed Loads (BLC 75 : Structure Wm (300 Deg)) (Continued)

	Member Label	Direction	Start Magnitude[lb/ft,...	End Magnitude[lb/ft,F...	Start Location[ft,%]	End Location[ft,%]
85	M97	X	0	0	0	%100
86	M97	Z	0	0	0	%100
87	M98	X	0	0	0	%100
88	M98	Z	0	0	0	%100
89	M100	X	-.209	-.209	0	%100
90	M100	Z	-.121	-.121	0	%100
91	M102	X	-.509	-.509	0	%100
92	M102	Z	-.294	-.294	0	%100
93	M103	X	-.106	-.106	0	%100
94	M103	Z	-.061	-.061	0	%100
95	M105	X	0	0	0	%100
96	M105	Z	0	0	0	%100
97	M107	X	0	0	0	%100
98	M107	Z	0	0	0	%100
99	M108	X	-.427	-.427	0	%100
100	M108	Z	-.247	-.247	0	%100
101	M109	X	-.106	-.106	0	%100
102	M109	Z	-.061	-.061	0	%100
103	M110	X	-.106	-.106	0	%100
104	M110	Z	-.061	-.061	0	%100
105	M111	X	-.427	-.427	0	%100
106	M111	Z	-.247	-.247	0	%100
107	M118	X	-.234	-.234	0	%100
108	M118	Z	-.135	-.135	0	%100
109	M120	X	-.209	-.209	0	%100
110	M120	Z	-.121	-.121	0	%100
111	M121A	X	-.234	-.234	0	%100
112	M121A	Z	-.135	-.135	0	%100
113	M126	X	-.934	-.934	0	%100
114	M126	Z	-.54	-.54	0	%100
115	M131	X	-2.326	-2.326	0	%100
116	M131	Z	-1.343	-1.343	0	%100
117	M134	X	-2.326	-2.326	0	%100
118	M134	Z	-1.343	-1.343	0	%100
119	M148	X	-.139	-.139	0	%100
120	M148	Z	-.08	-.08	0	%100
121	M152B	X	-.171	-.171	0	%100
122	M152B	Z	-.099	-.099	0	%100
123	M155	X	-.836	-.836	0	%100
124	M155	Z	-.483	-.483	0	%100
125	M154	X	-.139	-.139	0	%100
126	M154	Z	-.08	-.08	0	%100
127	M157A	X	-.555	-.555	0	%100
128	M157A	Z	-.32	-.32	0	%100
129	M160	X	-.413	-.413	0	%100
130	M160	Z	-.239	-.239	0	%100
131	M161	X	-.413	-.413	0	%100
132	M161	Z	-.239	-.239	0	%100
133	M162	X	-.413	-.413	0	%100
134	M162	Z	-.239	-.239	0	%100
135	M163	X	-.413	-.413	0	%100
136	M163	Z	-.239	-.239	0	%100

Member Distributed Loads (BLC 75 : Structure Wm (300 Deg)) (Continued)

	Member Label	Direction	Start Magnitude[lb/ft,...	End Magnitude[lb/ft,F...	Start Location[ft,%]	End Location[ft,%]
137	M164	X	-1.653	-1.653	0	%100
138	M164	Z	-.955	-.955	0	%100
139	M165	X	-1.653	-1.653	0	%100
140	M165	Z	-.955	-.955	0	%100
141	M166	X	-.129	-.129	0	%100
142	M166	Z	-.074	-.074	0	%100
143	M167	X	-.129	-.129	0	%100
144	M167	Z	-.074	-.074	0	%100
145	M168	X	-.514	-.514	0	%100
146	M168	Z	-.297	-.297	0	%100
147	M169	X	-.139	-.139	0	%100
148	M169	Z	-.08	-.08	0	%100
149	M170	X	-.139	-.139	0	%100
150	M170	Z	-.08	-.08	0	%100
151	M171	X	-.555	-.555	0	%100
152	M171	Z	-.32	-.32	0	%100
153	M174	X	-.148	-.148	0	%100
154	M174	Z	-.085	-.085	0	%100
155	M177	X	-.148	-.148	0	%100
156	M177	Z	-.085	-.085	0	%100
157	M180	X	-.148	-.148	0	%100
158	M180	Z	-.085	-.085	0	%100
159	M183	X	-.148	-.148	0	%100
160	M183	Z	-.085	-.085	0	%100
161	M186	X	-.591	-.591	0	%100
162	M186	Z	-.341	-.341	0	%100
163	M189	X	-.591	-.591	0	%100
164	M189	Z	-.341	-.341	0	%100
165	M504	X	-.555	-.555	0	%100
166	M504	Z	-.32	-.32	0	%100
167	M502	X	-.555	-.555	0	%100
168	M502	Z	-.32	-.32	0	%100
169	M501	X	-.555	-.555	0	%100
170	M501	Z	-.32	-.32	0	%100
171	M500	X	-.555	-.555	0	%100
172	M500	Z	-.32	-.32	0	%100
173	M506	X	-.555	-.555	0	%100
174	M506	Z	-.32	-.32	0	%100
175	M505	X	-.555	-.555	0	%100
176	M505	Z	-.32	-.32	0	%100
177	MP2A	X	-.672	-.672	0	%100
178	MP2A	Z	-.388	-.388	0	%100
179	MP3A	X	-.555	-.555	0	%100
180	MP3A	Z	-.32	-.32	0	%100
181	MP2C	X	-.672	-.672	0	%100
182	MP2C	Z	-.388	-.388	0	%100
183	MP2B	X	-.672	-.672	0	%100
184	MP2B	Z	-.388	-.388	0	%100
185	M223	X	-.611	-.611	0	%100
186	M223	Z	-.353	-.353	0	%100
187	M226A	X	-.611	-.611	0	%100
188	M226A	Z	-.353	-.353	0	%100

Member Distributed Loads (BLC 75 : Structure Wm (300 Deg)) (Continued)

	Member Label	Direction	Start Magnitude[lb/ft,...	End Magnitude[lb/ft,F...	Start Location[ft,%]	End Location[ft,%]
189	M228A	X	-.171	-.171	0	%100
190	M228A	Z	-.099	-.099	0	%100
191	M232A	X	-1.869	-1.869	0	%100
192	M232A	Z	-1.079	-1.079	0	%100
193	M235	X	-1.869	-1.869	0	%100
194	M235	Z	-1.079	-1.079	0	%100
195	M237	X	-.685	-.685	0	%100
196	M237	Z	-.395	-.395	0	%100
197	M244	X	-1.059	-1.059	0	%100
198	M244	Z	-.612	-.612	0	%100
199	M245	X	-1.059	-1.059	0	%100
200	M245	Z	-.612	-.612	0	%100
201	M246	X	-1.049	-1.049	0	%100
202	M246	Z	-.606	-.606	0	%100
203	M249	X	-.168	-.168	0	%100
204	M249	Z	-.097	-.097	0	%100
205	MP1A	X	-.555	-.555	0	%100
206	MP1A	Z	-.32	-.32	0	%100
207	M271	X	-.765	-.765	0	%100
208	M271	Z	-.442	-.442	0	%100
209	M271B	X	-1.56	-1.56	0	%100
210	M271B	Z	-.901	-.901	0	%100
211	M274A	X	-1.56	-1.56	0	%100
212	M274A	Z	-.901	-.901	0	%100
213	M277	X	-.836	-.836	0	%100
214	M277	Z	-.483	-.483	0	%100
215	M280	X	-.112	-.112	0	%100
216	M280	Z	-.065	-.065	0	%100
217	M283	X	-.112	-.112	0	%100
218	M283	Z	-.065	-.065	0	%100
219	M265	X	-.168	-.168	0	%100
220	M265	Z	-.097	-.097	0	%100
221	M266	X	-.672	-.672	0	%100
222	M266	Z	-.388	-.388	0	%100
223	MP4A	X	-.555	-.555	0	%100
224	MP4A	Z	-.32	-.32	0	%100
225	MP3C	X	-.555	-.555	0	%100
226	MP3C	Z	-.32	-.32	0	%100
227	MP3B	X	-.555	-.555	0	%100
228	MP3B	Z	-.32	-.32	0	%100
229	MP1C	X	-.555	-.555	0	%100
230	MP1C	Z	-.32	-.32	0	%100
231	MP4C	X	-.555	-.555	0	%100
232	MP4C	Z	-.32	-.32	0	%100
233	MP1B	X	-.555	-.555	0	%100
234	MP1B	Z	-.32	-.32	0	%100
235	MP4B	X	-.555	-.555	0	%100
236	MP4B	Z	-.32	-.32	0	%100
237	M287	X	-.191	-.191	0	%100
238	M287	Z	-.11	-.11	0	%100
239	M288	X	-.191	-.191	0	%100
240	M288	Z	-.11	-.11	0	%100

Member Distributed Loads (BLC 76 : Structure Wm (330 Deg))

	Member Label	Direction	Start Magnitude[lb/ft,...	End Magnitude[lb/ft,F...	Start Location[ft,%]	End Location[ft,%]
1	M1	X	-.078	-.078	0	%100
2	M1	Z	-.135	-.135	0	%100
3	M7	X	-.221	-.221	0	%100
4	M7	Z	-.382	-.382	0	%100
5	M8	X	-1.214	-1.214	0	%100
6	M8	Z	-2.103	-2.103	0	%100
7	M13	X	-.183	-.183	0	%100
8	M13	Z	-.317	-.317	0	%100
9	M14	X	-.013	-.013	0	%100
10	M14	Z	-.023	-.023	0	%100
11	M18	X	-.013	-.013	0	%100
12	M18	Z	-.023	-.023	0	%100
13	M25	X	-.14	-.14	0	%100
14	M25	Z	-.242	-.242	0	%100
15	M26	X	-.14	-.14	0	%100
16	M26	Z	-.242	-.242	0	%100
17	M31	X	0	0	0	%100
18	M31	Z	0	0	0	%100
19	M42A	X	-.221	-.221	0	%100
20	M42A	Z	-.382	-.382	0	%100
21	M44A	X	0	0	0	%100
22	M44A	Z	0	0	0	%100
23	M44	X	-.013	-.013	0	%100
24	M44	Z	-.023	-.023	0	%100
25	M46A	X	-.013	-.013	0	%100
26	M46A	Z	-.023	-.023	0	%100
27	M46B	X	-.185	-.185	0	%100
28	M46B	Z	-.32	-.32	0	%100
29	M34A	X	-.183	-.183	0	%100
30	M34A	Z	-.317	-.317	0	%100
31	M35	X	0	0	0	%100
32	M35	Z	0	0	0	%100
33	M36	X	-.185	-.185	0	%100
34	M36	Z	-.32	-.32	0	%100
35	M38	X	-.362	-.362	0	%100
36	M38	Z	-.628	-.628	0	%100
37	M42	X	-.313	-.313	0	%100
38	M42	Z	-.542	-.542	0	%100
39	M47	X	0	0	0	%100
40	M47	Z	0	0	0	%100
41	M48	X	0	0	0	%100
42	M48	Z	0	0	0	%100
43	M50	X	-.183	-.183	0	%100
44	M50	Z	-.317	-.317	0	%100
45	M51	X	-.053	-.053	0	%100
46	M51	Z	-.091	-.091	0	%100
47	M53	X	-.053	-.053	0	%100
48	M53	Z	-.091	-.091	0	%100
49	M56	X	-.558	-.558	0	%100
50	M56	Z	-.967	-.967	0	%100
51	M57	X	-.558	-.558	0	%100
52	M57	Z	-.967	-.967	0	%100

Member Distributed Loads (BLC 76 : Structure Wm (330 Deg)) (Continued)

	Member Label	Direction	Start Magnitude[lb/ft,...	End Magnitude[lb/ft,F...	Start Location[ft,%]	End Location[ft,%]
53	M59	X	-.362	-.362	0	%100
54	M59	Z	-.628	-.628	0	%100
55	M61	X	0	0	0	%100
56	M61	Z	0	0	0	%100
57	M62	X	-.183	-.183	0	%100
58	M62	Z	-.317	-.317	0	%100
59	M64	X	-.053	-.053	0	%100
60	M64	Z	-.091	-.091	0	%100
61	M66	X	-.053	-.053	0	%100
62	M66	Z	-.091	-.091	0	%100
63	M67	X	0	0	0	%100
64	M67	Z	0	0	0	%100
65	M68	X	-.183	-.183	0	%100
66	M68	Z	-.317	-.317	0	%100
67	M69	X	-.183	-.183	0	%100
68	M69	Z	-.317	-.317	0	%100
69	M70	X	0	0	0	%100
70	M70	Z	0	0	0	%100
71	M79	X	-.362	-.362	0	%100
72	M79	Z	-.628	-.628	0	%100
73	M83	X	-.078	-.078	0	%100
74	M83	Z	-.135	-.135	0	%100
75	M88	X	-.221	-.221	0	%100
76	M88	Z	-.382	-.382	0	%100
77	M89	X	-1.214	-1.214	0	%100
78	M89	Z	-2.103	-2.103	0	%100
79	M91	X	0	0	0	%100
80	M91	Z	0	0	0	%100
81	M92	X	-.013	-.013	0	%100
82	M92	Z	-.023	-.023	0	%100
83	M94	X	-.013	-.013	0	%100
84	M94	Z	-.023	-.023	0	%100
85	M97	X	-.14	-.14	0	%100
86	M97	Z	-.242	-.242	0	%100
87	M98	X	-.14	-.14	0	%100
88	M98	Z	-.242	-.242	0	%100
89	M100	X	-.362	-.362	0	%100
90	M100	Z	-.628	-.628	0	%100
91	M102	X	-.221	-.221	0	%100
92	M102	Z	-.382	-.382	0	%100
93	M103	X	-.183	-.183	0	%100
94	M103	Z	-.317	-.317	0	%100
95	M105	X	-.013	-.013	0	%100
96	M105	Z	-.023	-.023	0	%100
97	M107	X	-.013	-.013	0	%100
98	M107	Z	-.023	-.023	0	%100
99	M108	X	-.185	-.185	0	%100
100	M108	Z	-.32	-.32	0	%100
101	M109	X	0	0	0	%100
102	M109	Z	0	0	0	%100
103	M110	X	-.183	-.183	0	%100
104	M110	Z	-.317	-.317	0	%100

Member Distributed Loads (BLC 76 : Structure Wm (330 Deg)) (Continued)

	Member Label	Direction	Start Magnitude[lb/ft,...	End Magnitude[lb/ft,F...	Start Location[ft,%]	End Location[ft,%]
105	M111	X	-.185	-.185	0	%100
106	M111	Z	-.32	-.32	0	%100
107	M118	X	-.405	-.405	0	%100
108	M118	Z	-.701	-.701	0	%100
109	M120	X	0	0	0	%100
110	M120	Z	0	0	0	%100
111	M121A	X	0	0	0	%100
112	M121A	Z	0	0	0	%100
113	M126	X	-.405	-.405	0	%100
114	M126	Z	-.701	-.701	0	%100
115	M131	X	-.493	-.493	0	%100
116	M131	Z	-.853	-.853	0	%100
117	M134	X	-.493	-.493	0	%100
118	M134	Z	-.853	-.853	0	%100
119	M148	X	-.24	-.24	0	%100
120	M148	Z	-.416	-.416	0	%100
121	M152B	X	-.296	-.296	0	%100
122	M152B	Z	-.513	-.513	0	%100
123	M155	X	-.065	-.065	0	%100
124	M155	Z	-.112	-.112	0	%100
125	M154	X	0	0	0	%100
126	M154	Z	0	0	0	%100
127	M157A	X	-.24	-.24	0	%100
128	M157A	Z	-.416	-.416	0	%100
129	M160	X	-.716	-.716	0	%100
130	M160	Z	-1.24	-1.24	0	%100
131	M161	X	-.716	-.716	0	%100
132	M161	Z	-1.24	-1.24	0	%100
133	M162	X	0	0	0	%100
134	M162	Z	0	0	0	%100
135	M163	X	0	0	0	%100
136	M163	Z	0	0	0	%100
137	M164	X	-.716	-.716	0	%100
138	M164	Z	-1.24	-1.24	0	%100
139	M165	X	-.716	-.716	0	%100
140	M165	Z	-1.24	-1.24	0	%100
141	M166	X	-.223	-.223	0	%100
142	M166	Z	-.386	-.386	0	%100
143	M167	X	0	0	0	%100
144	M167	Z	0	0	0	%100
145	M168	X	-.223	-.223	0	%100
146	M168	Z	-.386	-.386	0	%100
147	M169	X	-.24	-.24	0	%100
148	M169	Z	-.416	-.416	0	%100
149	M170	X	0	0	0	%100
150	M170	Z	0	0	0	%100
151	M171	X	-.24	-.24	0	%100
152	M171	Z	-.416	-.416	0	%100
153	M174	X	-.256	-.256	0	%100
154	M174	Z	-.443	-.443	0	%100
155	M177	X	-.256	-.256	0	%100
156	M177	Z	-.443	-.443	0	%100

Member Distributed Loads (BLC 76 : Structure Wm (330 Deg)) (Continued)

	Member Label	Direction	Start Magnitude[lb/ft,...	End Magnitude[lb/ft,F...	Start Location[ft,%]	End Location[ft,%]
157	M180	X	0	0	0	%100
158	M180	Z	0	0	0	%100
159	M183	X	0	0	0	%100
160	M183	Z	0	0	0	%100
161	M186	X	-.256	-.256	0	%100
162	M186	Z	-.443	-.443	0	%100
163	M189	X	-.256	-.256	0	%100
164	M189	Z	-.443	-.443	0	%100
165	M504	X	-.32	-.32	0	%100
166	M504	Z	-.555	-.555	0	%100
167	M502	X	-.32	-.32	0	%100
168	M502	Z	-.555	-.555	0	%100
169	M501	X	-.32	-.32	0	%100
170	M501	Z	-.555	-.555	0	%100
171	M500	X	-.32	-.32	0	%100
172	M500	Z	-.555	-.555	0	%100
173	M506	X	-.32	-.32	0	%100
174	M506	Z	-.555	-.555	0	%100
175	M505	X	-.32	-.32	0	%100
176	M505	Z	-.555	-.555	0	%100
177	MP2A	X	-.388	-.388	0	%100
178	MP2A	Z	-.672	-.672	0	%100
179	MP3A	X	-.32	-.32	0	%100
180	MP3A	Z	-.555	-.555	0	%100
181	MP2C	X	-.388	-.388	0	%100
182	MP2C	Z	-.672	-.672	0	%100
183	MP2B	X	-.388	-.388	0	%100
184	MP2B	Z	-.672	-.672	0	%100
185	M223	X	-.111	-.111	0	%100
186	M223	Z	-.191	-.191	0	%100
187	M226A	X	-.111	-.111	0	%100
188	M226A	Z	-.191	-.191	0	%100
189	M228A	X	0	0	0	%100
190	M228A	Z	0	0	0	%100
191	M232A	X	-.837	-.837	0	%100
192	M232A	Z	-1.45	-1.45	0	%100
193	M235	X	-.837	-.837	0	%100
194	M235	Z	-1.45	-1.45	0	%100
195	M237	X	-.296	-.296	0	%100
196	M237	Z	-.513	-.513	0	%100
197	M244	X	-.608	-.608	0	%100
198	M244	Z	-1.053	-1.053	0	%100
199	M245	X	-.614	-.614	0	%100
200	M245	Z	-1.063	-1.063	0	%100
201	M246	X	-.608	-.608	0	%100
202	M246	Z	-1.053	-1.053	0	%100
203	M249	X	-.291	-.291	0	%100
204	M249	Z	-.504	-.504	0	%100
205	MP1A	X	-.32	-.32	0	%100
206	MP1A	Z	-.555	-.555	0	%100
207	M271	X	-.331	-.331	0	%100
208	M271	Z	-.574	-.574	0	%100

Member Distributed Loads (BLC 76 : Structure Wm (330 Deg)) (Continued)

	Member Label	Direction	Start Magnitude[lb/ft,...	End Magnitude[lb/ft,F...	Start Location[ft,%]	End Location[ft,%]
209	M271B	X	-.483	-.483	0	%100
210	M271B	Z	-.836	-.836	0	%100
211	M274A	X	-.901	-.901	0	%100
212	M274A	Z	-1.56	-1.56	0	%100
213	M277	X	-.901	-.901	0	%100
214	M277	Z	-1.56	-1.56	0	%100
215	M280	X	-.483	-.483	0	%100
216	M280	Z	-.836	-.836	0	%100
217	M283	X	-.065	-.065	0	%100
218	M283	Z	-.112	-.112	0	%100
219	M265	X	0	0	0	%100
220	M265	Z	0	0	0	%100
221	M266	X	-.291	-.291	0	%100
222	M266	Z	-.504	-.504	0	%100
223	MP4A	X	-.32	-.32	0	%100
224	MP4A	Z	-.555	-.555	0	%100
225	MP3C	X	-.32	-.32	0	%100
226	MP3C	Z	-.555	-.555	0	%100
227	MP3B	X	-.32	-.32	0	%100
228	MP3B	Z	-.555	-.555	0	%100
229	MP1C	X	-.32	-.32	0	%100
230	MP1C	Z	-.555	-.555	0	%100
231	MP4C	X	-.32	-.32	0	%100
232	MP4C	Z	-.555	-.555	0	%100
233	MP1B	X	-.32	-.32	0	%100
234	MP1B	Z	-.555	-.555	0	%100
235	MP4B	X	-.32	-.32	0	%100
236	MP4B	Z	-.555	-.555	0	%100
237	M287	X	-.331	-.331	0	%100
238	M287	Z	-.574	-.574	0	%100
239	M288	X	0	0	0	%100
240	M288	Z	0	0	0	%100

Member Distributed Loads (BLC 81 : BLC 39 Transient Area Loads)

	Member Label	Direction	Start Magnitude[lb/ft,...	End Magnitude[lb/ft,F...	Start Location[ft,%]	End Location[ft,%]
1	M188	Y	-.361	-.361	0	.188
2	M189	Y	-.082	-1.107	0	.35
3	M189	Y	-1.107	-2.541	.35	.7
4	M189	Y	-2.541	-3.133	.7	1.05
5	M189	Y	-3.133	-2.497	1.05	1.4
6	M189	Y	-2.497	-.863	1.4	1.75
7	M198	Y	-3.711	-1.107	0	1.172
8	M179	Y	-.361	-.361	0	.188
9	M180	Y	-.082	-1.107	0	.35
10	M180	Y	-1.107	-2.541	.35	.7
11	M180	Y	-2.541	-3.133	.7	1.05
12	M180	Y	-3.133	-2.497	1.05	1.4
13	M180	Y	-2.497	-.863	1.4	1.75
14	M197	Y	-3.711	-1.107	0	1.172
15	M176	Y	-.361	-.361	0	.188
16	M177	Y	-.082	-1.107	0	.35

Member Distributed Loads (BLC 81 : BLC 39 Transient Area Loads) (Continued)

	Member Label	Direction	Start Magnitude[lb/ft,...	End Magnitude[lb/ft,F...	Start Location[ft,%]	End Location[ft,%]
17	M177	Y	-1.107	-2.541	.35	.7
18	M177	Y	-2.541	-3.133	.7	1.05
19	M177	Y	-3.133	-2.497	1.05	1.4
20	M177	Y	-2.497	-.863	1.4	1.75
21	M190	Y	-3.711	-1.107	0	1.172
22	M185	Y	-.361	-.361	0	.187
23	M186	Y	-.082	-1.107	0	.35
24	M186	Y	-1.107	-2.541	.35	.7
25	M186	Y	-2.541	-3.133	.7	1.05
26	M186	Y	-3.133	-2.497	1.05	1.4
27	M186	Y	-2.497	-.863	1.4	1.75
28	M191	Y	-3.711	-1.107	0	1.172
29	M173	Y	-.361	-.361	0	.188
30	M174	Y	-.082	-1.107	0	.35
31	M174	Y	-1.107	-2.541	.35	.7
32	M174	Y	-2.541	-3.133	.7	1.05
33	M174	Y	-3.133	-2.497	1.05	1.4
34	M174	Y	-2.497	-.863	1.4	1.75
35	M195	Y	-3.711	-1.107	0	1.172
36	M182	Y	-.361	-.361	0	.187
37	M183	Y	-.082	-1.107	0	.35
38	M183	Y	-1.107	-2.541	.35	.7
39	M183	Y	-2.541	-3.133	.7	1.05
40	M183	Y	-3.133	-2.497	1.05	1.4
41	M183	Y	-2.497	-.863	1.4	1.75
42	M196	Y	-3.711	-1.107	0	1.172
43	M193	Y	-2.724	-2.724	.007	9.715
44	M199	Y	-2.728	-2.728	0	9.667
45	M203	Y	-2.724	-2.724	.007	9.715
46	M205	Y	-2.728	-2.728	0	9.667
47	M209	Y	-2.724	-2.724	.007	9.715
48	M211	Y	-2.728	-2.728	0	9.667

Member Distributed Loads (BLC 82 : BLC 40 Transient Area Loads)

	Member Label	Direction	Start Magnitude[lb/ft,...	End Magnitude[lb/ft,F...	Start Location[ft,%]	End Location[ft,%]
1	M188	Y	-.764	-.764	0	.188
2	M189	Y	-.173	-2.341	0	.35
3	M189	Y	-2.341	-5.376	.35	.7
4	M189	Y	-5.376	-6.627	.7	1.05
5	M189	Y	-6.627	-5.283	1.05	1.4
6	M189	Y	-5.283	-1.826	1.4	1.75
7	M198	Y	-7.851	-2.341	0	1.172
8	M179	Y	-.764	-.764	0	.188
9	M180	Y	-.173	-2.341	0	.35
10	M180	Y	-2.341	-5.376	.35	.7
11	M180	Y	-5.376	-6.627	.7	1.05
12	M180	Y	-6.627	-5.283	1.05	1.4
13	M180	Y	-5.283	-1.826	1.4	1.75
14	M197	Y	-7.85	-2.341	0	1.172
15	M176	Y	-.764	-.764	0	.188
16	M177	Y	-.173	-2.341	0	.35

Member Distributed Loads (BLC 82 : BLC 40 Transient Area Loads) (Continued)

	Member Label	Direction	Start Magnitude[lb/ft,...	End Magnitude[lb/ft,F...	Start Location[ft,%]	End Location[ft,%]
17	M177	Y	-2.341	-5.376	.35	.7
18	M177	Y	-5.376	-6.627	.7	1.05
19	M177	Y	-6.627	-5.283	1.05	1.4
20	M177	Y	-5.283	-1.826	1.4	1.75
21	M190	Y	-7.85	-2.341	0	1.172
22	M185	Y	-.764	-.764	0	.187
23	M186	Y	-.173	-2.341	0	.35
24	M186	Y	-2.341	-5.376	.35	.7
25	M186	Y	-5.376	-6.627	.7	1.05
26	M186	Y	-6.627	-5.283	1.05	1.4
27	M186	Y	-5.283	-1.826	1.4	1.75
28	M191	Y	-7.85	-2.341	0	1.172
29	M173	Y	-.764	-.764	0	.188
30	M174	Y	-.173	-2.341	0	.35
31	M174	Y	-2.341	-5.376	.35	.7
32	M174	Y	-5.376	-6.627	.7	1.05
33	M174	Y	-6.627	-5.283	1.05	1.4
34	M174	Y	-5.283	-1.826	1.4	1.75
35	M195	Y	-7.85	-2.341	0	1.172
36	M182	Y	-.764	-.764	0	.187
37	M183	Y	-.173	-2.341	0	.35
38	M183	Y	-2.341	-5.376	.35	.7
39	M183	Y	-5.376	-6.627	.7	1.05
40	M183	Y	-6.627	-5.283	1.05	1.4
41	M183	Y	-5.283	-1.826	1.4	1.75
42	M196	Y	-7.85	-2.341	0	1.172
43	M193	Y	-5.763	-5.763	.007	9.715
44	M199	Y	-5.771	-5.771	0	9.667
45	M203	Y	-5.763	-5.763	.007	9.715
46	M205	Y	-5.771	-5.771	0	9.667
47	M209	Y	-5.763	-5.763	.007	9.715
48	M211	Y	-5.771	-5.771	0	9.667

Member Area Loads (BLC 39 : Structure D)

	Joint A	Joint B	Joint C	Joint D	Direction	Distribution	Magnitude[ksf]
1	N247	N249	N249A	N246	Y	Two Way	-.005
2	N249	N249A	N234	N235	Y	Two Way	-.005
3	N230	N251	N250	N231	Y	Two Way	-.005
4	N251	N242	N243	N250	Y	Two Way	-.005
5	N227	N226	N253	N252	Y	Two Way	-.005
6	N253	N238	N239	N252	Y	Two Way	-.005
7	N254	N262	N262A	N255	Y	Two Way	-.005
8	N262B	N265	N264	N263	Y	Two Way	-.005
9	N270	N273	N272	N271	Y	Two Way	-.005

Member Area Loads (BLC 40 : Structure Di)

	Joint A	Joint B	Joint C	Joint D	Direction	Distribution	Magnitude[ksf]
1	N247	N249	N249A	N246	Y	Two Way	-.011
2	N249	N249A	N234	N235	Y	Two Way	-.011
3	N230	N251	N250	N231	Y	Two Way	-.011

Member Area Loads (BLC 40 : Structure Di) (Continued)

	Joint A	Joint B	Joint C	Joint D	Direction	Distribution	Magnitude[ksf]
4	N251	N242	N243	N250	Y	Two Way	-.011
5	N227	N226	N253	N252	Y	Two Way	-.011
6	N253	N238	N239	N252	Y	Two Way	-.011
7	N254	N262	N262A	N255	Y	Two Way	-.011
8	N262B	N265	N264	N263	Y	Two Way	-.011
9	N270	N273	N272	N271	Y	Two Way	-.011

Envelope Joint Reactions

	Joint		X [lb]	LC	Y [lb]	LC	Z [lb]	LC	MX [k-ft]	LC	MY [k-ft]	LC	MZ [k-ft]	LC
1	N2	max	555.244	11	401.755	7	5410.419	1	0	51	0	51	0	51
2		min	-522.604	5	-323.981	1	-7581.114	7	0	1	0	1	0	1
3	N49A	max	4820.367	9	397.588	3	3635.723	3	0	51	0	51	0	51
4		min	-6690.079	3	-319.342	9	-2529.091	9	0	1	0	1	0	1
5	N96	max	6196.552	11	388.86	11	4098.405	11	0	51	0	51	0	51
6		min	-4411.611	5	-319.646	5	-3114.838	5	0	1	0	1	0	1
7	N329	max	40.469	10	3383.786	1	1027.844	7	0	51	.001	9	.001	3
8		min	-40.488	4	-1159.859	7	-3014.42	1	0	1	-.001	3	-.001	9
9	N331	max	872.762	3	3363.296	9	1493.041	9	.001	11	.002	5	0	5
10		min	-2597.191	9	-1138.982	3	-506.176	3	-.001	5	-.002	11	0	11
11	N333	max	2607.192	5	3387.688	5	1520.089	5	0	4	0	4	0	4
12		min	-785.922	11	-1024.516	11	-449.101	11	0	10	0	10	0	10
13	Totals:	max	6856.676	10	8107.049	13	6844.304	1						
14		min	-6856.674	4	3511.304	7	-6844.316	7						

Envelope AISC 15th(360-16): LRFD Steel Code Checks

	Member	Shape	Code C...	Loc[ft]	LC	Shear ...	Loc[ft]	Dir	LC	phi*Pnc [lb]	phi*Pnt [lb]	phi*Mn y-...	phi*Mn z-...	Cb	Eqn
1	M1	PIPE_3.0	.161	.833	5	.039	1.75		11	63823.644	65205	5.749	5.749	2....	H1-1b
2	M7	L1.5x1.5x4	.150	1.083	11	.011	1.083	y	11	14674.549	22275	.36	.834	1....	H2-1
3	M8	PL1/2X12_H...	.011	.333	2	.005	.333	y	16	165371.4...	194400	2.025	48.6	1....	H1-1b
4	M13	L1.5x1.5x4	.049	1.058	11	.006	0	z	11	20163.23	22275	.36	.834	2....	H2-1
5	M14	SR_0.625	.019	.25	2	.004	0		2	9749.139	9940.19	.104	.104	1....	H1-1b
6	M18	SR_0.625	.017	.25	2	.004	0		2	9749.139	9940.19	.104	.104	1....	H1-1b
7	M42A	L1.5x1.5x4	.151	1.083	11	.010	1.061	z	11	14674.549	22275	.36	.834	1....	H2-1
8	M44A	L1.5x1.5x4	.037	0	11	.005	0	y	4	20163.23	22275	.36	.834	2....	H2-1
9	M44	SR_0.625	.019	.25	12	.005	0		12	9749.139	9940.19	.104	.104	1....	H1-1b
10	M46A	SR_0.625	.018	.25	12	.005	0		12	9749.139	9940.19	.104	.104	1....	H1-1b
11	M46B	L1.5x1.5x4	.068	0	11	.016	.3	z	12	19971.061	22275	.36	.834	1....	H2-1
12	M34A	L1.5x1.5x4	.051	0	11	.006	0	y	11	20163.23	22275	.36	.834	2....	H2-1
13	M35	L1.5x1.5x4	.040	0	5	.004	0	z	4	20163.23	22275	.36	.834	2....	H2-1
14	M36	L1.5x1.5x4	.053	0	11	.010	.3	z	12	19971.061	22275	.36	.834	2....	H2-1
15	M42	PIPE_3.0	.130	.833	3	.026	.833		5	63823.644	65205	5.749	5.749	2....	H1-1b
16	M47	L1.5x1.5x4	.073	1.083	11	.008	1.083	z	20	14674.549	22275	.36	.834	1....	H2-1
17	M48	PL1/2X12_H...	.011	.333	8	.005	.333	y	21	165371.4...	194400	2.025	48.6	1....	H1-1b
18	M50	L1.5x1.5x4	.034	1.058	7	.004	0	z	7	20163.23	22275	.36	.834	2....	H2-1
19	M51	SR_0.625	.018	.25	10	.004	0		10	9749.139	9940.19	.104	.104	1....	H1-1b
20	M53	SR_0.625	.017	.25	10	.004	0		10	9749.139	9940.19	.104	.104	1....	H1-1b
21	M61	L1.5x1.5x4	.071	1.083	11	.007	1.083	y	22	14674.549	22275	.36	.834	1....	H2-1
22	M62	L1.5x1.5x4	.032	1.058	9	.003	0	y	9	20163.23	22275	.36	.834	2....	H2-1
23	M64	SR_0.625	.018	.25	8	.004	0		8	9749.139	9940.19	.104	.104	1....	H1-1b

Envelope AISC 15th(360-16): LRFD Steel Code Checks (Continued)

	Member	Shape	Code C...	Loc[ft]	LC	Shear ...	Loc[ft]	Dir	LC	phi*Pnc [lb]	phi*Pnt [lb]	phi*Mn y-...	phi*Mn z-...	Cb	Eqn
24	M66	SR_0.625	.017	.25	8	.004	0		8	9749.139	9940.19	.104	.104	1....	H1-1b
25	M67	L1.5x1.5x4	.055	.554	8	.014	.808	z	22	19971.061	22275	.36	.834	1....	H2-1
26	M68	L1.5x1.5x4	.022	0	7	.003	0	y	7	20163.23	22275	.36	.834	2....	H2-1
27	M69	L1.5x1.5x4	.024	0	9	.003	0	z	9	20163.23	22275	.36	.834	2....	H2-1
28	M70	L1.5x1.5x4	.034	.554	2	.008	.3	z	8	19971.061	22275	.36	.834	1....	H2-1
29	M83	PIPE_3.0	.166	.833	11	.032	1.75		2	63823.644	65205	5.749	5.749	2....	H1-1b
30	M88	L1.5x1.5x4	.124	1.083	2	.010	1.083	y	5	14674.549	22275	.36	.834	1....	H2-1
31	M89	PL1/2X12_H...	.010	.333	4	.005	.333	y	17	165371.4...	194400	2.025	48.6	1....	H1-1b
32	M91	L1.5x1.5x4	.043	1.058	3	.005	0	z	3	20163.23	22275	.36	.834	2....	H2-1
33	M92	SR_0.625	.019	.25	6	.005	0		6	9749.139	9940.19	.104	.104	1....	H1-1b
34	M94	SR_0.625	.018	.25	6	.005	0		6	9749.139	9940.19	.104	.104	1....	H1-1b
35	M102	L1.5x1.5x4	.129	1.083	2	.009	1.083	z	5	14674.549	22275	.36	.834	1....	H2-1
36	M103	L1.5x1.5x4	.044	1.058	6	.005	0	y	8	20163.23	22275	.36	.834	2....	H2-1
37	M105	SR_0.625	.018	.25	4	.005	0		3	9749.139	9940.19	.104	.104	1....	H1-1b
38	M107	SR_0.625	.017	.25	4	.005	0		3	9749.139	9940.19	.104	.104	1....	H1-1b
39	M108	L1.5x1.5x4	.059	1.108	6	.016	.808	z	6	19971.061	22275	.36	.834	1....	H2-1
40	M109	L1.5x1.5x4	.041	0	2	.005	0	y	3	20163.23	22275	.36	.834	2....	H2-1
41	M110	L1.5x1.5x4	.040	0	8	.004	0	z	8	20163.23	22275	.36	.834	2....	H2-1
42	M111	L1.5x1.5x4	.042	1.108	6	.010	.808	z	6	19971.061	22275	.36	.834	1....	H2-1
43	M131	PL1/2x8	.091	0	18	.226	.5	y	6	90068.726	129600	1.35	21.6	2....	H1-1b
44	M134	PL1/2x8	.110	0	8	.182	.5	y	7	90068.726	129600	1.35	21.6	2....	H1-1b
45	M148	PIPE_2.0	.494	4.484	10	.235	4.484		1	23088.171	32130	1.872	1.872	2....	H1-1b
46	M152B	HSS3X3X3	.425	3.336	20	.459	2.078	z	8	63735.017	78246	6.796	6.796	1....	H3-6
47	M155	PL1/4x7_HRA	.083	.187	8	.297	.187	y	3	54453.383	56700	.295	8.204	1....	H1-1b
48	M154	PIPE_2.0	.514	4.484	6	.236	4.484		9	23088.171	32130	1.872	1.872	2....	H1-1b
49	M157A	PIPE_2.0	.504	4.484	2	.235	4.484		5	23088.171	32130	1.872	1.872	2....	H1-1b
50	M160	PL1/4x7_HRA	.053	0	2	.301	0	y	7	53229.022	56700	.295	8.269	1....	H1-1b
51	M161	PL1/4x7_HRA	.053	0	12	.301	0	y	7	53229.022	56700	.295	8.269	1....	H1-1b
52	M162	PL1/4x7_HRA	.053	0	10	.301	0	y	3	53229.022	56700	.295	8.269	1....	H1-1b
53	M163	PL1/4x7_HRA	.053	0	8	.301	0	y	3	53229.022	56700	.295	8.269	1....	H1-1b
54	M164	PL1/4x7_HRA	.053	0	6	.301	0	y	11	53229.022	56700	.295	8.269	1....	H1-1b
55	M165	PL1/4x7_HRA	.053	0	4	.301	0	y	11	53229.022	56700	.295	8.269	1....	H1-1b
56	M166	PIPE_2.0	.493	2.517	4	.262	4.167		1	26092.12	32130	1.872	1.872	2....	H1-1b
57	M167	PIPE_2.0	.488	2.517	12	.253	4.167		9	26092.12	32130	1.872	1.872	2....	H1-1b
58	M168	PIPE_2.0	.496	2.517	8	.256	4.167		5	26092.12	32130	1.872	1.872	2....	H1-1b
59	M169	PIPE_2.0	.318	.766	17	.062	.711		17	23088.171	32130	1.872	1.872	2....	H1-1b
60	M170	PIPE_2.0	.273	.766	13	.058	.766		23	23088.171	32130	1.872	1.872	2....	H1-1b
61	M171	PIPE_2.0	.275	.766	21	.057	.766		19	23088.171	32130	1.872	1.872	2....	H1-1b
62	M174	L2x2x4	.113	1.75	21	.021	0	z	7	26193.622	30585.6	.691	1.577	1....	H2-1
63	M177	L2x2x4	.066	1.24	15	.028	0	y	12	26193.622	30585.6	.691	1.577	1....	H2-1
64	M180	L2x2x4	.096	1.75	17	.017	0	z	3	26193.622	30585.6	.691	1.577	1....	H2-1
65	M183	L2x2x4	.073	1.203	23	.033	0	y	8	26193.622	30585.6	.691	1.577	1....	H2-1
66	M186	L2x2x4	.097	1.75	13	.018	0	z	11	26193.622	30585.6	.691	1.577	1....	H2-1
67	M189	L2x2x4	.067	1.276	19	.029	0	y	4	26193.622	30585.6	.691	1.577	1....	H2-1
68	M504	PIPE_2.0	.043	4.125	12	.004	4.125		12	20866.733	32130	1.872	1.872	2....	H1-1b
69	M502	PIPE_2.0	.043	4.125	12	.004	4.125		12	20866.733	32130	1.872	1.872	2....	H1-1b
70	M501	PIPE_2.0	.043	4.125	7	.004	4.125		7	20866.733	32130	1.872	1.872	1....	H1-1b
71	M500	PIPE_2.0	.043	4.125	7	.004	4.125		7	20866.733	32130	1.872	1.872	1....	H1-1b
72	M506	PIPE_2.0	.043	4.125	3	.004	4.125		3	20866.733	32130	1.872	1.872	2....	H1-1b
73	M505	PIPE_2.0	.043	4.125	3	.004	4.125		3	20866.733	32130	1.872	1.872	2....	H1-1b
74	MP2A	PIPE_2.5	.416	4.125	4	.067	4.125		10	37773.818	50715	3.596	3.596	2....	H1-1b
75	MP3A	PIPE_2.0	.310	1.187	4	.113	3.437		6	20866.733	32130	1.872	1.872	2....	H1-1b

Envelope AISC 15th(360-16): LRFD Steel Code Checks (Continued)

	Member	Shape	Code C...	Loc[ft]	LC	Shear ...	Loc[ft]	Dir	LC	phi*Pnc [lb]	phi*Pnt [lb]	phi*Mn y-...	phi*Mn z-...	Cb	Eqn
76	MP2C	PIPE_2.5	.421	4.125	12	.072	4.125		6	37773.818	50715	3.596	3.596	2....	H1-1b
77	MP2B	PIPE_2.5	.424	4.125	8	.073	4.125		2	37773.818	50715	3.596	3.596	2....	H1-1b
78	M223	PL1/2x8	.110	0	2	.178	.5	y	4	90068.726	129600	1.35	21.6	2....	H1-1b
79	M226A	PL1/2x8	.109	0	4	.224	.5	y	3	90068.726	129600	1.35	21.6	2....	H1-1b
80	M228A	HSS3X3X3	.412	3.336	15	.455	2.078	z	4	63735.017	78246	6.796	6.796	1....	H3-6
81	M232A	PL1/2x8	.113	0	11	.173	.5	y	9	90068.726	129600	1.35	21.6	2....	H1-1b
82	M235	PL1/2x8	.089	0	24	.249	.5	y	11	90068.726	129600	1.35	21.6	2....	H1-1b
83	M237	HSS3X3X3	.427	2.625	17	.452	2.078	z	12	63735.017	78246	6.796	6.796	1....	H1-1b
84	M244	LL3x3x3x6	.098	4.896	1	.008	4.896	z	9	46414.257	70632	6.362	3.751	1	H1-1b*
85	M245	LL3x3x3x6	.098	4.896	9	.010	4.896	z	5	46414.257	70632	6.362	3.751	1	H1-1b*
86	M246	LL3x3x3x6	.098	4.896	5	.007	0	y	4	46414.257	70632	6.362	3.751	1	H1-1b*
87	M249	PIPE_2.5	.271	7.378	4	.082	3.099		9	11334.699	50715	3.596	3.596	1....	H1-1b
88	MP1A	PIPE_2.0	.271	4.125	21	.094	4.125		8	20866.733	32130	1.872	1.872	2....	H1-1b
89	M271	L3X3X4	.267	1.242	7	.041	0	z	3	45089.19	46656	1.688	3.756	1....	H2-1
90	M271B	PL1/4x7_HRA	.083	.187	6	.297	.187	y	11	54453.383	56700	.295	8.204	1....	H1-1b
91	M274A	PL1/4x7_HRA	.083	.188	4	.297	.188	y	11	54453.383	56700	.295	8.204	1....	H1-1b
92	M277	PL1/4x7_HRA	.083	.187	2	.297	.187	y	7	54453.383	56700	.295	8.204	1....	H1-1b
93	M280	PL1/4x7_HRA	.083	.187	12	.297	.187	y	7	54453.383	56700	.295	8.204	1....	H1-1b
94	M283	PL1/4x7_HRA	.083	.188	10	.297	.188	y	3	54453.383	56700	.295	8.204	1....	H1-1b
95	M265	PIPE_2.5	.270	7.378	12	.085	3.099		5	11334.699	50715	3.596	3.596	1....	H1-1b
96	M266	PIPE_2.5	.272	7.378	8	.083	3.099		1	11334.699	50715	3.596	3.596	1....	H1-1b
97	MP4A	PIPE_2.0	.197	1.187	18	.087	1.187		7	20866.733	32130	1.872	1.872	2....	H1-1b
98	MP3C	PIPE_2.0	.319	4.125	23	.112	3.437		2	20866.733	32130	1.872	1.872	2....	H1-1b
99	MP3B	PIPE_2.0	.311	1.187	8	.112	3.437		10	20866.733	32130	1.872	1.872	2....	H1-1b
100	MP1C	PIPE_2.0	.242	4.125	17	.081	4.125		4	20866.733	32130	1.872	1.872	2....	H1-1b
101	MP4C	PIPE_2.0	.234	1.187	14	.089	1.187		3	20866.733	32130	1.872	1.872	2....	H1-1b
102	MP1B	PIPE_2.0	.235	4.125	13	.081	4.125		12	20866.733	32130	1.872	1.872	2....	H1-1b
103	MP4B	PIPE_2.0	.200	1.187	22	.088	1.187		11	20866.733	32130	1.872	1.872	2....	H1-1b
104	M287	L3X3X4	.248	0	11	.039	1.242	z	3	45089.19	46656	1.688	3.756	1....	H2-1
105	M288	L3X3X4	.254	0	7	.039	0	z	8	45089.19	46656	1.688	3.756	2....	H2-1

Envelope AISI S100-16: LRFD Cold Formed Steel Code Checks

	Member	Shape	Code ...	Loc[ft]	LC	Shear ...	Loc[ft]	Dir	LC	phi*Pn[lb]	phi*Tn[lb]	phi*Mny...	phi*Mnz...	phi*V...	phi*V...	Cb	Eqn
1	M25	4CU2X0...	.756	2.674	7	.031	2.674	y	12	20976.5...	30474.9...	.697	3.022	8592...	8592...	1.716	H1.2-1
2	M26	4CU2X0...	.694	2.674	7	.030	2.674	y	1	20976.5...	30474.9...	.697	3.022	8592...	8592...	1.692	H1.2-1
3	M31	4CU2X0...	.214	.625	5	.051	1.063	z	11	25343.2...	30474.9...	.697	3.022	8592...	8592...	2.611	H1.2-1
4	M38	4CU2X0...	.235	.625	11	.051	1.063	z	11	25343.2...	30474.9...	.697	3.022	8592...	8592...	2.607	H1.2-1
5	M56	4CU2X0...	.692	2.674	3	.028	2.674	y	8	20976.5...	30474.9...	.697	3.022	8592...	8592...	1.705	H1.2-1
6	M57	4CU2X0...	.759	2.674	3	.031	2.674	y	9	20976.5...	30474.9...	.697	3.022	8592...	8592...	1.703	H1.2-1
7	M59	4CU2X0...	.169	.625	5	.046	1.062	z	8	25343.2...	30474.9...	.697	3.022	8592...	8592...	3.369	H1.2-1
8	M79	4CU2X0...	.191	.625	11	.051	1.125	z	11	25343.2...	30474.9...	.697	3.022	8592...	8592...	2.734	H1.2-1
9	M97	4CU2X0...	.630	2.674	11	.029	2.674	y	4	20976.5...	30474.9...	.697	3.022	8592...	8592...	1.693	H1.2-1
10	M98	4CU2X0...	.784	2.674	11	.033	2.674	y	5	20976.5...	30474.9...	.697	3.022	8592...	8592...	1.712	H1.2-1
11	M100	4CU2X0...	.218	.625	5	.056	1.063	z	5	25343.2...	30474.9...	.697	3.022	8592...	8592...	2.645	H1.2-1
12	M118	4CU2X0...	.299	.609	5	.024	.609	z	11	22124.9...	30474.9...	.697	3.022	8592...	8592...	1.335	H1.2-1
13	M120	4CU2X0...	.189	.625	11	.045	1.125	z	5	25343.2...	30474.9...	.697	3.022	8592...	8592...	2.913	H1.2-1
14	M121A	4CU2X0...	.299	2.641	5	.024	.609	z	11	22124.9...	30474.9...	.697	3.022	8592...	8592...	1.15	H1.2-1
15	M126	4CU2X0...	.312	2.641	11	.025	2.641	z	11	22124.9...	30474.9...	.697	3.022	8592...	8592...	1.074	H1.2-1

Client:	Verizon Wireless	Date:	5/20/2021
Site Name:	HARWINTON 1 CT		
Project No.	21777068A		
Title:	Antenna Mount Analysis	Page:	1

Version 3.1

I. Mount-to-Tower Connection Check

RISA Model Data

Nodes *(labeled per RISA)*	Orientation *(per graphic of typical platform)*
N49A	30
N2	270
N96	150

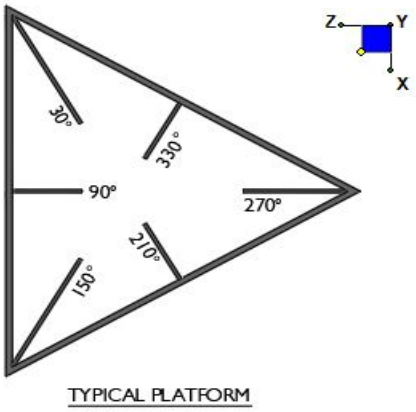

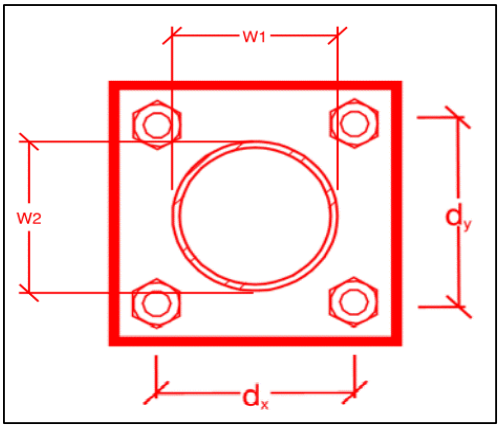

Tower Connection Plate and Weld Check

Connecting Standoff Member Shape:	Round
Weld Size (1/16 in):	3
Phi*Rn (kip/in):	4.18
Required Weld Strength (kip/in):	0.64
Weld Capacity:	**15.2%**

Unique Weld Check

Weld Pattern:	(2) Vertical Fillet Welds
L1 (in):	0.75
L2 (in):	6

Mount Desktop – Post Modification Inspection (PMI) Report Requirements

Documents & Photos Required from Contractor – Mount Modification

Purpose – to provide Maser Consulting Connecticut the proper documentation in order to complete the required Mount Desktop review of the Post Modification Inspection Report.

- Contractor is responsible for making certain the photos provided as noted below provide confirmation that the modification was completed in accordance with the modification drawings.
- Contractor shall relay any data that can impact the performance of the mount or the mount modification, this includes safety issues.

Base Requirements:

- Any special photos outside of the standard requirements will be indicated on the drawings
- Provide "as built drawings" showing contractor's name, preparer's signature, and date. Any deviations from the drawings (proposed modification) must be shown.
- Notation that all hardware was properly installed, and the existing hardware was inspected for any issues.
- Verification that loading is as communicated in the modification drawings. NOTE If loading is different than what is conveyed in the modification drawing contact Maser Consulting Connecticut immediately.
- Each photo should be time and date stamped
- Photos should be high resolution and submitted in a Zip File and should be organized in the file structure as depicted in Schedule A attached.
- Contractor shall ensure that the safety climb wire rope is supported and not adversely impacted by the install of the modification components. This may involve the install of wire rope guides, or other items to protect the wire rope.
- The photos in the file structure should be uploaded **to** **https://pmi.vzwsmart.com** as depicted on the drawings

Photo Requirements:

- *Base and "During Installation Photos"*
  - Base pictures include
    - Photo of Gate Signs showing the tower owner, site name, and number
    - Photo of carrier shelter showing the carrier site name and number if available
    - Photos of the galvanizing compound and/or paint used (if applicable), clearly showing the label and name
  - "During Installation Photos if provided - must be placed only in this folder
- *Photos taken at ground level*
  - Overall tower structure before and after installation of the modifications
  - Photos of the appropriate mount before and after installation of the modifications; if the mounts are at different rad elevations, pictures must be provided for all elevations that the modifications were installed

- *Photos taken at Mount Elevation*
    - Photos showing each individual sector before and also after installation of modifications. Each entire sector must be in one photo to show in the inter-connection of members.
        - These photos should also certify that the placement and geometry of the equipment on the mount is as depicted on the sketch and table in the mount analysis
    - Close-up photos of each installed modification per the modification drawings; pictures should also include connection hardware (U-bolts, bolts, nuts, all-threaded rods, etc.)
    - Photos showing the measurements of the installed modification member sizes (i.e. lengths, widths, depths, diameters, thicknesses)
    - Photos showing the elevation or distances of the installed modifications from the appropriate reference locations shown in the modification drawings
    - Photos showing the installed modifications onto the tower with tape drop measurements (if applicable) (i.e. ring/collar mounts, tie-backs, V-bracing kits, etc.); if the existing mount elevation needs to be changed according to the modification drawings, a tape drop measurement shall be provided before the elevation change
    - Photos showing the safety climb wire rope above and below the mount prior to modification.
    - Photos showing the climbing facility and safety climb if present.

Material Certification:

- Materials utilized must be as per specification on the drawings or the equivalent as validated by Maser Consulting Connecticut.
    - If the drawings are as specified on the drawings
        - The contractor should provide the packing list or the materials utilized to perform the mount modification
    - If an equivalent is utilized
        - It is required that the Maser Consulting Connecticut certification of such is included in the contractor submission package. There may be an additional charge for this certification if the equivalent submission doesn't meet specifications as prescribed in the drawings.
- The contractor must certify that the materials meet these specifications by one of these methods.

☐ The Material utilized was as specified on the Maser Consulting Connecticut Mount Modification Drawings and included
in the Material certification folder is a packing list or invoice for these materials

☐ The material utilized was an "equivalent" and included as part of the contractor submission is the Maser Consulting Connecticut certification, invoices, or specifications validating accepted status

Certifying Individual: Company _____

Name _____

Signature _____

Antenna & equipment placement and Geometry Confirmation:

- The contractor must certify that the antenna & equipment placement and geometry is in accordance with the antenna placement diagrams as included in this mount analysis.

☐ The contractor certifies that the photos support and the equipment on the mount is as depicted on the antenna placement diagrams as included in this mount analysis.

☐ The contractor notes that the equipment on the mount is not in accordance with the antenna placement diagrams and has accordingly marked up the diagrams or provided a diagram outlining the differences.

Certifying Individual: Company _____

Name _____

Signature _____

Special Instructions / Validation as required from the MA or Mod Drawings:

Issue:

Contractor shall install new safety climb wire rope guides to the existing standoff horizontal to prevent interference with mount connection.

Response:

Schedule A – Photo & Document File Structure

- VzW Site Number / Name
  - Base & “During Installation” Photos
  - Pre-Installation Photos
    - Alpha
    - Beta
    - Gamma
    - Ground Level
    - Tape Drop
  - Post-Installation Photos
    - Alpha
    - Beta
    - Gamma
    - Ground Level
    - Tape Drop
    - Photos of climbing facility and safety climb – If Present
  - Certifications – Submission of this document including certifications
  - Specific Required Additional Photos

Structure: 469283-VZW - HARWINTON 1 CT

Sector: **A** 5/20/2021

Structure Type: Monopole

Mount Elev: 168.00 Page: 1

Plan View

Front View
Looking at Structure

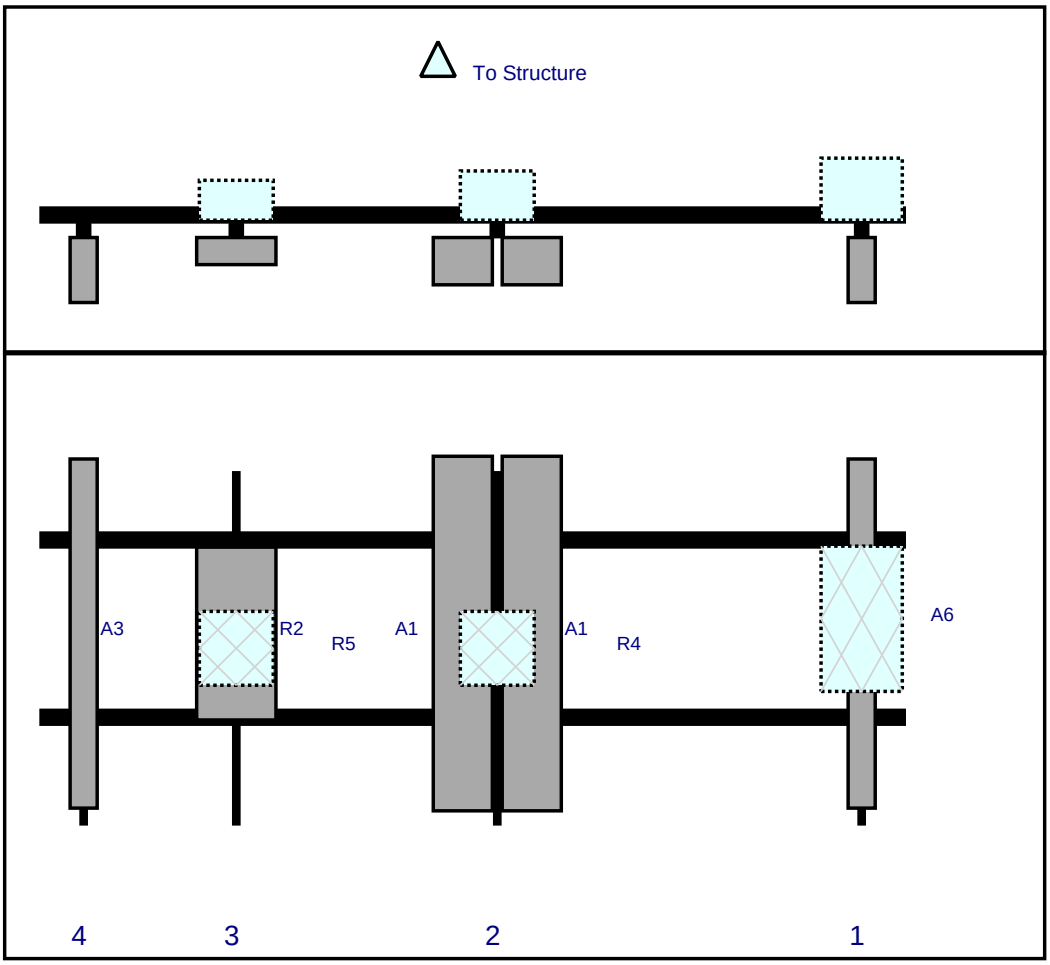

Ref#	Model	Height (in)	Width (in)	H Dist Frm L.	Pipe #	Pipe Pos V	Ant Pos	C. Ant Frm T.	Ant H Off	Status	Validation
A3	LPA-80080/6CF	70.9	5.5	167	1	a	Front	33	0	Retained	02/12/2021
A6	DB-C1-12C-24AB-0Z	29.5	16.5	167	1	a	Behind	30	0	Added	
A1	QS6656-5D	72	12	93	2	a	Front	33	7	Added	
A1	QS6656-5D	72	12	93	2	b	Front	33	-7	Added	
R4	B2/B66A RRH-BR049	15	15	93	2	a	Behind	36	0	Added	
R2	MT6407-77A	35.1	16.1	40	3	a	Front	33	0	Added	
R5	B5/B13 RRH-BR04C	15	15	40	3	a	Behind	36	0	Added	
A3	LPA-80080/6CF	70.9	5.5	9	4	a	Front	33	0	Retained	02/12/2021

Copyright 2019 by Tower Engineering Solutions, LLC. All Rights Reserved

Sector: **B** 5/20/2021

Structure Type: Monopole

Mount Elev: 168.00 Page: 2

Plan View

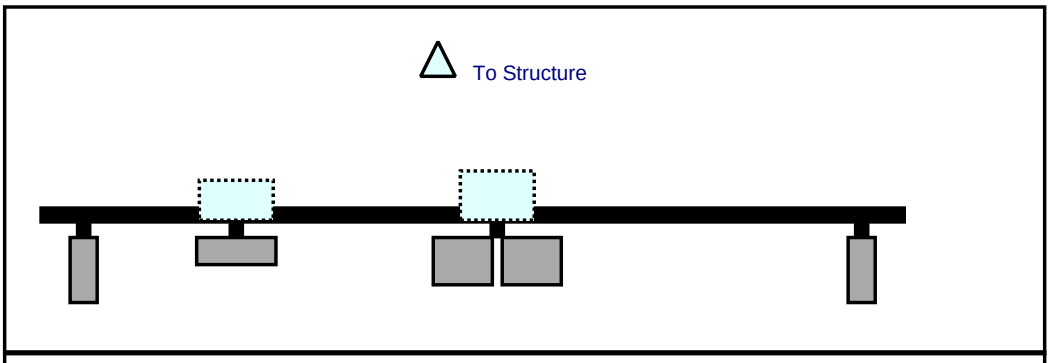

Front View
Looking at Structure

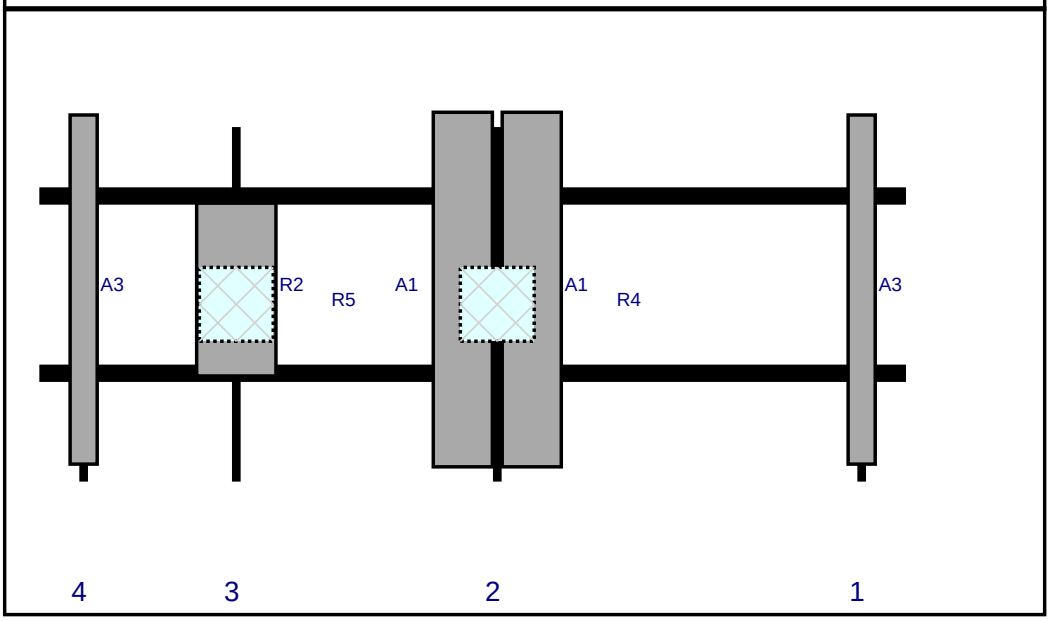

Ref#	Model	Height (in)	Width (in)	H Dist Frm L.	Pipe #	Pipe Pos V	Ant Pos	C. Ant Frm T.	Ant H Off	Status	Validation
A3	LPA-80080/6CF	70.9	5.5	167	1	a	Front	33	0	Retained	02/12/2021
A1	QS6656-5D	72	12	93	2	a	Front	33	7	Added	
A1	QS6656-5D	72	12	93	2	b	Front	33	-7	Added	
R4	B2/B66A RRH-BR049	15	15	93	2	a	Behind	36	0	Added	
R2	MT6407-77A	35.1	16.1	40	3	a	Front	33	0	Added	
R5	B5/B13 RRH-BR04C	15	15	40	3	a	Behind	36	0	Added	
A3	LPA-80080/6CF	70.9	5.5	9	4	a	Front	33	0	Retained	02/12/2021

Copyright 2019 by Tower Engineering Solutions, LLC. All Rights Reserved

Sector: **C** 5/20/2021

Structure Type: Monopole

Mount Elev: 168.00 Page: 3

Plan View

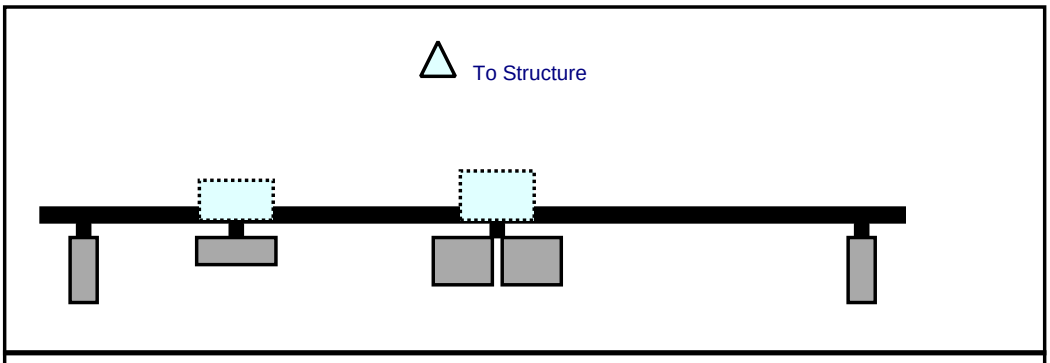

Front View
Looking at Structure

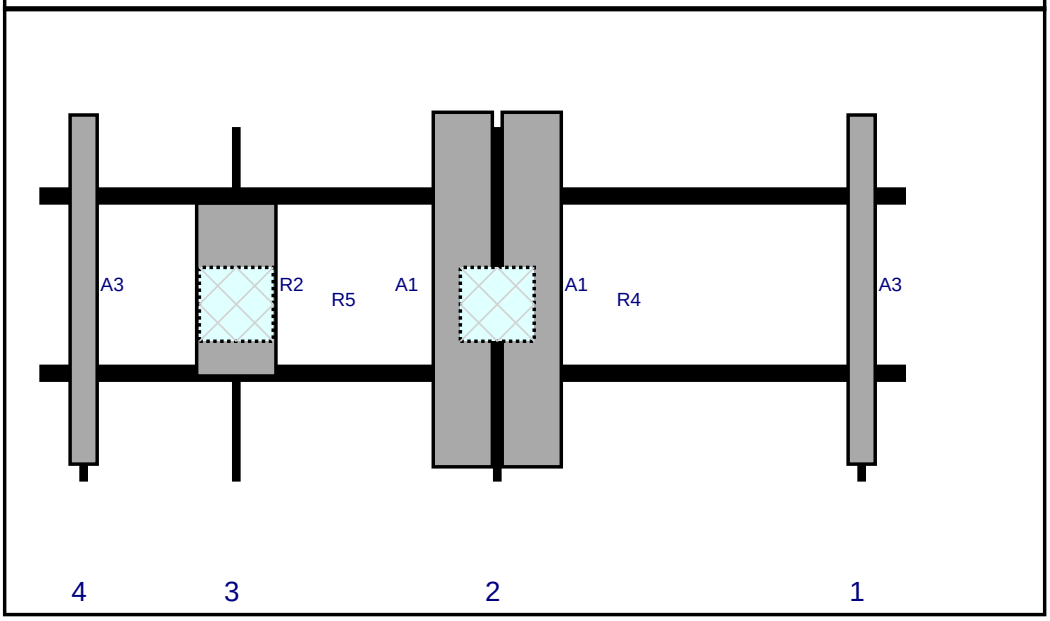

Ref#	Model	Height (in)	Width (in)	H Dist Frm L.	Pipe #	Pipe Pos V	Ant Pos	C. Ant Frm T.	Ant H Off	Status	Validation
A3	LPA-80080/6CF	70.9	5.5	167	1	a	Front	33	0	Retained	02/12/2021
A1	QS6656-5D	72	12	93	2	a	Front	33	7	Added	
A1	QS6656-5D	72	12	93	2	b	Front	33	-7	Added	
R4	B2/B66A RRH-BR049	15	15	93	2	a	Behind	36	0	Added	
R2	MT6407-77A	35.1	16.1	40	3	a	Front	33	0	Added	
R5	B5/B13 RRH-BR04C	15	15	40	3	a	Behind	36	0	Added	
A3	LPA-80080/6CF	70.9	5.5	9	4	a	Front	33	0	Retained	02/12/2021

Copyright 2019 by Tower Engineering Solutions, LLC. All Rights Reserved

Maser Consulting Connecticut

Subject	TIA-222-H Usage
Site Information	Site ID: 469283-VZW / HARWINTON 1 CT Site Name: HARWINTON 1 CT Carrier Name: Verizon Wireless Address: 64 Hungerford Lane Harwinton, Connecticut 06794 Litchfield County Latitude: 41.757264° Longitude: -73.052556°
Structure Information	Tower Type: Monopole Mount Type: 14.67-Ft Platform

To Whom It May Concern,

We respectfully submit the above referenced Antenna Mount Structural Analysis report in conformance with ANSI/TIA-222-H, Structural Standard for Antenna Supporting Structures and Antennas and Small Wind Turbine Support Structures.

The 2015 International Building Code states that, in Section 3108, telecommunication towers shall be designed and constructed in accordance with the provisions of TIA-222. The TIA-222-H is the latest revision of the TIA-222 Standard, effective as of January 01, 2018.

As with all ANSI standards and engineering best practice is to apply the most current revision of the standard. This ensures the engineer is applying all updates. As an example, the TIA-222-H standard includes updates to bring it in line with the latest AISC and ACI standards and it also incorporates the latest wind speed maps by ASCE 7 based on updated studies of the wind data.

The TIA-222-H standard clarifies these specific requirements for the antenna mount analysis such as modeling methods, seismic analysis, 30-degree increment wind directions and maintenance loading. Therefore, it is our opinion that TIA-222-H is the most appropriate standard for antenna mount structural analysis and is acceptable for use at this site to ensure the engineer is taking into account the most current engineering standard available.

Sincerely,

Taqi Khawaja, PE
Technical Manager

2000 Midlantic Drive - Suite 100, Mt. Laurel, New Jersey 08054 Phone: (856) 797-0412

Exhibit F

Power Density/RF Emissions Report

Site Name: ***HARWINTON 1 CT***
Cumulative Power Density

Operator	Operating Frequency	Number of Trans.	ERP Per Trans.	Total ERP	Distance to Target	Calculated Power Density
	(MHz)		(watts)	(watts)	(feet)	(mW/cm^2)
VZW 700	751	4	452	1807	170	0.0022
VZW CDMA	878.49	2	491	982	170	0.0012
VZW Cellular	874	4	452	1807	170	0.0022
VZW PCS	1975	4	1640	6559	170	0.0082
VZW AWS	2120	4	1883	7531	170	0.0094
VZW CBAND	3730.005	4	6531	26125	170	0.0325

Total Percentage of Maximum Permissible Exposure

*Guidelines adopted by the FCC on August 1, 1996, 47 CFR Part 1 based on NCRP Report 86, 1986 and generally on ANSI
**Calculation includes a -10 dB Off Beam Antenna Pattern Adjustment pursuant to Attachments B and C of the Siting Counci

MHz = Megahertz
mW/cm^2 = milliwatts per square centimeter
ERP = Effective Radiated Power

Absolute worst case maximum values used.

Maximum Permissible Exposure*	Fraction of MPE
(mW/cm^2)	(%)
0.5007	0.45%
0.5857	0.21%
0.5827	0.39%
1.0000	0.82%
1.0000	0.94%
1.0000	3.25%
	6.05%

/IEEE C95.1-1992
il's November 10, 2015 Memorandum for Exempt Modification filings

Exhibit G

Recipient Mailings

UNITED STATES POSTAL SERVICE®

Click-N-Ship®

usps.com
$8.70
US POSTAGE
Flat Rate Env

9405 5036 9930 0082 4758 18 0087 0000 0010 1581

U.S. POSTAGE PAID
Click-N-Ship®

12/03/2021

Mailed from 01566

PRIORITY MAIL 1-DAY™

DEBORAH CHASE
NORTHEAST SITE SOLUTIONS
420 MAIN ST
STE 1
STURBRIDGE MA 01566-1359

Expected Delivery Date: 12/06/21
Ref#: CR-876369

0006

C006

SHIP
TO: SARAH SNELL
CROWN CASTLE
1800 W PARK DR
WESTBOROUGH MA 01581-3926

USPS TRACKING #

9405 5036 9930 0082 4758 18

Electronic Rate Approved #038555749

Cut on dotted line.

Instructions

1. **Each Click-N-Ship® label is unique. Labels are to be used as printed and used only once. DO NOT PHOTO COPY OR ALTER LABEL.**
2. **Place your label so it does not wrap around the edge of the package.**
3. **Adhere your label to the package. A self-adhesive label is recommended. If tape or glue is used, DO NOT TAPE OVER BARCODE. Be sure all edges are secure.**
4. **To mail your package with PC Postage®, you may schedule a Package Pickup online, hand to your letter carrier, take to a Post Office™, or drop in a USPS collection box.**
5. **Mail your package on the "Ship Date" you selected when creating this label.**

Click-N-Ship® Label Record

USPS TRACKING # :
9405 5036 9930 0082 4758 18

Trans. #:	549946683	Priority Mail® Postage:	**$8.70**
Print Date:	12/03/2021	Total:	**$8.70**
Ship Date:	12/03/2021		
Expected Delivery Date:	12/06/2021		

From: DEBORAH CHASE
NORTHEAST SITE SOLUTIONS
420 MAIN ST
STE 1
STURBRIDGE MA 01566-1359

Ref#: CR-876369

To: SARAH SNELL
CROWN CASTLE
1800 W PARK DR
WESTBOROUGH MA 01581-3926

* Retail Pricing Priority Mail rates apply. There is no fee for USPS Tracking® service on Priority Mail service with use of this electronic rate shipping label. Refunds for unused postage paid labels can be requested online 30 days from the print date.

UNITED STATES POSTAL SERVICE® *Thank you for shipping with the United States Postal Service!*
Check the status of your shipment on the USPS Tracking® page at usps.com

UNITED STATES POSTAL SERVICE®

Click-N-Ship®

usps.com
$8.70
US POSTAGE
Flat Rate Env

9405 5036 9930 0082 4758 25 0087 0000 0010 6791

U.S. POSTAGE PAID
Click-N-Ship®

12/03/2021

Mailed from 01566

P

PRIORITY MAIL 2-DAY™

DEBORAH CHASE
NORTHEAST SITE SOLUTIONS
420 MAIN ST
STE 1
STURBRIDGE MA 01566-1359

Expected Delivery Date: 12/07/21
Ref#: CR-876369

0006

R006

SHIP
TO: MICHAEL R CRISS
FIRST SELECTMAN- HARWINTON
100 BENTLEY DR
HARWINTON CT 06791-2200

USPS TRACKING #

9405 5036 9930 0082 4758 25

Electronic Rate Approved #038555749

Cut on dotted line.

Instructions

1. **Each Click-N-Ship® label is unique. Labels are to be used as printed and used only once. DO NOT PHOTO COPY OR ALTER LABEL.**
2. **Place your label so it does not wrap around the edge of the package.**
3. **Adhere your label to the package. A self-adhesive label is recommended. If tape or glue is used, DO NOT TAPE OVER BARCODE. Be sure all edges are secure.**
4. **To mail your package with PC Postage®, you may schedule a Package Pickup online, hand to your letter carrier, take to a Post Office™, or drop in a USPS collection box.**
5. **Mail your package on the "Ship Date" you selected when creating this label.**

Click-N-Ship® Label Record

USPS TRACKING # :
9405 5036 9930 0082 4758 25

Trans. #:	549946683	Priority Mail® Postage:	**$8.70**
Print Date:	12/03/2021	Total:	**$8.70**
Ship Date:	12/03/2021		
Expected Delivery Date:	12/07/2021		

From: DEBORAH CHASE
NORTHEAST SITE SOLUTIONS
420 MAIN ST
STE 1
STURBRIDGE MA 01566-1359

Ref#: CR-876369

To: MICHAEL R CRISS
FIRST SELECTMAN- HARWINTON
100 BENTLEY DR
HARWINTON CT 06791-2200

* Retail Pricing Priority Mail rates apply. There is no fee for USPS Tracking® service on Priority Mail service with use of this electronic rate shipping label. Refunds for unused postage paid labels can be requested online 30 days from the print date.

UNITED STATES POSTAL SERVICE® *Thank you for shipping with the United States Postal Service!*
Check the status of your shipment on the USPS Tracking® page at usps.com

UNITED STATES POSTAL SERVICE®

Click-N-Ship®

usps.com
$8.70
US POSTAGE
Flat Rate Env

9405 5036 9930 0082 4758 32 0087 0000 0010 6791

U.S. POSTAGE PAID
Click-N-Ship®

12/03/2021

Mailed from 01566

P

PRIORITY MAIL 2-DAY™

DEBORAH CHASE
NORTHEAST SITE SOLUTIONS
420 MAIN ST
STE 1
STURBRIDGE MA 01566-1359

Expected Delivery Date: 12/07/21
Ref#: CR-876369

0006

R006

SHIP
TO: JEFFREY NEUMANN
BUILDING OFFICIAL
100 BENTLEY DR
HARWINTON CT 06791-2200

USPS TRACKING #

9405 5036 9930 0082 4758 32

Electronic Rate Approved #038555749

Cut on dotted line.

Instructions

1. **Each Click-N-Ship® label is unique. Labels are to be used as printed and used only once. DO NOT PHOTO COPY OR ALTER LABEL.**
2. **Place your label so it does not wrap around the edge of the package.**
3. **Adhere your label to the package. A self-adhesive label is recommended. If tape or glue is used, DO NOT TAPE OVER BARCODE. Be sure all edges are secure.**
4. **To mail your package with PC Postage®, you may schedule a Package Pickup online, hand to your letter carrier, take to a Post Office™, or drop in a USPS collection box.**
5. **Mail your package on the "Ship Date" you selected when creating this label.**

Click-N-Ship® Label Record

USPS TRACKING # :
9405 5036 9930 0082 4758 32

Trans. #:	549946683	Priority Mail® Postage:	**$8.70**
Print Date:	12/03/2021	Total:	**$8.70**
Ship Date:	12/03/2021		
Expected Delivery Date:	12/07/2021		

From: DEBORAH CHASE
NORTHEAST SITE SOLUTIONS
420 MAIN ST
STE 1
STURBRIDGE MA 01566-1359

Ref#: CR-876369

To: JEFFREY NEUMANN
BUILDING OFFICIAL
100 BENTLEY DR
HARWINTON CT 06791-2200

* Retail Pricing Priority Mail rates apply. There is no fee for USPS Tracking® service on Priority Mail service with use of this electronic rate shipping label. Refunds for unused postage paid labels can be requested online 30 days from the print date.

UNITED STATES POSTAL SERVICE® *Thank you for shipping with the United States Postal Service!*
Check the status of your shipment on the USPS Tracking® page at usps.com

UNITED STATES POSTAL SERVICE®

Click-N-Ship®

usps.com
$8.70
US POSTAGE
Flat Rate Env

9405 5036 9930 0082 4758 49 0087 0000 0010 6339

U.S. POSTAGE PAID
Click-N-Ship®

12/03/2021

Mailed from 01566

PRIORITY MAIL 2-DAY™

DEBORAH CHASE
NORTHEAST SITE SOLUTIONS
420 MAIN ST
STE 1
STURBRIDGE MA 01566-1359

Expected Delivery Date: 12/07/21
Ref#: CR-876369

0006

R010

SHIP
TO:

RED WOLF BROADCASTING CORPORATION
758 COLONEL LEDYARD HWY
LEDYARD CT 06339

USPS TRACKING #

9405 5036 9930 0082 4758 49

Electronic Rate Approved #038555749

Cut on dotted line.

Instructions

1. **Each Click-N-Ship® label is unique. Labels are to be used as printed and used only once. DO NOT PHOTO COPY OR ALTER LABEL.**
2. **Place your label so it does not wrap around the edge of the package.**
3. **Adhere your label to the package. A self-adhesive label is recommended. If tape or glue is used, DO NOT TAPE OVER BARCODE. Be sure all edges are secure.**
4. **To mail your package with PC Postage®, you may schedule a Package Pickup online, hand to your letter carrier, take to a Post Office™, or drop in a USPS collection box.**
5. **Mail your package on the "Ship Date" you selected when creating this label.**

Click-N-Ship® Label Record

USPS TRACKING # :
9405 5036 9930 0082 4758 49

Trans. #:	549946683	Priority Mail® Postage:	**$8.70**
Print Date:	12/03/2021	Total:	**$8.70**
Ship Date:	12/03/2021		
Expected Delivery Date:	12/07/2021		

From: DEBORAH CHASE
NORTHEAST SITE SOLUTIONS
420 MAIN ST
STE 1
STURBRIDGE MA 01566-1359

Ref#: CR-876369

To: RED WOLF BROADCASTING CORPORATION
758 COLONEL LEDYARD HWY
LEDYARD CT 06339

* Retail Pricing Priority Mail rates apply. There is no fee for USPS Tracking® service on Priority Mail service with use of this electronic rate shipping label. Refunds for unused postage paid labels can be requested online 30 days from the print date.

UNITED STATES POSTAL SERVICE® *Thank you for shipping with the United States Postal Service!*
Check the status of your shipment on the USPS Tracking® page at usps.com

876369

UNITED STATES POSTAL SERVICE.

FARMINGTON
210 MAIN ST
FARMINGTON, CT 06032-9998
(800)275-8777

12/08/2021 12:33 PM

Product	Qty	Unit Price	Price
Prepaid Mail Westborough, MA 01581 Weight: 0 lb 1.90 oz Acceptance Date: Wed 12/08/2021 Tracking #: 9405 5036 9930 0082 4758 18	1		$0.00
Prepaid Mail Harwinton, CT 06791 Weight: 0 lb 7.10 oz Acceptance Date: Wed 12/08/2021 Tracking #: 9405 5036 9930 0082 4758 25	1		$0.00
Prepaid Mail Harwinton, CT 06791 Weight: 0 lb 7.00 oz Acceptance Date: Wed 12/08/2021 Tracking #: 9405 5036 9930 0082 4758 32	1		$0.00
Prepaid Mail Ledyard, CT 06339 Weight: 0 lb 7.10 oz Acceptance Date: Wed 12/08/2021 Tracking #: 9405 5036 9930 0082 4758 49	1		$0.00

Grand Total: $0.00

****
USPS is a [illegible]