Y/4 ou

STATE OF CONNECTICUT

CONNECTICUT SITING COUNCIL

Ten Franklin Square, New Britain, CT 06051
Phone: (860) 827-2935 Fax: (860) 827-2950
E-Mail: siting.council@ct.gov
www.ct.gov/csc

April 3, 2013

Jennifer Notaro
Transcend Wireless
48 Spruce Street
Oakland, NJ 07436

RE: **EM-SPRINT-066-121015A** – Sprint Spectrum notice of intent to modify an existing telecommunications facility located at 123 Campville Hill Road, Harwinton, Connecticut.

Dear Ms. Notaro:

The Connecticut Siting Council (Council) hereby acknowledges your notice to modify this existing telecommunications facility, pursuant to Section 16-50j-73 of the Regulations of Connecticut State Agencies with the following conditions:

- Sprint's existing antennas shall be removed at the same time as the new antennas are to be installed without any interim loading period.
- Any deviation from the proposed modification as specified in this notice and supporting materials with Council shall render this acknowledgement invalid;
- Any material changes to this modification as proposed shall require the filing of a new notice with the Council;
- Not less than 45 days after completion of construction, the Council shall be notified in writing that construction has been completed;
- The validity of this action shall expire one year from the date of this letter; and
- The applicant may file a request for an extension of time beyond the one year deadline provided that such request is submitted to the Council not less than 60 days prior to the expiration;

The proposed modifications including the placement of all necessary equipment and shelters within the tower compound are to be implemented as specified here and in your notice dated September 19, 2012 and as modified according to your email message sent on February 27, 2013. The modifications are in compliance with the exception criteria in Section 16-50j-72 (b) of the Regulations of Connecticut State Agencies as changes to an existing facility site that would not increase tower height, extend the boundaries of the tower site, increase noise levels at the tower site boundary by six decibels, and increase the total radio frequencies electromagnetic radiation power density measured at the tower site boundary to or above the standard adopted by the State Department of Environmental Protection pursuant to General Statutes § 22a-162. This facility has also been carefully modeled to ensure that radio frequency emissions are conservatively below State and federal standards applicable to the frequencies now used on this tower.

This decision is under the exclusive jurisdiction of the Council. Please be advised that the validity of this action shall expire one year from the date of this letter. Any additional change to this facility will require explicit notice to this agency pursuant to Regulations of Connecticut State Agencies Section 16-50j-73. Such notice shall include all relevant information regarding the proposed change with cumulative worst-case modeling of radio frequency exposure at the closest point of uncontrolled access to the tower base, consistent with Federal Communications Commission, Office of Engineering and Technology, Bulletin 65. Thank you for your attention and cooperation.

Very truly yours,

Linda Roberts
Executive Director

LR/cdm

c: The Honorable Michael R. Criss, First Selectman, Town of Harwinton
Michael J. Orefice, Planning Chairman, Town of Harwinton
Crown Castle

Martin, David C.

From: Jennifer Notaro <jnotaro@transcendwireless.com>
Sent: Wednesday, February 27, 2013 2:23 PM
To: Martin, David C.
Cc: Bachman, Melanie; Roberts, Linda; Cunliffe, Fred; 'Catalano, Lauren (Lauren)** CTR **'
Subject: RE: 123 Campville Hill Rd, Harwinton, CT - 876376 CT33XC111
Attachments: CT33XC111 Structural Analysis Passing .pdf; NV_CT33XC111_01.30.13_Final CD_Rev 3_ 434832013130155442273.30.13_Final CD_Rev 3.pdf

Hi, David.

We finally have some resolution on this. We received approval to change the design for this site. This site will now be built as a "hot swap" meaning there will be no interim loading. The antennas will be removed and replaced on the same day.

That said, the Interim loading is no longer a factor. There will only be the final loading (which passes structurally). Please see the attached CD's and structural Analysis for your review.

Thank you for your patience in this matter!

Jennifer Notaro
Transcend Wireless
48 Spruce Street
Oakland, NJ 07436
C: 845-499-4712
F: 201-684-0066
****Please note new e-mail address****
jnotaro@transcendwireless.com

From: Martin, David C. [mailto:David.C.Martin@ct.gov]
Sent: Thursday, January 10, 2013 9:47 AM
To: 'Jennifer Palumbo Notaro'
Cc: Bachman, Melanie; Roberts, Linda; Cunliffe, Fred
Subject: RE: 123 Campville Hill Rd, Harwinton, CT - 876376 CT33XC111

Hello Jennifer,

Okay, so here's my problem – or more precisely our problem – originally this filing included two structural analyses; one that concluded that the tower had insufficient capacity to accommodate Sprint's interim loading and one that concluded that the tower could safely accommodate Sprint's final loading. The structural you sent me most recently is just the one for Sprint's final loading. But that still leaves the problem of the insufficient capacity for Sprint's interim loading, which I understand could be in place for up to a year.

From: Jennifer Palumbo Notaro [mailto:jpalumbo@transcendwireless.com]
Sent: Friday, January 04, 2013 2:09 PM
To: Martin, David C.
Subject: RE: 123 Campville Hill Rd, Harwinton, CT - 876376 CT33XC111

Hi, David. Happy New Year! Just wondering if everything was ok with the Structural I sent over. Is our application under review?

Thanks!

Jennifer Notaro
Transcend Wireless
48 Spruce Street
Oakland, NJ 07436
C: 845-499-4712

From: Jennifer Palumbo Notaro [mailto:jpalumbo@transcendwireless.com]
Sent: Thursday, December 27, 2012 11:28 AM
To: 'Martin, David C.'
Subject: RE: 123 Campville Hill Rd, Harwinton, CT - 876376 CT33XC111

No problem. Sorry I didn't give enough back story before firing off that email.
Hope you had a great holiday ☺

Jennifer Palumbo Notaro
Transcend Wireless
48 Spruce Street
Oakland, NJ 07436
C: 845-499-4712

From: Martin, David C. [mailto:David.C.Martin@ct.gov]
Sent: Thursday, December 27, 2012 11:24 AM
To: 'Jennifer Palumbo Notaro'
Subject: RE: 123 Campville Hill Rd, Harwinton, CT - 876376 CT33XC111

Okay. Now I'm up to speed. Thanks.

From: Jennifer Palumbo Notaro [mailto:jpalumbo@transcendwireless.com]
Sent: Thursday, December 27, 2012 11:12 AM
To: Martin, David C.
Subject: RE: 123 Campville Hill Rd, Harwinton, CT - 876376 CT33XC111

David

This was already submitted to you and we received a notification that you needed a passing structural before you could approve our application (see attached).

Jennifer Palumbo Notaro
Transcend Wireless
48 Spruce Street
Oakland, NJ 07436
C: 845-499-4712

From: Martin, David C. [mailto:David.C.Martin@ct.gov]
Sent: Thursday, December 27, 2012 11:07 AM
To: 'Jennifer Palumbo Notaro'
Subject: RE: 123 Campville Hill Rd, Harwinton, CT - 876376 CT33XC111

Jennifer,

This structural analysis is fine; it's what we normally receive.

I'm a little confused, however, about how you want to handle. Will you be submitting this with a cover letter or is this email your submission?

From: Jennifer Palumbo Notaro [mailto:jpalumbo@transcendwireless.com]
Sent: Thursday, December 27, 2012 10:52 AM
To: Martin, David C.
Cc: 'Catalano, Lauren (Lauren)** CTR **'
Subject: 123 Campville Hill Rd, Harwinton, CT - 876376 CT33XC111

David

Please see the attached passing Structural for the above referenced site. Please let us know if this meets your approval so that our application can be processed.

Thank you

Jennifer Palumbo Notaro
Transcend Wireless
48 Spruce Street
Oakland, NJ 07436
C: 845-499-4712

June 12, 2012

Mr. James Williams
Crown Castle
3530 Toringdon WaySuite 300
Charlotte, NC 28277
(704) 405-6521

B&T Engineering, Inc.
1717 S. Boulder, Suite 300
Tulsa, OK 74119
(918) 587-4630
ctuttle@btengineering.com

Subject: **Structural Analysis Report**

Carrier Designation:

***Sprint* Co-Locate**
Carrier Site Number: CT33XC111
Carrier Site Name: N/A

Crown Castle Designation:

Crown Castle BU Number: 876376
Crown Castle Site Name: Scoville Hill / Harwinton Rod
Crown Castle JDE Job Number: 189143
Crown Castle Work Order Number: 498947
Crown Castle Application Number: 151585 Rev. 0

Engineering Firm Designation:

B&T Engineering, Inc. Project Number: 83609.002

Site Data:

123 Campville Hill Rd., Harwinton, Litchfield County, CT
Latitude *41° 44' 12.12"*, Longitude *-73° 5' 50.86"*
177 Foot - Monopole Tower

Dear Mr. Williams,

B&T Engineering, Inc. is pleased to submit this **"Structural Analysis Report"** to determine the structural integrity of the above mentioned tower. This analysis has been performed in accordance with the Crown Castle Structural 'Statement of Work' and the terms of Crown Castle Purchase Order Number 468201, in accordance with application 151585, revision 0.

The purpose of the analysis is to determine acceptability of the tower stress level. Based on our analysis we have determined the tower stress level for the structure and foundation, under the following load case, to be:

LC5: Existing + Proposed for current applicant (1 Active Applicant) **Sufficient Capacity**
Note: See Table 1 and Table 2 for the proposed and existing/reserved loading, respectively.

The analysis has been performed in accordance with the TIA/EIA-222-F standard and the 2003 IBC; 2003 IRC (State Building Code, 2005 CT supplement) based upon a wind speed of 80.5 mph fastest mile.

All modifications and equipment proposed in this report shall be installed in accordance with the attached drawings for the determined available structural capacity to be effective.

We at *B&T Engineering, Inc.* appreciate the opportunity of providing our continuing professional services to you and Crown Castle. If you have any questions or need further assistance on this or any other projects please give us a call.

Respectfully submitted by:

STATE OF CONNECTICUT ★ CHAD TUTTLE ★ No. 25924 LICENSED PROFESSIONAL ENGINEER
6/13/12

Shardul Kadam, E.I.
Project Engineer

Chad E. Tuttle, P.E.
President

tnxTower Report - version 6.0.4.0

TABLE OF CONTENTS

1) INTRODUCTION

2) ANALYSIS CRITERIA
- Table 1 - Proposed Antenna and Cable Information
- Table 2 - Existing and Reserved Antenna and Cable Information
- Table 3 - Design Antenna and Cable Information

3) ANALYSIS PROCEDURE
- Table 4 - Documents Provided
- 3.1) Analysis Method
- 3.2) Assumptions

4) ANALYSIS RESULTS
- Table 5 - Section Capacity (Summary)
- Table 6 - Tower Component Stresses vs. Capacity
- 4.1) Recommendations

5) APPENDIX A
- tnxTower Output

6) APPENDIX B
- Base Level Drawing

7) APPENDIX C
- Additional Calculations

1) INTRODUCTION

This tower is a 177 ft Monopole tower designed by Summit in August of 2000. The tower was originally designed for a wind speed of 85 mph per TIA/EIA-222-F.This tower has been modified multiple times and those modifications have been incorporated in this analysis except the anchor rod modification by Global signal.

2) ANALYSIS CRITERIA

The structural analysis was performed for this tower in accordance with the requirements of TIA/EIA-222-F Structural Standards for Steel Antenna Towers and Antenna Supporting Structures using a fastest mile wind speed of 80.5 mph with no ice, 28.1 mph with 1 inch ice thickness and 50 mph under service loads.

Table 1 - Proposed Antenna and Cable Information

Mounting Level (ft)	Center Line Elevation (ft)	Number of Antennas	Antenna Manufacturer	Antenna Model	Number of Feed Lines	Feed Line Size (in)	Note
179.0	179.0	1	--	Platform Mount [LP 713-1]	3	1 1/4	1
	177.0	3	Alcatel Lucent	1900MHz RRH (65MHz)			
		3	Alcatel Lucent	800 EXTERNAL NOTCH FILTER			
		3	Alcatel Lucent	800MHZ RRH			
		9	Rfs Celwave	ACU-A20-N			
		3	Rfs Celwave	APXVSPP18-C-A20			

Notes:
1. Adding Handrails to the existing platform [LP-712-1]

Table 2 - Existing and Reserved Antenna and Cable Information

Mounting Level (ft)	Center Line Elevation (ft)	Number of Antennas	Antenna Manufacturer	Antenna Model	Number of Feed Lines	Feed Line Size (in)	Note
179.0	178.0	**6**	**Decibel**	**DB980H90E-M**	**6**	**1 5/8**	**2**
167.0	169.0	3	Ems Wireless	RR90-17-00DP	6	1 5/8	1
		6	Ericsson	KRY 112 75/1 TMA			
	167.0	1	--	T-Arm Mount [TA 602-3]			
154.0	156.0	1	Antel	BXA-171063-8BF-EDIN-2	12	1 5/8	1
		2	Antel	BXA-171085-8BF-EDIN-2			
		3	Antel	BXA-70063-6CF-2			
		2	Antel	LPA-80063/6CF			
		4	Antel	LPA-80080/6CF			
		6	Rfs Celwave	FD9R6004/2C-3L			
	154.0	1	--	Platform Mount [LP 303-1]			
137.0	139.0	12	Decibel	DB844H90	12	1 1/4	1
	137.0	1	--	Platform Mount [LP 712-1]			
127.0	129.0	6	Kathrein	AP14/17-880/1940/065D/ADT/XXP	12	1 5/8	1
		6	Powerwave	LGP 17201			
	127.0	1	--	Platform Mount [LP 303-1]			

Mounting Level (ft)	Center Line Elevation (ft)	Number of Antennas	Antenna Manufacturer	Antenna Model	Number of Feed Lines	Feed Line Size (in)	Note
117.0	117.0	3	Rfs Celwave	APXV18-206517S-C	6	1 5/8	1
		3	--	Flush Mounts			
79.0	80.0	1	Spectracom	8225	1	1/2	1
	79.0	1	--	Side Arm Mount [SO 701-1]			

Notes:
1) Existing Equipment
2) **Equipment to be Removed**

Table 3 - Design Antenna and Cable Information

Mounting Level (ft)	Center Line Elevation (ft)	Number of Antennas	Antenna Manufacturer	Antenna Model	Number of Feed Lines	Feed Line Size (in)
177	177	1	--	Low Profile Platform	--	--
		12	DAPA	48000		
167	167	1	--	Clamp On Low Profile Platform	--	--
		12	DAPA	48000		
157	157	1	--	Clamp On Low Profile Platform	--	--
		12	DAPA	48000		
75	75	1	--	GPS Antenna W/ Mount	--	--

3) ANALYSIS PROCEDURE

Table 4 - Documents Provided

Document	Remarks	Reference	Source
Online Application	Sprint co-locate revision# 0	151585	CCI Sites
Tower Manufacturer Drawings	Summit Manufacturing, Job No. 10633	1613568	CCI Sites
Foundation Drawings	Summit Manufacturing, Job No. 10633	1613623	CCI Sites
Geotech Report	Criscuolo Shepard Associates, File No. 99900.24	1531965	CCI Sites
Tower Modifications	Hutter Trankina Engineering Dated: 8/20/2004	1634507	CCI Sites
	Modification/PMI By B&T Engineering, Project No. 80185	2461484	CCI Sites
Antenna Configuration	Crown CAD Package	Date:5/30/2012	CCI Sites

3.1) Analysis Method

tnxTower (version 6.0.4.0), a commercially available analysis software package, was used to create a three-dimensional model of the tower and calculate member stresses for various loading cases. Selected output from the analysis is included in Appendix A.

3.2) Assumptions

1) Tower and structures were built in accordance with the manufacturer's specifications.
2) The tower and structures have been maintained in accordance with the manufacturer's specification.
3) The configuration of antennas, transmission cables, mounts and other appurtenances are as specified in Tables 1 and 2 and the referenced drawings.
4) When applicable, transmission cables are considered as structural components for calculating wind loads as allowed by TIA/EIA-222-F.
5) Mount areas and weights are assumed based on photographs provided.

This analysis may be affected if any assumptions are not valid or have been made in error. B&T Engineering, Inc. should be notified to determine the effect on the structural integrity of the tower.

4) ANALYSIS RESULTS

Table 5 - Section Capacity (Summary)

Section No.	Elevation (ft)	Component Type	Size	Critical Element	P (K)	SF*P_allow (K)	% Capacity	Pass / Fail
L1	177 - 129.75	Pole	TP30.268x22x0.219	1	-9.055	1061.189	64.0	Pass
L2	129.75 - 120	Pole	TP31.536x29.174x0.25	2	-12.634	1290.600	79.3	Pass
L3	120 - 110	Pole	TP33.286x31.536x0.394	3	-14.822	1764.879	72.6	Pass
L4	110 - 84	Pole	TP37.836x33.286x0.718	4	-21.642	2167.898	83.9	Pass
L5	84 - 80	Pole	TP38.045x35.57x0.783	5	-26.119	2324.792	88.4	Pass
L6	80 - 60	Pole	TP41.5x38.045x0.785	6	-33.943	2668.039	93.8	Pass
L7	60 - 39.3	Pole	TP45.167x41.5x0.734	7	-39.831	3395.737	82.7	Pass
L8	39.3 - 20	Pole	TP47.91x42.681x0.768	8	-52.608	3723.735	90.1	Pass
L9	20 - 0	Pole	TP51.41x47.91x0.779	9	-61.849	4113.571	90.6	Pass
							Summary	
						Pole (L6)	93.8	Pass
						RATING =	**93.8**	**Pass**

Table 6 - Tower Component Stresses vs. Capacity – LC3

Notes	Component	Elevation (ft)	% Capacity	Pass / Fail
1	Anchor Rods	Base	98.5	Pass
1	Base Plate	Base	97.5	Pass
1	Base Foundation	Base	89.4	Pass

Structure Rating (max from all components) =	**98.5%**

Notes:
1) See additional documentation in "Appendix C – Additional Calculations" for calculations supporting the % capacity consumed.
2) Capacities up to 100% are considered acceptable based on analysis methods used.
3) The percent capacities shown above (excluding foundations) include the 1/3 increase in allowable stresses as allowed by TIA/EIA-222-F.

4.1) Recommendations

The tower and its foundation have sufficient capacity to carry the existing and proposed loads. No modifications are required at this time.

APPENDIX A

TNXTOWER OUTPUT

Section	1	2	3	4	5	6	7	8	9
Length (ft)	47.250	13.500	10.000	26.000	8.750	20.000	20.700	25.050	20.000
Number of Sides	18	18	18	18	18	18	18	18	18
Thickness (in)	0.219	0.250	0.394	0.718	0.783	0.785	0.734	0.768	0.779
Socket Length (ft)	3.750			4.750			5.750		
Top Dia (in)	22.000	29.174	31.536	33.286	35.570	38.045	41.500	42.681	47.910
Bot Dia (in)	30.268	31.536	33.286	37.836	38.045	41.500	45.167	47.910	51.410
Grade	A607-65			53.7 ksi	32.8 ksi	31.4 ksi	32.9 ksi	42.0 ksi	40.6 ksi	41.1 ksi
Weight (K)	2.9	1.1	1.4	7.0	2.7	6.6	7.0	9.3	8.2

Total Weight (K): 46.1

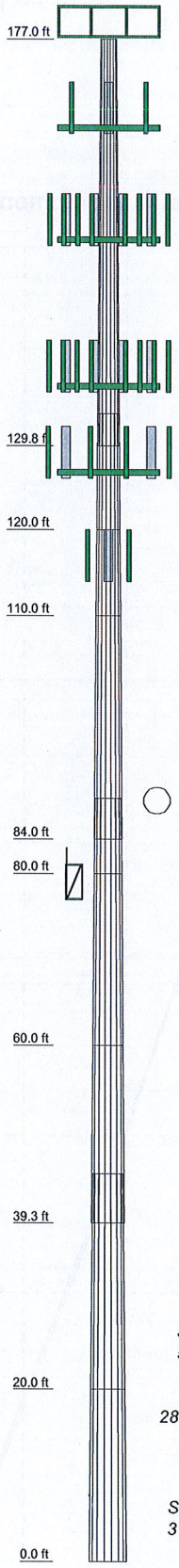

AXIAL
92 K

SHEAR
5 K

MOMENT
636 kip-ft

TORQUE 0 kip-ft
28 mph WIND - 1.000 in ICE

AXIAL
62 K

SHEAR
31 K

MOMENT
3787 kip-ft

TORQUE 1 kip-ft
REACTIONS - 80 mph WIND

DESIGNED APPURTENANCE LOADING

TYPE	ELEVATION	TYPE	ELEVATION
1900MHz RRH (65MHz) (P)	179	BXA-171085-8BF-EDIN-2 w/ Mount Pipe (E)	154
1900MHz RRH (65MHz) (P)	179	BXA-70063-6CF-2 w/ Mount Pipe (E)	154
1900MHz RRH (65MHz) (P)	179	BXA-70063-6CF-2 w/ Mount Pipe (E)	154
800 EXTERNAL NOTCH FILTER (P)	179	BXA-70063-6CF-2 w/ Mount Pipe (E)	154
800 EXTERNAL NOTCH FILTER (P)	179	(2) FD9R6004/2C-3L (E)	154
800 EXTERNAL NOTCH FILTER (P)	179	(2) FD9R6004/2C-3L (E)	154
800MHZ RRH (P)	179	(2) FD9R6004/2C-3L (E)	154
800MHZ RRH (P)	179	Platform Mount [LP 303-1] (E)	154
800MHZ RRH (P)	179	(4) DB844H90 w/ Mount Pipe (E)	137
(3) ACU-A20-N (P)	179	(4) DB844H90 w/ Mount Pipe (E)	137
(3) ACU-A20-N (P)	179	(4) DB844H90 w/ Mount Pipe (E)	137
(3) ACU-A20-N (P)	179	Platform Mount [LP 712-1] (E)	137
APXVSPP18-C-A20 w/ Mount Pipe (P)	179	(2) AP14/17-880/1940/065D/ADT/XXP w/ Mount Pipe (E)	127
APXVSPP18-C-A20 w/ Mount Pipe (P)	179	(2) AP14/17-880/1940/065D/ADT/XXP w/ Mount Pipe (E)	127
APXVSPP18-C-A20 w/ Mount Pipe (P)	179	(2) AP14/17-880/1940/065D/ADT/XXP w/ Mount Pipe (E)	127
Platform Mount [LP 713-1] (P)	179	(2) LGP 17201 (E)	127
RR90-17-00DP w/Mount Pipe (E)	167	(2) LGP 17201 (E)	127
RR90-17-00DP w/Mount Pipe (E)	167	(2) LGP 17201 (E)	127
RR90-17-00DP w/Mount Pipe (E)	167	Platform Mount [LP 303-1] (E)	127
(2) KRY 112 75/1 TMA (E)	167	APXV18-206517S-C w/ Mount Pipe (E)	117
(2) KRY 112 75/1 TMA (E)	167	APXV18-206517S-C w/ Mount Pipe (E)	117
(2) KRY 112 75/1 TMA (E)	167	APXV18-206517S-C w/ Mount Pipe (E)	117
T-Arm Mount [TA 602-3] (E)	167	8225 (E)	79
(3) 6' x 2" Mount Pipe (E)	167	Side Arm Mount [SO 701-1] (E)	79
(3) 6' x 2" Mount Pipe (E)	167		
(3) 6' x 2" Mount Pipe (E)	167		
(2) LPA-80063/6CF w/ Mount Pipe (E)	154		
(2) LPA-80080/6CF w/ Mount Pipe (E)	154		
(2) LPA-80080/6CF w/ Mount Pipe (E)	154		
BXA-171063-8BF-EDIN-2 w/ Mount Pipe (E)	154		
BXA-171085-8BF-EDIN-2 w/ Mount Pipe (E)	154		

MATERIAL STRENGTH

GRADE	Fy	Fu	GRADE	Fy	Fu
A607-65	65 ksi	80 ksi	32.9 ksi	33 ksi	65 ksi
53.7 ksi	54 ksi	65 ksi	42.0 ksi	42 ksi	65 ksi
32.8 ksi	33 ksi	65 ksi	40.6 ksi	41 ksi	65 ksi
31.4 ksi	31 ksi	65 ksi	41.1 ksi	41 ksi	65 ksi

TOWER DESIGN NOTES

1. Tower is located in Litchfield County, Connecticut.
2. Tower designed for a 80 mph basic wind in accordance with the TIA/EIA-222-F Standard.
3. Tower is also designed for a 28 mph basic wind with 1.00 in ice. Ice is considered to increase in thickness with height.
4. Deflections are based upon a 50 mph wind.
5. TOWER RATING: 93.8%

B&T Engineering.Inc.
1717 S.Boulder, Suite 300
Tulsa, OK 74119
Phone: (918) 587-4630
FAX: (918) 587-4630

Job: 83609.002- SCOVILLE HILL / HARWINTON ROD, CT (BU# 87637

Project: 177' Summit MP/ App ID: 151585; Rev: 0

Client: Crown Castle	Drawn by: skadam	App'd:
Code: TIA/EIA-222-F	Date: 06/12/12	Scale: NTS
Path: S:\B&T Engineering\Projects\Crown Castle\83609_876376_Scoville\Engineering\B\SAV002\83609_002_Scoville_CT_Final.et		Dwg No. E-1

TIA/EIA-222-F - 80 mph/28 mph 1.000 in Ice

Vx ---------- Vz

Maximum Values

Mx ---------- Mz

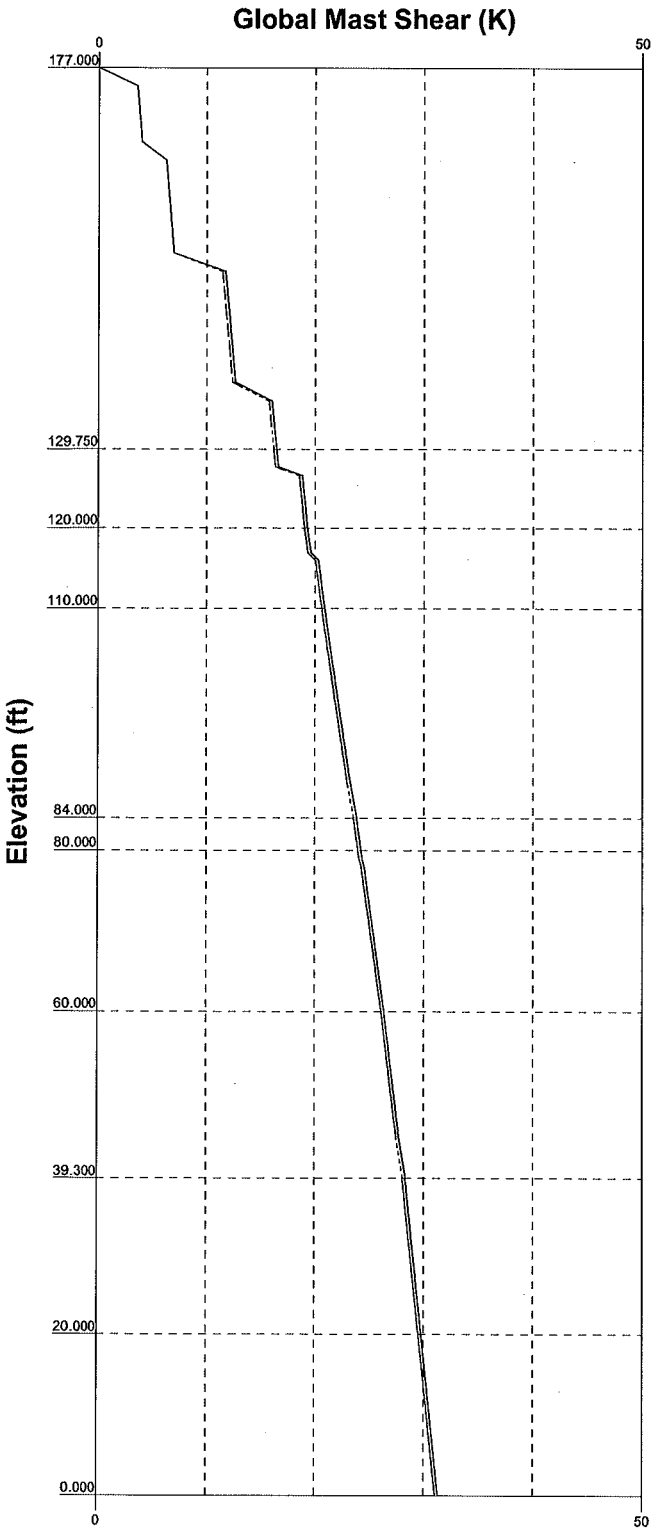

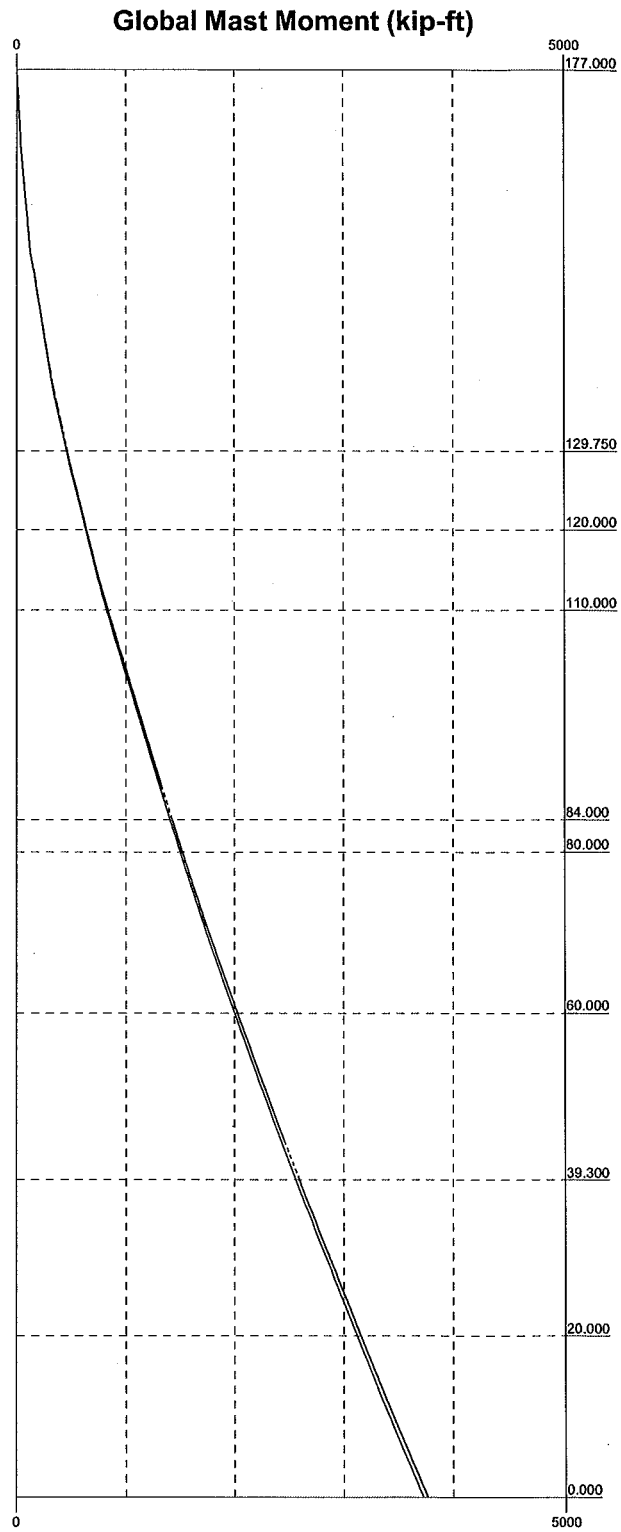

B&T Engineering.Inc. 1717 S.Boulder, Suite 300 Tulsa, OK 74119 Phone: (918) 587-4630 FAX: (918) 587-4630	Job: 83609.002- SCOVILLE HILL / HARWINTON ROD, CT (BU# 87637		
	Project: 177' Summit MP/ App ID: 151585; Rev: 0		
	Client: Crown Castle	Drawn by: skadam	App'd:
	Code: TIA/EIA-222-F	Date: 06/12/12	Scale: NTS
	Path:		Dwg No. E-4

TIA/EIA-222-F - Service - 50 mph

Maximum Values

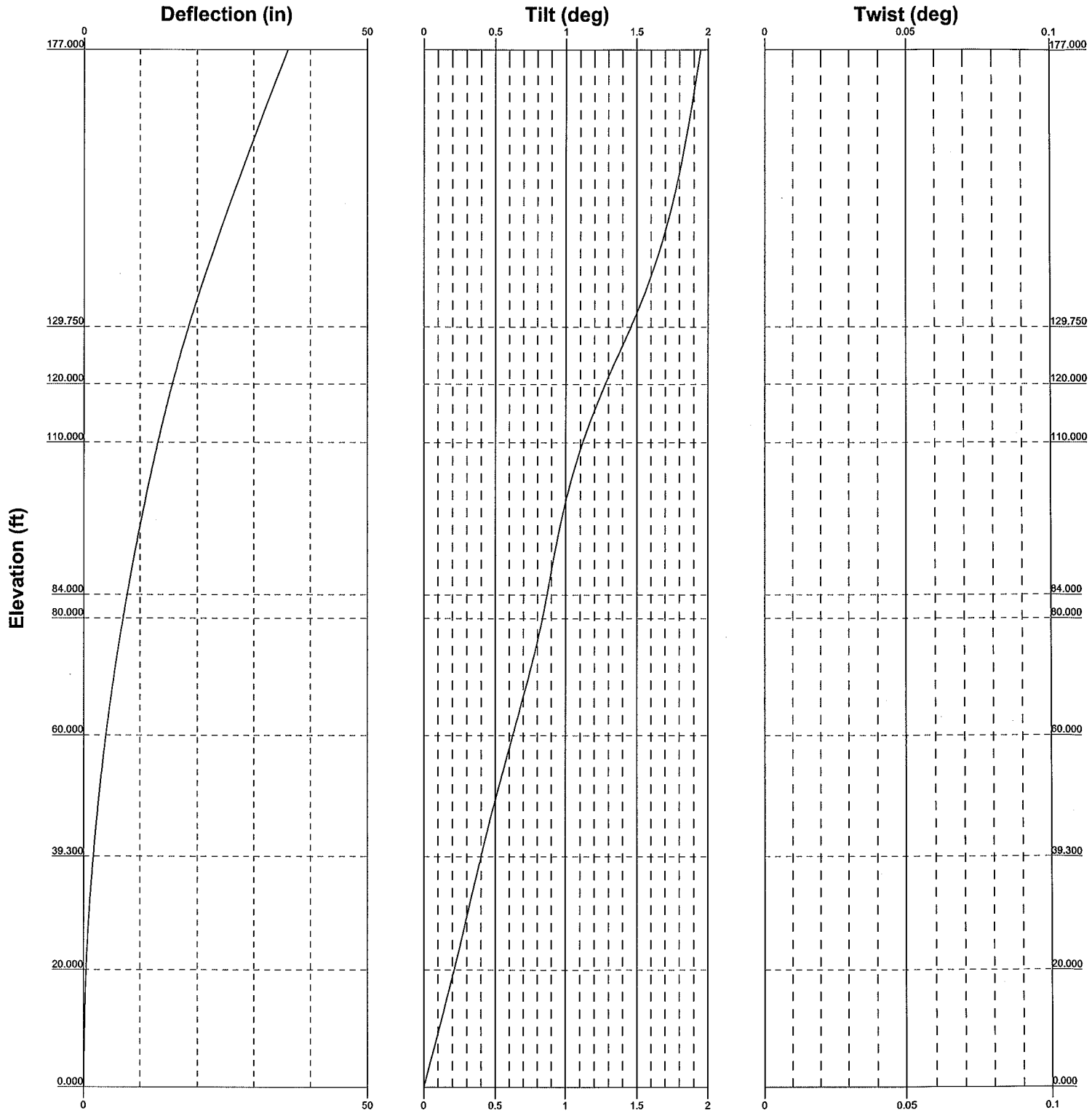

B&T Engineering.Inc.
1717 S.Boulder, Suite 300
Tulsa, OK 74119
Phone: (918) 587-4630
FAX: (918) 587-4630

Job: 83609.002- SCOVILLE HILL / HARWINTON ROD, CT (BU# 87637		
Project: 177' Summit MP/ App ID: 151585; Rev: 0		
Client: Crown Castle	Drawn by: skadam	App'd:
Code: TIA/EIA-222-F	Date: 06/12/12	Scale: NTS
Path:		Dwg No. E-5

Tower Input Data

There is a pole section.
This tower is designed using the TIA/EIA-222-F standard.
The following design criteria apply:

Tower is located in Litchfield County, Connecticut.
Basic wind speed of 80 mph.
Nominal ice thickness of 1.000 in.
Ice thickness is considered to increase with height.
Ice density of 56.000 pcf.
A wind speed of 28 mph is used in combination with ice.
Temperature drop of 50.000 °F.
Deflections calculated using a wind speed of 50 mph.
A non-linear (P-delta) analysis was used.
Pressures are calculated at each section.
Stress ratio used in pole design is 1.333.
Local bending stresses due to climbing loads, feedline supports, and appurtenance mounts are not considered.

Tapered Pole Section Geometry

Section	Elevation ft	Section Length ft	Splice Length ft	Number of Sides	Top Diameter in	Bottom Diameter in	Wall Thickness in	Bend Radius in	Pole Grade
L1	177.000-129.750	47.250	3.750	18	22.000	30.268	0.219	0.875	A607-65 (65 ksi)
L2	129.750-120.000	13.500	0.000	18	29.174	31.536	0.250	1.000	A607-65 (65 ksi)
L3	120.000-110.000	10.000	0.000	18	31.536	33.286	0.394	1.574	53.7 ksi (54 ksi)
L4	110.000-84.000	26.000	4.750	18	33.286	37.836	0.718	2.870	32.8 ksi (33 ksi)
L5	84.000-80.000	8.750	0.000	18	35.570	38.045	0.783	3.131	31.4 ksi (31 ksi)
L6	80.000-60.000	20.000	0.000	18	38.045	41.500	0.785	3.138	32.9 ksi (33 ksi)
L7	60.000-39.300	20.700	5.750	18	41.500	45.167	0.734	2.934	42.0 ksi (42 ksi)
L8	39.300-20.000	25.050	0.000	18	42.681	47.910	0.768	3.073	40.6 ksi (41 ksi)
L9	20.000-0.000	20.000		18	47.910	51.410	0.779	3.115	41.1 ksi (41 ksi)

Tapered Pole Properties

Section	Tip Dia. in	Area in^2	I in^4	r in	C in	I/C in^3	J in^4	It/Q in^2	w in	w/t
L1	22.339	15.126	906.645	7.732	11.176	81.124	1814.482	7.565	3.487	15.937
	30.735	20.868	2380.622	10.667	15.376	154.826	4764.376	10.436	4.942	22.587
L2	30.290	22.951	2425.878	10.268	14.820	163.684	4854.947	11.478	4.695	18.779
	32.022	24.825	3069.973	11.107	16.020	191.630	6143.985	12.415	5.110	20.441

Section	Tip Dia. in	Area in^2	I in^4	r in	C in	I/C in^3	J in^4	It/Q in^2	w in	w/t
L3	32.022	38.906	4767.116	11.056	16.020	297.567	9540.504	19.457	4.858	12.341
	33.799	41.092	5616.764	11.677	16.909	332.170	11240.918	20.550	5.166	13.124
L4	33.799	74.170	9939.386	11.562	16.909	587.806	19891.850	37.092	4.596	6.405
	38.420	84.532	14714.230	13.177	19.221	765.541	29447.821	42.274	5.396	7.521
L5	37.483	86.421	13212.728	12.349	18.069	731.220	26442.843	43.219	4.883	6.238
	38.632	92.570	16238.604	13.228	19.327	840.209	32498.574	46.294	5.318	6.795
L6	38.632	92.790	16275.533	13.227	19.327	842.120	32572.481	46.404	5.315	6.774
	42.140	101.394	21235.808	14.454	21.082	1007.296	42499.559	50.707	5.923	7.549
L7	42.140	94.922	19930.160	14.472	21.082	945.364	39886.544	47.470	6.013	8.196
	45.864	103.461	25806.692	15.774	22.945	1124.728	51647.341	51.740	6.658	9.076
L8	44.558	102.208	22683.914	14.879	21.682	1046.207	45397.677	51.114	6.160	8.017
	48.649	114.959	32276.834	16.735	24.338	1326.176	64596.138	57.490	7.080	9.215
L9	48.649	116.489	32692.099	16.732	24.338	1343.238	65427.215	58.256	7.062	9.069
	52.203	125.140	40529.550	17.974	26.116	1551.888	81112.430	62.582	7.678	9.86

Tower Elevation ft	Gusset Area (per face) ft^2	Gusset Thickness in	Gusset Grade	Adjust. Factor A_f	Adjust. Factor A_r	Weight Mult.	Double Angle Stitch Bolt Spacing Diagonals in	Double Angle Stitch Bolt Spacing Horizontals in
L1 177.000-129.750				1	1	1		
L2 129.750-120.000				1	1	1		
L3 120.000-110.000				1	1	1		
L4 110.000-84.000				1	1	1		
L5 84.000-80.000				1	1	1		
L6 80.000-60.000				1	1	1		
L7 60.000-39.300				1	1	1		
L8 39.300-20.000				1	1	1		
L9 20.000-0.000				1	1	1		

Feed Line/Linear Appurtenances - Entered As Area

Description	Face or Leg	Allow Shield	Component Type	Placement ft	Total Number		C_AA_A ft^2/ft	Weight klf
HB114-1-0813U4-M5J(1 1/4") (P(Outside Shielded))	B	No	CaAa (Out Of Face)	177.000 - 5.000	3	No Ice	0.000	0.001
						1/2" Ice	0.000	0.002
						1" Ice	0.000	0.004
						2" Ice	0.000	0.010
						4" Ice	0.000	0.028
****								
1 5/8 (E)	C	No	Inside Pole	167.000 - 5.000	6	No Ice	0.000	0.001
						1/2" Ice	0.000	0.001
						1" Ice	0.000	0.001

Description	Face or Leg	Allow Shield	Component Type	Placement ft	Total Number		C_AA_A ft^2/ft	Weight klf
						2" Ice	0.000	0.001
						4" Ice	0.000	0.001
****								
1 5/8 (E)	C	No	Inside Pole	154.000 - 5.000	12	No Ice	0.000	0.001
						1/2" Ice	0.000	0.001
						1" Ice	0.000	0.001
						2" Ice	0.000	0.001
						4" Ice	0.000	0.001
****								
1 1/4 (E)	A	No	Inside Pole	137.000 - 5.000	12	No Ice	0.000	0.001
						1/2" Ice	0.000	0.001
						1" Ice	0.000	0.001
						2" Ice	0.000	0.001
						4" Ice	0.000	0.001
****								
1 5/8 (E (Outside))	B	No	CaAa (Out Of Face)	127.000 - 110.000	2	No Ice	0.198	0.001
						1/2" Ice	0.298	0.003
						1" Ice	0.398	0.005
						2" Ice	0.598	0.011
						4" Ice	0.998	0.030
1 5/8 (E (Outside-Shielded))	B	No	CaAa (Out Of Face)	127.000 - 110.000	10	No Ice	0.000	0.001
						1/2" Ice	0.000	0.003
						1" Ice	0.000	0.005
						2" Ice	0.000	0.011
						4" Ice	0.000	0.030
1 5/8 (E (Outside-Shielded))	B	No	CaAa (Out Of Face)	110.000 - 5.000	12	No Ice	0.000	0.001
						1/2" Ice	0.000	0.003
						1" Ice	0.000	0.005
						2" Ice	0.000	0.011
						4" Ice	0.000	0.030
****								
1 5/8 (E (Outside-Shielded))	C	No	CaAa (Out Of Face)	117.000 - 5.000	6	No Ice	0.000	0.001
						1/2" Ice	0.000	0.003
						1" Ice	0.000	0.005
						2" Ice	0.000	0.011
						4" Ice	0.000	0.030
****								
1/2 (E)	B	No	Inside Pole	79.000 - 5.000	1	No Ice	0.000	0.000
						1/2" Ice	0.000	0.000
						1" Ice	0.000	0.000
						2" Ice	0.000	0.000
						4" Ice	0.000	0.000
****								
****								
4.5" SR (CaAa) (E)	C	No	CaAa (Out Of Face)	20.000 - 0.000	1	No Ice	0.450	0.000
						1/2" Ice	0.550	0.000
						1" Ice	0.650	0.000
						2" Ice	0.850	0.000
						4" Ice	1.250	0.000
4.5" SR (CaAa) (E)	B	No	CaAa (Out Of Face)	20.000 - 0.000	1	No Ice	0.450	0.000
						1/2" Ice	0.550	0.000
						1" Ice	0.650	0.000
						2" Ice	0.850	0.000
						4" Ice	1.250	0.000
4.25" SR (CaAa) (E)	C	No	CaAa (Out Of Face)	80.000 - 20.000	1	No Ice	0.425	0.000
						1/2" Ice	0.525	0.000
						1" Ice	0.625	0.000
						2" Ice	0.825	0.000
						4" Ice	1.225	0.000
4.25" SR (CaAa) (E)	B	No	CaAa (Out Of Face)	80.000 - 20.000	1	No Ice	0.425	0.000
						1/2" Ice	0.525	0.000

Description	Face or Leg	Allow Shield	Component Type	Placement ft	Total Number		C_AA_A ft^2/ft	Weight klf
						1" Ice	0.625	0.000
						2" Ice	0.825	0.000
						4" Ice	1.225	0.000
4" SR (CaAa) (E)	C	No	CaAa (Out Of Face)	110.000 - 80.000	1	No Ice	0.400	0.000
						1/2" Ice	0.500	0.000
						1" Ice	0.600	0.000
						2" Ice	0.800	0.000
						4" Ice	1.200	0.000
4" SR (CaAa) (E)	B	No	CaAa (Out Of Face)	110.000 - 80.000	1	No Ice	0.400	0.000
						1/2" Ice	0.500	0.000
						1" Ice	0.600	0.000
						2" Ice	0.800	0.000
						4" Ice	1.200	0.000
MP3-04 (E)	C	No	CaAa (Out Of Face)	120.000 - 110.000	1	No Ice	0.268	0.014
						1/2" Ice	0.352	0.016
						1" Ice	0.435	0.018
						2" Ice	0.602	0.022
						4" Ice	0.935	0.036

Feed Line/Linear Appurtenances Section Areas

Tower Section	Tower Elevation ft	Face	A_R ft^2	A_F ft^2	C_AA_A In Face ft^2	C_AA_A Out Face ft^2	Weight K
L1	177.000-129.750	A	0.000	0.000	0.000	0.000	0.057
		B	0.000	0.000	0.000	0.000	0.170
		C	0.000	0.000	0.000	0.000	0.535
L2	129.750-120.000	A	0.000	0.000	0.000	0.000	0.077
		B	0.000	0.000	0.000	2.772	0.122
		C	0.000	0.000	0.000	0.000	0.183
L3	120.000-110.000	A	0.000	0.000	0.000	0.000	0.079
		B	0.000	0.000	0.000	3.960	0.161
		C	0.000	0.000	0.000	2.683	0.372
L4	110.000-84.000	A	0.000	0.000	0.000	0.000	0.206
		B	0.000	0.000	0.000	10.400	0.418
		C	0.000	0.000	0.000	10.400	0.649
L5	84.000-80.000	A	0.000	0.000	0.000	0.000	0.032
		B	0.000	0.000	0.000	1.600	0.064
		C	0.000	0.000	0.000	1.600	0.100
L6	80.000-60.000	A	0.000	0.000	0.000	0.000	0.158
		B	0.000	0.000	0.000	8.500	0.326
		C	0.000	0.000	0.000	8.500	0.499
L7	60.000-39.300	A	0.000	0.000	0.000	0.000	0.164
		B	0.000	0.000	0.000	8.798	0.338
		C	0.000	0.000	0.000	8.798	0.517
L8	39.300-20.000	A	0.000	0.000	0.000	0.000	0.153
		B	0.000	0.000	0.000	8.203	0.315
		C	0.000	0.000	0.000	8.203	0.482
L9	20.000-0.000	A	0.000	0.000	0.000	0.000	0.119
		B	0.000	0.000	0.000	9.000	0.245
		C	0.000	0.000	0.000	9.000	0.374

Feed Line/Linear Appurtenances Section Areas - With Ice

Tower Section	Tower Elevation ft	Face or Leg	Ice Thickness in	A_R ft^2	A_F ft^2	C_AA_A In Face ft^2	C_AA_A Out Face ft^2	Weight K
L1	177.000-129.750	A	1.202	0.000	0.000	0.000	0.000	0.057
		B		0.000	0.000	0.000	0.000	0.768
		C		0.000	0.000	0.000	0.000	0.535
L2	129.750-120.000	A	1.173	0.000	0.000	0.000	0.000	0.077
		B		0.000	0.000	0.000	6.136	0.655
		C		0.000	0.000	0.000	0.000	0.183
L3	120.000-110.000	A	1.162	0.000	0.000	0.000	0.000	0.079
		B		0.000	0.000	0.000	8.606	0.836
		C		0.000	0.000	0.000	4.619	0.609
L4	110.000-84.000	A	1.138	0.000	0.000	0.000	0.000	0.206
		B		0.000	0.000	0.000	16.316	2.117
		C		0.000	0.000	0.000	16.316	1.348
L5	84.000-80.000	A	1.115	0.000	0.000	0.000	0.000	0.032
		B		0.000	0.000	0.000	2.510	0.326
		C		0.000	0.000	0.000	2.510	0.207
L6	80.000-60.000	A	1.094	0.000	0.000	0.000	0.000	0.158
		B		0.000	0.000	0.000	12.877	1.555
		C		0.000	0.000	0.000	12.877	1.005
L7	60.000-39.300	A	1.050	0.000	0.000	0.000	0.000	0.164
		B		0.000	0.000	0.000	13.144	1.528
		C		0.000	0.000	0.000	13.144	1.007
L8	39.300-20.000	A	1.000	0.000	0.000	0.000	0.000	0.153
		B		0.000	0.000	0.000	12.255	1.424
		C		0.000	0.000	0.000	12.255	0.938
L9	20.000-0.000	A	1.000	0.000	0.000	0.000	0.000	0.119
		B		0.000	0.000	0.000	13.000	1.040
		C		0.000	0.000	0.000	13.000	0.702

Feed Line Center of Pressure

Section	Elevation ft	CP_X in	CP_Z in	CP_X Ice in	CP_Z Ice in
L1	177.000-129.750	0.000	0.000	0.000	0.000
L2	129.750-120.000	0.335	0.193	0.622	0.359
L3	120.000-110.000	0.133	0.400	0.332	0.635
L4	110.000-84.000	0.000	0.472	0.000	0.633
L5	84.000-80.000	0.000	0.478	0.000	0.644
L6	80.000-60.000	0.000	0.507	0.000	0.669
L7	60.000-39.300	0.000	0.516	0.000	0.680
L8	39.300-20.000	0.000	0.522	0.000	0.691
L9	20.000-0.000	0.000	0.554	0.000	0.720

Discrete Tower Loads

Description	Face or Leg	Offset Type	Offsets: Horz Lateral Vert ft ft ft	Azimuth Adjustment °	Placement ft		C_AA_A Front ft^2	C_AA_A Side ft^2	Weight K
1900MHz RRH (65MHz) (P)	C	From Leg	4.000 0.000 -2.000	0.000	179.000	No Ice	2.698	2.771	0.060
						1/2" Ice	2.936	3.011	0.084
						1" Ice	3.183	3.260	0.111
						2" Ice	3.703	3.784	0.176
						4" Ice	4.846	4.935	0.354
1900MHz RRH (65MHz) (P)	B	From Leg	4.000 0.000 -2.000	0.000	179.000	No Ice	2.698	2.771	0.060
						1/2" Ice	2.936	3.011	0.084
						1" Ice	3.183	3.260	0.111
						2" Ice	3.703	3.784	0.176
						4" Ice	4.846	4.935	0.354
1900MHz RRH (65MHz) (P)	A	From Leg	4.000 0.000 -2.000	0.000	179.000	No Ice	2.698	2.771	0.060
						1/2" Ice	2.936	3.011	0.084
						1" Ice	3.183	3.260	0.111
						2" Ice	3.703	3.784	0.176
						4" Ice	4.846	4.935	0.354
800 EXTERNAL NOTCH FILTER (P)	C	From Leg	4.000 0.000 -2.000	0.000	179.000	No Ice	0.770	0.375	0.011
						1/2" Ice	0.890	0.465	0.017
						1" Ice	1.018	0.563	0.024
						2" Ice	1.301	0.787	0.045
						4" Ice	1.970	1.337	0.114
800 EXTERNAL NOTCH FILTER (P)	B	From Leg	4.000 0.000 -2.000	0.000	179.000	No Ice	0.770	0.375	0.011
						1/2" Ice	0.890	0.465	0.017
						1" Ice	1.018	0.563	0.024
						2" Ice	1.301	0.787	0.045
						4" Ice	1.970	1.337	0.114
800 EXTERNAL NOTCH FILTER (P)	A	From Leg	4.000 0.000 -2.000	0.000	179.000	No Ice	0.770	0.375	0.011
						1/2" Ice	0.890	0.465	0.017
						1" Ice	1.018	0.563	0.024
						2" Ice	1.301	0.787	0.045
						4" Ice	1.970	1.337	0.114
800MHZ RRH (P)	C	From Leg	4.000 0.000 -2.000	0.000	179.000	No Ice	2.490	2.068	0.053
						1/2" Ice	2.706	2.271	0.074
						1" Ice	2.931	2.481	0.098
						2" Ice	3.407	2.928	0.157
						4" Ice	4.462	3.927	0.318
800MHZ RRH (P)	B	From Leg	4.000 0.000 -2.000	0.000	179.000	No Ice	2.490	2.068	0.053
						1/2" Ice	2.706	2.271	0.074
						1" Ice	2.931	2.481	0.098
						2" Ice	3.407	2.928	0.157
						4" Ice	4.462	3.927	0.318
800MHZ RRH (P)	A	From Leg	4.000 0.000 -2.000	0.000	179.000	No Ice	2.490	2.068	0.053
						1/2" Ice	2.706	2.271	0.074
						1" Ice	2.931	2.481	0.098
						2" Ice	3.407	2.928	0.157
						4" Ice	4.462	3.927	0.318
(3) ACU-A20-N (P)	C	From Leg	4.000 0.000 -2.000	0.000	179.000	No Ice	0.078	0.136	0.001
						1/2" Ice	0.121	0.189	0.002
						1" Ice	0.173	0.251	0.004
						2" Ice	0.302	0.400	0.012
						4" Ice	0.665	0.802	0.045
(3) ACU-A20-N (P)	B	From Leg	4.000 0.000 -2.000	0.000	179.000	No Ice	0.078	0.136	0.001
						1/2" Ice	0.121	0.189	0.002
						1" Ice	0.173	0.251	0.004
						2" Ice	0.302	0.400	0.012

Description	Face or Leg	Offset Type	Offsets: Horz Lateral Vert ft ft ft	Azimuth Adjustment °	Placement ft		C_AA_A Front ft^2	C_AA_A Side ft^2	Weight K
						4" Ice	0.665	0.802	0.045
(3) ACU-A20-N (P)	A	From Leg	4.000 0.000 -2.000	0.000	179.000	No Ice	0.078	0.136	0.001
						1/2" Ice	0.121	0.189	0.002
						1" Ice	0.173	0.251	0.004
						2" Ice	0.302	0.400	0.012
						4" Ice	0.665	0.802	0.045
APXVSPP18-C-A20 w/ Mount Pipe (P)	C	From Leg	4.000 0.000 -2.000	0.000	179.000	No Ice	8.498	6.946	0.083
						1/2" Ice	9.149	8.127	0.148
						1" Ice	9.767	9.021	0.225
						2" Ice	11.031	10.844	0.406
						4" Ice	13.679	14.851	0.909
APXVSPP18-C-A20 w/ Mount Pipe (P)	B	From Leg	4.000 0.000 -2.000	0.000	179.000	No Ice	8.498	6.946	0.083
						1/2" Ice	9.149	8.127	0.148
						1" Ice	9.767	9.021	0.225
						2" Ice	11.031	10.844	0.406
						4" Ice	13.679	14.851	0.909
APXVSPP18-C-A20 w/ Mount Pipe (P)	A	From Leg	4.000 0.000 -2.000	0.000	179.000	No Ice	8.498	6.946	0.083
						1/2" Ice	9.149	8.127	0.148
						1" Ice	9.767	9.021	0.225
						2" Ice	11.031	10.844	0.406
						4" Ice	13.679	14.851	0.909
Platform Mount [LP 713-1] (P)	C	None		0.000	179.000	No Ice	31.270	31.270	1.510
						1/2" Ice	39.680	39.680	1.929
						1" Ice	48.090	48.090	2.348
						2" Ice	64.910	64.910	3.186
						4" Ice	98.550	98.550	4.862
****									
RR90-17-00DP w/Mount Pipe (E)	C	From Leg	4.000 0.000 2.000	0.000	167.000	No Ice	4.672	3.399	0.035
						1/2" Ice	5.202	4.237	0.071
						1" Ice	5.712	4.952	0.117
						2" Ice	6.764	6.431	0.229
						4" Ice	8.996	9.590	0.569
RR90-17-00DP w/Mount Pipe (E)	B	From Leg	4.000 0.000 2.000	0.000	167.000	No Ice	4.672	3.399	0.035
						1/2" Ice	5.202	4.237	0.071
						1" Ice	5.712	4.952	0.117
						2" Ice	6.764	6.431	0.229
						4" Ice	8.996	9.590	0.569
RR90-17-00DP w/Mount Pipe (E)	A	From Leg	4.000 0.000 2.000	0.000	167.000	No Ice	4.672	3.399	0.035
						1/2" Ice	5.202	4.237	0.071
						1" Ice	5.712	4.952	0.117
						2" Ice	6.764	6.431	0.229
						4" Ice	8.996	9.590	0.569
(2) KRY 112 75/1 TMA (E)	C	From Leg	4.000 0.000 2.000	0.000	167.000	No Ice	1.983	0.942	0.030
						1/2" Ice	2.176	1.094	0.043
						1" Ice	2.377	1.254	0.059
						2" Ice	2.804	1.600	0.098
						4" Ice	3.764	2.396	0.214
(2) KRY 112 75/1 TMA (E)	B	From Leg	4.000 0.000 2.000	0.000	167.000	No Ice	1.983	0.942	0.030
						1/2" Ice	2.176	1.094	0.043
						1" Ice	2.377	1.254	0.059
						2" Ice	2.804	1.600	0.098
						4" Ice	3.764	2.396	0.214
(2) KRY 112 75/1 TMA (E)	A	From Leg	4.000 0.000 2.000	0.000	167.000	No Ice	1.983	0.942	0.030
						1/2" Ice	2.176	1.094	0.043
						1" Ice	2.377	1.254	0.059
						2" Ice	2.804	1.600	0.098
						4" Ice	3.764	2.396	0.214

Description	Face or Leg	Offset Type	Offsets: Horz Lateral Vert ft ft ft	Azimuth Adjustment °	Placement ft		C_AA_A Front ft^2	C_AA_A Side ft^2	Weight K
T-Arm Mount [TA 602-3]	C	None		0.000	167.000	No Ice	11.590	11.590	0.774
(E)						1/2" Ice	15.440	15.440	0.990
						1" Ice	19.290	19.290	1.206
						2" Ice	26.990	26.990	1.639
						4" Ice	42.390	42.390	2.503
(3) 6' x 2" Mount Pipe	C	From Leg	4.000	0.000	167.000	No Ice	1.425	1.425	0.022
(E)			0.000			1/2" Ice	1.925	1.925	0.033
			0.000			1" Ice	2.294	2.294	0.048
						2" Ice	3.060	3.060	0.090
						4" Ice	4.702	4.702	0.231
(3) 6' x 2" Mount Pipe	B	From Leg	4.000	0.000	167.000	No Ice	1.425	1.425	0.022
(E)			0.000			1/2" Ice	1.925	1.925	0.033
			0.000			1" Ice	2.294	2.294	0.048
						2" Ice	3.060	3.060	0.090
						4" Ice	4.702	4.702	0.231
(3) 6' x 2" Mount Pipe	A	From Leg	4.000	0.000	167.000	No Ice	1.425	1.425	0.022
(E)			0.000			1/2" Ice	1.925	1.925	0.033
			0.000			1" Ice	2.294	2.294	0.048
						2" Ice	3.060	3.060	0.090
						4" Ice	4.702	4.702	0.231
****									
(2) LPA-80063/6CF w/	C	From Leg	4.000	0.000	154.000	No Ice	10.577	10.671	0.052
Mount Pipe			0.000			1/2" Ice	11.241	11.932	0.142
(E)			2.000			1" Ice	11.872	12.911	0.244
						2" Ice	13.163	14.921	0.476
						4" Ice	15.866	19.158	1.088
(2) LPA-80080/6CF w/	B	From Leg	4.000	0.000	154.000	No Ice	4.564	10.728	0.046
Mount Pipe			0.000			1/2" Ice	5.105	11.990	0.110
(E)			2.000			1" Ice	5.612	12.968	0.185
						2" Ice	6.651	14.980	0.363
						4" Ice	8.834	19.217	0.857
(2) LPA-80080/6CF w/	A	From Leg	4.000	0.000	154.000	No Ice	4.564	10.728	0.046
Mount Pipe			0.000			1/2" Ice	5.105	11.990	0.110
(E)			2.000			1" Ice	5.612	12.968	0.185
						2" Ice	6.651	14.980	0.363
						4" Ice	8.834	19.217	0.857
BXA-171063-8BF-EDIN-2	C	From Leg	4.000	0.000	154.000	No Ice	3.179	3.353	0.029
w/ Mount Pipe			0.000			1/2" Ice	3.555	3.971	0.059
(E)			2.000			1" Ice	3.964	4.595	0.098
						2" Ice	4.853	5.893	0.193
						4" Ice	6.767	8.885	0.487
BXA-171085-8BF-EDIN-2	B	From Leg	4.000	0.000	154.000	No Ice	3.179	3.353	0.029
w/ Mount Pipe			0.000			1/2" Ice	3.555	3.971	0.059
(E)			2.000			1" Ice	3.964	4.595	0.098
						2" Ice	4.853	5.893	0.193
						4" Ice	6.767	8.885	0.487
BXA-171085-8BF-EDIN-2	A	From Leg	4.000	0.000	154.000	No Ice	3.179	3.353	0.029
w/ Mount Pipe			0.000			1/2" Ice	3.555	3.971	0.059
(E)			2.000			1" Ice	3.964	4.595	0.098
						2" Ice	4.853	5.893	0.193
						4" Ice	6.767	8.885	0.487
BXA-70063-6CF-2 w/ Mount	C	From Leg	4.000	0.000	154.000	No Ice	7.969	5.801	0.042
Pipe			0.000			1/2" Ice	8.609	6.953	0.100
(E)			2.000			1" Ice	9.216	7.819	0.170
						2" Ice	10.459	9.601	0.335
						4" Ice	13.066	13.366	0.803
BXA-70063-6CF-2 w/ Mount	B	From Leg	4.000	0.000	154.000	No Ice	7.969	5.801	0.042

Description	Face or Leg	Offset Type	Offsets: Horz Lateral Vert ft ft ft	Azimuth Adjustment °	Placement ft		C_AA_A Front ft^2	C_AA_A Side ft^2	Weight K
Pipe			0.000			1/2" Ice	8.609	6.953	0.100
(E)			2.000			1" Ice	9.216	7.819	0.170
						2" Ice	10.459	9.601	0.335
						4" Ice	13.066	13.366	0.803
BXA-70063-6CF-2 w/ Mount	A	From Leg	4.000	0.000	154.000	No Ice	7.969	5.801	0.042
Pipe			0.000			1/2" Ice	8.609	6.953	0.100
(E)			2.000			1" Ice	9.216	7.819	0.170
						2" Ice	10.459	9.601	0.335
						4" Ice	13.066	13.366	0.803
(2) FD9R6004/2C-3L	C	From Leg	4.000	0.000	154.000	No Ice	0.367	0.085	0.003
(E)			0.000			1/2" Ice	0.451	0.136	0.005
			2.000			1" Ice	0.543	0.196	0.009
						2" Ice	0.755	0.343	0.020
						4" Ice	1.281	0.740	0.063
(2) FD9R6004/2C-3L	B	From Leg	4.000	0.000	154.000	No Ice	0.367	0.085	0.003
(E)			0.000			1/2" Ice	0.451	0.136	0.005
			2.000			1" Ice	0.543	0.196	0.009
						2" Ice	0.755	0.343	0.020
						4" Ice	1.281	0.740	0.063
(2) FD9R6004/2C-3L	A	From Leg	4.000	0.000	154.000	No Ice	0.367	0.085	0.003
(E)			0.000			1/2" Ice	0.451	0.136	0.005
			2.000			1" Ice	0.543	0.196	0.009
						2" Ice	0.755	0.343	0.020
						4" Ice	1.281	0.740	0.063
Platform Mount [LP 303-1]	C	None		0.000	154.000	No Ice	14.660	14.660	1.250
(E)						1/2" Ice	18.870	18.870	1.481
						1" Ice	23.080	23.080	1.713
						2" Ice	31.500	31.500	2.175
						4" Ice	48.340	48.340	3.101
****									
(4) DB844H90 w/ Mount	C	From Leg	4.000	0.000	137.000	No Ice	3.299	4.921	0.028
Pipe			0.000			1/2" Ice	3.690	5.596	0.066
(E)			2.000			1" Ice	4.119	6.284	0.112
						2" Ice	5.007	7.712	0.224
						4" Ice	6.920	10.833	0.553
(4) DB844H90 w/ Mount	B	From Leg	4.000	0.000	137.000	No Ice	3.299	4.921	0.028
Pipe			0.000			1/2" Ice	3.690	5.596	0.066
(E)			2.000			1" Ice	4.119	6.284	0.112
						2" Ice	5.007	7.712	0.224
						4" Ice	6.920	10.833	0.553
(4) DB844H90 w/ Mount	A	From Leg	4.000	0.000	137.000	No Ice	3.299	4.921	0.028
Pipe			0.000			1/2" Ice	3.690	5.596	0.066
(E)			2.000			1" Ice	4.119	6.284	0.112
						2" Ice	5.007	7.712	0.224
						4" Ice	6.920	10.833	0.553
Platform Mount [LP 712-1]	C	None		0.000	137.000	No Ice	24.530	24.530	1.335
(E)						1/2" Ice	29.940	29.940	1.646
						1" Ice	35.350	35.350	1.956
						2" Ice	46.170	46.170	2.577
						4" Ice	67.810	67.810	3.820
****									
(2)	C	From Leg	4.000	0.000	127.000	No Ice	5.394	3.750	0.056
AP14/17-880/1940/065D/AD			0.000			1/2" Ice	5.863	4.421	0.096
T/XXP w/ Mount Pipe			2.000			1" Ice	6.336	5.074	0.145
(E)						2" Ice	7.314	6.430	0.264
						4" Ice	9.396	9.533	0.612
(2)	B	From Leg	4.000	0.000	127.000	No Ice	5.394	3.750	0.056

Description	Face or Leg	Offset Type	Offsets: Horz Lateral Vert ft ft ft	Azimuth Adjustment °	Placement ft		C_AA_A Front ft^2	C_AA_A Side ft^2	Weight K
AP14/17-880/1940/065D/AD			0.000			1/2" Ice	5.863	4.421	0.096
T/XXP w/ Mount Pipe			2.000			1" Ice	6.336	5.074	0.145
(E)						2" Ice	7.314	6.430	0.264
						4" Ice	9.396	9.533	0.612
(2)	A	From Leg	4.000	0.000	127.000	No Ice	5.394	3.750	0.056
AP14/17-880/1940/065D/AD			0.000			1/2" Ice	5.863	4.421	0.096
T/XXP w/ Mount Pipe			2.000			1" Ice	6.336	5.074	0.145
(E)						2" Ice	7.314	6.430	0.264
						4" Ice	9.396	9.533	0.612
(2) LGP 17201	C	From Leg	4.000	0.000	127.000	No Ice	1.946	0.518	0.031
(E)			0.000			1/2" Ice	2.134	0.640	0.042
			2.000			1" Ice	2.330	0.770	0.055
						2" Ice	2.749	1.056	0.089
						4" Ice	3.690	1.733	0.193
(2) LGP 17201	B	From Leg	4.000	0.000	127.000	No Ice	1.946	0.518	0.031
(E)			0.000			1/2" Ice	2.134	0.640	0.042
			2.000			1" Ice	2.330	0.770	0.055
						2" Ice	2.749	1.056	0.089
						4" Ice	3.690	1.733	0.193
(2) LGP 17201	A	From Leg	4.000	0.000	127.000	No Ice	1.946	0.518	0.031
(E)			0.000			1/2" Ice	2.134	0.640	0.042
			2.000			1" Ice	2.330	0.770	0.055
						2" Ice	2.749	1.056	0.089
						4" Ice	3.690	1.733	0.193
Platform Mount [LP 303-1]	C	None		0.000	127.000	No Ice	14.660	14.660	1.250
(E)						1/2" Ice	18.870	18.870	1.481
						1" Ice	23.080	23.080	1.713
						2" Ice	31.500	31.500	2.175
						4" Ice	48.340	48.340	3.101
****									
APXV18-206517S-C w/	C	From Leg	1.500	0.000	117.000	No Ice	5.404	4.700	0.052
Mount Pipe			0.000			1/2" Ice	5.960	5.860	0.094
(E)			0.000			1" Ice	6.481	6.734	0.148
						2" Ice	7.547	8.515	0.280
						4" Ice	9.919	12.277	0.679
APXV18-206517S-C w/	B	From Leg	1.500	0.000	117.000	No Ice	5.404	4.700	0.052
Mount Pipe			0.000			1/2" Ice	5.960	5.860	0.094
(E)			0.000			1" Ice	6.481	6.734	0.148
						2" Ice	7.547	8.515	0.280
						4" Ice	9.919	12.277	0.679
APXV18-206517S-C w/	A	From Leg	1.500	0.000	117.000	No Ice	5.404	4.700	0.052
Mount Pipe			0.000			1/2" Ice	5.960	5.860	0.094
(E)			0.000			1" Ice	6.481	6.734	0.148
						2" Ice	7.547	8.515	0.280
						4" Ice	9.919	12.277	0.679
****									
8225	C	From Leg	4.000	0.000	79.000	No Ice	0.894	0.894	0.001
(E)			0.000			1/2" Ice	1.080	1.080	0.009
			1.000			1" Ice	1.284	1.284	0.018
						2" Ice	1.719	1.719	0.046
						4" Ice	2.691	2.691	0.137
Side Arm Mount [SO 701-1]	C	From Leg	3.000	0.000	79.000	No Ice	0.850	1.670	0.065
(E)			0.000			1/2" Ice	1.140	2.340	0.079
			0.000			1" Ice	1.430	3.010	0.093
						2" Ice	2.010	4.350	0.121
						4" Ice	3.170	7.030	0.177
****									

Load Combinations

Comb. No.	Description
1	Dead Only
2	Dead+Wind 0 deg - No Ice
3	Dead+Wind 30 deg - No Ice
4	Dead+Wind 60 deg - No Ice
5	Dead+Wind 90 deg - No Ice
6	Dead+Wind 120 deg - No Ice
7	Dead+Wind 150 deg - No Ice
8	Dead+Wind 180 deg - No Ice
9	Dead+Wind 210 deg - No Ice
10	Dead+Wind 240 deg - No Ice
11	Dead+Wind 270 deg - No Ice
12	Dead+Wind 300 deg - No Ice
13	Dead+Wind 330 deg - No Ice
14	Dead+Ice+Temp
15	Dead+Wind 0 deg+Ice+Temp
16	Dead+Wind 30 deg+Ice+Temp
17	Dead+Wind 60 deg+Ice+Temp
18	Dead+Wind 90 deg+Ice+Temp
19	Dead+Wind 120 deg+Ice+Temp
20	Dead+Wind 150 deg+Ice+Temp
21	Dead+Wind 180 deg+Ice+Temp
22	Dead+Wind 210 deg+Ice+Temp
23	Dead+Wind 240 deg+Ice+Temp
24	Dead+Wind 270 deg+Ice+Temp
25	Dead+Wind 300 deg+Ice+Temp
26	Dead+Wind 330 deg+Ice+Temp
27	Dead+Wind 0 deg - Service
28	Dead+Wind 30 deg - Service
29	Dead+Wind 60 deg - Service
30	Dead+Wind 90 deg - Service
31	Dead+Wind 120 deg - Service
32	Dead+Wind 150 deg - Service
33	Dead+Wind 180 deg - Service
34	Dead+Wind 210 deg - Service
35	Dead+Wind 240 deg - Service
36	Dead+Wind 270 deg - Service
37	Dead+Wind 300 deg - Service
38	Dead+Wind 330 deg - Service

Maximum Member Forces

Section No.	Elevation ft	Component Type	Condition	Gov. Load Comb.	Force K	Major Axis Moment kip-ft	Minor Axis Moment kip-ft
L1	177 - 129.75	Pole	Max Tension	1	0.000	0.000	0.000
			Max. Compression	14	-20.435	-0.118	-0.857
			Max. Mx	5	-9.071	-401.692	5.245
			Max. My	8	-9.104	5.280	-395.540
			Max. Vy	5	16.143	-401.692	5.245
			Max. Vx	8	15.870	5.280	-395.540

Section No.	Elevation ft	Component Type	Condition	Gov. Load Comb.	Force K	Major Axis Moment kip-ft	Minor Axis Moment kip-ft
			Max. Torque	6			0.040
L2	129.75 - 120	Pole	Max Tension	1	0.000	0.000	0.000
			Max. Compression	14	-26.751	-0.945	-1.375
			Max. Mx	5	-12.648	-644.498	8.364
			Max. My	8	-12.677	8.343	-634.589
			Max. Vy	5	19.318	-644.498	8.364
			Max. Vx	8	19.044	8.343	-634.589
			Max. Torque	2			-0.063
L3	120 - 110	Pole	Max Tension	1	0.000	0.000	0.000
			Max. Compression	14	-30.625	-1.460	-2.277
			Max. Mx	5	-14.835	-846.760	10.508
			Max. My	8	-14.862	10.753	-834.372
			Max. Vy	5	20.909	-846.760	10.508
			Max. Vx	8	20.635	10.753	-834.372
			Max. Torque	3			-0.084
L4	110 - 84	Pole	Max Tension	1	0.000	0.000	0.000
			Max. Compression	14	-40.390	-2.852	-4.198
			Max. Mx	5	-21.653	-1315.554	15.218
			Max. My	8	-21.675	15.557	-1297.406
			Max. Vy	5	23.218	-1315.554	15.218
			Max. Vx	8	22.942	15.557	-1297.406
			Max. Torque	11			0.141
L5	84 - 80	Pole	Max Tension	1	0.000	0.000	0.000
			Max. Compression	14	-46.351	-3.441	-5.012
			Max. Mx	5	-26.130	-1523.506	17.163
			Max. My	8	-26.151	17.542	-1502.976
			Max. Vy	5	24.250	-1523.506	17.163
			Max. Vx	8	23.973	17.542	-1502.976
			Max. Torque	11			0.178
L6	80 - 60	Pole	Max Tension	1	0.000	0.000	0.000
			Max. Compression	14	-56.898	-4.350	-7.218
			Max. Mx	5	-33.950	-2030.217	21.193
			Max. My	8	-33.966	22.061	-2004.940
			Max. Vy	5	26.375	-2030.217	21.193
			Max. Vx	8	26.114	22.061	-2004.940
			Max. Torque	12			0.612
L7	60 - 39.3	Pole	Max Tension	1	0.000	0.000	0.000
			Max. Compression	14	-64.693	-5.400	-8.660
			Max. Mx	5	-39.837	-2434.676	24.262
			Max. My	8	-39.848	25.207	-2405.575
			Max. Vy	5	27.725	-2434.676	24.262
			Max. Vx	8	27.465	25.207	-2405.575
			Max. Torque	12			0.667
L8	39.3 - 20	Pole	Max Tension	1	0.000	0.000	0.000
			Max. Compression	14	-80.995	-7.187	-11.106
			Max. Mx	5	-52.611	-3156.975	29.333
			Max. My	8	-52.616	30.409	-3121.526
			Max. Vy	5	29.797	-3156.975	29.333
			Max. Vx	8	29.541	30.409	-3121.526
			Max. Torque	12			0.757
L9	20 - 0	Pole	Max Tension	1	0.000	0.000	0.000
			Max. Compression	14	-92.329	-8.279	-12.600
			Max. Mx	5	-61.849	-3768.065	33.376
			Max. My	8	-61.849	34.532	-3727.633
			Max. Vy	5	31.313	-3768.065	33.376
			Max. Vx	8	31.062	34.532	-3727.633
			Max. Torque	12			0.837

Maximum Reactions

Location	Condition	Gov. Load Comb.	Vertical K	Horizontal, X K	Horizontal, Z K
Pole	Max. Vert	14	92.329	-0.000	-0.000
	Max. H_x	11	61.857	31.298	-0.217
	Max. H_z	2	61.857	-0.217	31.048
	Max. M_x	2	3722.214	-0.217	31.048
	Max. M_z	5	3768.065	-31.298	0.217
	Max. Torsion	12	0.837	26.997	15.336
	Min. Vert	30	61.857	-12.081	0.084
	Min. H_x	5	61.857	-31.298	0.217
	Min. H_z	8	61.857	0.217	-31.048
	Min. M_x	8	-3727.633	0.217	-31.048
	Min. M_z	11	-3764.959	31.298	-0.217
	Min. Torsion	6	-0.792	-26.997	-15.336

Tower Mast Reaction Summary

Load Combination	Vertical K	$Shear_x$ K	$Shear_z$ K	Overturning Moment, M_x kip-ft	Overturning Moment, M_z kip-ft	Torque kip-ft
Dead Only	61.857	0.000	0.000	2.629	-1.511	0.000
Dead+Wind 0 deg - No Ice	61.857	0.217	-31.048	-3722.214	-37.644	-0.330
Dead+Wind 30 deg - No Ice	61.857	15.837	-26.997	-3241.145	-1916.068	0.086
Dead+Wind 60 deg - No Ice	61.857	27.214	-15.712	-1890.943	-3281.462	0.462
Dead+Wind 90 deg - No Ice	61.857	31.298	-0.217	-33.376	-3768.065	0.715
Dead+Wind 120 deg - No Ice	61.857	26.997	15.336	1833.921	-3245.481	0.792
Dead+Wind 150 deg - No Ice	61.857	15.461	26.780	3210.583	-1853.622	0.674
Dead+Wind 180 deg - No Ice	61.857	-0.217	31.048	3727.633	34.532	0.375
Dead+Wind 210 deg - No Ice	61.857	-15.837	26.997	3246.567	1912.955	-0.041
Dead+Wind 240 deg - No Ice	61.857	-27.214	15.712	1896.368	3278.353	-0.462
Dead+Wind 270 deg - No Ice	61.857	-31.298	0.217	38.799	3764.959	-0.760
Dead+Wind 300 deg - No Ice	61.857	-26.997	-15.336	-1828.502	3242.375	-0.837
Dead+Wind 330 deg - No Ice	61.857	-15.461	-26.780	-3205.166	1850.513	-0.674
Dead+Ice+Temp	92.329	0.000	0.000	12.600	-8.279	0.000
Dead+Wind 0 deg+Ice+Temp	92.329	0.026	-4.893	-609.166	-13.020	-0.079
Dead+Wind 30 deg+Ice+Temp	92.329	2.484	-4.250	-528.161	-326.039	0.008
Dead+Wind 60 deg+Ice+Temp	92.329	4.277	-2.469	-302.217	-553.942	0.093
Dead+Wind 90 deg+Ice+Temp	92.329	4.923	-0.026	8.125	-635.663	0.153
Dead+Wind 120 deg+Ice+Temp	92.329	4.250	2.424	319.709	-549.306	0.172
Dead+Wind 150 deg+Ice+Temp	92.329	2.439	4.224	549.047	-318.008	0.146
Dead+Wind 180 deg+Ice+Temp	92.329	-0.026	4.893	634.688	-3.747	0.080
Dead+Wind 210 deg+Ice+Temp	92.329	-2.484	4.250	553.684	309.272	-0.007
Dead+Wind 240 deg+Ice+Temp	92.329	-4.277	2.469	327.740	537.176	-0.092
Dead+Wind 270 deg+Ice+Temp	92.329	-4.923	0.026	17.398	618.898	-0.153
Dead+Wind 300 deg+Ice+Temp	92.329	-4.250	-2.424	-294.187	532.540	-0.173
Dead+Wind 330 deg+Ice+Temp	92.329	-2.439	-4.224	-523.525	301.242	-0.145
Dead+Wind 0 deg - Service	61.857	0.084	-11.984	-1436.048	-15.498	-0.133
Dead+Wind 30 deg - Service	61.857	6.113	-10.420	-1250.259	-741.059	0.028
Dead+Wind 60 deg - Service	61.857	10.504	-6.064	-728.738	-1268.469	0.179
Dead+Wind 90 deg - Service	61.857	12.081	-0.084	-11.227	-1456.412	0.282
Dead+Wind 120 deg - Service	61.857	10.420	5.919	710.024	-1254.534	0.312
Dead+Wind 150 deg - Service	61.857	5.968	10.337	1241.753	-716.916	0.261
Dead+Wind 180 deg - Service	61.857	-0.084	11.984	1441.477	12.385	0.140
Dead+Wind 210 deg - Service	61.857	-6.113	10.420	1255.688	737.946	-0.021
Dead+Wind 240 deg - Service	61.857	-10.504	6.064	734.167	1265.356	-0.179
Dead+Wind 270 deg - Service	61.857	-12.081	0.084	16.656	1453.299	-0.289

Load Combination	Vertical K	$Shear_x$ K	$Shear_z$ K	Overturning Moment, M_x kip-ft	Overturning Moment, M_z kip-ft	Torque kip-ft
Dead+Wind 300 deg - Service	61.857	-10.420	-5.919	-704.595	1251.422	-0.318
Dead+Wind 330 deg - Service	61.857	-5.968	-10.337	-1236.325	713.803	-0.261

Solution Summary

	Sum of Applied Forces			Sum of Reactions			
Load Comb.	PX K	PY K	PZ K	PX K	PY K	PZ K	% Error
1	0.000	-61.857	0.000	0.000	61.857	0.000	0.000%
2	0.217	-61.857	-31.048	-0.217	61.857	31.048	0.000%
3	15.837	-61.857	-26.997	-15.837	61.857	26.997	0.000%
4	27.214	-61.857	-15.712	-27.214	61.857	15.712	0.000%
5	31.298	-61.857	-0.217	-31.298	61.857	0.217	0.000%
6	26.997	-61.857	15.336	-26.997	61.857	-15.336	0.000%
7	15.461	-61.857	26.780	-15.461	61.857	-26.780	0.000%
8	-0.217	-61.857	31.048	0.217	61.857	-31.048	0.000%
9	-15.837	-61.857	26.997	15.837	61.857	-26.997	0.000%
10	-27.214	-61.857	15.712	27.214	61.857	-15.712	0.000%
11	-31.298	-61.857	0.217	31.298	61.857	-0.217	0.000%
12	-26.997	-61.857	-15.336	26.997	61.857	15.336	0.000%
13	-15.461	-61.857	-26.780	15.461	61.857	26.780	0.000%
14	0.000	-92.329	0.000	-0.000	92.329	-0.000	0.000%
15	0.026	-92.329	-4.893	-0.026	92.329	4.893	0.000%
16	2.484	-92.329	-4.250	-2.484	92.329	4.250	0.000%
17	4.277	-92.329	-2.469	-4.277	92.329	2.469	0.000%
18	4.923	-92.329	-0.026	-4.923	92.329	0.026	0.000%
19	4.250	-92.329	2.424	-4.250	92.329	-2.424	0.000%
20	2.439	-92.329	4.224	-2.439	92.329	-4.224	0.000%
21	-0.026	-92.329	4.893	0.026	92.329	-4.893	0.000%
22	-2.484	-92.329	4.250	2.484	92.329	-4.250	0.000%
23	-4.277	-92.329	2.469	4.277	92.329	-2.469	0.000%
24	-4.923	-92.329	0.026	4.923	92.329	-0.026	0.000%
25	-4.250	-92.329	-2.424	4.250	92.329	2.424	0.000%
26	-2.439	-92.329	-4.224	2.439	92.329	4.224	0.000%
27	0.084	-61.857	-11.984	-0.084	61.857	11.984	0.000%
28	6.113	-61.857	-10.420	-6.113	61.857	10.420	0.000%
29	10.504	-61.857	-6.064	-10.504	61.857	6.064	0.000%
30	12.081	-61.857	-0.084	-12.081	61.857	0.084	0.000%
31	10.420	-61.857	5.919	-10.420	61.857	-5.919	0.000%
32	5.968	-61.857	10.337	-5.968	61.857	-10.337	0.000%
33	-0.084	-61.857	11.984	0.084	61.857	-11.984	0.000%
34	-6.113	-61.857	10.420	6.113	61.857	-10.420	0.000%
35	-10.504	-61.857	6.064	10.504	61.857	-6.064	0.000%
36	-12.081	-61.857	0.084	12.081	61.857	-0.084	0.000%
37	-10.420	-61.857	-5.919	10.420	61.857	5.919	0.000%
38	-5.968	-61.857	-10.337	5.968	61.857	10.337	0.000%

Non-Linear Convergence Results

Load Combination	Converged?	Number of Cycles	Displacement Tolerance	Force Tolerance
1	Yes	4	0.00000001	0.00000001
2	Yes	4	0.00000001	0.00045338
3	Yes	5	0.00000001	0.00065652
4	Yes	5	0.00000001	0.00065573
5	Yes	4	0.00000001	0.00037658
6	Yes	5	0.00000001	0.00063129
7	Yes	5	0.00000001	0.00061874
8	Yes	4	0.00000001	0.00064539
9	Yes	5	0.00000001	0.00065706
10	Yes	5	0.00000001	0.00066250
11	Yes	4	0.00000001	0.00078875
12	Yes	5	0.00000001	0.00061731
13	Yes	5	0.00000001	0.00062550
14	Yes	4	0.00000001	0.00008836
15	Yes	5	0.00000001	0.00031301
16	Yes	5	0.00000001	0.00033197
17	Yes	5	0.00000001	0.00033624
18	Yes	5	0.00000001	0.00032598
19	Yes	5	0.00000001	0.00033865
20	Yes	5	0.00000001	0.00033773
21	Yes	5	0.00000001	0.00032523
22	Yes	5	0.00000001	0.00033849
23	Yes	5	0.00000001	0.00033728
24	Yes	5	0.00000001	0.00031869
25	Yes	5	0.00000001	0.00032382
26	Yes	5	0.00000001	0.00032162
27	Yes	4	0.00000001	0.00015091
28	Yes	5	0.00000001	0.00005646
29	Yes	5	0.00000001	0.00005619
30	Yes	4	0.00000001	0.00015408
31	Yes	5	0.00000001	0.00005462
32	Yes	5	0.00000001	0.00005251
33	Yes	4	0.00000001	0.00016025
34	Yes	5	0.00000001	0.00005658
35	Yes	5	0.00000001	0.00005746
36	Yes	4	0.00000001	0.00017370
37	Yes	5	0.00000001	0.00005200
38	Yes	5	0.00000001	0.00005354

Maximum Tower Deflections - Service Wind

Section No.	Elevation ft	Horz. Deflection in	Gov. Load Comb.	Tilt °	Twist °
L1	177 - 129.75	36.160	35	1.950	0.000
L2	133.5 - 120	19.660	35	1.526	0.000
L3	120 - 110	15.646	35	1.278	0.000
L4	110 - 84	13.133	35	1.119	0.000
L5	88.75 - 80	8.621	35	0.905	0.000
L6	80 - 60	7.015	35	0.837	0.000
L7	60 - 39.3	3.947	35	0.627	0.000
L8	45.05 - 20	2.248	35	0.459	0.000
L9	20 - 0	0.436	35	0.210	0.000

Critical Deflections and Radius of Curvature - Service Wind

Elevation ft	Appurtenance	Gov. Load Comb.	Deflection in	Tilt °	Twist °	Radius of Curvature ft
179.000	1900MHz RRH (65MHz)	35	36.160	1.950	0.000	27431
167.000	RR90-17-00DP w/Mount Pipe	35	32.105	1.887	0.000	13715
154.000	(2) LPA-80063/6CF w/ Mount Pipe	35	26.978	1.785	0.000	5962
137.000	(4) DB844H90 w/ Mount Pipe	35	20.817	1.582	0.000	3428
127.000	(2) AP14/17-880/1940/065D/ADT/XXP w/ Mount Pipe	35	17.636	1.408	0.000	2984
117.000	APXV18-206517S-C w/ Mount Pipe	35	14.856	1.226	0.000	3236
79.000	8225	35	6.841	0.828	0.000	5853

Maximum Tower Deflections - Design Wind

Section No.	Elevation ft	Horz. Deflection in	Gov. Load Comb.	Tilt °	Twist °
L1	177 - 129.75	93.447	10	5.044	0.000
L2	133.5 - 120	50.846	10	3.947	0.001
L3	120 - 110	40.473	10	3.307	0.001
L4	110 - 84	33.976	10	2.896	0.001
L5	88.75 - 80	22.306	10	2.341	0.001
L6	80 - 60	18.152	10	2.166	0.001
L7	60 - 39.3	10.217	10	1.622	0.000
L8	45.05 - 20	5.819	10	1.188	0.000
L9	20 - 0	1.129	10	0.542	0.000

Critical Deflections and Radius of Curvature - Design Wind

Elevation ft	Appurtenance	Gov. Load Comb.	Deflection in	Tilt °	Twist °	Radius of Curvature ft
179.000	1900MHz RRH (65MHz)	10	93.447	5.044	0.001	10768
167.000	RR90-17-00DP w/Mount Pipe	10	82.980	4.879	0.001	5383
154.000	(2) LPA-80063/6CF w/ Mount Pipe	10	69.745	4.617	0.001	2338
137.000	(4) DB844H90 w/ Mount Pipe	10	53.835	4.092	0.001	1342
127.000	(2) AP14/17-880/1940/065D/ADT/XXP w/ Mount Pipe	10	45.616	3.643	0.001	1165
117.000	APXV18-206517S-C w/ Mount Pipe	10	38.430	3.173	0.001	1260
79.000	8225	10	17.702	2.144	0.001	2269

Compression Checks

Pole Design Data

Section No.	Elevation ft	Size	L ft	L_u ft	Kl/r	F_a ksi	A in^2	Actual P K	Allow. P_a K	Ratio $\frac{P}{P_a}$
L1	177 - 129.75 (1)	TP30.268x22x0.219	47.250	0.000	0.0	39.000	20.413	-9.055	796.091	0.011
L2	129.75 - 120 (2)	TP31.536x29.174x0.25	13.500	0.000	0.0	39.000	24.825	-12.634	968.192	0.013
L3	120 - 110 (3)	TP33.286x31.536x0.394	10.000	0.000	0.0	32.220	41.092	-14.822	1323.990	0.011
L4	110 - 84 (4)	TP37.836x33.286x0.718	26.000	0.000	0.0	19.680	82.639	-21.642	1626.330	0.013
L5	84 - 80 (5)	TP38.045x35.57x0.783	8.750	0.000	0.0	18.840	92.570	-26.119	1744.030	0.015
L6	80 - 60 (6)	TP41.5x38.045x0.785	20.000	0.000	0.0	19.740	101.394	-33.943	2001.530	0.017
L7	60 - 39.3 (7)	TP45.167x41.5x0.734	20.700	0.000	0.0	25.200	101.089	-39.831	2547.440	0.016
L8	39.3 - 20 (8)	TP47.91x42.681x0.768	25.050	0.000	0.0	24.300	114.959	-52.608	2793.500	0.019
L9	20 - 0 (9)	TP51.41x47.91x0.779	20.000	0.000	0.0	24.660	125.140	-61.849	3085.950	0.020

Pole Bending Design Data

Section No.	Elevation ft	Size	Actual M_x kip-ft	Actual f_{bx} ksi	Allow. F_{bx} ksi	Ratio $\frac{f_{bx}}{F_{bx}}$	Actual M_y kip-ft	Actual f_{by} ksi	Allow. F_{by} ksi	Ratio $\frac{f_{by}}{F_{by}}$
L1	177 - 129.75 (1)	TP30.268x22x0.219	404.705	32.789	39.000	0.841	0.000	0.000	39.000	0.000
L2	129.75 - 120 (2)	TP31.536x29.174x0.25	649.294	40.659	39.000	1.043	0.000	0.000	39.000	0.000
L3	120 - 110 (3)	TP33.286x31.536x0.394	852.875	30.811	32.220	0.956	0.000	0.000	32.220	0.000
L4	110 - 84 (4)	TP37.836x33.286x0.718	1324.317	21.730	19.680	1.104	0.000	0.000	19.680	0.000
L5	84 - 80 (5)	TP38.045x35.57x0.783	1533.383	21.900	18.840	1.162	0.000	0.000	18.840	0.000
L6	80 - 60 (6)	TP41.5x38.045x0.785	2042.850	24.337	19.740	1.233	0.000	0.000	19.740	0.000
L7	60 - 39.3 (7)	TP45.167x41.5x0.734	2448.975	27.380	25.200	1.086	0.000	0.000	25.200	0.000
L8	39.3 - 20 (8)	TP47.91x42.681x0.768	3174.017	28.720	24.300	1.182	0.000	0.000	24.300	0.000
L9	20 - 0 (9)	TP51.41x47.91x0.779	3787.325	29.285	24.660	1.188	0.000	0.000	24.660	0.000

Pole Shear Design Data

Section No.	Elevation ft	Size	Actual V K	Actual f_v ksi	Allow. F_v ksi	Ratio $\frac{f_v}{F_v}$	Actual T kip-ft	Actual f_{vt} ksi	Allow. F_{vt} ksi	Ratio $\frac{f_{vt}}{F_{vt}}$
L1	177 - 129.75 (1)	TP30.268x22x0.219	16.279	0.798	26.000	0.061	0.000	0.000	26.000	0.000
L2	129.75 - 120 (2)	TP31.536x29.174x0.25	19.455	0.784	26.000	0.060	0.021	0.001	26.000	0.000
L3	120 - 110 (3)	TP33.286x31.536x0.394	21.047	0.512	21.480	0.048	0.055	0.001	21.480	0.000
L4	110 - 84 (4)	TP37.836x33.286x0.718	23.356	0.283	13.120	0.043	0.129	0.001	13.120	0.000
L5	84 - 80 (5)	TP38.045x35.57x0.783	24.388	0.263	12.560	0.042	0.160	0.001	12.560	0.000

Section No.	Elevation ft	Size	Actual V K	Actual f_v ksi	Allow. F_v ksi	Ratio $\frac{f_v}{F_v}$	Actual T kip-ft	Actual f_{vt} ksi	Allow. F_{vt} ksi	Ratio $\frac{f_{vt}}{F_{vt}}$
L6	80 - 60 (6)	TP41.5x38.045x0.785	26.506	0.261	13.160	0.040	0.237	0.001	13.160	0.000
L7	60 - 39.3 (7)	TP45.167x41.5x0.734	27.854	0.276	16.800	0.033	0.292	0.002	16.800	0.000
L8	39.3 - 20 (8)	TP47.91x42.681x0.768	29.924	0.260	16.200	0.032	0.382	0.002	16.200	0.000
L9	20 - 0 (9)	TP51.41x47.91x0.779	31.438	0.251	16.440	0.031	0.462	0.002	16.440	0.000

Pole Interaction Design Data

Section No.	Elevation ft	Ratio $\frac{P}{P_a}$	Ratio $\frac{f_{bx}}{F_{bx}}$	Ratio $\frac{f_{by}}{F_{by}}$	Ratio $\frac{f_v}{F_v}$	Ratio $\frac{f_{vt}}{F_{vt}}$	Comb. Stress Ratio	Allow. Stress Ratio	Criteria
L1	177 - 129.75 (1)	0.011	0.841	0.000	0.061	0.000	0.853 ✔	1.333	H1-3+VT ✔
L2	129.75 - 120 (2)	0.013	1.043	0.000	0.060	0.000	1.056 ✔	1.333	H1-3+VT ✔
L3	120 - 110 (3)	0.011	0.956	0.000	0.048	0.000	0.968 ✔	1.333	H1-3+VT ✔
L4	110 - 84 (4)	0.013	1.104	0.000	0.043	0.000	1.118 ✔	1.333	H1-3+VT ✔
L5	84 - 80 (5)	0.015	1.162	0.000	0.042	0.000	1.178 ✔	1.333	H1-3+VT ✔
L6	80 - 60 (6)	0.017	1.233	0.000	0.040	0.000	1.250 ✔	1.333	H1-3+VT ✔
L7	60 - 39.3 (7)	0.016	1.086	0.000	0.033	0.000	1.102 ✔	1.333	H1-3+VT ✔
L8	39.3 - 20 (8)	0.019	1.182	0.000	0.032	0.000	1.201 ✔	1.333	H1-3+VT ✔
L9	20 - 0 (9)	0.020	1.188	0.000	0.031	0.000	1.208 ✔	1.333	H1-3+VT ✔

Section Capacity Table

Section No.	Elevation ft	Component Type	Size	Critical Element	P K	$SF*P_{allow}$ K	% Capacity	Pass Fail
L1	177 - 129.75	Pole	TP30.268x22x0.219	1	-9.055	1061.189	64.0	Pass
L2	129.75 - 120	Pole	TP31.536x29.174x0.25	2	-12.634	1290.600	79.3	Pass
L3	120 - 110	Pole	TP33.286x31.536x0.394	3	-14.822	1764.879	72.6	Pass
L4	110 - 84	Pole	TP37.836x33.286x0.718	4	-21.642	2167.898	83.9	Pass
L5	84 - 80	Pole	TP38.045x35.57x0.783	5	-26.119	2324.792	88.4	Pass
L6	80 - 60	Pole	TP41.5x38.045x0.785	6	-33.943	2668.039	93.8	Pass
L7	60 - 39.3	Pole	TP45.167x41.5x0.734	7	-39.831	3395.737	82.7	Pass
L8	39.3 - 20	Pole	TP47.91x42.681x0.768	8	-52.608	3723.735	90.1	Pass
L9	20 - 0	Pole	TP51.41x47.91x0.779	9	-61.849	4113.571	90.6	Pass
							Summary	
						Pole (L6)	93.8	Pass
						RATING =	**93.8**	**Pass**

APPENDIX B

BASE LEVEL DRAWING

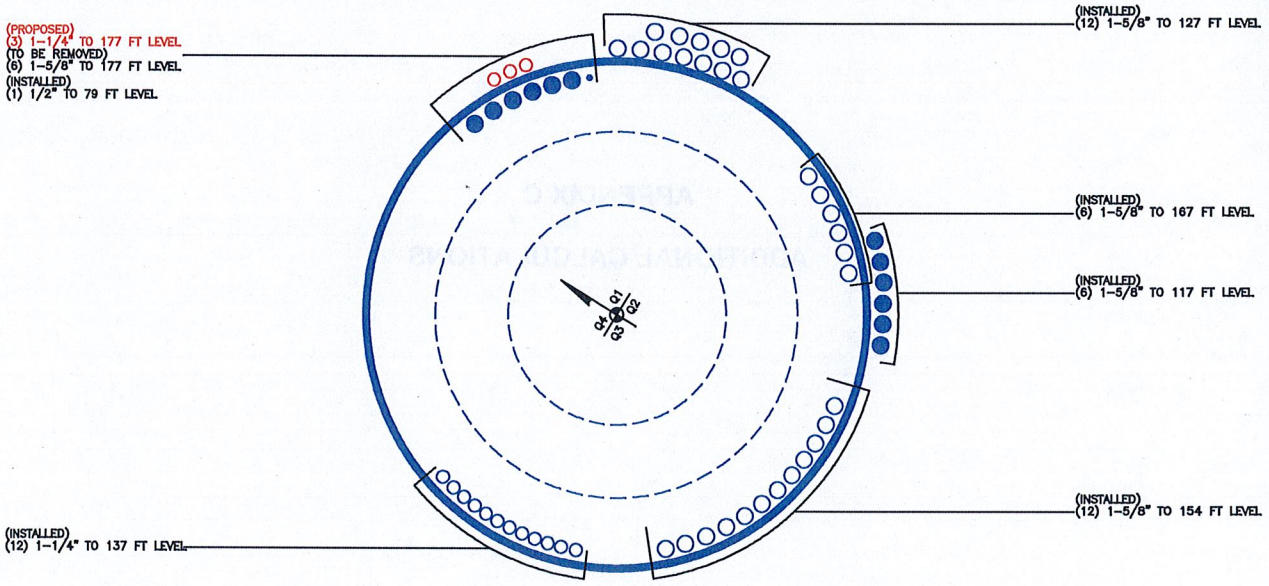

BUSINESS UNIT: 876376

APPENDIX C

ADDITIONAL CALCULATIONS

Square, Stiffened / Unstiffened Base Plate, Any Rod Material - Rev. F /G

Assumptions: 1) Rod groups at corners. Total # rods divisible by 4. Maximum total # of rods = 48 (12 per Corner).
2) Rod Spacing = Straight Center-to-Center distance between any (2) adjacent rods (same corner)
3) Clear space between bottom of leveling nut and top of concrete **not** exceeding (1)*(Rod Diameter)

Site Data

BU#: *876376*
Site Name: *Scoville, CT*
App #: *151585; Rev: 0*

Anchor Rod Data		
Qty:	16	
Diam:	2.25	in
Rod Material:	A615-J	
Yield, Fy:	75	ksi
Strength, Fu:	100	ksi
Bolt Circle:	58	in
Anchor Spacing:	6	in

Plate Data		
W=Side:	57	in
Thick:	2.75	in
Grade:	55	ksi
Clip Distance:	0	in

Stiffener Data (Welding at both sides)		
Configuration:	Unstiffened	
Weld Type:		**
Groove Depth:		in **
Groove Angle:		degrees
Fillet H. Weld:		<-- Disregard
Fillet V. Weld:		in
Width:		in
Height:		in
Thick:		in
Notch:		in
Grade:		ksi
Weld str.:		ksi

Pole Data		
Diam:	51.41	in
Thick:	0.375	in
Grade:	65	ksi
# of Sides:	18	"0" IF Round

Stress Increase Factor		
ASD ASIF:	1.333	

Base Reactions		
TIA Revision:	F	
Unfactored Moment, M:	3787	ft-kips
Unfactored Axial, P:	62	kips
Unfactored Shear, V:	31	kips

Anchor Rod Results

TIA F --> Maximum Rod Tension	192.0 Kips
Allowable Tension:	195.0 Kips
Anchor Rod Stress Ratio:	98.5% **Pass**

Base Plate Results Flexural Check

Base Plate Stress:	53.6 ksi
Allowable PL Bending Stress:	55.0 ksi
Base Plate Stress Ratio:	97.5% **Pass**

PL Ref. Data
Yield Line (in): 29.20
Max PL Length: 29.20

N/A - Unstiffened

Stiffener Results

Horizontal Weld :	N/A
Vertical Weld:	N/A
Plate Flex+Shear, fb/Fb+(fv/Fv)^2:	N/A
Plate Tension+Shear, ft/Ft+(fv/Fv)^2:	N/A
Plate Comp. (AISC Bracket):	N/A

Pole Results

Pole Punching Shear Check:	N/A

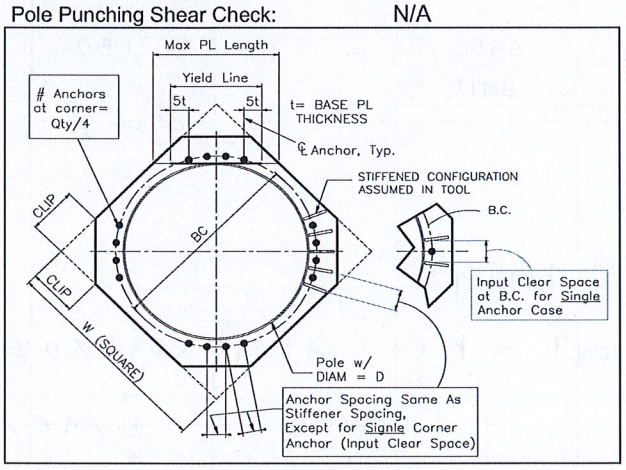

** Note: for complete joint penetration groove welds the groove depth must be exactly 1/2 the stiffener thickness for calculation purposes

PROJECT	88609.002 - Scoville hill
SUBJECT	Foundation
DATE 6/12/12	PAGE 1 OF 2

B+T GRP
1717 S. Boulder, Suite 300
Tulsa, OK 74119
(918) 587-4630

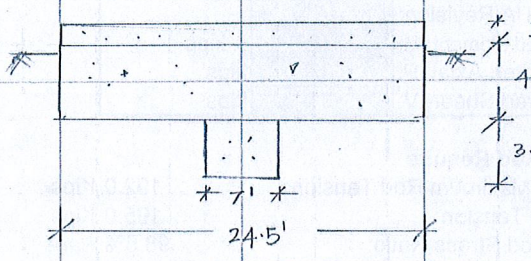

M = 3787 K-ft

V = 31 K

Axial = 62 K

[Assume 55" ϕ box opening at TOP 1']

① Check for overturning :-

$M_O = 3787 + 31 \times 4 = 3911$ K-ft

$M_R = [4 \times 24.5 \times 24.5 \times 0.150] \times \frac{24.5}{2} + [3.5 \times 7 \times 7 \times 0.15] \times \frac{24.5}{2}$

$+ 62 \times \frac{24.5}{2} + [1 \times 24.5 \times 24.5 - \frac{\pi}{4} \times 4.6^2 \times 1] \times 0.15 \times \frac{24.5}{2}$

$= 4411.8 + 315.13 + 759.5 + 1072.4 = 6558.8$ K-ft

$\frac{M_R}{M_O} = \frac{6558.8}{3911} = 1.7 > 1.50$

$\Rightarrow 89.4\ \%$

Check for bearing :-

Total load $= P = 4 \times 24.5 \times 24.5 \times 0.15 + 3.5 \times 7 \times 7 \times 0.15$

$+ [1 \times 24.5 \times 24.5 - \frac{\pi}{4} \times 4.6^2 \times 1] \times 0.15 + 62$

$= 535.4$ K

$M_O = 3911.0$ K-ft

$e = \frac{M_O}{P} = \frac{3911.0}{535.4} = 7.3 > \frac{B}{6} = \frac{24.5}{6} = 4.08'$

PROJECT	83609.002 – Scoville hill
SUBJECT	Foundation
DATE 6/12/12	PAGE 2 OF 2

B+T GRP
1717 S. Boulder, Suite 300
Tulsa, OK 74119
(918) 587-4630

$e' = \frac{B}{2} - e = \frac{24.5'}{2} - 7.3' = 4.95'$

$q_{max} = \frac{P}{\frac{1}{2} \times 3e' \times B} = \frac{535.4}{0.5 \times 3 \times 4.95 \times 24.5} = 2.94\ K/ft^2$

$< q_{max} = 20\ K/ft^2$

$\therefore$ safe in bearing

Know what's **below.**
Call before you dig.

APPROVALS

		APPROVED	APPROVED AS NOTED	DISAPPROVED REVISE
SPRINT REPRESENTATIVES	DATE	☐	☐	☐
SPRINT RF ENGINEER	DATE	☐	☐	☐
SITE OWNER	DATE	☐	☐	☐
	DATE	☐	☐	☐

Sprint®

SITE ID: CT33XC111
CROWN CASTLE SITE ID: 876376
SITE NAME: SCOVILLE HILL / HARWINTON ROD & GUN

NETWORK VISION CONSTRUCTION DRAWINGS

THE STRUCTURAL ENGINEERING CONCERNING THE STRUCTURAL STABILITY OF THE TOWER/POLE, FOUNDATION, ANTENNAS, MOUNTS AND ALL ASSOCIATED ANCILLARY RADIO EQUIPMENT IS BEING COMPLETED BY OTHERS. KMB DESIGN GROUP, LLC HAS NOT BEEN REQUESTED TO PERFORM ANY STRUCTURAL ANALYSIS SERVICES TO VERIFY THAT THE TOWER/POLE AND/OR FOUNDATION IS CAPABLE OF SUPPORTING THE PROPOSED EQUIPMENT DEPICTED WITHIN THESE SIGNED AND SEALED DRAWINGS. FURTHERMORE KMB DESIGN GROUP, LLC HAS NOT BEEN REQUESTED TO PHYSICALLY CONFIRM THE EXISTING MOUNT CONFIGURATION AND PERFORM A STRUCTURAL ANALYSIS TO VERIFY THAT THE EXISTING, INTERIM AND PROPOSED ANTENNAS, MOUNTS AND ALL ASSOCIATED ANCILLARY RADIO EQUIPMENT CAN BE SAFELY SUPPORTED. SIGNED AND SEALED DRAWINGS REVISED TO STATE "ISSUED FOR CONSTRUCTION" SHALL BE PROVIDED TO THE PROFESSIONAL ENGINEERS RESPONSIBLE FOR THE STRUCTURAL ANALYSIS OF THE TOWER/POLE, ANTENNAS, MOUNTS AND ALL ASSOCIATED ANCILLARY RADIO EQUIPMENT. KMB DESIGN GROUP, LLC SHALL BE NOTIFIED SHOULD THE STRUCTURAL ANALYSIS RESULT IN SOME ELEMENTS NOT BEING STRUCTURALLY CAPABLE OF SUPPORTING THE PROPOSED DESIGN DEPICTED. THE CONTRACTOR SHALL NOT COMMENCE CONSTRUCTION WITHOUT OBTAINING (A) A SIGNED AND SEALED COPY OF THE PLANS "ISSUED FOR CONSTRUCTION"; (B) STRUCTURAL ANALYSIS REPORT STATING THAT THE TOWER/POLE/FOUNDATION IS CAPABLE OF SUPPORTING THE PROPOSED LOADING REFERENCING THE SIGNED AND SEALED PLANS BY KMB DESIGN GROUP, LLC; (C) SPRINT PLATFORM ANALYSIS STATING THAT THE SPRINT PLATFORM IS CAPABLE OF SUPPORTING THE PROPOSED DESIGN AS REFERENCED WITHIN THE SIGNED AND SEALED PLANS BY KMB DESIGN GROUP, LLC.

NOTE:
NO CONSTRUCTION IS TO COMMENCE PRIOR TO CROWN CASTLE APPROVAL

AERIAL VIEW
SCALE: NTS

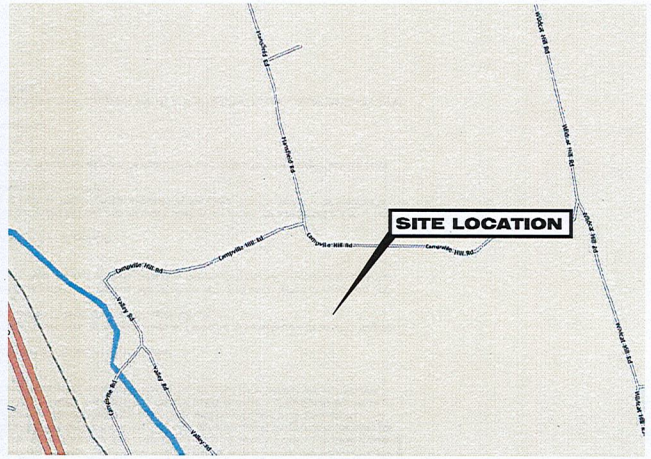

LOCATION MAP
SCALE: NTS

SITE INFORMATION

BLOCK: 5
LOT: 2A
MAP: A4
ZONING CLASSIFICATION: TBD
ZONING JURISDICTION: TBD

PROJECT INFORMATION:

SITE ADDRESS:
123 CAMPVILLE HILL ROAD
HARWINTON, CT 06791
LITCHFIELD COUNTY

COORDINATES:
LATITUDE: 41° 44' 12.40"
LONGITUDE: -73° 05' 49.33"
DATUM : NAD 83

STRUCTURE HEIGHT:
±179'-0" (TOP OF EXISTING MONOPOLE)

PROJECT DIRECTORY:

PROPERTY OWNER:
CROWN CASTLE
2000 CORPORATE DRIVE
CANONSBURG, PA 15317

APPLICANT:
SPRINT-NEXTEL
6200 SPRINT PARKWAY
OVERLAND PARK, KS 66251

ENGINEER:
KMB DESIGN GROUP, LLC
1800 ROUTE 34, SUITE 209
WALL, NJ 07719
KEITH DRENNAN - PROJECT MANAGER
(732) 280-5623

POWER COMPANY:
CONNECTICUT LIGHT & POWER
P.O. BOX 270
HARTFORD, CT 06141-0270
(800) 286-2000

CONSTRUCTION MANAGER:
TODD AMANN
(914) 715-9363

CROWN CASTLE CONSTRUCTION MANAGER:
MIKE CALLAHAN
(860) 919-7278

AAV PROVIDER:
CHARTER COMMUNICATIONS

DRAWING INDEX

DWG #	DRAWING TITLES
A01	COVER SHEET
C01	GENERAL NOTES 1 OF 2
C01A	GENERAL NOTES 2 OF 2
C02	COMPOUND PLAN
C02A	ELEVATION
C03	EQUIPMENT PLANS
C03A	EQUIPMENT & ANTENNA SPECIFICATIONS
C04	EXISTING ANTENNA PLAN (ALL SECTORS)
C04A	FINAL ANTENNA PLAN (ALL SECTORS)
C04B	RRH MOUNT DETAILS (ALL SECTORS)
C05	SITE DETAILS
C06	RF SCHEDULE
C06A	RF DATA SHEET
C07A	AAV DRAWINGS - SITE PHOTOS
C07B	AAV DRAWINGS - COMPOUND PLAN
C07C	AAV DRAWINGS - DETAILS
E01	ELECTRICAL NOTES
E02	ELECTRICAL & GROUNDING DETAILS

CODES & STANDARDS

These documents are in compliance & all construction to be in accordance with the following codes & standards as applicable:

State Building Code: 2005 Connecticut Supplement

2003 International Building Code
2003 International Residential Code
2003 International Existing Building Code
2003 International Mechanic Code
2003 International Plumbing Code
2003 International Energy Conservation Code (re-adopted with changes)
ICC/ANSI A117.1-2003 Assessible and Usable Buildings and Facilities

2005 National Electrical Code (NFPA-70)

DRIVING DIRECTIONS

1. DEPART 1 INTERNATIONAL BLVD, MAHWAH, NJ 07495
2. TAKE 3RD EXIT FROM ROUNDABOUT INTERNATIONAL BLVD ONTO LEISURE LN.
3. TAKE RAMP ONTO STATE HIGHWAY 17 (RT-17 N).
4. CONTINUE ON I-287 N.
5. TAKE THE I-87 S/I-287/NEW YORK STATE THRUWAY SOUTH/TAPPAN ZEE BR/NEW YORK CITY EXIT ONTO NEW YORK STATE THRUWAY SOUTH (I-287 E, I-87 S) (PARTIAL TOLL ROAD).
6. KEEP RIGHT ONTO NEW YORK STATE THRUWAY SOUTH (I-87 S) TOWARD RT-119/SAW MILL PKWY NORTH/SAW MILL PKWY SOUTH/NEW YORK CITY/ELMSFORD.
7. TAKE EXIT #8A/RT-119/SAW MILL PKWY NORTH/ELMSFORD ONTO SAW MILL PKY NORTH, SAW MILL RIVER PKY N TOWARD SAW MILL RIVER PKWY NORTH/KATONAH.
8. TAKE LEFT RAMP ONTO I-684 N TOWARD BREWSTER.
9. TAKE EXIT #9E/I-84 E/DANBURY ONTO I-84 E.
10. TAKE EXIT #20/CT-8 N/TORRINGTON TO THE LEFT ONTO CT-8 N.
11. TAKE EXIT #41/NORTHFIELD/CAMPVILLE.
12. TURN RIGHT ONTO CAMPVILLE RD.
13. CONTINUE ON NORTHFIELD RD.
14. BEAR LEFT ONTO VALLEY RD.
15. TURN RIGHT ONTO CAMPVILLE HILL RD. YOUR DESTINATION ON CAMPVILLE HILL RD IS ON THE RIGHT.

Sprint®

Alcatel·Lucent

REV.	DATE	REVISION DESCRIPTION	DRAWN BY	CHKD. BY
3	01-30-13	REVISED PER CLIENT COMMENTS	CCR	KCD
2	12-14-12	REVISED PER CLIENT COMMENTS	KAZ	KCD
1	12-07-12	REVISED PER CLIENT COMMENTS	KAZ	KCD
0	09-10-12	ISSUED FOR CONSTRUCTION	MCD	KCD

KMB DESIGN GROUP
kmbdg.com
1800 ROUTE 34, SUITE 209
WALL, NJ 07719
(732) 280-5623

Stephen A. Bray
PROFESSIONAL ENGINEER

STATE OF CONNECTICUT
STEPHEN A. BRAY
No. 26657
LICENSED PROFESSIONAL ENGINEER

CT LICENSE: 26657 1/30/13

PROJECT NUMBER: 332.1499

SITE INFORMATION:
123 CAMPVILLE HILL ROAD
HARWINTON, CT 06791
LITCHFIELD COUNTY
CROWN CASTLE SITE: 876376
CT33XC111

PROJECT TYPE: NETWORK VISION

DRAWN BY:	CHECKED BY:	DATE:
JLS		05-01-12

SHEET TITLE: COVER SHEET

SHEET NUMBER: A01 REV.: 3

OWNERSHIP OF DOCUMENTS: THIS DOCUMENT AND THE IDEAS AND DESIGNS INCORPORATED HEREIN, AS AN INSTRUMENT OF PROFESSIONAL SERVICE, ARE THE PROPERTY OF KMB DESIGN GROUP, LLC AND ARE NOT TO BE USED, IN WHOLE OR IN PART, FOR OTHER PURPOSES BY ANYBODY WITHOUT THE WRITTEN AUTHORIZATION OF KMB DESIGN GROUP, LLC. IT IS UNLAWFUL FOR ANY PERSON TO ADD OR MODIFY ANY ASPECT OF THESE DRAWINGS UNLESS THEY HAVE THE APPROVAL OF THE LICENSED PROFESSIONAL ENGINEER.

K:\332_Sprint_332.1000_Alcatel-Lucent\332.1499_CT33XC111_123 Campville Hill Road\332.1499_Construction\332.1499_A01.dwg, 1/30/2013 4:06:31 PM, ngonzalez

GENERAL CONSTRUCTION NOTES:

1. This set of plans has been prepared for the purposes of municipal and agency review and approval. This set of plans shall not be utilized as construction documents until all drawings have been revised to indicate "ISSUED FOR CONSTRUCTION." Contractor shall e-mail plans@kmbdg.com to ensure that they have the latest set of construction drawings prior to commencing any work whatsoever.
2. ADA compliance: The facility is a normally unoccupied mobile radio facility.
3. These plans are intended to be used to direct the proposed layout. Drawings should not be scaled unless otherwise noted. Plans, elevations and details are intended to show the end result of design. Minor modifications may be required to suit job dimensions or conditions.
4. The contractor shall verify all dimensions and conditions and notify the Project Manager of any discrepancies before starting any work.
5. These plans are designed to reflect observed field conditions. Certain conditions are assumed to comply with general standard construction design methods and principles, and the Contractor shall note that not all areas of structural attachment have been opened or specifically verified. The Contractor is therefore requested to notify the Engineer immediately should encountered field conditions vary from those depicted on the drawings. KMB Design Group, LLC will issue field change direction if required. The Project Manager is referenced on the cover sheet.
6. All equipment and materials shall be installed in accordance with the manufacturer's recommendations unless otherwise noted by the Engineer of Record.
7. The Contractor shall be responsible for all work performed and materials installed to be in strict conformance, as a minimum standard, with all applicable codes, regulations and ordinances having jurisdiction. Electrical systems shall be installed in conformance with the National Electrical Code, and all other local and state jurisdictional codes, ordinances, and with local utility company specifications, whichever is more stringent.
8. The Contractor shall keep contract area clean, hazard free and dispose of all dirt, stumps, stones, rubbish or debris in accordance with all local and environmental laws. No materials or equipment shall be placed anywhere on or in the structure without making adequate provisions to protect existing property. Upon completion, repair any damage that may have occurred during construction. Repair all existing wall surfaces damaged during construction such that they match and blend with adjacent surfaces.
9. The Contractor shall be solely responsible and have control over construction means, methods, techniques, sequences, and procedures.

SPRINT SPECIFICATIONS:

1. Contractor shall ensure that they obtain the latest copy of the following documents from ALU:
   A. Cell Site Installation & De-Installation Services - Attachment G-1
   B. Sprint Integrated Construction Standards for Wireless Sites
   C. Standard Construction Specifications for Wireless Sites
2. Contractor shall notify the Engineer immediately if any of the Sprint standards contradict the standards provided by KMB Design Group, LLC so that the Engineer can provide direction.
3. State, Federal and Local codes prevail.

DIVISION 1 - GENERAL REQUIREMENTS SECTION 01010 SUMMARY OF WORK:

1. The Contractor shall review and become familiar with specifications contained in the bid package prepared by KMB Design Group, LLC and the client. The Contractor shall e-mail plans@kmbdg.com to ensure that they have the latest set of construction drawings prior to commencing any work whatsoever.
2. In the event of a conflict between the bid package specifications and these notes, the provisions of the clients specifications shall take precedence.
3. The Contractor shall visit the site of the proposed work and fully acquaint themselves with the conditions as they exist in order that any restrictions pertaining to the work are understood. All areas and dimensions are indicated on the drawings as accurately as possible, but all conditions shall be verified by each contractor and/or subcontractor at the site. The failure of the contractor to examine or receive any form, instrument or document, or to visit the site shall not relieve the Contractor from any obligation with respect to their quoted price. The submission of a quotation shall acknowledge that the Contractor and their Subcontractors have fully examined the site and know the existing conditions and have made provisions for operating under the conditions as they exist at the site and have included all necessary items.
4. The General Contractor's responsibilities shall include, but not be limited to, construction of the equipment foundation, including electrical service, telephone conduits, grounding system and coordination with local utility companies.
5. The antenna installers responsibilities shall include, but not be limited to, cable tray installation, routing of cables from radio equipment to antennas, associated hardware for securing antenna cables, antenna mounts, determining supplier of antennas, grounding of antennas to grounding system, installing antennas and verifying with Radio Frequency Engineers, the alignment, location, and proper orientation of antennas.
6. The Contractors shall coordinate construction activities with the Crown Castle Construction Manager in order to avoid conflicts with current use of the site.
7. The Contractor shall conform to all applicable local, county, state, and federal codes, laws and requirements, including OSHA.
8. The Contractor shall apply and pay for the construction permit, certificate of occupancy and all other required permits or licenses. The Contractor is responsible for obtaining all inspections.
9. Safety procedures: Attention is directed to federal, state, and local laws, rules and regulations concerning construction safety and health standards. The construction company awarded this project shall ensure all working surroundings and conditions are sanitary, and are not hazardous or dangerous to the health or safety of the work crews or building occupants. Precaution shall be exercised at all times for the protection of persons and property. It is mandatory that the safety provisions of applicable local laws, OSHA regulations and building and construction codes, be observed for all contractors and antenna riggers.

SECTION 01613 - DELIVERY, STORAGE AND HANDLING:

1. The Contractor shall be responsible for all procedures and scheduling associated with hoisting, staging, and erecting of materials and equipment to and/or upon the site.
2. All elements of the existing site, i.e. structures, site plantings, etc. shall be protected as necessary from said actions. This work must be done in a safe, secure nondestructive manner for protecting personnel and property.

SECTION 01740 WARRANTIES AND BONDS:

1. The Contractor shall guarantee all labor and materials used in this project for a minimum period of one (1) year commencing from the date of final acceptance by the client. The Contractor is not required to guarantee material supplied by the Owner.
2. Final date of acceptance is deemed as the date that all required state and federal approval have been obtained including, but not limited to:
   A. Final inspection - D14
   B. Certificate of Occupancy
3. Any deficiencies that come evident during this one (1) year period shall be corrected by the Contractor at the Contractor's expense.

OWNERSHIP OF DOCUMENTS: THIS DOCUMENT AND THE IDEAS AND DESIGNS INCORPORATED HEREIN, AS AN INSTRUMENT OF PROFESSIONAL SERVICE, ARE THE PROPERTY OF KMB DESIGN GROUP, LLC AND ARE NOT TO BE USED, IN WHOLE OR IN PART, FOR OTHER PROJECTS WITHOUT THE WRITTEN AUTHORIZATION OF KMB DESIGN GROUP, LLC. IT IS UNLAWFUL FOR ANY PERSON TO AMEND ANY ASPECT OF THESE DRAWINGS UNLESS THEY HAVE THE APPROVAL OF THE LICENSED PROFESSIONAL IN WRITING.

Sprint

Alcatel•Lucent

REV.	DATE	REVISION DESCRIPTION	DRAWN BY	CHKD. BY
3	01-30-13	REVISED PER CLIENT COMMENTS	CCR	KCD
2	12-14-12	REVISED PER CLIENT COMMENTS	KAZ	KCD
1	12-07-12	REVISED PER CLIENT COMMENTS	KAZ	KCD
0	09-10-12	ISSUED FOR CONSTRUCTION	MCD	KCD

KMB DESIGN GROUP
kmbdg.com
1860 ROUTE 34, SUITE 209
WALL NJ 07719
(732) 280-5653

Stephen A. Bray
PROFESSIONAL ENGINEER
STATE OF CONNECTICUT · STEPHEN A. BRAY · LICENSED PROFESSIONAL ENGINEER
CT LICENSE: 26657 1/30/13

PROJECT NUMBER: 332.1499

SITE INFORMATION:
123 CAMPVILLE HILL ROAD
HARWINTON, CT 06791
LITCHFIELD COUNTY
CROWN CASTLE SITE: 876376
CT33XC111

PROJECT TYPE: NETWORK VISION

DRAWN BY:	CHECKED BY:	DATE:
JLS		05-01-12

SHEET TITLE: GENERAL NOTES 1 OF 2

SHEET NUMBER: C01 REV.: 3

K:\332_Sprint_332.1000_Alcatel-Lucent\332.1499_CT33XC111_123 Campville Hill Road\332.1499_CAD\332.1499_Construction\332.1499.C01.dwg, 1/30/2013 4:06:34 PM, ggonzalez

DIVISION 2 - SITE WORK

1. The Contractor shall call utilities prior to the start of construction.

2. All existing active sewer, water, gas, electric, and other utilities where encountered in the work, shall be protected at all times, and where required for the proper execution of the work, shall be relocated as directed by Engineers. Extreme caution should be used by the Contractor when excavating or pier drilling around or near utilities. The Contractor shall provide safety training for the working crew. This will include but not limited to:
   A. Fall protection
   B. Confined space
   C. Electrical safety
   D. Trenching & excavation

3. All site work shall be as indicated on the drawing and stipulated in the specification project summary.

4. If necessary, rubbish, stumps, debris, sticks, stones, and other refuse shall be removed from the site and disposed of legally.

5. The site shall be graded to cause surface water flow away from the equipment shelter and monopole areas.

6. No fill or embankment material shall be placed on frozen ground. Frozen materials, snow or ice shall not be placed in any fill or embankment.

7. The sub grade shall be compacted and brought to a smooth uniform grade prior to finished surface application.

8. All existing inactive sewer, water, gas, electric and other utilities, which interfere with the execution of the work, shall be removed and/or capped, plugged or otherwise discontinued at points which will not interfere with the execution of the work, subject to the approval of engineering.

9. The areas of the Owners property disturbed by the work and not covered by the building or driveway, shall be graded to a uniform slope, fertilized, seeded, and covered with mulch as specified in the specification of landscape work.

10. The Contractor shall minimize disturbance to existing site during construction. Erosion control measures, shall be in conformance with the local guidelines for erosion and sediment control.

11. All back fill shall be compacted to 95% modified proctor density as determined by ASTM standard test procedures.

DIVISION 3 - CONCRETE

1. Design and construction of all concrete elements shall conform to the latest editions of the following applicable codes: ACI 301 "Specifications for Structural Concrete for Buildings"; ACI 318 "Building Code Requirements for Reinforced Concrete".

2. Mix design shall be approved by Owner's representative prior to placing concrete.

3. Concrete shall be normal weight, 6% air entrained (±1.5%) with a maximum 4" slump, and have a minimum 28-day compressive strength of 3000 psi unless otherwise noted.

4. Maximum aggregate size shall be 1".

5. The following materials shall be used:

Portland cement:	ASTM C 150, TYPE I
Reinforcement:	ASTM A 185
Normal weight aggregate:	ASTM C 33
Water:	Drinkable
Admixtures:	Non-chloride containing

6. Reinforcing details shall be in accordance with the latest edition of ACI 315.

7. Reinforcing steel shall conform to ASTM A 615, grade 60, deformed unless noted otherwise. Welded wire fabric shall conform to ASTM A 185 welded steel wire fabric unless noted otherwise. Splices shall be class "B" and all hooks shall be standard, unless otherwise noted.

8. The following minimum concrete cover shall be provided for reinforcing steel unless shown otherwise on drawings:
   - Concrete cast against earth ..... 3"
   - Concrete exposed to earth or weather:

   #6 and larger ..... 2"
   #5 and smaller ..... 1 1/2"
   - Concrete not exposed to earth or weather or not cast against the ground:

   Slab and wall ..... 3/4"
   Beams and columns ..... 1 1/2"

9. A 1" chamfer shall be provided at all exposed edges of concrete, unless otherwise noted, in accordance with ACI 30 section 4.2.4.

10. Installation of concrete anchor, shall be per manufacturers written recommended procedure, the anchor bolt, dowel or rod shall conform to manufacturer's recommendation for embedment depth or as shown on the drawing. No rebar shall be cut without prior engineering approval when drilling holes in concrete.

11. Curing compounds shall conform to ASTM C-309.

12. Admixtures shall conform to the appropriate ASTM standard as referenced in ACI-301.

13. Do not weld or tack weld reinforcing steel.

14. All dowels, anchor bolts, embedded steel, electrical conduits, pipe sleeves, grounds and all other embedded items and formed details shall be in place before start of concrete placement.

15. Locate additional construction joints required to facilitate construction as acceptable to Engineer. Place reinforcement continuously through joint.

16. Reinforcement shall be cold bent whenever bending is required.

17. Place concrete in a uniform manner to prevent the formation of cold joints and other planes of weakness. Vibrate the concrete to fully embed reinforcing. Do not use vibrators to transport concrete thorough chutes or formwork.

18. Do not place concrete in water, ice, or on frozen ground.

19. Do not allow concrete sub base to freeze during concrete curing and setting period, or a minimum of 14 days after placement.

20. For cold -weather and hot-weather concrete placement, conform to applicable ACI codes and recommendations. In either case, materials containing chloride, calcium, salts, etc. shall not be used. Protect fresh concrete from weather for 7 days minimum.

DIVISION 5 - METALS

SECTION 05120 - STRUCTURAL STEEL

1. Codes and specifications:
   A. The fabrication/erection shall conform to the requirements of the following codes and specifications, latest edition, unless otherwise noted:
      - The local building code.
      - AISC-specification for structural steel buildings, allowable stress design, 1989.
      - ASTM A992 structural steel (for all w sections only).
      - ASTM A36 structural steel (all other sections).
      - ASTM A53, type E, grade B, electric resistance welded steel pipe.
      - ASTM 123 zinc (hot-dip galvanized) coatings on iron and steel products.
      - ASTM 153 zinc coated (hot-dip) iron and steel hardware.
      - AWS D1.1 structural welding code.
      - EIA/TIA-222 structural standards for steel antenna towers and antenna supporting structures.

2. Design parameters:
   A. The structural steel antenna mounting frames are designed to provide support for antennas and all hardware and accessories associated with antennas.

3. Fabrication and installation requirements:
   A. The antenna supports, antennas and mounting hardware shall be constructed plumb, level and true.
   B. All structural elements and fasteners shall be galvanized in accordance with ASTM A123 and A153.
   C. Welds should be shop made wherever possible, conforming to AISC specification and AWS requirements. All welds are to be of the size and type indicated. Contractor shall employ a licensed welder and shall provide the engineer with their name and a copy of their license prior to commencing any field welding.
   D. Contractor shall provide fire watch during all welding operations, brazing and soldering and other work requiring the use of an open flame. Two (2) hand held 30 lb fire extinguishers and adequate water supply shall be maintained on site. Fire watch plan shall be submitted to the client for approval prior to welding.
   E. All bolted connections shall be A325 high strength bolts 5/8" diameter minimum size unless otherwise noted. Bolts shall be supplied with flat washers. Bolts shall be tightened in accordance with the AISC snug tight condition, unless otherwise noted.
   F. Protective galvanized coatings which were damaged or removed during erection or transportation shall be restored by painting with zinc-rich primer.
   G. All threaded rods shall be 1/2" diameter A36 steel unless otherwise noted.
   H. Temporary structures for staging and construction shall be capable of withstanding forces specified by the local building code current edition.

4. Inspections:
   A. All structural steel antenna frames, and connections shall be inspected prior to installation of antennas.
   B. All antenna cable trays, supports, channels and clamps shall be inspected prior to installation of antenna cables.
   C. Coordinate all inspections with the client's Construction Manager.
   D. Contractor to make notifications 72 hours prior to any required inspections.

OWNERSHIP OF DOCUMENTS: THIS DOCUMENT AND THE IDEAS AND DESIGNS INCORPORATED HEREIN, AS IN INSTRUMENT OF PROFESSIONAL SERVICE, ARE THE PROPERTY OF KMB DESIGN GROUP, LLC AND ARE NOT TO BE USED, IN WHOLE OR IN PART, FOR OTHER PROJECTS WITHOUT THE WRITTEN AUTHORIZATION OF KMB DESIGN GROUP, LLC. IT IS UNLAWFUL FOR ANY PERSON TO AMEND ANY ASPECT OF THESE DRAWINGS UNLESS THEY HAVE THE APPROVAL OF THE LICENSED PROFESSIONAL IN WRITING.

Sprint

Alcatel·Lucent

REV.	DATE	REVISION DESCRIPTION	DRAWN BY	CHKD. BY
3	01-30-13	REVISED PER CLIENT COMMENTS	CCR	KCD
2	12-14-12	REVISED PER CLIENT COMMENTS	KAZ	KCD
1	12-07-12	REVISED PER CLIENT COMMENTS	KAZ	KCD
0	09-10-12	ISSUED FOR CONSTRUCTION	MCD	KCD

KMB DESIGN GROUP
kmbdg.com
1600 ROUTE 34, SUITE 209
WALL, NJ 07719
(732) 290-5622

Stephen A. Bray
PROFESSIONAL ENGINEER

STATE OF CONNECTICUT · STEPHEN A. BRAY · No. 26657 · LICENSED PROFESSIONAL ENGINEER

CT LICENSE: 26657 1/30/13

PROJECT NUMBER: 332.1499

SITE INFORMATION:
123 CAMPVILLE HILL ROAD
HARWINTON, CT 06791
LITCHFIELD COUNTY
CROWN CASTLE SITE: 876376
CT33XC111

PROJECT TYPE: NETWORK VISION

DRAWN BY:	CHECKED BY:	DATE:
JLS		05-01-12

SHEET TITLE: GENERAL NOTES 2 OF 2

SHEET NUMBER: C01A REV.: 3

K:\332_Sprint_332.1000_Alcatel Lucent\332.1499_CT33XC111_123 Campville Hill Road\332.1499_Construction\332.1499.C01A.dwg, 1/30/2013 4:06:37 PM, rgonzalez

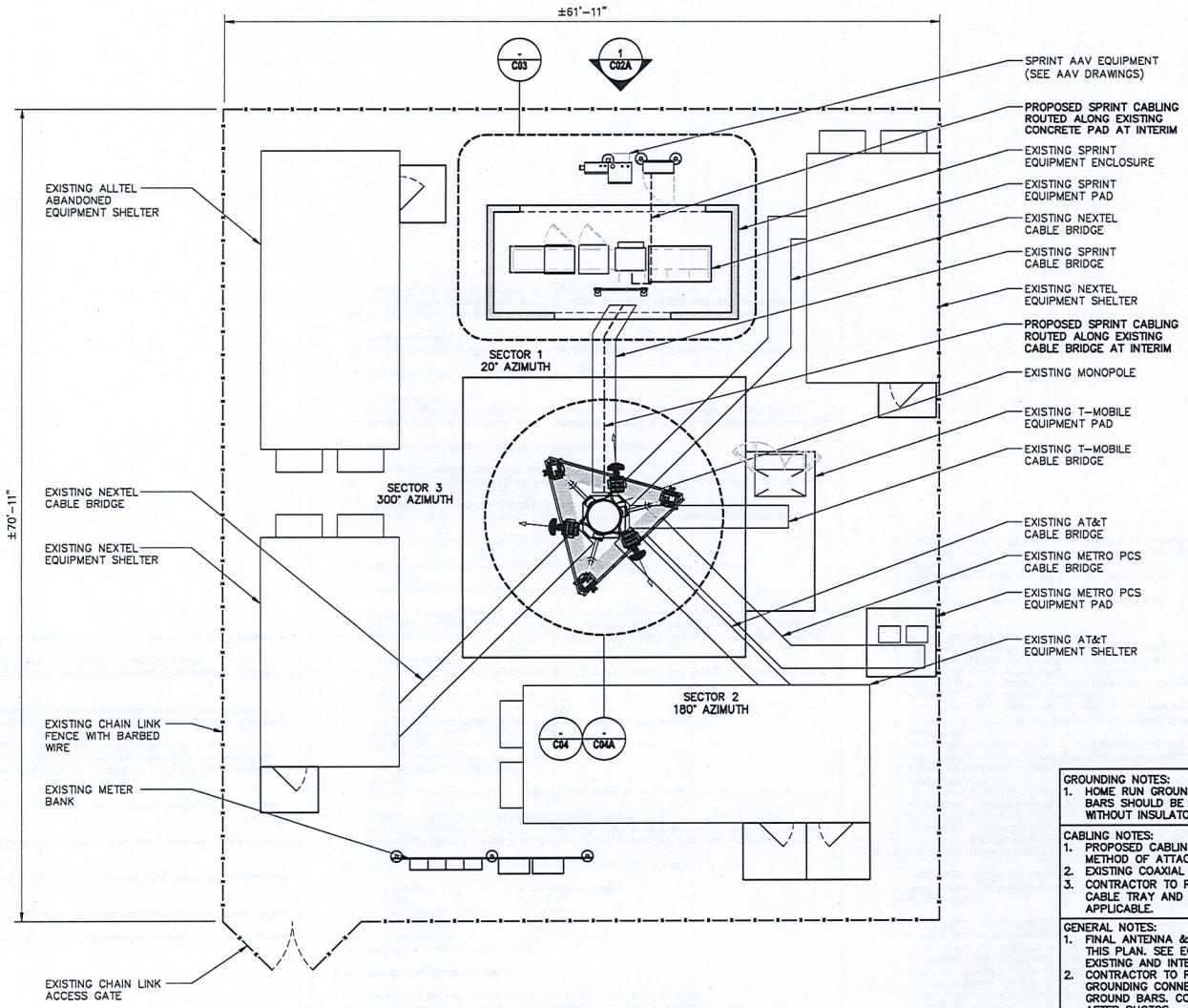

2.5 0 2.5 5 10
(IN FEET)

1 COMPOUND PLAN

11x17 SCALE:1" = 10' | 24x36 SCALE: 1" = 5'

GROUNDING NOTES:
1. HOME RUN GROUNDS NOT APPROVED. ALL ANTENNA BUSS BARS SHOULD BE INSTALLED DIRECTLY TO TOWER STEEL WITHOUT INSULATORS OR DOWN CONDUCTORS.

CABLING NOTES:
1. PROPOSED CABLING TO FOLLOW EXISTING ROUTE AND METHOD OF ATTACHMENT AT INTERIM.
2. EXISTING COAXIAL CABLES TO BE REMOVED AT FINAL.
3. CONTRACTOR TO REPAIR/REPLACE ANY MISSING/DAMAGED CABLE TRAY AND ADD HURRICANE STRAPS AS REQUIRED IF APPLICABLE.

GENERAL NOTES:
1. FINAL ANTENNA & EQUIPMENT CONFIGURATION SHOWN ON THIS PLAN. SEE EQUIPMENT & ANTENNA PLAN SHEETS FOR EXISTING AND INTERIM CONFIGURATION.
2. CONTRACTOR TO REPLACE ALL MISSING GROUND BARS AND GROUNDING CONNECTIONS AS REQUIRED WITH GALVANIZED GROUND BARS. CONTRACTOR SHALL PROVIDE BEFORE & AFTER PHOTOS.
3. CONTRACTOR TO RESTORE ANY RUST AREA TO ORIGINAL CONDITION AND PROTECTIVE COATING TO BE APPLIED.
4. STRUCTURAL ANALYSIS PROVIDED UNDER SEPARATE COVER.
5. PROPOSED SPRINT GPS UNIT TO REPLACE EXISTING GPS AT FINAL.

Sprint

Alcatel·Lucent

REV.	DATE	REVISION DESCRIPTION	DRAWN BY	CHKD. BY
3	01-30-13	REVISED PER CLIENT COMMENTS	CCR	KCD
2	12-14-12	REVISED PER CLIENT COMMENTS	KAZ	KCD
1	12-07-12	REVISED PER CLIENT COMMENTS	KAZ	KCD
0	08-10-12	ISSUED FOR CONSTRUCTION	MCD	KCD

KMB DESIGN GROUP
kmbdg.com
1860 ROUTE 34, SUITE 209
WALL NJ 07719
(732) 280-5622

Stephen A. Bray
PROFESSIONAL ENGINEER

STATE OF CONNECTICUT · STEPHEN A. BRAY · LICENSED PROFESSIONAL ENGINEER

CT LICENSE: 26657 1/30/13

PROJECT NUMBER: 332.1499

SITE INFORMATION:
123 CAMPVILLE HILL ROAD
HARWINTON, CT 06791
LITCHFIELD COUNTY
CROWN CASTLE SITE: 876376
CT33XC111

PROJECT TYPE: NETWORK VISION

DRAWN BY:	CHECKED BY:	DATE:
JLS		05-01-12

SHEET TITLE: COMPOUND PLAN

SHEET NUMBER: C02 | REV.: 3

OWNERSHIP OF DOCUMENTS: THIS DOCUMENT AND THE IDEAS AND DESIGNS INCORPORATED HEREIN, AS IN INSTRUMENT OF PROFESSIONAL SERVICE, ARE THE PROPERTY OF KMB DESIGN GROUP, LLC AND ARE NOT TO BE USED, IN WHOLE OR IN PART, FOR OTHER PROJECTS WITHOUT THE WRITTEN AUTHORIZATION OF KMB DESIGN GROUP, LLC. IT IS UNLAWFUL FOR ANY PERSON TO AMEND ANY ASPECT OF THESE DRAWINGS UNLESS THEY HAVE THE APPROVAL OF THE LICENSED PROFESSIONAL IN WRITING.

K:\332_Sprint_332.1000_Alcatel-Lucent\332.1499_CAD\332.1499_Construction\332.1499.C02.dwg, 1/28/2013 4:06:40 PM, rgonzalez

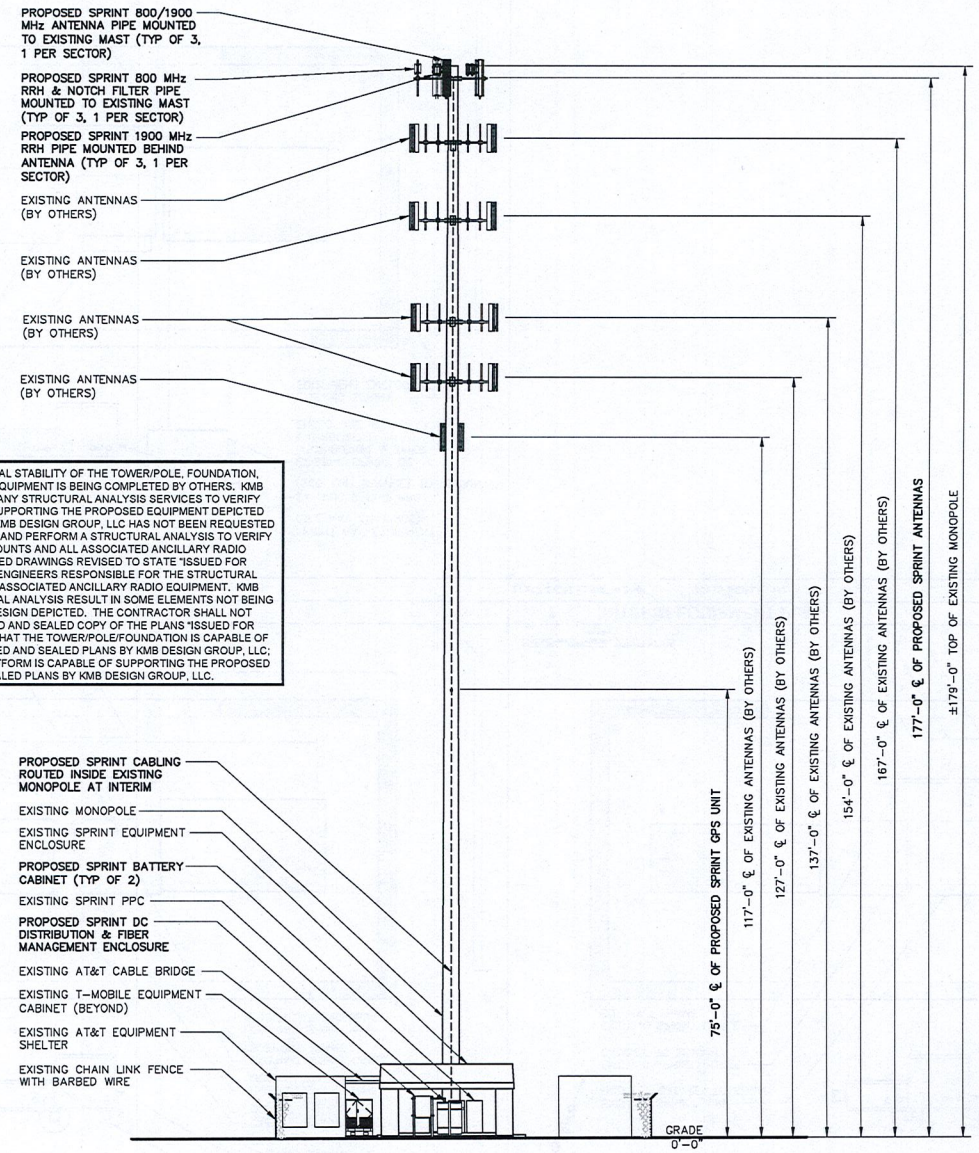

THE STRUCTURAL ENGINEERING CONCERNING THE STRUCTURAL STABILITY OF THE TOWER/POLE, FOUNDATION, ANTENNAS, MOUNTS AND ALL ASSOCIATED ANCILLARY RADIO EQUIPMENT IS BEING COMPLETED BY OTHERS. KMB DESIGN GROUP, LLC HAS NOT BEEN REQUESTED TO PERFORM ANY STRUCTURAL ANALYSIS SERVICES TO VERIFY THAT THE TOWER/POLE AND/OR FOUNDATION IS CAPABLE OF SUPPORTING THE PROPOSED EQUIPMENT DEPICTED WITHIN THESE SIGNED AND SEALED DRAWINGS. FURTHERMORE KMB DESIGN GROUP, LLC HAS NOT BEEN REQUESTED TO PHYSICALLY CONFIRM THE EXISTING MOUNT CONFIGURATION AND PERFORM A STRUCTURAL ANALYSIS TO VERIFY THAT THE EXISTING, INTERIM AND PROPOSED ANTENNAS, MOUNTS AND ALL ASSOCIATED ANCILLARY RADIO EQUIPMENT CAN BE SAFELY SUPPORTED. SIGNED AND SEALED DRAWINGS REVISED TO STATE "ISSUED FOR CONSTRUCTION" SHALL BE PROVIDED TO THE PROFESSIONAL ENGINEERS RESPONSIBLE FOR THE STRUCTURAL ANALYSIS OF THE TOWER/POLE, ANTENNAS, MOUNTS AND ALL ASSOCIATED ANCILLARY RADIO EQUIPMENT. KMB DESIGN GROUP, LLC SHALL BE NOTIFIED SHOULD THE STRUCTURAL ANALYSIS RESULT IN SOME ELEMENTS NOT BEING STRUCTURALLY CAPABLE OF SUPPORTING THE PROPOSED DESIGN DEPICTED. THE CONTRACTOR SHALL NOT COMMENCE CONSTRUCTION WITHOUT OBTAINING (A) A SIGNED AND SEALED COPY OF THE PLANS "ISSUED FOR CONSTRUCTION"; (B) STRUCTURAL ANALYSIS REPORT STATING THAT THE TOWER/POLE/FOUNDATION IS CAPABLE OF SUPPORTING THE PROPOSED LOADING REFERENCING THE SIGNED AND SEALED PLANS BY KMB DESIGN GROUP, LLC; (C) SPRINT PLATFORM ANALYSIS STATING THAT THE SPRINT PLATFORM IS CAPABLE OF SUPPORTING THE PROPOSED DESIGN AS REFERENCED WITHIN THE SIGNED AND SEALED PLANS BY KMB DESIGN GROUP, LLC.

NOTES:
1. GC TO VERIFY STRUCTURAL MODIFICATIONS HAVE BEEN COMPLETED PRIOR TO COMMENCING WORK.
2. NO CONSTRUCTION TO COMMENCE PRIOR TO CROWN CASTLE APPROVAL.
3. FINAL ANTENNA & EQUIPMENT CONFIGURATION SHOWN ON THIS PLAN. SEE EQUIPMENT & ANTENNA PLAN SHEETS FOR EXISTING AND INTERIM CONFIGURATION.

1 NORTHEAST ELEVATION

11x17 SCALE: 1" = 20' | 24x36 SCALE: 1" = 10'

Sprint

Alcatel·Lucent

REV.	DATE	REVISION DESCRIPTION	DRAWN BY	CHKD. BY
3	01-30-13	REVISED PER CLIENT COMMENTS	CCR	KCD
2	12-14-12	REVISED PER CLIENT COMMENTS	KAZ	KCD
1	12-07-12	REVISED PER CLIENT COMMENTS	KAZ	KCD
0	08-10-12	ISSUED FOR CONSTRUCTION	MCD	KCD

KMB DESIGN GROUP
kmbdg.com
1860 ROUTE 34, SUITE 209
WALL, NJ 07719
(732) 280-5623

Stephen A. Bray
PROFESSIONAL ENGINEER

STATE OF CONNECTICUT · STEPHEN A. BRAY · LICENSED PROFESSIONAL ENGINEER

CT LICENSE: 26657 1/30/13

PROJECT NUMBER: 332.1499

SITE INFORMATION:
123 CAMPVILLE HILL ROAD
HARWINTON, CT 06791
LITCHFIELD COUNTY
CROWN CASTLE SITE: 876376
CT33XC111

PROJECT TYPE: NETWORK VISION

DRAWN BY: JLS | CHECKED BY: | DATE: 05-01-12

SHEET TITLE: ELEVATION

SHEET NUMBER: C02A | REV.: 3

OWNERSHIP OF DOCUMENTS: THIS DOCUMENT AND THE IDEAS AND DESIGNS INCORPORATED HEREIN, AS IN INSTRUMENT OF PROFESSIONAL SERVICE, ARE THE PROPERTY OF KMB DESIGN GROUP, LLC AND ARE NOT TO BE USED, IN WHOLE OR IN PART, FOR OTHER PROJECTS WITHOUT THE WRITTEN AUTHORIZATION OF KMB DESIGN GROUP, LLC. IT IS UNLAWFUL FOR ANY PERSON TO AMEND ANY ASPECT OF THESE DRAWINGS UNLESS THEY HAVE THE APPROVAL OF THE LICENSED PROFESSIONAL IN WRITING.

K:\332_Sprint_332.1000_Alcatel-Lucent\332.1499_CT33XC111_123 Campville Hill Road\332.1499_Construction\332.1499.C02A.dwg, 1/30/2013 4:06:43 PM, rgonzalez

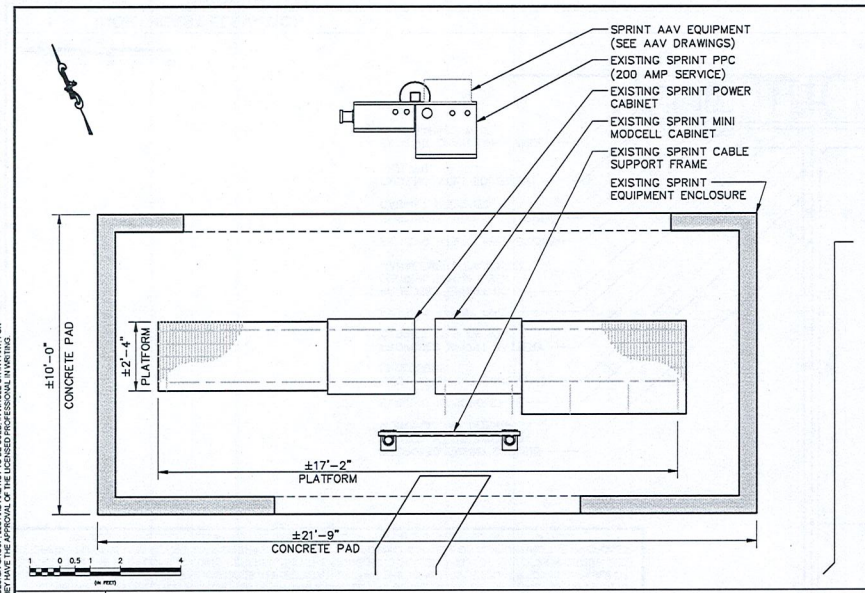

1 EXISTING EQUIPMENT PLAN

11x17 SCALE: 1/4" = 1'-0" | 24x36 SCALE: 1/2" = 1'-0"

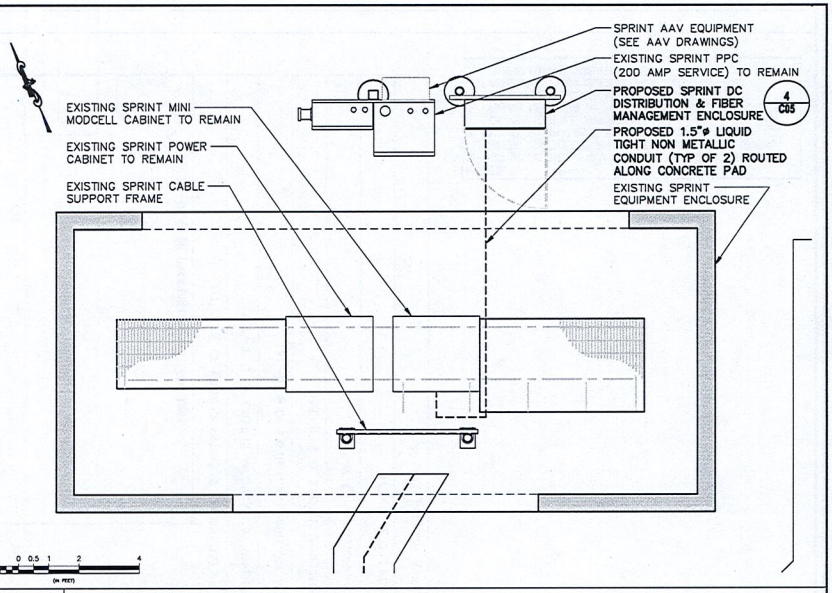

2 INTERIM EQUIPMENT PLAN

11x17 SCALE: 1/4" = 1'-0" | 24x36 SCALE: 1/2" = 1'-0"

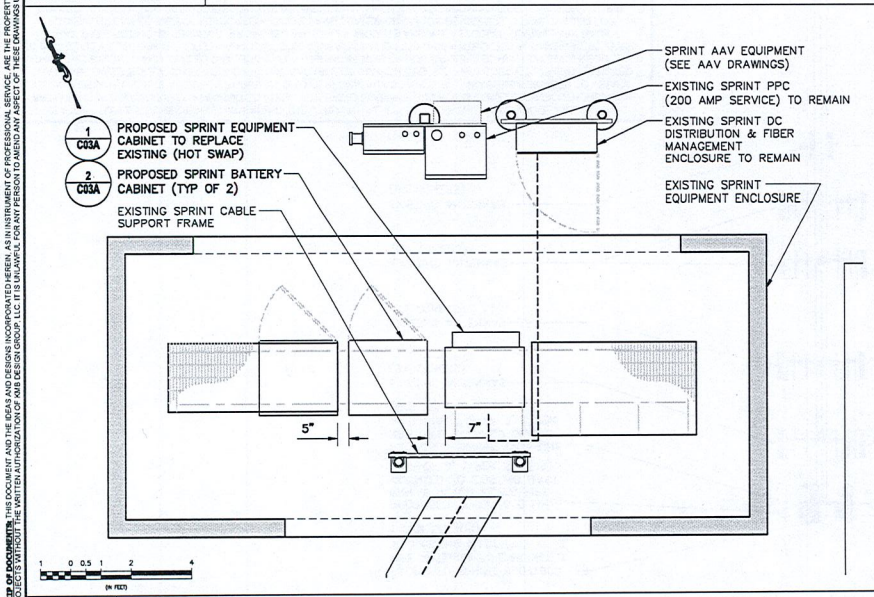

3 FINAL EQUIPMENT PLAN

11x17 SCALE: 1/4" = 1'-0" | 24x36 SCALE: 1/2" = 1'-0"

NOTES:
1. NO CONSTRUCTION TO COMMENCE PRIOR TO CROWN CASTLE APPROVAL.
2. CONTRACTOR TO REPLACE ALL MISSING GROUND BARS AND GROUNDING CONNECTIONS AS REQUIRED.

Sprint

Alcatel·Lucent

REV.	DATE	REVISION DESCRIPTION	DRAWN BY	CHKD. BY
3	01-30-13	REVISED PER CLIENT COMMENTS	CCR	KCD
2	12-14-12	REVISED PER CLIENT COMMENTS	KAZ	KCD
1	12-07-12	REVISED PER CLIENT COMMENTS	KAZ	KCD
0	09-10-12	ISSUED FOR CONSTRUCTION	MCD	KCD

KMB DESIGN GROUP
kmbdg.com
1860 ROUTE 34, SUITE 209
WALL, NJ 07719
(732) 280-5653

Stephen A. Bray
PROFESSIONAL ENGINEER
STATE OF CONNECTICUT
STEPHEN A. BRAY
26657
LICENSED PROFESSIONAL ENGINEER
CT LICENSE: 26657 1/30/13

PROJECT NUMBER: 332.1499

SITE INFORMATION:
123 CAMPVILLE HILL ROAD
HARWINTON, CT 06791
LITCHFIELD COUNTY
CROWN CASTLE SITE: 876376
CT33XC111

PROJECT TYPE: NETWORK VISION

DRAWN BY:	CHECKED BY:	DATE:
JLS		05-01-12

SHEET TITLE: EQUIPMENT PLANS

SHEET NUMBER: C03 | REV.: 3

OWNERSHIP OF DOCUMENTS: THIS DOCUMENT AND THE IDEAS AND DESIGNS INCORPORATED HEREIN, AS AN INSTRUMENT OF PROFESSIONAL SERVICE, ARE THE PROPERTY OF KMB DESIGN GROUP, LLC AND ARE NOT TO BE USED IN WHOLE OR IN PART, FOR ANY PROJECT WITHOUT THE WRITTEN AUTHORIZATION OF KMB DESIGN GROUP, LLC. IT IS SHARED AS SUCH ONLY FOR REVIEW AND ASSESSMENT OF THE ENVIRONMENTAL EFFECTS OF A PROPOSED PROJECT. ANY USE OR REUSE OF THESE DOCUMENTS WITHOUT WRITTEN AUTHORIZATION BY KMB DESIGN GROUP, LLC AND ARE NOT TO BE USED IN WHOLE OR IN PART, FOR ANY OTHER PROJECT WITHOUT THE WRITTEN AUTHORIZATION OF KMB DESIGN GROUP, LLC IS PROHIBITED. AS AN INSTRUMENT OF PROFESSIONAL SERVICE, THE APPROVAL OF THE LICENSED PROFESSIONAL ENGINEER.

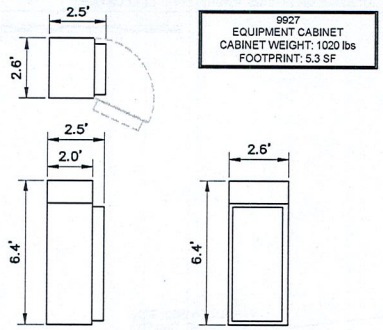

9927
EQUIPMENT CABINET
CABINET WEIGHT: 1020 lbs
FOOTPRINT: 5.3 SF

1 EQUIPMENT CABINET SPECIFICATIONS

11x17 SCALE: 3/16" = 1'-0" | 24x36 SCALE: 3/8" = 1'-0"

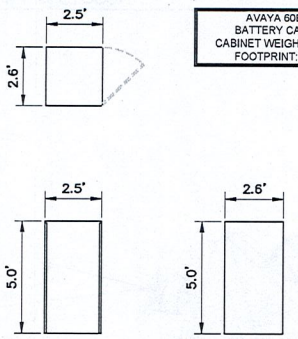

AVAYA 60ECv2
BATTERY CABINET
CABINET WEIGHT: 1625 lbs
FOOTPRINT: 6.5 SF

2 BATTERY CABINET SPECIFICATION

11x17 SCALE: 3/16" = 1'-0" | 24x36 SCALE: 3/8" = 1'-0"

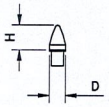

MANUF.: PCTEL
MODEL #: GPS-TMG-HR-26NCM
HEIGHT: 5.0"
DIAMETER: 3.2"
WEIGHT: 0.6 lbs

3 GPS UNIT SPECIFICATIONS

11x17 SCALE: 1/4" = 1'-0" | 24x36 SCALE: 1/2" = 1'-0"

4

DETAIL NOT USED

5

DETAIL NOT USED

6

DETAIL NOT USED

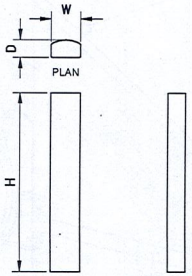

MANUF.: RFS
MODEL: APXVSPP18-C-A20
LENGTH 72.0"
WIDTH: 11.8"
DEPTH: 7.0"
WEIGHT: 64.5 lbs
AREA: 5.9 SF

7 ANTENNA SPECIFICATIONS - 800/1900 MHz

SCALE: NTS

8

DETAIL NOT USED

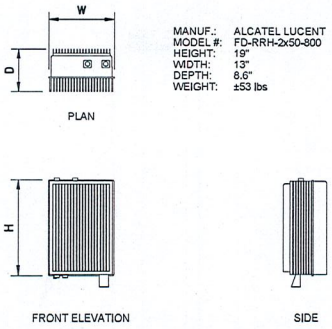

MANUF.: ALCATEL LUCENT
MODEL #: FD-RRH-2x50-800
HEIGHT: 19"
WIDTH: 13"
DEPTH: 8.6"
WEIGHT: ±53 lbs

9 RRH SPECIFICATIONS - 800 MHz

11x17 SCALE: 1/2" = 1'-0" | 24x36 SCALE: 1" = 1'-0"

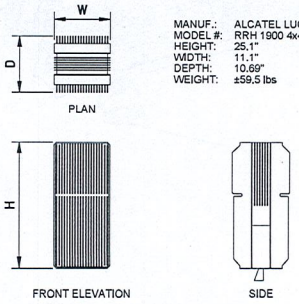

MANUF.: ALCATEL LUCENT
MODEL #: RRH 1900 4x45 65MHz
HEIGHT: 25.1"
WIDTH: 11.1"
DEPTH: 10.69"
WEIGHT: ±59.5 lbs

10 RRH SPECIFICATIONS - 1900 MHz

11x17 SCALE: 1/2" = 1'-0" | 24x36 SCALE: 1" = 1'-0"

11

DETAIL NOT USED

Sprint

Alcatel·Lucent

REV.	DATE	REVISION DESCRIPTION	DRAWN BY	CHKD. BY
5	01-30-13	REVISED PER CLIENT COMMENTS	CCR	KCD
4	12-14-12	REVISED PER CLIENT COMMENTS	KAZ	KCD
3	12-07-12	REVISED PER CLIENT COMMENTS	KAZ	KCD
2	09-10-12	ISSUED FOR CONSTRUCTION	MCD	KCD

KMB DESIGN GROUP
kmbdg.com
1860 ROUTE 34, SUITE 209
WALL NJ 07719
(732) 280-5633

Stephen A. Bray
PROFESSIONAL ENGINEER

STATE OF CONNECTICUT
STEPHEN A. BRAY
LICENSED PROFESSIONAL ENGINEER

CT LICENSE: 26657 1/30/13

PROJECT NUMBER:
332.1499

SITE INFORMATION:
123 CAMPVILLE HILL ROAD
HARWINTON, CT 06791
LITCHFIELD COUNTY
CROWN CASTLE SITE: 876376
CT33XC111

PROJECT TYPE:
NETWORK VISION

DRAWN BY:	CHECKED BY:	DATE:
JLS		05-01-12

SHEET TITLE:
EQUIPMENT & ANTENNA SPECIFICATIONS

SHEET NUMBER: C03A
REV.: 3

OWNERSHIP OF DOCUMENTS: THIS DOCUMENT AND THE IDEAS AND DESIGNS INCORPORATED HEREIN, AS AN INSTRUMENT OF PROFESSIONAL SERVICE, ARE THE PROPERTY OF KMB DESIGN GROUP, LLC AND ARE NOT TO BE USED, IN WHOLE OR IN PART, FOR OTHER PROJECTS WITHOUT THE WRITTEN AUTHORIZATION OF KMB DESIGN GROUP, LLC. IT IS UNLAWFUL FOR ANY PERSON TO AMEND ANY ASPECT OF THESE DRAWINGS UNLESS THEY HAVE THE APPROVAL OF THE LICENSED PROFESSIONAL IN WRITING.

K:\332_Sprint_332.1000_Alcatel-Lucent\332.1499_CT33XC111_123 Campville Hill Road\332.1499_CAD\332.1499_Construction\332-1499 CD03.dwg, 1/30/2013 4:06:51 PM, nplotzker

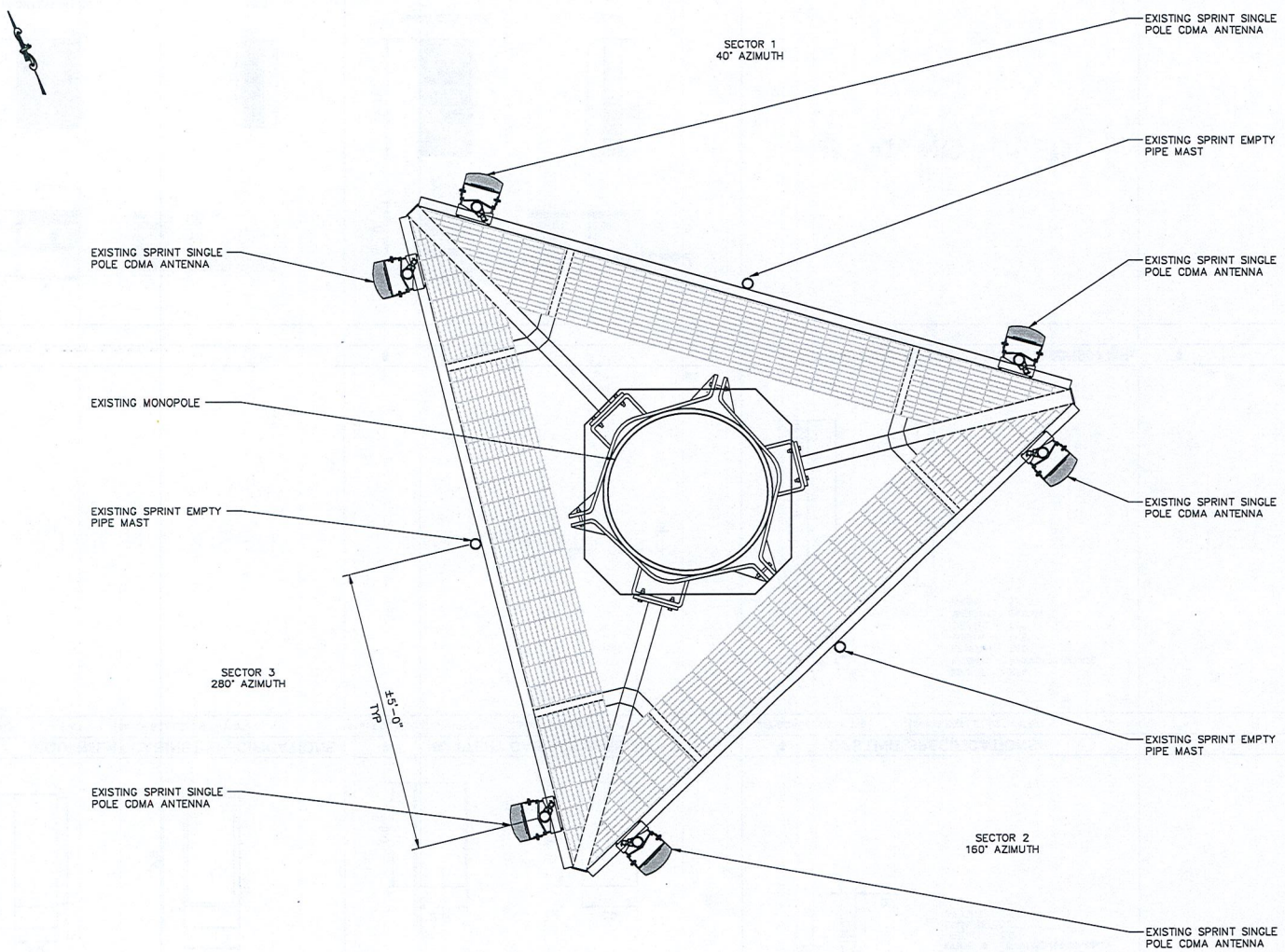

NOTES:
1. GC TO VERIFY STRUCTURAL MODIFICATIONS HAVE BEEN COMPLETED PRIOR TO COMMENCING WORK.
2. NO CONSTRUCTION TO COMMENCE PRIOR TO CROWN CASTLE APPROVAL.

1 EXISTING ANTENNA PLAN @ ±177-0" AGL (ALL SECTORS)

11x17 SCALE: 1/2" = 1'-0' | 24x36 SCALE: 1" = 1'-0"

OWNERSHIP OF DOCUMENTS: THIS DOCUMENT AND THE IDEAS AND DESIGNS INCORPORATED HEREIN, AS AN INSTRUMENT OF PROFESSIONAL SERVICE, ARE THE PROPERTY OF KMB DESIGN GROUP, LLC AND ARE NOT TO BE USED, IN WHOLE OR IN PART, FOR ANY OTHER PROJECT WITHOUT THE WRITTEN AUTHORIZATION OF KMB DESIGN GROUP, LLC. IT IS UNLAWFUL FOR ANY PERSON TO AMEND ANY ASPECT OF THESE DRAWINGS UNLESS THEY HAVE THE APPROVAL OF THE LICENSED PROFESSIONAL IN WRITING.

Sprint

Alcatel·Lucent

REV.	DATE	REVISION DESCRIPTION	DRAWN BY	CHKD. BY
3	01-30-13	REVISED PER CLIENT COMMENTS	CCR	KCD
2	12-14-12	REVISED PER CLIENT COMMENTS	KAZ	KCD
1	12-07-12	REVISED PER CLIENT COMMENTS	KAZ	KCD
0	09-10-12	ISSUED FOR CONSTRUCTION	MCD	KCD

KMB DESIGN GROUP
kmbdg.com
1860 ROUTE 34, SUITE 209
WALL, NJ 07719
(732) 280-5533

Stephen A. Bray
PROFESSIONAL ENGINEER
STATE OF CONNECTICUT
STEPHEN A. BRAY
LICENSED PROFESSIONAL ENGINEER
CT LICENSE: 26657 1/30/13

PROJECT NUMBER: 332.1499

SITE INFORMATION:
123 CAMPVILLE HILL ROAD
HARWINTON, CT 06791
LITCHFIELD COUNTY
CROWN CASTLE SITE: 876376
CT33XC111

PROJECT TYPE: NETWORK VISION

DRAWN BY:	CHECKED BY:	DATE:
JLS		05-01-12

SHEET TITLE: EXISTING ANTENNA PLAN (ALL SECTORS)

SHEET NUMBER: C04 REV.: 3

THE STRUCTURAL ENGINEERING CONCERNING THE STRUCTURAL STABILITY OF THE TOWER/POLE, FOUNDATION, ANTENNAS, MOUNTS AND ALL ASSOCIATED ANCILLARY RADIO EQUIPMENT IS BEING COMPLETED BY OTHERS. KMB DESIGN GROUP, LLC HAS NOT BEEN REQUESTED TO PERFORM ANY STRUCTURAL ANALYSIS SERVICES TO VERIFY THAT THE TOWER/POLE AND/OR FOUNDATION IS CAPABLE OF SUPPORTING THE PROPOSED EQUIPMENT DEPICTED WITHIN THESE SIGNED AND SEALED DRAWINGS. FURTHERMORE KMB DESIGN GROUP, LLC HAS NOT BEEN REQUESTED TO PHYSICALLY CONFIRM THE EXISTING MOUNT CONFIGURATION AND PERFORM A STRUCTURAL ANALYSIS TO VERIFY THAT THE EXISTING, INTERIM AND PROPOSED ANTENNAS, MOUNTS AND ALL ASSOCIATED ANCILLARY RADIO EQUIPMENT CAN BE SAFELY SUPPORTED. SIGNED AND SEALED DRAWINGS REVISED TO STATE "ISSUED FOR CONSTRUCTION" SHALL BE PROVIDED TO THE PROFESSIONAL ENGINEERS RESPONSIBLE FOR THE STRUCTURAL ANALYSIS OF THE TOWER/POLE, ANTENNAS, MOUNTS AND ALL ASSOCIATED ANCILLARY RADIO EQUIPMENT. KMB DESIGN GROUP, LLC SHALL BE NOTIFIED SHOULD THE STRUCTURAL ANALYSIS RESULT IN SOME ELEMENTS NOT BEING STRUCTURALLY CAPABLE OF SUPPORTING THE PROPOSED DESIGN DEPICTED. THE CONTRACTOR SHALL NOT COMMENCE CONSTRUCTION WITHOUT OBTAINING (A) A SIGNED AND SEALED COPY OF THE PLANS "ISSUED FOR CONSTRUCTION"; (B) STRUCTURAL ANALYSIS REPORT STATING THAT THE TOWER/POLE/FOUNDATION IS CAPABLE OF SUPPORTING THE PROPOSED LOADING REFERENCING THE SIGNED AND SEALED PLANS BY KMB DESIGN GROUP, LLC; (C) SPRINT PLATFORM ANALYSIS STATING THAT THE SPRINT PLATFORM IS CAPABLE OF SUPPORTING THE PROPOSED DESIGN AS REFERENCED WITHIN THE SIGNED AND SEALED PLANS BY KMB DESIGN GROUP, LLC.

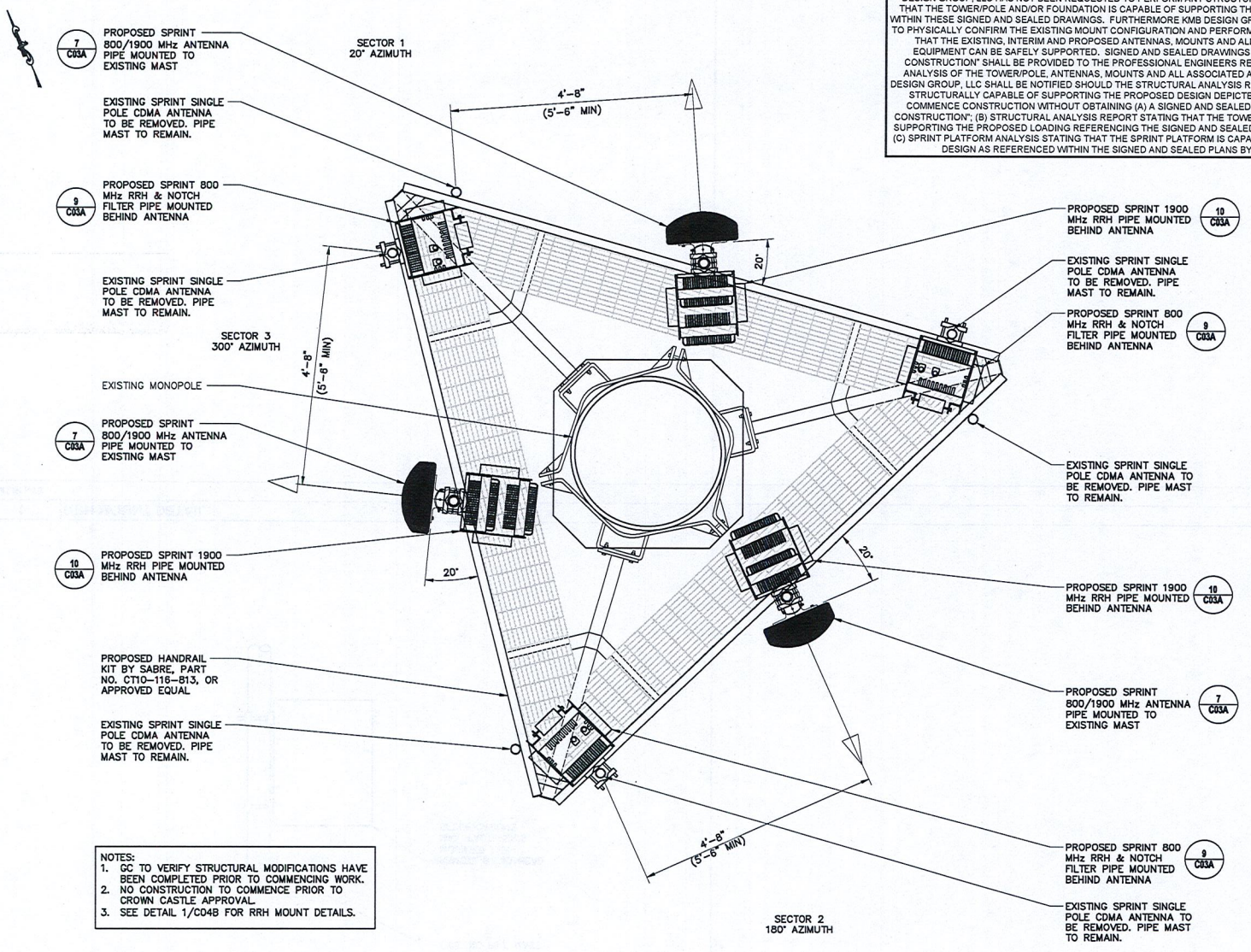

NOTES:
1. GC TO VERIFY STRUCTURAL MODIFICATIONS HAVE BEEN COMPLETED PRIOR TO COMMENCING WORK.
2. NO CONSTRUCTION TO COMMENCE PRIOR TO CROWN CASTLE APPROVAL.
3. SEE DETAIL 1/C04B FOR RRH MOUNT DETAILS.

1 0 1 2
(IN FEET)

1 FINAL ANTENNA PLAN @ ±177-0" AGL (ALL SECTORS)

11x17 SCALE: 1/2" = 1'-0" | 24x36 SCALE: 1" = 1'-0"

OWNERSHIP OF DOCUMENTS: THIS DOCUMENT AND THE IDEAS AND DESIGNS INCORPORATED HEREIN, AS AN INSTRUMENT OF PROFESSIONAL SERVICE, ARE THE PROPERTY OF KMB DESIGN GROUP, LLC AND ARE NOT TO BE USED, IN WHOLE OR IN PART, FOR ANY OTHER PROJECT, WITHOUT THE WRITTEN AUTHORIZATION OF KMB DESIGN GROUP, LLC. THE SEAL AND/OR ENTRY REFERRED TO HEREIN AND ASPECT OF THE EXPRESS PROFESSIONAL INVESTING

Sprint

Alcatel·Lucent

REV.	DATE	REVISION DESCRIPTION	DRAWN BY	CHKD. BY
3	01-30-13	REVISED PER CLIENT COMMENTS	CCR	KCD
2	12-14-12	REVISED PER CLIENT COMMENTS	KAZ	KCD
1	12-07-12	REVISED PER CLIENT COMMENTS	KAZ	KCD
0	09-10-12	ISSUED FOR CONSTRUCTION	MCD	KCD

KMB DESIGN GROUP
kmbdg.com
1800 ROUTE 34, SUITE 209
WALL, NJ 07719
(732) 390-5633

Stephen A. Bray
PROFESSIONAL ENGINEER
STATE OF CONNECTICUT
STEPHEN A. BRAY
No. 26657
LICENSED PROFESSIONAL ENGINEER
CT LICENSE: 26657 1/30/13

PROJECT NUMBER: 332.1499

SITE INFORMATION:
123 CAMPVILLE HILL ROAD
HARWINTON, CT 06791
LITCHFIELD COUNTY
CROWN CASTLE SITE: 876376
CT33XC111

PROJECT TYPE: NETWORK VISION

DRAWN BY:	CHECKED BY:	DATE:
JLS		05-01-12

SHEET TITLE: FINAL ANTENNA PLAN (ALL SECTORS)

SHEET NUMBER: C04A | REV.: 3

K:\332 Sprint\ 332.1000 Alcatel-Lucent\332.1499 CT33XC111 123 Campville Hill Road\332.1499 CAD\332.1499 C04A.dwg, 1/30/2013 4:06:58 PM, mcondes

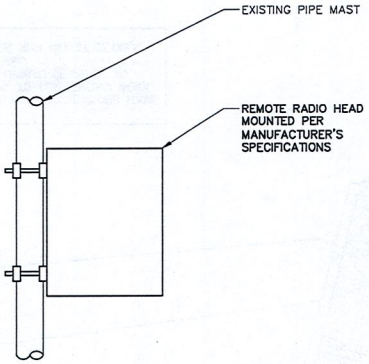

1 RRH MOUNT DETAIL

SCALE: NTS

OWNERSHIP OF DOCUMENTS: THIS DOCUMENT AND THE IDEAS AND DESIGNS INCORPORATED HEREIN, AS AN INSTRUMENT OF PROFESSIONAL SERVICE, ARE THE PROPERTY OF KMB DESIGN GROUP, LLC AND ARE NOT TO BE USED, IN WHOLE OR IN PART, FOR OTHER PROJECTS WITHOUT THE WRITTEN AUTHORIZATION OF KMB DESIGN GROUP, LLC. IT IS UNLAWFUL FOR ANY PERSON TO AMEND ANY ASPECT OF THESE DRAWINGS UNLESS THEY HAVE THE APPROVAL OF THE LICENSED PROFESSIONAL IN WRITING.

Sprint

Alcatel·Lucent

REV.	DATE	REVISION DESCRIPTION	DRAWN BY	CHKD. BY
3	01-30-13	REVISED PER CLIENT COMMENTS	CCR	KCD
2	12-14-12	REVISED PER CLIENT COMMENTS	KAZ	KCD
1	12-07-12	REVISED PER CLIENT COMMENTS	KAZ	KCD
0	09-10-12	ISSUED FOR CONSTRUCTION	MCD	KCD

KMB DESIGN GROUP
kmbdg.com
1800 ROUTE 34, SUITE 209
WALL, NJ 07719
(732) 280-5623

Stephen A. Bray
PROFESSIONAL ENGINEER

STATE OF CONNECTICUT · STEPHEN A. BRAY · LICENSED PROFESSIONAL ENGINEER

CT LICENSE: 26657 1/30/13

PROJECT NUMBER: 332.1499

SITE INFORMATION:
123 CAMPVILLE HILL ROAD
HARWINTON, CT 06791
LITCHFIELD COUNTY
CROWN CASTLE SITE: 876376
CT33XC111

PROJECT TYPE: NETWORK VISION

DRAWN BY:	CHECKED BY:	DATE:
JLS		05-01-12

SHEET TITLE: RRH MOUNT DETAILS (ALL SECTORS)

SHEET NUMBER: C04B

REV.: 3

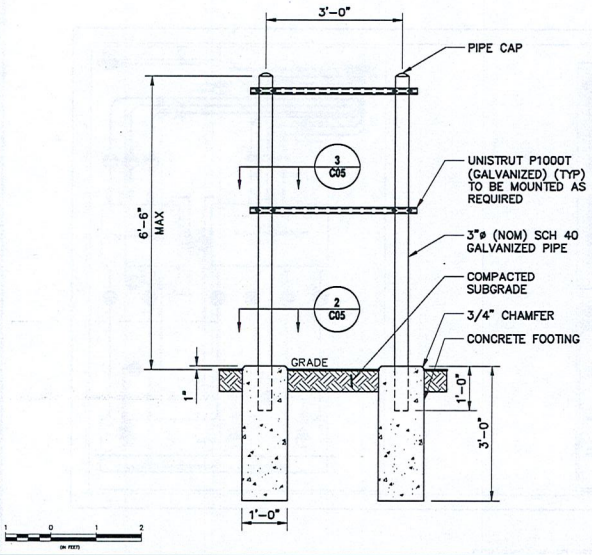

1 UNISTRUT FRAME DETAIL

11x17 SCALE: 3/8" = 1'-0" | 24x36 SCALE: 3/4" = 1'-0"

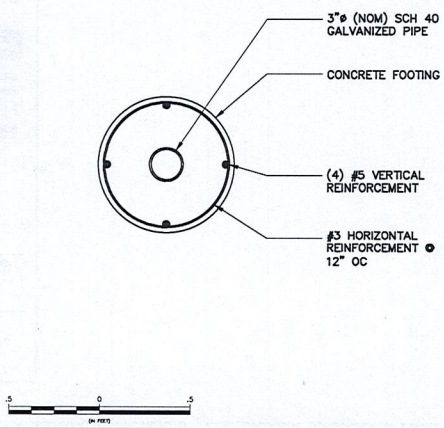

2 CONCRETE PIER DETAIL

11x17 SCALE: 1 1/2" = 1'-0" | 24x36 SCALE: 3" = 1'-0"

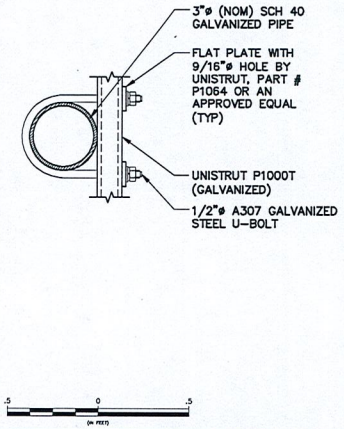

3 UNISTRUT CONNECTION DETAIL

11x17 SCALE: 1 1/2" = 1'-0" | 24x36 SCALE: 3" = 1'-0"

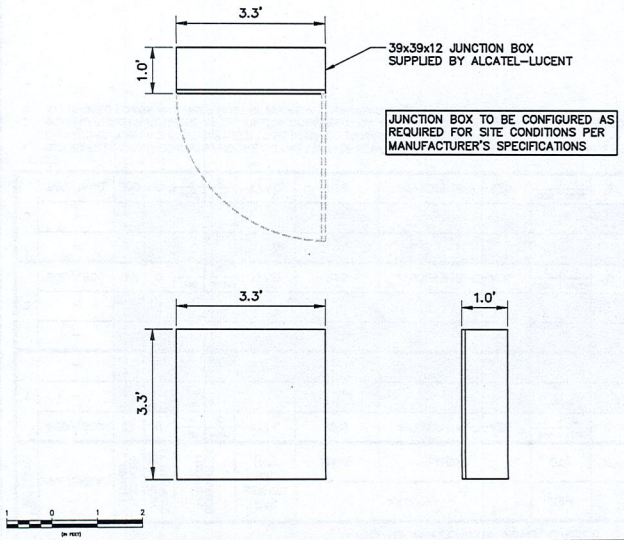

4 DC DISTRIBUTION & FIBER MGMT ENCLOSURE DETAIL

11x17 SCALE: 3/8" = 1'-0" | 24x36 SCALE: 3/4" = 1'-0"

Sprint

Alcatel·Lucent

REV.	DATE	REVISION DESCRIPTION	DRAWN BY	CHKD. BY
3	01-30-13	REVISED PER CLIENT COMMENTS	CCR	KCD
2	12-14-12	REVISED PER CLIENT COMMENTS	KAZ	KCD
1	12-07-12	REVISED PER CLIENT COMMENTS	KAZ	KCD
0	08-10-12	ISSUED FOR CONSTRUCTION	MCD	KCD

KMB DESIGN GROUP
kmbdg.com
1850 ROUTE 34, SUITE 209
WALL, NJ 07719
(732) 280-5633

Stephen A. Bray
PROFESSIONAL ENGINEER

STATE OF CONNECTICUT · STEPHEN A. BRAY · No. 26657 · LICENSED PROFESSIONAL ENGINEER

CT LICENSE: 26657 1/30/13

PROJECT NUMBER: 332.1499

SITE INFORMATION:
123 CAMPVILLE HILL ROAD
HARWINTON, CT 06791
LITCHFIELD COUNTY
CROWN CASTLE SITE: 876376
CT33XC111

PROJECT TYPE: NETWORK VISION

DRAWN BY:	CHECKED BY:	DATE:
JLS		05-01-12

SHEET TITLE: SITE DETAILS

SHEET NUMBER: C05 | REV.: 3

OWNERSHIP OF DOCUMENTS: THIS DOCUMENT AND THE IDEAS AND DESIGNS INCORPORATED HEREIN, AS IN INSTRUMENT OF PROFESSIONAL SERVICE, ARE THE PROPERTY OF KMB DESIGN GROUP, LLC AND ARE NOT TO BE USED, IN WHOLE OR IN PART, FOR ANY OTHER PROJECT WITHOUT THE WRITTEN AUTHORIZATION OF KMB DESIGN GROUP, LLC. IT IS UNLAWFUL FOR ANY PERSON TO AMEND ANY ASPECT OF THESE DRAWINGS UNLESS THEY HAVE THE APPROVAL OF THE LICENSED PROFESSIONAL IN WRITING.

FINAL ANTENNA AND CABLE SCHEDULE

SECTOR	ANTENNA	AZIMUTH (DEGREES)	MECHANICAL DT (DEGREES)	ELECTRICAL DT (DEGREES) 800	ELECTRICAL DT (DEGREES) 1900	RAD CENTER AGL (FT)	ANTENNA MAKE	ANTENNA MODEL	RRH QTY 800	RRH QTY 1900	TOP COAX JUMPER QTY	TOP COAX JUMPER LENGTH (FT)	COMBINER JUMPER QTY	COMBINER JUMPER LENGTH (FT)	NOTCH FILTER JUMPER QTY	NOTCH FILTER JUMPER LENGTH (FT)	HYBRIFLEX LENGTH (FT)
1	800/1900	20	0	−5	0	177.0	RFS	APXVSPP18-C-A20	1	1	6	10	–	–	1	3	240
	–																
	–																
2	–																240
	–																
	800/1900	180	0	−1	0	177.0	RFS	APXVSPP18-C-A20	1	1	6	8	–	–	1	3	
3	–																240
	–																
	800/1900	300	0	−7	0	177.0	RFS	APXVSPP18-C-A20	1	1	6	8	–	–	1	3	

NOTES:
1. DUE TO FIELD MEASUREMENTS AND THE INSTALLATION OF NEW ANTENNAS THAT VARY IN SIZE FROM THE EXISTING ANTENNAS, THE ANTENNA RAD CENTER HAS CHANGED FROM WHAT IS ON RECORD. THE DATABASE MAY NEED TO BE UPDATED TO MATCH THESE PLANS.
2. SOME CABLING MAY CHANGE AT THE TIME OF CONSTRUCTION. CONTRACTOR TO CONFIRM ALL CABLE LENGTHS, TYPE, QUANTITIES, AND CONFIGURATION PRIOR TO CONSTRUCTION.
3. ALL UNUSED POWER AND FIBER MUST BE PROPERLY TERMINATED AND WEATHERPROOFED.

CONTRACTOR TO VERIFY & USE THE LATEST TOWER TOP SCENARIO AS PROVIDED BY ALCATEL-LUCENT CONSTRUCTION MANAGER

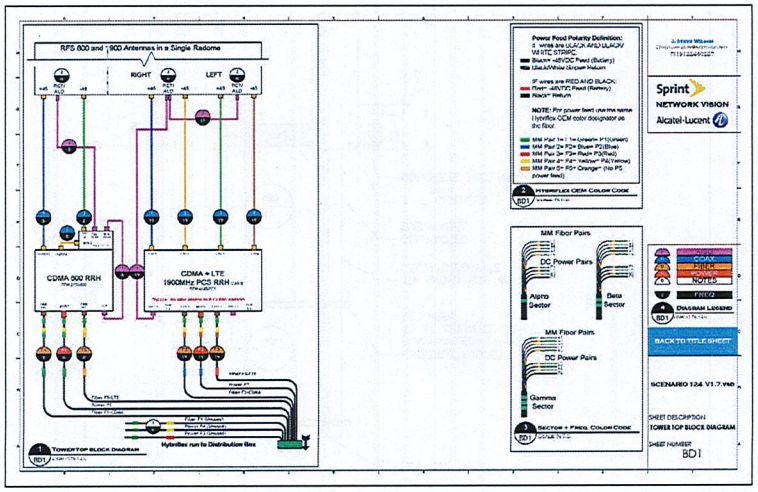

ALL SECTORS

Sprint

Alcatel·Lucent

REV.	DATE	REVISION DESCRIPTION	DRAWN BY	CHKD. BY
3	01-30-13	REVISED PER CLIENT COMMENTS	CCR	KCD
2	12-14-12	REVISED PER CLIENT COMMENTS	KAZ	KCD
1	12-07-12	REVISED PER CLIENT COMMENTS	KAZ	KCD
0	08-10-12	ISSUED FOR CONSTRUCTION	MCD	KCD

KMB DESIGN GROUP
kmbdg.com
1860 ROUTE 34, SUITE 209
WALL, NJ 07719
(732) 280-5623

Stephen A. Bray
PROFESSIONAL ENGINEER

STATE OF CONNECTICUT · STEPHEN A. BRAY · LICENSED PROFESSIONAL ENGINEER

CT LICENSE: 26657 1/30/13

PROJECT NUMBER: 332.1499

SITE INFORMATION:
123 CAMPVILLE HILL ROAD
HARWINTON, CT 06791
LITCHFIELD COUNTY
CROWN CASTLE SITE: 876376
CT33XC111

PROJECT TYPE: NETWORK VISION

DRAWN BY: JLS | CHECKED BY: | DATE: 05-01-12

SHEET TITLE: RF SCHEDULE

SHEET NUMBER: C06 | REV.: 3

OWNERSHIP OF DOCUMENTS: THIS DOCUMENT AND THE IDEAS AND DESIGNS INCORPORATED HEREIN, AS IN INSTRUMENT OF PROFESSIONAL SERVICE, ARE THE PROPERTY OF KMB DESIGN GROUP, LLC AND ARE NOT TO BE USED, IN WHOLE OR IN PART, FOR OTHER PROJECTS WITHOUT THE WRITTEN AUTHORIZATION OF KMB DESIGN GROUP, LLC. IT IS UNLAWFUL FOR ANY PERSON TO AMEND ANY ASPECT OF THESE DRAWINGS UNLESS THEY HAVE THE APPROVAL OF THE LICENSED PROFESSIONAL IN WRITING

	Market	Southern Connecticut		
	Cascade ID	CT33XC111		
		SECTOR 1	SECTOR 2	SECTOR 3
	Split sector present	No	No	No
1900	1900MHz_Azimuth	20	180	300
1900	1900MHz_No_of_Antennas	1	1	1
1900	1900MHz_RADCenter(ft)	177	177	177
1900	1900MHz_Antenna Make	RFS	RFS	RFS
1900	1900MHz_Antenna Model	APXVSPP18-C-A20	APXVSPP18-C-A20	APXVSPP18-C-A20
1900	1900MHz_Horizontal_Beamwidth	65	65	65
1900	1900MHz_Vertical_Beamwidth	5.5	5.5	5.5
1900	1900MHz_AntennaHeight (ft)	6	6	6
1900	1900MHz_AntennaGain(dBd)	15.9	15.9	15.9
1900	1900MHz_E_Tilt	0	0	0
1900	1900MHz _M_Tilt	0	0	0
1900	1900MHz_Carrier_Forecast_Year_2013	2	2	2
1900	1900MHz_RRH Manufacturer	ALU	ALU	ALU
1900	1900MHz_RRH Model	RRH 1900 4X45 65MHz	RRH 1900 4X45 65MHz	RRH 1900 4X45 65MHz
1900	1900MHz_RRH Count	1	1	1
1900	1900MHz_RRH Location	Top of the Pole/Tower	Top of the Pole/Tower	Top of the Pole/Tower
1900	1900MHz Combiner Model	No Combiner Required	No Combiner Required	No Combiner Required
1900	1900MHz_Top_Jumper #1_Length (RRH or Combiner-to-Antenna for TT or Main Coax to	10	10	10
1900	1900MHz_Top_Jumper #1_Cable_Model (RRH or Combiner-to-Antenna for TT or Main Coax	LCF12-50J	LCF12-50J	LCF12-50J
1900	1900MHz_Top_Jumper #2_Length (RRH to Combiner for TT if applicable, ft)	N/A	N/A	N/A
1900	1900MHz_Top_Jumper #2_Cable_Model (RRH to Combiner for TT if applicable)	N/A	N/A	N/A
1900	1900MHz_Main_Coax_Cable_Length (ft)	N/A	N/A	N/A
1900	1900MHz_Main_Coax_Cable_Model	N/A	N/A	N/A
1900	1900MHz_Bottom_Jumper #1_Length (Ground based RRH to Combiner-OR-Main Coax, ft)	N/A	N/A	N/A
1900	1900MHz_Bottom_Jumper #1_Cable_Model (Ground based RRH to Combiner-OR-Main Coax)	N/A	N/A	N/A
1900	1900MHz_Bottom_Jumper #2_Length (Ground based-Combiner to Main Coax, ft)	N/A	N/A	N/A
1900	1900MHz_Bottom_Jumper #2_Cable_Model (Ground based-Combiner to Main Coax)	N/A	N/A	N/A
800	800MHz_Azimuth	20	180	300
800	800MHz_No_of_Antennas	0	0	0
800	800MHz_RADCenter(ft)	177	177	177
800	800MHz_AntennaMake	RFS	RFS	RFS
800	800MHz_AntennaModel	APXVSPP18-C-A20 (Shared w/1900)	APXVSPP18-C-A20 (Shared w/1900)	APXVSPP18-C-A20 (Shared w/1900)
800	800MHz_Horizontal_Beamwidth	65	65	65
800	800MHz_Vertical_Beamwidth	11.5	11.5	11.5
800	800MHz_AntennaHeight (ft)	6	6	6
800	800MHz_AntennaGain (dBd)	13.4	13.4	13.4
800	800MHz_E_Tilt	-6	-1	-7
800	800MHz_M_Tilt	0	0	0
800	800MHz_RRH Manufacturer	ALU	ALU	ALU
800	800MHz_RRH Model	FD-RRH-2x50-800	FD-RRH-2x50-800	FD-RRH-2x50-800
800	800MHz_RRH Count	1	1	1
800	800MHz_RRH Location	Top of the Pole/Tower	Top of the Pole/Tower	Top of the Pole/Tower
800	800_Top_Jumper #1_Length (RRH to Antenna for TT or Main Coax to Antenna for GM)	10	10	10
800	800_Top_Jumper_Cable_Model (RRH to Antenna for TT or Main Coax to Antenna for GM)	LCF12-50J	LCF12-50J	LCF12-50J
800	800MHz_Main_Coax_Cable_Length (ft)	N/A	N/A	N/A
800	800MHz_Main_Coax_Cable_Model	N/A	N/A	N/A
800	800_Bottom_Jumper #1_Length (Ground based RRH to Main Coax)	N/A	N/A	N/A
800	800_Bottom_Jumper #1_Cable_Model (Ground based RRH to Main Coax)	N/A	N/A	N/A
	Plumbing Scenario *	124	124	124
Comments	* If plumbing scenario does not match the material received, please contact your Construction Manager			
Comments	11/9/2012			

DUE TO FIELD MEASUREMENTS AND THE INSTALLATION OF NEW ANTENNAS THAT VARY IN SIZE FROM THE EXISTING ANTENNAS, THE ANTENNA RAD CENTER HAS CHANGED FROM WHAT IS ON RECORD. THE DATABASE NEEDS TO BE UPDATED TO MATCH THESE PLANS.

Sprint

Alcatel·Lucent

REV.	DATE	REVISION DESCRIPTION	DRAWN BY	CHKD. BY
3	01-30-13	REVISED PER CLIENT COMMENTS	CCR	KCD
2	12-14-12	REVISED PER CLIENT COMMENTS	KAZ	KCD
1	12-07-12	REVISED PER CLIENT COMMENTS	KAZ	KCD
0	08-10-12	ISSUED FOR CONSTRUCTION	MCD	KCD

KMB DESIGN GROUP
kmbdg.com
1860 ROUTE 34, SUITE 209
WALL, NJ 07719
(732) 280-5633

Stephen A. Bray
PROFESSIONAL ENGINEER

STATE OF CONNECTICUT
STEPHEN A. BRAY
26657
LICENSED PROFESSIONAL ENGINEER

CT LICENSE: 26657 1/30/13

PROJECT NUMBER: 332.1499

SITE INFORMATION:
123 CAMPVILLE HILL ROAD
HARWINTON, CT 06791
LITCHFIELD COUNTY
CROWN CASTLE SITE: 876376
CT33XC111

PROJECT TYPE: NETWORK VISION

DRAWN BY: JLS | CHECKED BY: | DATE: 05-01-12

SHEET TITLE: RF DATA SHEET

SHEET NUMBER: C06A | REV.: 3

OWNERSHIP OF DOCUMENTS THIS DOCUMENT AND THE IDEAS AND DESIGNS INCORPORATED HEREIN, AS AN INSTRUMENT OF PROFESSIONAL SERVICE, ARE THE PROPERTY OF KMB DESIGN GROUP, LLC AND ARE NOT TO BE USED, IN WHOLE OR IN PART, FOR ANY OTHER PROJECT WITHOUT THE WRITTEN AUTHORIZATION OF KMB DESIGN GROUP, LLC. IT IS UNLAWFUL TO ALTER ANY ASPECT OF THESE DRAWINGS UNLESS THEY HAVE THE APPROVAL OF THE LICENSED PROFESSIONAL IN WRITING.

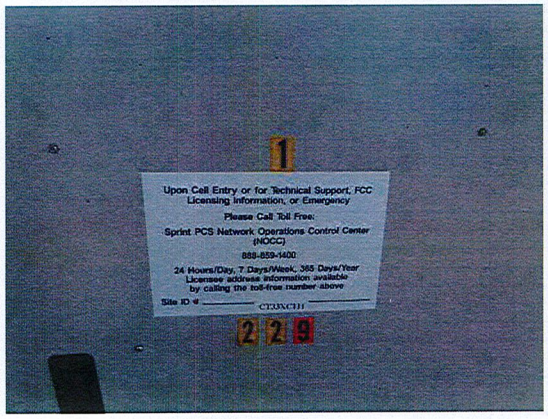

1 EXISTING SIGNAGE

2 PROPOSED MEET POINT

3 EXISTING EQUIPMENT AREA

4 EXISTING TELCO CABINET

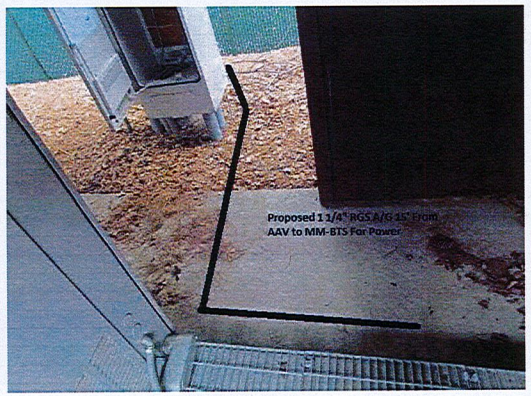

5 PROPOSED DC POWER SOURCE - MODCELL

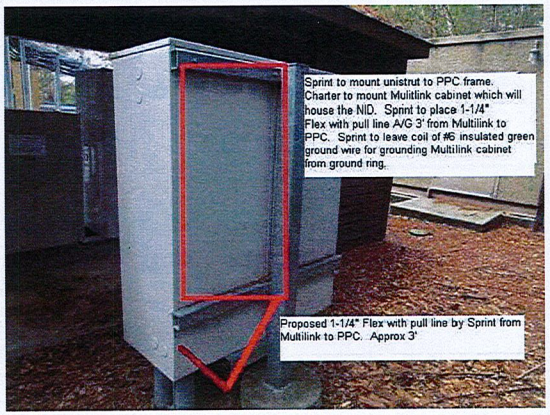

6 PROPOSED NID EQUIPMENT LOCATION

OWNERSHIP OF DOCUMENTS THIS DOCUMENT AND THE IDEAS AND DESIGNS INCORPORATED HEREIN, AS AN INSTRUMENT OF PROFESSIONAL SERVICE, ARE THE PROPERTY OF KMB DESIGN GROUP, LLC AND ARE NOT TO BE USED, IN WHOLE OR IN PART, FOR OTHER PROJECTS WITHOUT THE WRITTEN AUTHORIZATION OF KMB DESIGN GROUP, LLC. IT IS UNLAWFUL FOR ANY PERSON TO AMEND ANY ASPECT OF THESE DRAWINGS UNLESS THEY HAVE THE APPROVAL OF THE LICENSED PROFESSIONAL IN WRITING.

Sprint

Alcatel·Lucent

REV.	DATE	REVISION DESCRIPTION	DRAWN BY	CHKD. BY
3	01-30-13	REVISED PER CLIENT COMMENTS	CCR	KCD
2	12-14-12	REVISED PER CLIENT COMMENTS	KAZ	KCD
1	12-07-12	REVISED PER CLIENT COMMENTS	KAZ	KCD
0	09-10-12	ISSUED FOR CONSTRUCTION	MCD	KCD

KMB DESIGN GROUP
kmbdg.com
1850 ROUTE 34, SUITE 209
WALL, NJ 07719
(732) 280-5023

Stephen A. Bray
PROFESSIONAL ENGINEER
STATE OF CONNECTICUT
STEPHEN A. BRAY
LICENSED PROFESSIONAL ENGINEER
CT LICENSE: 26657 1/30/13

PROJECT NUMBER: 332.1499

SITE INFORMATION:
123 CAMPVILLE HILL ROAD
HARWINTON, CT 06791
LITCHFIELD COUNTY
CROWN CASTLE SITE: 876376
CT33XC111

PROJECT TYPE: NETWORK VISION

DRAWN BY: JLS | CHECKED BY: | DATE: 05-01-12

SHEET TITLE: AAV DRAWINGS SITE PHOTOS

SHEET NUMBER: C07A | REV.: 3

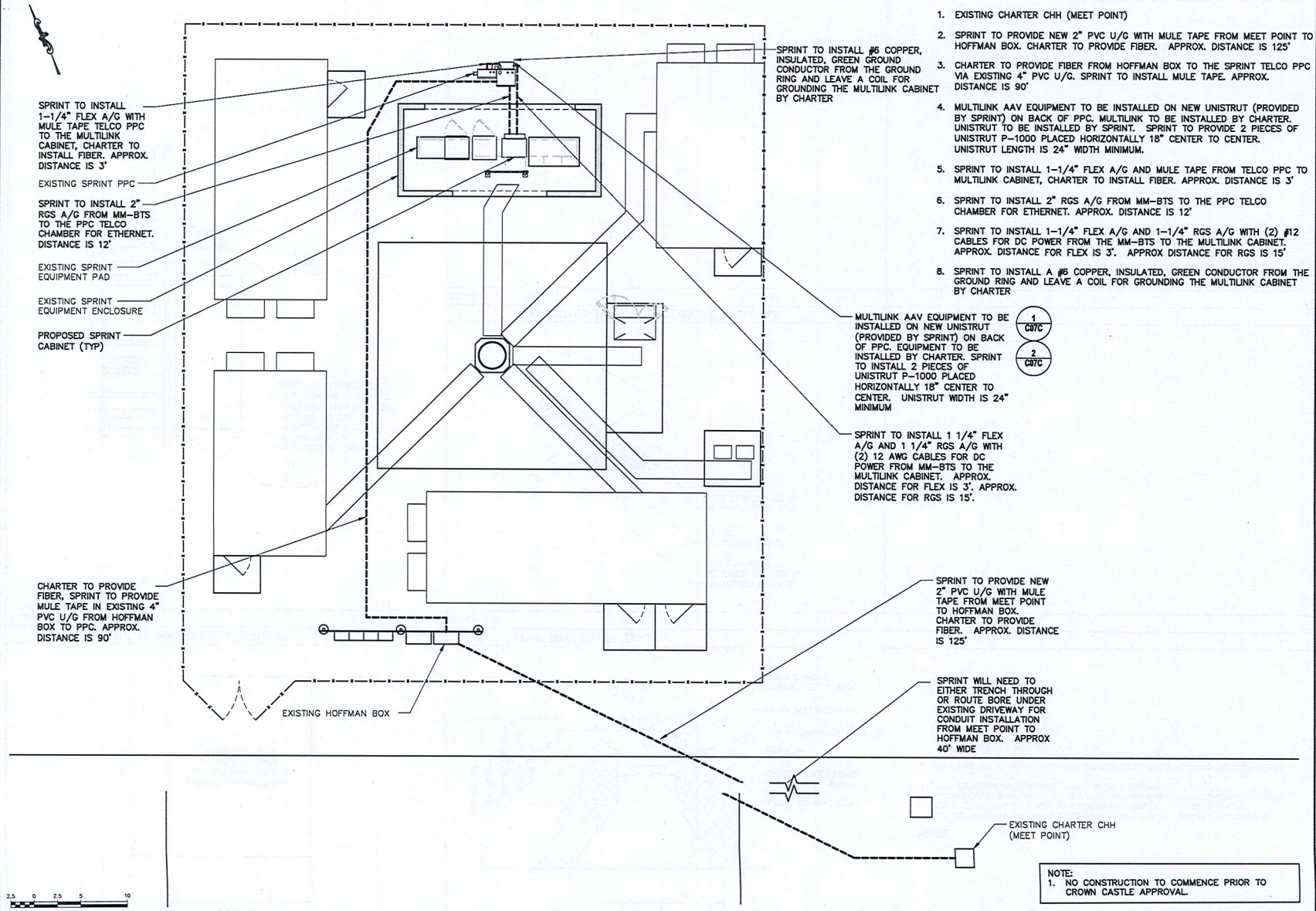

AAV SCOPE OF WORK NOTES:

1. EXISTING CHARTER CHH (MEET POINT)
2. SPRINT TO PROVIDE NEW 2" PVC U/G WITH MULE TAPE FROM MEET POINT TO HOFFMAN BOX. CHARTER TO PROVIDE FIBER. APPROX. DISTANCE IS 125'
3. CHARTER TO PROVIDE FIBER FROM HOFFMAN BOX TO THE SPRINT TELCO PPC VIA EXISTING 4" PVC U/G. SPRINT TO INSTALL MULE TAPE. APPROX. DISTANCE IS 90'
4. MULTILINK AAV EQUIPMENT TO BE INSTALLED ON NEW UNISTRUT (PROVIDED BY SPRINT) ON BACK OF PPC. MULTILINK TO BE INSTALLED BY CHARTER. UNISTRUT TO BE INSTALLED BY SPRINT. SPRINT TO PROVIDE 2 PIECES OF UNISTRUT P-1000 PLACED HORIZONTALLY 18" CENTER TO CENTER. UNISTRUT LENGTH IS 24" WIDTH MINIMUM.
5. SPRINT TO INSTALL 1-1/4" FLEX A/G AND MULE TAPE FROM TELCO PPC TO MULTILINK CABINET, CHARTER TO INSTALL FIBER. APPROX. DISTANCE IS 3'
6. SPRINT TO INSTALL 2" RGS A/G FROM MM-BTS TO THE PPC TELCO CHAMBER FOR ETHERNET. APPROX. DISTANCE IS 12'
7. SPRINT TO INSTALL 1-1/4" FLEX A/G AND 1-1/4" RGS A/G WITH (2) #12 CABLES FOR DC POWER FROM THE MM-BTS TO THE MULTILINK CABINET. APPROX. DISTANCE FOR FLEX IS 3'. APPROX DISTANCE FOR RGS IS 15'
8. SPRINT TO INSTALL A #6 COPPER, INSULATED, GREEN CONDUCTOR FROM THE GROUND RING AND LEAVE A COIL FOR GROUNDING THE MULTILINK CABINET BY CHARTER

NOTE:
1. NO CONSTRUCTION TO COMMENCE PRIOR TO CROWN CASTLE APPROVAL.

1 COMPOUND PLAN

11x17 SCALE: 1" = 10' | 24x36 SCALE: 1" = 5'

Sprint

Alcatel·Lucent

REV.	DATE	REVISION DESCRIPTION	DRAWN BY	CHKD. BY
3	01-30-13	REVISED PER CLIENT COMMENTS	CCR	KCD
2	12-14-12	REVISED PER CLIENT COMMENTS	KAZ	KCD
1	12-07-12	REVISED PER CLIENT COMMENTS	KAZ	KCD
0	09-10-12	ISSUED FOR CONSTRUCTION	MCD	KCD

KMB DESIGN GROUP
kmbdg.com
1860 ROUTE 34, SUITE 209
WALL, NJ 07719
(732) 280-5633

Stephen A. Bray
PROFESSIONAL ENGINEER
STATE OF CONNECTICUT
STEPHEN A. BRAY
26657
LICENSED PROFESSIONAL ENGINEER
CT LICENSE: 26657 1/30/13

PROJECT NUMBER: 332.1499

SITE INFORMATION:
123 CAMPVILLE HILL ROAD
HARWINTON, CT 06791
LITCHFIELD COUNTY
CROWN CASTLE SITE: 876376
CT33XC111

PROJECT TYPE: NETWORK VISION

DRAWN BY:	CHECKED BY:	DATE:
JLS		05-01-12

SHEET TITLE: AAV DRAWINGS COMPOUND PLAN

SHEET NUMBER: C07B | REV.: 3

OWNERSHIP OF DOCUMENTS: THIS DOCUMENT AND THE IDEAS AND DESIGNS INCORPORATED HEREIN, AS IN INSTRUMENT OF PROFESSIONAL SERVICE, ARE THE PROPERTY OF KMB DESIGN GROUP, LLC AND ARE NOT TO BE USED, IN WHOLE OR IN PART, FOR ANY PROJECT WITHOUT THE WRITTEN AUTHORIZATION OF KMB DESIGN GROUP, LLC. IT IS UNLAWFUL FOR ANY PERSON TO AMEND ANY ASPECT OF THESE DRAWINGS UNLESS THEY HAVE THE APPROVAL OF THE LICENSED PROFESSIONAL ENGINEER.

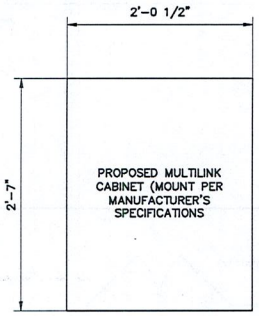

1 TYP MULTILINK SPECIFICATIONS

SCALE: NTS

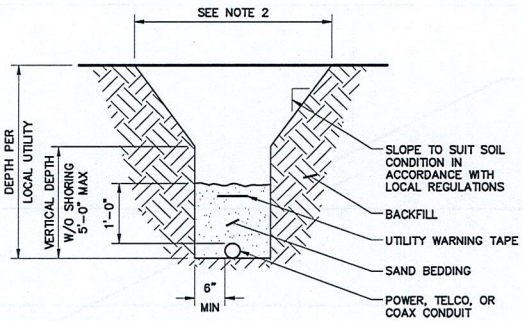

NOTES:

1. DETAIL SHOWN IS FOR ONE CONDUIT. MULTIPLE CONDUITS CAN BE PLACED IN THE SAME TRENCH AS LONG AS A MINIMUM SEPARATION PER THE LOCAL UTILITY COMPANIES IS MAINTAINED. IN ALL CASES THE MINIMUM CENTER TO CENTER SPACING BETWEEN CONDUITS IS 1'-0" (NOT REQUIRED FOR COAX).
2. CONTRACTOR SHALL RESTORE THE TRENCH TO ITS ORIGINAL CONDITIONS BY EITHER SEEDING OR SODDING GRASS AREAS, OR REPLACING ASPHALT OR CONCRETE AREAS TO ITS ORIGINAL CROSS SECTION.

3 TYP TRENCH DETAIL

SCALE: NTS

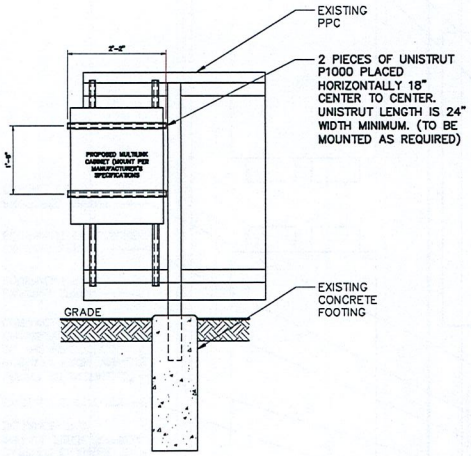

2 UNISTRUT FRAME DETAIL

11x17 SCALE: 3/8" = 1'-0" | 24x36 SCALE: 3/4" = 1'-0"

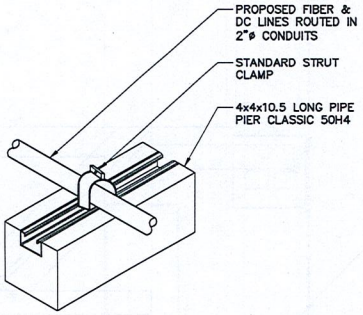

4 TYP CONDUIT ALONG CONCRETE DETAIL

SCALE: NTS

OWNERSHIP OF DOCUMENTS THIS DOCUMENT AND THE IDEAS AND DESIGNS INCORPORATED HEREIN, AS IN INSTRUMENT OF PROFESSIONAL SERVICE, ARE THE PROPERTY OF KMB DESIGN GROUP, LLC AND ARE NOT TO BE USED, IN WHOLE OR IN PART, FOR OTHER PROJECTS WITHOUT THE WRITTEN AUTHORIZATION OF KMB DESIGN GROUP, LLC. IT IS UNLAWFUL FOR ANY PERSON TO AMEND ANY ASPECT OF THESE DRAWINGS UNLESS THEY HAVE THE APPROVAL OF THE LICENSED PROFESSIONAL IN WRITING.

Sprint

Alcatel·Lucent

REV.	DATE	REVISION DESCRIPTION	DRAWN BY	CHKD. BY
3	01-30-13	REVISED PER CLIENT COMMENTS	CCR	KCD
2	12-14-12	REVISED PER CLIENT COMMENTS	KAZ	KCD
1	12-07-12	REVISED PER CLIENT COMMENTS	KAZ	KCD
0	09-10-12	ISSUED FOR CONSTRUCTION	MCD	KCD

KMB DESIGN GROUP
kmbdg.com
1860 ROUTE 34, SUITE 209
WALL, NJ 07719
(732) 280-5633

Stephen A. Bray
PROFESSIONAL ENGINEER
STATE OF CONNECTICUT
STEPHEN A. BRAY
LICENSED PROFESSIONAL ENGINEER
CT LICENSE: 26657 1/30/13

PROJECT NUMBER: 332.1499

SITE INFORMATION:
123 CAMPVILLE HILL ROAD
HARWINTON, CT 06791
LITCHFIELD COUNTY
CROWN CASTLE SITE: 876376
CT33XC111

PROJECT TYPE: NETWORK VISION

DRAWN BY:	CHECKED BY:	DATE:
JLS		05-01-12

SHEET TITLE: AAV DRAWINGS DETAILS

SHEET NUMBER: C07C

REV.: 3

OWNERSHIP OF DOCUMENTS: THIS DOCUMENT AND THE IDEAS AND DESIGNS INCORPORATED HEREIN, AS AN INSTRUMENT OF PROFESSIONAL SERVICE, ARE THE PROPERTY OF KMB DESIGN GROUP, LLC AND ARE NOT TO BE USED, IN WHOLE OR IN PART, FOR OTHER PROJECTS WITHOUT THE WRITTEN AUTHORIZATION OF KMB DESIGN GROUP, LLC. IT IS UNLAWFUL FOR ANY PERSON TO AMEND ANY ASPECT OF THESE DRAWINGS UNLESS THEY HAVE THE APPROVAL OF THE LICENSED PROFESSIONAL IN WRITING.

GENERAL SPECIFICATIONS

1. Contractor shall verify that the total number of service entrance disconnects in the existing utility company pedestal must not exceed six. If the new service added exceeds this value, contractor must coordinate with the utility company and authority having jurisdiction. Run an additional exclusive and dedicated service lateral set for the new load added to the compound as per NEC Article # 230-2(B)
2. All work should be done in a neat workmanlike manner, left clean and free from defects, and completely operable. The contractor shall provide all equipment as scheduled on the drawings. All materials shall be new and all work and materials shall be guaranteed by the contractor for a period of one (1) year from the date of acceptance by the owner.
3. All work shall be carefully coordinated with the landlord and all trades involved, and the contractor shall provide proper connections, fittings, valves, piping, etc. for all equipment furnished by carrier or other trades involved in this contract.
4. Contractor shall inform the engineer immediately of any conflict discovered before performing any work related to such conflict.
5. Provide all required temporary utilities and pay all associated fees and operating costs.
6. Before submitting this bid, the contractor shall visit the job site to examine and fully acquaint himself with the existing job conditions, paying particular attention to the location of existing conditions to make a complete and operable system without additional cost to the carrier or the engineer.
7. Obtain all permits and approvals from authorities having jurisdiction and paying all fees required.
8. Label all equipment served from Sprint panelboard with phenolic labels sized in relation to usage.
9. Contractor to provide and install engraved label on the Sprint meter socket enclosure.
10. Redlined As-Builts are to be delivered to a Sprint representative.
11. The equipment/protections must be rated for standard of AIC rate higher than incoming equipment and/or utility company AIC rate.

GROUNDING NOTES

1. The subcontractor is responsible for properly sequencing grounding and underground conduit installation as to prevent any loss of continuity in the grounding system or damage to the conduit.
2. All exterior ground conductors shall be #2 AWG solid tinned copper unless otherwise indicated.
3. All ground connections above grade (interior & exterior) shall be formed using high press crimps.
4. All ground connections below grade shall be exothermic (Cadweld).
5. Connections to equipment and enclosures shall be made utilizing two-hole ground lugs with an antioxidant compound.
6. Maximum resistance of the completed ground system shall not exceed 5 Ohms. Testing shall be performed in accordance with technical specification for facility grounding, using fall potential method.
7. Where grounding connections are made to painted metal surfaces shall be scraped clean to bear metal to ensure proper contact. Surfaces shall be restored to match original finishes.
8. Use of 90° bends in the protection grounding conductors shall be avoided when 45° bends can be adequately supported.
9. Ground depth shall be 30" minimum below finished grade, or 6" below frost line, whichever is greater.
10. Home run grounds not approved. All antenna buss bars should be installed directly to tower steel without insulators or down conductors.

ELECTRICAL SYMBOLS		ABBREVIATIONS	
	WIRING SYMBOLS	AWG	AMERICAN WIRE GAUGE
	DISCONNECT SWITCH	BCW	BARE COPPER WIRE
	METER	DWG	DRAWING
	CIRCUIT BREAKER	EMT	ELECTRICAL METALLIC TUBING
	CADWELD TYPE CONNECTION	GEN	GENERATOR
	COMPRESSION TYPE CONNECTION	MGB	MASTER GROUND BAR
	GROUND ROD WITH ACCESS	PVC	RIGID (SCH 40) PVC CONDUIT
	CHEMICAL GROUND ROD	RGS	RIGID GALVANIZED STEEL
	GROUND ROD	RWY	RACEWAY
	CONDUIT TURNING DOWN	TYP	TYPICAL
	CONDUIT TURNING UP		
JB	JUNCTION BOX		
PB	PULL BOX		
	CONDUIT RUNNING ABOVE GRADE		
	CONDUIT RUNNING UNDER GROUND		

ELECTRICAL SPECIFICATIONS

1. General:
   A. The electrical contractor shall furnish all labor,materials, tools, transportation equipment, services and facilities required for the complete, proper and substantial installation of all electrical work. All fixtures, devices, and equipment shown, noted or required on these drawings, and/or contained herein shall be connected from the source of electric power to the final connection, tested and made ready for satisfactory operation.
   B. Service equipment shall be 120/240 VAC, 100 Amp, single phase, unless otherwise directed by the Sprint Construction Manager.
   C. Unless otherwise indicated, the arrangement, position, connections, etc. shown on the drawings shall be taken on a diagram basis. The right is reserved by the engineer to make minor changes in locations and arrangements when required by job development without additional compensation to the contractor.
   D. All work shall conform to the adopted edition of the National Electrical Code and local, state and applicable codes.
   E. When a utility company meter is specified, the contractor shall obtain all associated cut-in cards, inspections, etc., necessary to have the meter set. It is the responsibility of the contractor to meet with utility company prior to construction to verify source of electric service, tap and meter location.
2. Identification:
   A. Provide typewritten directories for panels, indicating use of each branch circuit and designating spare circuits. Handwritten directories are not acceptable.
   B. All panel boards, switches and other equipment enclosures shall bear engraved nameplates as manufactured by Seton Nameplate Corp., or equal lettering to be 1/2" white letters on black background unless noted otherwise.
3. Raceways:
   A. Minimum conduit size shall be 3/4" unless otherwise noted on the drawings.
   B. Exposed raceways shall be run true, plumb, and parallel or perpendicular to building lines.
   C. Conduit routings are schematic. Sub contractor shall install conduits so that access to equipment is not blocked.
4. Wiring Methods:
   A. All feeders shall consist of pulled conductors in conduit. All branch circuits shall consist of pulled conductors in conduit. Except 15 and 20 Ampere 1 pole lighting receptacles, miscellaneous branch circuits concealed above suspended ceilings or within dry walls shall consist of type MC metal clad cable if allowed by code. Connections to communications cabinets and vibrating equipment shall consist of pulled conductors in LFMC, maximum 6' in length.
   B. Conductors shall be continuous from origin to panel or equipment without splices. Where tap splices are necessary and approved, they shall be made with suitable connectors in junction boxes.
   C. Equipment ground conductors shall be provided for all feeders and branch circuits.
   D. The contractor shall conceal all conduit routing passing through finished areas. Conduit routing through unfinished shall be supported as specified in drawings. Unless clearly specified, no conduits shall be routed on exterior surface of buildings.
   E. All conductor terminals shall be U.L. listed for minimum of 75° C.
   F. Provide fire stopping around all conduits at wall and floor penetrations.
   G. Seal all exterior wall penetrations as required.
   H. Underground conduits shall be a minimum of 24" below finished grade. All underground work shall be documented by photograph before any backfill is begun. Photos will be required at time punchlist is performed. Feeders shall be individual conductors in schedule 40 PVC, direct burial conduit. When buried conduits are subject to vehicular traffic, conduits shall be encased in concrete. All sweeps below grade shall be schedule 80 PVC.
   I. All feeders in "damp" or "wet" locations shall consist of individual conductor in rigid galvanized steel or rigid aluminum conduit. Liquid-tight flexible metallic conduit shall be utilized when connecting to equipment cabinets and vibrating equipment. The maximum length for flexible conduit shall be 6'-0".
5. Wiring Devices:
   A. Switches, receptacles and other wiring devices shall be specification grade of type, size and rating indicated on the drawings.
6. Disconnect Switches:
   A. Switches shall be quick-make, quick-break NEMA 1 for indoor use and NEMA 3R for outdoor use as manufactured by General Electric, Square D or equal. Electrical contractor to provide all safety disconnects.
7. Special Requirements:
   A. The electrical contractor shall furnish and install all power and control wiring for equipment contained in contract documents.
   B. All work requiring an outage or interruption of service (power, telephone) shall be scheduled only at such time permitted by owner.
8. Lighting fixtures and lamps:
   A. Lighting fixtures shall be furnished complete with necessary hardware and lamps.
9. Transformers:
   A. Transformers shall be dry type with average temperature rise not to exceed 150° C (115° C)(80° C)
   B. Transformers shall be as manufactured by Square D, General Electric, or Siemens.

The contractor is required to contact the utility companies prior to starting construction. This is necessary to reconfirm that the utility points have remained consistent with the contractor documents:

* Telephone Demarcation Point
* Electrical Service Tap Point
* New Utility Meter Location

Sprint®

Alcatel·Lucent

REV.	DATE	REVISION DESCRIPTION	DRAWN BY	CHKD. BY
3	01-30-13	REVISED PER CLIENT COMMENTS	CCR	KCD
2	12-14-12	REVISED PER CLIENT COMMENTS	KAZ	KCD
1	12-07-12	REVISED PER CLIENT COMMENTS	KAZ	KCD
0	08-10-12	ISSUED FOR CONSTRUCTION	MCD	KCD

KMB DESIGN GROUP
kmbdg.com
1800 ROUTE 34, SUITE 209
WALL, NJ 07719
(732) 280-5623

Stephen A. Bray
PROFESSIONAL ENGINEER
CT LICENSE: 26657 1/30/13

PROJECT NUMBER: 332.1499

SITE INFORMATION:
123 CAMPVILLE HILL ROAD
HARWINTON, CT 06791
LITCHFIELD COUNTY
CROWN CASTLE SITE: 876376
CT33XC111

PROJECT TYPE: NETWORK VISION

DRAWN BY: JLS | CHECKED BY: | DATE: 05-01-12

SHEET TITLE: ELECTRICAL NOTES

SHEET NUMBER: E01 | REV.: 3

K:\332 Sprint\ 332.1000 Alcatel-Lucent\332.1499 CT33XC111 123 Campville Hill Road\332.1499 CAD\332.1499 Construction\332.1499 E01.dwg 1/30/2013 4:02:26 PM

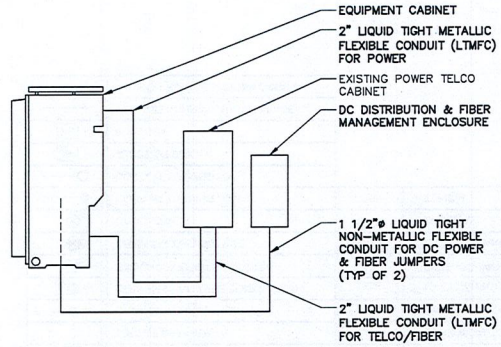

1 PLUMBING SCHEMATIC (IF REQUIRED)

SCALE: NTS

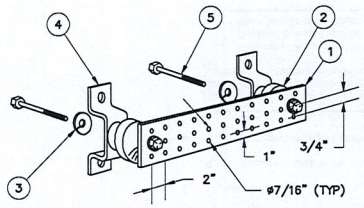

1. GALVANIZED STEEL GROUND BAR, 1/4" x 4" x 20". HAGER PART NO TGBI-14420C OR A.L.T. PART NO. 382227. HOLE CENTERS TO MATCH NEMA DOUBLE LUG CONFIGURATION.
2. INSULATORS, NEWTON INSTRUMENT CAT. NO. 3061-4.
3. 5/8" LOCKWASHERS, NEWTON INSTRUMENT CO. CAT. NO. 3015-8.
4. WALL MOUNTING BRACKET, NEWTON INSTRUMENT CO. CAT NO. A-6056.
5. 5/8-11 X 1" H.H.C.S.BOLTS, NEWTON INSTRUMENT CO. CAT NO. 3012-1

2 GROUND BAR DETAIL

SCALE: NTS

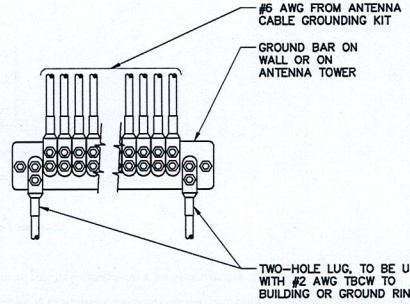

NOTE:
CONTRACTOR TO UTILIZE KOPR-SHIELD (THOMAS & BETTS) ON ALL LUG CONNECTIONS

3 GROUND LUG TO GROUND BAR CONNECTION DETAIL

SCALE: NTS

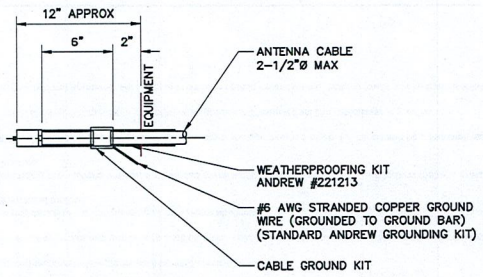

NOTE:
DO NOT INSTALL CABLE GROUND KIT AT A BEND AND ALWAYS DIRECT GROUND WIRE DOWN TO GROUND BAR.

4 CABLE GROUND KIT CONNECTION DETAIL

SCALE: NTS

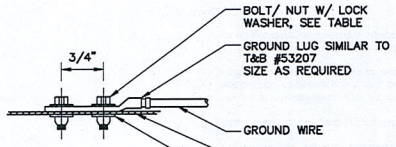

STANDARD LOCK WASHERS SHALL BE USED ON GROUND BARS, SERRATED "DRAGON TOOTH" LOCK WASHERS SHALL BE USED ON CONNECTIONS TO BUILDING STEEL AND MISCELLANEOUS METALS.

TABLE		
WIRE SIZE	LUG #	BOLT SIZE
#4/0	53212	1/2" – 20 NC x 1/2" S.S. BOLT & NUT W/ LOCK WASHERS
#2	53207	1/4" – 20 NC x 1/2" S.S. BOLT & NUT W/ LOCK WASHERS
#6	53205	

5 GROUND LUG CONNECTION DETAIL

SCALE: NTS

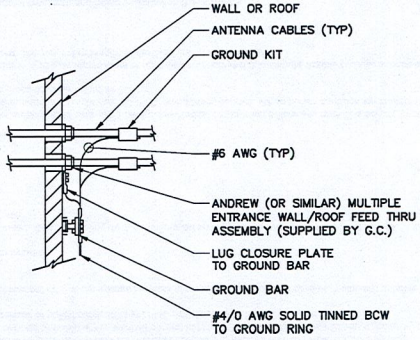

6 CABLE GROUNDING DETAIL

SCALE: NTS

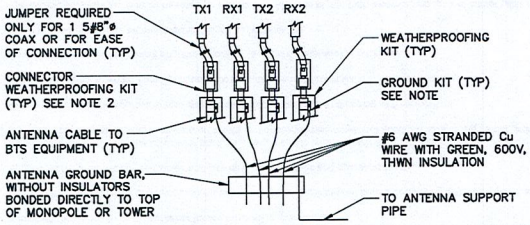

NOTES:
1. DO NOT INSTALL CABLE GROUND KIT AT A BEND AND ALWAYS DIRECT GROUND WIRE DOWN TO ANTENNA GROUND BAR.
2. WEATHER PROOFING SHALL BE TWO-PART TAPE KIT. COLD SHRINK SHALL NOT BE USED.
3. ATTACH "DO NOT DISCONNECT" LABELS TO GROUND BARS. CAN USE BRASS TAG "DO NOT DISCONNECT" AT EACH COAX GROUND POINT OR BACK-A-LITE PLATE ON GROUND BAR.

7 GROUND BAR TO GROUND WIRE CONNECTION DETAIL

SCALE: NTS

OWNERSHIP OF DOCUMENTS: THIS DOCUMENT AND THE IDEAS AND DESIGNS INCORPORATED HEREIN, AS AN INSTRUMENT OF PROFESSIONAL SERVICE, ARE THE PROPERTY OF KMB DESIGN GROUP, LLC AND ARE NOT TO BE USED, IN WHOLE OR IN PART, FOR OTHER PROJECTS WITHOUT THE WRITTEN AUTHORIZATION OF KMB DESIGN GROUP, LLC. IT IS UNLAWFUL FOR ANY PERSON TO AMEND ANY ASPECT OF THESE DRAWINGS UNLESS THEY HAVE THE APPROVAL OF THE LICENSED PROFESSIONAL IN WRITING.

Sprint

Alcatel·Lucent

REV.	DATE	REVISION DESCRIPTION	DRAWN BY	CHKD. BY
3	01-30-13	REVISED PER CLIENT COMMENTS	CCR	KCD
2	12-14-12	REVISED PER CLIENT COMMENTS	KAZ	KCD
1	12-07-12	REVISED PER CLIENT COMMENTS	KAZ	KCD
0	09-10-12	ISSUED FOR CONSTRUCTION	MCD	KCD

KMB DESIGN GROUP
kmbdg.com
1860 ROUTE 34, SUITE 209
WALL, NJ 07719
(732) 280-5623

Stephen A. Bray
PROFESSIONAL ENGINEER
STATE OF CONNECTICUT
STEPHEN A. BRAY
LICENSED PROFESSIONAL ENGINEER
CT LICENSE: 26657 1/30/13

PROJECT NUMBER: 332.1499

SITE INFORMATION:
123 CAMPVILLE HILL ROAD
HARWINTON, CT 06791
LITCHFIELD COUNTY
CROWN CASTLE SITE: 876376
CT33XC111

PROJECT TYPE: NETWORK VISION

DRAWN BY:	CHECKED BY:	DATE:
JLS		05-01-12

SHEET TITLE: ELECTRICAL & GROUNDING DETAILS

SHEET NUMBER: E02 REV.: 3

STATE OF CONNECTICUT
CONNECTICUT SITING COUNCIL
Ten Franklin Square, New Britain, CT 06051
Phone: (860) 827-2935 Fax: (860) 827-2950
E-Mail: siting.council@ct.gov
www.ct.gov/csc

November 8, 2012

Jennifer Palumbo
Real Estate Consultant
48 Spruce Street
Oakland, NJ 07436

RE: **EM-SPRINT-066-121015A** – Sprint Spectrum notice of intent to modify an existing telecommunications facility located at 123 Campville Hill Road, Harwinton, Connecticut.

Dear Ms. Palumbo:

The Connecticut Siting Council (Council) hereby shall not acknowledge your notice to modify this existing telecommunications facility, pursuant to Section 16-50j-73 of the Regulations of Connecticut State Agencies, until such time that:

- Sprint provides supporting material indicating that its interim antenna loading shall not cause the 180-foot monopole tower at 123 Campville Hill Road to exceed 100% of its structural capacity.

This decision is under the exclusive jurisdiction of the Council. Any additional change to this facility will require explicit notice to this agency pursuant to Regulations of Connecticut State Agencies Section 16-50j-73. Thank you for your attention and cooperation.

Very truly yours,

LRoberts

Linda Roberts
Executive Director

LR/CDM/jbw

c: The Honorable Michael R. Criss, First Selectman, Town of Harwinton
Michael J. Orefice, Planning Chairman, Town of Harwinton
Crown Castle

EM-SPRINT-066-121015A

sprint

Together with Nextel

48 Spruce Street
Oakland, NJ 07436
Phone: (845) 499-4712
Jennifer Palumbo

September 19, 2012

RECEIVED
OCT 15 2012
CONNECTICUT
SITING COUNCIL

Hand Delivered

Ms. Linda Roberts
Executive Director
Connecticut Siting Council
10 Franklin Square
New Britain, CT 06051

RE: Sprint Spectrum L.P. notice of intent to modify an existing telecommunications facility located at 123 Campville Hill Road, Harwinton, CT 06791. Known to Sprint Spectrum L.P. as site CT33XC111.

Dear Ms. Roberts:

In order to accommodate technological changes, implement Code Division Multiple Access ("CDMA") and/or Long Term Evolution ("LTE") capabilities, and enhance system performance in the state of Connecticut, Sprint Spectrum L.P. plans to modify the equipment configurations at many of its existing cell sites. Please accept this letter and attachments as notification, pursuant to R.C.S.A. Section 16-50j-73, of construction which constitutes an exempt modification pursuant to R.C.S.A. Section 16-50j-72(b)(2). In compliance with R.C.S.A. Section 16-50j-73, a copy of this letter and its attachments is being sent to the chief elected official of the municipality in which affected cell site is located.

CDMA employs Spread-Spectrum technology and special coding scheme to allow multiple users to be multiplexed over the same physical channel. LTE is a new high-performance air interface for cellular mobile communications. It is designed to increase the capacity and speed of mobile telephone networks.

As part of the project the new multi-mode 800/1900 antenna will replace existing antennas. These antennas will provide more flexibility for optimization by allowing fast and easy electrical tilt adjustment from remote location and will enable the transmission of multiple technologies from a single antenna. As Sprint Nextel's network evolves to meet the demands of its customers, it is essential for Sprint Nextel to install modern

equipment and antennas in order to provide reliable wireless voice and data services. The proposed equipment will include multi-mode radios that will allow Sprint Nextel to transmit at different frequencies using different technologies, including LTE technology. Likewise, the proposed antennas are quad-pole multi-band high gain antennas that will allow Sprint to operate using its multiple frequency bands and technologies, including LTE technology. The proposed equipment and antennas will improve the reliability, coverage and capacity of Sprint Nextel's voice and data networks across Sprint Nextel's various FCC licensed frequency bands and significantly increase the data speeds of Sprint Nextel's network by utilizing the latest LTE technology. Without the proposed modifications Sprint Nextel will be unable to provide reliable wireless voice and data service using the latest technologies.

Sprint Spectrum L.P. will have an interim (testing) period during the modification/installation prior to the final configuration. This antenna configuration is shown on the attached drawings of the planned modifications. Also included is the power density calculation reflecting the change in Sprint's operations at the site and documentation of the structural sufficiency of the tower to accommodate the revised antenna configuration.

The changes to the facility do not constitute modification as defined Connecticut General Statues ("C.G.S.") Section 16-50i(d) because the general physical characteristics of the facility will not be significantly changed or altered. Rather, the planned changes to the facility fall squarely within those activities explicitly provided for the R.C.S.A. Section 16-50j-72(b)(2).

1. The height of the overall structure will not be affected.
2. The proposed changes will not extend the site boundaries. There will be no effect on the site compound.
3. The proposed changes will not increase the noise level at the existing facility by 6 decibels or more.
4. Radio Frequency power density may increase due to the use of one or more CDMA transmissions. Moreover, LTE will utilize additional radio frequencies newly licensed by the FCC for cellular mobile communications. However, the changes will not increase the calculated "worst case" power density for the combined operations at the site to a level at or above the applicable standard for uncontrolled environments as calculated for a mixed frequency site.

For the foregoing reasons Sprint Spectrum L.P. respectfully submits that the proposed changes at the referenced site constitute exempt modifications under R.C.S.A. Section 16-50j-72(b)(2).

Please feel free to call me at (845)-499-4712 or email JPalumbo@Transcendwireless.com with questions concerning this matter.
Thank you for your consideration.

Sincerely,

Jennifer Palumbo
Real Estate Consultant

EBI Consulting

environmental | engineering | due diligence

RADIO FREQUENCY EMISSIONS ANALYSIS REPORT
EVALUATION OF HUMAN EXPOSURE POTENTIAL TO NON-IONIZING EMISSIONS

Sprint Existing Facility

Site ID: CT33XC111

Scoville Hill / Harwinton Rod and Gun
123 Campville Hill Road
Harwinton, CT 06791

September 02, 2012

21 B Street · Burlington, MA 01803 · Tel: (781) 273.2500 · Fax: (781) 273.3311

EBI Consulting
environmental | engineering | due diligence

September 02, 2012

Sprint
Attn: RF Engineering Manager
1 International Boulevard, Suite 800
Mahwah, NJ 07495

Re: Emissions Values for Site **CT33XC111 – Scoville Hill / Harwinton Rod and Gun**

EBI Consulting was directed to analyze the proposed upgrades to the existing Sprint facility located at 123 Campville Hill Road, Harwinton, CT, for the purpose of determining whether the emissions from the proposed Sprint equipment upgrades on this property are within specified federal limits.

All information used in this report was analyzed as a percentage of current Maximum Permissible Exposure (% MPE) as listed in the FCC OET Bulletin 65 Edition 97-01and ANSI/IEEE Std C95.1. The FCC regulates Maximum Permissible Exposure in units of microwatts per square centimeter (μW/cm2). The number of μW/cm2 calculated at each sample point is called the power density. The exposure limit for power density varies depending upon the frequencies being utilized. Wireless Carriers and Paging Services use different frequency bands each with different exposure limits, therefore it is necessary to report results and limits in terms of percent MPE rather than power density.

All results were compared to the FCC (Federal Communications Commission) radio frequency exposure rules, 47 CFR 1.1307(b)(1) – (b)(3), to determine compliance with the Maximum Permissible Exposure (MPE) limits for General Population/Uncontrolled environments as defined below.

General population/uncontrolled exposure limits apply to situations in which the general public may be exposed or in which persons who are exposed as a consequence of their employment may not be made fully aware of the potential for exposure or cannot exercise control over their exposure. Therefore, members of the general public would always be considered under this category when exposure is not employment related, for example, in the case of a telecommunications tower that exposes persons in a nearby residential area.

Public exposure to radio frequencies is regulated and enforced in units of microwatts per square centimeter ($\mu W/cm^2$). The general population exposure limit for the cellular band is approximately 567 $\mu W/cm^2$, and the general population exposure limit for the PCS band is 1000 $\mu W/cm^2$. Because each carrier will be using different frequency bands, and each frequency band has different exposure limits, it is necessary to report percent of MPE rather than power density.

21 B Street · Burlington, MA 01803 · Tel: (781) 273.2500 · Fax: (781) 273.3311

Occupational/controlled exposure limits apply to situations in which persons are exposed as a consequence of their employment and in which those persons who are exposed have been made fully aware of the potential for exposure and can exercise control over their exposure. Occupational/controlled exposure limits also apply where exposure is of a transient nature as a result of incidental passage through a location where exposure levels may be above general population/uncontrolled limits (see below), as long as the exposed person has been made fully aware of the potential for exposure and can exercise control over his or her exposure by leaving the area or by some other appropriate means.

Additional details can be found in FCC OET 65.

CALCULATIONS

Calculations were done for the proposed upgrades to the existing Sprint Wireless antenna facility located at 123 Campville Hill Road, Harwinton, CT, using the equipment information listed below. All calculations were performed per the specifications under FCC OET 65. All calculations were performed assuming the main lobe of the antenna was focused at the base of the tower to present a worst case scenario. Actual values seen from this site will be dramatically less than those shown in this report. For this report the sample point is the top of a 6 foot person standing at the base of the tower.

For all calculations, all emissions were calculated using the following assumptions:

1) 2 CDMA Carriers (1900 MHz) were considered for each sector of the proposed installation.
2) 1 CDMA Carrier (850 MHz) was considered for each sector of the proposed installation
3) All radios at the proposed installation were considered to be running at full power and were uncombined in their RF transmissions paths per carrier prescribed configuration. Per FCC OET Bulletin No. 65 - Edition 97-01 recommendations to achieve the maximum anticipated value at each sample point, all power levels emitting from the proposed antenna installation are increased by a factor of 2.56 to account for possible in-phase reflections from the surrounding environment. This is rarely the case, and if so, is never continuous.
4) For the following calculations the sample point was the top of a six foot person standing at the base of the tower. The actual gain in this direction was used per the manufactures supplied specifications.
5) The antenna used in this modeling is the RFS APXVSPP18-C-A20. This is based on feedback from the carrier with regards to anticipated antenna selection. This antenna has a 15.9 dBd gain value at its main lobe at 1900 MHz and 13.4 dBd at its main lobe for 850 MHz. All calculations were performed assuming the main lobe of the antenna was focused at the base of the tower to present a worst case scenario.

6) The antenna mounting height centerline of the proposed antennas is **177.5 feet** above ground level (AGL)
7) Emissions values for additional carriers were taken from the Connecticut Siting Council active database. Values in this database are provided by the individual carriers themselves.

All calculation were done with respect to uncontrolled / general public threshold limits

Summary

All calculations performed for this analysis yielded results that were well within the allowable limits for general public exposure to RF Emissions.

The anticipated Maximum Composite contributions from the Sprint facility are **7.608% (2.536% from each sector)** of the allowable FCC established general public limit considering all three sectors simultaneously sampled at the ground level.

The anticipated composite MPE value for this site assuming all carriers present is **42.808%** of the allowable FCC established general public limit sampled at the ground level. This is based upon values listed in the Connecticut Siting Council database for existing carrier emissions

FCC guidelines state that if a site is found to be out of compliance (over allowable thresholds), that carriers over a 5% contribution to the composite value will require measures to bring the site into compliance. For this facility, the composite values calculated were well within the allowable 100% threshold standard per the federal government

Scott Heffernan
RF Engineering Director

EBI Consulting
21 B Street
Burlington, MA 01803

Site ID	CT33XC111 - Scoville Hill / Harwinton Rod and Gun
Site Addresss	123 Campville Hill Road, Harwinton, CT 06791
Site Type	Monopole

o

Antenna Number	Antenna Make	Antenna Model	Radio Type	Frequency Band	Technology	Power Out Per Channel (Watts)	Number of Channels	Composite Power	Antenna Gain in direction of sample point (dBd)	Antenna Height (ft)	analysis height	Cable Size	Cable Loss (dB)	Additional Loss	ERP	Power Density Value	Power Density Percentage
1a	RFS	APXVSPP18-C-A20	RRH	1900 MHz	CDMA / LTE	20	2	40	15.9	177.5	171.5	1/2 "	0.5	0	1386.9474	16.95265	1.69527%
1a	RFS	APXVSPP18-C-A20	RRH	850 MHz	CDMA / LTE	20	1	20	13.4	177.5	171.5	1/2 "	0.5	0	389.96892	4.766589	0.84067%
														Sector total Power Density Value:		2.536%	

Sector 2

Antenna Number	Antenna Make	Antenna Model	Radio Type	Frequency Band	Technology	Power Out Per Channel (Watts)	Number of Channels	Composite Power	Antenna Gain in direction of sample point (dBd)	Antenna Height (ft)	analysis height	Cable Size	Cable Loss (dB)	Additional Loss	ERP	Power Density Value	Power Density Percentage
2a	RFS	APXVSPP18-C-A20	RRH	1900 MHz	CDMA / LTE	20	2	40	15.9	177.5	171.5	1/2 "	0.5	0	1386.9474	16.95265	1.69527%
2a	RFS	APXVSPP18-C-A20	RRH	850 MHz	CDMA / LTE	20	1	20	13.4	177.5	171.5	1/2 "	0.5	0	389.96892	4.766589	0.84067%
														Sector total Power Density Value:		2.536%	

Sector 3

Antenna Number	Antenna Make	Antenna Model	Radio Type	Frequency Band	Technology	Power Out Per Channel (Watts)	Number of Channels	Composite Power	Antenna Gain in direction of sample point (dBd)	Antenna Height (ft)	analysis height	Cable Size	Cable Loss (dB)	Additional Loss	ERP	Power Density Value	Power Density Percentage
3a	RFS	APXVSPP18-C-A20	RRH	1900 MHz	CDMA / LTE	20	2	40	15.9	177.5	171.5	1/2 "	0.5	0	1386.9474	16.95265	1.69527%
3a	RFS	APXVSPP18-C-A20	RRH	850 MHz	CDMA / LTE	20	1	20	13.4	177.5	171.5	1/2 "	0.5	0	389.96892	4.766589	0.84067%
														Sector total Power Density Value:		2.536%	

Site Composite MPE %	
Carrier	MPE %
Sprint	7.608%
T-Mobile	1.290%
Pocket	4.970%
Verizon Wireless	14.480%
Nextel	4.050%
AT&T	10.410%
Total Site MPE %	**42.808%**

Structural Evaluation Report

177' Monopole

Prepared for:
Crown Castle
BU No. 876376
Scoville Hill / Harwington Rod

Sprint Co-Locate
CT33XC111 (N/A)

B&T Project Number
83609.002

June 12, 2012

B+T GRP

B+T Group
1717 S. Boulder, Suite 300
Tulsa, OK 74119
(918) 587-4630 Phone
(918) 295-0265 Fax

June 12, 2012

Mr. James Williams
Crown Castle
3530 Toringdon WaySuite 300
Charlotte, NC 28277
(704) 405-6521

B&T Engineering, Inc.
1717 S. Boulder, Suite 300
Tulsa, OK 74119
(918) 587-4630
ctuttle@btengineering.com

Subject:	**Structural Analysis Report**	
Carrier Designation:	***Sprint* Co-Locate- Interim Load**	
	Carrier Site Number:	CT33XC111
	Carrier Site Name:	N/A
Crown Castle Designation:	**Crown Castle BU Number:**	876376
	Crown Castle Site Name:	Scoville Hill / Harwinton Rod
	Crown Castle JDE Job Number:	189143
	Crown Castle Work Order Number:	498947
	Crown Castle Application Number:	151585 Rev. 0
Engineering Firm Designation:	**B&T Engineering, Inc. Project Number:**	83609.002
Site Data:	**123 Campville Hill Rd., Harwinton, Litchfield County, CT** **Latitude *41° 44' 12.12"*, Longitude *-73° 5' 50.86"*** **177 Foot - Monopole Tower**	

Dear Mr. Williams,

B&T Engineering, Inc. is pleased to submit this **"Structural Analysis Report"** to determine the structural integrity of the above mentioned tower. This analysis has been performed in accordance with the Crown Castle Structural 'Statement of Work' and the terms of Crown Castle Purchase Order Number 468201, in accordance with application 151585, revision 0.

The purpose of the analysis is to determine acceptability of the tower stress level. Based on our analysis we have determined the tower stress level for the structure and foundation, under the following load case, to be:

LC5: Existing + Proposed for current applicant (1 Active Applicant) **Insufficient Capacity**
Note: See Table 1 and Table 2 for the proposed and existing/reserved loading, respectively.

The analysis has been performed in accordance with the TIA/EIA-222-F standard and the 2003 IBC; 2003 IRC (State Building Code, 2005 CT supplement) based upon a wind speed of 80.5 mph fastest mile.

All modifications and equipment proposed in this report shall be installed in accordance with the attached drawings for the determined available structural capacity to be effective.

We at *B&T Engineering, Inc.* appreciate the opportunity of providing our continuing professional services to you and Crown Castle. If you have any questions or need further assistance on this or any other projects please give us a call.

Respectfully submitted by:

STATE OF CONNECTICUT
CHAD TUTTLE
No. 23924
LICENSED
PROFESSIONAL ENGINEER
6/12/12

Shardul Kadam, E.I. 150
Project Engineer

Chad E. Tuttle, P.E
President

tnxTower Report - version 6.0.4.0

TABLE OF CONTENTS

1) INTRODUCTION

2) ANALYSIS CRITERIA
- Table 1 - Proposed Antenna and Cable Information
- Table 2 - Existing and Reserved Antenna and Cable Information
- Table 3 - Design Antenna and Cable Information

3) ANALYSIS PROCEDURE
- Table 4 - Documents Provided
- 3.1) Analysis Method
- 3.2) Assumptions

4) ANALYSIS RESULTS
- Table 5 - Section Capacity (Summary)
- Table 6 - Tower Component Stresses vs. Capacity
- 4.1) Recommendations

5) APPENDIX A
- tnxTower Output

6) APPENDIX B
- Base Level Drawing

7) APPENDIX C
- Additional Calculations

1) INTRODUCTION

This tower is a 177 ft Monopole tower designed by Summit in August of 2000. The tower was originally designed for a wind speed of 85 mph per TIA/EIA-222-F. This tower has been modified multiple times and those modifications have been incorporated in this analysis except the anchor rod modification by Global signal.

2) ANALYSIS CRITERIA

The structural analysis was performed for this tower in accordance with the requirements of TIA/EIA-222-F Structural Standards for Steel Antenna Towers and Antenna Supporting Structures using a fastest mile wind speed of 80.5 mph with no ice, 28.1 mph with 1 inch ice thickness and 50 mph under service loads.

Table 1 - Proposed Antenna and Cable Information

Mounting Level (ft)	Center Line Elevation (ft)	Number of Antennas	Antenna Manufacturer	Antenna Model	Number of Feed Lines	Feed Line Size (in)	Note
179.0	179.0	1	--	Platform Mount [LP 713-1]	3	1 1/4	1
	177.0	3	Alcatel Lucent	1900MHz RRH (65MHz)			
		3	Alcatel Lucent	800 EXTERNAL NOTCH FILTER			
		3	Alcatel Lucent	800MHZ RRH			
		9	Rfs Celwave	ACU-A20-N			
		3	Rfs Celwave	APXVSPP18-C-A20			

Notes:
1. Adding Handrails to the existing platform [LP-712-1]

Table 2 - Existing and Reserved Antenna and Cable Information

Mounting Level (ft)	Center Line Elevation (ft)	Number of Antennas	Antenna Manufacturer	Antenna Model	Number of Feed Lines	Feed Line Size (in)	Note
179.0	178.0	6	Decibel	DB980H90E-M	6	1 5/8	1
167.0	169.0	3	Ems Wireless	RR90-17-00DP	6	1 5/8	1
		6	Ericsson	KRY 112 75/1 TMA			
	167.0	1	--	T-Arm Mount [TA 602-3]			
154.0	156.0	1	Antel	BXA-171063-8BF-EDIN-2	12	1 5/8	1
		2	Antel	BXA-171085-8BF-EDIN-2			
		3	Antel	BXA-70063-6CF-2			
		2	Antel	LPA-80063/6CF			
		4	Antel	LPA-80080/6CF			
		6	Rfs Celwave	FD9R6004/2C-3L			
	154.0	1	--	Platform Mount [LP 303-1]			
137.0	139.0	12	Decibel	DB844H90	12	1 1/4	1
	137.0	1	--	Platform Mount [LP 712-1]			
127.0	129.0	6	Kathrein	AP14/17-880/1940/065D/ADT/XXP	12	1 5/8	1
		6	Powerwave	LGP 17201			
	127.0	1	--	Platform Mount [LP 303-1]			

Mounting Level (ft)	Center Line Elevation (ft)	Number of Antennas	Antenna Manufacturer	Antenna Model	Number of Feed Lines	Feed Line Size (in)	Note
117.0	117.0	3	Rfs Celwave	APXV18-206517S-C	6	1 5/8	1
		3	--	Flush Mounts			
79.0	80.0	1	Spectracom	8225	1	1/2	1
	79.0	1	--	Side Arm Mount [SO 701-1]			

Notes:
1) Existing Equipment

Table 3 - Design Antenna and Cable Information

Mounting Level (ft)	Center Line Elevation (ft)	Number of Antennas	Antenna Manufacturer	Antenna Model	Number of Feed Lines	Feed Line Size (in)
177	177	1	--	Low Profile Platform	--	--
		12	DAPA	48000		
167	167	1	--	Clamp On Low Profile Platform	--	--
		12	DAPA	48000		
157	157	1	--	Clamp On Low Profile Platform	--	--
		12	DAPA	48000		
75	75	1	--	GPS Antenna W/ Mount	--	--

3) ANALYSIS PROCEDURE

Table 4 - Documents Provided

Document	Remarks	Reference	Source
Online Application	Sprint co-locate revision# 0	151585	CCI Sites
Tower Manufacturer Drawings	Summit Manufacturing, Job No. 10633	1613568	CCI Sites
Foundation Drawings	Summit Manufacturing, Job No. 10633	1613623	CCI Sites
Geotech Report	Criscuolo Shepard Associates, File No. 99900.24	1531965	CCI Sites
Tower Modifications	Hutter Trankina Engineering Dated: 8/20/2004	1634507	CCI Sites
	Modification/PMI By B&T Engineering, Project No. 80185	2461484	CCI Sites
Antenna Configuration	Crown CAD Package	Date:5/30/2012	CCI Sites

3.1) Analysis Method

tnxTower (version 6.0.4.0), a commercially available analysis software package, was used to create a three-dimensional model of the tower and calculate member stresses for various loading cases. Selected output from the analysis is included in Appendix A.

3.2) Assumptions

1) Tower and structures were built in accordance with the manufacturer's specifications.
2) The tower and structures have been maintained in accordance with the manufacturer's specification.
3) The configuration of antennas, transmission cables, mounts and other appurtenances are as specified in Tables 1 and 2 and the referenced drawings.
4) When applicable, transmission cables are considered as structural components for calculating wind loads as allowed by TIA/EIA-222-F.
5) Mount areas and weights are assumed based on photographs provided.

This analysis may be affected if any assumptions are not valid or have been made in error. B&T Engineering, Inc. should be notified to determine the effect on the structural integrity of the tower.

4) ANALYSIS RESULTS

Table 5 - Section Capacity (Summary)

Section No.	Elevation (ft)	Component Type	Size	Critical Element	P (K)	SF*P_allow (K)	% Capacity	Pass / Fail
L1	177 - 129.75	Pole	TP30.268x22x0.219	1	-9.293	1061.189	71.6	Pass
L2	129.75 - 120	Pole	TP31.536x29.174x0.25	2	-12.963	1290.600	87.0	Pass
L3	120 - 110	Pole	TP33.286x31.536x0.394	3	-15.220	1764.879	79.0	Pass
L4	110 - 84	Pole	TP37.836x33.286x0.718	4	-22.171	2167.898	90.1	Pass
L5	84 - 80	Pole	TP38.045x35.57x0.783	5	-26.700	2324.792	94.6	Pass
L6	80 - 60	Pole	TP41.5x38.045x0.785	6	-34.649	2668.039	99.8	Pass
L7	60 - 39.3	Pole	TP45.167x41.5x0.734	7	-40.633	3395.737	87.6	Pass
L8	39.3 - 20	Pole	TP47.91x42.681x0.768	8	-53.569	3723.735	95.0	Pass
L9	20 - 0	Pole	TP51.41x47.91x0.779	9	-62.913	4113.571	95.3	Pass
							Summary	
						Pole (L6)	99.8	Pass
						RATING =	**99.8**	**Pass**

Table 6 - Tower Component Stresses vs. Capacity - LC5

Notes	Component	Elevation (ft)	% Capacity	Pass / Fail
1	Anchor Rods	Base	103.7	Fail
1	Base Plate	Base	102.5	Fail
1	Base Foundation	Base	93.8	Pass

Structure Rating (max from all components) =	**103.7%**

Notes:
1) See additional documentation in "Appendix C – Additional Calculations" for calculations supporting the % capacity consumed.
2) Capacities up to 100% are considered acceptable based on analysis methods used.
3) The percent capacities shown above (excluding foundations) include the 1/3 increase in allowable stresses as allowed by TIA/EIA-222-F.

4.1) Recommendations

The tower does not have sufficient capacity to carry the existing, reserved, and proposed loads. Modifications will be required to bring the tower into compliance with the TIA-222-F standard for the proposed and existing loading. The following components require modifications:

a) Anchor rods and Baseplate

Further engineering and detailing is required to design the necessary modifications. Foundation is sufficient.

APPENDIX A

TNXTOWER OUTPUT

Section	1	2	3	4	5	6	7	8	9
Length (ft)	47.250	13.500	10.000	26.000	8.750	20.000	20.700	25.050	20.000
Number of Sides	18	18	18	18	18	18	18	18	18
Thickness (in)	0.219	0.250	0.394	0.718	0.783	0.785	0.734	0.768	0.779
Socket Length (ft)	3.750			4.750			5.750		
Top Dia (in)	22.000	29.174	31.536	33.286	35.570	38.045	41.500	42.681	47.910
Bot Dia (in)	30.268	31.536	33.286	37.836	38.045	41.500	45.167	47.910	51.410
Grade	A607-65			53.7 ksi	32.8 ksi	31.4 ksi	32.9 ksi	42.0 ksi	40.6 ksi
Weight (K)	2.9	1.1	1.4	7.0	2.7	6.6	7.0	9.3	8.2
									41.1 ksi
									46.1

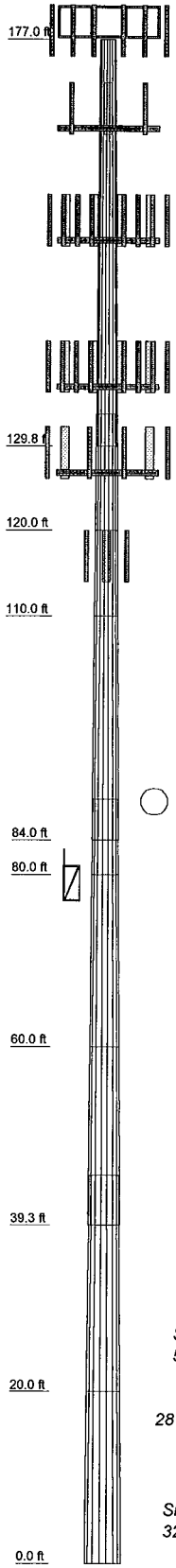

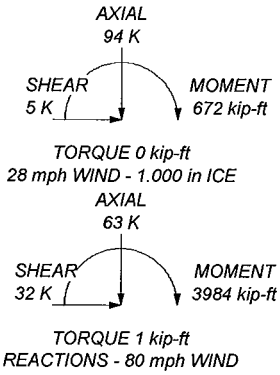

DESIGNED APPURTENANCE LOADING

TYPE	ELEVATION	TYPE	ELEVATION
(2) DB980H90E-M w/ Mount Pipe (E)	179	BXA-171085-8BF-EDIN-2 w/ Mount Pipe (E)	154
(2) DB980H90E-M w/ Mount Pipe (E)	179	BXA-171085-8BF-EDIN-2 w/ Mount Pipe (E)	154
(2) DB980H90E-M w/ Mount Pipe (E)	179	BXA-70063-6CF-2 w/ Mount Pipe (E)	154
1900MHz RRH (65MHz) (P)	179	BXA-70063-6CF-2 w/ Mount Pipe (E)	154
1900MHz RRH (65MHz) (P)	179	BXA-70063-6CF-2 w/ Mount Pipe (E)	154
1900MHz RRH (65MHz) (P)	179	(2) FD9R6004/2C-3L (E)	154
800 EXTERNAL NOTCH FILTER (P)	179	(2) FD9R6004/2C-3L (E)	154
800 EXTERNAL NOTCH FILTER (P)	179	(2) FD9R6004/2C-3L (E)	154
800 EXTERNAL NOTCH FILTER (P)	179	Platform Mount [LP 303-1] (E)	154
800MHZ RRH (P)	179	(4) DB844H90 w/ Mount Pipe (E)	137
800MHZ RRH (P)	179	(4) DB844H90 w/ Mount Pipe (E)	137
800MHZ RRH (P)	179	(4) DB844H90 w/ Mount Pipe (E)	137
(3) ACU-A20-N (P)	179	Platform Mount [LP 712-1] (E)	137
(3) ACU-A20-N (P)	179	(2) AP14/17-880/1940/065D/ADT/XXP w/ Mount Pipe (E)	127
(3) ACU-A20-N (P)	179	(2) AP14/17-880/1940/065D/ADT/XXP w/ Mount Pipe (E)	127
APXVSPP18-C-A20 w/ Mount Pipe (P)	179	(2) AP14/17-880/1940/065D/ADT/XXP w/ Mount Pipe (E)	127
APXVSPP18-C-A20 w/ Mount Pipe (P)	179	(2) LGP 17201 (E)	127
APXVSPP18-C-A20 w/ Mount Pipe (P)	179	(2) LGP 17201 (E)	127
Platform Mount [LP 713-1] (P)	179	(2) LGP 17201 (E)	127
RR90-17-00DP w/Mount Pipe (E)	167	Platform Mount [LP 303-1] (E)	127
RR90-17-00DP w/Mount Pipe (E)	167	APXV18-206517S-C w/ Mount Pipe (E)	117
RR90-17-00DP w/Mount Pipe (E)	167	APXV18-206517S-C w/ Mount Pipe (E)	117
(2) KRY 112 75/1 TMA (E)	167	APXV18-206517S-C w/ Mount Pipe (E)	117
(2) KRY 112 75/1 TMA (E)	167	8225 (E)	79
(2) KRY 112 75/1 TMA (E)	167	Side Arm Mount [SO 701-1] (E)	79
T-Arm Mount [TA 602-3] (E)	167		
(3) 6' x 2" Mount Pipe (E)	167		
(3) 6' x 2" Mount Pipe (E)	167		
(3) 6' x 2" Mount Pipe (E)	167		
(2) LPA-80063/6CF w/ Mount Pipe (E)	154		
(2) LPA-80080/6CF w/ Mount Pipe (E)	154		
(2) LPA-80080/6CF w/ Mount Pipe (E)	154		
BXA-171063-8BF-EDIN-2 w/ Mount Pipe (E)	154		

MATERIAL STRENGTH

GRADE	Fy	Fu	GRADE	Fy	Fu
A607-65	65 ksi	80 ksi	32.9 ksi	33 ksi	65 ksi
53.7 ksi	54 ksi	65 ksi	42.0 ksi	42 ksi	65 ksi
32.8 ksi	33 ksi	65 ksi	40.6 ksi	41 ksi	65 ksi
31.4 ksi	31 ksi	65 ksi	41.1 ksi	41 ksi	65 ksi

TOWER DESIGN NOTES

1. Tower is located in Litchfield County, Connecticut.
2. Tower designed for a 80 mph basic wind in accordance with the TIA/EIA-222-F Standard.
3. Tower is also designed for a 28 mph basic wind with 1.00 in ice. Ice is considered to increase in thickness with height.
4. Deflections are based upon a 50 mph wind.
5. TOWER RATING: 99.8%

B&T Engineering.Inc.
1717 S.Boulder, Suite 300
Tulsa, OK 74119
Phone: (918) 587-4630
FAX: (918) 587-4630

Job: 83609.002- SCOVILLE HILL / HARWINTON ROD, CT (BU# 87637		
Project: 177' Summit MP/ App ID: 151585; Rev: 0		
Client: Crown Castle	Drawn by: skadam	App'd:
Code: TIA/EIA-222-F	Date: 06/12/12	Scale: NTS
Path: S:\B&T Engineering\Projects\Crown Castle\83609_876374_Scoville\Engineering\RISA\002\83609_002_Scoville_CT - Interim.r3d		Dwg No. E-1

TIA/EIA-222-F - 80 mph/28 mph 1.000 in Ice

Vx ---------- Vz

Maximum Values

Mx ---------- Mz

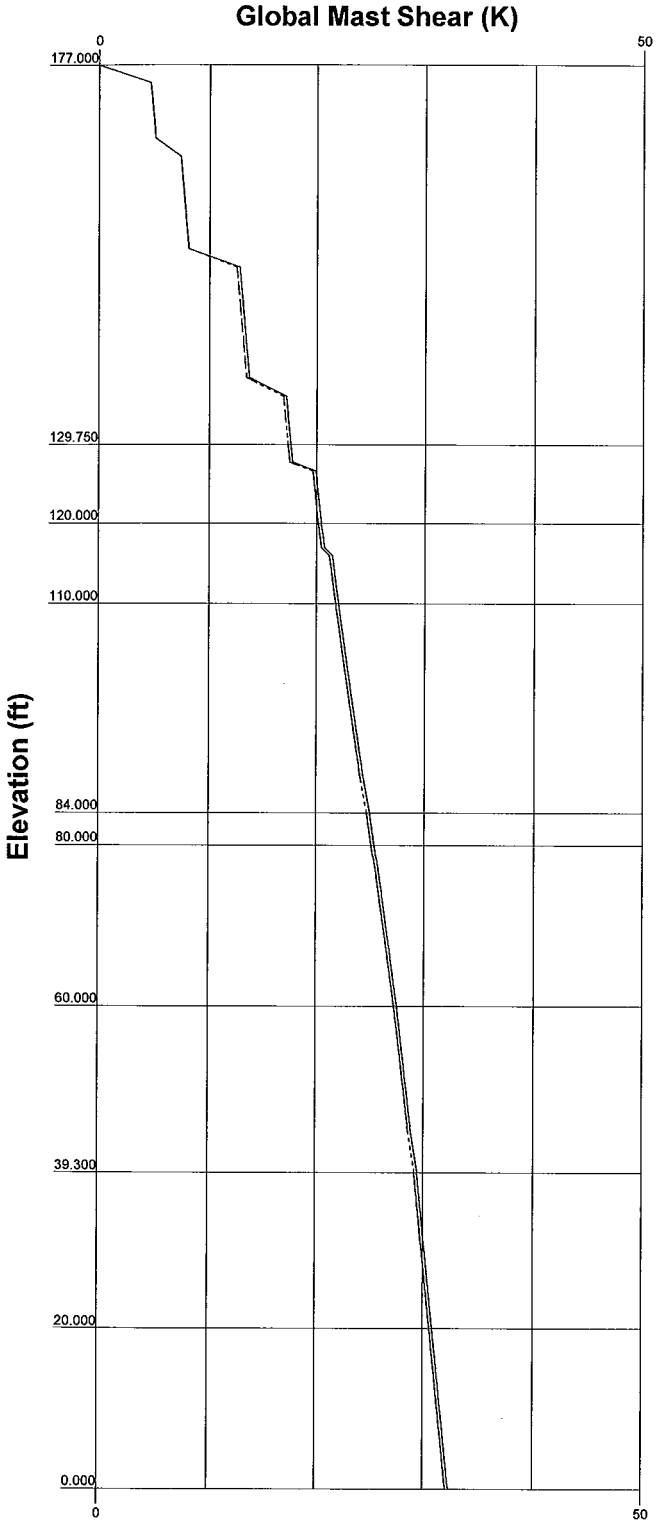

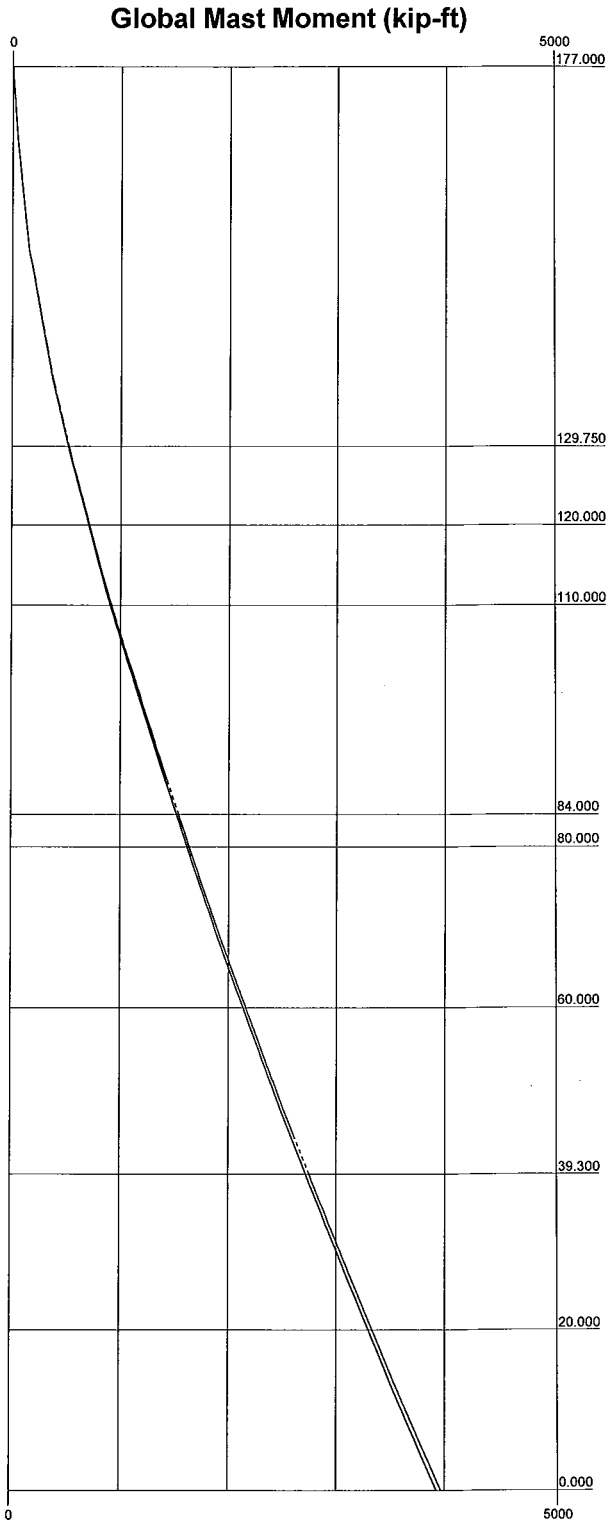

B&T Engineering.Inc.
1717 S.Boulder, Suite 300
Tulsa, OK 74119
Phone: (918) 587-4630
FAX: (918) 587-4630

Job: 83609.002- SCOVILLE HILL / HARWINTON ROD, CT (BU# 87637		
Project: 177' Summit MP/ App ID: 151585; Rev: 0		
Client: Crown Castle	Drawn by: skadam	App'd:
Code: TIA/EIA-222-F	Date: 06/12/12	Scale: NTS
Path: S:\B&T Engineering\Projects\Crown Castle\83609_876376_Scoville\Engineering\BU\SA\002\83609_002_Scoville_CT - Internal\		Dwg No. E-4

TIA/EIA-222-F - Service - 50 mph

Maximum Values

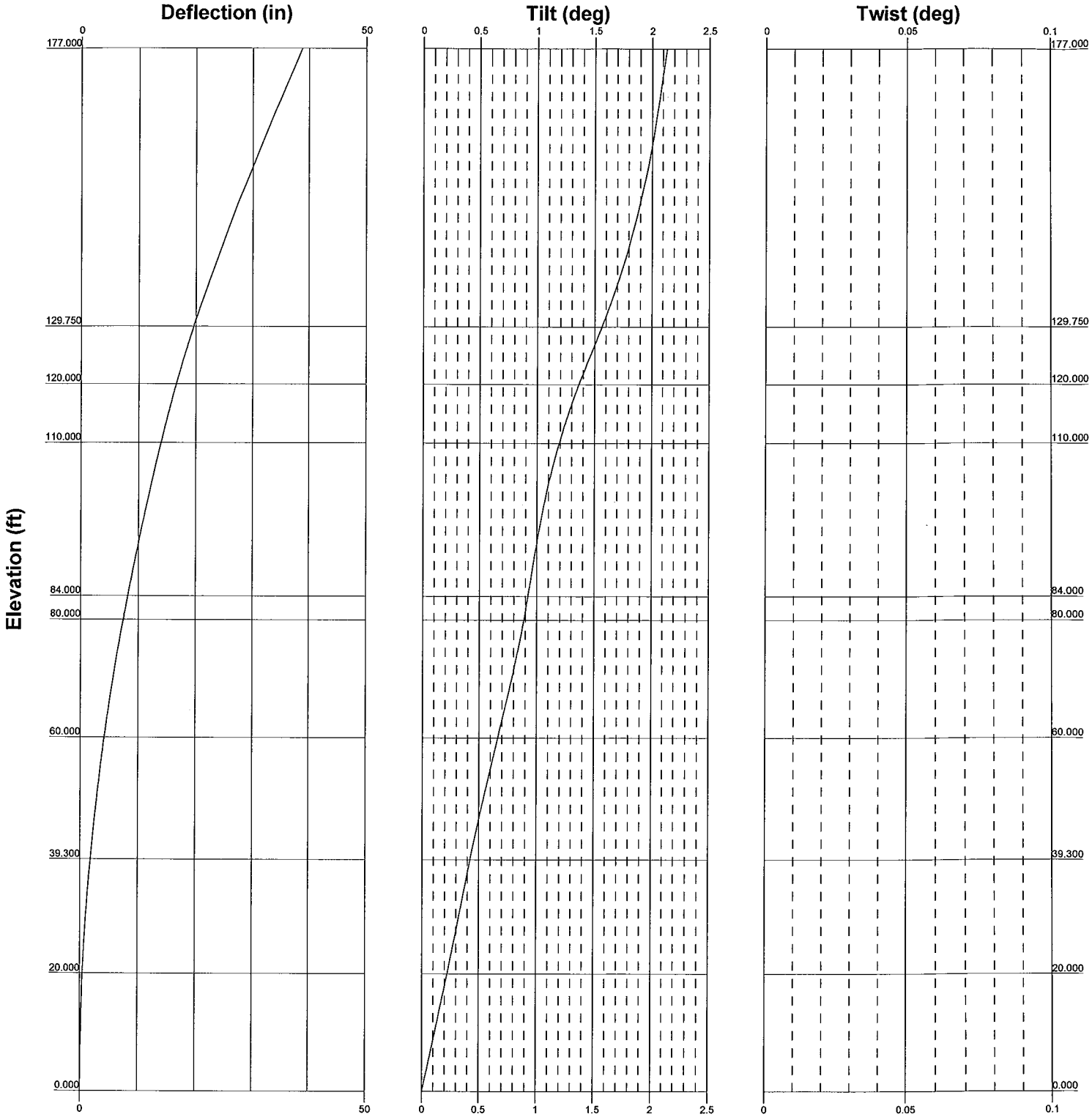

B&T Engineering.Inc.
1717 S.Boulder, Suite 300
Tulsa, OK 74119
Phone: (918) 587-4630
FAX: (918) 587-4630

Job: *83609.002- SCOVILLE HILL / HARWINTON ROD, CT (BU# 87637*		
Project: *177' Summit MP/ App ID: 151585; Rev: 0*		
Client: Crown Castle	Drawn by: skadam	App'd:
Code: TIA/EIA-222-F	Date: 06/12/12	Scale: NTS
Path: S:\B&T Engineering\Projects\Crown Castle\83609_87637\ Scoville\Engineering\RISA\00\83609_002_Scoville_CT - Harwinton		Dwg No. E-5

Feedline Distribution Chart
0' - 177'

Round — Flat — App In Face — App Out Face — Truss Leg

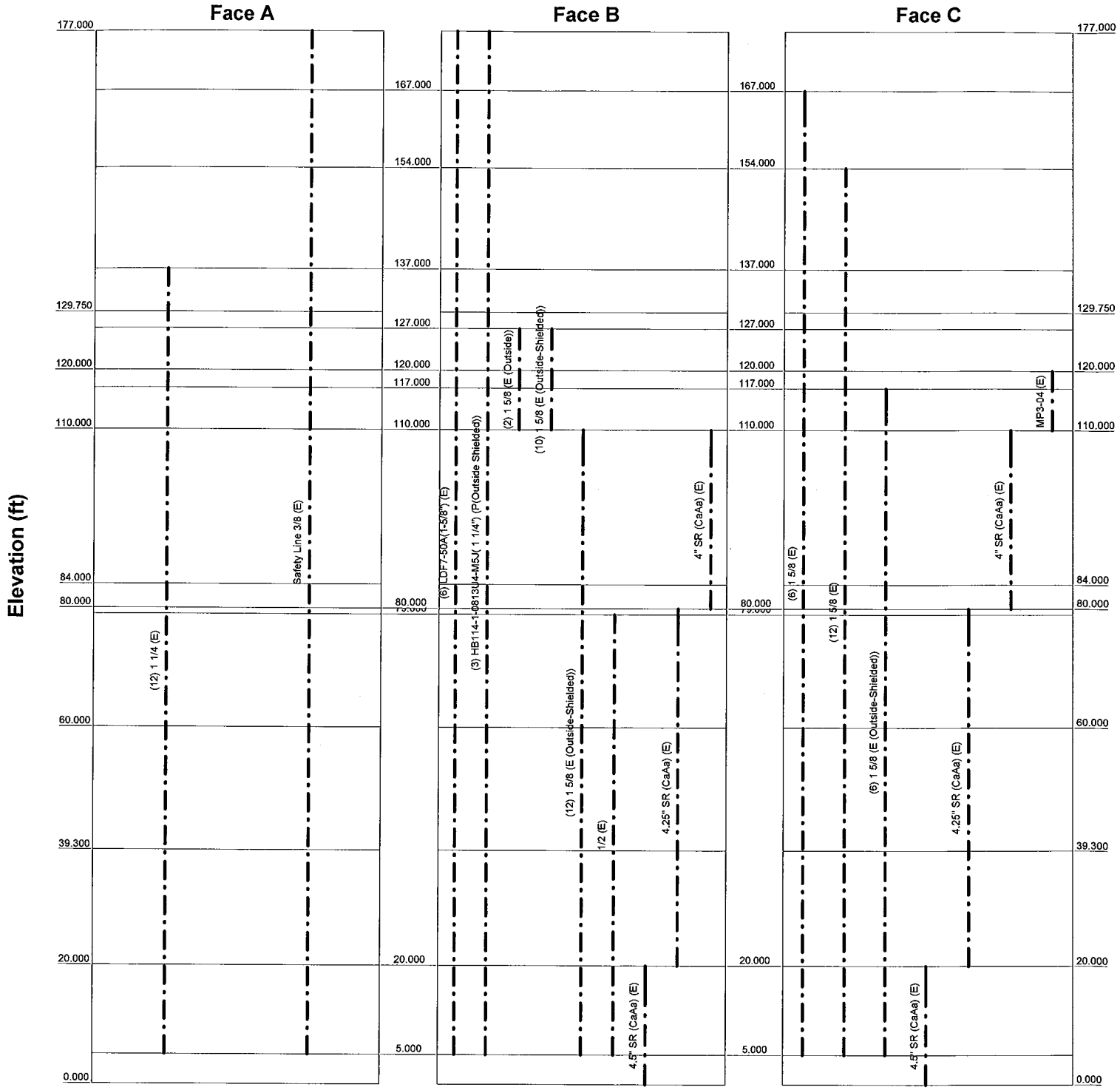

B&T Engineering.Inc. 1717 S.Boulder, Suite 300 Tulsa, OK 74119 Phone: (918) 587-4630 FAX: (918) 587-4630	Job: 83609.002- SCOVILLE HILL / HARWINTON ROD, CT (BU# 87637		
	Project: 177' Summit MP/ App ID: 151585; Rev: 0		
	Client: Crown Castle	Drawn by: skadam	App'd:
	Code: TIA/EIA-222-F	Date: 06/12/12	Scale: NTS
	Path: S:\B&T Engineering\Projects\Crown Castle\83609_876975_Scoville\Engineering\BSA\002\83609_002_Scoville_CT - Harwinton		Dwg No. E-7

Tower Input Data

There is a pole section.
This tower is designed using the TIA/EIA-222-F standard.
The following design criteria apply:

Tower is located in Litchfield County, Connecticut.
Basic wind speed of 80 mph.
Nominal ice thickness of 1.000 in.
Ice thickness is considered to increase with height.
Ice density of 56.000 pcf.
A wind speed of 28 mph is used in combination with ice.
Temperature drop of 50.000 °F.
Deflections calculated using a wind speed of 50 mph.
A non-linear (P-delta) analysis was used.
Pressures are calculated at each section.
Stress ratio used in pole design is 1.333.
Local bending stresses due to climbing loads, feedline supports, and appurtenance mounts are not considered.

Tapered Pole Section Geometry

Section	Elevation ft	Section Length ft	Splice Length ft	Number of Sides	Top Diameter in	Bottom Diameter in	Wall Thickness in	Bend Radius in	Pole Grade
L1	177.000-129.750	47.250	3.750	18	22.000	30.268	0.219	0.875	A607-65 (65 ksi)
L2	129.750-120.000	13.500	0.000	18	29.174	31.536	0.250	1.000	A607-65 (65 ksi)
L3	120.000-110.000	10.000	0.000	18	31.536	33.286	0.394	1.574	53.7 ksi (54 ksi)
L4	110.000-84.000	26.000	4.750	18	33.286	37.836	0.718	2.870	32.8 ksi (33 ksi)
L5	84.000-80.000	8.750	0.000	18	35.570	38.045	0.783	3.131	31.4 ksi (31 ksi)
L6	80.000-60.000	20.000	0.000	18	38.045	41.500	0.785	3.138	32.9 ksi (33 ksi)
L7	60.000-39.300	20.700	5.750	18	41.500	45.167	0.734	2.934	42.0 ksi (42 ksi)
L8	39.300-20.000	25.050	0.000	18	42.681	47.910	0.768	3.073	40.6 ksi (41 ksi)
L9	20.000-0.000	20.000		18	47.910	51.410	0.779	3.115	41.1 ksi (41 ksi)

Tapered Pole Properties

Section	Tip Dia. in	Area in^2	I in^4	r in	C in	I/C in^3	J in^4	It/Q in^2	w in	w/t
L1	22.339	15.126	906.645	7.732	11.176	81.124	1814.482	7.565	3.487	15.937
	30.735	20.868	2380.622	10.667	15.376	154.826	4764.376	10.436	4.942	22.587
L2	30.290	22.951	2425.878	10.268	14.820	163.684	4854.947	11.478	4.695	18.779
	32.022	24.825	3069.973	11.107	16.020	191.630	6143.985	12.415	5.110	20.441

Section	Tip Dia. in	Area in^2	I in^4	r in	C in	I/C in^3	J in^4	It/Q in^2	w in	w/t
L3	32.022	38.906	4767.116	11.056	16.020	297.567	9540.504	19.457	4.858	12.341
	33.799	41.092	5616.764	11.677	16.909	332.170	11240.918	20.550	5.166	13.124
L4	33.799	74.170	9939.386	11.562	16.909	587.806	19891.850	37.092	4.596	6.405
	38.420	84.532	14714.230	13.177	19.221	765.541	29447.821	42.274	5.396	7.521
L5	37.483	86.421	13212.728	12.349	18.069	731.220	26442.843	43.219	4.883	6.238
	38.632	92.570	16238.604	13.228	19.327	840.209	32498.574	46.294	5.318	6.795
L6	38.632	92.790	16275.533	13.227	19.327	842.120	32572.481	46.404	5.315	6.774
	42.140	101.394	21235.808	14.454	21.082	1007.296	42499.559	50.707	5.923	7.549
L7	42.140	94.922	19930.160	14.472	21.082	945.364	39886.544	47.470	6.013	8.196
	45.864	103.461	25806.692	15.774	22.945	1124.728	51647.341	51.740	6.658	9.076
L8	44.558	102.208	22683.914	14.879	21.682	1046.207	45397.677	51.114	6.160	8.017
	48.649	114.959	32276.834	16.735	24.338	1326.176	64596.138	57.490	7.080	9.215
L9	48.649	116.489	32692.099	16.732	24.338	1343.238	65427.215	58.256	7.062	9.069
	52.203	125.140	40529.550	17.974	26.116	1551.888	81112.430	62.582	7.678	9.86

Tower Elevation ft	Gusset Area (per face) ft^2	Gusset Thickness in	Gusset Grade	Adjust. Factor A_f	Adjust. Factor A_r	Weight Mult.	Double Angle Stitch Bolt Spacing Diagonals in	Double Angle Stitch Bolt Spacing Horizontals in
L1 177.000-129.750				1	1	1		
L2 129.750-120.000				1	1	1		
L3 120.000-110.000				1	1	1		
L4 110.000-84.000				1	1	1		
L5 84.000-80.000				1	1	1		
L6 80.000-60.000				1	1	1		
L7 60.000-39.300				1	1	1		
L8 39.300-20.000				1	1	1		
L9 20.000-0.000				1	1	1		

Feed Line/Linear Appurtenances - Entered As Area

Description	Face or Leg	Allow Shield	Component Type	Placement ft	Total Number		C_AA_A ft^2/ft	Weight klf
LDF7-50A(1-5/8") (E)	B	No	Inside Pole	177.000 - 5.000	6	No Ice	0.000	0.001
						1/2" Ice	0.000	0.001
						1" Ice	0.000	0.001
						2" Ice	0.000	0.001
						4" Ice	0.000	0.001
HB114-1-0813U4-M5J(1 1/4") (P(Outside Shielded))	B	No	CaAa (Out Of Face)	177.000 - 5.000	3	No Ice	0.000	0.001
						1/2" Ice	0.000	0.002
						1" Ice	0.000	0.004
						2" Ice	0.000	0.010

Description	Face or Leg	Allow Shield	Component Type	Placement ft	Total Number		C_AA_A ft^2/ft	Weight klf
						4" Ice	0.000	0.028
****								
1 5/8 (E)	C	No	Inside Pole	167.000 - 5.000	6	No Ice	0.000	0.001
						1/2" Ice	0.000	0.001
						1" Ice	0.000	0.001
						2" Ice	0.000	0.001
						4" Ice	0.000	0.001
****								
1 5/8 (E)	C	No	Inside Pole	154.000 - 5.000	12	No Ice	0.000	0.001
						1/2" Ice	0.000	0.001
						1" Ice	0.000	0.001
						2" Ice	0.000	0.001
						4" Ice	0.000	0.001
****								
1 1/4 (E)	A	No	Inside Pole	137.000 - 5.000	12	No Ice	0.000	0.001
						1/2" Ice	0.000	0.001
						1" Ice	0.000	0.001
						2" Ice	0.000	0.001
						4" Ice	0.000	0.001
****								
1 5/8 (E (Outside))	B	No	CaAa (Out Of Face)	127.000 - 110.000	2	No Ice	0.198	0.001
						1/2" Ice	0.298	0.003
						1" Ice	0.398	0.005
						2" Ice	0.598	0.011
						4" Ice	0.998	0.030
1 5/8 (E (Outside-Shielded))	B	No	CaAa (Out Of Face)	127.000 - 110.000	10	No Ice	0.000	0.001
						1/2" Ice	0.000	0.003
						1" Ice	0.000	0.005
						2" Ice	0.000	0.011
						4" Ice	0.000	0.030
1 5/8 (E (Outside-Shielded))	B	No	CaAa (Out Of Face)	110.000 - 5.000	12	No Ice	0.000	0.001
						1/2" Ice	0.000	0.003
						1" Ice	0.000	0.005
						2" Ice	0.000	0.011
						4" Ice	0.000	0.030
****								
1 5/8 (E (Outside-Shielded))	C	No	CaAa (Out Of Face)	117.000 - 5.000	6	No Ice	0.000	0.001
						1/2" Ice	0.000	0.003
						1" Ice	0.000	0.005
						2" Ice	0.000	0.011
						4" Ice	0.000	0.030
****								
1/2 (E)	B	No	Inside Pole	79.000 - 5.000	1	No Ice	0.000	0.000
						1/2" Ice	0.000	0.000
						1" Ice	0.000	0.000
						2" Ice	0.000	0.000
						4" Ice	0.000	0.000
****								
Safety Line 3/8 (E)	A	No	Inside Pole	177.000 - 5.000	1	No Ice	0.000	0.000
						1/2" Ice	0.000	0.000
						1" Ice	0.000	0.000
						2" Ice	0.000	0.000
						4" Ice	0.000	0.000
****								
4.5" SR (CaAa) (E)	C	No	CaAa (Out Of Face)	20.000 - 0.000	1	No Ice	0.450	0.000
						1/2" Ice	0.550	0.000
						1" Ice	0.650	0.000
						2" Ice	0.850	0.000
						4" Ice	1.250	0.000
4.5" SR (CaAa) (E)	B	No	CaAa (Out Of Face)	20.000 - 0.000	1	No Ice	0.450	0.000
						1/2" Ice	0.550	0.000

Description	Face or Leg	Allow Shield	Component Type	Placement ft	Total Number		C_AA_A ft^2/ft	Weight klf
						1" Ice	0.650	0.000
						2" Ice	0.850	0.000
						4" Ice	1.250	0.000
4.25" SR (CaAa) (E)	C	No	CaAa (Out Of Face)	80.000 - 20.000	1	No Ice	0.425	0.000
						1/2" Ice	0.525	0.000
						1" Ice	0.625	0.000
						2" Ice	0.825	0.000
						4" Ice	1.225	0.000
4.25" SR (CaAa) (E)	B	No	CaAa (Out Of Face)	80.000 - 20.000	1	No Ice	0.425	0.000
						1/2" Ice	0.525	0.000
						1" Ice	0.625	0.000
						2" Ice	0.825	0.000
						4" Ice	1.225	0.000
4" SR (CaAa) (E)	C	No	CaAa (Out Of Face)	110.000 - 80.000	1	No Ice	0.400	0.000
						1/2" Ice	0.500	0.000
						1" Ice	0.600	0.000
						2" Ice	0.800	0.000
						4" Ice	1.200	0.000
4" SR (CaAa) (E)	B	No	CaAa (Out Of Face)	110.000 - 80.000	1	No Ice	0.400	0.000
						1/2" Ice	0.500	0.000
						1" Ice	0.600	0.000
						2" Ice	0.800	0.000
						4" Ice	1.200	0.000
MP3-04 (E)	C	No	CaAa (Out Of Face)	120.000 - 110.000	1	No Ice	0.268	0.014
						1/2" Ice	0.352	0.016
						1" Ice	0.435	0.018
						2" Ice	0.602	0.022
						4" Ice	0.935	0.036

Feed Line/Linear Appurtenances Section Areas

Tower Section	Tower Elevation ft	Face	A_R ft^2	A_F ft^2	C_AA_A In Face ft^2	C_AA_A Out Face ft^2	Weight K
L1	177.000-129.750	A	0.000	0.000	0.000	0.000	0.068
		B	0.000	0.000	0.000	0.000	0.403
		C	0.000	0.000	0.000	0.000	0.535
L2	129.750-120.000	A	0.000	0.000	0.000	0.000	0.079
		B	0.000	0.000	0.000	2.772	0.170
		C	0.000	0.000	0.000	0.000	0.183
L3	120.000-110.000	A	0.000	0.000	0.000	0.000	0.081
		B	0.000	0.000	0.000	3.960	0.210
		C	0.000	0.000	0.000	2.683	0.372
L4	110.000-84.000	A	0.000	0.000	0.000	0.000	0.212
		B	0.000	0.000	0.000	10.400	0.546
		C	0.000	0.000	0.000	10.400	0.649
L5	84.000-80.000	A	0.000	0.000	0.000	0.000	0.033
		B	0.000	0.000	0.000	1.600	0.084
		C	0.000	0.000	0.000	1.600	0.100
L6	80.000-60.000	A	0.000	0.000	0.000	0.000	0.163
		B	0.000	0.000	0.000	8.500	0.425
		C	0.000	0.000	0.000	8.500	0.499
L7	60.000-39.300	A	0.000	0.000	0.000	0.000	0.168
		B	0.000	0.000	0.000	8.798	0.440
		C	0.000	0.000	0.000	8.798	0.517
L8	39.300-20.000	A	0.000	0.000	0.000	0.000	0.157
		B	0.000	0.000	0.000	8.203	0.410
		C	0.000	0.000	0.000	8.203	0.482

Tower Section	Tower Elevation ft	Face	A_R ft^2	A_F ft^2	C_AA_A In Face ft^2	C_AA_A Out Face ft^2	Weight K
L9	20.000-0.000	A	0.000	0.000	0.000	0.000	0.122
		B	0.000	0.000	0.000	9.000	0.319
		C	0.000	0.000	0.000	9.000	0.374

Feed Line/Linear Appurtenances Section Areas - With Ice

Tower Section	Tower Elevation ft	Face or Leg	Ice Thickness in	A_R ft^2	A_F ft^2	C_AA_A In Face ft^2	C_AA_A Out Face ft^2	Weight K
L1	177.000-129.750	A	1.202	0.000	0.000	0.000	0.000	0.068
		B		0.000	0.000	0.000	0.000	1.001
		C		0.000	0.000	0.000	0.000	0.535
L2	129.750-120.000	A	1.173	0.000	0.000	0.000	0.000	0.079
		B		0.000	0.000	0.000	6.136	0.703
		C		0.000	0.000	0.000	0.000	0.183
L3	120.000-110.000	A	1.162	0.000	0.000	0.000	0.000	0.081
		B		0.000	0.000	0.000	8.606	0.885
		C		0.000	0.000	0.000	4.619	0.609
L4	110.000-84.000	A	1.138	0.000	0.000	0.000	0.000	0.212
		B		0.000	0.000	0.000	16.316	2.245
		C		0.000	0.000	0.000	16.316	1.348
L5	84.000-80.000	A	1.115	0.000	0.000	0.000	0.000	0.033
		B		0.000	0.000	0.000	2.510	0.345
		C		0.000	0.000	0.000	2.510	0.207
L6	80.000-60.000	A	1.094	0.000	0.000	0.000	0.000	0.163
		B		0.000	0.000	0.000	12.877	1.654
		C		0.000	0.000	0.000	12.877	1.005
L7	60.000-39.300	A	1.050	0.000	0.000	0.000	0.000	0.168
		B		0.000	0.000	0.000	13.144	1.630
		C		0.000	0.000	0.000	13.144	1.007
L8	39.300-20.000	A	1.000	0.000	0.000	0.000	0.000	0.157
		B		0.000	0.000	0.000	12.255	1.519
		C		0.000	0.000	0.000	12.255	0.938
L9	20.000-0.000	A	1.000	0.000	0.000	0.000	0.000	0.122
		B		0.000	0.000	0.000	13.000	1.114
		C		0.000	0.000	0.000	13.000	0.702

Feed Line Center of Pressure

Section	Elevation ft	CP_X in	CP_Z in	CP_X Ice in	CP_Z Ice in
L1	177.000-129.750	0.000	0.000	0.000	0.000
L2	129.750-120.000	0.335	0.193	0.622	0.359
L3	120.000-110.000	0.133	0.400	0.332	0.635
L4	110.000-84.000	0.000	0.472	0.000	0.633
L5	84.000-80.000	0.000	0.478	0.000	0.644
L6	80.000-60.000	0.000	0.507	0.000	0.669
L7	60.000-39.300	0.000	0.516	0.000	0.680
L8	39.300-20.000	0.000	0.522	0.000	0.691
L9	20.000-0.000	0.000	0.554	0.000	0.720

Discrete Tower Loads

Description	Face or Leg	Offset Type	Offsets: Horz Lateral Vert ft ft ft	Azimuth Adjustment °	Placement ft		C_AA_A Front ft^2	C_AA_A Side ft^2	Weight K
(2) DB980H90E-M w/ Mount Pipe (E)	C	From Leg	4.000 0.000 -1.000	0.000	179.000	No Ice	4.036	3.619	0.030
						1/2" Ice	4.499	4.481	0.064
						1" Ice	4.947	5.219	0.107
						2" Ice	5.870	6.744	0.216
						4" Ice	8.046	9.995	0.549
(2) DB980H90E-M w/ Mount Pipe (E)	B	From Leg	4.000 0.000 -1.000	0.000	179.000	No Ice	4.036	3.619	0.030
						1/2" Ice	4.499	4.481	0.064
						1" Ice	4.947	5.219	0.107
						2" Ice	5.870	6.744	0.216
						4" Ice	8.046	9.995	0.549
(2) DB980H90E-M w/ Mount Pipe (E)	A	From Leg	4.000 0.000 -1.000	0.000	179.000	No Ice	4.036	3.619	0.030
						1/2" Ice	4.499	4.481	0.064
						1" Ice	4.947	5.219	0.107
						2" Ice	5.870	6.744	0.216
						4" Ice	8.046	9.995	0.549
1900MHz RRH (65MHz) (P)	C	From Leg	4.000 0.000 -2.000	0.000	179.000	No Ice	2.698	2.771	0.060
						1/2" Ice	2.936	3.011	0.084
						1" Ice	3.183	3.260	0.111
						2" Ice	3.703	3.784	0.176
						4" Ice	4.846	4.935	0.354
1900MHz RRH (65MHz) (P)	B	From Leg	4.000 0.000 -2.000	0.000	179.000	No Ice	2.698	2.771	0.060
						1/2" Ice	2.936	3.011	0.084
						1" Ice	3.183	3.260	0.111
						2" Ice	3.703	3.784	0.176
						4" Ice	4.846	4.935	0.354
1900MHz RRH (65MHz) (P)	A	From Leg	4.000 0.000 -2.000	0.000	179.000	No Ice	2.698	2.771	0.060
						1/2" Ice	2.936	3.011	0.084
						1" Ice	3.183	3.260	0.111
						2" Ice	3.703	3.784	0.176
						4" Ice	4.846	4.935	0.354
800 EXTERNAL NOTCH FILTER (P)	C	From Leg	4.000 0.000 -2.000	0.000	179.000	No Ice	0.770	0.375	0.011
						1/2" Ice	0.890	0.465	0.017
						1" Ice	1.018	0.563	0.024
						2" Ice	1.301	0.787	0.045
						4" Ice	1.970	1.337	0.114
800 EXTERNAL NOTCH FILTER (P)	B	From Leg	4.000 0.000 -2.000	0.000	179.000	No Ice	0.770	0.375	0.011
						1/2" Ice	0.890	0.465	0.017
						1" Ice	1.018	0.563	0.024
						2" Ice	1.301	0.787	0.045
						4" Ice	1.970	1.337	0.114
800 EXTERNAL NOTCH FILTER (P)	A	From Leg	4.000 0.000 -2.000	0.000	179.000	No Ice	0.770	0.375	0.011
						1/2" Ice	0.890	0.465	0.017
						1" Ice	1.018	0.563	0.024
						2" Ice	1.301	0.787	0.045
						4" Ice	1.970	1.337	0.114
800MHZ RRH (P)	C	From Leg	4.000 0.000 -2.000	0.000	179.000	No Ice	2.490	2.068	0.053
						1/2" Ice	2.706	2.271	0.074
						1" Ice	2.931	2.481	0.098
						2" Ice	3.407	2.928	0.157
						4" Ice	4.462	3.927	0.318
800MHZ RRH (P)	B	From Leg	4.000 0.000	0.000	179.000	No Ice	2.490	2.068	0.053
						1/2" Ice	2.706	2.271	0.074

Description	Face or Leg	Offset Type	Offsets: Horz Lateral Vert ft ft ft	Azimuth Adjustment °	Placement ft		C_AA_A Front ft^2	C_AA_A Side ft^2	Weight K
			-2.000			1" Ice	2.931	2.481	0.098
						2" Ice	3.407	2.928	0.157
						4" Ice	4.462	3.927	0.318
800MHZ RRH	A	From Leg	4.000	0.000	179.000	No Ice	2.490	2.068	0.053
(P)			0.000			1/2" Ice	2.706	2.271	0.074
			-2.000			1" Ice	2.931	2.481	0.098
						2" Ice	3.407	2.928	0.157
						4" Ice	4.462	3.927	0.318
(3) ACU-A20-N	C	From Leg	4.000	0.000	179.000	No Ice	0.078	0.136	0.001
(P)			0.000			1/2" Ice	0.121	0.189	0.002
			-2.000			1" Ice	0.173	0.251	0.004
						2" Ice	0.302	0.400	0.012
						4" Ice	0.665	0.802	0.045
(3) ACU-A20-N	B	From Leg	4.000	0.000	179.000	No Ice	0.078	0.136	0.001
(P)			0.000			1/2" Ice	0.121	0.189	0.002
			-2.000			1" Ice	0.173	0.251	0.004
						2" Ice	0.302	0.400	0.012
						4" Ice	0.665	0.802	0.045
(3) ACU-A20-N	A	From Leg	4.000	0.000	179.000	No Ice	0.078	0.136	0.001
(P)			0.000			1/2" Ice	0.121	0.189	0.002
			-2.000			1" Ice	0.173	0.251	0.004
						2" Ice	0.302	0.400	0.012
						4" Ice	0.665	0.802	0.045
APXVSPP18-C-A20 w/ Mount Pipe	C	From Leg	4.000	0.000	179.000	No Ice	8.498	6.946	0.083
(P)			0.000			1/2" Ice	9.149	8.127	0.148
			-2.000			1" Ice	9.767	9.021	0.225
						2" Ice	11.031	10.844	0.406
						4" Ice	13.679	14.851	0.909
APXVSPP18-C-A20 w/ Mount Pipe	B	From Leg	4.000	0.000	179.000	No Ice	8.498	6.946	0.083
(P)			0.000			1/2" Ice	9.149	8.127	0.148
			-2.000			1" Ice	9.767	9.021	0.225
						2" Ice	11.031	10.844	0.406
						4" Ice	13.679	14.851	0.909
APXVSPP18-C-A20 w/ Mount Pipe	A	From Leg	4.000	0.000	179.000	No Ice	8.498	6.946	0.083
(P)			0.000			1/2" Ice	9.149	8.127	0.148
			-2.000			1" Ice	9.767	9.021	0.225
						2" Ice	11.031	10.844	0.406
						4" Ice	13.679	14.851	0.909
Platform Mount [LP 713-1]	C	None		0.000	179.000	No Ice	31.270	31.270	1.510
(P)						1/2" Ice	39.680	39.680	1.929
						1" Ice	48.090	48.090	2.348
						2" Ice	64.910	64.910	3.186
						4" Ice	98.550	98.550	4.862
****									
RR90-17-00DP w/Mount Pipe	C	From Leg	4.000	0.000	167.000	No Ice	4.672	3.399	0.035
(E)			0.000			1/2" Ice	5.202	4.237	0.071
			2.000			1" Ice	5.712	4.952	0.117
						2" Ice	6.764	6.431	0.229
						4" Ice	8.996	9.590	0.569
RR90-17-00DP w/Mount Pipe	B	From Leg	4.000	0.000	167.000	No Ice	4.672	3.399	0.035
(E)			0.000			1/2" Ice	5.202	4.237	0.071
			2.000			1" Ice	5.712	4.952	0.117
						2" Ice	6.764	6.431	0.229
						4" Ice	8.996	9.590	0.569
RR90-17-00DP w/Mount Pipe	A	From Leg	4.000	0.000	167.000	No Ice	4.672	3.399	0.035
(E)			0.000			1/2" Ice	5.202	4.237	0.071
			2.000			1" Ice	5.712	4.952	0.117

Description	Face or Leg	Offset Type	Offsets: Horz Lateral Vert ft ft ft	Azimuth Adjustment °	Placement ft		C_AA_A Front ft^2	C_AA_A Side ft^2	Weight K
						2" Ice	6.764	6.431	0.229
						4" Ice	8.996	9.590	0.569
(2) KRY 112 75/1 TMA (E)	C	From Leg	4.000 0.000 2.000	0.000	167.000	No Ice	1.983	0.942	0.030
						1/2" Ice	2.176	1.094	0.043
						1" Ice	2.377	1.254	0.059
						2" Ice	2.804	1.600	0.098
						4" Ice	3.764	2.396	0.214
(2) KRY 112 75/1 TMA (E)	B	From Leg	4.000 0.000 2.000	0.000	167.000	No Ice	1.983	0.942	0.030
						1/2" Ice	2.176	1.094	0.043
						1" Ice	2.377	1.254	0.059
						2" Ice	2.804	1.600	0.098
						4" Ice	3.764	2.396	0.214
(2) KRY 112 75/1 TMA (E)	A	From Leg	4.000 0.000 2.000	0.000	167.000	No Ice	1.983	0.942	0.030
						1/2" Ice	2.176	1.094	0.043
						1" Ice	2.377	1.254	0.059
						2" Ice	2.804	1.600	0.098
						4" Ice	3.764	2.396	0.214
T-Arm Mount [TA 602-3] (E)	C	None		0.000	167.000	No Ice	11.590	11.590	0.774
						1/2" Ice	15.440	15.440	0.990
						1" Ice	19.290	19.290	1.206
						2" Ice	26.990	26.990	1.639
						4" Ice	42.390	42.390	2.503
(3) 6' x 2" Mount Pipe (E)	C	From Leg	4.000 0.000 0.000	0.000	167.000	No Ice	1.425	1.425	0.022
						1/2" Ice	1.925	1.925	0.033
						1" Ice	2.294	2.294	0.048
						2" Ice	3.060	3.060	0.090
						4" Ice	4.702	4.702	0.231
(3) 6' x 2" Mount Pipe (E)	B	From Leg	4.000 0.000 0.000	0.000	167.000	No Ice	1.425	1.425	0.022
						1/2" Ice	1.925	1.925	0.033
						1" Ice	2.294	2.294	0.048
						2" Ice	3.060	3.060	0.090
						4" Ice	4.702	4.702	0.231
(3) 6' x 2" Mount Pipe (E)	A	From Leg	4.000 0.000 0.000	0.000	167.000	No Ice	1.425	1.425	0.022
						1/2" Ice	1.925	1.925	0.033
						1" Ice	2.294	2.294	0.048
						2" Ice	3.060	3.060	0.090
						4" Ice	4.702	4.702	0.231
****									
(2) LPA-80063/6CF w/ Mount Pipe (E)	C	From Leg	4.000 0.000 2.000	0.000	154.000	No Ice	10.577	10.671	0.052
						1/2" Ice	11.241	11.932	0.142
						1" Ice	11.872	12.911	0.244
						2" Ice	13.163	14.921	0.476
						4" Ice	15.866	19.158	1.088
(2) LPA-80080/6CF w/ Mount Pipe (E)	B	From Leg	4.000 0.000 2.000	0.000	154.000	No Ice	4.564	10.728	0.046
						1/2" Ice	5.105	11.990	0.110
						1" Ice	5.612	12.968	0.185
						2" Ice	6.651	14.980	0.363
						4" Ice	8.834	19.217	0.857
(2) LPA-80080/6CF w/ Mount Pipe (E)	A	From Leg	4.000 0.000 2.000	0.000	154.000	No Ice	4.564	10.728	0.046
						1/2" Ice	5.105	11.990	0.110
						1" Ice	5.612	12.968	0.185
						2" Ice	6.651	14.980	0.363
						4" Ice	8.834	19.217	0.857
BXA-171063-8BF-EDIN-2 w/ Mount Pipe (E)	C	From Leg	4.000 0.000 2.000	0.000	154.000	No Ice	3.179	3.353	0.029
						1/2" Ice	3.555	3.971	0.059
						1" Ice	3.964	4.595	0.098
						2" Ice	4.853	5.893	0.193

Description	Face or Leg	Offset Type	Offsets: Horz Lateral Vert ft ft ft	Azimuth Adjustment °	Placement ft		C_AA_A Front ft^2	C_AA_A Side ft^2	Weight K
						4" Ice	6.767	8.885	0.487
BXA-171085-8BF-EDIN-2	B	From Leg	4.000	0.000	154.000	No Ice	3.179	3.353	0.029
w/ Mount Pipe			0.000			1/2" Ice	3.555	3.971	0.059
(E)			2.000			1" Ice	3.964	4.595	0.098
						2" Ice	4.853	5.893	0.193
						4" Ice	6.767	8.885	0.487
BXA-171085-8BF-EDIN-2	A	From Leg	4.000	0.000	154.000	No Ice	3.179	3.353	0.029
w/ Mount Pipe			0.000			1/2" Ice	3.555	3.971	0.059
(E)			2.000			1" Ice	3.964	4.595	0.098
						2" Ice	4.853	5.893	0.193
						4" Ice	6.767	8.885	0.487
BXA-70063-6CF-2 w/ Mount	C	From Leg	4.000	0.000	154.000	No Ice	7.969	5.801	0.042
Pipe			0.000			1/2" Ice	8.609	6.953	0.100
(E)			2.000			1" Ice	9.216	7.819	0.170
						2" Ice	10.459	9.601	0.335
						4" Ice	13.066	13.366	0.803
BXA-70063-6CF-2 w/ Mount	B	From Leg	4.000	0.000	154.000	No Ice	7.969	5.801	0.042
Pipe			0.000			1/2" Ice	8.609	6.953	0.100
(E)			2.000			1" Ice	9.216	7.819	0.170
						2" Ice	10.459	9.601	0.335
						4" Ice	13.066	13.366	0.803
BXA-70063-6CF-2 w/ Mount	A	From Leg	4.000	0.000	154.000	No Ice	7.969	5.801	0.042
Pipe			0.000			1/2" Ice	8.609	6.953	0.100
(E)			2.000			1" Ice	9.216	7.819	0.170
						2" Ice	10.459	9.601	0.335
						4" Ice	13.066	13.366	0.803
(2) FD9R6004/2C-3L	C	From Leg	4.000	0.000	154.000	No Ice	0.367	0.085	0.003
(E)			0.000			1/2" Ice	0.451	0.136	0.005
			2.000			1" Ice	0.543	0.196	0.009
						2" Ice	0.755	0.343	0.020
						4" Ice	1.281	0.740	0.063
(2) FD9R6004/2C-3L	B	From Leg	4.000	0.000	154.000	No Ice	0.367	0.085	0.003
(E)			0.000			1/2" Ice	0.451	0.136	0.005
			2.000			1" Ice	0.543	0.196	0.009
						2" Ice	0.755	0.343	0.020
						4" Ice	1.281	0.740	0.063
(2) FD9R6004/2C-3L	A	From Leg	4.000	0.000	154.000	No Ice	0.367	0.085	0.003
(E)			0.000			1/2" Ice	0.451	0.136	0.005
			2.000			1" Ice	0.543	0.196	0.009
						2" Ice	0.755	0.343	0.020
						4" Ice	1.281	0.740	0.063
Platform Mount [LP 303-1]	C	None		0.000	154.000	No Ice	14.660	14.660	1.250
(E)						1/2" Ice	18.870	18.870	1.481
						1" Ice	23.080	23.080	1.713
						2" Ice	31.500	31.500	2.175
						4" Ice	48.340	48.340	3.101
****									
(4) DB844H90 w/ Mount	C	From Leg	4.000	0.000	137.000	No Ice	3.299	4.921	0.028
Pipe			0.000			1/2" Ice	3.690	5.596	0.066
(E)			2.000			1" Ice	4.119	6.284	0.112
						2" Ice	5.007	7.712	0.224
						4" Ice	6.920	10.833	0.553
(4) DB844H90 w/ Mount	B	From Leg	4.000	0.000	137.000	No Ice	3.299	4.921	0.028
Pipe			0.000			1/2" Ice	3.690	5.596	0.066
(E)			2.000			1" Ice	4.119	6.284	0.112
						2" Ice	5.007	7.712	0.224
						4" Ice	6.920	10.833	0.553

Description	Face or Leg	Offset Type	Offsets: Horz Lateral Vert ft ft ft	Azimuth Adjustment °	Placement ft		C_AA_A Front ft^2	C_AA_A Side ft^2	Weight K
(4) DB844H90 w/ Mount Pipe (E)	A	From Leg	4.000 0.000 2.000	0.000	137.000	No Ice	3.299	4.921	0.028
						1/2" Ice	3.690	5.596	0.066
						1" Ice	4.119	6.284	0.112
						2" Ice	5.007	7.712	0.224
						4" Ice	6.920	10.833	0.553
Platform Mount [LP 712-1] (E)	C	None		0.000	137.000	No Ice	24.530	24.530	1.335
						1/2" Ice	29.940	29.940	1.646
						1" Ice	35.350	35.350	1.956
						2" Ice	46.170	46.170	2.577
						4" Ice	67.810	67.810	3.820
****									
(2) AP14/17-880/1940/065D/ADT/XXP w/ Mount Pipe (E)	C	From Leg	4.000 0.000 2.000	0.000	127.000	No Ice	5.394	3.750	0.056
						1/2" Ice	5.863	4.421	0.096
						1" Ice	6.336	5.074	0.145
						2" Ice	7.314	6.430	0.264
						4" Ice	9.396	9.533	0.612
(2) AP14/17-880/1940/065D/ADT/XXP w/ Mount Pipe (E)	B	From Leg	4.000 0.000 2.000	0.000	127.000	No Ice	5.394	3.750	0.056
						1/2" Ice	5.863	4.421	0.096
						1" Ice	6.336	5.074	0.145
						2" Ice	7.314	6.430	0.264
						4" Ice	9.396	9.533	0.612
(2) AP14/17-880/1940/065D/ADT/XXP w/ Mount Pipe (E)	A	From Leg	4.000 0.000 2.000	0.000	127.000	No Ice	5.394	3.750	0.056
						1/2" Ice	5.863	4.421	0.096
						1" Ice	6.336	5.074	0.145
						2" Ice	7.314	6.430	0.264
						4" Ice	9.396	9.533	0.612
(2) LGP 17201 (E)	C	From Leg	4.000 0.000 2.000	0.000	127.000	No Ice	1.946	0.518	0.031
						1/2" Ice	2.134	0.640	0.042
						1" Ice	2.330	0.770	0.055
						2" Ice	2.749	1.056	0.089
						4" Ice	3.690	1.733	0.193
(2) LGP 17201 (E)	B	From Leg	4.000 0.000 2.000	0.000	127.000	No Ice	1.946	0.518	0.031
						1/2" Ice	2.134	0.640	0.042
						1" Ice	2.330	0.770	0.055
						2" Ice	2.749	1.056	0.089
						4" Ice	3.690	1.733	0.193
(2) LGP 17201 (E)	A	From Leg	4.000 0.000 2.000	0.000	127.000	No Ice	1.946	0.518	0.031
						1/2" Ice	2.134	0.640	0.042
						1" Ice	2.330	0.770	0.055
						2" Ice	2.749	1.056	0.089
						4" Ice	3.690	1.733	0.193
Platform Mount [LP 303-1] (E)	C	None		0.000	127.000	No Ice	14.660	14.660	1.250
						1/2" Ice	18.870	18.870	1.481
						1" Ice	23.080	23.080	1.713
						2" Ice	31.500	31.500	2.175
						4" Ice	48.340	48.340	3.101
****									
APXV18-206517S-C w/ Mount Pipe (E)	C	From Leg	1.500 0.000 0.000	0.000	117.000	No Ice	5.404	4.700	0.052
						1/2" Ice	5.960	5.860	0.094
						1" Ice	6.481	6.734	0.148
						2" Ice	7.547	8.515	0.280
						4" Ice	9.919	12.277	0.679
APXV18-206517S-C w/ Mount Pipe (E)	B	From Leg	1.500 0.000 0.000	0.000	117.000	No Ice	5.404	4.700	0.052
						1/2" Ice	5.960	5.860	0.094
						1" Ice	6.481	6.734	0.148
						2" Ice	7.547	8.515	0.280
						4" Ice	9.919	12.277	0.679

Description	Face or Leg	Offset Type	Offsets: Horz Lateral Vert ft ft ft	Azimuth Adjustment °	Placement ft		C_AA_A Front ft^2	C_AA_A Side ft^2	Weight K
APXV18-206517S-C w/ Mount Pipe (E)	A	From Leg	1.500 0.000 0.000	0.000	117.000	No Ice	5.404	4.700	0.052
						1/2" Ice	5.960	5.860	0.094
						1" Ice	6.481	6.734	0.148
						2" Ice	7.547	8.515	0.280
						4" Ice	9.919	12.277	0.679
****									
8225 (E)	C	From Leg	4.000 0.000 1.000	0.000	79.000	No Ice	0.894	0.894	0.001
						1/2" Ice	1.080	1.080	0.009
						1" Ice	1.284	1.284	0.018
						2" Ice	1.719	1.719	0.046
						4" Ice	2.691	2.691	0.137
Side Arm Mount [SO 701-1] (E)	C	From Leg	3.000 0.000 0.000	0.000	79.000	No Ice	0.850	1.670	0.065
						1/2" Ice	1.140	2.340	0.079
						1" Ice	1.430	3.010	0.093
						2" Ice	2.010	4.350	0.121
						4" Ice	3.170	7.030	0.177
****									

Load Combinations

Comb. No.	Description
1	Dead Only
2	Dead+Wind 0 deg - No Ice
3	Dead+Wind 30 deg - No Ice
4	Dead+Wind 60 deg - No Ice
5	Dead+Wind 90 deg - No Ice
6	Dead+Wind 120 deg - No Ice
7	Dead+Wind 150 deg - No Ice
8	Dead+Wind 180 deg - No Ice
9	Dead+Wind 210 deg - No Ice
10	Dead+Wind 240 deg - No Ice
11	Dead+Wind 270 deg - No Ice
12	Dead+Wind 300 deg - No Ice
13	Dead+Wind 330 deg - No Ice
14	Dead+Ice+Temp
15	Dead+Wind 0 deg+Ice+Temp
16	Dead+Wind 30 deg+Ice+Temp
17	Dead+Wind 60 deg+Ice+Temp
18	Dead+Wind 90 deg+Ice+Temp
19	Dead+Wind 120 deg+Ice+Temp
20	Dead+Wind 150 deg+Ice+Temp
21	Dead+Wind 180 deg+Ice+Temp
22	Dead+Wind 210 deg+Ice+Temp
23	Dead+Wind 240 deg+Ice+Temp
24	Dead+Wind 270 deg+Ice+Temp
25	Dead+Wind 300 deg+Ice+Temp
26	Dead+Wind 330 deg+Ice+Temp
27	Dead+Wind 0 deg - Service
28	Dead+Wind 30 deg - Service
29	Dead+Wind 60 deg - Service

Comb. No.	Description
30	Dead+Wind 90 deg - Service
31	Dead+Wind 120 deg - Service
32	Dead+Wind 150 deg - Service
33	Dead+Wind 180 deg - Service
34	Dead+Wind 210 deg - Service
35	Dead+Wind 240 deg - Service
36	Dead+Wind 270 deg - Service
37	Dead+Wind 300 deg - Service
38	Dead+Wind 330 deg - Service

Maximum Member Forces

Section No.	Elevation ft	Component Type	Condition	Gov. Load Comb.	Force K	Major Axis Moment kip-ft	Minor Axis Moment kip-ft
L1	177 - 129.75	Pole	Max Tension	1	0.000	0.000	0.000
			Max. Compression	14	-21.449	-0.124	-0.867
			Max. Mx	5	-9.311	-450.408	5.253
			Max. My	8	-9.346	5.289	-444.252
			Max. Vy	5	17.259	-450.408	5.253
			Max. Vx	8	16.986	5.289	-444.252
			Max. Torque	6			0.041
L2	129.75 - 120	Pole	Max Tension	1	0.000	0.000	0.000
			Max. Compression	14	-27.834	-0.953	-1.388
			Max. Mx	5	-12.979	-708.316	8.376
			Max. My	8	-13.010	8.356	-698.401
			Max. Vy	5	20.437	-708.316	8.376
			Max. Vx	8	20.163	8.356	-698.401
			Max. Torque	2			-0.064
L3	120 - 110	Pole	Max Tension	1	0.000	0.000	0.000
			Max. Compression	14	-31.760	-1.469	-2.293
			Max. Mx	5	-15.234	-921.755	10.522
			Max. My	8	-15.262	10.769	-909.359
			Max. Vy	5	22.026	-921.755	10.522
			Max. Vx	8	21.752	10.769	-909.359
			Max. Torque	3			-0.084
L4	110 - 84	Pole	Max Tension	1	0.000	0.000	0.000
			Max. Compression	14	-41.634	-2.864	-4.218
			Max. Mx	5	-22.183	-1414.349	15.238
			Max. My	8	-22.206	15.579	-1396.189
			Max. Vy	5	24.340	-1414.349	15.238
			Max. Vx	8	24.064	15.579	-1396.189
			Max. Torque	11			0.143
L5	84 - 80	Pole	Max Tension	1	0.000	0.000	0.000
			Max. Compression	14	-47.640	-3.454	-5.033
			Max. Mx	5	-26.711	-1632.152	17.185
			Max. My	8	-26.733	17.566	-1611.608
			Max. Vy	5	25.377	-1632.152	17.185
			Max. Vx	8	25.100	17.566	-1611.608
			Max. Torque	11			0.179
L6	80 - 60	Pole	Max Tension	1	0.000	0.000	0.000
			Max. Compression	14	-58.290	-4.365	-7.243
			Max. Mx	5	-34.657	-2161.345	21.220
			Max. My	8	-34.673	22.089	-2136.049
			Max. Vy	5	27.496	-2161.345	21.220
			Max. Vx	8	27.234	22.089	-2136.049
			Max. Torque	12			0.614
L7	60 - 39.3	Pole	Max Tension	1	0.000	0.000	0.000
			Max. Compression	14	-66.161	-5.415	-8.686

Section No.	Elevation ft	Component Type	Condition	Gov. Load Comb.	Force K	Major Axis Moment kip-ft	Minor Axis Moment kip-ft
			Max. Mx	5	-40.639	-2582.447	24.292
			Max. My	8	-40.651	25.238	-2553.323
			Max. Vy	5	28.832	-2582.447	24.292
			Max. Vx	8	28.572	25.238	-2553.323
			Max. Torque	12			0.669
L8	39.3 - 20	Pole	Max Tension	1	0.000	0.000	0.000
			Max. Compression	14	-82.593	-7.202	-11.132
			Max. Mx	5	-53.572	-3332.197	29.367
			Max. My	8	-53.577	30.443	-3296.722
			Max. Vy	5	30.876	-3332.197	29.367
			Max. Vx	8	30.620	30.443	-3296.722
			Max. Torque	12			0.759
L9	20 - 0	Pole	Max Tension	1	0.000	0.000	0.000
			Max. Compression	14	-94.003	-8.294	-12.627
			Max. Mx	5	-62.913	-3964.496	33.410
			Max. My	8	-62.913	34.567	-3924.037
			Max. Vy	5	32.355	-3964.496	33.410
			Max. Vx	8	32.105	34.567	-3924.037
			Max. Torque	12			0.839

Maximum Reactions

Location	Condition	Gov. Load Comb.	Vertical K	Horizontal, X K	Horizontal, Z K
Pole	Max. Vert	14	94.003	-0.000	-0.000
	Max. H_x	11	62.921	32.340	-0.217
	Max. H_z	2	62.921	-0.217	32.090
	Max. M_x	2	3918.615	-0.217	32.090
	Max. M_z	5	3964.496	-32.340	0.217
	Max. Torsion	12	0.839	27.899	15.857
	Min. Vert	30	62.921	-12.483	0.084
	Min. H_x	5	62.921	-32.340	0.217
	Min. H_z	8	62.921	0.217	-32.090
	Min. M_x	8	-3924.037	0.217	-32.090
	Min. M_z	11	-3961.389	32.340	-0.217
	Min. Torsion	6	-0.792	-27.899	-15.857

Tower Mast Reaction Summary

Load Combination	Vertical K	$Shear_x$ K	$Shear_z$ K	Overturning Moment, M_x kip-ft	Overturning Moment, M_z kip-ft	Torque kip-ft
Dead Only	62.921	0.000	0.000	2.629	-1.511	0.000
Dead+Wind 0 deg - No Ice	62.921	0.217	-32.090	-3918.615	-37.682	-0.330
Dead+Wind 30 deg - No Ice	62.921	16.358	-27.899	-3411.240	-2014.317	0.087
Dead+Wind 60 deg - No Ice	62.921	28.116	-16.233	-1989.164	-3451.591	0.462
Dead+Wind 90 deg - No Ice	62.921	32.340	-0.217	-33.410	-3964.496	0.714
Dead+Wind 120 deg - No Ice	62.921	27.899	15.857	1932.093	-3415.590	0.792
Dead+Wind 150 deg - No Ice	62.921	15.982	27.682	3380.663	-1951.817	0.675
Dead+Wind 180 deg - No Ice	62.921	-0.217	32.090	3924.037	34.567	0.377
Dead+Wind 210 deg - No Ice	62.921	-16.358	27.899	3416.666	2011.201	-0.039
Dead+Wind 240 deg - No Ice	62.921	-28.116	16.233	1994.593	3448.479	-0.462

Load Combination	Vertical K	$Shear_x$ K	$Shear_z$ K	Overturning Moment, M_x kip-ft	Overturning Moment, M_z kip-ft	Torque kip-ft
Dead+Wind 270 deg - No Ice	62.921	-32.340	0.217	38.838	3961.389	-0.761
Dead+Wind 300 deg - No Ice	62.921	-27.899	-15.857	-1926.670	3412.483	-0.839
Dead+Wind 330 deg - No Ice	62.921	-15.982	-27.682	-3375.243	1948.707	-0.675
Dead+Ice+Temp	94.003	0.000	0.000	12.627	-8.294	0.000
Dead+Wind 0 deg+Ice+Temp	94.003	0.026	-5.071	-644.903	-13.052	-0.080
Dead+Wind 30 deg+Ice+Temp	94.003	2.573	-4.404	-559.113	-343.961	0.008
Dead+Wind 60 deg+Ice+Temp	94.003	4.431	-2.558	-320.082	-584.956	0.093
Dead+Wind 90 deg+Ice+Temp	94.003	5.101	-0.026	8.142	-671.465	0.153
Dead+Wind 120 deg+Ice+Temp	94.003	4.404	2.513	337.611	-580.306	0.173
Dead+Wind 150 deg+Ice+Temp	94.003	2.528	4.378	580.046	-335.906	0.147
Dead+Wind 180 deg+Ice+Temp	94.003	-0.026	5.071	670.486	-3.751	0.081
Dead+Wind 210 deg+Ice+Temp	94.003	-2.573	4.404	584.696	327.157	-0.006
Dead+Wind 240 deg+Ice+Temp	94.003	-4.431	2.558	345.666	568.154	-0.092
Dead+Wind 270 deg+Ice+Temp	94.003	-5.101	0.026	17.442	654.663	-0.154
Dead+Wind 300 deg+Ice+Temp	94.003	-4.404	-2.513	-312.029	563.504	-0.173
Dead+Wind 330 deg+Ice+Temp	94.003	-2.528	-4.378	-554.464	319.104	-0.146
Dead+Wind 0 deg - Service	62.921	0.084	-12.386	-1512.110	-15.515	-0.133
Dead+Wind 30 deg - Service	62.921	6.314	-10.768	-1316.138	-779.115	0.028
Dead+Wind 60 deg - Service	62.921	10.852	-6.265	-766.781	-1334.367	0.179
Dead+Wind 90 deg - Service	62.921	12.483	-0.084	-11.240	-1532.494	0.282
Dead+Wind 120 deg - Service	62.921	10.768	6.120	748.044	-1320.417	0.312
Dead+Wind 150 deg - Service	62.921	6.169	10.685	1307.621	-754.945	0.261
Dead+Wind 180 deg - Service	62.921	-0.084	12.386	1517.543	12.399	0.140
Dead+Wind 210 deg - Service	62.921	-6.314	10.768	1321.572	775.999	-0.021
Dead+Wind 240 deg - Service	62.921	-10.852	6.265	772.215	1331.252	-0.179
Dead+Wind 270 deg - Service	62.921	-12.483	0.084	16.674	1529.379	-0.289
Dead+Wind 300 deg - Service	62.921	-10.768	-6.120	-742.611	1317.302	-0.319
Dead+Wind 330 deg - Service	62.921	-6.169	-10.685	-1302.188	751.830	-0.261

Solution Summary

	Sum of Applied Forces			Sum of Reactions			
Load Comb.	PX K	PY K	PZ K	PX K	PY K	PZ K	% Error
1	0.000	-62.921	0.000	0.000	62.921	0.000	0.000%
2	0.217	-62.921	-32.090	-0.217	62.921	32.090	0.000%
3	16.358	-62.921	-27.899	-16.358	62.921	27.899	0.000%
4	28.116	-62.921	-16.233	-28.116	62.921	16.233	0.000%
5	32.340	-62.921	-0.217	-32.340	62.921	0.217	0.000%
6	27.899	-62.921	15.857	-27.899	62.921	-15.857	0.000%
7	15.982	-62.921	27.682	-15.982	62.921	-27.682	0.000%
8	-0.217	-62.921	32.090	0.217	62.921	-32.090	0.000%
9	-16.358	-62.921	27.899	16.358	62.921	-27.899	0.000%
10	-28.116	-62.921	16.233	28.116	62.921	-16.233	0.000%
11	-32.340	-62.921	0.217	32.340	62.921	-0.217	0.000%
12	-27.899	-62.921	-15.857	27.899	62.921	15.857	0.000%
13	-15.982	-62.921	-27.682	15.982	62.921	27.682	0.000%
14	0.000	-94.003	0.000	-0.000	94.003	-0.000	0.000%
15	0.026	-94.003	-5.071	-0.026	94.003	5.071	0.000%
16	2.573	-94.003	-4.404	-2.573	94.003	4.404	0.000%
17	4.431	-94.003	-2.558	-4.431	94.003	2.558	0.000%
18	5.101	-94.003	-0.026	-5.101	94.003	0.026	0.000%
19	4.404	-94.003	2.513	-4.404	94.003	-2.513	0.000%
20	2.528	-94.003	4.378	-2.528	94.003	-4.378	0.000%
21	-0.026	-94.003	5.071	0.026	94.003	-5.071	0.000%
22	-2.573	-94.003	4.404	2.573	94.003	-4.404	0.000%
23	-4.431	-94.003	2.558	4.431	94.003	-2.558	0.000%
24	-5.101	-94.003	0.026	5.101	94.003	-0.026	0.000%

Load Comb.	Sum of Applied Forces PX K	PY K	PZ K	Sum of Reactions PX K	PY K	PZ K	% Error
25	-4.404	-94.003	-2.513	4.404	94.003	2.513	0.000%
26	-2.528	-94.003	-4.378	2.528	94.003	4.378	0.000%
27	0.084	-62.921	-12.386	-0.084	62.921	12.386	0.000%
28	6.314	-62.921	-10.768	-6.314	62.921	10.768	0.000%
29	10.852	-62.921	-6.265	-10.852	62.921	6.265	0.000%
30	12.483	-62.921	-0.084	-12.483	62.921	0.084	0.000%
31	10.768	-62.921	6.120	-10.768	62.921	-6.120	0.000%
32	6.169	-62.921	10.685	-6.169	62.921	-10.685	0.000%
33	-0.084	-62.921	12.386	0.084	62.921	-12.386	0.000%
34	-6.314	-62.921	10.768	6.314	62.921	-10.768	0.000%
35	-10.852	-62.921	6.265	10.852	62.921	-6.265	0.000%
36	-12.483	-62.921	0.084	12.483	62.921	-0.084	0.000%
37	-10.768	-62.921	-6.120	10.768	62.921	6.120	0.000%
38	-6.169	-62.921	-10.685	6.169	62.921	10.685	0.000%

Non-Linear Convergence Results

Load Combination	Converged?	Number of Cycles	Displacement Tolerance	Force Tolerance
1	Yes	4	0.00000001	0.00000001
2	Yes	4	0.00000001	0.00053015
3	Yes	5	0.00000001	0.00083148
4	Yes	5	0.00000001	0.00083043
5	Yes	4	0.00000001	0.00043766
6	Yes	5	0.00000001	0.00080188
7	Yes	5	0.00000001	0.00078774
8	Yes	4	0.00000001	0.00074306
9	Yes	5	0.00000001	0.00083211
10	Yes	5	0.00000001	0.00083818
11	Yes	4	0.00000001	0.00090385
12	Yes	5	0.00000001	0.00078591
13	Yes	5	0.00000001	0.00079535
14	Yes	4	0.00000001	0.00009408
15	Yes	5	0.00000001	0.00037876
16	Yes	5	0.00000001	0.00040343
17	Yes	5	0.00000001	0.00040808
18	Yes	5	0.00000001	0.00039332
19	Yes	5	0.00000001	0.00041096
20	Yes	5	0.00000001	0.00040987
21	Yes	5	0.00000001	0.00039247
22	Yes	5	0.00000001	0.00041072
23	Yes	5	0.00000001	0.00040950
24	Yes	5	0.00000001	0.00038515
25	Yes	5	0.00000001	0.00039393
26	Yes	5	0.00000001	0.00039152
27	Yes	4	0.00000001	0.00017242
28	Yes	5	0.00000001	0.00007334
29	Yes	5	0.00000001	0.00007303
30	Yes	4	0.00000001	0.00017540
31	Yes	5	0.00000001	0.00007102
32	Yes	5	0.00000001	0.00006855
33	Yes	4	0.00000001	0.00018319
34	Yes	5	0.00000001	0.00007349
35	Yes	5	0.00000001	0.00007453
36	Yes	4	0.00000001	0.00019851
37	Yes	5	0.00000001	0.00006792

38	Yes	5	0.00000001	0.00006971

Maximum Tower Deflections - Service Wind

Section No.	Elevation ft	Horz. Deflection in	Gov. Load Comb.	Tilt °	Twist °
L1	177 - 129.75	38.835	35	2.137	0.000
L2	133.5 - 120	20.897	35	1.640	0.000
L3	120 - 110	16.594	35	1.365	0.000
L4	110 - 84	13.914	35	1.192	0.000
L5	88.75 - 80	9.118	35	0.960	0.000
L6	80 - 60	7.414	35	0.887	0.000
L7	60 - 39.3	4.167	35	0.663	0.000
L8	45.05 - 20	2.371	35	0.484	0.000
L9	20 - 0	0.459	35	0.221	0.000

Critical Deflections and Radius of Curvature - Service Wind

Elevation ft	Appurtenance	Gov. Load Comb.	Deflection in	Tilt °	Twist °	Radius of Curvature ft
179.000	(2) DB980H90E-M w/ Mount Pipe	35	38.835	2.137	0.000	23880
167.000	RR90-17-00DP w/Mount Pipe	35	34.410	2.058	0.000	11939
154.000	(2) LPA-80063/6CF w/ Mount Pipe	35	28.824	1.936	0.000	5190
137.000	(4) DB844H90 w/ Mount Pipe	35	22.144	1.703	0.000	2984
127.000	(2) AP14/17-880/1940/065D/ADT/XXP w/ Mount Pipe	35	18.723	1.509	0.000	2667
117.000	APXV18-206517S-C w/ Mount Pipe	35	15.750	1.309	0.000	2968
79.000	8225	35	7.230	0.878	0.000	5465

Maximum Tower Deflections - Design Wind

Section No.	Elevation ft	Horz. Deflection in	Gov. Load Comb.	Tilt °	Twist °
L1	177 - 129.75	100.314	10	5.524	0.001
L2	133.5 - 120	54.030	10	4.240	0.001
L3	120 - 110	42.916	10	3.532	0.001
L4	110 - 84	35.988	10	3.083	0.001
L5	88.75 - 80	23.588	10	2.483	0.001
L6	80 - 60	19.183	10	2.296	0.001
L7	60 - 39.3	10.782	10	1.716	0.000
L8	45.05 - 20	6.135	10	1.254	0.000
L9	20 - 0	1.188	10	0.571	0.000

Critical Deflections and Radius of Curvature - Design Wind

Elevation ft	Appurtenance	Gov. Load Comb.	Deflection in	Tilt °	Twist °	Radius of Curvature ft
179.000	(2) DB980H90E-M w/ Mount Pipe	10	100.314	5.524	0.001	9403
167.000	RR90-17-00DP w/Mount Pipe	10	88.902	5.321	0.001	4700
154.000	(2) LPA-80063/6CF w/ Mount Pipe	10	74.490	5.006	0.001	2041
137.000	(4) DB844H90 w/ Mount Pipe	10	57.250	4.404	0.001	1171
127.000	(2) AP14/17-880/1940/065D/ADT/XXP w/ Mount Pipe	10	48.415	3.902	0.001	1043
117.000	APXV18-206517S-C w/ Mount Pipe	10	40.735	3.385	0.001	1157
79.000	8225	10	18.705	2.272	0.001	2120

Compression Checks

Pole Design Data

Section No.	Elevation ft	Size	L ft	L_u ft	Kl/r	F_a ksi	A in^2	Actual P K	Allow. P_a K	Ratio $\frac{P}{P_a}$
L1	177 - 129.75 (1)	TP30.268x22x0.219	47.250	0.000	0.0	39.000	20.413	-9.293	796.091	0.012
L2	129.75 - 120 (2)	TP31.536x29.174x0.25	13.500	0.000	0.0	39.000	24.825	-12.963	968.192	0.013
L3	120 - 110 (3)	TP33.286x31.536x0.394	10.000	0.000	0.0	32.220	41.092	-15.220	1323.990	0.011
L4	110 - 84 (4)	TP37.836x33.286x0.718	26.000	0.000	0.0	19.680	82.639	-22.171	1626.330	0.014
L5	84 - 80 (5)	TP38.045x35.57x0.783	8.750	0.000	0.0	18.840	92.570	-26.700	1744.030	0.015
L6	80 - 60 (6)	TP41.5x38.045x0.785	20.000	0.000	0.0	19.740	101.394	-34.649	2001.530	0.017
L7	60 - 39.3 (7)	TP45.167x41.5x0.734	20.700	0.000	0.0	25.200	101.089	-40.633	2547.440	0.016
L8	39.3 - 20 (8)	TP47.91x42.681x0.768	25.050	0.000	0.0	24.300	114.959	-53.569	2793.500	0.019
L9	20 - 0 (9)	TP51.41x47.91x0.779	20.000	0.000	0.0	24.660	125.140	-62.913	3085.950	0.020

Pole Bending Design Data

Section No.	Elevation ft	Size	Actual M_x kip-ft	Actual f_{bx} ksi	Allow. F_{bx} ksi	Ratio $\frac{f_{bx}}{F_{bx}}$	Actual M_y kip-ft	Actual f_{by} ksi	Allow. F_{by} ksi	Ratio $\frac{f_{by}}{F_{by}}$
L1	177 - 129.75 (1)	TP30.268x22x0.219	453.423	36.736	39.000	0.942	0.000	0.000	39.000	0.000
L2	129.75 - 120 (2)	TP31.536x29.174x0.25	713.115	44.656	39.000	1.145	0.000	0.000	39.000	0.000
L3	120 - 110 (3)	TP33.286x31.536x0.394	927.875	33.520	32.220	1.040	0.000	0.000	32.220	0.000
L4	110 - 84 (4)	TP37.836x33.286x0.718	1423.117	23.352	19.680	1.187	0.000	0.000	19.680	0.000
L5	84 - 80 (5)	TP38.045x35.57x0.783	1642.033	23.452	18.840	1.245	0.000	0.000	18.840	0.000
L6	80 - 60 (6)	TP41.5x38.045x0.785	2173.983	25.899	19.740	1.312	0.000	0.000	19.740	0.000
L7	60 - 39.3 (7)	TP45.167x41.5x0.734	2596.758	29.032	25.200	1.152	0.000	0.000	25.200	0.000
L8	39.3 - 20 (8)	TP47.91x42.681x0.768	3349.258	30.306	24.300	1.247	0.000	0.000	24.300	0.000

Section No.	Elevation ft	Size	Actual M_x kip-ft	Actual f_{bx} ksi	Allow. F_{bx} ksi	Ratio $\frac{f_{bx}}{F_{bx}}$	Actual M_y kip-ft	Actual f_{by} ksi	Allow. F_{by} ksi	Ratio $\frac{f_{by}}{F_{by}}$
L9	20 - 0 (9)	TP51.41x47.91x0.779	3983.767	30.805	24.660	1.249	0.000	0.000	24.660	0.000

Pole Shear Design Data

Section No.	Elevation ft	Size	Actual V K	Actual f_v ksi	Allow. F_v ksi	Ratio $\frac{f_v}{F_v}$	Actual T kip-ft	Actual f_{vt} ksi	Allow. F_{vt} ksi	Ratio $\frac{f_{vt}}{F_{vt}}$
L1	177 - 129.75 (1)	TP30.268x22x0.219	17.396	0.852	26.000	0.066	0.000	0.000	26.000	0.000
L2	129.75 - 120 (2)	TP31.536x29.174x0.25	20.575	0.829	26.000	0.064	0.021	0.001	26.000	0.000
L3	120 - 110 (3)	TP33.286x31.536x0.394	22.165	0.539	21.480	0.050	0.054	0.001	21.480	0.000
L4	110 - 84 (4)	TP37.836x33.286x0.718	24.479	0.296	13.120	0.045	0.129	0.001	13.120	0.000
L5	84 - 80 (5)	TP38.045x35.57x0.783	25.516	0.276	12.560	0.044	0.160	0.001	12.560	0.000
L6	80 - 60 (6)	TP41.5x38.045x0.785	27.627	0.272	13.160	0.041	0.236	0.001	13.160	0.000
L7	60 - 39.3 (7)	TP45.167x41.5x0.734	28.961	0.286	16.800	0.034	0.292	0.002	16.800	0.000
L8	39.3 - 20 (8)	TP47.91x42.681x0.768	31.003	0.270	16.200	0.033	0.382	0.002	16.200	0.000
L9	20 - 0 (9)	TP51.41x47.91x0.779	32.481	0.260	16.440	0.032	0.462	0.002	16.440	0.000

Pole Interaction Design Data

Section No.	Elevation ft	Ratio $\frac{P}{P_a}$	Ratio $\frac{f_{bx}}{F_{bx}}$	Ratio $\frac{f_{by}}{F_{by}}$	Ratio $\frac{f_v}{F_v}$	Ratio $\frac{f_{vt}}{F_{vt}}$	Comb. Stress Ratio	Allow. Stress Ratio	Criteria
L1	177 - 129.75 (1)	0.012	0.942	0.000	0.066	0.000	0.955 ✔	1.333	H1-3+VT ✔
L2	129.75 - 120 (2)	0.013	1.145	0.000	0.064	0.000	1.159 ✔	1.333	H1-3+VT ✔
L3	120 - 110 (3)	0.011	1.040	0.000	0.050	0.000	1.052 ✔	1.333	H1-3+VT ✔
L4	110 - 84 (4)	0.014	1.187	0.000	0.045	0.000	1.201 ✔	1.333	H1-3+VT ✔
L5	84 - 80 (5)	0.015	1.245	0.000	0.044	0.000	1.261 ✔	1.333	H1-3+VT ✔
L6	80 - 60 (6)	0.017	1.312	0.000	0.041	0.000	1.330 ✔	1.333	H1-3+VT ✔
L7	60 - 39.3 (7)	0.016	1.152	0.000	0.034	0.000	1.168 ✔	1.333	H1-3+VT ✔
L8	39.3 - 20 (8)	0.019	1.247	0.000	0.033	0.000	1.267 ✔	1.333	H1-3+VT ✔
L9	20 - 0 (9)	0.020	1.249	0.000	0.032	0.000	1.270 ✔	1.333	H1-3+VT ✔

Section Capacity Table

Section No.	Elevation ft	Component Type	Size	Critical Element	P K	$SF*P_{allow}$ K	% Capacity	Pass Fail
L1	177 - 129.75	Pole	TP30.268x22x0.219	1	-9.293	1061.189	71.6	Pass
L2	129.75 - 120	Pole	TP31.536x29.174x0.25	2	-12.963	1290.600	87.0	Pass
L3	120 - 110	Pole	TP33.286x31.536x0.394	3	-15.220	1764.879	79.0	Pass
L4	110 - 84	Pole	TP37.836x33.286x0.718	4	-22.171	2167.898	90.1	Pass
L5	84 - 80	Pole	TP38.045x35.57x0.783	5	-26.700	2324.792	94.6	Pass
L6	80 - 60	Pole	TP41.5x38.045x0.785	6	-34.649	2668.039	99.8	Pass
L7	60 - 39.3	Pole	TP45.167x41.5x0.734	7	-40.633	3395.737	87.6	Pass
L8	39.3 - 20	Pole	TP47.91x42.681x0.768	8	-53.569	3723.735	95.0	Pass
L9	20 - 0	Pole	TP51.41x47.91x0.779	9	-62.913	4113.571	95.3	Pass
							Summary	
						Pole (L6)	99.8	Pass
						RATING =	**99.8**	**Pass**

Program Version 6.0.4.0 - 1/27/2012

APPENDIX B

BASE LEVEL DRAWING

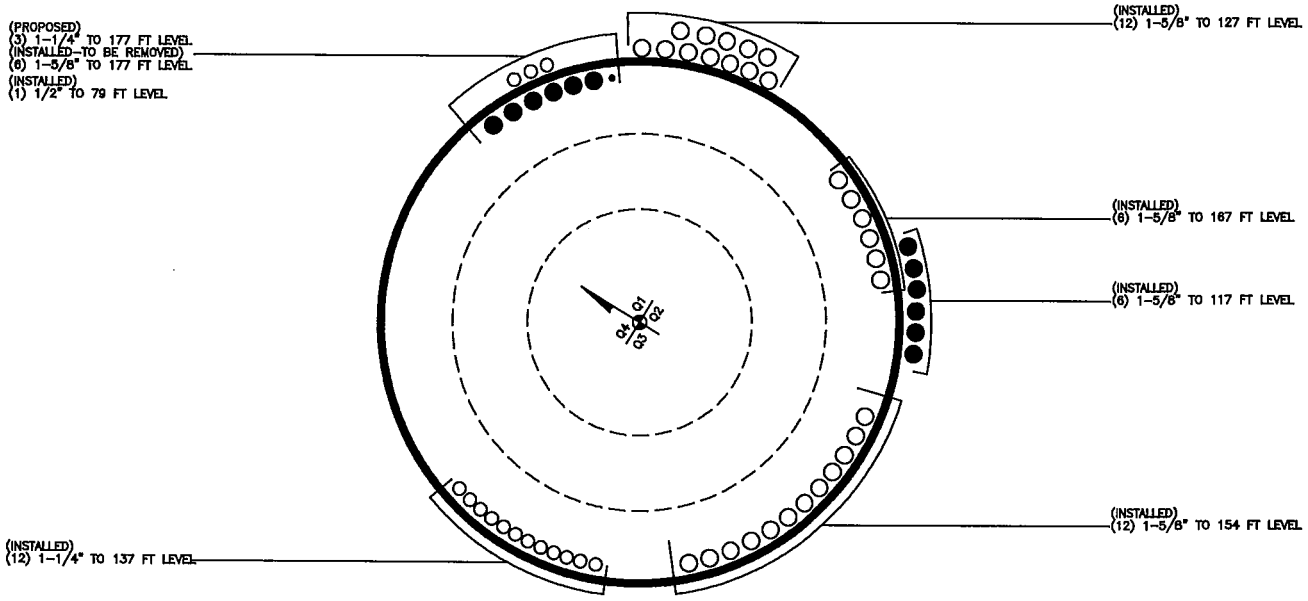

BUSINESS UNIT: 876376

APPENDIX C

ADDITIONAL CALCULATIONS

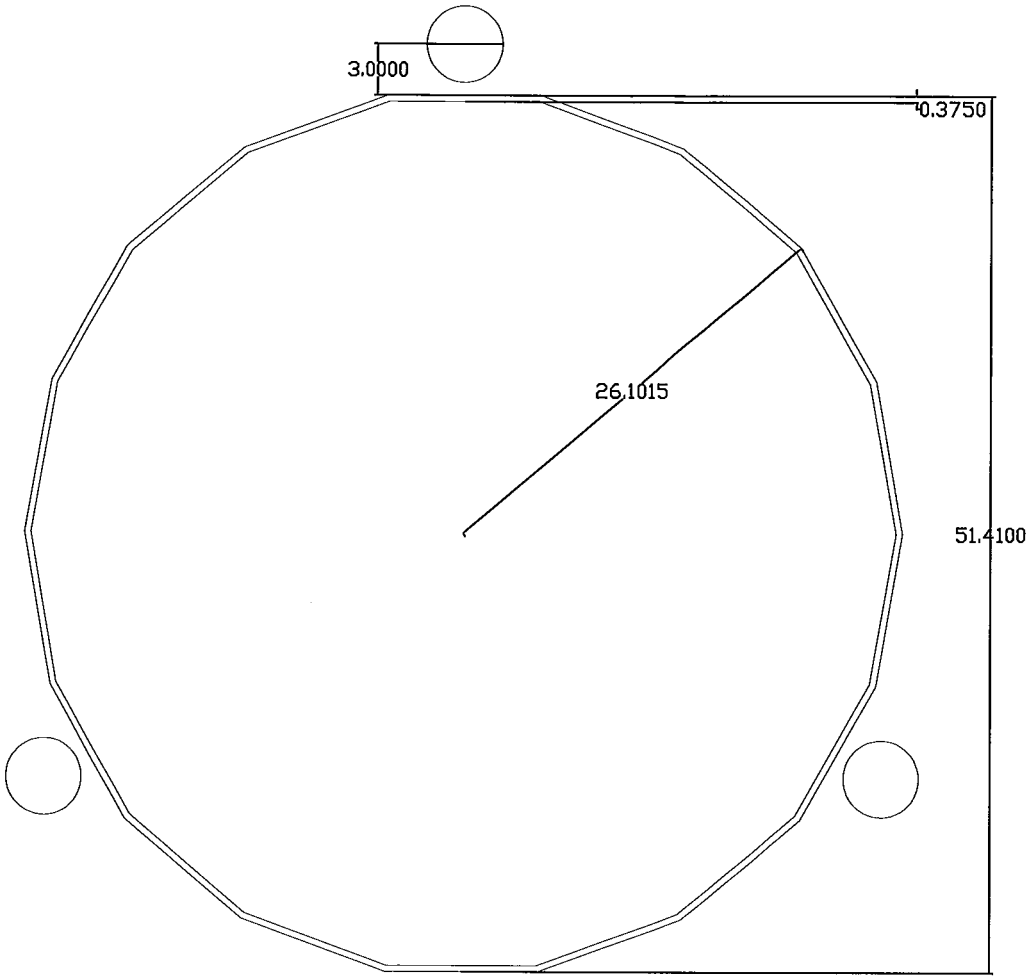

---------- REGIONS ----------

Area: 108.4552
Perimeter: 366.3700
Bounding box: X: -27.1093 -- 27.1093
Y: -25.7050 -- 30.9550
Centroid: X: 0.0000
Y: 0.0000
Moments of inertia: X: 39699.5304
Y: 39699.5304
Product of inertia: XY: 0.0000
Radii of gyration: X: 19.1323
Y: 19.1323
Principal moments and X-Y directions about centroid:
I: 39699.5304 along [0.8170 -0.5766]
J: 39699.5304 along [0.5766 0.8170]

Existing Modified Section 0'-20'
(3) 4 1/2" SR

PROJECT	**83609.002 - Scoville Hill, CT - BU# 876376**		
SUBJECT	**Section 0' - 20'**		
DATE	**06/12/12**	PAGE 1 OF 2	

B&T Engineering, Inc.
1717 S Boulder Ave
Suite 300 Tulsa OK 74119
(918) 587-4630

SSK

Rod Analysis:

Moment	3984		**Controlling Factor:**	**Rod**
I section	39699.5304			
ybar	28.71 in		**Equiv. Thickness**	**.7787 in**
S	1382.78 in^3			
fb	34.57 ksi		**Unity%=**	**95.21 %**
Rod Grade	50.00 ksi			
Lu	33			
Rod Diameter	4.50 in			
K	1			
I (Rod)	20.13 in^4			
A (Rod)	15.90 in^2			
r (Rod)	1.13 in			
Kl/r (Rod)	29.33			
Cc (Rod)	107.00			
Fa (Rod)	27.23 ksi	w/o 1/3 Increase		
Fa (Rod w/ 1/3 Incr	36.31 ksi	w/ 1/3 Increase		
Pa (Rod)	577.53 kips		Rod Unity% =	95.21 %

Check Pole Section:

Pole Fbx	39 ksi	From Risa		
Diameter	51.41 in			
t	.38 in			
Ireinf	39699.53 in^4	Reinforced Moment of Intertia		
ybar	26.10 in			
Spole	1521.05 in^3			
fb	31.43 ksi			
Fb (1 1/3)	52.00 ksi			
			Unity% =	60.44 %

Equivalent Thickness:

ro	25.7050 in			
ri	24.9263 in			
teq	**.7787 in**	**Alter Fy in Risa Model to Match Unity ratio of:**		
			Unity% =	**95.21 %**

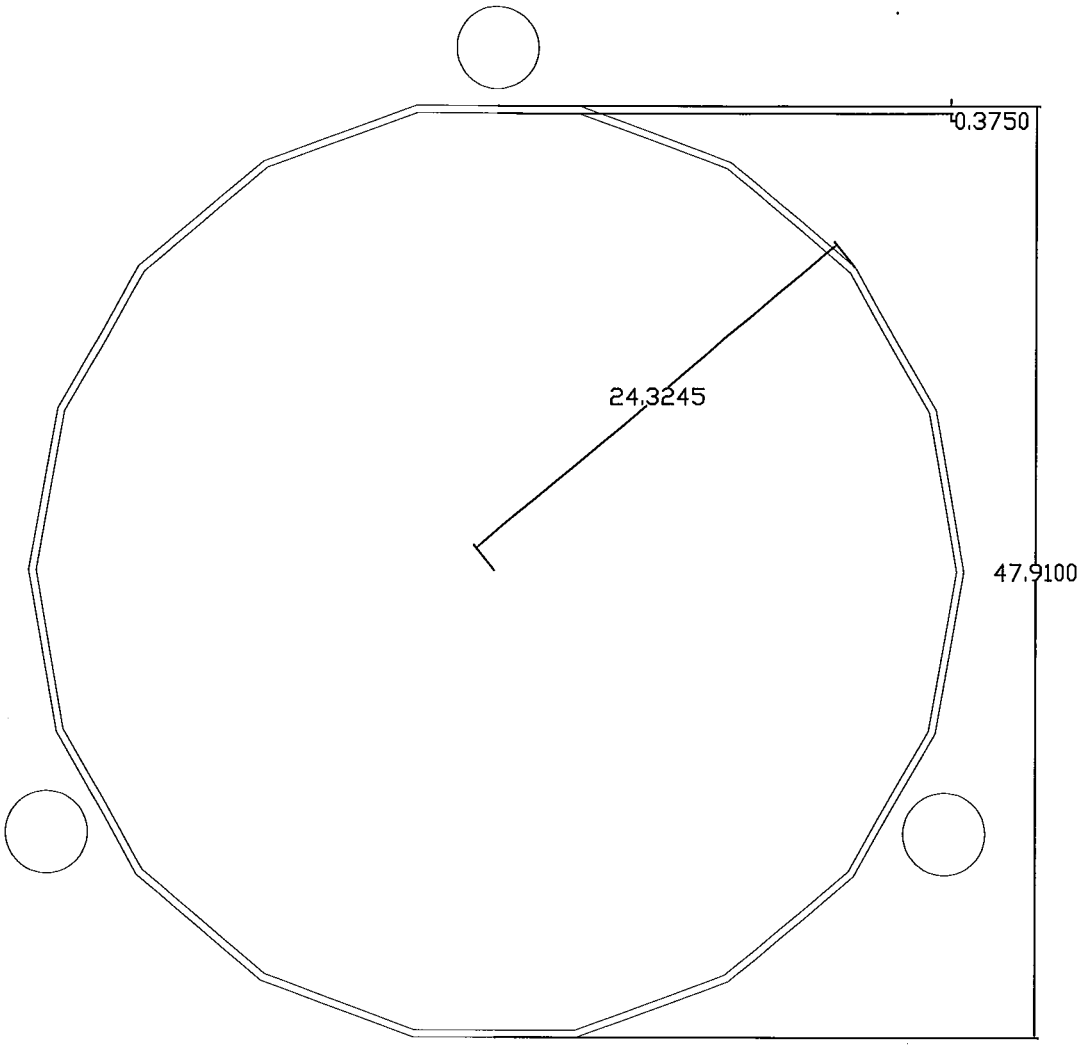

---------- REGIONS ----------

Area: 99.1353
Perimeter: 341.7966
Bounding Box:
Lower Bound: X= -25.4687 Y= -23.9550
Upper Bound: X= 25.4687 Y= 29.0800
Centroid: X= 0.0000 Y= 0.0000
Moments of inertia: X= 31655.5270 Y= 31655.5270
Products of inertia:
XY: -0.0000
Radii of gyration: X= 17.8694 Y= 17.8694

Existing Modified Section 20'-39.3'
(3) 4 1/4" SR

PROJECT	**83609.002 - Scoville Hill, CT - BU# 876376**		
SUBJECT	**Section 20' - 39.3'**		
DATE	**06/12/12**	PAGE 1 OF 2	

B&T Engineering, Inc.
1717 S Boulder Ave
Suite 300 Tulsa OK 74119
(918) 587-4630

SSK

Rod Analysis:

Moment	3350		**Controlling Factor:**	**Rod**
I section	31655.53			
ybar	26.90 in		**Equiv. Thickness**	**.7693 in**
S	1176.79 in^3			
fb	34.16 ksi		**Unity%=**	**94.82 %**
Rod Grade	50.00 ksi			
Lu	33			
Rod Diameter	4.25 in			
K	1			
I (Rod)	16.01 in^4			
A (Rod)	14.19 in^2			
r (Rod)	1.06 in			
Kl/r (Rod)	31.06			
Cc (Rod)	107.00			
Fa (Rod)	27.02 ksi	w/o 1/3 Increase		
Fa (Rod w/ 1/3 Incr	36.03 ksi	w/ 1/3 Increase		
Pa (Rod)	511.10 kips		Rod Unity% =	94.82 %

Check Pole Section:

Pole Fbx	39 ksi	From Risa		
Diameter	47.91 in			
t	.38 in			
Ireinf	31655.53 in^4	Reinforced Moment of Intertia		
ybar	23.96 in			
Spole	1321.46 in^3			
fb	30.42 ksi			
Fb (1 1/3)	52.00 ksi			
			Unity% =	58.50 %

Equivalent Thickness:

ro	23.9550 in			
ri	23.1857 in			
teq	**.7693 in**	**Alter Fy in Risa Model to Match Unity ratio of:**		
			Unity% =	**94.82 %**

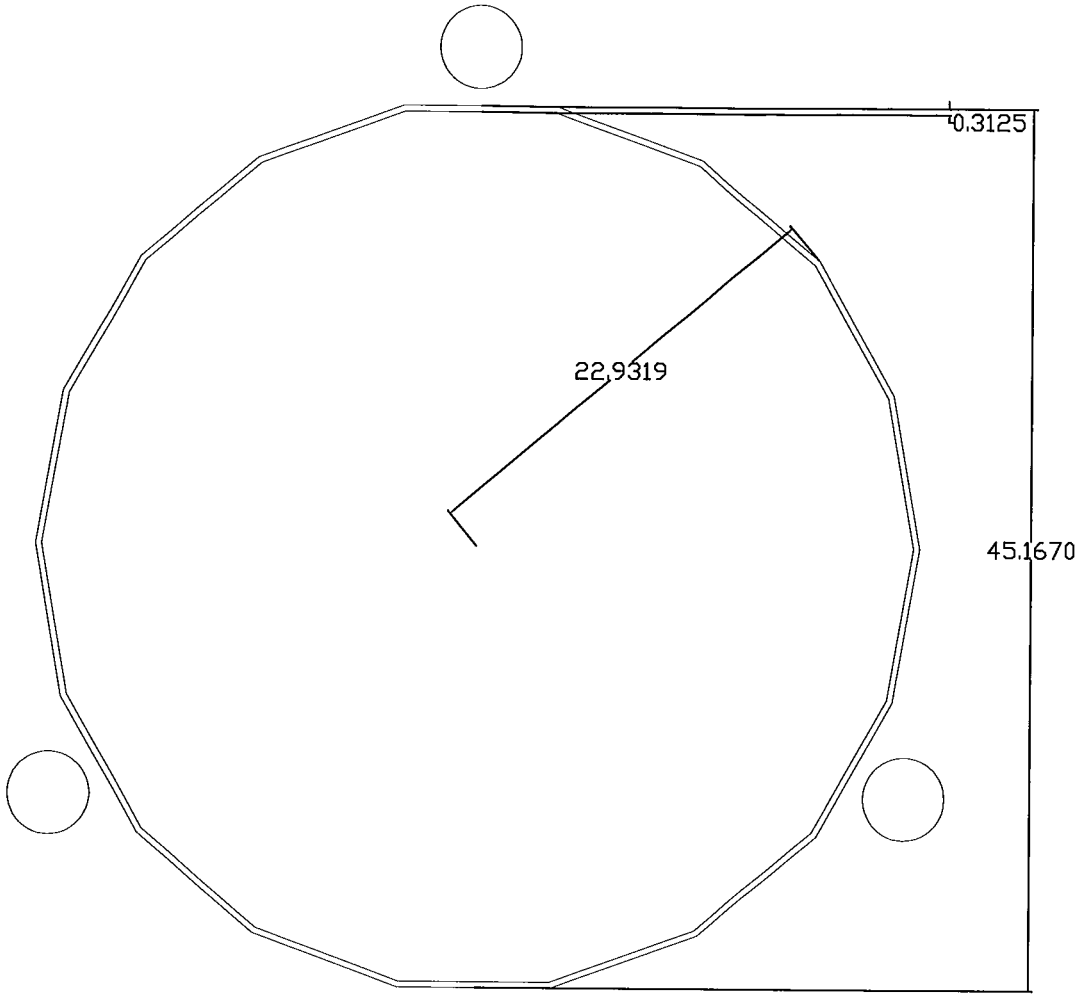

---------- REGIONS ----------

Area: 87.0472
Perimeter: 324.7814
Bounding box: X: -24.2810 -- 24.2810
Y: -22.5835 -- 27.7085
Centroid: X: 0.0000
Y: 0.0000
Moments of inertia: X: 25280.6677
Y: 25280.6677
Product of inertia: XY: 0.0000
Radii of gyration: X: 17.0419
Y: 17.0419
Principal moments and X-Y directions about centroid:
I: 25280.6677 along [0.0436 -0.9990]
J: 25280.6677 along [0.9990 0.0436]

Existing Modified Section 39.3'-60'
(3) 4 1/4" SR

PROJECT	**83609.002 - Scoville Hill, CT - BU# 876376**		
SUBJECT	**Section 39.3' - 60'**		
DATE	**06/12/12**	PAGE 1 OF 2	

B&T Engineering, Inc.
1717 S Boulder Ave
Suite 300 Tulsa OK 74119
(918) 587-4630

SSK

Rod Analysis:

Moment	2597		**Controlling Factor:**	**Rod**
I section	25280.7			
ybar	25.58 in		**Equiv. Thickness**	**.7336 in**
S	988.14 in^3			
fb	31.54 ksi		**Unity%=**	**87.54 %**
Rod Grade	50.00 ksi			
Lu	33			
Rod Diameter	4.25 in			
K	1			
I (Rod)	16.01 in^4			
A (Rod)	14.19 in^2			
r (Rod)	1.06 in			
Kl/r (Rod)	31.06			
Cc (Rod)	107.00			
Fa (Rod)	27.02 ksi	w/o 1/3 Increase		
Fa (Rod w/ 1/3 Incr	36.03 ksi	w/ 1/3 Increase		
Pa (Rod)	511.10 kips		Rod Unity% =	87.54 %

Check Pole Section:

Pole Fbx	39 ksi	From Risa		
Diameter	45.17 in			
t	.31 in			
Ireinf	25280.70 in^4	Reinforced Moment of Intertia		
ybar	22.58 in			
Spole	1119.43 in^3			
fb	27.84 ksi			
Fb (1 1/3)	52.00 ksi			
			Unity% =	53.54 %

Equivalent Thickness:

ro	22.5835 in			
ri	21.8499 in			
teq	**.7336 in**	**Alter Fy in Risa Model to Match Unity ratio of:**		
			Unity% =	**87.54 %**

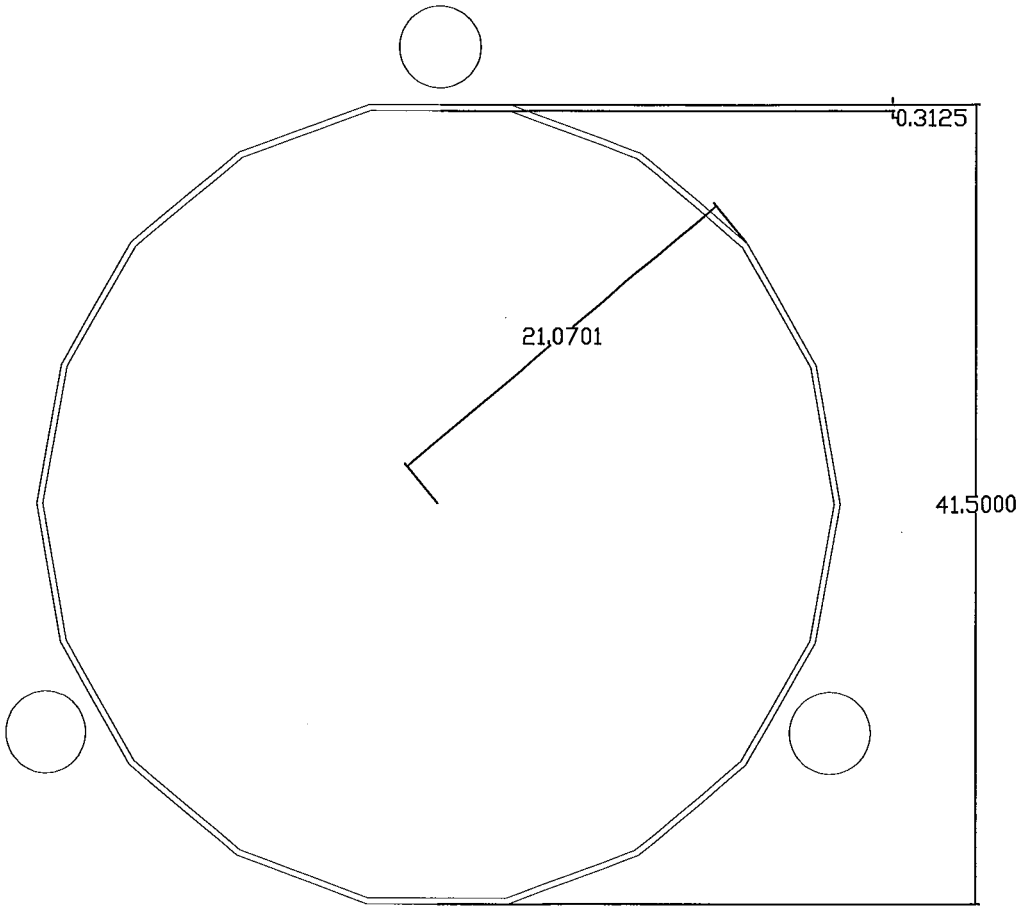

---------- REGIONS ----------

Area: 83.4101
Perimeter: 301.5041
Bounding Box:
Lower Bound: X= -22.6931 Y= -20.7500
Upper Bound: X= 22.6931 Y= 25.8750
Centroid: X= 0.0000 Y= 0.0000
Moments of inertia: X= 20803.8135 Y= 20803.8135
Products of inertia:
XY: 0.0000
Radii of gyration: X= 15.7929 Y= 15.7929

Existing Modified Section 60'-80'
(3) 4 1/4" SR

PROJECT	**83609.002 - Scoville Hill, CT - BU# 876376**		
SUBJECT	**Section 60.0' - 80'**		
DATE	**06/12/12**	PAGE 1 OF 2	

B&T Engineering, Inc.
1717 S Boulder Ave
Suite 300 Tulsa OK 74119
(918) 587-4630

SSK

Rod Analysis:

Moment	2173.8		**Controlling Factor:**	**Rod**
I section	20803.8			
ybar	23.75 in		**Equiv. Thickness**	**.7846 in**
S	875.95 in^3			
fb	29.78 ksi		**Unity%=**	**99.92 %**
Rod Grade	50.00 ksi			
Lu	66			
Rod Diameter	4.25 in			
K	1			
I (Rod)	16.01 in^4			
A (Rod)	14.19 in^2			
r (Rod)	1.06 in			
Kl/r (Rod)	62.12			
Cc (Rod)	107.00			
Fa (Rod)	22.35 ksi	w/o 1/3 Increase		
Fa (Rod w/ 1/3 Incr	29.80 ksi	w/ 1/3 Increase		
Pa (Rod)	422.80 kips		Rod Unity% =	99.92 %

Check Pole Section:

Pole Fbx	39 ksi	From Risa		
Diameter	41.50 in			
t	.31 in			
Ireinf	20803.80 in^4	Reinforced Moment of Intertia		
ybar	20.75 in			
Spole	1002.59 in^3			
fb	26.02 ksi			
Fb (1 1/3)	52.00 ksi			
			Unity% =	50.03 %

Equivalent Thickness:

ro	20.7500 in			
ri	19.9654 in			
teq	**.7846 in**	**Alter Fy in Risa Model to Match Unity ratio of:**		
			Unity% =	**99.92 %**

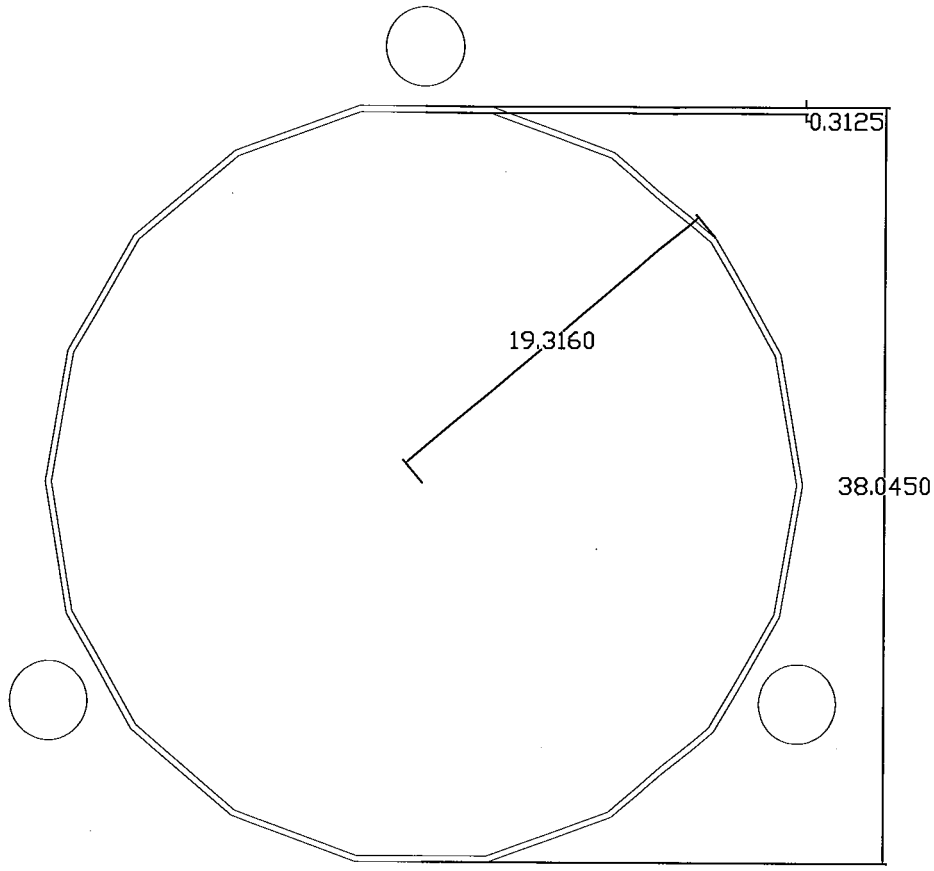

---------- REGIONS ----------

Area: 75.1237
Perimeter: 277.2164
Bounding box: X: -21.0720 -- 21.0720
Y: -19.0225 -- 24.0225
Centroid: X: 0.0000
Y: 0.0000
Moments of inertia: X: 15909.4080
Y: 15909.4080
Product of inertia: XY: 0.0000
Radii of gyration: X: 14.5525
Y: 14.5525
Principal moments and X-Y directions about centroid:
I: 15909.4080 along [0.1075 -0.9942]
J: 15909.4080 along [0.9942 0.1075]

Existing Modified Section 80'-84'
(3) 4" SR

PROJECT	**83609.002 - Scoville Hill, CT - BU# 876376**		
SUBJECT	**Section 80' - 84'**		
DATE	**06/12/12**	PAGE 1 OF 2	

B&T Engineering, Inc.
1717 S Boulder Ave
Suite 300 Tulsa OK 74119
(918) 587-4630

SSK

Rod Analysis:

Moment	1642.03		**Controlling Factor:**	**Rod**
I section	15909.41			
ybar	22.02 in		**Equiv. Thickness**	**.7827 in**
S	722.42 in^3			
fb	27.28 ksi		**Unity%=**	**94.41 %**
Rod Grade	50.00 ksi			
Lu	66			
Rod Diameter	4.00 in			
K	1			
I (Rod)	12.57 in^4			
A (Rod)	12.57 in^2			
r (Rod)	1.00 in			
Kl/r (Rod)	66.00			
Cc (Rod)	107.00			
Fa (Rod)	21.67 ksi	w/o 1/3 Increase		
Fa (Rod w/ 1/3 Incr	28.89 ksi	w/ 1/3 Increase		
Pa (Rod)	363.04 kips		Rod Unity% =	94.41 %

Check Pole Section:

Pole Fbx	39 ksi	From Risa		
Diameter	38.05 in			
t	.31 in			
Ireinf	15909.41 in^4	Reinforced Moment of Intertia		
ybar	19.02 in			
Spole	836.35 in^3			
fb	23.56 ksi			
Fb (1 1/3)	52.00 ksi			
			Unity% =	45.31 %

Equivalent Thickness:

ro	19.0225 in			
ri	18.2398 in			
teq	**.7827 in**	**Alter Fy in Risa Model to Match Unity ratio of:**		
			Unity% =	**94.41 %**

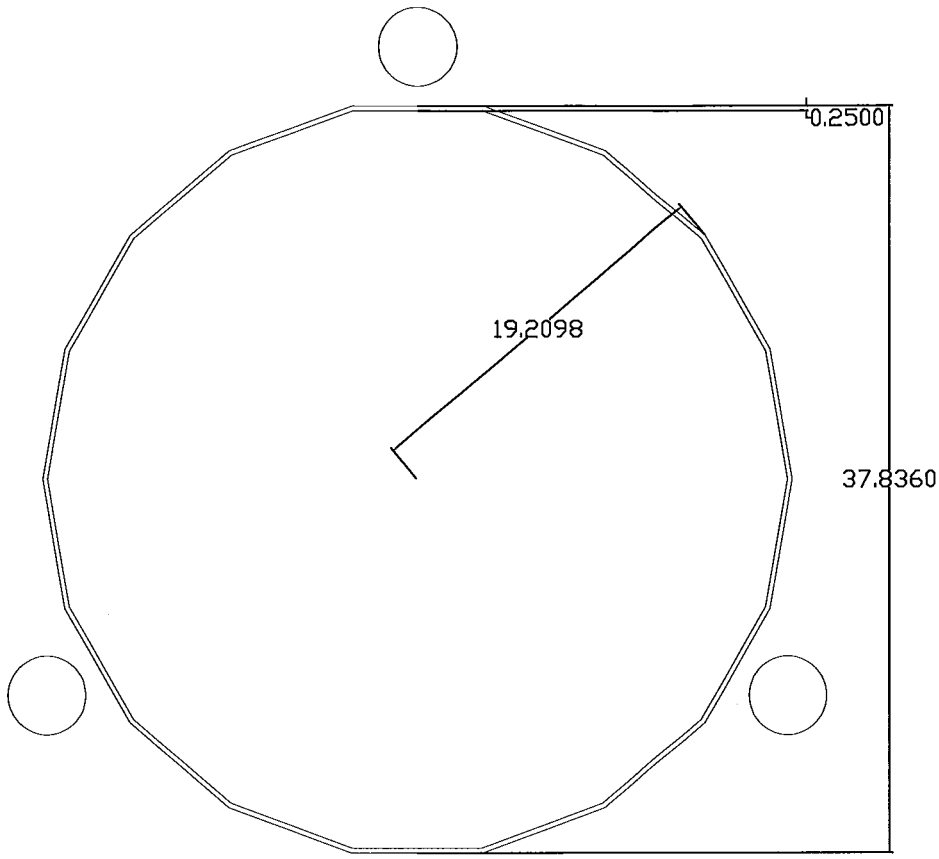

---------- REGIONS ----------

Area:		67.5225		
Perimeter:		276.2864		
Bounding box:	X:	-20.9815	--	20.9815
	Y:	-18.9180	--	23.9180
Centroid:	X:	0.0000		
	Y:	0.0000		
Moments of inertia:	X:	14414.2876		
	Y:	14414.2876		
Product of inertia:	XY:	0.0000		
Radii of gyration:	X:	14.6107		
	Y:	14.6107		

Principal moments and X-Y directions about centroid:
I: 14414.2876 along [0.3921 -0.9199]
J: 14414.2876 along [0.9199 0.3921]

Existing Modified Section 84'-110'
(3) 4" SR

PROJECT	**83609.002 - Scoville Hill, CT - BU# 876376**		
SUBJECT	**Section 84' - 110'**		
DATE	**06/12/12**	PAGE 1 OF 2	

B&T Engineering, Inc.
1717 S Boulder Ave
Suite 300 Tulsa OK 74119
(918) 587-4630

SSK

Rod Analysis:

Moment	1423.2	**Controlling Factor:**	**Rod**
I section	14414.3		
ybar	21.92 in	**Equiv. Thickness**	**.7175 in**
S	657.65 in^3		
fb	25.97 ksi	**Unity%=**	**89.89 %**
Rod Grade	50.00 ksi		
Lu	66		
Rod Diameter	4.00 in		
K	1		
I (Rod)	12.57 in^4		
A (Rod)	12.57 in^2		
r (Rod)	1.00 in		
Kl/r (Rod)	66.00		
Cc (Rod)	107.00		
Fa (Rod)	21.67 ksi	w/o 1/3 Increase	
Fa (Rod w/ 1/3 Incr	28.89 ksi	w/ 1/3 Increase	
Pa (Rod)	363.04 kips	Rod Unity% =	89.89 %

Check Pole Section:

Pole Fbx	39 ksi	From Risa	
Diameter	37.84 in		
t	.25 in		
Ireinf	14414.30 in^4	Reinforced Moment of Intertia	
ybar	18.92 in		
Spole	761.94 in^3		
fb	22.41 ksi		
Fb (1 1/3)	52.00 ksi		
		Unity% =	43.10 %

Equivalent Thickness:

ro	18.9180 in		
ri	18.2005 in		
teq	**.7175 in**	**Alter Fy in Risa Model to Match Unity ratio of:**	
		Unity% =	**89.89 %**

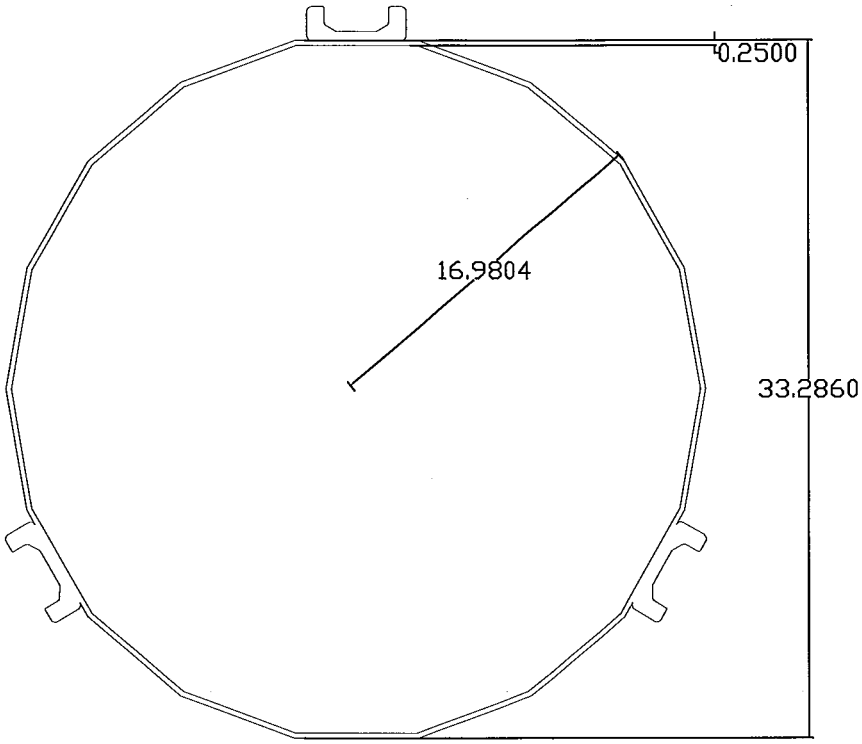

---------- REGIONS ----------

Area:		38.7763
Perimeter:		226.2662
Bounding box:	X:	-16.9186 -- 16.9186
	Y:	-16.6430 -- 18.2572
Centroid:	X:	0.0000
	Y:	0.0000
Moments of inertia:	X:	5501.4339
	Y:	5501.4339
Product of inertia:	XY:	0.0000
Radii of gyration:	X:	11.9112
	Y:	11.9112

Principal moments and X-Y directions about centroid:
I: 5501.4339 along [0.8104 0.5859]
J: 5501.4339 along [-0.5859 0.8104]

Existing Modified Section 110'-120'
(3) MP304

PROJECT	**83609.001 - Scoville Hill, CT - BU# 876376**		
SUBJECT	**MP3 MOI - Equiv Thickness Calc**		
DATE	**06/12/12**	PAGE 1	OF 1

B&T Engineering, Inc.
1325 E. 15th St., Suite 202
Tulsa, OK 74120
(918) 587-4630

SSC

Elevation: 110.00 ft to 120.00 ft

MP3 and Pole Information:

Applied Moment	928.0 k-ft	
Combined MOI	5501.4 in^4	
MP3 Type	MP3-04	
MP3 Grade	65.00 ksi	
MP3 Ultimate Stress	80.00 ksi	
Pole Diameter	33.29 in	
Pole Fb	39.00 ksi	No 1/3 Increase
Bolt Spacing	18.00 in	
Hole Size	1.28	
k	0.8	

MP3 Compression Analysis:

Ybar (MP3)	17.25 in		
S (MP3)	318.87 in^3		
fb (MP3)	34.92 ksi		
ry	1.6950 in		
kl/r	8.4956		
Cc	93.8441		
Fa	50.76 ksi	Unity% =	68.8 %

MP3 Tension Analysis:

Ag	4.13 in^2		
An	3.58 in^2		
U	0.959		
Ae	3.43 in^2		
Ta (Yielding)	214.76 k		
Ta (Rupture)	183.08 k		
Ft (Equiv)	44.33 ksi	Unity% =	78.8 %

Pole Analysis:

Ybar (Pole)	16.64 in		
S (Pole)	330.56 in^3		
fb (Pole)	33.69 ksi		
Fb (Pole)	52.00 ksi	Unity% =	64.8 %

Equivalent Thickness:

ro	16.64 in	
ri	16.25 in	
teq	**.3936 in**	**Adjust Fy in Risa such that Bending Unity% Matches**

78.8 %

Square, Stiffened / Unstiffened Base Plate, Any Rod Material - Rev. F /G

Assumptions: 1) Rod groups at corners. Total # rods divisible by 4. Maximum total # of rods = 48 (12 per Corner).
2) Rod Spacing = Straight Center-to-Center distance between any (2) adjacent rods (same corner)
3) Clear space between bottom of leveling nut and top of concrete **not** exceeding (1)*(Rod Diameter)

Site Data

BU#: *876376*
Site Name: *Scoville, CT*
App #: *151585; Rev: 0*

Anchor Rod Data		
Qty:	16	
Diam:	2.25	in
Rod Material:	A615-J	
Yield, Fy:	75	ksi
Strength, Fu:	100	ksi
Bolt Circle:	58	in
Anchor Spacing:	6	in

Plate Data		
W=Side:	57	in
Thick:	2.75	in
Grade:	55	ksi
Clip Distance:	0	in

Stiffener Data (Welding at both sides)		
Configuration:	Unstiffened	
Weld Type:		**
Groove Depth:		in **
Groove Angle:		degrees
Fillet H. Weld:		<-- Disregard
Fillet V. Weld:		in
Width:		in
Height:		in
Thick:		in
Notch:		in
Grade:		ksi
Weld str.:		ksi

Pole Data		
Diam:	51.41	in
Thick:	0.375	in
Grade:	65	ksi
# of Sides:	18	"0" IF Round

Stress Increase Factor		
ASD ASIF:	1.333	

Base Reactions		
TIA Revision:	F	
Unfactored Moment, M:	3984	ft-kips
Unfactored Axial, P:	63	kips
Unfactored Shear, V:	32	kips

Anchor Rod Results

TIA F --> Maximum Rod Tension	202.1 Kips
Allowable Tension:	195.0 Kips
Anchor Rod Stress Ratio:	103.7% **Pass**

Base Plate Results Flexural Check

Base Plate Stress:	56.4 ksi
Allowable PL Bending Stress:	55.0 ksi
Base Plate Stress Ratio:	102.5% **Pass**

PL Ref. Data
Yield Line (in): 29.20
Max PL Length: 29.20

N/A - Unstiffened
Stiffener Results

Horizontal Weld :	N/A
Vertical Weld:	N/A
Plate Flex+Shear, fb/Fb+(fv/Fv)^2:	N/A
Plate Tension+Shear, ft/Ft+(fv/Fv)^2:	N/A
Plate Comp. (AISC Bracket):	N/A

Pole Results

Pole Punching Shear Check:	N/A

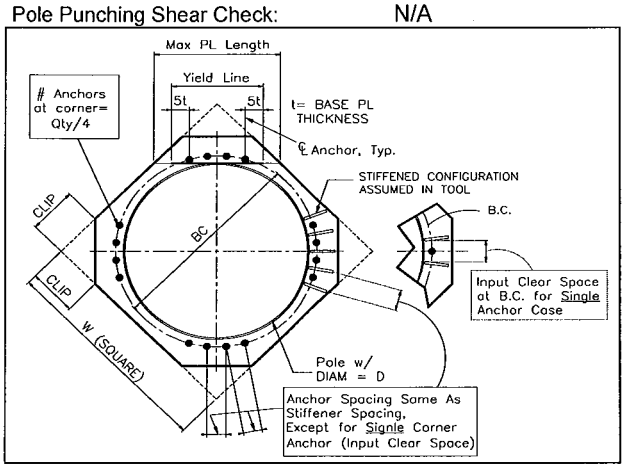

** Note: for complete joint penetration groove welds the groove depth must be exactly 1/2 the stiffener thickness for calculation purposes

PROJECT	88609.002 - Scoville hill
SUBJECT	Foundation
DATE	6/12/12
PAGE	1 OF 2

B+T GRP
1717 S. Boulder, Suite 300
Tulsa, OK 74119
(918) 587-4630

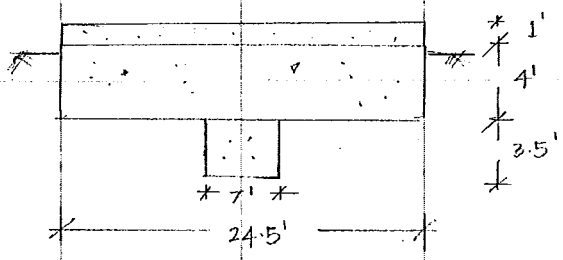

$M = 3984$ K-ft

$V = 32^K$

Axial $= 63^K$

[Assume 55" ϕ box opening at Top 1']

① Check for overturning :-

$M_O = 3984 + 32 \times 4 = 4112$ K-ft

$$M_R = [4 \times 24.5 \times 24.5 \times 0.150] \times \frac{24.5}{2} + [3.5 \times 7 \times 7 \times 0.15] \times \frac{24.5}{2}$$

$$+ 63 \times \frac{24.5}{2} + \left[1 \times 24.5 \times 24.5 - \frac{\pi}{4} \times 4.6^2 \times 1\right] \times 0.15 \times \frac{24.5}{2}$$

$$= 4411.8 + 315.13 + 771.8 + 1072.4 = 6571.1 \text{ K-ft}$$

$$\frac{M_R}{M_O} = \frac{6571.1}{4112} = 1.6 > 1.50$$

$\Rightarrow$ 93.8 %

Check for bearing :-

Total load $= P = 4 \times 24.5 \times 24.5 \times 0.15 + 3.5 \times 7 \times 7 \times 0.15$

$+ \left[1 \times 24.5 \times 24.5 - \frac{\pi}{4} \times 4.6^2 \times 1\right] \times 0.15 + 63$

$= 536.4^K$

$M_O = 4112$ K-ft

$$e = \frac{M_O}{P} = \frac{4112}{536.4} = 7.7' > \frac{B}{6} = \frac{24.5}{6} = 4.08'$$

PROJECT	83609.002 – Scoville bill
SUBJECT	Foundation
DATE	6/12/12
PAGE	2 OF 2

B+T GRP
1717 S. Boulder, Suite 300
Tulsa, OK 74119
(918) 587-4630

$$e' = \frac{B}{2} - e = \frac{24.5'}{2} - 7.7 = 4.55'$$

$$q_{max} = \frac{P}{\frac{1}{2} \times 3e' \times B} = \frac{536.4}{0.5 \times 3 \times 4.55 \times 24.5} = 3.21 \ K/ft^2$$

$$< q_{max} = 20 \ K/ft^2$$

$\therefore$ Safe in bearing

June 12, 2012

Mr. James Williams
Crown Castle
3530 Toringdon WaySuite 300
Charlotte, NC 28277
(704) 405-6521

B&T Engineering, Inc.
1717 S. Boulder, Suite 300
Tulsa, OK 74119
(918) 587-4630
ctuttle@btengineering.com

Subject:	**Structural Analysis Report**	
Carrier Designation:	***Sprint* Co-Locate**	
	Carrier Site Number:	CT33XC111
	Carrier Site Name:	N/A
Crown Castle Designation:	**Crown Castle BU Number:**	876376
	Crown Castle Site Name:	Scoville Hill / Harwinton Rod
	Crown Castle JDE Job Number:	189143
	Crown Castle Work Order Number:	498947
	Crown Castle Application Number:	151585 Rev. 0
Engineering Firm Designation:	**B&T Engineering, Inc. Project Number:**	83609.002
Site Data:	**123 Campville Hill Rd., Harwinton, Litchfield County, CT** **Latitude *41° 44' 12.12"*, Longitude *-73° 5' 50.86"*** **177 Foot - Monopole Tower**	

Dear Mr. Williams,

B&T Engineering, Inc. is pleased to submit this **"Structural Analysis Report"** to determine the structural integrity of the above mentioned tower. This analysis has been performed in accordance with the Crown Castle Structural 'Statement of Work' and the terms of Crown Castle Purchase Order Number 468201, in accordance with application 151585, revision 0.

The purpose of the analysis is to determine acceptability of the tower stress level. Based on our analysis we have determined the tower stress level for the structure and foundation, under the following load case, to be:

LC5: Existing + Proposed for current applicant (1 Active Applicant) **Sufficient Capacity**
Note: See Table 1 and Table 2 for the proposed and existing/reserved loading, respectively.

The analysis has been performed in accordance with the TIA/EIA-222-F standard and the 2003 IBC; 2003 IRC (State Building Code, 2005 CT supplement) based upon a wind speed of 80.5 mph fastest mile.

All modifications and equipment proposed in this report shall be installed in accordance with the attached drawings for the determined available structural capacity to be effective.

We at *B&T Engineering, Inc.* appreciate the opportunity of providing our continuing professional services to you and Crown Castle. If you have any questions or need further assistance on this or any other projects please give us a call.

Respectfully submitted by:

STATE OF CONNECTICUT ★ CHAD TUTTLE No. 23924 LICENSED PROFESSIONAL ENGINEER ★

6/12/12

Shardul Kadam, E.I.
Project Engineer

Chad E. Tuttle, P.E
President

tnxTower Report - version 6.0.4.0

TABLE OF CONTENTS

1) INTRODUCTION

2) ANALYSIS CRITERIA
- Table 1 - Proposed Antenna and Cable Information
- Table 2 - Existing and Reserved Antenna and Cable Information
- Table 3 - Design Antenna and Cable Information

3) ANALYSIS PROCEDURE
- Table 4 - Documents Provided
- 3.1) Analysis Method
- 3.2) Assumptions

4) ANALYSIS RESULTS
- Table 5 - Section Capacity (Summary)
- Table 6 - Tower Component Stresses vs. Capacity
- 4.1) Recommendations

5) APPENDIX A
- tnxTower Output

6) APPENDIX B
- Base Level Drawing

7) APPENDIX C
- Additional Calculations

1) INTRODUCTION

This tower is a 177 ft Monopole tower designed by Summit in August of 2000. The tower was originally designed for a wind speed of 85 mph per TIA/EIA-222-F.This tower has been modified multiple times and those modifications have been incorporated in this analysis except the anchor rod modification by Global signal.

2) ANALYSIS CRITERIA

The structural analysis was performed for this tower in accordance with the requirements of TIA/EIA-222-F Structural Standards for Steel Antenna Towers and Antenna Supporting Structures using a fastest mile wind speed of 80.5 mph with no ice, 28.1 mph with 1 inch ice thickness and 50 mph under service loads.

Table 1 - Proposed Antenna and Cable Information

Mounting Level (ft)	Center Line Elevation (ft)	Number of Antennas	Antenna Manufacturer	Antenna Model	Number of Feed Lines	Feed Line Size (in)	Note
179.0	179.0	1	--	Platform Mount [LP 713-1]	3	1 1/4	1
	177.0	3	Alcatel Lucent	1900MHz RRH (65MHz)			
		3	Alcatel Lucent	800 EXTERNAL NOTCH FILTER			
		3	Alcatel Lucent	800MHZ RRH			
		9	Rfs Celwave	ACU-A20-N			
		3	Rfs Celwave	APXVSPP18-C-A20			

Notes:
1. Adding Handrails to the existing platform [LP-712-1]

Table 2 - Existing and Reserved Antenna and Cable Information

Mounting Level (ft)	Center Line Elevation (ft)	Number of Antennas	Antenna Manufacturer	Antenna Model	Number of Feed Lines	Feed Line Size (in)	Note
179.0	178.0	**6**	**Decibel**	**DB980H90E-M**	**6**	**1 5/8**	**2**
167.0	169.0	3	Ems Wireless	RR90-17-00DP	6	1 5/8	1
		6	Ericsson	KRY 112 75/1 TMA			
	167.0	1	--	T-Arm Mount [TA 602-3]			
154.0	156.0	1	Antel	BXA-171063-8BF-EDIN-2	12	1 5/8	1
		2	Antel	BXA-171085-8BF-EDIN-2			
		3	Antel	BXA-70063-6CF-2			
		2	Antel	LPA-80063/6CF			
		4	Antel	LPA-80080/6CF			
		6	Rfs Celwave	FD9R6004/2C-3L			
	154.0	1	--	Platform Mount [LP 303-1]			
137.0	139.0	12	Decibel	DB844H90	12	1 1/4	1
	137.0	1	--	Platform Mount [LP 712-1]			
127.0	129.0	6	Kathrein	AP14/17-880/1940/065D/ADT/XXP	12	1 5/8	1
		6	Powerwave	LGP 17201			
	127.0	1	--	Platform Mount [LP 303-1]			

Mounting Level (ft)	Center Line Elevation (ft)	Number of Antennas	Antenna Manufacturer	Antenna Model	Number of Feed Lines	Feed Line Size (in)	Note
117.0	117.0	3	Rfs Celwave	APXV18-206517S-C	6	1 5/8	1
		3	--	Flush Mounts			
79.0	80.0	1	Spectracom	8225	1	1/2	1
	79.0	1	--	Side Arm Mount [SO 701-1]			

Notes:
1) Existing Equipment
2) **Equipment to be Removed**

Table 3 - Design Antenna and Cable Information

Mounting Level (ft)	Center Line Elevation (ft)	Number of Antennas	Antenna Manufacturer	Antenna Model	Number of Feed Lines	Feed Line Size (in)
177	177	1	--	Low Profile Platform	--	--
		12	DAPA	48000		
167	167	1	--	Clamp On Low Profile Platform	--	--
		12	DAPA	48000		
157	157	1	--	Clamp On Low Profile Platform	--	--
		12	DAPA	48000		
75	75	1	--	GPS Antenna W/ Mount	--	--

3) ANALYSIS PROCEDURE

Table 4 - Documents Provided

Document	Remarks	Reference	Source
Online Application	Sprint co-locate revision# 0	151585	CCI Sites
Tower Manufacturer Drawings	Summit Manufacturing, Job No. 10633	1613568	CCI Sites
Foundation Drawings	Summit Manufacturing, Job No. 10633	1613623	CCI Sites
Geotech Report	Criscuolo Shepard Associates, File No. 99900.24	1531965	CCI Sites
Tower Modifications	Hutter Trankina Engineering Dated: 8/20/2004	1634507	CCI Sites
	Modification/PMI By B&T Engineering, Project No. 80185	2461484	CCI Sites
Antenna Configuration	Crown CAD Package	Date:5/30/2012	CCI Sites

3.1) Analysis Method

tnxTower (version 6.0.4.0), a commercially available analysis software package, was used to create a three-dimensional model of the tower and calculate member stresses for various loading cases. Selected output from the analysis is included in Appendix A.

3.2) Assumptions

1) Tower and structures were built in accordance with the manufacturer's specifications.
2) The tower and structures have been maintained in accordance with the manufacturer's specification.
3) The configuration of antennas, transmission cables, mounts and other appurtenances are as specified in Tables 1 and 2 and the referenced drawings.
4) When applicable, transmission cables are considered as structural components for calculating wind loads as allowed by TIA/EIA-222-F.
5) Mount areas and weights are assumed based on photographs provided.

This analysis may be affected if any assumptions are not valid or have been made in error. B&T Engineering, Inc. should be notified to determine the effect on the structural integrity of the tower.

4) ANALYSIS RESULTS

Table 5 - Section Capacity (Summary)

Section No.	Elevation (ft)	Component Type	Size	Critical Element	P (K)	SF*P_allow (K)	% Capacity	Pass / Fail
L1	177 - 129.75	Pole	TP30.268x22x0.219	1	-9.055	1061.189	64.0	Pass
L2	129.75 - 120	Pole	TP31.536x29.174x0.25	2	-12.634	1290.600	79.3	Pass
L3	120 - 110	Pole	TP33.286x31.536x0.394	3	-14.822	1764.879	72.6	Pass
L4	110 - 84	Pole	TP37.836x33.286x0.718	4	-21.642	2167.898	83.9	Pass
L5	84 - 80	Pole	TP38.045x35.57x0.783	5	-26.119	2324.792	88.4	Pass
L6	80 - 60	Pole	TP41.5x38.045x0.785	6	-33.943	2668.039	93.8	Pass
L7	60 - 39.3	Pole	TP45.167x41.5x0.734	7	-39.831	3395.737	82.7	Pass
L8	39.3 - 20	Pole	TP47.91x42.681x0.768	8	-52.608	3723.735	90.1	Pass
L9	20 - 0	Pole	TP51.41x47.91x0.779	9	-61.849	4113.571	90.6	Pass
							Summary	
						Pole (L6)	93.8	Pass
						RATING =	**93.8**	**Pass**

Table 6 - Tower Component Stresses vs. Capacity – LC3

Notes	Component	Elevation (ft)	% Capacity	Pass / Fail
1	Anchor Rods	Base	98.5	Pass
1	Base Plate	Base	97.5	Pass
1	Base Foundation	Base	89.4	Pass

Structure Rating (max from all components) =	**98.5%**

Notes:
1) See additional documentation in "Appendix C – Additional Calculations" for calculations supporting the % capacity consumed.
2) Capacities up to 100% are considered acceptable based on analysis methods used.
3) The percent capacities shown above (excluding foundations) include the 1/3 increase in allowable stresses as allowed by TIA/EIA-222-F.

4.1) Recommendations

The tower and its foundation have sufficient capacity to carry the existing and proposed loads. No modifications are required at this time.

APPENDIX A

TNXTOWER OUTPUT

Section	1	2	3	4	5	6	7	8	9
Length (ft)	47.250	13.500	10.000	26.000	8.750	20.000	20.700	25.050	20.000
Number of Sides	18	18	18	18	18	18	18	18	18
Thickness (in)	0.219	0.250	0.394	0.718	0.783	0.785	0.734	0.768	0.779
Socket Length (ft)	3.750			4.750			5.750		
Top Dia (in)	22.000	29.174	31.536	33.286	35.570	38.045	41.500	42.681	47.910
Bot Dia (in)	30.268	31.536	33.286	37.836	38.045	41.500	45.167	47.910	51.410
Grade	A607-65			53.7 ksi	32.8 ksi	31.4 ksi	32.9 ksi	42.0 ksi	40.6 ksi 41.1 ksi
Weight (K)	2.9	1.1	1.4	7.0	2.7	6.6	7.0	9.3	8.2
									46.1

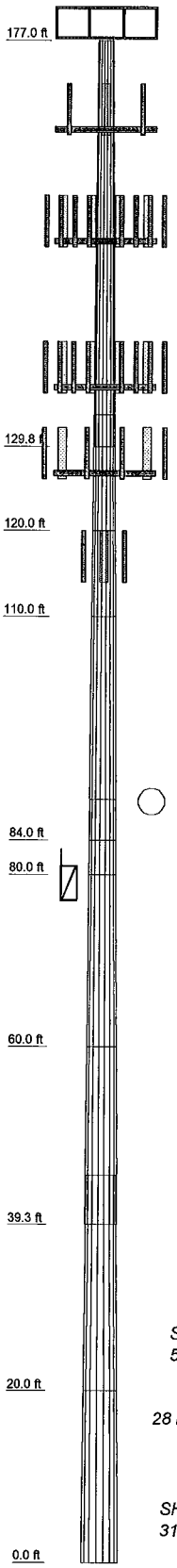

DESIGNED APPURTENANCE LOADING

TYPE	ELEVATION	TYPE	ELEVATION
1900MHz RRH (65MHz) (P)	179	BXA-171085-8BF-EDIN-2 w/ Mount Pipe (E)	154
1900MHz RRH (65MHz) (P)	179	BXA-70063-6CF-2 w/ Mount Pipe (E)	154
1900MHz RRH (65MHz) (P)	179	BXA-70063-6CF-2 w/ Mount Pipe (E)	154
800 EXTERNAL NOTCH FILTER (P)	179	BXA-70063-6CF-2 w/ Mount Pipe (E)	154
800 EXTERNAL NOTCH FILTER (P)	179	(2) FD9R6004/2C-3L (E)	154
800 EXTERNAL NOTCH FILTER (P)	179	(2) FD9R6004/2C-3L (E)	154
800MHZ RRH (P)	179	(2) FD9R6004/2C-3L (E)	154
800MHZ RRH (P)	179	Platform Mount [LP 303-1] (E)	154
800MHZ RRH (P)	179	(4) DB844H90 w/ Mount Pipe (E)	137
(3) ACU-A20-N (P)	179	(4) DB844H90 w/ Mount Pipe (E)	137
(3) ACU-A20-N (P)	179	(4) DB844H90 w/ Mount Pipe (E)	137
(3) ACU-A20-N (P)	179	Platform Mount [LP 712-1] (E)	137
APXVSPP18-C-A20 w/ Mount Pipe (P)	179	(2) AP14/17-880/1940/065D/ADT/XXP w/ Mount Pipe (E)	127
APXVSPP18-C-A20 w/ Mount Pipe (P)	179	(2) AP14/17-880/1940/065D/ADT/XXP w/ Mount Pipe (E)	127
APXVSPP18-C-A20 w/ Mount Pipe (P)	179	(2) AP14/17-880/1940/065D/ADT/XXP w/ Mount Pipe (E)	127
Platform Mount [LP 713-1] (P)	179	(2) LGP 17201 (E)	127
RR90-17-00DP w/Mount Pipe (E)	167	(2) LGP 17201 (E)	127
RR90-17-00DP w/Mount Pipe (E)	167	(2) LGP 17201 (E)	127
RR90-17-00DP w/Mount Pipe (E)	167	Platform Mount [LP 303-1] (E)	127
(2) KRY 112 75/1 TMA (E)	167	APXV18-206517S-C w/ Mount Pipe (E)	117
(2) KRY 112 75/1 TMA (E)	167	APXV18-206517S-C w/ Mount Pipe (E)	117
(2) KRY 112 75/1 TMA (E)	167	APXV18-206517S-C w/ Mount Pipe (E)	117
T-Arm Mount [TA 602-3] (E)	167	8225 (E)	79
(3) 6' x 2" Mount Pipe (E)	167	Side Arm Mount [SO 701-1] (E)	79
(3) 6' x 2" Mount Pipe (E)	167		
(3) 6' x 2" Mount Pipe (E)	167		
(2) LPA-80063/6CF w/ Mount Pipe (E)	154		
(2) LPA-80080/6CF w/ Mount Pipe (E)	154		
(2) LPA-80080/6CF w/ Mount Pipe (E)	154		
BXA-171063-8BF-EDIN-2 w/ Mount Pipe (E)	154		
BXA-171085-8BF-EDIN-2 w/ Mount Pipe (E)	154		

MATERIAL STRENGTH

GRADE	Fy	Fu	GRADE	Fy	Fu
A607-65	65 ksi	80 ksi	32.9 ksi	33 ksi	65 ksi
53.7 ksi	54 ksi	65 ksi	42.0 ksi	42 ksi	65 ksi
32.8 ksi	33 ksi	65 ksi	40.6 ksi	41 ksi	65 ksi
31.4 ksi	31 ksi	65 ksi	41.1 ksi	41 ksi	65 ksi

TOWER DESIGN NOTES

1. Tower is located in Litchfield County, Connecticut.
2. Tower designed for a 80 mph basic wind in accordance with the TIA/EIA-222-F Standard.
3. Tower is also designed for a 28 mph basic wind with 1.00 in ice. Ice is considered to increase in thickness with height.
4. Deflections are based upon a 50 mph wind.
5. TOWER RATING: 93.8%

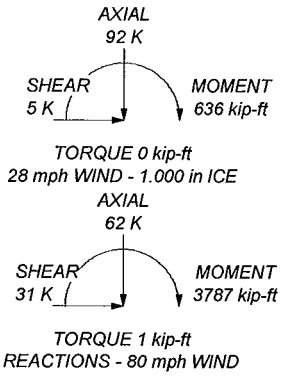

B&T Engineering.Inc.
1717 S.Boulder, Suite 300
Tulsa, OK 74119
Phone: (918) 587-4630
FAX: (918) 587-4630

Job: 83609.002- SCOVILLE HILL / HARWINTON ROD, CT (BU# 87637		
Project: 177' Summit MP/ App ID: 151585; Rev: 0		
Client: Crown Castle	Drawn by: skadam	App'd:
Code: TIA/EIA-222-F	Date: 06/12/12	Scale: NTS
Path:		Dwg No. E-1

TIA/EIA-222-F - 80 mph/28 mph 1.000 in Ice

Vx ---------- Vz

Maximum Values

Mx ---------- Mz

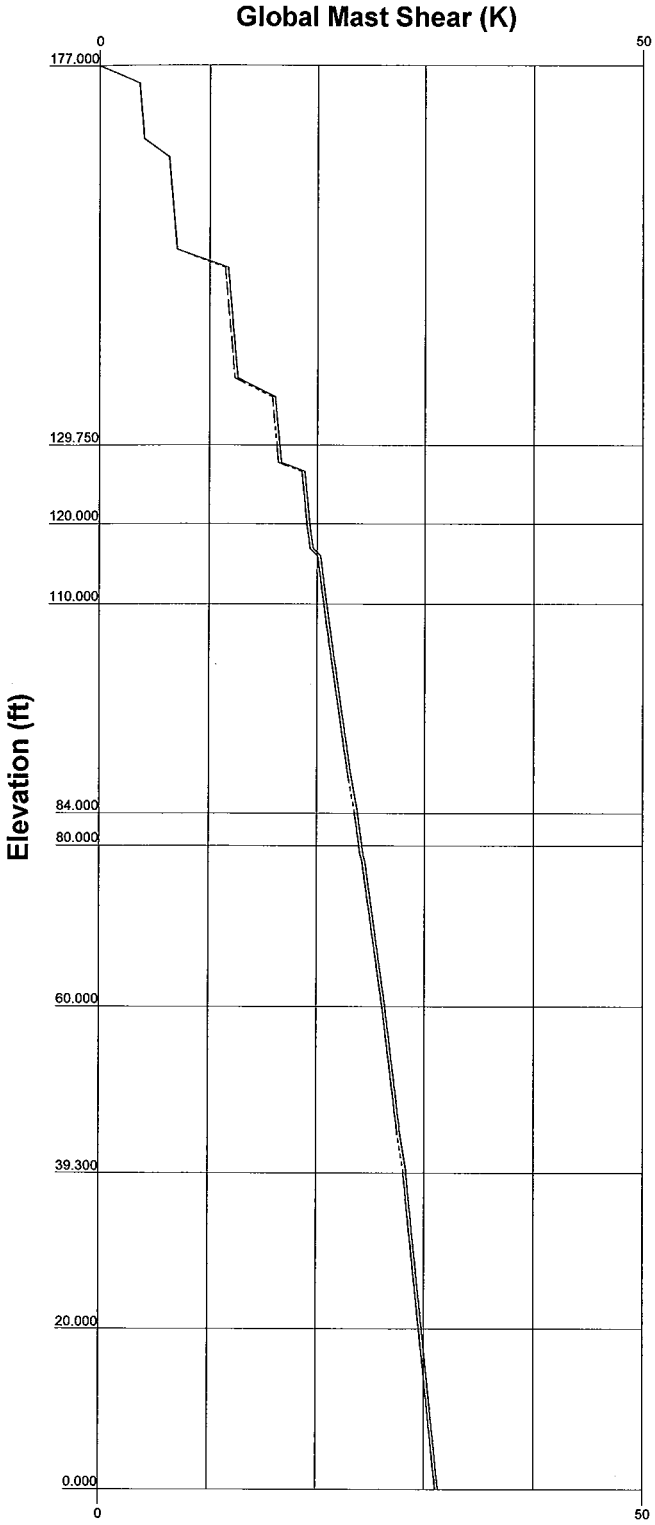

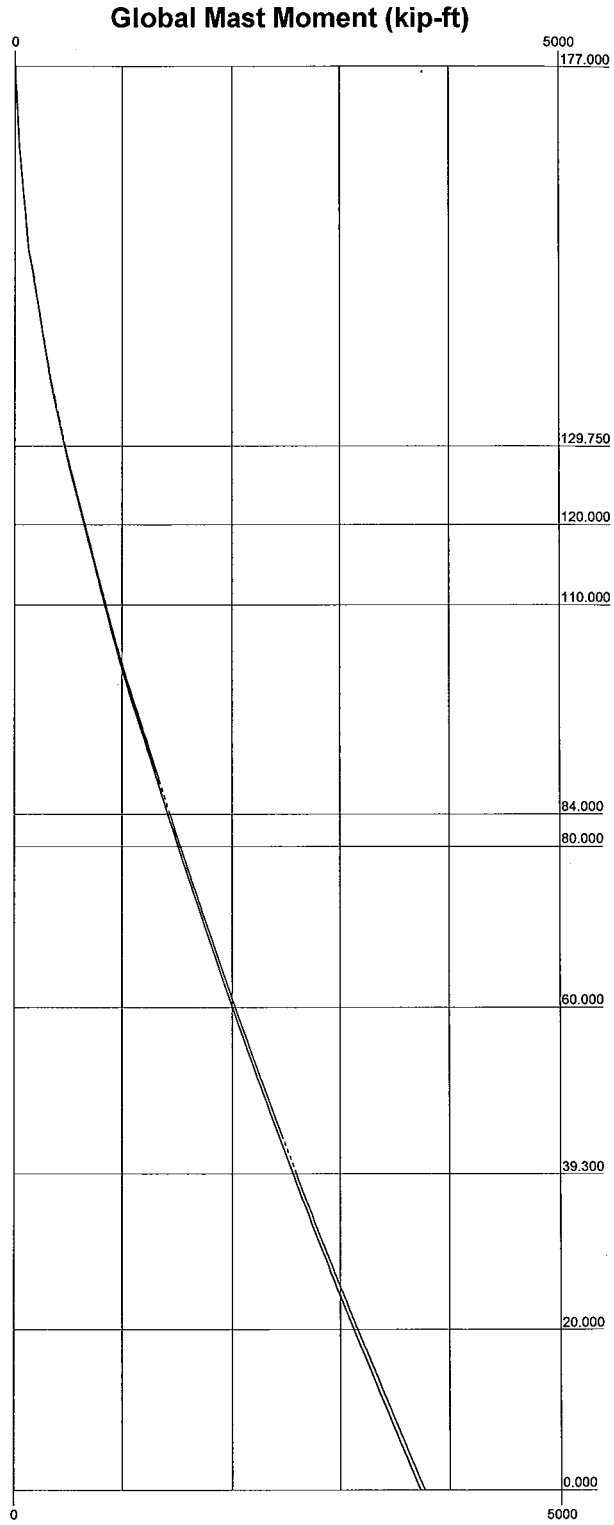

B&T Engineering.Inc.
1717 S.Boulder, Suite 300
Tulsa, OK 74119
Phone: (918) 587-4630
FAX: (918) 587-4630

Job: 83609.002- SCOVILLE HILL / HARWINTON ROD, CT (BU# 87637		
Project: 177' Summit MP/ App ID: 151585; Rev: 0		
Client: Crown Castle	Drawn by: skadam	App'd:
Code: TIA/EIA-222-F	Date: 06/12/12	Scale: NTS
Path: S:\B&T Engineering\Projects\Crown Castle\83609_87637\5_Scoville\Engineering\BU\SA\002\83609_002_Scoville_CT_Final.en		Dwg No. E-4

TIA/EIA-222-F - Service - 50 mph

Maximum Values

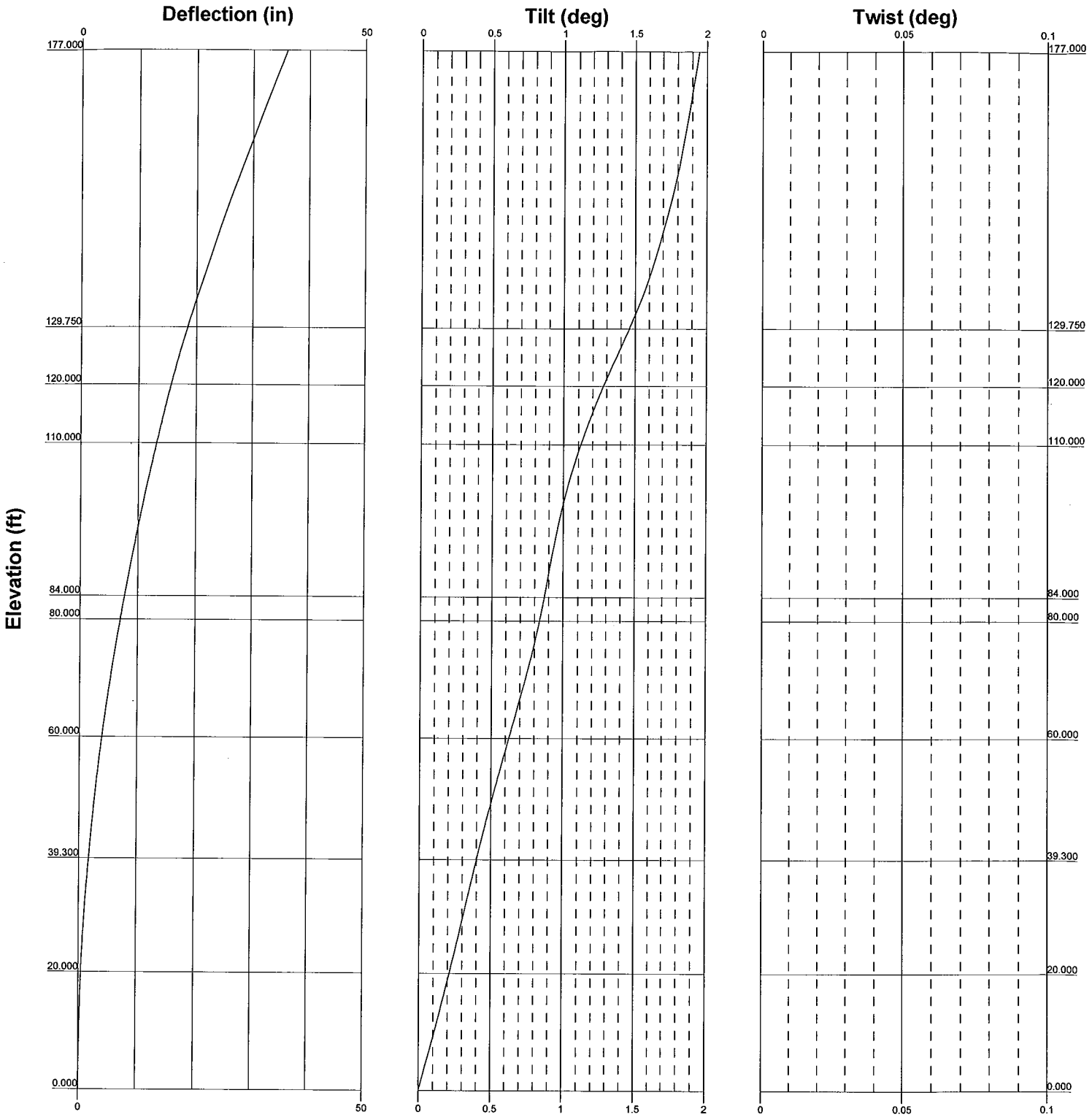

B&T Engineering.Inc.
1717 S.Boulder, Suite 300
Tulsa, OK 74119
Phone: (918) 587-4630
FAX: (918) 587-4630

Job: ***83609.002- SCOVILLE HILL / HARWINTON ROD, CT (BU# 87637***		
Project: ***177' Summit MP/ App ID: 151585; Rev: 0***		
Client: Crown Castle	Drawn by: skadam	App'd:
Code: TIA/EIA-222-F	Date: 06/12/12	Scale: NTS
Path: S:\B&T Engineering\Projects\Crown Castle\83609_876376_Scoville\Engineering\BU\A\002\83609_002_Scoville_CT_Foster\		Dwg No. E-5

Tower Input Data

There is a pole section.
This tower is designed using the TIA/EIA-222-F standard.
The following design criteria apply:

Tower is located in Litchfield County, Connecticut.
Basic wind speed of 80 mph.
Nominal ice thickness of 1.000 in.
Ice thickness is considered to increase with height.
Ice density of 56.000 pcf.
A wind speed of 28 mph is used in combination with ice.
Temperature drop of 50.000 °F.
Deflections calculated using a wind speed of 50 mph.
A non-linear (P-delta) analysis was used.
Pressures are calculated at each section.
Stress ratio used in pole design is 1.333.
Local bending stresses due to climbing loads, feedline supports, and appurtenance mounts are not considered.

Tapered Pole Section Geometry

Section	Elevation ft	Section Length ft	Splice Length ft	Number of Sides	Top Diameter in	Bottom Diameter in	Wall Thickness in	Bend Radius in	Pole Grade
L1	177.000-129.750	47.250	3.750	18	22.000	30.268	0.219	0.875	A607-65 (65 ksi)
L2	129.750-120.000	13.500	0.000	18	29.174	31.536	0.250	1.000	A607-65 (65 ksi)
L3	120.000-110.000	10.000	0.000	18	31.536	33.286	0.394	1.574	53.7 ksi (54 ksi)
L4	110.000-84.000	26.000	4.750	18	33.286	37.836	0.718	2.870	32.8 ksi (33 ksi)
L5	84.000-80.000	8.750	0.000	18	35.570	38.045	0.783	3.131	31.4 ksi (31 ksi)
L6	80.000-60.000	20.000	0.000	18	38.045	41.500	0.785	3.138	32.9 ksi (33 ksi)
L7	60.000-39.300	20.700	5.750	18	41.500	45.167	0.734	2.934	42.0 ksi (42 ksi)
L8	39.300-20.000	25.050	0.000	18	42.681	47.910	0.768	3.073	40.6 ksi (41 ksi)
L9	20.000-0.000	20.000		18	47.910	51.410	0.779	3.115	41.1 ksi (41 ksi)

Tapered Pole Properties

Section	Tip Dia. in	Area in^2	I in^4	r in	C in	I/C in^3	J in^4	It/Q in^2	w in	w/t
L1	22.339	15.126	906.645	7.732	11.176	81.124	1814.482	7.565	3.487	15.937
	30.735	20.868	2380.622	10.667	15.376	154.826	4764.376	10.436	4.942	22.587
L2	30.290	22.951	2425.878	10.268	14.820	163.684	4854.947	11.478	4.695	18.779
	32.022	24.825	3069.973	11.107	16.020	191.630	6143.985	12.415	5.110	20.441

Section	Tip Dia. in	Area in^2	I in^4	r in	C in	I/C in^3	J in^4	It/Q in^2	w in	w/t
L3	32.022	38.906	4767.116	11.056	16.020	297.567	9540.504	19.457	4.858	12.341
	33.799	41.092	5616.764	11.677	16.909	332.170	11240.918	20.550	5.166	13.124
L4	33.799	74.170	9939.386	11.562	16.909	587.806	19891.850	37.092	4.596	6.405
	38.420	84.532	14714.230	13.177	19.221	765.541	29447.821	42.274	5.396	7.521
L5	37.483	86.421	13212.728	12.349	18.069	731.220	26442.843	43.219	4.883	6.238
	38.632	92.570	16238.604	13.228	19.327	840.209	32498.574	46.294	5.318	6.795
L6	38.632	92.790	16275.533	13.227	19.327	842.120	32572.481	46.404	5.315	6.774
	42.140	101.394	21235.808	14.454	21.082	1007.296	42499.559	50.707	5.923	7.549
L7	42.140	94.922	19930.160	14.472	21.082	945.364	39886.544	47.470	6.013	8.196
	45.864	103.461	25806.692	15.774	22.945	1124.728	51647.341	51.740	6.658	9.076
L8	44.558	102.208	22683.914	14.879	21.682	1046.207	45397.677	51.114	6.160	8.017
	48.649	114.959	32276.834	16.735	24.338	1326.176	64596.138	57.490	7.080	9.215
L9	48.649	116.489	32692.099	16.732	24.338	1343.238	65427.215	58.256	7.062	9.069
	52.203	125.140	40529.550	17.974	26.116	1551.888	81112.430	62.582	7.678	9.86

Tower Elevation ft	Gusset Area (per face) ft^2	Gusset Thickness in	Gusset Grade	Adjust. Factor A_f	Adjust. Factor A_r	Weight Mult.	Double Angle Stitch Bolt Spacing Diagonals in	Double Angle Stitch Bolt Spacing Horizontals in
L1 177.000-129.750				1	1	1		
L2 129.750-120.000				1	1	1		
L3 120.000-110.000				1	1	1		
L4 110.000-84.000				1	1	1		
L5 84.000-80.000				1	1	1		
L6 80.000-60.000				1	1	1		
L7 60.000-39.300				1	1	1		
L8 39.300-20.000				1	1	1		
L9 20.000-0.000				1	1	1		

Feed Line/Linear Appurtenances - Entered As Area

Description	Face or Leg	Allow Shield	Component Type	Placement ft	Total Number		C_AA_A ft^2/ft	Weight klf
HB114-1-0813U4-M5J(1 1/4") (P(Outside Shielded))	B	No	CaAa (Out Of Face)	177.000 - 5.000	3	No Ice	0.000	0.001
						1/2" Ice	0.000	0.002
						1" Ice	0.000	0.004
						2" Ice	0.000	0.010
						4" Ice	0.000	0.028
****								
1 5/8 (E)	C	No	Inside Pole	167.000 - 5.000	6	No Ice	0.000	0.001
						1/2" Ice	0.000	0.001
						1" Ice	0.000	0.001

Description	Face or Leg	Allow Shield	Component Type	Placement ft	Total Number		C_AA_A ft^2/ft	Weight klf
						2" Ice	0.000	0.001
						4" Ice	0.000	0.001
****								
1 5/8	C	No	Inside Pole	154.000 - 5.000	12	No Ice	0.000	0.001
(E)						1/2" Ice	0.000	0.001
						1" Ice	0.000	0.001
						2" Ice	0.000	0.001
						4" Ice	0.000	0.001
****								
1 1/4	A	No	Inside Pole	137.000 - 5.000	12	No Ice	0.000	0.001
(E)						1/2" Ice	0.000	0.001
						1" Ice	0.000	0.001
						2" Ice	0.000	0.001
						4" Ice	0.000	0.001
****								
1 5/8	B	No	CaAa (Out Of Face)	127.000 - 110.000	2	No Ice	0.198	0.001
(E (Outside))						1/2" Ice	0.298	0.003
						1" Ice	0.398	0.005
						2" Ice	0.598	0.011
						4" Ice	0.998	0.030
1 5/8	B	No	CaAa (Out Of Face)	127.000 - 110.000	10	No Ice	0.000	0.001
(E (Outside-Shielded))						1/2" Ice	0.000	0.003
						1" Ice	0.000	0.005
						2" Ice	0.000	0.011
						4" Ice	0.000	0.030
1 5/8	B	No	CaAa (Out Of Face)	110.000 - 5.000	12	No Ice	0.000	0.001
(E (Outside-Shielded))						1/2" Ice	0.000	0.003
						1" Ice	0.000	0.005
						2" Ice	0.000	0.011
						4" Ice	0.000	0.030
****								
1 5/8	C	No	CaAa (Out Of Face)	117.000 - 5.000	6	No Ice	0.000	0.001
(E (Outside-Shielded))						1/2" Ice	0.000	0.003
						1" Ice	0.000	0.005
						2" Ice	0.000	0.011
						4" Ice	0.000	0.030
****								
1/2	B	No	Inside Pole	79.000 - 5.000	1	No Ice	0.000	0.000
(E)						1/2" Ice	0.000	0.000
						1" Ice	0.000	0.000
						2" Ice	0.000	0.000
						4" Ice	0.000	0.000
****								
****								
4.5" SR (CaAa)	C	No	CaAa (Out Of Face)	20.000 - 0.000	1	No Ice	0.450	0.000
(E)						1/2" Ice	0.550	0.000
						1" Ice	0.650	0.000
						2" Ice	0.850	0.000
						4" Ice	1.250	0.000
4.5" SR (CaAa)	B	No	CaAa (Out Of Face)	20.000 - 0.000	1	No Ice	0.450	0.000
(E)						1/2" Ice	0.550	0.000
						1" Ice	0.650	0.000
						2" Ice	0.850	0.000
						4" Ice	1.250	0.000
4.25" SR (CaAa)	C	No	CaAa (Out Of Face)	80.000 - 20.000	1	No Ice	0.425	0.000
(E)						1/2" Ice	0.525	0.000
						1" Ice	0.625	0.000
						2" Ice	0.825	0.000
						4" Ice	1.225	0.000
4.25" SR (CaAa)	B	No	CaAa (Out Of Face)	80.000 - 20.000	1	No Ice	0.425	0.000
(E)						1/2" Ice	0.525	0.000

Description	Face or Leg	Allow Shield	Component Type	Placement ft	Total Number		C_AA_A ft^2/ft	Weight klf
						1" Ice	0.625	0.000
						2" Ice	0.825	0.000
						4" Ice	1.225	0.000
4" SR (CaAa) (E)	C	No	CaAa (Out Of Face)	110.000 - 80.000	1	No Ice	0.400	0.000
						1/2" Ice	0.500	0.000
						1" Ice	0.600	0.000
						2" Ice	0.800	0.000
						4" Ice	1.200	0.000
4" SR (CaAa) (E)	B	No	CaAa (Out Of Face)	110.000 - 80.000	1	No Ice	0.400	0.000
						1/2" Ice	0.500	0.000
						1" Ice	0.600	0.000
						2" Ice	0.800	0.000
						4" Ice	1.200	0.000
MP3-04 (E)	C	No	CaAa (Out Of Face)	120.000 - 110.000	1	No Ice	0.268	0.014
						1/2" Ice	0.352	0.016
						1" Ice	0.435	0.018
						2" Ice	0.602	0.022
						4" Ice	0.935	0.036

Feed Line/Linear Appurtenances Section Areas

Tower Section	Tower Elevation ft	Face	A_R ft^2	A_F ft^2	C_AA_A In Face ft^2	C_AA_A Out Face ft^2	Weight K
L1	177.000-129.750	A	0.000	0.000	0.000	0.000	0.057
		B	0.000	0.000	0.000	0.000	0.170
		C	0.000	0.000	0.000	0.000	0.535
L2	129.750-120.000	A	0.000	0.000	0.000	0.000	0.077
		B	0.000	0.000	0.000	2.772	0.122
		C	0.000	0.000	0.000	0.000	0.183
L3	120.000-110.000	A	0.000	0.000	0.000	0.000	0.079
		B	0.000	0.000	0.000	3.960	0.161
		C	0.000	0.000	0.000	2.683	0.372
L4	110.000-84.000	A	0.000	0.000	0.000	0.000	0.206
		B	0.000	0.000	0.000	10.400	0.418
		C	0.000	0.000	0.000	10.400	0.649
L5	84.000-80.000	A	0.000	0.000	0.000	0.000	0.032
		B	0.000	0.000	0.000	1.600	0.064
		C	0.000	0.000	0.000	1.600	0.100
L6	80.000-60.000	A	0.000	0.000	0.000	0.000	0.158
		B	0.000	0.000	0.000	8.500	0.326
		C	0.000	0.000	0.000	8.500	0.499
L7	60.000-39.300	A	0.000	0.000	0.000	0.000	0.164
		B	0.000	0.000	0.000	8.798	0.338
		C	0.000	0.000	0.000	8.798	0.517
L8	39.300-20.000	A	0.000	0.000	0.000	0.000	0.153
		B	0.000	0.000	0.000	8.203	0.315
		C	0.000	0.000	0.000	8.203	0.482
L9	20.000-0.000	A	0.000	0.000	0.000	0.000	0.119
		B	0.000	0.000	0.000	9.000	0.245
		C	0.000	0.000	0.000	9.000	0.374

Feed Line/Linear Appurtenances Section Areas - With Ice

Tower Section	Tower Elevation ft	Face or Leg	Ice Thickness in	A_R ft^2	A_F ft^2	C_AA_A In Face ft^2	C_AA_A Out Face ft^2	Weight K
L1	177.000-129.750	A	1.202	0.000	0.000	0.000	0.000	0.057
		B		0.000	0.000	0.000	0.000	0.768
		C		0.000	0.000	0.000	0.000	0.535
L2	129.750-120.000	A	1.173	0.000	0.000	0.000	0.000	0.077
		B		0.000	0.000	0.000	6.136	0.655
		C		0.000	0.000	0.000	0.000	0.183
L3	120.000-110.000	A	1.162	0.000	0.000	0.000	0.000	0.079
		B		0.000	0.000	0.000	8.606	0.836
		C		0.000	0.000	0.000	4.619	0.609
L4	110.000-84.000	A	1.138	0.000	0.000	0.000	0.000	0.206
		B		0.000	0.000	0.000	16.316	2.117
		C		0.000	0.000	0.000	16.316	1.348
L5	84.000-80.000	A	1.115	0.000	0.000	0.000	0.000	0.032
		B		0.000	0.000	0.000	2.510	0.326
		C		0.000	0.000	0.000	2.510	0.207
L6	80.000-60.000	A	1.094	0.000	0.000	0.000	0.000	0.158
		B		0.000	0.000	0.000	12.877	1.555
		C		0.000	0.000	0.000	12.877	1.005
L7	60.000-39.300	A	1.050	0.000	0.000	0.000	0.000	0.164
		B		0.000	0.000	0.000	13.144	1.528
		C		0.000	0.000	0.000	13.144	1.007
L8	39.300-20.000	A	1.000	0.000	0.000	0.000	0.000	0.153
		B		0.000	0.000	0.000	12.255	1.424
		C		0.000	0.000	0.000	12.255	0.938
L9	20.000-0.000	A	1.000	0.000	0.000	0.000	0.000	0.119
		B		0.000	0.000	0.000	13.000	1.040
		C		0.000	0.000	0.000	13.000	0.702

Feed Line Center of Pressure

Section	Elevation ft	CP_X in	CP_Z in	CP_X Ice in	CP_Z Ice in
L1	177.000-129.750	0.000	0.000	0.000	0.000
L2	129.750-120.000	0.335	0.193	0.622	0.359
L3	120.000-110.000	0.133	0.400	0.332	0.635
L4	110.000-84.000	0.000	0.472	0.000	0.633
L5	84.000-80.000	0.000	0.478	0.000	0.644
L6	80.000-60.000	0.000	0.507	0.000	0.669
L7	60.000-39.300	0.000	0.516	0.000	0.680
L8	39.300-20.000	0.000	0.522	0.000	0.691
L9	20.000-0.000	0.000	0.554	0.000	0.720

Discrete Tower Loads

Description	Face or Leg	Offset Type	Offsets: Horz Lateral Vert ft ft ft	Azimuth Adjustment °	Placement ft		C_AA_A Front ft^2	C_AA_A Side ft^2	Weight K
1900MHz RRH (65MHz) (P)	C	From Leg	4.000 0.000 -2.000	0.000	179.000	No Ice	2.698	2.771	0.060
						1/2" Ice	2.936	3.011	0.084
						1" Ice	3.183	3.260	0.111
						2" Ice	3.703	3.784	0.176
						4" Ice	4.846	4.935	0.354
1900MHz RRH (65MHz) (P)	B	From Leg	4.000 0.000 -2.000	0.000	179.000	No Ice	2.698	2.771	0.060
						1/2" Ice	2.936	3.011	0.084
						1" Ice	3.183	3.260	0.111
						2" Ice	3.703	3.784	0.176
						4" Ice	4.846	4.935	0.354
1900MHz RRH (65MHz) (P)	A	From Leg	4.000 0.000 -2.000	0.000	179.000	No Ice	2.698	2.771	0.060
						1/2" Ice	2.936	3.011	0.084
						1" Ice	3.183	3.260	0.111
						2" Ice	3.703	3.784	0.176
						4" Ice	4.846	4.935	0.354
800 EXTERNAL NOTCH FILTER (P)	C	From Leg	4.000 0.000 -2.000	0.000	179.000	No Ice	0.770	0.375	0.011
						1/2" Ice	0.890	0.465	0.017
						1" Ice	1.018	0.563	0.024
						2" Ice	1.301	0.787	0.045
						4" Ice	1.970	1.337	0.114
800 EXTERNAL NOTCH FILTER (P)	B	From Leg	4.000 0.000 -2.000	0.000	179.000	No Ice	0.770	0.375	0.011
						1/2" Ice	0.890	0.465	0.017
						1" Ice	1.018	0.563	0.024
						2" Ice	1.301	0.787	0.045
						4" Ice	1.970	1.337	0.114
800 EXTERNAL NOTCH FILTER (P)	A	From Leg	4.000 0.000 -2.000	0.000	179.000	No Ice	0.770	0.375	0.011
						1/2" Ice	0.890	0.465	0.017
						1" Ice	1.018	0.563	0.024
						2" Ice	1.301	0.787	0.045
						4" Ice	1.970	1.337	0.114
800MHZ RRH (P)	C	From Leg	4.000 0.000 -2.000	0.000	179.000	No Ice	2.490	2.068	0.053
						1/2" Ice	2.706	2.271	0.074
						1" Ice	2.931	2.481	0.098
						2" Ice	3.407	2.928	0.157
						4" Ice	4.462	3.927	0.318
800MHZ RRH (P)	B	From Leg	4.000 0.000 -2.000	0.000	179.000	No Ice	2.490	2.068	0.053
						1/2" Ice	2.706	2.271	0.074
						1" Ice	2.931	2.481	0.098
						2" Ice	3.407	2.928	0.157
						4" Ice	4.462	3.927	0.318
800MHZ RRH (P)	A	From Leg	4.000 0.000 -2.000	0.000	179.000	No Ice	2.490	2.068	0.053
						1/2" Ice	2.706	2.271	0.074
						1" Ice	2.931	2.481	0.098
						2" Ice	3.407	2.928	0.157
						4" Ice	4.462	3.927	0.318
(3) ACU-A20-N (P)	C	From Leg	4.000 0.000 -2.000	0.000	179.000	No Ice	0.078	0.136	0.001
						1/2" Ice	0.121	0.189	0.002
						1" Ice	0.173	0.251	0.004
						2" Ice	0.302	0.400	0.012
						4" Ice	0.665	0.802	0.045
(3) ACU-A20-N (P)	B	From Leg	4.000 0.000 -2.000	0.000	179.000	No Ice	0.078	0.136	0.001
						1/2" Ice	0.121	0.189	0.002
						1" Ice	0.173	0.251	0.004
						2" Ice	0.302	0.400	0.012

Description	Face or Leg	Offset Type	Offsets: Horz Lateral Vert ft ft ft	Azimuth Adjustment °	Placement ft		C_AA_A Front ft^2	C_AA_A Side ft^2	Weight K
						4" Ice	0.665	0.802	0.045
(3) ACU-A20-N (P)	A	From Leg	4.000 0.000 -2.000	0.000	179.000	No Ice	0.078	0.136	0.001
						1/2" Ice	0.121	0.189	0.002
						1" Ice	0.173	0.251	0.004
						2" Ice	0.302	0.400	0.012
						4" Ice	0.665	0.802	0.045
APXVSPP18-C-A20 w/ Mount Pipe (P)	C	From Leg	4.000 0.000 -2.000	0.000	179.000	No Ice	8.498	6.946	0.083
						1/2" Ice	9.149	8.127	0.148
						1" Ice	9.767	9.021	0.225
						2" Ice	11.031	10.844	0.406
						4" Ice	13.679	14.851	0.909
APXVSPP18-C-A20 w/ Mount Pipe (P)	B	From Leg	4.000 0.000 -2.000	0.000	179.000	No Ice	8.498	6.946	0.083
						1/2" Ice	9.149	8.127	0.148
						1" Ice	9.767	9.021	0.225
						2" Ice	11.031	10.844	0.406
						4" Ice	13.679	14.851	0.909
APXVSPP18-C-A20 w/ Mount Pipe (P)	A	From Leg	4.000 0.000 -2.000	0.000	179.000	No Ice	8.498	6.946	0.083
						1/2" Ice	9.149	8.127	0.148
						1" Ice	9.767	9.021	0.225
						2" Ice	11.031	10.844	0.406
						4" Ice	13.679	14.851	0.909
Platform Mount [LP 713-1] (P)	C	None		0.000	179.000	No Ice	31.270	31.270	1.510
						1/2" Ice	39.680	39.680	1.929
						1" Ice	48.090	48.090	2.348
						2" Ice	64.910	64.910	3.186
						4" Ice	98.550	98.550	4.862
****									
RR90-17-00DP w/Mount Pipe (E)	C	From Leg	4.000 0.000 2.000	0.000	167.000	No Ice	4.672	3.399	0.035
						1/2" Ice	5.202	4.237	0.071
						1" Ice	5.712	4.952	0.117
						2" Ice	6.764	6.431	0.229
						4" Ice	8.996	9.590	0.569
RR90-17-00DP w/Mount Pipe (E)	B	From Leg	4.000 0.000 2.000	0.000	167.000	No Ice	4.672	3.399	0.035
						1/2" Ice	5.202	4.237	0.071
						1" Ice	5.712	4.952	0.117
						2" Ice	6.764	6.431	0.229
						4" Ice	8.996	9.590	0.569
RR90-17-00DP w/Mount Pipe (E)	A	From Leg	4.000 0.000 2.000	0.000	167.000	No Ice	4.672	3.399	0.035
						1/2" Ice	5.202	4.237	0.071
						1" Ice	5.712	4.952	0.117
						2" Ice	6.764	6.431	0.229
						4" Ice	8.996	9.590	0.569
(2) KRY 112 75/1 TMA (E)	C	From Leg	4.000 0.000 2.000	0.000	167.000	No Ice	1.983	0.942	0.030
						1/2" Ice	2.176	1.094	0.043
						1" Ice	2.377	1.254	0.059
						2" Ice	2.804	1.600	0.098
						4" Ice	3.764	2.396	0.214
(2) KRY 112 75/1 TMA (E)	B	From Leg	4.000 0.000 2.000	0.000	167.000	No Ice	1.983	0.942	0.030
						1/2" Ice	2.176	1.094	0.043
						1" Ice	2.377	1.254	0.059
						2" Ice	2.804	1.600	0.098
						4" Ice	3.764	2.396	0.214
(2) KRY 112 75/1 TMA (E)	A	From Leg	4.000 0.000 2.000	0.000	167.000	No Ice	1.983	0.942	0.030
						1/2" Ice	2.176	1.094	0.043
						1" Ice	2.377	1.254	0.059
						2" Ice	2.804	1.600	0.098
						4" Ice	3.764	2.396	0.214

Description	Face or Leg	Offset Type	Offsets: Horz Lateral Vert ft ft ft	Azimuth Adjustment °	Placement ft		C_AA_A Front ft^2	C_AA_A Side ft^2	Weight K
T-Arm Mount [TA 602-3] (E)	C	None		0.000	167.000	No Ice	11.590	11.590	0.774
						1/2" Ice	15.440	15.440	0.990
						1" Ice	19.290	19.290	1.206
						2" Ice	26.990	26.990	1.639
						4" Ice	42.390	42.390	2.503
(3) 6' x 2" Mount Pipe (E)	C	From Leg	4.000 0.000 0.000	0.000	167.000	No Ice	1.425	1.425	0.022
						1/2" Ice	1.925	1.925	0.033
						1" Ice	2.294	2.294	0.048
						2" Ice	3.060	3.060	0.090
						4" Ice	4.702	4.702	0.231
(3) 6' x 2" Mount Pipe (E)	B	From Leg	4.000 0.000 0.000	0.000	167.000	No Ice	1.425	1.425	0.022
						1/2" Ice	1.925	1.925	0.033
						1" Ice	2.294	2.294	0.048
						2" Ice	3.060	3.060	0.090
						4" Ice	4.702	4.702	0.231
(3) 6' x 2" Mount Pipe (E)	A	From Leg	4.000 0.000 0.000	0.000	167.000	No Ice	1.425	1.425	0.022
						1/2" Ice	1.925	1.925	0.033
						1" Ice	2.294	2.294	0.048
						2" Ice	3.060	3.060	0.090
						4" Ice	4.702	4.702	0.231
****									
(2) LPA-80063/6CF w/ Mount Pipe (E)	C	From Leg	4.000 0.000 2.000	0.000	154.000	No Ice	10.577	10.671	0.052
						1/2" Ice	11.241	11.932	0.142
						1" Ice	11.872	12.911	0.244
						2" Ice	13.163	14.921	0.476
						4" Ice	15.866	19.158	1.088
(2) LPA-80080/6CF w/ Mount Pipe (E)	B	From Leg	4.000 0.000 2.000	0.000	154.000	No Ice	4.564	10.728	0.046
						1/2" Ice	5.105	11.990	0.110
						1" Ice	5.612	12.968	0.185
						2" Ice	6.651	14.980	0.363
						4" Ice	8.834	19.217	0.857
(2) LPA-80080/6CF w/ Mount Pipe (E)	A	From Leg	4.000 0.000 2.000	0.000	154.000	No Ice	4.564	10.728	0.046
						1/2" Ice	5.105	11.990	0.110
						1" Ice	5.612	12.968	0.185
						2" Ice	6.651	14.980	0.363
						4" Ice	8.834	19.217	0.857
BXA-171063-8BF-EDIN-2 w/ Mount Pipe (E)	C	From Leg	4.000 0.000 2.000	0.000	154.000	No Ice	3.179	3.353	0.029
						1/2" Ice	3.555	3.971	0.059
						1" Ice	3.964	4.595	0.098
						2" Ice	4.853	5.893	0.193
						4" Ice	6.767	8.885	0.487
BXA-171085-8BF-EDIN-2 w/ Mount Pipe (E)	B	From Leg	4.000 0.000 2.000	0.000	154.000	No Ice	3.179	3.353	0.029
						1/2" Ice	3.555	3.971	0.059
						1" Ice	3.964	4.595	0.098
						2" Ice	4.853	5.893	0.193
						4" Ice	6.767	8.885	0.487
BXA-171085-8BF-EDIN-2 w/ Mount Pipe (E)	A	From Leg	4.000 0.000 2.000	0.000	154.000	No Ice	3.179	3.353	0.029
						1/2" Ice	3.555	3.971	0.059
						1" Ice	3.964	4.595	0.098
						2" Ice	4.853	5.893	0.193
						4" Ice	6.767	8.885	0.487
BXA-70063-6CF-2 w/ Mount Pipe (E)	C	From Leg	4.000 0.000 2.000	0.000	154.000	No Ice	7.969	5.801	0.042
						1/2" Ice	8.609	6.953	0.100
						1" Ice	9.216	7.819	0.170
						2" Ice	10.459	9.601	0.335
						4" Ice	13.066	13.366	0.803
BXA-70063-6CF-2 w/ Mount	B	From Leg	4.000	0.000	154.000	No Ice	7.969	5.801	0.042

Description	Face or Leg	Offset Type	Offsets: Horz Lateral Vert ft ft ft	Azimuth Adjustment °	Placement ft		C_AA_A Front ft^2	C_AA_A Side ft^2	Weight K
Pipe			0.000			1/2" Ice	8.609	6.953	0.100
(E)			2.000			1" Ice	9.216	7.819	0.170
						2" Ice	10.459	9.601	0.335
						4" Ice	13.066	13.366	0.803
BXA-70063-6CF-2 w/ Mount	A	From Leg	4.000	0.000	154.000	No Ice	7.969	5.801	0.042
Pipe			0.000			1/2" Ice	8.609	6.953	0.100
(E)			2.000			1" Ice	9.216	7.819	0.170
						2" Ice	10.459	9.601	0.335
						4" Ice	13.066	13.366	0.803
(2) FD9R6004/2C-3L	C	From Leg	4.000	0.000	154.000	No Ice	0.367	0.085	0.003
(E)			0.000			1/2" Ice	0.451	0.136	0.005
			2.000			1" Ice	0.543	0.196	0.009
						2" Ice	0.755	0.343	0.020
						4" Ice	1.281	0.740	0.063
(2) FD9R6004/2C-3L	B	From Leg	4.000	0.000	154.000	No Ice	0.367	0.085	0.003
(E)			0.000			1/2" Ice	0.451	0.136	0.005
			2.000			1" Ice	0.543	0.196	0.009
						2" Ice	0.755	0.343	0.020
						4" Ice	1.281	0.740	0.063
(2) FD9R6004/2C-3L	A	From Leg	4.000	0.000	154.000	No Ice	0.367	0.085	0.003
(E)			0.000			1/2" Ice	0.451	0.136	0.005
			2.000			1" Ice	0.543	0.196	0.009
						2" Ice	0.755	0.343	0.020
						4" Ice	1.281	0.740	0.063
Platform Mount [LP 303-1]	C	None		0.000	154.000	No Ice	14.660	14.660	1.250
(E)						1/2" Ice	18.870	18.870	1.481
						1" Ice	23.080	23.080	1.713
						2" Ice	31.500	31.500	2.175
						4" Ice	48.340	48.340	3.101
****									
(4) DB844H90 w/ Mount	C	From Leg	4.000	0.000	137.000	No Ice	3.299	4.921	0.028
Pipe			0.000			1/2" Ice	3.690	5.596	0.066
(E)			2.000			1" Ice	4.119	6.284	0.112
						2" Ice	5.007	7.712	0.224
						4" Ice	6.920	10.833	0.553
(4) DB844H90 w/ Mount	B	From Leg	4.000	0.000	137.000	No Ice	3.299	4.921	0.028
Pipe			0.000			1/2" Ice	3.690	5.596	0.066
(E)			2.000			1" Ice	4.119	6.284	0.112
						2" Ice	5.007	7.712	0.224
						4" Ice	6.920	10.833	0.553
(4) DB844H90 w/ Mount	A	From Leg	4.000	0.000	137.000	No Ice	3.299	4.921	0.028
Pipe			0.000			1/2" Ice	3.690	5.596	0.066
(E)			2.000			1" Ice	4.119	6.284	0.112
						2" Ice	5.007	7.712	0.224
						4" Ice	6.920	10.833	0.553
Platform Mount [LP 712-1]	C	None		0.000	137.000	No Ice	24.530	24.530	1.335
(E)						1/2" Ice	29.940	29.940	1.646
						1" Ice	35.350	35.350	1.956
						2" Ice	46.170	46.170	2.577
						4" Ice	67.810	67.810	3.820
****									
(2)	C	From Leg	4.000	0.000	127.000	No Ice	5.394	3.750	0.056
AP14/17-880/1940/065D/AD			0.000			1/2" Ice	5.863	4.421	0.096
T/XXP w/ Mount Pipe			2.000			1" Ice	6.336	5.074	0.145
(E)						2" Ice	7.314	6.430	0.264
						4" Ice	9.396	9.533	0.612
(2)	B	From Leg	4.000	0.000	127.000	No Ice	5.394	3.750	0.056

Description	Face or Leg	Offset Type	Offsets: Horz Lateral Vert ft ft ft	Azimuth Adjustment °	Placement ft		C_AA_A Front ft^2	C_AA_A Side ft^2	Weight K
AP14/17-880/1940/065D/AD			0.000			1/2" Ice	5.863	4.421	0.096
T/XXP w/ Mount Pipe			2.000			1" Ice	6.336	5.074	0.145
(E)						2" Ice	7.314	6.430	0.264
						4" Ice	9.396	9.533	0.612
(2)	A	From Leg	4.000	0.000	127.000	No Ice	5.394	3.750	0.056
AP14/17-880/1940/065D/AD			0.000			1/2" Ice	5.863	4.421	0.096
T/XXP w/ Mount Pipe			2.000			1" Ice	6.336	5.074	0.145
(E)						2" Ice	7.314	6.430	0.264
						4" Ice	9.396	9.533	0.612
(2) LGP 17201	C	From Leg	4.000	0.000	127.000	No Ice	1.946	0.518	0.031
(E)			0.000			1/2" Ice	2.134	0.640	0.042
			2.000			1" Ice	2.330	0.770	0.055
						2" Ice	2.749	1.056	0.089
						4" Ice	3.690	1.733	0.193
(2) LGP 17201	B	From Leg	4.000	0.000	127.000	No Ice	1.946	0.518	0.031
(E)			0.000			1/2" Ice	2.134	0.640	0.042
			2.000			1" Ice	2.330	0.770	0.055
						2" Ice	2.749	1.056	0.089
						4" Ice	3.690	1.733	0.193
(2) LGP 17201	A	From Leg	4.000	0.000	127.000	No Ice	1.946	0.518	0.031
(E)			0.000			1/2" Ice	2.134	0.640	0.042
			2.000			1" Ice	2.330	0.770	0.055
						2" Ice	2.749	1.056	0.089
						4" Ice	3.690	1.733	0.193
Platform Mount [LP 303-1]	C	None		0.000	127.000	No Ice	14.660	14.660	1.250
(E)						1/2" Ice	18.870	18.870	1.481
						1" Ice	23.080	23.080	1.713
						2" Ice	31.500	31.500	2.175
						4" Ice	48.340	48.340	3.101
****									
APXV18-206517S-C w/	C	From Leg	1.500	0.000	117.000	No Ice	5.404	4.700	0.052
Mount Pipe			0.000			1/2" Ice	5.960	5.860	0.094
(E)			0.000			1" Ice	6.481	6.734	0.148
						2" Ice	7.547	8.515	0.280
						4" Ice	9.919	12.277	0.679
APXV18-206517S-C w/	B	From Leg	1.500	0.000	117.000	No Ice	5.404	4.700	0.052
Mount Pipe			0.000			1/2" Ice	5.960	5.860	0.094
(E)			0.000			1" Ice	6.481	6.734	0.148
						2" Ice	7.547	8.515	0.280
						4" Ice	9.919	12.277	0.679
APXV18-206517S-C w/	A	From Leg	1.500	0.000	117.000	No Ice	5.404	4.700	0.052
Mount Pipe			0.000			1/2" Ice	5.960	5.860	0.094
(E)			0.000			1" Ice	6.481	6.734	0.148
						2" Ice	7.547	8.515	0.280
						4" Ice	9.919	12.277	0.679
****									
8225	C	From Leg	4.000	0.000	79.000	No Ice	0.894	0.894	0.001
(E)			0.000			1/2" Ice	1.080	1.080	0.009
			1.000			1" Ice	1.284	1.284	0.018
						2" Ice	1.719	1.719	0.046
						4" Ice	2.691	2.691	0.137
Side Arm Mount [SO 701-1]	C	From Leg	3.000	0.000	79.000	No Ice	0.850	1.670	0.065
(E)			0.000			1/2" Ice	1.140	2.340	0.079
			0.000			1" Ice	1.430	3.010	0.093
						2" Ice	2.010	4.350	0.121
						4" Ice	3.170	7.030	0.177
****									

Load Combinations

Comb. No.	Description
1	Dead Only
2	Dead+Wind 0 deg - No Ice
3	Dead+Wind 30 deg - No Ice
4	Dead+Wind 60 deg - No Ice
5	Dead+Wind 90 deg - No Ice
6	Dead+Wind 120 deg - No Ice
7	Dead+Wind 150 deg - No Ice
8	Dead+Wind 180 deg - No Ice
9	Dead+Wind 210 deg - No Ice
10	Dead+Wind 240 deg - No Ice
11	Dead+Wind 270 deg - No Ice
12	Dead+Wind 300 deg - No Ice
13	Dead+Wind 330 deg - No Ice
14	Dead+Ice+Temp
15	Dead+Wind 0 deg+Ice+Temp
16	Dead+Wind 30 deg+Ice+Temp
17	Dead+Wind 60 deg+Ice+Temp
18	Dead+Wind 90 deg+Ice+Temp
19	Dead+Wind 120 deg+Ice+Temp
20	Dead+Wind 150 deg+Ice+Temp
21	Dead+Wind 180 deg+Ice+Temp
22	Dead+Wind 210 deg+Ice+Temp
23	Dead+Wind 240 deg+Ice+Temp
24	Dead+Wind 270 deg+Ice+Temp
25	Dead+Wind 300 deg+Ice+Temp
26	Dead+Wind 330 deg+Ice+Temp
27	Dead+Wind 0 deg - Service
28	Dead+Wind 30 deg - Service
29	Dead+Wind 60 deg - Service
30	Dead+Wind 90 deg - Service
31	Dead+Wind 120 deg - Service
32	Dead+Wind 150 deg - Service
33	Dead+Wind 180 deg - Service
34	Dead+Wind 210 deg - Service
35	Dead+Wind 240 deg - Service
36	Dead+Wind 270 deg - Service
37	Dead+Wind 300 deg - Service
38	Dead+Wind 330 deg - Service

Maximum Member Forces

Section No.	Elevation ft	Component Type	Condition	Gov. Load Comb.	Force K	Major Axis Moment kip-ft	Minor Axis Moment kip-ft
L1	177 - 129.75	Pole	Max Tension	1	0.000	0.000	0.000
			Max. Compression	14	-20.435	-0.118	-0.857
			Max. Mx	5	-9.071	-401.692	5.245
			Max. My	8	-9.104	5.280	-395.540
			Max. Vy	5	16.143	-401.692	5.245
			Max. Vx	8	15.870	5.280	-395.540

Section No.	Elevation ft	Component Type	Condition	Gov. Load Comb.	Force K	Major Axis Moment kip-ft	Minor Axis Moment kip-ft
			Max. Torque	6			0.040
L2	129.75 - 120	Pole	Max Tension	1	0.000	0.000	0.000
			Max. Compression	14	-26.751	-0.945	-1.375
			Max. Mx	5	-12.648	-644.498	8.364
			Max. My	8	-12.677	8.343	-634.589
			Max. Vy	5	19.318	-644.498	8.364
			Max. Vx	8	19.044	8.343	-634.589
			Max. Torque	2			-0.063
L3	120 - 110	Pole	Max Tension	1	0.000	0.000	0.000
			Max. Compression	14	-30.625	-1.460	-2.277
			Max. Mx	5	-14.835	-846.760	10.508
			Max. My	8	-14.862	10.753	-834.372
			Max. Vy	5	20.909	-846.760	10.508
			Max. Vx	8	20.635	10.753	-834.372
			Max. Torque	3			-0.084
L4	110 - 84	Pole	Max Tension	1	0.000	0.000	0.000
			Max. Compression	14	-40.390	-2.852	-4.198
			Max. Mx	5	-21.653	-1315.554	15.218
			Max. My	8	-21.675	15.557	-1297.406
			Max. Vy	5	23.218	-1315.554	15.218
			Max. Vx	8	22.942	15.557	-1297.406
			Max. Torque	11			0.141
L5	84 - 80	Pole	Max Tension	1	0.000	0.000	0.000
			Max. Compression	14	-46.351	-3.441	-5.012
			Max. Mx	5	-26.130	-1523.506	17.163
			Max. My	8	-26.151	17.542	-1502.976
			Max. Vy	5	24.250	-1523.506	17.163
			Max. Vx	8	23.973	17.542	-1502.976
			Max. Torque	11			0.178
L6	80 - 60	Pole	Max Tension	1	0.000	0.000	0.000
			Max. Compression	14	-56.898	-4.350	-7.218
			Max. Mx	5	-33.950	-2030.217	21.193
			Max. My	8	-33.966	22.061	-2004.940
			Max. Vy	5	26.375	-2030.217	21.193
			Max. Vx	8	26.114	22.061	-2004.940
			Max. Torque	12			0.612
L7	60 - 39.3	Pole	Max Tension	1	0.000	0.000	0.000
			Max. Compression	14	-64.693	-5.400	-8.660
			Max. Mx	5	-39.837	-2434.676	24.262
			Max. My	8	-39.848	25.207	-2405.575
			Max. Vy	5	27.725	-2434.676	24.262
			Max. Vx	8	27.465	25.207	-2405.575
			Max. Torque	12			0.667
L8	39.3 - 20	Pole	Max Tension	1	0.000	0.000	0.000
			Max. Compression	14	-80.995	-7.187	-11.106
			Max. Mx	5	-52.611	-3156.975	29.333
			Max. My	8	-52.616	30.409	-3121.526
			Max. Vy	5	29.797	-3156.975	29.333
			Max. Vx	8	29.541	30.409	-3121.526
			Max. Torque	12			0.757
L9	20 - 0	Pole	Max Tension	1	0.000	0.000	0.000
			Max. Compression	14	-92.329	-8.279	-12.600
			Max. Mx	5	-61.849	-3768.065	33.376
			Max. My	8	-61.849	34.532	-3727.633
			Max. Vy	5	31.313	-3768.065	33.376
			Max. Vx	8	31.062	34.532	-3727.633
			Max. Torque	12			0.837

Maximum Reactions

Location	Condition	Gov. Load Comb.	Vertical K	Horizontal, X K	Horizontal, Z K
Pole	Max. Vert	14	92.329	-0.000	-0.000
	Max. H_x	11	61.857	31.298	-0.217
	Max. H_z	2	61.857	-0.217	31.048
	Max. M_x	2	3722.214	-0.217	31.048
	Max. M_z	5	3768.065	-31.298	0.217
	Max. Torsion	12	0.837	26.997	15.336
	Min. Vert	30	61.857	-12.081	0.084
	Min. H_x	5	61.857	-31.298	0.217
	Min. H_z	8	61.857	0.217	-31.048
	Min. M_x	8	-3727.633	0.217	-31.048
	Min. M_z	11	-3764.959	31.298	-0.217
	Min. Torsion	6	-0.792	-26.997	-15.336

Tower Mast Reaction Summary

Load Combination	Vertical K	$Shear_x$ K	$Shear_z$ K	Overturning Moment, M_x kip-ft	Overturning Moment, M_z kip-ft	Torque kip-ft
Dead Only	61.857	0.000	0.000	2.629	-1.511	0.000
Dead+Wind 0 deg - No Ice	61.857	0.217	-31.048	-3722.214	-37.644	-0.330
Dead+Wind 30 deg - No Ice	61.857	15.837	-26.997	-3241.145	-1916.068	0.086
Dead+Wind 60 deg - No Ice	61.857	27.214	-15.712	-1890.943	-3281.462	0.462
Dead+Wind 90 deg - No Ice	61.857	31.298	-0.217	-33.376	-3768.065	0.715
Dead+Wind 120 deg - No Ice	61.857	26.997	15.336	1833.921	-3245.481	0.792
Dead+Wind 150 deg - No Ice	61.857	15.461	26.780	3210.583	-1853.622	0.674
Dead+Wind 180 deg - No Ice	61.857	-0.217	31.048	3727.633	34.532	0.375
Dead+Wind 210 deg - No Ice	61.857	-15.837	26.997	3246.567	1912.955	-0.041
Dead+Wind 240 deg - No Ice	61.857	-27.214	15.712	1896.368	3278.353	-0.462
Dead+Wind 270 deg - No Ice	61.857	-31.298	0.217	38.799	3764.959	-0.760
Dead+Wind 300 deg - No Ice	61.857	-26.997	-15.336	-1828.502	3242.375	-0.837
Dead+Wind 330 deg - No Ice	61.857	-15.461	-26.780	-3205.166	1850.513	-0.674
Dead+Ice+Temp	92.329	0.000	0.000	12.600	-8.279	0.000
Dead+Wind 0 deg+Ice+Temp	92.329	0.026	-4.893	-609.166	-13.020	-0.079
Dead+Wind 30 deg+Ice+Temp	92.329	2.484	-4.250	-528.161	-326.039	0.008
Dead+Wind 60 deg+Ice+Temp	92.329	4.277	-2.469	-302.217	-553.942	0.093
Dead+Wind 90 deg+Ice+Temp	92.329	4.923	-0.026	8.125	-635.663	0.153
Dead+Wind 120 deg+Ice+Temp	92.329	4.250	2.424	319.709	-549.306	0.172
Dead+Wind 150 deg+Ice+Temp	92.329	2.439	4.224	549.047	-318.008	0.146
Dead+Wind 180 deg+Ice+Temp	92.329	-0.026	4.893	634.688	-3.747	0.080
Dead+Wind 210 deg+Ice+Temp	92.329	-2.484	4.250	553.684	309.272	-0.007
Dead+Wind 240 deg+Ice+Temp	92.329	-4.277	2.469	327.740	537.176	-0.092
Dead+Wind 270 deg+Ice+Temp	92.329	-4.923	0.026	17.398	618.898	-0.153
Dead+Wind 300 deg+Ice+Temp	92.329	-4.250	-2.424	-294.187	532.540	-0.173
Dead+Wind 330 deg+Ice+Temp	92.329	-2.439	-4.224	-523.525	301.242	-0.145
Dead+Wind 0 deg - Service	61.857	0.084	-11.984	-1436.048	-15.498	-0.133
Dead+Wind 30 deg - Service	61.857	6.113	-10.420	-1250.259	-741.059	0.028
Dead+Wind 60 deg - Service	61.857	10.504	-6.064	-728.738	-1268.469	0.179
Dead+Wind 90 deg - Service	61.857	12.081	-0.084	-11.227	-1456.412	0.282
Dead+Wind 120 deg - Service	61.857	10.420	5.919	710.024	-1254.534	0.312
Dead+Wind 150 deg - Service	61.857	5.968	10.337	1241.753	-716.916	0.261
Dead+Wind 180 deg - Service	61.857	-0.084	11.984	1441.477	12.385	0.140
Dead+Wind 210 deg - Service	61.857	-6.113	10.420	1255.688	737.946	-0.021
Dead+Wind 240 deg - Service	61.857	-10.504	6.064	734.167	1265.356	-0.179
Dead+Wind 270 deg - Service	61.857	-12.081	0.084	16.656	1453.299	-0.289

Load Combination	Vertical K	$Shear_x$ K	$Shear_z$ K	Overturning Moment, M_x kip-ft	Overturning Moment, M_z kip-ft	Torque kip-ft
Dead+Wind 300 deg - Service	61.857	-10.420	-5.919	-704.595	1251.422	-0.318
Dead+Wind 330 deg - Service	61.857	-5.968	-10.337	-1236.325	713.803	-0.261

Solution Summary

	Sum of Applied Forces			Sum of Reactions			
Load Comb.	PX K	PY K	PZ K	PX K	PY K	PZ K	% Error
1	0.000	-61.857	0.000	0.000	61.857	0.000	0.000%
2	0.217	-61.857	-31.048	-0.217	61.857	31.048	0.000%
3	15.837	-61.857	-26.997	-15.837	61.857	26.997	0.000%
4	27.214	-61.857	-15.712	-27.214	61.857	15.712	0.000%
5	31.298	-61.857	-0.217	-31.298	61.857	0.217	0.000%
6	26.997	-61.857	15.336	-26.997	61.857	-15.336	0.000%
7	15.461	-61.857	26.780	-15.461	61.857	-26.780	0.000%
8	-0.217	-61.857	31.048	0.217	61.857	-31.048	0.000%
9	-15.837	-61.857	26.997	15.837	61.857	-26.997	0.000%
10	-27.214	-61.857	15.712	27.214	61.857	-15.712	0.000%
11	-31.298	-61.857	0.217	31.298	61.857	-0.217	0.000%
12	-26.997	-61.857	-15.336	26.997	61.857	15.336	0.000%
13	-15.461	-61.857	-26.780	15.461	61.857	26.780	0.000%
14	0.000	-92.329	0.000	-0.000	92.329	-0.000	0.000%
15	0.026	-92.329	-4.893	-0.026	92.329	4.893	0.000%
16	2.484	-92.329	-4.250	-2.484	92.329	4.250	0.000%
17	4.277	-92.329	-2.469	-4.277	92.329	2.469	0.000%
18	4.923	-92.329	-0.026	-4.923	92.329	0.026	0.000%
19	4.250	-92.329	2.424	-4.250	92.329	-2.424	0.000%
20	2.439	-92.329	4.224	-2.439	92.329	-4.224	0.000%
21	-0.026	-92.329	4.893	0.026	92.329	-4.893	0.000%
22	-2.484	-92.329	4.250	2.484	92.329	-4.250	0.000%
23	-4.277	-92.329	2.469	4.277	92.329	-2.469	0.000%
24	-4.923	-92.329	0.026	4.923	92.329	-0.026	0.000%
25	-4.250	-92.329	-2.424	4.250	92.329	2.424	0.000%
26	-2.439	-92.329	-4.224	2.439	92.329	4.224	0.000%
27	0.084	-61.857	-11.984	-0.084	61.857	11.984	0.000%
28	6.113	-61.857	-10.420	-6.113	61.857	10.420	0.000%
29	10.504	-61.857	-6.064	-10.504	61.857	6.064	0.000%
30	12.081	-61.857	-0.084	-12.081	61.857	0.084	0.000%
31	10.420	-61.857	5.919	-10.420	61.857	-5.919	0.000%
32	5.968	-61.857	10.337	-5.968	61.857	-10.337	0.000%
33	-0.084	-61.857	11.984	0.084	61.857	-11.984	0.000%
34	-6.113	-61.857	10.420	6.113	61.857	-10.420	0.000%
35	-10.504	-61.857	6.064	10.504	61.857	-6.064	0.000%
36	-12.081	-61.857	0.084	12.081	61.857	-0.084	0.000%
37	-10.420	-61.857	-5.919	10.420	61.857	5.919	0.000%
38	-5.968	-61.857	-10.337	5.968	61.857	10.337	0.000%

Non-Linear Convergence Results

Load Combination	Converged?	Number of Cycles	Displacement Tolerance	Force Tolerance
1	Yes	4	0.00000001	0.00000001
2	Yes	4	0.00000001	0.00045338
3	Yes	5	0.00000001	0.00065652
4	Yes	5	0.00000001	0.00065573
5	Yes	4	0.00000001	0.00037658
6	Yes	5	0.00000001	0.00063129
7	Yes	5	0.00000001	0.00061874
8	Yes	4	0.00000001	0.00064539
9	Yes	5	0.00000001	0.00065706
10	Yes	5	0.00000001	0.00066250
11	Yes	4	0.00000001	0.00078875
12	Yes	5	0.00000001	0.00061731
13	Yes	5	0.00000001	0.00062550
14	Yes	4	0.00000001	0.00008836
15	Yes	5	0.00000001	0.00031301
16	Yes	5	0.00000001	0.00033197
17	Yes	5	0.00000001	0.00033624
18	Yes	5	0.00000001	0.00032598
19	Yes	5	0.00000001	0.00033865
20	Yes	5	0.00000001	0.00033773
21	Yes	5	0.00000001	0.00032523
22	Yes	5	0.00000001	0.00033849
23	Yes	5	0.00000001	0.00033728
24	Yes	5	0.00000001	0.00031869
25	Yes	5	0.00000001	0.00032382
26	Yes	5	0.00000001	0.00032162
27	Yes	4	0.00000001	0.00015091
28	Yes	5	0.00000001	0.00005646
29	Yes	5	0.00000001	0.00005619
30	Yes	4	0.00000001	0.00015408
31	Yes	5	0.00000001	0.00005462
32	Yes	5	0.00000001	0.00005251
33	Yes	4	0.00000001	0.00016025
34	Yes	5	0.00000001	0.00005658
35	Yes	5	0.00000001	0.00005746
36	Yes	4	0.00000001	0.00017370
37	Yes	5	0.00000001	0.00005200
38	Yes	5	0.00000001	0.00005354

Maximum Tower Deflections - Service Wind

Section No.	Elevation ft	Horz. Deflection in	Gov. Load Comb.	Tilt °	Twist °
L1	177 - 129.75	36.160	35	1.950	0.000
L2	133.5 - 120	19.660	35	1.526	0.000
L3	120 - 110	15.646	35	1.278	0.000
L4	110 - 84	13.133	35	1.119	0.000
L5	88.75 - 80	8.621	35	0.905	0.000
L6	80 - 60	7.015	35	0.837	0.000
L7	60 - 39.3	3.947	35	0.627	0.000
L8	45.05 - 20	2.248	35	0.459	0.000
L9	20 - 0	0.436	35	0.210	0.000

Critical Deflections and Radius of Curvature - Service Wind

Elevation ft	Appurtenance	Gov. Load Comb.	Deflection in	Tilt °	Twist °	Radius of Curvature ft
179.000	1900MHz RRH (65MHz)	35	36.160	1.950	0.000	27431
167.000	RR90-17-00DP w/Mount Pipe	35	32.105	1.887	0.000	13715
154.000	(2) LPA-80063/6CF w/ Mount Pipe	35	26.978	1.785	0.000	5962
137.000	(4) DB844H90 w/ Mount Pipe	35	20.817	1.582	0.000	3428
127.000	(2) AP14/17-880/1940/065D/ADT/XXP w/ Mount Pipe	35	17.636	1.408	0.000	2984
117.000	APXV18-206517S-C w/ Mount Pipe	35	14.856	1.226	0.000	3236
79.000	8225	35	6.841	0.828	0.000	5853

Maximum Tower Deflections - Design Wind

Section No.	Elevation ft	Horz. Deflection in	Gov. Load Comb.	Tilt °	Twist °
L1	177 - 129.75	93.447	10	5.044	0.000
L2	133.5 - 120	50.846	10	3.947	0.001
L3	120 - 110	40.473	10	3.307	0.001
L4	110 - 84	33.976	10	2.896	0.001
L5	88.75 - 80	22.306	10	2.341	0.001
L6	80 - 60	18.152	10	2.166	0.001
L7	60 - 39.3	10.217	10	1.622	0.000
L8	45.05 - 20	5.819	10	1.188	0.000
L9	20 - 0	1.129	10	0.542	0.000

Critical Deflections and Radius of Curvature - Design Wind

Elevation ft	Appurtenance	Gov. Load Comb.	Deflection in	Tilt °	Twist °	Radius of Curvature ft
179.000	1900MHz RRH (65MHz)	10	93.447	5.044	0.001	10768
167.000	RR90-17-00DP w/Mount Pipe	10	82.980	4.879	0.001	5383
154.000	(2) LPA-80063/6CF w/ Mount Pipe	10	69.745	4.617	0.001	2338
137.000	(4) DB844H90 w/ Mount Pipe	10	53.835	4.092	0.001	1342
127.000	(2) AP14/17-880/1940/065D/ADT/XXP w/ Mount Pipe	10	45.616	3.643	0.001	1165
117.000	APXV18-206517S-C w/ Mount Pipe	10	38.430	3.173	0.001	1260
79.000	8225	10	17.702	2.144	0.001	2269

Compression Checks

Pole Design Data

Section No.	Elevation ft	Size	L ft	L_u ft	Kl/r	F_a ksi	A in^2	Actual P K	Allow. P_a K	Ratio $\frac{P}{P_a}$
L1	177 - 129.75 (1)	TP30.268x22x0.219	47.250	0.000	0.0	39.000	20.413	-9.055	796.091	0.011
L2	129.75 - 120 (2)	TP31.536x29.174x0.25	13.500	0.000	0.0	39.000	24.825	-12.634	968.192	0.013
L3	120 - 110 (3)	TP33.286x31.536x0.394	10.000	0.000	0.0	32.220	41.092	-14.822	1323.990	0.011
L4	110 - 84 (4)	TP37.836x33.286x0.718	26.000	0.000	0.0	19.680	82.639	-21.642	1626.330	0.013
L5	84 - 80 (5)	TP38.045x35.57x0.783	8.750	0.000	0.0	18.840	92.570	-26.119	1744.030	0.015
L6	80 - 60 (6)	TP41.5x38.045x0.785	20.000	0.000	0.0	19.740	101.394	-33.943	2001.530	0.017
L7	60 - 39.3 (7)	TP45.167x41.5x0.734	20.700	0.000	0.0	25.200	101.089	-39.831	2547.440	0.016
L8	39.3 - 20 (8)	TP47.91x42.681x0.768	25.050	0.000	0.0	24.300	114.959	-52.608	2793.500	0.019
L9	20 - 0 (9)	TP51.41x47.91x0.779	20.000	0.000	0.0	24.660	125.140	-61.849	3085.950	0.020

Pole Bending Design Data

Section No.	Elevation ft	Size	Actual M_x kip-ft	Actual f_{bx} ksi	Allow. F_{bx} ksi	Ratio $\frac{f_{bx}}{F_{bx}}$	Actual M_y kip-ft	Actual f_{by} ksi	Allow. F_{by} ksi	Ratio $\frac{f_{by}}{F_{by}}$
L1	177 - 129.75 (1)	TP30.268x22x0.219	404.705	32.789	39.000	0.841	0.000	0.000	39.000	0.000
L2	129.75 - 120 (2)	TP31.536x29.174x0.25	649.294	40.659	39.000	1.043	0.000	0.000	39.000	0.000
L3	120 - 110 (3)	TP33.286x31.536x0.394	852.875	30.811	32.220	0.956	0.000	0.000	32.220	0.000
L4	110 - 84 (4)	TP37.836x33.286x0.718	1324.317	21.730	19.680	1.104	0.000	0.000	19.680	0.000
L5	84 - 80 (5)	TP38.045x35.57x0.783	1533.383	21.900	18.840	1.162	0.000	0.000	18.840	0.000
L6	80 - 60 (6)	TP41.5x38.045x0.785	2042.850	24.337	19.740	1.233	0.000	0.000	19.740	0.000
L7	60 - 39.3 (7)	TP45.167x41.5x0.734	2448.975	27.380	25.200	1.086	0.000	0.000	25.200	0.000
L8	39.3 - 20 (8)	TP47.91x42.681x0.768	3174.017	28.720	24.300	1.182	0.000	0.000	24.300	0.000
L9	20 - 0 (9)	TP51.41x47.91x0.779	3787.325	29.285	24.660	1.188	0.000	0.000	24.660	0.000

Pole Shear Design Data

Section No.	Elevation ft	Size	Actual V K	Actual f_v ksi	Allow. F_v ksi	Ratio $\frac{f_v}{F_v}$	Actual T kip-ft	Actual f_{vt} ksi	Allow. F_{vt} ksi	Ratio $\frac{f_{vt}}{F_{vt}}$
L1	177 - 129.75 (1)	TP30.268x22x0.219	16.279	0.798	26.000	0.061	0.000	0.000	26.000	0.000
L2	129.75 - 120 (2)	TP31.536x29.174x0.25	19.455	0.784	26.000	0.060	0.021	0.001	26.000	0.000
L3	120 - 110 (3)	TP33.286x31.536x0.394	21.047	0.512	21.480	0.048	0.055	0.001	21.480	0.000
L4	110 - 84 (4)	TP37.836x33.286x0.718	23.356	0.283	13.120	0.043	0.129	0.001	13.120	0.000
L5	84 - 80 (5)	TP38.045x35.57x0.783	24.388	0.263	12.560	0.042	0.160	0.001	12.560	0.000

Section No.	Elevation ft	Size	Actual V K	Actual f_v ksi	Allow. F_v ksi	Ratio $\frac{f_v}{F_v}$	Actual T kip-ft	Actual f_{vt} ksi	Allow. F_{vt} ksi	Ratio $\frac{f_{vt}}{F_{vt}}$
L6	80 - 60 (6)	TP41.5x38.045x0.785	26.506	0.261	13.160	0.040	0.237	0.001	13.160	0.000
L7	60 - 39.3 (7)	TP45.167x41.5x0.734	27.854	0.276	16.800	0.033	0.292	0.002	16.800	0.000
L8	39.3 - 20 (8)	TP47.91x42.681x0.768	29.924	0.260	16.200	0.032	0.382	0.002	16.200	0.000
L9	20 - 0 (9)	TP51.41x47.91x0.779	31.438	0.251	16.440	0.031	0.462	0.002	16.440	0.000

Pole Interaction Design Data

Section No.	Elevation ft	Ratio $\frac{P}{P_a}$	Ratio $\frac{f_{bx}}{F_{bx}}$	Ratio $\frac{f_{by}}{F_{by}}$	Ratio $\frac{f_v}{F_v}$	Ratio $\frac{f_{vt}}{F_{vt}}$	Comb. Stress Ratio	Allow. Stress Ratio	Criteria
L1	177 - 129.75 (1)	0.011	0.841	0.000	0.061	0.000	0.853 ✔	1.333	H1-3+VT ✔
L2	129.75 - 120 (2)	0.013	1.043	0.000	0.060	0.000	1.056 ✔	1.333	H1-3+VT ✔
L3	120 - 110 (3)	0.011	0.956	0.000	0.048	0.000	0.968 ✔	1.333	H1-3+VT ✔
L4	110 - 84 (4)	0.013	1.104	0.000	0.043	0.000	1.118 ✔	1.333	H1-3+VT ✔
L5	84 - 80 (5)	0.015	1.162	0.000	0.042	0.000	1.178 ✔	1.333	H1-3+VT ✔
L6	80 - 60 (6)	0.017	1.233	0.000	0.040	0.000	1.250 ✔	1.333	H1-3+VT ✔
L7	60 - 39.3 (7)	0.016	1.086	0.000	0.033	0.000	1.102 ✔	1.333	H1-3+VT ✔
L8	39.3 - 20 (8)	0.019	1.182	0.000	0.032	0.000	1.201 ✔	1.333	H1-3+VT ✔
L9	20 - 0 (9)	0.020	1.188	0.000	0.031	0.000	1.208 ✔	1.333	H1-3+VT ✔

Section Capacity Table

Section No.	Elevation ft	Component Type	Size	Critical Element	P K	$SF*P_{allow}$ K	% Capacity	Pass Fail
L1	177 - 129.75	Pole	TP30.268x22x0.219	1	-9.055	1061.189	64.0	Pass
L2	129.75 - 120	Pole	TP31.536x29.174x0.25	2	-12.634	1290.600	79.3	Pass
L3	120 - 110	Pole	TP33.286x31.536x0.394	3	-14.822	1764.879	72.6	Pass
L4	110 - 84	Pole	TP37.836x33.286x0.718	4	-21.642	2167.898	83.9	Pass
L5	84 - 80	Pole	TP38.045x35.57x0.783	5	-26.119	2324.792	88.4	Pass
L6	80 - 60	Pole	TP41.5x38.045x0.785	6	-33.943	2668.039	93.8	Pass
L7	60 - 39.3	Pole	TP45.167x41.5x0.734	7	-39.831	3395.737	82.7	Pass
L8	39.3 - 20	Pole	TP47.91x42.681x0.768	8	-52.608	3723.735	90.1	Pass
L9	20 - 0	Pole	TP51.41x47.91x0.779	9	-61.849	4113.571	90.6	Pass
							Summary	
						Pole (L6)	93.8	Pass
						RATING =	**93.8**	**Pass**

APPENDIX B

BASE LEVEL DRAWING

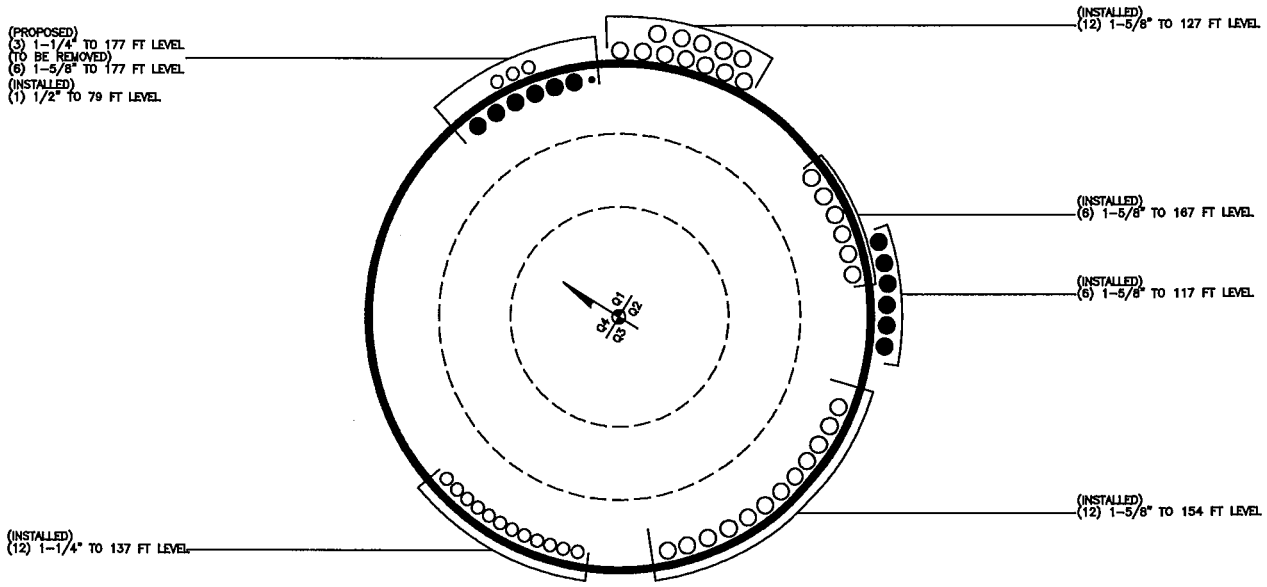

BUSINESS UNIT: 876376

APPENDIX C

ADDITIONAL CALCULATIONS

Square, Stiffened / Unstiffened Base Plate, Any Rod Material - Rev. F /G

Assumptions: 1) Rod groups at corners. Total # rods divisible by 4. Maximum total # of rods = 48 (12 per Corner).
2) Rod Spacing = Straight Center-to-Center distance between any (2) adjacent rods (same corner)
3) Clear space between bottom of leveling nut and top of concrete **not** exceeding (1)*(Rod Diameter)

Site Data

BU#: *876376*
Site Name: *Scoville, CT*
App #: *151585; Rev: 0*

Anchor Rod Data		
Qty:	16	
Diam:	2.25	in
Rod Material:	A615-J	
Yield, Fy:	75	ksi
Strength, Fu:	100	ksi
Bolt Circle:	58	in
Anchor Spacing:	6	in

Plate Data		
W=Side:	57	in
Thick:	2.75	in
Grade:	55	ksi
Clip Distance:	0	in

Stiffener Data (Welding at both sides)		
Configuration:	Unstiffened	
Weld Type:		**
Groove Depth:		in **
Groove Angle:		degrees
Fillet H. Weld:		<-- Disregard
Fillet V. Weld:		in
Width:		in
Height:		in
Thick:		in
Notch:		in
Grade:		ksi
Weld str.:		ksi

Pole Data		
Diam:	51.41	in
Thick:	0.375	in
Grade:	65	ksi
# of Sides:	18	"0" IF Round

Stress Increase Factor		
ASD ASIF:	1.333	

Base Reactions		
TIA Revision:	F	
Unfactored Moment, M:	3787	ft-kips
Unfactored Axial, P:	62	kips
Unfactored Shear, V:	31	kips

Anchor Rod Results

TIA F --> Maximum Rod Tension	192.0 Kips
Allowable Tension:	195.0 Kips
Anchor Rod Stress Ratio:	98.5% **Pass**

Base Plate Results Flexural Check

Base Plate Stress:	53.6 ksi
Allowable PL Bending Stress:	55.0 ksi
Base Plate Stress Ratio:	97.5% **Pass**

PL Ref. Data
Yield Line (in): 29.20
Max PL Length: 29.20

N/A - Unstiffened
Stiffener Results

Horizontal Weld :	N/A
Vertical Weld:	N/A
Plate Flex+Shear, fb/Fb+(fv/Fv)^2:	N/A
Plate Tension+Shear, ft/Ft+(fv/Fv)^2:	N/A
Plate Comp. (AISC Bracket):	N/A

Pole Results

Pole Punching Shear Check:	N/A

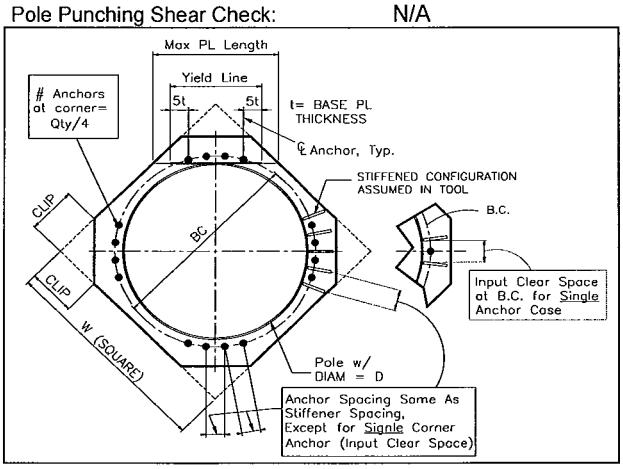

** Note: for complete joint penetration groove welds the groove depth must be exactly 1/2 the stiffener thickness for calculation purposes

PROJECT	88609.002 - Scoville hill
SUBJECT	Foundation
DATE	6/12/12
PAGE	1 OF 2

B+T GRP
1717 S. Boulder, Suite 300
Tulsa, OK 74119
(918) 587-4630

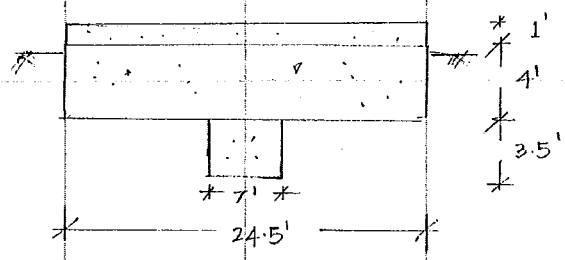

M = 3787 K-ft

V = 31 K

Axial = 62 K

[* Assume 55" ϕ box opening at Top 1']

① Check for overturning :-

$M_O = 3787 + 31 \times 4 = 3911$ K-ft

$$M_R = [4 \times 24.5 \times 24.5 \times 0.150] \times \frac{24.5}{2} + [3.5 \times 7 \times 7 \times 0.15] \times \frac{24.5}{2}$$

$$+ 62 \times \frac{24.5}{2} + \left[1 \times 24.5 \times 24.5 - \frac{\pi}{4} \times 4.6^2 \times 1\right] \times 0.15 \times \frac{24.5}{2}$$

$$= 4411.8 + 315.13 + 759.5 + 1072.4 = 6558.8 \text{ K-ft}$$

$$\frac{M_R}{M_O} = \frac{6558.8}{3911} = 1.7 > 1.50$$

$\Rightarrow$ 89.4 %

Check for bearing :-

$$\text{Total load} = P = 4 \times 24.5 \times 24.5 \times 0.15 + 3.5 \times 7 \times 7 \times 0.15$$

$$+ \left[1 \times 24.5 \times 24.5 - \frac{\pi}{4} \times 4.6^2 \times 1\right] \times 0.15 + 62$$

$= 535.4$ K

$M_O = 3911.0$ K-ft

$$e = \frac{M_O}{P} = \frac{3911.0}{535.4} = 7.3 > \frac{B}{6} = \frac{24.5}{6} = 4.08'$$

PROJECT	83609.002 – Scoville hill
SUBJECT	Foundation
DATE	6/12/12
PAGE	2 OF 2

B+T GRP
1717 S. Boulder, Suite 300
Tulsa, OK 74119
(918) 587-4630

$$e' = \frac{B}{2} - e = \frac{24.5'}{2} - 7.3' = 4.95'$$

$$q_{max} = \frac{P}{\frac{1}{2} \times 3e' \times B} = \frac{535.4}{0.5 \times 3 \times 4.95 \times 24.5} = 2.94\ K/ft^2$$

$$< q_{max} = 20\ K/ft^2$$

$\therefore$ Safe in bearing

Know what's **below.**
Call before you dig.

APPROVALS

		APPROVED	APPROVED AS NOTED	DISAPPROVED REVISE
SPRINT REPRESENTATIVES	DATE	☐	☐	☐
SPRINT RF ENGINEER	DATE	☐	☐	☐
SITE OWNER	DATE	☐	☐	☐
	DATE	☐	☐	☐

Sprint®

SITE ID: CT33XC111

SITE NAME: SCOVILLE HILL / HARWINTON ROD & GUN

NETWORK VISION CONSTRUCTION DRAWINGS

THE STRUCTURAL ENGINEERING CONCERNING THE STRUCTURAL STABILITY OF THE TOWER/POLE, FOUNDATION, ANTENNAS, MOUNTS AND ALL ASSOCIATED ANCILLARY RADIO EQUIPMENT IS BEING COMPLETED BY OTHERS. KMB DESIGN GROUP, LLC HAS NOT BEEN REQUESTED TO PERFORM ANY STRUCTURAL ANALYSIS SERVICES TO VERIFY THAT THE TOWER/POLE AND/OR FOUNDATION IS CAPABLE OF SUPPORTING THE PROPOSED EQUIPMENT DEPICTED WITHIN THESE SIGNED AND SEALED DRAWINGS. FURTHERMORE KMB DESIGN GROUP, LLC HAS NOT BEEN REQUESTED TO PHYSICALLY CONFIRM THE EXISTING MOUNT CONFIGURATION AND PERFORM A STRUCTURAL ANALYSIS TO VERIFY THAT THE EXISTING, INTERIM AND PROPOSED ANTENNAS, MOUNTS AND ALL ASSOCIATED ANCILLARY RADIO EQUIPMENT CAN BE SAFELY SUPPORTED. SIGNED AND SEALED DRAWINGS REVISED TO STATE "ISSUED FOR CONSTRUCTION" SHALL BE PROVIDED TO THE PROFESSIONAL ENGINEERS RESPONSIBLE FOR THE STRUCTURAL ANALYSIS OF THE TOWER/POLE, ANTENNAS, MOUNTS AND ALL ASSOCIATED ANCILLARY RADIO EQUIPMENT. KMB DESIGN GROUP, LLC SHALL BE NOTIFIED SHOULD THE STRUCTURAL ANALYSIS RESULT IN SOME ELEMENTS NOT BEING STRUCTURALLY CAPABLE OF SUPPORTING THE PROPOSED DESIGN DEPICTED. THE CONTRACTOR SHALL NOT COMMENCE CONSTRUCTION WITHOUT OBTAINING (A) A SIGNED AND SEALED COPY OF THE PLANS "ISSUED FOR CONSTRUCTION"; (B) STRUCTURAL ANALYSIS REPORT STATING THAT THE TOWER/POLE/FOUNDATION IS CAPABLE OF SUPPORTING THE PROPOSED LOADING REFERENCING THE SIGNED AND SEALED PLANS BY KMB DESIGN GROUP, LLC; (C) SPRINT PLATFORM ANALYSIS STATING THAT THE SPRINT PLATFORM IS CAPABLE OF SUPPORTING THE PROPOSED DESIGN AS REFERENCED WITHIN THE SIGNED AND SEALED PLANS BY KMB DESIGN GROUP, LLC.

AERIAL VIEW
SCALE: NTS

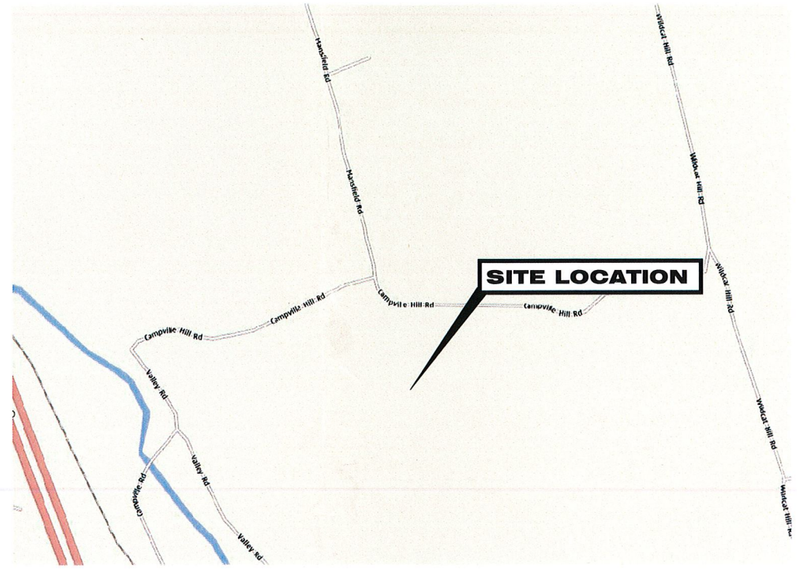

LOCATION MAP
SCALE: NTS

SITE INFORMATION

BLOCK: 5
LOT: 2A
MAP: A4
ZONING CLASSIFICATION: TBD
ZONING JURISDICTION: TBD

PROJECT INFORMATION:

SITE ADDRESS:
123 CAMPVILLE HILL ROAD
HARWINTON, CT 06791
LITCHFIELD COUNTY

COORDINATES:
LATITUDE: 41° 44' 12.40"
LONGITUDE: -73° 05' 49.33"
DATUM : NAD 83

STRUCTURE HEIGHT:
±180'-0" (TOP OF EXISTING MONOPOLE)

PROJECT DIRECTORY:

PROPERTY OWNER:
GLOBAL SIGNAL ACQUISITIONS II LLC

APPLICANT:
SPRINT-NEXTEL
6200 SPRINT PARKWAY
OVERLAND PARK, KS 66251

ENGINEER:
KMB DESIGN GROUP, LLC
1800 ROUTE 34, SUITE 209
WALL, NJ 07719
KEITH DRENNAN - PROJECT MANAGER
(732) 280-5623

POWER COMPANY:
CONNECTICUT LIGHT & POWER
P.O. BOX 270
HARTFORD, CT 06141-0270
(800) 286-2000

CONSTRUCTION MANAGER:
TODD AMANN
(914) 715-9363

DRAWING INDEX

DWG #	DRAWING TITLES
A01	COVER SHEET
C01	GENERAL NOTES 1 OF 2
C01A	GENERAL NOTES 2 OF 2
C02	COMPOUND PLAN
C02A	ELEVATION
C03	EQUIPMENT PLANS
C03A	EQUIPMENT & ANTENNA SPECIFICATIONS
C04	EXISTING ANTENNA PLAN (ALL SECTORS)
C04A	INTERIM ANTENNA PLAN (ALL SECTORS)
C04B	FINAL ANTENNA PLAN (ALL SECTORS)
C04C	RRH MOUNT DETAILS (ALL SECTORS)
C05	SITE DETAILS
C06	RF SCHEDULE
C06A	RF DATA SHEET
C07	AAV DRAWINGS - COVER SHEET
C07A	AAV DRAWINGS - SITE PHOTOS
C07B	AAV DRAWINGS - COMPOUND PLAN
C07C	AAV DRAWINGS - DETAILS
E01	ELECTRICAL NOTES
E02	ELECTRICAL & GROUNDING DETAILS

CODES & STANDARDS

These documents are in compliance & all construction to be in accordance with the following codes & standards as applicable:

State Building Code: 2005 Connecticut Supplement

2003 International Building Code
2003 International Residential Code
2003 International Existing Building Code
2003 International Mechanic Code
2003 International Plumbing Code
2003 International Energy Conservation Code (re-adopted with changes)
ICC/ANSI A117.1-2003 Assessible and Usable Buildings and Facilities

2005 National Electrical Code (NFPA-70)

DRIVING DIRECTIONS

1. DEPART 1 INTERNATIONAL BLVD, MAHWAH, NJ 07495
2. TAKE 3RD EXIT FROM ROUNDABOUT INTERNATIONAL BLVD ONTO LEISURE LN.
3. TAKE RAMP ONTO STATE HIGHWAY 17 (RT-17 N).
4. CONTINUE ON I-287 N.
5. TAKE THE I-87 S/I-287/NEW YORK STATE THRUWAY SOUTH/TAPPAN ZEE BR/NEW YORK CITY EXIT ONTO NEW YORK STATE THRUWAY SOUTH (I-287 E, I-87 S) (PARTIAL TOLL ROAD).
6. KEEP RIGHT ONTO NEW YORK STATE THRUWAY SOUTH (I-87 S) TOWARD RT-119/SAW MILL PKWY NORTH.SAW MILL PKWY SOUTH/NEW YORK CITY/ELMSFORD.
7. TAKE EXIT #8A/RT-119/SAW MILL PKWY NORTH/ELMSFORD ONTO SAW MILL PKY NORTH, SAW MILL RIVER PKY N TOWARD SAW MILL RIVER PKWY NORTH/KATONAH.
8. TAKE LEFT RAMP ONTO I-684 N TOWARD BREWSTER.
9. TAKE EXIT #9E/I-84 E/DANBURY ONTO I-84 E.
10. TAKE EXIT #20/CT-8 N/TORRINGTON TO THE LEFT ONTO CT-8 N.
11. TAKE EXIT #41/NORTHFIELD/CAMPVILLE.
12. TURN RIGHT ONTO CAMPVILLE RD.
13. CONTINUE ON NORTHFIELD RD.
14. BEAR LEFT ONTO VALLEY RD.
15. TURN RIGHT ONTO CAMPVILLE HILL RD. YOUR DESTINATION ON CAMPVILLE HILL RD IS ON THE RIGHT.

Sprint®

Alcatel·Lucent

REV.	DATE	REVISION DESCRIPTION	DRAWN BY	CHKD. BY
0	08-10-12	ISSUED FOR CONSTRUCTION	MCD	KCD

KMB DESIGN GROUP
kmbdg.com
1800 ROUTE 34, SUITE 209
WALL, NJ 07719
(732) 280-5623

Stephen A. Bray
PROFESSIONAL ENGINEER
STATE OF CONNECTICUT · STEPHEN A. BRAY · No. 26657 · LICENSED · PROFESSIONAL ENGINEER
CT LICENSE: 26657 8/10/12

PROJECT NUMBER: **332.1499**

SITE INFORMATION:
123 CAMPVILLE HILL ROAD
HARWINTON, CT 06791
LITCHFIELD COUNTY

CT33XC111

PROJECT TYPE: NETWORK VISION

DRAWN BY:	CHECKED BY:	DATE:
JLS		05-01-12

SHEET TITLE: COVER SHEET

SHEET NUMBER: A01 REV.: 0

OWNERSHIP OF DOCUMENTS: THIS DOCUMENT AND THE IDEAS AND DESIGNS INCORPORATED HEREIN, AS IN INSTRUMENT OF PROFESSIONAL SERVICE, ARE THE PROPERTY OF KMB DESIGN GROUP, LLC AND ARE NOT TO BE USED, IN WHOLE OR IN PART, FOR OTHER PROJECTS WITHOUT THE WRITTEN AUTHORIZATION OF KMB DESIGN GROUP, LLC. IT IS UNLAWFUL FOR ANY PERSON TO AMEND ANY ASPECT OF THESE DRAWINGS UNLESS THEY HAVE THE APPROVAL OF THE LICENSED PROFESSIONAL IN WRITING.

K:\332_Sprint_332.1000_Alcatel-Lucent\332.1499_CT33XC111_123 Campville Hill Road\332.1499_CAD\332.1499_Construction\332.1499.A01.dwg, 8/10/2012 10:31:47 AM, mdufly

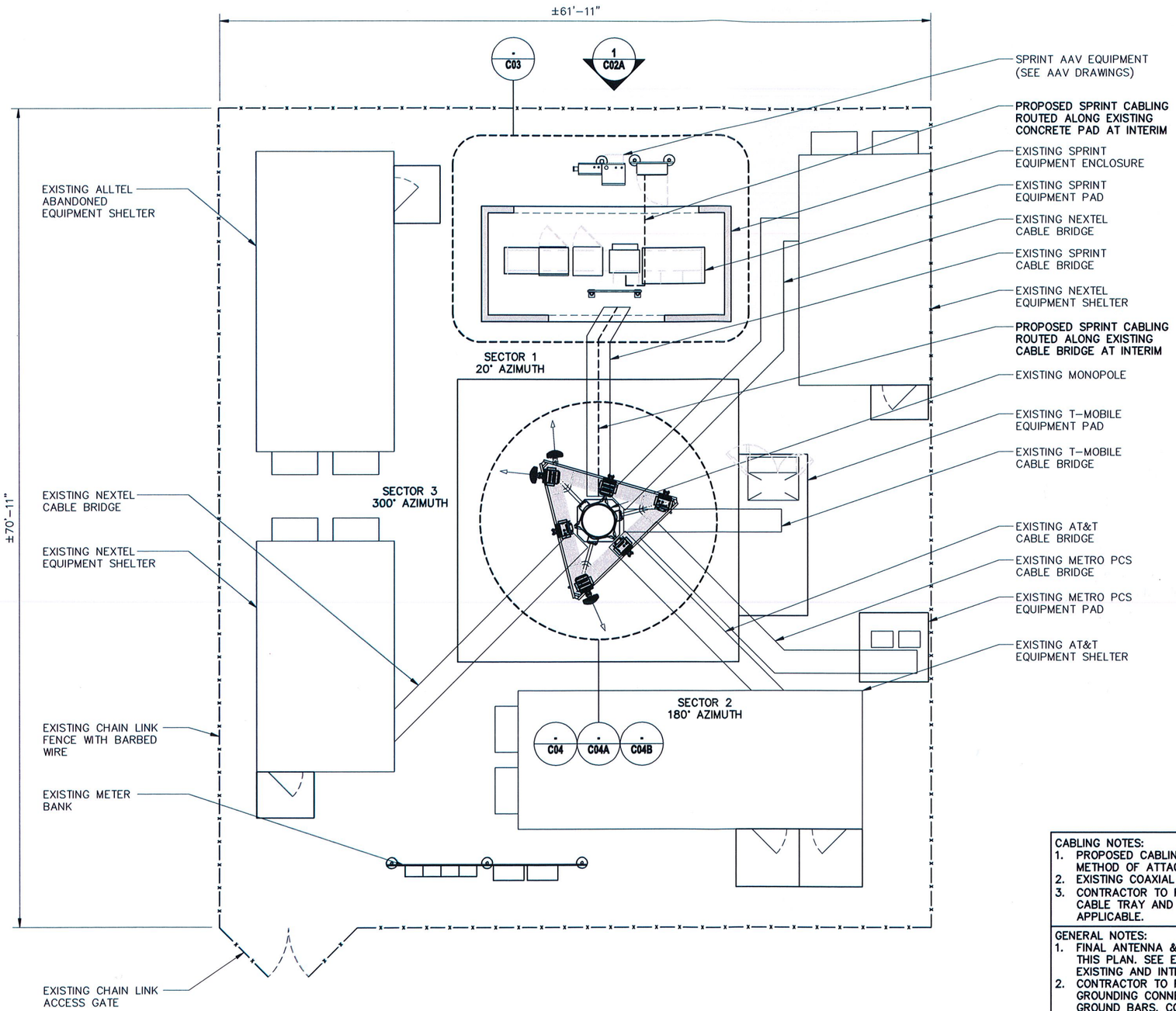

CABLING NOTES:
1. PROPOSED CABLING TO FOLLOW EXISTING ROUTE AND METHOD OF ATTACHMENT AT INTERIM.
2. EXISTING COAXIAL CABLES TO BE REMOVED AT FINAL.
3. CONTRACTOR TO REPAIR/REPLACE ANY MISSING/DAMAGED CABLE TRAY AND ADD HURRICANE STRAPS AS REQUIRED IF APPLICABLE.

GENERAL NOTES:
1. FINAL ANTENNA & EQUIPMENT CONFIGURATION SHOWN ON THIS PLAN. SEE EQUIPMENT & ANTENNA PLAN SHEETS FOR EXISTING AND INTERIM CONFIGURATION.
2. CONTRACTOR TO REPLACE ALL MISSING GROUND BARS AND GROUNDING CONNECTIONS AS REQUIRED WITH GALVANIZED GROUND BARS. CONTRACTOR SHALL PROVIDE BEFORE & AFTER PHOTOS.
3. CONTRACTOR TO RESTORE ANY RUST AREA TO ORIGINAL CONDITION AND PROTECTIVE COATING TO BE APPLIED.
4. STRUCTURAL ANALYSIS PROVIDED UNDER SEPARATE COVER.
5. PROPOSED SPRINT GPS UNIT TO REPLACE EXISTING GPS AT FINAL.

2.5 0 2.5 5 10
(IN FEET)

1 COMPOUND PLAN

11x17 SCALE:1" = 10' | 24x36 SCALE: 1" = 5'

OWNERSHIP OF DOCUMENTS: THIS DOCUMENT AND THE IDEAS AND DESIGNS INCORPORATED HEREIN, AS IN INSTRUMENT OF PROFESSIONAL SERVICE, ARE THE PROPERTY OF KMB DESIGN GROUP, LLC AND ARE NOT TO BE USED, IN WHOLE OR IN PART, FOR OTHER PROJECTS WITHOUT THE WRITTEN AUTHORIZATION OF KMB DESIGN GROUP, LLC. IT IS UNLAWFUL FOR ANY PERSON TO AMEND ANY ASPECT OF THESE DRAWINGS UNLESS THEY HAVE THE APPROVAL OF THE LICENSED PROFESSIONAL IN WRITING.

Sprint

Alcatel·Lucent

REV.	DATE	REVISION DESCRIPTION	DRAWN BY	CHKD. BY
0	08-10-12	ISSUED FOR CONSTRUCTION	MCD	KCD

KMB DESIGN GROUP
kmbdg.com
1800 ROUTE 34, SUITE 209
WALL, NJ 07719
(732) 280-5623

Stephen A. Bray
PROFESSIONAL ENGINEER
STATE OF CONNECTICUT STEPHEN A. BRAY No. 26657 LICENSED PROFESSIONAL ENGINEER

CT LICENSE: 26657 8/10/12

PROJECT NUMBER: 332.1499

SITE INFORMATION:
123 CAMPVILLE HILL ROAD
HARWINTON, CT 06791
LITCHFIELD COUNTY

CT33XC111

PROJECT TYPE: NETWORK VISION

DRAWN BY:	CHECKED BY:	DATE:
JLS		05-01-12

SHEET TITLE: COMPOUND PLAN

SHEET NUMBER: C02 | REV.: 0

K:\332_Sprint_332.1000_Alcatel-Lucent\332.1499_CT33XC111_123 Campville Hill Road\332.1499_Construction\332.1499.C02.dwg, 8/10/2012 10:31:56 AM, mdufty

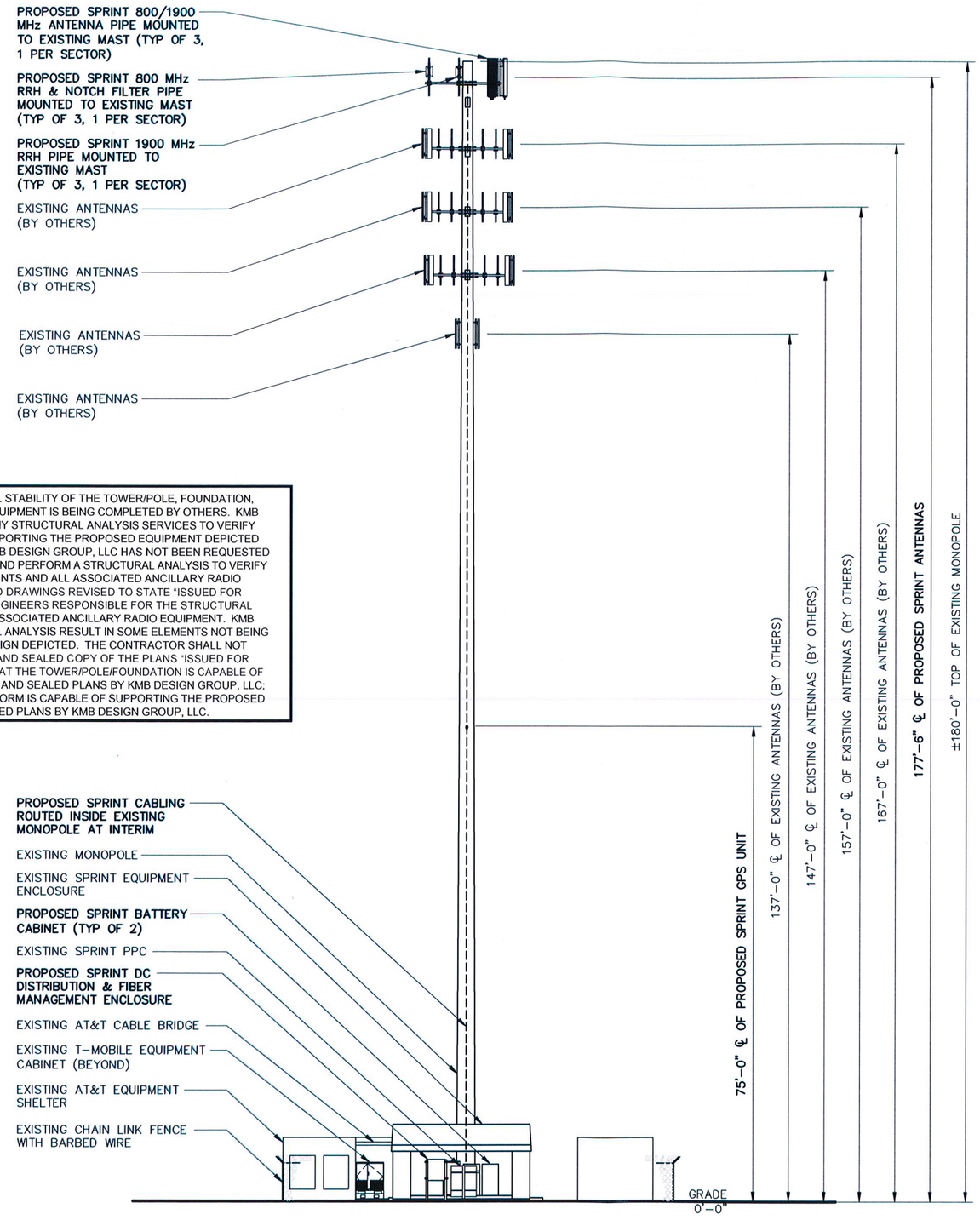

THE STRUCTURAL ENGINEERING CONCERNING THE STRUCTURAL STABILITY OF THE TOWER/POLE, FOUNDATION, ANTENNAS, MOUNTS AND ALL ASSOCIATED ANCILLARY RADIO EQUIPMENT IS BEING COMPLETED BY OTHERS. KMB DESIGN GROUP, LLC HAS NOT BEEN REQUESTED TO PERFORM ANY STRUCTURAL ANALYSIS SERVICES TO VERIFY THAT THE TOWER/POLE AND/OR FOUNDATION IS CAPABLE OF SUPPORTING THE PROPOSED EQUIPMENT DEPICTED WITHIN THESE SIGNED AND SEALED DRAWINGS. FURTHERMORE KMB DESIGN GROUP, LLC HAS NOT BEEN REQUESTED TO PHYSICALLY CONFIRM THE EXISTING MOUNT CONFIGURATION AND PERFORM A STRUCTURAL ANALYSIS TO VERIFY THAT THE EXISTING, INTERIM AND PROPOSED ANTENNAS, MOUNTS AND ALL ASSOCIATED ANCILLARY RADIO EQUIPMENT CAN BE SAFELY SUPPORTED. SIGNED AND SEALED DRAWINGS REVISED TO STATE "ISSUED FOR CONSTRUCTION" SHALL BE PROVIDED TO THE PROFESSIONAL ENGINEERS RESPONSIBLE FOR THE STRUCTURAL ANALYSIS OF THE TOWER/POLE, ANTENNAS, MOUNTS AND ALL ASSOCIATED ANCILLARY RADIO EQUIPMENT. KMB DESIGN GROUP, LLC SHALL BE NOTIFIED SHOULD THE STRUCTURAL ANALYSIS RESULT IN SOME ELEMENTS NOT BEING STRUCTURALLY CAPABLE OF SUPPORTING THE PROPOSED DESIGN DEPICTED. THE CONTRACTOR SHALL NOT COMMENCE CONSTRUCTION WITHOUT OBTAINING (A) A SIGNED AND SEALED COPY OF THE PLANS "ISSUED FOR CONSTRUCTION"; (B) STRUCTURAL ANALYSIS REPORT STATING THAT THE TOWER/POLE/FOUNDATION IS CAPABLE OF SUPPORTING THE PROPOSED LOADING REFERENCING THE SIGNED AND SEALED PLANS BY KMB DESIGN GROUP, LLC; (C) SPRINT PLATFORM ANALYSIS STATING THAT THE SPRINT PLATFORM IS CAPABLE OF SUPPORTING THE PROPOSED DESIGN AS REFERENCED WITHIN THE SIGNED AND SEALED PLANS BY KMB DESIGN GROUP, LLC.

OWNERSHIP OF DOCUMENTS THIS DOCUMENT AND THE IDEAS AND DESIGNS INCORPORATED HEREIN, AS AN INSTRUMENT OF PROFESSIONAL SERVICE, ARE THE PROPERTY OF KMB DESIGN GROUP, LLC AND ARE NOT TO BE USED, IN WHOLE OR IN PART, FOR OTHER PROJECTS WITHOUT THE WRITTEN AUTHORIZATION OF KMB DESIGN GROUP, LLC. IT IS UNLAWFUL FOR ANY PERSON TO ALTER ANY ASPECT OF THESE DRAWINGS UNLESS THEY HAVE THE APPROVAL OF THE LICENSED PROFESSIONAL IN WRITING.

1 NORTHEAST ELEVATION

11x17 SCALE: 1" = 20' | 24x36 SCALE: 1" = 10'

Sprint®

Alcatel·Lucent

REV.	DATE	REVISION DESCRIPTION	DRAWN BY	CHKD. BY
0	08-10-12	ISSUED FOR CONSTRUCTION	MCD	KCD

KMB DESIGN GROUP
kmbdg.com
1800 ROUTE 34, SUITE 209
WALL, NJ 07719
(732) 280-5623

Stephen A. Bray
PROFESSIONAL ENGINEER
STATE OF CONNECTICUT · STEPHEN A. BRAY · NO. 26657 · LICENSED PROFESSIONAL ENGINEER

CT LICENSE: 26657 8/10/12

PROJECT NUMBER: 332.1499

SITE INFORMATION:
123 CAMPVILLE HILL ROAD
HARWINTON, CT 06791
LITCHFIELD COUNTY

CT33XC111

PROJECT TYPE: NETWORK VISION

DRAWN BY:	CHECKED BY:	DATE:
JLS		05-01-12

SHEET TITLE: ELEVATION

SHEET NUMBER: C02A | REV.: 0

K:\332_Sprint_332.1000_Alcatel-Lucent\332.1499_CT33XC111_123 Campville Hill Road\332.1499_CT33XC111_123 Campville Hill Road\332.1499_Construction\332.1499_C02A.dwg, 8/10/2012 10:31:59 AM, mduffy

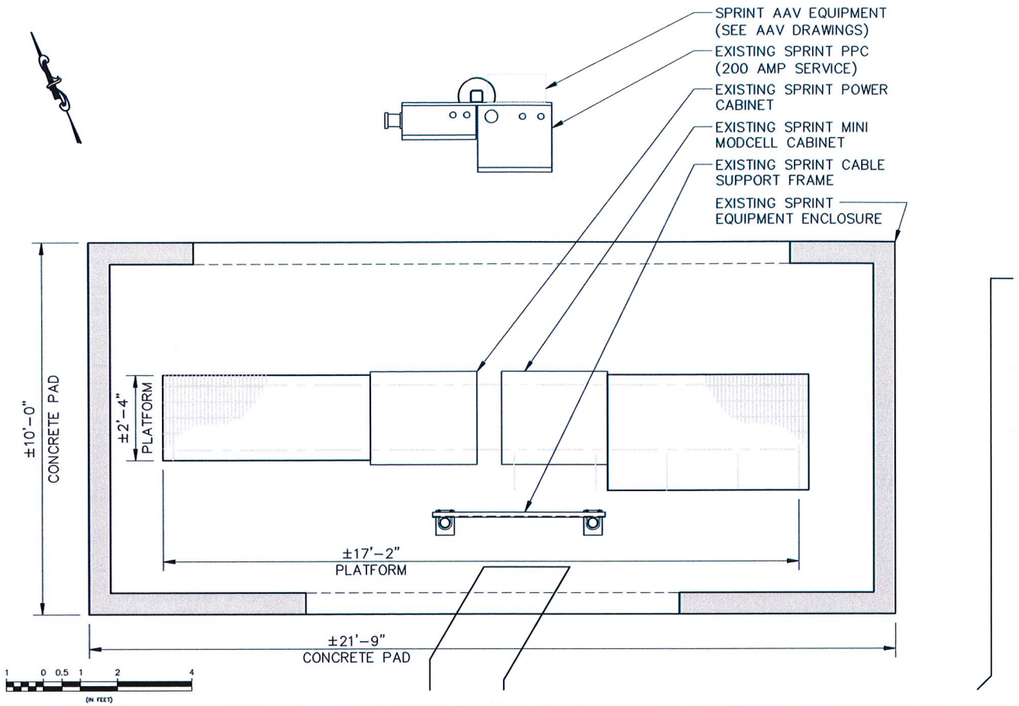

1 EXISTING EQUIPMENT PLAN

11x17 SCALE: 1/4" = 1'-0" | 24x36 SCALE: 1/2" = 1'-0"

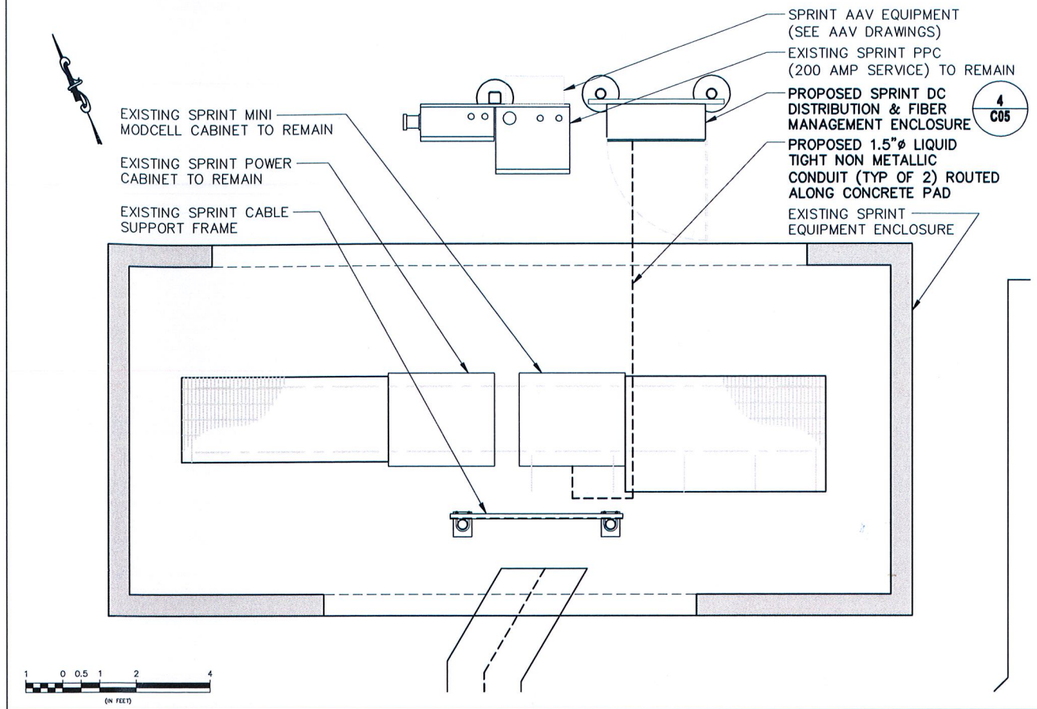

2 INTERIM EQUIPMENT PLAN

11x17 SCALE: 1/4" = 1'-0" | 24x36 SCALE: 1/2" = 1'-0"

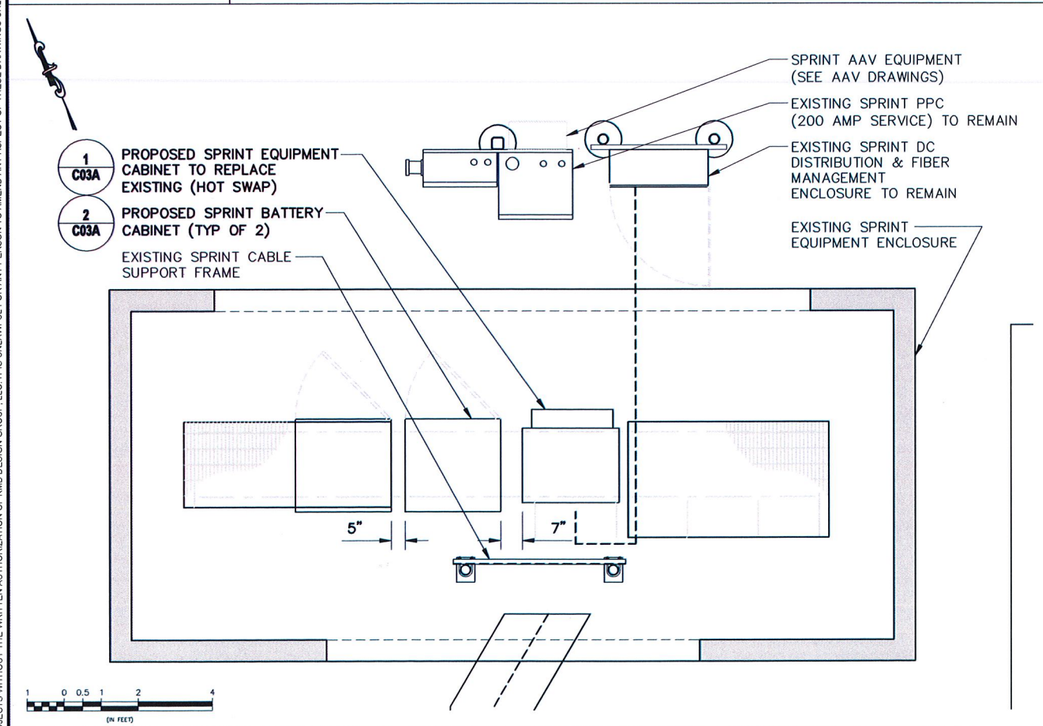

3 FINAL EQUIPMENT PLAN

11x17 SCALE: 1/4" = 1'-0" | 24x36 SCALE: 1/2" = 1'-0"

NOTE:
1. CONTRACTOR TO REPLACE ALL MISSING GROUND BARS AND GROUNDING CONNECTIONS AS REQUIRED.

Sprint®

Alcatel·Lucent

REV.	DATE	REVISION DESCRIPTION	DRAWN BY	CHKD. BY
0	08-10-12	ISSUED FOR CONSTRUCTION	MCD	KCD

KMB DESIGN GROUP
kmbdg.com
1800 ROUTE 34, SUITE 209
WALL, NJ 07719
(732) 280-5623

Stephen A. Bray
PROFESSIONAL ENGINEER

STATE OF CONNECTICUT · STEPHEN A. BRAY · No. 26657 · LICENSED PROFESSIONAL ENGINEER

CT LICENSE: 26657 8/10/12

PROJECT NUMBER: 332.1499

SITE INFORMATION:
123 CAMPVILLE HILL ROAD
HARWINTON, CT 06791
LITCHFIELD COUNTY

CT33XC111

PROJECT TYPE: NETWORK VISION

DRAWN BY:	CHECKED BY:	DATE:
JLS		05-01-12

SHEET TITLE: EQUIPMENT PLANS

SHEET NUMBER: C03 | REV.: 0

OWNERSHIP OF DOCUMENTS: THIS DOCUMENT AND THE IDEAS AND DESIGNS INCORPORATED HEREIN, AS IN INSTRUMENT OF PROFESSIONAL SERVICE, ARE THE PROPERTY OF KMB DESIGN GROUP, LLC AND ARE NOT TO BE USED, IN WHOLE OR IN PART, FOR OTHER PROJECTS WITHOUT THE WRITTEN AUTHORIZATION OF KMB DESIGN GROUP, LLC. IT IS UNLAWFUL FOR ANY PERSON TO AMEND ANY ASPECT OF THESE DRAWINGS UNLESS THEY HAVE THE APPROVAL OF THE LICENSED PROFESSIONAL IN WRITING.

K:\332_Sprint_332.1000_Alcatel-Lucent\332.1499_CT33XC111_123 Campville Hill Road\332.1499_CAD\332.1499_Construction\332.1499.C03.dwg, 8/10/2012 10:32:03 AM, mduffy

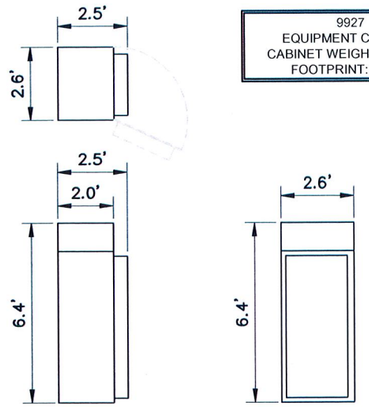

9927
EQUIPMENT CABINET
CABINET WEIGHT: 1020 lbs
FOOTPRINT: 5.3 SF

1 EQUIPMENT CABINET SPECIFICATIONS

11x17 SCALE: 3/16" = 1'-0" | 24x36 SCALE: 3/8" = 1'-0"

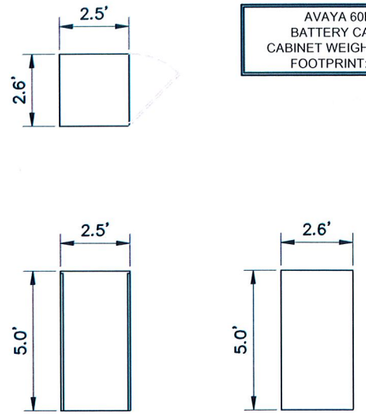

AVAYA 60ECv2
BATTERY CABINET
CABINET WEIGHT: 1625 lbs
FOOTPRINT: 6.5 SF

2 BATTERY CABINET SPECIFICATION

11x17 SCALE: 3/16" = 1'-0" | 24x36 SCALE: 3/8" = 1'-0"

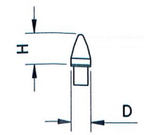

MANUF.: PCTEL
MODEL #: GPS-TMG-HR-26NCM
HEIGHT: 5.0"
DIAMETER: 3.2"
WEIGHT: 0.6 lbs

3 GPS UNIT SPECIFICATIONS

11x17 SCALE: 1/4" = 1'-0" | 24x36 SCALE: 1/2" = 1'-0"

4

DETAIL NOT USED

5

DETAIL NOT USED

6

DETAIL NOT USED

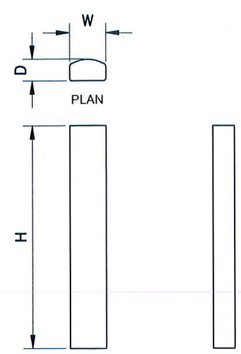

MANUF.: RFS
MODEL: APXVSPP18-C-A20
LENGTH 72.0"
WIDTH: 11.8"
DEPTH: 7.0"
WEIGHT: 64.5 lbs
AREA: 5.9 SF

7 ANTENNA SPECIFICATIONS - 800/1900 MHz

SCALE: NTS

8

DETAIL NOT USED

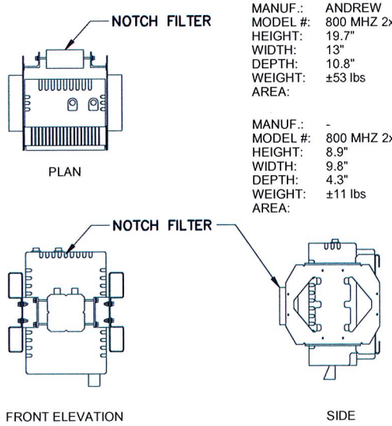

MANUF.: ANDREW
MODEL #: 800 MHZ 2x50W
HEIGHT: 19.7"
WIDTH: 13"
DEPTH: 10.8"
WEIGHT: ±53 lbs
AREA:

MANUF.: -
MODEL #: 800 MHZ 2x50W
HEIGHT: 8.9"
WIDTH: 9.8"
DEPTH: 4.3"
WEIGHT: ±11 lbs
AREA:

9 RRH SPECIFICATIONS - 800 MHz

11x17 SCALE: 1/2" = 1'-0" | 24x36 SCALE: 1" = 1'-0"

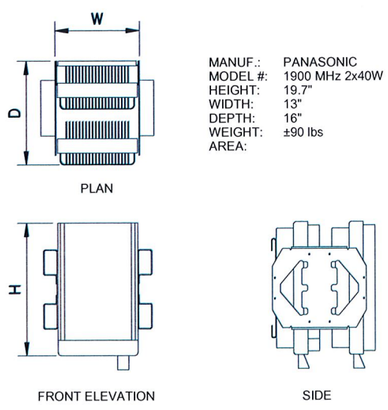

MANUF.: PANASONIC
MODEL #: 1900 MHz 2x40W
HEIGHT: 19.7"
WIDTH: 13"
DEPTH: 16"
WEIGHT: ±90 lbs
AREA:

10 RRH SPECIFICATIONS - 1900 MHz

11x17 SCALE: 1/2" = 1'-0" | 24x36 SCALE: 1" = 1'-0"

11

DETAIL NOT USED

Sprint®

Alcatel·Lucent

REV.	DATE	REVISION DESCRIPTION	DRAWN BY	CHKD. BY
0	08-10-12	ISSUED FOR CONSTRUCTION	MCD	KCD

KMB DESIGN GROUP
kmbdg.com
1800 ROUTE 34, SUITE 209
WALL, NJ 07719
(732) 280-5623

Stephen A. Bray
PROFESSIONAL ENGINEER
STATE OF CONNECTICUT
STEPHEN A. BRAY
No. 26657
LICENSED
PROFESSIONAL ENGINEER
CT LICENSE: 26657 8/10/12

PROJECT NUMBER: 332.1499

SITE INFORMATION:
123 CAMPVILLE HILL ROAD
HARWINTON, CT 06791
LITCHFIELD COUNTY

CT33XC111

PROJECT TYPE: NETWORK VISION

DRAWN BY: JLS | CHECKED BY: | DATE: 05-01-12

SHEET TITLE: EQUIPMENT & ANTENNA SPECIFICATIONS

SHEET NUMBER: C03A | REV.: 0

OWNERSHIP OF DOCUMENTS: THIS DOCUMENT AND THE IDEAS AND DESIGNS INCORPORATED HEREIN, AS IN INSTRUMENT OF PROFESSIONAL SERVICE, ARE THE PROPERTY OF KMB DESIGN GROUP, LLC AND ARE NOT TO BE USED, IN WHOLE OR IN PART, FOR OTHER PROJECTS WITHOUT THE WRITTEN AUTHORIZATION OF KMB DESIGN GROUP, LLC. IT IS UNLAWFUL FOR ANY PERSON TO AMEND ANY ASPECT OF THESE DRAWINGS UNLESS THEY HAVE THE APPROVAL OF THE LICENSED PROFESSIONAL IN WRITING.

K:\332_Sprint_332.1000_Alcatel-Lucent\332.1499_CT33XC111_123 Campville Hill Road\332.1499_CAD\332.1499_Construction\332.1499.C03A.dwg, 8/10/2012 10:32:06 AM, mduffy

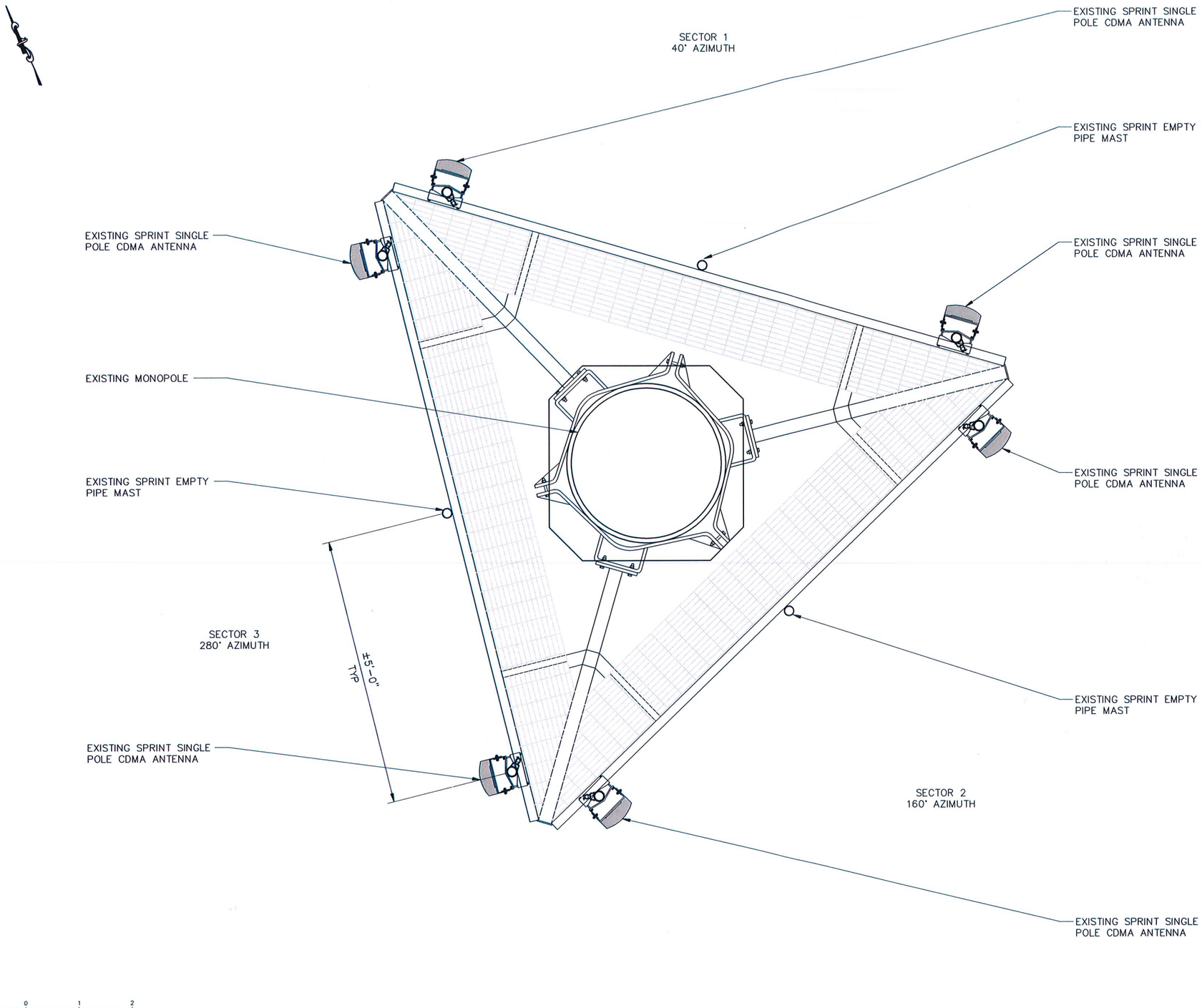

1 0 1 2
(IN FEET)

1 EXISTING ANTENNA PLAN @ ±177-6" AGL (ALL SECTORS)

11x17 SCALE: 1/2" = 1'-0' | 24x36 SCALE: 1" = 1'-0"

OWNERSHIP OF DOCUMENTS: THIS DOCUMENT AND THE IDEAS AND DESIGNS INCORPORATED HEREIN, AS AN INSTRUMENT OF PROFESSIONAL SERVICE, ARE THE PROPERTY OF KMB DESIGN GROUP, LLC AND ARE NOT TO BE USED, IN WHOLE OR IN PART, FOR OTHER PROJECTS WITHOUT THE EXPRESS WRITTEN AUTHORIZATION OF KMB DESIGN GROUP, LLC. IT IS UNLAWFUL FOR ANY PERSON TO AMEND ANY ASPECT OF THESE DRAWINGS UNLESS THEY HAVE THE APPROVAL OF THE LICENSED PROFESSIONAL IN WRITING.

Sprint®

Alcatel·Lucent

REV.	DATE	REVISION DESCRIPTION	DRAWN BY	CHKD. BY
0	08-10-12	ISSUED FOR CONSTRUCTION	MCD	KCD

KMB DESIGN GROUP
kmbdg.com
1800 ROUTE 34, SUITE 209
WALL, NJ 07719
(732) 280-5623

Stephen A. Bray
PROFESSIONAL ENGINEER

STATE OF CONNECTICUT
STEPHEN A. BRAY
No. 26657
LICENSED
PROFESSIONAL ENGINEER

CT LICENSE: 26657 8/10/12

PROJECT NUMBER:
332.1499

SITE INFORMATION:
123 CAMPVILLE HILL ROAD
HARWINTON, CT 06791
LITCHFIELD COUNTY

CT33XC111

PROJECT TYPE:
NETWORK VISION

DRAWN BY:	CHECKED BY:	DATE:
JLS		05-01-12

SHEET TITLE:
EXISTING ANTENNA PLAN
(ALL SECTORS)

SHEET NUMBER:	REV.:
C04	0

K:\332_Sprint_332.1000_Alcatel-Lucent\332.1499_CT33XC111_123 Campville Hill Road\332.1499_CAD\332.1499_Construction\332.1499.C04.dwg, 8/10/2012 10:32:09 AM, mduffy

THE STRUCTURAL ENGINEERING CONCERNING THE STRUCTURAL STABILITY OF THE TOWER/POLE, FOUNDATION, ANTENNAS, MOUNTS AND ALL ASSOCIATED ANCILLARY RADIO EQUIPMENT IS BEING COMPLETED BY OTHERS. KMB DESIGN GROUP, LLC HAS NOT BEEN REQUESTED TO PERFORM ANY STRUCTURAL ANALYSIS SERVICES TO VERIFY THAT THE TOWER/POLE AND/OR FOUNDATION IS CAPABLE OF SUPPORTING THE PROPOSED EQUIPMENT DEPICTED WITHIN THESE SIGNED AND SEALED DRAWINGS. FURTHERMORE KMB DESIGN GROUP, LLC HAS NOT BEEN REQUESTED TO PHYSICALLY CONFIRM THE EXISTING MOUNT CONFIGURATION AND PERFORM A STRUCTURAL ANALYSIS TO VERIFY THAT THE EXISTING, INTERIM AND PROPOSED ANTENNAS, MOUNTS AND ALL ASSOCIATED ANCILLARY RADIO EQUIPMENT CAN BE SAFELY SUPPORTED. SIGNED AND SEALED DRAWINGS REVISED TO STATE "ISSUED FOR CONSTRUCTION" SHALL BE PROVIDED TO THE PROFESSIONAL ENGINEERS RESPONSIBLE FOR THE STRUCTURAL ANALYSIS OF THE TOWER/POLE, ANTENNAS, MOUNTS AND ALL ASSOCIATED ANCILLARY RADIO EQUIPMENT. KMB DESIGN GROUP, LLC SHALL BE NOTIFIED SHOULD THE STRUCTURAL ANALYSIS RESULT IN SOME ELEMENTS NOT BEING STRUCTURALLY CAPABLE OF SUPPORTING THE PROPOSED DESIGN DEPICTED. THE CONTRACTOR SHALL NOT COMMENCE CONSTRUCTION WITHOUT OBTAINING (A) A SIGNED AND SEALED COPY OF THE PLANS "ISSUED FOR CONSTRUCTION"; (B) STRUCTURAL ANALYSIS REPORT STATING THAT THE TOWER/POLE/FOUNDATION IS CAPABLE OF SUPPORTING THE PROPOSED LOADING REFERENCING THE SIGNED AND SEALED PLANS BY KMB DESIGN GROUP, LLC; (C) SPRINT PLATFORM ANALYSIS STATING THAT THE SPRINT PLATFORM IS CAPABLE OF SUPPORTING THE PROPOSED DESIGN AS REFERENCED WITHIN THE SIGNED AND SEALED PLANS BY KMB DESIGN GROUP, LLC.

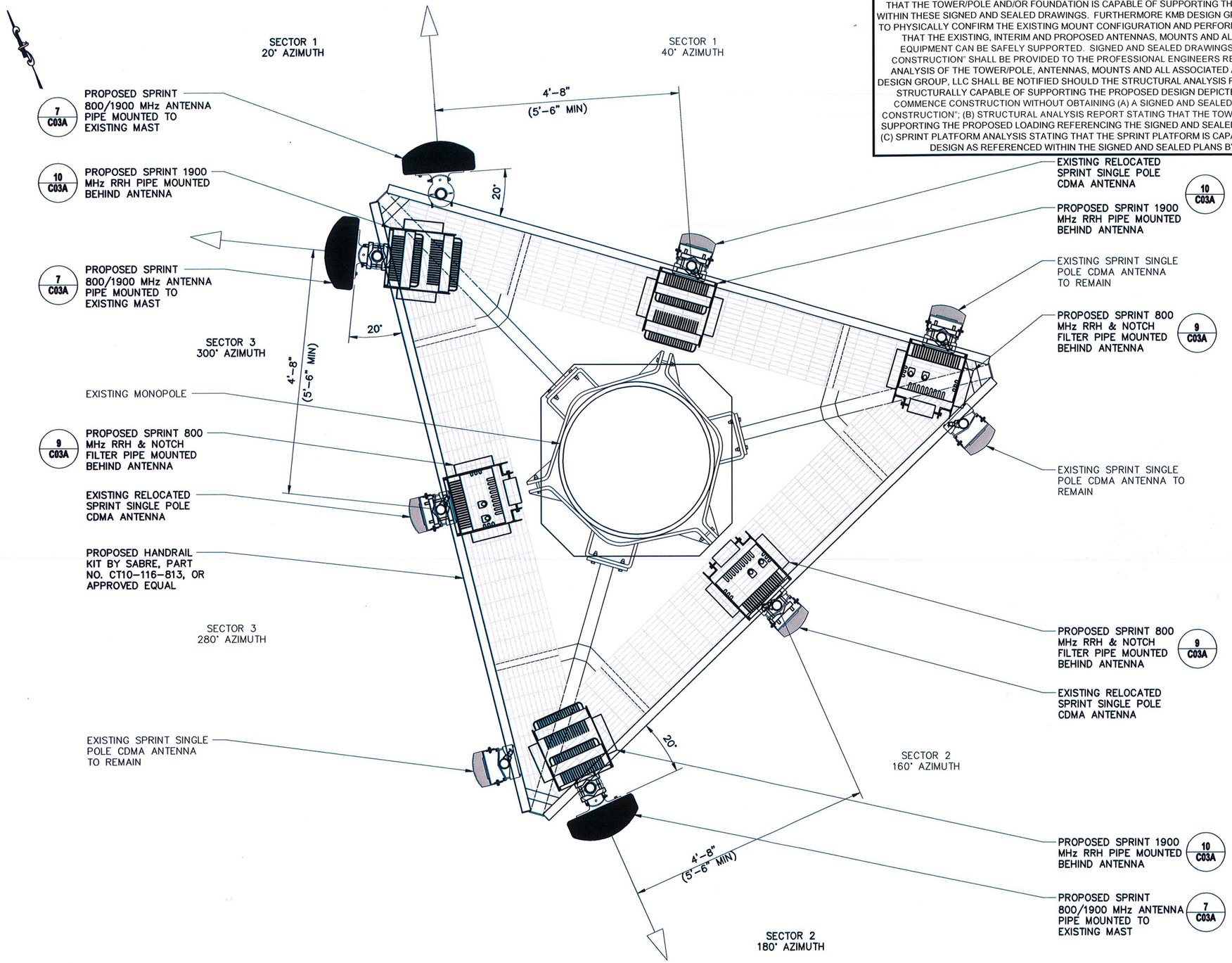

1 INTERIM ANTENNA PLAN @ ±177-6" AGL (ALL SECTORS)

11x17 SCALE: 1/2" = 1'-0' | 24x36 SCALE: 1" = 1'-0"

OWNERSHIP OF DOCUMENTS: THIS DOCUMENT AND THE IDEAS AND DESIGNS INCORPORATED HEREIN, AS AN INSTRUMENT OF PROFESSIONAL SERVICE, ARE THE PROPERTY OF KMB DESIGN GROUP, LLC AND ARE NOT TO BE USED, IN WHOLE OR IN PART, FOR OTHER PROJECTS WITHOUT THE WRITTEN AUTHORIZATION OF KMB DESIGN GROUP, LLC. IT IS UNLAWFUL FOR ANY PERSON TO AMEND ANY ASPECT OF THESE DRAWINGS UNLESS THEY HAVE THE APPROVAL OF THE LICENSED PROFESSIONAL IN WRITING.

Sprint®

Alcatel·Lucent

REV.	DATE	REVISION DESCRIPTION	DRAWN BY	CHKD. BY
0	08-10-12	ISSUED FOR CONSTRUCTION	MCD	KCD

KMB DESIGN GROUP
kmbdg.com
1800 ROUTE 34, SUITE 209
WALL, NJ 07719
(732) 280-5623

Stephen A. Bray
PROFESSIONAL ENGINEER

STATE OF CONNECTICUT
STEPHEN A. BRAY
No. 26657
LICENSED
PROFESSIONAL ENGINEER

CT LICENSE: 26657 8/10/12

PROJECT NUMBER: 332.1499

SITE INFORMATION:
123 CAMPVILLE HILL ROAD
HARWINTON, CT 06791
LITCHFIELD COUNTY

CT33XC111

PROJECT TYPE: NETWORK VISION

DRAWN BY:	CHECKED BY:	DATE:
JLS		05-01-12

SHEET TITLE: INTERIM ANTENNA PLAN (ALL SECTORS)

SHEET NUMBER: C04A | REV.: 0

K:\332_Sprint_332.1000_Alcatel-Lucent\332.1499_CT33XC111_123 Campville Hill Road\332.1499_CT33XC111_123 Campville Hill Road\332.1499_Construction\332.1499.C04A.dwg, 8/10/2012 10:32:12 AM, mdurffy

THE STRUCTURAL ENGINEERING CONCERNING THE STRUCTURAL STABILITY OF THE TOWER/POLE, FOUNDATION, ANTENNAS, MOUNTS AND ALL ASSOCIATED ANCILLARY RADIO EQUIPMENT IS BEING COMPLETED BY OTHERS. KMB DESIGN GROUP, LLC HAS NOT BEEN REQUESTED TO PERFORM ANY STRUCTURAL ANALYSIS SERVICES TO VERIFY THAT THE TOWER/POLE AND/OR FOUNDATION IS CAPABLE OF SUPPORTING THE PROPOSED EQUIPMENT DEPICTED WITHIN THESE SIGNED AND SEALED DRAWINGS. FURTHERMORE KMB DESIGN GROUP, LLC HAS NOT BEEN REQUESTED TO PHYSICALLY CONFIRM THE EXISTING MOUNT CONFIGURATION AND PERFORM A STRUCTURAL ANALYSIS TO VERIFY THAT THE EXISTING, INTERIM AND PROPOSED ANTENNAS, MOUNTS AND ALL ASSOCIATED ANCILLARY RADIO EQUIPMENT CAN BE SAFELY SUPPORTED. SIGNED AND SEALED DRAWINGS REVISED TO STATE "ISSUED FOR CONSTRUCTION" SHALL BE PROVIDED TO THE PROFESSIONAL ENGINEERS RESPONSIBLE FOR THE STRUCTURAL ANALYSIS OF THE TOWER/POLE, ANTENNAS, MOUNTS AND ALL ASSOCIATED ANCILLARY RADIO EQUIPMENT. KMB DESIGN GROUP, LLC SHALL BE NOTIFIED SHOULD THE STRUCTURAL ANALYSIS RESULT IN SOME ELEMENTS NOT BEING STRUCTURALLY CAPABLE OF SUPPORTING THE PROPOSED DESIGN DEPICTED. THE CONTRACTOR SHALL NOT COMMENCE CONSTRUCTION WITHOUT OBTAINING (A) A SIGNED AND SEALED COPY OF THE PLANS "ISSUED FOR CONSTRUCTION"; (B) STRUCTURAL ANALYSIS REPORT STATING THAT THE TOWER/POLE/FOUNDATION IS CAPABLE OF SUPPORTING THE PROPOSED LOADING REFERENCING THE SIGNED AND SEALED PLANS BY KMB DESIGN GROUP, LLC; (C) SPRINT PLATFORM ANALYSIS STATING THAT THE SPRINT PLATFORM IS CAPABLE OF SUPPORTING THE PROPOSED DESIGN AS REFERENCED WITHIN THE SIGNED AND SEALED PLANS BY KMB DESIGN GROUP, LLC.

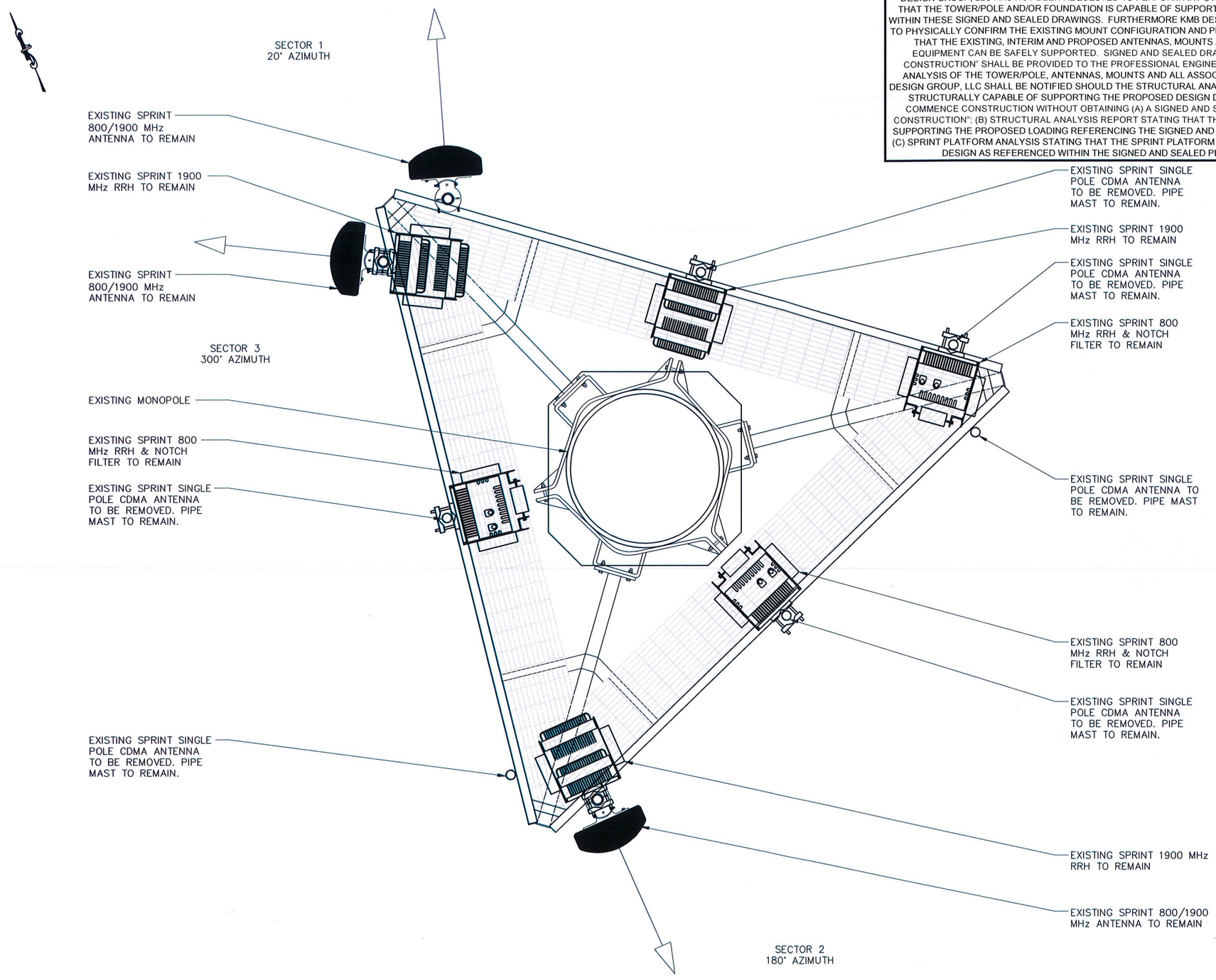

1 0 1 2
(IN FEET)

1 FINAL ANTENNA PLAN @ ±177-6" AGL (ALL SECTORS)

11x17 SCALE: 1/2" = 1'-0' | 24x36 SCALE: 1" = 1'-0"

OWNERSHIP OF DOCUMENTS: THIS DOCUMENT AND THE IDEAS AND DESIGNS INCORPORATED HEREIN, AS IN INSTRUMENT OF PROFESSIONAL SERVICE, ARE THE PROPERTY OF KMB DESIGN GROUP, LLC AND ARE NOT TO BE USED, IN WHOLE OR IN PART, FOR OTHER PROJECTS WITHOUT THE WRITTEN AUTHORIZATION OF KMB DESIGN GROUP, LLC. IT IS UNLAWFUL FOR ANY PERSON TO AMEND ANY ASPECT OF THESE DRAWINGS UNLESS THEY HAVE THE APPROVAL OF THE LICENSED PROFESSIONAL IN WRITING.

Sprint®

Alcatel·Lucent

REV.	DATE	REVISION DESCRIPTION	DRAWN BY	CHKD. BY
0	08-10-12	ISSUED FOR CONSTRUCTION	MCD	KCD

KMB DESIGN GROUP
kmbdg.com
1800 ROUTE 34, SUITE 209
WALL, NJ 07719
(732) 280-5623

Stephen A. Bray
PROFESSIONAL ENGINEER
STATE OF CONNECTICUT · STEPHEN A. BRAY · NO. 26657 · LICENSED PROFESSIONAL ENGINEER

CT LICENSE: 26657 8/10/12

PROJECT NUMBER: 332.1499

SITE INFORMATION:
123 CAMPVILLE HILL ROAD
HARWINTON, CT 06791
LITCHFIELD COUNTY

CT33XC111

PROJECT TYPE: NETWORK VISION

DRAWN BY:	CHECKED BY:	DATE:
JLS		05-01-12

SHEET TITLE: FINAL ANTENNA PLAN (ALL SECTORS)

SHEET NUMBER: C04B | REV.: 0

K:\332_Sprint_332.1000_Alcatel-Lucent\332.1499_CT33XC111_123 Campville Hill Road\332.1499_CAD\332.1499_Construction\332.1499.CD4B.dwg, 8/10/2012 10:32:15 AM, mdufty

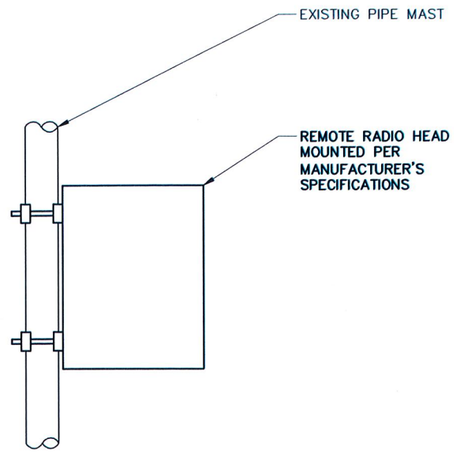

1 **RRH MOUNT DETAIL**

SCALE: NTS

OWNERSHIP OF DOCUMENTS: THIS DOCUMENT AND THE IDEAS AND DESIGNS INCORPORATED HEREIN, AS AN INSTRUMENT OF PROFESSIONAL SERVICE, ARE THE PROPERTY OF KMB DESIGN GROUP, LLC AND ARE NOT TO BE USED, IN WHOLE OR IN PART, FOR OTHER PROJECTS WITHOUT THE WRITTEN AUTHORIZATION OF KMB DESIGN GROUP, LLC. IT IS UNLAWFUL FOR ANY PERSON TO AMEND ANY ASPECT OF THESE DRAWINGS UNLESS THEY HAVE THE APPROVAL OF THE LICENSED PROFESSIONAL IN WRITING.

Sprint®

Alcatel·Lucent

REV.	DATE	REVISION DESCRIPTION	DRAWN BY	CHKD. BY
0	08-10-12	ISSUED FOR CONSTRUCTION	MCD	KCD

KMB DESIGN GROUP
kmbdg.com
1800 ROUTE 34, SUITE 209
WALL, NJ 07719
(732) 280-5623

Stephen A. Bray
PROFESSIONAL ENGINEER

STATE OF CONNECTICUT
STEPHEN A. BRAY
No. 26657
LICENSED
PROFESSIONAL ENGINEER

CT LICENSE: 26657 8/10/12

PROJECT NUMBER:
332.1499

SITE INFORMATION:
123 CAMPVILLE HILL ROAD
HARWINTON, CT 06791
LITCHFIELD COUNTY

CT33XC111

PROJECT TYPE:
NETWORK VISION

DRAWN BY:	CHECKED BY:	DATE:
JLS		05-01-12

SHEET TITLE:
RRH MOUNT DETAILS
(ALL SECTORS)

SHEET NUMBER:	REV.:
C04C	0

K:\332_Sprint_332.1000_Alcatel-Lucent\332.1499_CT33XC111_123 Campville Hill Road\332.1499_CAD\332.1499_Construction\332.1499.C04C.dwg, 8/10/2012 10:32:18 AM, mduffy

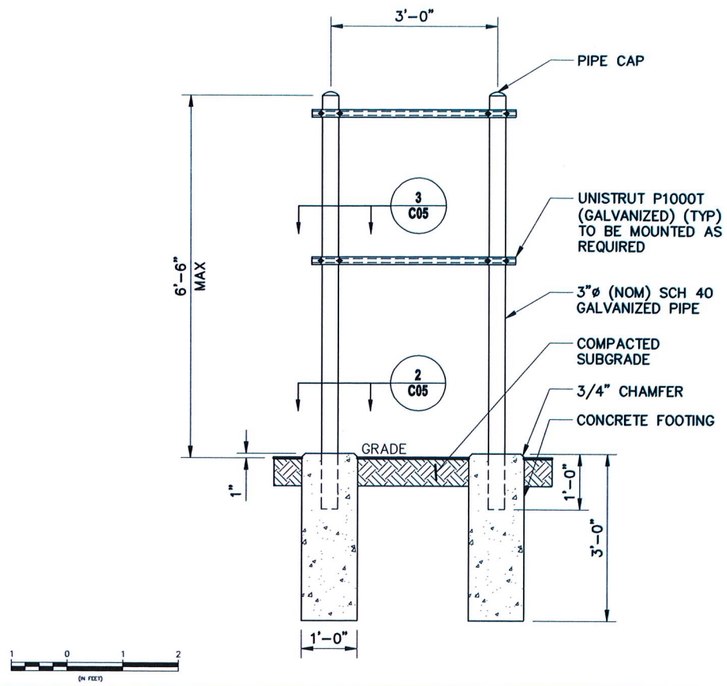

1 UNISTRUT FRAME DETAIL

11x17 SCALE: 3/8" = 1'-0" | 24x36 SCALE: 3/4" = 1'-0"

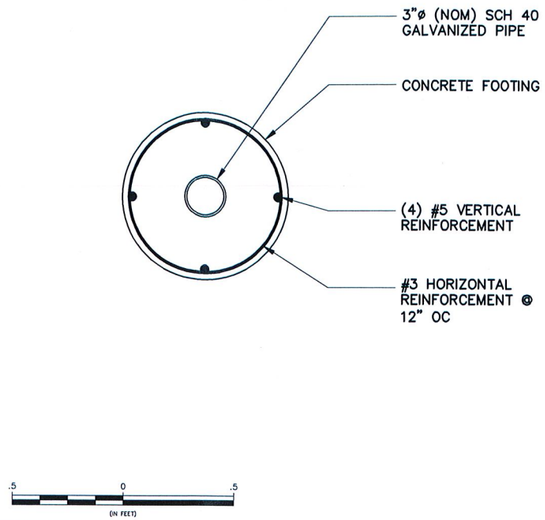

2 CONCRETE PIER DETAIL

11x17 SCALE: 1 1/2" = 1'-0" | 24x36 SCALE: 3" = 1'-0"

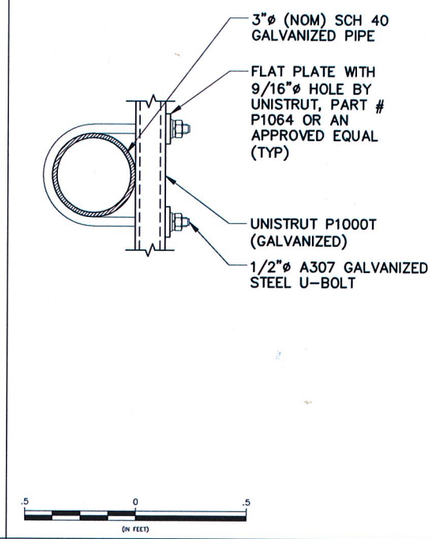

3 UNISTRUT CONNECTION DETAIL

11x17 SCALE: 1 1/2" = 1'-0" | 24x36 SCALE: 3" = 1'-0"

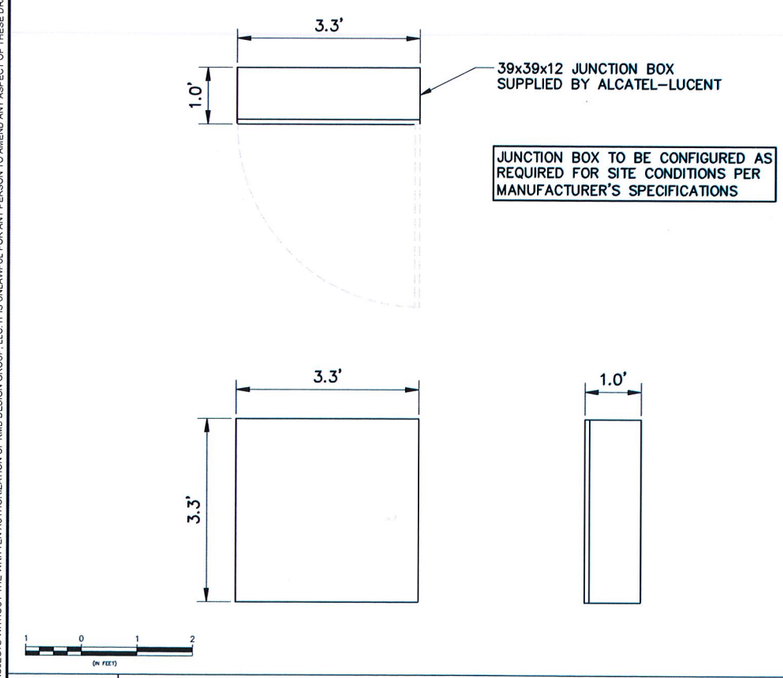

4 DC DISTRIBUTION & FIBER MGMT ENCLOSURE DETAIL

11x17 SCALE: 3/8" = 1'-0" | 24x36 SCALE: 3/4" = 1'-0"

Sprint®

Alcatel·Lucent

REV.	DATE	REVISION DESCRIPTION	DRAWN BY	CHKD. BY
0	08-10-12	ISSUED FOR CONSTRUCTION	MCD	KCD

KMB DESIGN GROUP
kmbdg.com
1800 ROUTE 34, SUITE 209
WALL, NJ 07719
(732) 280-5623

Stephen A. Bray
PROFESSIONAL ENGINEER
STATE OF CONNECTICUT · STEPHEN A. BRAY · No. 26657 · LICENSED PROFESSIONAL ENGINEER
CT LICENSE: 26657 8/10/12

PROJECT NUMBER: 332.1499

SITE INFORMATION:
123 CAMPVILLE HILL ROAD
HARWINTON, CT 06791
LITCHFIELD COUNTY

CT33XC111

PROJECT TYPE: NETWORK VISION

DRAWN BY: JLS | CHECKED BY: | DATE: 05-01-12

SHEET TITLE: SITE DETAILS

SHEET NUMBER: C05 | REV.: 0

OWNERSHIP OF DOCUMENTS: THIS DOCUMENT AND THE IDEAS AND DESIGNS INCORPORATED HEREIN, AS AN INSTRUMENT OF PROFESSIONAL SERVICE, ARE THE PROPERTY OF KMB DESIGN GROUP, LLC AND ARE NOT TO BE USED, IN WHOLE OR IN PART, FOR OTHER PROJECTS WITHOUT THE WRITTEN AUTHORIZATION OF KMB DESIGN GROUP, LLC. IT IS UNLAWFUL FOR ANY PERSON TO AMEND ANY ASPECT OF THESE DRAWINGS UNLESS THEY HAVE THE APPROVAL OF THE LICENSED PROFESSIONAL IN WRITING.

K:\332_Sprint_332.1000_Alcatel-Lucent\332.1499_CT33XC111_123 Campville Hill Road\332.1499_CAD\332.1499_Construction\332.1499.C05.dwg, 8/10/2012 10:32:21 AM, mduffy