SHEET INDEX

NO.	DESCRIPTION
T1	TITLE SHEET
C1	GENERAL NOTES
C2	COMPOUND SITE PLAN & ELEVATION
C3	EQUIPMENT SITE PLANS
C4	EQUIPMENT DETAILS
C5	ANTENNA PLANS
C6	ANTENNA CABLE RISER & GPS DETAILS
C7	EQUIPMENT DETAILS
C8	RF AND CABLE DETAILS
C9	FIBER DISTRIBUTION BOX DETAILS
E1	UTILITY SITE PLAN
E2	DETAILS
E3	GROUNDING PLAN AND DETAILS

DRIVING DIRECTIONS

DEPART FROM SPRINT:
1 INTERNATIONAL BLVD MAHWAH, NJ 07430

1. HEAD NORTH ON INTERNATIONAL BLVD/PARK ST TOWARD QUEENSLAND RD.
2. TAKE THE 3RD RIGHT ONTO PARK LN.
3. CONTINUE STRAIGHT ONTO LEISURE LN.
4. CONTINUE ONTO NJ-17 N.
5. TAKE THE NEW JERSEY 17 N/INTERSTATE 287 N EXIT TOWARD INTERSTATE 87/NORTH Y. THRUWAY.
6. KEEP LEFT AT THE FORK, FOLLOW SIGNS FOR I-287 N/I-87/NJ-17 N/NY. THRUWAY AND MERGE ONTO I-287 N/NJ-17 N.
7. KEEP RIGHT AT THE FORK, FOLLOW SIGNS FOR I-87 S/I-287/TAPPAN ZEE BR/NEW YORK CITY/NEW YORK THRUWAY AND MERGE ONTO I-287 E/I-87 S.
8. TAKE THE EXIT ONTO I-95 N.
9. TAKE EXIT 48 ON THE LEFT TO MERGE ONTO I-91 N TOWARD HARTFORD.
10. TAKE EXIT 33 FOR JENNINGS RD.
11. TURN LEFT ONTO JENNINGS RD.
12. TURN LEFT ONTO WESTON ST.

DESTINATION WILL BE ON THE LEFT.

VICINITY MAP

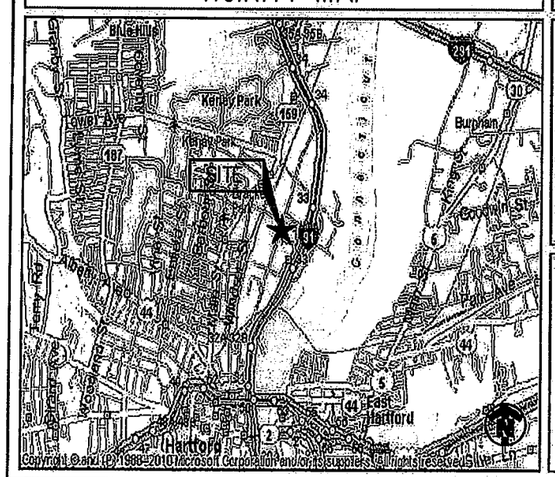

Sprint™

NETWORK VISION MMBTS LAUNCH

NORTHERN CONNECTICUT MARKET

SPRINT SITE NAME
WESTON SQUARE

CROWN CASTLE SITE NAME
WESTON SQUARE

SPRINT SITE NUMBER
CT03XC064

CROWN CASTLE NUMBER
876325

SITE ADDRESS
92 WESTON STREET
HARTFORD, CT 06120

STRUCTURE TYPE
MONOPOLE

OWNER AND TENANT MAY, FROM TIME TO TIME AT TENANT'S OPTION, REPLACE THIS EXHIBIT WITH AND EXHIBIT SETTING FORTH THE LEGAL DESCRIPTION OF THE SITE, OR WITH ENGINEERED OR AS-BUILT DRAWING DEPICTING THE SITE OR ILLUSTRATING STRUCTURAL MODIFICATIONS OR CONSTRUCTION PLANS OF THE SITE. ANY VISUAL OR TEXTUAL REPRESENTATION OF THE EQUIPMENT LOCATED WITHIN THE SITE CONTAINED IN THESE OTHER DOCUMENTS IS ILLUSTRATIVE ONLY, AND DOES NOT LIMIT THE RIGHTS OF SPRINT AS PROVIDED FOR IN THE AGREEMENT. THE LOCATIONS OF ANY ACCESS AND UTILITY EASEMENTS ARE ILLUSTRATIVE ONLY. ACTUAL LOCATIONS MAY BE DETERMINED BY TENANT AND/ OR THE SERVICING UTILITY COMPANY IN COMPLIANCE WITH LOCAL LAWS AND REGULATIONS.

UNDERGROUND SERVICE ALERT
CALL TOLL FREE
1-800-922-4455
THREE WORKING DAYS BEFORE YOU DIG

PROJECT TEAM

ALCATEL·LUCENT
1 ROBBINS ROAD
WESTFORD, MA 01886
PROJECT MANAGER

INFINIGY Design. Build. Deliver.
11 Herbert Drive
Latham, NY 12110
OFFICE #: (518) 690-0790
FAX #: (518) 690-0793
ENGINEER

SCOPE OF WORK:

- HANDICAP ACCESS REQUIREMENTS ARE NOT REQUIRED
- FACILITY IS UNMANNED AND NOT FOR HUMAN HABITATION
- FACILITY HAS NO PLUMBING OR REFRIGERANTS
- THIS FACILITY SHALL MEET OR EXCEED ALL FAA AND FCC REGULATORY REQUIREMENTS
- ALL NEW MATERIAL SHALL BE FURNISHED AND INSTALLED BY CONTRACTOR UNLESS NOTED OTHERWISE. CABINETS, ANTENNAS/RRU AND CABLES FURNISHED BY OWNER AND INSTALLED BY CONTRACTOR
- INSTALL NEW ANTENNAS/RRH'S ON EXISTING TOWER
- INSTALL NEW BTS OR RETROFIT EXISTING BTS IN EXISTING EQUIPMENT AREA
- REMOVE EXISTING CDMA ANTENNAS AND COAX CABLES
- REPLACE EXISTING BATTERY CABINET WITH NEW BATTERY CABINET IF REQUIRED
- REPLACE EXISTING GPS IF REQUIRED

PROJECT SUMMARY

SITE NAME:	WESTON SQUARE	
SITE NO.:	CT03XC064	
SITE ADDRESS:	92 WESTON STREET HARTFORD, CT 06120	
COUNTY:	HARTFORD	
SITE COORDINATES:		
LATITUDE:	41° 47' 12.2994" N	(NAD 83)
LONGITUDE:	72° 39' 44.4204" W	(NAD 83)
GROUND ELEV.:	±19'	(AMSL)
TOWER HEIGHT:	±110'	
POWER COMPANY.:	CL&P: (860) 947-2000	
PHONE COMPANY:	AT&T: (800) 288-2020	
JURISDICTION:	CONNECTICUT SITING COUNCIL	
LANDLORD:	CROWN ATLANTIC COMPANY LLC. 2000 CORPORATE DRIVE CANONSBURG, PA 15317 (704) 405-6555	
APPLICANT:	SPRINT 1 INTERNATIONAL BLVD. MAHWAH, NJ 07495	
PROJECT MANAGER:	ALCATEL LUCENT 1 ROBBINS ROAD WESTFORD, MA 01886	
CONTACT:	ISAM ELHALWANI (617) 851-6133	
CONSTRUCTION MANAGER:	MIKE CALLAHAN (860) 919-7278	
ENGINEER:	INFINIGY 11 HERBERT DRIVE LATHAM, NY 12110	
CONTACT:	PAUL FANOS (518) 690-0790	
BUILDING CODE:	2003 INTERNATIONAL BUILDING CODE 2005 CONNECTICUT BUILDING CODE W/ 2009 AMENDMENT UNIFORM MECHANICAL CODE UNIFORM PLUMBING CODE LOCAL BUILDING CODE CITY/COUNTY ORDINANCES	
ELECTRICAL CODE:	2005 NATIONAL ELECTRICAL CODE	

ENGINEER'S LICENSE

CERTIFICATION STATEMENT:
I HEREBY CERTIFY THAT THESE DOCUMENTS WERE PREPARED OR APPROVED BY ME, AND THAT I AM A DULY LICENSED PROFESSIONAL ENGINEER UNDER THE LAWS OF THE STATE OF CONNECTICUT.

LICENSED ENGINEER – STATE OF CONNECTICUT

APPROVALS

ALU CONST.		DATE
ALU RF		DATE
ALU LEASING/SITE ACQ.		DATE
IN-MARKET CONSTRUCTION LEAD		DATE
SITE OWNER	NAME/COMPANY: TITLE:	DATE

INFINIGY Design. Build. Deliver.
11 Herbert Drive
Latham, NY 12110
Office # (518) 690-0790
Fax # (518) 690-0793

STATE OF CONNECTICUT JOHN S. STEVENS No. 24705 LICENSED PROFESSIONAL ENGINEER

UNAUTHORIZED ALTERATION OR ADDITION TO THIS DOCUMENT IS A VIOLATION OF APPLICABLE STATE AND LOCAL LAWS

No.	Submittal / Revision	Apd'd	Date
1	REVISED PER COMMENTS	AHS	4/15/13
0	ISSUED FOR REVIEW	KMF	11/26/12

Drawn: KMF Date: 11/26/12
Designed: AJD Date: 11/26/12
Checked: AGF Date: 11/26/12

Project Number
294-043

Project Title
WESTON SQUARE
CT03XC064

92 WESTON STREET
HARTFORD, CT 06120

Prepared For
Sprint VISION

THIS DOCUMENT IS THE DESIGN PROPERTY AND COPYRIGHT OF INFINIGY ENGINEERING, PLLC AND THE ENGINEER. ALL RIGHTS RESERVED. CLIENT, ANY DUPLICATION OR USE WITHOUT EXPRESS WRITTEN CONSENT OF THE CREATOR IS STRICTLY PROHIBITED.

Drawing Scale:
AS NOTED

Date:
4/15/13

Drawing Title
TITLE SHEET

Drawing Number
T1

GENERAL NOTES

PART 1 – GENERAL REQUIREMENTS

1.1 THE WORK SHALL COMPLY WITH APPLICABLE NATIONAL CODES AND STANDARDS, LATEST EDITION, AND PORTIONS THEREOF, INCLUDED BUT NOT LIMITED TO THE FOLLOWING:
A. GR-63-CORE NEBS REQUIREMENTS: PHYSICAL PROTECTION
B. GR-78-CORE GENERIC REQUIREMENTS FOR THE PHYSICAL DESIGN AND MANUFACTURE OF TELECOMMUNICATIONS EQUIPMENT.
C. NATIONAL FIRE PROTECTION ASSOCIATION CODES AND STANDARDS (NFPA) INCLUDING NFPA 70 (NATIONAL ELECTRICAL CODE – "NEC").
D. AND NFPA 101 (LIFE SAFETY CODE).
E. AMERICAN SOCIETY FOR TESTING OF MATERIALS (ASTM).
F. INSTITUTE OF ELECTRONIC AND ELECTRICAL ENGINEERS (IEEE).

1.2 DEFINITIONS:
A: WORK: THE SUM OF TASKS AND RESPONSIBILITIES IDENTIFIED IN THE CONTRACT DOCUMENTS.
B: COMPANY: SPRINT NEXTEL CORPORATION
C. ENGINEER: SYNONYMOUS WITH ARCHITECT & ENGINEER AND "A&E". THE DESIGN PROFESSIONAL HAVING PROFESSIONAL RESPONSIBILITY FOR DESIGN OF THE PROJECT.
D: CONTRACTOR: CONSTRUCTION CONTRACTOR; CONSTRUCTION VENDOR; INDIVIDUAL OR ENTITY WHO AFTER EXECUTION OF A CONTRACT IS BOUND TO ACCOMPLISH THE WORK.
E: THIRD PARTY VENDOR OR AGENCY: A VENDOR OR AGENCY ENGAGED SEPARATELY BY THE COMPANY, A&E, OR CONTRACTOR TO PROVIDE MATERIALS OR TO ACCOMPLISH SPECIFIC TASKS RELATED TO BUT NOT INCLUDED IN THE WORK.

1.3 POINT OF CONTACT: COMMUNICATION BETWEEN THE COMPANY AND THE CONTRACTOR SHALL FLOW THROUGH THE SINGLE COMPANY SITE DEVELOPMENT SPECIALIST OR OTHER PROJECT COORDINATOR APPOINTED TO MANAGE THE PROJECT FOR THE COMPANY.

1.4 ON-SITE SUPERVISION: THE CONTRACTOR SHALL SUPERVISE AND DIRECT THE WORK AND SHALL BE RESPONSIBLE FOR CONSTRUCTION MEANS, METHODS, TECHNIQUES, SEQUENCES, AND PROCEDURES IN ACCORDANCE WITH THE CONTRACT DOCUMENTS. THE CONTRACTOR SHALL EMPLOY A COMPETENT SUPERINTENDENT WHO SHALL BE IN ATTENDANCE AT THE SITE AT ALL TIMES DURING PERFORMANCE OF THE WORK.

1.5 DRAWINGS, SPECIFICATIONS AND DETAILS REQUIRED AT JOBSITE: THE CONSTRUCTION CONTRACTOR SHALL MAINTAIN A FULL SET OF THE CONSTRUCTION DRAWINGS, STANDARD CONSTRUCTION DETAILS FOR WIRELESS SITES, AND THE STANDARD CONSTRUCTION SPECIFICATIONS FOR WIRELESS SITES AT THE JOBSITE FROM MOBILIZATION THROUGH CONSTRUCTION COMPLETION.
A. THE JOBSITE DRAWINGS, SPECIFICATIONS AND DETAILS SHALL BE CLEARLY MARKED DAILY IN PENCIL WITH ANY CHANGES IN CONSTRUCTION OVER WHAT IS DEPICTED IN THE DOCUMENTS. AT CONSTRUCTION COMPLETION, THIS JOBSITE MARKUP SET SHALL BE DELIVERED TO THE COMPANY OR COMPANY'S DESIGNATED REPRESENTATIVE TO BE FORWARDED TO THE COMPANY'S A&E VENDOR FOR PRODUCTION OF "AS-BUILT" DRAWINGS.

1.6 USE OF JOB SITE: THE CONTRACTOR SHALL CONFINE ALL CONSTRUCTION AND RELATED OPERATIONS INCLUDING STAGING AND STORAGE OF MATERIALS AND EQUIPMENT, PARKING, TEMPORARY FACILITIES, AND WASTE STORAGE TO THE LEASE PARCEL UNLESS OTHERWISE PERMITTED BY THE CONTRACT DOCUMENTS.

1.7 NOTICE TO PROCEED:
A. NO WORK SHALL COMMENCE PRIOR TO COMPANY'S WRITTEN NOTICE TO PROCEED.
B. UPON RECEIVING NOTICE TO PROCEED, CONTRACTOR SHALL FULLY PERFORM ALL WORK NECESSARY TO PROVIDE SPRINT NEXTEL WITH AN OPERATIONAL WIRELESS FACILITY.

PART 2 – EXECUTION

2.1 TEMPORARY UTILITIES AND FACILITIES: THE CONTRACTOR SHALL BE RESPONSIBLE FOR ALL TEMPORARY UTILITIES AND FACILITIES NECESSARY EXCEPT AS OTHERWISE INDICATED IN THE CONSTRUCTION DOCUMENTS. TEMPORARY UTILITIES AND FACILITIES INCLUDE, POTABLE WATER, HEAT, HVAC, ELECTRICITY, SANITARY FACILITIES, WASTE DISPOSAL FACILITIES, AND TELEPHONE/COMMUNICATION SERVICES. PROVIDE TEMPORARY UTILITIES AND FACILITIES IN ACCORDANCE WITH OSHA AND THE AUTHORITY HAVING JURISDICTION. CONTRACTOR MAY UTILIZE THE COMPANY ELECTRICAL SERVICE IN THE COMPLETION OF THE WORK WHEN IT BECOMES AVAILABLE. USE OF THE LESSORS OR SITE OWNER'S UTILITIES OR FACILITIES IS EXPRESSLY FORBIDDEN EXCEPT AS OTHERWISE ALLOWED IN THE CONTRACT DOCUMENTS.

2.2 ACCESS TO WORK: THE CONTRACTOR SHALL PROVIDE ACCESS TO THE JOB SITE FOR AUTHORIZED COMPANY PERSONNEL AND AUTHORIZED REPRESENTATIVES OF THE ARCHITECT/ENGINEER DURING ALL PHASES OF THE WORK.

2.3 TESTING: REQUIREMENTS FOR TESTING BY THIS CONTRACTOR SHALL BE AS INDICATED HEREWITH, ON THE CONSTRUCTION DRAWINGS, AND IN THE INDIVIDUAL SECTIONS OF THESE SPECIFICATIONS. SHOULD COMPANY CHOOSE TO ENGAGE ANY THIRD-PARTY TO CONDUCT ADDITIONAL TESTING, THE CONTRACTOR SHALL COOPERATE WITH AND PROVIDE A WORK AREA FOR COMPANY'S TEST AGENCY.

2.4 COMPANY FURNISHED MATERIAL AND EQUIPMENT: ALL HANDLING, STORAGE AND INSTALLATION OF COMPANY FURNISHED MATERIAL AND EQUIPMENT SHALL BE IN ACCORDANCE WITH THE REQUIREMENTS OF THE CONTRACT DOCUMENTS AND WITH THE MANUFACTURER'S INSTRUCTIONS AND RECOMMENDATIONS.
A. CONTRACTOR SHALL PROCURE ALL OTHER REQUIRED WORK RELATED MATERIALS NOT PROVIDED BY SPRINT NEXTEL TO SUCCESSFULLY CONSTRUCT A WIRELESS FACILITY.

2.5 DIMENSIONS: VERIFY DIMENSIONS INDICATED ON DRAWINGS WITH FIELD DIMENSIONS BEFORE FABRICATION OR ORDERING OF MATERIALS. DO NOT SCALE DRAWINGS.

2.6 EXISTING CONDITIONS: NOTIFY THE COMPANY REPRESENTATIVE OF EXISTING CONDITIONS DIFFERING FROM THOSE INDICATED ON THE DRAWINGS. DO NOT REMOVE OR ALTER STRUCTURAL COMPONENTS WITHOUT PRIOR WRITTEN APPROVAL FROM THE ARCHITECT AND ENGINEER.

PART 3 – RECEIPT OF MATERIAL & EQUIPMENT

3.1 RECEIPT OF MATERIAL AND EQUIPMENT: CONTRACTOR IS RESPONSIBLE FOR SPRINT NEXTEL PROVIDED MATERIAL AND EQUIPMENT AND UPON RECEIPT SHALL:
A. ACCEPT DELIVERIES AS SHIPPED AND TAKE RECEIPT.
B. VERIFY COMPLETENESS AND CONDITION OF ALL DELIVERIES.
C. TAKE RESPONSIBILITY FOR EQUIPMENT AND PROVIDE INSURANCE PROTECTION AS REQUIRED IN AGREEMENT.
D. RECORD ANY DEFECTS OR DAMAGES AND WITHIN TWENTY-FOUR HOURS AFTER RECEIPT, REPORT TO SPRINT NEXTEL OR ITS DESIGNATED PROJECT REPRESENTATIVE OF SUCH.
E. PROVIDE SECURE AND NECESSARY WEATHER PROTECTED WAREHOUSING.
F. COORDINATE SAFE AND SECURE TRANSPORTATION OF MATERIAL AND EQUIPMENT, DELIVERING AND OFF-LOADING FROM CONTRACTOR'S WAREHOUSE TO SITE.

PART 4 – GENERAL REQUIREMENTS FOR CONSTRUCTION

4.1 CONTRACTOR SHALL KEEP THE SITE FREE FROM ACCUMULATING WASTE MATERIAL, DEBRIS, AND TRASH. AT THE COMPLETION OF THE WORK, CONTRACTOR SHALL REMOVE FROM THE SITE ALL REMAINING RUBBISH, IMPLEMENTS, TEMPORARY FACILITIES, AND SURPLUS MATERIALS.

4.2 EQUIPMENT ROOMS SHALL AT ALL TIMES BE MAINTAINED "BROOM CLEAN" AND CLEAR OF DEBRIS.

4.3 CONTRACTOR SHALL TAKE ALL REASONABLE PRECAUTIONS TO DISCOVER AND LOCATE ANY HAZARDOUS CONDITION.
A. IN THE EVENT CONTRACTOR ENCOUNTERS ANY HAZARDOUS CONDITION WHICH HAS NOT BEEN ABATED OR OTHERWISE MITIGATED, CONTRACTOR AND ALL OTHER PERSONS SHALL IMMEDIATELY STOP WORK IN THE AFFECTED AREA AND NOTIFY COMPANY IN WRITING. THE WORK IN THE AFFECTED AREA SHALL NOT BE RESUMED EXCEPT BY WRITTEN NOTIFICATION BY COMPANY.
B. CONTRACTOR AGREES TO USE CARE WHILE ON THE SITE AND SHALL NOT TAKE ANY ACTION THAT WILL OR MAY RESULT IN OR CAUSE THE HAZARDOUS CONDITION TO BE FURTHER RELEASED IN THE ENVIRONMENT, OR TO FURTHER EXPOSE INDIVIDUALS TO THE HAZARD.

4.4 CONTRACTOR'S ACTIVITIES SHALL BE RESTRICTED TO THE PROJECT LIMITS. SHOULD AREAS OUTSIDE THE PROJECT LIMITS BE AFFECTED BY CONTRACTOR'S ACTIVITIES, CONTRACTOR SHALL IMMEDIATELY RETURN THEM TO ORIGINAL CONDITION.

4.5 CONDUCT TESTING AS REQUIRED HEREIN.

PART 5 – TESTS AND INSPECTIONS

5.1 TESTS AND INSPECTIONS:
A. THE CONTRACTOR SHALL BE RESPONSIBLE FOR ALL CONSTRUCTION TESTS, INSPECTIONS AND PROJECT DOCUMENTATION.

B. CONTRACTOR SHALL COORDINATE TEST AND INSPECTION SCHEDULES WITH COMPANY'S REPRESENTATIVE WHO MUST BE ON SITE TO WITNESS SUCH TESTS AND INSPECTIONS.

C. WHEN THE USE OF A THIRD PARTY INDEPENDENT TESTING AGENCY IS REQUIRED, THE AGENCY THAT IS SELECTED MUST PERFORM SUCH WORK ON A REGULAR BASIS IN THE STATE WHERE THE PROJECT IS LOCATED AND HAVE A THOROUGH UNDERSTANDING OF LOCAL AVAILABLE MATERIALS, INCLUDING THE SOIL, ROCK, AND GROUNDWATER CONDITIONS.

D. THE THIRD PARTY TESTING AGENCY IS TO BE FAMILIAR WITH THE APPLICABLE REQUIREMENTS FOR THE TESTS TO BE DONE, EQUIPMENT TO BE USED, AND ASSOCIATED HEALTH AND SAFETY ISSUES.
E. SITE RESISTANCE TO EARTH TESTING PER EXHIBIT: CELL SITE GROUNDING SYSTEM DESIGN.

F. ANTENNA AND COAX SWEEP TESTS PER EXHIBIT: ANTENNA TRANSMISSION LINE ACCEPTANCE STANDARDS. HYBERFLEX TESTING NOT LIMITED TO COAX SWEEPS.

G. ALL OTHER TESTS REQUIRED BY COMPANY OR JURISDICTION.

PART 6 – TRENCHING AND BACKFILLING

6.1 TRENCHING AND BACKFILLING: THE CONTRACTOR SHALL PERFORM ALL EXCAVATION OF EVERY DESCRIPTION AND OF WHATEVER SUBSTANCES ENCOUNTERED, TO THE DEPTHS INDICATED ON THE CONSTRUCTION DRAWINGS OR AS OTHERWISE SPECIFIED.

A. PROTECTION OF EXISTING UTILITIES: THE CONTRACTOR SHALL CHECK WITH THE LOCAL UTILITIES AND THE RESPECTIVE UTILITY LOCATOR COMPANIES PRIOR TO STARTING EXCAVATION OPERATIONS IN EACH RESPECTIVE AREA TO ASCERTAIN THE LOCATIONS OF KNOWN UTILITY LINES. THE LOCATIONS, NUMBER AND TYPES OF EXISTING UTILITY LINES DETAILED ON THE CONSTRUCTION DRAWINGS ARE APPROXIMATE AND DO NOT REPRESENT EXACT INFORMATION. THE CONTRACTOR SHALL BE RESPONSIBLE FOR REPAIRING ALL LINES DAMAGED DURING EXCAVATION AND ALL ASSOCIATED OPERATIONS. ALL UTILITY LINES UNCOVERED DURING THE EXCAVATION OPERATIONS, SHALL BE PROTECTED FROM DAMAGE DURING EXCAVATION AND ASSOCIATED OPERATIONS. ALL REPAIRS SHALL BE APPROVED BY THE UTILITY COMPANY.

B. HAND DIGGING: UNLESS APPROVED IN WRITING OTHERWISE, ALL DIGGING WITHIN AN EXISTING CELL SITE COMPOUND IS TO BE DONE BY HAND.

C. DURING EXCAVATION, MATERIAL SUITABLE FOR BACKFILLING SHALL BE STOCKPILED IN AN ORDERLY MANNER A SUFFICIENT DISTANCE FROM THE BANKS OF THE TRENCH TO AVOID OVERLOADING AND TO PREVENT SLIDES OR CAVE-INS. ALL EXCAVATED MATERIALS NOT REQUIRED OR SUITABLE FOR BACKFILL SHALL BE REMOVED AND DISPOSED OF AT THE CONTRACTOR'S EXPENSE.

D. GRADING SHALL BE DONE AS MAY BE NECESSARY TO PREVENT SURFACE WATER FROM FLOWING INTO TRENCHES OR OTHER EXCAVATIONS, AND ANY WATER ACCUMULATING THEREIN SHALL BE REMOVED BY PUMPING OR BY OTHER APPROVED METHOD.

E. SHEETING AND SHORING SHALL BE DONE AS NECESSARY FOR THE PROTECTION OF THE WORK AND FOR THE SAFETY OF PERSONNEL. UNLESS OTHERWISE INDICATED, EXCAVATION SHALL BE BY OPEN CUT, EXCEPT THAT SHORT SECTIONS OF A TRENCH MAY BE TUNNELED IF, THE CONDUIT CAN BE SAFELY AND PROPERLY INSTALLED AND BACKFILL CAN BE PROPERLY TAMPED IN SUCH TUNNEL SECTIONS. EARTH EXCAVATION SHALL COMPRISE ALL MATERIALS AND SHALL INCLUDE CLAY, SILT, SAND, MUCK, GRAVEL, HARDPAN, LOOSE SHALE, AND LOOSE STONE.

F. TRENCHES SHALL BE OF NECESSARY WIDTH FOR THE PROPER LAYING OF THE CONDUIT OR CABLE, AND THE BANKS SHALL BE AS NEARLY VERTICAL AS PRACTICABLE. THE BOTTOM OF THE TRENCHES SHALL BE ACCURATELY GRADED TO PROVIDE UNIFORM BEARING AND SUPPORT FOR EACH SECTION OF THE CONDUIT OR CABLE ON UNDISTURBED SOIL AT EVERY POINT ALONG ITS ENTIRE LENGTH, EXCEPT WHERE ROCK IS ENCOUNTERED, CARE SHALL BE TAKEN NOT TO EXCAVATE BELOW THE DEPTHS INDICATED. WHERE ROCK EXCAVATIONS ARE NECESSARY, THE ROCK SHALL BE EXCAVATED TO A MINIMUM OVER DEPTH OF 6 INCHES BELOW THE TRENCH DEPTHS INDICATED ON THE CONSTRUCTION DRAWINGS OR SPECIFIED. OVER DEPTHS IN THE ROCK EXCAVATION AND UNAUTHORIZED OVER DEPTHS SHALL BE THOROUGHLY BACK FILLED AND TAMPED TO THE APPROPRIATE GRADE. WHENEVER WET OR OTHERWISE UNSTABLE SOIL THAT IS INCAPABLE OF PROPERLY SUPPORTING THE CONDUIT OR CABLE IS ENCOUNTERED IN THE BOTTOM OF THE TRENCH, SUCH SOLID SHALL BE REMOVED TO A MINIMUM OVER DEPTH OF 6 INCHES AND THE TRENCH BACKFILLED TO THE PROPER GRADE WITH EARTH OF OTHER SUITABLE MATERIAL, AS HEREINAFTER SPECIFIED.

G. BACKFILLING OF TRENCHES. TRENCHES SHALL NOT BE BACKFILLED UNTIL ALL SPECIFIED TESTS HAVE BEEN PERFORMED AND ACCEPTED. WHERE COMPACTED BACKFILL IS NOT INDICATED THE TRENCHES SHALL BE CAREFULLY BACKFILLED WITH SELECT MATERIAL SUCH AS EXCAVATED SOILS THAT ARE FREE OF ICE, SNOW, ROOTS, SOD, RUBBISH OR STONES, DEPOSITED IN 6 INCH LAYERS AND THOROUGHLY AND CAREFULLY RAMMED UNTIL THE CONDUIT OR CABLE HAS A COVER OF NOT LESS THAN 1 FOOT. THE REMAINDER OF THE BACKFILL MATERIAL SHALL BE GRANULAR IN NATURE AND SHALL NOT CONTAIN ICE, SNOW ROOTS, SOD, RUBBISH, OR STONES OF 2-1/2 INCH MAXIMUM DIMENSION. BACKFILL SHALL BE CAREFULLY PLACED IN THE TRENCH AND IN 1 FOOT LAYERS AND EACH LAYER TAMPED. SETTLING THE BACKFILL WITH WATER WILL BE PERMITTED. THE SURFACE SHALL BE GRADED TO A REASONABLE UNIFORMITY AND THE MOUNDING OVER THE TRENCHES LEFT IN A UNIFORM AND NEAT CONDITION.

PROJECT INFORMATION

THIS IS AN UNMANNED AND RESTRICTED ACCESS EQUIPMENT FACILITY AND WILL BE USED FOR THE TRANSMISSION OF RADIO SIGNALS FOR THE PURPOSE OF PROVIDING PUBLIC WIRELESS COMMUNICATIONS SERVICE.

NO POTABLE WATER SUPPLY IS TO BE PROVIDED AT THIS LOCATION.

NO WASTE WATER WILL BE GENERATED AT THIS LOCATION.

NO SOLID WASTE WILL BE GENERATED AT THIS LOCATION.

SPRINT MAINTENANCE CREW (TYPICALLY ONE PERSON) WILL MAKE AN AVERAGE OF ONE TRIP PER MONTH AT ONE HOUR PER VISIT.

LEGEND

SYMBOL	DESCRIPTION
	CIRCUIT BREAKER
	NON-FUSIBLE DISCONNECT SWITCH
F	FUSIBLE DISCONNECT SWITCH
	SURFACE MOUNTED PANEL BOARD
T	TRANSFORMER
M	KILOWATT HOUR METER
JB	JUNCTION BOX
PB	PULL BOX TO NEC/TELCO STANDARDS
	UNDERGROUND UTILITIES
#	DENOTES REFERENCE NOTE
	EXOTHERMIC WELD CONNECTION
	MECHANICAL CONNECTION
OR	GROUND ROD
OR	GROUND ROD WITH INSPECTION SLEEVE
	GROUND BAR
	PIN AND SLEEVE RECEPTACLE
	120AC DUPLEX RECEPTACLE
G	GROUND CONDUCTOR
#	REPRESENTS DETAIL NUMBER
#	REF. DRAWING NUMBER

ABBREVIATIONS

CIGBE	COAX ISOLATED GROUND BAR EXTERNAL
MIGB	MASTER ISOLATED GROUND BAR
SST	SELF SUPPORTING TOWER
GPS	GLOBAL POSITIONING SYSTEM
TYP.	TYPICAL
DWG	DRAWING
BCW	BARE COPPER WIRE
BFG	BELOW FINISH GRADE
PVC	POLYVINYL CHLORIDE
CAB	CABINET
C	CONDUIT
SS	STAINLESS STEEL
G	GROUND
AWG	AMERICAN WIRE GAUGE
RGS	RIGID GALVANIZED STEEL
AHJ	AUTHORITY HAVING JURISDICTION
TTLNA	TOWER TOP LOW NOISE AMPLIFIER
UNO	UNLESS NOTED OTHERWISE
EMT	ELECTRICAL METALLIC TUBING
AGL	ABOVE GROUND LEVEL

INFINIGY Design. Build. Deliver.
11 Herbert Drive
Latham, NY 12110
Office # (518) 690-0790
Fax # (518) 690-0793

STATE OF CONNECTICUT JOHN S. STEVENS No. 24705 LICENSED PROFESSIONAL ENGINEER

1	REVISED PER COMMENTS	APS	4/15/13
0	ISSUED FOR REVIEW	KWF	11/15/12
No.	Submittal / Revision	App'd	Date

Drawn: KWF Date: 11/15/12
Designed: AJD Date: 11/15/12
Checked: AGF Date: 11/15/12

Project Number 294-043

Project Title
WESTON SQUARE
CT03XC064

92 WESTON STREET
HARTFORD, CT 06120

Prepared For
Sprint VISION

THIS DOCUMENT IS THE DESIGN PROPERTY AND COPYRIGHT OF INFINIGY ENGINEERING, PLLC AND FOR THE EXCLUSIVE USED BY THE TITLE OWNER AND AUTHORIZED AGENTS. WITHOUT EXPRESS WRITTEN CONSENT OF THE CREATOR IS STRICTLY PROHIBITED.

Drawing Scale: AS NOTED
Date: 4/15/13

Drawing Title
GENERAL NOTES

Drawing Number
C1

INFORMATION CONTAINED WITHIN DRAWINGS ARE BASED ON PROVIDED INFORMATION.

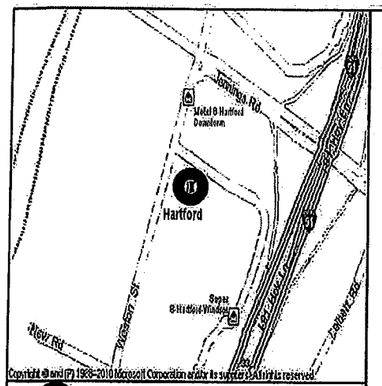

WORK AREA

LOCATION MAP
N.T.S.

FOR ADDITIONAL STRUCTURAL INFORMATION SEE STRUCTURAL ANALYSIS BY PAUL J. FORD DATED: 10/30/12 AND STRUCTURAL MODIFICATION REPORT BY PAUL J. FORD DATED: 2/23/13.

NOTE:
OVERALL VERTICAL SPRINT LEASED AREA OF 8' NOT TO BE EXCEEDED

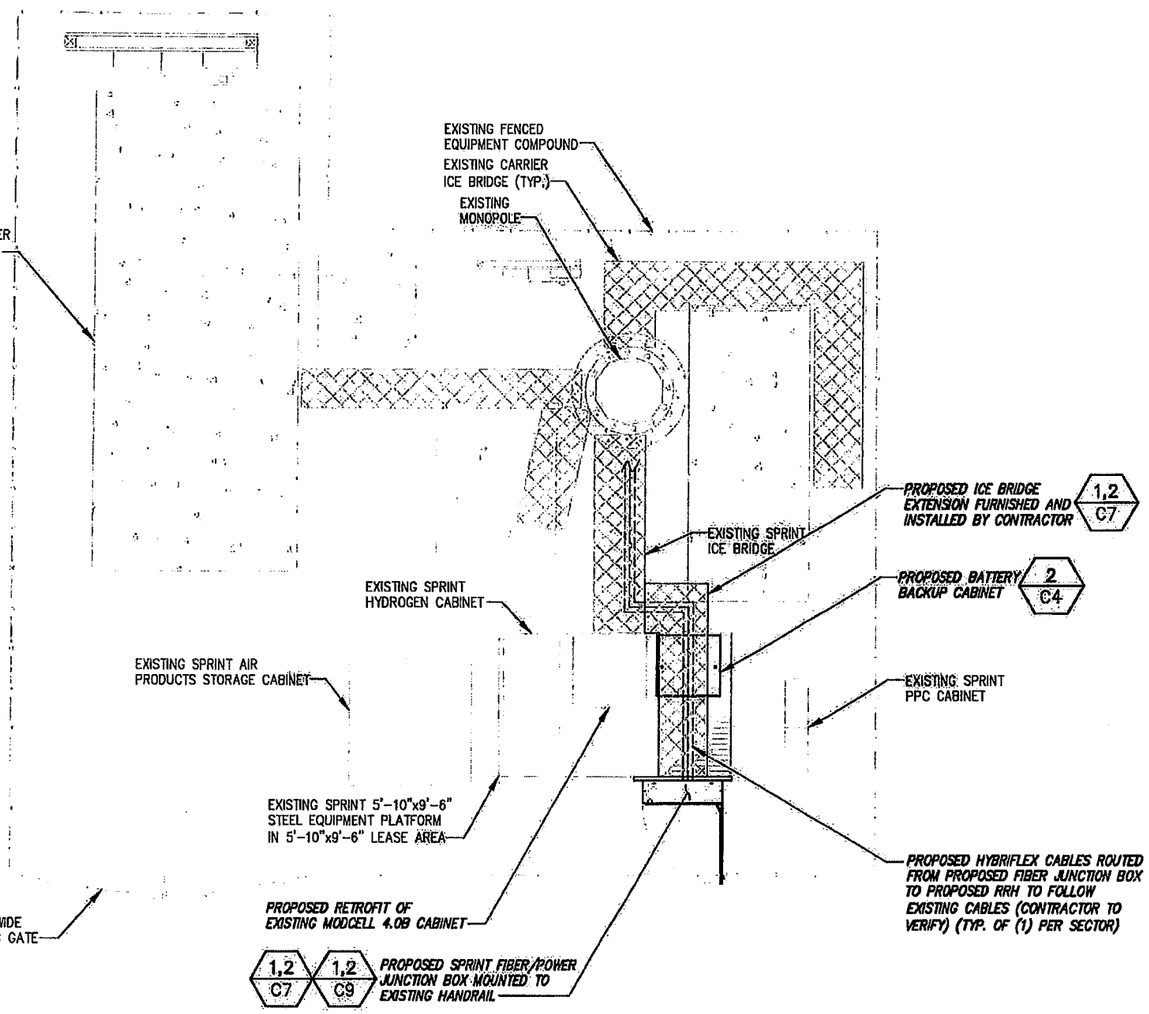

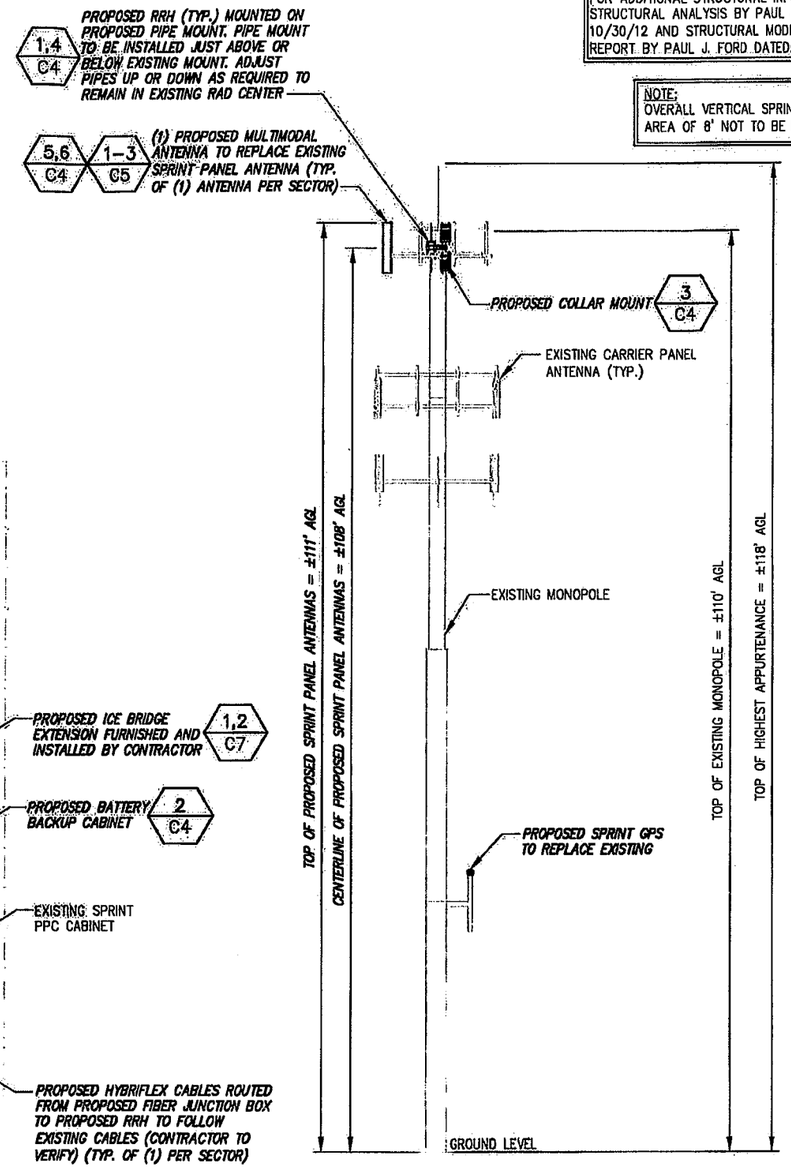

2 SITE ELEVATION
NOT TO SCALE

NOTE:
CONTRACTOR SHALL NOT STACK THE HYBRIFLEX CABLES ON TOP OF THE EXISTING COAXIAL CABLES AS TO PREVENT THE COAXIAL CABLES FROM BEING REMOVED.

NOTE:
1. REFER TO: CONSTRUCTION STANDARDS-SPRINT DOCUMENT: "EXHIBIT A – STANDARD CONSTRUCTION SPECIFICATIONS FOR WIRELESS SITES REV 4.0 – 02.15.2011.DOCM"
2. REFER TO: "WEATHERPROOFING SPECS: EXCERPT EXH A – WTHRPRF – STD CONSTR SPECS._15720111042185 5429.DOCM"
3. REFER TO: "COLOR CODING-SPRINT NEXTEL ANT AND LINE COLOR CODING (DRAFT) V3 09-08-11.PDF"
4. CONTRACTOR TO VERIFY LATEST REV AND DATE PRIOR TO CONSTRUCTION.

CALLED NORTH

1 COMPOUND SITE PLAN
SCALE: AS NOTED

GRAPHIC SCALE

6' 3' 0 3' 6'

SCALE (11x17): 1" = 6'-0"
SCALE (22x34): 1" = 3'-0"

INFINIGY Design. Build. Deliver.
11 Herbert Drive
Latham, NY 12110
Office # (518) 690-0790
Fax # (518) 690-0793

STATE OF CONNECTICUT
JOHN S. STEVENS
No. 24705
LICENSED PROFESSIONAL ENGINEER

No	Submittal / Revision	Appd.	Date
1	REVISED PER COMMENTS	AHS	4/15/13
0	ISSUED FOR REVIEW	KMF	11/28/12

Drawn: KMF Date: 11/28/12
Designed: A-D Date: 11/28/12
Checked: AGF Date: 11/28/12

Project Number
294-043

Project Title
WESTON SQUARE
CT03XC064

92 WESTON STREET
HARTFORD, CT 06120

Prepared For
Sprint VISION

THIS DOCUMENT IS THE DESIGN PROPERTY AND COPYRIGHT OF INFINIGY ENGINEERING, PLLC AND WAS PREPARED FOR USE BY THE TITLE CLIENT. ANY DUPLICATION OR USE WITHOUT EXPRESS WRITTEN CONSENT OF THE CREATOR IS STRICTLY PROHIBITED.

Drawing Scale:
AS NOTED

Date:
4/15/13

Drawing Title
COMPOUND SITE PLAN & ELEVATION

Drawing Number
C2

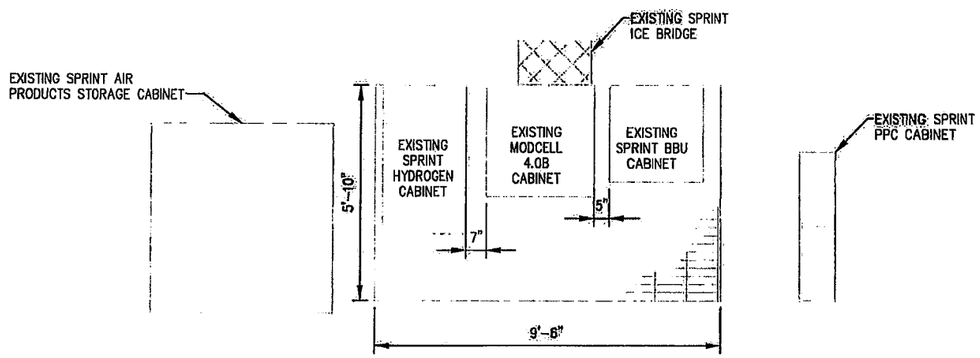

1 EQUIPMENT SITE PLAN (EXISTING)
SCALE: AS NOTED

CALLED NORTH

GRAPHIC SCALE

4' 2' 0 2' 4'

SCALE (11x17): 1" = 4'-0"
SCALE (22x34): 1" = 2'-0"

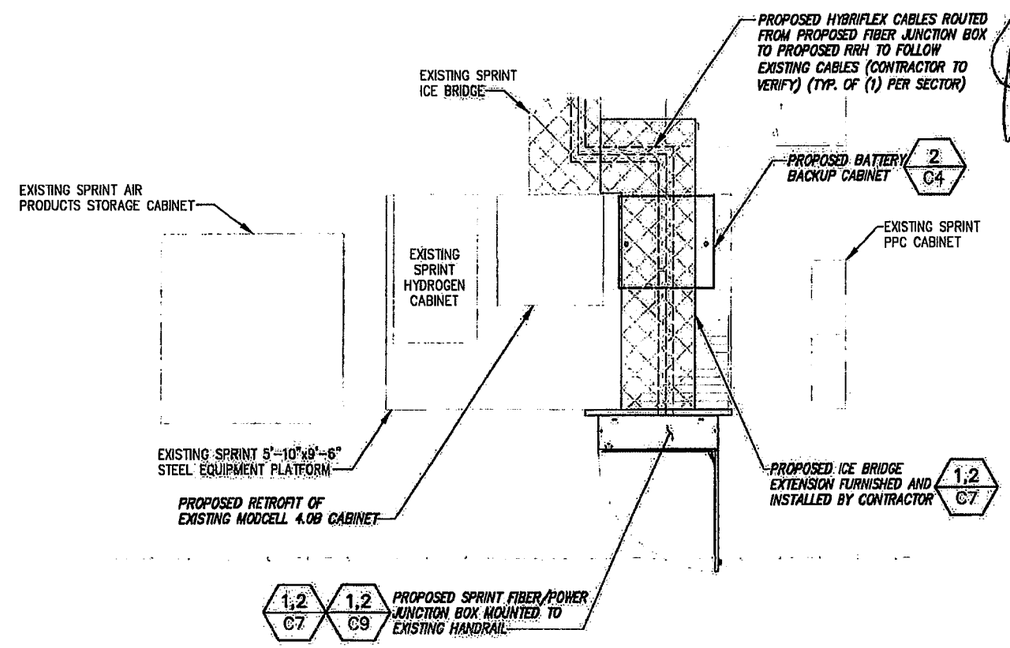

2 EQUIPMENT SITE PLAN (FINAL/PERMANENT)
SCALE: AS NOTED

CALLED NORTH

GRAPHIC SCALE

4' 2' 0 2' 4'

SCALE (11x17): 1" = 4'-0"
SCALE (22x34): 1" = 2'-0"

NOTE:
CONTRACTOR SHALL NOT STACK THE HYBRIFLEX CABLES ON TOP OF THE EXISTING COAXIAL CABLES AS TO PREVENT THE COAXIAL CABLES FROM BEING REMOVED.

NOTE:
1. REFER TO: CONSTRUCTION STANDARDS-SPRINT DOCUMENT: "EXHIBIT A - STANDARD CONSTRUCTION SPECIFICATIONS FOR WIRELESS SITES REV 4.0 - 02.15.2011.DOCM"
2. REFER TO: "WEATHERPROOFING SPECS: EXCERPT EXH A - WTHRPRF - STD CONSTR SPECS._157201110421855429.DOCM"
3. REFER TO: "COLOR CODING-SPRINT NEXTEL ANT AND LINE COLOR CODING (DRAFT) V3 09-08-11.PDF"
4. CONTRACTOR TO VERIFY LATEST REV AND DATE PRIOR TO CONSTRUCTION.

INFINIGY Design. Build. Deliver.
11 Herbert Drive
Latham, NY 12110
Office # (518) 690-0790
Fax # (518) 690-0793

STATE OF CONNECTICUT
JOHN S. STEVENS
No. 24705
LICENSED PROFESSIONAL ENGINEER

UNAUTHORIZED ALTERATION OR ADDITION TO THIS DOCUMENT IS A VIOLATION OF APPLICABLE STATE AND FEDERAL LAWS

No.	Submittal / Revision	Apv'd	Date
1	REVISED PER COMMENTS	AHS	4/15/13
0	ISSUED FOR REVIEW	KMF	11/15/12

Drawn: KMF Date: 11/15/12
Designed: AJD Date: 11/15/12
Checked: AGF Date: 11/15/12

Project Number
294-043

Project Title
WESTON SQUARE
CT03XC064

92 WESTON STREET
HARTFORD, CT 06120

Prepared For
Sprint VISION

THIS DOCUMENT IS THE DESIGN PROPERTY AND COPYRIGHT OF INFINIGY PROJECT LLC AND MAY NOT BE USED BY THE TITLE CLIENT. ANY DUPLICATION OR USE WITHOUT EXPRESS WRITTEN CONSENT OF THE CREATOR IS STRICTLY PROHIBITED.

Drawing Scale:
AS NOTED

Date:
4/15/13

Drawing Title
EQUIPMENT SITE PLANS

Drawing Number
C3

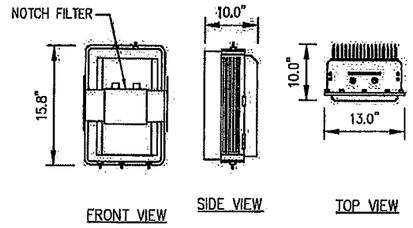

800 MHz RRH
(ALU)
WEIGHT = 53 LBS.

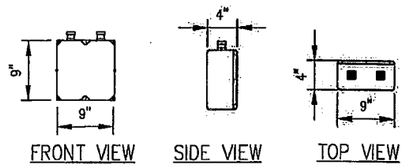

850 MHZ NOTCH FILTERS
WEIGHT = 11 LBS.

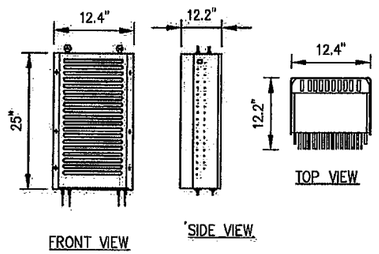

1900 MHz RRH
(ALU)
WEIGHT = 60 LBS.
(INCLUDING OPTIONAL SOLAR SHIELD)

NOTE:
REFER TO R.F. SYSTEM SCHEDULE FOR EXACT RRH SPECIFICATIONS AND QUANTITIES.

1 RRH EQUIPMENT DETAILS
NOT TO SCALE

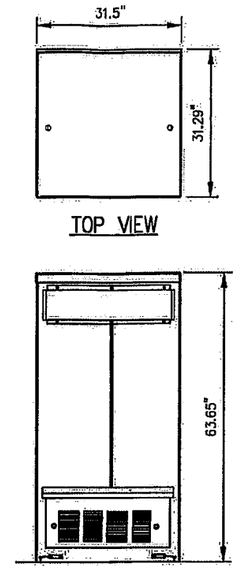

2 BATTERY CABINET PROFILE
NOT TO SCALE

DESIGN CRITERIA:

2009 INTERNATIONAL BUILDING CODE W/ STATE MODIFICATION	
WIND SPEED (ASCE-7-05)	90 MPH
EXPOSURE B	
IMPORTANCE FACTOR	1.0
SEISMIC SITE CLASS	D
Ss=0.152 S1=0.050	
SEISMIC IMPORTANCE FACTOR	1.0
SEISMIC DESIGN CATEGORY	B
9928 MM BTS CABINET WEIGHT:	1074 LBS.
EMERSON BATTERY CABINET SPECIFICATIONS:	
(31.29"x31.5"x63.65")	
WEIGHTS:	
SHIPPING WEIGHT:	600 LBS.
LIFT WEIGHT:	540 LBS.
TOTAL WEIGHT:	2640 LBS (WITH BATTERIES)
INDIVIDUAL BATTERY WEIGHT:	105 LBS
(DO NOT LIFT WITH BATTERIES IN CABINET)	
MATERIAL SPECIFICATIONS	
C-, M-, AND ANGLE SHAPES:	ASTM A36
HIGH-STRENGTH BOLTS:	ASTM A325SC OR (A325N)
STRUCTURAL WF SHAPES:	ASTM A572-GR50
TUBE STEEL & PIPE COLUMNS:	ASTM A500, GRADE B
WELDING ELECTRODES:	E70XX
W - SHAPES:	ASTM A992, GRADE 50
U-BOLTS:	ASTM A36

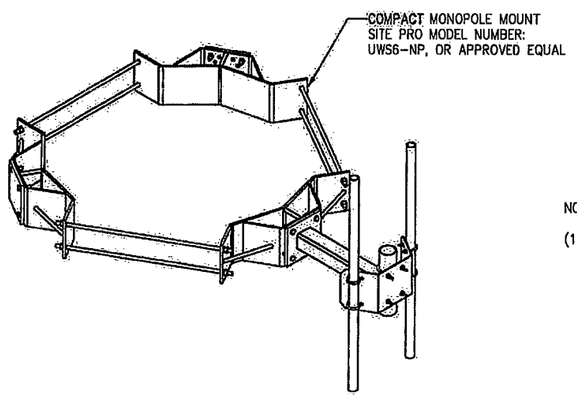

3 COMPACT MONOPOLE MOUNT
NOT TO SCALE

NOTE:
OVERALL VERTICAL SPRINT LEASED AREA OF 8' NOT TO BE EXCEEDED

NOTE:
REFER TO R.F. SYSTEM SCHEDULE FOR EXACT RRH SPECIFICATIONS AND QUANTITIES.

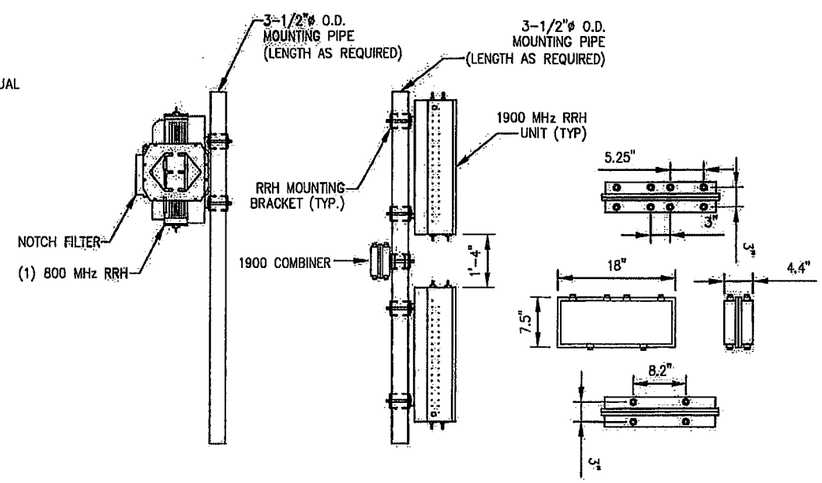

1900 RRH COMBINER
WEIGHT 40 LBS.

4 RRH MOUNTING DETAILS
NOT TO SCALE

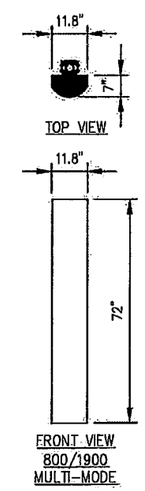

RFS ANTENNA
P/N: APXVSPP18-C-A20

5 ANTENNA DETAILS
NOT TO SCALE

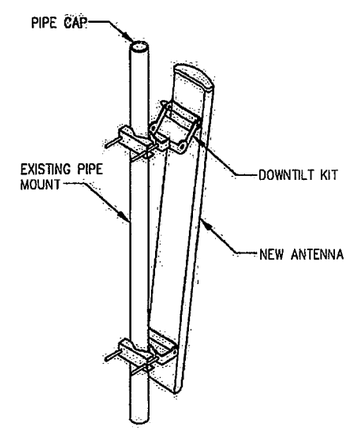

6 PANEL ANTENNA MOUNT DETAIL
NOT TO SCALE

INFINIGY Design. Build. Deliver.
11 Herbert Drive
Latham, NY 12110
Office # (518) 690-0790
Fax # (518) 690-0793

STATE OF CONNECTICUT
JOHN S. STEVENS
No. 24705
LICENSED PROFESSIONAL ENGINEER

UNAUTHORIZED ALTERATION OR ADDITION TO THIS DOCUMENT IS A VIOLATION OF APPLICABLE STATE, PROVINCIAL, AND LOCAL LAWS

No	Submittal / Revision	Apvd	Date
1	REVISED PER COMMENTS	AHS	4/15/13
0	ISSUED FOR REVIEW	KMF	11/15/12

Drawn: KMF Date: 11/15/12
Designed: AJD Date: 11/15/12
Checked: AGF Date: 11/15/12

Project Number
284-043

Project Title
WESTON SQUARE
CT03XC064

92 WESTON STREET
HARTFORD, CT 06120

Prepared For
Sprint VISION

THIS DOCUMENT IS THE DESIGN PROPERTY AND COPYRIGHT OF INFINIGY ENGINEERING, PLLC AND MUST BE RETURNED ON REQUEST. CLIENT, ANY DUPLICATION OR USE WITHOUT EXPRESS WRITTEN CONSENT OF THE CREATOR IS STRICTLY PROHIBITED.

Drawing Scale:
AS NOTED

Date:
4/15/13

Drawing Title
EQUIPMENT DETAILS

Drawing Number
C4

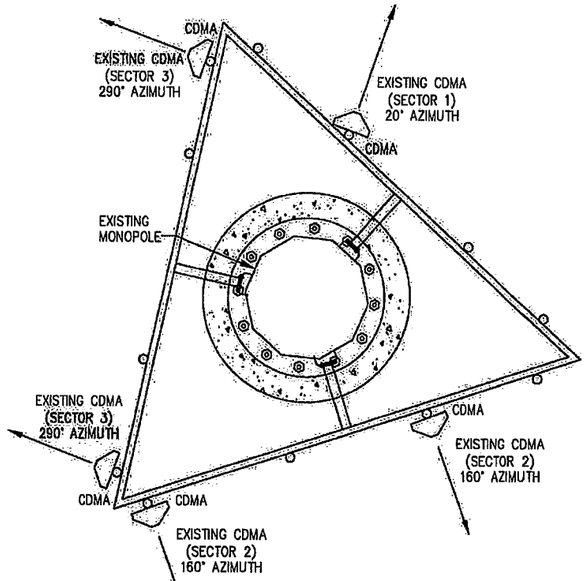

1 ANTENNA CONFIGURATION (EXISTING)
NOT TO SCALE

CALLED NORTH

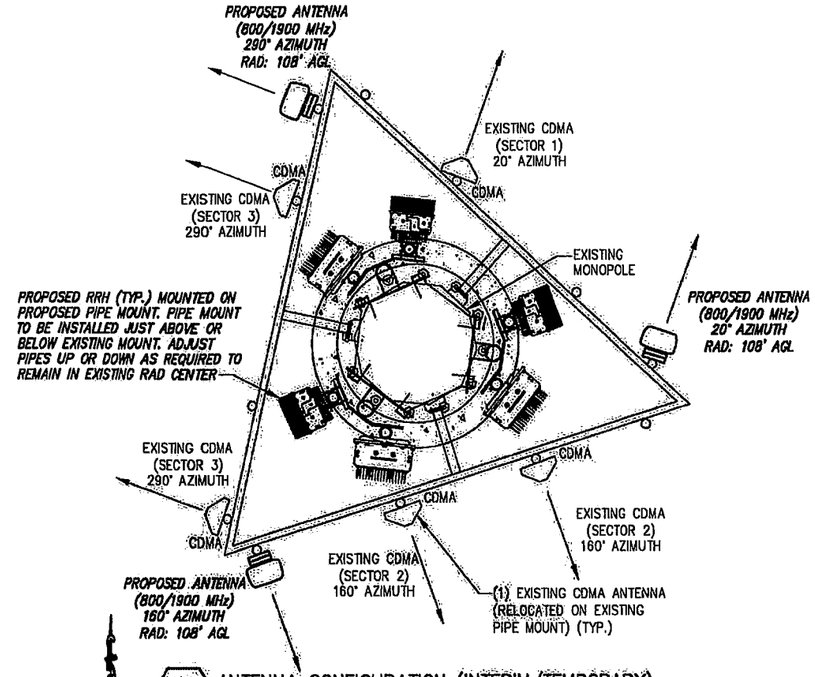

2 ANTENNA CONFIGURATION (INTERIM/TEMPORARY)
NOT TO SCALE

CALLED NORTH

NOTE:
CONTRACTOR TO VERIFY A PASSING SIGNED AND SEALED ANTENNA MOUNT/PLATFORM STRUCTURAL ANALYSIS HAS BEEN COMPLETED FOR INTERIM AND FINAL RF CONFIGURATION. NO ANTENNA MOUNT/PLATFORM MODIFICATIONS SHOULD COMMENCE OR INSTALLATION OF ANTENNAS, RRH OR TOWER MOUNTED EQUIPMENT WITHOUT VERIFYING THE MOUNT/PLATFORM ANALYSIS HAS BEEN COMPLETED FOR THE SPECIFIC LOADING. ADDITIONALLY ALL MOUNTS, ANTENNAS, AND COAX TO BE INSTALLED IN ACCORDANCE WITH TOWER STRUCTURAL ANALYSIS PROVIDED BY CROWN CASTLE.

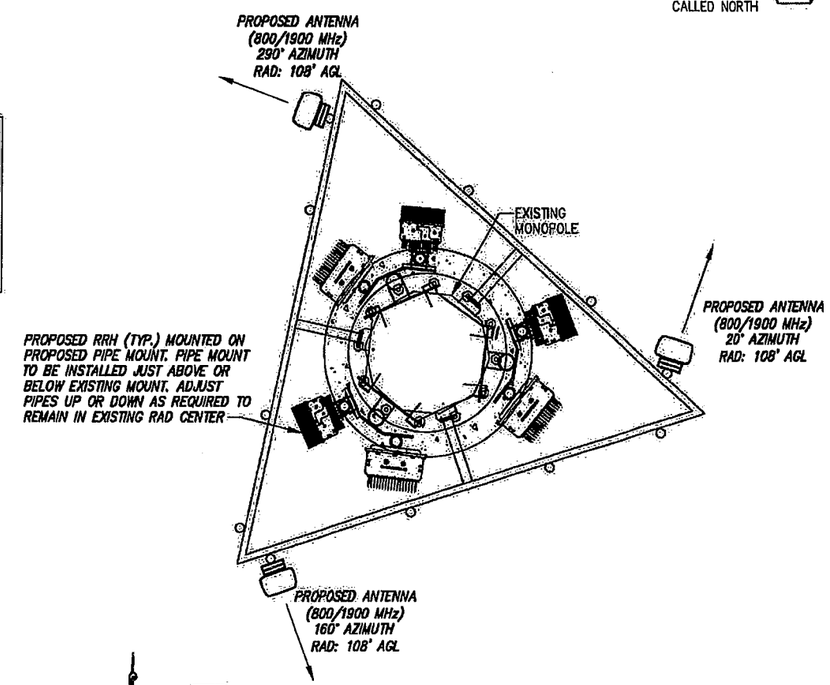

3 ANTENNA CONFIGURATION (FINAL/PERMANENT)
NOT TO SCALE

CALLED NORTH

NOTE:
REQUIRED PIPE MOUNTS TO BE SUPPLIED BY CONTRACTOR.

FOR ADDITIONAL STRUCTURAL INFORMATION SEE STRUCTURAL ANALYSIS BY PAUL J. FORD DATED: 10/30/12 AND STRUCTURAL MODIFICATION REPORT BY PAUL J. FORD DATED: 2/23/13.

RRH NOTES:

- SEE PAGE C4 FOR RRH MOUNTING INFORMATION (TYP. ALL SECTORS).
- REFER TO RF SCHEDULE ON SHEET C8 FOR RRH UNIT SPECS AND QUANTITIES.

GENERAL NOTES:

1. NEW SPRINT PANEL ANTENNAS TO MEET RF DESIGN REQUIREMENTS PER EBTS, PER APPROVED STRUCTURAL ANALYSIS.
2. CONTRACTOR TO PROVIDE EXISTING ANTENNA VERIFICATION AND TO INCLUDE MOUNTING HEIGHT, RAD CENTER, TOP AND BOTTOM OF ANTENNAS.
3. THE CONFIGURATION PLANS ARE FOR CONCEPTUAL PURPOSES ONLY. CONTRACTOR TO VERIFY FIELD CONDITIONS.
4. THE ANTENNA INSTALLATION SHALL BE DONE IN ACCORDANCE WITH THE STRUCTURAL ANALYSIS AND ASSOCIATED DETAILS THEREIN. CONTRACTOR SHALL NOTIFY THE ENGINEER OF ANY DISCREPANCIES PRIOR TO WORK ON THE STRUCTURE.
5. CONTRACTOR SHALL VERIFY NEW PARTS BEFORE ORDERING.
6. REFER TO SHEET C4 & C8 FOR ANTENNA SPECS.
7. CONTRACTOR TO USE PROPER TORQUE WHEN INSTALLING AND TIGHTENING CONNECTORS TO INSURE PROPER FIT.
8. ALL HYBRID CABLES SHALL BE MARKED WITHIN 24" OF THE END OF EACH CABLE WITH 2" WIDE VINYL TAPE. THIS INCLUDES ALL JUMPERS AND MAIN LINE HYBRID CABLES.
9. CDMA ANTENNAS SHALL NOT BE REMOVED UNTIL ALL NEW MULTI-MODE ANTENNAS ARE INSTALLED AND ON-AIR.

INFINIGY Design. Build. Deliver.
11 Herbert Drive
Latham, NY 12110
Office # (518) 690-0790
Fax # (518) 690-0793

STATE OF CONNECTICUT JOHN S. STEVENS No. 24705 LICENSED PROFESSIONAL ENGINEER

UNAUTHORIZED ALTERATION OR ADDITION TO THIS DOCUMENT IS A VIOLATION OF APPLICABLE STATE AND LOCAL LAWS

No.	Submittal / Revision	App'd	Date
1	REVISED PER COMMENTS	AHS	4/15/13
0	ISSUED FOR REVIEW	KMF	11/15/12

Drawn: KMF Date: 11/15/12
Designed: AJD Date: 11/15/12
Checked: AGF Date: 11/15/12

Project Number
294-043

Project Title
WESTON SQUARE
CT03XC064

92 WESTON STREET
HARTFORD, CT 06120

Prepared For
Sprint VISION

THIS DOCUMENT IS THE DESIGN PROPERTY AND COPYRIGHTED WORK OF INFINIGY, INC. AND FOR THE EXCLUSIVE USED BY THE TITLE CLIENT. ANY DUPLICATION OR USE WITHOUT EXPRESS WRITTEN CONSENT OF THE CREATOR IS STRICTLY PROHIBITED.

Drawing Scale:
AS NOTED

Date:
4/15/13

Drawing Title
ANTENNA PLANS

Drawing Number
C5

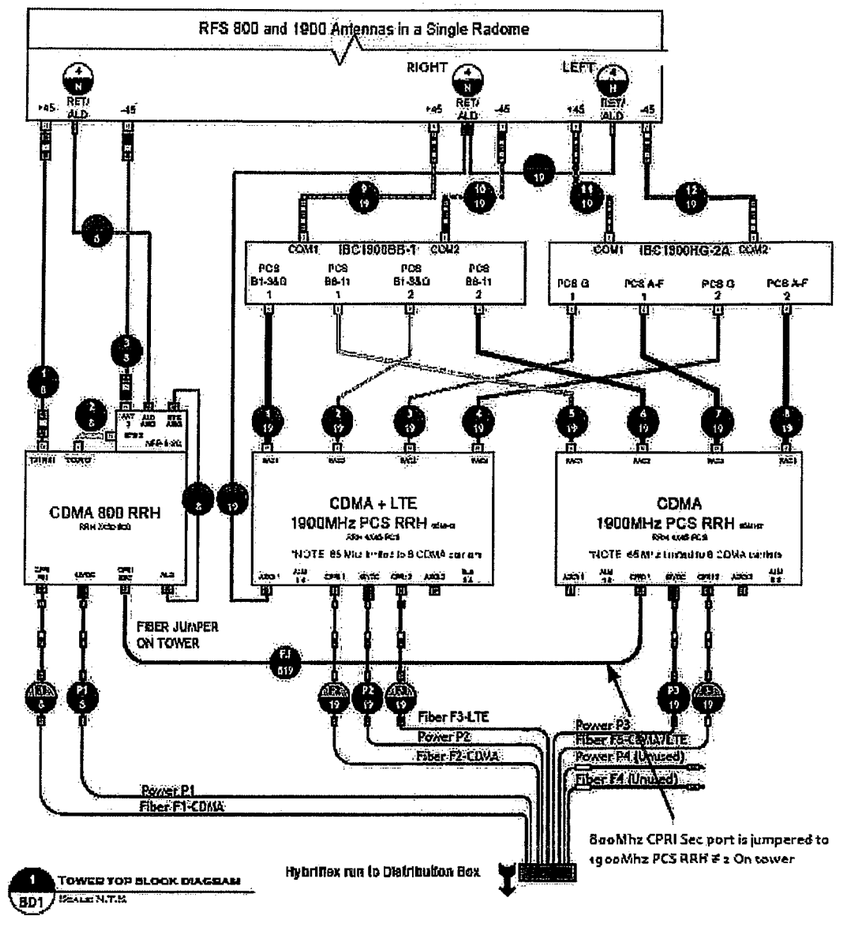

1 BD1 TOWER TOP BLOCK DIAGRAM
SCALE: N.T.S.

INSTALLER VERIFY LATEST PLUMBING/WIRING DIAGRAMS, PRIOR TO INSTALLATION.

SCENARIO_128 v2.3

1 — ANTENNA CABLE RISER DIAGRAM
NOT TO SCALE

Power Feed Polarity Definition:
IF wires are BLACK AND BLACK/ WHITE STRIPE:
- Black= -48VDC Feed (Battery)
- Black/White Stripe= Return

IF wires are RED AND BLACK:
- Red= -48VDC Feed (Battery)
- Black= Return

NOTE: For power feed use the same Hybriflex OEM color designator as the fiber.

- MM Pair 1= F1= Green= P1(Green)
- MM Pair 2= F2= Blue= P2(Blue)
- MM Pair 3= F3= Red= P3(Red)
- MM Pair 4= F4= Yellow= P4(Yellow)
- MM Pair 5= F5= Orange= (No P5 power feed)

2 BD1 HYBRIFLEX OEM COLOR CODE
SCALE: N.T.S.

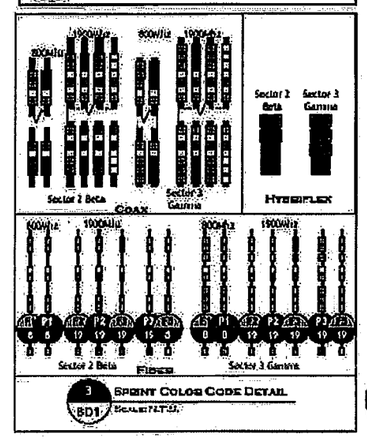

3 BD1 SPRINT COLOR CODE DETAIL
SCALE: N.T.S.

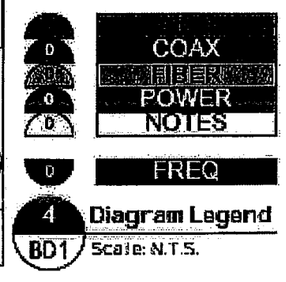

4 BD1 Diagram Legend
Scale: N.T.S.

WEATHERPROOFING CONNECTORS AND GROUND KIT NOTES:
1. ALL CONNECTORS AND GROUND KITS SHALL BE WEATHERPROOFED USING BUTYL RUBBER WEATHERPROOFING AND TAPE, THIS INSTALLATION MUST BE DONE IN ACCORDANCE WITH THE MANUFACTURER'S RECOMMENDATION OR PER THE FOLLOWING INSTRUCTIONS (WHICHEVER IS GREATER).
2. THE COAXIAL CABLE CONNECTION OR GROUND KIT CAN BE ENCOMPASSED INTO COLD SHRINK AND COMPLETELY WRAPPED WITH 2 IN. WIDE ELECTRICAL TAPE OVERLAPPING EACH ROW BY APPROXIMATELY ½" AND EXTENDING PAST THE CONNECTION BY TWO INCHES AND DISCUSSED BELOW; OR
3. THE COAXIAL ABLE CONNECTION OR GROUND KIT CAN BE WRAPPED WITH LAYERS OR ELECTRICAL/BUTYL RUBBER/ELECTRICAL TAPE AS DISCUSSED BELOW OR;
4. THE COAXIAL CABLE CONNECTION OR GROUND KIT CAN BE WRAPPED WITH TWO LAYERS OF 1.5 INCH WIDE SELF-AMALGAMATING TAPE COVERED WITH TWO LAYERS OF ELECTRICAL TAPE.

RRH JUMPER NOTES:
1. FOR DISTANCES BETWEEN RRH'S AND ANTENNAS LESS THAN 10'-0" USE A 1/2" JUMPER.
2. FOR DISTANCES BETWEEN RRH'S AND ANTENNAS GREATER THAN 10'-0" USE A 7/8" JUMPER.

INFINIGY Design. Build. Deliver.
11 Herbert Drive
Latham, NY 12110
Office # (518) 690-0790
Fax # (518) 690-0793

STATE OF CONNECTICUT JOHN S. STEWART No. 24705 LICENSED PROFESSIONAL ENGINEER

UNAUTHORIZED ALTERATION OR ADDITION TO THIS DOCUMENT IS A VIOLATION OF APPLICABLE STATE AND/OR LOCAL LAWS

No	Submittal / Revision	Appd	Date
1	REVISED PER COMMENTS	JHS	4/15/13
0	ISSUED FOR REVIEW	KMF	11/16/12

Drawn: KMF Date: 11/16/12
Designed: AJD Date: 11/16/12
Checked: AGF Date: 11/16/12

Project Number
294-043

Project Title
WESTON SQUARE
CT03XC064

92 WESTON STREET
HARTFORD, CT 06120

Prepared For
Sprint VISION

THIS DOCUMENT IS THE DESIGN PROPERTY AND COPYRIGHT OF INFINIGY ENGINEERING, PLLC AND FOR THE EXCLUSIVE USE BY THE TITLE OWNER. ANY USE OF THIS DOCUMENT WITHOUT EXPRESS WRITTEN CONSENT OF THE CREATOR IS STRICTLY PROHIBITED.

Drawing Scale:
AS NOTED.

Date:
4/15/13

Drawing Title
ANTENNA CABLE RISER AND GPS DETAILS

Drawing Number
C6

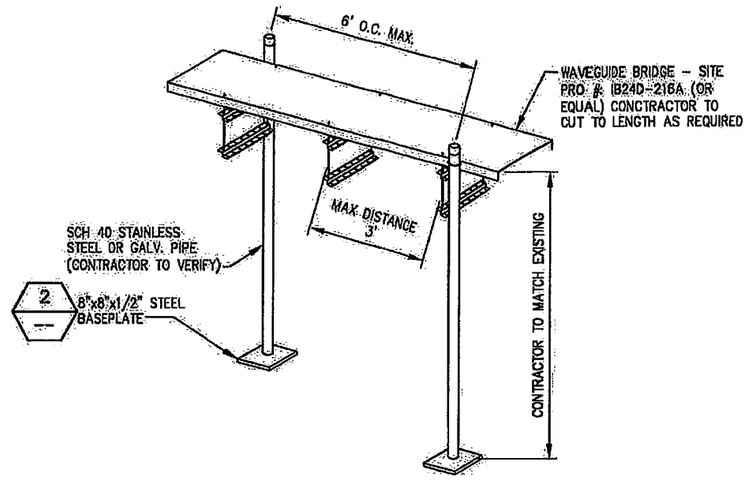

1 TYPICAL ICE BRIDGE DETAIL
NOT TO SCALE

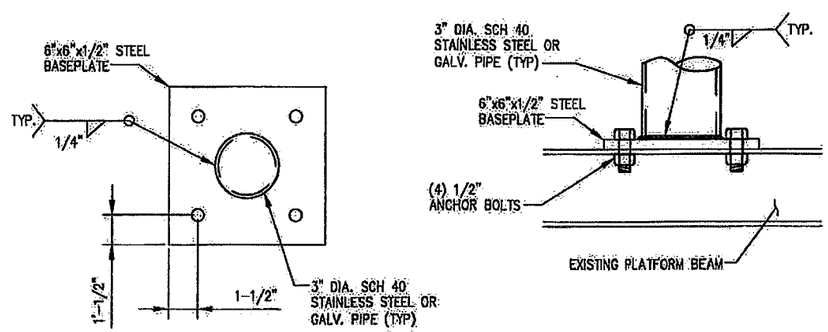

2 SUPPORT POST MOUNTING DETAIL
NOT TO SCALE

INFINIGY Design. Build. Deliver.
111 Herbert Drive
Latham, NY 12110
Office #: (518) 690-0790
Fax #: (518) 690-0793

STATE OF CONNECTICUT
JOHN S. STEVENS
No. 24705
LICENSED PROFESSIONAL ENGINEER

UNAUTHORIZED ALTERATION OR ALTERATION TO THIS DOCUMENT IS A VIOLATION OF APPLICABLE STATE AND/OR LOCAL LAWS

No.	Submittal / Revision	App'd	Date
1	REVISED FOR COMMENTS	AHB	8/13/13
0	ISSUED FOR REVIEW	KMF	11/15/12

Drawn: KMF Date: 11/15/12
Designed: AJD Date: 11/15/12
Checked: ACF Date: 11/15/12

Project Number
294-043

Project Title
WESTON SQUARE
CT03XC064

92 WESTON STREET
HARTFORD, CT 06120

Prepared For
Sprint VISION

THIS DOCUMENT IS THE DESIGN PROPERTY AND COPYRIGHTED INTELLECTUAL PROPERTY OF TILLC AND FOR THE EXCLUSIVE USE BY THE TITLE CLIENT. ANY DUPLICATION OR USE WITHOUT EXPRESS WRITTEN CONSENT FROM THE CREATOR IS STRICTLY PROHIBITED.

Drawing Scale:
AS NOTED
Date:
4/15/13

Drawing Title
EQUIPMENT DETAILS

Drawing Number
C7

	Market	Northern Connecticut		
	Cascade ID	CT03XC064		
		SECTOR 1	SECTOR 2	SECTOR 3
	Split sector present	No	No	No
1900	1900MHz_Azimuth	20	160	290
1900	1900MHz_No_of_Antennas	1	1	1
1900	1900MHz_RADCenter(ft)	110	110	110
1900	1900MHz_Antenna Make	RFS	RFS	RFS
1900	1900MHz_Antenna Model	APXVSPP18-C-A20	APXVSPP18-C-A20	APXVSPP18-C-A20
1900	1900MHz_Horizontal_Beamwidth	65	65	65
1900	1900MHz_Vertical_Beamwidth	5.5	5.5	5.5
1900	1900MHz_AntennaHeight (ft)	6	6	6
1900	1900MHz_AntennaGain(dBd)	15.9	15.9	15.9
1900	1900MHz_E_Tilt	-1	-4	-1
1900	1900MHz _M_Tilt	0	0	0
1900	1900MHz_Carrier_Forecast_Year_2013	9	9	9
1900	1900MHz_RRH Manufacturer	ALU	ALU	ALU
1900	1900MHz_RRH Model	RRH 1900 4X45 65MHz	RRH 1900 4X45 65MHz	RRH 1900 4X45 65MHz
1900	1900MHz_RRH Count	2	2	2
1900	1900MHz_RRH Location	Top of the Pole/Tower	Top of the Pole/Tower	Top of the Pole/Tower
1900	1900MHz Combiner Model	IBC1900BB-1 and IBC1900HG-2A	IBC1900BB-1 and IBC1900HG-2A	IBC1900BB-1 and IBC1900HG-2A
1900	1900MHz_Top_Jumper #1_Length (RRH or Combiner-to-Antenna for TT or Main Coax to	10	10	10
1900	1900MHz_Top_Jumper #1_Cable_Model (RRH or Combiner-to-Antenna for TT or Main Coax	LCF12-50J	LCF12-50J	LCF12-50J
1900	1900MHz_Top_Jumper #2_Length (RRH to Combiner for TT if applicable, ft)	6	6	6
1900	1900MHz_Top_Jumper #2_Cable_Model (RRH to Combiner for TT if applicable)	LCF12-50J	LCF12-50J	LCF12-50J
1900	1900MHz_Main_Coax_Cable_Length (ft)	N/A	N/A	N/A
1900	1900MHz_Main_Coax_Cable_Model	N/A	N/A	N/A
1900	1900MHz_Bottom_Jumper #1_Length (Ground based RRH to Combiner-OR-Main Coax, ft)	N/A	N/A	N/A
1900	1900MHz_Bottom_Jumper #1_Cable_Model (Ground based RRH to Combiner-OR-Main Coax)	N/A	N/A	N/A
1900	1900MHz_Bottom_Jumper #2_Length (Ground based-Combiner to Main Coax, ft)	N/A	N/A	N/A
1900	1900MHz_Bottom_Jumper #2_Cable_Model (Ground based-Combiner to Main Coax)	N/A	N/A	N/A
800	800MHz_Azimuth	20	160	290
800	800MHz_No_of_Antennas	0	0	0
800	800MHz_RADCenter(ft)	110	110	110
800	800MHz_AntennaMake	RFS	RFS	RFS
800	800MHz_AntennaModel	APXVSPP18-C-A20 (Shared w/1900)	APXVSPP18-C-A20 (Shared w/1900)	APXVSPP18-C-A20 (Shared w/1900)
800	800MHz_Horizontal_Beamwidth	65	65	65
800	800MHz_Vertical_Beamwidth	11.5	11.5	11.5
800	800MHz_AntennaHeight (ft)	6	6	6
800	800MHz_AntennaGain (dBd)	13.4	13.4	13.4
800	800MHz_E_Tilt	-8	-8	0
800	800MHz_M_Tilt	0	0	0
800	800MHz_RRH Manufacturer	ALU	ALU	ALU
800	800MHz_RRH Model	800 MHz RRH 2x50W	800 MHz RRH 2x50W	800 MHz RRH 2x50W
800	800MHz_RRH Count	1	1	1
800	800MHz_RRH Location	Top of the Pole/Tower	Top of the Pole/Tower	Top of the Pole/Tower
800	800_Top_Jumper #1_Length (RRH to Antenna for TT or Main Coax to Antenna for GM)	10	10	10
800	800_Top_Jumper_Cable_Model (RRH to Antenna for TT or Main Coax to Antenna for GM)	LCF12-50J	LCF12-50J	LCF12-50J
800	800MHz_Main_Coax_Cable_Length (ft)	N/A	N/A	N/A
800	800MHz_Main_Coax_Cable_Model	N/A	N/A	N/A
800	800_Bottom_Jumper #1_Length (Ground based RRH to Main Coax)	N/A	N/A	N/A
800	800_Bottom_Jumper #1_Cable_Model (Ground based RRH to Main Coax)	N/A	N/A	N/A
	Plumbing Scenario *	128	128	128
Comments	* If plumbing scenario does not match the material received, please contact your Construction Manager			
Comments	11/9/2012			

NOTE:
RFDS SHOWN PROVIDED BY SPRINT DATED 11/9/12.

NOTE:
COORDINATE RF ANTENNA INSTALLATION WITH FINAL SPRINT RFDS. COORDINATE RF MW DISH (IF APPLICABLE) INSTALLATION WITH FINAL SPRINT RFDS.

1 SPRINT RFDS
NOT TO SCALE

CHECK FST FOR LATEST VERSION OF RFDS

NOTE:
1. REFER TO: CONSTRUCTION STANDARDS–SPRINT DOCUMENT: "EXHIBIT A – STANDARD CONSTRUCTION SPECIFICATIONS FOR WIRELESS SITES REV 4.0 – 02.15.2011.DOCM"
2. REFER TO: "WEATHERPROOFING SPECS: EXCERPT EXH A – WTHRPRF – STD CONSTR SPECS._1572011104218554 29.DOCM"
3. REFER TO: "COLOR CODING–SPRINT NEXTEL ANT AND LINE COLOR CODING (DRAFT) V3 09--08-11.PDF"
4. CONTRACTOR TO VERIFY LATEST REV AND DATE PRIOR TO CONSTRUCTION.

1. DO NOT USE ONE HOISTING GRIP FOR HOISTING TWO OR MORE CABLES OR CABLE TRAYS. THIS CAN CAUSE THE HOISTING GRIP TO BREAK OR THE CABLES OR WAVE-- GUIDES TO FALL.
2. DO NOT USE THE HOISTING GRIP FOR LOWERING CABLE OR CABLE TRAY. SNAGGING OF THE CABLE OR CABLE TRAY MAY LOOSEN THE GRIP AND POSSIBLY CAUSE THE CABLE TO CABLE TRAY TO SWAY OR FALL.
3. DO NOT REUSE HOISTING GRIPS. USED GRIPS MAY HAVE LOST ELASTICITY, STRETCHED, OR BECOME WEAKENED. REUSING A GRIP CAN CAUSE THE CABLE OR CABLE TRAY TO SLIP, BREAK, OR FALL.
4. USE HOISTING GRIPS AT INTERVALS OF NO MORE THAN 200 FT (60 M).
5. MAKE SURE THAT THE PROPER HOISTING GRIP IS USED FOR THE CABLE OR CABLE TRAY BEING INSTALLED. SLIPPAGE OR INSUFFICIENT GRIPPING STRENGTH WILL RESULT IF YOU ARE USING THE WRONG HOISTING GRIP.

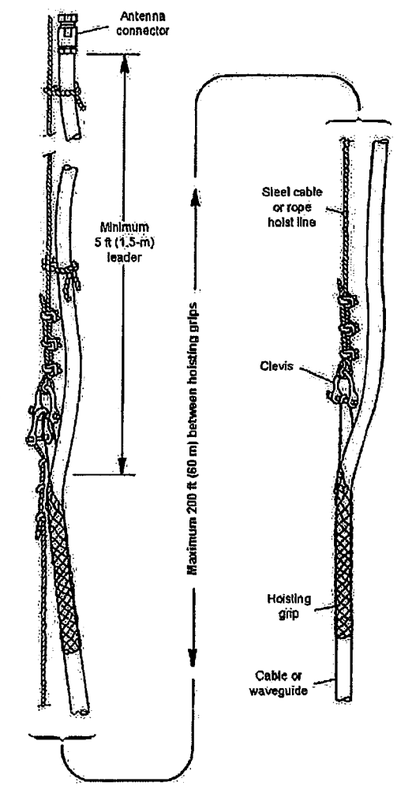

2 HOIST GRIP DETAIL
NOT TO SCALE

INFINIGY Design. Build. Deliver.
11 Herbert Drive
Latham, NY 12110
Office # (518) 690-0790
Fax # (518) 690-0793

STATE OF CONNECTICUT JOHN S. STEVENS No. 24705 LICENSED PROFESSIONAL ENGINEER

UNAUTHORIZED ALTERATION OR ADDITION TO THIS DOCUMENT IS A VIOLATION OF APPLICABLE STATE AND/OR LOCAL LAWS

No	Submittal/Revision	Apv'd	Date
1	REVISED PER COMMENTS	AHS	4/15/13
0	ISSUED FOR REVIEW	KMF	11/15/12

Drawn: KMF Date: 11/15/12
Designed: AJD Date: 11/15/12
Checked: AGF Date: 11/15/12

Project Number
294-043

Project Title
WESTON SQUARE
CT03XC064

62 WESTON STREET
HARTFORD, CT 06120

Prepared For
Sprint VISION

THIS DOCUMENT IS THE DESIGN PROPERTY AND COPYRIGHT OF INFINIGY ENGINEERING, PLLC AND IS TO BE USED FOR THE INTENDED PURPOSE OF CLIENT. ANY DUPLICATION OR USE WITHOUT EXPRESS WRITTEN CONSENT OF THE CREATOR IS STRICTLY PROHIBITED.

Drawing Scale:
AS NOTED

Date:
4/15/13

Drawing Title
RF AND CABLE DETAILS

Drawing Number
C8

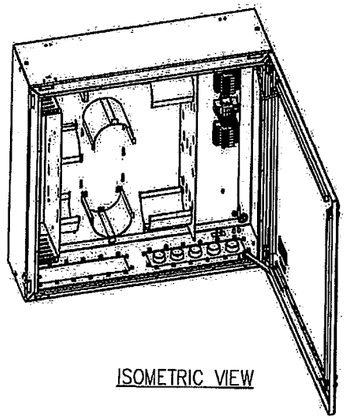

ISOMETRIC VIEW

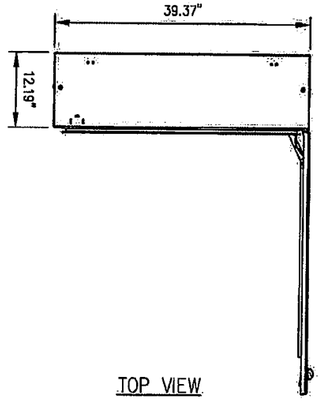

TOP VIEW

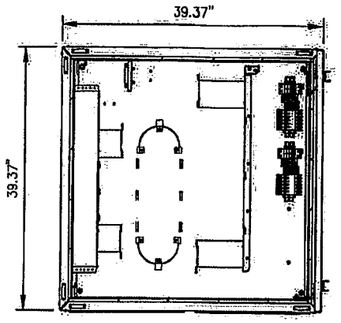

FRONT VIEW

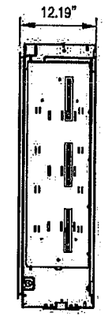

SIDE VIEW

1 DISTRIBUTION BOX DETAIL
NOT TO SCALE

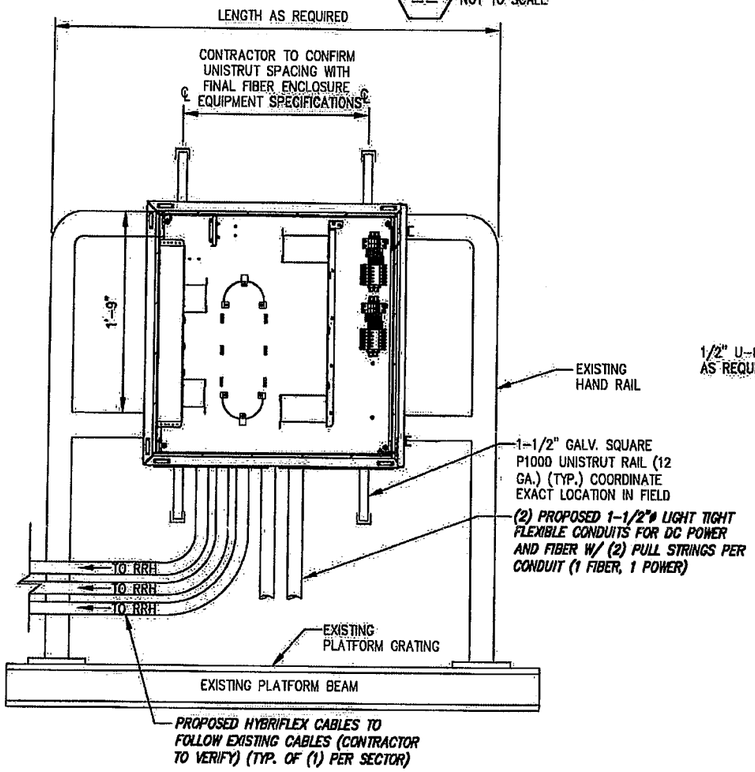

ELEVATION

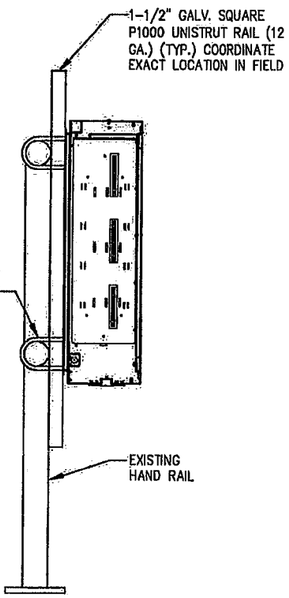

SECTION

NOTE:
1. ANCHORS AND UNISTRUT CHANNEL SHALL HAVE HOT-DIPPED GALVANIZED FINISH.
2. MOUNT FIBER AND POWER DISTRIBUTION BOX WITH FOUR (4) 1/4"ø UNISTRUT BOLTING HARDWARE AND SPRING NUTS.

2 DISTRIBUTION BOX ON EXISTING HANDRAIL
NOT TO SCALE

NOTE:
- DISTRIBUTION BOX IS KITTED WITH 50' OF 1-1/2" LIQUID-TIGHT CONDUIT AND CONNECTORS. THIS SHOULD BE:
* SPLIT IN HALF,
* TERMINATED TO THE DISTRIBUTION BOX AS SHOWN,
* RAN TO AND COILED AS CLOSE TO WHERE THE CABINET IS GOING TO BE MOUNTED AS POSSIBLE.

- DISTRIBUTION BOX IS KITTED WITH 2 AWG, POWER CABLE 35' x 2EA. RUNS RED AND 2EA. RUNS BLACK. THIS SHOULD BE COILED AND LEFT INSIDE DISTRIBUTION BOX.

- BTS INSTALLATION TEAM WILL TERMINATE LIQUID-TIGHT, RUN THE FIBER JUMPERS AND POWER CABLES FROM BTS CABINET TO DISTRIBUTION BOX.

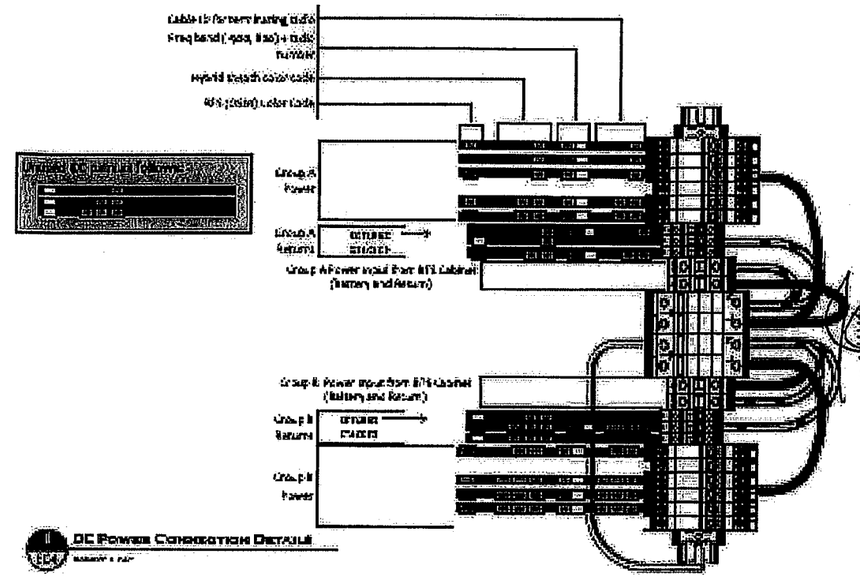

1 DC Power Connection Details

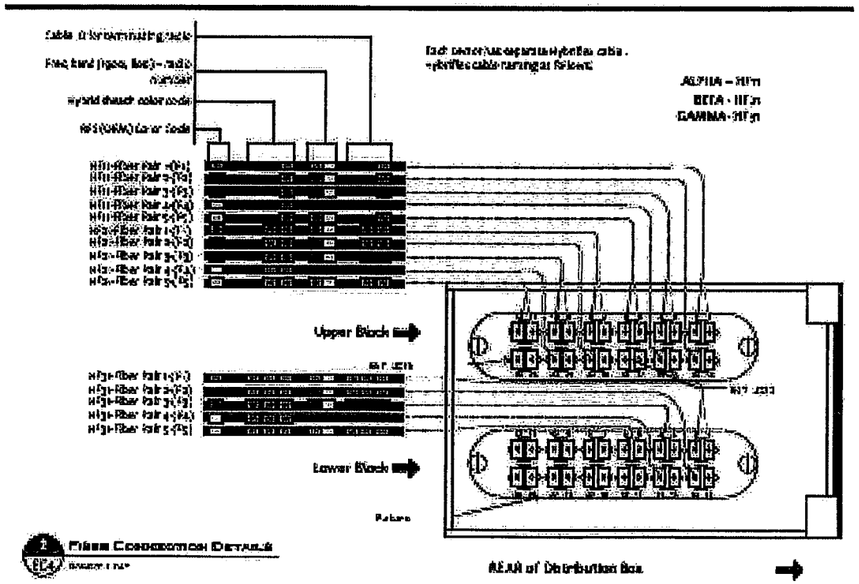

2 Fiber Connection Details

SCENARIO 128 v2.3

2 FIBER & DC CONNECTION DETAILS
NOT TO SCALE

INFINIGY Design. Build. Deliver.
11 Herbert Drive
Latham, NY 12110
Office # (518) 690-0790
Fax # (518) 690-0793

STATE OF CONNECTICUT JOHN S. STEVENS No. 24705 LICENSED PROFESSIONAL ENGINEER

1	REVISED PER COMMENTS	AHS	4/15/13
0	ISSUED FOR REVIEW	KMF	11/15/12
No.	Submittal / Revision	App'd	Date

Drawn: KMF Date: 11/15/12
Designed: AJD Date: 11/15/12
Checked: AGF Date: 11/15/12

Project Number
294-043

Project Title
WESTON SQUARE
CT03XC064

92 WESTON STREET
HARTFORD, CT 06120

Prepared For
Sprint VISION

THIS DOCUMENT IS THE DESIGN PROPERTY AND COPYRIGHT OF INFINIGY PLLC AND FOR THE EXCLUSIVE USE BY THE TITLE CLIENT. ANY DUPLICATION OR USE WITHOUT EXPRESS WRITTEN CONSENT OF THE CREATOR IS STRICTLY PROHIBITED.

Drawing Scale:
AS NOTED

Date:
4/15/13

Drawing Title
FIBER DISTRIBUTION BOX DETAILS

Drawing Number
C9

CODED NOTES:

1. PROPOSED SPRINT FIBER/POWER JUNCTION BOX MOUNTED TO EXISTING HANDRAIL
2. PROPOSED RETROFIT OF EXISTING MODCELL 4.0B CABINET
3. PROPOSED BATTERY BACKUP CABINET
4. PROPOSED HYBRIFLEX CABLES ROUTED FROM PROPOSED FIBER JUNCTION BOX TO PROPOSED RRH TO FOLLOW EXISTING CABLES (CONTRACTOR TO VERIFY) (TYP. OF (1) PER SECTOR)
5. PROPOSED 1-1/2" LIQUID TIGHT CONDUIT WITH PULL-STRING FOR TELCO FROM FIBER JUNCTION BOX TO RADIO EQUIPMENT CABINET, 10'
6. PROPOSED 1-1/2" LIQUID TIGHT CONDUIT WITH PULL-STRING FOR DC POWER FROM FIBER JUNCTION BOX TO RADIO EQUIPMENT CABINET, 10'

NOTE:
CONTRACTOR SHALL NOT STACK THE HYBRIFLEX CABLES ON TOP OF THE EXISTING COAXIAL CABLES AS TO PREVENT THE COAXIAL CABLES FROM BEING REMOVED.

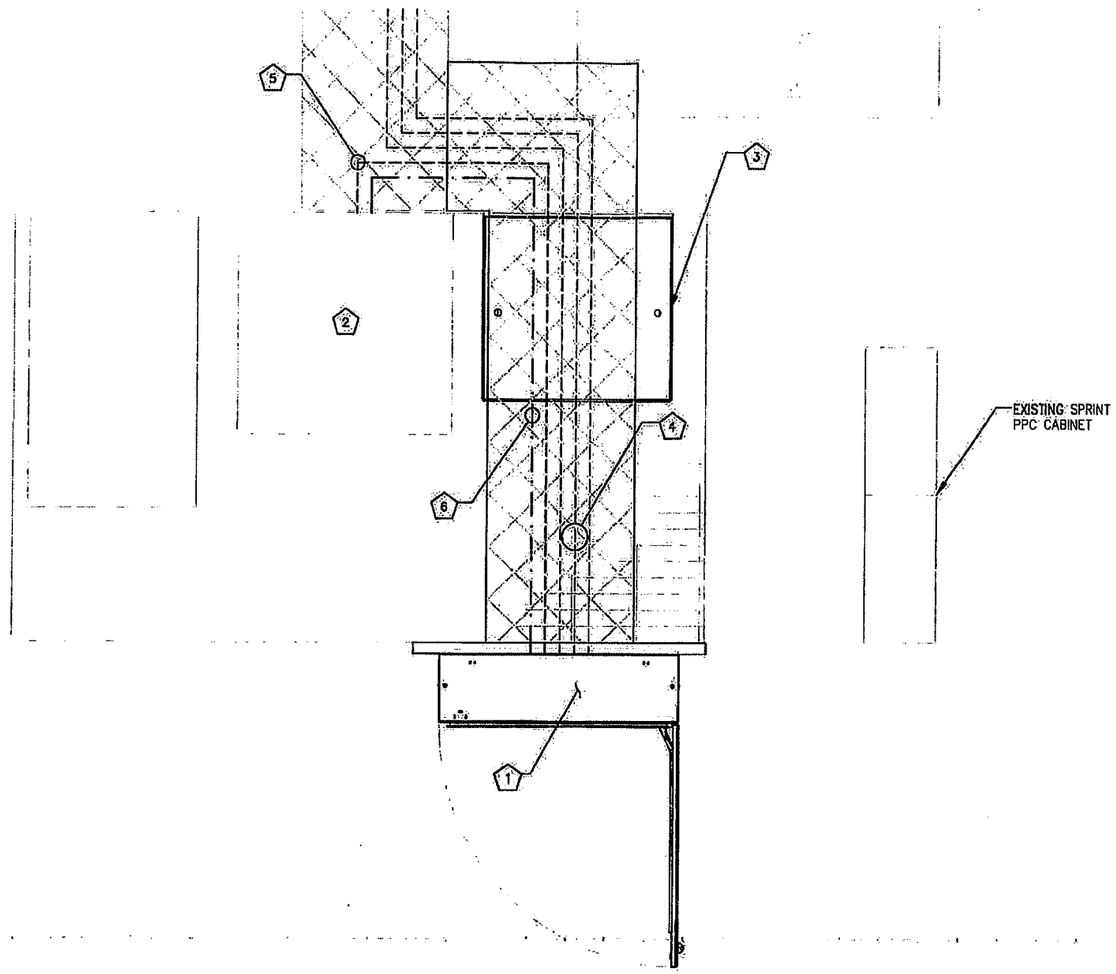

CALLED NORTH

1 UTILITY SITE PLAN
SCALE: AS NOTED

GRAPHIC SCALE
2' 1' 0 1' 2'
SCALE (11x17): 1" = 2'-0"
SCALE (22x34): 1" = 1'-0"

UNDERGROUND SERVICE ALERT
CALL TOLL FREE
1-800-922-4455
THREE WORKING DAYS BEFORE YOU DIG

NOTES:

CONTRACTOR TO USE EXISTING SPARE CONDUITS, IF AVAILABLE. CONDUIT SIZES MUST BE EQUAL TO OR GREATER THAN THAT ALLOWED BY CODE.

EXISTING ALARMS NEED TO BE RE-ROUTED AND VERIFIED IN PROPER WORKING CONDITION WHEN NEW MMBTS EQUIPMENT IS INSTALLED.

REMAINING GROUND LEADS FROM REMOVED CABINETS TO BE COILED (NOT ON WALKING SURFACE).

REMAINING UNUSED CONDUITS FROM EXISTING CABINETS TO BE COVERED WITH WATERPROOF CAPS (NOT DUCT TAPE).

ELECTRICAL NOTES:

1. ALL ELECTRICAL WORK SHALL CONFORM TO THE LATEST EDITION OF THE NATIONAL ELECTRICAL CODE (N.E.C.), AND APPLICABLE LOCAL CODES
2. GROUNDING SHALL COMPLY WITH THE ARTICLE 250 OF NATIONAL ELECTRICAL CODE.
3. ALL ELECTRICAL ITEMS SHALL BE U.L. APPROVED OR LISTED.
4. ALL WIRES SHALL BE AWG MIN #12 THHN COPPER UNLESS NOTED.
5. CONDUCTORS SHALL BE INSTALLED IN SCHEDULE 40 PVC CONDUIT UNLESS NOTED OTHERWISE.
6. LABEL SPRINT SERVICE DISCONNECTS WITH SWITCH AND PPC CABINET WITH ENGRAVED LAMACOID LABELS, LETTERS 1" IN HEIGHT.
7. ROUTE GROUNDING CONDUCTORS ALONG THE SHORTEST AND STRAIGHTEST PATH POSSIBLE. BEND GROUNDING LEADS WITH A MINIMUM 8" RADIUS.
8. ENGAGE AN INDEPENDENT TESTING FIRM TO TEST AND VERIFY THAT RESISTANCE DOES NOT EXCEED 10 OHMS TO GROUND. TEST GROUND RING RESISTANCE PRIOR TO MAKING FINAL GROUND CONNECTIONS TO INFRASTRUCTURE AND EQUIPMENT. GROUNDING AND OTHER OPERATIONAL TESTING SHALL BE WITNESSED BY SPRINTS REPRESENTATIVE.
9. PROVIDE PULL BOXES AND JUNCTION BOXES WHERE REQUIRED SO THAT CONDUIT BENDS DO NOT EXCEED 360 DEGREES.
10. OBTAIN PERMITS AND PAY FEES RELATED TO ELECTRICAL WORK PERFORMED ON THIS PROJECT. DELIVER COPIES OF ALL PERMITS TO SPRINT REPRESENTATIVE.
11. SCHEDULE AND ATTEND INSPECTIONS RELATED TO ELECTRICAL WORK REQUIRED BY JURISDICTION HAVING AUTHORITY. CORRECT AND PAY FOR ANY WORK REQUIRED TO PASS ANY FAILED INSPECTION.
12. REDLINED AS-BUILTS ARE TO BE DELIVERED TO A SPRINT REPRESENTATIVE.
13. PROVIDE TWO COPIES OF OPERATION AND MAINTENANCE MANUALS IN THREE-RING BINDER.
14. FURNISH AND INSTALL THE COMPLETE ELECTRICAL SERVICE, TELCO CONDUIT, AND THE COMPLETE GROUNDING SYSTEM.
15. ALL WORK SHALL BE PERFORMED IN STRICT ACCORDANCE WITH ALL APPLICABLE BUILDING CODES AND LOCAL ORDINANCES, INSTALLED IN A NEAT MANNER AND SHALL BE SUBJECT TO APPROVAL BY A SPRINT REPRESENTATIVE.
16. CONDUCT A PRE-CONSTRUCTION SITE VISIT AND VERIFY EXISTING SITE CONDITIONS AFFECTING THIS WORK. REPORT ANY OMISSIONS OR DISCREPANCIES FOR CLARIFICATION PRIOR TO THE START OF CONSTRUCTION.
17. PROTECT ADJACENT STRUCTURES AND FINISHES FROM DAMAGE, REPAIR TO ORIGINAL CONDITION ANY DAMAGED AREA.
18. REMOVE DEBRIS ON A DAILY BASIS. DEBRIS NOT REMOVED IN A TIMELY FASHION WILL BE REMOVED BY OTHERS AND THE RESPONSIBLE SUBCONTRACTOR SHALL BE CHARGED ACCORDINGLY. REMOVAL OF DEBRIS SHALL BE COORDINATED WITH THE OWNER'S REPRESENTATIVE. DEBRIS SHALL BE REMOVED FROM THE PROPERTY AND DISPOSED OF LEGALLY.
19. UPON COMPLETION OF WORK, THE SITE SHALL BE CLEAN AND FREE OF DUST AND FINGERPRINTS.
20. PRIOR TO ANY TRENCHING, CONTACT LOCAL UTILITY TO VERIFY LOCATION OF ANY EXISTING BURIED SERVICE CONDUITS.
21. DOCUMENT GROUND RING INSTALLATION AND CONNECTIONS TO IT WITH PHOTOGRAPHS PRIOR TO BACKFILLING SITE. PRESENT PHOTO ARCHIVE A SITE "PUNCH LIST" WALK TO SPRINT'S REPRESENTATIVE.

NOTE:
INFINIGY ENGINEERING HAS NOT CONDUCTED AN ELECTRICAL LOAD STUDY FOR THIS SITE. CONTRACTOR IS TO VERIFY EXISTING ELECTRICAL LOADS PRIOR TO CONSTRUCTION TO ENSURE THERE IS AMPLE SERVICE AVAILABLE TO ACCOMMODATE THE EXISTING AND PROPOSED EQUIPMENT.

INFINIGY Design. Build. Deliver.
11 Herbert Drive
Latham, NY 12110
Office # (518) 690-0790
Fax # (518) 690-0793

STATE OF CONNECTICUT
JOHN S. STEVENS
No. 24705
LICENSED
PROFESSIONAL ENGINEER

UNAUTHORIZED ALTERATION OR ADDITION TO THIS DOCUMENT IS A VIOLATION OF APPLICABLE STATE AND LOCAL LAWS

No.	Submittal / Revision	Appd.	Date
a	REVISED PER COMMENTS	AHS	6/13/13
b	ISSUED FOR REVIEW	KMF	11/15/12

Drawn: KMF Date: 11/15/12
Designed: AJD Date: 11/15/12
Checked: AGF Date: 11/15/12

Project Number
294-043

Project Title
WESTON SQUARE
CT03XC064

92 WESTON STREET
HARTFORD, CT 06120

Prepared For
Sprint VISION

THIS DOCUMENT IS THE DESIGN PROPERTY AND COPYRIGHTED WORK OF INFINIGY PLLC AND FOR THE EXCLUSIVE USED BY THE TITLE CLIENT. ANY DUPLICATION OR USE WITHOUT EXPRESS WRITTEN AUTHORITY FROM THE CREATOR IS STRICTLY PROHIBITED.

Drawing Scale:
AS NOTED

Date:
4/15/13

Drawing Title
UTILITY SITE PLAN

Drawing Number
E1

GROUNDING NOTES:
IN ADDITION TO POWER SERVICE GROUNDING AS REQUIRED BY NEC. CONTRACTOR SHALL BE RESPONSIBLE TO COORD AND INSTALL ALL SURGE AND LIGHTING PROTECTION GROUNDING AS REQUIRED AND SPECIFIED BY SPRINT.

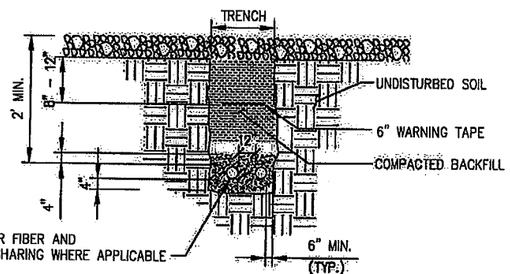

– SEPARATION DIMENSIONS MUST BE VERIFIED WITH LOCAL UTILITY CO. REQUIREMENTS.

***HAND DIG INSIDE COMPOUND**

1 UTILITY TRENCH DETAIL
NOT TO SCALE

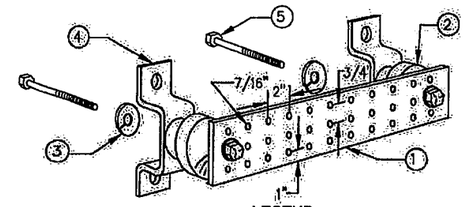

LEGEND

1. TINNED COPPER GROUND BAR, 1/4"x4"x20", NEWTON INSTRUMENT CO., HARGER TGBI14420M, OR EQUIVALENT. HOLE CENTERS TO MATCH
2. NEMA DOUBLE LUG CONFIGURATION.
3. INSULATORS, NEWTON INSTRUMENT CO. CAT. NO. 3061–4 OR HARGER EQUIVALENT.
4. 5/8" LOCKWASHERS, NEWTON INSTRUMENT CO. CAT. NO. 3015–8 OR EQUIVALENT.
5. WALL MOUNTING BRACKET, NEWTON INSTRUMENT CO. CAT. NO. A–6056 OR HARGER EQUIVALENT.
6. 5/8–11"x1" H.H.C.S. BOLTS, NEWTON INSTRUMENT CO. CAT. NO. 3012–1 OR HARGER EQUIVALENT.

NOTE:
1) ALL MOUNTING HARDWARE CAN ALSO BE USED ON 6", 12", 18", ETC. GROUND BARS.
2) ENTIRE ESSEMBLY AVAILABLE FROM NEWTON INSTRUMENT CO. CAT. NO. 2106060010 OR AS HARGER TGBI14420M.

GROUND BAR

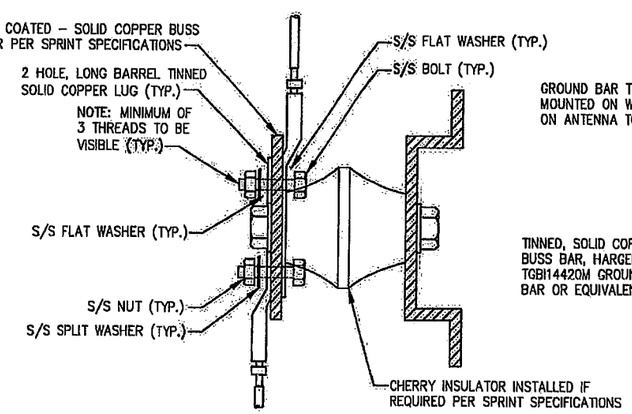

NOTE:
1) ALL HARDWARE 18–8 STAINLESS STEEL INCLUDING SPLIT WASHERS.
2) COAT WIRE END WITH ANTI–OXIDATION COMPOUND PRIOR TO INSERTION INTO LUG BARREL AND CRIMPING.
3) APPLY ANTI–OXIDATION COMPOUND BETWEEN ALL LUGS AND BUSS BARS PRIOR TO MATING AND BOLTING.

GROUND LUG

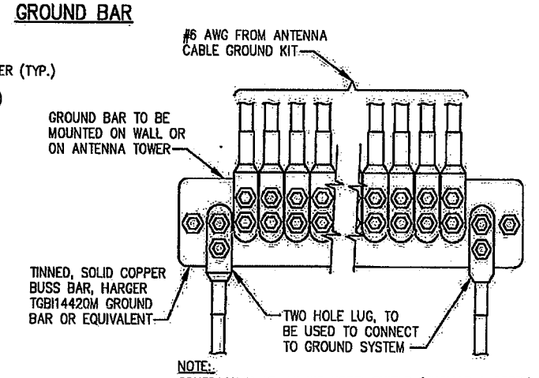

NOTE:
CONTRACTOR TO UTILIZE KORP–SHIELD (THOMAS & BETTS) OR EQUIVALENT ON ALL LUG CONNECTIONS

ANTENNA GROUND BAR

2 GROUND BAR DETAILS
NOT TO SCALE

INFINIGY Design. Build. Deliver.
11 Herbert Drive
Latham, NY 12110
Office # (518) 690-0790
Fax # (518) 690-0793

STATE OF CONNECTICUT · JOHN S. STEVENS · No. 24705 · LICENSED PROFESSIONAL ENGINEER

No.	Submittal / Revision	App'd	Date
1	REVISED PER COMMENTS	AHS	4/15/13
0	ISSUED FOR REVIEW	KMF	11/15/12

Drawn: KMF Date: 11/15/12
Designed: AJD Date: 11/15/12
Checked: AGF Date: 11/15/12

Project Number
284-043

Project Title
WESTON SQUARE
CT03XC064

92 WESTON STREET
HARTFORD, CT 06120

Prepared For
Sprint VISION

THIS DOCUMENT IS THE DESIGN PROPERTY AND COPYRIGHTED WORK OF INFINIGY PLLC AND FOR THE EXCLUSIVE USED BY THE TITLE CLIENT. ANY DUPLICATION OR USE WITHOUT EXPRESS WRITTEN CONSENT OF THE CREATOR IS STRICTLY PROHIBITED.

Drawing Scale:
AS NOTED

Date:
4/15/13

Drawing Title
DETAILS

Drawing Number
E2

CODED NOTES:

1. PROPOSED BATTERY BACKUP CABINET
2. PROPOSED SPRINT FIBER/POWER JUNCTION BOX MOUNTED TO EXISTING HANDRAIL
3. PROPOSED ICE BRIDGE EXTENSION FURNISHED AND INSTALLED BY CONTRACTOR

SYMBOL	
⊗	COPPER GROUND ROD
▸	CONNECT PER MANUFACTURER SPECS
■	CADWELD CONNECTION
•	MECHANICAL CONNECTION
▬	GROUND BAR

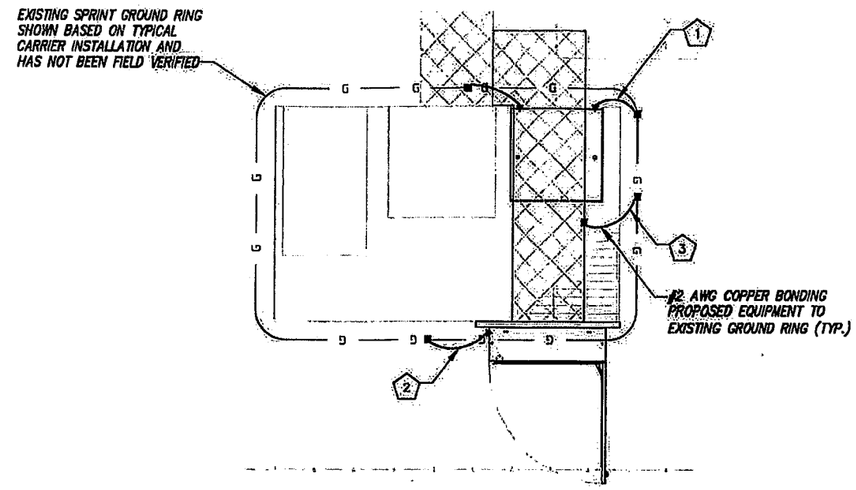

CALLED NORTH

1 EQUIPMENT GROUNDING PLAN
SCALE: AS NOTED

GRAPHIC SCALE

4' 2' 0 2' 4'

SCALE (11x17): 1" = 4'-0"
SCALE (22x34): 1" = 2'-0"

GROUNDING NOTES:

1. ALL DOWN CONDUCTORS AND GROUND RING AND CONDUCTOR SHALL BE #2 AWG, SOLID, BARE, TINNED COPPER, UNO, ALL CONNECTIONS TO GROUND RING SHALL BE EXOTHERMICALLY WELDED. CONDUCTOR SHALL BE A MINIMUM DEPTH BELOW GRADE OF 30 INCHES OR TO THE LEDGE. MINIMUM BEND RADIUS SHALL BE 8 INCHES. CONDUCTOR SHALL BE AT LEAST 24 INCHES FROM ANY FOUNDATION, UNO.
2. WHERE MECHANICAL CONDUCTOR CONNECTIONS ARE SPECIFIED, BOLTED, COMPRESSION-TYPE CLAMPS OR SPLIT-BOLT TYPE CONNECTORS SHALL BE USED.
3. GRIND OFF GALVANIZING IN AFFECTED AREA. EXOTHERMICALLY WELD #2 CONDUCTOR AT 6 INCHES ABOVE GRADE R FOUNDATION, WHICHEVER IS HIGHER. COLD-GALV AFTER. EXOTHERMICALLY WELD OTHER END TO THE GROUND.
4. GROUND CONDUCTORS ON EXTERIOR WALL OF SHELTER SHALL BE ENCASED IN PVC CONDUIT TO GRADE. MOUNT PVC WITH GALVANIZED "C" CLAMPS. SEAL TOP ENDS.
5. FOLLOWING COMPLETION OF WORK, CONDUCT GROUND TEST. SUBMIT WRITTEN TEST TO CONSTRUCTION MANAGER AND PROJECT MANAGER.
6. ALL GROUNDING WORK SHALL COMPLY WITH CARRIER(S) STANDARDS.
7. GROUNDING REQUIREMENTS SHOWN ON THIS PLAN ARE FOR ITEMS THAT ARE LOCATED NEAR GRADE LEVEL AND THAT NEED TO BE TIED TO THE BELOW GRADE GROUND RING.
8. UNLESS NOTED OTHERWISE, ALL GROUNDING SHALL BE IN ACCORDANCE WITH SPRINT'S SSEQ DOCUMENTS 3.018.02.004 "BONDING, GROUNDING AND TRANSIENT PROTECTION FOR CELL SITES", AND 3.018.10.002 "SITE RESISTANCE TO EARTH TESTING". ALL GROUNDING SHALL ALSO COMPLY WITH ALL STATE AND LOCAL CODES, AND THE NATIONAL ELECTRICAL CODE (NEC).
9. UNLESS NOTED OTHERWISE, ALL GROUNDING CONNECTIONS SHALL BE MADE BY AN EXOTHERMIC WELD.
10. RESISTANCE TO EARTH TESTING IS REQUIRED PER SPRINT STANDARDS ON ALL NEW SITES.
11. REFER TO "ANTI-THEFT UPDATE TO SPRINT GROUNDING 082412.PDF" FOR GUIDELINE TO SUSPECTED OR ACTUAL THEFT OF GROUND RING.

NOTES:
1) DO NOT INSTALL CABLE GROUND KIT AT A BEND AND ALWAYS DIRECT GROUND WIRE DOWN TO GROUND BAR.
2) GROUNDING KIT SHALL BE TYPE AND PART NUMBER AS SUPPLIED OR RECOMMENDED BY CABLE MANUFACTURER.
3) WEATHERPROOFING SHALL BE TYPE AND PART NUMBER AS SUPPLIED OR RECOMMENDED BY CABLE MANUFACTURER.

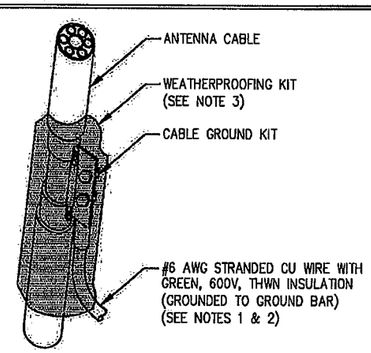

2 CONNECTION OF GROUND KIT TO ANTENNA CABLE
NOT TO SCALE

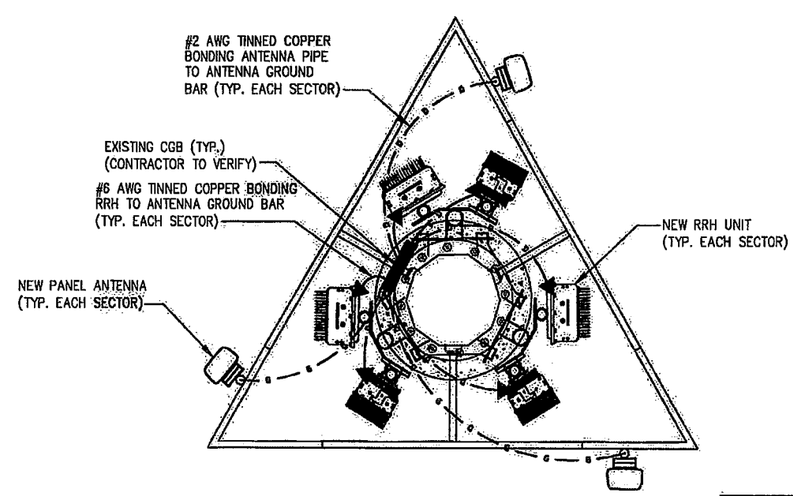

3 TYPICAL ANTENNA GROUNDING PLAN
NOT TO SCALE

NOTES:
1. CONTRACTOR TO VERIFY EXISTING LUG SPACES ARE AVAILABLE ON GROUND BAR. ADD ADDITIONAL BUS BAR IF NO LUG SPACES ARE AVAILABLE.
2. ANTENNA GROUNDING CONNECTIONS SHOWN ARE NOT EXACT TO THIS SITE. FOR EXACT ANTENNA LAYOUT REFER TO ANTENNA CONFIGURATION SHEET.

INFINIGY Design. Build. Deliver.
11 Herbert Drive
Latham, NY 12110
Office # (518) 690-0790
Fax # (518) 690-0793

STATE OF CONNECTICUT JOHN S. STEVENS No. 24705 LICENSED PROFESSIONAL ENGINEER

UNAUTHORIZED ALTERATION OR ADDITION TO THIS DOCUMENT IS A VIOLATION OF APPLICABLE STATE AND FEDERAL LAWS

No	Submittal / Revision	Appv'd	Date
1	REVISED PER COMMENTS	AHS	6/15/13
0	ISSUED FOR REVIEW	KMF	11/15/12

Drawn: KMF Date: 11/15/12
Designed: AJD Date: 11/15/12
Checked: AGF Date: 11/15/12

Project Number
284-043

Project Title
WESTON SQUARE
CT03XC064
92 WESTON STREET
HARTFORD, CT 06120

Prepared For
Sprint VISION

THIS DOCUMENT IS THE DESIGN PROPERTY AND COPYRIGHT OF INFINIGY ENGINEERING, PLLC AND FOR THE EXCLUSIVE USE BY THE TITLE CLIENT. ANY DUPLICATION OR USE WITHOUT EXPRESS WRITTEN CONSENT OF THE CREATOR IS STRICTLY PROHIBITED.

Drawing Scale: AS NOTED
Date: 4/15/13

Drawing Title
GROUNDING PLAN AND DETAILS

Drawing Number
E3