NORTHEAST SITE SOLUTIONS
Turnkey Wireless Development

Northeast Site Solutions
Denise Sabo
4 Angela's Way, Burlington CT 06013
203-435-3640
denise@northeastsitesolutions.com

June 2, 2022

Members of the Siting Council
Connecticut Siting Council
Ten Franklin Square
New Britain, CT 06051

RE: Tower Share Application
2755 State Street, Hamden, CT 065187
Latitude: 41.355477
Longitude: -72.890327
Site #: 876312_Crown_Dish

Dear Ms. Bachman:

This letter and attachments are submitted on behalf of Dish Wireless LLC. Dish Wireless LLC plans to install antennas and related equipment to the tower site located at 2755 State Street, Hamden, Connecticut.

Dish Wireless LLC proposes to install three (3) 600/1900 MHz 5G antennas and six (6) RRUs, at the 100-foot level of the existing 120-foot self-support tower, one (1) Fiber cable will also be installed. Dish Wireless LLC equipment cabinets will be placed within a 7' x 5' lease area within the base of the stealth structure. Included are plans by Jacobs, dated May 16, 2022, Exhibit C. Also included is a structural analysis prepared by B+T, dated October 7, 2021, confirming that the existing tower is structurally capable of supporting the proposed equipment. Attached as Exhibit D. The facility was approved by the Town of Hamden Planning & Zoning Commission on April 8, 1997. Please see attached Exhibit A.

Please accept this letter as notification pursuant to Regulations of Connecticut State Agencies 16-50aa, of Dish Wireless LLC intent to share a telecommunications facility pursuant to R.C.S.A. 16-50j-88. In accordance with R.C.S.A., a copy of this letter is being sent to Mayor Lauren Garrett and Erik Johnson, Acting Town Planner for the Town of Hamden, as well as the tower owner (Crown Castle) and property owner (Hamden Storage LLC).

The planned modifications of the facility fall squarely within those activities explicitly provided for in R.C.S.A. 16-50j-89.

1. The proposed modification will not result in an increase in the height of the existing structure. The top of the existing tower is 120-feet and the Dish Wireless LLC antennas will be located at a centerline height of 100-feet.

2. The proposed modifications will not result in an increase of the site boundary as depicted on the attached site plan.

3. The proposed modifications will not increase noise levels at the facility by six decibels or more, or to levels that exceed local and state criteria. The incremental effect of the proposed changes will be negligent.

4. The operation of the proposed antennas will not increase radio frequency emissions at the facility to a level at or above the Federal Communications Commission safety standard. The combined site operations will result in a total power density of 7.93% as evidenced by Exhibit F.

Connecticut General Statutes 16-50aa indicates that the Council must approve the shared use of a telecommunications facility provided it finds the shared use is technically, legally, environmentally, and economically feasible and meets public safety concerns. As demonstrated in this letter, Dish Wireless LLC respectfully submits that the shared use of this facility satisfies these criteria.

A. Technical Feasibility. The existing tower has been deemed structurally capable of supporting Dish Wireless LLC proposed loading. The structural analysis is included as Exhibit D.

B. Legal Feasibility. As referenced above, C.G.S. 16-50aa has been authorized to issue orders approving the shared use of an existing tower such as this tower in Hamden. Under the authority granted to the Council, an order of the Council approving the requested shared use would permit Dish Wireless LLC to obtain a building permit for the proposed installation. Further, a Letter of Authorization is included as Exhibit G, authorizing Dish Wireless LLC to file this application for shared use.

C. Environmental Feasibility. The proposed shared use of this facility would have a minimal environmental impact. The installation of Dish Wireless LLC equipment at the 100-foot level of the existing 120-foot tower would have an insignificant visual impact on the area around the tower. Dish Wireless LLC ground equipment would be installed within the existing facility compound. Dish Wireless LLC shared use would therefore not cause any significant alteration in the physical or environmental characteristics of the existing site. Additionally, as evidenced by Exhibit F, the proposed antennas would not increase radio frequency emissions to a level at or above the Federal Communications Commission safety standard.

D. Economic Feasibility. Dish Wireless LLC will be entering into an agreement with the owner of this facility to mutually agreeable terms. As previously mentioned, the Letter of Authorization has been provided by the owner to assist Dish Wireless LLC with this tower sharing application.

E. Public Safety Concerns. As discussed above, the tower is structurally capable of supporting Dish Wireless LLC proposed loading. Dish Wireless LLC is not aware of any public safety concerns relative to the proposed sharing of the existing tower. Dish Wireless LLC intentions of providing new and improved wireless service through the shared use of this facility is expected to enhance the safety and welfare of local residents and individuals traveling through Hamden.

Sincerely,

Denise Sabo

Denise Sabo
Mobile: 203-435-3640
Fax: 413-521-0558
Office: 4 Angela's Way, Burlington CT 06013
Email: denise@northeastsitesolutions.com

NORTHEAST SITE SOLUTIONS

Turnkey Wireless Development

Attachments

Cc: Mayor Lauren Garrett
Town of Hamden
2750 Dixwell Avenue
Hamden, CT 06518

Erik Johnson, Acting Town Planner
Town of Hamden
2750 Dixwell Avenue
3rd Floor, Government Center
Hamden, CT 06518

Hamden Storage LLC, Property Owner
228 Park Ave S
New York, NY 10003-1502

Crown Castle, Tower Owner

Exhibit A

Original Facility Approval

Mr. Roscow said the homes that would be impacted would be those in back of Mauro electric. Going up the street, each home blocks the view of the next. The antenna looks like a big osprey nest. The horizontal lines are much more objectionable. He does not see this as being objectionable. Mr. DeCaprio sees no objection. Mr. McDonough understands the concern of the neighbors regarding a tower park, but this is far from that. This is insignificant. Mr. Roscow said there is a moratorium, there are horizontal wires running everywhere. The only homes with a view would look down on the roof of Mauro Electric, which is more objectionable. Mr. Kops said the applicant has a copy of the recommended conditions of approval.

Mr. DeCaprio made a motion to approve Special Permit 96-800/CAM, subject to the following conditions. The proposal conforms to the basic site plan objectives specified in Section 844 of the Hamden Zoning Regulations. The application also meets the Special Permit Threshold Decision criteria specified in Section 826.The proposal should have no adverse impact on the health, safety and welfare of the surrounding area. The proposal is also consistent with all applicable goals and policies in Section 22a -92 of the General Statutes and contains sufficient safeguards to mitigate adverse impacts on both Coastal resources and future water dependent development activities.

1. The Special Permit must be recorded prior to the issuance of a zoning permit, and only after the conditions necessary for the zoning permit have been met.

2. Prior to the issuance of a zoning permit the applicant must:

   a. Provide revised plans listing all conditions of approval;
   b. Provide a bond in an amount approved by the Town Engineer and Town Planner;
   c. Obtain approval of an environmental assessment from the Federal Communications Commission, in accordance with the Environmental Policy Act of 1969.

3. The telecommunications facility must comply with all applicable Federal Communications Commission Radiofrequency Emissions Guidelines (FCC 96-326, adopted August 1, 1996, effective date January 1, 1997, as revised). At the end of each six month period, the applicant must submit to the Commission a report evaluating compliance, prepared by a qualified, independent company.

4. The tower/antenna must be designed to accommodate at least one additional carrier of personal services communications. The addition of any future carrier, however, will require the approval of the Planning and Zoning Commission.

TOWN OF HAMDEN

INTER-OFFICE MEMO

TO: Planning and Zoning Commission

FROM: Daniel W. Kops, Jr., Town Planner

RE: Special Permit #96-800/CAM
2755 State Street
Telecommunications Antenna

DATE: April 8, 1997

RECOMMENDED CONDITIONS OF APPROVAL

With the conditions noted below, the proposal conforms to the basic site plan objectives specified in Section 844 of the Hamden Zoning Regulations. The application also meets the Special Permit Threshold Decision criteria specified in Section 826. The proposal should have no adverse impact on the health, safety, and welfare of neighboring residents.

It is also consistent with all applicable goals and policies in Section 22a-92 of the General Statutes and contains sufficient safeguards to mitigate adverse impacts on both Coastal resources and future water dependent development activities. I therefore recommend approval of Special Permit/CAM #96-800 subject to the following conditions:

1. The Special Permit must be recorded prior to the issuance of a zoning permit, and only after the conditions necessary for the zoning permit have been met.

2. Prior to the issuance of a zoning permit the applicant must:

   a. Provide revised plans listing all conditions of approval;

   b. Provide a bond in an amount approved by the Town Engineer and Town Planner;

   c. Obtain approval of an environmental assessment from the Federal Communications Commission, in accordance with the Environmental Policy Act of 1969.

3. The telecommunications facility must comply with all applicable Federal Communications Commission Radiofrequency Emissions Guidelines (FCC 96-326, adopted August 1, 1996, effective date January 1, 1997, as revised). At the end of each six month period the applicant must submit to the Commission a report evaluating compliance, prepared by a qualified, independent company.

4. The tower/antenna must be designed to accommodate at least one additional carrier of personal services communications. The addition of any future carrier, however, will require the approval of the Planning and Zoning Commission.

5. All work must be completed by April 8, 2002, or the approval will be null and void.

DWK:tbm

Exhibit B

Property Card

Town of Hamden, CT

Property Listing Report

Map Block Lot	2332-008-00-0000	Building #	1	PID	20657	Account

Property Information

Property Location	2755 STATE ST
Owner	HAMDEN STORAGE LLC
Co-Owner	na
Mailing Address	228 PARK AVE S NEW YORK NY 10003-1502
Land Use	3120 SELF STGE M96
Land Class	C
Zoning Code	T4
Census Tract	

Neighborhood	T
Acreage	3.03
Utilities	All Public
Lot Setting/Desc	Urban Level,Swampy
Book / Page	4847/0108
Additional Info	

Photo

Sketch

Primary Construction Details

Year Built	1980
Building Desc.	SELF STGE M96
Building Style	Self Storage
Building Grade	C
Stories	1
Occupancy	51.00
Exterior Walls	Concr/Cinder
Exterior Walls 2	NA
Roof Style	Gable/Hip
Roof Cover	Asphalt
Interior Walls	Minim/Masonry
Interior Walls 2	NA
Interior Floors 1	Concr-Finished
Interior Floors 2	NA

Heating Fuel	Coal or Wood
Heating Type	None
AC Type	None
Bedrooms	0
Full Bathrooms	0
Half Bathrooms	0
Extra Fixtures	0
Total Rooms	0
Bath Style	NA
Kitchen Style	NA
Fin Bsmt Area	
Fin Bsmt Quality	
Bsmt Gar	0
Fireplaces	0

(*Industrial / Commercial Details)

Building Use	Ind/Comm
Building Condition	A
Sprinkler %	NA
Heat / AC	NONE
Frame Type	MASONRY
Baths / Plumbing	AVERAGE
Ceiling / Wall	CEILING ONLY
Rooms / Prtns	AVERAGE
Wall Height	
First Floor Use	NA
Foundation	NA

Report Created On 6/2/2022

Town of Hamden, CT

Property Listing Report | Map Block Lot **2332-008-00-0000** | Building # **1** | PID **20657** | Account

Valuation Summary

(Assessed value = 70% of Appraised Value)

Item	Appraised	Assessed
Buildings		646310
Extras	6300	4410
Improvements		
Outbuildings	60800	42560
Land	550100	385070
Total	1540500	1078350

Sub Areas

Subarea Type	Gross Area (sq ft)	Living Area (sq ft)
First Floor	4800	4800
Slab	5700	0
Office	320	320
Apartment	580	580
Total Area	11400	5700

Outbuilding and Extra Features

Type	Description
PAVING-ASPHALT	48000 S.F.
SHED COM WOOD	192 S.F.
FENCE-6' CHAIN	1296 L.F.
HEAT, FORCED H/A	900 S.F.

Sales History

Owner of Record	Book/ Page	Sale Date	Sale Price
HAMDEN STORAGE LLC	4847/0108	2021-06-11	230010
HAMDEN STORAGE LLC	4847/0102	2021-06-11	1269990
DEBAJ LLC & AMODIO LOUIS G JR & FRANK E	4752/0276	2020-10-26	0
DEBAJ LLC AND AMODIO LOUIS G JR ET ALS	4752/0258	2020-10-26	0
DEBAJ LLC AND AMODIO ET ALS	4734/163-181	2020-09-03	0
DEBJAY LLC UND AND BANL OF AMERICA TRSTE	4690/0191	2020-04-15	0
AMODIO LOUIS G EST UND 1/2 INT &	4468/0127	2017-11-14	0
AMODIO LOUIS G EST UND 1/2 INT &	4468/0126	2017-11-14	0

Report Created On **6/2/2022**

Town of Hamden, CT

Property Listing Report | Map Block Lot 2332-008-00-0000 | Building # 2 | PID 20657 | Account

Photo

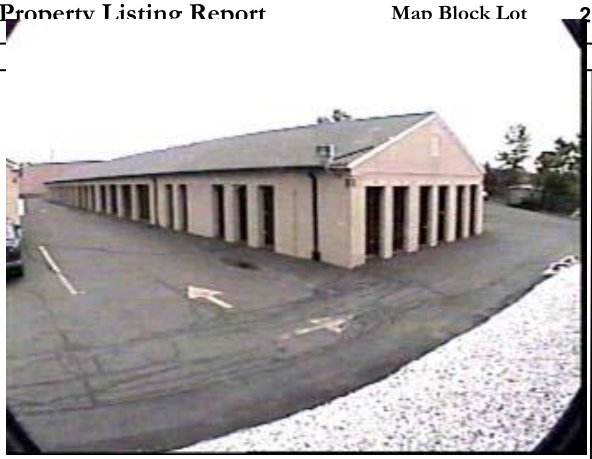

Sketch

Primary Construction Details

Year Built	1980
Building Desc.	Ind/Comm
Building Style	Self Storage
Building Grade	C
Stories	1
Occupancy	51.00
Exterior Walls	Concr/Cinder
Exterior Walls 2	NA
Roof Style	Gable/Hip
Roof Cover	Asphalt
Interior Walls	Minim/Masonry
Interior Walls 2	NA
Interior Floors 1	Concr-Finished
Interior Floors 2	NA

Heating Fuel	Coal or Wood
Heating Type	None
AC Type	None
Bedrooms	0
Full Bathrooms	0
Half Bathrooms	0
Extra Fixtures	0
Total Rooms	0
Bath Style	NA
Kitchen Style	NA
Fin Bsmt Area	
Fin Bsmt Quality	
Bsmt Gar	0
Fireplaces	0

(*Industrial / Commercial Details)

Building Use	SELF STGE M96
Building Condition	A
Sprinkler %	NA
Heat / AC	NONE
Frame Type	MASONRY
Baths / Plumbing	NONE
Ceiling / Wall	NONE
Rooms / Prtns	AVERAGE
Wall Height	8.00
First Floor Use	NA
Foundation	NA

Sub Areas

Subarea Type	Gross Area (sq ft)	Living Area (sq ft)
First Floor	6150	6150
Slab	6150	0

Subarea Type	Gross Area (sq ft)	Living Area (sq ft)
Total Area	12300	6150

Report Created On 6/2/2022

Town of Hamden, CT

Property Listing Report | Map Block Lot 2332-008-00-0000 | Building # 3 | PID 20657 | Account

Photo

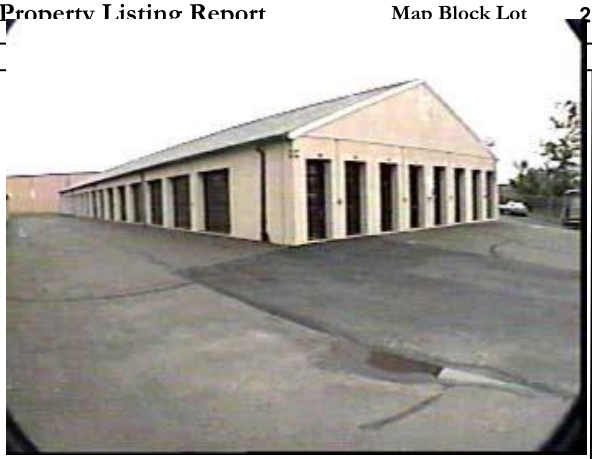

Sketch

Primary Construction Details

Year Built	1980
Building Desc.	Ind/Comm
Building Style	Self Storage
Building Grade	C
Stories	1
Occupancy	62.00
Exterior Walls	Concr/Cinder
Exterior Walls 2	NA
Roof Style	Gable/Hip
Roof Cover	Asphalt
Interior Walls	Minim/Masonry
Interior Walls 2	NA
Interior Floors 1	Concr-Finished
Interior Floors 2	NA

Heating Fuel	Coal or Wood
Heating Type	None
AC Type	None
Bedrooms	0
Full Bathrooms	0
Half Bathrooms	0
Extra Fixtures	0
Total Rooms	0
Bath Style	NA
Kitchen Style	NA
Fin Bsmt Area	
Fin Bsmt Quality	
Bsmt Gar	0
Fireplaces	0

(*Industrial / Commercial Details)

Building Use	SELF STGE M96
Building Condition	A
Sprinkler %	NA
Heat / AC	NONE
Frame Type	MASONRY
Baths / Plumbing	NONE
Ceiling / Wall	NONE
Rooms / Prtns	AVERAGE
Wall Height	8.00
First Floor Use	NA
Foundation	NA

Sub Areas

Subarea Type	Gross Area (sq ft)	Living Area (sq ft)
First Floor	6400	6400
Slab	6400	0

Subarea Type	Gross Area (sq ft)	Living Area (sq ft)
Total Area	12800	6400

Report Created On 6/2/2022

Town of Hamden, CT

Property Listing Report | Map Block Lot 2332-008-00-0000 | Building # 4 | PID 20657 | Account

Photo

Sketch

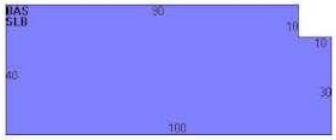

Primary Construction Details

Year Built	1980
Building Desc.	Ind/Comm
Building Style	Self Storage
Building Grade	C
Stories	1
Occupancy	48.00
Exterior Walls	Concr/Cinder
Exterior Walls 2	NA
Roof Style	Gable/Hip
Roof Cover	Asphalt
Interior Walls	Minim/Masonry
Interior Walls 2	NA
Interior Floors 1	Concr-Finished
Interior Floors 2	NA

Heating Fuel	Coal or Wood
Heating Type	None
AC Type	None
Bedrooms	0
Full Bathrooms	0
Half Bathrooms	0
Extra Fixtures	0
Total Rooms	0
Bath Style	NA
Kitchen Style	NA
Fin Bsmt Area	
Fin Bsmt Quality	
Bsmt Gar	0
Fireplaces	0

(*Industrial / Commercial Details)

Building Use	SELF STGE M96
Building Condition	A
Sprinkler %	NA
Heat / AC	NONE
Frame Type	MASONRY
Baths / Plumbing	NONE
Ceiling / Wall	NONE
Rooms / Prtns	AVERAGE
Wall Height	8.00
First Floor Use	NA
Foundation	NA

Sub Areas

Subarea Type	Gross Area (sq ft)	Living Area (sq ft)
First Floor	3900	3900
Slab	3900	0

Subarea Type	Gross Area (sq ft)	Living Area (sq ft)
Total Area	7800	3900

Report Created On 6/2/2022

Town of Hamden, CT

Property Listing Report

Map Block Lot	2332-008-00-0000	Building #	5	PID	20657	Account

Photo

2332-008-00-0000 04/15/2015

Sketch

Primary Construction Details

Year Built	1980
Building Desc.	Ind/Comm
Building Style	Self Storage
Building Grade	C
Stories	1
Occupancy	98.00
Exterior Walls	Concr/Cinder
Exterior Walls 2	NA
Roof Style	Gable/Hip
Roof Cover	Asphalt
Interior Walls	Minim/Masonry
Interior Walls 2	NA
Interior Floors 1	Concr-Finished
Interior Floors 2	NA

Heating Fuel	Coal or Wood
Heating Type	None
AC Type	None
Bedrooms	0
Full Bathrooms	0
Half Bathrooms	0
Extra Fixtures	0
Total Rooms	0
Bath Style	NA
Kitchen Style	NA
Fin Bsmt Area	
Fin Bsmt Quality	
Bsmt Gar	0
Fireplaces	0

(*Industrial / Commercial Details)

Building Use	SELF STGE M96
Building Condition	A
Sprinkler %	NA
Heat / AC	NONE
Frame Type	MASONRY
Baths / Plumbing	NONE
Ceiling / Wall	NONE
Rooms / Prtns	AVERAGE
Wall Height	9.00
First Floor Use	NA
Foundation	NA

Sub Areas

Subarea Type	Gross Area (sq ft)	Living Area (sq ft)
First Floor	7650	7650
Slab	7650	0

Subarea Type	Gross Area (sq ft)	Living Area (sq ft)
Total Area	15300	7650

Report Created On 6/2/2022

Town of Hamden, Connecticut - Assessment Parcel Map

Parcel: 2332-008-00-0000 Address: 2755 STATE ST

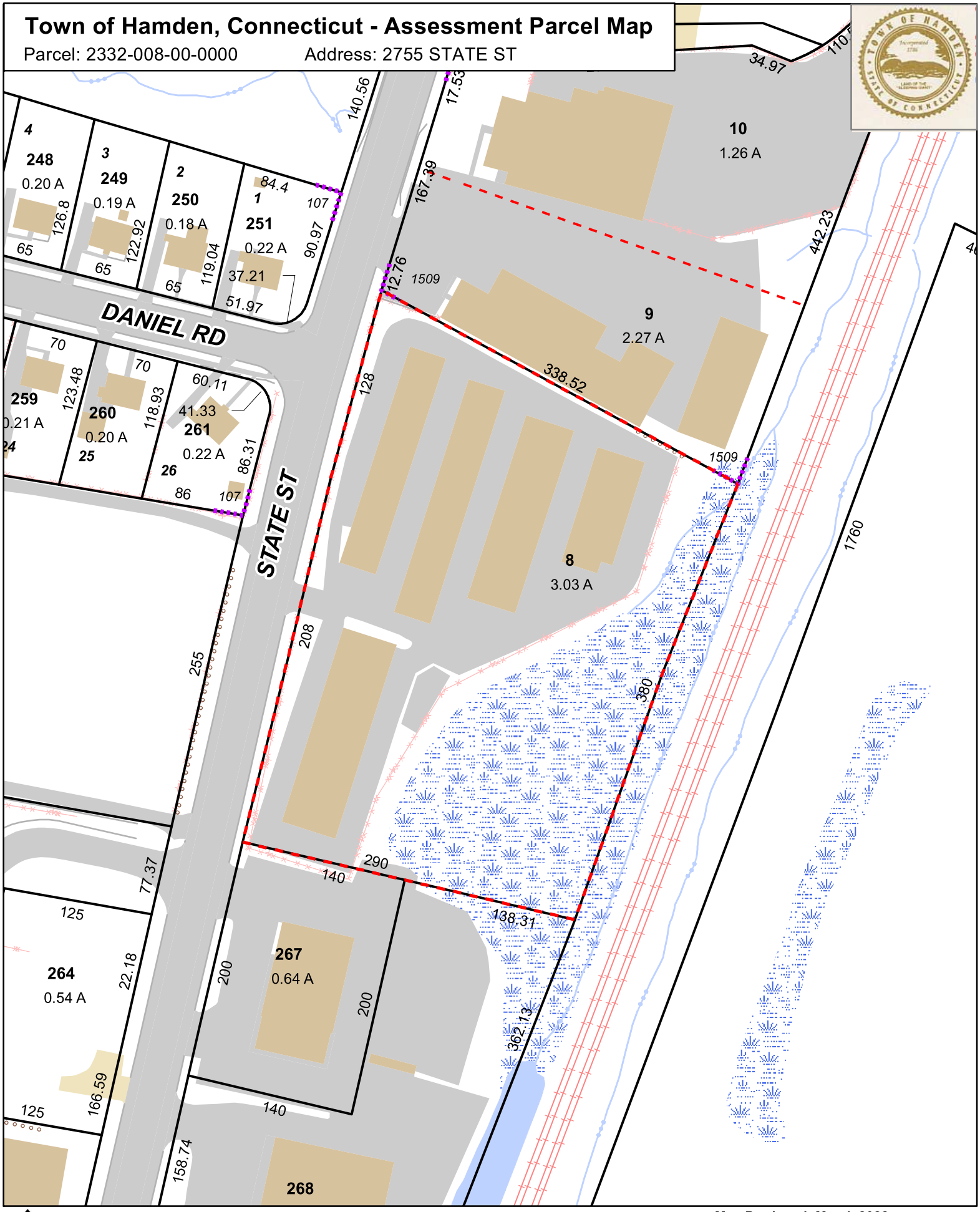

N

Approximate Scale: 1 inch = 100 feet

0 50 100 150 200 Feet

Map Produced: March 2022

Disclaimer: This map is for informational purposes only. All information is subject to verification by any user. The Town of Hamden and its mapping contractors assume no legal responsibility for the information contained herein.

Exhibit C

Construction Drawings

DISH WIRELESS L.L.C. SITE ID:

BOHVN00021A

DISH WIRELESS L.L.C. SITE ADDRESS:

2755 STATE STREET
HAMDEN, CT 06517

CONNECTICUT - CODE COMPLIANCE

ALL WORK SHALL BE PERFORMED AND MATERIALS INSTALLED IN ACCORDANCE WITH THE CURRENT EDITIONS OF THE FOLLOWING CODES AS ADOPTED BY THE LOCAL GOVERNING AUTHORITIES. NOTHING IN THESE PLANS IS TO BE CONSTRUED TO PERMIT WORK NOT CONFORMING TO THESE CODES:

CODE TYPE	CODE
BUILDING	2018 CT STATE BUILDING CODE/2015 IBC W/ CT AMENDMENTS
MECHANICAL	2018 CT STATE BUILDING CODE/2015 IMC W/ CT AMENDMENTS
ELECTRICAL	2018 CT STATE BUILDING CODE/2017 NEC W/ CT AMENDMENTS

SHEET INDEX

SHEET NO.	SHEET TITLE
T-1	TITLE SHEET
A-1	OVERALL AND ENLARGED SITE PLAN
A-2	ELEVATION, ANTENNA LAYOUT AND SCHEDULE
A-3	EQUIPMENT PLATFORM AND H-FRAME DETAILS
A-4	EQUIPMENT DETAILS
A-5	EQUIPMENT DETAILS
A-6	EQUIPMENT DETAILS
E-1	ELECTRICAL/FIBER ROUTE PLAN AND NOTES
E-2	ELECTRICAL DETAILS
E-3	ELECTRICAL ONE-LINE & PANEL SCHEDULE
G-1	GROUNDING PLANS AND NOTES
G-2	GROUNDING DETAILS
G-3	GROUNDING DETAILS
RF-1	RF CABLE COLOR CODES
GN-1	LEGEND AND ABBREVIATIONS
GN-2	RF SIGNAGE
GN-3	GENERAL NOTES
GN-4	GENERAL NOTES
GN-5	GENERAL NOTES

SCOPE OF WORK

THIS IS NOT AN ALL INCLUSIVE LIST. CONTRACTOR SHALL UTILIZE SPECIFIED EQUIPMENT PART OR ENGINEER APPROVED EQUIVALENT. CONTRACTOR SHALL VERIFY ALL NEEDED EQUIPMENT TO PROVIDE A FUNCTIONAL SITE. THE PROJECT GENERALLY CONSISTS OF THE FOLLOWING:

TOWER SCOPE OF WORK:
- EXISTING ABANDONED EQUIPMENT AT 100' RAD TO BE REMOVED
- INSTALL (3) PROPOSED PANEL ANTENNAS (1 PER SECTOR)
- INSTALL (3) PROPOSED ANTENNA SECTOR FRAMES (1 PER SECTOR)
- INSTALL PROPOSED JUMPERS
- INSTALL (6) PROPOSED RRHs (2 PER SECTOR)
- INSTALL (1) PROPOSED OVER VOLTAGE PROTECTION DEVICE (OVP)
- INSTALL (1) PROPOSED HYBRID CABLE

GROUND SCOPE OF WORK:
- EXISTING ABANDONED CONCRETE PAD TO BE UTILIZED
- EXISTING ABANDONED EQUIPMENT TO BE REMOVED
- INSTALL (1) PROPOSED METAL PLATFORM
- EXISTING ICE BRIDGE TO BE UTILIZED BY DISH WIRELESS L.L.C.
- INSTALL (1) PROPOSED PPC CABINET
- INSTALL (1) PROPOSED EQUIPMENT CABINET
- INSTALL (1) PROPOSED POWER CONDUIT
- INSTALL (1) PROPOSED TELCO CONDUIT
- INSTALL (1) PROPOSED GPS UNIT
- INSTALL (1) PROPOSED FIBER NID (IF REQUIRED)
- DISH WIRELESS L.L.C. TO UTILIZE POSITION 'A' ON EXISTING METER BANK

SITE PHOTO

UNDERGROUND SERVICE ALERT CBYD 811
UTILITY NOTIFICATION CENTER OF CONNECTICUT
(800) 922-4455
WWW.CBYD.COM

CALL 2 WORKING DAYS UTILITY NOTIFICATION PRIOR TO CONSTRUCTION

811

GENERAL NOTES

THE FACILITY IS UNMANNED AND NOT FOR HUMAN HABITATION. A TECHNICIAN WILL VISIT THE SITE AS REQUIRED FOR ROUTINE MAINTENANCE. THE PROJECT WILL NOT RESULT IN ANY SIGNIFICANT DISTURBANCE OR EFFECT ON DRAINAGE. NO SANITARY SEWER SERVICE, POTABLE WATER, OR TRASH DISPOSAL IS REQUIRED AND NO COMMERCIAL SIGNAGE IS PROPOSED.

11"x17" PLOT WILL BE HALF SCALE UNLESS OTHERWISE NOTED

CONTRACTOR SHALL VERIFY ALL PLANS, EXISTING DIMENSIONS, AND CONDITIONS ON THE JOB SITE, AND SHALL IMMEDIATELY NOTIFY THE ENGINEER IN WRITING OF ANY DISCREPANCIES BEFORE PROCEEDING WITH THE WORK.

SITE INFORMATION

PROPERTY OWNER:	HAMDEN STORAGE LLC
ADDRESS:	228 PARK AVE S NEW YORK, NY 10003-1502
TOWER TYPE:	SELF SUPPORT
TOWER CO SITE ID:	876312
TOWER APP NUMBER:	553441
COUNTY:	NEW HAVEN
LATITUDE (NAD 83):	41° 21' 19.67" N 41.355464
LONGITUDE (NAD 83):	72° 53' 25.13" W -72.890314
ZONING JURISDICTION:	TOWN OF HAMDEN
ZONING DISTRICT:	NOT REQUIRED
PARCEL NUMBER:	2332-008-00-0000
OCCUPANCY GROUP:	U
CONSTRUCTION TYPE:	II-B
POWER COMPANY:	UNITED ILLUMINATING COMPANY
TELEPHONE COMPANY:	LIGHTOWER

PROJECT DIRECTORY

APPLICANT:	DISH WIRELESS L.L.C. 5701 SOUTH SANTA FE DRIVE LITTLETON, CO 80120
TOWER OWNER:	CROWN CASTLE USA, INC. 2000 CORPORATE DRIVE CANONSBURG, PA 15317 877.486.9377
SITE DESIGNER:	JACOBS TELECOMMUNICATIONS, INC 5449 BELLS FERRY ROAD ACWORTH, GA 30102 470.785.4050

SITE ACQUISITION:
COURTNEY PRESTON
COURTNEY.PRESTON.CONTRACTOR@CROWNCASTLE.COM

CONSTRUCTION MANAGER:
JAVIER SOTO
JAVIER.SOTO@DISH.COM

RF ENGINEER:
SYED ZAIDI
SYED.ZAIDI@DISH.COM

DIRECTIONS

DIRECTIONS FROM DISH WIRELESS L.L.C. DISTRICT OFFICE: FROM NEW HAVEN, TAKE 91 NORTH TO EXIT 9. TAKE A RIGHT AND FOLLOW UNTIL SACKETT PT. TAKE A LEFT AND TAKE LEFT ON STATE STREET.

VICINITY MAP

NO SCALE

dish wireless.

5701 SOUTH SANTA FE DRIVE
LITTLETON, CO 80120

Jacobs.
Challenging today.
Reinventing tomorrow.

Jacobs Telecommunications, Inc.
5449 BELLS FERRY ROAD
ACWORTH, GA 30102

STATE OF CONNECTICUT · EARL B. SVENDSEN · 34052 · LICENSED PROFESSIONAL ENGINEER

5/16/2022

IT IS A VIOLATION OF LAW FOR ANY PERSON, UNLESS THEY ARE ACTING UNDER THE DIRECTION OF A LICENSED PROFESSIONAL ENGINEER, TO ALTER THIS DOCUMENT.

DRAWN BY:	CHECKED BY:	APPROVED BY:
MWD	TJM	KRK

RFDS REV #: 0

CONSTRUCTION DOCUMENTS

SUBMITTALS

REV	DATE	DESCRIPTION
1	05/16/2022	ISSUED FOR CONSTRUCTION

A&E PROJECT NUMBER
EUCC0309

DISH WIRELESS L.L.C.
PROJECT INFORMATION
BOHVN00021A
2755 STATE STREET
HAMDEN, CT 06517

SHEET TITLE
TITLE SHEET

SHEET NUMBER
T-1

NOTES

1. CONTRACTOR SHALL FIELD VERIFY ALL DIMENSIONS.
2. ANTENNAS AND MOUNTS OMITTED FOR CLARITY.

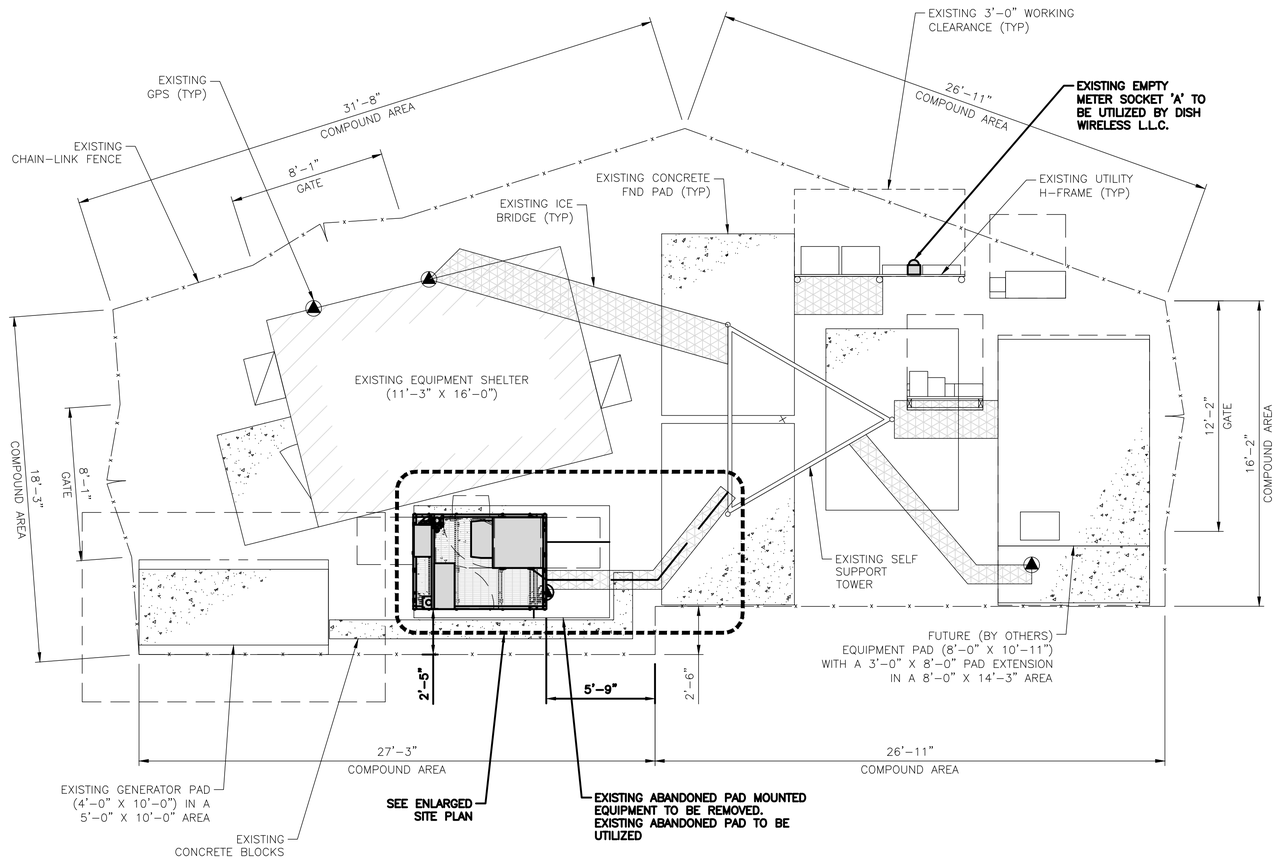

OVERALL SITE PLAN

4' 2' 0 4' 8'
1/4"=1'-0"

1

NOTES

1. CONTRACTOR SHALL FIELD VERIFY ALL DIMENSIONS.
2. CONTRACTOR SHALL MAINTAIN A 10'-0" MINIMUM SEPARATION BETWEEN THE PROPOSED GPS UNIT, TRANSMITTING ANTENNAS AND EXISTING GPS UNITS.
3. ANTENNAS AND MOUNTS OMITTED FOR CLARITY.

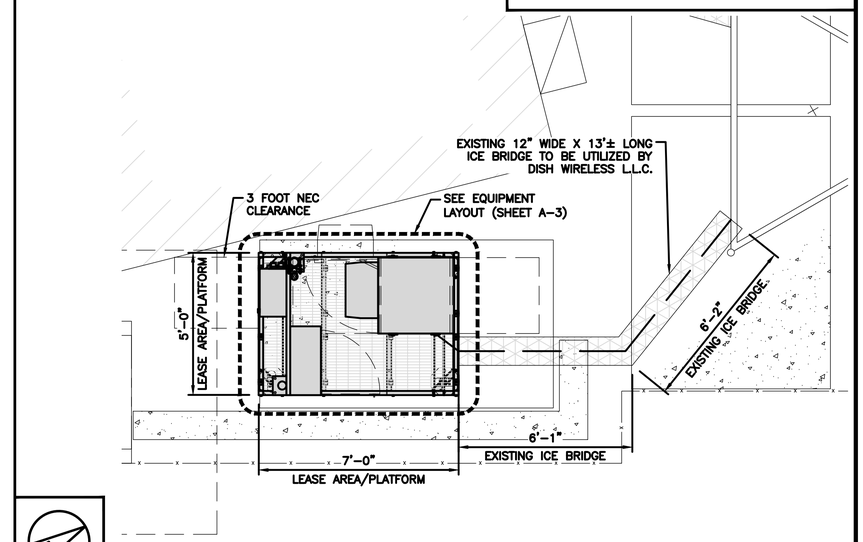

ENLARGED SITE PLAN

12" 6" 0 1' 2' 3' 4' 5' 6' 7'
3/8"=1'-0"

2

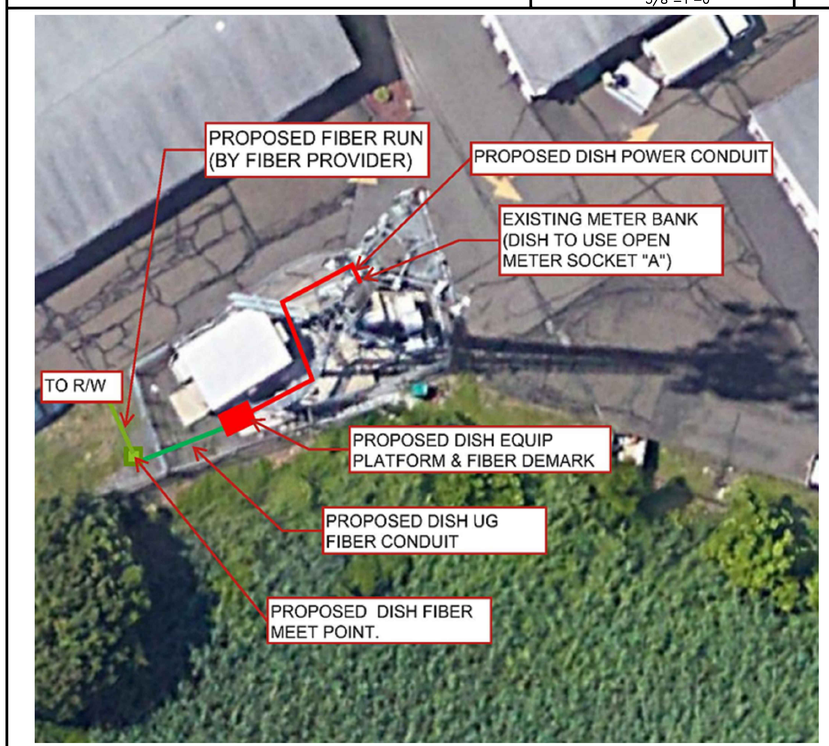

ESA

NO SCALE

3

dish wireless.

5701 SOUTH SANTA FE DRIVE
LITTLETON, CO 80120

Jacobs.
Challenging today.
Reinventing tomorrow.

Jacobs Telecommunications, Inc.
5449 BELLS FERRY ROAD
ACWORTH, GA 30102

STATE OF CONNECTICUT · EARL B. SLANDE · 34052 · LICENSED PROFESSIONAL ENGINEER

5/16/2022

IT IS A VIOLATION OF LAW FOR ANY PERSON, UNLESS THEY ARE ACTING UNDER THE DIRECTION OF A LICENSED PROFESSIONAL ENGINEER, TO ALTER THIS DOCUMENT.

DRAWN BY:	CHECKED BY:	APPROVED BY:
MWD	TJM	KRK

RFDS REV #: 0

CONSTRUCTION DOCUMENTS

SUBMITTALS

REV	DATE	DESCRIPTION
1	05/16/2022	ISSUED FOR CONSTRUCTION

A&E PROJECT NUMBER
EUCC0309

DISH WIRELESS L.L.C. PROJECT INFORMATION
BOHVN00021A
2755 STATE STREET
HAMDEN, CT 06517

SHEET TITLE
OVERALL AND ENLARGED SITE PLAN

SHEET NUMBER
A-1

NOTES

1. CONTRACTOR SHALL FIELD VERIFY ALL DIMENSIONS.
2. FOR ANTENNA SPECIFICATIONS REFER TO ANTENNA SCHEDULE AND FINAL CONSTRUCTION RFDS FOR ALL RF DETAILS
3. EXISTING EQUIPMENT AND FENCE OMITTED FOR CLARITY.
4. JACOBS HAS NOT EVALUATED OR CONFIRMED THE STRUCTURAL CAPACITY OF THE TOWER OR ANTENNA/RADIO MOUNTS. REFER TO LATEST STRUCTURAL ANALYSIS FOR VERIFICATION OF TOWER AND MOUNTING COMPONENTS PRIOR TO CONSTRUCTION. ANY MODIFICATIONS SHALL BE PERFORMED PRIOR TO THE INSTALLATION OF THE EQUIPMENT SHOWN IN THE DRAWING.

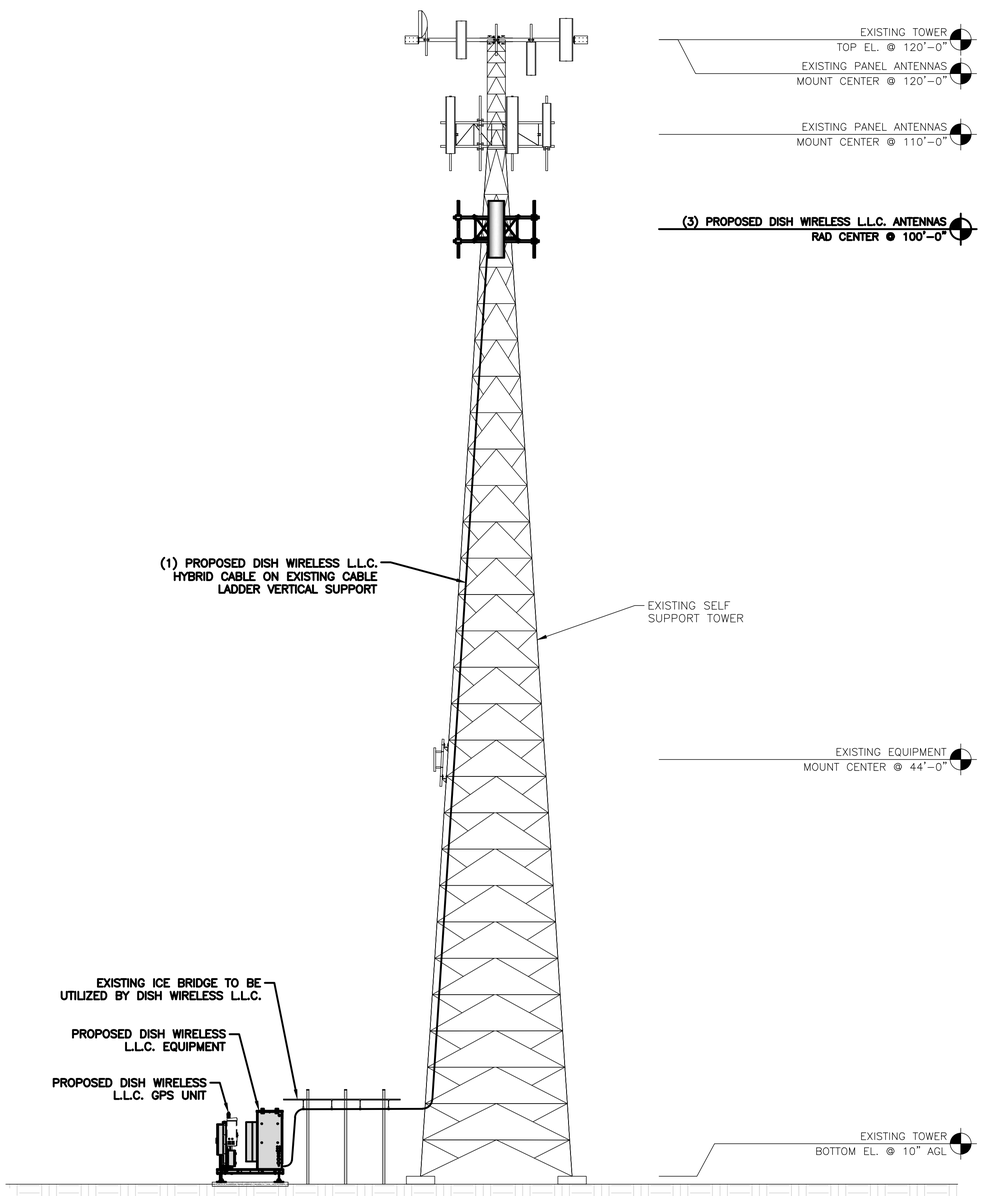

PROPOSED SOUTHEAST ELEVATION

8' 4' 0 8' 16'
1/8"=1'-0"

1

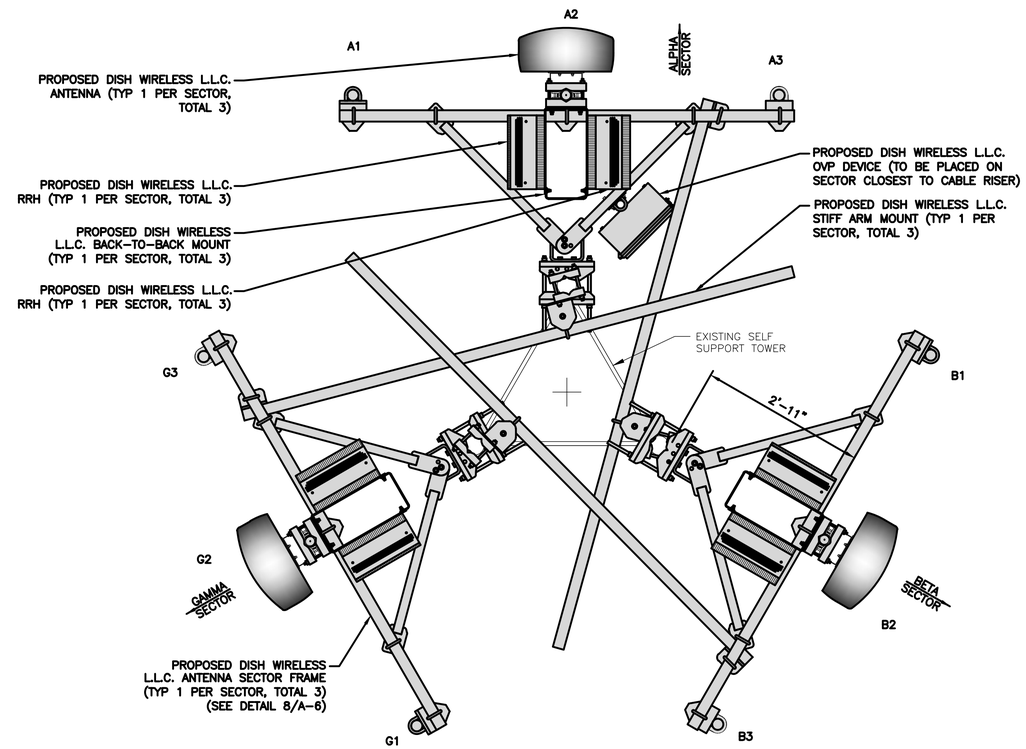

NOTE:
CONTRACTOR TO CONFIRM MOUNT FITMENT WITH LATEST MOUNT ANALYSIS WHEN AVAILABLE OR CONTACT DISH CM IF A MOUNT ANALYSIS IS NOT AVAILABLE.

ANTENNA LAYOUT

12" 6" 0 1' 2' 3'
3/4"=1'-0"

2

SECTOR POS.	ANTENNA					RRH		OVP	TRANSMISSION CABLE
	EXISTING OR PROPOSED	MANUFACTURER – MODEL NUMBER	TECH	AZIMUTH	RAD CENTER	MANUFACTURER – MODEL NUMBER	TECH	MANUFACTURER MODEL	FEED LINE TYPE AND LENGTH
A1	--	--	--	--	--	--	--	RAYCAP RDIDC-9181-PF-48	(1) HIGH-CAPACITY HYBRID CABLE (135' LONG)
A2	PROPOSED	JMA WIRELESS – MX08FRO665-21	5G	0°	100'-0"	FUJITSU – TA08025-B604 FUJITSU – TA08025-B605	5G		
A3	--	--	--	--	--	--	--		
B1	--	--	--	--	--	--	--	SHARED W/ALPHA	SHARED W/ALPHA
B2	PROPOSED	JMA WIRELESS – MX08FRO665-21	5G	120°	100'-0"	FUJITSU – TA08025-B604 FUJITSU – TA08025-B605	5G		
B3	--	--	--	--	--	--	--		
G1	--	--	--	--	--	--	--	SHARED W/ALPHA	SHARED W/ALPHA
G2	PROPOSED	JMA WIRELESS – MX08FRO665-21	5G	240°	100'-0"	FUJITSU – TA08025-B604 FUJITSU – TA08025-B605	5G		
G3	--	--	--	--	--	--	--		

NOTES

1. CONTRACTOR TO REFER TO FINAL CONSTRUCTION RFDS FOR ALL RF DETAILS.
2. ANTENNA AND RRH MODELS MAY CHANGE DUE TO EQUIPMENT AVAILABILITY. ALL EQUIPMENT CHANGES MUST BE APPROVED AND REMAIN IN COMPLIANCE WITH THE PROPOSED DESIGN AND STRUCTURAL ANALYSES.

*SEE LATEST DISH RFDS FOR AZIMUTH INFORMATION AT TIME OF BUILD

ANTENNA SCHEDULE

NO SCALE

3

dish wireless.
5701 SOUTH SANTA FE DRIVE
LITTLETON, CO 80120

Jacobs.
Challenging today.
Reinventing tomorrow.

Jacobs Telecommunications, Inc.
5449 BELLS FERRY ROAD
ACWORTH, GA 30102

STATE OF CONNECTICUT · EARL B. SLANDE · 34052 · LICENSED PROFESSIONAL ENGINEER

5/16/2022

IT IS A VIOLATION OF LAW FOR ANY PERSON, UNLESS THEY ARE ACTING UNDER THE DIRECTION OF A LICENSED PROFESSIONAL ENGINEER, TO ALTER THIS DOCUMENT.

DRAWN BY:	CHECKED BY:	APPROVED BY:
MWD	TJM	KRK

RFDS REV #: 0

CONSTRUCTION DOCUMENTS

SUBMITTALS

REV	DATE	DESCRIPTION
1	05/16/2022	ISSUED FOR CONSTRUCTION

A&E PROJECT NUMBER
EUCC0309

DISH WIRELESS L.L.C. PROJECT INFORMATION
BOHVN00021A
2755 STATE STREET
HAMDEN, CT 06517

SHEET TITLE
ELEVATION, ANTENNA LAYOUT AND SCHEDULE

SHEET NUMBER
A-2

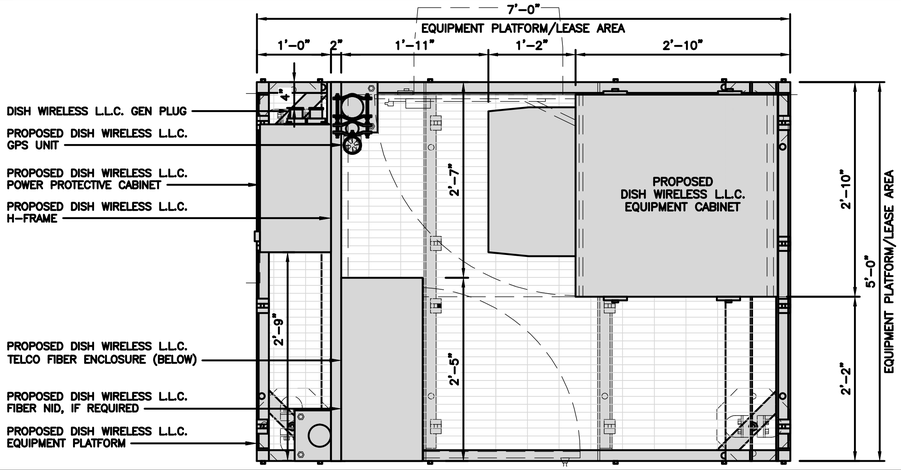

PLATFORM EQUIPMENT PLAN

12" 9" 6" 3" 0 1' 2'
1"=1'-0"

1

COMMSCOPE MTC4045LP 5X7 PLATFORM	
DIMENSIONS (HxWxD)	16"x84"x60"
TOTAL WEIGHT	423 LBS

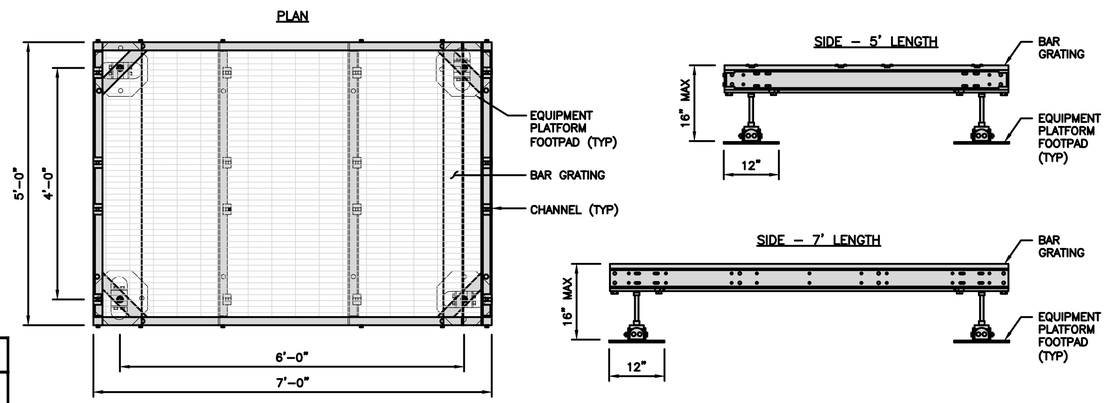

NOTES

1. PLATFORM TO BE LEVELED TO NO MORE THAN +/- 1 DEGREE FROM HORIZONTAL ON BOTH PLANES.

PLATFORM DETAIL

NO SCALE

2

COMMSCOPE MTC4045HFLD H-FRAME	
UNISTRUT/SUPPORT RAILS QTY	5
WEIGHT	59.74 lbs

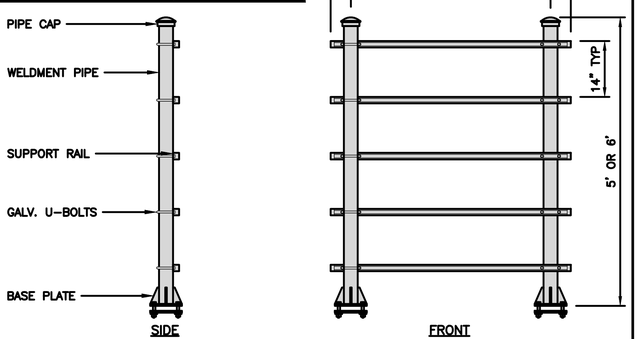

H-FRAME DETAIL

NO SCALE

3

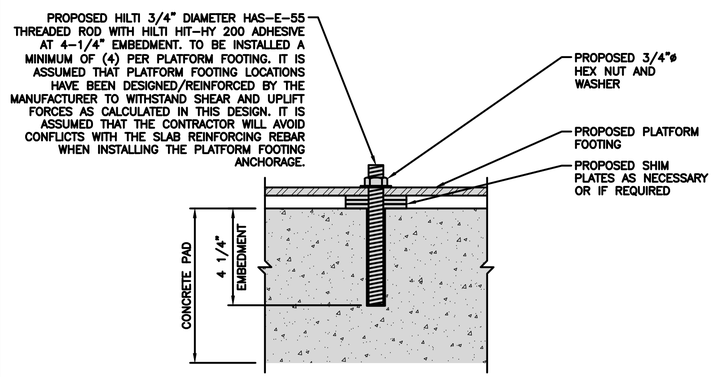

TYPICAL METAL PLATFORM TO CONCRETE SLAB ANCHORAGE

NO SCALE

4

NOTES

1. CONTRACTOR TO BURY PLATFORM FEET WITH A MINIMUM OF 2" OF FILL PER EXISTING SITE SURFACE
2. WEED BARRIER FABRIC TO BE ADDED AT DISCRETION OF DISH WIRELESS L.L.C. CONSTRUCTION MANAGER AT TIME OF CONSTRUCTION. ONE SHEET 8'x8' INSTALLED UNDER ALL FOUR FEET OF THE PLATFORM (4 MIL BLACK PLASTIC)
3. EQUIPMENT CABINET OMITTED FOR CLARITY
4. DETAIL IS FOR H-FRAME EQUIPMENT ELEVATION PURPOSES. REFER TO LINE DIAGRAMS FOR EXACT CONDUIT QUANTITY.

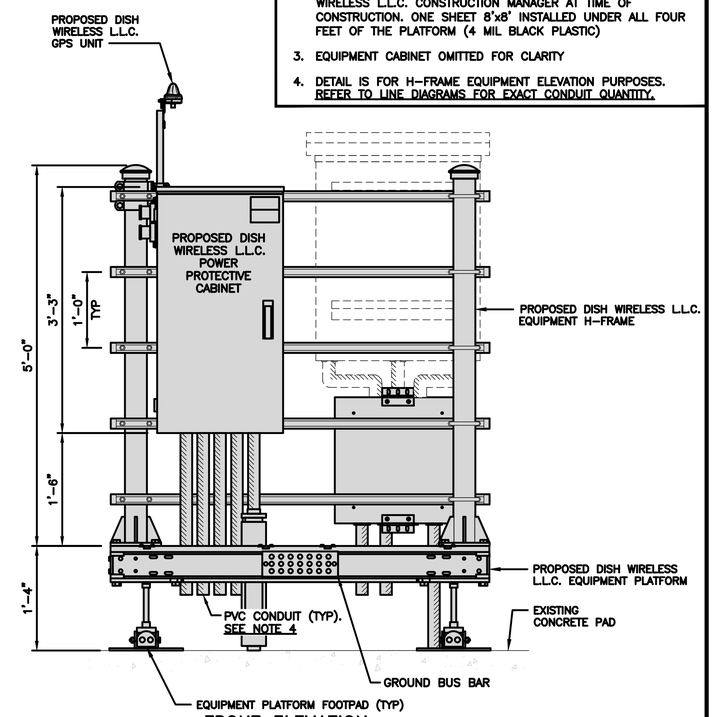

FRONT ELEVATION

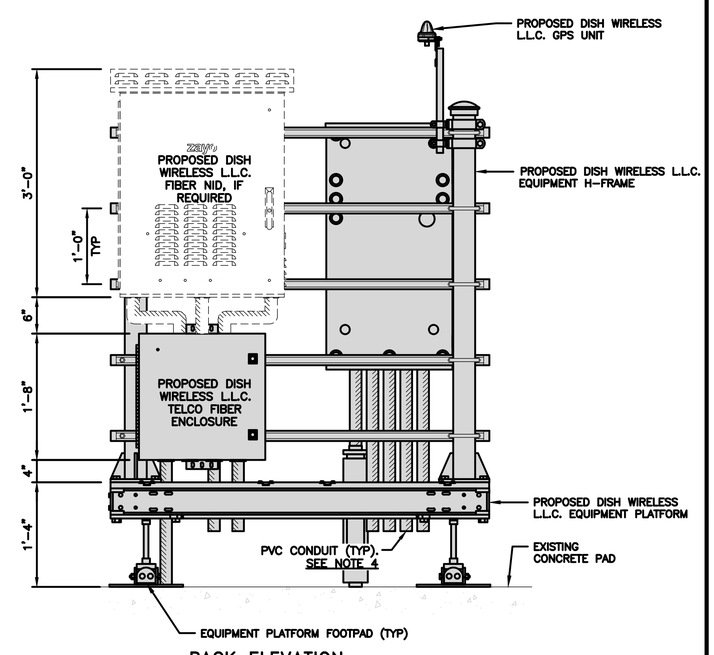

BACK ELEVATION

H-FRAME EQUIPMENT ELEVATION

12" 9" 6" 3" 0 1' 2'
1"=1'-0"

5

dish wireless.

5701 SOUTH SANTA FE DRIVE
LITTLETON, CO 80120

Jacobs.
Challenging today.
Reinventing tomorrow.

Jacobs Telecommunications, Inc.
5449 BELLS FERRY ROAD
ACWORTH, GA 30102

STATE OF CONNECTICUT · EARL B. SVENDE · 34052 LICENSED PROFESSIONAL ENGINEER

5/16/2022

IT IS A VIOLATION OF LAW FOR ANY PERSON, UNLESS THEY ARE ACTING UNDER THE DIRECTION OF A LICENSED PROFESSIONAL ENGINEER, TO ALTER THIS DOCUMENT.

DRAWN BY:	CHECKED BY:	APPROVED BY:
MWD	TJM	KRK

RFDS REV #: 0

CONSTRUCTION DOCUMENTS

SUBMITTALS

REV	DATE	DESCRIPTION
1	05/16/2022	ISSUED FOR CONSTRUCTION

A&E PROJECT NUMBER
EUCC0309

DISH WIRELESS L.L.C. PROJECT INFORMATION
BOHVN00021A
2755 STATE STREET
HAMDEN, CT 06517

SHEET TITLE
EQUIPMENT PLATFORM AND H-FRAME DETAILS

SHEET NUMBER
A-3

CHARLES INDUSTRY HEX CUBE-PM639155N4	
DIMENSIONS (HxWxD)	74"x32"x32"
POWER PLANT	-48VDC ABB/600W
TOTAL WEIGHT (EMPTY)	408 lbs

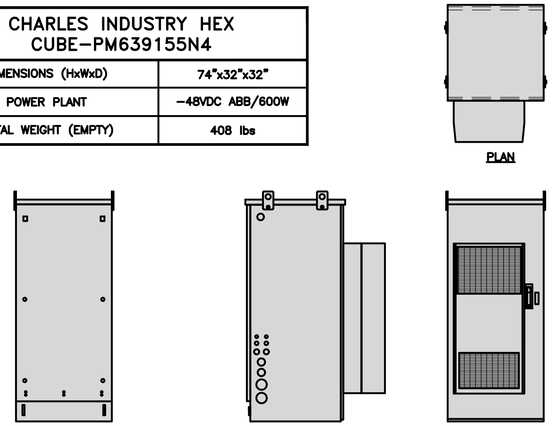

CABINET DETAIL | NO SCALE | 1

RAYCAP PPC RDIAC-2465-P-240-MTS	
ENCLOSURE DIMENSIONS (HxWxD):	39"x22.855"x12.593
WEIGHT:	80 lbs
OPERATING AC VOLTAGE	240/120 1 PHASE 3W+G

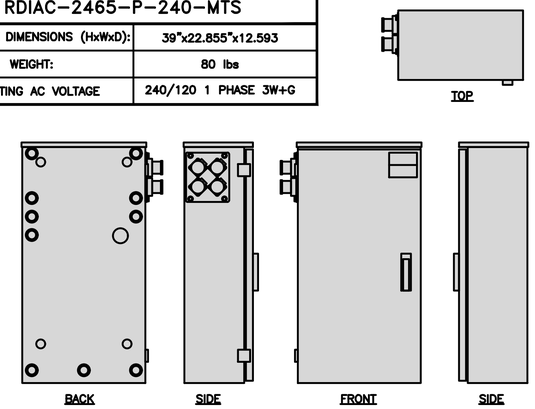

POWER PROTECTION CABINET (PPC) DETAIL | NO SCALE | 2

NOT USED | NO SCALE | 3

NOT USED | NO SCALE | 4

ZAYO 5RU (LEFT SWING DOOR) FIBER NID ENCLOSURE	
DIMENSIONS (HxWxD)	36.1"x29"x12.9"
WEIGHT	85 lbs

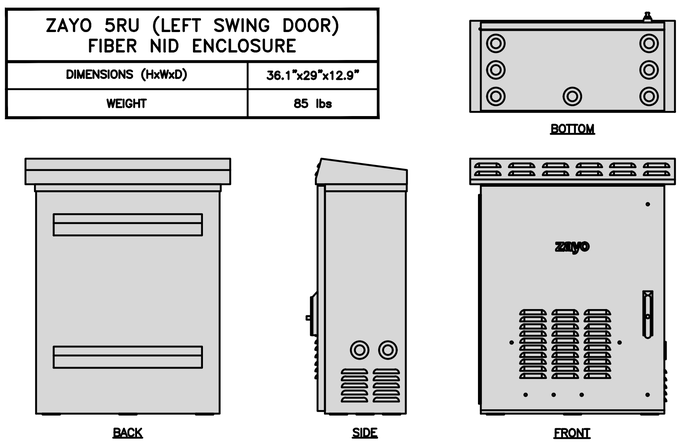

FIBER NID ENCLOSURE DETAIL | NO SCALE | 5

NOT USED | NO SCALE | 6

NOT USED | NO SCALE | 7

NOT USED | NO SCALE | 8

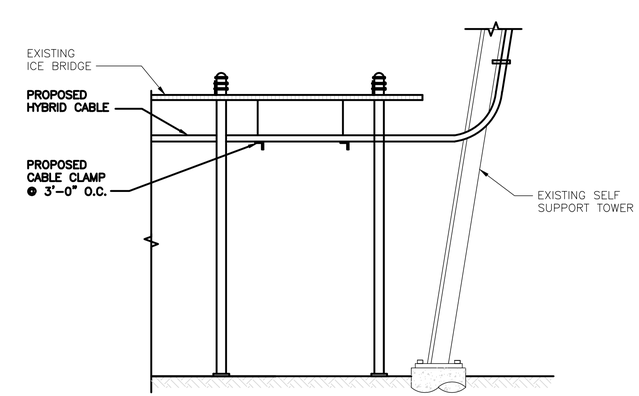

HYBRID CABLE RUN | NO SCALE | 9

dish wireless.

5701 SOUTH SANTA FE DRIVE
LITTLETON, CO 80120

Jacobs.
Challenging today.
Reinventing tomorrow.

Jacobs Telecommunications, Inc.
5449 BELLS FERRY ROAD
ACWORTH, GA 30102

STATE OF CONNECTICUT · EARL B. SLANDE · 34052 · LICENSED PROFESSIONAL ENGINEER
5/16/2022

IT IS A VIOLATION OF LAW FOR ANY PERSON, UNLESS THEY ARE ACTING UNDER THE DIRECTION OF A LICENSED PROFESSIONAL ENGINEER, TO ALTER THIS DOCUMENT.

DRAWN BY:	CHECKED BY:	APPROVED BY:
MWD	TJM	KRK

RFDS REV #: 0

CONSTRUCTION DOCUMENTS

SUBMITTALS

REV	DATE	DESCRIPTION
1	05/16/2022	ISSUED FOR CONSTRUCTION

A&E PROJECT NUMBER
EUCC0309

DISH WIRELESS L.L.C. PROJECT INFORMATION
BOHVN00021A
2755 STATE STREET
HAMDEN, CT 06517

SHEET TITLE
EQUIPMENT DETAILS

SHEET NUMBER
A-4

PCTEL GPSGL-TMG-SPI-40NCB	
DIMENSIONS (DIAxH) MM/INCH	81x184mm 3.2"x7.25"
WEIGHT W/ACCESSORIES	075 lbs
CONNECTOR	N-FEMALE
FREQUENCY RANGE	1590 ± 30MHz

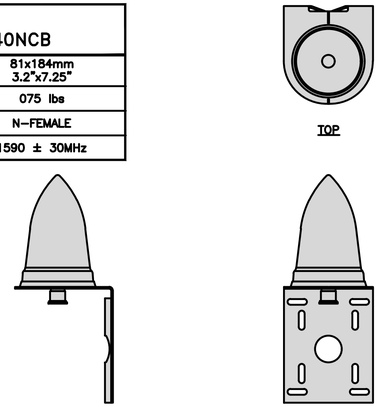

GPS DETAIL | NO SCALE | 1

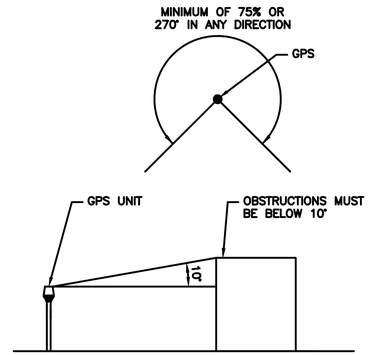

GPS MINIMUM SKY VIEW REQUIREMENTS | NO SCALE | 2

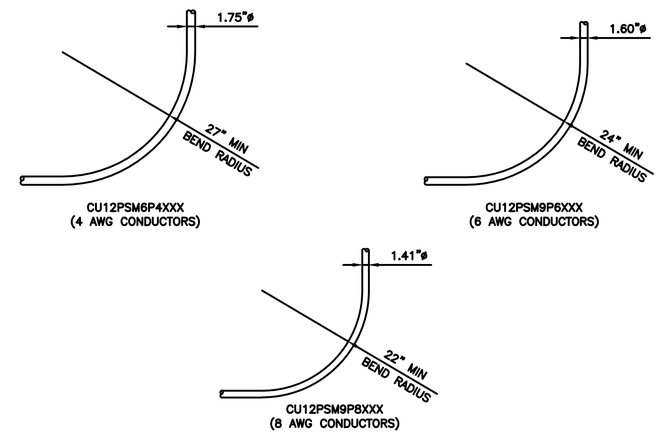

CABLES UNLIMITED HYBRID CABLE MINIMUM BEND RADIUSES | NO SCALE | 3

NOT USED | NO SCALE | 4

NOT USED | NO SCALE | 5

NOT USED | NO SCALE | 6

NOT USED | NO SCALE | 7

NOT USED | NO SCALE | 8

NOT USED | NO SCALE | 9

dish wireless.

5701 SOUTH SANTA FE DRIVE
LITTLETON, CO 80120

Jacobs.

Challenging today.
Reinventing tomorrow.

Jacobs Telecommunications, Inc.
5449 BELLS FERRY ROAD
ACWORTH, GA 30102

STATE OF CONNECTICUT · EARL B. SLANDE · 34052 · LICENSED PROFESSIONAL ENGINEER

5/16/2022

IT IS A VIOLATION OF LAW FOR ANY PERSON, UNLESS THEY ARE ACTING UNDER THE DIRECTION OF A LICENSED PROFESSIONAL ENGINEER, TO ALTER THIS DOCUMENT.

DRAWN BY:	CHECKED BY:	APPROVED BY:
MWD	TJM	KRK

RFDS REV #: 0

CONSTRUCTION DOCUMENTS

SUBMITTALS

REV	DATE	DESCRIPTION
1	05/16/2022	ISSUED FOR CONSTRUCTION

A&E PROJECT NUMBER

EUCC0309

DISH WIRELESS L.L.C. PROJECT INFORMATION

BOHVN00021A
2755 STATE STREET
HAMDEN, CT 06517

SHEET TITLE

EQUIPMENT DETAILS

SHEET NUMBER

A-5

FUJITSU DUAL BAND TA08025-B604	
DIMENSIONS (HxWxD)	14.9"x15.7"x7.8"
WEIGHT	63.9 lbs
CONNECTOR TYPE	4.3-10 RF CONNECTOR
POWER SUPPLY	DC -58~-36V

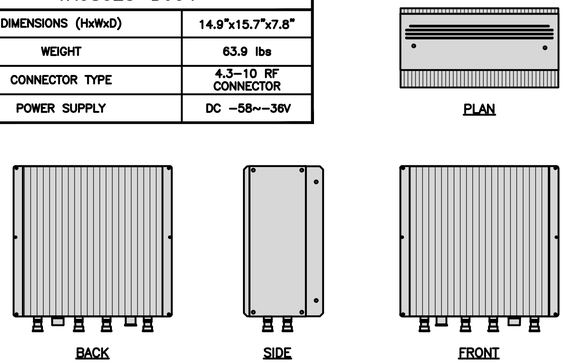

REMOTE RADIO HEAD DETAIL (RRH) — NO SCALE — 1

FUJITSU TRIPLE BAND TA08025-B605	
DIMENSIONS (HxWxD)	14.9"x15.7"x9"
WEIGHT	74.95 lbs
CONNECTOR TYPE	4.3-10 RF CONNECTOR
POWER SUPPLY	DC -58~-36V

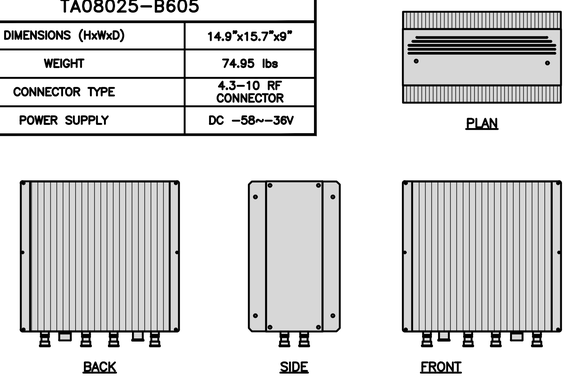

REMOTE RADIO HEAD DETAIL (RRH) — NO SCALE — 2

COMMSCOPE BACK-TO-BACK MOUNT RR-FA2	
DIMENSIONS (HxWxD)	16.41"x18.0"x3.0"
WEIGHT	39.22 lb
PACKAGE QUANTITY	2

NOTE: OR DISH WIRELESS L.L.C. APPROVED EQUIVALENT

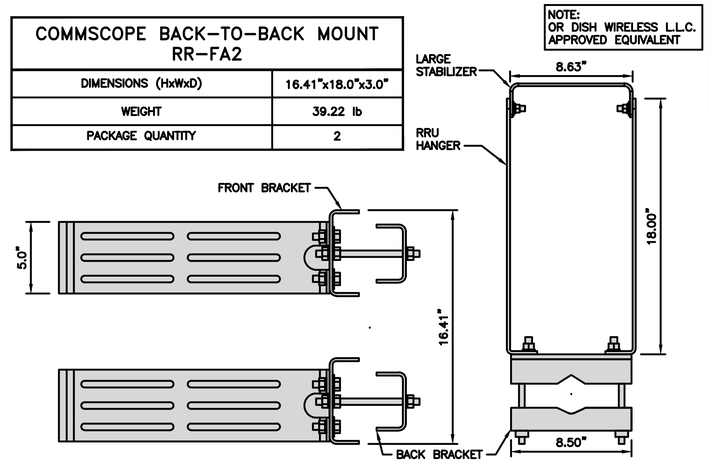

REMOTE RADIO MOUNT DETAIL — NO SCALE — 3

RAYCAP RDIDC-9181-PF-48 DC SURGE PROTECTION (OVP)	
DIMENSIONS (HxWxD)	18.98"x14.39"x8.15"
WEIGHT	21.82 LBS

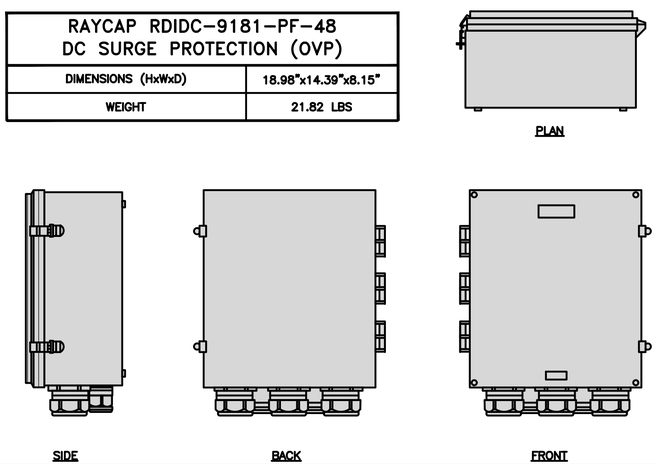

SURGE SUPPRESSION DETAIL (OVP) — NO SCALE — 4

JMA MX08FRO665-21	
DIMENSIONS (HxWxD)	72"x20.0"x8.0"
RF PORTS, CONNECTOR TYPE	8 x 4.3-10 FEMALE
WEIGHT	64.5 lbs
WEIGHT WITH BRACKETS	82.5 lbs

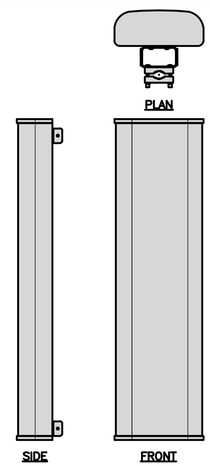

ANTENNA DETAIL — NO SCALE — 5

NOT USED — NO SCALE — 6

M04 MOUNTING BRACKET HPA-33R-BUU-H4-K	
WIDTH	5"
DEPTH	2"
HEIGHT	8"
TOTAL WEIGHT	1.5 lbs
HOUSING MATERIAL	ASA/ABS/ALUMINUM
RADOME COLOR	LIGHT GRAY
CONNECTOR	1x8-PIN DAISY CHAIN

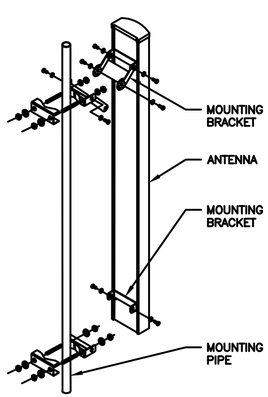

NOTE: OR DISH WIRELESS L.L.C. APPROVED EQUIVALENT

ANTENNA MOUNTING DETAIL — NO SCALE — 7

COMMSCOPE V-FRAME MTC3975083	
FACE SIZE	8'-0"
WEIGHT	352.136 lbs

NOTE: OR DISH WIRELESS L.L.C. APPROVED EQUIVALENT

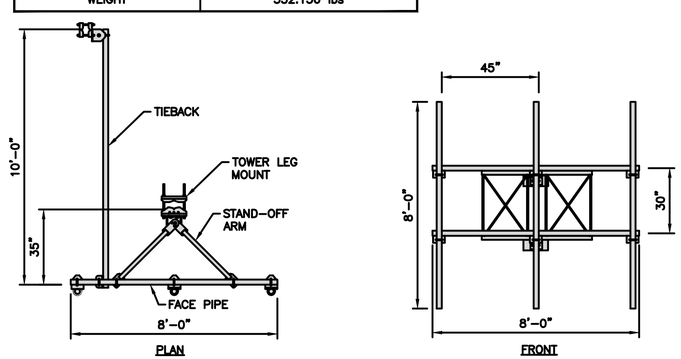

ANTENNA FRAME DETAIL — NO SCALE — 8

NOT USED — NO SCALE — 9

dish wireless.

5701 SOUTH SANTA FE DRIVE
LITTLETON, CO 80120

Jacobs.
Challenging today.
Reinventing tomorrow.

Jacobs Telecommunications, Inc.
5449 BELLS FERRY ROAD
ACWORTH, GA 30102

STATE OF CONNECTICUT — EARL B. SLANDE — 34052 LICENSED PROFESSIONAL ENGINEER

5/16/2022

IT IS A VIOLATION OF LAW FOR ANY PERSON, UNLESS THEY ARE ACTING UNDER THE DIRECTION OF A LICENSED PROFESSIONAL ENGINEER, TO ALTER THIS DOCUMENT.

DRAWN BY:	CHECKED BY:	APPROVED BY:
MWD	TJM	KRK

RFDS REV #: 0

CONSTRUCTION DOCUMENTS

SUBMITTALS

REV	DATE	DESCRIPTION
1	05/16/2022	ISSUED FOR CONSTRUCTION

A&E PROJECT NUMBER
EUCC0309

DISH WIRELESS L.L.C. PROJECT INFORMATION
BOHVN00021A
2755 STATE STREET
HAMDEN, CT 06517

SHEET TITLE
EQUIPMENT DETAILS

SHEET NUMBER
A-6

ROW NOTE

NO WORK WITHIN THIS PERMIT APPLICATION SHALL BE PERFORMED WITHIN THE PUBLIC ROW. UTILITY WORK WITHIN THE PUBLIC ROW SHALL BE THE RESPONSIBILITY OF THE UTILITY PROVIDER AND REQUIRES A SEPARATE PERMIT.

NOTES

1. CONTRACTOR SHALL FIELD VERIFY ALL PROPOSED UNDERGROUND UTILITY CONDUIT ROUTE.
2. ANTENNAS AND MOUNTS OMITTED FOR CLARITY.
3. THE GROUND LEASE PROVIDES BROAD/BLANKET UTILITY RIGHTS. "PWR" AND "FBR" PATH DEPICTED ON A-1 AND E-1 ARE BASED ON BEST AVAILABLE INFORMATION INCLUDING BUT NOT LIMITED TO FIELD VERIFICATION, PRIOR PROJECT DOCUMENTATION AND OTHER REAL PROPERTY RIGHTS DOCUMENTS. WHEN INSTALLING THE UTILITIES PLEASE LOCATE AND FOLLOW EXISTING PATH. IF EXISTING PATH IS NOT AN OPTION, PLEASE NOTIFY TOWER OWNER AS FURTHER COORDINATION MAY BE NEEDED.

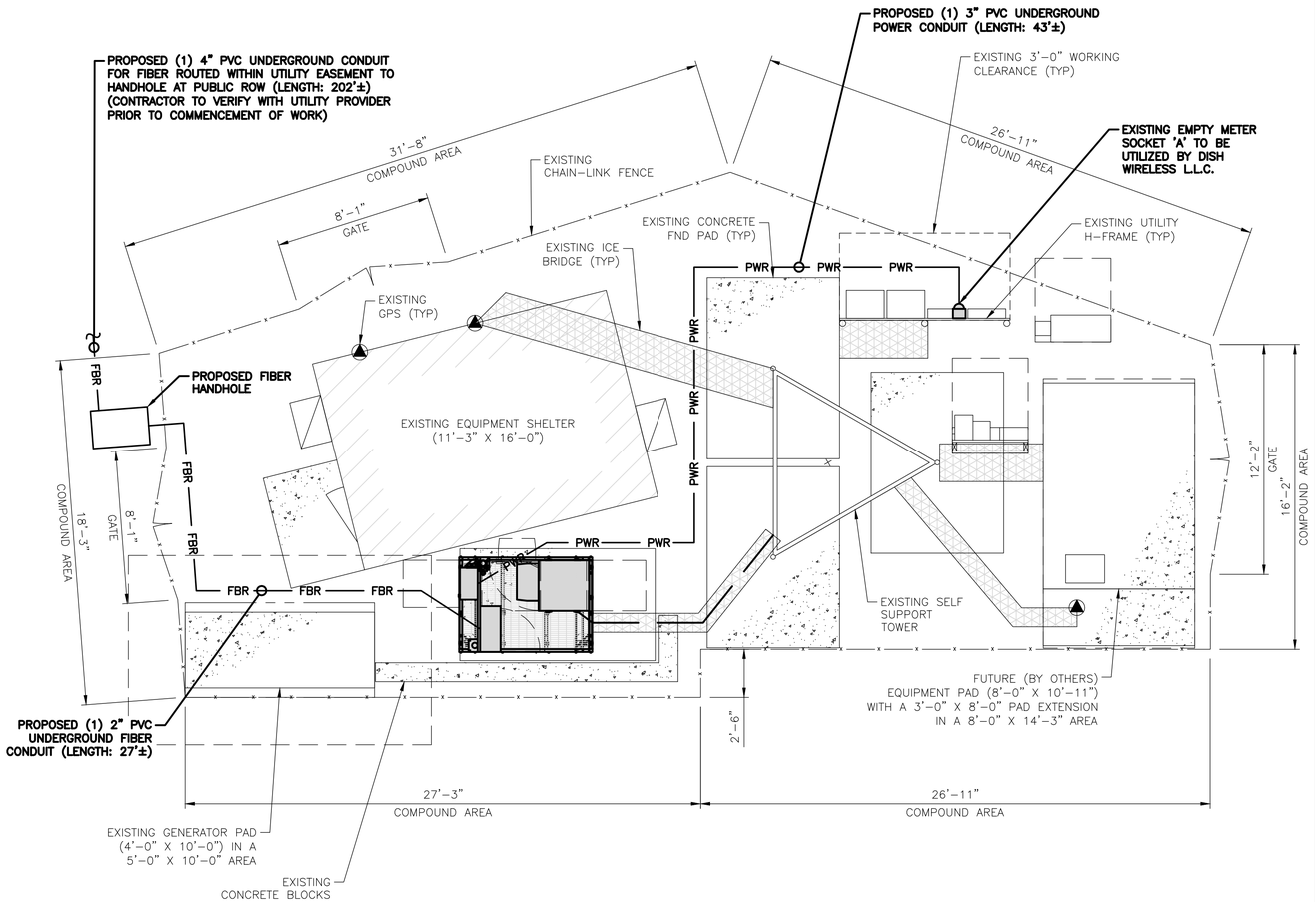

UTILITY ROUTE PLAN

4' 2' 0 4' 8'
1/4"=1'-0"

1

DC POWER WIRING SHALL BE COLOR CODED AT EACH END FOR IDENTIFYING +24V AND −48V CONDUCTORS. RED MARKINGS SHALL IDENTIFY +24V AND BLUE MARKINGS SHALL IDENTIFY −48V.

1. CONTRACTOR SHALL INSPECT THE EXISTING CONDITIONS PRIOR TO SUBMITTING A BID. ANY QUESTIONS ARISING DURING THE BID PERIOD IN REGARDS TO THE CONTRACTOR'S FUNCTIONS, THE SCOPE OF WORK, OR ANY OTHER ISSUE RELATED TO THIS PROJECT SHALL BE BROUGHT UP DURING THE BID PERIOD WITH THE PROJECT MANAGER FOR CLARIFICATION, NOT AFTER THE CONTRACT HAS BEEN AWARDED.
2. ALL ELECTRICAL WORK SHALL BE DONE IN ACCORDANCE WITH CURRENT NATIONAL ELECTRICAL CODES AND ALL STATE AND LOCAL CODES, LAWS, AND ORDINANCES. PROVIDE ALL COMPONENTS AND WIRING SIZES AS REQUIRED TO MEET NEC STANDARDS.
3. LOCATION OF EQUIPMENT, CONDUIT AND DEVICES SHOWN ON THE DRAWINGS ARE APPROXIMATE AND SHALL BE COORDINATED WITH FIELD CONDITIONS PRIOR TO CONSTRUCTION.
4. CONDUIT ROUGH-IN SHALL BE COORDINATED WITH THE MECHANICAL EQUIPMENT TO AVOID LOCATION CONFLICTS. VERIFY WITH THE MECHANICAL EQUIPMENT CONTRACTOR AND COMPLY AS REQUIRED.
5. CONTRACTOR SHALL PROVIDE ALL BREAKERS, CONDUITS AND CIRCUITS AS REQUIRED FOR A COMPLETE SYSTEM.
6. CONTRACTOR SHALL PROVIDE PULL BOXES AND JUNCTION BOXES AS REQUIRED BY THE NEC ARTICLE 314. PROVIDE 1 PULL BOX EVERY 150' TO 200' MAX.
7. CONTRACTOR SHALL PROVIDE ALL STRAIN RELIEF AND CABLE SUPPORTS FOR ALL CABLE ASSEMBLIES. INSTALLATION SHALL BE IN ACCORDANCE WITH MANUFACTURER'S SPECIFICATIONS AND RECOMMENDATIONS.
8. ALL DISCONNECTS AND CONTROLLING DEVICES SHALL BE PROVIDED WITH ENGRAVED PHENOLIC NAMEPLATES INDICATING EQUIPMENT CONTROLLED, BRANCH CIRCUITS INSTALLED ON, AND PANEL FIELD LOCATIONS FED FROM.
9. INSTALL AN EQUIPMENT GROUNDING CONDUCTOR IN ALL CONDUITS PER THE SPECIFICATIONS AND NEC 250. THE EQUIPMENT GROUNDING CONDUCTORS SHALL BE BONDED AT ALL JUNCTION BOXES, PULL BOXES, AND ALL DISCONNECT SWITCHES, AND EQUIPMENT CABINETS.
10. ALL NEW MATERIAL SHALL HAVE A U.L. LABEL.
11. PANEL SCHEDULE LOADING AND CIRCUIT ARRANGEMENTS REFLECT POST-CONSTRUCTION EQUIPMENT.
12. CONTRACTOR SHALL BE RESPONSIBLE FOR AS-BUILT PANEL SCHEDULE AND SITE DRAWINGS.
13. ALL TRENCHES IN COMPOUND TO BE HAND DUG.

ELECTRICAL NOTES

NO SCALE

2

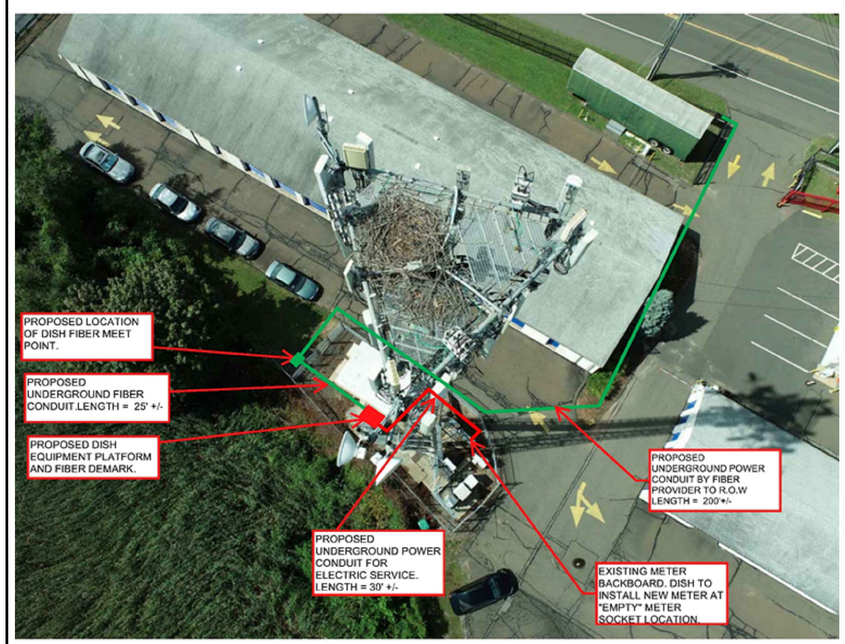

ESA

NO SCALE

3

dish wireless.

5701 SOUTH SANTA FE DRIVE
LITTLETON, CO 80120

Jacobs.
Challenging today.
Reinventing tomorrow.

Jacobs Telecommunications, Inc.
5449 BELLS FERRY ROAD
ACWORTH, GA 30102

STATE OF CONNECTICUT · EARL B. SLANDE · 34052 LICENSED PROFESSIONAL ENGINEER

5/16/2022

IT IS A VIOLATION OF LAW FOR ANY PERSON, UNLESS THEY ARE ACTING UNDER THE DIRECTION OF A LICENSED PROFESSIONAL ENGINEER, TO ALTER THIS DOCUMENT.

DRAWN BY:	CHECKED BY:	APPROVED BY:
MWD	TJM	KRK

RFDS REV #: 0

CONSTRUCTION DOCUMENTS

SUBMITTALS

REV	DATE	DESCRIPTION
1	05/16/2022	ISSUED FOR CONSTRUCTION

A&E PROJECT NUMBER

EUCC0309

DISH WIRELESS L.L.C. PROJECT INFORMATION

BOHVN00021A
2755 STATE STREET
HAMDEN, CT 06517

SHEET TITLE

ELECTRICAL/FIBER ROUTE PLAN AND NOTES

SHEET NUMBER

E-1

CARLON EXPANSION FITTINGS

COUPLING END PART#	MALE TERMINAL ADAPTER END PART#	SIZE	STD CTN QTY.	TRAVEL LENGTH
E945D	E945DX	1/2"	20	4"
E945E	E945EX	3/4"	15	4"
E945F	E945FX	1"	10	4"
E945G	E945GX	1 1/4"	5	4"
E945H	E945HX	1 1/2"	5	4"
E945J	E945JX	2"	15	8"
E945K	E945KX	2 1/2"	10	8"
E945L	E945LX	3"	10	8"
E945M	E945MX	3 1/2"	5	8"
E945N	E945NX	4"	5	8"
E945P	E945PX	5"	1	8"
E945R	E945RX	6"	1	8"

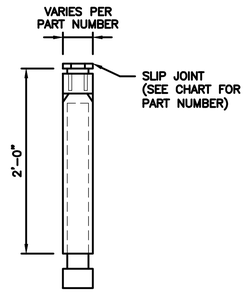

NOTE:
CONTRACTOR TO INSTALL EXPANSION FITTING SLIP JOINT AT METER CENTER CONDUIT TERMINATION, AS PER LOCAL UTILITY POLICY, ORDINANCE AND/OR SPECIFIED REQUIREMENT.

EXPANSION JOINT DETAIL | NO SCALE | 1

TRENCHING NOTES

1. CONTRACTOR SHALL RESTORE THE TRENCH TO ITS ORIGINAL CONDITIONS BY EITHER SEEDING OR SODDING GRASS AREAS, OR REPLACING ASPHALT OR CONCRETE AREAS TO ITS ORIGINAL CROSS SECTION.
2. TRENCHING SAFETY; INCLUDING, BUT NOT LIMITED TO SOIL CLASSIFICATION, SLOPING, AND SHORING, SHALL BE GOVERNED BY THE CURRENT OSHA TRENCHING AND EXCAVATION SAFETY STANDARDS.
3. ALL CONDUITS SHALL BE INSTALLED IN COMPLIANCE WITH THE CURRENT NATIONAL ELECTRIC CODE (NEC) OR AS REQUIRED BY THE LOCAL JURISDICTION, WHICHEVER IS THE MOST STRINGENT.

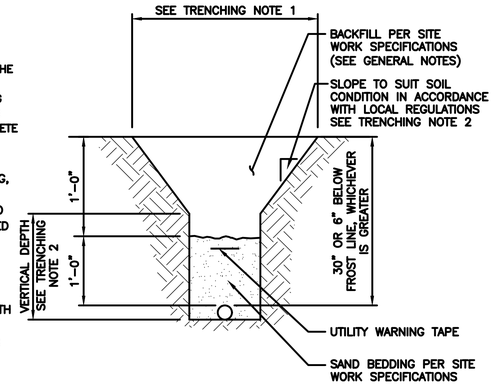

TYPICAL UNDERGROUND TRENCH DETAIL | NO SCALE | 2

NOT USED | NO SCALE | 3

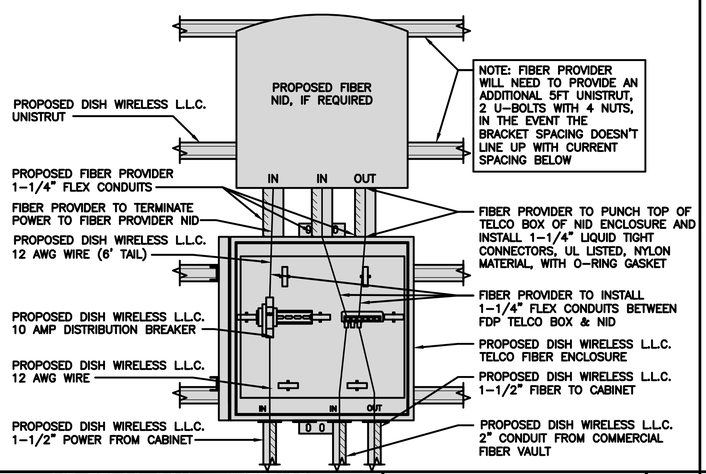

LIT TELCO BOX – INTERIOR WIRING LAYOUT (OPTIONAL) | NO SCALE | 4

NOT USED | NO SCALE | 5

NOT USED | NO SCALE | 6

NOT USED | NO SCALE | 7

NOT USED | NO SCALE | 8

NOT USED | NO SCALE | 9

dish wireless.
5701 SOUTH SANTA FE DRIVE
LITTLETON, CO 80120

Jacobs.
Challenging today.
Reinventing tomorrow.
Jacobs Telecommunications, Inc.
5449 BELLS FERRY ROAD
ACWORTH, GA 30102

STATE OF CONNECTICUT · EARL B. SLANDE · 34052 LICENSED PROFESSIONAL ENGINEER
5/16/2022

IT IS A VIOLATION OF LAW FOR ANY PERSON, UNLESS THEY ARE ACTING UNDER THE DIRECTION OF A LICENSED PROFESSIONAL ENGINEER, TO ALTER THIS DOCUMENT.

DRAWN BY:	CHECKED BY:	APPROVED BY:
MWD	TJM	KRK

RFDS REV #: 0

CONSTRUCTION DOCUMENTS

SUBMITTALS

REV	DATE	DESCRIPTION
1	05/16/2022	ISSUED FOR CONSTRUCTION

A&E PROJECT NUMBER
EUCC0309

DISH WIRELESS L.L.C. PROJECT INFORMATION
BOHVN00021A
2755 STATE STREET
HAMDEN, CT 06517

SHEET TITLE
ELECTRICAL DETAILS

SHEET NUMBER
E-2

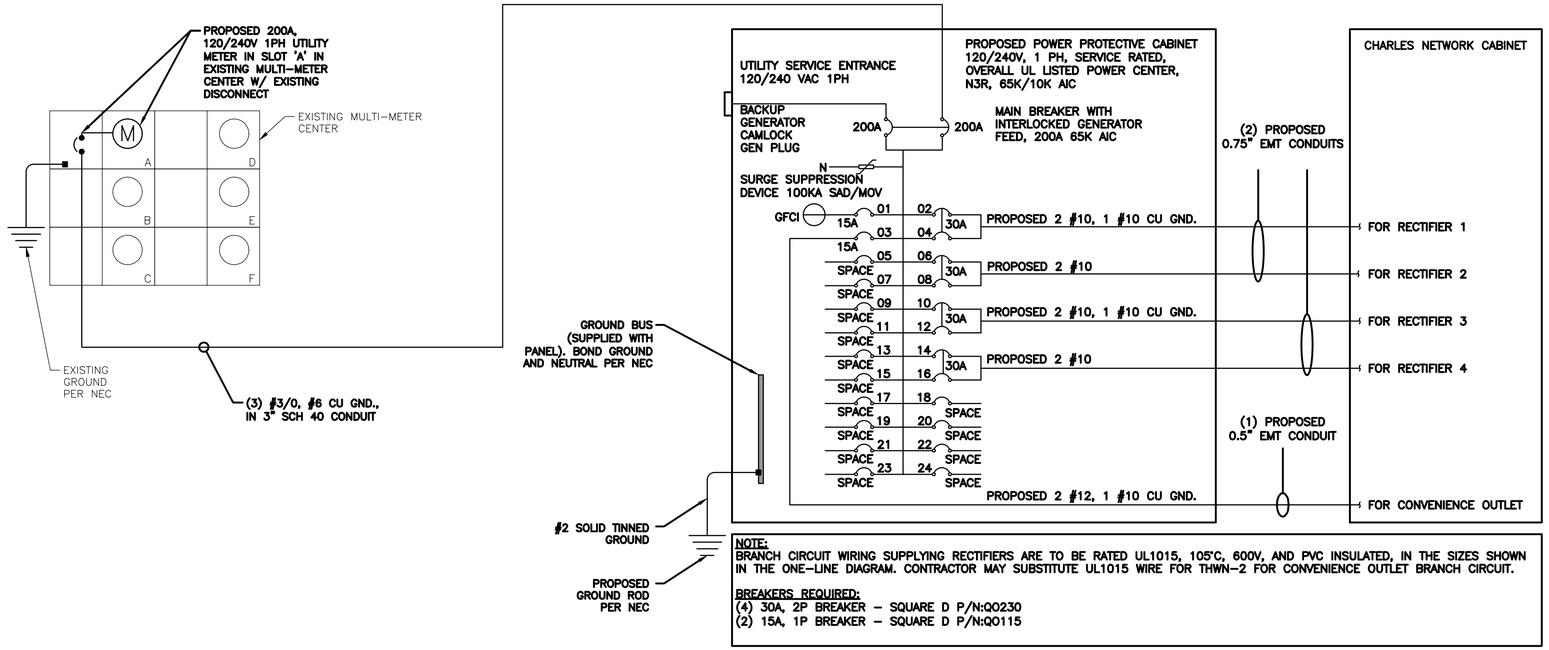

NOTE:
BRANCH CIRCUIT WIRING SUPPLYING RECTIFIERS ARE TO BE RATED UL1015, 105°C, 600V, AND PVC INSULATED, IN THE SIZES SHOWN IN THE ONE-LINE DIAGRAM. CONTRACTOR MAY SUBSTITUTE UL1015 WIRE FOR THWN-2 FOR CONVENIENCE OUTLET BRANCH CIRCUIT.

BREAKERS REQUIRED:
(4) 30A, 2P BREAKER – SQUARE D P/N:QO230
(2) 15A, 1P BREAKER – SQUARE D P/N:QO115

NOTES

ELECTRICAL CONTRACTOR TO CALCULATE MAXIMUM AVAILABLE FAULT CURRENT AND LABEL PANEL IN ACCORDANCE WITH NEC AS REQUIRED BY JURISDICTION.

THE ENGINEER OF RECORD HAS PERFORMED ALL REQUIRED VOLTAGE DROP CALCULATIONS AND ALL BRANCH CIRCUIT AND FEEDERS COMPLY WITH THE NEC (LISTED ON T-1) ARTICLE 210.19(A)(1) FPN NO. 4.

THE (2) CONDUITS WITH (4) CURRENT CARRYING CONDUCTORS EACH, SHALL APPLY THE ADJUSTMENT FACTOR OF 80% PER 2014/17 NEC TABLE 310.15(B)(3)(a) OR 2020 NEC TABLE 310.15(C)(1) FOR UL1015 WIRE.

#12 FOR 15A–20A/1P BREAKER: 0.8 x 30A = 24.0A
#10 FOR 25A–30A/2P BREAKER: 0.8 x 40A = 32.0A
#8 FOR 35A–40A/2P BREAKER: 0.8 x 55A = 44.0A
#6 FOR 45A–60A/2P BREAKER: 0.8 x 75A = 60.0A

CONDUIT SIZING: AT 40% FILL PER NEC CHAPTER 9, TABLE 4, ARTICLE 358.
0.5" CONDUIT – 0.122 SQ. IN AREA
0.75" CONDUIT – 0.213 SQ. IN AREA
2.0" CONDUIT – 1.316 SQ. IN AREA
3.0" CONDUIT – 2.907 SQ. IN AREA

CABINET CONVENIENCE OUTLET CONDUCTORS (1 CONDUIT): USING THWN-2, CU.

#10 – 0.0211 SQ. IN X 2 = 0.0422 SQ. IN
#10 – 0.0211 SQ. IN X 1 = 0.0211 SQ. IN <GROUND
TOTAL = 0.0633 SQ. IN

0.5" EMT CONDUIT IS ADEQUATE TO HANDLE THE TOTAL OF (3) WIRES, INCLUDING GROUND WIRE, AS INDICATED ABOVE.

RECTIFIER CONDUCTORS (2 CONDUITS): USING UL1015, CU.

#10 – 0.0266 SQ. IN X 4 = 0.1064 SQ. IN
#10 – 0.0082 SQ. IN X 1 = 0.0082 SQ. IN <BARE GROUND
TOTAL = 0.1146 SQ. IN

0.75" EMT CONDUIT IS ADEQUATE TO HANDLE THE TOTAL OF (5) WIRES, INCLUDING GROUND WIRE, AS INDICATED ABOVE.

PPC FEED CONDUCTORS (1 CONDUIT): USING THWN, CU.

3/0 – 0.2679 SQ. IN X 3 = 0.8037 SQ. IN
#6 – 0.0507 SQ. IN X 1 = 0.0507 SQ. IN. <GROUND
TOTAL = 0.8544 SQ. IN

3.0" SCH 40 PVC CONDUIT IS ADEQUATE TO HANDLE THE TOTAL OF (4) WIRES; INCLUDING GROUND WIRE, AS INDICATED ABOVE.

PPC ONE-LINE DIAGRAM

NO SCALE | 1

PROPOSED PPC PANEL SCHEDULE FOR CHARLES CABINET

LOAD SERVED	VOLT AMPS (WATTS) L1	VOLT AMPS (WATTS) L2	BREAKER	CKT #	PHASE	CKT #	BREAKER	VOLT AMPS (WATTS) L1	VOLT AMPS (WATTS) L2	LOAD SERVED
PPC GFCI OUTLET	180		15A	1	A	2	30A	2880		ABB/GE INFINITY RECTIFIER 1
CHARLES GFCI OUTLET		180	15A	3	B	4			2880	
–SPACE–				5	A	6	30A	2880		ABB/GE INFINITY RECTIFIER 2
–SPACE–				7	B	8			2880	
–SPACE–				9	A	10	30A	2880		ABB/GE INFINITY RECTIFIER 3
–SPACE–				11	B	12			2880	
–SPACE–				13	A	14	30A	2880		ABB/GE INFINITY RECTIFIER 4
–SPACE–				15	B	16			2880	
–SPACE–				17	A	18				–SPACE–
–SPACE–				19	B	20				–SPACE–
–SPACE–				21	A	22				–SPACE–
–SPACE–				23	B	24				–SPACE–
VOLTAGE AMPS	180	180						11520	11520	
200A MCB, 1ϕ, 24 SPACE, 120/240V			L1		L2					
MB RATING: 65,000 AIC			11700		11700		VOLTAGE AMPS			
			98		98		AMPS			
			98				MAX AMPS			
			123				MAX 125%			

PANEL SCHEDULE | NO SCALE | 2

NOT USED | NO SCALE | 3

dish wireless.

5701 SOUTH SANTA FE DRIVE
LITTLETON, CO 80120

Jacobs.
Challenging today.
Reinventing tomorrow.

Jacobs Telecommunications, Inc.
5449 BELLS FERRY ROAD
ACWORTH, GA 30102

STATE OF CONNECTICUT · EARL B. SVANDE · 34052 · LICENSED PROFESSIONAL ENGINEER
5/16/2022

IT IS A VIOLATION OF LAW FOR ANY PERSON, UNLESS THEY ARE ACTING UNDER THE DIRECTION OF A LICENSED PROFESSIONAL ENGINEER, TO ALTER THIS DOCUMENT.

DRAWN BY:	CHECKED BY:	APPROVED BY:
MWD	TJM	KRK

RFDS REV #: 0

CONSTRUCTION DOCUMENTS

SUBMITTALS

REV	DATE	DESCRIPTION
1	05/16/2022	ISSUED FOR CONSTRUCTION

A&E PROJECT NUMBER
EUCC0309

DISH WIRELESS L.L.C.
PROJECT INFORMATION
BOHVN00021A
2755 STATE STREET
HAMDEN, CT 06517

SHEET TITLE
ELECTRICAL ONE-LINE & PANEL SCHEDULE

SHEET NUMBER
E-3

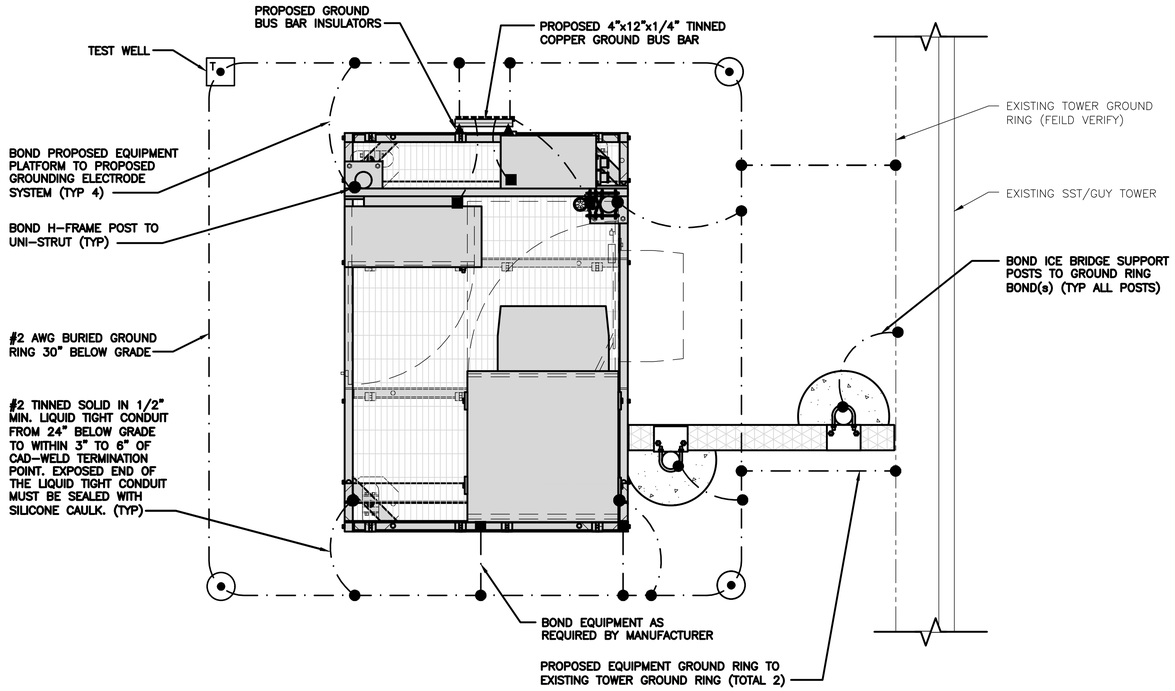

TYPICAL EQUIPMENT GROUNDING PLAN — NO SCALE — 1

NOTES

MOUNT, ANTENNAS AND OVP SHOWN ARE GENERIC AND NOT REFERENCING TO A SPECIFIC MANUFACTURER. THIS LAYOUT IS FOR GROUNDING REFERENCE ONLY.

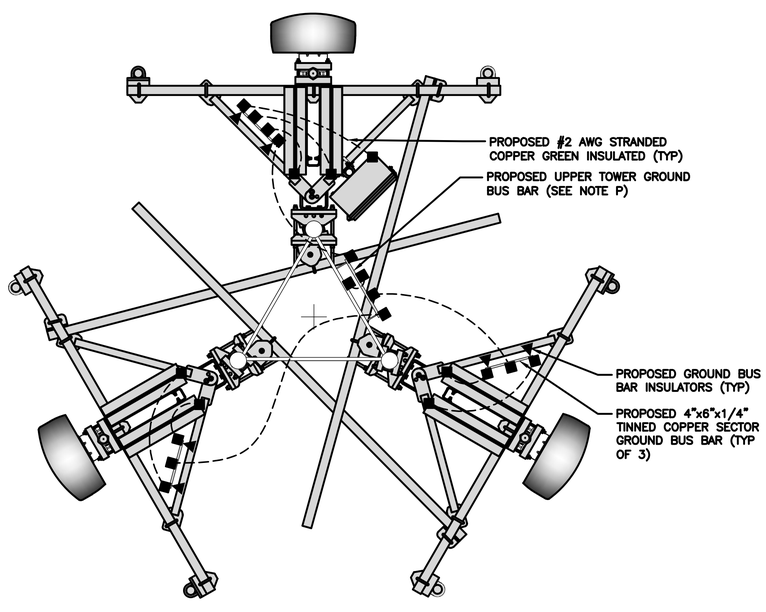

TYPICAL ANTENNA GROUNDING PLAN — NO SCALE — 2

- EXOTHERMIC CONNECTION
- MECHANICAL CONNECTION
- GROUND BUS BAR
- GROUND ROD
- TEST GROUND ROD WITH INSPECTION SLEEVE
- #2 AWG STRANDED & INSULATED
- #2 AWG SOLID COPPER TINNED

GROUNDING LEGEND

1. GROUNDING IS SHOWN DIAGRAMMATICALLY ONLY.
2. CONTRACTOR SHALL GROUND ALL EQUIPMENT AS A COMPLETE SYSTEM. GROUNDING SHALL BE IN COMPLIANCE WITH NEC SECTION 250 AND DISH WIRELESS L.L.C. GROUNDING AND BONDING REQUIREMENTS AND MANUFACTURER'S SPECIFICATIONS.
3. ALL GROUND CONDUCTORS SHALL BE COPPER; NO ALUMINUM CONDUCTORS SHALL BE USED.

GROUNDING KEY NOTES

(A) EXTERIOR GROUND RING: #2 AWG SOLID COPPER, BURIED AT A DEPTH OF AT LEAST 30 INCHES BELOW GRADE, OR 6 INCHES BELOW THE FROST LINE AND APPROXIMATELY 24 INCHES FROM THE EXTERIOR WALL OR FOOTING.

(B) TOWER GROUND RING: THE GROUND RING SYSTEM SHALL BE INSTALLED AROUND AN ANTENNA TOWER'S LEGS, AND/OR GUY ANCHORS. WHERE SEPARATE SYSTEMS HAVE BEEN PROVIDED FOR THE TOWER AND THE BUILDING, AT LEAST TWO BONDS SHALL BE MADE BETWEEN THE TOWER RING GROUND SYSTEM AND THE BUILDING RING GROUND SYSTEM USING MINIMUM #2 AWG SOLID COPPER CONDUCTORS.

(C) INTERIOR GROUND RING: #2 AWG STRANDED GREEN INSULATED COPPER CONDUCTOR EXTENDED AROUND THE PERIMETER OF THE EQUIPMENT AREA. ALL NON-TELECOMMUNICATIONS RELATED METALLIC OBJECTS FOUND WITHIN A SITE SHALL BE GROUNDED TO THE INTERIOR GROUND RING WITH #6 AWG STRANDED GREEN INSULATED CONDUCTOR.

(D) BOND TO INTERIOR GROUND RING: #2 AWG SOLID TINNED COPPER WIRE PRIMARY BONDS SHALL BE PROVIDED AT LEAST AT FOUR POINTS ON THE INTERIOR GROUND RING, LOCATED AT THE CORNERS OF THE BUILDING.

(E) GROUND ROD: UL LISTED COPPER CLAD STEEL. MINIMUM 1/2" DIAMETER BY EIGHT FEET LONG. GROUND RODS SHALL BE INSTALLED WITH INSPECTION SLEEVES. GROUND RODS SHALL BE DRIVEN TO THE DEPTH OF GROUND RING CONDUCTOR.

(F) CELL REFERENCE GROUND BAR: POINT OF GROUND REFERENCE FOR ALL COMMUNICATIONS EQUIPMENT FRAMES. ALL BONDS ARE MADE WITH #2 AWG UNLESS NOTED OTHERWISE STRANDED GREEN INSULATED COPPER CONDUCTORS. BOND TO GROUND RING WITH (2) #2 SOLID TINNED COPPER CONDUCTORS.

(G) HATCH PLATE GROUND BAR: BOND TO THE INTERIOR GROUND RING WITH TWO #2 AWG STRANDED GREEN INSULATED COPPER CONDUCTORS. WHEN A HATCH-PLATE AND A CELL REFERENCE GROUND BAR ARE BOTH PRESENT, THE CRGB MUST BE CONNECTED TO THE HATCH-PLATE AND TO THE INTERIOR GROUND RING USING (2) TWO #2 AWG STRANDED GREEN INSULATED COPPER CONDUCTORS EACH.

(H) EXTERIOR CABLE ENTRY PORT GROUND BARS: LOCATED AT THE ENTRANCE TO THE CELL SITE BUILDING. BOND TO GROUND RING WITH A #2 AWG SOLID TINNED COPPER CONDUCTORS WITH AN EXOTHERMIC WELD AND INSPECTION SLEEVE.

(I) TELCO GROUND BAR: BOND TO BOTH CELL REFERENCE GROUND BAR OR EXTERIOR GROUND RING.

(J) FRAME BONDING: THE BONDING POINT FOR TELECOM EQUIPMENT FRAMES SHALL BE THE GROUND BUS THAT IS NOT ISOLATED FROM THE EQUIPMENTS METAL FRAMEWORK.

(K) INTERIOR UNIT BONDS: METAL FRAMES, CABINETS AND INDIVIDUAL METALLIC UNITS LOCATED WITH THE AREA OF THE INTERIOR GROUND RING REQUIRE A #6 AWG STRANDED GREEN INSULATED COPPER BOND TO THE INTERIOR GROUND RING.

(L) FENCE AND GATE GROUNDING: METAL FENCES WITHIN 7 FEET OF THE EXTERIOR GROUND RING OR OBJECTS BONDED TO THE EXTERIOR GROUND RING SHALL BE BONDED TO THE GROUND RING WITH A #2 AWG SOLID TINNED COPPER CONDUCTOR AT AN INTERVAL NOT EXCEEDING 25 FEET. BONDS SHALL BE MADE AT EACH GATE POST AND ACROSS GATE OPENINGS.

(M) EXTERIOR UNIT BONDS: METALLIC OBJECTS, EXTERNAL TO OR MOUNTED TO THE BUILDING, SHALL BE BONDED TO THE EXTERIOR GROUND RING. USING #2 TINNED SOLID COPPER WIRE

(N) ICE BRIDGE SUPPORTS: EACH ICE BRIDGE LEG SHALL BE BONDED TO THE GROUND RING WITH #2 AWG BARE TINNED COPPER CONDUCTOR. PROVIDE EXOTHERMIC WELDS AT BOTH THE ICE BRIDGE LEG AND BURIED GROUND RING.

(O) DURING ALL DC POWER SYSTEM CHANGES INCLUDING DC SYSTEM CHANGE OUTS, RECTIFIER REPLACEMENTS OR ADDITIONS, BREAKER DISTRIBUTION CHANGES, BATTERY ADDITIONS, BATTERY REPLACEMENTS AND INSTALLATIONS OR CHANGES TO DC CONVERTER SYSTEMS IT SHALL BE REQUIRED THAT SERVICE CONTRACTORS VERIFY ALL DC POWER SYSTEMS ARE EQUIPPED WITH A MASTER DC SYSTEM RETURN GROUND CONDUCTOR FROM THE DC POWER SYSTEM COMMON RETURN BUS DIRECTLY CONNECTED TO THE CELL SITE REFERENCE GROUND BAR

(P) TOWER TOP COLLECTOR BUS BAR IS TO BE MECHANICALLY BONDED TO TOWER STEEL.

REFER TO DISH WIRELESS L.L.C. GROUNDING NOTES.

GROUNDING KEY NOTES — NO SCALE — 3

dish wireless.
5701 SOUTH SANTA FE DRIVE
LITTLETON, CO 80120

Jacobs
Challenging today.
Reinventing tomorrow.
Jacobs Telecommunications, Inc.
5449 BELLS FERRY ROAD
ACWORTH, GA 30102

STATE OF CONNECTICUT — EARL B. SLANDE — 34052 LICENSED PROFESSIONAL ENGINEER
5/16/2022

IT IS A VIOLATION OF LAW FOR ANY PERSON, UNLESS THEY ARE ACTING UNDER THE DIRECTION OF A LICENSED PROFESSIONAL ENGINEER, TO ALTER THIS DOCUMENT.

DRAWN BY:	CHECKED BY:	APPROVED BY:
MWD	TJM	KRK

RFDS REV #: 0

CONSTRUCTION DOCUMENTS

SUBMITTALS

REV	DATE	DESCRIPTION
1	05/16/2022	ISSUED FOR CONSTRUCTION

A&E PROJECT NUMBER
EUCC0309

DISH WIRELESS L.L.C. PROJECT INFORMATION
BOHVN00021A
2755 STATE STREET
HAMDEN, CT 06517

SHEET TITLE
GROUNDING PLANS AND NOTES

SHEET NUMBER
G-1

NOTES

1. EQUIPMENT CABINET OMITTED FOR CLARITY
2. DETAIL IS FOR H-FRAME EQUIPMENT GROUNDING PURPOSES. REFER TO LINE DIAGRAMS FOR EXACT CONDUIT QUANTITY.

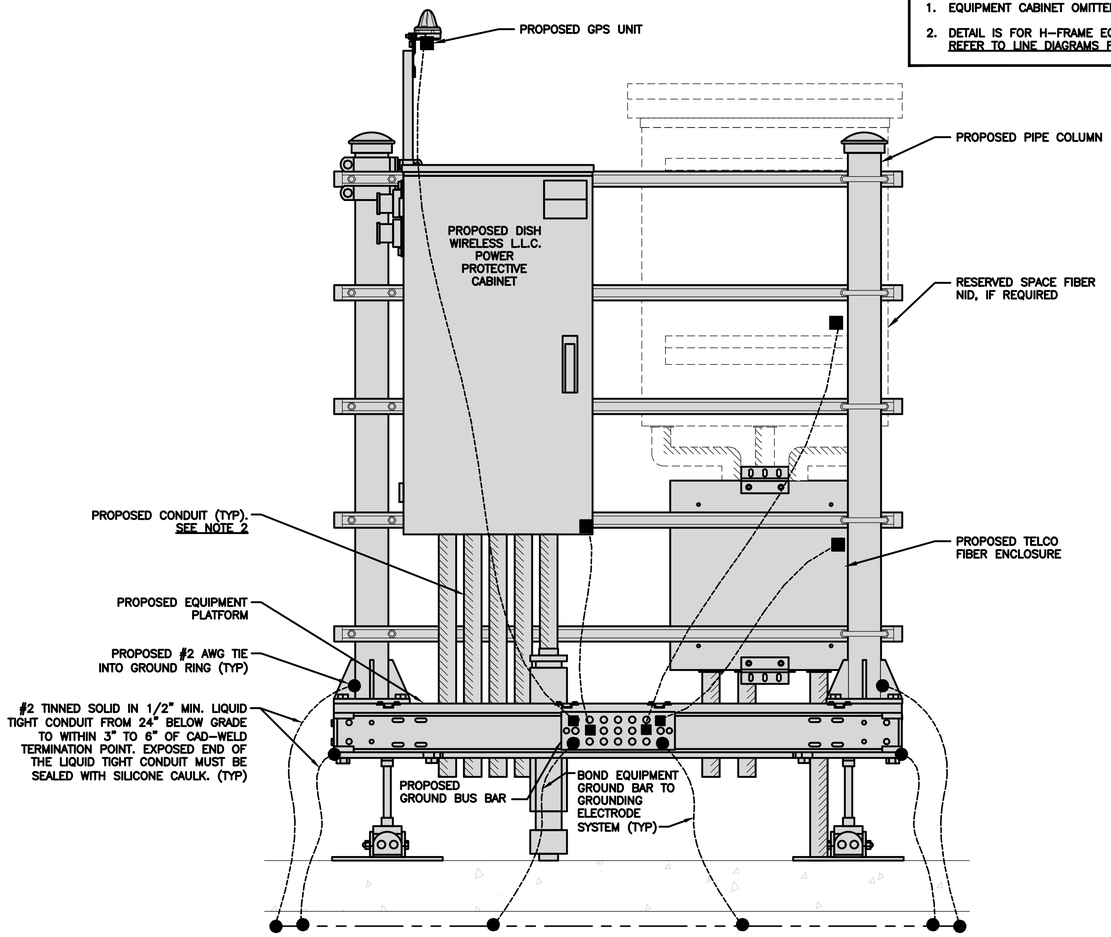

H-FRAME GROUNDING DETAIL | NO SCALE | 1

NOTES

CABLE GROUNDING NOT REQUIRED WHEN ANTENNA IS LESS THAN 10' FROM CABINET

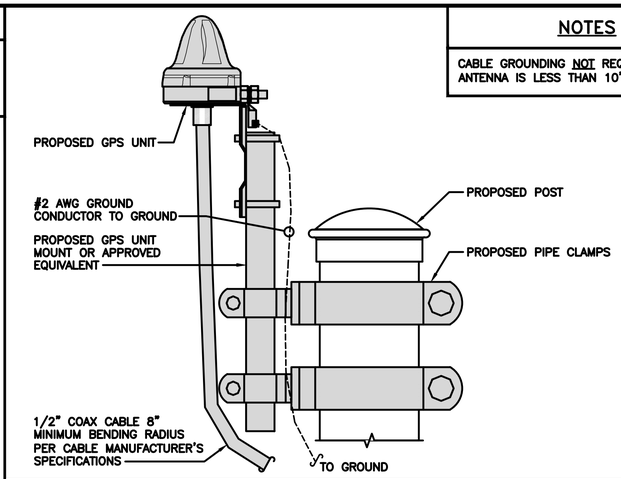

TYPICAL GPS UNIT GROUNDING | NO SCALE | 2

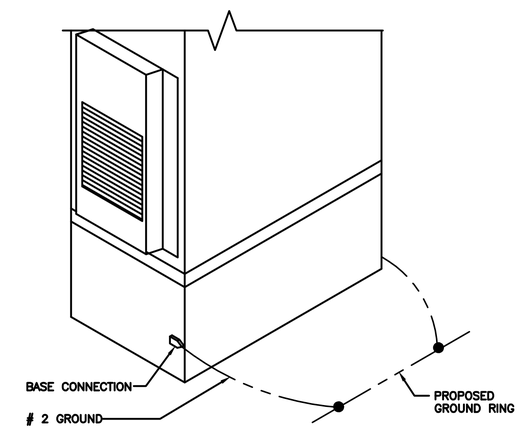

OUTDOOR CABINET GROUNDING | NO SCALE | 3

NOT USED | NO SCALE | 4

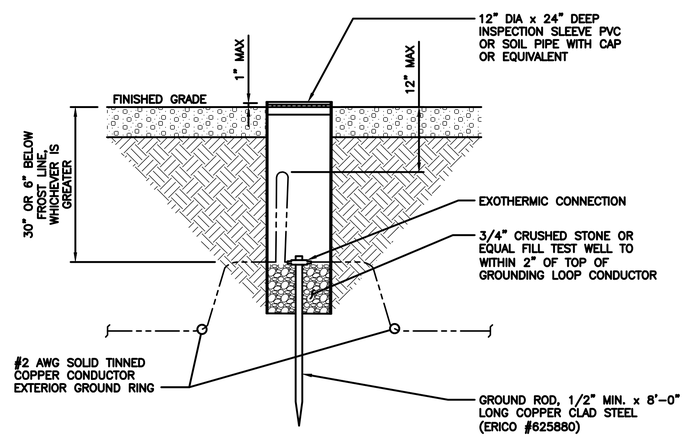

TYPICAL TEST GROUND ROD WITH INSPECTION SLEEVE | NO SCALE | 5

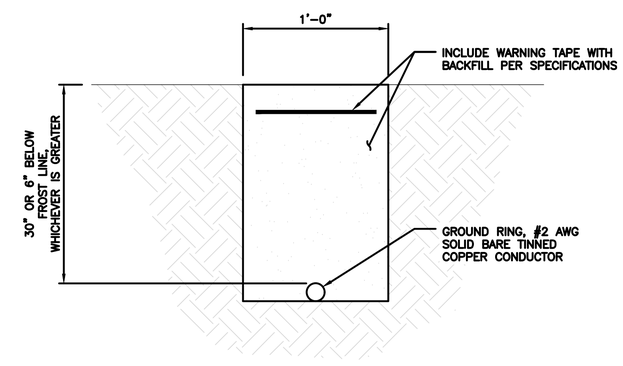

TYPICAL GROUND RING TRENCH | NO SCALE | 6

dish wireless.

5701 SOUTH SANTA FE DRIVE
LITTLETON, CO 80120

Jacobs.
Challenging today.
Reinventing tomorrow.

Jacobs Telecommunications, Inc.
5449 BELLS FERRY ROAD
ACWORTH, GA 30102

STATE OF CONNECTICUT · EARL B. SLANDE · 34052 LICENSED PROFESSIONAL ENGINEER

5/16/2022

IT IS A VIOLATION OF LAW FOR ANY PERSON, UNLESS THEY ARE ACTING UNDER THE DIRECTION OF A LICENSED PROFESSIONAL ENGINEER, TO ALTER THIS DOCUMENT.

DRAWN BY:	CHECKED BY:	APPROVED BY:
MWD	TJM	KRK

RFDS REV #: 0

CONSTRUCTION DOCUMENTS

SUBMITTALS

REV	DATE	DESCRIPTION
1	05/16/2022	ISSUED FOR CONSTRUCTION

A&E PROJECT NUMBER
EUCC0309

DISH WIRELESS L.L.C. PROJECT INFORMATION
BOHVN00021A
2755 STATE STREET
HAMDEN, CT 06517

SHEET TITLE
GROUNDING DETAILS

SHEET NUMBER
G-2

1. EXOTHERMIC WELD (2) TWO, #2 AWG BARE TINNED SOLID COPPER CONDUCTORS TO GROUND BAR. ROUTE CONDUCTORS TO BURIED GROUND RING AND PROVIDE PARALLEL EXOTHERMIC WELD.
2. ALL EXTERIOR GROUNDING HARDWARE SHALL BE STAINLESS STEEL 3/8" DIAMETER OR LARGER. ALL HARDWARE 18-8 STAINLESS STEEL INCLUDING LOCK WASHERS, COAT ALL SURFACES WITH AN ANTI-OXIDANT COMPOUND BEFORE MATING.
3. FOR GROUND BOND TO STEEL ONLY: COAT ALL SURFACES WITH AN ANTI-OXIDANT COMPOUND BEFORE MATING.
4. DO NOT INSTALL CABLE GROUNDING KIT AT A BEND AND ALWAYS DIRECT GROUND CONDUCTOR DOWN TO GROUNDING BUS.
5. NUT & WASHER SHALL BE PLACED ON THE FRONT SIDE OF THE GROUND BAR AND BOLTED ON THE BACK SIDE.
6. ALL GROUNDING PARTS AND EQUIPMENT TO BE SUPPLIED AND INSTALLED BY CONTRACTOR.
7. THE CONTRACTOR SHALL BE RESPONSIBLE FOR INSTALLING ADDITIONAL GROUND BAR AS REQUIRED.
8. ENSURE THE WIRE INSULATION TERMINATION IS WITHIN 1/8" OF THE BARREL (NO SHINERS).

TYPICAL GROUNDING NOTES | NO SCALE | 1

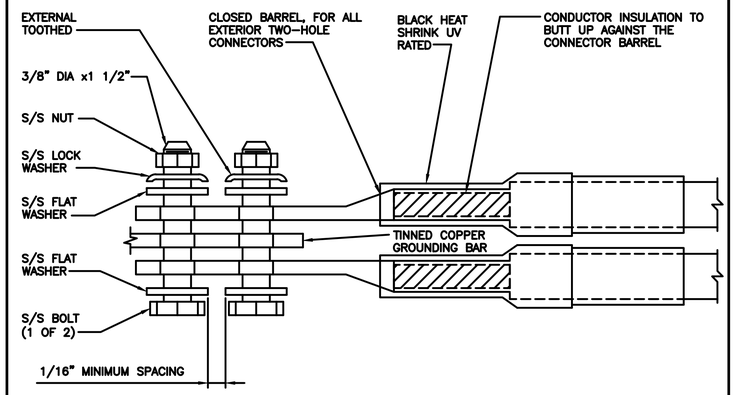

TYPICAL EXTERIOR TWO HOLE LUG | NO SCALE | 2

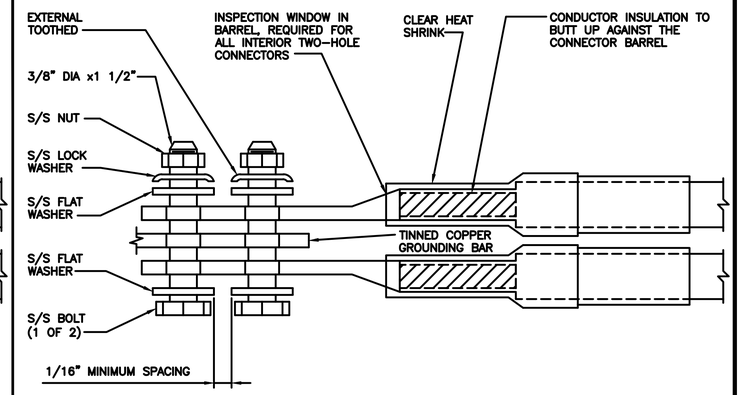

TYPICAL INTERIOR TWO HOLE LUG | NO SCALE | 3

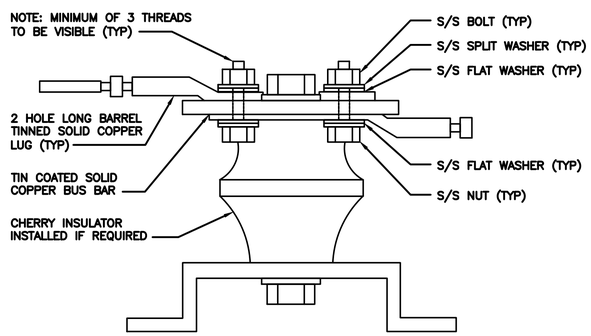

LUG DETAIL | NO SCALE | 4

NOT USED | NO SCALE | 5

NOT USED | NO SCALE | 6

NOT USED | NO SCALE | 7

NOT USED | NO SCALE | 8

NOT USED | NO SCALE | 9

dish wireless.

5701 SOUTH SANTA FE DRIVE
LITTLETON, CO 80120

Jacobs.

Challenging today.
Reinventing tomorrow.

Jacobs Telecommunications, Inc.
5449 BELLS FERRY ROAD
ACWORTH, GA 30102

STATE OF CONNECTICUT · EARL B. SVANDE · 34052 LICENSED PROFESSIONAL ENGINEER

5/16/2022

IT IS A VIOLATION OF LAW FOR ANY PERSON, UNLESS THEY ARE ACTING UNDER THE DIRECTION OF A LICENSED PROFESSIONAL ENGINEER, TO ALTER THIS DOCUMENT.

DRAWN BY:	CHECKED BY:	APPROVED BY:
MWD	TJM	KRK

RFDS REV #: 0

CONSTRUCTION DOCUMENTS

SUBMITTALS

REV	DATE	DESCRIPTION
1	05/16/2022	ISSUED FOR CONSTRUCTION

A&E PROJECT NUMBER
EUCC0309

DISH WIRELESS L.L.C. PROJECT INFORMATION
BOHVN00021A
2755 STATE STREET
HAMDEN, CT 06517

SHEET TITLE
GROUNDING DETAILS

SHEET NUMBER
G-3

RF JUMPER COLOR CODING

3/4" TAPE WIDTHS WITH 3/4" SPACING

LOW-BAND RRH –
(600MHz N71 BASEBAND) +
(850MHz N26 BAND) +
(700MHz N29 BAND) – OPTIONAL PER MARKET

ADD FREQUENCY COLOR TO SECTOR BAND
(CBRS WILL USE YELLOW BANDS)

ALPHA RRH				BETA RRH				GAMMA RRH			
PORT 1 + SLANT	PORT 2 – SLANT	PORT 3 + SLANT	PORT 4 – SLANT	PORT 1 + SLANT	PORT 2 – SLANT	PORT 3 + SLANT	PORT 4 – SLANT	PORT 1 + SLANT	PORT 2 – SLANT	PORT 3 + SLANT	PORT 4 – SLANT
RED	RED	RED	RED	BLUE	BLUE	BLUE	BLUE	GREEN	GREEN	GREEN	GREEN
ORANGE	ORANGE	RED	RED	ORANGE	ORANGE	BLUE	BLUE	ORANGE	ORANGE	GREEN	GREEN
	WHITE (–) PORT	ORANGE	ORANGE		WHITE (–) PORT	ORANGE	ORANGE		WHITE (–) PORT	ORANGE	ORANGE
			WHITE (–) PORT				WHITE (–) PORT				WHITE (–) PORT

MID-BAND RRH –
(AWS BANDS N66+N70)

ADD FREQUENCY COLOR TO SECTOR BAND
(CBRS WILL USE YELLOW BANDS)

RED	RED	RED	RED	BLUE	BLUE	BLUE	BLUE	GREEN	GREEN	GREEN	GREEN
PURPLE	PURPLE	RED	RED	PURPLE	PURPLE	BLUE	BLUE	PURPLE	PURPLE	GREEN	GREEN
	WHITE (–) PORT	PURPLE	PURPLE		WHITE (–) PORT	PURPLE	PURPLE		WHITE (–) PORT	PURPLE	PURPLE
			WHITE (–) PORT				WHITE (–) PORT				WHITE (–) PORT

HYBRID/DISCREET CABLES

INCLUDE SECTOR BANDS BEING SUPPORTED
ALONG WITH FREQUENCY BANDS

EXAMPLE 1 – HYBRID, OR DISCREET, SUPPORTS
ALL SECTORS, BOTH LOW-BANDS AND MID-BANDS

EXAMPLE 2 – HYBRID, OR DISCREET, SUPPORTS
CBRS ONLY, ALL SECTORS

EXAMPLE 1	EXAMPLE 2	EXAMPLE 3
RED	RED	RED
BLUE	BLUE	
GREEN	GREEN	ORANGE
		PURPLE
ORANGE	YELLOW	
PURPLE		

FIBER JUMPERS TO RRHs

LOW-BAND RRH FIBER CABLES HAVE SECTOR
STRIPE ONLY

LOW BAND RRH	HIGH BAND RRH	LOW BAND RRH	HIGH BAND RRH	LOW BAND RRH	HIGH BAND RRH
RED	RED	BLUE	BLUE	GREEN	GREEN
	PURPLE		PURPLE		PURPLE

POWER CABLES TO RRHs

LOW-BAND RRH POWER CABLES HAVE SECTOR
STRIPE ONLY

LOW BAND RRH	HIGH BAND RRH	LOW BAND RRH	HIGH BAND RRH	LOW BAND RRH	HIGH BAND RRH
RED	RED	BLUE	BLUE	GREEN	GREEN
	PURPLE		PURPLE		PURPLE

RET MOTORS AT ANTENNAS

ANTENNA 1 LOW BAND/ "IN"	ANTENNA 1 HIGH BAND/ "IN"	ANTENNA 1 LOW BAND/ "IN"	ANTENNA 1 HIGH BAND/ "IN"	ANTENNA 1 LOW BAND/ "IN"	ANTENNA 1 HIGH BAND/ "IN"
RED	RED	BLUE	BLUE	GREEN	GREEN
	PURPLE		PURPLE		PURPLE

MICROWAVE RADIO LINKS

LINKS WILL HAVE A 1.5–2 INCH WHITE WRAP WITH
THE AZIMUTH COLOR OVERLAPPING IN THE MIDDLE.
ADD ADDITIONAL SECTOR COLOR BANDS FOR EACH
ADDITIONAL MW RADIO.

MICROWAVE CABLES WILL REQUIRE P-TOUCH
LABELS INSIDE THE CABINET TO IDENTIFY THE
LOCAL AND REMOTE SITE ID'S

FORWARD AZIMUTH OF 0–120 DEGREES		FORWARD AZIMUTH OF 120–240 DEGREES		FORWARD AZIMUTH OF 240–360 DEGREES	
PRIMARY	SECONDARY	PRIMARY	SECONDARY	PRIMARY	SECONDARY
WHITE	WHITE	WHITE	WHITE	WHITE	WHITE
RED	RED	BLUE	BLUE	GREEN	GREEN
WHITE	WHITE	WHITE	WHITE	WHITE	WHITE
	RED		BLUE		GREEN
	WHITE		WHITE		WHITE

RF CABLE COLOR CODES | NO SCALE | 1

LOW BANDS (N71+N26)
OPTIONAL – (N29)
ORANGE

AWS
(N66+N70+H-BLOCK)
PURPLE

CBRS TECH
(3 GHz)
YELLOW

NEGATIVE SLANT PORT
ON ANT/RRH
WHITE

ALPHA SECTOR	BETA SECTOR	GAMMA SECTOR
RED	BLUE	GREEN

COLOR IDENTIFIER | NO SCALE | 2

NOT USED | NO SCALE | 3

NOT USED | NO SCALE | 4

dish wireless.
5701 SOUTH SANTA FE DRIVE
LITTLETON, CO 80120

Jacobs.
Challenging today.
Reinventing tomorrow.
Jacobs Telecommunications, Inc.
5449 BELLS FERRY ROAD
ACWORTH, GA 30102

STATE OF CONNECTICUT · EARL B. SLANDE · 34052 LICENSED PROFESSIONAL ENGINEER
5/16/2022

IT IS A VIOLATION OF LAW FOR ANY PERSON, UNLESS THEY ARE ACTING UNDER THE DIRECTION OF A LICENSED PROFESSIONAL ENGINEER, TO ALTER THIS DOCUMENT.

DRAWN BY:	CHECKED BY:	APPROVED BY:
MWD	TJM	KRK

RFDS REV #: 0

CONSTRUCTION DOCUMENTS

SUBMITTALS

REV	DATE	DESCRIPTION
1	05/16/2022	ISSUED FOR CONSTRUCTION

A&E PROJECT NUMBER
EUCC0309

DISH WIRELESS L.L.C.
PROJECT INFORMATION
BOHVN00021A
2755 STATE STREET
HAMDEN, CT 06517

SHEET TITLE
RF
CABLE COLOR CODES

SHEET NUMBER
RF-1

EXOTHERMIC CONNECTION

MECHANICAL CONNECTION

CHEMICAL ELECTROLYTIC GROUNDING SYSTEM

TEST CHEMICAL ELECTROLYTIC GROUNDING SYSTEM

EXOTHERMIC WITH INSPECTION SLEEVE

GROUNDING BAR

GROUND ROD

TEST GROUND ROD WITH INSPECTION SLEEVE

SINGLE POLE SWITCH

DUPLEX RECEPTACLE

DUPLEX GFCI RECEPTACLE

FLUORESCENT LIGHTING FIXTURE
(2) TWO LAMPS 48–T8

SMOKE DETECTION (DC)

EMERGENCY LIGHTING (DC)

SECURITY LIGHT W/PHOTOCELL LITHONIA ALXW
LED–1–25A400/51K–SR4–120–PE–DDBTXD

CHAIN LINK FENCE

WOOD/WROUGHT IRON FENCE

WALL STRUCTURE

LEASE AREA

PROPERTY LINE (PL)

SETBACKS

ICE BRIDGE

CABLE TRAY

WATER LINE

UNDERGROUND POWER

UNDERGROUND TELCO

OVERHEAD POWER

OVERHEAD TELCO

UNDERGROUND TELCO/POWER

ABOVE GROUND POWER

ABOVE GROUND TELCO

ABOVE GROUND TELCO/POWER

WORKPOINT

SECTION REFERENCE

DETAIL REFERENCE

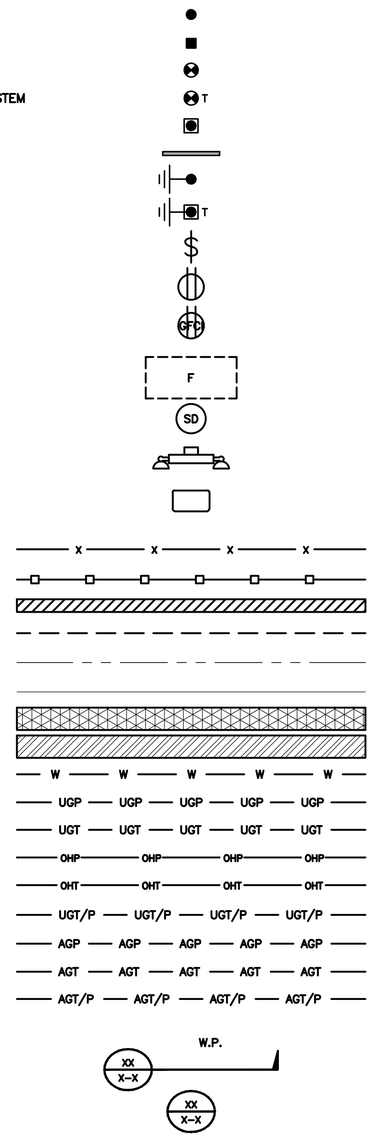

LEGEND

AB	ANCHOR BOLT
ABV	ABOVE
AC	ALTERNATING CURRENT
ADDL	ADDITIONAL
AFF	ABOVE FINISHED FLOOR
AFG	ABOVE FINISHED GRADE
AGL	ABOVE GROUND LEVEL
AIC	AMPERAGE INTERRUPTION CAPACITY
ALUM	ALUMINUM
ALT	ALTERNATE
ANT	ANTENNA
APPROX	APPROXIMATE
ARCH	ARCHITECTURAL
ATS	AUTOMATIC TRANSFER SWITCH
AWG	AMERICAN WIRE GAUGE
BATT	BATTERY
BLDG	BUILDING
BLK	BLOCK
BLKG	BLOCKING
BM	BEAM
BTC	BARE TINNED COPPER CONDUCTOR
BOF	BOTTOM OF FOOTING
CAB	CABINET
CANT	CANTILEVERED
CHG	CHARGING
CLG	CEILING
CLR	CLEAR
COL	COLUMN
COMM	COMMON
CONC	CONCRETE
CONSTR	CONSTRUCTION
DBL	DOUBLE
DC	DIRECT CURRENT
DEPT	DEPARTMENT
DF	DOUGLAS FIR
DIA	DIAMETER
DIAG	DIAGONAL
DIM	DIMENSION
DWG	DRAWING
DWL	DOWEL
EA	EACH
EC	ELECTRICAL CONDUCTOR
EL.	ELEVATION
ELEC	ELECTRICAL
EMT	ELECTRICAL METALLIC TUBING
ENG	ENGINEER
EQ	EQUAL
EXP	EXPANSION
EXT	EXTERIOR
EW	EACH WAY
FAB	FABRICATION
FF	FINISH FLOOR
FG	FINISH GRADE
FIF	FACILITY INTERFACE FRAME
FIN	FINISH(ED)
FLR	FLOOR
FDN	FOUNDATION
FOC	FACE OF CONCRETE
FOM	FACE OF MASONRY
FOS	FACE OF STUD
FOW	FACE OF WALL
FS	FINISH SURFACE
FT	FOOT
FTG	FOOTING
GA	GAUGE
GEN	GENERATOR
GFCI	GROUND FAULT CIRCUIT INTERRUPTER
GLB	GLUE LAMINATED BEAM
GLV	GALVANIZED
GPS	GLOBAL POSITIONING SYSTEM
GND	GROUND
GSM	GLOBAL SYSTEM FOR MOBILE
HDG	HOT DIPPED GALVANIZED
HDR	HEADER
HGR	HANGER
HVAC	HEAT/VENTILATION/AIR CONDITIONING
HT	HEIGHT
IGR	INTERIOR GROUND RING
IN	INCH
INT	INTERIOR
LB(S)	POUND(S)
LF	LINEAR FEET
LTE	LONG TERM EVOLUTION
MAS	MASONRY
MAX	MAXIMUM
MCL	MOUNT CENTER LINE
MB	MACHINE BOLT
MECH	MECHANICAL
MFR	MANUFACTURER
MGB	MASTER GROUND BAR
MIN	MINIMUM
MISC	MISCELLANEOUS
MTL	METAL
MTS	MANUAL TRANSFER SWITCH
MW	MICROWAVE
NEC	NATIONAL ELECTRIC CODE
NM	NEWTON METERS
NO.	NUMBER
#	NUMBER
NTS	NOT TO SCALE
OC	ON–CENTER
OSHA	OCCUPATIONAL SAFETY AND HEALTH ADMINISTRATION
OPNG	OPENING
P/C	PRECAST CONCRETE
PCS	PERSONAL COMMUNICATION SERVICES
PCU	PRIMARY CONTROL UNIT
PRC	PRIMARY RADIO CABINET
PP	POLARIZING PRESERVING
PSF	POUNDS PER SQUARE FOOT
PSI	POUNDS PER SQUARE INCH
PT	PRESSURE TREATED
PWR	POWER CABINET
QTY	QUANTITY
RAD	RADIUS
RECT	RECTIFIER
REF	REFERENCE
REINF	REINFORCEMENT
REQ'D	REQUIRED
RET	REMOTE ELECTRIC TILT
RF	RADIO FREQUENCY
RMC	RIGID METALLIC CONDUIT
RRH	REMOTE RADIO HEAD
RRU	REMOTE RADIO UNIT
RWY	RACEWAY
SCH	SCHEDULE
SHT	SHEET
SIAD	SMART INTEGRATED ACCESS DEVICE
SIM	SIMILAR
SPEC	SPECIFICATION
SQ	SQUARE
SS	STAINLESS STEEL
STD	STANDARD
STL	STEEL
TEMP	TEMPORARY
THK	THICKNESS
TMA	TOWER MOUNTED AMPLIFIER
TN	TOE NAIL
TOA	TOP OF ANTENNA
TOC	TOP OF CURB
TOF	TOP OF FOUNDATION
TOP	TOP OF PLATE (PARAPET)
TOS	TOP OF STEEL
TOW	TOP OF WALL
TVSS	TRANSIENT VOLTAGE SURGE SUPPRESSION
TYP	TYPICAL
UG	UNDERGROUND
UL	UNDERWRITERS LABORATORY
UNO	UNLESS NOTED OTHERWISE
UMTS	UNIVERSAL MOBILE TELECOMMUNICATIONS SYSTEM
UPS	UNITERRUPTIBLE POWER SYSTEM (DC POWER PLANT)
VIF	VERIFIED IN FIELD
W	WIDE
W/	WITH
WD	WOOD
WP	WEATHERPROOF
WT	WEIGHT

ABBREVIATIONS

dish wireless.

5701 SOUTH SANTA FE DRIVE
LITTLETON, CO 80120

Jacobs.

Challenging today.
Reinventing tomorrow.

Jacobs Telecommunications, Inc.
5449 BELLS FERRY ROAD
ACWORTH, GA 30102

STATE OF CONNECTICUT · EARL B. SVANDE · 34052 LICENSED PROFESSIONAL ENGINEER

5/16/2022

IT IS A VIOLATION OF LAW FOR ANY PERSON, UNLESS THEY ARE ACTING UNDER THE DIRECTION OF A LICENSED PROFESSIONAL ENGINEER, TO ALTER THIS DOCUMENT.

DRAWN BY:	CHECKED BY:	APPROVED BY:
MWD	TJM	KRK

RFDS REV #: 0

CONSTRUCTION DOCUMENTS

SUBMITTALS

REV	DATE	DESCRIPTION
1	05/16/2022	ISSUED FOR CONSTRUCTION

A&E PROJECT NUMBER

EUCC0309

DISH WIRELESS L.L.C.
PROJECT INFORMATION

BOHVN00021A
2755 STATE STREET
HAMDEN, CT 06517

SHEET TITLE

LEGEND AND ABBREVIATIONS

SHEET NUMBER

GN-1

SIGN TYPES

TYPE	COLOR	COLOR CODE PURPOSE
INFORMATION	GREEN	"INFORMATIONAL SIGN" TO NOTIFY OTHERS OF SITE OWNERSHIP & CONTACT NUMBER AND POTENTIAL RF EXPOSURE.
NOTICE	BLUE	"NOTICE BEYOND THIS POINT" RF FIELDS BEYOND THIS POINT MAY EXCEED THE FCC GENERAL PUBLIC EXPOSURE LIMIT. OBEY ALL POSTED SIGNS AND SITE GUIDELINES FOR WORKING IN RF ENVIRONMENTS. IN ACCORDANCE WITH FEDERAL COMMUNICATIONS COMMISSION RULES ON RADIO FREQUENCY EMISSIONS 47 CFR-1.1307(b)
CAUTION	YELLOW	"CAUTION BEYOND THIS POINT" RF FIELDS BEYOND THIS POINT MAY EXCEED THE FCC GENERAL PUBLIC EXPOSURE LIMIT. OBEY ALL POSTED SIGNS AND SITE GUIDELINES FOR WORKING IN RF ENVIRONMENTS. IN ACCORDANCE WITH FEDERAL COMMUNICATIONS COMMISSION RULES ON RADIO FREQUENCY EMISSIONS 47 CFR-1.1307(b)
WARNING	ORANGE/RED	"WARNING BEYOND THIS POINT" RF FIELDS AT THIS SITE EXCEED FCC RULES FOR HUMAN EXPOSURE. FAILURE TO OBEY ALL POSTED SIGNS AND SITE GUIDELINES FOR WORKING IN RF ENVIRONMENTS COULD RESULT IN SERIOUS INJURY. IN ACCORDANCE WITH FEDERAL COMMUNICATIONS COMMISSION RULES ON RADIO FREQUENCY EMISSIONS 47 CFR-1.1307(b)

SIGN PLACEMENT:

- RF SIGNAGE PLACEMENT SHALL FOLLOW THE RECOMMENDATIONS OF AN EXISTING EME REPORT, CREATED BY A THIRD PARTY PREVIOUSLY AUTHORIZED BY DISH Wireless L.L.C.
- INFORMATION SIGN (GREEN) SHALL BE LOCATED ON EXISTING DISH Wireless L.L.C EQUIPMENT.
  - A) IF THE INFORMATION SIGN IS A STICKER, IT SHALL BE PLACED ON EXISTING DISH Wireless L.L.C EQUIPMENT CABINET.
  - B) IF THE INFORMATION SIGH IS A METAL SIGN IT SHALL BE PLACED ON EXISTING DISH Wireless L.L.C H-FRAME WITH A SECURE ATTACH METHOD.
- IF EME REPORT IS NOT AVAILABLE AT THE TIME OF CREATION OF CONSTRUCTION DOCUMENTS; PLEASE CONTACT DISH Wireless L.L.C. CONSTRUCTION MANAGER FOR FURTHER INSTRUCTION ON HOW TO PROCEED.

NOTES:

1. FOR DISH Wireless L.L.C. LOGO, SEE DISH Wireless L.L.C. DESIGN SPECIFICATIONS (PROVIDED BY DISH Wireless L.L.C.)
2. SITE ID SHALL BE APPLIED TO SIGNS USING "LASER ENGRAVING" OR ANY OTHER WEATHER RESISTANT METHOD (DISH Wireless L.L.C. APPROVAL REQUIRED)
3. TEXT FOR SIGNAGE SHALL INDICATE CORRECT SITE NAME AND NUMBER AS PER DISH Wireless L.L.C. CONSTRUCTION MANAGER RECOMMENDATIONS.
4. CABINET/SHELTER MOUNTING APPLICATION REQUIRES ANOTHER PLATE APPLIED TO THE FACE OF THE CABINET WITH WATER PROOF POLYURETHANE ADHESIVE
5. ALL SIGNS WILL BE SECURED WITH EITHER STAINLESS STEEL ZIP TIES OR STAINLESS STEEL TECH SCREWS
6. ALL SIGNS TO BE 8.5"x11" AND MADE WITH 0.04" OF ALUMINUM MATERIAL

INFORMATION

This is an access point to an area with transmitting antennas.

Obey all signs and barriers beyond this point.
Call the DISH Wireless L.L.C. NOC at 1-866-624-6874

Site ID: BOHVN00021A

THIS SIGN IS FOR REFERENCE PURPOSES ONLY

NOTICE

Transmitting Antenna(s)

Radio frequency fields beyond this point MAY *EXCEED* the FCC Occupational exposure limit.

Obey all posted signs and site guidelines for working in radio frequency environments.

Call the DISH Wireless L.L.C. NOC at 1-866-624-6874 prior to working beyond this point.

Site ID: BOHVN00021A

dish

THIS SIGN IS FOR REFERENCE PURPOSES ONLY

CAUTION

Transmitting Antenna(s)

Radio frequency fields beyond this point MAY *EXCEED* the FCC Occupational exposure limit.

Obey all posted signs and site guidelines for working in radio frequency environments.

Call the DISH Wireless L.L.C. NOC at 1-866-624-6874 prior to working beyond this point.

Site ID: BOHVN00021A

dish

THIS SIGN IS FOR REFERENCE PURPOSES ONLY

WARNING

Transmitting Antenna(s)

Radio frequency fields beyond this point *EXCEED* the FCC Occupational exposure limit.

Obey all posted signs and site guidelines for working in radio frequency environments.

Call the DISH Wireless L.L.C. NOC at 1-866-624-6874 prior to working beyond this point.

Site ID: BOHVN00021A

dish

THIS SIGN IS FOR REFERENCE PURPOSES ONLY

RF SIGNAGE

dish wireless.

5701 SOUTH SANTA FE DRIVE
LITTLETON, CO 80120

Jacobs.
Challenging today.
Reinventing tomorrow.

Jacobs Telecommunications, Inc.
5449 BELLS FERRY ROAD
ACWORTH, GA 30102

STATE OF CONNECTICUT · EARL B. SLANDE · 34052 LICENSED PROFESSIONAL ENGINEER

5/16/2022

IT IS A VIOLATION OF LAW FOR ANY PERSON, UNLESS THEY ARE ACTING UNDER THE DIRECTION OF A LICENSED PROFESSIONAL ENGINEER, TO ALTER THIS DOCUMENT.

DRAWN BY:	CHECKED BY:	APPROVED BY:
MWD	TJM	KRK

RFDS REV #: 0

CONSTRUCTION DOCUMENTS

SUBMITTALS

REV	DATE	DESCRIPTION
1	05/16/2022	ISSUED FOR CONSTRUCTION

A&E PROJECT NUMBER
EUCC0309

DISH WIRELESS L.L.C. PROJECT INFORMATION
BOHVN00021A
2755 STATE STREET
HAMDEN, CT 06517

SHEET TITLE
RF SIGNAGE

SHEET NUMBER
GN-2

SITE ACTIVITY REQUIREMENTS:

1. NOTICE TO PROCEED – NO WORK SHALL COMMENCE PRIOR TO CONTRACTOR RECEIVING A WRITTEN NOTICE TO PROCEED (NTP) AND THE ISSUANCE OF A PURCHASE ORDER. PRIOR TO ACCESSING/ENTERING THE SITE YOU MUST CONTACT THE DISH WIRELESS L.L.C. AND TOWER OWNER NOC & THE DISH WIRELESS L.L.C. AND TOWER OWNER CONSTRUCTION MANAGER.

2. "LOOK UP" – DISH WIRELESS L.L.C. AND TOWER OWNER SAFETY CLIMB REQUIREMENT:

THE INTEGRITY OF THE SAFETY CLIMB AND ALL COMPONENTS OF THE CLIMBING FACILITY SHALL BE CONSIDERED DURING ALL STAGES OF DESIGN, INSTALLATION, AND INSPECTION. TOWER MODIFICATION, MOUNT REINFORCEMENTS, AND/OR EQUIPMENT INSTALLATIONS SHALL NOT COMPROMISE THE INTEGRITY OR FUNCTIONAL USE OF THE SAFETY CLIMB OR ANY COMPONENTS OF THE CLIMBING FACILITY ON THE STRUCTURE. THIS SHALL INCLUDE, BUT NOT BE LIMITED TO: PINCHING OF THE WIRE ROPE, BENDING OF THE WIRE ROPE FROM ITS SUPPORTS, DIRECT CONTACT OR CLOSE PROXIMITY TO THE WIRE ROPE WHICH MAY CAUSE FRICTIONAL WEAR, IMPACT TO THE ANCHORAGE POINTS IN ANY WAY, OR TO IMPEDE/BLOCK ITS INTENDED USE. ANY COMPROMISED SAFETY CLIMB, INCLUDING EXISTING CONDITIONS MUST BE TAGGED OUT AND REPORTED TO YOUR DISH WIRELESS L.L.C. AND DISH WIRELESS L.L.C. AND TOWER OWNER POC OR CALL THE NOC TO GENERATE A SAFETY CLIMB MAINTENANCE AND CONTRACTOR NOTICE TICKET.

3. PRIOR TO THE START OF CONSTRUCTION, ALL REQUIRED JURISDICTIONAL PERMITS SHALL BE OBTAINED. THIS INCLUDES, BUT IS NOT LIMITED TO, BUILDING, ELECTRICAL, MECHANICAL, FIRE, FLOOD ZONE, ENVIRONMENTAL, AND ZONING. AFTER ONSITE ACTIVITIES AND CONSTRUCTION ARE COMPLETED, ALL REQUIRED PERMITS SHALL BE SATISFIED AND CLOSED OUT ACCORDING TO LOCAL JURISDICTIONAL REQUIREMENTS.

4. ALL CONSTRUCTION MEANS AND METHODS; INCLUDING BUT NOT LIMITED TO, ERECTION PLANS, RIGGING PLANS, CLIMBING PLANS, AND RESCUE PLANS SHALL BE THE RESPONSIBILITY OF THE GENERAL CONTRACTOR RESPONSIBLE FOR THE EXECUTION OF THE WORK CONTAINED HEREIN, AND SHALL MEET ANSI/ASSE A10.48 (LATEST EDITION); FEDERAL, STATE, AND LOCAL REGULATIONS; AND ANY APPLICABLE INDUSTRY CONSENSUS STANDARDS RELATED TO THE CONSTRUCTION ACTIVITIES BEING PERFORMED. ALL RIGGING PLANS SHALL ADHERE TO ANSI/ASSE A10.48 (LATEST EDITION) AND DISH WIRELESS L.L.C. AND TOWER OWNER STANDARDS, INCLUDING THE REQUIRED INVOLVEMENT OF A QUALIFIED ENGINEER FOR CLASS IV CONSTRUCTION, TO CERTIFY THE SUPPORTING STRUCTURE(S) IN ACCORDANCE WITH ANSI/TIA–322 (LATEST EDITION).

5. ALL SITE WORK TO COMPLY WITH DISH WIRELESS L.L.C. AND TOWER OWNER INSTALLATION STANDARDS FOR CONSTRUCTION ACTIVITIES ON DISH WIRELESS L.L.C. AND TOWER OWNER TOWER SITE AND LATEST VERSION OF ANSI/TIA–1019–A–2012 "STANDARD FOR INSTALLATION, ALTERATION, AND MAINTENANCE OF ANTENNA SUPPORTING STRUCTURES AND ANTENNAS."

6. IF THE SPECIFIED EQUIPMENT CAN NOT BE INSTALLED AS SHOWN ON THESE DRAWINGS, THE CONTRACTOR SHALL PROPOSE AN ALTERNATIVE INSTALLATION FOR APPROVAL BY DISH WIRELESS L.L.C. AND TOWER OWNER PRIOR TO PROCEEDING WITH ANY SUCH CHANGE OF INSTALLATION.

7. ALL MATERIALS FURNISHED AND INSTALLED SHALL BE IN STRICT ACCORDANCE WITH ALL APPLICABLE CODES, REGULATIONS AND ORDINANCES. CONTRACTOR SHALL ISSUE ALL APPROPRIATE NOTICES AND COMPLY WITH ALL LAWS, ORDINANCES, RULES, REGULATIONS AND LAWFUL ORDERS OF ANY PUBLIC AUTHORITY REGARDING THE PERFORMANCE OF THE WORK. ALL WORK CARRIED OUT SHALL COMPLY WITH ALL APPLICABLE MUNICIPAL AND UTILITY COMPANY SPECIFICATIONS AND LOCAL JURISDICTIONAL CODES, ORDINANCES AND APPLICABLE REGULATIONS.

8. THE CONTRACTOR SHALL INSTALL ALL EQUIPMENT AND MATERIALS IN ACCORDANCE WITH MANUFACTURER'S RECOMMENDATIONS UNLESS SPECIFICALLY STATED OTHERWISE.

9. THE CONTRACTOR SHALL CONTACT UTILITY LOCATING SERVICES INCLUDING PRIVATE LOCATES SERVICES PRIOR TO THE START OF CONSTRUCTION.

10. ALL EXISTING ACTIVE SEWER, WATER, GAS, ELECTRIC AND OTHER UTILITIES WHERE ENCOUNTERED IN THE WORK, SHALL BE PROTECTED AT ALL TIMES AND WHERE REQUIRED FOR THE PROPER EXECUTION OF THE WORK, SHALL BE RELOCATED AS DIRECTED BY CONTRACTOR. EXTREME CAUTION SHOULD BE USED BY THE CONTRACTOR WHEN EXCAVATING OR DRILLING PIERS AROUND OR NEAR UTILITIES. CONTRACTOR SHALL PROVIDE SAFETY TRAINING FOR THE WORKING CREW. THIS WILL INCLUDE BUT NOT BE LIMITED TO A) FALL PROTECTION B) CONFINED SPACE C) ELECTRICAL SAFETY D) TRENCHING AND EXCAVATION E) CONSTRUCTION SAFETY PROCEDURES.

11. ALL SITE WORK SHALL BE AS INDICATED ON THE STAMPED CONSTRUCTION DRAWINGS AND DISH PROJECT SPECIFICATIONS, LATEST APPROVED REVISION.

12. CONTRACTOR SHALL KEEP THE SITE FREE FROM ACCUMULATING WASTE MATERIAL, DEBRIS, AND TRASH AT THE COMPLETION OF THE WORK. IF NECESSARY, RUBBISH, STUMPS, DEBRIS, STICKS, STONES AND OTHER REFUSE SHALL BE REMOVED FROM THE SITE AND DISPOSED OF LEGALLY.

13. ALL EXISTING INACTIVE SEWER, WATER, GAS, ELECTRIC AND OTHER UTILITIES, WHICH INTERFERE WITH THE EXECUTION OF THE WORK, SHALL BE REMOVED AND/OR CAPPED, PLUGGED OR OTHERWISE DISCONTINUED AT POINTS WHICH WILL NOT INTERFERE WITH THE EXECUTION OF THE WORK, SUBJECT TO THE APPROVAL OF DISH WIRELESS L.L.C. AND TOWER OWNER, AND/OR LOCAL UTILITIES.

14. THE CONTRACTOR SHALL PROVIDE SITE SIGNAGE IN ACCORDANCE WITH THE TECHNICAL SPECIFICATION FOR SITE SIGNAGE REQUIRED BY LOCAL JURISDICTION AND SIGNAGE REQUIRED ON INDIVIDUAL PIECES OF EQUIPMENT, ROOMS, AND SHELTERS.

15. THE SITE SHALL BE GRADED TO CAUSE SURFACE WATER TO FLOW AWAY FROM THE CARRIER'S EQUIPMENT AND TOWER AREAS.

16. THE SUB GRADE SHALL BE COMPACTED AND BROUGHT TO A SMOOTH UNIFORM GRADE PRIOR TO FINISHED SURFACE APPLICATION.

17. THE AREAS OF THE OWNERS PROPERTY DISTURBED BY THE WORK AND NOT COVERED BY THE TOWER, EQUIPMENT OR DRIVEWAY, SHALL BE GRADED TO A UNIFORM SLOPE, AND STABILIZED TO PREVENT EROSION AS SPECIFIED ON THE CONSTRUCTION DRAWINGS AND/OR PROJECT SPECIFICATIONS.

18. CONTRACTOR SHALL MINIMIZE DISTURBANCE TO EXISTING SITE DURING CONSTRUCTION. EROSION CONTROL MEASURES, IF REQUIRED DURING CONSTRUCTION, SHALL BE IN CONFORMANCE WITH THE LOCAL GUIDELINES FOR EROSION AND SEDIMENT CONTROL.

19. THE CONTRACTOR SHALL PROTECT EXISTING IMPROVEMENTS, PAVEMENTS, CURBS, LANDSCAPING AND STRUCTURES. ANY DAMAGED PART SHALL BE REPAIRED AT CONTRACTOR'S EXPENSE TO THE SATISFACTION OF OWNER.

20. CONTRACTOR SHALL LEGALLY AND PROPERLY DISPOSE OF ALL SCRAP MATERIALS SUCH AS COAXIAL CABLES AND OTHER ITEMS REMOVED FROM THE EXISTING FACILITY. ANTENNAS AND RADIOS REMOVED SHALL BE RETURNED TO THE OWNER'S DESIGNATED LOCATION.

21. CONTRACTOR SHALL LEAVE PREMISES IN CLEAN CONDITION. TRASH AND DEBRIS SHOULD BE REMOVED FROM SITE ON A DAILY BASIS.

22. NO FILL OR EMBANKMENT MATERIAL SHALL BE PLACED ON FROZEN GROUND. FROZEN MATERIALS, SNOW OR ICE SHALL NOT BE PLACED IN ANY FILL OR EMBANKMENT.

GENERAL NOTES:

1.FOR THE PURPOSE OF CONSTRUCTION DRAWING, THE FOLLOWING DEFINITIONS SHALL APPLY:

CONTRACTOR:GENERAL CONTRACTOR RESPONSIBLE FOR CONSTRUCTION

CARRIER:DISH WIRELESS L.L.C.

TOWER OWNER:TOWER OWNER

2. THESE DRAWINGS HAVE BEEN PREPARED USING STANDARDS OF PROFESSIONAL CARE AND COMPLETENESS NORMALLY EXERCISED UNDER SIMILAR CIRCUMSTANCES BY REPUTABLE ENGINEERS IN THIS OR SIMILAR LOCALITIES. IT IS ASSUMED THAT THE WORK DEPICTED WILL BE PERFORMED BY AN EXPERIENCED CONTRACTOR AND/OR WORKPEOPLE WHO HAVE A WORKING KNOWLEDGE OF THE APPLICABLE CODE STANDARDS AND REQUIREMENTS AND OF INDUSTRY ACCEPTED STANDARD GOOD PRACTICE. AS NOT EVERY CONDITION OR ELEMENT IS (OR CAN BE) EXPLICITLY SHOWN ON THESE DRAWINGS, THE CONTRACTOR SHALL USE INDUSTRY ACCEPTED STANDARD GOOD PRACTICE FOR MISCELLANEOUS WORK NOT EXPLICITLY SHOWN.

3. THESE DRAWINGS REPRESENT THE FINISHED STRUCTURE. THEY DO NOT INDICATE THE MEANS OR METHODS OF CONSTRUCTION. THE CONTRACTOR SHALL BE SOLELY RESPONSIBLE FOR THE CONSTRUCTION MEANS, METHODS, TECHNIQUES, SEQUENCES, AND PROCEDURES. THE CONTRACTOR SHALL PROVIDE ALL MEASURES NECESSARY FOR PROTECTION OF LIFE AND PROPERTY DURING CONSTRUCTION. SUCH MEASURES SHALL INCLUDE, BUT NOT BE LIMITED TO, BRACING, FORMWORK, SHORING, ETC. SITE VISITS BY THE ENGINEER OR HIS REPRESENTATIVE WILL NOT INCLUDE INSPECTION OF THESE ITEMS AND IS FOR STRUCTURAL OBSERVATION OF THE FINISHED STRUCTURE ONLY.

4. NOTES AND DETAILS IN THE CONSTRUCTION DRAWINGS SHALL TAKE PRECEDENCE OVER GENERAL NOTES AND TYPICAL DETAILS. WHERE NO DETAILS ARE SHOWN, CONSTRUCTION SHALL CONFORM TO SIMILAR WORK ON THE PROJECT, AND/OR AS PROVIDED FOR IN THE CONTRACT DOCUMENTS. WHERE DISCREPANCIES OCCUR BETWEEN PLANS, DETAILS, GENERAL NOTES, AND SPECIFICATIONS, THE GREATER, MORE STRICT REQUIREMENTS, SHALL GOVERN. IF FURTHER CLARIFICATION IS REQUIRED CONTACT THE ENGINEER OF RECORD.

5. SUBSTANTIAL EFFORT HAS BEEN MADE TO PROVIDE ACCURATE DIMENSIONS AND MEASUREMENTS ON THE DRAWINGS TO ASSIST IN THE FABRICATION AND/OR PLACEMENT OF CONSTRUCTION ELEMENTS BUT IT IS THE SOLE RESPONSIBILITY OF THE CONTRACTOR TO FIELD VERIFY THE DIMENSIONS, MEASUREMENTS, AND/OR CLEARANCES SHOWN IN THE CONSTRUCTION DRAWINGS PRIOR TO FABRICATION OR CUTTING OF ANY NEW OR EXISTING CONSTRUCTION ELEMENTS. IF IT IS DETERMINED THAT THERE ARE DISCREPANCIES AND/OR CONFLICTS WITH THE CONSTRUCTION DRAWINGS THE ENGINEER OF RECORD IS TO BE NOTIFIED AS SOON AS POSSIBLE.

6. PRIOR TO THE SUBMISSION OF BIDS, THE BIDDING CONTRACTOR SHALL VISIT THE CELL SITE TO FAMILIARIZE WITH THE EXISTING CONDITIONS AND TO CONFIRM THAT THE WORK CAN BE ACCOMPLISHED AS SHOWN ON THE CONSTRUCTION DRAWINGS. ANY DISCREPANCY FOUND SHALL BE BROUGHT TO THE ATTENTION OF CARRIER POC AND TOWER OWNER.

7. ALL MATERIALS FURNISHED AND INSTALLED SHALL BE IN STRICT ACCORDANCE WITH ALL APPLICABLE CODES, REGULATIONS AND ORDINANCES. CONTRACTOR SHALL ISSUE ALL APPROPRIATE NOTICES AND COMPLY WITH ALL LAWS, ORDINANCES, RULES, REGULATIONS AND LAWFUL ORDERS OF ANY PUBLIC AUTHORITY REGARDING THE PERFORMANCE OF THE WORK. ALL WORK CARRIED OUT SHALL COMPLY WITH ALL APPLICABLE MUNICIPAL AND UTILITY COMPANY SPECIFICATIONS AND LOCAL JURISDICTIONAL CODES, ORDINANCES AND APPLICABLE REGULATIONS.

8. UNLESS NOTED OTHERWISE, THE WORK SHALL INCLUDE FURNISHING MATERIALS, EQUIPMENT, APPURTENANCES AND LABOR NECESSARY TO COMPLETE ALL INSTALLATIONS AS INDICATED ON THE DRAWINGS.

9. THE CONTRACTOR SHALL INSTALL ALL EQUIPMENT AND MATERIALS IN ACCORDANCE WITH MANUFACTURER'S RECOMMENDATIONS UNLESS SPECIFICALLY STATED OTHERWISE.

10. IF THE SPECIFIED EQUIPMENT CAN NOT BE INSTALLED AS SHOWN ON THESE DRAWINGS, THE CONTRACTOR SHALL PROPOSE AN ALTERNATIVE INSTALLATION FOR APPROVAL BY THE CARRIER AND TOWER OWNER PRIOR TO PROCEEDING WITH ANY SUCH CHANGE OF INSTALLATION.

11. CONTRACTOR IS TO PERFORM A SITE INVESTIGATION, BEFORE SUBMITTING BIDS, TO DETERMINE THE BEST ROUTING OF ALL CONDUITS FOR POWER, AND TELCO AND FOR GROUNDING CABLES AS SHOWN IN THE POWER, TELCO, AND GROUNDING PLAN DRAWINGS.

12. THE CONTRACTOR SHALL PROTECT EXISTING IMPROVEMENTS, PAVEMENTS, CURBS, LANDSCAPING AND STRUCTURES. ANY DAMAGED PART SHALL BE REPAIRED AT CONTRACTOR'S EXPENSE TO THE SATISFACTION OF DISH WIRELESS L.L.C. AND TOWER OWNER

13. CONTRACTOR SHALL LEGALLY AND PROPERLY DISPOSE OF ALL SCRAP MATERIALS SUCH AS COAXIAL CABLES AND OTHER ITEMS REMOVED FROM THE EXISTING FACILITY. ANTENNAS REMOVED SHALL BE RETURNED TO THE OWNER'S DESIGNATED LOCATION.

14. CONTRACTOR SHALL LEAVE PREMISES IN CLEAN CONDITION. TRASH AND DEBRIS SHOULD BE REMOVED FROM SITE ON A DAILY BASIS.

dish wireless.

5701 SOUTH SANTA FE DRIVE
LITTLETON, CO 80120

Jacobs.
Challenging today.
Reinventing tomorrow.

Jacobs Telecommunications, Inc.
5449 BELLS FERRY ROAD
ACWORTH, GA 30102

STATE OF CONNECTICUT · EARL B. SVENDE · 34052 LICENSED PROFESSIONAL ENGINEER

5/16/2022

IT IS A VIOLATION OF LAW FOR ANY PERSON, UNLESS THEY ARE ACTING UNDER THE DIRECTION OF A LICENSED PROFESSIONAL ENGINEER, TO ALTER THIS DOCUMENT.

DRAWN BY:	CHECKED BY:	APPROVED BY:
MWD	TJM	KRK

RFDS REV #: 0

CONSTRUCTION DOCUMENTS

SUBMITTALS

REV	DATE	DESCRIPTION
1	05/16/2022	ISSUED FOR CONSTRUCTION

A&E PROJECT NUMBER

EUCC0309

DISH WIRELESS L.L.C. PROJECT INFORMATION

BOHVN00021A
2755 STATE STREET
HAMDEN, CT 06517

SHEET TITLE

GENERAL NOTES

SHEET NUMBER

GN-3

CONCRETE, FOUNDATIONS, AND REINFORCING STEEL:

1. ALL CONCRETE WORK SHALL BE IN ACCORDANCE WITH THE ACI 301, ACI 318, ACI 336, ASTM A184, ASTM A185 AND THE DESIGN AND CONSTRUCTION SPECIFICATION FOR CAST–IN–PLACE CONCRETE.

2. UNLESS NOTED OTHERWISE, SOIL BEARING PRESSURE USED FOR DESIGN OF SLABS AND FOUNDATIONS IS ASSUMED TO BE 1000 psf.

3. ALL CONCRETE SHALL HAVE A MINIMUM COMPRESSIVE STRENGTH (f'c) OF 3000 psi AT 28 DAYS, UNLESS NOTED OTHERWISE. NO MORE THAN 90 MINUTES SHALL ELAPSE FROM BATCH TIME TO TIME OF PLACEMENT UNLESS APPROVED BY THE ENGINEER OF RECORD. TEMPERATURE OF CONCRETE SHALL NOT EXCEED 90°f AT TIME OF PLACEMENT.

4. CONCRETE EXPOSED TO FREEZE–THAW CYCLES SHALL CONTAIN AIR ENTRAINING ADMIXTURES. AMOUNT OF AIR ENTRAINMENT TO BE BASED ON SIZE OF AGGREGATE AND F3 CLASS EXPOSURE (VERY SEVERE). CEMENT USED TO BE TYPE II PORTLAND CEMENT WITH A MAXIMUM WATER–TO–CEMENT RATIO (W/C) OF 0.45.

5. ALL STEEL REINFORCING SHALL CONFORM TO ASTM A615. ALL WELDED WIRE FABRIC (WWF) SHALL CONFORM TO ASTM A185. ALL SPLICES SHALL BE CLASS "B" TENSION SPLICES, UNLESS NOTED OTHERWISE. ALL HOOKS SHALL BE STANDARD 90 DEGREE HOOKS, UNLESS NOTED OTHERWISE. YIELD STRENGTH (Fy) OF STANDARD DEFORMED BARS ARE AS FOLLOWS:

#4 BARS AND SMALLER 40 ksi

#5 BARS AND LARGER 60 ksi

6. THE FOLLOWING MINIMUM CONCRETE COVER SHALL BE PROVIDED FOR REINFORCING STEEL UNLESS SHOWN OTHERWISE ON DRAWINGS:

- CONCRETE CAST AGAINST AND PERMANENTLY EXPOSED TO EARTH 3"
- CONCRETE EXPOSED TO EARTH OR WEATHER:
- #6 BARS AND LARGER 2"
- #5 BARS AND SMALLER 1–1/2"
- CONCRETE NOT EXPOSED TO EARTH OR WEATHER:
- SLAB AND WALLS 3/4"
- BEAMS AND COLUMNS 1–1/2"

7. A TOOLED EDGE OR A 3/4" CHAMFER SHALL BE PROVIDED AT ALL EXPOSED EDGES OF CONCRETE, UNLESS NOTED OTHERWISE, IN ACCORDANCE WITH ACI 301 SECTION 4.2.4.

ELECTRICAL INSTALLATION NOTES:

1. ALL ELECTRICAL WORK SHALL BE PERFORMED IN ACCORDANCE WITH THE PROJECT SPECIFICATIONS, NEC AND ALL APPLICABLE FEDERAL, STATE, AND LOCAL CODES/ORDINANCES.

2. CONDUIT ROUTINGS ARE SCHEMATIC. CONTRACTOR SHALL INSTALL CONDUITS SO THAT ACCESS TO EQUIPMENT IS NOT BLOCKED AND TRIP HAZARDS ARE ELIMINATED.

3. WIRING, RACEWAY AND SUPPORT METHODS AND MATERIALS SHALL COMPLY WITH THE REQUIREMENTS OF THE NEC.

4. ALL CIRCUITS SHALL BE SEGREGATED AND MAINTAIN MINIMUM CABLE SEPARATION AS REQUIRED BY THE NEC.

4.1. ALL EQUIPMENT SHALL BEAR THE UNDERWRITERS LABORATORIES LABEL OF APPROVAL, AND SHALL CONFORM TO REQUIREMENT OF THE NATIONAL ELECTRICAL CODE.

4.2. ALL OVERCURRENT DEVICES SHALL HAVE AN INTERRUPTING CURRENT RATING THAT SHALL BE GREATER THAN THE SHORT CIRCUIT CURRENT TO WHICH THEY ARE SUBJECTED, 22,000 AIC MINIMUM. VERIFY AVAILABLE SHORT CIRCUIT CURRENT DOES NOT EXCEED THE RATING OF ELECTRICAL EQUIPMENT IN ACCORDANCE WITH ARTICLE 110.24 NEC OR THE MOST CURRENT ADOPTED CODE PRE THE GOVERNING JURISDICTION.

5. EACH END OF EVERY POWER PHASE CONDUCTOR, GROUNDING CONDUCTOR, AND TELCO CONDUCTOR OR CABLE SHALL BE LABELED WITH COLOR–CODED INSULATION OR ELECTRICAL TAPE (3M BRAND, 1/2" PLASTIC ELECTRICAL TAPE WITH UV PROTECTION, OR EQUAL). THE IDENTIFICATION METHOD SHALL CONFORM WITH NEC AND OSHA.

6. ALL ELECTRICAL COMPONENTS SHALL BE CLEARLY LABELED WITH LAMICOID TAGS SHOWING THEIR RATED VOLTAGE, PHASE CONFIGURATION, WIRE CONFIGURATION, POWER OR AMPACITY RATING AND BRANCH CIRCUIT ID NUMBERS (i.e. PANEL BOARD AND CIRCUIT ID'S).

7. PANEL BOARDS (ID NUMBERS) SHALL BE CLEARLY LABELED WITH PLASTIC LABELS.

8. TIE WRAPS ARE NOT ALLOWED.

9. ALL POWER AND EQUIPMENT GROUND WIRING IN TUBING OR CONDUIT SHALL BE SINGLE COPPER CONDUCTOR (#14 OR LARGER) WITH TYPE THHW, THWN, THWN–2, XHHW, XHHW–2, THW, THW–2, RHW, OR RHW–2 INSULATION UNLESS OTHERWISE SPECIFIED.

10. SUPPLEMENTAL EQUIPMENT GROUND WIRING LOCATED INDOORS SHALL BE SINGLE COPPER CONDUCTOR (#6 OR LARGER) WITH TYPE THHW, THWN, THWN–2, XHHW, XHHW–2, THW, THW–2, RHW, OR RHW–2 INSULATION UNLESS OTHERWISE SPECIFIED.

11. POWER AND CONTROL WIRING IN FLEXIBLE CORD SHALL BE MULTI–CONDUCTOR, TYPE SOOW CORD (#14 OR LARGER) UNLESS OTHERWISE SPECIFIED.

12. POWER AND CONTROL WIRING FOR USE IN CABLE TRAY SHALL BE MULTI–CONDUCTOR, TYPE TC CABLE (#14 OR LARGER), WITH TYPE THHW, THWN, THWN–2, XHHW, XHHW–2, THW, THW–2, RHW, OR RHW–2 INSULATION UNLESS OTHERWISE SPECIFIED.

13. ALL POWER AND GROUNDING CONNECTIONS SHALL BE CRIMP–STYLE, COMPRESSION WIRE LUGS AND WIRE NUTS BY THOMAS AND BETTS (OR EQUAL). LUGS AND WIRE NUTS SHALL BE RATED FOR OPERATION NOT LESS THAN 75° C (90° C IF AVAILABLE).

14. RACEWAY AND CABLE TRAY SHALL BE LISTED OR LABELED FOR ELECTRICAL USE IN ACCORDANCE WITH NEMA, UL, ANSI/IEEE AND NEC.

15. ELECTRICAL METALLIC TUBING (EMT), INTERMEDIATE METAL CONDUIT (IMC), OR RIGID METAL CONDUIT (RMC) SHALL BE USED FOR EXPOSED INDOOR LOCATIONS.

16. ELECTRICAL METALLIC TUBING (EMT) OR METAL–CLAD CABLE (MC) SHALL BE USED FOR CONCEALED INDOOR LOCATIONS.

17. SCHEDULE 40 PVC UNDERGROUND ON STRAIGHTS AND SCHEDULE 80 PVC FOR ALL ELBOWS/90s AND ALL APPROVED ABOVE GRADE PVC CONDUIT.

18. LIQUID–TIGHT FLEXIBLE METALLIC CONDUIT (LIQUID–TITE FLEX) SHALL BE USED INDOORS AND OUTDOORS, WHERE VIBRATION OCCURS OR FLEXIBILITY IS NEEDED.

19. CONDUIT AND TUBING FITTINGS SHALL BE THREADED OR COMPRESSION–TYPE AND APPROVED FOR THE LOCATION USED. SET SCREW FITTINGS ARE NOT ACCEPTABLE.

20. CABINETS, BOXES AND WIRE WAYS SHALL BE LABELED FOR ELECTRICAL USE IN ACCORDANCE WITH NEMA, UL, ANSI/IEEE AND THE NEC.

21. WIREWAYS SHALL BE METAL WITH AN ENAMEL FINISH AND INCLUDE A HINGED COVER, DESIGNED TO SWING OPEN DOWNWARDS (WIREMOLD SPECMATE WIREWAY).

22. SLOTTED WIRING DUCT SHALL BE PVC AND INCLUDE COVER (PANDUIT TYPE E OR EQUAL).

23. CONDUITS SHALL BE FASTENED SECURELY IN PLACE WITH APPROVED NON–PERFORATED STRAPS AND HANGERS. EXPLOSIVE DEVICES (i.e. POWDER–ACTUATED) FOR ATTACHING HANGERS TO STRUCTURE WILL NOT BE PERMITTED. CLOSELY FOLLOW THE LINES OF THE STRUCTURE, MAINTAIN CLOSE PROXIMITY TO THE STRUCTURE AND KEEP CONDUITS IN TIGHT ENVELOPES. CHANGES IN DIRECTION TO ROUTE AROUND OBSTACLES SHALL BE MADE WITH CONDUIT OUTLET BODIES. CONDUIT SHALL BE INSTALLED IN A NEAT AND WORKMANLIKE MANNER. PARALLEL AND PERPENDICULAR TO STRUCTURE WALL AND CEILING LINES. ALL CONDUIT SHALL BE FISHED TO CLEAR OBSTRUCTIONS. ENDS OF CONDUITS SHALL BE TEMPORARILY CAPPED FLUSH TO FINISH GRADE TO PREVENT CONCRETE, PLASTER OR DIRT FROM ENTERING. CONDUITS SHALL BE RIGIDLY CLAMPED TO BOXES BY GALVANIZED MALLEABLE IRON BUSHING ON INSIDE AND GALVANIZED MALLEABLE IRON LOCKNUT ON OUTSIDE AND INSIDE.

24. EQUIPMENT CABINETS, TERMINAL BOXES, JUNCTION BOXES AND PULL BOXES SHALL BE GALVANIZED OR EPOXY–COATED SHEET STEEL. SHALL MEET OR EXCEED UL 50 AND BE RATED NEMA 1 (OR BETTER) FOR INTERIOR LOCATIONS AND NEMA 3 (OR BETTER) FOR EXTERIOR LOCATIONS.

25. METAL RECEPTACLE, SWITCH AND DEVICE BOXES SHALL BE GALVANIZED, EPOXY–COATED OR NON–CORRODING; SHALL MEET OR EXCEED UL 514A AND NEMA OS 1 AND BE RATED NEMA 1 (OR BETTER) FOR INTERIOR LOCATIONS AND WEATHER PROTECTED (WP OR BETTER) FOR EXTERIOR LOCATIONS.

26. NONMETALLIC RECEPTACLE, SWITCH AND DEVICE BOXES SHALL MEET OR EXCEED NEMA OS 2 (NEWEST REVISION) AND BE RATED NEMA 1 (OR BETTER) FOR INTERIOR LOCATIONS AND WEATHER PROTECTED (WP OR BETTER) FOR EXTERIOR LOCATIONS.

27. THE CONTRACTOR SHALL NOTIFY AND OBTAIN NECESSARY AUTHORIZATION FROM THE CARRIER AND/OR DISH WIRELESS L.L.C. AND TOWER OWNER BEFORE COMMENCING WORK ON THE AC POWER DISTRIBUTION PANELS.

28. THE CONTRACTOR SHALL PROVIDE NECESSARY TAGGING ON THE BREAKERS, CABLES AND DISTRIBUTION PANELS IN ACCORDANCE WITH THE APPLICABLE CODES AND STANDARDS TO SAFEGUARD LIFE AND PROPERTY.

29. INSTALL LAMICOID LABEL ON THE METER CENTER TO SHOW "DISH WIRELESS L.L.C.".

30. ALL EMPTY/SPARE CONDUITS THAT ARE INSTALLED ARE TO HAVE A METERED MULE TAPE PULL CORD INSTALLED.

dish wireless.

5701 SOUTH SANTA FE DRIVE
LITTLETON, CO 80120

Jacobs.
Challenging today.
Reinventing tomorrow.

Jacobs Telecommunications, Inc.
5449 BELLS FERRY ROAD
ACWORTH, GA 30102

STATE OF CONNECTICUT · EARL B. SVANDE · 34052 LICENSED PROFESSIONAL ENGINEER

5/16/2022

IT IS A VIOLATION OF LAW FOR ANY PERSON, UNLESS THEY ARE ACTING UNDER THE DIRECTION OF A LICENSED PROFESSIONAL ENGINEER, TO ALTER THIS DOCUMENT.

DRAWN BY:	CHECKED BY:	APPROVED BY:
MWD	TJM	KRK

RFDS REV #: 0

CONSTRUCTION DOCUMENTS

SUBMITTALS

REV	DATE	DESCRIPTION
1	05/16/2022	ISSUED FOR CONSTRUCTION

A&E PROJECT NUMBER

EUCC0309

DISH WIRELESS L.L.C.
PROJECT INFORMATION

BOHVN00021A
2755 STATE STREET
HAMDEN, CT 06517

SHEET TITLE

GENERAL NOTES

SHEET NUMBER

GN-4

GROUNDING NOTES:

1. ALL GROUND ELECTRODE SYSTEMS (INCLUDING TELECOMMUNICATION, RADIO, LIGHTNING PROTECTION AND AC POWER GES'S) SHALL BE BONDED TOGETHER AT OR BELOW GRADE, BY TWO OR MORE COPPER BONDING CONDUCTORS IN ACCORDANCE WITH THE NEC.

2. THE CONTRACTOR SHALL PERFORM IEEE FALL-OF-POTENTIAL RESISTANCE TO EARTH TESTING (PER IEEE 1100 AND 81) FOR GROUND ELECTRODE SYSTEMS, THE CONTRACTOR SHALL FURNISH AND INSTALL SUPPLEMENTAL GROUND ELECTRODES AS NEEDED TO ACHIEVE A TEST RESULT OF 5 OHMS OR LESS.

3. THE CONTRACTOR IS RESPONSIBLE FOR PROPERLY SEQUENCING GROUNDING AND UNDERGROUND CONDUIT INSTALLATION AS TO PREVENT ANY LOSS OF CONTINUITY IN THE GROUNDING SYSTEM OR DAMAGE TO THE CONDUIT AND PROVIDE TESTING RESULTS.

4. METAL CONDUIT AND TRAY SHALL BE GROUNDED AND MADE ELECTRICALLY CONTINUOUS WITH LISTED BONDING FITTINGS OR BY BONDING ACROSS THE DISCONTINUITY WITH #6 COPPER WIRE UL APPROVED GROUNDING TYPE CONDUIT CLAMPS.

5. METAL RACEWAY SHALL NOT BE USED AS THE NEC REQUIRED EQUIPMENT GROUND CONDUCTOR. STRANDED COPPER CONDUCTORS WITH GREEN INSULATION, SIZED IN ACCORDANCE WITH THE NEC, SHALL BE FURNISHED AND INSTALLED WITH THE POWER CIRCUITS TO BTS EQUIPMENT.

6. EACH CABINET FRAME SHALL BE DIRECTLY CONNECTED TO THE MASTER GROUND BAR WITH GREEN INSULATED SUPPLEMENTAL EQUIPMENT GROUND WIRES, #6 STRANDED COPPER OR LARGER FOR INDOOR BTS; #2 BARE SOLID TINNED COPPER FOR OUTDOOR BTS.

7. CONNECTIONS TO THE GROUND BUS SHALL NOT BE DOUBLED UP OR STACKED BACK TO BACK CONNECTIONS ON OPPOSITE SIDE OF THE GROUND BUS ARE PERMITTED.

8. ALL EXTERIOR GROUND CONDUCTORS BETWEEN EQUIPMENT/GROUND BARS AND THE GROUND RING SHALL BE #2 SOLID TINNED COPPER UNLESS OTHERWISE INDICATED.

9. ALUMINUM CONDUCTOR OR COPPER CLAD STEEL CONDUCTOR SHALL NOT BE USED FOR GROUNDING CONNECTIONS.

10. USE OF 90° BENDS IN THE PROTECTION GROUNDING CONDUCTORS SHALL BE AVOIDED WHEN 45° BENDS CAN BE ADEQUATELY SUPPORTED.

11. EXOTHERMIC WELDS SHALL BE USED FOR ALL GROUNDING CONNECTIONS BELOW GRADE.

12. ALL GROUND CONNECTIONS ABOVE GRADE (INTERIOR AND EXTERIOR) SHALL BE FORMED USING HIGH PRESS CRIMPS.

13. COMPRESSION GROUND CONNECTIONS MAY BE REPLACED BY EXOTHERMIC WELD CONNECTIONS.

14. ICE BRIDGE BONDING CONDUCTORS SHALL BE EXOTHERMICALLY BONDED OR BOLTED TO THE BRIDGE AND THE TOWER GROUND BAR.

15. APPROVED ANTIOXIDANT COATINGS (i.e. CONDUCTIVE GEL OR PASTE) SHALL BE USED ON ALL COMPRESSION AND BOLTED GROUND CONNECTIONS.

16. ALL EXTERIOR GROUND CONNECTIONS SHALL BE COATED WITH A CORROSION RESISTANT MATERIAL.

17. MISCELLANEOUS ELECTRICAL AND NON-ELECTRICAL METAL BOXES, FRAMES AND SUPPORTS SHALL BE BONDED TO THE GROUND RING, IN ACCORDANCE WITH THE NEC.

18. BOND ALL METALLIC OBJECTS WITHIN 6 ft OF MAIN GROUND RING WITH (1) #2 BARE SOLID TINNED COPPER GROUND CONDUCTOR.

19. GROUND CONDUCTORS USED FOR THE FACILITY GROUNDING AND LIGHTNING PROTECTION SYSTEMS SHALL NOT BE ROUTED THROUGH METALLIC OBJECTS THAT FORM A RING AROUND THE CONDUCTOR, SUCH AS METALLIC CONDUITS, METAL SUPPORT CLIPS OR SLEEVES THROUGH WALLS OR FLOORS. WHEN IT IS REQUIRED TO BE HOUSED IN CONDUIT TO MEET CODE REQUIREMENTS OR LOCAL CONDITIONS, NON-METALLIC MATERIAL SUCH AS PVC CONDUIT SHALL BE USED. WHERE USE OF METAL CONDUIT IS UNAVOIDABLE (i.e., NONMETALLIC CONDUIT PROHIBITED BY LOCAL CODE) THE GROUND CONDUCTOR SHALL BE BONDED TO EACH END OF THE METAL CONDUIT.

20. ALL GROUNDS THAT TRANSITION FROM BELOW GRADE TO ABOVE GRADE MUST BE #2 BARE SOLID TINNED COPPER IN 3/4" NON-METALLIC, FLEXIBLE CONDUIT FROM 24" BELOW GRADE TO WITHIN 3" TO 6" OF CAD-WELD TERMINATION POINT. THE EXPOSED END OF THE CONDUIT MUST BE SEALED WITH SILICONE CAULK. (ADD TRANSITIONING GROUND STANDARD DETAIL AS WELL).

21. BUILDINGS WHERE THE MAIN GROUNDING CONDUCTORS ARE REQUIRED TO BE ROUTED TO GRADE, THE CONTRACTOR SHALL ROUTE TWO GROUNDING CONDUCTORS FROM THE ROOFTOP, TOWERS, AND WATER TOWERS GROUNDING RING, TO THE EXISTING GROUNDING SYSTEM, THE GROUNDING CONDUCTORS SHALL NOT BE SMALLER THAN 2/0 COPPER. ROOFTOP GROUNDING RING SHALL BE BONDED TO THE EXISTING GROUNDING SYSTEM, THE BUILDING STEEL COLUMNS, LIGHTNING PROTECTION SYSTEM, AND BUILDING MAIN WATER LINE (FERROUS OR NONFERROUS METAL PIPING ONLY). DO NOT ATTACH GROUNDING TO FIRE SPRINKLER SYSTEM PIPES.

dish wireless.

5701 SOUTH SANTA FE DRIVE
LITTLETON, CO 80120

Jacobs.

Challenging today.
Reinventing tomorrow.

Jacobs Telecommunications, Inc.
5449 BELLS FERRY ROAD
ACWORTH, GA 30102

STATE OF CONNECTICUT · EARL B. SLANDE · 34052 LICENSED PROFESSIONAL ENGINEER

5/16/2022

IT IS A VIOLATION OF LAW FOR ANY PERSON, UNLESS THEY ARE ACTING UNDER THE DIRECTION OF A LICENSED PROFESSIONAL ENGINEER, TO ALTER THIS DOCUMENT.

DRAWN BY:	CHECKED BY:	APPROVED BY:
MWD	TJM	KRK

RFDS REV #: 0

CONSTRUCTION DOCUMENTS

SUBMITTALS

REV	DATE	DESCRIPTION
1	05/16/2022	ISSUED FOR CONSTRUCTION

A&E PROJECT NUMBER

EUCC0309

DISH WIRELESS L.L.C.
PROJECT INFORMATION

BOHVN00021A
2755 STATE STREET
HAMDEN, CT 06517

SHEET TITLE

GENERAL NOTES

SHEET NUMBER

GN-5

Exhibit D

Structural Analysis Report

Date: **October 07, 2021**

B+T Group
1717 S Boulder Ave, Suite 300
Tulsa, OK 74119
(918) 587-4630

Subject:	**Structural Analysis Report**	
Carrier Designation:	***DISH Network* Co-Locate**	
	Site Number:	BOHVN00021A
	Site Name:	CT-CCI-T-876312
Crown Castle Designation:	**BU Number:**	876312
	Site Name:	Montowese Amodio Self Store
	JDE Job Number:	645699
	Work Order Number:	1964066
	Order Number:	553441 Rev. 0
Engineering Firm Designation:	**B+T Group Project Number:**	108127.004.01
Site Data:	**2755 State Street, Hamden, New Haven County, CT**	
	Latitude *41° 21' 19.67"*, Longitude *-72° 53' 25.13"*	
	120 Foot - Self Support Tower	

B+T Group is pleased to submit this **"Structural Analysis Report"** to determine the structural integrity of the above-mentioned tower.

The purpose of the analysis is to determine acceptability of the tower stress level. Based on our analysis we have determined the tower stress level for the structure and foundation, under the following load case, to be:

LC7: Proposed Equipment Configuration **Sufficient Capacity**

This analysis utilizes an ultimate 3-second gust wind speed of 120 mph as required by the 2018 Connecticut State Building Code(2015 IBC). Applicable Standard references and design criteria are listed in Section 2 - Analysis Criteria.

Structural analysis prepared by: Matthew Williams

Respectfully submitted by: B+T Engineering, Inc.
COA: PEC.0001564; Expires: 2/10/2022

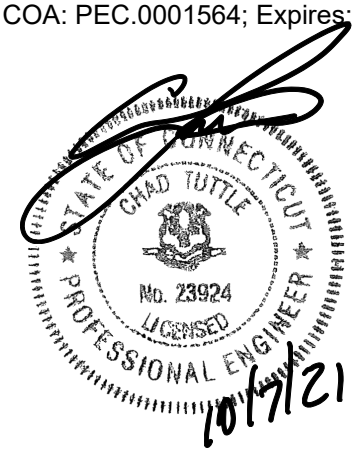

Chad E. Tuttle, P.E.

tnxTower Report - version 8.1.1.0

TABLE OF CONTENTS

1) INTRODUCTION

2) ANALYSIS CRITERIA
Table 1 - Proposed Equipment Configuration
Table 2 - Other Considered Equipment

3) ANALYSIS PROCEDURE
Table 3 - Documents Provided
3.1) Analysis Method
3.2) Assumptions

4) ANALYSIS RESULTS
Table 4 - Section Capacity (Summary)
Table 5 - Tower Component Stresses vs. Capacity
4.1) Recommendations

5) APPENDIX A
tnxTower Output

6) APPENDIX B
Base Level Drawing

7) APPENDIX C
Additional Calculations

1) INTRODUCTION

This tower is a 120 ft. Self-Support tower designed by PiROD. The tower has been modified per reinforcement drawings prepared by GPD in November of 2008. Reinforcement consists of addition of new horizontal redundant bracing from 70'-90'. Addition of new tie rod assembly from 0'-20'.

2) ANALYSIS CRITERIA

TIA-222 Revision:	TIA-222-H
Risk Category:	II
Wind Speed:	120 mph
Exposure Category:	C
Topographic Factor:	1
Ice Thickness:	1 in
Wind Speed with Ice:	50 mph
Service Wind Speed:	60 mph

Table 1 - Proposed Equipment Configuration

Mounting Level (ft)	Center Line Elevation (ft)	Number of Antennas	Antenna Manufacturer	Antenna Model	Number of Feed Lines	Feed Line Size (in)
100.0	100.0	3	Fujitsu	TA08025-B604	1	1-1/2
		3	Fujitsu	TA08025-B605		
		3	JMA Wireless	MX08FRO665-21		
		1	Raycap	RDIDC-9181-PF-48		
		1	--	Commscope MTC3975083 (3)		

Table 2 - Other Considered Equipment

Mounting Level (ft)	Center Line Elevation (ft)	Number of Antennas	Antenna Manufacturer	Antenna Model	Number of Feed Lines	Feed Line Size (in)
120.0	122.0	3	Dragonwave	A-ANT-23G-2-C	4 1 3 6	1-1/4 7/8 1/2 5/16
	120.0	3	Alcatel Lucent	1900MHz RRH (65MHz)		
		3	Alcatel Lucent	800 EXTERNAL NOTCH FILTER		
		3	Alcatel Lucent	800MHZ RRH		
		3	Alcatel Lucent	TD-RRH8x20-25		
		3	Powerwave Tech.	P40-16-XLPP-RR-A		
		3	RFS Celwave	ACU-A20-N		
		3	RFS Celwave	APXVTM14-C-120		
		1	--	Platform Mount [LP 405-1]		
		3	--	Side Arm Mount [SO 301-1]		
	118.0	3	Argus Tech.	LLPX310R		
		3	Samsung Telecom.	FDD_R6_RRH		
110.0	112.0	3	CCI Antennas	DMP65R-BU6D	6 3 4 2	1-5/8 7/8 13/16 3/8
		3	CCI Antennas	TPA65R-BU6D		
		3	Ericsson	AIR 6419 B77G		
		3	Ericsson	AIR 6449 N77		

Mounting Level (ft)	Center Line Elevation (ft)	Number of Antennas	Antenna Manufacturer	Antenna Model	Number of Feed Lines	Feed Line Size (in)
		3	Ericsson	RADIO 4478 B14		
		3	Ericsson	RRUS 32 B2		
		3	Ericsson	RRUS 32 B30		
		3	Ericsson	RRUS 4426 B66		
		3	Ericsson	RRUS 4449 B5/B12		
		2	Raycap	DC6-48-60-18-8F		
		1	Raycap	DC9-48-60-24-8C-EV		
	110.0	1	--	Pipe Mount [PM 601-3]		
		1	--	Sector Mount [SM 406-3]		
44.0	46.0	1	Trimble	BULLET III	1	1/2
	44.0	1	--	Side Arm Mount [SO 701-1]		

3) ANALYSIS PROCEDURE

Table 3 - Documents Provided

Document	Reference	Source
Tower Manufacturing Drawing	1611638	CCI Sites
Tower Modification Drawing	2486404	CCI Sites
Post Modification Inspection	3241117	CCI Sites
Foundation Drawing	1611716	CCI Sites
Geotech Report	1529742	CCI Sites
Crown CAD Package	Date: 09/09/2021	CCI Sites

3.1) Analysis Method

tnxTower (version 8.1.1.0), a commercially available analysis software package, was used to create a three-dimensional model of the tower and calculate member stresses for various loading cases. Selected output from the analysis is included in Appendix A. When applicable, Crown Castle has calculated and provided the effective area for panel antennas using approved methods following the intent of the TIA-222 standard.

3.2) Assumptions

1) The tower and structures were maintained in accordance with the - TIA-222 standard.
2) The configuration of antennas, transmission cables, mounts and other appurtenances are as specified in Tables 1 and 2 and the referenced drawings.

This analysis may be affected if any assumptions are not valid or have been made in error. B+T Group should be notified to determine the effect on the structural integrity of the tower.

4) ANALYSIS RESULTS

Table 4 - Section Capacity (Summary)

Section No.	Elevation (ft)	Component Type	Size	Critical Element	P (K)	SF*P_allow (K)	% Capacity	Pass / Fail
T1	120 - 117.667	Leg	1 1/2	2	-2.782	55.544	5.0	Pass
T2	117.667 - 110	Leg	1 1/2	13	-11.896	55.544	21.4	Pass
T3	110 - 90	Leg	1 3/4	44	-70.025	82.873	84.5	Pass
T4	90 - 70	Leg	2	108	-130.177	139.769	93.1	Pass
T5	70 - 52.6146	Leg	2 1/2	189	-183.575	200.087	91.7	Pass
T6	52.6146 - 50	Leg	2 1/2	243	-190.083	207.523	91.6	Pass
T7	50 - 40	Leg	Pirod 105245	256	-186.556	225.602	82.7	Pass
T8	40 - 20	Leg	Pirod 105217	265	-200.354	225.602	88.8	Pass
T9	20 - 0	Leg	Pirod 105217 w/ (2) 1.25 Tierod	280	-212.992	271.615	78.4	Pass
T1	120 - 117.667	Diagonal	3/4	8	-2.705	6.601	41.0	Pass
T2	117.667 - 110	Diagonal	5/8	23	-2.434	3.703	65.7	Pass
T3	110 - 90	Diagonal	3/4	56	-4.686	6.260	74.9	Pass
T4	90 - 70	Diagonal	7/8	120	-7.372	7.910	93.2	Pass
T5	70 - 52.6146	Diagonal	7/8	240	-6.828	9.652	70.7	Pass
T6	52.6146 - 50	Diagonal	7/8	252	-5.122	8.779	58.3	Pass
T7	50 - 40	Diagonal	L2 1/2x2 1/2x3/16	258	-6.474	18.455	35.1	Pass
T8	40 - 20	Diagonal	L2 1/2x2 1/2x3/16	271	-3.017	14.567	20.7	Pass
T9	20 - 0	Diagonal	L2 1/2x2 1/2x3/16	285	-5.087	11.522	44.2	Pass
T2	117.667 - 110	Horizontal	3/4	28	-0.240	4.584	5.2	Pass
T3	110 - 90	Horizontal	3/4	57	-1.268	3.647	34.8	Pass
T5	70 - 52.6146	Horizontal	7/8	199	-3.061	4.424	69.2	Pass
T6	52.6146 - 50	Horizontal	7/8	244	-3.224	4.312	74.8	Pass
T4	90 - 70	Secondary Horizontal	1 1/4	123	-3.064	35.300	8.7	Pass
T1	120 - 117.667	Top Girt	5x3/8	4	-1.766	5.649	31.3	Pass
T2	117.667 - 110	Top Girt	7/8	18	-0.241	8.492	2.8	Pass
T3	110 - 90	Top Girt	3/4	46	-1.604	4.612	34.8	Pass
T4	90 - 70	Top Girt	1	110	-2.361	5.467	43.2	Pass
T5	70 - 52.6146	Top Girt	1	191	-3.180	8.854	35.9	Pass
T2	117.667 - 110	Bottom Girt	7/8	20	-0.826	8.492	9.7	Pass
T3	110 - 90	Bottom Girt	3/4	48	-2.267	3.534	64.1	Pass
T4	90 - 70	Bottom Girt	1	112	-3.160	4.331	73.0	Pass
T6	52.6146 - 50	Bottom Girt	1	246	-3.350	7.225	46.4	Pass
							Summary	
						Leg (T4)	93.1	Pass
						Diagonal (T4)	93.2	Pass
						Horizontal (T6)	74.8	Pass
						Secondary Horizontal (T4)	8.7	Pass
						Top Girt (T4)	43.2	Pass

Section No.	Elevation (ft)	Component Type	Size	Critical Element	P (K)	SF*P_allow (K)	% Capacity	Pass / Fail
						Bottom Girt (T4)	73.0	Pass
						Bolt Checks	65.3	Pass
						Rating =	93.2	Pass

Table 5 - Tower Component Stresses vs. Capacity- LC7

Notes	Component	Elevation (ft)	% Capacity	Pass / Fail
1,2	Anchor Rods	Base	54.7	Pass
1,2	Base Foundation (Structure)	Base	39.9	Pass
1,2	Base Foundation (Soil interaction)	Base	90.2	Pass

Structure Rating (max from all components) =	**93.2%**

Notes:
1) See additional documentation in “Appendix C - Additional Calculations” for calculations supporting the % capacity consumed.
2) Rating per TIA-222-H Section 15.5.

4.1) Recommendations

The tower and its foundation have sufficient capacity to carry the proposed load configuration. No modifications are required at this time.

APPENDIX A

TNXTOWER OUTPUT

Section	T1	T2	T3	T4	T5	T6	T7	T8	T9
Legs		SR 1 1/2	SR 1 3/4	SR 2	SR 2 1/2		Pirod 105245	Pirod 105217	Pirod 105217 w/ (2) 1.25 Tierod
Leg Grade					A572-50				
Diagonals	A	SR 5/8	SR 3/4	SR 7/8				L2 1/2x2 1/2x3/16	
Diagonal Grade				A572-50				A36	
Top Girts	B	SR 7/8	SR 3/4	SR 1				N.A.	
Bottom Girts	N.A.	SR 7/8	SR 3/4	SR 1	N.A.	SR 1		N.A.	
Horizontals	N.A.		SR 3/4	N.A.	SR 7/8			N.A.	
Sec. Horizontals			N.A.	SR 1 1/4				N.A.	
Face Width (ft) 10	3.5			4	4.5	4444	6	8	
# Panels @ (ft)		4 @ 2.33333	8 @ 2.39583	8 @ 2.375	7 @ 2.34077	C		5 @ 10	
Weight (K) 11.0	0.1	0.3	0.9	1.6	1.4	0.2	1.2	2.3	2.9

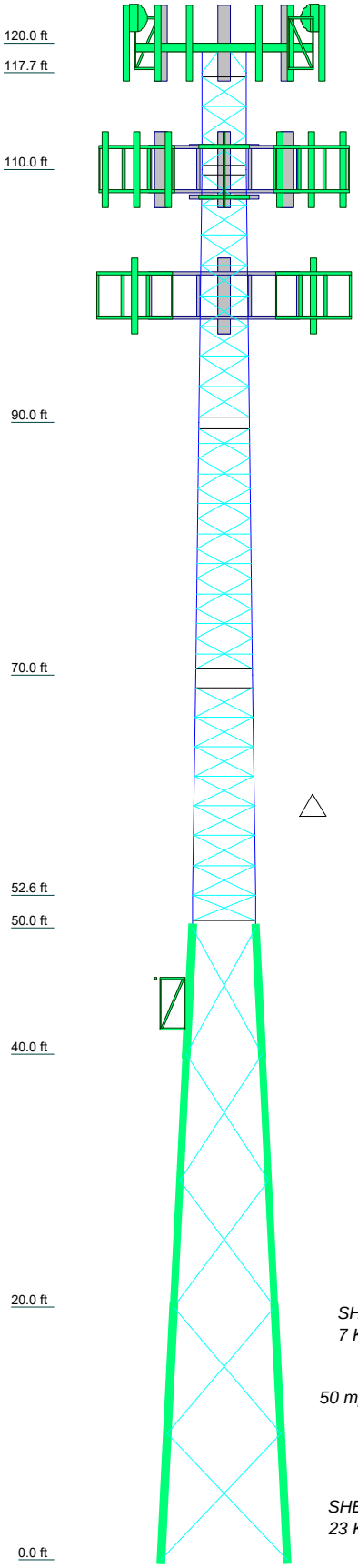

SYMBOL LIST

MARK	SIZE	MARK	SIZE
A	SR 3/4	C	1 @ 2.03125
B	5x3/8		

MATERIAL STRENGTH

GRADE	Fy	Fu	GRADE	Fy	Fu
A572-50	50 ksi	65 ksi	A36	36 ksi	58 ksi

TOWER DESIGN NOTES

1. Tower is located in New Haven County, Connecticut.
2. Tower designed for Exposure C to the TIA-222-H Standard.
3. Tower designed for a 120 mph basic wind in accordance with the TIA-222-H Standard.
4. Tower is also designed for a 50 mph basic wind with 1.00 in ice. Ice is considered to increase in thickness with height.
5. Deflections are based upon a 60 mph wind.
6. Tower Risk Category II.
7. Topographic Category 1 with Crest Height of 0.000 ft
8. TIA-222-H Annex S
9. TOWER RATING: 93.2%

ALL REACTIONS ARE FACTORED

MAX. CORNER REACTIONS AT BASE:
DOWN: 219 K
SHEAR: 17 K

UPLIFT: -196 K
SHEAR: 15 K

AXIAL 57 K
SHEAR 7 K
MOMENT 539 kip-ft

TORQUE 2 kip-ft
50 mph WIND - 1.000 in ICE

AXIAL 33 K
SHEAR 23 K
MOMENT 1823 kip-ft

TORQUE 6 kip-ft
REACTIONS - 120 mph WIND

B+T Group
1717 S Boulder Ave, Suite 300
Tulsa, OK 74119
Phone: (918) 587-4630
FAX: (918) 587-4630

Job: *108127.004.01 - MONTOWESE AMODIO SELF STORE, CT (BU# 87631*		
Project:		
Client: Crown Castle	Drawn by: GURUPRASAD	App'd:
Code: TIA-222-H	Date: 10/06/21	Scale: NTS
Path:		Dwg No. E-1

Plot Plan

Total Area - 0.04 Acres

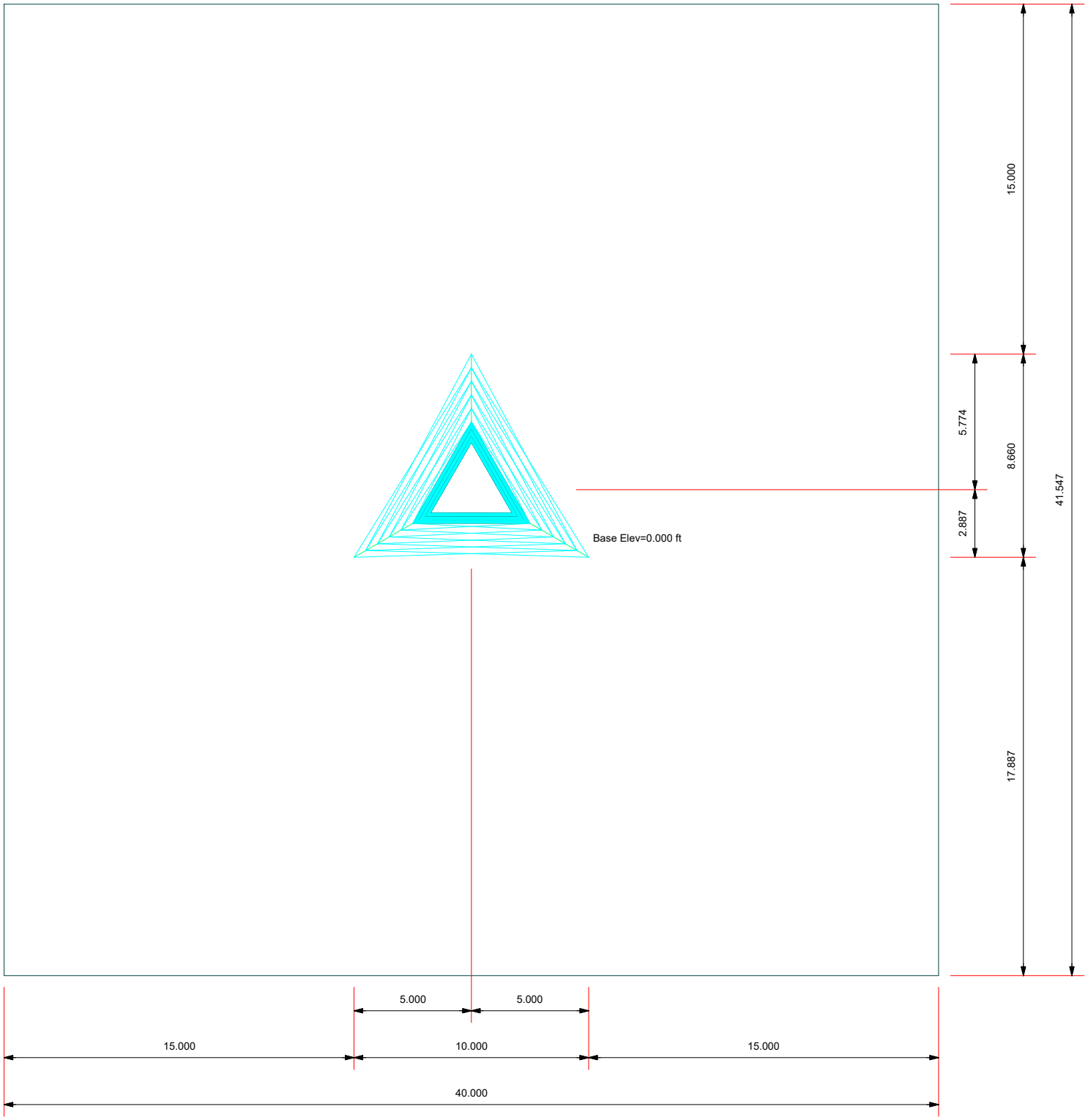

B+T Group
1717 S Boulder Ave, Suite 300
Tulsa, OK 74119
Phone: (918) 587-4630
FAX: (918) 587-4630

Job: ***108127.004.01 - MONTOWESE AMODIO SELF STORE, CT (BU# 87631***		
Project:		
Client: Crown Castle	Drawn by: GURUPRASAD	App'd:
Code: TIA-222-H	Date: 10/06/21	Scale: NTS
Path:		Dwg No. E-2

TIA-222-H - 120 mph/50 mph 1.000 in Ice Exposure C

Leg Capacity ——— **Leg Compression (K)**

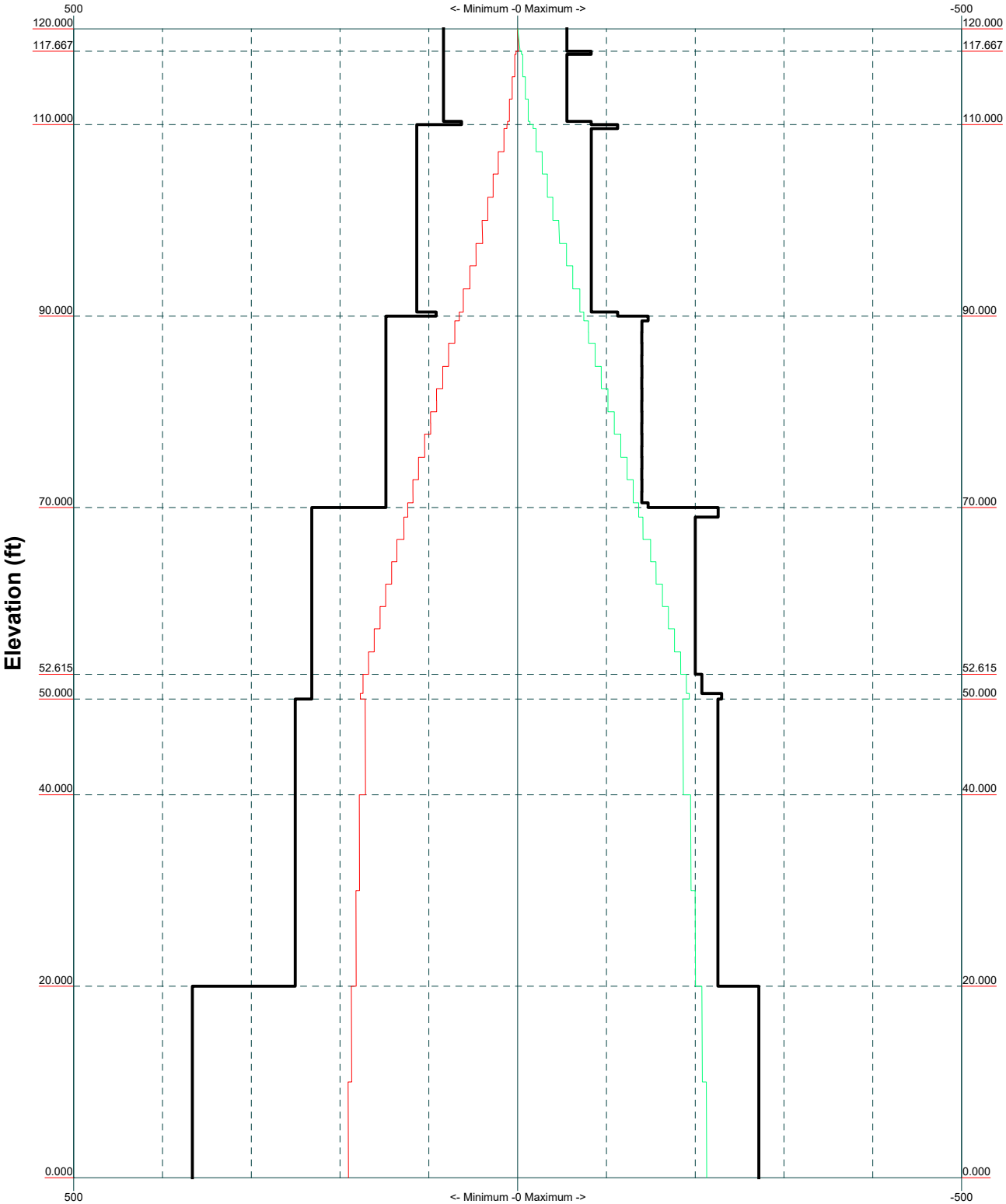

B+T GRP

B+T Group
1717 S Boulder Ave, Suite 300
Tulsa, OK 74119
Phone: (918) 587-4630
FAX: (918) 587-4630

Job: *108127.004.01 - MONTOWESE AMODIO SELF STORE, CT (BU# 87631*		
Project:		
Client: Crown Castle	Drawn by: GURUPRASAD	App'd:
Code: TIA-222-H	Date: 10/06/21	Scale: NTS
Path:		Dwg No. E-3

TIA-222-H - 120 mph/50 mph 1.000 in Ice Exposure C

Vx Vz

Maximum Values

Mx Mz

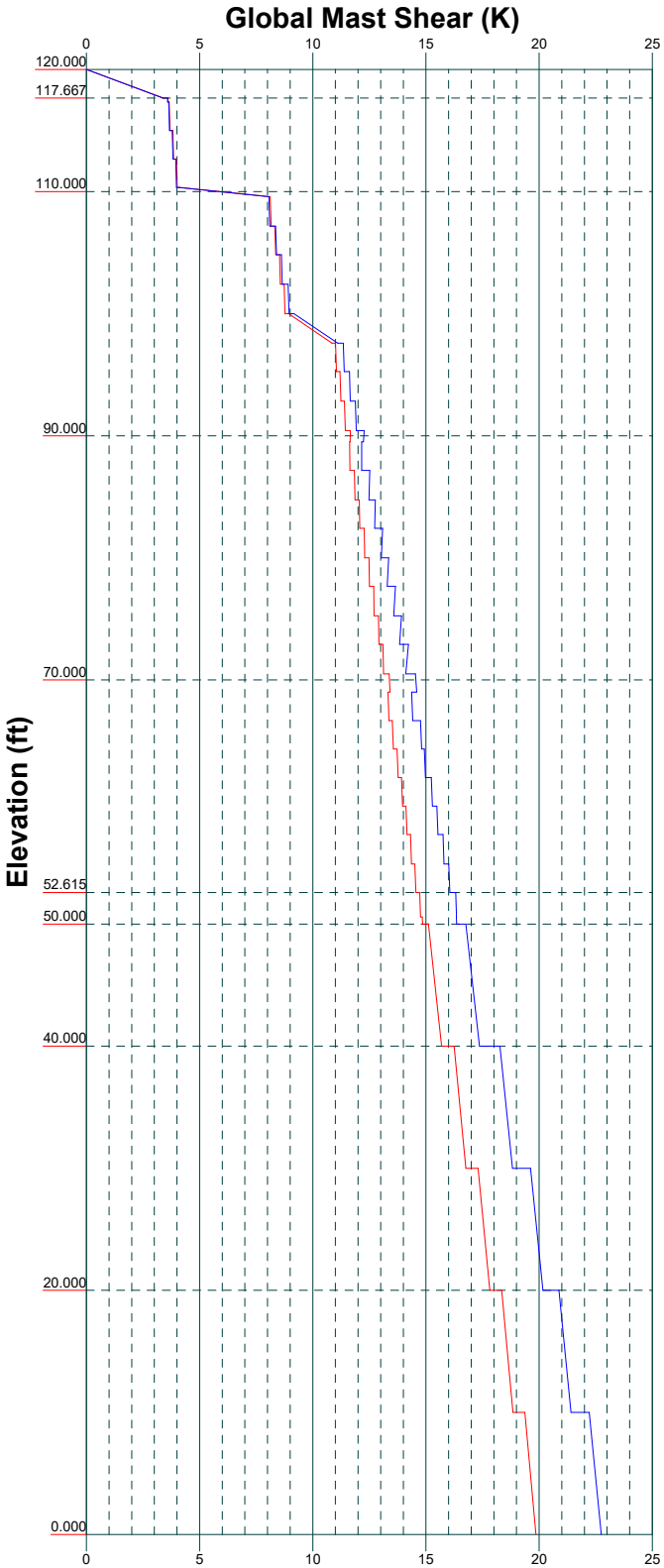

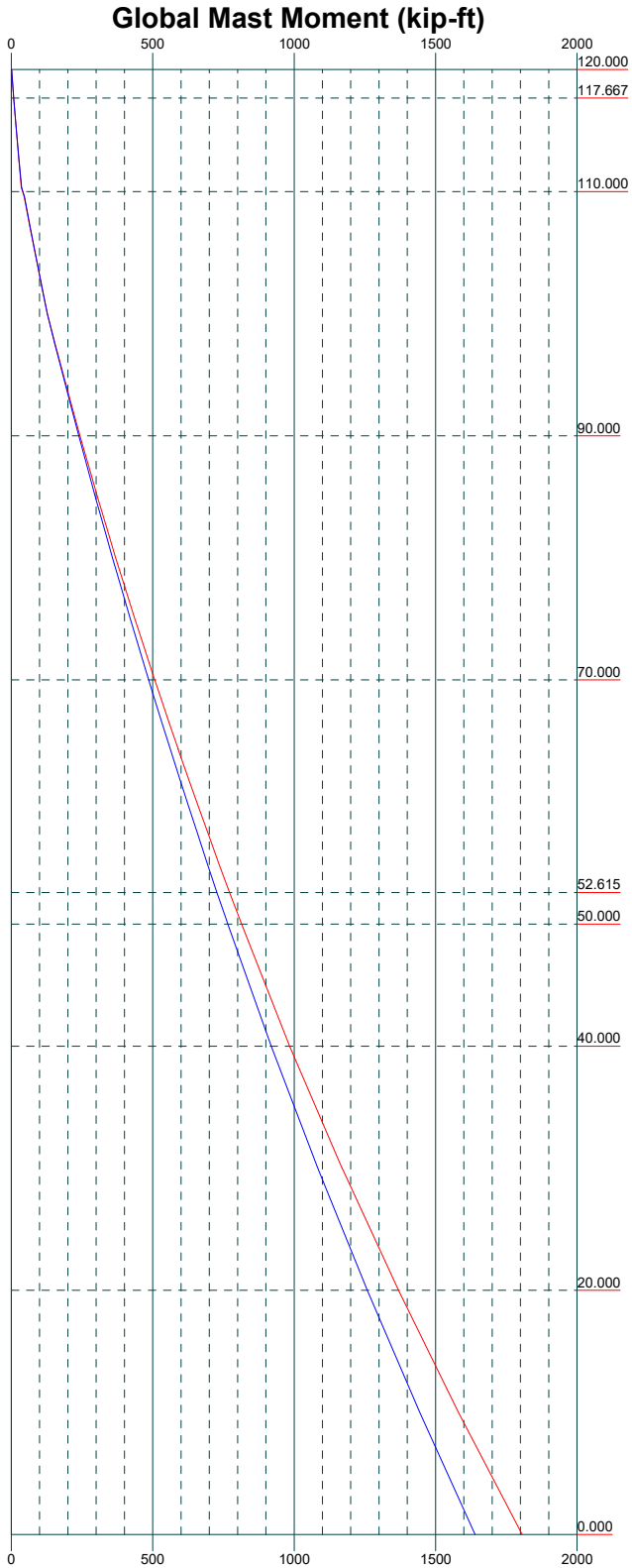

B+T Group
1717 S Boulder Ave, Suite 300
Tulsa, OK 74119
Phone: (918) 587-4630
FAX: (918) 587-4630

Job: 108127.004.01 - MONTOWESE AMODIO SELF STORE, CT (BU# 87631		
Project:		
Client: Crown Castle	Drawn by: GURUPRASAD	App'd:
Code: TIA-222-H	Date: 10/06/21	Scale: NTS
Path:		Dwg No. E-4

TIA-222-H - Service - 60 mph

Maximum Values

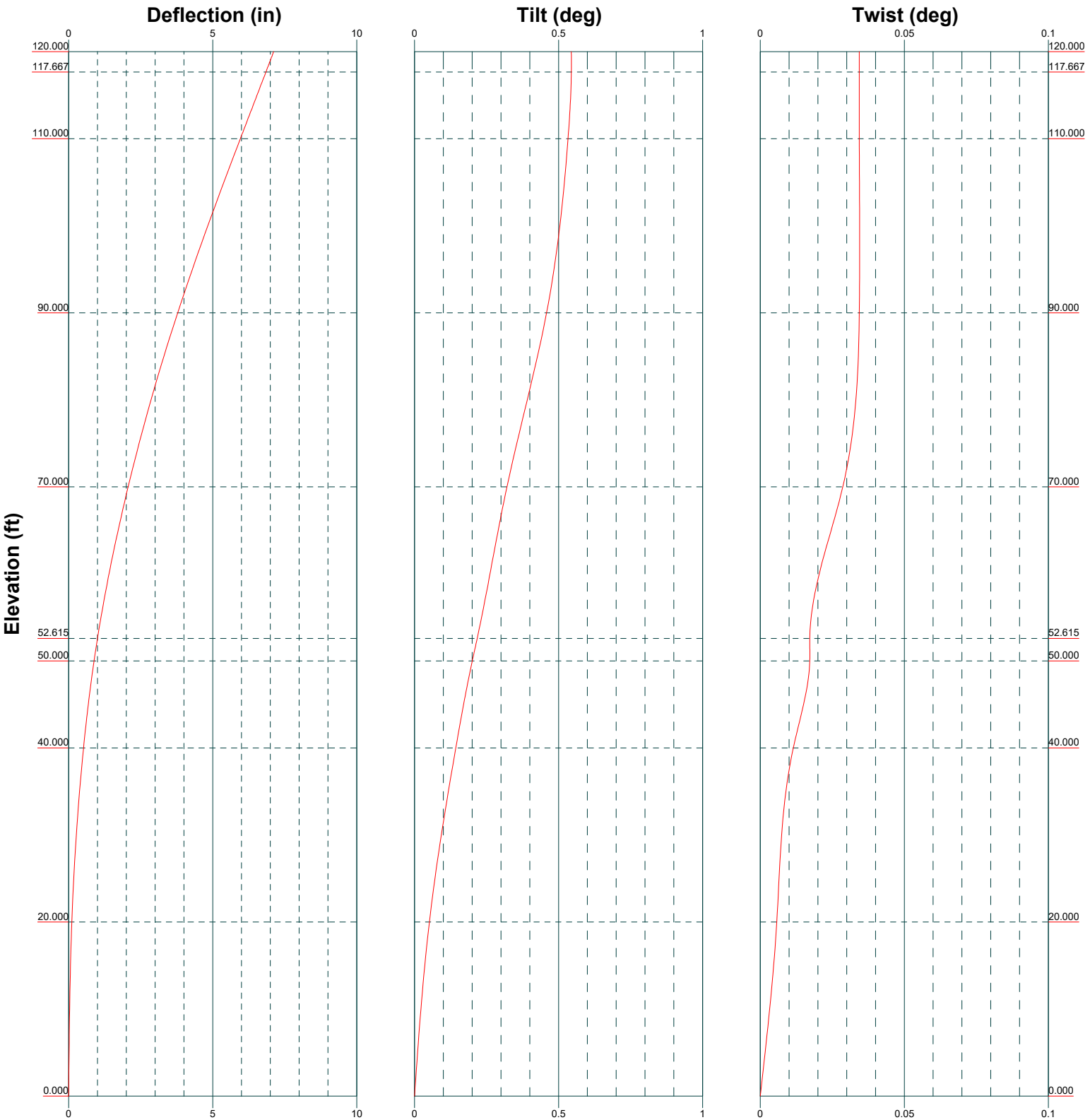

B+T Group
1717 S Boulder Ave, Suite 300
Tulsa, OK 74119
Phone: (918) 587-4630
FAX: (918) 587-4630

Job: *108127.004.01 - MONTOWESE AMODIO SELF STORE, CT (BU# 87631*		
Project:		
Client: Crown Castle	Drawn by: GURUPRASAD	App'd:
Code: TIA-222-H	Date: 10/06/21	Scale: NTS
Path:		Dwg No. E-5

Feed Line Distribution Chart
0' - 120'

Round | Flat | App In Face | App Out Face | Truss Leg

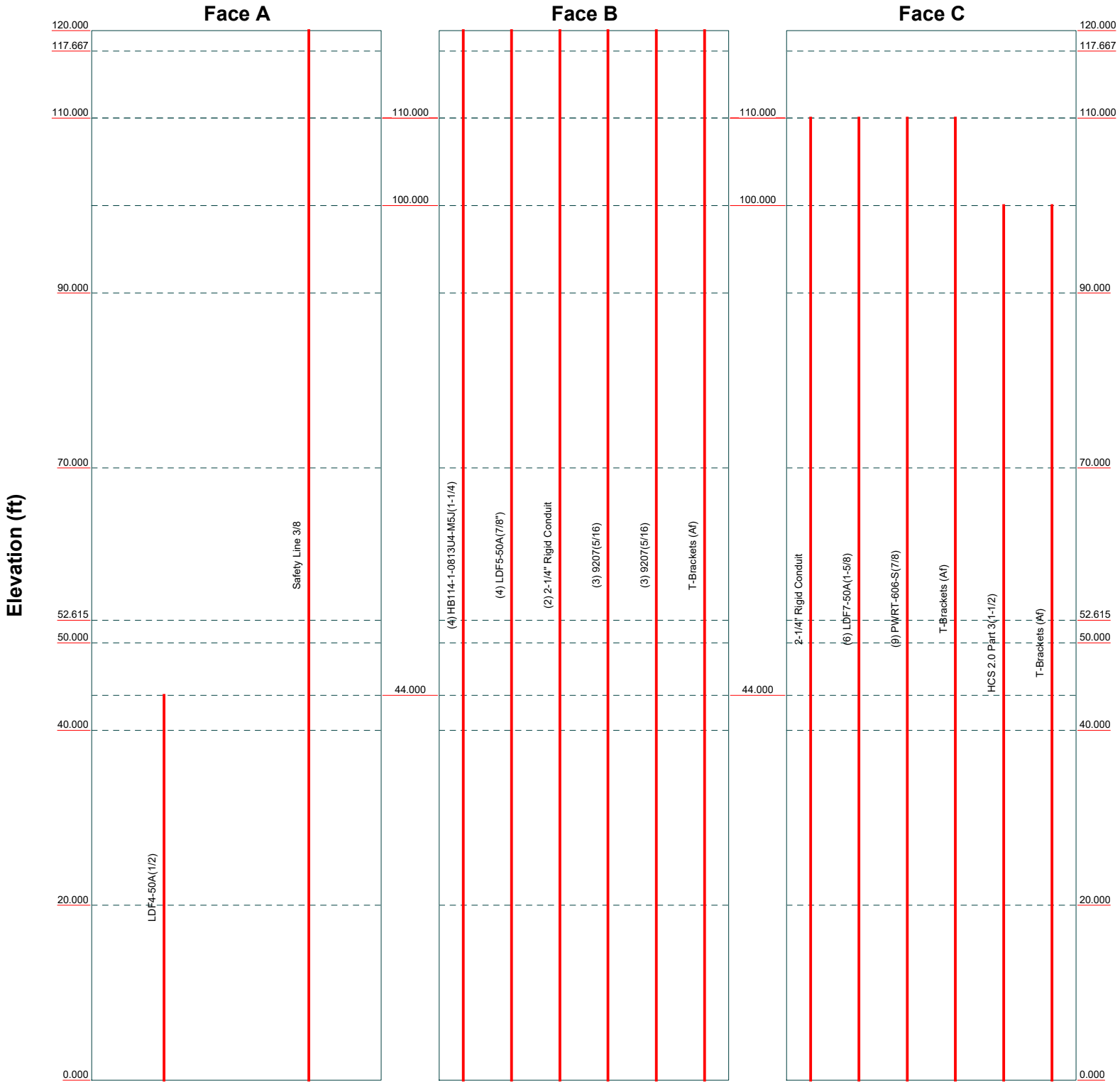

B+T Group
1717 S Boulder Ave, Suite 300
Tulsa, OK 74119
Phone: (918) 587-4630
FAX: (918) 587-4630

Job: *108127.004.01 - MONTOWESE AMODIO SELF STORE, CT (BU# 87631*		
Project:		
Client: Crown Castle	Drawn by: GURUPRASAD	App'd:
Code: TIA-222-H	Date: 10/06/21	Scale: NTS
Path:		Dwg No. E-7

Tower Input Data

The main tower is a 3x free standing tower with an overall height of 120.000 ft above the ground line.
The base of the tower is set at an elevation of 0.000 ft above the ground line.
The face width of the tower is 3.500 ft at the top and 10.000 ft at the base.
This tower is designed using the TIA-222-H standard.
The following design criteria apply:

Tower is located in New Haven County, Connecticut.
Tower base elevation above sea level: 7.000 ft.
Basic wind speed of 120 mph.
Risk Category II.
Exposure Category C.
Simplified Topographic Factor Procedure for wind speed-up calculations is used.
Topographic Category: 1.
Crest Height: 0.000 ft.
Nominal ice thickness of 1.000 in.
Ice thickness is considered to increase with height.
Ice density of 56.000 pcf.
A wind speed of 50 mph is used in combination with ice.
Temperature drop of 50.000 °F.
Deflections calculated using a wind speed of 60 mph.
TIA-222-H Annex S.
A non-linear (P-delta) analysis was used.
Pressures are calculated at each section.
Stress ratio used in tower member design is 1.
Tower analysis based on target reliabilities in accordance with Annex S.
Load Modification Factors used: $K_{es}(F_w) = 0.95$, $K_{es}(t_i) = 0.85$.
Maximum demand-capacity ratio is: 1.05.
Local bending stresses due to climbing loads, feed line supports, and appurtenance mounts are not considered.

Options

Consider Moments - Legs
Consider Moments - Horizontals
Consider Moments - Diagonals
Use Moment Magnification
√ Use Code Stress Ratios
√ Use Code Safety Factors - Guys
Escalate Ice
Always Use Max Kz
Use Special Wind Profile
Include Bolts In Member Capacity
Leg Bolts Are At Top Of Section
√ Secondary Horizontal Braces Leg
Use Diamond Inner Bracing (4 Sided)
SR Members Have Cut Ends
SR Members Are Concentric

Distribute Leg Loads As Uniform
Assume Legs Pinned
√ Assume Rigid Index Plate
√ Use Clear Spans For Wind Area
√ Use Clear Spans For KL/r
Retension Guys To Initial Tension
√ Bypass Mast Stability Checks
√ Use Azimuth Dish Coefficients
√ Project Wind Area of Appurt.
Autocalc Torque Arm Areas
Add IBC .6D+W Combination
√ Sort Capacity Reports By Component
Triangulate Diamond Inner Bracing
Treat Feed Line Bundles As Cylinder
Ignore KL/ry For 60 Deg. Angle Legs

Use ASCE 10 X-Brace Ly Rules
√ Calculate Redundant Bracing Forces
Ignore Redundant Members in FEA
√ SR Leg Bolts Resist Compression
All Leg Panels Have Same Allowable
Offset Girt At Foundation
√ Consider Feed Line Torque
√ Include Angle Block Shear Check
Use TIA-222-H Bracing Resist. Exemption
Use TIA-222-H Tension Splice Exemption

Poles

Include Shear-Torsion Interaction
Always Use Sub-Critical Flow
Use Top Mounted Sockets
Pole Without Linear Attachments
Pole With Shroud Or No Appurtenances
Outside and Inside Corner Radii Are Known

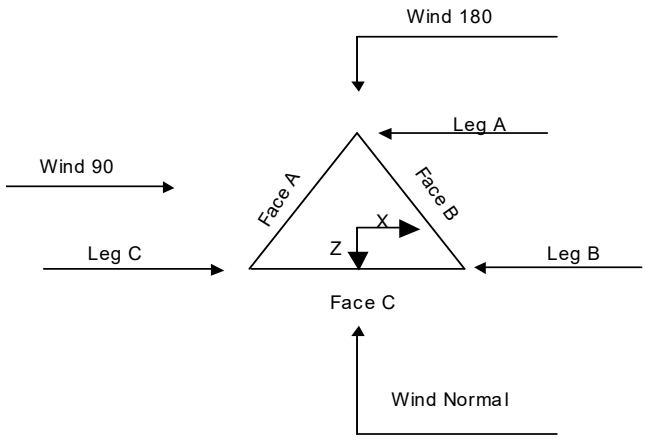

Triangular Tower

Tower Section Geometry

Tower Section	Tower Elevation ft	Assembly Database	Description	Section Width ft	Number of Sections	Section Length ft
T1	120.000-117.667			3.500	1	2.333
T2	117.667-110.000			3.500	1	7.667
T3	110.000-90.000			3.500	1	20.000
T4	90.000-70.000			4.000	1	20.000
T5	70.000-52.615			4.500	1	17.385
T6	52.615-50.000			4.944	1	2.615
T7	50.000-40.000			5.000	1	10.000
T8	40.000-20.000			6.000	1	20.000
T9	20.000-0.000			8.000	1	20.000

Tower Section Geometry *(cont'd)*

Tower Section	Tower Elevation ft	Diagonal Spacing ft	Bracing Type	Has K Brace End Panels	Has Horizontals	Top Girt Offset in	Bottom Girt Offset in
T1	120.000-117.667	2.333	K Brace Down	No	Yes	0.000	0.000
T2	117.667-110.000	2.333	X Brace	No	Steps	4.000	4.000
T3	110.000-90.000	2.396	X Brace	No	Steps	5.000	5.000

Tower Section	Tower Elevation ft	Diagonal Spacing ft	Bracing Type	Has K Brace End Panels	Has Horizontals	Top Girt Offset in	Bottom Girt Offset in
T4	90.000-70.000	2.375	X Brace	No	Yes	6.000	6.000
T5	70.000-52.615	2.341	X Brace	No	Steps	12.000	0.000
T6	52.615-50.000	2.031	X Brace	No	Steps	0.000	7.000
T7	50.000-40.000	10.000	X Brace	No	No	0.000	0.000
T8	40.000-20.000	10.000	X Brace	No	No	0.000	0.000
T9	20.000-0.000	10.000	X Brace	No	No	0.000	0.000

Tower Section Geometry *(cont'd)*

Tower Elevation ft	Leg Type	Leg Size	Leg Grade	Diagonal Type	Diagonal Size	Diagonal Grade
T1 120.000-117.667	Solid Round	1 1/2	A572-50 (50 ksi)	Solid Round	3/4	A572-50 (50 ksi)
T2 117.667-110.000	Solid Round	1 1/2	A572-50 (50 ksi)	Solid Round	5/8	A572-50 (50 ksi)
T3 110.000-90.000	Solid Round	1 3/4	A572-50 (50 ksi)	Solid Round	3/4	A572-50 (50 ksi)
T4 90.000-70.000	Solid Round	2	A572-50 (50 ksi)	Solid Round	7/8	A572-50 (50 ksi)
T5 70.000-52.615	Solid Round	2 1/2	A572-50 (50 ksi)	Solid Round	7/8	A572-50 (50 ksi)
T6 52.615-50.000	Solid Round	2 1/2	A572-50 (50 ksi)	Solid Round	7/8	A572-50 (50 ksi)
T7 50.000-40.000	Truss Leg	Pirod 105245	A572-50 (50 ksi)	Equal Angle	L2 1/2x2 1/2x3/16	A36 (36 ksi)
T8 40.000-20.000	Truss Leg	Pirod 105217	A572-50 (50 ksi)	Equal Angle	L2 1/2x2 1/2x3/16	A36 (36 ksi)
T9 20.000-0.000	Truss Leg	Pirod 105217 w/ (2) 1.25 Tierod	A572-50 (50 ksi)	Equal Angle	L2 1/2x2 1/2x3/16	A36 (36 ksi)

Tower Section Geometry *(cont'd)*

Tower Elevation ft	Top Girt Type	Top Girt Size	Top Girt Grade	Bottom Girt Type	Bottom Girt Size	Bottom Girt Grade
T2 117.667-110.000	Solid Round	7/8	A572-50 (50 ksi)	Solid Round	7/8	A572-50 (50 ksi)
T3 110.000-90.000	Solid Round	3/4	A572-50 (50 ksi)	Solid Round	3/4	A572-50 (50 ksi)
T4 90.000-70.000	Solid Round	1	A572-50 (50 ksi)	Solid Round	1	A572-50 (50 ksi)
T5 70.000-52.615	Solid Round	1	A572-50 (50 ksi)	Solid Round		A36 (36 ksi)
T6 52.615-50.000	Solid Round		A36 (36 ksi)	Solid Round	1	A572-50 (50 ksi)

Tower Section Geometry *(cont'd)*

Tower Elevation ft	No. of Mid Girts	Mid Girt Type	Mid Girt Size	Mid Girt Grade	Horizontal Type	Horizontal Size	Horizontal Grade
T1 120.000-117.667	None	Flat Bar		A36 (36 ksi)	Flat Bar	5x3/8	A36 (36 ksi)
T2 117.667-110.000	None	Flat Bar		A36 (36 ksi)	Solid Round	3/4	A572-50 (50 ksi)
T3 110.000-90.000	None	Solid Round		A572-50 (50 ksi)	Solid Round	3/4	A572-50 (50 ksi)
T5 70.000-52.615	None	Solid Round		A572-50 (50 ksi)	Solid Round	7/8	A572-50 (50 ksi)
T6 52.615-50.000	None	Solid Round		A572-50 (50 ksi)	Solid Round	7/8	A572-50 (50 ksi)

Tower Section Geometry *(cont'd)*

Tower Elevation ft	Secondary Horizontal Type	Secondary Horizontal Size	Secondary Horizontal Grade	Inner Bracing Type	Inner Bracing Size	Inner Bracing Grade
T4 90.000-70.000	Solid Round	1 1/4	A572-50 (50 ksi)	Solid Round		A36 (36 ksi)

Tower Section Geometry *(cont'd)*

Tower Elevation ft	Gusset Area (per face) ft^2	Gusset Thickness in	Gusset Grade	Adjust. Factor A_f	Adjust. Factor A_r	Weight Mult.	Double Angle Stitch Bolt Spacing Diagonals in	Double Angle Stitch Bolt Spacing Horizontals in	Double Angle Stitch Bolt Spacing Redundants in
T1 120.000-117.667	0.000	0.000	A36 (36 ksi)	1	1	1	Mid-Pt	Mid-Pt	Mid-Pt
T2 117.667-110.000	0.000	0.000	A36 (36 ksi)	1	1	1	Mid-Pt	Mid-Pt	Mid-Pt
T3 110.000-90.000	0.000	0.000	A36 (36 ksi)	1	1	1	Mid-Pt	Mid-Pt	Mid-Pt
T4 90.000-70.000	0.000	0.000	A36 (36 ksi)	1	1	1	Mid-Pt	Mid-Pt	Mid-Pt
T5 70.000-52.615	0.000	0.000	A36 (36 ksi)	1	1	1	Mid-Pt	Mid-Pt	Mid-Pt
T6 52.615-50.000	0.000	0.000	A36 (36 ksi)	1	1	1	Mid-Pt	Mid-Pt	Mid-Pt
T7 50.000-40.000	0.000	0.000	A36 (36 ksi)	1.05	1	1.05	Mid-Pt	Mid-Pt	Mid-Pt
T8 40.000-20.000	0.000	0.000	A36 (36 ksi)	1.05	1	1.05	Mid-Pt	Mid-Pt	Mid-Pt
T9 20.000-0.000	0.000	0.000	A36 (36 ksi)	1.05	1	1.05	Mid-Pt	Mid-Pt	Mid-Pt

Tower Section Geometry *(cont'd)*

Tower Elevation ft	Calc K Single Angles	Calc K Solid Rounds	K Factors[1] Legs	X Brace Diags X Y	K Brace Diags X Y	Single Diags X Y	Girts X Y	Horiz. X Y	Sec. Horiz. X Y	Inner Brace X Y
T1	No	Yes	1	1	1	1	1	1	1	1
120.000-117.667				1	1	1	1	1	1	1
T2	No	Yes	1	1	1	1	1	1	1	1
117.667-110.000				1	1	1	1	1	1	1
T3	No	Yes	1	1	1	1	1	1	1	1
110.000-90.000				1	1	1	1	1	1	1
T4	No	No	1	1	1	1	1	1	1	1
90.000-70.000				1	1	1	1	1	0.5	1
T5	No	Yes	1	1	1	1	1	1	1	1
70.000-52.615				1	1	1	1	1	1	1
T6	No	Yes	1	1	1	1	1	1	1	1
52.615-50.000				1	1	1	1	1	1	1
T7	Yes	No	1	1	1	1	1	1	1	1
50.000-40.000				1	1	1	1	1	1	1
T8	Yes	No	1	1	1	1	1	1	1	1
40.000-20.000				1	1	1	1	1	1	1
T9	Yes	No	1	1	1	1	1	1	1	1
20.000-0.000				1	1	1	1	1	1	1

[1]*Note: K factors are applied to member segment lengths. K-braces without inner supporting members will have the K factor in the out-of-plane direction applied to the overall length.*

Tower Section Geometry *(cont'd)*

Tower Elevation ft	Truss-Leg K Factors: Truss-Legs Used As Leg Members: Leg Panels	X Brace Diagonals	Z Brace Diagonals	Truss-Legs Used As Inner Members: Leg Panels	X Brace Diagonals	Z Brace Diagonals
T7	1	0.5	0.85	1	0.5	0.85
50.000-40.000						
T8	1	0.5	0.85	1	0.5	0.85
40.000-20.000						
T9	2.0447	0.5	0.85	1	0.5	0.85
20.000-0.000						

Tower Section Geometry *(cont'd)*

Tower Elevation ft	Leg		Diagonal		Top Girt		Bottom Girt		Mid Girt		Long Horizontal		Short Horizontal	
	Net Width Deduct in	U	Net Width Deduct in	U	Net Width Deduct in	U	Net Width Deduct in	U	Net Width Deduct in	U	Net Width Deduct in	U	Net Width Deduct in	U
T1 120.000-117.667	0.000	1	0.000	1	0.000	1	0.000	1	0.000	0.75	0.000	1	0.000	1
T2 117.667-110.000	0.000	1	0.000	1	0.000	1	0.000	1	0.000	0.75	0.000	1	0.000	1
T3 110.000-90.000	0.000	1	0.000	1	0.000	1	0.000	1	0.000	1	0.000	1	0.000	1
T4 90.000-70.000	0.000	1	0.000	1	0.000	1	0.000	1	0.000	1	0.000	1	0.000	1
T5 70.000-52.615	0.000	1	0.000	1	0.000	1	0.000	1	0.000	1	0.000	1	0.000	1
T6 52.615-50.000	0.000	1	0.000	1	0.000	1	0.000	1	0.000	1	0.000	1	0.000	1
T7 50.000-40.000	0.000	1	0.000	0.75	0.000	0.75	0.000	0.75	0.000	1	0.000	0.75	0.000	0.75
T8 40.000-20.000	0.000	1	0.000	0.75	0.000	0.75	0.000	0.75	0.000	1	0.000	0.75	0.000	0.75
T9 20.000-0.000	0.000	1	0.000	0.75	0.000	0.75	0.000	0.75	0.000	1	0.000	0.75	0.000	0.75

Tower Elevation ft	Redundant Horizontal		Redundant Diagonal		Redundant Sub-Diagonal		Redundant Sub-Horizontal		Redundant Vertical		Redundant Hip		Redundant Hip Diagonal	
	Net Width Deduct in	U	Net Width Deduct in	U	Net Width Deduct in	U	Net Width Deduct in	U	Net Width Deduct in	U	Net Width Deduct in	U	Net Width Deduct in	U
T1 120.000-117.667	0.000	0.75	0.000	0.75	0.000	0.75	0.000	0.75	0.000	0.75	0.000	0.75	0.000	0.75
T2 117.667-110.000	0.000	0.75	0.000	0.75	0.000	0.75	0.000	0.75	0.000	0.75	0.000	0.75	0.000	0.75
T3 110.000-90.000	0.000	0.75	0.000	0.75	0.000	0.75	0.000	0.75	0.000	0.75	0.000	0.75	0.000	0.75
T4 90.000-70.000	0.000	0.75	0.000	0.75	0.000	0.75	0.000	0.75	0.000	0.75	0.000	0.75	0.000	0.75
T5 70.000-52.615	0.000	0.75	0.000	0.75	0.000	0.75	0.000	0.75	0.000	0.75	0.000	0.75	0.000	0.75
T6 52.615-50.000	0.000	0.75	0.000	0.75	0.000	0.75	0.000	0.75	0.000	0.75	0.000	0.75	0.000	0.75
T7 50.000-40.000	0.000	0.75	0.000	0.75	0.000	0.75	0.000	0.75	0.000	0.75	0.000	0.75	0.000	0.75
T8 40.000-20.000	0.000	0.75	0.000	0.75	0.000	0.75	0.000	0.75	0.000	0.75	0.000	0.75	0.000	0.75
T9 20.000-0.000	0.000	0.75	0.000	0.75	0.000	0.75	0.000	0.75	0.000	0.75	0.000	0.75	0.000	0.75

Tower Section Geometry *(cont'd)*

Tower Elevation ft	Leg Connection Type	Leg Bolt Size in	Leg No.	Diagonal Bolt Size in	Diagonal No.	Top Girt Bolt Size in	Top Girt No.	Bottom Girt Bolt Size in	Bottom Girt No.	Mid Girt Bolt Size in	Mid Girt No.	Long Horizontal Bolt Size in	Long Horizontal No.	Short Horizontal Bolt Size in	Short Horizontal No.
T1 120.000-117.667	Sleeve DS	0.000 A325N	0	0.000 A325N	0 *	0.000 A325N	0 *	0.000 A325N	0 *	0.625 A325N	0	0.000 A325N	0 *	0.000 A325N	0 *
T2 117.667-110.000	Sleeve DS	0.625 A325N	4	0.000 A325N	0 *	0.000 A325N	0 *	0.000 A325N	0 *	0.625 A325N	0	0.000 A325N	0 *	0.000 A325N	0 *
T3 110.000-90.000	Sleeve DS	0.625 A325N	5	0.000 A325N	0 *	0.000 A325N	0 *	0.000 A325N	0 *	0.625 A325N	0	0.000 A325N	0 *	0.000 A325N	0 *
T4 90.000-70.000	Sleeve DS	0.750 A325N	5	0.000 A325N	0 *	0.000 A325N	0 *	0.000 A325N	0 *	0.625 A325N	0	0.000 A325N	0 *	0.000 A325N	0 *
T5 70.000-52.615	Sleeve DS	0.000 A325N	0	0.000 A325N	0 *	0.000 A325N	0 *	0.000 A325N	0 *	0.625 A325N	0	0.000 A325N	0 *	0.000 A325N	0 *
T6 52.615-50.000	Flange	1.000 A325N	6	0.000 A325N	0 *	0.000 A325N	0 *	0.000 A325N	0 *	0.625 A325N	0	0.000 A325N	0 *	0.000 A325N	0 *
T7 50.000-40.000	Flange	1.000 A325N	6	1.000 A325N	1	0.000 A325N	0	0.000 A325N	0	0.625 A325N	0	0.000 A325N	0	0.000 A325N	0
T8 40.000-20.000	Flange	1.000 A325N	6	1.000 A325N	1	0.000 A325N	0	0.000 A325N	0	0.625 A325N	0	0.000 A325N	0	0.000 A325N	0
T9 20.000-0.000	Flange	1.000 A687	0	1.000 A325N	1	0.000 A325N	0	0.000 A325N	0	0.625 A325N	0	0.000 A325N	0	0.000 A325N	0

* Out-of-plane partial restraint assumed

Feed Line/Linear Appurtenances - Entered As Round Or Flat

Description	Face or Leg	Allow Shield	Exclude From Torque Calculation	Component Type	Placement ft	Face Offset in	Lateral Offset (Frac FW)	#	# Per Row	Clear Spacing in	Width or Diameter in	Perimeter in	Weight klf
HB114-1-0813U4-M5J(1-1/4)	B	No	No	Ar (CaAa)	120.000 - 0.000	-6.000	-0.4	4	2	1.000	1.540		0.001
LDF5-50A(7/8") *	B	No	No	Ar (CaAa)	120.000 - 0.000	-4.000	-0.34	4	4	1.000	1.090		0.000
2-1/4" Rigid Conduit	B	No	No	Ar (CaAa)	120.000 - 0.000	-6.000	-0.3	2	2	2.000	2.250		0.003
9207(5/16)	B	No	No	Ar (CaAa)	120.000 - 0.000	-6.000	-0.28	3	2	0.300	0.330		0.001
9207(5/16)	B	No	No	Ar (CaAa)	120.000 - 0.000	-6.000	-0.32	3	2	0.300	0.330		0.001
T-Brackets (Af) *	B	No	No	Af (CaAa)	120.000 - 0.000	-4.000	-0.43	1	1	1.000	1.000		0.008
2-1/4" Rigid Conduit	C	No	No	Ar (CaAa)	110.000 - 0.000	-4.000	0.26	1	1	1.000	2.250		0.003
LDF7-50A(1-5/8)	C	No	No	Ar (CaAa)	110.000 - 0.000	-4.000	0.35	6	6	1.000	1.980		0.001
PWRT-606-S(7/8)	C	No	No	Ar (CaAa)	110.000 - 0.000	-7.000	0.35	9	9	1.000	0.920		0.001

Description	Face or Leg	Allow Shield	Exclude From Torque Calculation	Component Type	Placement ft	Face Offset in	Lateral Offset (Frac FW)	#	# Per Row	Clear Spacing in	Width or Diameter in	Perimeter in	Weight klf
T-Brackets (Af) *	C	No	No	Af (CaAa)	110.000 - 0.000	-5.000	0.43	1	1	1.000	1.000		0.008
HCS 2.0 Part 3(1-1/2)	C	No	No	Ar (CaAa)	100.000 - 0.000	-2.000	-0.45	1	1	1.000	1.550		0.002
T-Brackets (Af) *	C	No	No	Af (CaAa)	100.000 - 0.000	-4.000	-0.43	1	1	1.000	1.000		0.008
LDF4-50A(1/2) *	A	No	No	Ar (CaAa)	44.000 - 0.000	-4.000	0.37	1	1	0.500	0.630		0.000
Safety Line 3/8 *	A	No	No	Ar (CaAa)	120.000 - 0.000	0.000	0.47	1	1	0.375	0.375		0.000

Feed Line/Linear Appurtenances - Entered As Area

Description	Face or Leg	Allow Shield	Exclude From Torque Calculation	Component Type	Placement ft	Total Number	C_AA_A ft^2/ft	Weight klf
*								

Feed Line/Linear Appurtenances Section Areas

Tower Section	Tower Elevation ft	Face	A_R ft^2	A_F ft^2	C_AA_A In Face ft^2	C_AA_A Out Face ft^2	Weight K
T1	120.000-117.667	A	0.000	0.000	0.087	0.000	0.001
		B	0.000	0.000	4.356	0.000	0.056
		C	0.000	0.000	0.000	0.000	0.000
T2	117.667-110.000	A	0.000	0.000	0.287	0.000	0.002
		B	0.000	0.000	14.311	0.000	0.185
		C	0.000	0.000	0.000	0.000	0.000
T3	110.000-90.000	A	0.000	0.000	0.750	0.000	0.004
		B	0.000	0.000	37.333	0.000	0.482
		C	0.000	0.000	51.370	0.000	0.588
T4	90.000-70.000	A	0.000	0.000	0.750	0.000	0.004
		B	0.000	0.000	37.333	0.000	0.482
		C	0.000	0.000	54.587	0.000	0.689
T5	70.000-52.615	A	0.000	0.000	0.652	0.000	0.004
		B	0.000	0.000	32.453	0.000	0.419
		C	0.000	0.000	47.451	0.000	0.599
T6	52.615-50.000	A	0.000	0.000	0.098	0.000	0.001
		B	0.000	0.000	4.881	0.000	0.063
		C	0.000	0.000	7.136	0.000	0.090
T7	50.000-40.000	A	0.000	0.000	0.627	0.000	0.003
		B	0.000	0.000	18.667	0.000	0.241
		C	0.000	0.000	27.293	0.000	0.344
T8	40.000-20.000	A	0.000	0.000	2.010	0.000	0.007

Tower Section	Tower Elevation ft	Face	A_R ft^2	A_F ft^2	C_AA_A In Face ft^2	C_AA_A Out Face ft^2	Weight K
		B	0.000	0.000	37.333	0.000	0.482
		C	0.000	0.000	54.587	0.000	0.689
T9	20.000-0.000	A	0.000	0.000	2.010	0.000	0.007
		B	0.000	0.000	37.333	0.000	0.482
		C	0.000	0.000	54.587	0.000	0.689

Feed Line/Linear Appurtenances Section Areas - With Ice

Tower Section	Tower Elevation ft	Face or Leg	Ice Thickness in	A_R ft^2	A_F ft^2	C_AA_A In Face ft^2	C_AA_A Out Face ft^2	Weight K
T1	120.000-117.667	A	0.966	0.000	0.000	0.538	0.000	0.004
		B		0.000	0.000	10.508	0.000	0.136
		C		0.000	0.000	0.000	0.000	0.000
T2	117.667-110.000	A	0.962	0.000	0.000	1.763	0.000	0.014
		B		0.000	0.000	34.462	0.000	0.446
		C		0.000	0.000	0.000	0.000	0.000
T3	110.000-90.000	A	0.950	0.000	0.000	4.549	0.000	0.035
		B		0.000	0.000	89.412	0.000	1.155
		C		0.000	0.000	116.377	0.000	1.512
T4	90.000-70.000	A	0.929	0.000	0.000	4.465	0.000	0.034
		B		0.000	0.000	88.585	0.000	1.139
		C		0.000	0.000	122.814	0.000	1.649
T5	70.000-52.615	A	0.904	0.000	0.000	3.796	0.000	0.028
		B		0.000	0.000	76.167	0.000	0.974
		C		0.000	0.000	106.173	0.000	1.413
T6	52.615-50.000	A	0.888	0.000	0.000	0.563	0.000	0.004
		B		0.000	0.000	11.372	0.000	0.145
		C		0.000	0.000	15.910	0.000	0.210
T7	50.000-40.000	A	0.877	0.000	0.000	3.082	0.000	0.023
		B		0.000	0.000	43.267	0.000	0.550
		C		0.000	0.000	60.691	0.000	0.799
T8	40.000-20.000	A	0.842	0.000	0.000	8.745	0.000	0.063
		B		0.000	0.000	85.159	0.000	1.075
		C		0.000	0.000	120.422	0.000	1.565
T9	20.000-0.000	A	0.754	0.000	0.000	8.045	0.000	0.054
		B		0.000	0.000	81.705	0.000	1.012
		C		0.000	0.000	118.012	0.000	1.482

Feed Line Center of Pressure

Section	Elevation ft	CP_X in	CP_Z in	CP_X Ice in	CP_Z Ice in
T1	120.000-117.667	-0.583	-6.011	-0.575	-6.636
T2	117.667-110.000	-0.950	-8.942	-0.772	-8.424
T3	110.000-90.000	-6.391	-5.713	-6.422	-5.475
T4	90.000-70.000	-5.899	-5.355	-5.938	-5.100
T5	70.000-52.615	-6.297	-5.802	-6.613	-5.758
T6	52.615-50.000	-6.265	-5.747	-6.555	-5.630
T7	50.000-40.000	-5.134	-4.733	-4.870	-4.080
T8	40.000-20.000	-6.043	-5.926	-6.987	-6.444
T9	20.000-0.000	-7.027	-7.036	-8.940	-8.192

Shielding Factor Ka

Tower Section	Feed Line Record No.	Description	Feed Line Segment Elev.	K_a No Ice	K_a Ice
T1	1	HB114-1-0813U4-M5J(1-1/4)	117.67 - 120.00	0.6000	0.4859
T1	2	LDF5-50A(7/8")	117.67 - 120.00	0.6000	0.4859
T1	5	2-1/4" Rigid Conduit	117.67 - 120.00	0.6000	0.4859
T1	6	9207(5/16)	117.67 - 120.00	0.6000	0.4859
T1	7	9207(5/16)	117.67 - 120.00	0.6000	0.4859
T1	8	T-Brackets (Af)	117.67 - 120.00	0.6000	0.4859
T1	26	Safety Line 3/8	117.67 - 120.00	0.6000	0.4859
T2	1	HB114-1-0813U4-M5J(1-1/4)	110.00 - 117.67	0.6000	0.6000
T2	2	LDF5-50A(7/8")	110.00 - 117.67	0.6000	0.6000
T2	5	2-1/4" Rigid Conduit	110.00 - 117.67	0.6000	0.6000
T2	6	9207(5/16)	110.00 - 117.67	0.6000	0.6000
T2	7	9207(5/16)	110.00 - 117.67	0.6000	0.6000
T2	8	T-Brackets (Af)	110.00 - 117.67	0.6000	0.6000
T2	26	Safety Line 3/8	110.00 - 117.67	0.6000	0.6000
T3	1	HB114-1-0813U4-M5J(1-1/4)	90.00 - 110.00	0.6000	0.6000
T3	2	LDF5-50A(7/8")	90.00 - 110.00	0.6000	0.6000
T3	5	2-1/4" Rigid Conduit	90.00 - 110.00	0.6000	0.6000
T3	6	9207(5/16)	90.00 - 110.00	0.6000	0.6000
T3	7	9207(5/16)	90.00 - 110.00	0.6000	0.6000
T3	8	T-Brackets (Af)	90.00 - 110.00	0.6000	0.6000
T3	13	2-1/4" Rigid Conduit	90.00 - 110.00	0.6000	0.6000
T3	14	LDF7-50A(1-5/8)	90.00 - 110.00	0.6000	0.6000
T3	17	PWRT-606-S(7/8)	90.00 - 110.00	0.6000	0.6000
T3	18	T-Brackets (Af)	90.00 - 110.00	0.6000	0.6000
T3	20	HCS 2.0 Part 3(1-1/2)	90.00 - 100.00	0.6000	0.6000
T3	21	T-Brackets (Af)	90.00 - 100.00	0.6000	0.6000
T3	26	Safety Line 3/8	90.00 - 110.00	0.6000	0.6000
T4	1	HB114-1-0813U4-M5J(1-1/4)	70.00 - 90.00	0.6000	0.5592
T4	2	LDF5-50A(7/8")	70.00 - 90.00	0.6000	0.5592
T4	5	2-1/4" Rigid Conduit	70.00 - 90.00	0.6000	0.5592
T4	6	9207(5/16)	70.00 - 90.00	0.6000	0.5592
T4	7	9207(5/16)	70.00 - 90.00	0.6000	0.5592
T4	8	T-Brackets (Af)	70.00 - 90.00	0.6000	0.5592
T4	13	2-1/4" Rigid Conduit	70.00 - 90.00	0.6000	0.5592
T4	14	LDF7-50A(1-5/8)	70.00 - 90.00	0.6000	0.5592
T4	17	PWRT-606-S(7/8)	70.00 - 90.00	0.6000	0.5592
T4	18	T-Brackets (Af)	70.00 - 90.00	0.6000	0.5592

Tower Section	Feed Line Record No.	Description	Feed Line Segment Elev.	K_a No Ice	K_a Ice
T4	20	HCS 2.0 Part 3(1-1/2)	70.00 - 90.00	0.6000	0.5592
T4	21	T-Brackets (Af)	70.00 - 90.00	0.6000	0.5592
T4	26	Safety Line 3/8	70.00 - 90.00	0.6000	0.5592
T5	1	HB114-1-0813U4-M5J(1-1/4)	52.61 - 70.00	0.6000	0.6000
T5	2	LDF5-50A(7/8")	52.61 - 70.00	0.6000	0.6000
T5	5	2-1/4" Rigid Conduit	52.61 - 70.00	0.6000	0.6000
T5	6	9207(5/16)	52.61 - 70.00	0.6000	0.6000
T5	7	9207(5/16)	52.61 - 70.00	0.6000	0.6000
T5	8	T-Brackets (Af)	52.61 - 70.00	0.6000	0.6000
T5	13	2-1/4" Rigid Conduit	52.61 - 70.00	0.6000	0.6000
T5	14	LDF7-50A(1-5/8)	52.61 - 70.00	0.6000	0.6000
T5	17	PWRT-606-S(7/8)	52.61 - 70.00	0.6000	0.6000
T5	18	T-Brackets (Af)	52.61 - 70.00	0.6000	0.6000
T5	20	HCS 2.0 Part 3(1-1/2)	52.61 - 70.00	0.6000	0.6000
T5	21	T-Brackets (Af)	52.61 - 70.00	0.6000	0.6000
T5	26	Safety Line 3/8	52.61 - 70.00	0.6000	0.6000
T6	1	HB114-1-0813U4-M5J(1-1/4)	50.00 - 52.61	0.6000	0.6000
T6	2	LDF5-50A(7/8")	50.00 - 52.61	0.6000	0.6000
T6	5	2-1/4" Rigid Conduit	50.00 - 52.61	0.6000	0.6000
T6	6	9207(5/16)	50.00 - 52.61	0.6000	0.6000
T6	7	9207(5/16)	50.00 - 52.61	0.6000	0.6000
T6	8	T-Brackets (Af)	50.00 - 52.61	0.6000	0.6000
T6	13	2-1/4" Rigid Conduit	50.00 - 52.61	0.6000	0.6000
T6	14	LDF7-50A(1-5/8)	50.00 - 52.61	0.6000	0.6000
T6	17	PWRT-606-S(7/8)	50.00 - 52.61	0.6000	0.6000
T6	18	T-Brackets (Af)	50.00 - 52.61	0.6000	0.6000
T6	20	HCS 2.0 Part 3(1-1/2)	50.00 - 52.61	0.6000	0.6000
T6	21	T-Brackets (Af)	50.00 - 52.61	0.6000	0.6000
T6	26	Safety Line 3/8	50.00 - 52.61	0.6000	0.6000
T7	1	HB114-1-0813U4-M5J(1-1/4)	40.00 - 50.00	0.6000	0.4396
T7	2	LDF5-50A(7/8")	40.00 - 50.00	0.6000	0.4396
T7	5	2-1/4" Rigid Conduit	40.00 - 50.00	0.6000	0.4396
T7	6	9207(5/16)	40.00 - 50.00	0.6000	0.4396
T7	7	9207(5/16)	40.00 - 50.00	0.6000	0.4396
T7	8	T-Brackets (Af)	40.00 - 50.00	0.6000	0.4396
T7	13	2-1/4" Rigid Conduit	40.00 - 50.00	0.6000	0.4396
T7	14	LDF7-50A(1-5/8)	40.00 - 50.00	0.6000	0.4396
T7	17	PWRT-606-S(7/8)	40.00 - 50.00	0.6000	0.4396
T7	18	T-Brackets (Af)	40.00 - 50.00	0.6000	0.4396
T7	20	HCS 2.0 Part 3(1-1/2)	40.00 - 50.00	0.6000	0.4396
T7	21	T-Brackets (Af)	40.00 - 50.00	0.6000	0.4396
T7	24	LDF4-50A(1/2)	40.00 - 44.00	0.6000	0.4396
T7	26	Safety Line 3/8	40.00 - 50.00	0.6000	0.4396
T8	1	HB114-1-0813U4-M5J(1-1/4)	20.00 - 40.00	0.6000	0.5641
T8	2	LDF5-50A(7/8")	20.00 - 40.00	0.6000	0.5641
T8	5	2-1/4" Rigid Conduit	20.00 - 40.00	0.6000	0.5641
T8	6	9207(5/16)	20.00 - 40.00	0.6000	0.5641
T8	7	9207(5/16)	20.00 - 40.00	0.6000	0.5641
T8	8	T-Brackets (Af)	20.00 - 40.00	0.6000	0.5641
T8	13	2-1/4" Rigid Conduit	20.00 - 40.00	0.6000	0.5641
T8	14	LDF7-50A(1-5/8)	20.00 - 40.00	0.6000	0.5641
T8	17	PWRT-606-S(7/8)	20.00 - 40.00	0.6000	0.5641
T8	18	T-Brackets (Af)	20.00 - 40.00	0.6000	0.5641
T8	20	HCS 2.0 Part 3(1-1/2)	20.00 - 40.00	0.6000	0.5641
T8	21	T-Brackets (Af)	20.00 - 40.00	0.6000	0.5641
T8	24	LDF4-50A(1/2)	20.00 - 40.00	0.6000	0.5641
T8	26	Safety Line 3/8	20.00 - 40.00	0.6000	0.5641
T9	1	HB114-1-0813U4-M5J(1-1/4	0.00 - 20.00	0.6000	0.6000

Tower Section	Feed Line Record No.	Description	Feed Line Segment Elev.	K_a No Ice	K_a Ice
		)			
T9	2	LDF5-50A(7/8")	0.00 - 20.00	0.6000	0.6000
T9	5	2-1/4" Rigid Conduit	0.00 - 20.00	0.6000	0.6000
T9	6	9207(5/16)	0.00 - 20.00	0.6000	0.6000
T9	7	9207(5/16)	0.00 - 20.00	0.6000	0.6000
T9	8	T-Brackets (Af)	0.00 - 20.00	0.6000	0.6000
T9	13	2-1/4" Rigid Conduit	0.00 - 20.00	0.6000	0.6000
T9	14	LDF7-50A(1-5/8)	0.00 - 20.00	0.6000	0.6000
T9	17	PWRT-606-S(7/8)	0.00 - 20.00	0.6000	0.6000
T9	18	T-Brackets (Af)	0.00 - 20.00	0.6000	0.6000
T9	20	HCS 2.0 Part 3(1-1/2)	0.00 - 20.00	0.6000	0.6000
T9	21	T-Brackets (Af)	0.00 - 20.00	0.6000	0.6000
T9	24	LDF4-50A(1/2)	0.00 - 20.00	0.6000	0.6000
T9	26	Safety Line 3/8	0.00 - 20.00	0.6000	0.6000

Discrete Tower Loads

Description	Face or Leg	Offset Type	Offsets: Horz Lateral Vert ft ft ft	Azimuth Adjustment °	Placement ft		C_AA_A Front ft^2	C_AA_A Side ft^2	Weight K
* CLEARWIRE *									
LLPX310R w/ Mount Pipe	A	From Leg	4.000	0.000	120.000	No Ice	3.880	2.360	0.057
			0.000			1/2" Ice	4.290	2.730	0.091
			-2.000			1" Ice	4.720	3.120	0.133
LLPX310R w/ Mount Pipe	B	From Leg	4.000	0.000	120.000	No Ice	3.880	2.360	0.057
			0.000			1/2" Ice	4.290	2.730	0.091
			-2.000			1" Ice	4.720	3.120	0.133
LLPX310R w/ Mount Pipe	C	From Leg	4.000	0.000	120.000	No Ice	3.880	2.360	0.057
			0.000			1/2" Ice	4.290	2.730	0.091
			-2.000			1" Ice	4.720	3.120	0.133
FDD_R6_RRH	A	From Leg	4.000	0.000	120.000	No Ice	1.533	0.684	0.033
			0.000			1/2" Ice	1.690	0.800	0.045
			-2.000			1" Ice	1.854	0.923	0.058
FDD_R6_RRH	B	From Leg	4.000	0.000	120.000	No Ice	1.533	0.684	0.033
			0.000			1/2" Ice	1.690	0.800	0.045
			-2.000			1" Ice	1.854	0.923	0.058
FDD_R6_RRH	C	From Leg	4.000	0.000	120.000	No Ice	1.533	0.684	0.033
			0.000			1/2" Ice	1.690	0.800	0.045
			-2.000			1" Ice	1.854	0.923	0.058
5' x 2" Pipe Mount	B	From Leg	4.000	0.000	120.000	No Ice	1.188	1.188	0.018
			0.000			1/2" Ice	1.496	1.496	0.027
			0.000			1" Ice	1.807	1.807	0.040
5' x 2" Pipe Mount	C	From Leg	4.000	0.000	120.000	No Ice	1.188	1.188	0.018
			0.000			1/2" Ice	1.496	1.496	0.027
			0.000			1" Ice	1.807	1.807	0.040
(2) 5' x 2" Pipe Mount	B	From Leg	4.000	0.000	120.000	No Ice	1.188	1.188	0.018
			0.000			1/2" Ice	1.496	1.496	0.027
			0.000			1" Ice	1.807	1.807	0.040
5' x 2" Pipe Mount	C	From Leg	4.000	0.000	120.000	No Ice	1.188	1.188	0.018
			0.000			1/2" Ice	1.496	1.496	0.027
			0.000			1" Ice	1.807	1.807	0.040

Description	Face or Leg	Offset Type	Offsets: Horz Lateral Vert ft ft ft	Azimuth Adjustment °	Placement ft		C_AA_A Front ft^2	C_AA_A Side ft^2	Weight K
(2) Side Arm Mount [SO 301-1]	B	From Leg	5.000 0.000 0.000	0.000	120.000	No Ice 1/2" Ice 1" Ice	0.460 0.650 0.870	0.910 1.300 1.710	0.023 0.033 0.047
Side Arm Mount [SO 301-1]	C	From Leg	5.000 0.000 0.000	0.000	120.000	No Ice 1/2" Ice 1" Ice	0.460 0.650 0.870	0.910 1.300 1.710	0.023 0.033 0.047
* * SPRINT *									
P40-16-XLPP-RR-A w/ Mount Pipe	A	From Leg	4.000 0.000 0.000	0.000	120.000	No Ice 1/2" Ice 1" Ice	7.240 7.730 8.240	3.310 3.730 4.160	0.084 0.147 0.219
P40-16-XLPP-RR-A w/ Mount Pipe	B	From Leg	4.000 0.000 0.000	0.000	120.000	No Ice 1/2" Ice 1" Ice	7.240 7.730 8.240	3.310 3.730 4.160	0.084 0.147 0.219
P40-16-XLPP-RR-A w/ Mount Pipe	C	From Leg	4.000 0.000 0.000	0.000	120.000	No Ice 1/2" Ice 1" Ice	7.240 7.730 8.240	3.310 3.730 4.160	0.084 0.147 0.219
APXVTM14-C-120 w/ Mount Pipe	A	From Leg	4.000 0.000 0.000	0.000	120.000	No Ice 1/2" Ice 1" Ice	4.090 4.480 4.880	2.860 3.230 3.610	0.077 0.127 0.185
APXVTM14-C-120 w/ Mount Pipe	B	From Leg	4.000 0.000 0.000	0.000	120.000	No Ice 1/2" Ice 1" Ice	4.090 4.480 4.880	2.860 3.230 3.610	0.077 0.127 0.185
APXVTM14-C-120 w/ Mount Pipe	C	From Leg	4.000 0.000 0.000	0.000	120.000	No Ice 1/2" Ice 1" Ice	4.090 4.480 4.880	2.860 3.230 3.610	0.077 0.127 0.185
800 EXTERNAL NOTCH FILTER	A	From Leg	4.000 0.000 0.000	0.000	120.000	No Ice 1/2" Ice 1" Ice	0.660 0.763 0.873	0.289 0.364 0.446	0.011 0.017 0.024
800 EXTERNAL NOTCH FILTER	B	From Leg	4.000 0.000 0.000	0.000	120.000	No Ice 1/2" Ice 1" Ice	0.660 0.763 0.873	0.289 0.364 0.446	0.011 0.017 0.024
800 EXTERNAL NOTCH FILTER	C	From Leg	4.000 0.000 0.000	0.000	120.000	No Ice 1/2" Ice 1" Ice	0.660 0.763 0.873	0.289 0.364 0.446	0.011 0.017 0.024
1900MHz RRH (65MHz)	A	From Leg	4.000 0.000 0.000	0.000	120.000	No Ice 1/2" Ice 1" Ice	2.322 2.527 2.739	2.385 2.591 2.805	0.060 0.084 0.111
1900MHz RRH (65MHz)	B	From Leg	4.000 0.000 0.000	0.000	120.000	No Ice 1/2" Ice 1" Ice	2.322 2.527 2.739	2.385 2.591 2.805	0.060 0.084 0.111
1900MHz RRH (65MHz)	C	From Leg	4.000 0.000 0.000	0.000	120.000	No Ice 1/2" Ice 1" Ice	2.322 2.527 2.739	2.385 2.591 2.805	0.060 0.084 0.111
800MHZ RRH	A	From Leg	4.000 0.000 0.000	0.000	120.000	No Ice 1/2" Ice 1" Ice	2.134 2.320 2.512	1.773 1.946 2.127	0.053 0.074 0.098
800MHZ RRH	B	From Leg	4.000 0.000 0.000	0.000	120.000	No Ice 1/2" Ice 1" Ice	2.134 2.320 2.512	1.773 1.946 2.127	0.053 0.074 0.098
800MHZ RRH	C	From Leg	4.000 0.000 0.000	0.000	120.000	No Ice 1/2" Ice 1" Ice	2.134 2.320 2.512	1.773 1.946 2.127	0.053 0.074 0.098
ACU-A20-N	A	From Leg	4.000 0.000 0.000	0.000	120.000	No Ice 1/2" Ice 1" Ice	0.067 0.104 0.148	0.117 0.162 0.215	0.001 0.002 0.004
ACU-A20-N	B	From Leg	4.000	0.000	120.000	No Ice	0.067	0.117	0.001

Description	Face or Leg	Offset Type	Offsets: Horz Lateral Vert ft ft ft	Azimuth Adjustment °	Placement ft		C_AA_A Front ft^2	C_AA_A Side ft^2	Weight K
			0.000			1/2" Ice	0.104	0.162	0.002
			0.000			1" Ice	0.148	0.215	0.004
ACU-A20-N	C	From Leg	4.000	0.000	120.000	No Ice	0.067	0.117	0.001
			0.000			1/2" Ice	0.104	0.162	0.002
			0.000			1" Ice	0.148	0.215	0.004
TD-RRH8x20-25	A	From Leg	4.000	0.000	120.000	No Ice	3.704	1.294	0.066
			0.000			1/2" Ice	3.946	1.465	0.090
			0.000			1" Ice	4.196	1.642	0.117
TD-RRH8x20-25	B	From Leg	4.000	0.000	120.000	No Ice	3.704	1.294	0.066
			0.000			1/2" Ice	3.946	1.465	0.090
			0.000			1" Ice	4.196	1.642	0.117
TD-RRH8x20-25	C	From Leg	4.000	0.000	120.000	No Ice	3.704	1.294	0.066
			0.000			1/2" Ice	3.946	1.465	0.090
			0.000			1" Ice	4.196	1.642	0.117
5' x 2" Pipe Mount	A	From Leg	4.000	0.000	120.000	No Ice	1.188	1.188	0.018
			0.000			1/2" Ice	1.496	1.496	0.027
			0.000			1" Ice	1.807	1.807	0.040
5' x 2" Pipe Mount	B	From Leg	4.000	0.000	120.000	No Ice	1.188	1.188	0.018
			0.000			1/2" Ice	1.496	1.496	0.027
			0.000			1" Ice	1.807	1.807	0.040
5' x 2" Pipe Mount	C	From Leg	4.000	0.000	120.000	No Ice	1.188	1.188	0.018
			0.000			1/2" Ice	1.496	1.496	0.027
			0.000			1" Ice	1.807	1.807	0.040
Platform Mount [LP 405-1]	C	None		0.000	120.000	No Ice	20.880	20.880	1.800
						1/2" Ice	28.890	28.890	2.277
						1" Ice	37.040	37.040	2.868
*									
RRUS 32 B2	A	From Leg	4.000	0.000	110.000	No Ice	2.731	1.668	0.053
			0.000			1/2" Ice	2.953	1.855	0.074
			2.000			1" Ice	3.182	2.049	0.098
RRUS 32 B2	B	From Leg	4.000	0.000	110.000	No Ice	2.731	1.668	0.053
			0.000			1/2" Ice	2.953	1.855	0.074
			2.000			1" Ice	3.182	2.049	0.098
RRUS 32 B2	C	From Leg	4.000	0.000	110.000	No Ice	2.731	1.668	0.053
			0.000			1/2" Ice	2.953	1.855	0.074
			2.000			1" Ice	3.182	2.049	0.098
RRUS 32 B30	A	From Leg	4.000	0.000	110.000	No Ice	2.692	1.573	0.060
			0.000			1/2" Ice	2.912	1.756	0.080
			2.000			1" Ice	3.138	1.945	0.104
RRUS 32 B30	B	From Leg	4.000	0.000	110.000	No Ice	2.692	1.573	0.060
			0.000			1/2" Ice	2.912	1.756	0.080
			2.000			1" Ice	3.138	1.945	0.104
RRUS 32 B30	C	From Leg	4.000	0.000	110.000	No Ice	2.692	1.573	0.060
			0.000			1/2" Ice	2.912	1.756	0.080
			2.000			1" Ice	3.138	1.945	0.104
DC6-48-60-18-8F	B	From Leg	4.000	0.000	110.000	No Ice	1.212	1.212	0.033
			0.000			1/2" Ice	1.892	1.892	0.055
			2.000			1" Ice	2.105	2.105	0.080
DC6-48-60-18-8F	C	From Leg	4.000	0.000	110.000	No Ice	1.212	1.212	0.033
			0.000			1/2" Ice	1.892	1.892	0.055
			2.000			1" Ice	2.105	2.105	0.080
AIR 6419 B77G w/ Mount Pipe	A	From Leg	4.000	0.000	110.000	No Ice	4.320	2.490	0.078
			0.000			1/2" Ice	4.740	2.840	0.110
			2.000			1" Ice	5.170	3.210	0.147
AIR 6419 B77G w/ Mount Pipe	B	From Leg	4.000	0.000	110.000	No Ice	4.320	2.490	0.078
			0.000			1/2" Ice	4.740	2.840	0.110
			2.000			1" Ice	5.170	3.210	0.147

Description	Face or Leg	Offset Type	Offsets: Horz Lateral Vert ft ft ft	Azimuth Adjustment °	Placement ft		C_AA_A Front ft^2	C_AA_A Side ft^2	Weight K
AIR 6419 B77G w/ Mount Pipe	C	From Leg	4.000	0.000	110.000	No Ice	4.320	2.490	0.078
			0.000			1/2" Ice	4.740	2.840	0.110
			2.000			1" Ice	5.170	3.210	0.147
DMP65R-BU6D w/ Mount Pipe	A	From Leg	4.000	0.000	110.000	No Ice	11.960	5.970	0.115
			0.000			1/2" Ice	12.700	6.630	0.201
			2.000			1" Ice	13.460	7.300	0.298
DMP65R-BU6D w/ Mount Pipe	B	From Leg	4.000	0.000	110.000	No Ice	11.960	5.970	0.115
			0.000			1/2" Ice	12.700	6.630	0.201
			2.000			1" Ice	13.460	7.300	0.298
DMP65R-BU6D w/ Mount Pipe	C	From Leg	4.000	0.000	110.000	No Ice	11.960	5.970	0.115
			0.000			1/2" Ice	12.700	6.630	0.201
			2.000			1" Ice	13.460	7.300	0.298
TPA65R-BU6D w/ Mount Pipe	A	From Leg	4.000	0.000	110.000	No Ice	12.250	6.050	0.098
			0.000			1/2" Ice	13.000	6.710	0.185
			2.000			1" Ice	13.760	7.390	0.284
TPA65R-BU6D w/ Mount Pipe	B	From Leg	4.000	0.000	110.000	No Ice	12.250	6.050	0.098
			0.000			1/2" Ice	13.000	6.710	0.185
			2.000			1" Ice	13.760	7.390	0.284
TPA65R-BU6D w/ Mount Pipe	C	From Leg	4.000	0.000	110.000	No Ice	12.250	6.050	0.098
			0.000			1/2" Ice	13.000	6.710	0.185
			2.000			1" Ice	13.760	7.390	0.284
AIR 6449 N77 w/ Mount Pipe	A	From Leg	4.000	0.000	110.000	No Ice	3.650	2.720	0.110
			0.000			1/2" Ice	3.990	3.030	0.150
			2.000			1" Ice	4.350	3.360	0.196
AIR 6449 N77 w/ Mount Pipe	B	From Leg	4.000	0.000	110.000	No Ice	3.650	2.720	0.110
			0.000			1/2" Ice	3.990	3.030	0.150
			2.000			1" Ice	4.350	3.360	0.196
AIR 6449 N77 w/ Mount Pipe	C	From Leg	4.000	0.000	110.000	No Ice	3.650	2.720	0.110
			0.000			1/2" Ice	3.990	3.030	0.150
			2.000			1" Ice	4.350	3.360	0.196
RADIO 4478 B14	A	From Leg	4.000	0.000	110.000	No Ice	2.021	1.246	0.059
			0.000			1/2" Ice	2.200	1.396	0.077
			2.000			1" Ice	2.386	1.554	0.097
RADIO 4478 B14	B	From Leg	4.000	0.000	110.000	No Ice	2.021	1.246	0.059
			0.000			1/2" Ice	2.200	1.396	0.077
			2.000			1" Ice	2.386	1.554	0.097
RADIO 4478 B14	C	From Leg	4.000	0.000	110.000	No Ice	2.021	1.246	0.059
			0.000			1/2" Ice	2.200	1.396	0.077
			2.000			1" Ice	2.386	1.554	0.097
RRUS 4449 B5/B12	A	From Leg	4.000	0.000	110.000	No Ice	1.968	1.408	0.071
			0.000			1/2" Ice	2.144	1.564	0.090
			2.000			1" Ice	2.328	1.727	0.111
RRUS 4449 B5/B12	B	From Leg	4.000	0.000	110.000	No Ice	1.968	1.408	0.071
			0.000			1/2" Ice	2.144	1.564	0.090
			2.000			1" Ice	2.328	1.727	0.111
RRUS 4449 B5/B12	C	From Leg	4.000	0.000	110.000	No Ice	1.968	1.408	0.071
			0.000			1/2" Ice	2.144	1.564	0.090
			2.000			1" Ice	2.328	1.727	0.111
RRUS 4426 B66	A	From Leg	4.000	0.000	110.000	No Ice	1.644	0.725	0.048
			0.000			1/2" Ice	1.804	0.842	0.061
			2.000			1" Ice	1.972	0.969	0.076
RRUS 4426 B66	B	From Leg	4.000	0.000	110.000	No Ice	1.644	0.725	0.048
			0.000			1/2" Ice	1.804	0.842	0.061
			2.000			1" Ice	1.972	0.969	0.076
RRUS 4426 B66	C	From Leg	4.000	0.000	110.000	No Ice	1.644	0.725	0.048
			0.000			1/2" Ice	1.804	0.842	0.061
			2.000			1" Ice	1.972	0.969	0.076

Description	Face or Leg	Offset Type	Offsets: Horz Lateral Vert ft ft ft	Azimuth Adjustment °	Placement ft		C_AA_A Front ft^2	C_AA_A Side ft^2	Weight K
DC9-48-60-24-8C-EV	A	From Leg	4.000	0.000	110.000	No Ice	2.737	4.785	0.026
			0.000			1/2" Ice	2.963	5.065	0.063
			2.000			1" Ice	3.196	5.352	0.104
(2) 4' x 2" Pipe Mount	A	From Face	4.000	0.000	110.000	No Ice	0.785	0.785	0.029
			0.000			1/2" Ice	1.028	1.028	0.035
			0.000			1" Ice	1.281	1.281	0.044
(2) 4' x 2" Pipe Mount	B	From Face	4.000	0.000	110.000	No Ice	0.785	0.785	0.029
			0.000			1/2" Ice	1.028	1.028	0.035
			0.000			1" Ice	1.281	1.281	0.044
(2) 4' x 2" Pipe Mount	C	From Face	4.000	0.000	110.000	No Ice	0.785	0.785	0.029
			0.000			1/2" Ice	1.028	1.028	0.035
			0.000			1" Ice	1.281	1.281	0.044
5 Hor x 2" x 2" Tube Mount	A	From Face	1.000	0.000	110.000	No Ice	1.000	0.033	0.100
			0.000			1/2" Ice	1.348	0.059	0.110
			2.000			1" Ice	1.704	0.093	0.124
5 Hor x 2" x 2" Tube Mount	B	From Face	1.000	0.000	110.000	No Ice	1.000	0.033	0.100
			0.000			1/2" Ice	1.348	0.059	0.110
			2.000			1" Ice	1.704	0.093	0.124
5 Hor x 2" x 2" Tube Mount	C	From Face	1.000	0.000	110.000	No Ice	1.000	0.033	0.100
			0.000			1/2" Ice	1.348	0.059	0.110
			2.000			1" Ice	1.704	0.093	0.124
5 Hor x 2" x 2" Tube Mount	A	From Face	1.000	0.000	110.000	No Ice	1.000	0.033	0.100
			0.000			1/2" Ice	1.348	0.059	0.110
			-2.000			1" Ice	1.704	0.093	0.124
5 Hor x 2" x 2" Tube Mount	B	From Face	1.000	0.000	110.000	No Ice	1.000	0.033	0.100
			0.000			1/2" Ice	1.348	0.059	0.110
			-2.000			1" Ice	1.704	0.093	0.124
5 Hor x 2" x 2" Tube Mount	C	From Face	1.000	0.000	110.000	No Ice	1.000	0.033	0.100
			0.000			1/2" Ice	1.348	0.059	0.110
			-2.000			1" Ice	1.704	0.093	0.124
Pipe Mount [PM 601-3]	C	None		0.000	110.000	No Ice	3.170	3.170	0.195
						1/2" Ice	3.790	3.790	0.232
						1" Ice	4.420	4.420	0.279
Sector Mount [SM 406-3]	C	None		0.000	110.000	No Ice	19.760	19.760	0.923
						1/2" Ice	29.240	29.240	1.311
						1" Ice	38.800	38.800	1.845
*									
MX08FRO665-21 w/ Mount Pipe	A	From Leg	4.000	0.000	100.000	No Ice	8.010	4.230	0.108
			0.000			1/2" Ice	8.520	4.690	0.194
			0.000			1" Ice	9.040	5.160	0.292
MX08FRO665-21 w/ Mount Pipe	B	From Leg	4.000	0.000	100.000	No Ice	8.010	4.230	0.108
			0.000			1/2" Ice	8.520	4.690	0.194
			0.000			1" Ice	9.040	5.160	0.292
MX08FRO665-21 w/ Mount Pipe	C	From Leg	4.000	0.000	100.000	No Ice	8.010	4.230	0.108
			0.000			1/2" Ice	8.520	4.690	0.194
			0.000			1" Ice	9.040	5.160	0.292
TA08025-B604	A	From Leg	4.000	0.000	100.000	No Ice	1.964	0.981	0.064
			0.000			1/2" Ice	2.138	1.112	0.081
			0.000			1" Ice	2.320	1.250	0.100
TA08025-B604	B	From Leg	4.000	0.000	100.000	No Ice	1.964	0.981	0.064
			0.000			1/2" Ice	2.138	1.112	0.081
			0.000			1" Ice	2.320	1.250	0.100
TA08025-B604	C	From Leg	4.000	0.000	100.000	No Ice	1.964	0.981	0.064
			0.000			1/2" Ice	2.138	1.112	0.081
			0.000			1" Ice	2.320	1.250	0.100
TA08025-B605	A	From Leg	4.000	0.000	100.000	No Ice	1.964	1.129	0.075
			0.000			1/2" Ice	2.138	1.267	0.093

Description	Face or Leg	Offset Type	Offsets: Horz Lateral Vert ft ft ft	Azimuth Adjustment °	Placement ft		C_AA_A Front ft^2	C_AA_A Side ft^2	Weight K
			0.000			1" Ice	2.320	1.411	0.114
TA08025-B605	B	From Leg	4.000	0.000	100.000	No Ice	1.964	1.129	0.075
			0.000			1/2" Ice	2.138	1.267	0.093
			0.000			1" Ice	2.320	1.411	0.114
TA08025-B605	C	From Leg	4.000	0.000	100.000	No Ice	1.964	1.129	0.075
			0.000			1/2" Ice	2.138	1.267	0.093
			0.000			1" Ice	2.320	1.411	0.114
RDIDC-9181-PF-48	A	From Leg	4.000	0.000	100.000	No Ice	2.012	1.168	0.022
			0.000			1/2" Ice	2.189	1.311	0.040
			0.000			1" Ice	2.373	1.461	0.060
(2) 8' x 2" Mount Pipe	A	From Leg	4.000	0.000	100.000	No Ice	1.900	1.900	0.029
			0.000			1/2" Ice	2.728	2.728	0.044
			0.000			1" Ice	3.401	3.401	0.063
(2) 8' x 2" Mount Pipe	B	From Leg	4.000	0.000	100.000	No Ice	1.900	1.900	0.029
			0.000			1/2" Ice	2.728	2.728	0.044
			0.000			1" Ice	3.401	3.401	0.063
(2) 8' x 2" Mount Pipe	C	From Leg	4.000	0.000	100.000	No Ice	1.900	1.900	0.029
			0.000			1/2" Ice	2.728	2.728	0.044
			0.000			1" Ice	3.401	3.401	0.063
Commscope MTC3975083	C	None		0.000	100.000	No Ice	23.850	23.850	1.260
(3)						1/2" Ice	34.120	34.120	1.803
						1" Ice	44.390	44.390	2.345
*									
*									
BULLET III	C	From Leg	3.000	0.000	44.000	No Ice	0.066	0.066	0.000
			0.000			1/2" Ice	0.101	0.101	0.002
			2.000			1" Ice	0.144	0.144	0.003
Side Arm Mount [SO 701-1]	C	From Leg	1.500	0.000	44.000	No Ice	0.850	1.670	0.065
			0.000			1/2" Ice	1.140	2.340	0.079
			0.000			1" Ice	1.430	3.010	0.093
*									

Dishes

Description	Face or Leg	Dish Type	Offset Type	Offsets: Horz Lateral Vert ft	Azimuth Adjustment °	3 dB Beam Width °	Elevation ft	Outside Diameter ft		Aperture Area ft^2	Weight K
* CLEARWIRE *											
A-ANT-23G-2-C	B	Paraboloid w/Shroud (HP)	From Leg	5.000	-10.000		120.000	2.175	No Ice	3.720	0.012
				0.000					1/2" Ice	4.010	0.030
				2.000					1" Ice	4.300	0.050
A-ANT-23G-2-C	B	Paraboloid w/Shroud (HP)	From Leg	5.000	90.000		120.000	2.175	No Ice	3.720	0.012
				0.000					1/2" Ice	4.010	0.030
				2.000					1" Ice	4.300	0.050
A-ANT-23G-2-C	C	Paraboloid w/Shroud (HP)	From Leg	5.000	10.000		120.000	2.175	No Ice	3.720	0.012
				0.000					1/2" Ice	4.010	0.030
				2.000					1" Ice	4.300	0.050
*											

Truss-Leg Properties

Section Designation	Area	Area Ice	Self Weight	Ice Weight	Equiv. Diameter	Equiv. Diameter Ice	Leg Area
	in^2	in^2	K	K	in	in	in^2
Pirod 105245	1090.334	2685.836	0.677	0.217	7.572	18.652	5.301
Pirod 105217	2130.748	4920.430	0.619	0.397	7.398	17.085	5.301
Pirod 105217 w/ (2) 1.25 Tierod	2297.598	4775.669	0.793	0.355	7.978	16.582	7.753

Load Combinations

Comb. No.	Description
1	Dead Only
2	1.2 Dead+1.0 Wind 0 deg - No Ice
3	1.2D+1.0W (pattern 1) 0 deg - No Ice
4	1.2D+1.0W (pattern 2) 0 deg - No Ice
5	0.9 Dead+1.0 Wind 0 deg - No Ice
6	1.2 Dead+1.0 Wind 30 deg - No Ice
7	1.2D+1.0W (pattern 1) 30 deg - No Ice
8	1.2D+1.0W (pattern 2) 30 deg - No Ice
9	0.9 Dead+1.0 Wind 30 deg - No Ice
10	1.2 Dead+1.0 Wind 60 deg - No Ice
11	1.2D+1.0W (pattern 1) 60 deg - No Ice
12	1.2D+1.0W (pattern 2) 60 deg - No Ice
13	0.9 Dead+1.0 Wind 60 deg - No Ice
14	1.2 Dead+1.0 Wind 90 deg - No Ice
15	1.2D+1.0W (pattern 1) 90 deg - No Ice
16	1.2D+1.0W (pattern 2) 90 deg - No Ice
17	0.9 Dead+1.0 Wind 90 deg - No Ice
18	1.2 Dead+1.0 Wind 120 deg - No Ice
19	1.2D+1.0W (pattern 1) 120 deg - No Ice
20	1.2D+1.0W (pattern 2) 120 deg - No Ice
21	0.9 Dead+1.0 Wind 120 deg - No Ice
22	1.2 Dead+1.0 Wind 150 deg - No Ice
23	1.2D+1.0W (pattern 1) 150 deg - No Ice
24	1.2D+1.0W (pattern 2) 150 deg - No Ice
25	0.9 Dead+1.0 Wind 150 deg - No Ice
26	1.2 Dead+1.0 Wind 180 deg - No Ice
27	1.2D+1.0W (pattern 1) 180 deg - No Ice
28	1.2D+1.0W (pattern 2) 180 deg - No Ice
29	0.9 Dead+1.0 Wind 180 deg - No Ice
30	1.2 Dead+1.0 Wind 210 deg - No Ice
31	1.2D+1.0W (pattern 1) 210 deg - No Ice
32	1.2D+1.0W (pattern 2) 210 deg - No Ice
33	0.9 Dead+1.0 Wind 210 deg - No Ice
34	1.2 Dead+1.0 Wind 240 deg - No Ice
35	1.2D+1.0W (pattern 1) 240 deg - No Ice
36	1.2D+1.0W (pattern 2) 240 deg - No Ice
37	0.9 Dead+1.0 Wind 240 deg - No Ice
38	1.2 Dead+1.0 Wind 270 deg - No Ice
39	1.2D+1.0W (pattern 1) 270 deg - No Ice
40	1.2D+1.0W (pattern 2) 270 deg - No Ice
41	0.9 Dead+1.0 Wind 270 deg - No Ice
42	1.2 Dead+1.0 Wind 300 deg - No Ice

Comb. No.	Description
43	1.2D+1.0W (pattern 1) 300 deg - No Ice
44	1.2D+1.0W (pattern 2) 300 deg - No Ice
45	0.9 Dead+1.0 Wind 300 deg - No Ice
46	1.2 Dead+1.0 Wind 330 deg - No Ice
47	1.2D+1.0W (pattern 1) 330 deg - No Ice
48	1.2D+1.0W (pattern 2) 330 deg - No Ice
49	0.9 Dead+1.0 Wind 330 deg - No Ice
50	1.2 Dead+1.0 Ice+1.0 Temp
51	1.2 Dead+1.0 Wind 0 deg+1.0 Ice+1.0 Temp
52	1.2 Dead+1.0 Wind 30 deg+1.0 Ice+1.0 Temp
53	1.2 Dead+1.0 Wind 60 deg+1.0 Ice+1.0 Temp
54	1.2 Dead+1.0 Wind 90 deg+1.0 Ice+1.0 Temp
55	1.2 Dead+1.0 Wind 120 deg+1.0 Ice+1.0 Temp
56	1.2 Dead+1.0 Wind 150 deg+1.0 Ice+1.0 Temp
57	1.2 Dead+1.0 Wind 180 deg+1.0 Ice+1.0 Temp
58	1.2 Dead+1.0 Wind 210 deg+1.0 Ice+1.0 Temp
59	1.2 Dead+1.0 Wind 240 deg+1.0 Ice+1.0 Temp
60	1.2 Dead+1.0 Wind 270 deg+1.0 Ice+1.0 Temp
61	1.2 Dead+1.0 Wind 300 deg+1.0 Ice+1.0 Temp
62	1.2 Dead+1.0 Wind 330 deg+1.0 Ice+1.0 Temp
63	Dead+Wind 0 deg - Service
64	Dead+Wind 30 deg - Service
65	Dead+Wind 60 deg - Service
66	Dead+Wind 90 deg - Service
67	Dead+Wind 120 deg - Service
68	Dead+Wind 150 deg - Service
69	Dead+Wind 180 deg - Service
70	Dead+Wind 210 deg - Service
71	Dead+Wind 240 deg - Service
72	Dead+Wind 270 deg - Service
73	Dead+Wind 300 deg - Service
74	Dead+Wind 330 deg - Service

Maximum Member Forces

Section No.	Elevation ft	Component Type	Condition	Gov. Load Comb.	Axial K	Major Axis Moment kip-ft	Minor Axis Moment kip-ft
T1	120 - 117.667	Leg	Max Tension	10	0.110	0.000	0.000
			Max. Compression	53	-2.782	0.055	-0.012
			Max. Mx	34	-1.406	-0.262	0.080
			Max. My	2	-1.146	-0.036	-0.264
			Max. Vy	14	-1.425	-0.000	-0.000
			Max. Vx	2	1.403	-0.000	-0.000
		Diagonal	Max Tension	14	2.638	0.000	0.000
			Max. Compression	14	-2.705	0.000	0.000
			Max. Mx	52	0.289	0.002	0.000
			Max. My	10	-0.638	0.000	-0.000
			Max. Vy	52	-0.003	0.000	0.000
			Max. Vx	10	0.000	0.000	0.000
		Top Girt	Max Tension	10	1.834	-0.115	-0.001
			Max. Compression	34	-1.766	0.059	-0.001
			Max. Mx	2	0.929	-0.196	-0.000
			Max. My	2	0.378	-0.196	-0.007
			Max. Vy	2	0.119	-0.196	-0.000
			Max. Vx	2	-0.004	-0.196	-0.007
T2	117.667 - 110	Leg	Max Tension	13	11.298	0.553	-0.220
			Max. Compression	34	-13.925	-0.048	0.048
			Max. Mx	14	-12.253	0.614	-0.036

Section No.	Elevation ft	Component Type	Condition	Gov. Load Comb.	Axial K	Major Axis Moment kip-ft	Minor Axis Moment kip-ft
			Max. My	2	-13.689	-0.065	-0.591
			Max. Vy	34	-1.703	0.305	-0.106
			Max. Vx	2	-1.740	0.041	0.316
		Diagonal	Max Tension	14	2.366	0.000	0.000
			Max. Compression	14	-2.434	0.000	0.000
			Max. Mx	56	0.474	-0.002	-0.000
			Max. My	10	-1.961	-0.001	0.001
			Max. Vy	56	0.004	-0.002	-0.000
			Max. Vx	10	0.000	0.000	0.000
		Horizontal	Max Tension	26	0.279	0.000	0.000
			Max. Compression	5	-0.146	0.000	0.000
			Max. Mx	51	0.088	0.006	0.000
			Max. My	22	0.094	0.000	0.000
			Max. Vy	51	-0.007	0.000	0.000
			Max. Vx	22	-0.000	0.000	0.000
		Top Girt	Max Tension	34	0.230	0.000	0.000
			Max. Compression	13	-0.160	0.000	0.000
			Max. Mx	50	0.060	0.007	0.000
			Max. My	22	0.036	0.000	-0.000
			Max. Vy	50	-0.008	0.000	0.000
			Max. Vx	22	0.000	0.000	0.000
		Bottom Girt	Max Tension	26	0.793	0.000	0.000
			Max. Compression	34	-0.826	0.000	0.000
			Max. Mx	50	0.006	0.007	0.000
			Max. My	22	0.109	0.000	-0.000
			Max. Vy	50	-0.008	0.000	0.000
			Max. Vx	22	0.000	0.000	0.000
T3	110 - 90	Leg	Max Tension	13	65.727	1.071	0.027
			Max. Compression	2	-74.480	0.531	-0.001
			Max. Mx	2	-74.473	-1.153	0.008
			Max. My	6	-3.632	0.032	-1.064
			Max. Vy	2	-4.042	0.531	-0.001
			Max. Vx	6	3.343	0.016	0.974
		Diagonal	Max Tension	6	4.713	0.000	0.000
			Max. Compression	30	-4.686	0.000	0.000
			Max. Mx	6	2.868	-0.004	-0.000
			Max. My	14	-4.152	-0.000	0.003
			Max. Vy	51	0.005	-0.003	0.000
			Max. Vx	14	-0.001	0.000	0.000
		Horizontal	Max Tension	26	1.306	0.000	0.000
			Max. Compression	5	-0.996	0.000	0.000
			Max. Mx	51	0.173	0.007	0.000
			Max. My	38	0.164	0.000	-0.000
			Max. Vy	51	-0.007	0.000	0.000
			Max. Vx	38	0.000	0.000	0.000
		Top Girt	Max Tension	34	1.614	0.000	0.000
			Max. Compression	10	-1.604	0.000	0.000
			Max. Mx	50	0.016	0.006	0.000
			Max. My	22	-0.001	0.000	-0.000
			Max. Vy	50	-0.007	0.000	0.000
			Max. Vx	22	0.000	0.000	0.000
		Bottom Girt	Max Tension	26	2.282	0.000	0.000
			Max. Compression	2	-2.267	0.000	0.000
			Max. Mx	50	0.070	0.008	0.000
			Max. My	22	0.411	0.000	-0.000
			Max. Vy	50	-0.008	0.000	0.000
			Max. Vx	22	0.000	0.000	0.000
T4	90 - 70	Leg	Max Tension	13	123.764	2.442	-0.020
			Max. Compression	2	-136.312	-0.449	-0.020
			Max. Mx	2	-136.303	-2.664	-0.100
			Max. My	22	-5.869	0.070	2.088

Section No.	Elevation ft	Component Type	Condition	Gov. Load Comb.	Axial K	Major Axis Moment kip-ft	Minor Axis Moment kip-ft
			Max. Vy	2	-4.432	-0.449	-0.020
			Max. Vx	22	3.523	-0.003	0.328
		Diagonal	Max Tension	6	7.329	-0.004	-0.001
			Max. Compression	30	-7.372	0.000	0.000
			Max. Mx	2	2.871	-0.007	-0.002
			Max. My	6	-4.270	0.002	0.005
			Max. Vy	51	0.007	-0.005	0.001
			Max. Vx	6	-0.002	0.002	0.005
		Secondary Horizontal	Max Tension	6	3.187	-0.000	0.001
			Max. Compression	6	-3.064	-0.004	-0.002
			Max. Mx	2	-1.408	-0.011	-0.005
			Max. My	6	0.070	-0.011	-0.006
			Max. Vy	60	-0.011	-0.007	-0.000
			Max. Vx	6	-0.003	0.000	0.000
		Top Girt	Max Tension	2	1.987	0.000	0.000
			Max. Compression	10	-1.818	0.000	0.000
			Max. Mx	50	0.028	0.011	0.000
			Max. My	22	-0.351	0.000	-0.000
			Max. Vy	50	-0.011	0.000	0.000
			Max. Vx	22	0.000	0.000	0.000
		Bottom Girt	Max Tension	26	2.797	0.000	0.000
			Max. Compression	2	-3.160	0.000	0.000
			Max. Mx	50	0.066	0.014	0.000
			Max. My	22	0.732	0.000	-0.000
			Max. Vy	50	-0.012	0.000	0.000
			Max. Vx	22	0.000	0.000	0.000
T5	70 - 52.6146	Leg	Max Tension	29	167.965	-0.172	-0.003
			Max. Compression	2	-183.575	0.102	0.005
			Max. Mx	2	-136.336	4.015	0.149
			Max. My	22	-5.544	-0.151	-3.204
			Max. Vy	2	-4.467	4.015	0.149
			Max. Vx	22	3.538	-0.151	-3.204
		Diagonal	Max Tension	6	6.298	0.000	0.000
			Max. Compression	30	-6.828	0.000	0.000
			Max. Mx	30	3.016	-0.007	0.000
			Max. My	30	-6.800	0.001	0.004
			Max. Vy	51	0.007	-0.005	-0.000
			Max. Vx	30	-0.002	0.001	0.004
		Horizontal	Max Tension	26	2.419	0.000	0.000
			Max. Compression	5	-2.127	0.000	0.000
			Max. Mx	50	0.199	0.013	0.000
			Max. My	38	0.127	0.000	-0.000
			Max. Vy	50	-0.011	0.000	0.000
			Max. Vx	38	0.000	0.000	0.000
		Top Girt	Max Tension	34	2.278	0.000	0.000
			Max. Compression	6	-2.005	0.000	0.000
			Max. Mx	50	0.068	0.014	0.000
			Max. My	30	-0.650	0.000	0.000
			Max. Vy	50	-0.012	0.000	0.000
			Max. Vx	30	-0.000	0.000	0.000
T6	52.6146 - 50	Leg	Max Tension	29	177.157	-0.196	0.027
			Max. Compression	2	-193.403	3.436	0.128
			Max. Mx	2	-193.403	3.436	0.128
			Max. My	22	-7.081	0.047	-1.965
			Max. Vy	2	-5.553	3.436	0.128
			Max. Vx	22	3.469	0.047	-1.965
		Diagonal	Max Tension	6	4.953	0.000	0.000
			Max. Compression	6	-5.122	0.000	0.000
			Max. Mx	2	3.707	-0.006	0.000
			Max. My	34	-4.031	-0.000	0.001

Section No.	Elevation ft	Component Type	Condition	Gov. Load Comb.	Axial K	Major Axis Moment kip-ft	Minor Axis Moment kip-ft
			Max. Vy	51	0.007	-0.005	0.000
			Max. Vx	34	-0.000	0.000	0.000
		Horizontal	Max Tension	26	1.330	0.000	0.000
			Max. Compression	5	-1.119	0.000	0.000
			Max. Mx	50	0.192	0.013	0.000
			Max. My	38	0.113	0.000	-0.000
			Max. Vy	50	-0.011	0.000	0.000
			Max. Vx	38	0.000	0.000	0.000
		Bottom Girt	Max Tension	26	1.901	0.000	0.000
			Max. Compression	2	-1.733	0.000	0.000
			Max. Mx	50	0.055	0.016	0.000
			Max. My	22	-0.230	0.000	-0.000
			Max. Vy	50	-0.013	0.000	0.000
			Max. Vx	22	0.000	0.000	0.000
T7	50 - 40	Leg	Max Tension	29	171.757	-3.141	-0.131
			Max. Compression	2	-186.556	7.990	0.079
			Max. Mx	26	171.000	-8.495	-0.138
			Max. My	6	-8.289	-0.259	-14.512
			Max. Vy	10	0.650	-8.460	0.015
			Max. Vx	46	-1.349	-0.306	14.022
		Diagonal	Max Tension	5	6.092	0.000	0.000
			Max. Compression	26	-6.474	0.000	0.000
			Max. Mx	26	0.927	0.129	0.018
			Max. My	30	-0.329	-0.102	-0.031
			Max. Vy	6	-0.027	0.116	0.030
			Max. Vx	30	0.006	0.000	0.000
T8	40 - 20	Leg	Max Tension	29	182.158	-7.885	-0.075
			Max. Compression	2	-200.354	7.404	0.040
			Max. Mx	26	177.580	-8.495	-0.138
			Max. My	6	-9.672	-0.259	-14.512
			Max. Vy	10	-0.177	-7.853	0.025
			Max. Vx	46	0.797	-0.307	14.022
		Diagonal	Max Tension	3	2.793	0.056	-0.002
			Max. Compression	29	-3.264	0.000	0.000
			Max. Mx	2	1.622	0.126	0.009
			Max. My	28	-0.315	0.090	-0.012
			Max. Vy	2	-0.029	0.126	0.009
			Max. Vx	28	0.002	0.000	0.000
T9	20 - 0	Leg	Max Tension	29	190.957	-6.624	-0.067
			Max. Compression	2	-212.992	-0.000	-0.000
			Max. Mx	2	-207.486	7.404	0.040
			Max. My	6	-11.175	-0.284	-9.997
			Max. Vy	26	-0.768	-6.734	-0.072
			Max. Vx	46	1.064	-0.303	9.604
		Diagonal	Max Tension	29	4.409	0.000	0.000
			Max. Compression	2	-5.087	0.000	0.000
			Max. Mx	2	1.427	0.070	0.006
			Max. My	25	-3.060	-0.025	-0.013
			Max. Vy	52	0.024	0.034	-0.006
			Max. Vx	25	0.002	-0.025	-0.013

Maximum Reactions

Location	Condition	Gov. Load Comb.	Vertical K	Horizontal, X K	Horizontal, Z K
Leg C	Max. Vert	34	211.849	14.108	-8.427

Location	Condition	Gov. Load Comb.	Vertical K	Horizontal, X K	Horizontal, Z K
	Max. H_x	34	211.849	14.108	-8.427
	Max. H_z	13	-192.443	-12.908	7.707
	Min. Vert	13	-192.443	-12.908	7.707
	Min. H_x	13	-192.443	-12.908	7.707
	Min. H_z	34	211.849	14.108	-8.427
Leg B	Max. Vert	18	208.374	-14.019	-8.111
	Max. H_x	45	-188.238	12.706	7.338
	Max. H_z	45	-188.238	12.706	7.338
	Min. Vert	45	-188.238	12.706	7.338
	Min. H_x	18	208.374	-14.019	-8.111
	Min. H_z	18	208.374	-14.019	-8.111
Leg A	Max. Vert	2	219.482	-0.326	17.167
	Max. H_x	20	-67.897	0.947	-4.978
	Max. H_z	2	219.482	-0.326	17.167
	Min. Vert	29	-195.838	0.346	-15.474
	Min. H_x	44	89.796	-1.014	6.602
	Min. H_z	29	-195.838	0.346	-15.474

Tower Mast Reaction Summary

Load Combination	Vertical K	$Shear_x$ K	$Shear_z$ K	Overturning Moment, M_x kip-ft	Overturning Moment, M_z kip-ft	Torque kip-ft
Dead Only	27.358	0.000	0.000	-1.538	3.079	0.000
1.2 Dead+1.0 Wind 0 deg - No Ice	32.830	0.047	-23.005	-1805.995	-2.845	-5.857
1.2D+1.0W (pattern 1) 0 deg - No Ice	32.830	0.047	-21.093	-1586.117	-2.845	-5.850
1.2D+1.0W (pattern 2) 0 deg - No Ice	32.830	0.051	-16.844	-1443.200	-3.019	-5.772
0.9 Dead+1.0 Wind 0 deg - No Ice	24.622	0.047	-23.005	-1797.169	-3.753	-5.845
1.2 Dead+1.0 Wind 30 deg - No Ice	32.830	11.633	-19.964	-1574.346	-918.386	-5.392
1.2D+1.0W (pattern 1) 30 deg - No Ice	32.830	10.664	-18.304	-1383.487	-806.943	-5.289
1.2D+1.0W (pattern 2) 30 deg - No Ice	32.830	8.555	-14.618	-1256.833	-735.685	-5.322
0.9 Dead+1.0 Wind 30 deg - No Ice	24.622	11.633	-19.964	-1566.584	-915.021	-5.379
1.2 Dead+1.0 Wind 60 deg - No Ice	32.830	18.867	-10.866	-873.222	-1511.188	-3.775
1.2D+1.0W (pattern 1) 60 deg - No Ice	32.830	17.190	-9.909	-763.140	-1318.397	-3.576
1.2D+1.0W (pattern 2) 60 deg - No Ice	32.830	14.002	-8.053	-705.714	-1221.823	-3.707
0.9 Dead+1.0 Wind 60 deg - No Ice	24.622	18.867	-10.866	-868.642	-1504.993	-3.764
1.2 Dead+1.0 Wind 90 deg - No Ice	32.830	20.109	-0.084	-13.250	-1639.942	-4.049
1.2D+1.0W (pattern 1) 90 deg - No Ice	32.830	18.171	-0.084	-13.229	-1417.069	-3.807
1.2D+1.0W (pattern 2) 90 deg - No Ice	32.830	15.147	-0.088	-13.400	-1346.084	-4.003
0.9 Dead+1.0 Wind 90 deg - No Ice	24.622	20.109	-0.084	-12.690	-1633.037	-4.043
1.2 Dead+1.0 Wind 120 deg -	32.830	18.705	10.716	846.583	-1485.530	-0.012

Load Combination	Vertical K	$Shear_x$ K	$Shear_z$ K	Overturning Moment, M_x kip-ft	Overturning Moment, M_z kip-ft	Torque kip-ft
No Ice						
1.2D+1.0W (pattern 1) 120 deg - No Ice	32.830	17.037	9.763	737.068	-1293.713	0.186
1.2D+1.0W (pattern 2) 120 deg - No Ice	32.830	13.876	7.919	682.777	-1202.912	-0.024
0.9 Dead+1.0 Wind 120 deg - No Ice	24.622	18.705	10.716	843.094	-1479.490	-0.012
1.2 Dead+1.0 Wind 150 deg - No Ice	32.830	10.974	18.958	1498.862	-866.223	5.800
1.2D+1.0W (pattern 1) 150 deg - No Ice	32.830	10.027	17.336	1312.485	-757.408	5.898
1.2D+1.0W (pattern 2) 150 deg - No Ice	32.830	8.090	13.954	1202.881	-695.808	5.729
0.9 Dead+1.0 Wind 150 deg - No Ice	24.622	10.974	18.958	1492.329	-863.122	5.792
1.2 Dead+1.0 Wind 180 deg - No Ice	32.830	-0.037	22.494	1774.890	9.220	6.113
1.2D+1.0W (pattern 1) 180 deg - No Ice	32.830	-0.037	20.598	1556.890	9.219	6.106
1.2D+1.0W (pattern 2) 180 deg - No Ice	32.830	-0.041	16.509	1419.653	9.383	6.027
0.9 Dead+1.0 Wind 180 deg - No Ice	24.622	-0.037	22.494	1767.086	8.233	6.101
1.2 Dead+1.0 Wind 210 deg - No Ice	32.830	-11.500	19.776	1553.379	912.805	5.692
1.2D+1.0W (pattern 1) 210 deg - No Ice	32.830	-10.535	18.123	1363.242	801.820	5.584
1.2D+1.0W (pattern 2) 210 deg - No Ice	32.830	-8.452	14.482	1239.953	732.505	5.618
0.9 Dead+1.0 Wind 210 deg - No Ice	24.622	-11.500	19.776	1546.631	907.631	5.679
1.2 Dead+1.0 Wind 240 deg - No Ice	32.830	-18.964	10.892	861.603	1511.608	4.042
1.2D+1.0W (pattern 1) 240 deg - No Ice	32.830	-17.286	9.934	751.443	1318.670	3.838
1.2D+1.0W (pattern 2) 240 deg - No Ice	32.830	-14.050	8.051	695.060	1223.903	3.971
0.9 Dead+1.0 Wind 240 deg - No Ice	24.622	-18.964	10.892	858.039	1503.587	4.031
1.2 Dead+1.0 Wind 270 deg - No Ice	32.830	-19.933	0.038	3.517	1632.577	4.216
1.2D+1.0W (pattern 1) 270 deg - No Ice	32.830	-18.002	0.038	3.537	1410.561	3.975
1.2D+1.0W (pattern 2) 270 deg - No Ice	32.830	-15.030	0.041	3.705	1343.461	4.172
0.9 Dead+1.0 Wind 270 deg - No Ice	24.622	-19.933	0.038	3.968	1623.833	4.210
1.2 Dead+1.0 Wind 300 deg - No Ice	32.830	-18.454	-10.558	-845.276	1486.959	-0.258
1.2D+1.0W (pattern 1) 300 deg - No Ice	32.830	-16.793	-9.610	-736.272	1296.031	-0.452
1.2D+1.0W (pattern 2) 300 deg - No Ice	32.830	-13.725	-7.819	-682.882	1206.786	-0.243
0.9 Dead+1.0 Wind 300 deg - No Ice	24.622	-18.454	-10.558	-840.837	1478.999	-0.257
1.2 Dead+1.0 Wind 330 deg - No Ice	32.830	-10.985	-18.993	-1506.963	875.219	-5.644
1.2D+1.0W (pattern 1) 330 deg - No Ice	32.830	-10.038	-17.371	-1320.605	766.374	-5.737
1.2D+1.0W (pattern 2) 330 deg - No Ice	32.830	-8.100	-13.989	-1211.008	704.761	-5.569

Load Combination	Vertical K	$Shear_x$ K	$Shear_z$ K	Overturning Moment, M_x kip-ft	Overturning Moment, M_z kip-ft	Torque kip-ft
0.9 Dead+1.0 Wind 330 deg - No Ice	24.622	-10.985	-18.993	-1499.468	870.183	-5.635
1.2 Dead+1.0 Ice+1.0 Temp	57.169	0.000	0.000	-4.409	11.016	-0.000
1.2 Dead+1.0 Wind 0 deg+1.0 Ice+1.0 Temp	57.169	0.009	-6.977	-539.131	9.665	-2.394
1.2 Dead+1.0 Wind 30 deg+1.0 Ice+1.0 Temp	57.169	3.443	-5.931	-462.672	-256.197	-1.917
1.2 Dead+1.0 Wind 60 deg+1.0 Ice+1.0 Temp	57.169	5.499	-3.172	-254.400	-422.593	-1.620
1.2 Dead+1.0 Wind 90 deg+1.0 Ice+1.0 Temp	57.169	6.004	-0.017	-6.788	-467.238	-1.559
1.2 Dead+1.0 Wind 120 deg+1.0 Ice+1.0 Temp	57.169	5.235	3.008	231.578	-401.402	-0.443
1.2 Dead+1.0 Wind 150 deg+1.0 Ice+1.0 Temp	57.169	3.231	5.591	428.859	-239.578	1.596
1.2 Dead+1.0 Wind 180 deg+1.0 Ice+1.0 Temp	57.169	-0.007	6.842	520.816	12.225	2.444
1.2 Dead+1.0 Wind 210 deg+1.0 Ice+1.0 Temp	57.169	-3.390	5.847	446.377	273.404	1.974
1.2 Dead+1.0 Wind 240 deg+1.0 Ice+1.0 Temp	57.169	-5.456	3.141	241.344	438.806	1.670
1.2 Dead+1.0 Wind 270 deg+1.0 Ice+1.0 Temp	57.169	-5.916	0.007	-3.270	481.820	1.593
1.2 Dead+1.0 Wind 300 deg+1.0 Ice+1.0 Temp	57.169	-5.201	-2.986	-239.784	422.897	0.391
1.2 Dead+1.0 Wind 330 deg+1.0 Ice+1.0 Temp	57.169	-3.234	-5.598	-438.640	261.971	-1.563
Dead+Wind 0 deg - Service	27.358	0.012	-6.056	-475.161	1.388	-1.540
Dead+Wind 30 deg - Service	27.358	3.062	-5.255	-414.342	-238.928	-1.427
Dead+Wind 60 deg - Service	27.358	4.967	-2.861	-230.273	-394.531	-0.988
Dead+Wind 90 deg - Service	27.358	5.294	-0.022	-4.525	-428.328	-1.049
Dead+Wind 120 deg - Service	27.358	4.924	2.821	221.169	-387.821	0.004
Dead+Wind 150 deg - Service	27.358	2.889	4.990	392.377	-225.262	1.520
Dead+Wind 180 deg - Service	27.358	-0.010	5.921	464.831	4.549	1.606
Dead+Wind 210 deg - Service	27.358	-3.027	5.206	406.696	241.755	1.502
Dead+Wind 240 deg - Service	27.358	-4.992	2.867	225.113	398.937	1.055
Dead+Wind 270 deg - Service	27.358	-5.247	0.010	-0.131	430.667	1.095
Dead+Wind 300 deg - Service	27.358	-4.858	-2.779	-222.944	392.442	-0.072
Dead+Wind 330 deg - Service	27.358	-2.892	-5.000	-396.653	231.866	-1.476

Solution Summary

	Sum of Applied Forces			Sum of Reactions			
Load Comb.	PX K	PY K	PZ K	PX K	PY K	PZ K	% Error
1	0.000	-27.358	0.000	0.000	27.358	0.000	0.000%
2	0.047	-32.830	-23.005	-0.047	32.830	23.005	0.000%
3	0.047	-32.830	-21.093	-0.047	32.830	21.093	0.000%
4	0.051	-32.830	-16.844	-0.051	32.830	16.844	0.000%
5	0.047	-24.622	-23.005	-0.047	24.622	23.005	0.000%
6	11.633	-32.830	-19.965	-11.633	32.830	19.964	0.000%
7	10.664	-32.830	-18.304	-10.664	32.830	18.304	0.000%
8	8.555	-32.830	-14.618	-8.555	32.830	14.618	0.000%
9	11.633	-24.622	-19.965	-11.633	24.622	19.964	0.000%
10	18.867	-32.830	-10.866	-18.867	32.830	10.866	0.000%
11	17.190	-32.830	-9.909	-17.190	32.830	9.909	0.000%
12	14.002	-32.830	-8.053	-14.002	32.830	8.053	0.000%
13	18.867	-24.622	-10.866	-18.867	24.622	10.866	0.000%

Load Comb.	Sum of Applied Forces PX K	PY K	PZ K	Sum of Reactions PX K	PY K	PZ K	% Error
14	20.109	-32.830	-0.084	-20.109	32.830	0.084	0.000%
15	18.171	-32.830	-0.084	-18.171	32.830	0.084	0.000%
16	15.147	-32.830	-0.088	-15.147	32.830	0.088	0.000%
17	20.109	-24.622	-0.084	-20.109	24.622	0.084	0.000%
18	18.705	-32.830	10.716	-18.705	32.830	-10.716	0.000%
19	17.037	-32.830	9.763	-17.037	32.830	-9.763	0.000%
20	13.876	-32.830	7.919	-13.876	32.830	-7.919	0.000%
21	18.705	-24.622	10.716	-18.705	24.622	-10.716	0.000%
22	10.974	-32.830	18.958	-10.974	32.830	-18.958	0.000%
23	10.027	-32.830	17.336	-10.027	32.830	-17.336	0.000%
24	8.090	-32.830	13.954	-8.090	32.830	-13.954	0.000%
25	10.974	-24.622	18.958	-10.974	24.622	-18.958	0.000%
26	-0.037	-32.830	22.494	0.037	32.830	-22.494	0.000%
27	-0.037	-32.830	20.598	0.037	32.830	-20.598	0.000%
28	-0.041	-32.830	16.509	0.041	32.830	-16.509	0.000%
29	-0.037	-24.622	22.494	0.037	24.622	-22.494	0.000%
30	-11.500	-32.830	19.776	11.500	32.830	-19.776	0.000%
31	-10.535	-32.830	18.123	10.535	32.830	-18.123	0.000%
32	-8.452	-32.830	14.482	8.452	32.830	-14.482	0.000%
33	-11.500	-24.622	19.776	11.500	24.622	-19.776	0.000%
34	-18.964	-32.830	10.892	18.964	32.830	-10.892	0.000%
35	-17.286	-32.830	9.934	17.286	32.830	-9.934	0.000%
36	-14.050	-32.830	8.051	14.050	32.830	-8.051	0.000%
37	-18.964	-24.622	10.892	18.964	24.622	-10.892	0.000%
38	-19.933	-32.830	0.038	19.933	32.830	-0.038	0.000%
39	-18.002	-32.830	0.038	18.002	32.830	-0.038	0.000%
40	-15.030	-32.830	0.041	15.030	32.830	-0.041	0.000%
41	-19.933	-24.622	0.038	19.933	24.622	-0.038	0.000%
42	-18.454	-32.830	-10.558	18.454	32.830	10.558	0.000%
43	-16.793	-32.830	-9.610	16.793	32.830	9.610	0.000%
44	-13.725	-32.830	-7.819	13.725	32.830	7.819	0.000%
45	-18.454	-24.622	-10.558	18.454	24.622	10.558	0.000%
46	-10.985	-32.830	-18.993	10.985	32.830	18.993	0.000%
47	-10.038	-32.830	-17.371	10.038	32.830	17.371	0.000%
48	-8.100	-32.830	-13.989	8.100	32.830	13.989	0.000%
49	-10.985	-24.622	-18.993	10.985	24.622	18.993	0.000%
50	0.000	-57.169	0.000	0.000	57.169	0.000	0.000%
51	0.009	-57.169	-6.977	-0.009	57.169	6.977	0.000%
52	3.443	-57.169	-5.931	-3.443	57.169	5.931	0.000%
53	5.499	-57.169	-3.172	-5.499	57.169	3.172	0.000%
54	6.004	-57.169	-0.017	-6.004	57.169	0.017	0.000%
55	5.235	-57.169	3.008	-5.235	57.169	-3.008	0.000%
56	3.231	-57.169	5.591	-3.231	57.169	-5.591	0.000%
57	-0.007	-57.169	6.842	0.007	57.169	-6.842	0.000%
58	-3.390	-57.169	5.847	3.390	57.169	-5.847	0.000%
59	-5.456	-57.169	3.141	5.456	57.169	-3.141	0.000%
60	-5.916	-57.169	0.007	5.916	57.169	-0.007	0.000%
61	-5.201	-57.169	-2.986	5.201	57.169	2.986	0.000%
62	-3.234	-57.169	-5.598	3.234	57.169	5.598	0.000%
63	0.012	-27.358	-6.056	-0.012	27.358	6.056	0.000%
64	3.062	-27.358	-5.255	-3.062	27.358	5.255	0.000%
65	4.967	-27.358	-2.861	-4.967	27.358	2.861	0.000%
66	5.294	-27.358	-0.022	-5.294	27.358	0.022	0.000%
67	4.924	-27.358	2.821	-4.924	27.358	-2.821	0.000%
68	2.889	-27.358	4.990	-2.889	27.358	-4.990	0.000%
69	-0.010	-27.358	5.921	0.010	27.358	-5.921	0.000%
70	-3.027	-27.358	5.206	3.027	27.358	-5.206	0.000%
71	-4.992	-27.358	2.867	4.992	27.358	-2.867	0.000%
72	-5.247	-27.358	0.010	5.247	27.358	-0.010	0.000%
73	-4.858	-27.358	-2.779	4.858	27.358	2.779	0.000%
74	-2.892	-27.358	-5.000	2.892	27.358	5.000	0.000%

Non-Linear Convergence Results

Load Combination	Converged?	Number of Cycles	Displacement Tolerance	Force Tolerance
1	Yes	4	0.00000001	0.00000001
2	Yes	4	0.00000001	0.00002542
3	Yes	4	0.00000001	0.00002704
4	Yes	4	0.00000001	0.00002618
5	Yes	4	0.00000001	0.00001091
6	Yes	4	0.00000001	0.00002824
7	Yes	4	0.00000001	0.00002941
8	Yes	4	0.00000001	0.00002828
9	Yes	4	0.00000001	0.00001272
10	Yes	4	0.00000001	0.00003030
11	Yes	4	0.00000001	0.00003156
12	Yes	4	0.00000001	0.00003030
13	Yes	4	0.00000001	0.00001264
14	Yes	4	0.00000001	0.00003028
15	Yes	4	0.00000001	0.00003048
16	Yes	4	0.00000001	0.00002951
17	Yes	4	0.00000001	0.00001521
18	Yes	4	0.00000001	0.00002493
19	Yes	4	0.00000001	0.00002693
20	Yes	4	0.00000001	0.00002585
21	Yes	4	0.00000001	0.00000957
22	Yes	4	0.00000001	0.00003096
23	Yes	4	0.00000001	0.00003104
24	Yes	4	0.00000001	0.00002998
25	Yes	4	0.00000001	0.00001651
26	Yes	4	0.00000001	0.00003105
27	Yes	4	0.00000001	0.00003203
28	Yes	4	0.00000001	0.00003085
29	Yes	4	0.00000001	0.00001389
30	Yes	4	0.00000001	0.00002785
31	Yes	4	0.00000001	0.00002924
32	Yes	4	0.00000001	0.00002814
33	Yes	4	0.00000001	0.00001194
34	Yes	4	0.00000001	0.00002544
35	Yes	4	0.00000001	0.00002706
36	Yes	4	0.00000001	0.00002612
37	Yes	4	0.00000001	0.00001066
38	Yes	4	0.00000001	0.00002980
39	Yes	4	0.00000001	0.00003022
40	Yes	4	0.00000001	0.00002922
41	Yes	4	0.00000001	0.00001455
42	Yes	4	0.00000001	0.00003012
43	Yes	4	0.00000001	0.00003151
44	Yes	4	0.00000001	0.00003022
45	Yes	4	0.00000001	0.00001226
46	Yes	4	0.00000001	0.00003125
47	Yes	4	0.00000001	0.00003110
48	Yes	4	0.00000001	0.00003012
49	Yes	4	0.00000001	0.00001693
50	Yes	4	0.00000001	0.00001055
51	Yes	4	0.00000001	0.00015938
52	Yes	4	0.00000001	0.00016149
53	Yes	4	0.00000001	0.00016251
54	Yes	4	0.00000001	0.00015918
55	Yes	4	0.00000001	0.00015651

56	Yes	4	0.00000001	0.00015996
57	Yes	4	0.00000001	0.00016356
58	Yes	4	0.00000001	0.00016125
59	Yes	4	0.00000001	0.00015833
60	Yes	4	0.00000001	0.00015976
61	Yes	4	0.00000001	0.00016188
62	Yes	4	0.00000001	0.00016076
63	Yes	4	0.00000001	0.00001799
64	Yes	4	0.00000001	0.00001853
65	Yes	4	0.00000001	0.00001900
66	Yes	4	0.00000001	0.00001847
67	Yes	4	0.00000001	0.00001799
68	Yes	4	0.00000001	0.00001851
69	Yes	4	0.00000001	0.00001902
70	Yes	4	0.00000001	0.00001850
71	Yes	4	0.00000001	0.00001800
72	Yes	4	0.00000001	0.00001845
73	Yes	4	0.00000001	0.00001897
74	Yes	4	0.00000001	0.00001852

Maximum Tower Deflections - Service Wind

Section No.	Elevation ft	Horz. Deflection in	Gov. Load Comb.	Tilt °	Twist °
T1	120 - 117.667	7.115	64	0.542	0.032
T2	117.667 - 110	6.847	64	0.542	0.032
T3	110 - 90	5.959	64	0.534	0.034
T4	90 - 70	3.784	64	0.456	0.034
T5	70 - 52.6146	2.065	64	0.323	0.028
T6	52.6146 - 50	1.002	64	0.220	0.018
T7	50 - 40	0.881	64	0.202	0.017
T8	40 - 20	0.516	64	0.144	0.011
T9	20 - 0	0.110	64	0.052	0.005

Critical Deflections and Radius of Curvature - Service Wind

Elevation ft	Appurtenance	Gov. Load Comb.	Deflection in	Tilt °	Twist °	Radius of Curvature ft
122.000	A-ANT-23G-2-C	64	7.115	0.542	0.032	91483
120.000	LLPX310R w/ Mount Pipe	64	7.115	0.542	0.032	91483
110.000	RRUS 32 B2	64	5.959	0.534	0.034	36221
100.000	MX08FRO665-21 w/ Mount Pipe	64	4.830	0.505	0.035	14462
44.000	BULLET III	64	0.645	0.166	0.013	9048

Maximum Tower Deflections - Design Wind

Section No.	Elevation ft	Horz. Deflection in	Gov. Load Comb.	Tilt °	Twist °

Section No.	Elevation ft	Horz. Deflection in	Gov. Load Comb.	Tilt °	Twist °
T1	120 - 117.667	27.163	6	2.071	0.136
T2	117.667 - 110	26.139	6	2.071	0.136
T3	110 - 90	22.748	6	2.040	0.140
T4	90 - 70	14.443	6	1.741	0.137
T5	70 - 52.6146	7.878	6	1.233	0.109
T6	52.6146 - 50	3.820	6	0.838	0.070
T7	50 - 40	3.358	6	0.770	0.064
T8	40 - 20	1.966	6	0.550	0.044
T9	20 - 0	0.419	6	0.197	0.018

Critical Deflections and Radius of Curvature - Design Wind

Elevation ft	Appurtenance	Gov. Load Comb.	Deflection in	Tilt °	Twist °	Radius of Curvature ft
122.000	A-ANT-23G-2-C	6	27.163	2.071	0.136	25839
120.000	LLPX310R w/ Mount Pipe	6	27.163	2.071	0.136	25839
110.000	RRUS 32 B2	6	22.748	2.040	0.140	8931
100.000	MX08FRO665-21 w/ Mount Pipe	6	18.438	1.929	0.142	3789
44.000	BULLET III	6	2.460	0.632	0.051	2367

Bolt Design Data

Section No.	Elevation ft	Component Type	Bolt Grade	Bolt Size in	Number Of Bolts	Maximum Load per Bolt K	Allowable Load per Bolt K	Ratio Load / Allowable	Allowable Ratio	Criteria
T2	117.667	Leg	A325N	0.625	4	3.481	27.612	0.126 ✔	1.05	Bolt DS
T3	110	Leg	A325N	0.625	5	14.896	27.612	0.539 ✔	1.05	Bolt DS
T4	90	Leg	A325N	0.750	5	27.262	39.761	0.686 ✔	1.05	Bolt DS
T6	52.6146	Leg	A325N	1.000	6	29.526	54.517	0.542 ✔	1.05	Bolt Tension
T7	50	Leg	A325N	1.000	6	28.626	54.517	0.525 ✔	1.05	Bolt Tension
		Diagonal	A325N	1.000	1	6.092	10.663	0.571 ✔	1.05	Member Block Shear
T8	40	Leg	A325N	1.000	6	30.360	54.517	0.557 ✔	1.05	Bolt Tension
		Diagonal	A325N	1.000	1	2.793	10.663	0.262 ✔	1.05	Member Block Shear
T9	20	Diagonal	A325N	1.000	1	4.409	10.663	0.413 ✔	1.05	Member Block Shear

Compression Checks

Leg Design Data (Compression)

Section No.	Elevation ft	Size	L ft	L_u ft	Kl/r	A in^2	P_u K	ϕP_n K	Ratio $\frac{P_u}{\phi P_n}$
T1	120 - 117.667	1 1/2	2.333	2.333	74.7 K=1.00	1.767	-2.782	52.899	0.053 [1] ✔
T2	117.667 - 110	1 1/2	7.667	2.333	74.7 K=1.00	1.767	-11.896	52.899	0.225 [1] ✔
T3	110 - 90	1 3/4	20.002	2.396	65.7 K=1.00	2.405	-70.025	78.927	0.887 [1] ✔
T4	90 - 70	2	20.002	1.196	28.7 K=1.00	3.142	-130.177	133.113	0.978 [1] ✔
T5	70 - 52.6146	2 1/2	17.387	2.341	44.9 K=1.00	4.909	-183.575	190.559	0.963 [1] ✔
T6	52.6146 - 50	2 1/2	2.615	2.031	39.0 K=1.00	4.909	-190.083	197.641	0.962 [1] ✔
T7	50 - 40	Pirod 105245	10.017	10.017	37.8 K=1.00	5.301	-186.556	214.859	0.868 [1] ✔
T8	40 - 20	Pirod 105217	20.033	10.017	37.8 K=1.00	5.301	-200.354	214.859	0.932 [1] ✔
T9	20 - 0	Pirod 105217 w/ (2) 1.25 Tierod	20.033	10.017	64.0 K=1.00	7.753	-212.992	258.681	0.823 [1] ✔

[1] P_u / ϕP_n controls

Truss-Leg Diagonal Data

Section No.	Elevation ft	Diagonal Size	L_d ft	Kl/r	ϕP_n K	A in^2	V_u K	ϕV_n K	Stress Ratio
T7	50 - 40	0.5	1.471	120.0	238.565	0.196	1.351	3.446	0.393 ✔
T8	40 - 20	0.5	1.471	120.0	238.565	0.196	0.799	3.335	0.241 ✔
T9	20 - 0	0.5	1.455	118.8	348.898	0.196	1.065	3.388	0.315 ✔

Diagonal Design Data (Compression)

Section No.	Elevation ft	Size	L ft	L_u ft	Kl/r	A in^2	P_u K	ϕP_n K	Ratio $\frac{P_u}{\phi P_n}$
T1	120 - 117.667	3/4	2.917	2.813	126.0 K=0.70	0.442	-2.705	6.287	0.430 [1] ✔
T2	117.667 - 110	5/8	4.206	2.028	140.2 K=0.90	0.307	-2.434	3.527	0.690 [1] ✔
T3	110 - 90	3/4	4.628	2.246	129.4 K=0.90	0.442	-4.686	5.962	0.786 [1] ✔
T4	90 - 70	7/8	5.051	2.448	134.3	0.601	-7.372	7.533	0.979 [1]

Section No.	Elevation ft	Size	L ft	L_u ft	Kl/r	A in^2	P_u K	ϕP_n K	Ratio $\frac{P_u}{\phi P_n}$
T5	70 - 52.6146	7/8	5.122	2.462	K=1.00 121.6 K=0.90	0.601	-6.828	9.192	✔ 0.743 [1]
T6	52.6146 - 50	7/8	5.365	2.582	127.5 K=0.90	0.601	-5.122	8.361	✔ 0.613 [1]
T7	50 - 40	L2 1/2x2 1/2x3/16	11.416	4.982	120.8 K=1.00	0.902	-6.474	17.576	✔ 0.368 [1]
T8	40 - 20	L2 1/2x2 1/2x3/16	12.503	5.627	136.4 K=1.00	0.902	-3.017	13.873	✔ 0.217 [1]
T9	20 - 0	L2 1/2x2 1/2x3/16	13.796	6.327	153.4 K=1.00	0.902	-5.087	10.974	✔ 0.464 [1]
									✔

[1] P_u / ϕP_n controls

Horizontal Design Data (Compression)

Section No.	Elevation ft	Size	L ft	L_u ft	Kl/r	A in^2	P_u K	ϕP_n K	Ratio $\frac{P_u}{\phi P_n}$
T2	117.667 - 110	3/4	3.500	3.375	151.2 K=0.70	0.442	-0.240	4.366	0.055 [1] ✔
T3	110 - 90	3/4	3.930	3.784	169.5 K=0.70	0.442	-1.268	3.473	0.365 [1] ✔
T5	70 - 52.6146	7/8	4.885	4.676	179.6 K=0.70	0.601	-3.061	4.213	0.727 [1] ✔
T6	52.6146 - 50	7/8	4.944	4.736	181.9 K=0.70	0.601	-3.224	4.107	0.785 [1] ✔

[1] P_u / ϕP_n controls

Secondary Horizontal Design Data (Compression)

Section No.	Elevation ft	Size	L ft	L_u ft	Kl/r	A in^2	P_u K	ϕP_n K	Ratio $\frac{P_u}{\phi P_n}$
T4	90 - 70	1 1/4	4.458	2.145	82.4 K=1.00	1.227	-3.064	33.619	0.091 [1] ✔

[1] P_u / ϕP_n controls

Top Girt Design Data (Compression)

Section No.	Elevation ft	Size	L ft	L_u ft	Kl/r	A in^2	P_u K	ϕP_n K	Ratio $\frac{P_u}{\phi P_n}$
T1	120 - 117.667	5x3/8	3.500	2.531	280.6 K=1.00	1.875	-1.766	5.380	0.328 [1] ✔
		KL/R > 200 (C) - 4							
T2	117.667 - 110	7/8	3.500	3.375	129.6 K=0.70	0.601	-0.241	8.088	0.030 [1] ✔
T3	110 - 90	3/4	3.510	3.365	150.7 K=0.70	0.442	-1.604	4.393	0.365 [1] ✔
T4	90 - 70	1	4.013	3.846	184.6 K=1.00	0.785	-2.361	5.207	0.453 [1] ✔
T5	70 - 52.6146	1	4.526	4.317	145.1 K=0.70	0.785	-3.180	8.432	0.377 [1] ✔

[1] P_u / ϕP_n controls

Bottom Girt Design Data (Compression)

Section No.	Elevation ft	Size	L ft	L_u ft	Kl/r	A in^2	P_u K	ϕP_n K	Ratio $\frac{P_u}{\phi P_n}$
T2	117.667 - 110	7/8	3.500	3.375	129.6 K=0.70	0.601	-0.826	8.088	0.102 [1] ✔
T3	110 - 90	3/4	3.990	3.844	172.2 K=0.70	0.442	-2.267	3.366	0.674 [1] ✔
T4	90 - 70	1	4.487	4.321	207.4 K=1.00	0.785	-3.160	4.125	0.766 [1] ✔
		KL/R > 200 (C) - 112							
T6	52.6146 - 50	1	4.988	4.779	160.6 K=0.70	0.785	-3.350	6.881	0.487 [1] ✔

[1] P_u / ϕP_n controls

Tension Checks

Leg Design Data (Tension)

Section No.	Elevation ft	Size	L ft	L_u ft	Kl/r	A in^2	P_u K	ϕP_n K	Ratio $\frac{P_u}{\phi P_n}$
T1	120 - 117.667	1 1/2	2.333	2.333	74.7	1.767	0.110	79.522	0.001 [1] ✔
T2	117.667 - 110	1 1/2	7.667	0.333	10.7	1.234	11.298	60.151	0.188 [1 #] ✔
T3	110 - 90	1 3/4	20.002	0.417	11.4	1.794	65.727	87.466	0.751 [1 #] ✔
T4	90 - 70	2	20.002	0.500	12.0	3.142	123.765	141.372	0.875 [1 #]

Section No.	Elevation ft	Size	L ft	L_u ft	Kl/r	A in^2	P_u K	ϕP_n K	Ratio $\frac{P_u}{\phi P_n}$
T5	70 - 52.6146	2 1/2	17.387	2.341	44.9	4.909	167.965	220.893	0.760 [1]
T6	52.6146 - 50	2 1/2	2.615	0.583	11.2	4.909	177.157	220.893	0.802 [1]
T7	50 - 40	Pirod 105245	10.017	10.017	37.8	5.301	171.757	238.565	0.720 [1]
T8	40 - 20	Pirod 105217	20.033	10.017	37.8	5.301	182.158	238.565	0.764 [1]
T9	20 - 0	Pirod 105217 w/ (2) 1.25 Tierod	20.033	10.017	64.0	7.753	190.957	348.898	0.547 [1]

[1] P_u / ϕP_n controls
[#] Based on net area of leg in section below

Truss-Leg Diagonal Data

Section No.	Elevation ft	Diagonal Size	L_d ft	Kl/r	ϕP_n K	A in^2	V_u K	ϕV_n K	Stress Ratio
T7	50 - 40	0.5	1.471	120.0	238.565	0.196	1.351	3.446	0.393
T8	40 - 20	0.5	1.471	120.0	238.565	0.196	0.799	3.335	0.241
T9	20 - 0	0.5	1.455	118.8	348.898	0.196	1.065	3.388	0.315

Diagonal Design Data (Tension)

Section No.	Elevation ft	Size	L ft	L_u ft	Kl/r	A in^2	P_u K	ϕP_n K	Ratio $\frac{P_u}{\phi P_n}$
T1	120 - 117.667	3/4	2.917	2.813	180.0	0.442	2.638	19.880	0.133 [1]
T2	117.667 - 110	5/8	4.206	2.028	155.8	0.307	2.366	13.806	0.171 [1]
T3	110 - 90	3/4	4.628	2.246	143.8	0.442	4.713	19.880	0.237 [1]
T4	90 - 70	7/8	5.051	2.448	134.3	0.601	7.329	27.059	0.271 [1]
T5	70 - 52.6146	7/8	5.122	2.462	135.1	0.601	6.298	27.059	0.233 [1]
T6	52.6146 - 50	7/8	5.365	2.582	141.6	0.601	4.953	27.059	0.183 [1]
T7	50 - 40	L2 1/2x2 1/2x3/16	11.416	4.982	80.1	0.518	6.092	22.546	0.270 [1]
T8	40 - 20	L2 1/2x2 1/2x3/16	11.930	5.383	86.2	0.518	2.793	22.546	0.124 [1]

Section No.	Elevation ft	Size	L ft	L_u ft	Kl/r	A in^2	P_u K	ϕP_n K	Ratio $\frac{P_u}{\phi P_n}$
T9	20 - 0	L2 1/2x2 1/2x3/16	13.796	6.327	100.8	0.518	4.409	22.546	0.196 [1]

[1] P_u / ϕP_n controls

Horizontal Design Data (Tension)

Section No.	Elevation ft	Size	L ft	L_u ft	Kl/r	A in^2	P_u K	ϕP_n K	Ratio $\frac{P_u}{\phi P_n}$
T2	117.667 - 110	3/4	3.500	3.375	216.0	0.442	0.279	19.880	0.014 [1]
T3	110 - 90	3/4	3.870	3.724	238.3	0.442	1.306	19.880	0.066 [1]
T5	70 - 52.6146	7/8	4.885	4.676	256.5	0.601	3.061	27.059	0.113 [1]
T6	52.6146 - 50	7/8	4.944	4.736	259.8	0.601	3.224	27.059	0.119 [1]

[1] P_u / ϕP_n controls

Secondary Horizontal Design Data (Tension)

Section No.	Elevation ft	Size	L ft	L_u ft	Kl/r	A in^2	P_u K	ϕP_n K	Ratio $\frac{P_u}{\phi P_n}$
T4	90 - 70	1 1/4	4.458	2.145	164.8	1.227	3.187	55.223	0.058 [1]

[1] P_u / ϕP_n controls

Top Girt Design Data (Tension)

Section No.	Elevation ft	Size	L ft	L_u ft	Kl/r	A in^2	P_u K	ϕP_n K	Ratio $\frac{P_u}{\phi P_n}$
T1	120 - 117.667	5x3/8	3.500	2.531	280.6	1.875	1.834	60.750	0.030 [1]
T2	117.667 - 110	7/8	3.500	3.375	185.1	0.601	0.241	27.059	0.009 [1]
T3	110 - 90	3/4	3.510	3.365	215.3	0.442	1.614	19.880	0.081 [1]

Section No.	Elevation ft	Size	L ft	L_u ft	Kl/r	A in^2	P_u K	ϕP_n K	Ratio $\frac{P_u}{\phi P_n}$
T4	90 - 70	1	4.013	3.846	184.6	0.785	2.361	35.343	0.067 [1] ✔
T5	70 - 52.6146	1	4.526	4.317	207.2	0.785	3.180	35.343	0.090 [1] ✔

[1] P_u / ϕP_n controls

Bottom Girt Design Data (Tension)

Section No.	Elevation ft	Size	L ft	L_u ft	Kl/r	A in^2	P_u K	ϕP_n K	Ratio $\frac{P_u}{\phi P_n}$
T2	117.667 - 110	7/8	3.500	3.375	185.1	0.601	0.793	27.059	0.029 [1] ✔
T3	110 - 90	3/4	3.990	3.844	246.0	0.442	2.282	19.880	0.115 [1] ✔
T4	90 - 70	1	4.487	4.321	207.4	0.785	2.797	35.343	0.079 [1] ✔
T6	52.6146 - 50	1	4.988	4.779	229.4	0.785	3.350	35.343	0.095 [1] ✔

[1] P_u / ϕP_n controls

Section Capacity Table

Section No.	Elevation ft	Component Type	Size	Critical Element	P K	ϕP_{allow} K	% Capacity	Pass Fail
T1	120 - 117.667	Leg	1 1/2	2	-2.782	55.544	5.0	Pass
T2	117.667 - 110	Leg	1 1/2	13	-11.896	55.544	21.4	Pass
T3	110 - 90	Leg	1 3/4	44	-70.025	82.873	84.5	Pass
T4	90 - 70	Leg	2	108	-130.177	139.769	93.1	Pass
T5	70 - 52.6146	Leg	2 1/2	189	-183.575	200.087	91.7	Pass
T6	52.6146 - 50	Leg	2 1/2	243	-190.083	207.523	91.6	Pass
T7	50 - 40	Leg	Pirod 105245	256	-186.556	225.602	82.7	Pass
T8	40 - 20	Leg	Pirod 105217	265	-200.354	225.602	88.8	Pass
T9	20 - 0	Leg	Pirod 105217 w/ (2) 1.25 Tierod	280	-212.992	271.615	78.4	Pass
T1	120 - 117.667	Diagonal	3/4	8	-2.705	6.601	41.0	Pass
T2	117.667 - 110	Diagonal	5/8	23	-2.434	3.703	65.7	Pass
T3	110 - 90	Diagonal	3/4	56	-4.686	6.260	74.9	Pass
T4	90 - 70	Diagonal	7/8	120	-7.372	7.910	93.2	Pass
T5	70 - 52.6146	Diagonal	7/8	240	-6.828	9.652	70.7	Pass
T6	52.6146 - 50	Diagonal	7/8	252	-5.122	8.779	58.3	Pass
T7	50 - 40	Diagonal	L2 1/2x2 1/2x3/16	258	-6.474	18.455	35.1	Pass
T8	40 - 20	Diagonal	L2 1/2x2 1/2x3/16	271	-3.017	14.567	20.7	Pass
T9	20 - 0	Diagonal	L2 1/2x2 1/2x3/16	285	-5.087	11.522	44.2	Pass
T2	117.667 - 110	Horizontal	3/4	28	-0.240	4.584	5.2	Pass
T3	110 - 90	Horizontal	3/4	57	-1.268	3.647	34.8	Pass
T5	70 - 52.6146	Horizontal	7/8	199	-3.061	4.424	69.2	Pass
T6	52.6146 - 50	Horizontal	7/8	244	-3.224	4.312	74.8	Pass

Section No.	Elevation ft	Component Type	Size	Critical Element	P K	$øP_{allow}$ K	% Capacity	Pass Fail
T4	90 - 70	Secondary Horizontal	1 1/4	123	-3.064	35.300	8.7	Pass
T1	120 - 117.667	Top Girt	5x3/8	4	-1.766	5.649	31.3	Pass
T2	117.667 - 110	Top Girt	7/8	18	-0.241	8.492	2.8	Pass
T3	110 - 90	Top Girt	3/4	46	-1.604	4.612	34.8	Pass
T4	90 - 70	Top Girt	1	110	-2.361	5.467	43.2	Pass
T5	70 - 52.6146	Top Girt	1	191	-3.180	8.854	35.9	Pass
T2	117.667 - 110	Bottom Girt	7/8	20	-0.826	8.492	9.7	Pass
T3	110 - 90	Bottom Girt	3/4	48	-2.267	3.534	64.1	Pass
T4	90 - 70	Bottom Girt	1	112	-3.160	4.331	73.0	Pass
T6	52.6146 - 50	Bottom Girt	1	246	-3.350	7.225	46.4	Pass
							Summary	
						Leg (T4)	93.1	Pass
						Diagonal (T4)	93.2	Pass
						Horizontal (T6)	74.8	Pass
						Secondary Horizontal (T4)	8.7	Pass
						Top Girt (T4)	43.2	Pass
						Bottom Girt (T4)	73.0	Pass
						Bolt Checks	65.3	Pass
						RATING =	**93.2**	**Pass**

Program Version 8.1.1.0

APPENDIX B

BASE LEVEL DRAWING

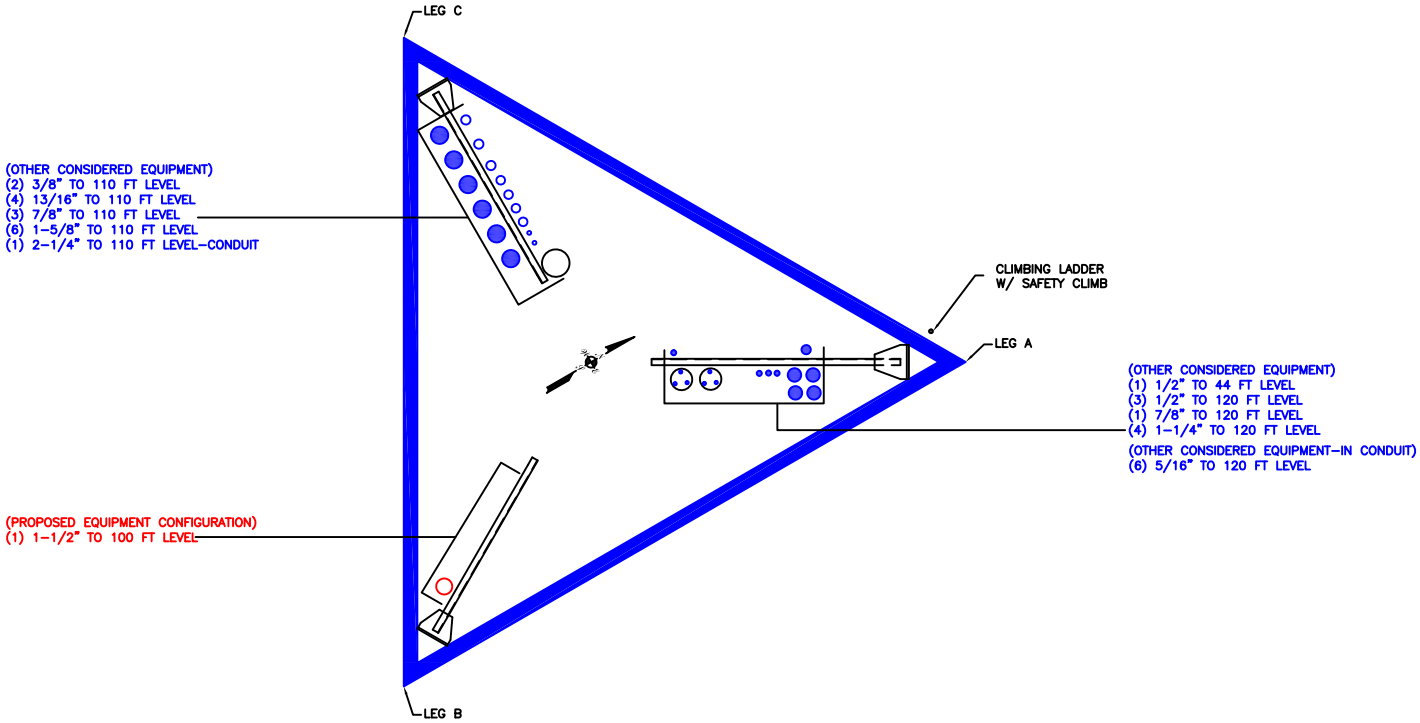
LEG C
(OTHER CONSIDERED EQUIPMENT)
(2) 3/8" TO 110 FT LEVEL
(4) 13/16" TO 110 FT LEVEL
(3) 7/8" TO 110 FT LEVEL
(6) 1-5/8" TO 110 FT LEVEL
(1) 2-1/4" TO 110 FT LEVEL-CONDUIT
CLIMBING LADDER
W/ SAFETY CLIMB
LEG A
(OTHER CONSIDERED EQUIPMENT)
(1) 1/2" TO 44 FT LEVEL
(3) 1/2" TO 120 FT LEVEL
(1) 7/8" TO 120 FT LEVEL
(4) 1-1/4" TO 120 FT LEVEL
(OTHER CONSIDERED EQUIPMENT-IN CONDUIT)
(6) 5/16" TO 120 FT LEVEL
(PROPOSED EQUIPMENT CONFIGURATION)
(1) 1-1/2" TO 100 FT LEVEL
LEG B

APPENDIX C

ADDITIONAL CALCULATIONS

PROJECT	108127.004.01 - MONTOWESE AMODIO SELF STORE, CT	Project #	108127.004.01
SUBJECT	Truss Leg & Flange Connection	Site Name	MONTOWESE AN
DATE	10/06/21	Order #	553441 Rev#0

v1.7.1

Input Key
User Input
Imported from tnx or User Input
Imported from Truss Leg Tool (1.1.2)
Auto Calc

Tower Information	
TIA-222 Rev.	H
Apply TIA-222-H Section 15.5	Yes

	Selection	Elevation	Bottom Flange Bolt			Truss leg						Tie-Rod					Deqv	Compression (k)	Tension (k)	KL/r Mod	Ke	Kn	Kleg	K	Max % From Tool (1.1.0.1)	Max Load/Bolt (k)	Flange Bolt Capacity (k)	Bot. Flange Bolt %
			QTY.	Size	Grade	Part Number	Global Lu (ft)	Size	Unb. Le	Fy	Width	QTY.	Size	Lu (in)	Offset X (in	Fy												
3	☐	50 - 40				105245	10	1.50	14.188	50	12						1.500	186.6	171.8	37.8					See tnx			--
	☐	40 - 20				105217	10	1.50	14.188	50	12						1.500	200.4	182.2	37.8					See tnx			--
	☑	20 - 0	6	1	A325	105217	10	1.50	14.188	50	12	2	1.25	20.0	0.625	50.0	1.814	213.0	191.0	31.3	1.0	1.0	1.0	2.0447	78.4%	36.86	54.52	64.4%
	☐																											
	☐																											
	☐																											
	☐																											
	☐																											
	☐																											
	☐																											
	☐																											
	☐																											
	☐																											
	☐																											
	☐																											
	☐																											
	☐																											
	☐																											
	☐																											
	☐																											
	☐																											

Truss Leg Reinforcement

BU # :	876312
Site Name:	MONTOWESE AMODIO SELF
Order:	553441 Rev#0
Elevation:	20 - 0
TIA-222 Revision:	H

Existing Tie Rods		
Diameter, de:	1.5	in
Unbraced Length, Le:	14.1875	in
Yield Strength, Fye:	50	ksi

New Tie Rods		
Diameter, dn:	1.25	in
Unbraced Length, Ln:	20	in
Offset, X:	0.625	in
Yield Strength, Fyn:	50	ksi
New Tie Rod Qty	2	

Truss Leg		
Width, w:	12	in
Unbraced Length, Lleg:	10	ft

Reactions from tnx		
Compression, C:	212.992	kip
Tension, T:	190.957	kip

Output from tnx		
KL/r Modified Leg, KLtnx:	31.3	

Length Factors		
Length Factor of Existing Tie Rods, Ke:	1	
Length Factor of New Tie Rods, Kn:	1	
Length Factor of the Leg, Kleg:	1	

Results				
	Demand	Capacity	Rating*	Check
Compression (Existing Tie Rods), kip:	48.53	71.62	64.5%	**Pass**
Compression (New Tie Rods), kip:	33.70	40.93	78.4%	**Pass**
Compression (Modified Tie Rods), kip:	212.99	328.56	61.7%	**Pass**
Tension (Existing Tie Rods), kip:	43.51	79.52	52.1%	**Pass**
Tension (New Tie Rods), kip:	30.21	55.22	52.1%	**Pass**
Tension (Modified Tie Rods), kip:	190.96	349.01	52.1%	**Pass**

**Section 15.5 Applied*

Adjustments for tnx		
Diameter of modified truss leg, Deqv:	1.814	in
Leg K Factor Adjustment, K:	2.045	

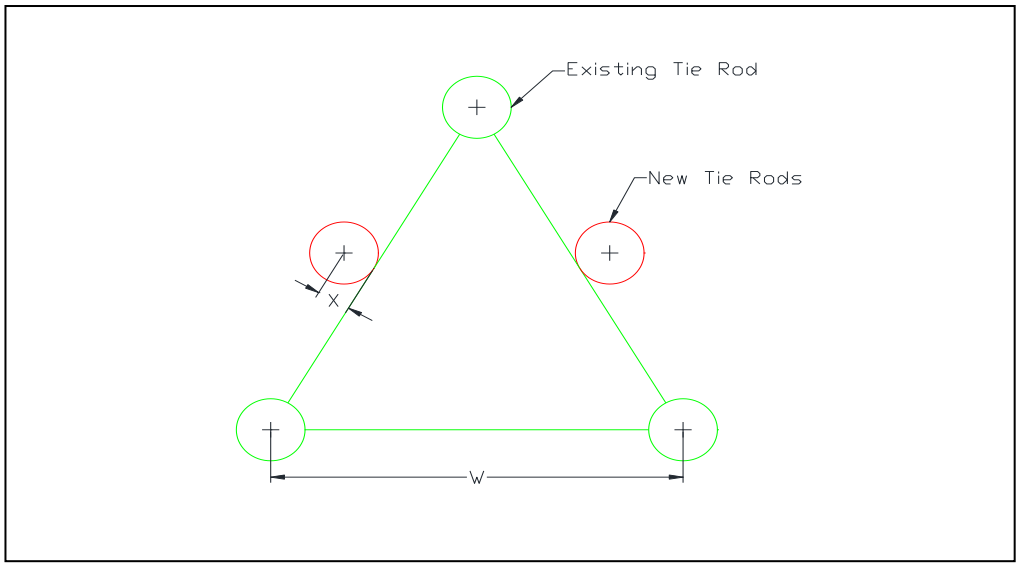

Version 1.2.0

Self Support Anchor Rod Capacity

Site Info	
BU #	876312
Site Name	WESE AMODIO SELF ST
Order #	553441 Rev#0

Analysis Considerations	
TIA-222 Revision	H
Grout Considered:	Yes
l_{ar} (in)	0

Applied Loads		
	Comp.	Uplift
Axial Force (kips)	219.48	195.84
Shear Force (kips)	17.17	15.48

**TIA-222-H Section 15.5 Applied*

Considered Eccentricity	
Leg Mod Eccentricity (in)	0.000
Anchor Rod N.A Shift (in)	0.000
Total Eccentricity (in)	0.000

**Anchor Rod Eccentricity Applied*

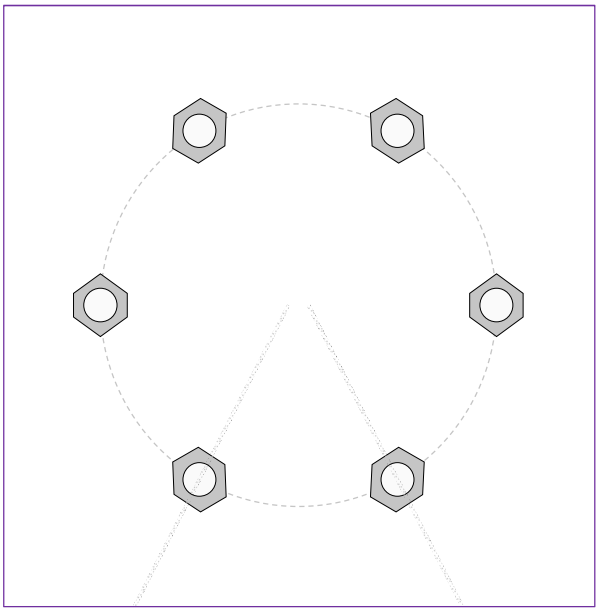

Connection Properties

Anchor Rod Data

(6) 1" ø bolts (A687 N; Fy=105 ksi, Fu=125 ksi)

l_{ar} (in): 0

Analysis Results

Anchor Rod Summary *(units of kips, kip-in)*

Pu_t = 32.64	ϕPn_t = 56.81	**Stress Rating**
Vu = 2.58	ϕVn = 36.82	**54.7%**
Mu = n/a	ϕMn = n/a	**Pass**

Pile Foundation

Checks the capacity of pile foundation configurations for monopoles or self-support towers with individual foundations in Rev. F, G, and H.

BU #:	876312
Site Name:	MONTOWESE AMODIO SELF
Order:	553441 Rev#0

Tower Type:	Self-Support
TIA Revision:	H

Top & Bot. Pad Rein. Different?:	☐

Factored Design Reactions Per Leg		
Uplift, Tu:	195.84	kips
Compression, Cu:	219.48	kips
Uplift Shear, Su:	15.48	kips
Compression Shear, Sc:	17.17	kips
Load Eccentricity, Ecc:	0	in
Bolt Circle / Bearing Plate Width, BC:	10	in

Design Checks				
	Capacity	*Demand*	*Rating**	*Check*
PILE CHECKS				
Soil Compression (kips per pile):	71.25	63.21	**84.5%**	**Pass**
Soil Uplift (kips per pile):	30.00	28.42	**90.2%**	**Pass**
Pile Tensile Strength (kips):	357.12	28.42	**7.6%**	**Pass**
PAD CHECKS				
One-Way Shear (kips):	348.14	146.03	**39.9%**	**Pass**
Pad Shear - Comp Two-Way (ksi):	0.164	0.023	**13.6%**	**Pass**
*Flexural Two-Way (Comp) (kip*ft):*	1865.52	0.00	**0.0%**	**Pass**
Pad Shear - Tension Two-Way (ksi):	0.164	0.012	**6.7%**	**Pass**
*Flexural Two-Way (Tension) (kip*ft):*	1865.52	0.00	**0.0%**	**Pass**
*Pad Flexure (kip*ft):*	937.06	300.36	**30.5%**	**Pass**

**Rating per TIA-222-H Section 15.5*

Structural Rating:	**39.9%**
Soil Rating:	**90.2%**

Pile Properties		
Pile Shape:	H-Pile	
HP Size:	HP10 x 42	
Length of Pile, Lpile:	41	ft
Pile (Soil) Capacity Given?	Yes	
Steel Grade, Fy:	36	ksi
Rebar Quantity, Pquan:	16	

Pile Group		
Group Configuration:	Rectangular	
Number of Columns, Nx:	3	
Number of Rows, Ny:	2	
Column Spacing, Dx:	36	in
Row Spacing, Dy:	36	in
Orientation of Neutral Axis, θ:	0	deg
Group Efficiency Given in Geotech?	No	

Program Calculated Group Efficiency, Eg: 1.00

Pile Cap		
Cap Type:	Block	
Depth to Bottom of Block, D:	2.00	ft
Thickness of Block, T:	4.00	ft
Block Width, Wx:	9.50	ft
Block Length, Wy:	7.00	ft
Pad Rebar Size (Bot.), Spad:	7	
Pad Rebar Quantity (X-direction) (Bot.), Mpad:	12	
Pad Rebar Quantity (Y-direction) (Bot.), $Mpad_y$:	8	

Ultimate Pile Capacities		
Ultimate Compression, Cn:	95	kips
Ultimate Tension, Tn:	40	kips

Per CCIsites Doc. # 1611716 (p-2/4)

Material Properties		
Rebar Grade, Fy:	60	ksi
Concrete Strength, Fc:	4	ksi
Clear Cover, cc:	3	in

Soil Properties		
Groundwater Depth, GW:	6.00	ft
Soil Unit Weight:	130	pcf
Cohesion, Co:	0	ksf
Friction Angle, ϕ:	36	deg
Neglected Depth, ND:	3.33	ft
Negative Friction Force (per pile), Sw:		kips
SPT Blow Count, N_{blows}:	15	

ASCE 7 Hazards Report

Address:
No Address at This Location

Standard: ASCE/SEI 7-16
Risk Category: II
Soil Class: D - Default (see Section 11.4.3)

Elevation: 7.4 ft (NAVD 88)
Latitude: 41.355464
Longitude: -72.890314

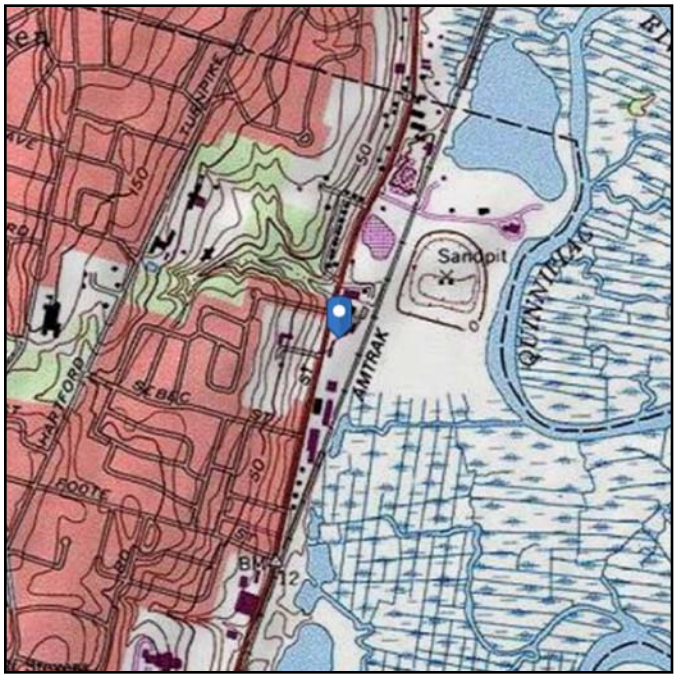

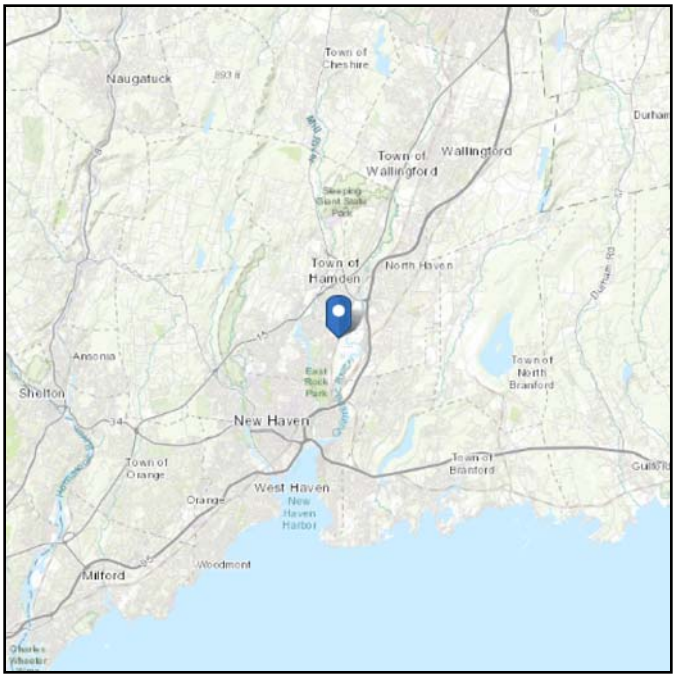

Wind

Results:

Wind Speed:	120 Vmph
10-year MRI	75 Vmph
25-year MRI	85 Vmph
50-year MRI	91 Vmph
100-year MRI	98 Vmph

Data Source:	ASCE/SEI 7-16, Fig. 26.5-1B and Figs. CC.2-1–CC.2-4, and Section 26.5.2
Date Accessed:	Sat Sep 18 2021

Value provided is 3-second gust wind speeds at 33 ft above ground for Exposure C Category, based on linear interpolation between contours. Wind speeds are interpolated in accordance with the 7-16 Standard. Wind speeds correspond to approximately a 7% probability of exceedance in 50 years (annual exceedance probability = 0.00143, MRI = 700 years).

Site is in a hurricane-prone region as defined in ASCE/SEI 7-16 Section 26.2. Glazed openings need not be protected against wind-borne debris.

Seismic

Site Soil Class: D - Default (see Section 11.4.3)

Results:

S_S :	0.202	S_{D1} :	0.086
S_1 :	0.054	T_L :	6
F_a :	1.6	PGA :	0.113
F_v :	2.4	PGA_M :	0.178
S_{MS} :	0.323	F_{PGA} :	1.575
S_{M1} :	0.13	I_e :	1
S_{DS} :	0.215	C_v :	0.704

Seismic Design Category B

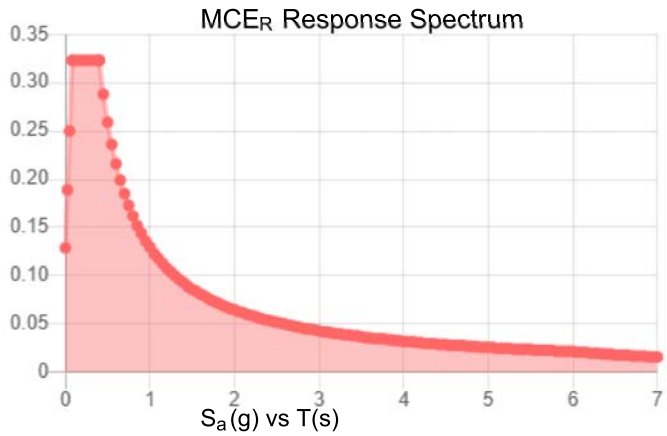

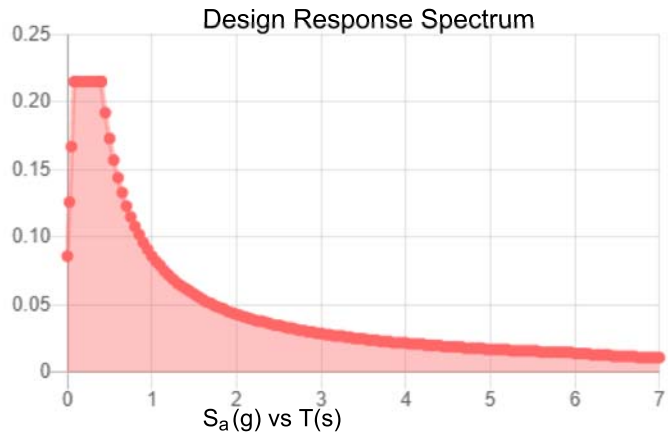

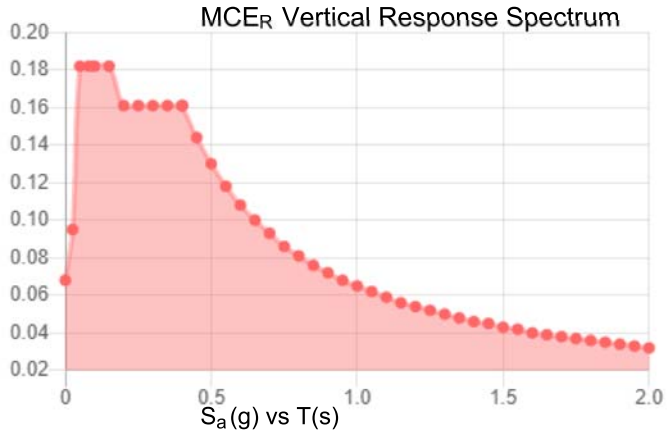

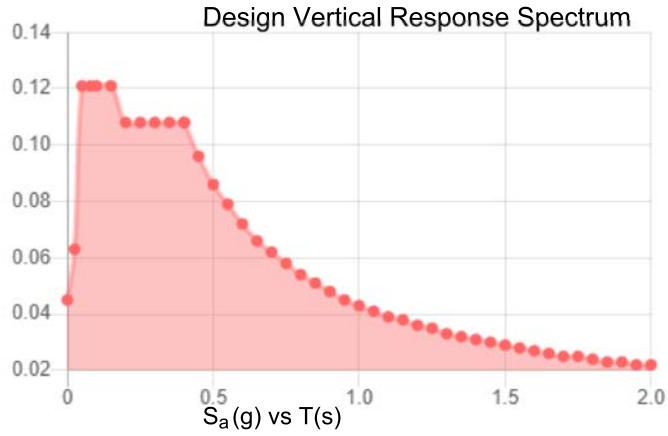

Data Accessed: Sat Sep 18 2021

Date Source: USGS Seismic Design Maps based on ASCE/SEI 7-16 and ASCE/SEI 7-16 Table 1.5-2. Additional data for site-specific ground motion procedures in accordance with ASCE/SEI 7-16 Ch. 21 are available from USGS.

Ice

Results:

Ice Thickness:	1.00 in.
Concurrent Temperature:	15 F
Gust Speed:	50 mph
Data Source:	Standard ASCE/SEI 7-16, Figs. 10-2 through 10-8
Date Accessed:	Sat Sep 18 2021

Ice thicknesses on structures in exposed locations at elevations higher than the surrounding terrain and in valleys and gorges may exceed the mapped values.

Values provided are equivalent radial ice thicknesses due to freezing rain with concurrent 3-second gust speeds, for a 500-year mean recurrence interval, and temperatures concurrent with ice thicknesses due to freezing rain. Thicknesses for ice accretions caused by other sources shall be obtained from local meteorological studies. Ice thicknesses in exposed locations at elevations higher than the surrounding terrain and in valleys and gorges may exceed the mapped values.

The ASCE 7 Hazard Tool is provided for your convenience, for informational purposes only, and is provided “as is” and without warranties of any kind. The location data included herein has been obtained from information developed, produced, and maintained by third party providers; or has been extrapolated from maps incorporated in the ASCE 7 standard. While ASCE has made every effort to use data obtained from reliable sources or methodologies, ASCE does not make any representations or warranties as to the accuracy, completeness, reliability, currency, or quality of any data provided herein. Any third-party links provided by this Tool should not be construed as an endorsement, affiliation, relationship, or sponsorship of such third-party content by or from ASCE.

ASCE does not intend, nor should anyone interpret, the results provided by this Tool to replace the sound judgment of a competent professional, having knowledge and experience in the appropriate field(s) of practice, nor to substitute for the standard of care required of such professionals in interpreting and applying the contents of this Tool or the ASCE 7 standard.

In using this Tool, you expressly assume all risks associated with your use. Under no circumstances shall ASCE or its officers, directors, employees, members, affiliates, or agents be liable to you or any other person for any direct, indirect, special, incidental, or consequential damages arising from or related to your use of, or reliance on, the Tool or any information obtained therein. To the fullest extent permitted by law, you agree to release and hold harmless ASCE from any and all liability of any nature arising out of or resulting from any use of data provided by the ASCE 7 Hazard Tool.

Exhibit E

Mount Analysis

Date: **May 17, 2022**

Infinigy
500 West Office Center Drive, Suite 150
Fort Washington, PA 19034
(518) 690-0790
structural@infinigy.com

Subject:	**Mount Analysis Report**	
Carrier Designation:	**Dish Network 5G**	
	Carrier Site Number:	BOHVN00021A
	Carrier Site Name:	CT-CCI-T-876312
Crown Castle Designation:	**Crown Castle BU Number:**	876312
	Crown Castle Site Name:	MONTOWESE AMODIO SELF STORE
	Crown Castle JDE Job Number:	645699
	Crown Castle Order Number:	553441 Rev.1
Engineering Firm Designation:	**Infinigy Report Designation:**	1039-Z0001-B
Site Data:	**2755 State Street, Hamden, New Haven County, CT, 06517**	
	Latitude 41°21'19.67" Longitude -72°53'25.13"	
Structure Information:	**Tower Height & Type:**	**120.0 ft Self Support**
	Mount Elevation:	**100.0 ft**
	Mount Type:	**8.0 ft Sector Frame**

Infinigy is pleased to submit this **"Mount Analysis Report"** to determine the structural integrity of Dish Network's antenna mounting system with the proposed appurtenance and equipment addition on the abovementioned supporting tower structure. Analysis of the existing supporting tower structure is to be completed by others and therefore is not part of this analysis. Analysis of the antenna mounting system as a tie-off point for fall protection or rigging is not part of this document.

The purpose of the analysis is to determine acceptability of the mount stress level. Based on our analysis we have determined the mount stress level to be:

Sector Frame **Sufficient**

***See Section 4.1 of this report for the loading and structural modifications required in order for the mount to support the loading listed in Table 1.**

This analysis utilizes an ultimate 3-second gust wind speed of 120 mph as required by the 2018 Connecticut State Building Code. Applicable Standard references and design criteria are listed in Section 2 - Analysis Criteria.

Mount analysis prepared by: Alex Mercado, E.I.T.

Respectfully Submitted by: Emmanuel Poulin

structural@infinigy.com

STATE OF CONNECTICUT
EMMANUEL POULIN
No. 22947
LICENSED
PROFESSIONAL ENGINEER

5/17/22

TABLE OF CONTENTS

1) INTRODUCTION

2) ANALYSIS CRITERIA
Table 1 - Proposed Equipment Configuration

3) ANALYSIS PROCEDURE
Table 2 - Documents Provided
3.1) Analysis Method
3.2) Assumptions

4) ANALYSIS RESULTS
Table 3 - Mount Component Stresses vs. Capacity
Table 4 - Tieback End Reactions
4.1) Recommendations

5) APPENDIX A
Wire Frame and Rendered Models

6) APPENDIX B
Software Input Calculations

7) APPENDIX C
Software Analysis Output

8) APPENDIX D
Additional Calculations

9) APPENDIX E
Mount Modification Design Drawings (MDD) / Supplemental Drawings

1) INTRODUCTION

This is a proposed 3 sector 8.0 ft Sector Frame, designed by Commscope.

2) ANALYSIS CRITERIA

Building Code:	2015 IBC / 2018 Connecticut State Building Code
TIA-222 Revision:	TIA-222-H
Risk Category:	II
Ultimate Wind Speed:	120 mph
Exposure Category:	C
Topographic Factor at Base:	1.0
Topographic Factor at Mount:	1.0
Ice Thickness:	1.5 in
Wind Speed with Ice:	50 mph
Seismic S_s:	0.185
Seismic S_1:	0.062
Live Loading Wind Speed:	30 mph
Man Live Load at Mid/End-Points:	250 lb
Man Live Load at Mount Pipes:	500 lb

Table 1 - Proposed Equipment Configuration

Mount Centerline (ft)	Antenna Centerline (ft)	Number of Antennas	Antenna Manufacturer	Antenna Model	Mount / Modification Details
100.0	100.0	3	JMA WIRELESS	MX08FRO665-21	8.0 ft Sector Frame (Commscope MTC3975083)
		3	FUJITSU	TA08025-B604	
		3	FUJITSU	TA08025-B605	
		1	RAYCAP	RDIDC-9181-PF-48	

3) ANALYSIS PROCEDURE

Table 2 - Documents Provided

Document	Remarks	Reference	Source
Crown Application	DISH Network Application	553441 Rev.1	CCI Sites
Mount Manufacturer Drawings	Commscope	MTC3975083	Infinigy

3.1) Analysis Method

RISA-3D (Version 17.0.4), a commercially available analysis software package, was used to create a three-dimensional model of the antenna mounting system and calculate member stresses for various loading cases.

Infinigy Mount Analysis Tool V2.3, a tool internally developed by Infinigy, was used to calculate wind loading on all appurtenances, dishes and mount members for various loading cases. Selected output from the analysis is included in Appendix B “Software Input Calculations”.

This analysis was performed in accordance with Crown Castle’s ENG-SOW-10208 *Mount Analysis* (Revision E).

3.2) Assumptions

1) The antenna mounting system was properly fabricated, installed and maintained in good condition in accordance with its original design and manufacturer's specifications.
2) The configuration of antennas, mounts, and other appurtenances are as specified in Table 1 and the referenced drawings.
3) All member connections are assumed to have been designed to meet or exceed the load carrying capacity of the connected member unless otherwise specified in this report.
4) The analysis will be required to be revised if the existing conditions in the field differ from those shown in the above-referenced documents or assumed in this analysis. No allowance was made for any damaged, missing, or rusted members.
5) Prior structural modifications to the tower mounting system are assumed to be installed as shown per available data.
6) Steel grades have been assumed as follows, unless noted otherwise:

Channel, Solid Round, Angle, Plate	ASTM A36 (GR 36)
HSS (Rectangular)	ASTM A500 (GR B-46)
Pipe	ASTM A53 (GR 35)
Connection Bolts	ASTM A449

This analysis may be affected if any assumptions are not valid or have been made in error. Infinigy should be notified to determine the effect on the structural integrity of the antenna mounting system.

4) ANALYSIS RESULTS

Table 3 - Mount Component Stresses vs. Capacity (Sector Frame, Worst Case Sector)

Notes	Component	Critical Member	Centerline (ft)	% Capacity	Pass / Fail
1,2	Mount Pipe(s)	MP3	100.0	9.7	Pass
	Horizontal(s)	HOR1		9.9	Pass
	Standoff(s)	SA3		25.0	Pass
	Bracing(s)	DIAG4		26.1	Pass
	Mount Connection(s)	--		12.6	Pass

Structure Rating (max from all components) =	**26.1%**

Notes:
1) See additional documentation in "Appendix C - Software Analysis Output" for calculations supporting the % capacity consumed.
2) See additional documentation in “Appendix D – Additional Calculations” for detailed mount connection calculations.

Table 4 - Tieback Connection Data Table

Tower Connection Node No.	Existing / Proposed	Resultant End Reaction (lb)	Connected Member Type	Connected Member Size	Member Compressive Capacity (lb)	Notes
N38	Proposed	738.6	Leg	1 3/4	4,143.7	1,2

Notes:
1) Tieback connection point is within 25% of either end of the connected tower member
2) Reduced member compressive capacity according to CED-STD-10294 *Standard for Installation of Mounts and Appurtenances*

4.1) Recommendations

The mount has sufficient capacity to carry the proposed loading configuration. In order for the results of the analysis to be considered valid, the proposed mount listed below must be installed.

1. Installation of (1) Commscope MTC3975083 Sector Frame per sector.

No structural modifications are required at this time, provided that the above-listed changes are implemented.

APPENDIX A

WIRE FRAME AND RENDERED MODELS

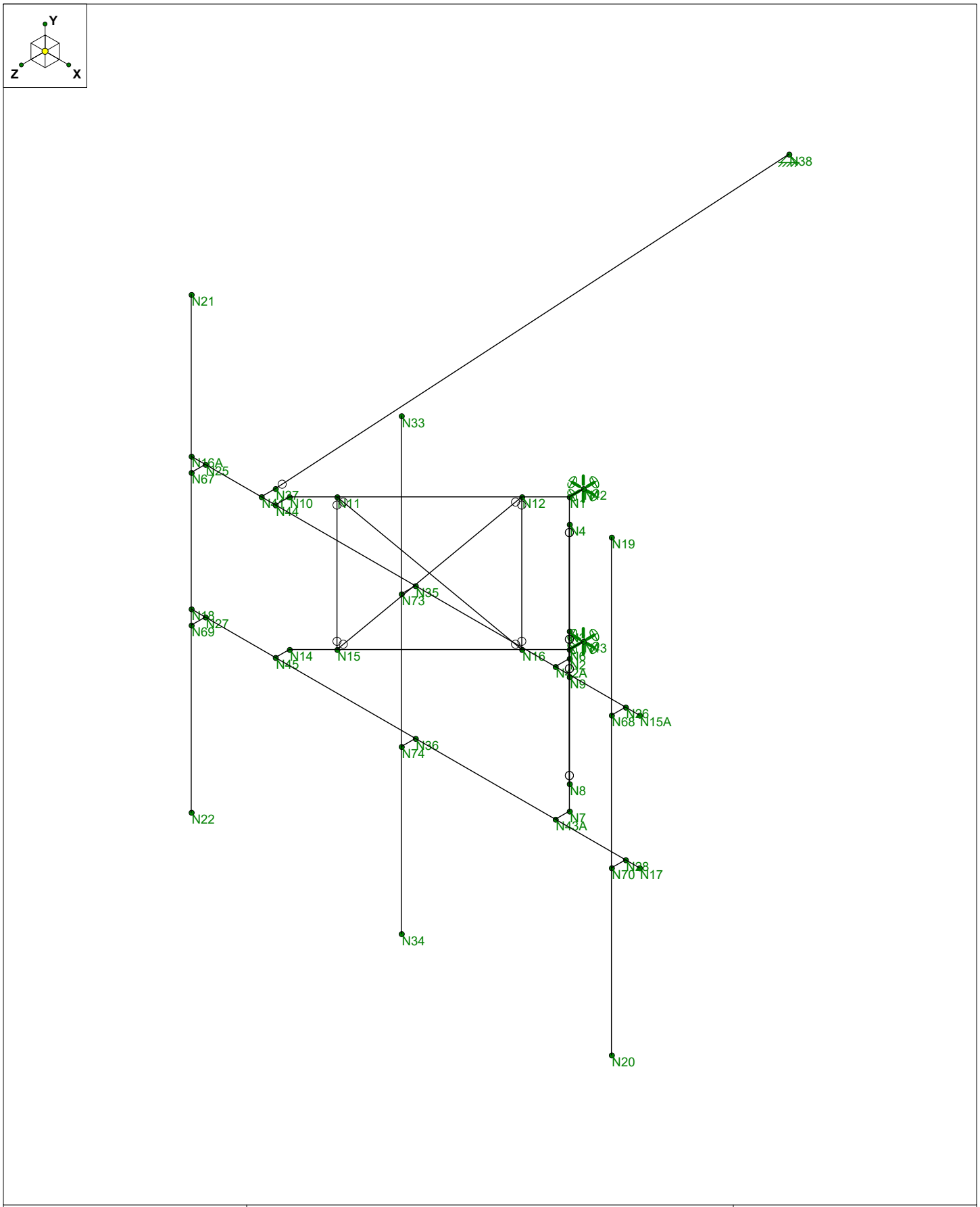

Infinigy Engineering	876312	Wireframe
AM		May 17, 2022 at 12:02 PM
1039-Z0001-B		876312_loaded.r3d

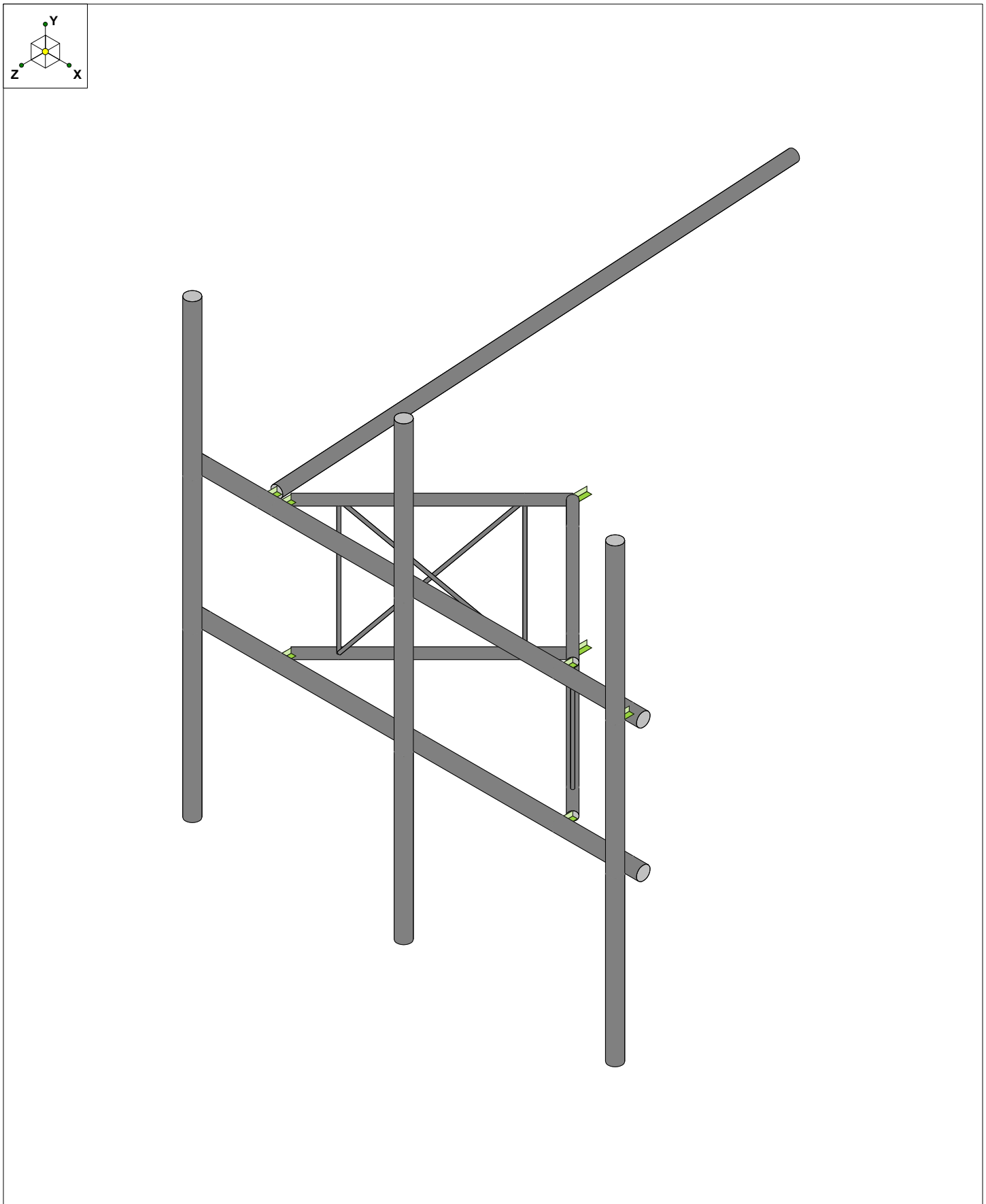

Infinigy Engineering	876312	Rendered
AM		May 17, 2022 at 12:02 PM
1039-Z0001-B		876312_loaded.r3d

APPENDIX B

SOFTWARE INPUT CALCULATIONS

Program Inputs

INFINIGY

Infinigy Load Calculator V2.3

PROJECT INFORMATION		
Site Name:	NTOWESE AMODIO SELF ST	
Carrier:	DISH Network	
Engineer:	Alex Mercado	

CODE STANDARDS		
Building Code:	2015 IBC	
TIA Standard:	TIA-222-H	
ASCE Standard:	ASCE 7-10	

SITE INFORMATION		
Risk Category:	II	
Exposure Category:	C	
Topo Factor Procedure:	Method 1, Category 1	
Site Class:	D - Stiff Soil (Assumed)	
Ground Elevation:	7.40	ft *Rev H

WIND AND ICE DATA		
Ultimate Wind (V_{ult}):	120	mph
Design Wind (V):	N/A	mph
Ice Wind (V_{ice}):	50	mph
Base Ice Thickness (t_i):	1.5	in
Radial Ice Thickness (t_{iz}):	1.676	in
Flat Pressure:	88.622	psf
Round Pressure:	53.173	psf
Ice Wind Pressure:	9.231	psf

MOUNT INFORMATION		
Mount Type:	Sector Frame	
Num Sectors:	3	
Centerline AGL:	100.00	ft
Tower Height AGL:	120.00	ft

SEISMIC DATA		
Short-Period Accel. (S_s):	0.185	g
1-Second Accel. (S_1):	0.062	g
Short-Period Design (S_{DS}):	0.197	
1-Second Design (S_{D1}):	0.099	
Short-Period Coeff. (F_a):	1.600	
1-Second Coeff. (F_v):	2.400	
Amplification Factor (A_s):	3.000	
Response Mod. Coeff. (R):	2.000	
Seismic Importance (I_e):	1.000	
Seismic Response Co. (C_s):	0.099	
Total App. Weight:	225.210	lb
Total Shear Force (V_s):	22.221	lb
Hor. Seismic Load (E_h):	22.221	lb
Vert. Seismic Load (E_v):	8.888	lb *

*For reference only. Per TIA rev H section 16.7, Ev is not applicable to mounts

TOPOGRAPHIC DATA		
Topo Feature:	N/A	
Slope Distance:	N/A	ft
Crest Distance:	N/A	ft
Crest Height:	N/A	ft

FACTORS		
Directionality Fact. (K_d):	0.950	
Ground Ele. Factor (K_e):	1.000	*Rev H Only
Rooftop Speed-Up (K_s):	1.000	*Rev H Only
Topographic Factor (K_{zt}):	1.000	
Height Esc. Fact. (K_{iz}):	1.117	
Gust Effect Factor (G_h):	1.000	
Shielding Factor (K_a):	0.900	
Velocity Pressure Co.(K_z):	1.266	(Mount Elev)

Program Inputs

INFINIGY
Infinigy Load Calculator V2.3

ELEVATION VIEW

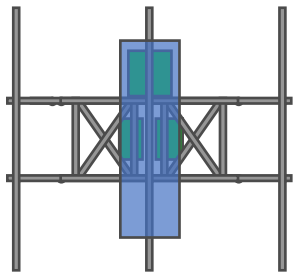

PLAN VIEW

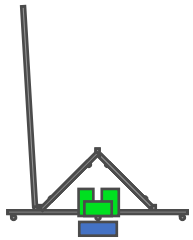

APPURTENANCE INFORMATION

Appurtenance Name	Elevation	Qty.	Height (in)	Width (in)	Depth (in)	Weight (lbs)	EPA_N (ft^2)	EPA_T (ft^2)	Member (α sector)
JMA WIRELESS MX08FRO665-21	100.0	3	72.00	20.00	8.00	64.50	8.01	3.21	MP2
FUJITSU TA08025-B604	100.0	3	14.96	15.75	7.87	63.90	1.96	0.98	MP2
FUJITSU TA08025-B605	100.0	3	14.96	15.75	9.06	74.96	1.96	1.13	MP2
RAYCAP RDIDC-9181-PF-48	100.0	1	16.57	14.57	8.46	21.85	2.01	1.17	MP2

ASCE 7 Hazards Report

Address:
No Address at This Location

Standard: ASCE/SEI 7-10
Risk Category: II
Soil Class: D - Stiff Soil

Elevation: 7.4 ft (NAVD 88)
Latitude: 41.355464
Longitude: -72.890314

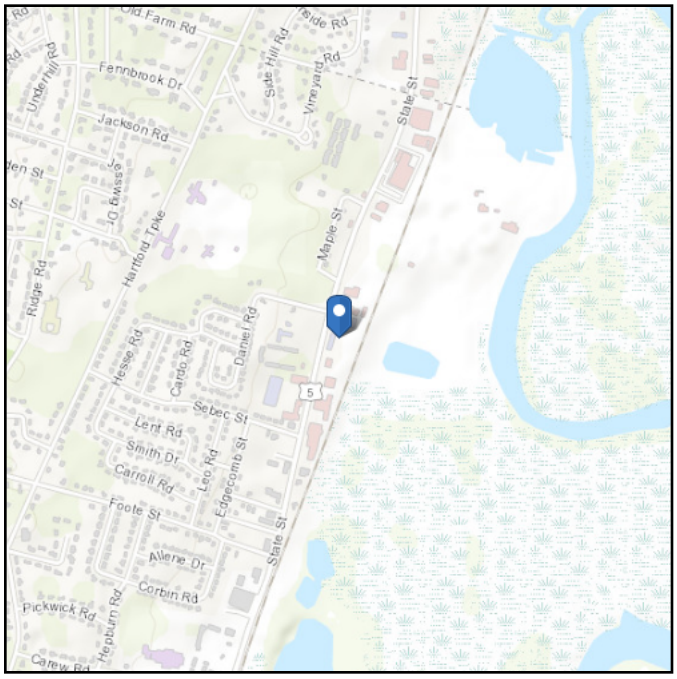

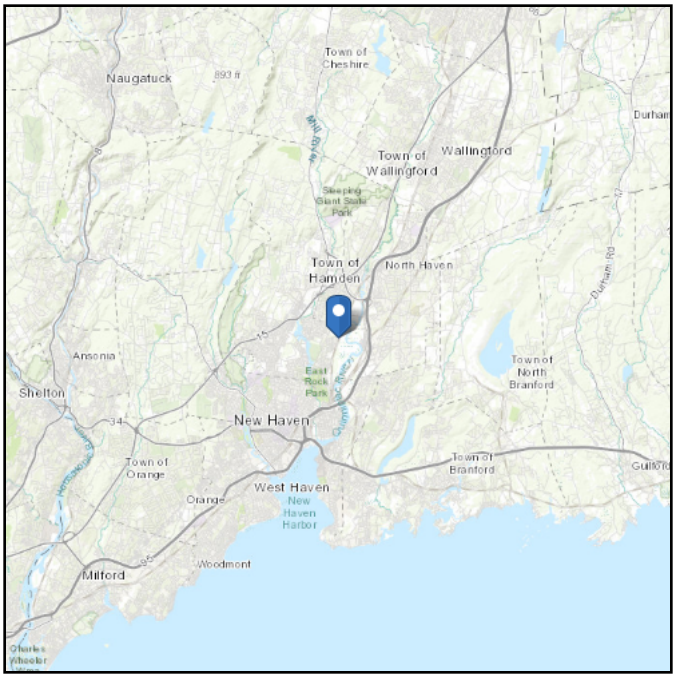

Wind

Results:

Wind Speed	120 Vmph per the state of Connecticut allowing ASCE-16 wind speeds.
10-year MRI	77 Vmph
25-year MRI	87 Vmph
50-year MRI	94 Vmph
100-year MRI	101 Vmph

Data Source:	ASCE/SEI 7-10, Fig. 26.5-1A and Figs. CC-1–CC-4, and Section 26.5.2, incorporating errata of March 12, 2014
Date Accessed:	Tue May 17 2022

Value provided is 3-second gust wind speeds at 33 ft above ground for Exposure C Category, based on linear interpolation between contours. Wind speeds are interpolated in accordance with the 7-10 Standard. Wind speeds correspond to approximately a 7% probability of exceedance in 50 years (annual exceedance probability = 0.00143, MRI = 700 years).

Site is in a hurricane-prone region as defined in ASCE/SEI 7-10 Section 26.2. Glazed openings need not be protected against wind-borne debris.

Seismic

Site Soil Class: D - Stiff Soil

Results:

S_S :	0.185	S_{DS} :	0.197
S_1 :	0.062	S_{D1} :	0.1
F_a :	1.6	T_L :	6
F_v :	2.4	PGA :	0.096
S_{MS} :	0.295	PGA_M :	0.153
S_{M1} :	0.149	F_{PGA} :	1.6
		I_e :	1

Seismic Design Category B

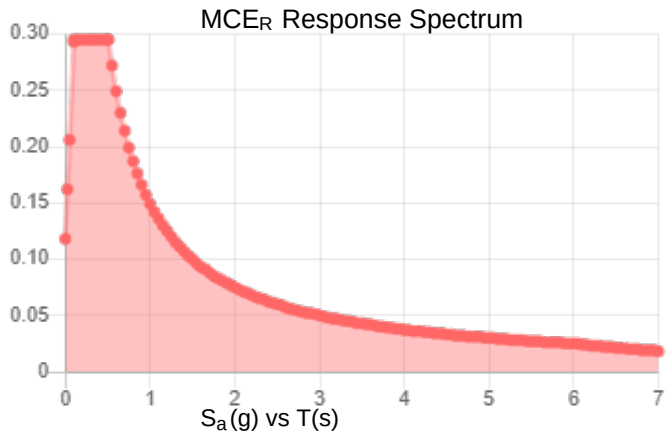

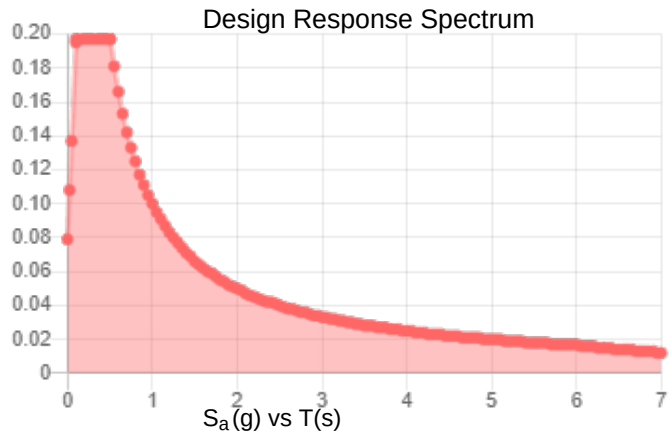

Data Accessed: **Tue May 17 2022**

Date Source:

USGS Seismic Design Maps based on ASCE/SEI 7-10, incorporating Supplement 1 and errata of March 31, 2013, and ASCE/SEI 7-10 Table 1.5-2. Additional data for site-specific ground motion procedures in accordance with ASCE/SEI 7-10 Ch. 21 are available from USGS.

Ice

Results:

Ice Thickness:	0.75 in.
Concurrent Temperature:	15 F
Gust Speed	50 mph
Data Source:	Standard ASCE/SEI 7-10, Figs. 10-2 through 10-8
Date Accessed:	Tue May 17 2022

Ice thicknesses on structures in exposed locations at elevations higher than the surrounding terrain and in valleys and gorges may exceed the mapped values.

Values provided are equivalent radial ice thicknesses due to freezing rain with concurrent 3-second gust speeds, for a 50-year mean recurrence interval, and temperatures concurrent with ice thicknesses due to freezing rain. Thicknesses for ice accretions caused by other sources shall be obtained from local meteorological studies. Ice thicknesses in exposed locations at elevations higher than the surrounding terrain and in valleys and gorges may exceed the mapped values.

The ASCE 7 Hazard Tool is provided for your convenience, for informational purposes only, and is provided “as is” and without warranties of any kind. The location data included herein has been obtained from information developed, produced, and maintained by third party providers; or has been extrapolated from maps incorporated in the ASCE 7 standard. While ASCE has made every effort to use data obtained from reliable sources or methodologies, ASCE does not make any representations or warranties as to the accuracy, completeness, reliability, currency, or quality of any data provided herein. Any third-party links provided by this Tool should not be construed as an endorsement, affiliation, relationship, or sponsorship of such third-party content by or from ASCE.

ASCE does not intend, nor should anyone interpret, the results provided by this Tool to replace the sound judgment of a competent professional, having knowledge and experience in the appropriate field(s) of practice, nor to substitute for the standard of care required of such professionals in interpreting and applying the contents of this Tool or the ASCE 7 standard.

In using this Tool, you expressly assume all risks associated with your use. Under no circumstances shall ASCE or its officers, directors, employees, members, affiliates, or agents be liable to you or any other person for any direct, indirect, special, incidental, or consequential damages arising from or related to your use of, or reliance on, the Tool or any information obtained therein. To the fullest extent permitted by law, you agree to release and hold harmless ASCE from any and all liability of any nature arising out of or resulting from any use of data provided by the ASCE 7 Hazard Tool.

APPENDIX C

SOFTWARE ANALYSIS OUTPUT

Member Primary Data

	Label	I Joint	J Joint	K Joint	Rotate(d...	Section/Shape	Type	Design List	Material	Design Ru...
1	SA2	N2	N1			Standoff Arms	Beam	Pipe	A500 Gr....	Typical
2	SA1	N7	N6			Standoff Arms	Beam	Pipe	A500 Gr....	Typical
3	VB1	N3	N8			Standoff Vertical	VBrace	BAR	A529 Gr....	Typical
4	VB2	N4	N9			Standoff Vertical	VBrace	BAR	A529 Gr....	Typical
5	DIAG1	N4	N8			Diagonal	VBrace	BAR	A529 Gr....	Typical
6	DIAG2	N3	N9			Diagonal	VBrace	BAR	A529 Gr....	Typical
7	SA4	N10	N1			Standoff Arms	Beam	Pipe	A500 Gr....	Typical
8	SA3	N14	N6			Standoff Arms	Beam	Pipe	A500 Gr....	Typical
9	VB3	N11	N15			Standoff Vertical	VBrace	BAR	A529 Gr....	Typical
10	VB4	N12	N16			Standoff Vertical	VBrace	BAR	A529 Gr....	Typical
11	DIAG3	N12	N15			Diagonal	VBrace	BAR	A529 Gr....	Typical
12	DIAG4	N11	N16			Diagonal	VBrace	BAR	A529 Gr....	Typical
13	HOR2	N16A	N15A			Face Horizontal	Beam	Pipe	A500 Gr....	Typical
14	HOR1	N18	N17			Face Horizontal	Beam	Pipe	A500 Gr....	Typical
15	MP3	N22	N21			Mount Pipe	Column	Pipe	A500 Gr....	Typical
16	MP1	N20	N19			Mount Pipe	Column	Pipe	A500 Gr....	Typical
17	MP2	N34	N33			Mount Pipe	Column	Pipe	A500 Gr....	Typical
18	TB	N37	N38			Tieback	Beam	Pipe	A500 Gr....	Typical
19	M29	N25	N67			RIGID	None	None	RIGID	Typical
20	M30	N27	N69			RIGID	None	None	RIGID	Typical
21	M33	N35	N73			RIGID	None	None	RIGID	Typical
22	M34	N36	N74			RIGID	None	None	RIGID	Typical
23	M35	N26	N68			RIGID	None	None	RIGID	Typical
24	M36	N28	N70			RIGID	None	None	RIGID	Typical
25	M25	N1	N42			RIGID	None	None	RIGID	Typical
26	M26	N6	N43			RIGID	None	None	RIGID	Typical
27	M27	N37	N41			RIGID	None	None	RIGID	Typical
28	M28	N10	N44			RIGID	None	None	RIGID	Typical
29	M29A	N14	N45			RIGID	None	None	RIGID	Typical
30	M30A	N2	N42A			RIGID	None	None	RIGID	Typical
31	M31	N7	N43A			RIGID	None	None	RIGID	Typical

Material Takeoff

	Material	Size	Pieces	Length[in]	Weight[K]
1	General				
2	RIGID		13	39	0
3	Total General		13	39	0
4					
5	Hot Rolled Steel				
6	A500 Gr.46	PIPE_1.5	4	169.6	.036
7	A500 Gr.46	PIPE_2.5	5	480	.219
8	A500 Gr.46	PIPE_2.0	1	117.2	.034
9	A529 Gr.50	0.625" S.R.	8	272.4	.024
10	Total HR Steel		18	1039.3	.313

Basic Load Cases

	BLC Description	Category	X Gravity	Y Gravity	Z Gravity	Joint	Point	Distribut...	Area(M...	Surface(Plate/Wall)
1	Self Weight	DL		-1			5			
2	Wind Load AZI 0	WLZ					10			
3	Wind Load AZI 30	None					10			
4	Wind Load AZI 60	None					10			
5	Wind Load AZI 90	WLX					10			
6	Wind Load AZI 120	None					10			

Basic Load Cases (Continued)

	BLC Description	Category	X Gravity	Y Gravity	Z Gravity	Joint	Point	Distribut...	Area(M...	Surface(Plate/Wall)
7	Wind Load AZI 150	None					10			
8	Wind Load AZI 180	None					10			
9	Wind Load AZI 210	None					10			
10	Wind Load AZI 240	None					10			
11	Wind Load AZI 270	None					10			
12	Wind Load AZI 300	None					10			
13	Wind Load AZI 330	None					10			
14	Distr. Wind Load Z	WLZ						31		
15	Distr. Wind Load X	WLX						31		
16	Ice Weight	OL1					5	31		
17	Ice Wind Load AZI 0	OL2					10			
18	Ice Wind Load AZI ...	None					10			
19	Ice Wind Load AZI ...	None					10			
20	Ice Wind Load AZI ...	OL3					10			
21	Ice Wind Load AZI ...	None					10			
22	Ice Wind Load AZI ...	None					10			
23	Ice Wind Load AZI ...	None					10			
24	Ice Wind Load AZI ...	None					10			
25	Ice Wind Load AZI ...	None					10			
26	Ice Wind Load AZI ...	None					10			
27	Ice Wind Load AZI ...	None					10			
28	Ice Wind Load AZI ...	None					10			
29	Distr. Ice Wind Loa...	OL2						31		
30	Distr. Ice Wind Loa...	OL3						31		
31	Seismic Load Z	ELZ			-.296		5			
32	Seismic Load X	ELX	-.296				5			
33	Service Live Loads	LL				1				
34	Maintenance Load ...	LL				1				
35	Maintenance Load ...	LL				1				
36	Maintenance Load ...	LL				1				

Load Combinations

	Description	Solve	PDelta	SRSS	BLC	Factor	BLC	Fa...	B...	Fa...	B...	Fa...	B...	Fa...	B...	Fa...	B...	Fa...	B...	Fa...	B...	Fa...	B...	Fa...
1	1.4DL	Yes	Y		1	1.4																		
2	1.2DL + 1WL AZI 0	Yes	Y		1	1.2	2	1	14	1	15													
3	1.2DL + 1WL AZI 30	Yes	Y		1	1.2	3	1	14	.866	15	.5												
4	1.2DL + 1WL AZI 60	Yes	Y		1	1.2	4	1	14	.5	15	.866												
5	1.2DL + 1WL AZI 90	Yes	Y		1	1.2	5	1	14		15	1												
6	1.2DL + 1WL AZI 120	Yes	Y		1	1.2	6	1	14	-.5	15	.866												
7	1.2DL + 1WL AZI 150	Yes	Y		1	1.2	7	1	14	-.8...	15	.5												
8	1.2DL + 1WL AZI 180	Yes	Y		1	1.2	8	1	14	-1	15													
9	1.2DL + 1WL AZI 210	Yes	Y		1	1.2	9	1	14	-.8...	15	-.5												
10	1.2DL + 1WL AZI 240	Yes	Y		1	1.2	10	1	14	-.5	15	-.8...												
11	1.2DL + 1WL AZI 270	Yes	Y		1	1.2	11	1	14		15	-1												
12	1.2DL + 1WL AZI 300	Yes	Y		1	1.2	12	1	14	.5	15	-.8...												
13	1.2DL + 1WL AZI 330	Yes	Y		1	1.2	13	1	14	.866	15	-.5												
14	0.9DL + 1WL AZI 0	Yes	Y		1	.9	2	1	14	1	15													
15	0.9DL + 1WL AZI 30	Yes	Y		1	.9	3	1	14	.866	15	.5												
16	0.9DL + 1WL AZI 60	Yes	Y		1	.9	4	1	14	.5	15	.866												
17	0.9DL + 1WL AZI 90	Yes	Y		1	.9	5	1	14		15	1												
18	0.9DL + 1WL AZI 120	Yes	Y		1	.9	6	1	14	-.5	15	.866												
19	0.9DL + 1WL AZI 150	Yes	Y		1	.9	7	1	14	-.8...	15	.5												
20	0.9DL + 1WL AZI 180	Yes	Y		1	.9	8	1	14	-1	15													
21	0.9DL + 1WL AZI 210	Yes	Y		1	.9	9	1	14	-.8...	15	-.5												
22	0.9DL + 1WL AZI 240	Yes	Y		1	.9	10	1	14	-.5	15	-.8...												

Load Combinations (Continued)

	Description	Solve	PDelta	SRSS	BLC	Factor	BLC	Fa...	B...	Fa...	B...	Fa...	B...	Fa...	B...	Fa...	B...	Fa...	B...	Fa...	B...	Fa...	B...	Fa...
23	0.9DL + 1WL AZI 270	Yes	Y		1	.9	11	1	14		15	-1												
24	0.9DL + 1WL AZI 300	Yes	Y		1	.9	12	1	14	.5	15	-.8...												
25	0.9DL + 1WL AZI 330	Yes	Y		1	.9	13	1	14	.866	15	-.5												
26	1.2D + 1.0Di	Yes	Y		1	1.2	16	1																
27	1.2D + 1.0Di +1.0Wi A...	Yes	Y		1	1.2	16	1	17	1	29	1	30											
28	1.2D + 1.0Di +1.0Wi A...	Yes	Y		1	1.2	16	1	18	1	29	.866	30	.5										
29	1.2D + 1.0Di +1.0Wi A...	Yes	Y		1	1.2	16	1	19	1	29	.5	30	.866										
30	1.2D + 1.0Di +1.0Wi A...	Yes	Y		1	1.2	16	1	20	1	29		30	1										
31	1.2D + 1.0Di +1.0Wi A...	Yes	Y		1	1.2	16	1	21	1	29	-.5	30	.866										
32	1.2D + 1.0Di +1.0Wi A...	Yes	Y		1	1.2	16	1	22	1	29	-.8...	30	.5										
33	1.2D + 1.0Di +1.0Wi A...	Yes	Y		1	1.2	16	1	23	1	29	-1	30											
34	1.2D + 1.0Di +1.0Wi A...	Yes	Y		1	1.2	16	1	24	1	29	-.8...	30	-.5										
35	1.2D + 1.0Di +1.0Wi A...	Yes	Y		1	1.2	16	1	25	1	29	-.5	30	-.8...										
36	1.2D + 1.0Di +1.0Wi A...	Yes	Y		1	1.2	16	1	26	1	29		30	-1										
37	1.2D + 1.0Di +1.0Wi A...	Yes	Y		1	1.2	16	1	27	1	29	.5	30	-.8...										
38	1.2D + 1.0Di +1.0Wi A...	Yes	Y		1	1.2	16	1	28	1	29	.866	30	-.5										
39	(1.2 + 0.2Sds)DL + 1.0...	Yes	Y		1	1.239	31	1	32															
40	(1.2 + 0.2Sds)DL + 1.0...	Yes	Y		1	1.239	31	.866	32	.5														
41	(1.2 + 0.2Sds)DL + 1.0...	Yes	Y		1	1.239	31	.5	32	.866														
42	(1.2 + 0.2Sds)DL + 1.0...	Yes	Y		1	1.239	31		32	1														
43	(1.2 + 0.2Sds)DL + 1.0...	Yes	Y		1	1.239	31	-.5	32	.866														
44	(1.2 + 0.2Sds)DL + 1.0...	Yes	Y		1	1.239	31	-.8...	32	.5														
45	(1.2 + 0.2Sds)DL + 1.0...	Yes	Y		1	1.239	31	-1	32															
46	(1.2 + 0.2Sds)DL + 1.0...	Yes	Y		1	1.239	31	-.8...	32	-.5														
47	(1.2 + 0.2Sds)DL + 1.0...	Yes	Y		1	1.239	31	-.5	32	-.8...														
48	(1.2 + 0.2Sds)DL + 1.0...	Yes	Y		1	1.239	31		32	-1														
49	(1.2 + 0.2Sds)DL + 1.0...	Yes	Y		1	1.239	31	.5	32	-.8...														
50	(1.2 + 0.2Sds)DL + 1.0...	Yes	Y		1	1.239	31	.866	32	-.5														
51	(0.9 - 0.2Sds)DL + 1.0...	Yes	Y		1	.861	31	1	32															
52	(0.9 - 0.2Sds)DL + 1.0...	Yes	Y		1	.861	31	.866	32	.5														
53	(0.9 - 0.2Sds)DL + 1.0...	Yes	Y		1	.861	31	.5	32	.866														
54	(0.9 - 0.2Sds)DL + 1.0...	Yes	Y		1	.861	31		32	1														
55	(0.9 - 0.2Sds)DL + 1.0...	Yes	Y		1	.861	31	-.5	32	.866														
56	(0.9 - 0.2Sds)DL + 1.0...	Yes	Y		1	.861	31	-.8...	32	.5														
57	(0.9 - 0.2Sds)DL + 1.0...	Yes	Y		1	.861	31	-1	32															
58	(0.9 - 0.2Sds)DL + 1.0...	Yes	Y		1	.861	31	-.8...	32	-.5														
59	(0.9 - 0.2Sds)DL + 1.0...	Yes	Y		1	.861	31	-.5	32	-.8...														
60	(0.9 - 0.2Sds)DL + 1.0...	Yes	Y		1	.861	31		32	-1														
61	(0.9 - 0.2Sds)DL + 1.0...	Yes	Y		1	.861	31	.5	32	-.8...														
62	(0.9 - 0.2Sds)DL + 1.0...	Yes	Y		1	.861	31	.866	32	-.5														
63	1.0DL + 1.5LL + 1.0SW...	Yes	Y		1	1	2	.25	14	.25	15		33	1.5										
64	1.0DL + 1.5LL + 1.0SW...	Yes	Y		1	1	3	.25	14	.216	15	.125	33	1.5										
65	1.0DL + 1.5LL + 1.0SW...	Yes	Y		1	1	4	.25	14	.125	15	.216	33	1.5										
66	1.0DL + 1.5LL + 1.0SW...	Yes	Y		1	1	5	.25	14		15	.25	33	1.5										
67	1.0DL + 1.5LL + 1.0SW...	Yes	Y		1	1	6	.25	14	-.1...	15	.216	33	1.5										
68	1.0DL + 1.5LL + 1.0SW...	Yes	Y		1	1	7	.25	14	-.2...	15	.125	33	1.5										
69	1.0DL + 1.5LL + 1.0SW...	Yes	Y		1	1	8	.25	14	-.25	15		33	1.5										
70	1.0DL + 1.5LL + 1.0SW...	Yes	Y		1	1	9	.25	14	-.2...	15	-.1...	33	1.5										
71	1.0DL + 1.5LL + 1.0SW...	Yes	Y		1	1	10	.25	14	-.1...	15	-.2...	33	1.5										
72	1.0DL + 1.5LL + 1.0SW...	Yes	Y		1	1	11	.25	14		15	-.25	33	1.5										
73	1.0DL + 1.5LL + 1.0SW...	Yes	Y		1	1	12	.25	14	.125	15	-.2...	33	1.5										
74	1.0DL + 1.5LL + 1.0SW...	Yes	Y		1	1	13	.25	14	.216	15	-.1...	33	1.5										
75	1.2DL + 1.5LL	Yes	Y		1	1.2	33	1.5																
76	1.2DL + 1.5LM-MP1 + ...	Yes	Y		1	1.2	34	1.5	2	.063	14	.063	15											
77	1.2DL + 1.5LM-MP1 + ...	Yes	Y		1	1.2	34	1.5	3	.063	14	.054	15	.031										
78	1.2DL + 1.5LM-MP1 + ...	Yes	Y		1	1.2	34	1.5	4	.063	14	.031	15	.054										
79	1.2DL + 1.5LM-MP1 + ...	Yes	Y		1	1.2	34	1.5	5	.063	14		15	.063										

Load Combinations (Continued)

	Description	Solve	PDelta	SRSS	BLC	Factor	BLC	Fa...	B...	Fa...	B...	Fa...	B...	Fa...	B...	Fa...	B...	Fa...	B...	Fa...	B...	Fa...	B...	Fa...
80	1.2DL + 1.5LM-MP1 + ...	Yes	Y		1	1.2	34	1.5	6	.063	14	-.0...	15	.054										
81	1.2DL + 1.5LM-MP1 + ...	Yes	Y		1	1.2	34	1.5	7	.063	14	-.0...	15	.031										
82	1.2DL + 1.5LM-MP1 + ...	Yes	Y		1	1.2	34	1.5	8	.063	14	-.0...	15											
83	1.2DL + 1.5LM-MP1 + ...	Yes	Y		1	1.2	34	1.5	9	.063	14	-.0...	15	-.0...										
84	1.2DL + 1.5LM-MP1 + ...	Yes	Y		1	1.2	34	1.5	10	.063	14	-.0...	15	-.0...										
85	1.2DL + 1.5LM-MP1 + ...	Yes	Y		1	1.2	34	1.5	11	.063	14		15	-.0...										
86	1.2DL + 1.5LM-MP1 + ...	Yes	Y		1	1.2	34	1.5	12	.063	14	.031	15	-.0...										
87	1.2DL + 1.5LM-MP1 + ...	Yes	Y		1	1.2	34	1.5	13	.063	14	.054	15	-.0...										
88	1.2DL + 1.5LM-MP2 + ...	Yes	Y		1	1.2	35	1.5	2	.063	14	.063	15											
89	1.2DL + 1.5LM-MP2 + ...	Yes	Y		1	1.2	35	1.5	3	.063	14	.054	15	.031										
90	1.2DL + 1.5LM-MP2 + ...	Yes	Y		1	1.2	35	1.5	4	.063	14	.031	15	.054										
91	1.2DL + 1.5LM-MP2 + ...	Yes	Y		1	1.2	35	1.5	5	.063	14		15	.063										
92	1.2DL + 1.5LM-MP2 + ...	Yes	Y		1	1.2	35	1.5	6	.063	14	-.0...	15	.054										
93	1.2DL + 1.5LM-MP2 + ...	Yes	Y		1	1.2	35	1.5	7	.063	14	-.0...	15	.031										
94	1.2DL + 1.5LM-MP2 + ...	Yes	Y		1	1.2	35	1.5	8	.063	14	-.0...	15											
95	1.2DL + 1.5LM-MP2 + ...	Yes	Y		1	1.2	35	1.5	9	.063	14	-.0...	15	-.0...										
96	1.2DL + 1.5LM-MP2 + ...	Yes	Y		1	1.2	35	1.5	10	.063	14	-.0...	15	-.0...										
97	1.2DL + 1.5LM-MP2 + ...	Yes	Y		1	1.2	35	1.5	11	.063	14		15	-.0...										
98	1.2DL + 1.5LM-MP2 + ...	Yes	Y		1	1.2	35	1.5	12	.063	14	.031	15	-.0...										
99	1.2DL + 1.5LM-MP2 + ...	Yes	Y		1	1.2	35	1.5	13	.063	14	.054	15	-.0...										
100	1.2DL + 1.5LM-MP3 + ...	Yes	Y		1	1.2	36	1.5	2	.063	14	.063	15											
101	1.2DL + 1.5LM-MP3 + ...	Yes	Y		1	1.2	36	1.5	3	.063	14	.054	15	.031										
102	1.2DL + 1.5LM-MP3 + ...	Yes	Y		1	1.2	36	1.5	4	.063	14	.031	15	.054										
103	1.2DL + 1.5LM-MP3 + ...	Yes	Y		1	1.2	36	1.5	5	.063	14		15	.063										
104	1.2DL + 1.5LM-MP3 + ...	Yes	Y		1	1.2	36	1.5	6	.063	14	-.0...	15	.054										
105	1.2DL + 1.5LM-MP3 + ...	Yes	Y		1	1.2	36	1.5	7	.063	14	-.0...	15	.031										
106	1.2DL + 1.5LM-MP3 + ...	Yes	Y		1	1.2	36	1.5	8	.063	14	-.0...	15											
107	1.2DL + 1.5LM-MP3 + ...	Yes	Y		1	1.2	36	1.5	9	.063	14	-.0...	15	-.0...										
108	1.2DL + 1.5LM-MP3 + ...	Yes	Y		1	1.2	36	1.5	10	.063	14	-.0...	15	-.0...										
109	1.2DL + 1.5LM-MP3 + ...	Yes	Y		1	1.2	36	1.5	11	.063	14		15	-.0...										
110	1.2DL + 1.5LM-MP3 + ...	Yes	Y		1	1.2	36	1.5	12	.063	14	.031	15	-.0...										
111	1.2DL + 1.5LM-MP3 + ...	Yes	Y		1	1.2	36	1.5	13	.063	14	.054	15	-.0...										

Envelope Joint Reactions

	Joint		X [lb]	LC	Y [lb]	LC	Z [lb]	LC	MX [lb-ft]	LC	MY [lb-ft]	LC	MZ [lb-ft]	LC
1	N38	max	95.169	17	60.893	36	734.226	5	0	111	0	111	0	111
2		min	-95.294	23	14.58	54	-734.446	11	0	1	0	1	0	1
3	N42	max	1076.287	79	877.042	31	441.721	24	-129.992	25	0	111	183.587	91
4		min	-1035.783	97	223.035	61	-1999.9...	31	-520.42	32	0	1	-192	85
5	N43	max	1036.997	91	871.23	37	1901.952	27	-130.679	20	0	111	183.779	91
6		min	-1077.424	85	222.234	55	-217.657	20	-518.814	27	0	1	-192.137	85
7	Totals:	max	777.261	5	1803.983	27	1208.245	14						
8		min	-777.261	23	462.958	57	-1208.2...	8						

Envelope AISC 15th(360-16): LRFD Steel Code Checks

	Member	Shape	Code Check	Loc[in]	LC	Shear Check	Loc[in]	Dir	LC	phi*...	phi*...	phi*...	phi*...	...	Eqn
1	DIAG4	0.625" S.R.	.261	20.32	86	.005	39.811		9	3991...	13815	134.4	134.4	...	H1-...
2	DIAG2	0.625" S.R.	.255	20.32	90	.005	39.811		7	3991...	13815	134.4	134.4	...	H1-...
3	SA3	PIPE_1.5	.250	42.4	87	.069	42.4		84	2276...	3100...	1452...	1452...	...	H1-...
4	SA1	PIPE_1.5	.245	42.4	89	.068	42.4		92	2276...	3100...	1452...	1452...	...	H1-...
5	SA4	PIPE_1.5	.238	42.4	82	.069	42.4		85	2276...	3100...	1452...	1452...	...	H1-...
6	SA2	PIPE_1.5	.233	42.4	93	.068	42.4		91	2276...	3100...	1452...	1452...	...	H1-...
7	HOR1	PIPE_2.5	.099	48	110	.071	18		86	3348...	66654	4726...	4726...	...	H1-...
8	MP3	PIPE_2.5	.097	63	80	.031	63		82	3348...	66654	4726...	4726...	...	H1-...

Envelope AISC 15th(360-16): LRFD Steel Code Checks (Continued)

	Member	Shape	Code Check	Loc[in]	LC	Shear Check	Loc[in]	Dir	LC	phi*...	phi*...	phi*...	phi*...	...	Eqn
9	HOR2	PIPE_2.5	.097	48	104	.072	18		78	6232..	66654	4726..	4726..	...	H1-...
10	MP1	PIPE_2.5	.096	63	96	.031	35		91	3348..	66654	4726..	4726..	...	H1-...
11	TB	PIPE_2.0	.090	58.605	5	.005	117.209		36	1031..	42228	2459..	2459..	...	H1-...
12	MP2	PIPE_2.5	.087	34	8	.020	63		10	3348..	66654	4726..	4726..	...	H1-...
13	DIAG3	0.625" S.R.	.083	19.905	37	.004	0		2	2036..	13815	134.4	134.4	...	H1-...
14	DIAG1	0.625" S.R.	.082	19.905	29	.004	39.811		2	2036..	13815	134.4	134.4	...	H1-...
15	VB3	0.625" S.R.	.021	14.15	3	.005	0		80	4673..	13815	134.4	134.4	1	H1-...
16	VB2	0.625" S.R.	.019	14.15	20	.013	0		86	4673..	13815	134.4	134.4	1	H1-...
17	VB4	0.625" S.R.	.019	14.15	20	.013	0		90	4673..	13815	134.4	134.4	1	H1-...
18	VB1	0.625" S.R.	.019	14.15	14	.005	0		96	4673..	13815	134.4	134.4	1	H1-...

APPENDIX D

ADDITIONAL CALCUATIONS

INFINIGY

Bolt Calculation Tool, V1.6.1

PROJECT DATA	
Site Name:	ONTOWESE AMODIO SELF STO
Site Number:	876312
Connection Description:	Sector Frame to Tower

MAXIMUM BOLT LOADS		
Bolt Tension:	2560.97	lbs
Bolt Shear:	831.37	lbs

WORST CASE BOLT LOADS[1]		
Bolt Tension:	2560.97	lbs
Bolt Shear:	446.55	lbs

BOLT PROPERTIES		
Bolt Type:	Threaded Rod	-
Bolt Diameter:	0.625	in
Bolt Grade:	A449	-
# of Threaded Rods:	2	-
Threads Excluded?	No	-

[1] *Worst case bolt loads correspond to Load combination #31 on member M25 in RISA-3D, which causes the maximum demand on the bolts.*

Member Information
J nodes of M25, M26,

BOLT CHECK		
Tensile Strength	20340.15	
Shear Strength	13805.83	
Max Tensile Usage	12.6%	
Max Shear Usage	6.0%	
Interaction Check (Worst Case)	0.02	***≤1.05***
Result	Pass	

APPENDIX E

MOUNT MODIFICATION DESIGN DRAWINGS (MDD) / SUPPLEMENTAL DRAWINGS

REVISIONS				
REV.	IPS	DESCRIPTION	BY	DATE
A	10191PC	NEW RELEASED.	RJC	3/17/2021

NOTES:

1.0 GENERAL
- 1.1 ALL METRIC DIMENSIONS ARE IN BRACKETS
- 1.2 FOR PATENT INFO :https://www.cs-pat.com

2.0 DESIGN NOTES
- 2.1 DESIGN SURVIAL WIND SPEED: 180 MPH, 3 SEC GUST WITH EQUIPMENT MOUNTED AS SHOWN

3.0 MANUFACTURING/SPECIAL REQUIREMENTS
- 3.1 TORQUE HARDWARE ACCORDING TO SIZE AS NOTED BELOW:
  - ALL HARDWARE 1/4" DIAMETER: TORQUE 7 FT-LBS
  - ALL HARDWARE 3/8" DIAMETER: TORQUE 12 FT-LBS
  - ALL HARDWARE 1/2" DIAMETER OR LARGER SHALL BE TIGHTENED SNUG TIGHT, DEFINED AS THE CONDITION OBTAINED WITH A FEW IMPACTS OA AN IMPACT WRENCH OR THE FULL EFFORT OF AN IRONWORKER USING AN ORDINARY SPUD WRENCH TO BRING THE CONNECTED PLIES INTO FIRM CONTACT.

4.0 TEST

5.0 PACKAGING
- 5.1 PACKAGING SHALL MEET COMMSCOPE REQUIREMENTS PER DOCUMENT IS-PL-3005
- 5.2 PRINTED DOCUMENT TO BE PLACED INSIDE POLYBAG AND THEN IN SHIPPING CONTAINER
- 5.3 EXTRA HARDWARE MAY BE SUPPLIED, BAGGED AND SHIPPED.

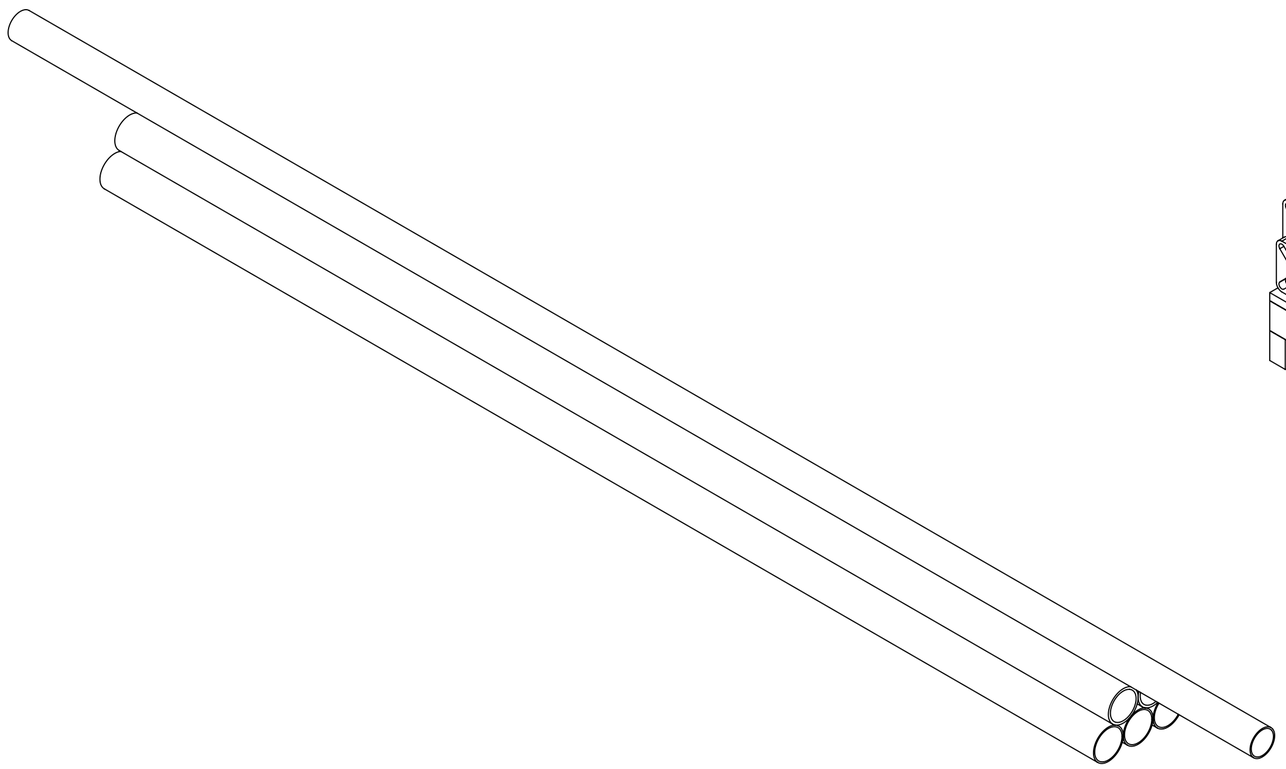

PB01TEA0308B0208K

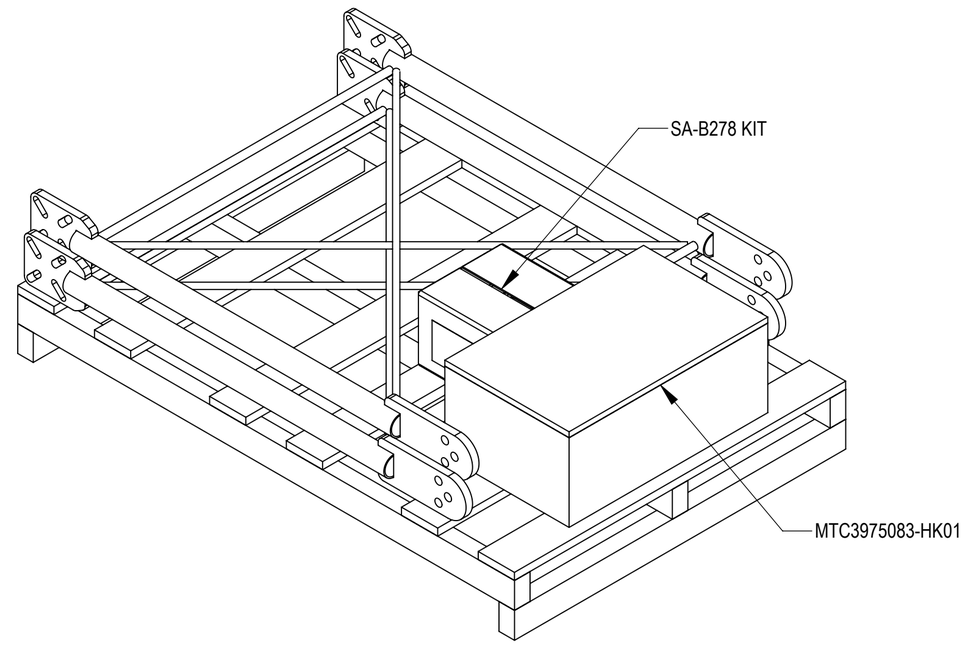

MTC3975083-PK01

ITEM	PART NO.	DESCRIPTION	QTY
1	MTC3975083-PK01	PACK KIT, MTC3975083, 1 SCTR, 3 ANT PIPE	1
2	PB01TEA0308B0208K	PIPE BUNDLE	1

DENSITY		lbs/in³
MASS	352.136	lbs
VOLUME	2431.173	in³
SURFACE AREA	19715.555	in²
HEIGHT		
LENGTH		
WIDTH		

© 2021 CommScope, Inc. Confidential

COMMSCOPE, INC. OF NORTH CAROLINA

TOLERANCES
0 PLACE X ± .25 | 2 PLACE .XX ± 0.06
1 PLACE .X ± 0.12 | ANGLES ± 2°

SAP MATERIAL MASTER: MTC3975083

FINISH: GALV A123

MATERIAL: SEE BOM

UNLESS OTHERWISE SPECIFIED DIMENSIONS ARE IN INCHES INTERPRET PER ANSI Y 14.5M-1994

	NAME	DATE
CE	XZ1054	03/02/2021
RW	BCAMPBELLCON	03/17/2021
AD	MC1107	03/17/2021
RE	BCROSS	03/17/2021

ECN 10191PC

TITLE: SECTOR FRAME, TW, SFG21, 8FT, 3 ANT PIPE

SCALE: 1:8

DOCUMENT NO.: MTC3975083

SIZE: C

Auth Group: INSL

MODEL			DRAWING			SHEET
VERSION	STATUS	REVISION	VERSION	STATUS	REVISION	
00	RE	A	00	RE	A	1 OF 7

NOTES:

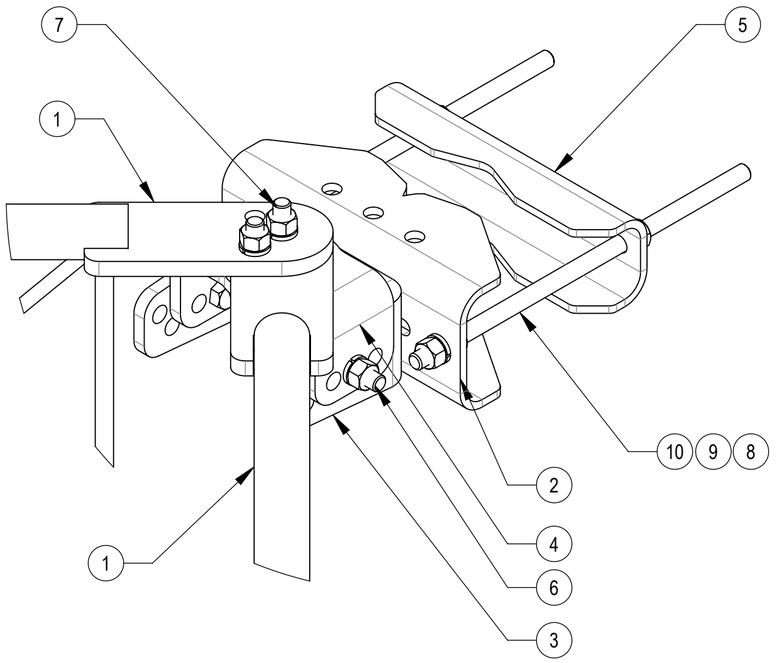

DETAIL A
SCALE 1 : 4

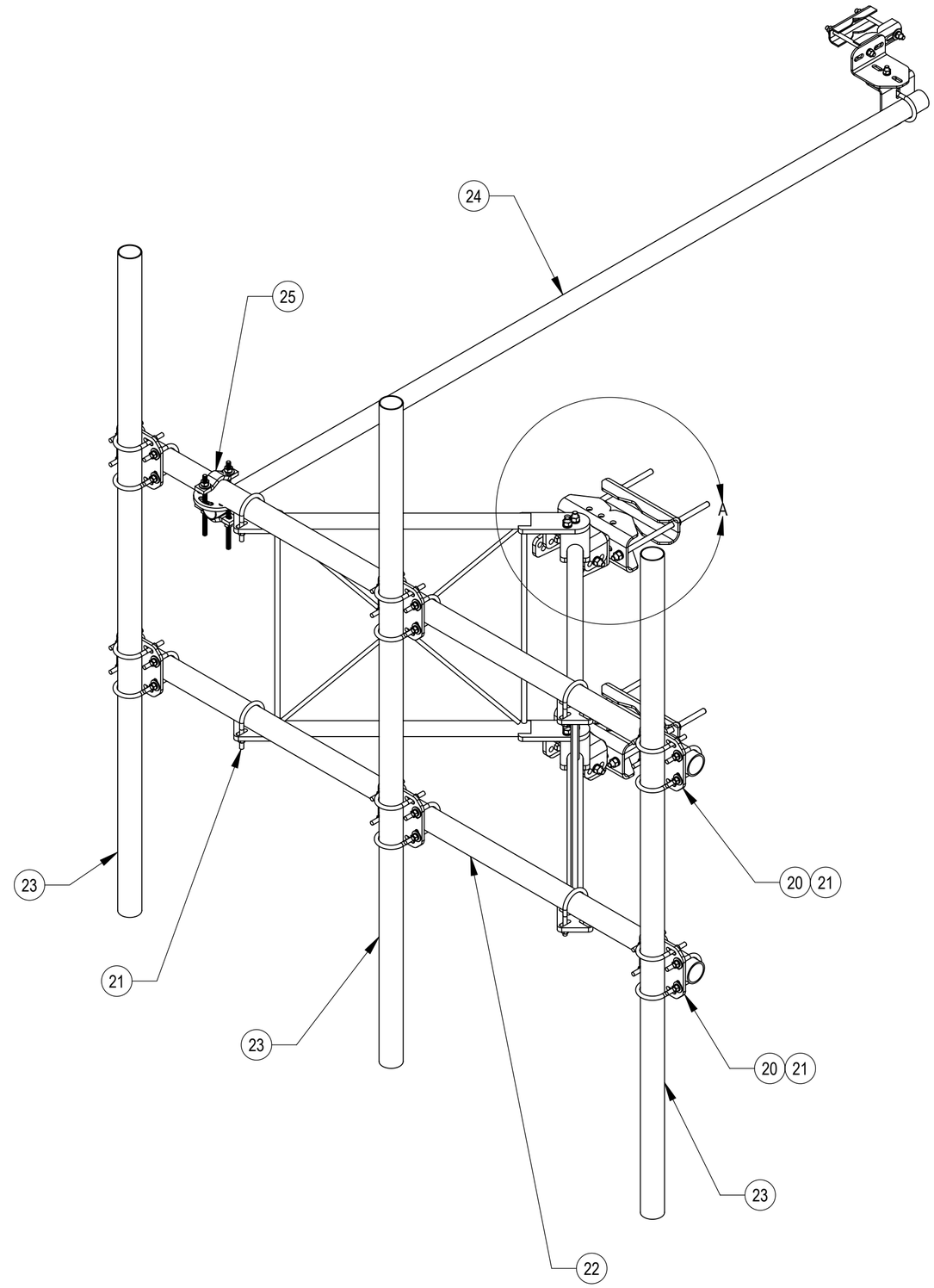

ITEM NO.	PART NUMBER	DESCRIPTION	QTY.	NOTE NO.
1	SFV01	WELDMENT, SF-V STANDOFF ARM	2	
2	MTC397522	CLAMP, FRONT MOUNTING	2	
3	SFV03	SFV TAPER BRACKET	1	
4	SFV02	SFV AZIMUTH BRACKET	3	
5	MTC397521	CLAMP, BACK	2	
6	GB-05225	5/8" X 2-1/4" GALV BOLT KIT	8	
7	GB-05305	5/8" X 3" GALV BOLT KIT	4	
8	GWL-05	5/8" GALV LOCK WASHER	8	
9	GN-05	5/8" GALV HEX NUT	12	
10	MT-382-16	5/8" X 16" GALV THREADED ROD	4	
11	GWF-05	5/8" GALV FLAT WASHER, 1.7OD	6	
12	GUB-4240	1/2" X 2-1/2" X 4" GALV U-BOLT	1	
13	XAU01	ANGLE, CROSSOVER, 1.9-3.5" X 1.9-3.5" OD	2	
14	SAB01	FORMED CLAMP	2	
15	MT-379-8	1/2" X 8" GALV THREADED ROD	2	
16	GB-04145	1/2" X 1-1/2" GALV BOLT KIT	1	
17	GWF-04	1/2" GALV FLAT WASHER	52	
18	GWL-04	1/2" GALV LOCK WASHER	41	
19	GN-04	1/2" GALV HEX NUT	41	
20	XPU01	PLATE, CROSSOVER, 1.9-3.5" X 1.9-3.5" OD	6	
21	GUB-4352	1/2" X 3" X 5-1/4" GALV U-BOLT	28	
22	MT54696	∅2.875" O.D. X 96 PIPE	2	
23	MT54696120	∅2.88" X 96" GALV PIPE	3	
24	MT-651-120	2.375" OD X 120" PIPE	1	
25	XP-R	CROSSOVER PLATE, ROUND, UP TO 3.5" OD	1	

© 2021 CommScope, Inc. Confidential

COMMSCOPE, INC. OF NORTH CAROLINA

TITLE
SECTOR FRAME, TW, SFG21, 8FT, 3 ANT PIPE

SIZE	SCALE	DOCUMENT NO.
C	1:12	MTC3975083

DRAWING			SHEET
VERSION	STATUS	REVISION	
00	RE	A	2 OF 7

NOTES:

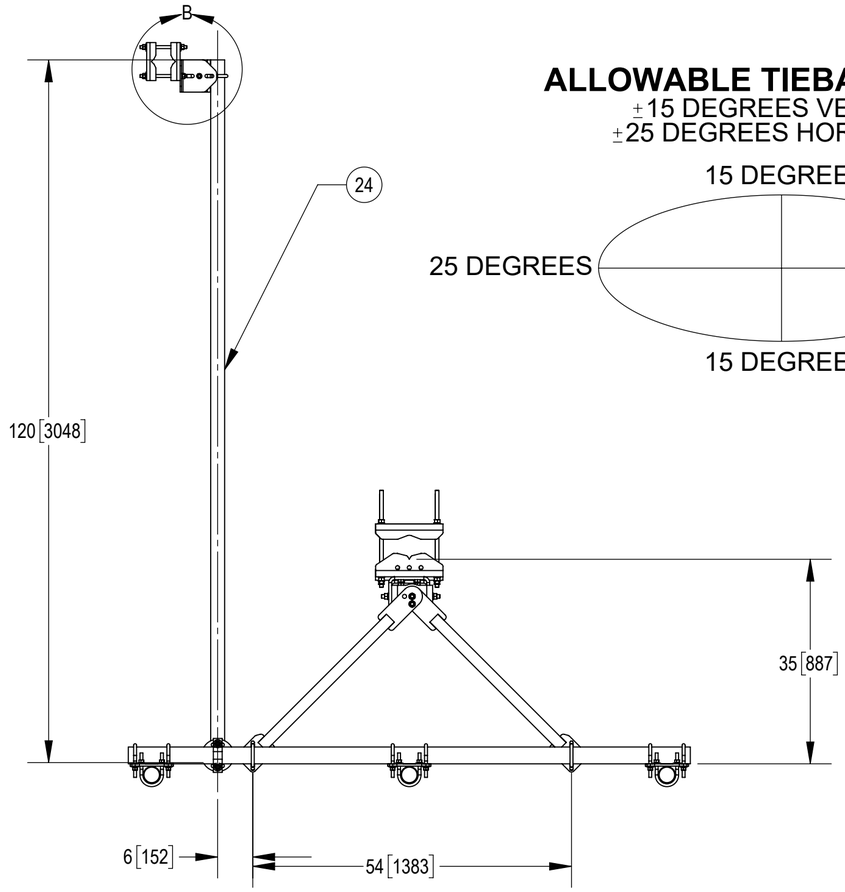

ALLOWABLE TIEBACK ANGLE

±15 DEGREES VERTICAL
±25 DEGREES HORIZONTAL

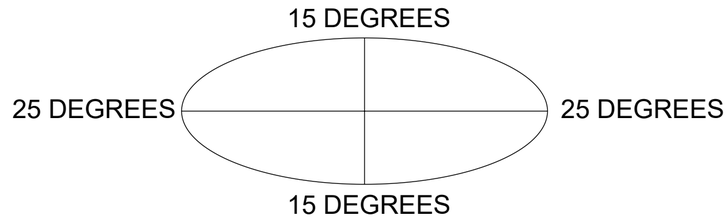

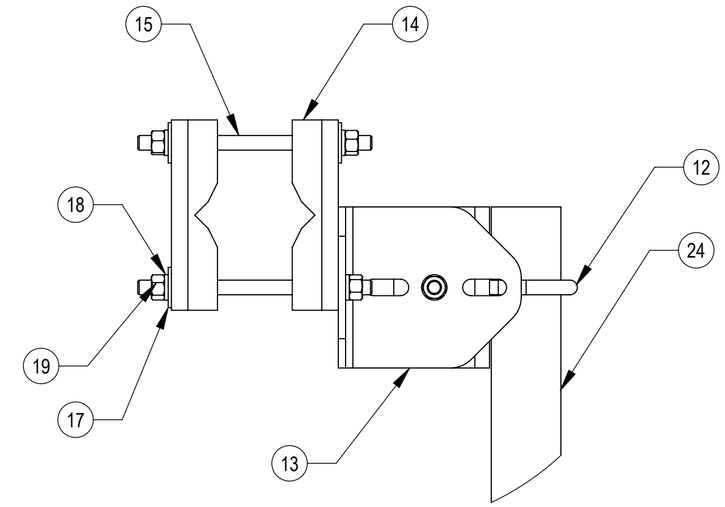

DETAIL B
SCALE 1 : 4

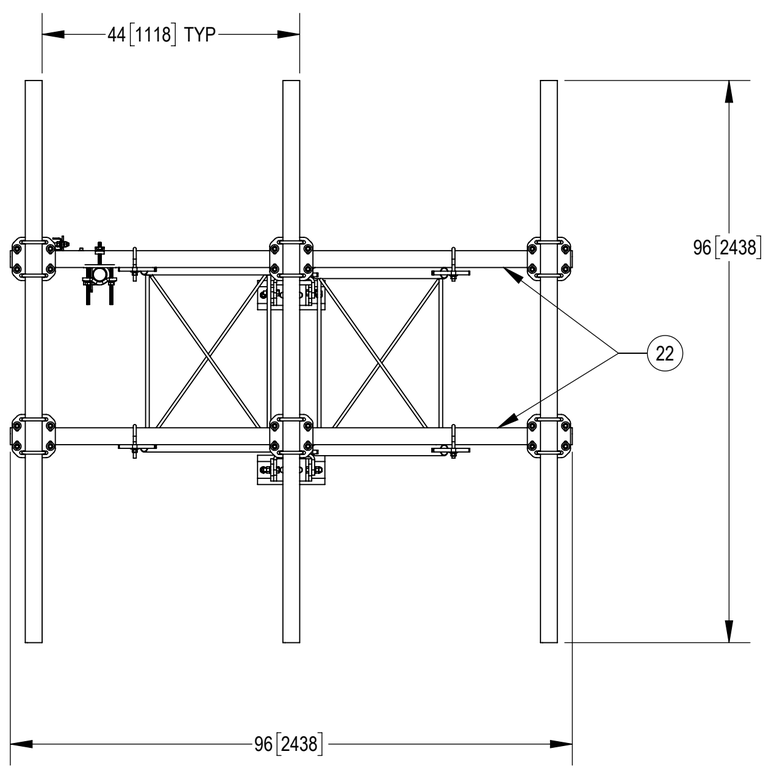

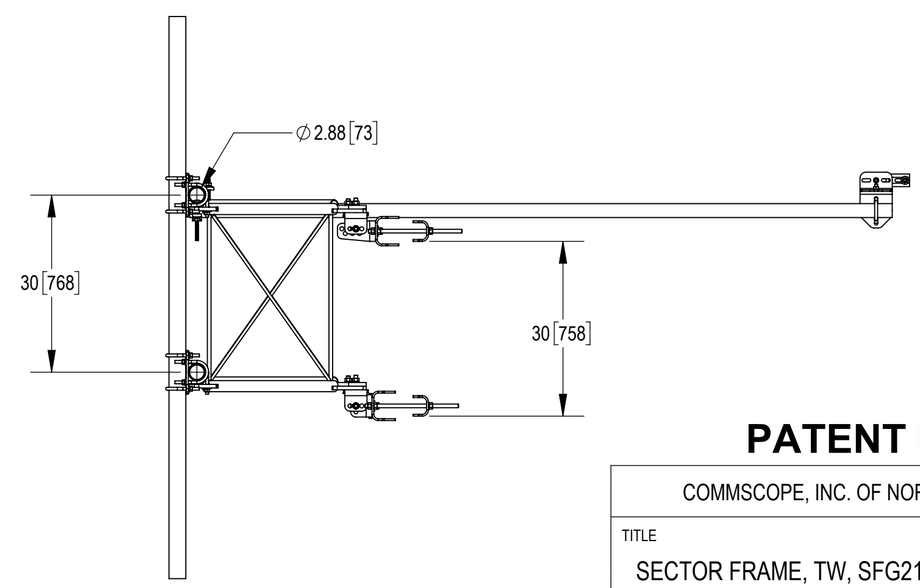

PATENT PENDING

COMMSCOPE, INC. OF NORTH CAROLINA			
TITLE SECTOR FRAME, TW, SFG21, 8FT, 3 ANT PIPE			
SIZE C	SCALE 1:20	DOCUMENT NO. MTC3975083	
		DRAWING VERSION 00 / STATUS RE / REVISION A	SHEET 3 OF 7

© 2021 CommScope, Inc. Confidential

NOTES:

STEP1: ATTACH STANDOFF ARMS (SFV01) TO AZIMUTH BRACKETS (SFV02) USING BOLT KITS (GB-05305)

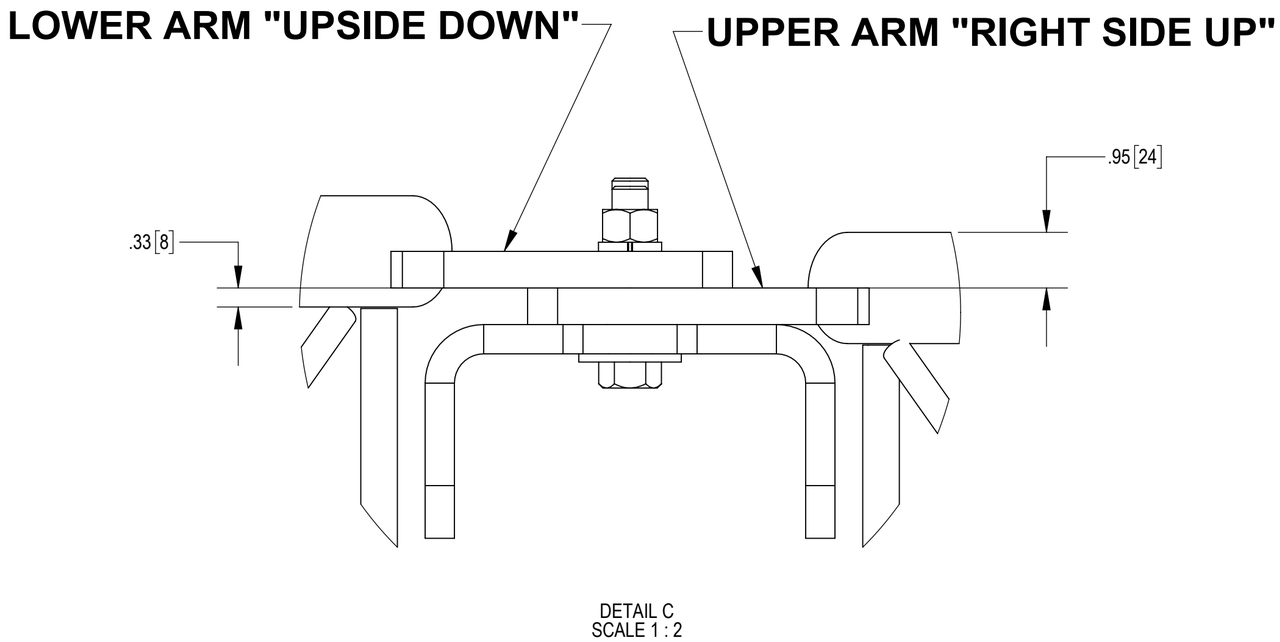

DETAIL C
SCALE 1 : 2

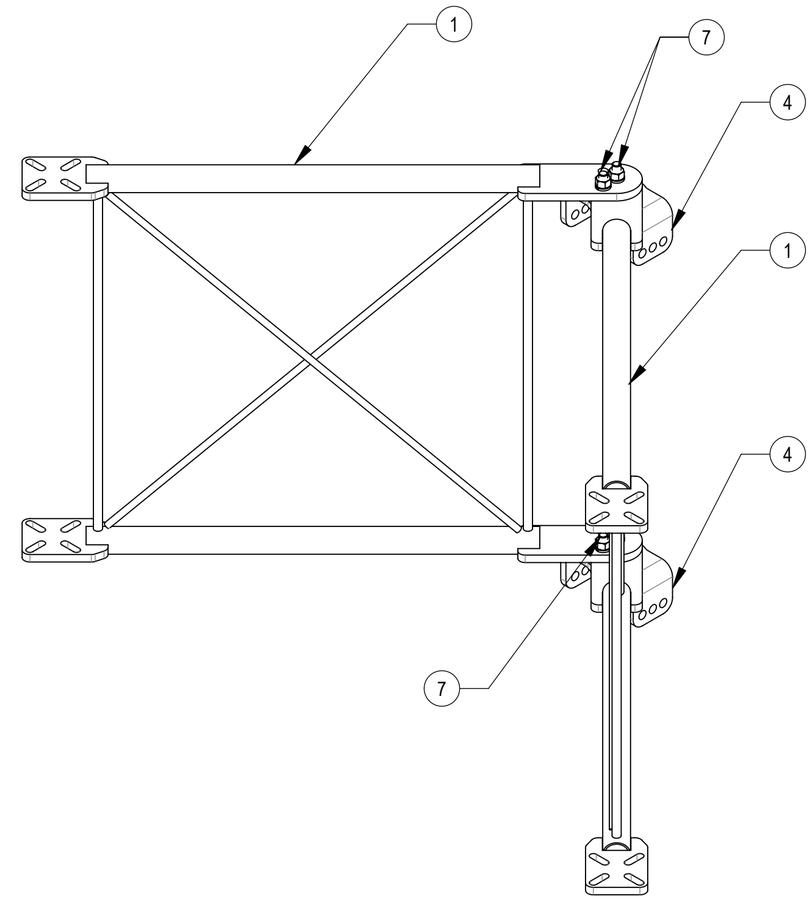

**STANDOFF ARM ORIENTATION IS CRITICAL!
WHEN ASSEMBLED, ARMS SHOULD BE LEVEL
WITH EACH OTHER. ALSO SEE DETAIL C ABOVE**

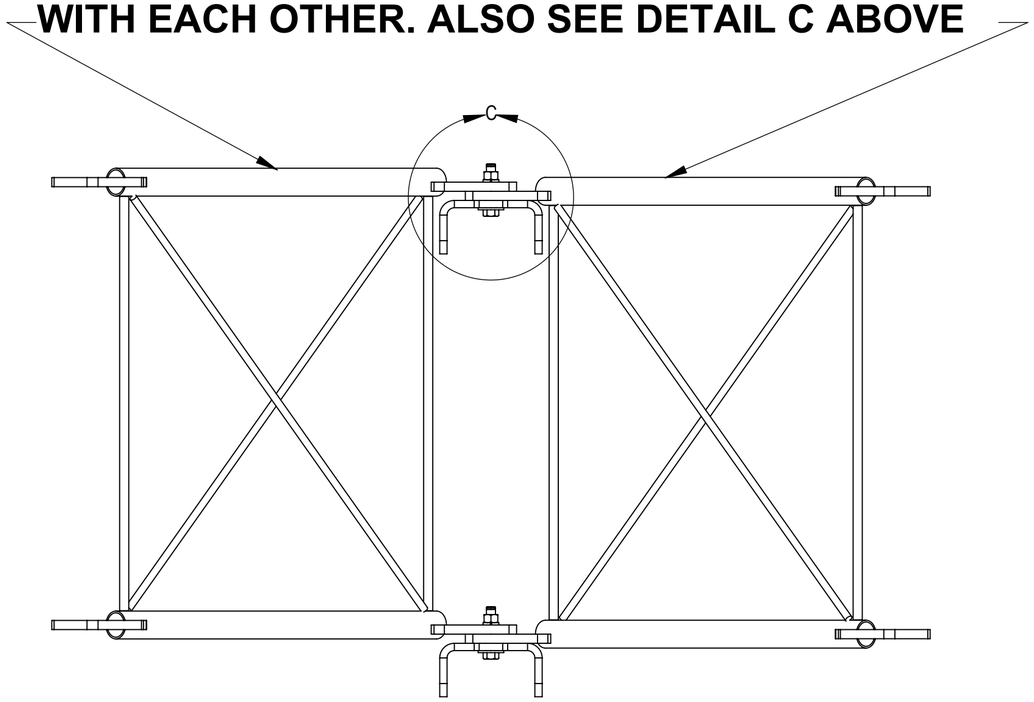

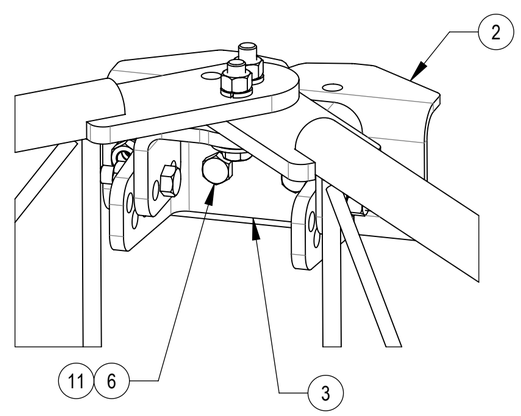

ISO ROTATED VIEW

PATENT PENDING

COMMSCOPE, INC. OF NORTH CAROLINA

TITLE
SECTOR FRAME, TW, SFG21, 8FT, 3 ANT PIPE

SIZE	SCALE	DOCUMENT NO.			
C	1:8	MTC3975083			
		DRAWING			SHEET
		VERSION	STATUS	REVISION	
		00	RE	A	4 OF 7

© 2021 CommScope, Inc. Confidential

NOTES:

STEP 2A: ON TOP, ATTACH TAPER BRACKET (SFV03) TO AZIMUTH BRACKET (SFV02) USING BOLT KITS (GB-05225). SEE ISO ROTATED VIEW. ATTACH TAPER BRACKET (SFV03) TO CLAMP, FRONT MTG (MTC397522) USING BOLT KITS (GB-05225).

STEP 2B: ON BOTTOM, ATTACH AZIMUTH BRACKET (SFV02) TO AZIMUTH BRACKET (SFV02) USING BOLT KITS (GB-05225). ATTACH AZIMUTH BRACKET (SFV02) TO CLAMP, FRONT MTG (MTC397522) USING BOLT KITS(GB-05225).

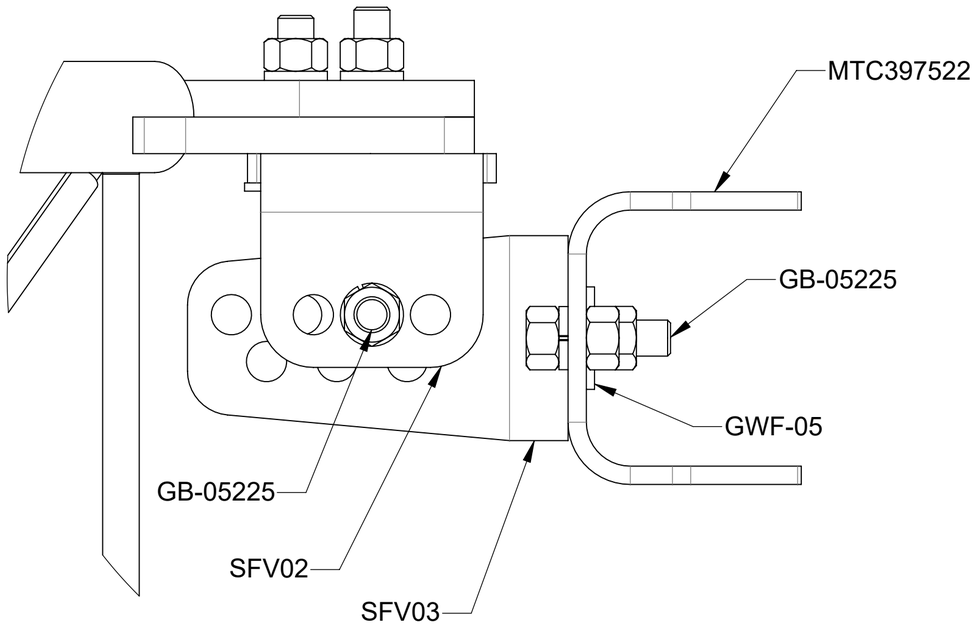

DETAIL D
SCALE 1 : 2

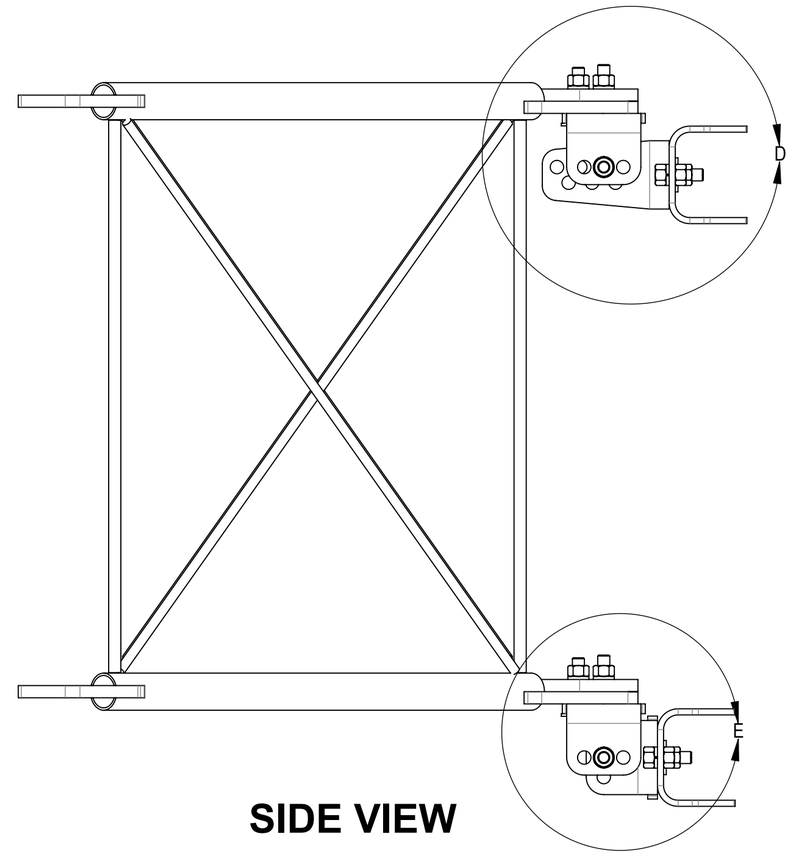

SIDE VIEW

STANDOFF ARM ORIENTATION IS CRITICAL! WHEN ASSEMBLED, PIPES SHOULD BE LEVEL

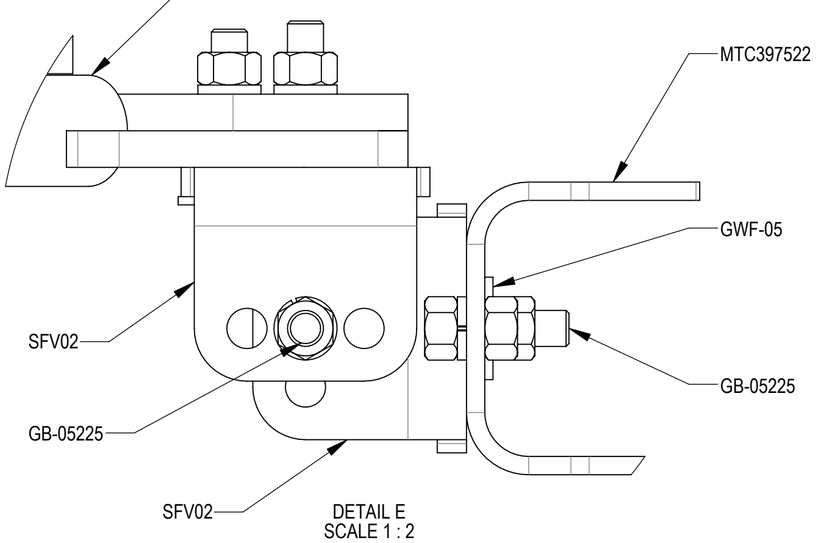

DETAIL E
SCALE 1 : 2

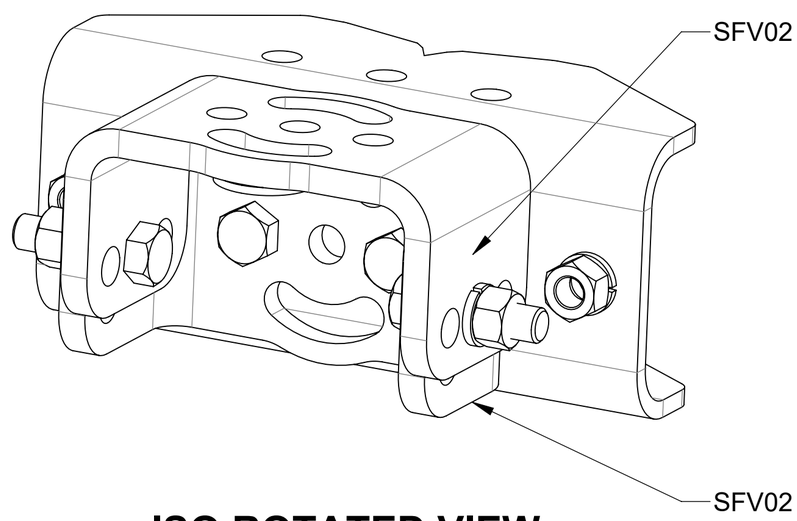

ISO ROTATED VIEW

PATENT PENDING

COMMSCOPE, INC. OF NORTH CAROLINA			
TITLE: SECTOR FRAME, TW, SFG21, 8FT, 3 ANT PIPE			
SIZE: C	SCALE: 1:4	DOCUMENT NO.: MTC3975083	
		DRAWING	SHEET
		VERSION: 00 / STATUS: RE / REVISION: A	5 OF 7

© 2021 CommScope, Inc. Confidential

NOTES:

STEP 3: ATTACH FACE PIPES TO STANDOFF ARMS (SFV01) USING U-BOLTS (GUB-4240).

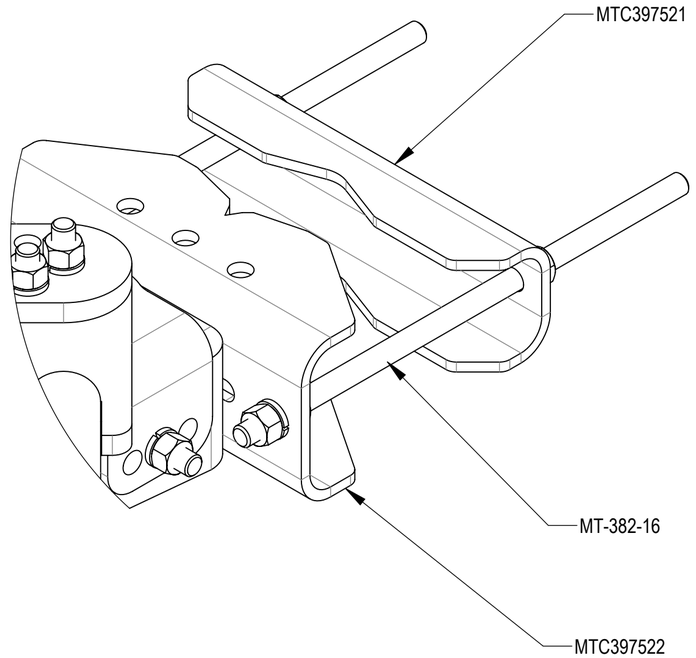

DETAIL G
SCALE 1 : 3

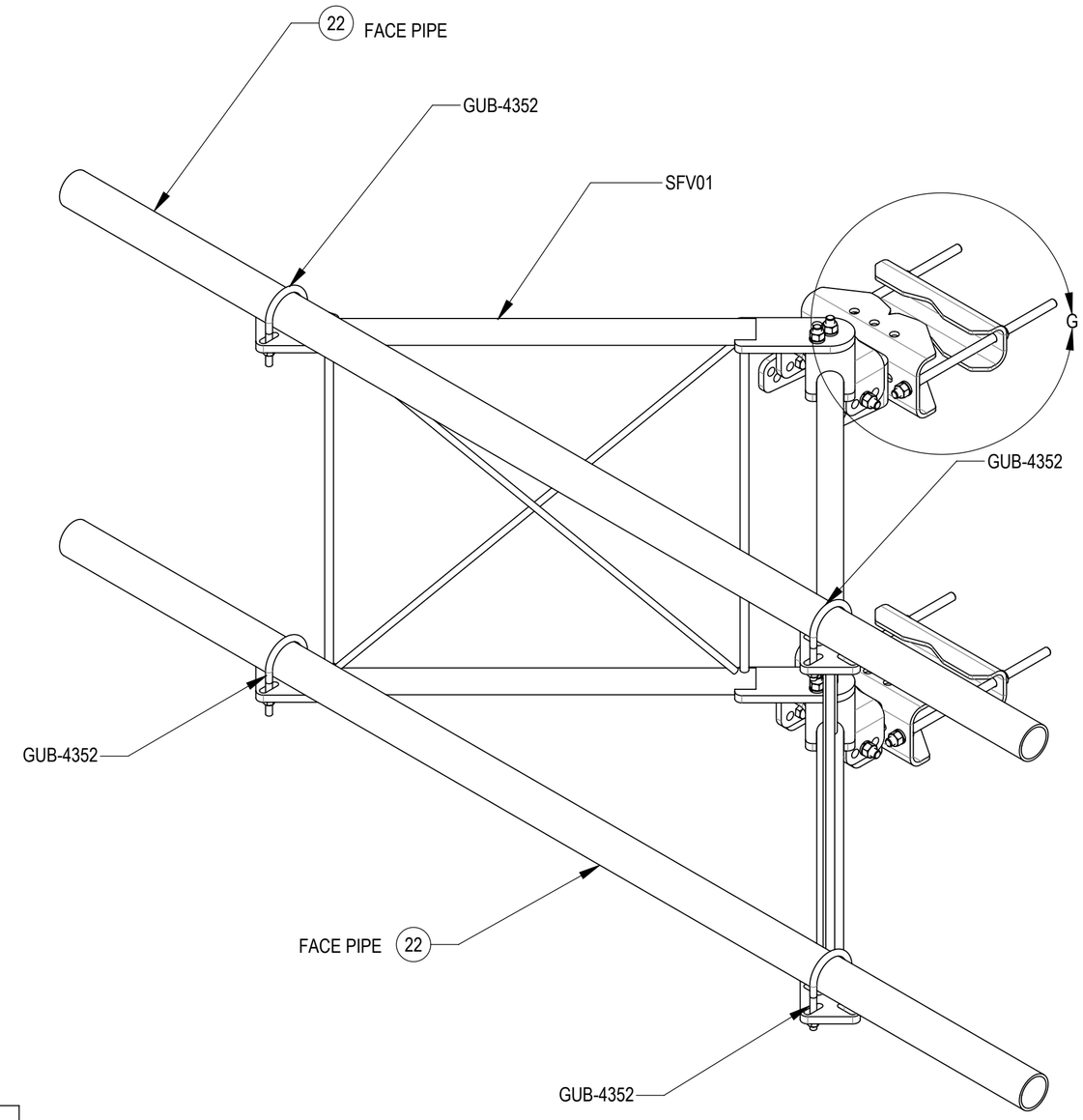

ISO VIEW

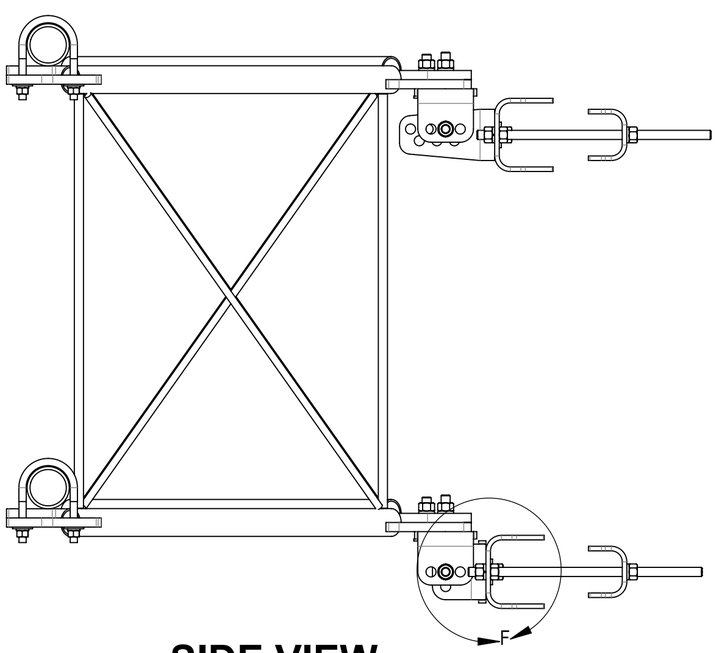

SIDE VIEW

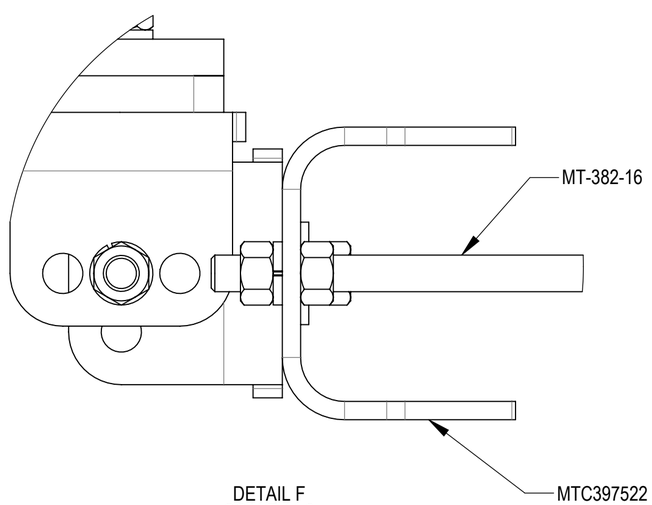

DETAIL F
SCALE 1 : 2

PATENT PENDING

COMMSCOPE, INC. OF NORTH CAROLINA			
TITLE SECTOR FRAME, TW, SFG21, 8FT, 3 ANT PIPE			
SIZE C	SCALE 1:8	DOCUMENT NO. MTC3975083	
		DRAWING	SHEET
		VERSION 00 / STATUS RE / REVISION A	6 OF 7

© 2021 CommScope, Inc. Confidential

NOTES:

STEP 4: ATTACH ANTENNA PIPES & TIE BACK PIPE (MT-651-120) TO FACE PIPES USING CROSSOVER BRACKETS (XAU01) AND U-BOLTS (GUB-4240). LOCATION SHOWN IS FOR MAXIMUM LOADING.

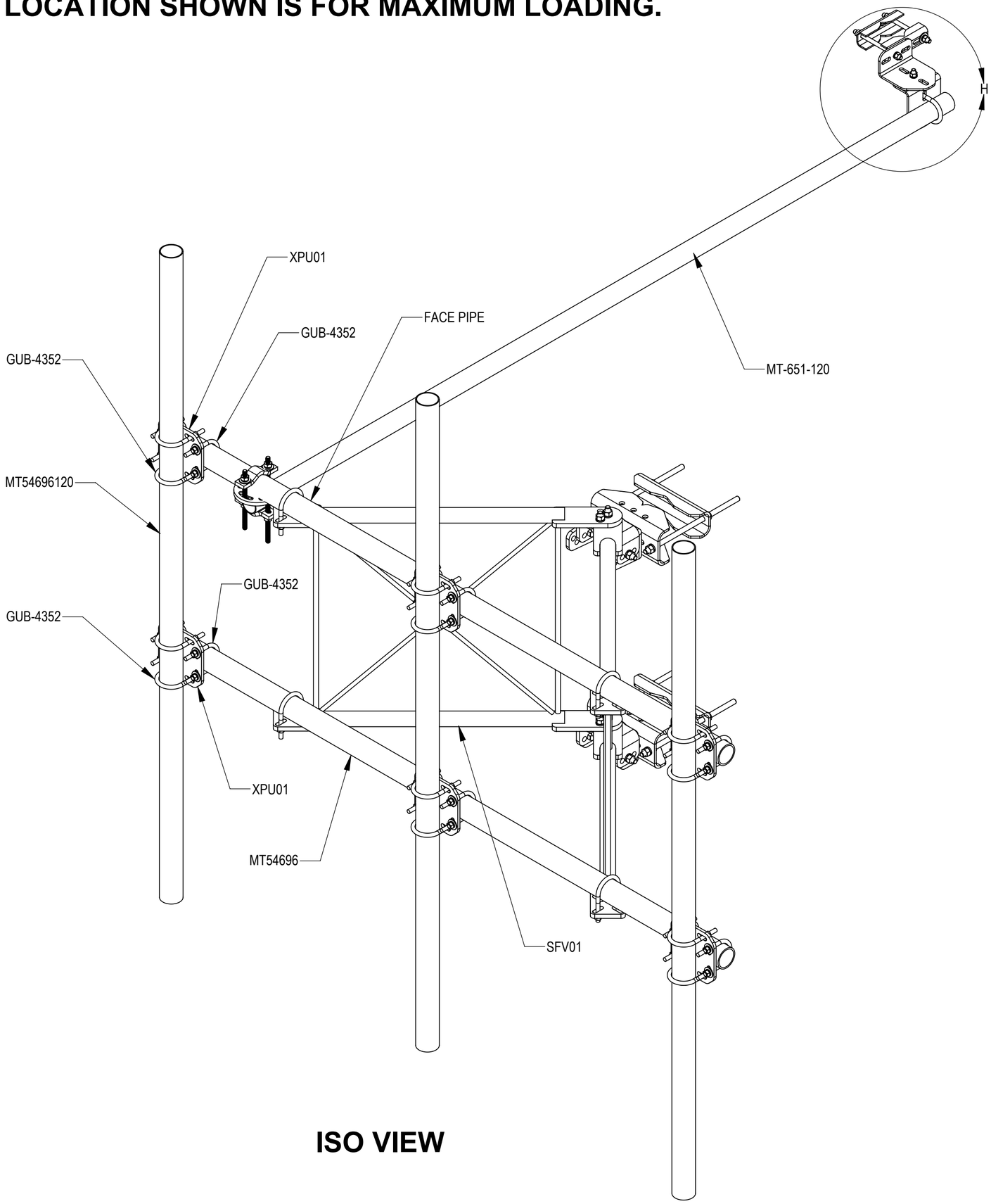

ISO VIEW

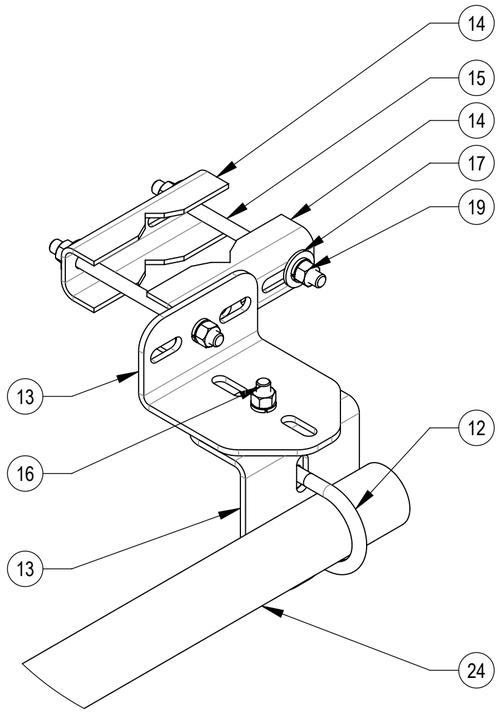

DETAIL H
SCALE 1 : 4

ALLOWABLE TIEBACK ANGLE

±15 DEGREES VERTICAL
±25 DEGREES HORIZONTAL

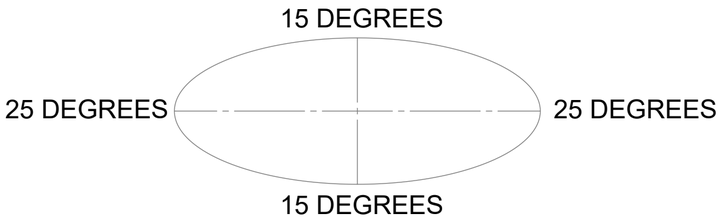

PATENT PENDING

© 2021 CommScope, Inc. Confidential

COMMSCOPE, INC. OF NORTH CAROLINA				
TITLE: SECTOR FRAME, TW, SFG21, 8FT, 3 ANT PIPE				
SIZE: C	SCALE: 1:10	DOCUMENT NO.: MTC3975083		
		DRAWING		SHEET
		VERSION: 00	STATUS: RE	REVISION: A	7 OF 7

Exhibit F

Power Density/RF Emissions Report

EBI Consulting

environmental | engineering | due diligence

RADIO FREQUENCY EMISSIONS ANALYSIS REPORT
EVALUATION OF HUMAN EXPOSURE POTENTIAL TO NON-IONIZING EMISSIONS

Dish Wireless Existing Facility

Site ID: 876312

BOHVN00021A
2755 State Street
Hamden, Connecticut 06517

May 25, 2022

EBI Project Number: 6222003248

Site Compliance Summary	
Compliance Status:	**COMPLIANT**
Site total MPE% of FCC general population allowable limit:	**7.93%**

21 B Street, Burlington, MA 01803 · Tel: (781) 273.2500 · Fax: (781) 273.3311

May 25, 2022

Attn: Dish Wireless

Emissions Analysis for Site: 876312 - BOHVN00021A

EBI Consulting was directed to analyze the proposed Dish Wireless facility located at **2755 State Street** in **Hamden, Connecticut** for the purpose of determining whether the emissions from the Proposed Dish Wireless Antenna Installation located on this property are within specified federal limits.

All information used in this report was analyzed as a percentage of current Maximum Permissible Exposure (% MPE) as listed in the FCC OET Bulletin 65 Edition 97-01and ANSI/IEEE Std C95.1. The FCC regulates Maximum Permissible Exposure in units of microwatts per square centimeter ($\mu W/cm^2$). The number of $\mu W/cm^2$ calculated at each sample point is called the power density. The exposure limit for power density varies depending upon the frequencies being utilized. Wireless Carriers and Paging Services use different frequency bands each with different exposure limits; therefore, it is necessary to report results and limits in terms of percent MPE rather than power density.

All results were compared to the FCC (Federal Communications Commission) radio frequency exposure rules, 47 CFR 1.1307(b)(1) – (b)(3), to determine compliance with the Maximum Permissible Exposure (MPE) limits for General Population/Uncontrolled environments as defined below.

General population/uncontrolled exposure limits apply to situations in which the general population may be exposed or in which persons who are exposed as a consequence of their employment may not be made fully aware of the potential for exposure or cannot exercise control over their exposure. Therefore, members of the general population would always be considered under this category when exposure is not employment related, for example, in the case of a telecommunications tower that exposes persons in a nearby residential area.

Public exposure to radio frequencies is regulated and enforced in units of microwatts per square centimeter ($\mu W/cm^2$). The general population exposure limits for the 600 MHz and 700 MHz frequency bands are approximately 400 $\mu W/cm^2$ and 467 $\mu W/cm^2$, respectively. The general population exposure limit for the 1900 MHz (PCS), 2100 MHz (AWS) and 11 GHz frequency bands is 1000 $\mu W/cm^2$. Because each carrier will be using different frequency bands, and each frequency band has different exposure limits, it is necessary to report percent of MPE rather than power density.

Occupational/controlled exposure limits apply to situations in which persons are exposed as a consequence of their employment and in which those persons who are exposed have been made fully aware of the potential for exposure and can exercise control over their exposure.

Occupational/controlled exposure limits also apply where exposure is of a transient nature as a result of incidental passage through a location where exposure levels may be above general population/uncontrolled limits (see below), as long as the exposed person has been made fully aware of the potential for exposure and can exercise control over his or her exposure by leaving the area or by some other appropriate means.

Additional details can be found in FCC OET 65.

CALCULATIONS

Calculations were done for the proposed Dish Wireless Wireless antenna facility located at 2755 State Street in Hamden, Connecticut using the equipment information listed below. All calculations were performed per the specifications under FCC OET 65. Since Dish Wireless is proposing highly focused directional panel antennas, which project most of the emitted energy out toward the horizon, all calculations were performed assuming a lobe representing the maximum gain of the antenna per the antenna manufacturer's supplied specifications, minus 20 dB for directional panel antennas and 20 dB for highly focused parabolic microwave dishes, was focused at the base of the tower. For this report, the sample point is the top of a 6-foot person standing at the base of the tower.

For all calculations, all equipment was calculated using the following assumptions:

1) 4 n71 channels (600 MHz Band) were considered for each sector of the proposed installation. These Channels have a transmit power of 30 Watts per Channel.

2) 4 n70 channels (PCS Band - 1900 MHz) were considered for each sector of the proposed installation. These Channels have a transmit power of 40 Watts per Channel.

3) All radios at the proposed installation were considered to be running at full power and were uncombined in their RF transmissions paths per carrier prescribed configuration. Per FCC OET Bulletin No. 65 - Edition 97-01 recommendations to achieve the maximum anticipated value at each sample point, all power levels emitting from the proposed antenna installation are increased by a factor of 2.56 to account for possible in-phase reflections from the surrounding environment. This is rarely the case, and if so, is never continuous.

4) For the following calculations, the sample point was the top of a 6-foot person standing at the base of the tower. The maximum gain of the antenna per the antenna manufacturer's supplied specifications, minus 20 dB for directional panel antennas and 20 dB for highly focused parabolic microwave dishes, was used in this direction. This value is a very conservative estimate as gain reductions for these particular antennas are typically much higher in this direction.

5) The antennas used in this modeling are the JMA MX08FRO665-21 for the 600 MHz / 1900 MHz channel(s) in Sector A, the JMA MX08FRO665-21 for the 600 MHz / 1900 MHz channel(s) in Sector B, the JMA MX08FRO665-21 for the 600 MHz / 1900 MHz channel(s) in Sector C. This is based on feedback from the carrier with regard to anticipated antenna selection. All Antenna gain values and associated transmit power levels are shown in the Site Inventory and Power Data table below. The maximum gain of the antenna per the antenna manufacturer's supplied specifications, minus 20 dB for directional panel antennas and 20 dB for highly focused parabolic microwave dishes, was used for all calculations. This value is a very conservative estimate as gain reductions for these particular antennas are typically much higher in this direction.

6) The antenna mounting height centerline of the proposed antennas is 100 feet above ground level (AGL).

7) Emissions values for additional carriers were taken from the Connecticut Siting Council active database. Values in this database are provided by the individual carriers themselves.

8) All calculations were done with respect to uncontrolled / general population threshold limits.

Dish Wireless Site Inventory and Power Data

Sector:	A	Sector:	B	Sector:	C
Antenna #:	1	Antenna #:	1	Antenna #:	1
Make / Model:	JMA MX08FRO665-21	Make / Model:	JMA MX08FRO665-21	Make / Model:	JMA MX08FRO665-21
Frequency Bands:	600 MHz / 1900 MHz	Frequency Bands:	600 MHz / 1900 MHz	Frequency Bands:	600 MHz / 1900 MHz
Gain:	11.35 dBd / 15.75 dBd	Gain:	11.35 dBd / 15.75 dBd	Gain:	11.35 dBd / 15.75 dBd
Height (AGL):	100 feet	Height (AGL):	100 feet	Height (AGL):	100 feet
Channel Count:	8	Channel Count:	8	Channel Count:	8
Total TX Power (W):	280.00 Watts	Total TX Power (W):	280.00 Watts	Total TX Power (W):	280.00 Watts
ERP (W):	1,424.17	ERP (W):	1,424.17	ERP (W):	1,424.17
Antenna A1 MPE %:	**0.85%**	Antenna B1 MPE %:	**0.85%**	Antenna C1 MPE %:	**0.85%**

Site Composite MPE %	
Carrier	**MPE %**
Dish Wireless (Max at Sector A):	0.85%
AT&T	4.96%
Metro PCS	1.38%
Clearwire	0.15%
Sprint	0.59%
Site Total MPE % :	7.93%

Dish Wireless MPE % Per Sector	
Dish Wireless Sector A Total:	0.85%
Dish Wireless Sector B Total:	0.85%
Dish Wireless Sector C Total:	0.85%
Site Total MPE % :	7.93%

Dish Wireless Maximum MPE Power Values (Sector A)

Dish Wireless Frequency Band / Technology (Sector A)	# Channels	Watts ERP (Per Channel)	Height (feet)	Total Power Density (μW/cm²)	Frequency (MHz)	Allowable MPE (μW/cm²)	Calculated % MPE
Dish Wireless 600 MHz n71	4	110.82	100.0	1.80	600 MHz n71	400	0.45%
Dish Wireless 1900 MHz n70	4	245.22	100.0	3.99	1900 MHz n70	1000	0.40%
						Total:	**0.85%**

• NOTE: Totals may vary by approximately 0.01% due to summation of remainders in calculations.

Summary

All calculations performed for this analysis yielded results that were **within** the allowable limits for general population exposure to RF Emissions.

The anticipated maximum composite contributions from the Dish Wireless facility as well as the site composite emissions value with regards to compliance with FCC's allowable limits for general population exposure to RF Emissions are shown here:

Dish Wireless Sector	Power Density Value (%)
Sector A:	0.85%
Sector B:	0.85%
Sector C:	0.85%
Dish Wireless Maximum MPE % (Sector A):	0.85%
Site Total:	7.93%
Site Compliance Status:	**COMPLIANT**

The anticipated composite MPE value for this site assuming all carriers present is **7.93%** of the allowable FCC established general population limit sampled at the ground level. This is based upon values listed in the Connecticut Siting Council database for existing carrier emissions.

FCC guidelines state that if a site is found to be out of compliance (over allowable thresholds), that carriers over a 5% contribution to the composite value will require measures to bring the site into compliance. For this facility, the composite values calculated were well within the allowable 100% threshold standard per the federal government.

Exhibit G

Letter of Authorization

4545 E River Rd, Suite 320
West Henrietta, NY 14586

Phone: (585) 445-5896
Fax: (724) 416-4461
www.crowncastle.com

Crown Castle Letter of Authorization

CT - CONNECTICUT SITING COUNCIL
Melanie A. Bachman
Executive Director
Connecticut Siting Council
10 Franklin Square
New Britain, CT 06051

Re: Tower Share Application
Crown Castle telecommunications site at:
2755 STATE STREET, HAMDEN, CT 06517

GLOBAL SIGNAL ACQUISITIONS II LLC ("Crown Castle") hereby authorizes DISH Wireless LLC, including their Agent, to act as our Agent in the processing of all zoning applications, building permits and approvals through the CONNECTICUT SITING COUNCIL for the existing wireless communications site described below:

Crown Site ID/Name:	**876312/MONTOWESE AMODIO SELF STORE**
Customer Site ID:	**BOHVN00021A/CT-CCI-T-876312**
Site Address:	**2755 State Street, Hamden, CT 06517**

Crown Castle

By: _____ Date: 5/27/2022

Richard Zajac
Site Acquisition Specialist

Exhibit H

Recipient Mailings

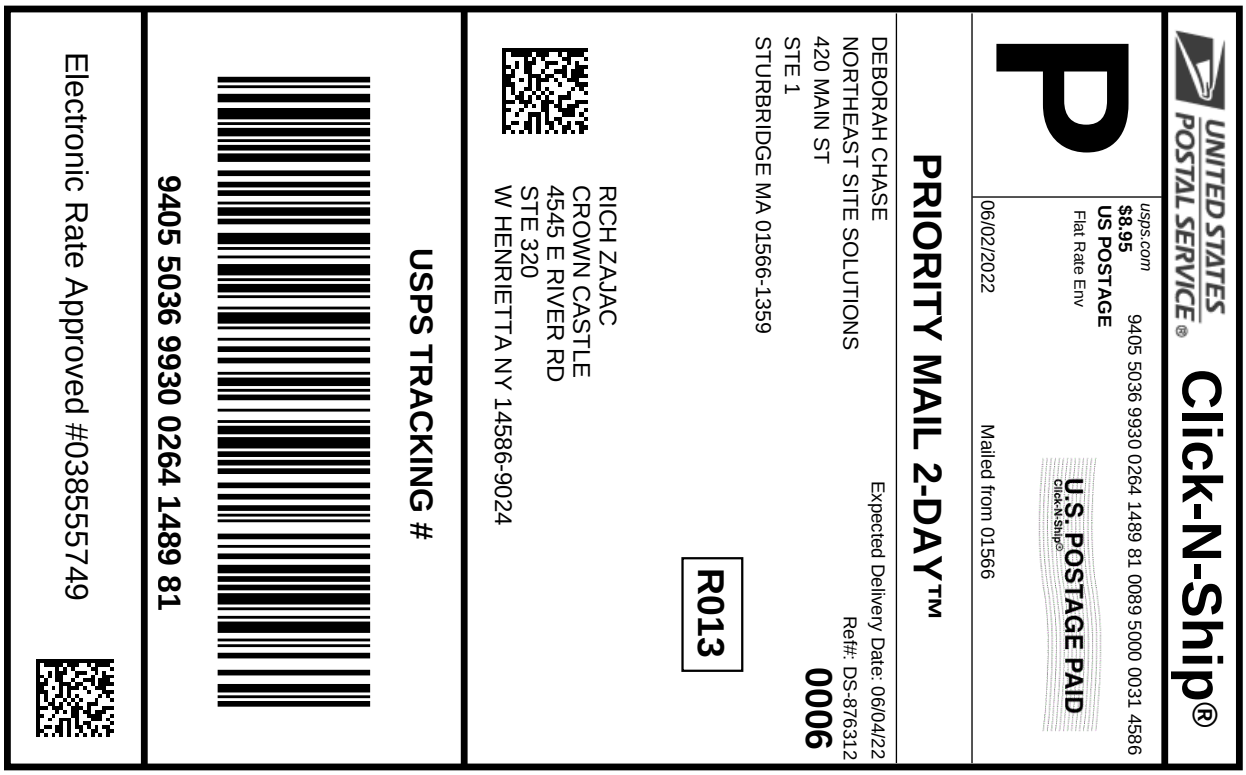

Cut on dotted line.

Instructions

1. **Each Click-N-Ship® label is unique. Labels are to be used as printed and used only once. DO NOT PHOTO COPY OR ALTER LABEL.**
2. **Place your label so it does not wrap around the edge of the package.**
3. **Adhere your label to the package. A self-adhesive label is recommended. If tape or glue is used, DO NOT TAPE OVER BARCODE. Be sure all edges are secure.**
4. **To mail your package with PC Postage®, you may schedule a Package Pickup online, hand to your letter carrier, take to a Post Office™, or drop in a USPS collection box.**
5. **Mail your package on the "Ship Date" you selected when creating this label.**

Click-N-Ship® Label Record

USPS TRACKING # :
9405 5036 9930 0264 1489 81

Trans. #:	564808228	Priority Mail® Postage:	**$8.95**
Print Date:	06/02/2022	Total:	**$8.95**
Ship Date:	06/02/2022		
Expected Delivery Date:	06/04/2022		

From: DEBORAH CHASE
NORTHEAST SITE SOLUTIONS
420 MAIN ST
STE 1
STURBRIDGE MA 01566-1359

Ref#: DS-876312

To: RICH ZAJAC
CROWN CASTLE
4545 E RIVER RD
STE 320
W HENRIETTA NY 14586-9024

* Retail Pricing Priority Mail rates apply. There is no fee for USPS Tracking® service on Priority Mail service with use of this electronic rate shipping label. Refunds for unused postage paid labels can be requested online 30 days from the print date.

Thank you for shipping with the United States Postal Service!
Check the status of your shipment on the USPS Tracking® page at usps.com

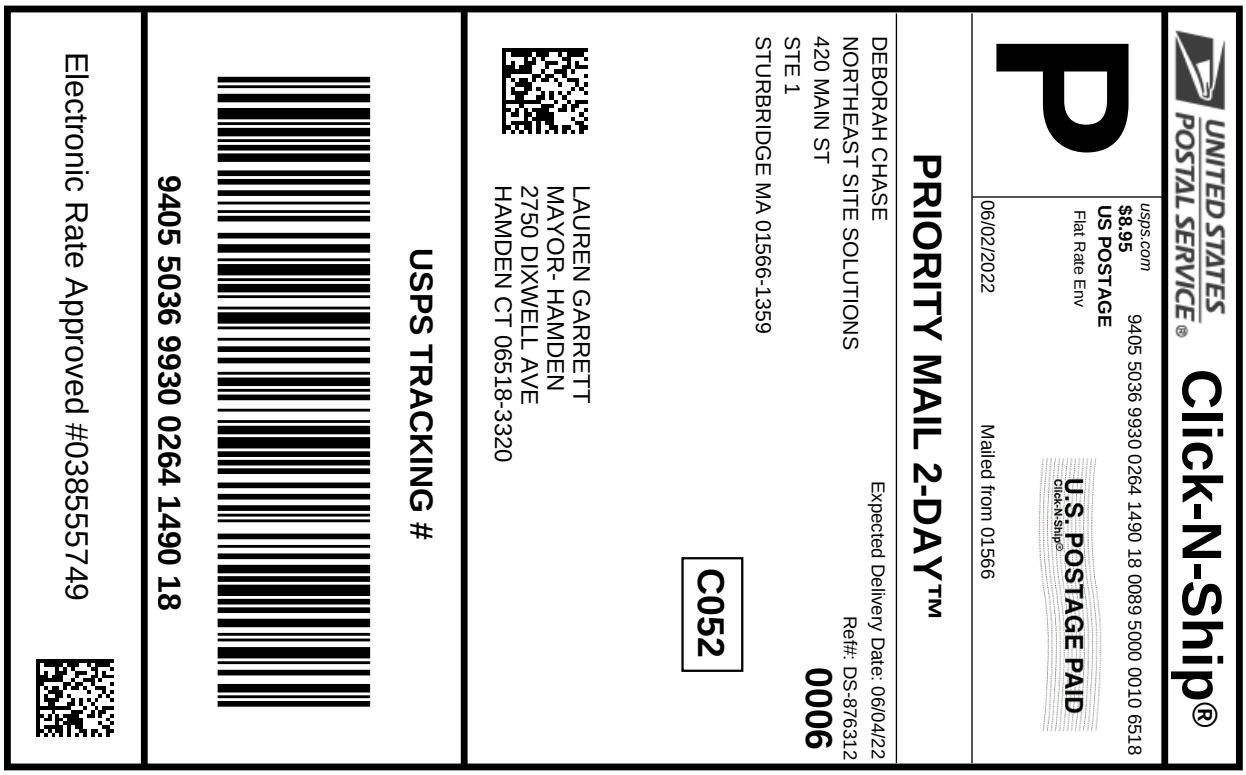

Cut on dotted line.

Instructions

1. **Each Click-N-Ship® label is unique. Labels are to be used as printed and used only once. DO NOT PHOTO COPY OR ALTER LABEL.**
2. **Place your label so it does not wrap around the edge of the package.**
3. **Adhere your label to the package. A self-adhesive label is recommended. If tape or glue is used, DO NOT TAPE OVER BARCODE. Be sure all edges are secure.**
4. **To mail your package with PC Postage®, you may schedule a Package Pickup online, hand to your letter carrier, take to a Post Office™, or drop in a USPS collection box.**
5. **Mail your package on the "Ship Date" you selected when creating this label.**

Click-N-Ship® Label Record

USPS TRACKING # :
9405 5036 9930 0264 1490 18

Trans. #:	564808228	Priority Mail® Postage:	**$8.95**
Print Date:	06/02/2022	Total:	**$8.95**
Ship Date:	06/02/2022		
Expected Delivery Date:	06/04/2022		

From: DEBORAH CHASE
NORTHEAST SITE SOLUTIONS
420 MAIN ST
STE 1
STURBRIDGE MA 01566-1359

Ref#: DS-876312

To: LAUREN GARRETT
MAYOR- HAMDEN
2750 DIXWELL AVE
HAMDEN CT 06518-3320

* Retail Pricing Priority Mail rates apply. There is no fee for USPS Tracking® service on Priority Mail service with use of this electronic rate shipping label. Refunds for unused postage paid labels can be requested online 30 days from the print date.

Thank you for shipping with the United States Postal Service!
Check the status of your shipment on the USPS Tracking® page at usps.com

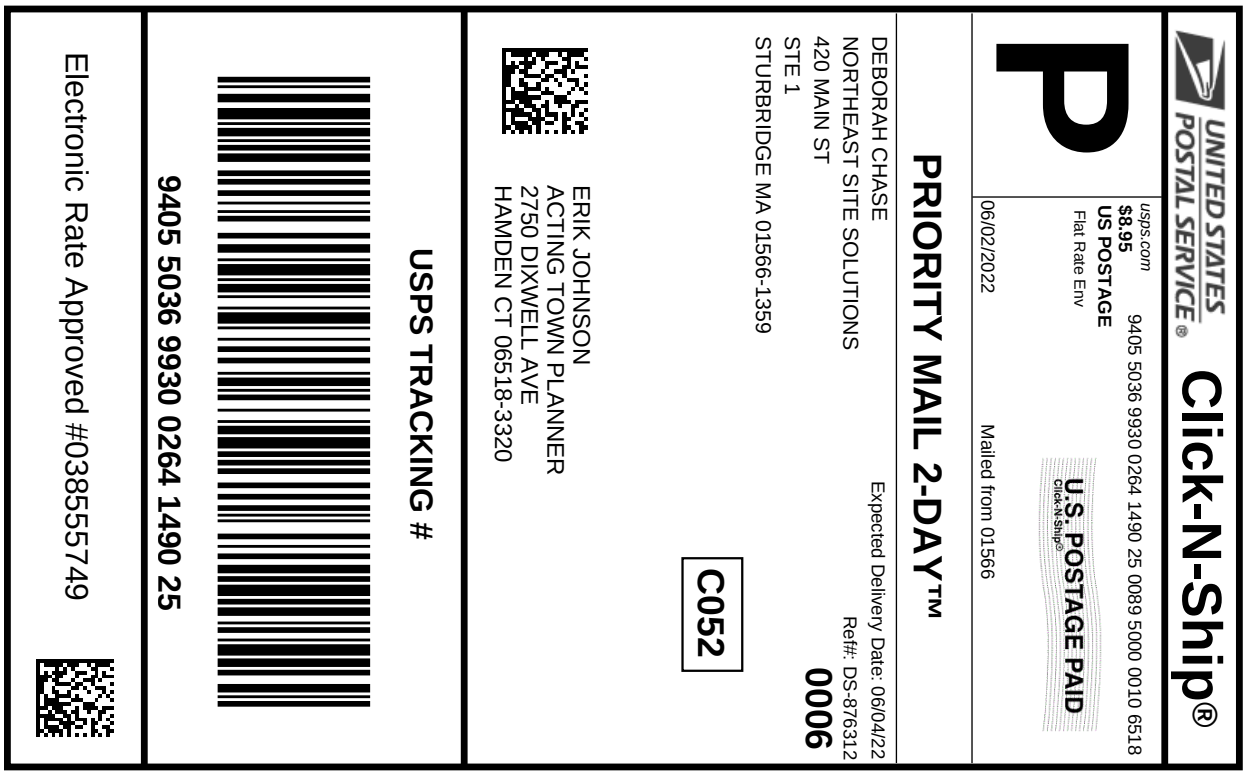

Cut on dotted line.

Instructions

1. **Each Click-N-Ship® label is unique. Labels are to be used as printed and used only once. DO NOT PHOTO COPY OR ALTER LABEL.**
2. **Place your label so it does not wrap around the edge of the package.**
3. **Adhere your label to the package. A self-adhesive label is recommended. If tape or glue is used, DO NOT TAPE OVER BARCODE. Be sure all edges are secure.**
4. **To mail your package with PC Postage®, you may schedule a Package Pickup online, hand to your letter carrier, take to a Post Office™, or drop in a USPS collection box.**
5. **Mail your package on the "Ship Date" you selected when creating this label.**

Click-N-Ship® Label Record

USPS TRACKING # :
9405 5036 9930 0264 1490 25

Trans. #:	564808228	Priority Mail® Postage:	**$8.95**
Print Date:	06/02/2022	Total:	**$8.95**
Ship Date:	06/02/2022		
Expected Delivery Date:	06/04/2022		

From: DEBORAH CHASE
NORTHEAST SITE SOLUTIONS
420 MAIN ST
STE 1
STURBRIDGE MA 01566-1359

Ref#: DS-876312

To: ERIK JOHNSON
ACTING TOWN PLANNER
2750 DIXWELL AVE
HAMDEN CT 06518-3320

* Retail Pricing Priority Mail rates apply. There is no fee for USPS Tracking® service on Priority Mail service with use of this electronic rate shipping label. Refunds for unused postage paid labels can be requested online 30 days from the print date.

Thank you for shipping with the United States Postal Service!
Check the status of your shipment on the USPS Tracking® page at usps.com

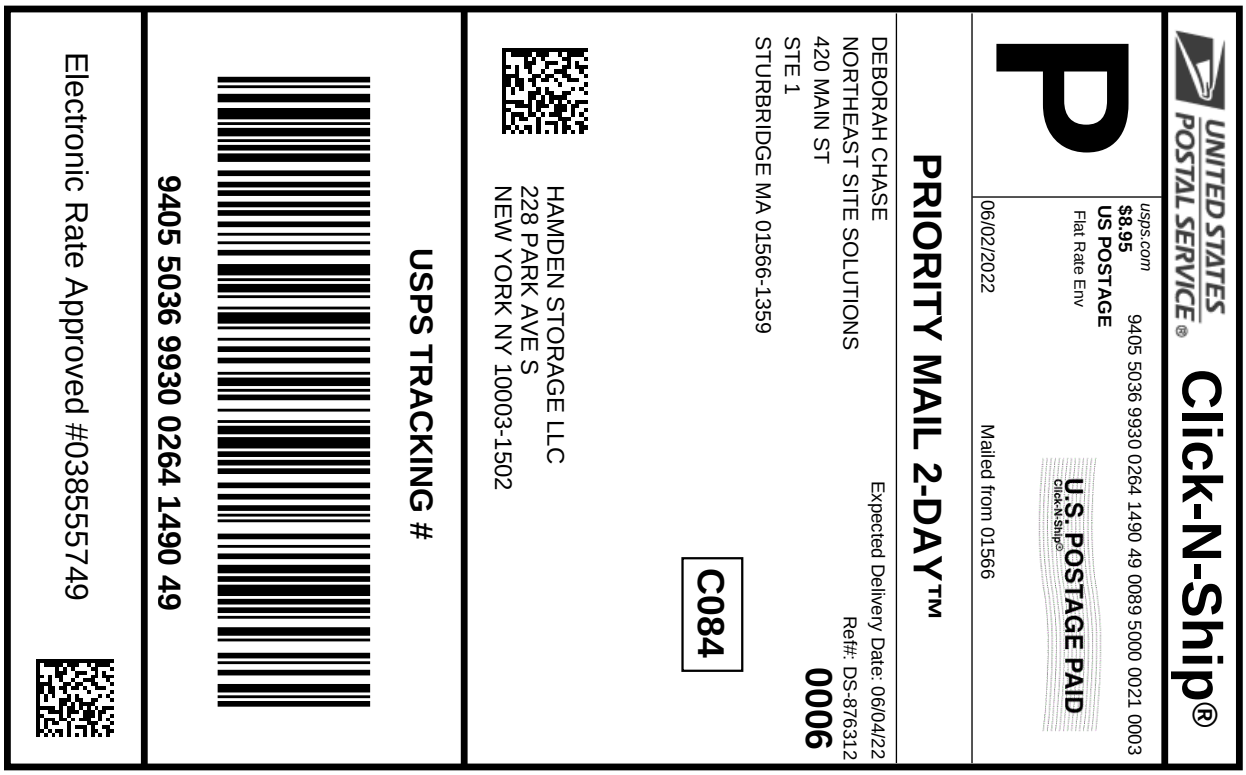

Cut on dotted line.

Instructions

1. **Each Click-N-Ship® label is unique. Labels are to be used as printed and used only once. DO NOT PHOTO COPY OR ALTER LABEL.**
2. **Place your label so it does not wrap around the edge of the package.**
3. **Adhere your label to the package. A self-adhesive label is recommended. If tape or glue is used, DO NOT TAPE OVER BARCODE. Be sure all edges are secure.**
4. **To mail your package with PC Postage®, you may schedule a Package Pickup online, hand to your letter carrier, take to a Post Office™, or drop in a USPS collection box.**
5. **Mail your package on the "Ship Date" you selected when creating this label.**

Click-N-Ship® Label Record

USPS TRACKING # :
9405 5036 9930 0264 1490 49

Trans. #:	564808228	Priority Mail® Postage:	**$8.95**
Print Date:	06/02/2022	Total:	**$8.95**
Ship Date:	06/02/2022		
Expected Delivery Date:	06/04/2022		

From: DEBORAH CHASE
NORTHEAST SITE SOLUTIONS
420 MAIN ST
STE 1
STURBRIDGE MA 01566-1359

Ref#: DS-876312

To: HAMDEN STORAGE LLC
228 PARK AVE S
NEW YORK NY 10003-1502

* Retail Pricing Priority Mail rates apply. There is no fee for USPS Tracking® service on Priority Mail service with use of this electronic rate shipping label. Refunds for unused postage paid labels can be requested online 30 days from the print date.

Thank you for shipping with the United States Postal Service!
Check the status of your shipment on the USPS Tracking® page at usps.com

8 16512 Clown Dish

UNITED STATES POSTAL SERVICE.

FARMINGTON
210 MAIN ST
FARMINGTON, CT 06032-9998
(800)275-8777

06/03/2022 04:27 PM

Product	Qty	Unit Price	Price
Prepaid Mail New York, NY 10003 Weight: 0 lb 9.50 oz Acceptance Date: Fri 06/03/2022 Tracking #: 9405 5036 9930 0264 1490 49	1		$0.00
Prepaid Mail Hamden, CT 06518 Weight: 0 lb 9.50 oz Acceptance Date: Fri 06/03/2022 Tracking #: 9405 5036 9930 0264 1490 25	1		$0.00
Prepaid Mail Hamden, CT 06518 Weight: 0 lb 9.60 oz Acceptance Date: Fri 06/03/2022 Tracking #: 9405 5036 9930 0264 1490 18	1		$0.00
Prepaid Mail West Henrietta, NY 14586 Weight: 0 lb 2.00 oz Acceptance Date: Fri 06/03/2022 Tracking #: 9405 5036 9930 0264 1489 81	1		$0.00

Grand Total: $0.00

****
Every household in the U.S. is now
eligible to receive a third set
of 8 free test kits.
Go to www.covidtests.gov
****

Preview your Mail
Track your Packages
Sign up for FREE @
https://informeddelivery.usps.com

All sales final on stamps and postage.
Refunds for guaranteed services only.
Thank you for your business.

Tell us about your experience.
Go to: https://postalexperience.com/Pos
or scan this code with your mobile device,

or call 1-800-410-7420.