Filed by:
G. Scott Shepherd, Site Development Specialist II - SBA Communications
134 Flanders Rd., Suite 125, Westborough, MA 01581
508.251.0720 x 3807 - gshepherd@sbasite.com

March 4, 2021

Melanie A. Bachman
Executive Director
Connecticut Siting Council
Ten Franklin Square
New Britain, CT 06051

RE: Notice of Exempt Modification
285 Chamberlain Hill Rd., Higganum, CT
Latitude: 41.501764
Longitude: -72.618694
Sprint, now a part of T-Mobile USA #: CTHA832A_Sprint Retain

Dear Ms. Bachman:

Sprint/T-Mobile currently maintains six (6) antennas at the 185-foot level of the existing 185-foot Monopole Tower at 285 Chamberlain Hill Rd., Higganum, CT. The 185-foot tower is owned by SBA Properties, LLC. The property is owned by Ruth M. Quale, F/K/A Ruth Opuszynski. T-Mobile now intends to remove six (6) L700/L600 MHz antennas and replace with six (6) new L700/L600 MHz antennas and install three (3) new 2500 NHz antennas for a total of nine (9) antennas.

The new antennas support 5g services and would be installed at the 184-foot level of the tower.

Please note: Per the Connecticut Siting Council Website: CSC COVID 19 Guidelines.
In order to prevent the spread of Coronavirus and protect the health and safety of our members and staff, as of March 18, 2020, the Connecticut Siting Council shall convert to full remote operations until March 30, 2020. Please be advised that during this time period, all hard copy filing requirements will be waived in lieu of an electronic filing. Please also be advised that the March 26, 2020 regular meeting shall be held via teleconference. The Council's website is not equipped with an on-line filing fee receipt service. Therefore, filing fees and/or direct cost charges associated with matters received electronically during the above-mentioned time period will be directly invoiced at a later date.

Planned Modifications:

TOWER

<u>Remove:</u>

- N/A

Remove and Replace:

- (3) RFS APXVSPP18-C-A20 antenna (remove) – (3) Ericsson AIR32 KRD901146-1_B66A_B2A antenna (replace)
- (3) RFS APXVTM14-C-120 antenna (remove) – (3) RFS APXVAALL24_43-U-NA20 antenna (replace)
- (3) ALU TDRRH8x20-25 (remove) – (3) Ericsson 4449 B71+B85 RRU (replace)
- (3) ALU 1900 MHz RRH (remove) – (3) Ericsson 4415 B25 RRU (replace)

Install New:

- (3) Ericsson AIR6449 B41 2500 MHz antenna
- (3) 2" Hybrid

Existing Equipment to Remain:

- (1) Low Profile Platform w/handrail kit (Site Pro1 HRK14), Reinforcement Kit (Site Pro1 PRK1245L) @185'

Entitlements:

- (4) RFS ACU-A20-N-RET
- (3) ALU 800 MHz RRH
- (3) ALU 800MHz filter
- (4) 1-1/4" Hybrid

GROUND

Install New:

- (1) 6160 cabinet
- (1) B160 Battery cabinet
- (1) AAV cabinet w/(1) 2" conduit
- (1) 2" conduit on existing concrete pad
- (1) 1" conduit on existing concrete pad
- (1) 1" conduit underground
- (1) 2" conduit underground
-

Remove:

- Existing Steel Dunnage
- (2) Existing Sprint cabinets

This facility was approved by the Town of Haddam's Planning and Zoning Commission November 4, 1999. The Haddam Planning and Zoning Commision of the Town of Haddam hereby gives notice of its official action concerning the following: 1. Grant a Special Permit to construct an 190-foot Communication Tower and associated structures; 2. Grant a change of Zone I-1 to C-1 for Map 49, Lot 34, 3. Approve the Application to Amend Haddam Zoning Regulations Section 3 Definitions to add the following: Self-Storage Facility; 4. Approve the Application to Amend Haddam Zoning Regulations Section 7 Commercial Zones C-1 by adding subsection 7.3.m to permit "Self Storage Facility" as a Special Permit use. A Building Permit was issued January 5, 2000 for the construction of a 185-foot monopole tower, with an actual height of 190-feet including the top wireless carriers antennas (see attached). There is

no original CSC approval on file, however, CSC approval was provided under Petition No. EM-SPRINT-061-140530 for antenna modifications on June 16, 2014. Please see attached.

Please accept this letter as notification pursuant to Regulations of Connecticut State Agencies §16-50j-73, for construction that constitutes an exempt modification pursuant to R.C.S.A. §16.50j-72(b)(2). In accordance with R.C.S.A. § 16.50j-73, a copy of this letter is being sent to the Town of Haddam's First Selectman, Robert McGary, and Planning & Zoning Chairman, Edward Wallor, as well as to the property owner. (Separate notice is not being sent to tower owner, as it belongs to SBA.)

The planned modifications to the facility fall squarely within those activities explicitly provided for in R.C.S.A. §16.50j-72(b)(2).

1. The proposed modifications will not result in an increase in the height of the existing structure.
2. The proposed modification will not require the extension of the site boundary.
3. The proposed modifications will not increase noise levels at the facility by six decibels or more, or to levels that exceed state and local criteria.
4. The operation of the replacement antennas will not increase radio frequency emissions at the facility to a level at or above the Federal Communications Commission safety standard.
5. The proposed modification will not cause a change or alteration in the physical or environmental characteristics of the site.
6. The existing structure and its foundation can support the proposed loading.

For the foregoing reasons, T-Mobile respectfully submits that the proposed modifications to the above-referenced telecommunication facility constitute an exempt modifications under R.C.S.A. § 16-50j-72(b)(2).

Sincerely,

G. Scott Shepherd
Site Development Specialist II
SBA COMMUNICATIONS CORPORATION
134 Flanders Rd., Suite 125
Westborough, MA 01581
508.251.0720 x3807 + T
508.366.2610 + F
508.868.6000 + C
gshepherd@sbasite.com

Attachments

cc: Robert McGary, First Selectman / with attachments
Town Office Building, 30 Field Park Drive, Haddam, CT 06438
Edward Wallor, Planning & Zoning Chairman / with attachments
Town Office Building, 30 Field Park Drive, Haddam, CT 06438
Ruth M. Quale / with attachments
285 Chamberlain Hill Rd., Higganum, CT 06441

EXHIBIT LIST

Exhibit 1	Check Copy	To be invoiced at a later date per Covid guidelines
Exhibit 2	Notification Receipts	x
Exhibit 3	Property Card	x
Exhibit 4	Property Map	x
Exhibit 5	Original Zoning Approval	Town of Haddam P&Z 11/4/99, Town of Haddam BP Jan. 5, 2000, No. EM-SPRINT-061-140530
Exhibit 6	Construction Drawings	Centerline 2/26/21
Exhibit 7	Structural Analysis	TES 12/18/20
Exhibit 8	Antenna Mount Analysis	TES 12/18/20
Exhibit 10	EME Report	EBI Consulting 2/22/21

EXHIBIT 1

Normally, Exhibit 1 would contain a copy of the check for the filing fee.

EXHIBIT 2

ORIGIN ID:BBFA (508) 614-0389
RICK WOODS
SBA COMMUNICATIONS CORPORATION
134 FLANDERS RD
SUITE 125
WESTBOROUGH, MA 01581
UNITED STATES US

SHIP DATE: 04MAR21
ACTWGT: 1.00 LB
CAD: 105843304/INET4340

BILL SENDER

TO **MELANIE A. BACHMAN EXEC. DIR**
CONNECTICUT SITING COUNCIL
TEN FRANKLIN SQUARE

NEW BRITAIN CT 06051
(508) 251-0720 X 3807
INV:
PO:
REF: 10-56-92009-6089
DEPT:

J211121011901uv

FedEx Express

56DJ3/AC39/FE4A

FRI - 05 MAR 10:30A
PRIORITY OVERNIGHT

TRK# 0201 **7730 7316 9716**

EB BDLA

06051
BDL
CT-US

After printing this label:
1. Use the 'Print' button on this page to print your label to your laser or inkjet printer.
2. Fold the printed page along the horizontal line.
3. Place label in shipping pouch and affix it to your shipment so that the barcode portion of the label can be read and scanned.

Warning: Use only the printed original label for shipping. Using a photocopy of this label for shipping purposes is fraudulent and could result in additional billing charges, along with the cancellation of your FedEx account number.
Use of this system constitutes your agreement to the service conditions in the current FedEx Service Guide, available on fedex.com.FedEx will not be responsible for any claim in excess of $100 per package, whether the result of loss, damage, delay, non-delivery,misdelivery,or misinformation, unless you declare a higher value, pay an additional charge, document your actual loss and file a timely claim.Limitations found in the current FedEx Service Guide apply. Your right to recover from FedEx for any loss, including intrinsic value of the package, loss of sales, income interest, profit, attorney's fees, costs, and other forms of damage whether direct, incidental,consequential, or special is limited to the greater of $100 or the authorized declared value. Recovery cannot exceed actual documented loss.Maximum for items of extraordinary value is $1,000, e.g. jewelry, precious metals, negotiable instruments and other items listed in our ServiceGuide. Written claims must be filed within strict time limits, see current FedEx Service Guide.

ORIGIN ID:BBFA (508) 614-0389
RICK WOODS
SBA COMMUNICATIONS CORPORATION
134 FLANDERS RD
SUITE 125
WESTBOROUGH, MA 01581
UNITED STATES US

SHIP DATE: 04MAR21
ACTWGT: 1.00 LB
CAD: 105843304/INET4340

BILL SENDER

TO **ROBERT MCGARY, FIRST SELECTMAN**
TOWN O HADDAM
30 FIELD PARK DRIVE

HADDAM CT 06438
(508) 251-0720 X 3807 REF: 10-56-92009-6089
INV:
PO: DEPT:

J211121011901uv

FedEx Express

56DJ3/AC39/FE4A

FRI - 05 MAR 12:00P
PRIORITY OVERNIGHT

TRK# 0201 **7730 7321 3337**

EB RSPA

06438
BDL
CT-US

After printing this label:
1. Use the 'Print' button on this page to print your label to your laser or inkjet printer.
2. Fold the printed page along the horizontal line.
3. Place label in shipping pouch and affix it to your shipment so that the barcode portion of the label can be read and scanned.

Warning: Use only the printed original label for shipping. Using a photocopy of this label for shipping purposes is fraudulent and could result in additional billing charges, along with the cancellation of your FedEx account number.
Use of this system constitutes your agreement to the service conditions in the current FedEx Service Guide, available on fedex.com.FedEx will not be responsible for any claim in excess of $100 per package, whether the result of loss, damage, delay, non-delivery,misdelivery,or misinformation, unless you declare a higher value, pay an additional charge, document your actual loss and file a timely claim.Limitations found in the current FedEx Service Guide apply. Your right to recover from FedEx for any loss, including intrinsic value of the package, loss of sales, income interest, profit, attorney's fees, costs, and other forms of damage whether direct, incidental,consequential, or special is limited to the greater of $100 or the authorized declared value. Recovery cannot exceed actual documented loss.Maximum for items of extraordinary value is $1,000, e.g. jewelry, precious metals, negotiable instruments and other items listed in our ServiceGuide. Written claims must be filed within strict time limits, see current FedEx Service Guide.

ORIGIN ID:BBFA (508) 614-0389
RICK WOODS
SBA COMMUNICATIONS CORPORATION
134 FLANDERS RD
SUITE 125
WESTBOROUGH, MA 01581
UNITED STATES US

SHIP DATE: 04MAR21
ACTWGT: 1.00 LB
CAD: 105843304/INET4340

BILL SENDER

TO EDWARD WALLOR, P&Z CHAIRMAN
TOWN O HADDAM
30 FIELD PARK DRIVE
HADDAM CT 06438
(508) 251-0720 X 3807

REF: 10-56-92009-6089
INV:
PO:
DEPT:

56DJ3/AC39/FE4A

J211121011901uv

FRI - 05 MAR 12:00P
PRIORITY OVERNIGHT

TRK# 0201 7730 7323 3052

EB RSPA

06438
BDL
CT-US

After printing this label:
1. Use the 'Print' button on this page to print your label to your laser or inkjet printer.
2. Fold the printed page along the horizontal line.
3. Place label in shipping pouch and affix it to your shipment so that the barcode portion of the label can be read and scanned.

Warning: Use only the printed original label for shipping. Using a photocopy of this label for shipping purposes is fraudulent and could result in additional billing charges, along with the cancellation of your FedEx account number.
Use of this system constitutes your agreement to the service conditions in the current FedEx Service Guide, available on fedex.com.FedEx will not be responsible for any claim in excess of $100 per package, whether the result of loss, damage, delay, non-delivery,misdelivery,or misinformation, unless you declare a higher value, pay an additional charge, document your actual loss and file a timely claim.Limitations found in the current FedEx Service Guide apply. Your right to recover from FedEx for any loss, including intrinsic value of the package, loss of sales, income interest, profit, attorney's fees, costs, and other forms of damage whether direct, incidental,consequential, or special is limited to the greater of $100 or the authorized declared value. Recovery cannot exceed actual documented loss.Maximum for items of extraordinary value is $1,000, e.g. jewelry, precious metals, negotiable instruments and other items listed in our ServiceGuide. Written claims must be filed within strict time limits, see current FedEx Service Guide.

ORIGIN ID:BBFA (508) 614-0389
RICK WOODS
SBA COMMUNICATIONS CORPORATION
134 FLANDERS RD
SUITE 125
WESTBOROUGH, MA 01581
UNITED STATES US

SHIP DATE: 04MAR21
ACTWGT: 1.00 LB
CAD: 105843304/INET4340

BILL SENDER

TO **RUTH M. QUALE**

285 CHAMBERLAIN HILL RD.

HIGGANUM CT 06441

(508) 251-0720 X 3807 REF: 10-56-92009-6089
INV:
PO: DEPT:

J211121011901uv

56DJ3/AC39/FE4A

FRI - 05 MAR 10:30A
PRIORITY OVERNIGHT

TRK# 0201 **7730 7325 6580**

EB RSPA

06441
BDL
CT-US

After printing this label:
1. Use the 'Print' button on this page to print your label to your laser or inkjet printer.
2. Fold the printed page along the horizontal line.
3. Place label in shipping pouch and affix it to your shipment so that the barcode portion of the label can be read and scanned.

Warning: Use only the printed original label for shipping. Using a photocopy of this label for shipping purposes is fraudulent and could result in additional billing charges, along with the cancellation of your FedEx account number.
Use of this system constitutes your agreement to the service conditions in the current FedEx Service Guide, available on fedex.com.FedEx will not be responsible for any claim in excess of $100 per package, whether the result of loss, damage, delay, non-delivery,misdelivery,or misinformation, unless you declare a higher value, pay an additional charge, document your actual loss and file a timely claim.Limitations found in the current FedEx Service Guide apply. Your right to recover from FedEx for any loss, including intrinsic value of the package, loss of sales, income interest, profit, attorney's fees, costs, and other forms of damage whether direct, incidental,consequential, or special is limited to the greater of $100 or the authorized declared value. Recovery cannot exceed actual documented loss.Maximum for items of extraordinary value is $1,000, e.g. jewelry, precious metals, negotiable instruments and other items listed in our ServiceGuide. Written claims must be filed within strict time limits, see current FedEx Service Guide.

EXHIBIT 3

SBA Properties, LLC
NAME CHANGE FORM
July 8, 2013
Submitted By: Liane Montesino

Please change the Ground Lessor information as noted below on the following site:

Site Name:	Higganum
Site ID:	CT04169-A-0
Previous Owner Payee Name & Address:	Ruth Opuszynski 285 Chamberlain Road Higganum, CT 06441
Previous Vendor ID#:	113968
New Owner Payee Name:	Ruth Quale
New Payee/Landlord & Remit To Address:	N/A
New Owner Office Telephone #:	N/A
New Owner Cell #:	N/A
New Owner Fax #:	N/A
New Owner Email:	N/A
W-9 Included in Package:	No
Effective Date:	Immediately
Revenue Sharing:	Yes
Printable Status:	Yes
Revised COI Submitted:	Yes
Notes (if necessary):	Please update the ground owner's name per the attached documentation.

Site Administration Approval:

Daniela Mitrovic — Date 7/8/13

Nancy Caccavale — Date 7/8/13

The Assessor's office is responsible for the maintenance of records on the ownership of properties. Assessments are computed at 70% of the estimated market value of real property at the time of the last revaluation which was 2020.

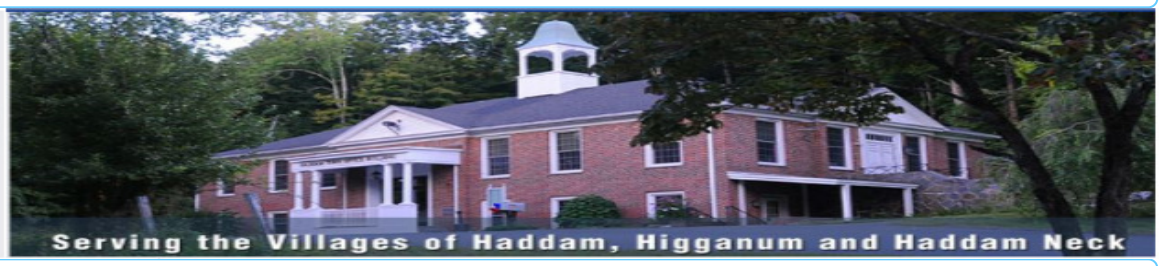

Information on the Property Records for the Municipality of Haddam was last updated on 3/3/2021.

Parcel Information

Location:	285 CHAMBERLAIN HILL RD	Property Use:	Residential	Primary Use:	Residential
Unique ID:	C0103400	Map Block Lot:	02 020 2	Acres:	2.05
490 Acres:	0.00	Zone:	R-2	Volume / Page:	400/ 936
Developers Map / Lot:		Census:	5901		

Value Information

	Appraised Value	Assessed Value
Land	94,650	66,260
Buildings	182,020	127,410
Detached Outbuildings	2,590	1,810
Total	279,260	195,480

Owner's Information

Owner's Data
QUALE RUTH M 285 CHAMBERLAIN HILL RD HIGGANUM, CT 06441

Building 1

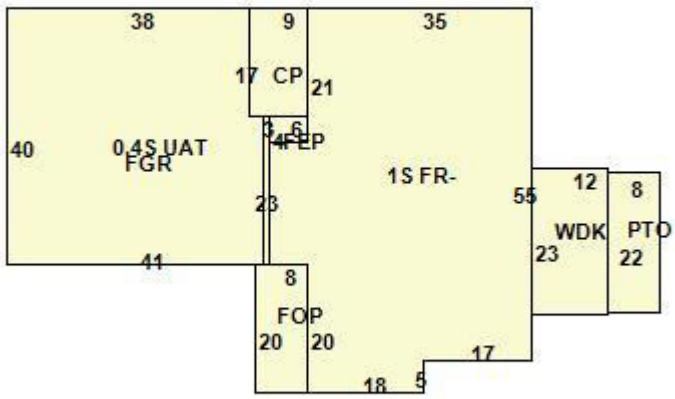

Building Use:	Single Family	Style:	Ranch	Living Area:	2,129
Stories:	1.00	Construction:	Wood Frame	Year Built:	1970
Total Rooms:	7	Bedrooms:	3	Full Baths:	2

Half Baths:	0	Fireplaces:	0	Heating:	Hot Water
Fuel:	Oil	Cooling Percent:	100	Basement Area:	0
Basement Finished Area:	0	Basement Garages:	0	Roof Material:	Asphalt
Siding:	Vinyl Siding	Units:			

Special Features

Fireplace	1
Wood/Pellet Stove	1

Attached Components

Type:	Year Built:	Area:
Wood Deck	1970	276
Frame Garage	1970	1,589
Concrete Patio	1970	153
Patio	2000	176
Enclosed Porch	1970	24
Open Porch	1970	160
Unfinished Attic	2012	626

Detached Outbuildings

Type:	Year Built:	Length:	Width:	Area:
Wood Deck Detached	2000	12.00	8.00	96
Above Ground	2000	0.00	0.00	1
Frame Shed	1970	10.00	12.00	120

Type:	Year Built:	Length:	Width:	Area:
Frame Shed	1996	12.00	24.00	288

Owner History - Sales

Owner Name	Volume	Page	Sale Date	Deed Type	Valid Sale	Sale Price
QUALE RUTH M	0400	0936	06/22/2020	Name Change	No	$0
OPUSZYNSKI RUTH M	0335	0144	01/13/2010		No	$0
OPUSZYNSKI DAVID & RUTH M	0203	0626	09/07/1995		No	$0

Building Permits

Permit Number	Permit Type	Date Opened	Date Closed	Permit Status	Reason
10857	Addition	11/03/2011		Closed	3 C GAR W/ WRKSHP ABOVE 2340SF

Information Published With Permission From The Assessor

EXHIBIT 4

Google Maps

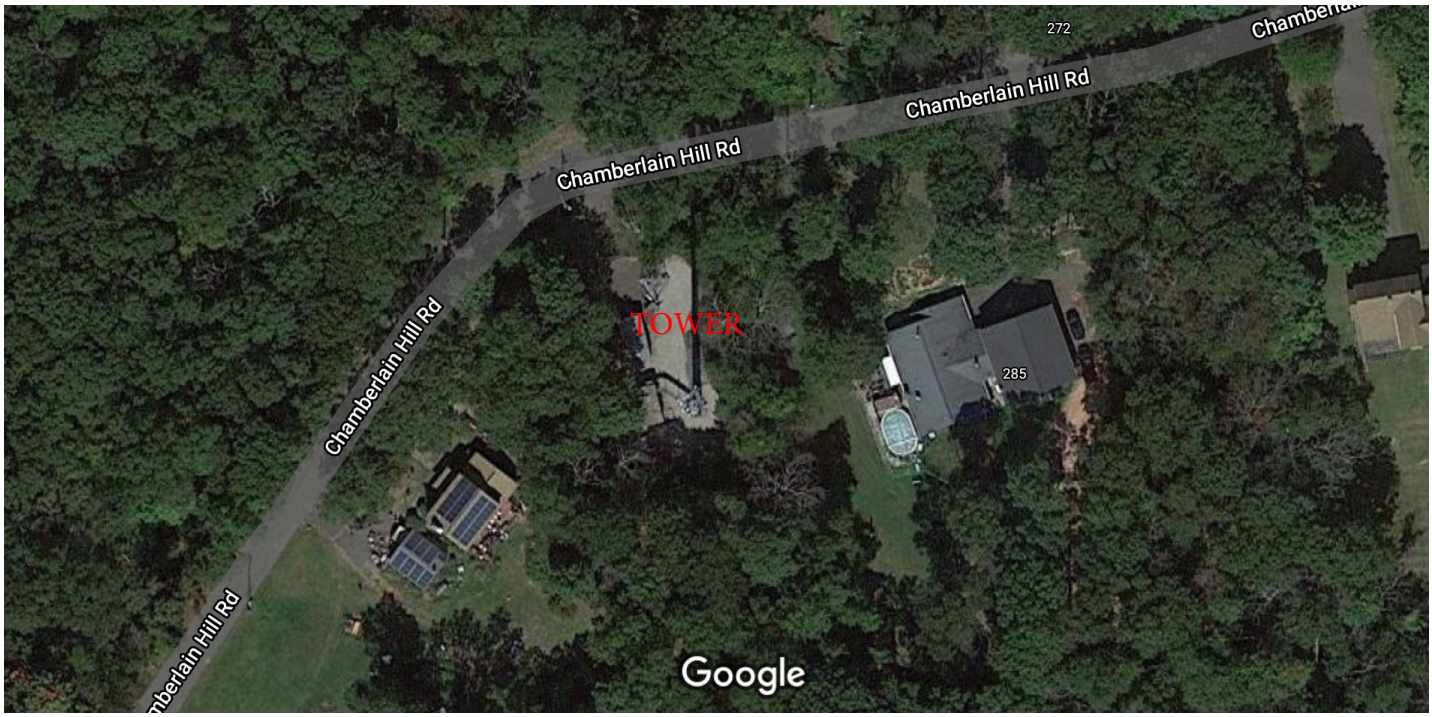

Imagery ©2021 Maxar Technologies, U.S. Geological Survey, Map data ©2021 50 ft

EXHIBIT 5

Legal Notice of Decisions

Please print this on Thursday, November 4, 1999

The Haddam Planning and Zoning Commission of the Town of Haddam hereby gives notice of its official action concerning the following:

1. Grant a Special Permit to Construct 190 foot Communication Tower and associated structures, as shown on a map entitled "SITE PLAN PROPOSED TOWER 285 CHAMBERLAIN HILL ROAD, HIGGANUM, PROPERTY OF RUTH &, DAVID OPUSZYNSKI" dated September 7, 1999. Map 2, Lot 20-2

2. To grant a Change of Zone I-1 to C-1 for Map 49, Lot 34, 88 Bridge Street

3. Approve the Application to Amend Haddam Zoning Regulations Section 3 Definitions to add the following: Self Storage Facility.

4. Approve the Application to Amend Haddam Zoning Regulations Section 7 Commercial Zones -C-1 by adding subsection 7.3.m to permit "Self Storage Facility", as a Special Permit use.

Said official action was taken at the commission's regular meeting of November 1,1999. The full record of the Commission's decision is on file in the Land Use Office of the Town Office Building. Dated at Haddam, CT this 2nd day of November, 1999.

Stephen Hitchcock, Chairman
Planning & Zoning Commission

TOWN OF HADDAM

PLANNING & ZONING COMMISSION

MOTION SHEET

Date: NOVEMBER 1, 1999

Applicant Name: Ruth & David Opuszynski

Property Address: 285 Chamberlain Hill Road
Assessor Map No. 2, Lot No. 20-2

Motion Made By Commissioner: Baranoff

Seconded By Commissioner: Hasse

Motion to grant a Special Permit to construct a 190 foot Communications Tower and associated structures, as shown on a map entitled "SITE PLAN PROPOSED TOWER, 285 CHAMBERLAIN HILL RD. HIGGANUM, CT. PROPERTY OF RUTH & DAVID OPUSZYNSKI" dated Sept. 7, 1999 with the following conditions:

1. **Standard Special Permit Conditions.**

For:	Against:	Abstain:
Carolyn Rose		Robert P. Hickmott
Robert Baranoff		
Virginia Marshall		
Stanley J. DeNicola		
Stephen Hutchins		

CT 4/69-A

BUILDING PERMIT

AMOUNT PAID

APPLICANT COPY
THIS PERMIT NOT VALID UNLESS PROPERLY RECEIPTED BY CASHIER

£1065 $868.60
VALIDATION

DATE January 5 19 20000 PERMIT NO. _____

APPL. AT National Tower LLC ADDRESS 70 Hammond Place (NO.) (STREET) (CONTR'S LICENSE)

PERMIT TO Construct Tower (TYPE OF IMPROVEMENT) ( ) NO. STORY (PROPOSED USE) NUMBER OF DWELLING UNITS _____

AT (LOCATION) 285 Chamberlain Hill Rd (NO.) (STREET) Map 2 Lot 20-2 ZONING DISTRICT _____

BETWEEN _____ (CROSS STREET) AND _____ (CROSS STREET)

SUBDIVISION _____ LOT _____ BLOCK _____ LOT SIZE _____

BUILDING IS TO BE _____ FT. WIDE BY _____ FT. LONG BY _____ FT. IN HEIGHT AND SHALL CONFORM IN CONSTRUCTIO

TO TYPE _____ USE GROUP _____ BASEMENT WALLS OR FOUNDATION _____ (TYPE)

REMARKS: Construct 185' Monopole with 5 carrier on it and each carrier has 9 antenna on each carrier. Top of monopole has 1 carrier on top which makes the monopole 190' tall.

AREA OR VOLUME _____ (CUBIC/SQUARE FEET) ESTIMATED COST $ 85,000.00 PERMIT FEE $ 868.60

OWNER Ruth & David Opuszynski

ADDRESS 285 Chamberlain Hill Rd Hampton CONN

BUILDING DEPT. BY [signature]

PERMIT

JOB WEATHER CARD

DATE January 5 19xx2000 PERMIT NO. _____

APPLICANT National Tower LLC ADDRESS 70 Hawthorn Place (NO.) (STREET) (CONTR'S LICENSE)

PERMIT TO Construct Tower (TYPE OF IMPROVEMENT) (___) NO. STORY _____ (PROPOSED USE) NUMBER OF DWELLING UNITS _____

AT (LOCATION) 283 Chamberlain Hill Rd (NO.) (STREET) Map 2 Lot 20-2 ZONING DISTRICT _____

BETWEEN _____ (CROSS STREET) AND _____ (CROSS STREET)

SUBDIVISION _____ LOT _____ BLOCK _____ LOT SIZE _____

BUILDING IS TO BE _____ FT. WIDE BY _____ FT. LONG BY _____ FT. IN HEIGHT AND SHALL CONFORM IN CONSTRUCTION

TO TYPE _____ USE GROUP _____ BASEMENT WALLS OR FOUNDATION _____ (TYPE)

REMARKS: Construct 185' Monopole with 5 carrier on it and each carrier has 3 antenas on each carrier. Top of monopole has 1 carrier on top which makes the monopole 190' tall.

AREA OR VOLUME _____ (CUBIC/SQUARE FEET) ESTIMATED COST $ 85,000.00 PERMIT FEE $ 850.00

OWNER Ruth & David Opuszynski BUILDING DEPT. _____

ADDRESS 283 Chamberlain Hill Rd Tyngsboro 01879 BY _____

THIS PERMIT CONVEYS NO RIGHT TO OCCUPY ANY STREET, ALLEY OR SIDEWALK OR ANY PART THEREOF, EITHER TEMPORARILY OR PERMANENTLY. ENCROACHMENTS ON PUBLIC PROPERTY, NOT SPECIFICALLY PERMITTED UNDER THE BUILDING CODE, MUST BE APPROVED BY THE JURISDICTION. STREET OR ALLEY GRADES AS WELL AS DEPTH AND LOCATION OF PUBLIC SEWERS MAY BE OBTAINED FROM THE DEPARTMENT OF PUBLIC WORKS. THE ISSUANCE OF THIS PERMIT DOES NOT RELEASE THE APPLICANT FROM THE CONDITIONS OF ANY APPLICABLE SUBDIVISION RESTRICTIONS.

MINIMUM OF THREE CALLED INSPECTIONS REQUIRED FOR ALL CONSTRUCTION WORK:
1. FOUNDATIONS OR FOOTINGS.
2. PRIOR TO COVERING STRUCTURAL MEMBERS (READY FOR LATH OR FINISH COVERING).
3. FINAL INSPECTION BEFORE OCCUPANCY.

APPROVED PLANS MUST BE RETAINED ON JOB AND THIS CARD KEPT POSTED UNTIL FINAL INSPECTION HAS BEEN MADE. WHERE A CERTIFICATE OF OCCUPANCY IS REQUIRED, SUCH BUILDING SHALL NOT BE OCCUPIED UNTIL FINAL INSPECTION HAS BEEN MADE.

WHERE APPLICABLE SEPARATE PERMITS ARE REQUIRED FOR ELECTRICAL, PLUMBING AND MECHANICAL INSTALLATIONS.

POST THIS CARD SO IT IS VISIBLE FROM STREET

BUILDING INSPECTION APPROVALS	PLUMBING INSPECTION APPROVALS	ELECTRICAL INSPECTION APPROVALS
1	1	1
2	2	2
3	HEATING INSPECTING APPROVALS	REFRIGERATION INSPECTION APPROVALS
	1	1
OTHER _____	2	2

WORK SHALL NOT PROCEED UNTIL THE INSPECTOR HAS APPROVED THE VARIOUS STAGES OF CONSTRUCTION.

PERMIT WILL BECOME NULL AND VOID IF CONSTRUCTION WORK IS NOT STARTED WITHIN SIX MONTHS OF DATE THE PERMIT IS ISSUED AS NOTED ABOVE.

INSPECTIONS INDICATED ON THIS CARD CAN BE ARRANGED FOR BY TELEPHONE OR WRITTEN NOTIFICATION.

FORM NO. BOCA - BP 1994

STATE OF CONNECTICUT
CONNECTICUT SITING COUNCIL
Ten Franklin Square, New Britain, CT 06051
Phone: (860) 827-2935 Fax: (860) 827-2950
E-Mail: siting.council@ct.gov
www.ct.gov/csc

June 16, 2014

Kri Pelletier
SBA Communications Corporation
33 Boston Post Road West Suite 320
Marlborough, MA 01752

RE: **EM-SPRINT-061-140530** – Sprint Spectrum notice of intent to modify an existing telecommunications facility located at 285 Chamberlain Hill Road, Higganum (Haddam), Connecticut.

Dear Ms. Pelletier:

The Connecticut Siting Council (Council) hereby acknowledges your notice to modify this existing telecommunications facility, pursuant to Section 16-50j-73 of the Regulations of Connecticut State Agencies with the following conditions:

- The proposed coax shall be installed in accordance with the recommendations made in the Structural Analysis Report prepared by FDH Engineering dated April 11, 2014 and stamped by J.D Holt;
- Not more than 45 days following completion of the antenna installation, Sprint shall provide documentation certifying that its installation complied with the engineer's recommendation;
- Any deviation from the proposed modification as specified in this notice and supporting materials with the Council shall render this acknowledgement invalid;
- Any material changes to this modification as proposed shall require the filing of a new notice with the Council;
- Within 45 days after completion of construction, the Council shall be notified in writing that construction has been completed;
- Any nonfunctioning antenna and associated antenna mounting equipment on this facility owned and operated by Sprint shall be removed within 60 days of the date the antenna ceased to function;
- The validity of this action shall expire one year from the date of this letter; and
- The applicant may file a request for an extension of time beyond the one year deadline provided that such request is submitted to the Council not less than 60 days prior to the expiration.

The proposed modifications including the placement of all necessary equipment and shelters within the tower compound are to be implemented as specified here and in your notice dated May 28, 2014. The modifications are in compliance with the exception criteria in Section 16-50j-72 (b) of the Regulations of Connecticut State Agencies as changes to an existing facility site that would not increase tower height, extend the boundaries of the tower site, increase noise levels at the tower site boundary by six decibels, and increase the total radio frequencies electromagnetic radiation power density measured at the tower site boundary to or above the standard adopted by the State Department of Environmental Protection pursuant to General Statutes § 22a-162. This facility has also been carefully modeled to ensure that radio frequency emissions are conservatively below State and federal standards applicable to the frequencies now used on this tower.

This decision is under the exclusive jurisdiction of the Council. Please be advised that the validity of this action shall expire one year from the date of this letter. Any additional change to this facility will require explicit notice to this agency pursuant to Regulations of Connecticut State Agencies Section 16-50j-73. Such notice shall include all relevant information regarding the proposed change with cumulative worst-case modeling of radio frequency exposure at the closest point of uncontrolled access to the tower base, consistent

with Federal Communications Commission, Office of Engineering and Technology, Bulletin 65. Thank you for your attention and cooperation.

Very truly yours,

Melanie A. Bachman
Acting Executive Director

MAB/RDM/cm

c: The Honorable Melissa Schlag, First Selectman, Town of Haddam
Elizabeth Glidden, Town Planner, Town of Haddam

EXHIBIT 6

PROJECT INFORMATION

TOWER OWNER:	SBA PROPERTIES, LLC 8501 CONGRESS AVENUE BOCA RATON, FL 33487 PHONE: 561-226-9523
SBA TOWER ID:	CT04169-A
SBA SITE NAME:	HIGGANUM
T-MOBILE SITE NAME:	CTHA832A
T-MOBILE SITE NUMBER:	CTHA832A
SBA SITE ADDRESS:	285 CHAMBERLAIN HILL ROAD HIGGANUM, CT 06441
LATITUDE:	41.50176000
LONGITUDE:	-72.61870000
TOWER HEIGHT:	185'-0"± AGL
RAD CENTER:	185'-0"± AGL
ZONING JURISDICTION:	TOWN OF HIGGANUM
COUNTY:	MIDDLESEX/HADDAM

DESCRIPTION OF WORK:

TELECOMMUNICATIONS FACILITY UPGRADE (SPRINT RETAIN):

MONOPOLE

COMPLIANCE CODES:

1.	BUILDING CODE: IBC 2015 & CONNECTICUT STATE BUILDING CODE 2018
2.	ELECTRICAL CODE: 2017 NATIONAL ELECTRICAL CODE
3.	CONCRETE CODE: AMERICAN CONCRETE INSTITUTE (ACI) 318
4.	STEEL CODE: AMERICAN INSTITUTE OF STEEL CONSTRUCTION (AISC), 14TH EDITION
5.	TELECOMMUNICATIONS CODE: EIA/TIA-222-G STRUCTURAL STANDARDS FOR STEEL

BASED ON INFORMATION PROVIDED BY T-MOBILE, THIS TELECOMMUNICATIONS EQUIPMENT DEPLOYMENT IS AN ELIGIBLE FACILITY UNDER THE TAX RELIEF ACT OF 2012, 47 USC 1455(A), AND IS SUBJECT TO AN EXPEDITED ELIGIBLE FACILITIES REQUEST/REVIEW AND ZONING PRE-EMPTION FOR LOCAL DISCRETIONARY PERMITS (VARIANCE, SPECIAL PERMIT, SITE PLAN REVIEW).

PROJECT DIRECTORY

A&E / PROJECT MANAGER:
CENTERLINE COMMUNICATIONS
750 WEST CENTER ST, SUITE 301
WEST BRIDGEWATER, MA 02379
PHONE 781.713.4725

APPLICANT:
T-MOBILE NORTHEAST, LLC.
15 COMMERCE WAY, SUITE B
NORTON, MA 02766
PHONE: (508) 286-2700
FAX: (508) 286-2893

SITE NAME: CTHA832A
285 CHAMBERLAIN HILL ROAD
HIGGANUM, CT 06441

SITE NUMBER: CTHA832A
SBA SITE #: CT04169-A
PROJECT: SPRINT RETAIN
CONFIGURATION: 67D5A997DB 6160 (GSM ONLY)

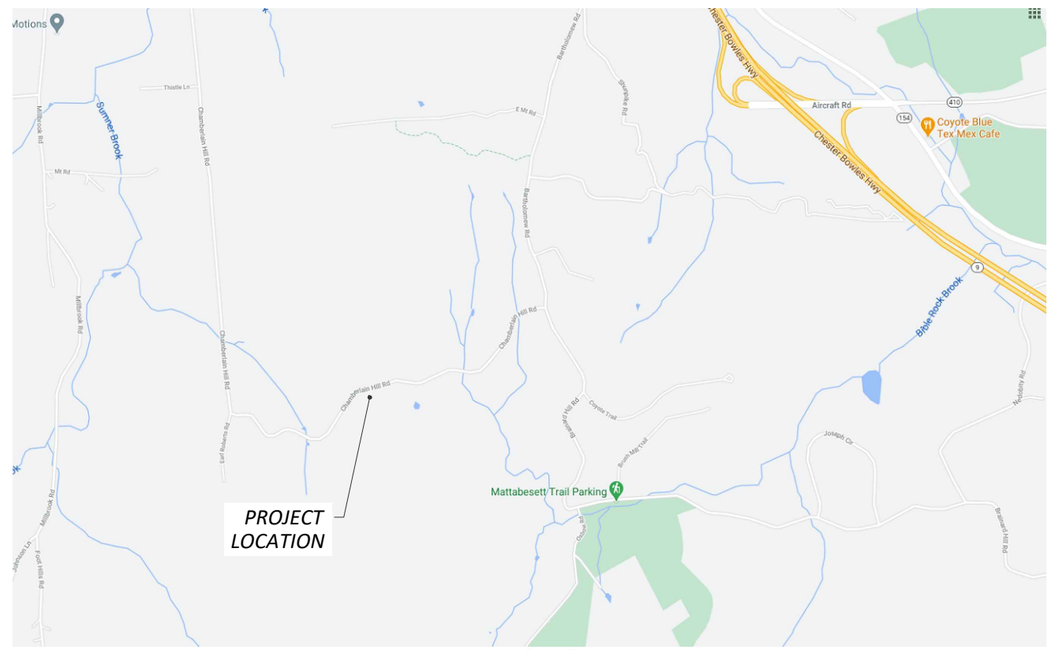

VICINITY MAP
NOT TO SCALE

GENERAL NOTES:

1. THIS DOCUMENT IS THE CREATION, DESIGN, PROPERTY AND COPYRIGHTED WORK OF T-MOBILE. ANY DUPLICATION OR USE WITHOUT EXPRESS WRITTEN CONSENT IS STRICTLY PROHIBITED. DUPLICATION AND USE BY GOVERNMENT AGENCIES FOR THE PURPOSE OF CONDUCTING THEIR LAWFULLY AUTHORIZED REGULATORY AND ADMINISTRATIVE FUNCTIONS IS SPECIFICALLY ALLOWED.

2. THE FACILITY IS AN UNMANNED PRIVATE AND SECURED EQUIPMENT INSTALLATION. IT IS ONLY ACCESSED BY TRAINED TECHNICIANS FOR PERIODIC ROUTINE MAINTENANCE AND THEREFORE DOES NOT REQUIRE ANY WATER OR SANITARY SEWER SERVICE. THE FACILITY IS NOT GOVERNED BY REGULATIONS REQUIRING PUBLIC ACCESS PER ADA REQUIREMENTS.

3. CONTRACTOR SHALL VERIFY ALL PLANS AND EXISTING DIMENSIONS AND CONDITIONS ON THE JOB SITE AND SHALL IMMEDIATELY NOTIFY THE T-MOBILE REPRESENTATIVE IN WRITING OF DISCREPANCIES BEFORE PROCEEDING WITH THE WORK OR BE RESPONSIBLE FOR SAME.

DRAWING INDEX

NO.	DESCRIPTION	REV.	DATE
T-1	TITLE SHEET	1	02/26/21
GN-1	GENERAL NOTES	1	02/26/21
A-1	COMPOUND & EQUIPMENT PLANS	1	02/26/21
A-2	ANTENNA LAYOUT & ELEVATIONS	1	02/26/21
A-3	DETAILS	1	02/26/21
SN-1	STRUCTURAL NOTES	1	02/26/21
RF-1	RF PLUMBING DIAGRAM	1	02/26/21
G-1	GROUNDING DETAILS	1	02/26/21

T - Mobile
NORTHEAST LLC
T-MOBILE NORTHEAST, LLC.
15 COMMERCE WAY, SUITE B
NORTON, MA 02766
PHONE: (508) 286-2700
FAX: (508) 286-2893

SBA
SBA COMMUNICATIONS CORP.
134 FLANDERS ROAD, SUITE 125
WESTBOROUGH, MA 01581
PHONE: (508) 251-0720

CENTERLINE COMMUNICATIONS
750 W CENTER ST, SUITE 301
WEST BRIDGEWATER, MA 02379
PHONE: 781.713.4725

REVISIONS

NO.	DATE	DESCRIPTION
1	02/26/21	ISSUED FOR CONSTRUCTION
0	12/09/20	ISSUED FOR REVIEW

DESIGNED BY: KT
APPROVED BY: DC

STATE OF CONNECTICUT
DEREK J. CREASER
No. 28551
LICENSED PROFESSIONAL ENGINEER

DATE: 02/26/21

IT IS A VIOLATION OF LAW FOR ANY PERSON UNLESS THEY ARE ACTING UNDER THE DIRECTION OF A LICENSED PROFESSIONAL ENGINEER TO ALTER THIS DOCUMENT. UNLESS EXPLICITLY AGREED TO BY THE ENGINEER IN WRITING, THE ENGINEER DISCLAIMS ALL LIABILITY ASSOCIATED WITH THE REUSE, ALTERATION OR MODIFICATION OF THE CONTENTS HEREIN.

CBYD.COM 811
Call Before You Dig, Inc.

SITE NAME: CTHA832A
SITE NUMBER: CTHA832A
SITE ADDRESS: 285 CHAMBERLAIN HILL ROAD HIGGANUM, CT 06441
PROJECT TYPE: SPRINT RETAIN
SHEET TITLE: TITLE SHEET
DRAWING #: T-1
REVISION: 1

GENERAL NOTES

1. FOR THE PURPOSE OF CONSTRUCTION DRAWING, THE FOLLOWING DEFINITIONS SHALL APPLY:
   CONTRACTOR – CENTERLINE COMMUNICATIONS
   SUBCONTRACTOR – GENERAL CONTRACTOR (CONSTRUCTION)
   OWNER – T–MOBILE

2. PRIOR TO THE SUBMISSION OF BIDS, THE BIDDING SUBCONTRACTOR SHALL VISIT THE CELL SITE TO FAMILIARIZE WITH THE EXISTING CONDITIONS AND TO CONFIRM THAT THE WORK CAN BE ACCOMPLISHED AS SHOWN ON THE CONSTRUCTION DRAWINGS. ANY DISCREPANCY FOUND SHALL BE BROUGHT TO THE ATTENTION OF CONTRACTOR.

3. ALL MATERIALS FURNISHED AND INSTALLED SHALL BE IN STRICT ACCORDANCE WITH ALL APPLICABLE CODES, REGULATIONS, AND ORDINANCES. SUBCONTRACTOR SHALL ISSUE ALL APPROPRIATE NOTICES AND COMPLY WITH ALL LAWS, ORDINANCES, RULES, REGULATIONS, AND LAWFUL ORDERS OF ANY PUBLIC AUTHORITY REGARDING THE PERFORMANCE OF THE WORK. ALL WORK CARRIED OUT SHALL COMPLY WITH ALL APPLICABLE MUNICIPAL AND UTILITY COMPANY SPECIFICATIONS AND LOCAL JURISDICTIONAL CODES, ORDINANCES AND APPLICABLE REGULATIONS.

4. DRAWINGS PROVIDED HERE ARE NOT TO BE SCALED AND ARE INTENDED TO SHOW OUTLINE ONLY.

5. UNLESS NOTED OTHERWISE, THE WORK SHALL INCLUDE FURNISHING MATERIALS, EQUIPMENT, APPURTENANCES, AND LABOR NECESSARY TO COMPLETE ALL INSTALLATIONS AS INDICATED ON THE DRAWINGS.

6. "KITTING LIST" SUPPLIED WITH THE BID PACKAGE IDENTIFIES ITEMS THAT WILL BE SUPPLIED BY CONTRACTOR. ITEMS NOT INCLUDED IN THE BILL OF MATERIALS AND KITTING LIST SHALL BE SUPPLIED BY THE SUBCONTRACTOR.

7. THE SUBCONTRACTOR SHALL INSTALL ALL EQUIPMENT AND MATERIALS IN ACCORDANCE WITH MANUFACTURER'S RECOMMENDATIONS UNLESS SPECIFICALLY STATED OTHERWISE.

8. IF THE SPECIFIED EQUIPMENT CANNOT BE INSTALLED AS SHOWN ON THESE DRAWINGS, THE SUBCONTRACTOR SHALL PROPOSE AN ALTERNATIVE INSTALLATION SPACE FOR APPROVAL BY THE CONTRACTOR.

9. SUBCONTRACTOR SHALL DETERMINE ACTUAL ROUTING OF CONDUIT, POWER AND T1 CABLES, GROUNDING CABLES AS SHOWN ON THE POWER, GROUNDING AND TELCO PLAN DRAWING. SUBCONTRACTOR SHALL UTILIZE EXISTING TRAYS AND/OR SHALL ADD NEW TRAYS AS NECESSARY. SUBCONTRACTOR SHALL CONFIRM THE ACTUAL ROUTING WITH THE CONTRACTOR.

10. THE SUBCONTRACTOR SHALL PROTECT EXISTING IMPROVEMENTS, PAVEMENTS, CURBS, LANDSCAPING AND STRUCTURES. ANY DAMAGED PART SHALL BE REPAIRED AT SUBCONTRACTOR'S EXPENSE TO THE SATISFACTION OF OWNER.

11. SUBCONTRACTOR SHALL LEGALLY AND PROPERLY DISPOSE OF ALL SCRAP MATERIALS SUCH AS COAXIAL CABLES AND OTHER ITEMS REMOVED FROM THE EXISTING FACILITY. ANTENNAS REMOVED SHALL BE RETURNED TO THE OWNER'S DESIGNATED LOCATION.

12. SUBCONTRACTOR SHALL LEAVE PREMISES IN CLEAN CONDITION.

13. ALL CONCRETE REPAIR WORK SHALL BE DONE IN ACCORDANCE WITH AMERICAN CONCRETE INSTITUTE (ACI) 301.

14. ANY NEW CONCRETE NEEDED FOR THE CONSTRUCTION SHALL BE AIR–ENTRAINED AND SHALL HAVE 4000 PSI STRENGTH AT 28 DAYS. ALL CONCRETE WORK SHALL BE DONE IN ACCORDANCE WITH ACI 318 CODE REQUIREMENTS.

15. ALL STRUCTURAL STEEL WORK SHALL BE DETAILED, FABRICATED AND ERECTED IN ACCORDANCE WITH AISC SPECIFICATIONS. ALL STRUCTURAL STEEL SHALL BE ASTM A36 (Fy = 36 ksi) UNLESS OTHERWISE NOTED. PIPES SHALL BE ASTM A53 TYPE E (Fy = 36 ksi). ALL STEEL EXPOSED TO WEATHER SHALL BE HOT DIPPED GALVANIZED. TOUCHUP ALL SCRATCHES AND OTHER MARKS IN THE FIELD AFTER STEEL IS ERECTED USING A COMPATIBLE ZINC RICH PAINT.

16. CONSTRUCTION SHALL COMPLY WITH SPECIFICATIONS AND "GENERAL CONSTRUCTION SERVICES FOR CONSTRUCTION OF T–MOBILE SITES."

17. SUBCONTRACTOR SHALL VERIFY ALL EXISTING DIMENSIONS AND CONDITIONS PRIOR TO COMMENCING ANY WORK. ALL DIMENSIONS OF EXISTING CONSTRUCTION SHOWN ON THE DRAWINGS MUST BE VERIFIED. SUBCONTRACTOR SHALL NOTIFY THE CONTRACTOR OF ANY DISCREPANCIES PRIOR TO ORDERING MATERIAL OR PROCEEDING WITH CONSTRUCTION.

18. THE EXISTING CELL SITE IS IN FULL COMMERCIAL OPERATION. ANY CONSTRUCTION WORK BY SUBCONTRACTOR SHALL NOT DISRUPT THE EXISTING NORMAL OPERATION. ANY WORK ON EXISTING EQUIPMENT MUST BE COORDINATED WITH CONTRACTOR. ALSO, WORK SHOULD BE SCHEDULED FOR AN APPROPRIATE MAINTENANCE WINDOW USUALLY IN LOW TRAFFIC PERIODS AFTER MIDNIGHT.

19. SINCE THE CELL SITE IS ACTIVE, ALL SAFETY PRECAUTIONS MUST BE TAKEN WHEN WORKING AROUND HIGH LEVELS OF ELECTROMAGNETIC RADIATION. EQUIPMENT SHOULD BE SHUTDOWN PRIOR TO PERFORMING ANY WORK THAT COULD EXPOSE THE WORKERS TO DANGER. PERSONAL RF EXPOSURE MONITORS ARE ADVISED TO BE WORN TO ALERT OF ANY DANGEROUS EXPOSURE LEVELS.

20. APPLICABLE BUILDING CODES:
SUBCONTRACTOR'S WORK SHALL COMPLY WITH ALL APPLICABLE NATIONAL, STATE, AND LOCAL CODES AS ADOPTED BY THE LOCAL AUTHORITY HAVING JURISDICTION (AHJ) FOR THE LOCATION. THE EDITION OF THE AHJ ADOPTED CODES AND STANDARDS IN EFFECT ON THE DATE OF CONTRACT AWARD SHALL GOVERN THE DESIGN.
   BUILDING CODE: IBC 2015 & CONNECTICUT STATE BUILDING CODE 2018
   ELECTRICAL CODE: 2017 NATIONAL ELECTRICAL CODE
   LIGHTNING CODE: NFPA 70–2017

SUBCONTRACTOR'S WORK SHALL COMPLY WITH THE LATEST EDITION OF THE FOLLOWING STANDARDS:

AMERICAN CONCRETE INSTITUTE (ACI) 318; BUILDING CODE REQUIREMENTS FOR STRUCTURAL CONCRETE;

AMERICAN INSTITUTE OF STEEL CONSTRUCTION (AISC)

MANUAL OF STEEL CONSTRUCTION, ASD, FOURTEENTH EDITION;

TELECOMMUNICATIONS INDUSTRY ASSOCIATION (TIA) 222–G, STRUCTURAL STANDARDS FOR STEEL

ANTENNA TOWER AND ANTENNA SUPPORTING STRUCTURES; REFER TO ELECTRICAL DRAWINGS FOR SPECIFIC ELECTRICAL STANDARDS.

FOR ANY CONFLICTS BETWEEN SECTIONS OF LISTED CODES AND STANDARDS REGARDING MATERIAL, METHODS OF CONSTRUCTION, OR OTHER REQUIREMENTS, THE MOST RESTRICTIVE REQUIREMENT SHALL GOVERN. WHERE THERE IS CONFLICT BETWEEN A GENERAL REQUIREMENT AND A SPECIFIC REQUIREMENT, THE SPECIFIC REQUIREMENT SHALL GOVERN.

ABBREVIATIONS

AGL	ABOVE GRADE LEVEL	G.C.	GENERAL CONTRACTOR	RF	RADIO FREQUENCY
AWG	AMERICAN WIRE GAUGE	MGB	MASTER GROUND BUS		
BCW	BARE COPPER WIRE	MIN	MINIMUM	TBD	TO BE DETERMINED
BTS	BASE TRANSCEIVER STATION	PROPOSED	NEW	TBR	TO BE REMOVED
EXISTING	EXISTING	N.T.S.	NOT TO SCALE	TBRR	TO BE REMOVED AND REPLACED
EG	EQUIPMENT GROUND	REF	REFERENCE	TYP	TYPICAL
EGR	EQUIPMENT GROUND RING	REQ	REQUIRED		

RF NOTES

1. ACTUAL LENGTHS SHALL BE DETERMINED PER SITE CONDITION BY SUBCONTRACTOR

2. THE DESIGN IS BASED ON RF DATA SHEETS, SIGNED AND APPROVED.

3. RADIO SIGNAL CABLE AND RACEWAY SHALL COMPLY WITH THE REQUIREMENTS OF THE NATIONAL ELECTRICAL CODE (NEC, NFPA 70), CHAPTER 8.

4. ALL SPECIFIED MATERIAL FOR EACH LOCATION (E.G. OUT DOORS–OCCUPIED, INDOORS–UNOCCUPIED, PLENUMS, RISER SHAFTS, ETC.) SHALL BE APPROVED, LISTED, OR LABELED AS REQUIRED BY THE NEC.

5. RADIO SIGNAL CABLE SHALL BE SUPPORTED AT MINIMUM OF EVERY THREE (3) FEET EXCEPT INSIDE MONOPOLES OR MONOPOLES WHERE CABLE AND CONNECTOR MANUFACTURERS SUPPORT RECOMMENDATIONS SHALL BE FOLLOWED. MANUFACTURER RECOMMENDATION CABLES SUPPORT ACCESSORIES SHALL BE USED.

6. THE OUTDOOR CABLE SUPPORT SYSTEM SHALL BE PROVIDED WITH AN ICE SHIELD TO SUPPORT AND PROTECT ANTENNA CABLE RUNS.

7. DRIP LOOPS SHALL BE REQUIRED ON ALL OUTSIDE CABLES. CABLES SHALL BE SLOPED AWAY FROM BUILDING OR OUTDOOR BTS CABINETS TO PREVENT WATER FROM ENTERING THROUGH THE COAXIAL CABLE PORT.

8. ALL FEEDER LINE AND JUMPER CONNECTORS SHALL BE 7/16 DIN CABLE CONNECTORS THAT MEET IP68 STANDARDS.

9. 7/16 DIN CONNECTORS REQUIRE NO ADDITIONAL WEATHER PROOFING IN INDOOR APPLICATIONS IF INSTALLED AND TORQUED PROPERLY. IN OUTDOOR APPLICATIONS WEATHER PROOFING IS REQUIRED AND THE FOLLOWING PROCEDURE SHOULD BE FOLLOWED.

10. USING WEATHERPROOFING KIT APPROVED BY CABLE MANUFACTURER AND CONTRACTOR START TAPE APPROXIMATELY 5 INCHES FROM THE CONNECTOR, AND WRAP 2 INCHES TOWARD THE CONNECTOR, THEN REVERSE THE TAPE SO THAT THE STICKY SIDE IS UP. TAPE OVER THE CONNECTOR OR SURGE ARRESTOR UNTIL THREE (3) TO FOUR (4) INCHES BEYOND THE CONNECTOR AND REVERSE AGAIN WITH THE STICKY SIDE DOWN FOR ANOTHER INCH OR TWO. PASS THE BUTYL RUBBER AND FINISH WITH A FINAL LAYER OF TAPE.

11. ANTENNAS SHALL BE PAINTED,WHEN REQUIRED, BY THE LANDLORD OR AUTHORITY OF HAVING JURISDICTION IN ACCORDANCE WITH ANTENNA MANUFACTURERS' SURFACES PREPARATION AND PAINTING REQUIREMENTS.

12. CABLE SHIELDS AND TOWER CONDUITS SHALL BE GROUNDED AT THE TOP OF THE TOWER WITHIN 10 FEET OF THEIR CONNECTORS, AND AT THE BOTTOM OF THE TOWER ABOUT 6 INCHES BEFORE THEY TURN TOWARD THE FACILITY. THEY SHALL BE GROUNDED AT THE MIDPOINT OF THE TOWERS THAT ARE BETWEEN 60 FEET AND 200 FEET HIGH, AND AT INTERVALS OF 60 FEET OR LESS ON TOWERS THAT ARE HIGHER THAN 200 FEET.

ANTENNA CABLE AND SCHEDULING NOTES

1. SUBCONTRACTOR SHALL VERIFY THE ACTUAL LENGTH IN THE FIELD BEFORE INSTALLATION.

2. TAG AND COLOR CODE ALL MAIN CABLES AT LOCATIONS PER T–MOBILE ANTENNA CABLE MARKING STANDARD:

- TOP OF TOWER END OF MAIN COAX
- BOTTOM OF TOWER END OF MAIN COAX
- DIRECTLY BEFORE AND AFTER RF EQUIPMENT
- END OF JUMPERS AT BTS EQUIPMENT

3. ANTENNAS SHALL BE PROCURED AND INSTALLED WITH DOWN TILT MOUNTING BRACKETS SUPPLIED BY ANTENNA MANUFACTURER.

4. PRIOR APPROVAL IS REQUIRED BEFORE PERFORMING ANY WORK ON EXISTING CELL SITE EQUIPMENT.

T - Mobile
NORTHEAST LLC
T-MOBILE NORTHEAST, LLC.
15 COMMERCE WAY, SUITE B
NORTON, MA 02766
PHONE: (508) 286-2700
FAX: (508) 286-2893

SBA
SBA COMMUNICATIONS CORP.
134 FLANDERS ROAD, SUITE 125
WESTBOROUGH, MA 01581
PHONE: (508) 251-0720

CENTERLINE COMMUNICATIONS
750 W CENTER ST, SUITE 301
WEST BRIDGEWATER, MA 02379
PHONE: 781.713.4725

REVISIONS		
1	02/26/21	ISSUED FOR CONSTRUCTION
0	12/09/20	ISSUED FOR REVIEW
NO.	DATE	DESCRIPTION

DESIGNED BY:	APPROVED BY:
KT	DC

STATE OF CONNECTICUT
DEREK J. CREASER
No. 28351
LICENSED
PROFESSIONAL ENGINEER

DATE: 02/26/21

IT IS A VIOLATION OF LAW FOR ANY PERSON UNLESS THEY ARE ACTING UNDER THE DIRECTION OF A LICENSED PROFESSIONAL ENGINEER TO ALTER THIS DOCUMENT. UNLESS EXPLICITLY AGREED TO BY THE ENGINEER IN WRITING, THE ENGINEER DISCLAIMS ALL LIABILITY ASSOCIATED WITH THE REUSE, ALTERATION OR MODIFICATION OF THE CONTENTS HEREIN.

SITE NAME: CTHA832A

SITE NUMBER: CTHA832A

SITE ADDRESS: 285 CHAMBERLAIN HILL ROAD
HIGGANUM, CT 06441

PROJECT TYPE: SPRINT RETAIN

SHEET TITLE: GENERAL NOTES

DRAWING #: GN–1

REVISION: 1

NOTES:

1. REFERENCE STRUCTURAL ANALYSIS BY OTHERS FOR FURTHER INFORMATION REGARDING THE CAPACITY OF THE EXISTING STRUCTURE TO SUPPORT THIS EQUIPMENT UPGRADE.
2. REFER TO THE FINAL RF DATA SHEET FOR FINAL ANTENNA SETTINGS.

FEEDLINE SCHEDULE	FEEDLINES	LOCATION
A	EXISTING TO BE REMOVED: (3) 1-1/4" HYBRID CABLES	UP INSIDE MONOPOLE TO RAD
B	PROPOSED: (3) 6x12 (1-5/8") HYBRID FIBER	UP INSIDE MONOPOLE TO RAD

NOTE:
EXISTING T-MOBILE EQUIPMENT FEEDLINE INVENTORY BASED ON COLLOCATION APPLICATION AND SBA RECORD, NOT FIELD OBSERVATIONS. RFDS AND FEEDLINE LEASING ENTITLEMENTS MAY DIFFER.
SEE STRUCTURAL ANALYSIS FOR FEEDLINE INSTALLATION.

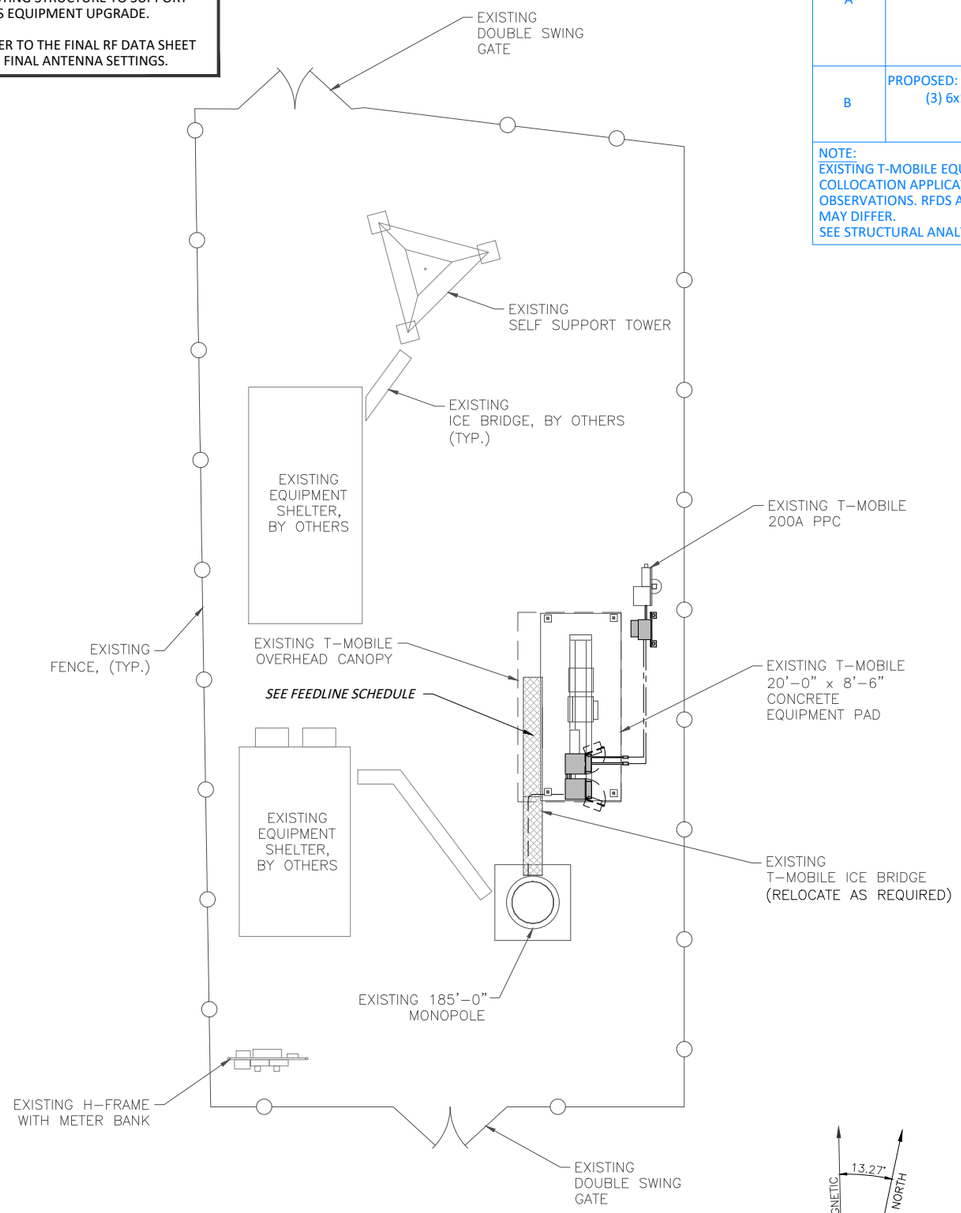

COMPOUND PLAN

SCALE: 1/8" = 1'-0" (22"X34")
1/16" = 1'-0" (11"X17")

GRAPHIC SCALE

8 0 4 8 16 32

(IN FEET)

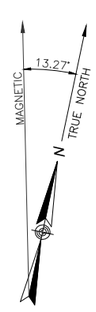

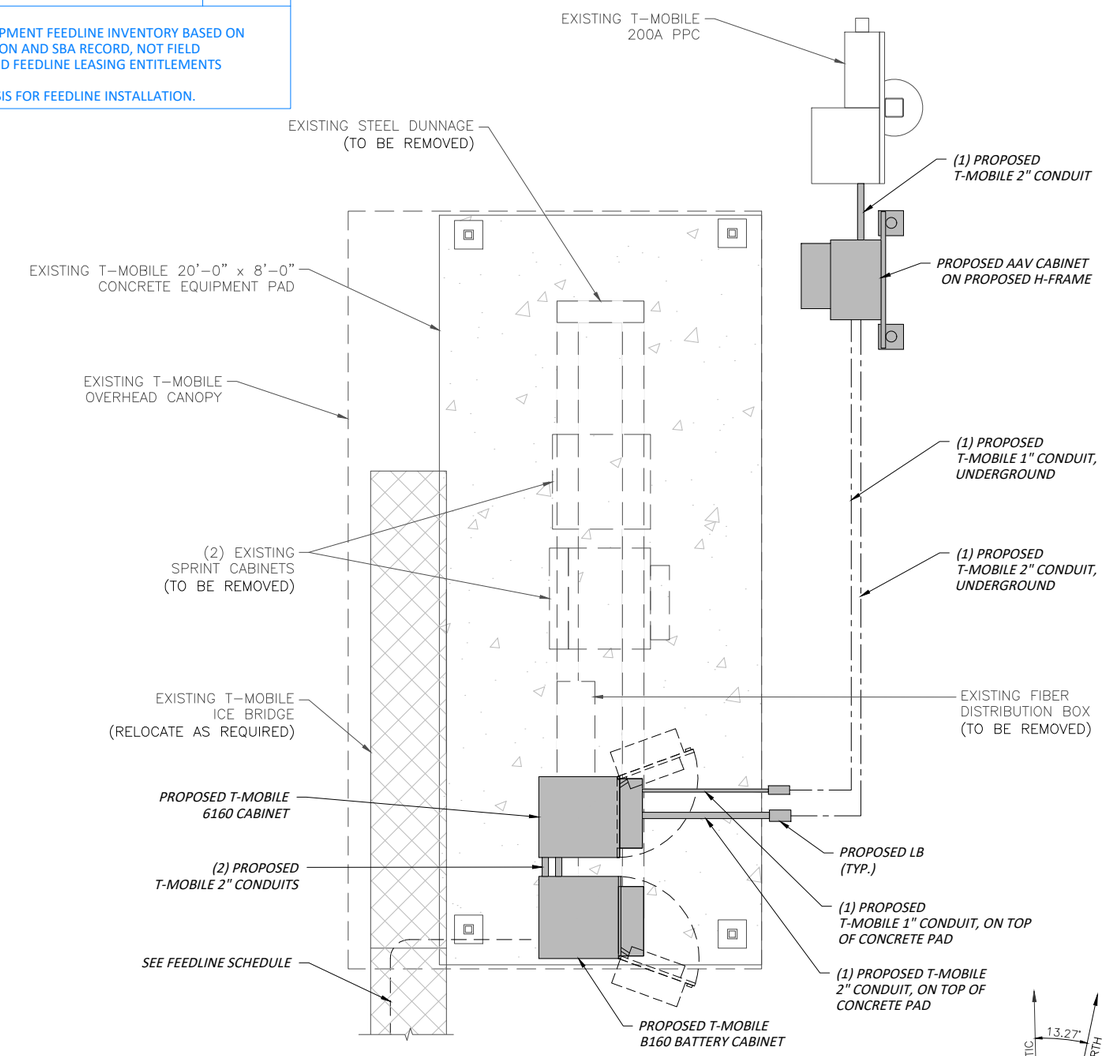

EQUIPMENT PLAN

SCALE: 1/2" = 1'-0" (22"X34")
1" = 1'-0" (11"X17")

GRAPHIC SCALE

2 0 1 2 4 8

(IN FEET)

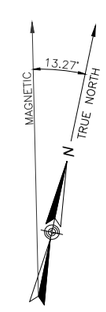

T - Mobile
NORTHEAST LLC
T-MOBILE NORTHEAST, LLC.
15 COMMERCE WAY, SUITE B
NORTON, MA 02766
PHONE: (508) 286-2700
FAX: (508) 286-2893

SBA
SBA COMMUNICATIONS CORP.
134 FLANDERS ROAD, SUITE 125
WESTBOROUGH, MA 01581
PHONE: (508) 251-0720

CENTERLINE COMMUNICATIONS
750 W CENTER ST, SUITE 301
WEST BRIDGEWATER, MA 02379
PHONE: 781.713.4725

REVISIONS

NO.	DATE	DESCRIPTION
1	02/26/21	ISSUED FOR CONSTRUCTION
0	12/09/20	ISSUED FOR REVIEW

DESIGNED BY:	APPROVED BY:
KT	DC

STATE OF CONNECTICUT
DEREK J. CREASER
No. 28551
LICENSED
PROFESSIONAL ENGINEER

DATE: 02/26/21

IT IS A VIOLATION OF LAW FOR ANY PERSON UNLESS THEY ARE ACTING UNDER THE DIRECTION OF A LICENSED PROFESSIONAL ENGINEER TO ALTER THIS DOCUMENT. UNLESS EXPLICITLY AGREED TO BY THE ENGINEER IN WRITING. THE ENGINEER DISCLAIMS ALL LIABILITY ASSOCIATED WITH THE REUSE, ALTERATION OR MODIFICATION OF THE CONTENTS HEREIN.

SITE NAME: CTHA832A

SITE NUMBER: CTHA832A

SITE ADDRESS: 285 CHAMBERLAIN HILL ROAD HIGGANUM, CT 06441

PROJECT TYPE: SPRINT RETAIN

SHEET TITLE: COMPOUND & EQUIPMENT PLANS

DRAWING #: A-1

REVISION: 1

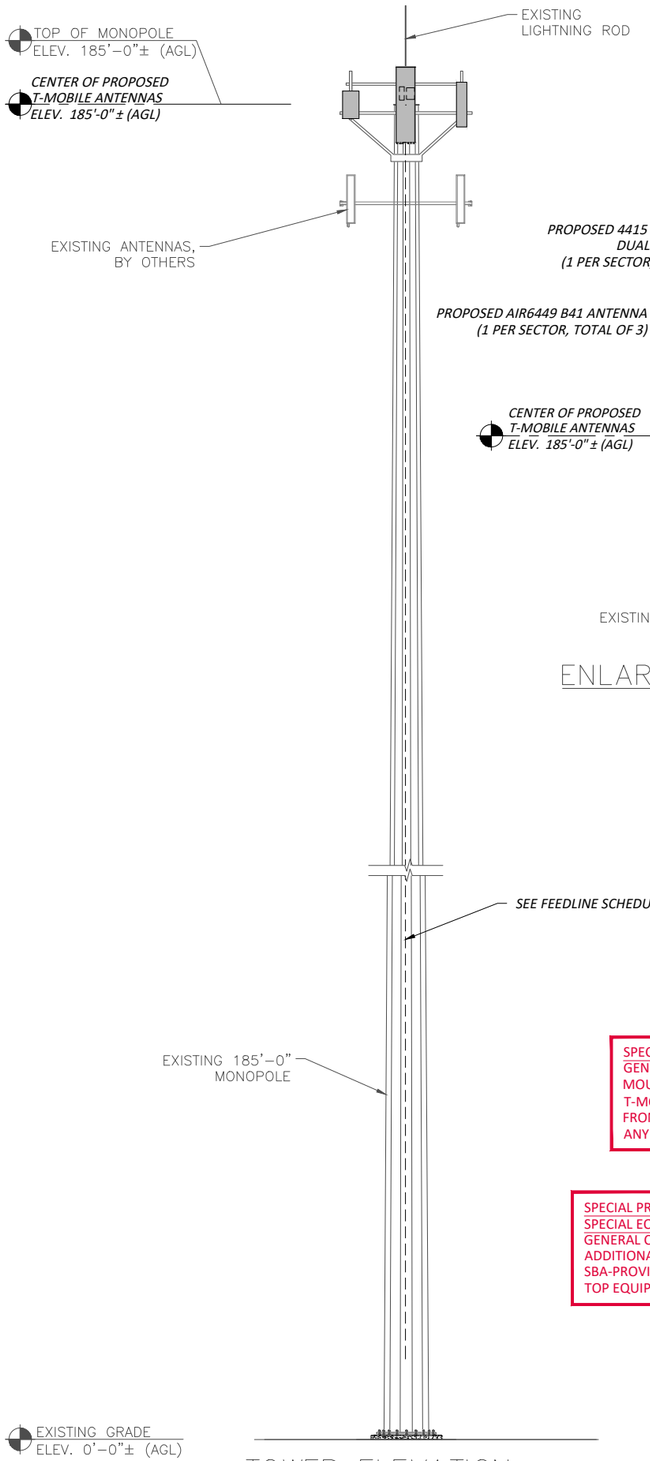

TOWER ELEVATION

SCALE: 1/8" = 1'-0" (22"X34")
1/16" = 1'-0" (11"X17")

NOTES:

1. REFERENCE STRUCTURAL ANALYSIS BY OTHERS FOR FURTHER INFORMATION REGARDING THE CAPACITY OF THE EXISTING STRUCTURE TO SUPPORT THIS EQUIPMENT UPGRADE.
2. REFER TO THE FINAL RF DATA SHEET FOR FINAL ANTENNA SETTINGS.

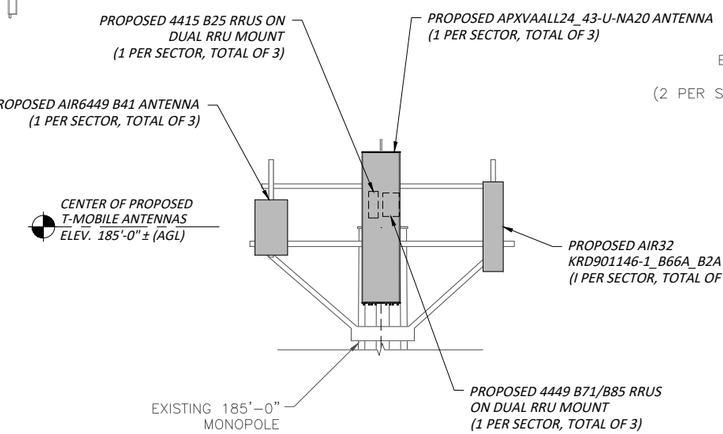

ENLARGED ANTENNA ELEVATION

SCALE: N.T.S

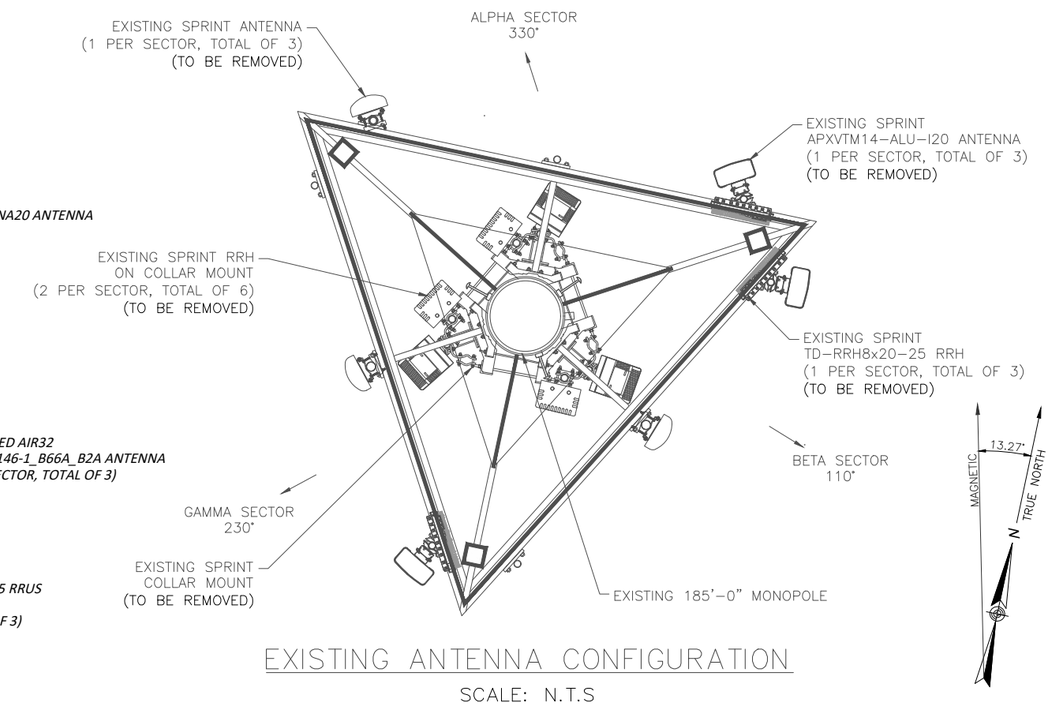

EXISTING ANTENNA CONFIGURATION

SCALE: N.T.S

SPECIAL CONSTRUCTION NOTE:
GENERAL CONTRACTOR SHALL FURNISH AND INSTALL ALL ANTENNA MOUNT STRUCTURAL AUGMENTS (STRUCTURAL MODIFICATIONS) AT T-MOBILE'S RAD/VERTICAL EQUIPMENT SPACE PER RECOMMENDATIONS FROM SBA-PROVIDED ANTENNA MOUNT STRUCTURAL ANALYSIS AND ANY SUPPLEMENTAL CONSTRUCTION DRAWINGS (PROVIDED BY OTHERS).

SPECIAL PRE-CONSTRUCTION WORK NOTE (SBA-PROVIDED TOWER STRUCTURAL ANALYSIS SPECIAL EQUIPMENT INSTALLATION REQUIREMENTS)
GENERAL CONTRACTOR SHALL FURNISH AND INSTALL ALL SPECIAL OR SUPPLEMENTAL ADDITIONAL TOWER-MOUNTED EQUIPMENT PER RECOMMENDATIONS FROM SBA-PROVIDED TOWER STRUCTURAL ANALYSIS FOR ANY SPECIAL SHIELDING OF TOWER TOP EQUIPMENT AND FOR ANY SPECIAL FEEDLINE OR RELOCATION.

GRAPHIC SCALE

5'-4" 0 5'-4" 10'-8" 21'-4" 42'-8"

(IN FEET)

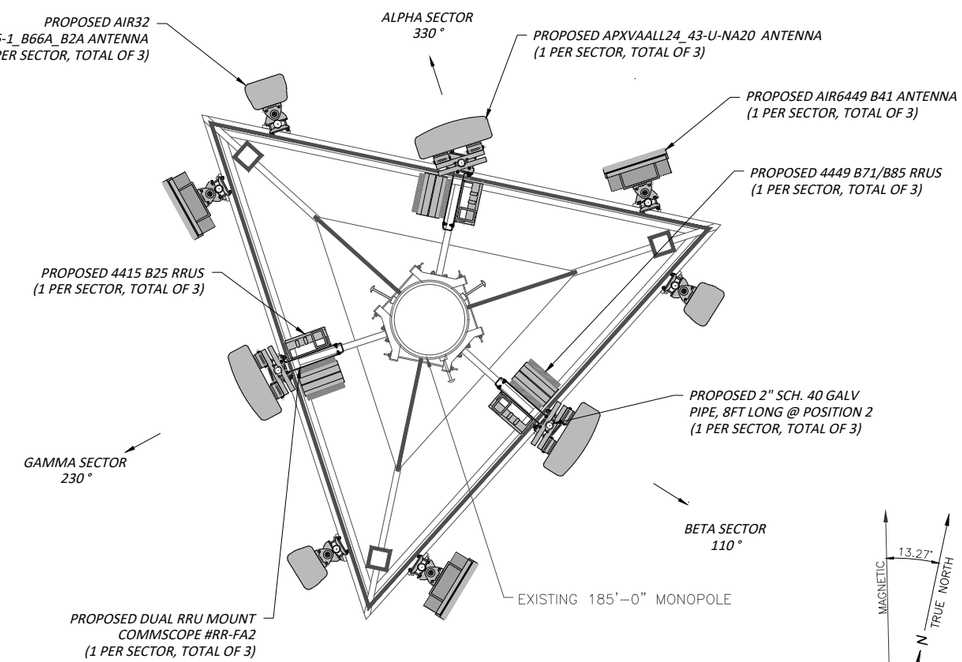

PROPOSED ANTENNA CONFIGURATION

SCALE: N.T.S

T - Mobile
NORTHEAST LLC
T-MOBILE NORTHEAST, LLC.
15 COMMERCE WAY, SUITE B
NORTON, MA 02766
PHONE: (508) 286-2700
FAX: (508) 286-2893

SBA
SBA COMMUNICATIONS CORP.
134 FLANDERS ROAD, SUITE 125
WESTBOROUGH, MA 01581
PHONE: (508) 251-0720

CENTERLINE COMMUNICATIONS
750 W CENTER ST, SUITE 301
WEST BRIDGEWATER, MA 02379
PHONE: 781.713.4725

REVISIONS

NO.	DATE	DESCRIPTION
1	02/26/21	ISSUED FOR CONSTRUCTION
0	12/09/20	ISSUED FOR REVIEW

DESIGNED BY: KT
APPROVED BY: DC

STATE OF CONNECTICUT
DEREK J. CREASER
No. 28551
LICENSED PROFESSIONAL ENGINEER

DATE: 02/26/21

IT IS A VIOLATION OF LAW FOR ANY PERSON UNLESS THEY ARE ACTING UNDER THE DIRECTION OF A LICENSED PROFESSIONAL ENGINEER TO ALTER THIS DOCUMENT. UNLESS EXPLICITLY AGREED TO BY THE ENGINEER IN WRITING, THE ENGINEER DISCLAIMS ALL LIABILITY ASSOCIATED WITH THE REUSE, ALTERATION OR MODIFICATION OF THE CONTENTS HEREIN.

SITE NAME: CTHA832A

SITE NUMBER: CTHA832A

SITE ADDRESS: 285 CHAMBERLAIN HILL ROAD
HIGGANUM, CT 06441

PROJECT TYPE: SPRINT RETAIN

SHEET TITLE: ANTENNA LAYOUT & ELEVATIONS

DRAWING #: A-2

REVISION: 1

ANTENNA SCHEDULE

SECTOR	EXISTING/ PROPOSED	BAND	ANTENNA	SIZE (INCHES) (L x W x D)	ANTENNA ℄ HEIGHT	AZIMUTH	TMA/ DIPLEXER	RRU	SIZE (INCHES) (L x W x D)	FEEDER
A1	PROPOSED	L2100, G1900, L1900	AIR32 KRD901146-1 B66A_B2	56.6x12.9x8.7	±185'	330°	–	(P) (1) 4449 B71 B85 RRUS (P) (1) 4415 B25 RRUS	15x13.2x10.4 16.5x13.4x5.9	(P) (3) 6x12 FIBER
A2	PROPOSED	L700, L600, N600, L1900	APXVAALL24_43-U -NA20	95.9x24x8.5	±185'	330°	–	–	–	
A3	PROPOSED	L2500, N2500	AIR6449 B41	33.1x20.6x8.6	±185'	330°	–	–	–	
B1	PROPOSED	L2100, G1900, L1900	AIR32 KRD901146-1 B66A_B2	56.6x12.9x8.7	±185'	110°	–	(P) (1) 4449 B71 B85 RRUS (P) (1) 4415 B25 RRUS	15x13.2x10.4 16.5x13.4x5.9	
B2	PROPOSED	L700, L600, N600, L1900	APXVAALL24_43-U -NA20	95.9x24x8.5	±185'	110°	–	–	–	
B3	PROPOSED	L2500, N2500	AIR6449 B41	33.1x20.6x8.6	±185'	110°	–	–	–	
G1	PROPOSED	L2100, G1900, L1900	AIR32 KRD901146-1 B66A_B2	56.6x12.9x8.7	±185'	230°	–	(P) (1) 4449 B71 B85 RRUS (P) (1) 4415 B25 RRUS	15x13.2x10.4 16.5x13.4x5.9	
G2	PROPOSED	L700, L600, N600, L1900	APXVAALL24_43-U -NA20	95.9x24x8.5	±185'	230°	–	–	–	
G3	PROPOSED	L2500, N2500	AIR6449 B41	33.1x20.6x8.6	±185'	230°	–	–	–	

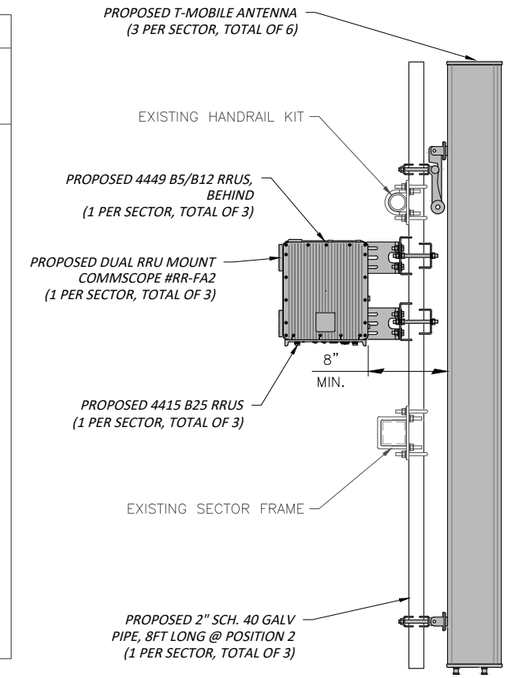

ANTENNA MOUNTING DETAIL

N.T.S.

NOTES:

1. REFERENCE STRUCTURAL ANALYSIS BY OTHERS FOR FURTHER INFORMATION REGARDING THE CAPACITY OF THE EXISTING STRUCTURE TO SUPPORT THIS EQUIPMENT UPGRADE.
2. REFER TO THE FINAL RF DATA SHEET FOR FINAL ANTENNA SETTINGS.

RRU CHART

QUANTITY	MODEL	L	W	D
3(P)	4449 B71/B85	15.0"	13.2"	10.4"
3(P)	4415 B25	16.5"	13.4"	5.9"

NOTE:
MOUNT PER MANUFACTURER'S SPECIFICATIONS.

REFER TO THE FINAL RFDS AND TABLE FOR THE PROPOSED RRUS MODEL, QUANTITY, AND DIMENSIONS

RRUS DETAIL

N.T.S.

ERICSSON RBS6160 EQUIPMENT CABINET

ENCLOSURE: ALUMINUM
DIMENSIONS (HxWxD): 63" X 25.6" X 33.5"
WEIGHT: 188LBS (EXCLUDES EQUIPMENT)
WEATHER TIGHTNESS: NEMA TYPE 3R

ERICSSON B160 BATTERY CABINET

ENCLOSURE: ALUMINUM
DIMENSIONS (HxWxD): 63" X 26" X 26"
WEIGHT: 188LBS (EXCLUDES EQUIPMENT)
WEATHER TIGHTNESS: NEMA TYPE 3R

EQUIPMENT CABINET DETAIL

N.T.S.

EMERSON NETXTEND COMPACT 2416 CABINET

ENCLOSURE: ALUMINUM
DIMENSIONS (HxWxD): 24" X 24" X 25.25"
WEIGHT: 64LBS (EXCLUDES EQUIPMENT)
WEATHER TIGHTNESS: NEMA TYPE 3R

AAV CABINET DETAIL

N.T.S.

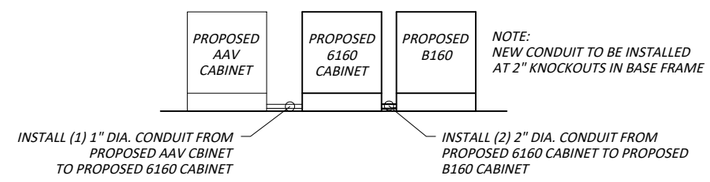

CONDUIT DETAIL

N.T.S.

T - Mobile
NORTHEAST LLC
T-MOBILE NORTHEAST, LLC.
15 COMMERCE WAY, SUITE B
NORTON, MA 02766
PHONE: (508) 286-2700
FAX: (508) 286-2893

SBA
SBA COMMUNICATIONS CORP.
134 FLANDERS ROAD, SUITE 125
WESTBOROUGH, MA 01581
PHONE: (508) 251-0720

CENTERLINE COMMUNICATIONS
750 W CENTER ST, SUITE 301
WEST BRIDGEWATER, MA 02379
PHONE: 781.713.4725

REVISIONS

NO.	DATE	DESCRIPTION
1	02/26/21	ISSUED FOR CONSTRUCTION
0	12/09/20	ISSUED FOR REVIEW

DESIGNED BY: KT
APPROVED BY: DC

STATE OF CONNECTICUT
DEREK J. CREASER
No. 28551
LICENSED PROFESSIONAL ENGINEER

DATE: 02/26/21

IT IS A VIOLATION OF LAW FOR ANY PERSON UNLESS THEY ARE ACTING UNDER THE DIRECTION OF A LICENSED PROFESSIONAL ENGINEER TO ALTER THIS DOCUMENT. UNLESS EXPLICITLY AGREED TO BY THE ENGINEER IN WRITING, THE ENGINEER DISCLAIMS ALL LIABILITY ASSOCIATED WITH THE REUSE, ALTERATION OR MODIFICATION OF THE CONTENTS HEREIN.

SITE NAME: CTHA832A
SITE NUMBER: CTHA832A
SITE ADDRESS: 285 CHAMBERLAIN HILL ROAD HIGGANUM, CT 06441
PROJECT TYPE: SPRINT RETAIN
SHEET TITLE: DETAILS
DRAWING #: A-3
REVISION: 1

STRUCTURAL NOTES:

1. DESIGN REQUIREMENTS ARE PER STATE BUILDING CODE AND APPLICABLE SUPPLEMENTS, INTERNATIONAL BUILDING CODE, EIA/TIA-222-G STRUCTURAL STANDARDS FOR STEEL ANTENNA, TOWERS AND ANTENNA SUPPORTING STRUCTURES.
2. CONTRACTOR SHALL VERIFY ALL DIMENSIONS AND CONDITIONS IN THE FIELD PRIOR TO FABRICATION AND ERECTION OF ANY MATERIAL. ANY UNUSUAL CONDITIONS SHALL BE REPORTED TO THE ATTENTION OF THE CONSTRUCTION MANAGER AND ENGINEER OF RECORD.
3. DESIGN AND CONSTRUCTION OF STRUCTURAL STEEL SHALL CONFORM TO THE AMERICAN INSTITUTE OF STEEL CONSTRUCTION "SPECIFICATION FOR THE DESIGN, FABRICATION AND ERECTION OF STRUCTURAL STEEL FOR BUILDINGS".
4. STRUCTURAL STEEL SHALL CONFORM TO ASTM A992 (Fy=50 ksi), MISCELLANEOUS STEEL SHALL CONFORM TO ASTM A36 UNLESS OTHERWISE INDICATED.
5. STEEL PIPE SHALL CONFORM TO ASTM A500 "COLD-FORMED WELDED & SEAMLESS CARBON STEEL STRUCTURAL TUBING", GRADE B, OR ASTM A53 PIPE STEEL BLACK AND HOT-DIPPED ZINC-COATED WELDED AND SEAMLESS TYPE E OR S, GRADE B. PIPE SIZES INDICATED ARE NOMINAL. ACTUAL OUTSIDE DIAMETER IS LARGER.
6. STRUCTURAL CONNECTION BOLTS SHALL BE HIGH STRENGTH BOLTS (BEARING TYPE) AND CONFORM TO ASTM A325 TYPE-X "HIGH STRENGTH BOLTS FOR STRUCTURAL JOINTS, INCLUDING SUITABLE NUTS AND PLAIN HARDENED WASHERS". ALL BOLTS SHALL BE 3/4" DIA UON.
7. ALL STEEL MATERIALS SHALL BE GALVANIZED AFTER FABRICATION IN ACCORDANCE WITH ASTM A123 "ZINC (HOT-DIP GALVANIZED) COATINGS ON IRON AND STEEL PRODUCTS", UNLESS OTHERWISE NOTED.
8. ALL BOLTS, ANCHORS AND MISCELLANEOUS HARDWARE SHALL BE GALVANIZED IN ACCORDANCE WITH ASTM A153 "ZINC-COATING (HOT-DIP) ON IRON AND STEEL HARDWARE", UNLESS OTHERWISE NOTED.
9. FIELD WELDS, DRILL HOLES, SAW CUTS AND ALL DAMAGED GALVANIZED SURFACES SHALL BE REPAIRED WITH AN ORGANIC ZINC REPAIR PAINT COMPLYING WITH REQUIREMENTS OF ASTM A780. GALVANIZING REPAIR PAINT SHALL HAVE 65 PERCENT ZINC BY WEIGHT, ZIRP BY DUNCAN GALVANIZING, GALVA BRIGHT PREMIUM BY CROWN OR EQUAL. THICKNESS OF APPLIED GALVANIZING REPAIR PAINT SHALL BE NOT NOT LESS THAN 4 COATS (ALLOW TIME TO DRY BETWEEN COATS) WITH A RESULTING COATING THICKNESS REQUIRED BY ASTM A123 OR A153 AS APPLICABLE.
10. CONTRACTOR SHALL COMPLY WITH AWS CODE FOR PROCEDURES, APPEARANCE AND QUALITY OF WELDS, AND FOR METHODS USED IN CORRECTING WELDING. ALL WELDERS AND WELDING PROCESSES SHALL BE QUALIFIED IN ACCORDANCE WITH AWS "STANDARD QUALIFICATION PROCEDURES". ALL WELDING SHALL BE DONE USING E70XX ELECTRODES AND WELDING SHALL CONFORM TO AISC AND DI.I. WHERE FILLET WELD SIZES ARE NOT SHOWN, PROVIDE THE MINIMUM SIZE PER TABLE J2.4 IN THE AISC "STEEL CONSTRUCTION MANUAL". 14TH EDITION.
11. INCORRECTLY FABRICATED, DAMAGED OR OTHERWISE MISFITTING OR NON-CONFORMING MATERIALS OR CONDITIONS SHALL BE REPORTED TO THE CONSTRUCTION MANAGER PRIOR TO REMEDIAL OR CORRECTIVE ACTION. ANY SUCH ACTION SHALL REQUIRE CONSTRUCTION MANAGER APPROVAL.
12. UNISTRUT SHALL BE FORMED STEEL CHANNEL STRUT FRAMING AS MANUFACTURED BY UNISTRUT CORP., WAYNE, MI OR EQUAL. STRUT MEMBERS SHALL BE 1 5/8"x1 5/8"x12GA, UNLESS OTHERWISE NOTED, AND SHALL BE HOT-DIP GALVANIZED AFTER FABRICATION.
13. EPOXY ANCHOR ASSEMBLY SHALL CONSIST OF STAINLESS STEEL ANCHOR ROD WITH NUTS & WASHERS. AN INTERNALLY THREADED INSERT, A SCREEN TUBE AND A EPOXY ADHESIVE. THE ANCHORING SYSTEM SHALL BE THE HILTI-HIT HY-270 AND OR HY-200 SYSTEMS (AS SPECIFIED IN DWG.) OR ENGINEERS APPROVED EQUAL.
14. EXPANSION BOLTS SHALL CONFORM TO FEDERAL SPECIFICATION FF-S-325, GROUP II, TYPE 4, CLASS I, HILTI KWIK BOLT III OR APPROVED EQUAL. INSTALLATION SHALL BE IN ACCORDANCE WITH THE MANUFACTURER'S RECOMMENDATIONS.
15. LUMBER SHALL COMPLY WITH THE REQUIREMENTS OF THE AMERICAN INSTITUTE OF TIMBER CONSTRUCTION AND THE NATIONAL FOREST PRODUCTS ASSOCIATION'S NATIONAL DESIGN SPECIFICATION FOR WOOD CONSTRUCTION. ALL LUMBER SHALL BE PRESSURE TREATED AND SHALL BE STRUCTURAL GRADE NO. 2 OR BETTER.
16. WHERE ROOF PENETRATIONS ARE REQUIRED, THE CONTRACTOR SHALL CONTACT AND COORDINATE RELATED WORK WITH THE BUILDING OWNER AND THE EXISTING ROOF INSTALLER. WORK SHALL BE PERFORMED IN SUCH A MANNER AS TO NOT VOID THE EXISTING ROOF WARRANTY. ROOF SHALL BE WATERTIGHT.
17. ALL FIBERGLASS MEMBERS USED ARE AS MANUFACTURED BY STRONGWELL COMPANY OF BRISTOL, VA 24203. ALL DESIGN CRITERIA FOR THESE MEMBERS IS BASED ON INFORMATION PROVIDED IN THE DESIGN MANUAL. ALL REQUIREMENTS PUBLISHED IN SAID MANUAL MUST BE STRICTLY ADHERED TO.
18. NO MATERIALS TO BE ORDERED AND NO WORK TO BE COMPLETED UNTIL SHOP DRAWINGS HAVE BEEN REVIEWED AND APPROVED IN WRITING.
19. SUBCONTRACTOR SHALL FIREPROOF ALL STEEL TO PRE-EXISTING CONDITIONS.

SPECIAL INSPECTIONS (REFERENCE IBC CHAPTER 17):

GENERAL: WHERE APPLICATION IS MADE FOR CONSTRUCTION, THE OWNER OR THE REGISTERED DESIGN PROFESSIONAL IN RESPONSIBLE CHARGE ACTING AS THE OWNER'S AGENT SHALL EMPLOY ONE OR MORE APPROVED AGENCIES TO PERFORM INSPECTIONS DURING CONSTRUCTION ON THE TYPES OF WORK LISTED IN THE INSPECTION CHECKLIST ABOVE.

THE REGISTERED DESIGN PROFESSIONAL IN RESPONSIBLE CHARGE AND ENGINEERS OF RECORD INVOLVED IN THE DESIGN OF THE PROJECT ARE PERMITTED TO ACT AS THE APPROVED AGENCY AND THEIR PERSONNEL ARE PERMITTED TO ACT AS THE SPECIAL INSPECTOR FOR THE WORK DESIGNED BY THEM, PROVIDED THOSE PERSONNEL MEET THE QUALIFICATION REQUIREMENTS.

STATEMENT OF SPECIAL INSPECTIONS: THE APPLICANT SHALL SUBMIT A STATEMENT OF SPECIAL INSPECTIONS PREPARED BY THE REGISTERED DESIGN PROFESSIONAL IN RESPONSIBLE CHARGE IN ACCORDANCE WITH SECTION 107.1 AS A CONDITION FOR ISSUANCE. THIS STATEMENT SHALL BE IN ACCORDANCE WITH SECTION 1705.

REPORT REQUIREMENT: SPECIAL INSPECTORS SHALL KEEP RECORDS OF INSPECTIONS. THE SPECIAL INSPECTOR SHALL FURNISH INSPECTION REPORTS TO THE BUILDING OFFICIAL, AND TO THE REGISTERED DESIGN PROFESSIONAL IN RESPONSIBLE CHARGE. REPORTS SHALL INDICATE THAT WORK INSPECTED WAS OR WAS NOT COMPLETED IN CONFORMANCE TO APPROVED CONSTRUCTION DOCUMENTS. DISCREPANCIES SHALL BE BROUGHT TO THE IMMEDIATE ATTENTION OF THE CONTRACTOR FOR CORRECTION. IF THEY ARE NOT CORRECTED, THE DISCREPANCIES SHALL BE BROUGHT TO THE ATTENTION OF THE BUILDING OFFICIAL AND TO THE REGISTERED DESIGN PROFESSIONAL IN RESPONSIBLE CHARGE. A FINAL REPORT DOCUMENTING REQUIRED SPECIAL INSPECTIONS SHALL BE SUBMITTED.

SPECIAL INSPECTION CHECKLIST	
BEFORE CONSTRUCTION	
CONSTRUCTION/INSTALLATION INSPECTIONS AND TESTING REQUIRED (COMPLETED BY ENGINEER OF RECORD)	REPORT ITEM
N/A	ENGINEER OF RECORD APPROVED SHOP DRAWINGS [1]
N/A	MATERIAL SPECIFICATIONS REPORT [2]
N/A	FABRICATOR NDE INSPECTION
N/A	PACKING SLIPS [3]
ADDITIONAL TESTING AND INSPECTIONS:	
DURING CONSTRUCTION	
CONSTRUCTION/INSTALLATION INSPECTIONS AND TESTING REQUIRED (COMPLETED BY ENGINEER OF RECORD)	REPORT ITEM
REQUIRED	STEEL INSPECTIONS
N/A	HIGH STRENGTH BOLT INSPECTIONS
N/A	HIGH WIND ZONE INSPECTIONS [4]
N/A	FOUNDATION INSPECTIONS
N/A	CONCRETE COMP. STRENGTH, SLUMP TESTS AND PLACEMENT
N/A	POST INSTALLED ANCHOR VERIFICATION [5]
N/A	GROUT VERIFICATION
N/A	CERTIFIED WELD INSPECTION
N/A	EARTHWORK: LIFT AND DENSITY
N/A	ON SITE COLD GALVANIZING VERIFICATION
N/A	GUY WIRE TENSION REPORT
ADDITIONAL TESTING AND INSPECTIONS:	
AFTER CONSTRUCTION	
CONSTRUCTION/INSTALLATION INSPECTIONS AND TESTING REQUIRED (COMPLETED BY ENGINEER OF RECORD)	REPORT ITEM
REQUIRED	**MODIFICATION INSPECTOR REDLINE OR RECORD DRAWINGS [6]**
N/A	POST INSTALLED ANCHOR PULL-OUT TESTING
REQUIRED	**PHOTOGRAPHS**
ADDITIONAL TESTING AND INSPECTIONS:	

NOTES:

1. REQUIRED FOR ANY NEW SHOP FABRICATED FRP OR STEEL.
2. PROVIDED BY MANUFACTURER, REQUIRED IF HIGH STRENGTH BOLTS OR STEEL.
3. PROVIDED BY GENERAL CONTRACTOR; PROOF OF MATERIALS.
4. HIGH WIND ZONE INSPECTION CATB 120MPH OR CAT C,D 110MPH INSPECT FRAMING OF WALLS, ANCHORING, FASTENING SCHEDULE.
5. ADHESIVE FOR REBAR AND ANCHORS SHALL HAVE BEEN TESTED IN ACCORDANCE WITH ACI 355.4 AND ICC-ES AC308 FOR CRACKED CONCRETE AND SEISMIC APPLICATIONS. DESIGN ADHESIVE BOND STRENGTH HAS BEEN BASED ON ACI 355.4 TEMPERATURE CATEGORY B WITH INSTALLATIONS INTO DRY HOLES DRILLED USING A CARBIDE BIT INTO CRACKED CONCRETE THAT HAS CURED FOR AT LEAST 21 DAYS. ADHESIVE ANCHORS REQUIRING CERTIFIED INSTALLATIONS SHALL BE INSTALLED BY A CERTIFIED ADHESIVE ANCHOR INSTALLER PER ACI 318-11 D.9.2.2. INSTALLATIONS REQUIRING CERTIFIED INSTALLERS SHALL BE INSPECTED PER ACI 318-11 D.8.2.4.
6. AS REQUIRED; FOR ANY FIELD CHANGES TO THE ITEMS IN THIS TABLE.

NOTES:

1. ALL CONNECTIONS TO BE SHOP WELDED & FIELD BOLTED USING 3/4"ø A325-X BOLTS, UNLESS OTHERWISE NOTIFIED.
2. SHOP DRAWING ENGINEER REVIEW & APPROVAL REQUIRED BEFORE ORDERING MATERIAL.
3. SHOP DRAWING ENGINEER REVIEW & APPROVAL REQUIRED PRIOR TO STEEL FABRICATION.
4. VERIFICATION OF EXISTING ROOF CONSTRUCTION IS REQUIRED PRIOR TO THE INSTALLATION OF THE ROOF PLATFORM. ENGINEER OF RECORD IS TO APPROVE EXISTING CONDITIONS IN ORDER TO MOVE FORWARD.
5. CENTERLINE OF PROPOSED STEEL PLATFORM SUPPORT COLUMNS TO BE CENTRALLY LOCATED OVER THE EXISTING BUILDING COLUMNS.
6. EXISTING BRICK MASONRY COLUMNS/BEARING TO BE REPAIRED/REPLACED AT ALL PROPOSED PLATFORM SUPPORT POINTS. ENGINEER OF RECORD TO REVIEW AND APPROVE.

T - Mobile NORTHEAST LLC
T-MOBILE NORTHEAST, LLC.
15 COMMERCE WAY, SUITE B
NORTON, MA 02766
PHONE: (508) 286-2700
FAX: (508) 286-2893

SBA
SBA COMMUNICATIONS CORP.
134 FLANDERS ROAD, SUITE 125
WESTBOROUGH, MA 01581
PHONE: (508) 251-0720

CENTERLINE COMMUNICATIONS
750 W CENTER ST, SUITE 301
WEST BRIDGEWATER, MA 02379
PHONE: 781.713.4725

REVISIONS		
1	02/26/21	ISSUED FOR CONSTRUCTION
0	12/09/20	ISSUED FOR REVIEW
NO.	DATE	DESCRIPTION

DESIGNED BY:	APPROVED BY:
KT	DC

STATE OF CONNECTICUT
DEREK J. CREASER
No. 28551
LICENSED PROFESSIONAL ENGINEER

DATE: 02/26/21

IT IS A VIOLATION OF LAW FOR ANY PERSON UNLESS THEY ARE ACTING UNDER THE DIRECTION OF A LICENSED PROFESSIONAL ENGINEER TO ALTER THIS DOCUMENT. UNLESS EXPLICITLY AGREED TO BY THE ENGINEER IN WRITING, THE ENGINEER DISCLAIMS ALL LIABILITY ASSOCIATED WITH THE REUSE, ALTERATION OR MODIFICATION OF THE CONTENTS HEREIN.

SITE NAME: CTHA832A

SITE NUMBER: CTHA832A

SITE ADDRESS: 285 CHAMBERLAIN HILL ROAD HIGGANUM, CT 06441

PROJECT TYPE: SPRINT RETAIN

SHEET TITLE: STRUCTURAL NOTES

DRAWING #: SN-1 REVISION: 1

67D5A997DB_2xAIR+1xOP.jpg

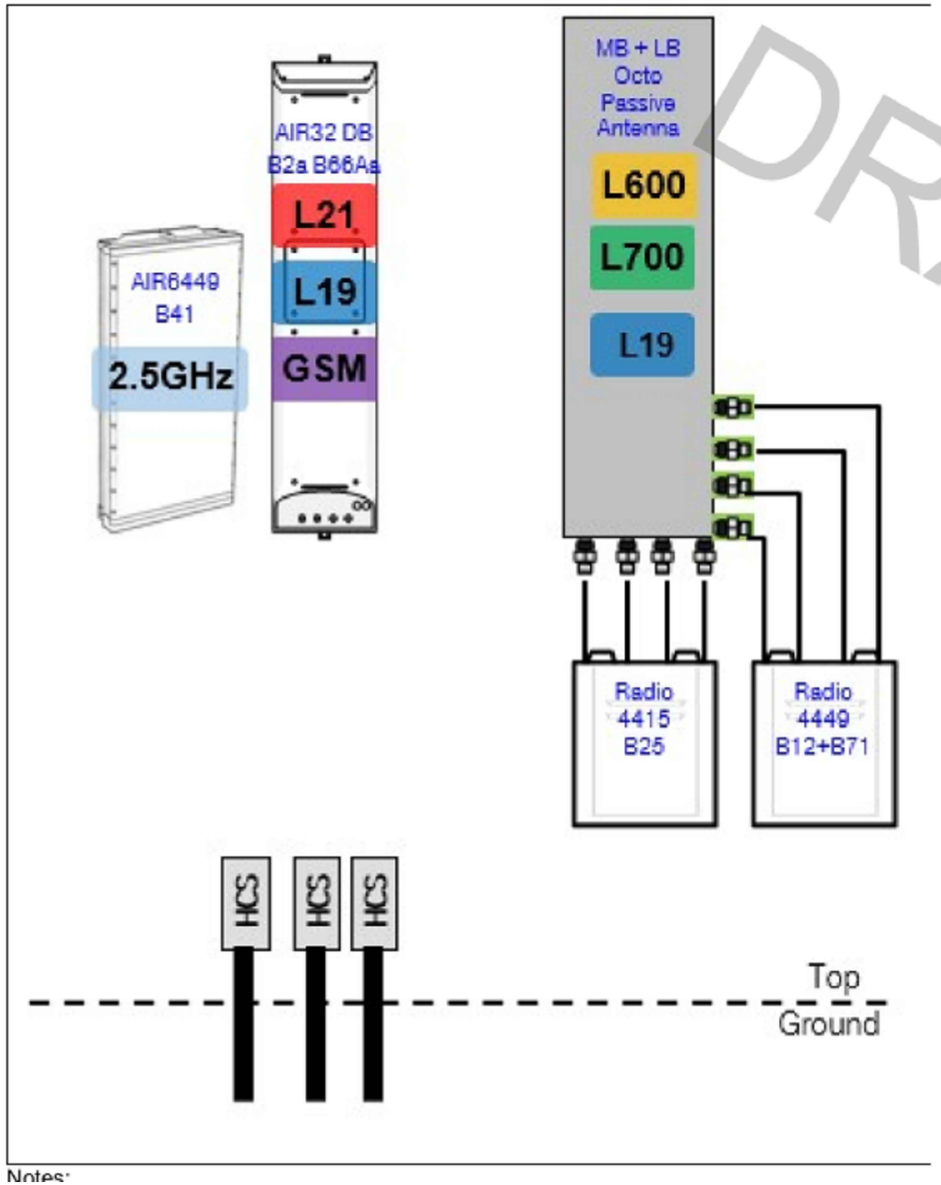

Notes:

PLUMBING DIAGRAM

N.T.S.

T - Mobile
NORTHEAST LLC
T-MOBILE NORTHEAST, LLC.
15 COMMERCE WAY, SUITE B
NORTON, MA 02766
PHONE: (508) 286-2700
FAX: (508) 286-2893

SBA
SBA COMMUNICATIONS CORP.
134 FLANDERS ROAD, SUITE 125
WESTBOROUGH, MA 01581
PHONE: (508) 251-0720

CENTERLINE COMMUNICATIONS
750 W CENTER ST, SUITE 301
WEST BRIDGEWATER, MA 02379
PHONE: 781.713.4725

REVISIONS

NO.	DATE	DESCRIPTION
1	02/26/21	ISSUED FOR CONSTRUCTION
0	12/09/20	ISSUED FOR REVIEW

DESIGNED BY: KT
APPROVED BY: DC

STATE OF CONNECTICUT
DEREK J. CREASER
No. 28551
LICENSED PROFESSIONAL ENGINEER

DATE: 02/26/21

IT IS A VIOLATION OF LAW FOR ANY PERSON UNLESS THEY ARE ACTING UNDER THE DIRECTION OF A LICENSED PROFESSIONAL ENGINEER TO ALTER THIS DOCUMENT. UNLESS EXPLICITLY AGREED TO BY THE ENGINEER IN WRITING, THE ENGINEER DISCLAIMS ALL LIABILITY ASSOCIATED WITH THE REUSE, ALTERATION OR MODIFICATION OF THE CONTENTS HEREIN.

SITE NAME: CTHA832A

SITE NUMBER: CTHA832A

SITE ADDRESS: 285 CHAMBERLAIN HILL ROAD
HIGGANUM, CT 06441

PROJECT TYPE: SPRINT RETAIN

SHEET TITLE: RF PLUMBING DIAGRAM

DRAWING #: RF-1

REVISION: 1

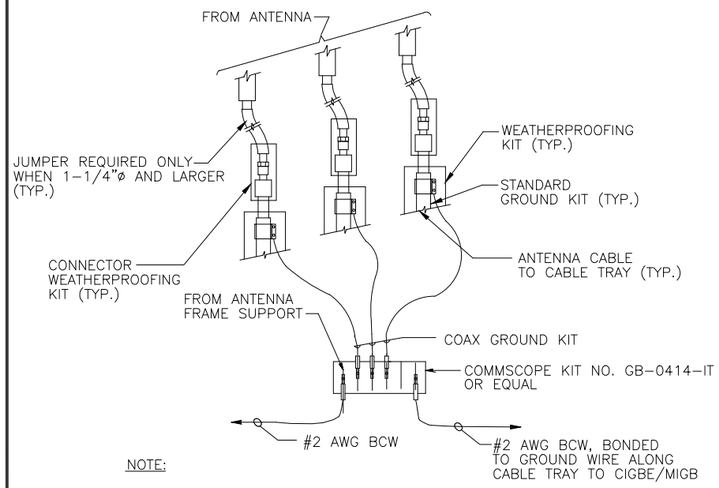

NOTE:

1. DO NOT INSTALL CABLE GROUND KIT AT A BEND AND ALWAYS DIRECT GROUND WIRE DOWN TO CIGBE.

GROUNDING RISER DIAGRAM

N.T.S.

EACH GROUND CONDUCTOR TERMINATING ON ANY GROUND BAR SHALL HAVE AN IDENTIFICATION TAG ATTACHED AT EACH END THAT WILL IDENTIFY ITS ORIGIN AND DESTINATION.

SECTION "P" – SURGE PRODUCERS

CABLE ENTRY PORTS (HATCH PLATES) (#2)
GENERATOR FRAMEWORK (IF AVAILABLE) (#2)
TELCO GROUND BAR
COMMERCIAL POWER COMMON NEUTRAL/GROUND BOND (#2)
+24V POWER SUPPLY RETURN BAR (#2)
−48V POWER SUPPLY RETURN BAR (#2)
RECTIFIER FRAMES.

SECTION "A" – SURGE ABSORBERS

INTERIOR GROUND RING (#2)
EXTERNAL EARTH GROUND FIELD (BURIED GROUND RING) (#2)
METALLIC COLD WATER PIPE (IF AVAILABLE) (#2)
BUILDING STEEL (IF AVAILABLE) (#2)

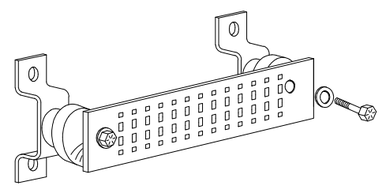

GROUND BAR DETAIL

N.T.S.

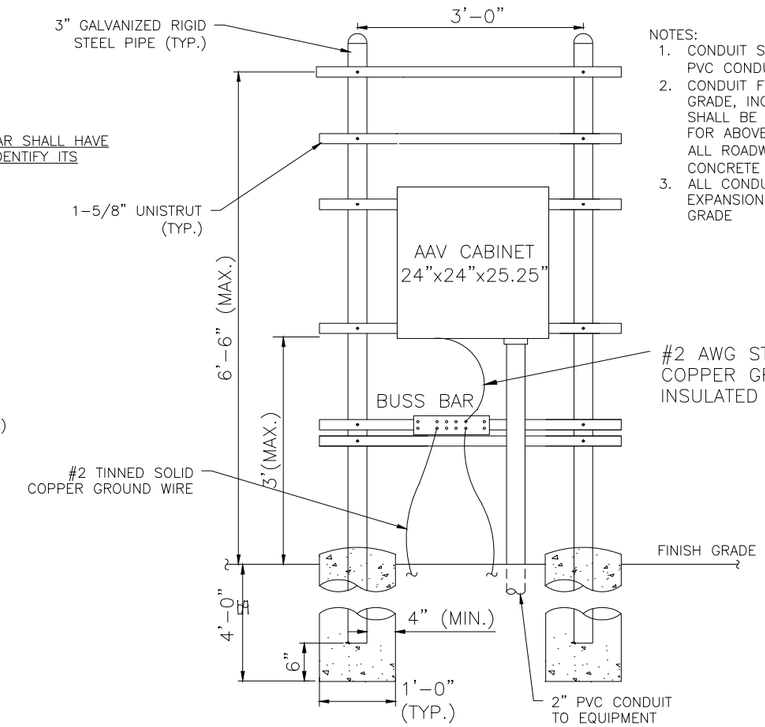

NOTES:

1. CONDUIT SHALL BE SCHEDULE 40 PVC CONDUIT 30" BELOW GRADE
2. CONDUIT FROM 30" BELOW GRADE, INCLUDING THE SWEEP, SHALL BE SCHEDULE 80 PVC FOR ABOVE GRADE AND UNDER ALL ROADWAYS (UNLESS CONCRETE ENCASED)
3. ALL CONDUITS SHALL HAVE EXPANSION FITTINGS ABOVE GRADE

H-FRAME DETAIL

N.T.S.

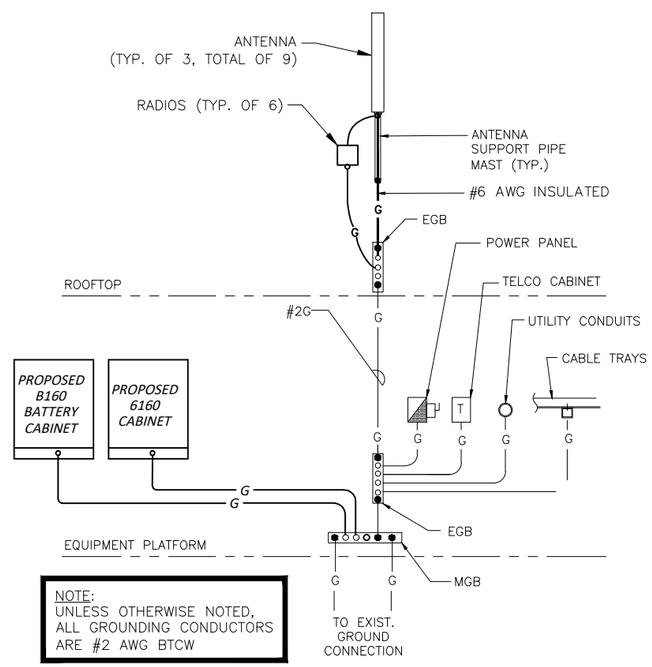

NOTE:
UNLESS OTHERWISE NOTED, ALL GROUNDING CONDUCTORS ARE #2 AWG BTCW

GROUNDING RISER DIAGRAM

N.T.S.

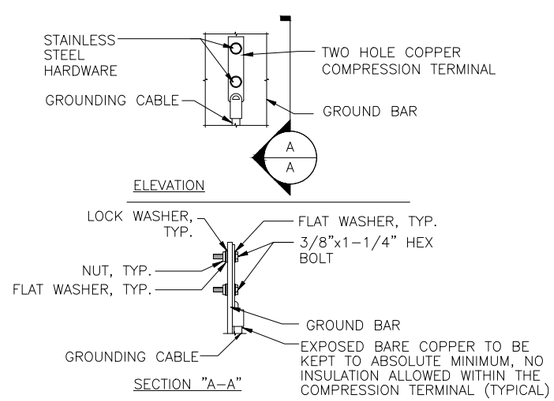

NOTE:

1. "DOUBLING UP" OR "STACKING" OF CONNECTION IS NOT PERMITTED.
2. OXIDE INHIBITING COMPOUND TO BE USED AT ALL LOCATION.
3. CADWELD DOWNLEADS FROM UPPER EGB, LOWER EGB, AND MGB

GROUND BAR CONNECTION DETAIL

N.T.S.

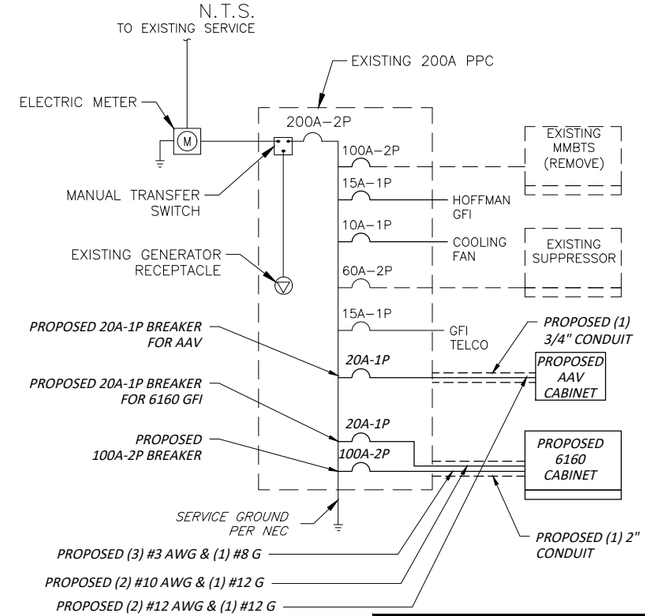

NOTE:
ALL WORK NEEDS TO BE PERFORMED BY LICENSED ELECTRICIAN ADHERING TO THE NEC AND LOCAL CODE REQUIREMENTS

ONE LINE POWER DIAGRAM

N.T.S.

T - Mobile NORTHEAST LLC
T-MOBILE NORTHEAST, LLC.
15 COMMERCE WAY, SUITE B
NORTON, MA 02766
PHONE: (508) 286-2700
FAX: (508) 286-2893

SBA COMMUNICATIONS CORP.
134 FLANDERS ROAD, SUITE 125
WESTBOROUGH, MA 01581
PHONE: (508) 251-0720

CENTERLINE COMMUNICATIONS
750 W CENTER ST, SUITE 301
WEST BRIDGEWATER, MA 02379
PHONE: 781.713.4725

REVISIONS		
1	02/26/21	ISSUED FOR CONSTRUCTION
0	12/09/20	ISSUED FOR REVIEW
NO.	DATE	DESCRIPTION

DESIGNED BY:	APPROVED BY:
KT	DC

STATE OF CONNECTICUT
DEREK J. CREASER
No. 28551
LICENSED PROFESSIONAL ENGINEER

DATE: 02/26/21

IT IS A VIOLATION OF LAW FOR ANY PERSON UNLESS THEY ARE ACTING UNDER THE DIRECTION OF A LICENSED PROFESSIONAL ENGINEER TO ALTER THIS DOCUMENT. UNLESS EXPLICITLY AGREED TO BY THE ENGINEER IN WRITING, THE ENGINEER DISCLAIMS ALL LIABILITY ASSOCIATED WITH THE REUSE, ALTERATION OR MODIFICATION OF THE CONTENTS HEREIN.

SITE NAME: CTHA832A

SITE NUMBER: CTHA832A

SITE ADDRESS: 285 CHAMBERLAIN HILL ROAD HIGGANUM, CT 06441

PROJECT TYPE: SPRINT RETAIN

SHEET TITLE: GROUNDING DETAILS

DRAWING #: G-1 | REVISION: 1

EXHIBIT 7

Tower Engineering Solutions
Phone (972) 483-0607, Fax (972) 975-9615
1320 Greenway Drive, Suite 600, Irving, Texas 75038

Structural Analysis Report

Existing 185 ft SUMMIT Monopole

Customer Name: SBA Communications Corp

Customer Site Number: CT04169-A-2

Customer Site Name: Higganum

Carrier Name: T-Mobile Sprint (App#: 143995-1)

Carrier Site ID / Name: CT33XC545

Site Location: 285 Chamberlain Hill Road

Higganum, Connecticut

Middlesex County

Latitude: 41.501764

Longitude: -72.618694

Exp.01/31/2021

STATE OF CONNECTICUT
MUSTAPHA ASSI
No. 23865
LICENSED
PROFESSIONAL ENGINEER

12/18/2020

Analysis Result:

Max Structural Usage: 62.3% [Pass]

Max Foundation Usage: 41.0% [Pass]

Additional Usage Caused by New Mount/Mount Modification: N/A

Report Prepared By : Tawfeeq Alajaj

Introduction

The purpose of this report is to summarize the analysis results on the 185 ft SUMMIT Monopole to support the proposed antennas and transmission lines in addition to those currently installed. Any modification listed under Sources of Information was assumed completed and was included in this analysis.

Sources of Information

Tower Drawings	Original structural design report prepared by Summit Manufacturing, LLC & Paul J. Ford and Company. Dated 11-29-1999. SUMMIT Job No 5350. Job No 29299-805. Previous structural report prepared by FDH Engineering, Inc. Dated 04-11-2014. Project No 1463AY1400.
Foundation Drawing	Original foundation design prepared by Summit Manufacturing, LLC & Paul J. Ford and Company. Dated 11-29-1999. SUMMIT Job No 5350. Job No 29299-805.
Geotechnical Report	Geotechnical report prepared by Criscuolo Shepard Associates, P.C. Dated 06-21-1999. File No 99137.
Modification Drawings	N/A

Analysis Criteria

The rigorous analysis was performed in accordance with the requirements and stipulations of the TIA-222-G-2**.** In accordance with this standard, the structure was analyzed using **TESPoles,** a proprietary analysis software. The program considers the structure as an elastic 3-D model with second-order effects and temperature effects incorporated in the analysis. The analysis was performed using multiple wind directions.

Wind Speed Used in the Analysis:	Ultimate Design Wind Speed V_{ult} = 127.0 mph (3-Sec. Gust) Nominal Design Wind Speed V_{asd} = 98.0 mph (3-Sec. Gust)
Wind Speed with Ice:	50 mph (3-Sec. Gust) with 3/4" radial ice concurrent
Operational Wind Speed:	60 mph + 0" Radial ice
Standard/Codes:	TIA-222-G-2 / 2015 IBC / 2018 Connecticut State Building Code
Exposure Category:	B
Structure Class:	II
Topographic Category:	1
Crest Height:	0 ft
Seismic Parameters:	S_S = 0.179, S_1 = 0.062

This structural analysis is based upon the tower being classified as a Structure Class II; however, if a different classification is required subsequent to the date hereof, the tower classification will be changed to meet such requirement and a new structural analysis will be run.

Existing Antennas, Mounts and Transmission Lines

The table below summarizes the antennas, mounts and transmission lines that were considered in the analysis as existing on the tower.

Items	Elevation (ft.)	Qty.	Antenna Descriptions	Mount Type & Qty.	Transmission Lines	Owner
-	185.0	3	RFS APXVSPP18-C-A20 - Panel	Low Profile Platform w/ Handrail Kit (SitePro1 HRK14) & Reinforcement Kit (SitePro1 PRK 1245L)	(4) 1-1/4" Hybrid	Sprint Nextel
-		3	RFS APXVTM14-C-I20 - Panel			
-		4	RFS ACU-A20-N RET			
-		3	ALU TD-RRH8x20-25			
-		3	ALU 1900 MHz RRH			
-		3	ALU 800 MHz RRH			
-		3	ALU 800 MHz Filter			
8	177.5	6	Ericsson RRU11	Collar Mount (Andrew MTC 3335)	(12) 1 5/8"; [(2) 1/2" DC Power & (1) 3/8" Fiber; Inside (1) 3" Innerduct]	AT&T
9		1	Raycap DC6-48-60-18-8F			
10	175.0	6	Powerwave 7770 - Panel	Low Profile Platform		
11		3	KMW AM-X-CD-16-65-00T-RET - Panel			
12		6	Powerwave LGP13519			
13		12	Powerwave LGP21401			

Proposed Carrier's Final Configuration of Antennas, Mounts and Transmission Lines

Information pertaining to the proposed carrier's final configuration of antennas and transmission lines was provided by SBA Communications Corp. The proposed antennas and lines are listed below.

Items	Elevation (ft)	Qty.	Antenna Descriptions	Mount Type & Qty.	Transmission Lines	Owner
1	185.0	3	Ericsson - AIR32 KRD901146-1_B66A_B2A (Octo) - Panel	Low Profile Platform w/ Handrail Kit (SitePro1 HRK14) & Reinforcement Kit (SitePro1 PRK 1245L)	(3) 2" Hybrid	T-Mobile Sprint
2		3	RFS - APXVAALL24_43-U-NA20 - Panel			
3		3	Ericsson - AIR6449 B41 - Panel			
4		4	RFS ACU-A20-N RET			
5		3	Ericsson 4415 B25 RRU			
6		3	ALU 800 MHz RRH			
7		3	Ericsson 4449 B71 + B85 RRU			
8		3	ALU 800 MHz Filter			

See the attached coax layout for the line placement considered in the analysis.

Analysis Results

The results of the structural analysis, performed for the wind and ice loading and antenna equipment as defined above, are summarized as the following:

	Pole shafts	Anchor Bolts	Base Plate
Max. Usage:	**62.3%**	**34.6%**	**59.7%**
Pass/Fail	**Pass**	**Pass**	**Pass**

Foundations

	Moment (Kip-Ft)	Shear (Kips)
Original Design Reactions	5025.0	39.0
Analysis Reactions	3147.2	24.1
Factored Reactions*	6783.8	52.7
% of Design Reactions	46.4%	45.8%

* Per section 15.5.1 of the TIA-222-G standard, factored reactions were obtained by multiplying a 1.35 factor to the original design reactions.

The foundation has been investigated using the supplied documents and soils report and was found adequate. Therefore, no modification to the foundation will be required. Some geotechnical soil parameters were obtained from the original foundation calculations included with the referenced tower and foundation design drawings.

Operational Condition (Rigidity):

Operational characteristics of the tower are found to be within the limits prescribed by TIA-222 for the installed antennas. The maximum twist/sway at the elevation of the proposed equipment is 1.3708 degrees under the operational wind speed as specified in the Analysis Criteria.

Conclusions

Based on the analysis results, the existing structure and its foundation were found to be adequate to safely support the existing and proposed equipment and meet the minimum requirements per the TIA-222 Standard under the design basic wind speed as specified in the Analysis Criteria.

Standard Conditions

1. This analysis was performed based on the information supplied to **(TES) Tower Engineering Solutions, LLC.** Verification of the information provided was not included in the Scope of Work for **TES**. The accuracy of the analysis is dependent on the accuracy of the information provided.

2. The structural analysis was performance based upon the evidence available at the time of this report. All information provided by the client is considered to be accurate.

3. The analyses will be performed based on the codes as specified by the client or based on the best knowledge of the engineering staff of **TES**. In the absence of information to the contrary, all work will be performed in accordance with the latest relevant revision of ANSI/TIA-222. If wind speed and/or ice loads are different from the minimum values recommended by the ANSI/TIA-222 standard or other codes, **TES** should be notified in writing and the applicable minimum values provided by the client.

4. The configuration of the existing mounts, antennas, coax and other appurtenances were supplied by the customer for the current structural analysis. **TES** has not visited the tower site to verify the adequacy of the information provided. If there is any discrepancy found in the report regarding the existing conditions, **TES** should be notified immediately to evaluate the effect of the discrepancy on the analysis results.

5. The client will assume responsibility for rework associated with the differences in initially provided information, including tower and foundation information, existing and/or proposed equipment and transmission lines.

6. If a feasibility analysis was performed, final acceptance of changed conditions shall be based upon a rigorous structural analysis.

Usage Diagram - Max Ratio 62.30% at 94.0ft

Structure:	CT04169-A-2-SBA	**Code:**	EIA/TIA-222-G	12/18/2020
Site Name:	Higganum	**Exposure:**	B	
Height:	185.00 (ft)	**Gh:**	1.1	
Base Elev:	0.000 (ft)			Page: 1

Tower Engineering Solutions

Dead Load Factor: 1.20

Wind Load Factor: 1.60

Load Case : 1.2D + 1.6W 98 mph Wind

Iterations: 26

Copyright © 2020 by Tower Engineering Solutions, LLC. All rights reserved.

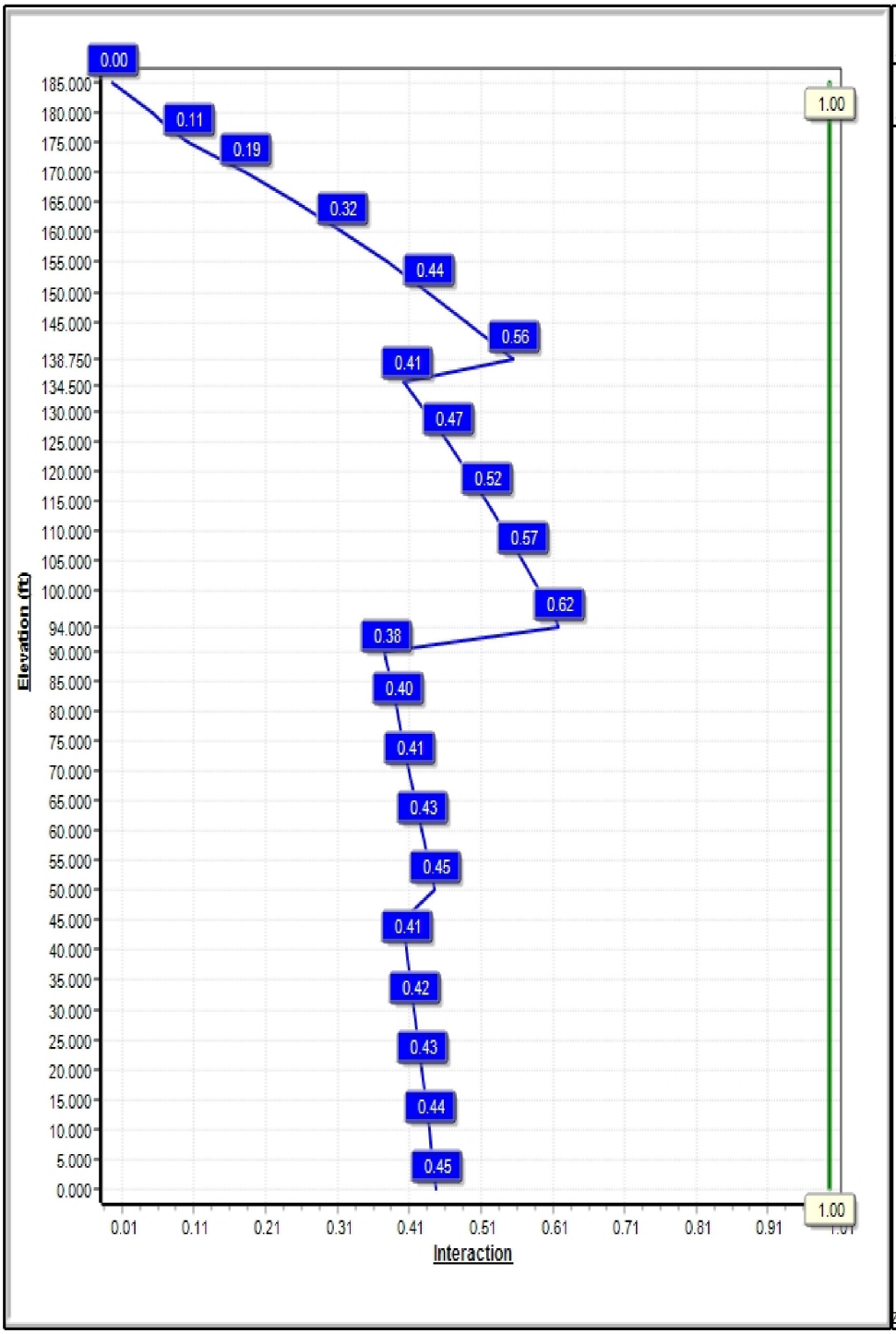

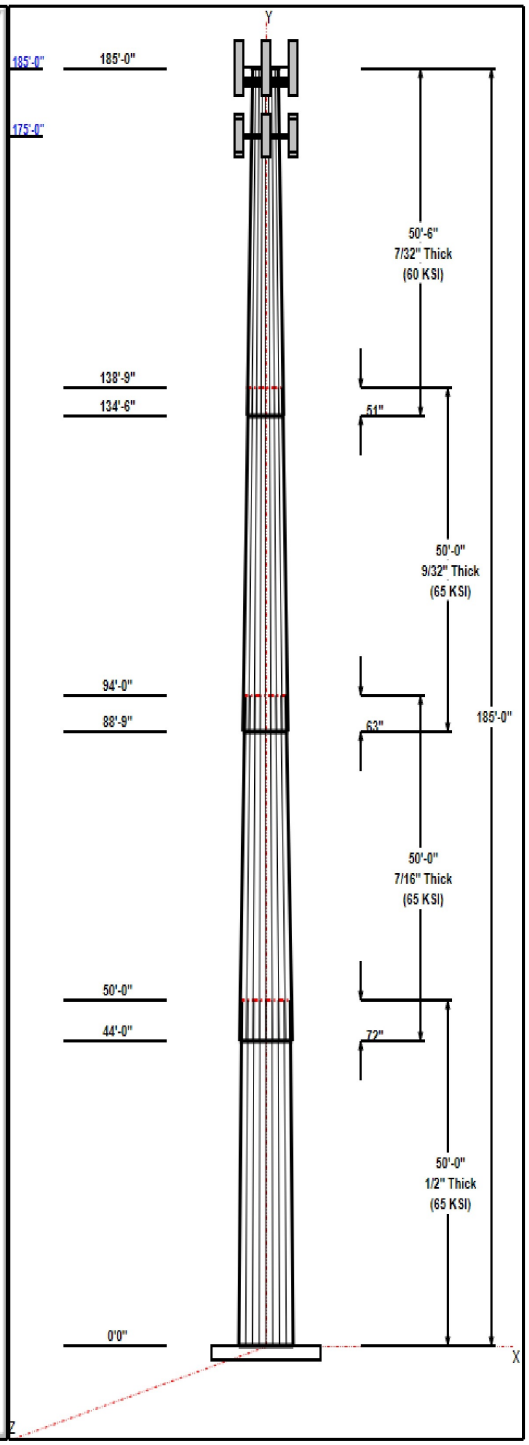

Structure: CT04169-A-2-SBA

Type:	Tapered	**Base Shape:**	18 Sided	12/18/2020
Site Name:	Higganum	**Taper:**	0.18003	
Height:	185.00 (ft)			
Base Elev:	0.00 (ft)			Page: 2

Tower Engineering Solutions

Shaft Properties

Seq	Length (ft)	Top (in)	Bottom (in)	Thick (in)	Joint Type	Taper	Grade (ksi)
1	50.00	46.43	55.43	0.500		0.18003	65
2	50.00	39.38	48.38	0.438	Slip	0.18003	65
3	50.00	31.89	40.89	0.281	Slip	0.18003	65
4	50.50	24.00	33.09	0.219	Slip	0.18003	60

Discrete Appurtenances

Attach Elev (ft)	Force Elev (ft)	Qty	Description	Carrier
185.00	188.50	1	Lightning Rod	---
185.00	185.00	1	Low Profile Platform	T-Mobile Sprint
185.00	185.00	3	AIR32	T-Mobile Sprint
185.00	185.00	3	APXVAALL24_43-U-NA20	T-Mobile Sprint
185.00	185.00	3	AIR6449 B41	T-Mobile Sprint
185.00	185.00	4	RFS ACU-A20-N RET	T-Mobile Sprint
185.00	185.00	3	Ericsson 4415 B25 RRU	T-Mobile Sprint
185.00	185.00	3	ALU 800 MHz RRH	T-Mobile Sprint
185.00	185.00	3	Ericsson 4449 B71 + B85	T-Mobile Sprint
185.00	185.00	3	ALU 800 MHz Filter	T-Mobile Sprint
185.00	185.00	1	SitePro1 HRK14	T-Mobile Sprint
185.00	185.00	1	SitePro1 PRK 1245L	T-Mobile Sprint
177.50	177.50	6	Ericsson RRU11	AT&T
177.50	177.50	1	Raycap DC6-48-60-18-8F	AT&T
177.50	177.50	1	Collar Mount (Andrew MTC	AT&T
175.00	175.00	1	Low Profile Platform	AT&T
175.00	175.00	6	Powerwave LGP13519	AT&T
175.00	175.00	12	Powerwave LGP21401	AT&T
175.00	175.00	6	Powerwave 7770	AT&T
175.00	175.00	3	KMW	AT&T

Linear Appurtenances

Elev From (ft)	Elev To (ft)	Placement	Description	Carrier
3.00	185.00	Inside	2" Hybrid	T-Mobile Sprint
3.00	175.00	Inside	1 5/8" Coax	AT&T
3.00	175.00	Inside	1/2" DC Power	AT&T
3.00	175.00	Inside	3" Innerduct	AT&T
3.00	175.00	Inside	3/8" Fiber	AT&T

Anchor Bolts

Qty	Specifications	Grade (ksi)	Arrangement
28	2.25" 18J	75.0	Cluster

Base Plate

Thickness (in)	Specifications (in)	Grade (ksi)	Geometry
2.7500	67.0	50.0	Clipped

Reactions

Load Case	Moment (FT-Kips)	Shear (Kips)	Axial (Kips)
1.2D + 1.6W 98 mph Wind	3147.2	24.1	50.3
0.9D + 1.6W 98 mph Wind	3108.1	24.1	37.7
1.2D + 1.0Di + 1.0Wi 50 mph Wind	923.2	7.1	73.0

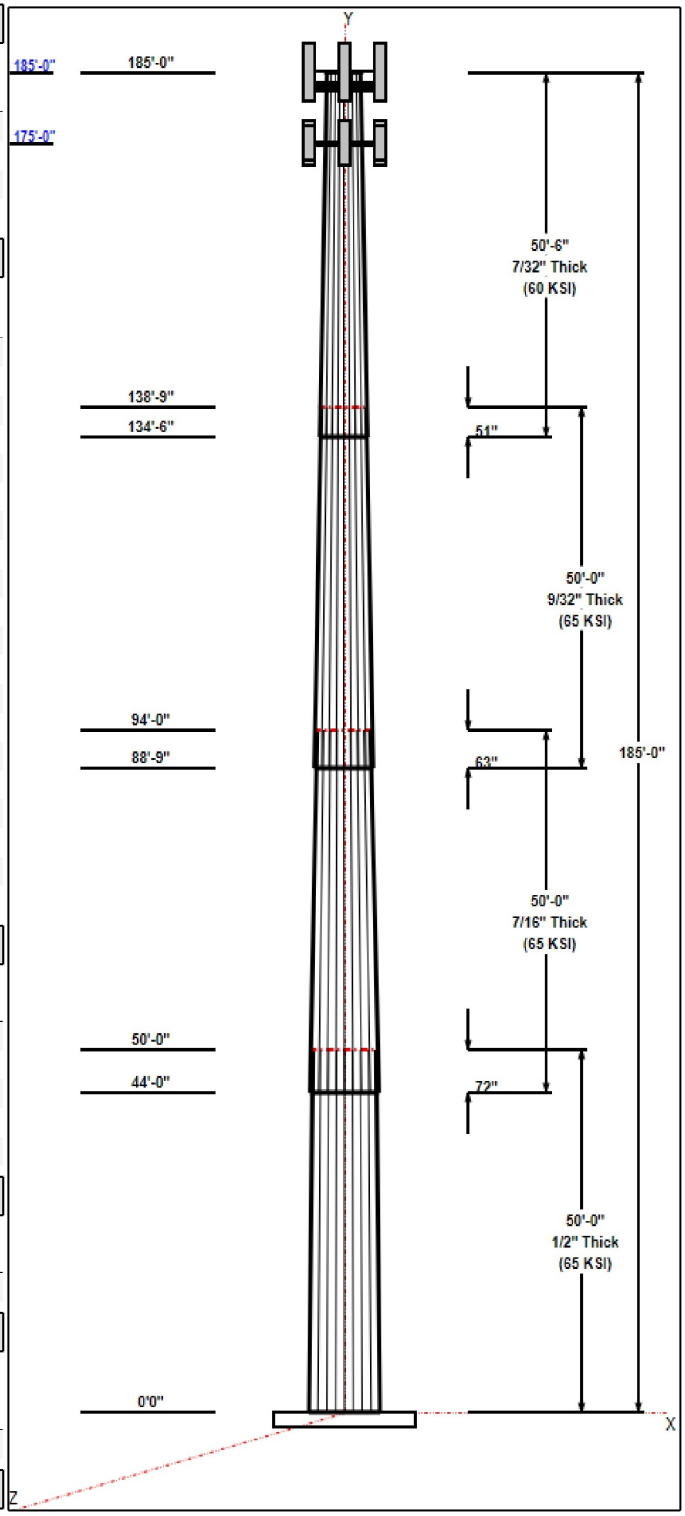

Copyright © 2020 by Tower Engineering Solutions, LLC. All rights reserved.

1.2D + 1.0E	257.4	1.8	50.3
0.9D + 1.0E	253.8	1.8	37.7
1.0D + 1.0W 60 mph Wind	732.1	5.6	41.9

Copyright © 2020 by Tower Engineering Solutions, LLC. All rights reserved.

Structure: CT04169-A-2-SBA - Coax Line Placement

Type: Monopole
Site Name: Higganum
Height: 185.00 (ft)

12/18/2020

Tower Engineering Solutions

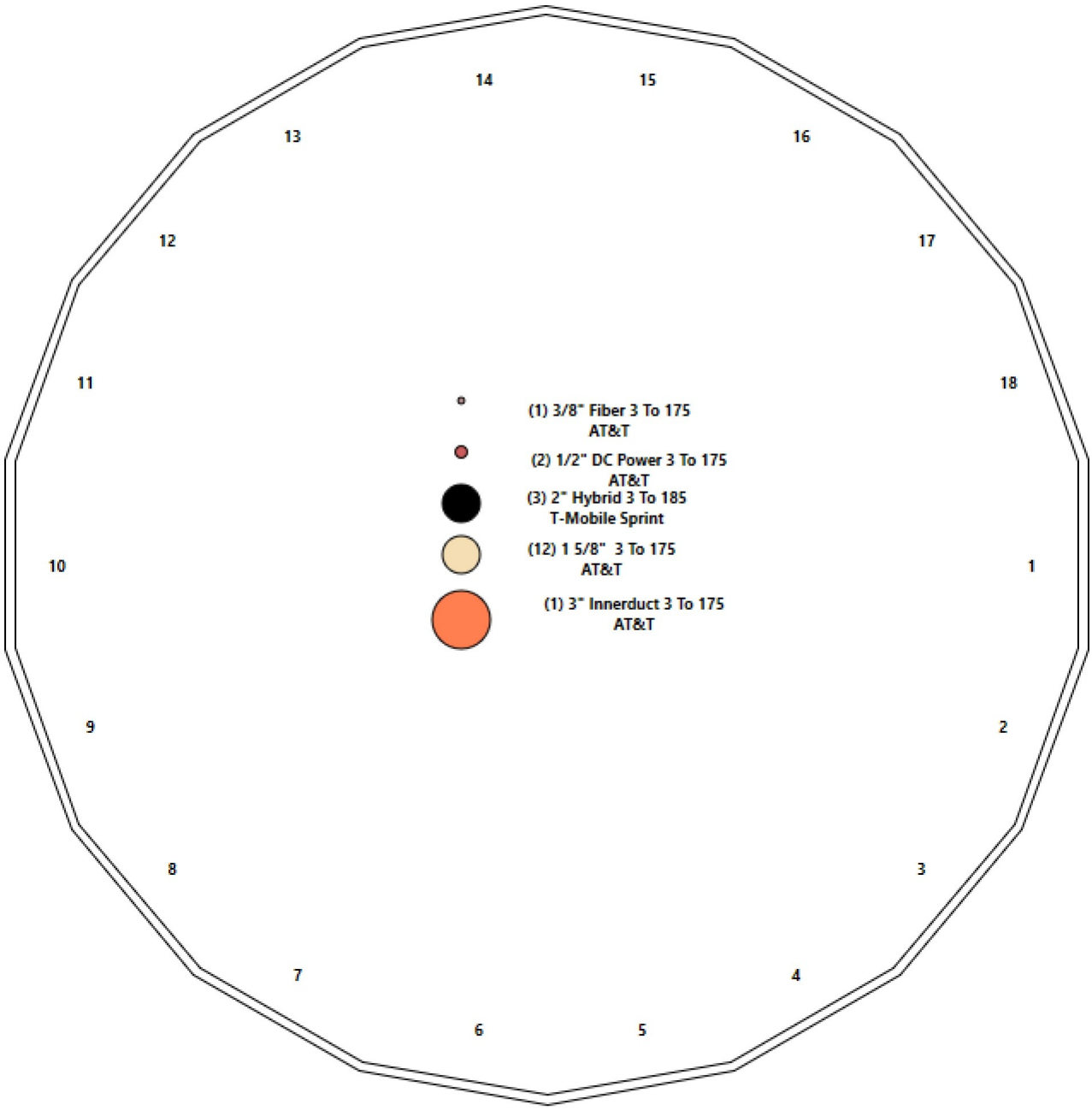

Copyright © 2020 by Tower Engineering Solutions, LLC. All rights reserved.

Shaft Properties

Structure:	CT04169-A-2-SBA		**Code:**	EIA/TIA-222-G	12/18/2020
Site Name:	Higganum		**Exposure:**	B	
Height:	185.00 (ft)		**Crest Height:**	0.00	
Base Elev:	0.000 (ft)		**Site Class:**	C - Very Dense Soil	
Gh:	1.1	**Topography:** 1	**Struct Class:**	II	Page: 5

Tower Engineering Solutions

Sec. No.	Shape	Length (ft)	Thick (in)	Fy (ksi)	Joint Type	Overlap (in)	Weight (lb)
1	18	50.000	0.5000	65		0.00	13,616
2	18	50.000	0.4375	65	Slip	72.00	10,264
3	18	50.000	0.2813	65	Slip	63.00	5,484
4	18	50.500	0.2188	60	Slip	51.00	3,380
					Total Shaft Weight:		**32,744**

	Bottom						Top						
Sec. No.	**Dia (in)**	**Elev (ft)**	**Area (sqin)**	**Ix (in^4)**	**W/t Ratio**	**D/t Ratio**	**Dia (in)**	**Elev (ft)**	**Area (sqin)**	**Ix (in^4)**	**W/t Ratio**	**D/t Ratio**	**Taper**
1	55.43	0.00	87.17	33230.98	18.14	110.86	46.43	50.00	72.89	19425.1	14.96	92.86	0.180027
2	48.38	44.00	66.58	19336.95	18.09	110.59	39.38	94.00	54.08	10362.7	14.46	90.02	0.180027
3	40.89	88.75	36.25	7552.64	24.23	145.39	31.89	138.75	28.21	3561.29	18.58	113.3	0.180027
4	33.09	134.5	22.82	3115.98	25.26	151.27	24.00	185.00	16.51	1179.77	17.93	109.7	0.180027

Copyright © 2020 by Tower Engineering Solutions, LLC. All rights reserved.

Load Summary

Structure:	CT04169-A-2-SBA	**Code:**	EIA/TIA-222-G	12/18/2020	
Site Name:	Higganum	**Exposure:**	B		
Height:	185.00 (ft)	**Crest Height:**	0.00		
Base Elev:	0.000 (ft)	**Site Class:**	C - Very Dense Soil		
Gh:	1.1 **Topography:** 1	**Struct Class:**	II	Page: 6	

Tower Engineering Solutions

Discrete Appurtenances

No.	Elev (ft)	Description	Qty	No Ice Weight (lb)	No Ice CaAa (sf)	No Ice CaAa Factor	Ice Weight (lb)	Ice CaAa (sf)	Ice CaAa Factor	Hor. Ecc. (ft)	Vert Ecc (ft)
1	185.00	Lightning Rod	1	35.00	1.05	1.00	67.08	3.474	1.00	0.00	3.50
2	185.00	Low Profile Platform	1	1500.00	22.00	1.00	2836.65	40.036	1.00	0.00	0.00
3	185.00	AIR32 KRD901146-1_B66A_B2A	3	132.20	6.51	0.87	321.21	7.715	0.87	0.00	0.00
4	185.00	APXVAALL24_43-U-NA20	3	99.00	20.24	0.73	536.92	22.182	0.73	0.00	0.00
5	185.00	AIR6449 B41	3	103.00	5.65	0.71	243.02	6.621	0.71	0.00	0.00
6	185.00	RFS ACU-A20-N RET	4	1.00	0.14	0.79	5.39	0.443	0.00	0.00	0.00
7	185.00	Ericsson 4415 B25 RRU	3	46.30	1.86	0.67	108.73	2.438	0.67	0.00	0.00
8	185.00	ALU 800 MHz RRH	3	53.00	2.49	0.67	128.53	3.658	0.67	0.00	0.00
9	185.00	Ericsson 4449 B71 + B85 RRU	3	73.20	1.97	0.67	132.17	2.551	0.67	0.00	0.00
10	185.00	ALU 800 MHz Filter	3	8.80	0.78	0.69	26.82	1.441	0.69	0.00	0.00
11	185.00	SitePro1 HRK14	1	302.36	8.13	1.00	668.79	16.244	1.00	0.00	0.00
12	185.00	SitePro1 PRK 1245L	1	464.91	9.50	1.00	796.34	19.659	1.00	0.00	0.00
13	177.50	Ericsson RRU11	6	50.70	2.57	0.71	133.92	3.233	0.71	0.00	0.00
14	177.50	Raycap DC6-48-60-18-8F	1	31.80	2.20	0.90	94.67	3.265	0.90	0.00	0.00
15	177.50	Collar Mount (Andrew MTC 3335)	1	150.00	5.00	0.75	277.79	8.550	0.75	0.00	0.00
16	175.00	Low Profile Platform	1	1500.00	22.00	0.00	2829.24	39.936	0.00	0.00	0.00
17	175.00	Powerwave LGP13519	6	5.30	0.13	0.60	14.95	0.306	0.60	0.00	0.00
18	175.00	Powerwave LGP21401	12	14.10	1.10	0.60	39.49	1.824	0.60	0.00	0.00
19	175.00	Powerwave 7770	6	35.00	5.51	0.77	172.76	6.583	0.77	0.00	0.00
20	175.00	KMW AM-X-CD-16-65-00T-RET	3	48.50	8.02	0.79	213.30	10.857	0.79	0.00	0.00
		Totals:	**65**	**6,395.27**			**15,127.82**				

Linear Appurtenances

Bottom Elev. (ft)	Top Elev. (ft)	Description	Exposed Width	Exposed
3.00	185.00	(3) 2" Hybrid	0.00	Inside
3.00	175.00	(12) 1 5/8" Coax	0.00	Inside
3.00	175.00	(2) 1/2" DC Power	0.00	Inside
3.00	175.00	(1) 3" Innerduct	0.00	Inside
3.00	175.00	(1) 3/8" Fiber	0.00	Inside

Copyright © 2020 by Tower Engineering Solutions, LLC. All rights reserved.

Shaft Section Properties

Structure:	CT04169-A-2-SBA		**Code:**	EIA/TIA-222-G	12/18/2020
Site Name:	Higganum		**Exposure:**	B	
Height:	185.00 (ft)		**Crest Height:**	0.00	
Base Elev:	0.000 (ft)		**Site Class:**	C - Very Dense Soil	
Gh:	1.1	**Topography:** 1	**Struct Class:**	II	Page: 7

Tower Engineering Solutions

Increment Length: **5 (ft)**

Elev (ft)	Description	Thick (in)	Dia (in)	Area (in^2)	Ix (in^4)	W/t Ratio	D/t Ratio	Fpy (ksi)	S (in^3)	Weight (lb)
0.00		0.5000	55.430	87.171	33231.0	18.14	110.86	80.1	1180.	0.0
5.00		0.5000	54.530	85.742	31623.9	17.82	109.06	80.4	1142.	1471.0
10.00		0.5000	53.630	84.314	30069.6	17.50	107.26	80.8	1104.	1446.7
15.00		0.5000	52.730	82.885	28567.0	17.18	105.46	81.2	1067.	1422.4
20.00		0.5000	51.829	81.457	27115.3	16.87	103.66	81.6	1030.	1398.1
25.00		0.5000	50.929	80.028	25713.7	16.55	101.86	81.9	994.4	1373.7
30.00		0.5000	50.029	78.600	24361.2	16.23	100.06	82.3	959.1	1349.4
35.00		0.5000	49.129	77.172	23056.9	15.91	98.26	82.5	924.4	1325.1
40.00		0.5000	48.229	75.743	21800.1	15.60	96.46	82.5	890.3	1300.8
44.00	Bot - Section 2	0.5000	47.509	74.600	20828.2	15.34	95.02	82.5	863.5	1023.2
45.00		0.5000	47.329	74.315	20589.8	15.28	94.66	82.5	856.9	479.5
50.00	Top - Section 1	0.4375	47.304	65.077	18059.3	17.65	108.12	0.0	0.0	2370.1
55.00		0.4375	46.404	63.827	17038.6	17.29	106.07	81.1	723.2	1096.6
60.00		0.4375	45.503	62.577	16057.1	16.93	104.01	81.5	695.0	1075.3
65.00		0.4375	44.603	61.327	15114.0	16.57	101.95	81.9	667.4	1054.1
70.00		0.4375	43.703	60.078	14208.6	16.20	99.89	82.3	640.4	1032.8
75.00		0.4375	42.803	58.828	13340.1	15.84	97.84	82.5	613.9	1011.5
80.00		0.4375	41.903	57.578	12507.7	15.48	95.78	82.5	587.9	990.3
85.00		0.4375	41.003	56.328	11710.7	15.11	93.72	82.5	562.5	969.0
88.75	Bot - Section 3	0.4375	40.328	55.390	11135.7	14.84	92.18	82.5	543.9	712.8
90.00		0.4375	40.103	55.078	10948.3	14.75	91.66	82.5	537.7	388.7
94.00	Top - Section 2	0.2813	39.945	35.406	7037.5	23.63	142.03	0.0	0.0	1229.2
95.00		0.2813	39.765	35.245	6942.1	23.52	141.39	73.7	343.9	120.2
100.00		0.2813	38.865	34.442	6478.0	22.96	138.19	74.4	328.3	592.8
105.00		0.2813	37.965	33.638	6035.1	22.39	134.99	75.1	313.1	579.2
110.00		0.2813	37.065	32.835	5612.9	21.83	131.78	75.7	298.3	565.5
115.00		0.2813	36.164	32.031	5210.8	21.26	128.58	76.4	283.8	551.8
120.00		0.2813	35.264	31.228	4828.5	20.70	125.38	77.1	269.7	538.1
125.00		0.2813	34.364	30.424	4465.2	20.13	122.18	77.7	255.9	524.5
130.00		0.2813	33.464	29.621	4120.7	19.57	118.98	78.4	242.5	510.8
134.50	Bot - Section 4	0.2813	32.654	28.898	3826.2	19.06	116.10	79.0	230.8	448.0
135.00		0.2813	32.564	28.817	3794.4	19.00	115.78	79.0	229.5	87.9
138.75	Top - Section 3	0.2188	32.326	22.292	2903.4	24.65	147.78	0.0	0.0	651.3
140.00		0.2188	32.101	22.136	2842.8	24.47	146.75	68.1	174.4	94.5
145.00		0.2188	31.201	21.511	2608.8	23.74	142.63	68.8	164.7	371.3
150.00		0.2188	30.301	20.886	2387.9	23.01	138.52	69.6	155.2	360.7
155.00		0.2188	29.401	20.261	2179.9	22.29	134.40	70.4	146.0	350.0
160.00		0.2188	28.501	19.636	1984.4	21.56	130.29	71.1	137.1	339.4
165.00		0.2188	27.601	19.011	1800.9	20.84	126.17	71.9	128.5	328.8
170.00		0.2188	26.700	18.386	1629.0	20.11	122.06	72.6	120.2	318.1
175.00		0.2188	25.800	17.761	1468.5	19.39	117.94	73.4	112.1	307.5
177.50		0.2188	25.350	17.448	1392.3	19.02	115.89	73.8	108.2	149.8
180.00		0.2188	24.900	17.136	1318.9	18.66	113.83	74.1	104.3	147.1
185.00		0.2188	24.000	16.511	1179.8	17.93	109.71	74.9	96.8	286.2
										32743.5

Copyright © 2020 by Tower Engineering Solutions, LLC. All rights reserved.

Wind Loading - Shaft

Structure:	CT04169-A-2-SBA		**Code:**	EIA/TIA-222-G	12/18/2020
Site Name:	Higganum		**Exposure:**	B	
Height:	185.00 (ft)		**Crest Height:**	0.00	
Base Elev:	0.000 (ft)		**Site Class:**	C - Very Dense Soil	
Gh:	1.1	**Topography:** 1	**Struct Class:**	II	Page: 8

Tower Engineering Solutions

Load Case: 1.2D + 1.6W 98 mph Wind

Dead Load Factor 1.20

Wind Load Factor 1.60

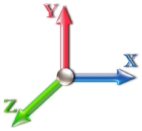

Iterations 26

Elev (ft)	Description	Kzt	Kz	qz (psf)	qzGh (psf)	C (mph-ft)	Cf	Ice Thick (in)	Tributary (ft)	Aa (sf)	CfAa (sf)	Wind Force X (lb)	Dead Load Ice (lb)	Tot Dead Load (lb)
0.00		1.00	0.70	16.350	17.98	384.58	0.650	0.000	0.00	0.000	0.00	0.0	0.0	0.0
5.00		1.00	0.70	16.350	17.98	378.34	0.650	0.000	5.00	23.262	15.12	435.1	0.0	1765.2
10.00		1.00	0.70	16.350	17.98	372.09	0.650	0.000	5.00	22.881	14.87	428.0	0.0	1736.0
15.00		1.00	0.70	16.350	17.98	365.84	0.650	0.000	5.00	22.500	14.63	420.8	0.0	1706.8
20.00		1.00	0.70	16.350	17.98	359.60	0.650	0.000	5.00	22.119	14.38	413.7	0.0	1677.7
25.00		1.00	0.70	16.350	17.98	353.35	0.650	0.000	5.00	21.738	14.13	406.6	0.0	1648.5
30.00		1.00	0.70	16.364	18.00	347.26	0.650	0.000	5.00	21.357	13.88	399.8	0.0	1619.3
35.00		1.00	0.73	17.100	18.81	348.60	0.650	0.000	5.00	20.977	13.63	410.4	0.0	1590.2
40.00		1.00	0.76	17.765	19.54	348.80	0.650	0.000	5.00	20.596	13.39	418.6	0.0	1561.0
44.00	Bot - Section 2	1.00	0.78	18.256	20.08	348.31	0.650	0.000	4.00	16.202	10.53	338.4	0.0	1227.8
45.00		1.00	0.79	18.374	20.21	348.10	0.650	0.000	1.00	4.087	2.66	85.9	0.0	575.4
50.00	Top - Section 1	1.00	0.81	18.935	20.83	346.66	0.650	0.000	5.00	20.204	13.13	437.7	0.0	2844.1
55.00		1.00	0.83	19.458	21.40	351.22	0.650	0.000	5.00	19.823	12.89	441.3	0.0	1315.9
60.00		1.00	0.85	19.948	21.94	348.72	0.650	0.000	5.00	19.443	12.64	443.7	0.0	1290.4
65.00		1.00	0.87	20.409	22.45	345.75	0.650	0.000	5.00	19.062	12.39	445.1	0.0	1264.9
70.00		1.00	0.89	20.846	22.93	342.38	0.650	0.000	5.00	18.681	12.14	445.5	0.0	1239.3
75.00		1.00	0.91	21.261	23.39	338.65	0.650	0.000	5.00	18.300	11.90	445.1	0.0	1213.8
80.00		1.00	0.93	21.656	23.82	334.60	0.650	0.000	5.00	17.919	11.65	443.9	0.0	1188.3
85.00		1.00	0.94	22.035	24.24	330.26	0.650	0.000	5.00	17.538	11.40	442.1	0.0	1162.8
88.75	Bot - Section 3	1.00	0.96	22.308	24.54	326.83	0.650	0.000	3.75	12.904	8.39	329.3	0.0	855.3
90.00		1.00	0.96	22.398	24.64	325.66	0.650	0.000	1.25	4.313	2.80	110.5	0.0	466.4
94.00	Top - Section 2	1.00	0.97	22.678	24.95	321.80	0.650	0.000	4.00	13.642	8.87	353.9	0.0	1475.0
95.00		1.00	0.97	22.746	25.02	325.42	0.650	0.000	1.00	3.372	2.19	87.8	0.0	144.2
100.00		1.00	0.99	23.082	25.39	320.39	0.650	0.000	5.00	16.634	10.81	439.2	0.0	711.4
105.00		1.00	1.00	23.406	25.75	315.16	0.650	0.000	5.00	16.253	10.56	435.2	0.0	695.0
110.00		1.00	1.02	23.719	26.09	309.74	0.650	0.000	5.00	15.872	10.32	430.7	0.0	678.6
115.00		1.00	1.03	24.022	26.42	304.14	0.650	0.000	5.00	15.491	10.07	425.7	0.0	662.2
120.00		1.00	1.04	24.316	26.75	298.38	0.650	0.000	5.00	15.111	9.82	420.3	0.0	645.8
125.00		1.00	1.05	24.602	27.06	292.46	0.650	0.000	5.00	14.730	9.57	414.6	0.0	629.4
130.00		1.00	1.07	24.879	27.37	286.40	0.650	0.000	5.00	14.349	9.33	408.4	0.0	613.0
134.50	Bot - Section 4	1.00	1.08	25.122	27.63	280.83	0.650	0.000	4.50	12.588	8.18	361.8	0.0	537.6
135.00		1.00	1.08	25.149	27.66	280.21	0.650	0.000	0.50	1.398	0.91	40.2	0.0	105.5
138.75	Top - Section 3	1.00	1.09	25.346	27.88	275.47	0.650	0.000	3.75	10.365	6.74	300.5	0.0	781.6
140.00		1.00	1.09	25.411	27.95	277.66	0.650	0.000	1.25	3.407	2.21	99.1	0.0	113.4
145.00		1.00	1.10	25.667	28.23	271.23	0.650	0.000	5.00	13.391	8.70	393.2	0.0	445.6
150.00		1.00	1.11	25.917	28.51	264.69	0.650	0.000	5.00	13.011	8.46	385.8	0.0	432.8
155.00		1.00	1.12	26.161	28.78	258.03	0.650	0.000	5.00	12.630	8.21	378.0	0.0	420.0
160.00		1.00	1.13	26.399	29.04	251.27	0.650	0.000	5.00	12.249	7.96	369.9	0.0	407.3
165.00		1.00	1.14	26.633	29.30	244.40	0.650	0.000	5.00	11.868	7.71	361.6	0.0	394.5
170.00		1.00	1.15	26.861	29.55	237.44	0.650	0.000	5.00	11.487	7.47	353.0	0.0	381.8
175.00	Appurtenance(s)	1.00	1.16	27.084	29.79	230.39	0.650	0.000	5.00	11.106	7.22	344.1	0.0	369.0
177.50	Appurtenance(s)	1.00	1.16	27.194	29.91	226.83	0.650	0.000	2.50	5.410	3.52	168.3	0.0	179.7
180.00		1.00	1.17	27.303	30.03	223.25	0.650	0.000	2.50	5.315	3.45	166.0	0.0	176.5
185.00	Appurtenance(s)	1.00	1.18	27.518	30.27	216.02	0.650	0.000	5.00	10.345	6.72	325.7	0.0	343.5
								Totals:	**185.00**			**15,204.4**		**39,292.2**

Copyright © 2020 by Tower Engineering Solutions, LLC. All rights reserved.

Discrete Appurtenance Forces

Structure:	CT04169-A-2-SBA		**Code:**	EIA/TIA-222-G	12/18/2020
Site Name:	Higganum		**Exposure:**	B	
Height:	185.00 (ft)		**Crest Height:**	0.00	
Base Elev:	0.000 (ft)		**Site Class:**	C - Very Dense Soil	
Gh:	1.1	**Topography:** 1	**Struct Class:**	II	Page: 9

Tower Engineering Solutions

Load Case: 1.2D + 1.6W 98 mph Wind

Dead Load Factor 1.20

Wind Load Factor 1.60

Iterations 26

No.	Elev (ft)	Description	Qty	qz (psf)	qzGh (psf)	Orient Factor x Ka	Ka	Total CaAa (sf)	Dead Load (lb)	Horiz Ecc (ft)	Vert Ecc (ft)	Wind FX (lb)	Mom Y (lb-ft)	Mom Z (lb-ft)
1	185.00	Lightning Rod	1	27.665	30.432	1.00	1.00	1.05	42.00	0.000	3.500	51.13	0.00	178.94
2	185.00	Ericsson 4449 B71 + B85	3	27.518	30.269	0.50	0.75	2.97	263.52	0.000	0.000	143.83	0.00	0.00
3	185.00	ALU 800 MHz RRH	3	27.518	30.269	0.50	0.75	3.75	190.80	0.000	0.000	181.79	0.00	0.00
4	185.00	Ericsson 4415 B25 RRU	3	27.518	30.269	0.50	0.75	2.80	166.68	0.000	0.000	135.80	0.00	0.00
5	185.00	RFS ACU-A20-N RET	4	27.518	30.269	0.59	0.75	0.33	4.80	0.000	0.000	16.07	0.00	0.00
6	185.00	AIR6449 B41	3	27.518	30.269	0.53	0.75	9.03	370.80	0.000	0.000	437.13	0.00	0.00
7	185.00	APXVAALL24_43-U-NA20	3	27.518	30.269	0.55	0.75	33.24	356.40	0.000	0.000	1610.04	0.00	0.00
8	185.00	AIR32	3	27.518	30.269	0.65	0.75	12.74	475.92	0.000	0.000	617.17	0.00	0.00
9	185.00	Low Profile Platform	1	27.518	30.269	1.00	1.00	22.00	1800.00	0.000	0.000	1065.48	0.00	0.00
10	185.00	ALU 800 MHz Filter	3	27.518	30.269	0.52	0.75	1.21	31.68	0.000	0.000	58.65	0.00	0.00
11	185.00	SitePro1 PRK 1245L	1	27.518	30.269	1.00	1.00	9.50	557.89	0.000	0.000	460.09	0.00	0.00
12	185.00	SitePro1 HRK14	1	27.518	30.269	1.00	1.00	8.13	362.83	0.000	0.000	393.74	0.00	0.00
13	177.50	Collar Mount (Andrew	1	27.194	29.913	0.56	0.75	2.81	180.00	0.000	0.000	134.61	0.00	0.00
14	177.50	Raycap DC6-48-60-18-8F	1	27.194	29.913	0.72	0.80	1.58	38.16	0.000	0.000	75.81	0.00	0.00
15	177.50	Ericsson RRU11	6	27.194	29.913	0.57	0.80	8.76	365.04	0.000	0.000	419.20	0.00	0.00
16	175.00	KMW	3	27.084	29.792	0.63	0.80	15.21	174.60	0.000	0.000	724.83	0.00	0.00
17	175.00	Powerwave 7770	6	27.084	29.792	0.62	0.80	20.36	252.00	0.000	0.000	970.76	0.00	0.00
18	175.00	Powerwave LGP21401	12	27.084	29.792	0.48	0.80	6.34	203.04	0.000	0.000	302.02	0.00	0.00
19	175.00	Powerwave LGP13519	6	27.084	29.792	0.48	0.80	0.37	38.16	0.000	0.000	17.85	0.00	0.00
20	175.00	Low Profile Platform	1	27.084	29.792	0.00	1.00	22.00	1800.00	0.000	0.000	1048.69	0.00	0.00
							Totals:		**7,674.32**			**8,864.70**		

Copyright © 2020 by Tower Engineering Solutions, LLC. All rights reserved.

Total Applied Force Summary

Structure:	CT04169-A-2-SBA		**Code:**	EIA/TIA-222-G	12/18/2020
Site Name:	Higganum		**Exposure:**	B	
Height:	185.00 (ft)		**Crest Height:**	0.00	
Base Elev:	0.000 (ft)		**Site Class:**	C - Very Dense Soil	
Gh:	1.1	**Topography:** 1	**Struct Class:**	II	Page: 10

Tower Engineering Solutions

Load Case: 1.2D + 1.6W 98 mph Wind

Dead Load Factor 1.20

Wind Load Factor 1.60

Iterations 26

Elev (ft)	Description	Lateral FX (-) (lb)	Axial FY (-) (lb)	Torsion MY (lb-ft)	Moment MZ (lb-ft)
0.00		0.00	0.00	0.00	0.00
5.00		435.09	1803.49	0.00	0.00
10.00		427.97	1831.82	0.00	0.00
15.00		420.85	1802.66	0.00	0.00
20.00		413.72	1773.49	0.00	0.00
25.00		406.60	1744.33	0.00	0.00
30.00		399.81	1715.16	0.00	0.00
35.00		410.36	1686.00	0.00	0.00
40.00		418.58	1656.84	0.00	0.00
44.00		338.38	1304.47	0.00	0.00
45.00		85.90	594.55	0.00	0.00
50.00		437.66	2939.92	0.00	0.00
55.00		441.26	1411.73	0.00	0.00
60.00		443.68	1386.21	0.00	0.00
65.00		445.05	1360.69	0.00	0.00
70.00		445.49	1335.17	0.00	0.00
75.00		445.10	1309.66	0.00	0.00
80.00		443.95	1284.14	0.00	0.00
85.00		442.10	1258.62	0.00	0.00
88.75		329.32	927.22	0.00	0.00
90.00		110.52	490.39	0.00	0.00
94.00		353.92	1551.65	0.00	0.00
95.00		87.76	163.41	0.00	0.00
100.00		439.23	807.22	0.00	0.00
105.00		435.20	790.82	0.00	0.00
110.00		430.69	774.41	0.00	0.00
115.00		425.73	758.01	0.00	0.00
120.00		420.34	741.60	0.00	0.00
125.00		414.56	725.20	0.00	0.00
130.00		408.39	708.79	0.00	0.00
134.50		361.78	623.89	0.00	0.00
135.00		40.23	115.03	0.00	0.00
138.75		300.54	853.46	0.00	0.00
140.00		99.05	137.34	0.00	0.00
145.00		393.22	541.39	0.00	0.00
150.00		385.75	528.63	0.00	0.00
155.00		377.99	515.87	0.00	0.00
160.00		369.93	503.11	0.00	0.00
165.00		361.59	490.35	0.00	0.00
170.00		352.99	477.59	0.00	0.00
175.00	(28) attachments	3408.28	2932.63	0.00	0.00
177.50	(8) attachments	797.94	771.50	0.00	0.00
180.00		166.02	185.11	0.00	0.00
185.00	(29) attachments	5496.57	4983.98	0.00	178.94
	Totals:	**24,069.08**	**50,297.54**	**0.00**	**178.94**

Copyright © 2020 by Tower Engineering Solutions, LLC. All rights reserved.

Calculated Forces

Structure:	CT04169-A-2-SBA	**Code:**	EIA/TIA-222-G	12/18/2020	
Site Name:	Higganum	**Exposure:**	B		
Height:	185.00 (ft)	**Crest Height:**	0.00		
Base Elev:	0.000 (ft)	**Site Class:**	C - Very Dense Soil		
Gh:	1.1 **Topography:** 1	**Struct Class:**	II	Page: 11	

Tower Engineering Solutions

Load Case: 1.2D + 1.6W 98 mph Wind

Dead Load Factor 1.20

Wind Load Factor 1.60

Iterations 26

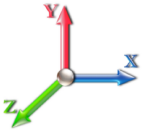

Seg Elev (ft)	Pu FY (-) (kips)	Vu FX (-) (kips)	Tu MY (-) (ft-kips)	Mu MZ (ft-kips)	Mu MX (ft-kips)	Resultant Moment (ft-kips)	phi Pn (kips)	phi Vn (kips)	phi Tn (ft-kips)	phi Mn (ft-kips)	Total Deflect (in)	Rotation Sway (deg)	Rotation Twist (deg)	Stress Ratio
0.00	-50.27	-24.13	0.00	-3147.2	0.00	3147.22	6281.65	3140.82	14160.7	7090.90	0.00	0.000	0.000	0.452
5.00	-48.41	-23.80	0.00	-3026.5	0.00	3026.59	6207.52	3103.76	13762.2	6891.36	0.07	-0.132	0.000	0.447
10.00	-46.53	-23.48	0.00	-2907.5	0.00	2907.58	6132.44	3066.22	13367.2	6693.54	0.28	-0.266	0.000	0.442
15.00	-44.67	-23.15	0.00	-2790.1	0.00	2790.19	6056.39	3028.19	12975.7	6497.50	0.63	-0.400	0.000	0.437
20.00	-42.85	-22.83	0.00	-2674.4	0.00	2674.43	5979.38	2989.69	12587.8	6303.28	1.12	-0.536	0.000	0.432
25.00	-41.05	-22.50	0.00	-2560.3	0.00	2560.31	5901.42	2950.71	12203.7	6110.94	1.76	-0.674	0.000	0.426
30.00	-39.29	-22.17	0.00	-2447.8	0.00	2447.81	5822.49	2911.25	11823.5	5920.54	2.54	-0.812	0.000	0.420
35.00	-37.56	-21.83	0.00	-2336.9	0.00	2336.95	5733.46	2866.73	11429.0	5722.99	3.46	-0.952	0.000	0.415
40.00	-35.86	-21.46	0.00	-2227.8	0.00	2227.81	5627.33	2813.67	11007.6	5512.03	4.54	-1.093	0.000	0.411
44.00	-34.54	-21.14	0.00	-2141.9	0.00	2141.97	5542.43	2771.21	10676.3	5346.11	5.50	-1.207	0.000	0.407
45.00	-33.91	-21.09	0.00	-2120.8	0.00	2120.83	5521.20	2760.60	10594.3	5305.03	5.76	-1.236	0.000	0.406
50.00	-30.93	-20.66	0.00	-2015.3	0.00	2015.38	4722.80	2361.40	9081.59	4547.54	7.13	-1.379	0.000	0.450
55.00	-29.48	-20.26	0.00	-1912.0	0.00	1912.06	4656.60	2328.30	8780.72	4396.89	8.65	-1.523	0.000	0.441
60.00	-28.05	-19.86	0.00	-1810.7	0.00	1810.74	4589.45	2294.72	8483.02	4247.81	10.33	-1.678	0.000	0.432
65.00	-26.65	-19.44	0.00	-1711.4	0.00	1711.45	4521.33	2260.66	8188.59	4100.38	12.17	-1.834	0.000	0.423
70.00	-25.28	-19.02	0.00	-1614.2	0.00	1614.22	4452.25	2226.13	7897.53	3954.63	14.17	-1.991	0.000	0.414
75.00	-23.94	-18.60	0.00	-1519.1	0.00	1519.11	4370.60	2185.30	7589.78	3800.53	16.34	-2.147	0.000	0.405
80.00	-22.62	-18.17	0.00	-1426.1	0.00	1426.12	4277.74	2138.87	7269.08	3639.94	18.67	-2.304	0.000	0.397
85.00	-21.34	-17.72	0.00	-1335.2	0.00	1335.29	4184.88	2092.44	6955.30	3482.82	21.17	-2.461	0.000	0.389
88.75	-20.40	-17.38	0.00	-1268.8	0.00	1268.83	4115.23	2057.61	6724.50	3367.25	23.15	-2.580	0.000	0.382
90.00	-19.89	-17.28	0.00	-1247.1	0.00	1247.10	4092.01	2046.01	6648.44	3329.16	23.83	-2.620	0.000	0.380
94.00	-18.34	-16.88	0.00	-1177.9	0.00	1177.99	2345.44	1172.72	3825.50	1915.59	26.08	-2.746	0.000	0.623
95.00	-18.14	-16.82	0.00	-1161.1	0.00	1161.12	2339.01	1169.51	3797.57	1901.61	26.66	-2.778	0.000	0.619
100.00	-17.29	-16.41	0.00	-1077.0	0.00	1077.00	2306.26	1153.13	3658.43	1831.93	29.69	-3.008	0.000	0.596
105.00	-16.46	-16.00	0.00	-994.94	0.00	994.94	2272.55	1136.28	3520.24	1762.74	32.96	-3.235	0.000	0.572
110.00	-15.65	-15.59	0.00	-914.94	0.00	914.94	2237.88	1118.94	3383.12	1694.08	36.47	-3.460	0.000	0.547
115.00	-14.86	-15.17	0.00	-837.00	0.00	837.00	2202.25	1101.13	3247.17	1626.00	40.21	-3.682	0.000	0.522
120.00	-14.10	-14.76	0.00	-761.15	0.00	761.15	2165.66	1082.83	3112.49	1558.56	44.18	-3.900	0.000	0.495
125.00	-13.35	-14.34	0.00	-687.37	0.00	687.37	2128.11	1064.06	2979.20	1491.82	48.38	-4.114	0.000	0.467
130.00	-12.63	-13.92	0.00	-615.66	0.00	615.66	2089.60	1044.80	2847.40	1425.82	52.79	-4.321	0.000	0.438
134.50	-12.01	-13.54	0.00	-553.00	0.00	553.00	2054.12	1027.06	2730.15	1367.10	56.95	-4.503	0.000	0.411
135.00	-11.88	-13.51	0.00	-546.23	0.00	546.23	2050.13	1025.07	2717.20	1360.62	57.42	-4.523	0.000	0.407
138.75	-11.03	-13.16	0.00	-495.59	0.00	495.59	1362.09	681.04	1798.87	900.77	61.03	-4.670	0.000	0.559
140.00	-10.87	-13.07	0.00	-479.14	0.00	479.14	1356.31	678.16	1778.61	890.62	62.26	-4.718	0.000	0.546
145.00	-10.31	-12.67	0.00	-413.78	0.00	413.78	1332.67	666.33	1697.93	850.23	67.32	-4.942	0.000	0.495
150.00	-9.78	-12.28	0.00	-350.41	0.00	350.41	1308.18	654.09	1617.96	810.18	72.60	-5.150	0.000	0.440
155.00	-9.26	-11.88	0.00	-289.03	0.00	289.03	1282.83	641.42	1538.80	770.54	78.09	-5.341	0.000	0.383
160.00	-8.76	-11.49	0.00	-229.62	0.00	229.62	1256.64	628.32	1460.53	731.35	83.77	-5.510	0.000	0.321
165.00	-8.29	-11.10	0.00	-172.16	0.00	172.16	1229.59	614.80	1383.27	692.66	89.61	-5.654	0.000	0.256
170.00	-7.83	-10.72	0.00	-116.65	0.00	116.65	1201.70	600.85	1307.09	654.52	95.59	-5.768	0.000	0.185
175.00	-5.25	-7.03	0.00	-63.07	0.00	63.07	1172.95	586.47	1232.10	616.96	101.66	-5.846	0.000	0.107
177.50	-4.56	-6.16	0.00	-45.49	0.00	45.49	1158.25	579.13	1195.08	598.43	104.73	-5.873	0.000	0.080
180.00	-4.39	-5.98	0.00	-30.08	0.00	30.08	1143.35	571.67	1158.39	580.05	107.80	-5.892	0.000	0.056
185.00	0.00	-5.50	0.00	-0.18	0.00	0.18	1112.89	556.45	1086.05	543.83	113.98	-5.908	0.000	0.000

Copyright © 2020 by Tower Engineering Solutions, LLC. All rights reserved.

Wind Loading - Shaft

Structure:	CT04169-A-2-SBA		**Code:**	EIA/TIA-222-G	12/18/2020
Site Name:	Higganum		**Exposure:**	B	
Height:	185.00 (ft)		**Crest Height:**	0.00	
Base Elev:	0.000 (ft)		**Site Class:**	C - Very Dense Soil	
Gh:	1.1	**Topography:** 1	**Struct Class:**	II	Page: 12

Tower Engineering Solutions

Load Case: 0.9D + 1.6W 98 mph Wind

Dead Load Factor 0.90

Wind Load Factor 1.60

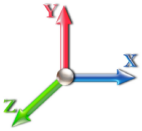

Iterations 26

Elev (ft)	Description	Kzt	Kz	qz (psf)	qzGh (psf)	C (mph-ft)	Cf	Ice Thick (in)	Tributary (ft)	Aa (sf)	CfAa (sf)	Wind Force X (lb)	Dead Load Ice (lb)	Tot Dead Load (lb)
0.00		1.00	0.70	16.350	17.98	384.58	0.650	0.000	0.00	0.000	0.00	0.0	0.0	0.0
5.00		1.00	0.70	16.350	17.98	378.34	0.650	0.000	5.00	23.262	15.12	435.1	0.0	1323.9
10.00		1.00	0.70	16.350	17.98	372.09	0.650	0.000	5.00	22.881	14.87	428.0	0.0	1302.0
15.00		1.00	0.70	16.350	17.98	365.84	0.650	0.000	5.00	22.500	14.63	420.8	0.0	1280.1
20.00		1.00	0.70	16.350	17.98	359.60	0.650	0.000	5.00	22.119	14.38	413.7	0.0	1258.2
25.00		1.00	0.70	16.350	17.98	353.35	0.650	0.000	5.00	21.738	14.13	406.6	0.0	1236.4
30.00		1.00	0.70	16.364	18.00	347.26	0.650	0.000	5.00	21.357	13.88	399.8	0.0	1214.5
35.00		1.00	0.73	17.100	18.81	348.60	0.650	0.000	5.00	20.977	13.63	410.4	0.0	1192.6
40.00		1.00	0.76	17.765	19.54	348.80	0.650	0.000	5.00	20.596	13.39	418.6	0.0	1170.8
44.00	Bot - Section 2	1.00	0.78	18.256	20.08	348.31	0.650	0.000	4.00	16.202	10.53	338.4	0.0	920.9
45.00		1.00	0.79	18.374	20.21	348.10	0.650	0.000	1.00	4.087	2.66	85.9	0.0	431.5
50.00	Top - Section 1	1.00	0.81	18.935	20.83	346.66	0.650	0.000	5.00	20.204	13.13	437.7	0.0	2133.1
55.00		1.00	0.83	19.458	21.40	351.22	0.650	0.000	5.00	19.823	12.89	441.3	0.0	986.9
60.00		1.00	0.85	19.948	21.94	348.72	0.650	0.000	5.00	19.443	12.64	443.7	0.0	967.8
65.00		1.00	0.87	20.409	22.45	345.75	0.650	0.000	5.00	19.062	12.39	445.1	0.0	948.6
70.00		1.00	0.89	20.846	22.93	342.38	0.650	0.000	5.00	18.681	12.14	445.5	0.0	929.5
75.00		1.00	0.91	21.261	23.39	338.65	0.650	0.000	5.00	18.300	11.90	445.1	0.0	910.4
80.00		1.00	0.93	21.656	23.82	334.60	0.650	0.000	5.00	17.919	11.65	443.9	0.0	891.2
85.00		1.00	0.94	22.035	24.24	330.26	0.650	0.000	5.00	17.538	11.40	442.1	0.0	872.1
88.75	Bot - Section 3	1.00	0.96	22.308	24.54	326.83	0.650	0.000	3.75	12.904	8.39	329.3	0.0	641.5
90.00		1.00	0.96	22.398	24.64	325.66	0.650	0.000	1.25	4.313	2.80	110.5	0.0	349.8
94.00	Top - Section 2	1.00	0.97	22.678	24.95	321.80	0.650	0.000	4.00	13.642	8.87	353.9	0.0	1106.2
95.00		1.00	0.97	22.746	25.02	325.42	0.650	0.000	1.00	3.372	2.19	87.8	0.0	108.2
100.00		1.00	0.99	23.082	25.39	320.39	0.650	0.000	5.00	16.634	10.81	439.2	0.0	533.5
105.00		1.00	1.00	23.406	25.75	315.16	0.650	0.000	5.00	16.253	10.56	435.2	0.0	521.2
110.00		1.00	1.02	23.719	26.09	309.74	0.650	0.000	5.00	15.872	10.32	430.7	0.0	508.9
115.00		1.00	1.03	24.022	26.42	304.14	0.650	0.000	5.00	15.491	10.07	425.7	0.0	496.6
120.00		1.00	1.04	24.316	26.75	298.38	0.650	0.000	5.00	15.111	9.82	420.3	0.0	484.3
125.00		1.00	1.05	24.602	27.06	292.46	0.650	0.000	5.00	14.730	9.57	414.6	0.0	472.0
130.00		1.00	1.07	24.879	27.37	286.40	0.650	0.000	5.00	14.349	9.33	408.4	0.0	459.7
134.50	Bot - Section 4	1.00	1.08	25.122	27.63	280.83	0.650	0.000	4.50	12.588	8.18	361.8	0.0	403.2
135.00		1.00	1.08	25.149	27.66	280.21	0.650	0.000	0.50	1.398	0.91	40.2	0.0	79.1
138.75	Top - Section 3	1.00	1.09	25.346	27.88	275.47	0.650	0.000	3.75	10.365	6.74	300.5	0.0	586.2
140.00		1.00	1.09	25.411	27.95	277.66	0.650	0.000	1.25	3.407	2.21	99.1	0.0	85.0
145.00		1.00	1.10	25.667	28.23	271.23	0.650	0.000	5.00	13.391	8.70	393.2	0.0	334.2
150.00		1.00	1.11	25.917	28.51	264.69	0.650	0.000	5.00	13.011	8.46	385.8	0.0	324.6
155.00		1.00	1.12	26.161	28.78	258.03	0.650	0.000	5.00	12.630	8.21	378.0	0.0	315.0
160.00		1.00	1.13	26.399	29.04	251.27	0.650	0.000	5.00	12.249	7.96	369.9	0.0	305.5
165.00		1.00	1.14	26.633	29.30	244.40	0.650	0.000	5.00	11.868	7.71	361.6	0.0	295.9
170.00		1.00	1.15	26.861	29.55	237.44	0.650	0.000	5.00	11.487	7.47	353.0	0.0	286.3
175.00	Appurtenance(s)	1.00	1.16	27.084	29.79	230.39	0.650	0.000	5.00	11.106	7.22	344.1	0.0	276.7
177.50	Appurtenance(s)	1.00	1.16	27.194	29.91	226.83	0.650	0.000	2.50	5.410	3.52	168.3	0.0	134.8
180.00		1.00	1.17	27.303	30.03	223.25	0.650	0.000	2.50	5.315	3.45	166.0	0.0	132.4
185.00	Appurtenance(s)	1.00	1.18	27.518	30.27	216.02	0.650	0.000	5.00	10.345	6.72	325.7	0.0	257.6
								Totals:	**185.00**			**15,204.4**		**29,469.2**

Copyright © 2020 by Tower Engineering Solutions, LLC. All rights reserved.

Discrete Appurtenance Forces

Structure:	CT04169-A-2-SBA		**Code:**	EIA/TIA-222-G	12/18/2020
Site Name:	Higganum		**Exposure:**	B	
Height:	185.00 (ft)		**Crest Height:**	0.00	
Base Elev:	0.000 (ft)		**Site Class:**	C - Very Dense Soil	
Gh:	1.1	**Topography:** 1	**Struct Class:**	II	Page: 13

Tower Engineering Solutions

Load Case: 0.9D + 1.6W 98 mph Wind

Dead Load Factor 0.90

Wind Load Factor 1.60

Iterations 26

No.	Elev (ft)	Description	Qty	qz (psf)	qzGh (psf)	Orient Factor x Ka	Ka	Total CaAa (sf)	Dead Load (lb)	Horiz Ecc (ft)	Vert Ecc (ft)	Wind FX (lb)	Mom Y (lb-ft)	Mom Z (lb-ft)
1	185.00	Lightning Rod	1	27.665	30.432	1.00	1.00	1.05	31.50	0.000	3.500	51.13	0.00	178.94
2	185.00	Ericsson 4449 B71 + B85	3	27.518	30.269	0.50	0.75	2.97	197.64	0.000	0.000	143.83	0.00	0.00
3	185.00	ALU 800 MHz RRH	3	27.518	30.269	0.50	0.75	3.75	143.10	0.000	0.000	181.79	0.00	0.00
4	185.00	Ericsson 4415 B25 RRU	3	27.518	30.269	0.50	0.75	2.80	125.01	0.000	0.000	135.80	0.00	0.00
5	185.00	RFS ACU-A20-N RET	4	27.518	30.269	0.59	0.75	0.33	3.60	0.000	0.000	16.07	0.00	0.00
6	185.00	AIR6449 B41	3	27.518	30.269	0.53	0.75	9.03	278.10	0.000	0.000	437.13	0.00	0.00
7	185.00	APXVAALL24_43-U-NA20	3	27.518	30.269	0.55	0.75	33.24	267.30	0.000	0.000	1610.04	0.00	0.00
8	185.00	AIR32	3	27.518	30.269	0.65	0.75	12.74	356.94	0.000	0.000	617.17	0.00	0.00
9	185.00	Low Profile Platform	1	27.518	30.269	1.00	1.00	22.00	1350.00	0.000	0.000	1065.48	0.00	0.00
10	185.00	ALU 800 MHz Filter	3	27.518	30.269	0.52	0.75	1.21	23.76	0.000	0.000	58.65	0.00	0.00
11	185.00	SitePro1 PRK 1245L	1	27.518	30.269	1.00	1.00	9.50	418.42	0.000	0.000	460.09	0.00	0.00
12	185.00	SitePro1 HRK14	1	27.518	30.269	1.00	1.00	8.13	272.12	0.000	0.000	393.74	0.00	0.00
13	177.50	Collar Mount (Andrew	1	27.194	29.913	0.56	0.75	2.81	135.00	0.000	0.000	134.61	0.00	0.00
14	177.50	Raycap DC6-48-60-18-8F	1	27.194	29.913	0.72	0.80	1.58	28.62	0.000	0.000	75.81	0.00	0.00
15	177.50	Ericsson RRU11	6	27.194	29.913	0.57	0.80	8.76	273.78	0.000	0.000	419.20	0.00	0.00
16	175.00	KMW	3	27.084	29.792	0.63	0.80	15.21	130.95	0.000	0.000	724.83	0.00	0.00
17	175.00	Powerwave 7770	6	27.084	29.792	0.62	0.80	20.36	189.00	0.000	0.000	970.76	0.00	0.00
18	175.00	Powerwave LGP21401	12	27.084	29.792	0.48	0.80	6.34	152.28	0.000	0.000	302.02	0.00	0.00
19	175.00	Powerwave LGP13519	6	27.084	29.792	0.48	0.80	0.37	28.62	0.000	0.000	17.85	0.00	0.00
20	175.00	Low Profile Platform	1	27.084	29.792	0.00	1.00	22.00	1350.00	0.000	0.000	1048.69	0.00	0.00
							Totals:		**5,755.74**			**8,864.70**		

Copyright © 2020 by Tower Engineering Solutions, LLC. All rights reserved.

Total Applied Force Summary

Structure:	CT04169-A-2-SBA		**Code:**	EIA/TIA-222-G	12/18/2020
Site Name:	Higganum		**Exposure:**	B	
Height:	185.00 (ft)		**Crest Height:**	0.00	
Base Elev:	0.000 (ft)		**Site Class:**	C - Very Dense Soil	
Gh:	1.1	**Topography:** 1	**Struct Class:**	II	Page: 14

Tower Engineering Solutions

Load Case: 0.9D + 1.6W 98 mph Wind

Dead Load Factor 0.90

Wind Load Factor 1.60

Iterations 26

Elev (ft)	Description	Lateral FX (-) (lb)	Axial FY (-) (lb)	Torsion MY (lb-ft)	Moment MZ (lb-ft)
0.00		0.00	0.00	0.00	0.00
5.00		435.09	1352.62	0.00	0.00
10.00		427.97	1373.87	0.00	0.00
15.00		420.85	1351.99	0.00	0.00
20.00		413.72	1330.12	0.00	0.00
25.00		406.60	1308.25	0.00	0.00
30.00		399.81	1286.37	0.00	0.00
35.00		410.36	1264.50	0.00	0.00
40.00		418.58	1242.63	0.00	0.00
44.00		338.38	978.35	0.00	0.00
45.00		85.90	445.91	0.00	0.00
50.00		437.66	2204.94	0.00	0.00
55.00		441.26	1058.80	0.00	0.00
60.00		443.68	1039.66	0.00	0.00
65.00		445.05	1020.52	0.00	0.00
70.00		445.49	1001.38	0.00	0.00
75.00		445.10	982.24	0.00	0.00
80.00		443.95	963.10	0.00	0.00
85.00		442.10	943.96	0.00	0.00
88.75		329.32	695.41	0.00	0.00
90.00		110.52	367.80	0.00	0.00
94.00		353.92	1163.74	0.00	0.00
95.00		87.76	122.56	0.00	0.00
100.00		439.23	605.42	0.00	0.00
105.00		435.20	593.11	0.00	0.00
110.00		430.69	580.81	0.00	0.00
115.00		425.73	568.50	0.00	0.00
120.00		420.34	556.20	0.00	0.00
125.00		414.56	543.90	0.00	0.00
130.00		408.39	531.59	0.00	0.00
134.50		361.78	467.91	0.00	0.00
135.00		40.23	86.28	0.00	0.00
138.75		300.54	640.09	0.00	0.00
140.00		99.05	103.01	0.00	0.00
145.00		393.22	406.04	0.00	0.00
150.00		385.75	396.47	0.00	0.00
155.00		377.99	386.90	0.00	0.00
160.00		369.93	377.33	0.00	0.00
165.00		361.59	367.76	0.00	0.00
170.00		352.99	358.19	0.00	0.00
175.00	(28) attachments	3408.28	2199.47	0.00	0.00
177.50	(8) attachments	797.94	578.63	0.00	0.00
180.00		166.02	138.83	0.00	0.00
185.00	(29) attachments	5496.57	3737.98	0.00	178.94
	Totals:	**24,069.08**	**37,723.15**	**0.00**	**178.94**

Copyright © 2020 by Tower Engineering Solutions, LLC. All rights reserved.

Calculated Forces

Structure:	CT04169-A-2-SBA	**Code:**	EIA/TIA-222-G	12/18/2020	
Site Name:	Higganum	**Exposure:**	B		
Height:	185.00 (ft)	**Crest Height:**	0.00		
Base Elev:	0.000 (ft)	**Site Class:**	C - Very Dense Soil		
Gh:	1.1 **Topography:** 1	**Struct Class:**	II	Page: 15	

Tower Engineering Solutions

Load Case: 0.9D + 1.6W 98 mph Wind

Dead Load Factor 0.90

Wind Load Factor 1.60

Iterations 26

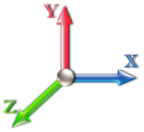

Seg Elev (ft)	Pu FY (-) (kips)	Vu FX (-) (kips)	Tu MY (-) (ft-kips)	Mu MZ (ft-kips)	Mu MX (ft-kips)	Resultant Moment (ft-kips)	phi Pn (kips)	phi Vn (kips)	phi Tn (ft-kips)	phi Mn (ft-kips)	Total Deflect (in)	Rotation Sway (deg)	Rotation Twist (deg)	Stress Ratio
0.00	-37.70	-24.11	0.00	-3108.0	0.00	3108.06	6281.65	3140.82	14160.7	7090.90	0.00	0.000	0.000	0.444
5.00	-36.29	-23.76	0.00	-2987.5	0.00	2987.50	6207.52	3103.76	13762.2	6891.36	0.07	-0.130	0.000	0.439
10.00	-34.86	-23.41	0.00	-2868.7	0.00	2868.71	6132.44	3066.22	13367.2	6693.54	0.28	-0.262	0.000	0.434
15.00	-33.46	-23.06	0.00	-2751.6	0.00	2751.67	6056.39	3028.19	12975.7	6497.50	0.62	-0.395	0.000	0.429
20.00	-32.08	-22.71	0.00	-2636.4	0.00	2636.40	5979.38	2989.69	12587.8	6303.28	1.11	-0.529	0.000	0.424
25.00	-30.72	-22.36	0.00	-2522.8	0.00	2522.86	5901.42	2950.71	12203.7	6110.94	1.74	-0.665	0.000	0.418
30.00	-29.39	-22.01	0.00	-2411.0	0.00	2411.06	5822.49	2911.25	11823.5	5920.54	2.50	-0.801	0.000	0.412
35.00	-28.08	-21.65	0.00	-2301.0	0.00	2301.00	5733.46	2866.73	11429.0	5722.99	3.42	-0.939	0.000	0.407
40.00	-26.80	-21.27	0.00	-2192.7	0.00	2192.74	5627.33	2813.67	11007.6	5512.03	4.47	-1.077	0.000	0.403
44.00	-25.80	-20.94	0.00	-2107.6	0.00	2107.66	5542.43	2771.21	10676.3	5346.11	5.42	-1.190	0.000	0.399
45.00	-25.32	-20.89	0.00	-2086.7	0.00	2086.71	5521.20	2760.60	10594.3	5305.03	5.68	-1.218	0.000	0.398
50.00	-23.08	-20.46	0.00	-1982.2	0.00	1982.28	4722.80	2361.40	9081.59	4547.54	7.03	-1.359	0.000	0.441
55.00	-21.98	-20.05	0.00	-1880.0	0.00	1880.00	4656.60	2328.30	8780.72	4396.89	8.53	-1.500	0.000	0.432
60.00	-20.90	-19.63	0.00	-1779.7	0.00	1779.77	4589.45	2294.72	8483.02	4247.81	10.18	-1.653	0.000	0.424
65.00	-19.84	-19.21	0.00	-1681.6	0.00	1681.63	4521.33	2260.66	8188.59	4100.38	11.99	-1.806	0.000	0.415
70.00	-18.81	-18.78	0.00	-1585.6	0.00	1585.60	4452.25	2226.13	7897.53	3954.63	13.97	-1.960	0.000	0.405
75.00	-17.79	-18.35	0.00	-1491.7	0.00	1491.70	4370.60	2185.30	7589.78	3800.53	16.10	-2.114	0.000	0.397
80.00	-16.80	-17.91	0.00	-1399.9	0.00	1399.97	4277.74	2138.87	7269.08	3639.94	18.40	-2.268	0.000	0.389
85.00	-15.83	-17.47	0.00	-1310.4	0.00	1310.41	4184.88	2092.44	6955.30	3482.82	20.85	-2.422	0.000	0.380
88.75	-15.13	-17.13	0.00	-1244.9	0.00	1244.90	4115.23	2057.61	6724.50	3367.25	22.80	-2.539	0.000	0.373
90.00	-14.74	-17.02	0.00	-1223.4	0.00	1223.49	4092.01	2046.01	6648.44	3329.16	23.47	-2.578	0.000	0.371
94.00	-13.57	-16.64	0.00	-1155.3	0.00	1155.39	2345.44	1172.72	3825.50	1915.59	25.69	-2.702	0.000	0.609
95.00	-13.42	-16.57	0.00	-1138.7	0.00	1138.75	2339.01	1169.51	3797.57	1901.61	26.25	-2.733	0.000	0.605
100.00	-12.77	-16.15	0.00	-1055.8	0.00	1055.89	2306.26	1153.13	3658.43	1831.93	29.24	-2.958	0.000	0.582
105.00	-12.14	-15.73	0.00	-975.12	0.00	975.12	2272.55	1136.28	3520.24	1762.74	32.45	-3.181	0.000	0.559
110.00	-11.53	-15.32	0.00	-896.45	0.00	896.45	2237.88	1118.94	3383.12	1694.08	35.90	-3.402	0.000	0.535
115.00	-10.93	-14.90	0.00	-819.87	0.00	819.87	2202.25	1101.13	3247.17	1626.00	39.58	-3.619	0.000	0.509
120.00	-10.35	-14.48	0.00	-745.39	0.00	745.39	2165.66	1082.83	3112.49	1558.56	43.48	-3.833	0.000	0.483
125.00	-9.79	-14.06	0.00	-672.99	0.00	672.99	2128.11	1064.06	2979.20	1491.82	47.61	-4.042	0.000	0.456
130.00	-9.24	-13.65	0.00	-602.67	0.00	602.67	2089.60	1044.80	2847.40	1425.82	51.94	-4.245	0.000	0.427
134.50	-8.78	-13.27	0.00	-541.25	0.00	541.25	2054.12	1027.06	2730.15	1367.10	56.03	-4.423	0.000	0.400
135.00	-8.68	-13.23	0.00	-534.61	0.00	534.61	2050.13	1025.07	2717.20	1360.62	56.49	-4.443	0.000	0.397
138.75	-8.04	-12.90	0.00	-484.99	0.00	484.99	1362.09	681.04	1798.87	900.77	60.04	-4.586	0.000	0.545
140.00	-7.91	-12.81	0.00	-468.86	0.00	468.86	1356.31	678.16	1778.61	890.62	61.24	-4.634	0.000	0.533
145.00	-7.50	-12.41	0.00	-404.82	0.00	404.82	1332.67	666.33	1697.93	850.23	66.21	-4.852	0.000	0.482
150.00	-7.09	-12.02	0.00	-342.76	0.00	342.76	1308.18	654.09	1617.96	810.18	71.40	-5.056	0.000	0.429
155.00	-6.71	-11.63	0.00	-282.68	0.00	282.68	1282.83	641.42	1538.80	770.54	76.79	-5.242	0.000	0.372
160.00	-6.34	-11.24	0.00	-224.55	0.00	224.55	1256.64	628.32	1460.53	731.35	82.36	-5.408	0.000	0.312
165.00	-5.98	-10.86	0.00	-168.35	0.00	168.35	1229.59	614.80	1383.27	692.66	88.09	-5.549	0.000	0.248
170.00	-5.64	-10.48	0.00	-114.06	0.00	114.06	1201.70	600.85	1307.09	654.52	93.96	-5.660	0.000	0.179
175.00	-3.79	-6.87	0.00	-61.65	0.00	61.65	1172.95	586.47	1232.10	616.96	99.92	-5.737	0.000	0.103
177.50	-3.29	-6.02	0.00	-44.47	0.00	44.47	1158.25	579.13	1195.08	598.43	102.93	-5.763	0.000	0.077
180.00	-3.16	-5.85	0.00	-29.41	0.00	29.41	1143.35	571.67	1158.39	580.05	105.95	-5.782	0.000	0.054
185.00	0.00	-5.50	0.00	-0.18	0.00	0.18	1112.89	556.45	1086.05	543.83	112.00	-5.797	0.000	0.000

Copyright © 2020 by Tower Engineering Solutions, LLC. All rights reserved.

Wind Loading - Shaft

Structure:	CT04169-A-2-SBA		**Code:**	EIA/TIA-222-G	12/18/2020
Site Name:	Higganum		**Exposure:**	B	
Height:	185.00 (ft)		**Crest Height:**	0.00	
Base Elev:	0.000 (ft)		**Site Class:**	C - Very Dense Soil	
Gh:	1.1	**Topography:** 1	**Struct Class:**	II	Page: 16

Tower Engineering Solutions

Load Case: 1.2D + 1.0Di + 1.0Wi 50 mph Wind

Dead Load Factor 1.20

Wind Load Factor 1.00

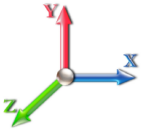

Iterations 25

Elev (ft)	Description	Kzt	Kz	qz (psf)	qzGh (psf)	C (mph-ft)	Cf	Ice Thick (in)	Tributary (ft)	Aa (sf)	CfAa (sf)	Wind Force X (lb)	Dead Load Ice (lb)	Tot Dead Load (lb)
0.00		1.00	0.70	4.256	4.68	0.00	1.200	0.000	0.00	0.000	0.00	0.0	0.0	0.0
5.00		1.00	0.70	4.256	4.68	0.00	1.200	1.242	5.00	24.297	29.16	136.5	434.0	2199.1
10.00		1.00	0.70	4.256	4.68	0.00	1.200	1.331	5.00	23.990	28.79	134.8	458.3	2194.3
15.00		1.00	0.70	4.256	4.68	0.00	1.200	1.386	5.00	23.655	28.39	132.9	469.9	2176.8
20.00		1.00	0.70	4.256	4.68	0.00	1.200	1.427	5.00	23.308	27.97	130.9	476.0	2153.6
25.00		1.00	0.70	4.256	4.68	0.00	1.200	1.459	5.00	22.954	27.54	129.0	478.8	2127.3
30.00		1.00	0.70	4.260	4.69	0.00	1.200	1.486	5.00	22.596	27.11	127.0	479.4	2098.8
35.00		1.00	0.73	4.451	4.90	0.00	1.200	1.509	5.00	22.234	26.68	130.6	478.6	2068.8
40.00		1.00	0.76	4.625	5.09	0.00	1.200	1.529	5.00	21.870	26.24	133.5	476.6	2037.6
44.00	Bot - Section 2	1.00	0.78	4.752	5.23	0.00	1.200	1.544	4.00	17.232	20.68	108.1	379.5	1607.3
45.00		1.00	0.79	4.783	5.26	0.00	1.200	1.547	1.00	4.344	5.21	27.4	96.4	671.8
50.00	Top - Section 1	1.00	0.81	4.929	5.42	0.00	1.200	1.564	5.00	21.507	25.81	139.9	478.6	3322.7
55.00		1.00	0.83	5.065	5.57	0.00	1.200	1.579	5.00	21.139	25.37	141.3	474.4	1790.3
60.00		1.00	0.85	5.193	5.71	0.00	1.200	1.592	5.00	20.770	24.92	142.4	469.7	1760.1
65.00		1.00	0.87	5.313	5.84	0.00	1.200	1.605	5.00	20.399	24.48	143.1	464.6	1729.4
70.00		1.00	0.89	5.426	5.97	0.00	1.200	1.617	5.00	20.029	24.03	143.5	459.0	1698.4
75.00		1.00	0.91	5.534	6.09	0.00	1.200	1.628	5.00	19.657	23.59	143.6	453.1	1667.0
80.00		1.00	0.93	5.637	6.20	0.00	1.200	1.639	5.00	19.285	23.14	143.5	446.9	1635.2
85.00		1.00	0.94	5.736	6.31	0.00	1.200	1.649	5.00	18.912	22.69	143.2	440.5	1603.2
88.75	Bot - Section 3	1.00	0.96	5.807	6.39	0.00	1.200	1.656	3.75	13.939	16.73	106.8	326.6	1181.9
90.00		1.00	0.96	5.830	6.41	0.00	1.200	1.658	1.25	4.659	5.59	35.9	109.9	576.3
94.00	Top - Section 2	1.00	0.97	5.903	6.49	0.00	1.200	1.666	4.00	14.753	17.70	115.0	347.2	1822.2
95.00		1.00	0.97	5.921	6.51	0.00	1.200	1.667	1.00	3.650	4.38	28.5	86.5	230.8
100.00		1.00	0.99	6.008	6.61	0.00	1.200	1.676	5.00	18.030	21.64	143.0	425.5	1136.9
105.00		1.00	1.00	6.093	6.70	0.00	1.200	1.684	5.00	17.656	21.19	142.0	418.2	1113.1
110.00		1.00	1.02	6.174	6.79	0.00	1.200	1.692	5.00	17.282	20.74	140.9	410.6	1089.2
115.00		1.00	1.03	6.253	6.88	0.00	1.200	1.699	5.00	16.908	20.29	139.6	403.0	1065.1
120.00		1.00	1.04	6.330	6.96	0.00	1.200	1.707	5.00	16.533	19.84	138.1	395.1	1040.9
125.00		1.00	1.05	6.404	7.04	0.00	1.200	1.714	5.00	16.158	19.39	136.6	387.2	1016.5
130.00		1.00	1.07	6.476	7.12	0.00	1.200	1.720	5.00	15.783	18.94	134.9	379.1	992.0
134.50	Bot - Section 4	1.00	1.08	6.539	7.19	0.00	1.200	1.726	4.50	13.883	16.66	119.8	334.5	872.1
135.00		1.00	1.08	6.546	7.20	0.00	1.200	1.727	0.50	1.542	1.85	13.3	37.6	143.0
138.75	Top - Section 3	1.00	1.09	6.598	7.26	0.00	1.200	1.732	3.75	11.447	13.74	99.7	277.0	1058.6
140.00		1.00	1.09	6.615	7.28	0.00	1.200	1.733	1.25	3.768	4.52	32.9	91.8	205.2
145.00		1.00	1.10	6.681	7.35	0.00	1.200	1.739	5.00	14.841	17.81	130.9	358.8	804.3
150.00		1.00	1.11	6.746	7.42	0.00	1.200	1.745	5.00	14.465	17.36	128.8	350.2	783.0
155.00		1.00	1.12	6.810	7.49	0.00	1.200	1.751	5.00	14.089	16.91	126.6	341.5	761.6
160.00		1.00	1.13	6.872	7.56	0.00	1.200	1.757	5.00	13.713	16.46	124.4	332.8	740.0
165.00		1.00	1.14	6.933	7.63	0.00	1.200	1.762	5.00	13.336	16.00	122.0	323.9	718.4
170.00		1.00	1.15	6.992	7.69	0.00	1.200	1.767	5.00	12.960	15.55	119.6	315.0	696.7
175.00	Appurtenance(s)	1.00	1.16	7.050	7.76	0.00	1.200	1.772	5.00	12.583	15.10	117.1	305.9	674.9
177.50	Appurtenance(s)	1.00	1.16	7.079	7.79	0.00	1.200	1.775	2.50	6.150	7.38	57.5	150.7	330.4
180.00		1.00	1.17	7.107	7.82	0.00	1.200	1.777	2.50	6.056	7.27	56.8	148.4	324.9
185.00	Appurtenance(s)	1.00	1.18	7.163	7.88	0.00	1.200	1.782	5.00	11.830	14.20	111.9	287.6	631.1
								Totals:	**185.00**			**4,953.8**		**54,551.0**

Copyright © 2020 by Tower Engineering Solutions, LLC. All rights reserved.

Discrete Appurtenance Forces

Structure:	CT04169-A-2-SBA	**Code:**	EIA/TIA-222-G	12/18/2020	
Site Name:	Higganum	**Exposure:**	B		
Height:	185.00 (ft)	**Crest Height:**	0.00		
Base Elev:	0.000 (ft)	**Site Class:**	C - Very Dense Soil		
Gh:	1.1 **Topography:** 1	**Struct Class:**	II	Page: 17	

Tower Engineering Solutions

Load Case: 1.2D + 1.0Di + 1.0Wi 50 mph Wind

Dead Load Factor 1.20

Wind Load Factor 1.00

Iterations 25

No.	Elev (ft)	Description	Qty	qz (psf)	qzGh (psf)	Orient Factor x Ka	Ka	Total CaAa (sf)	Dead Load (lb)	Horiz Ecc (ft)	Vert Ecc (ft)	Wind FX (lb)	Mom Y (lb-ft)	Mom Z (lb-ft)
1	185.00	Lightning Rod	1	7.201	7.922	1.00	1.00	3.47	65.08	0.000	3.500	27.52	0.00	96.31
2	185.00	Ericsson 4449 B71 + B85	3	7.163	7.879	0.50	0.75	3.85	265.22	0.000	0.000	30.31	0.00	0.00
3	185.00	ALU 800 MHz RRH	3	7.163	7.879	0.50	0.75	5.51	354.08	0.000	0.000	43.45	0.00	0.00
4	185.00	Ericsson 4415 B25 RRU	3	7.163	7.879	0.50	0.75	3.68	353.96	0.000	0.000	28.96	0.00	0.00
5	185.00	RFS ACU-A20-N RET	4	7.163	7.879	0.00	0.75	1.77	17.15	0.000	0.000	13.96	0.00	0.00
6	185.00	AIR6449 B41	3	7.163	7.879	0.53	0.75	10.58	695.77	0.000	0.000	83.34	0.00	0.00
7	185.00	APXVAALL24_43-U-NA20	3	7.163	7.879	0.55	0.75	36.43	1670.17	0.000	0.000	287.07	0.00	0.00
8	185.00	AIR32	3	7.163	7.879	0.65	0.75	15.10	1042.96	0.000	0.000	119.00	0.00	0.00
9	185.00	Low Profile Platform	1	7.163	7.879	1.00	1.00	40.04	2836.65	0.000	0.000	315.46	0.00	0.00
10	185.00	ALU 800 MHz Filter	3	7.163	7.879	0.52	0.75	2.24	70.73	0.000	0.000	17.62	0.00	0.00
11	185.00	SitePro1 PRK 1245L	1	7.163	7.879	1.00	1.00	19.66	794.23	0.000	0.000	154.90	0.00	0.00
12	185.00	SitePro1 HRK14	1	7.163	7.879	1.00	1.00	16.24	1031.62	0.000	0.000	127.99	0.00	0.00
13	177.50	Collar Mount (Andrew	1	7.079	7.787	0.56	0.75	4.81	7.79	0.000	0.000	37.45	0.00	0.00
14	177.50	Raycap DC6-48-60-18-8F	1	7.079	7.787	0.72	0.80	2.35	83.33	0.000	0.000	18.31	0.00	0.00
15	177.50	Ericsson RRU11	6	7.079	7.787	0.57	0.80	11.02	864.35	0.000	0.000	85.80	0.00	0.00
16	175.00	KMW	3	7.050	7.755	0.63	0.80	20.59	529.50	0.000	0.000	159.64	0.00	0.00
17	175.00	Powerwave 7770	6	7.050	7.755	0.62	0.80	24.33	1078.56	0.000	0.000	188.68	0.00	0.00
18	175.00	Powerwave LGP21401	12	7.050	7.755	0.48	0.80	10.50	422.52	0.000	0.000	81.46	0.00	0.00
19	175.00	Powerwave LGP13519	6	7.050	7.755	0.48	0.80	0.88	79.83	0.000	0.000	6.84	0.00	0.00
20	175.00	Low Profile Platform	1	7.050	7.755	0.00	1.00	39.94	2829.24	0.000	0.000	309.71	0.00	0.00
							Totals:		**15,092.75**			**2,137.47**		

Copyright © 2020 by Tower Engineering Solutions, LLC. All rights reserved.

Total Applied Force Summary

Structure:	CT04169-A-2-SBA		**Code:**	EIA/TIA-222-G	12/18/2020
Site Name:	Higganum		**Exposure:**	B	
Height:	185.00 (ft)		**Crest Height:**	0.00	
Base Elev:	0.000 (ft)		**Site Class:**	C - Very Dense Soil	
Gh:	1.1	**Topography:** 1	**Struct Class:**	II	Page: 18

Tower Engineering Solutions

Load Case: 1.2D + 1.0Di + 1.0Wi 50 mph Wind

Dead Load Factor 1.20

Wind Load Factor 1.00

Iterations 25

Elev (ft)	Description	Lateral FX (-) (lb)	Axial FY (-) (lb)	Torsion MY (lb-ft)	Moment MZ (lb-ft)
0.00		0.00	0.00	0.00	0.00
5.00		136.50	2237.44	0.00	0.00
10.00		134.77	2290.14	0.00	0.00
15.00		132.89	2272.59	0.00	0.00
20.00		130.94	2249.45	0.00	0.00
25.00		128.95	2223.09	0.00	0.00
30.00		127.05	2194.60	0.00	0.00
35.00		130.64	2164.59	0.00	0.00
40.00		133.50	2133.42	0.00	0.00
44.00		108.09	1683.93	0.00	0.00
45.00		27.43	690.98	0.00	0.00
50.00		139.93	3418.53	0.00	0.00
55.00		141.33	1886.16	0.00	0.00
60.00		142.36	1855.94	0.00	0.00
65.00		143.05	1825.27	0.00	0.00
70.00		143.46	1794.21	0.00	0.00
75.00		143.60	1762.79	0.00	0.00
80.00		143.51	1731.07	0.00	0.00
85.00		143.19	1699.07	0.00	0.00
88.75		106.85	1253.78	0.00	0.00
90.00		35.85	600.28	0.00	0.00
94.00		114.95	1898.88	0.00	0.00
95.00		28.53	249.94	0.00	0.00
100.00		143.00	1232.72	0.00	0.00
105.00		142.00	1208.98	0.00	0.00
110.00		140.85	1185.06	0.00	0.00
115.00		139.56	1160.98	0.00	0.00
120.00		138.14	1136.74	0.00	0.00
125.00		136.59	1112.36	0.00	0.00
130.00		134.92	1087.84	0.00	0.00
134.50		119.84	958.36	0.00	0.00
135.00		13.33	152.59	0.00	0.00
138.75		99.69	1130.43	0.00	0.00
140.00		32.90	229.14	0.00	0.00
145.00		130.89	900.14	0.00	0.00
150.00		128.81	878.82	0.00	0.00
155.00		126.65	857.39	0.00	0.00
160.00		124.39	835.87	0.00	0.00
165.00		122.04	814.26	0.00	0.00
170.00		119.61	792.55	0.00	0.00
175.00	(28) attachments	863.45	5710.41	0.00	0.00
177.50	(8) attachments	199.02	1294.47	0.00	0.00
180.00		56.81	333.53	0.00	0.00
185.00	(29) attachments	1361.43	9845.92	0.00	96.31
	Totals:	**7,091.30**	**72,974.72**	**0.00**	**96.31**

Copyright © 2020 by Tower Engineering Solutions, LLC. All rights reserved.

Calculated Forces

Structure:	CT04169-A-2-SBA	**Code:**	EIA/TIA-222-G	12/18/2020	
Site Name:	Higganum	**Exposure:**	B		
Height:	185.00 (ft)	**Crest Height:**	0.00		
Base Elev:	0.000 (ft)	**Site Class:**	C - Very Dense Soil		
Gh:	1.1 **Topography:** 1	**Struct Class:**	II	Page: 19	

Tower Engineering Solutions

Load Case: 1.2D + 1.0Di + 1.0Wi 50 mph Wind

Dead Load Factor 1.20

Wind Load Factor 1.00

Iterations 25

Seg Elev (ft)	Pu FY (-) (kips)	Vu FX (-) (kips)	Tu MY (-) (ft-kips)	Mu MZ (ft-kips)	Mu MX (ft-kips)	Resultant Moment (ft-kips)	phi Pn (kips)	phi Vn (kips)	phi Tn (ft-kips)	phi Mn (ft-kips)	Total Deflect (in)	Rotation Sway (deg)	Rotation Twist (deg)	Stress Ratio
0.00	-72.97	-7.12	0.00	-923.20	0.00	923.20	6281.65	3140.82	14160.7	7090.90	0.00	0.000	0.000	0.142
5.00	-70.73	-7.03	0.00	-887.62	0.00	887.62	6207.52	3103.76	13762.2	6891.36	0.02	-0.039	0.000	0.140
10.00	-68.44	-6.94	0.00	-852.49	0.00	852.49	6132.44	3066.22	13367.2	6693.54	0.08	-0.078	0.000	0.139
15.00	-66.16	-6.85	0.00	-817.81	0.00	817.81	6056.39	3028.19	12975.7	6497.50	0.19	-0.117	0.000	0.137
20.00	-63.90	-6.75	0.00	-783.59	0.00	783.59	5979.38	2989.69	12587.8	6303.28	0.33	-0.157	0.000	0.135
25.00	-61.68	-6.66	0.00	-749.82	0.00	749.82	5901.42	2950.71	12203.7	6110.94	0.52	-0.197	0.000	0.133
30.00	-59.48	-6.57	0.00	-716.51	0.00	716.51	5822.49	2911.25	11823.5	5920.54	0.74	-0.238	0.000	0.131
35.00	-57.31	-6.47	0.00	-683.67	0.00	683.67	5733.46	2866.73	11429.0	5722.99	1.02	-0.279	0.000	0.129
40.00	-55.17	-6.36	0.00	-651.33	0.00	651.33	5627.33	2813.67	11007.6	5512.03	1.33	-0.320	0.000	0.128
44.00	-53.49	-6.26	0.00	-625.89	0.00	625.89	5542.43	2771.21	10676.3	5346.11	1.61	-0.353	0.000	0.127
45.00	-52.79	-6.25	0.00	-619.63	0.00	619.63	5521.20	2760.60	10594.3	5305.03	1.69	-0.362	0.000	0.126
50.00	-49.37	-6.13	0.00	-588.36	0.00	588.36	4722.80	2361.40	9081.59	4547.54	2.09	-0.404	0.000	0.140
55.00	-47.48	-6.01	0.00	-557.73	0.00	557.73	4656.60	2328.30	8780.72	4396.89	2.53	-0.446	0.000	0.137
60.00	-45.62	-5.89	0.00	-527.70	0.00	527.70	4589.45	2294.72	8483.02	4247.81	3.02	-0.491	0.000	0.134
65.00	-43.79	-5.76	0.00	-498.27	0.00	498.27	4521.33	2260.66	8188.59	4100.38	3.56	-0.536	0.000	0.131
70.00	-42.00	-5.63	0.00	-469.47	0.00	469.47	4452.25	2226.13	7897.53	3954.63	4.15	-0.582	0.000	0.128
75.00	-40.23	-5.50	0.00	-441.30	0.00	441.30	4370.60	2185.30	7589.78	3800.53	4.78	-0.628	0.000	0.125
80.00	-38.50	-5.37	0.00	-413.78	0.00	413.78	4277.74	2138.87	7269.08	3639.94	5.46	-0.673	0.000	0.123
85.00	-36.80	-5.23	0.00	-386.93	0.00	386.93	4184.88	2092.44	6955.30	3482.82	6.19	-0.719	0.000	0.120
88.75	-35.54	-5.12	0.00	-367.31	0.00	367.31	4115.23	2057.61	6724.50	3367.25	6.77	-0.753	0.000	0.118
90.00	-34.94	-5.09	0.00	-360.90	0.00	360.90	4092.01	2046.01	6648.44	3329.16	6.97	-0.765	0.000	0.117
94.00	-33.04	-4.97	0.00	-340.53	0.00	340.53	2345.44	1172.72	3825.50	1915.59	7.63	-0.801	0.000	0.192
95.00	-32.79	-4.96	0.00	-335.56	0.00	335.56	2339.01	1169.51	3797.57	1901.61	7.80	-0.810	0.000	0.190
100.00	-31.55	-4.83	0.00	-310.77	0.00	310.77	2306.26	1153.13	3658.43	1831.93	8.68	-0.877	0.000	0.183
105.00	-30.34	-4.71	0.00	-286.62	0.00	286.62	2272.55	1136.28	3520.24	1762.74	9.63	-0.942	0.000	0.176
110.00	-29.15	-4.58	0.00	-263.09	0.00	263.09	2237.88	1118.94	3383.12	1694.08	10.66	-1.007	0.000	0.168
115.00	-27.99	-4.45	0.00	-240.20	0.00	240.20	2202.25	1101.13	3247.17	1626.00	11.74	-1.071	0.000	0.160
120.00	-26.85	-4.32	0.00	-217.97	0.00	217.97	2165.66	1082.83	3112.49	1558.56	12.90	-1.133	0.000	0.152
125.00	-25.74	-4.18	0.00	-196.39	0.00	196.39	2128.11	1064.06	2979.20	1491.82	14.12	-1.194	0.000	0.144
130.00	-24.65	-4.05	0.00	-175.46	0.00	175.46	2089.60	1044.80	2847.40	1425.82	15.40	-1.254	0.000	0.135
134.50	-23.69	-3.92	0.00	-157.24	0.00	157.24	2054.12	1027.06	2730.15	1367.10	16.61	-1.305	0.000	0.127
135.00	-23.54	-3.91	0.00	-155.28	0.00	155.28	2050.13	1025.07	2717.20	1360.62	16.75	-1.311	0.000	0.126
138.75	-22.41	-3.80	0.00	-140.60	0.00	140.60	1362.09	681.04	1798.87	900.77	17.79	-1.353	0.000	0.173
140.00	-22.18	-3.78	0.00	-135.86	0.00	135.86	1356.31	678.16	1778.61	890.62	18.15	-1.366	0.000	0.169
145.00	-21.28	-3.65	0.00	-116.98	0.00	116.98	1332.67	666.33	1697.93	850.23	19.61	-1.430	0.000	0.154
150.00	-20.40	-3.51	0.00	-98.75	0.00	98.75	1308.18	654.09	1617.96	810.18	21.14	-1.489	0.000	0.138
155.00	-19.54	-3.38	0.00	-81.18	0.00	81.18	1282.83	641.42	1538.80	770.54	22.73	-1.542	0.000	0.121
160.00	-18.71	-3.25	0.00	-64.27	0.00	64.27	1256.64	628.32	1460.53	731.35	24.37	-1.590	0.000	0.103
165.00	-17.89	-3.12	0.00	-48.03	0.00	48.03	1229.59	614.80	1383.27	692.66	26.06	-1.630	0.000	0.084
170.00	-17.10	-2.98	0.00	-32.45	0.00	32.45	1201.70	600.85	1307.09	654.52	27.78	-1.662	0.000	0.064
175.00	-11.42	-1.95	0.00	-17.54	0.00	17.54	1172.95	586.47	1232.10	616.96	29.54	-1.683	0.000	0.038
177.50	-10.13	-1.72	0.00	-12.66	0.00	12.66	1158.25	579.13	1195.08	598.43	30.42	-1.691	0.000	0.030
180.00	-9.80	-1.65	0.00	-8.36	0.00	8.36	1143.35	571.67	1158.39	580.05	31.31	-1.696	0.000	0.023
185.00	0.00	-1.36	0.00	-0.10	0.00	0.10	1112.89	556.45	1086.05	543.83	33.09	-1.701	0.000	0.000

Copyright © 2020 by Tower Engineering Solutions, LLC. All rights reserved.

Seismic Segment Forces (Factored)

Structure:	CT04169-A-2-SBA		**Code:**	EIA/TIA-222-G	12/18/2020
Site Name:	Higganum		**Exposure:**	B	
Height:	185.00 (ft)		**Crest Height:**	0.00	
Base Elev:	0.000 (ft)		**Site Class:**	C - Very Dense Soil	
Gh:	1.1	**Topography:** 1	**Struct Class:**	II	Page: 20

Tower Engineering Solutions

Load Case:	1.2D + 1.0E					**Iterations**	24
Gust Response Factor	1.10			**Sds**	0.14	**Ss**	0.18
Dead Load Factor	1.20	**Seismic Load Factor**	1.00	**Sd1**	0.07	**S1**	0.06
Wind Load Factor	0.00	**Structure Frequency (f1)**	0.31	**SA**	0.02	**Seismic Importance Factor**	1.00

Top Elev (ft)	Description	Wz (lb)	a	b	c	Lateral Fs (lb)	R: 1.50
0.00		0.00	0.00	0.00	0.00	0.00	
5.00		1470.9	0.00	0.03	0.02	19.93	
10.00		1446.6	0.01	0.05	0.03	28.87	
15.00		1422.3	0.01	0.06	0.03	33.28	
20.00		1398.0	0.02	0.07	0.04	35.40	
25.00		1373.7	0.03	0.07	0.04	36.33	
30.00		1349.4	0.05	0.07	0.04	36.67	
35.00		1325.1	0.07	0.07	0.04	36.76	
40.00		1300.8	0.09	0.07	0.04	36.80	
44.00	Bot - Section 2	1023.1	0.11	0.07	0.04	29.41	
45.00		479.48	0.11	0.07	0.04	13.84	
50.00	Top - Section 1	2370.0	0.14	0.07	0.03	69.71	
55.00		1096.5	0.17	0.07	0.03	32.74	
60.00		1075.3	0.20	0.06	0.02	32.27	
65.00		1054.0	0.23	0.06	0.02	31.22	
70.00		1032.7	0.27	0.05	0.01	29.28	
75.00		1011.5	0.31	0.04	0.01	26.11	
80.00		990.25	0.35	0.03	0.01	21.36	
85.00		968.99	0.40	0.02	0.01	14.86	
88.75	Bot - Section 3	712.79	0.43	0.01	0.01	6.67	
90.00		388.70	0.45	0.00	0.01	2.78	
94.00	Top - Section 2	1229.1	0.49	-0.01	0.01	-0.48	
95.00		120.21	0.50	-0.02	0.01	-0.28	
100.00		592.82	0.55	-0.04	0.01	-7.14	
105.00		579.15	0.61	-0.06	0.02	-11.97	
110.00		565.48	0.67	-0.08	0.02	-15.38	
115.00		551.81	0.73	-0.10	0.04	-17.18	
120.00		538.14	0.80	-0.11	0.05	-17.43	
125.00		524.47	0.86	-0.12	0.07	-16.24	
130.00		510.80	0.93	-0.12	0.10	-13.79	
134.50	Bot - Section 4	448.03	1.00	-0.11	0.13	-9.55	
135.00		87.88	1.01	-0.11	0.13	-1.81	
138.75	Top - Section 3	651.32	1.06	-0.09	0.17	-9.22	
140.00		94.49	1.08	-0.08	0.18	-1.11	
145.00		371.30	1.16	-0.03	0.23	-0.18	
150.00		360.66	1.24	0.05	0.29	4.74	
155.00		350.03	1.33	0.16	0.36	10.23	
160.00		339.40	1.41	0.31	0.45	16.20	
165.00		328.76	1.50	0.51	0.55	22.61	
170.00		318.13	1.60	0.77	0.66	29.39	
175.00	Appurtenance(s)	2364.0	1.69	1.09	0.80	280.36	
177.50	Appurtenance(s)	635.76	1.74	1.28	0.88	84.37	
180.00		147.10	1.79	1.49	0.96	21.70	
185.00	Appurtenance(s)	4139.0	1.89	1.98	1.14	741.29	
	Totals:	**39,138.8**				**1,663.4**	**Total Wind:** **24,069.1**

Seismic Base Shear is Less Than 50% of Wind Force - An Analysis is NOT Required

Copyright © 2020 by Tower Engineering Solutions, LLC. All rights reserved.

Calculated Forces

Structure:	CT04169-A-2-SBA	**Code:**	EIA/TIA-222-G	12/18/2020	
Site Name:	Higganum	**Exposure:**	B		
Height:	185.00 (ft)	**Crest Height:**	0.00		
Base Elev:	0.000 (ft)	**Site Class:**	C - Very Dense Soil		
Gh:	1.1	**Topography:** 1	**Struct Class:**	II	Page: 21

Tower Engineering Solutions

Load Case: 1.2D + 1.0E

Iterations 24

Gust Response Factor	1.10			**Sds**	0.14			**Ss**	0.18
Dead Load Factor	1.20	**Seismic Load Factor**	1.00	**Sd1**	0.07			**S1**	0.06
Wind Load Factor	0.00	**Structure Frequency (f1)**	0.31	**SA**	0.02	**Seismic Importance Factor**			1.00

Seg Elev (ft)	Pu FY (-) (kips)	Vu FX (-) (kips)	Tu MY (-) (ft-kips)	Mu MZ (ft-kips)	Mu MX (ft-kips)	Resultant Moment (ft-kips)	phi Pn (kips)	phi Vn (kips)	phi Tn (ft-kips)	phi Mn (ft-kips)	Total Deflect (in)	Rotation Sway (deg)	Rotation Twist (deg)	Stress Ratio
0.00	-50.30	-1.79	0.00	-257.35	0.00	257.35	6281.65	3140.82	14160.7	7090.90		0.00	0.00	0.044
5.00	-48.49	-1.78	0.00	-248.40	0.00	248.40	6207.52	3103.76	13762.2	6891.36		0.01	-0.01	0.044
10.00	-46.66	-1.76	0.00	-239.51	0.00	239.51	6132.44	3066.22	13367.2	6693.54		0.02	-0.02	0.043
15.00	-44.86	-1.73	0.00	-230.72	0.00	230.72	6056.39	3028.19	12975.7	6497.50		0.05	-0.03	0.043
20.00	-43.08	-1.70	0.00	-222.06	0.00	222.06	5979.38	2989.69	12587.8	6303.28		0.09	-0.04	0.042
25.00	-41.34	-1.68	0.00	-213.54	0.00	213.54	5901.42	2950.71	12203.7	6110.94		0.14	-0.06	0.042
30.00	-39.62	-1.64	0.00	-205.16	0.00	205.16	5822.49	2911.25	11823.5	5920.54		0.21	-0.07	0.041
35.00	-37.94	-1.61	0.00	-196.94	0.00	196.94	5733.46	2866.73	11429.0	5722.99		0.29	-0.08	0.041
40.00	-36.28	-1.58	0.00	-188.87	0.00	188.87	5627.33	2813.67	11007.6	5512.03		0.37	-0.09	0.041
44.00	-34.98	-1.55	0.00	-182.54	0.00	182.54	5542.43	2771.21	10676.3	5346.11		0.46	-0.10	0.040
45.00	-34.38	-1.54	0.00	-180.99	0.00	180.99	5521.20	2760.60	10594.3	5305.03		0.48	-0.10	0.040
50.00	-31.44	-1.47	0.00	-173.28	0.00	173.28	4722.80	2361.40	9081.59	4547.54		0.59	-0.12	0.045
55.00	-30.03	-1.45	0.00	-165.91	0.00	165.91	4656.60	2328.30	8780.72	4396.89		0.72	-0.13	0.044
60.00	-28.64	-1.42	0.00	-158.68	0.00	158.68	4589.45	2294.72	8483.02	4247.81		0.86	-0.14	0.044
65.00	-27.28	-1.39	0.00	-151.60	0.00	151.60	4521.33	2260.66	8188.59	4100.38		1.01	-0.15	0.043
70.00	-25.95	-1.36	0.00	-144.65	0.00	144.65	4452.25	2226.13	7897.53	3954.63		1.18	-0.17	0.042
75.00	-24.64	-1.34	0.00	-137.85	0.00	137.85	4370.60	2185.30	7589.78	3800.53		1.37	-0.18	0.042
80.00	-23.35	-1.32	0.00	-131.16	0.00	131.16	4277.74	2138.87	7269.08	3639.94		1.57	-0.20	0.041
85.00	-22.09	-1.30	0.00	-124.57	0.00	124.57	4184.88	2092.44	6955.30	3482.82		1.78	-0.21	0.041
88.75	-21.17	-1.30	0.00	-119.68	0.00	119.68	4115.23	2057.61	6724.50	3367.25		1.95	-0.22	0.041
90.00	-20.68	-1.29	0.00	-118.06	0.00	118.06	4092.01	2046.01	6648.44	3329.16		2.01	-0.23	0.041
94.00	-19.12	-1.29	0.00	-112.88	0.00	112.88	2345.44	1172.72	3825.50	1915.59		2.21	-0.24	0.067
95.00	-18.96	-1.29	0.00	-111.59	0.00	111.59	2339.01	1169.51	3797.57	1901.61		2.26	-0.24	0.067
100.00	-18.15	-1.30	0.00	-105.12	0.00	105.12	2306.26	1153.13	3658.43	1831.93		2.52	-0.26	0.065
105.00	-17.36	-1.30	0.00	-98.63	0.00	98.63	2272.55	1136.28	3520.24	1762.74		2.81	-0.29	0.064
110.00	-16.59	-1.30	0.00	-92.13	0.00	92.13	2237.88	1118.94	3383.12	1694.08		3.12	-0.31	0.062
115.00	-15.83	-1.31	0.00	-85.61	0.00	85.61	2202.25	1101.13	3247.17	1626.00		3.46	-0.33	0.060
120.00	-15.09	-1.31	0.00	-79.09	0.00	79.09	2165.66	1082.83	3112.49	1558.56		3.82	-0.35	0.058
125.00	-14.36	-1.31	0.00	-72.55	0.00	72.55	2128.11	1064.06	2979.20	1491.82		4.20	-0.38	0.055
130.00	-13.65	-1.31	0.00	-66.01	0.00	66.01	2089.60	1044.80	2847.40	1425.82		4.61	-0.40	0.053
134.50	-13.03	-1.31	0.00	-60.13	0.00	60.13	2054.12	1027.06	2730.15	1367.10		4.99	-0.42	0.050
135.00	-12.91	-1.31	0.00	-59.48	0.00	59.48	2050.13	1025.07	2717.20	1360.62		5.04	-0.42	0.050
138.75	-12.06	-1.30	0.00	-54.57	0.00	54.57	1362.09	681.04	1798.87	900.77		5.37	-0.44	0.069
140.00	-11.92	-1.31	0.00	-52.95	0.00	52.95	1356.31	678.16	1778.61	890.62		5.49	-0.44	0.068
145.00	-11.38	-1.31	0.00	-46.42	0.00	46.42	1332.67	666.33	1697.93	850.23		5.96	-0.47	0.063
150.00	-10.85	-1.30	0.00	-39.89	0.00	39.89	1308.18	654.09	1617.96	810.18		6.47	-0.49	0.058
155.00	-10.33	-1.29	0.00	-33.39	0.00	33.39	1282.83	641.42	1538.80	770.54		6.99	-0.51	0.051
160.00	-9.83	-1.27	0.00	-26.94	0.00	26.94	1256.64	628.32	1460.53	731.35		7.54	-0.53	0.045
165.00	-9.34	-1.25	0.00	-20.58	0.00	20.58	1229.59	614.80	1383.27	692.66		8.10	-0.55	0.037
170.00	-8.86	-1.22	0.00	-14.34	0.00	14.34	1201.70	600.85	1307.09	654.52		8.69	-0.56	0.029
175.00	-5.93	-0.91	0.00	-8.26	0.00	8.26	1172.95	586.47	1232.10	616.96		9.28	-0.57	0.018
177.50	-5.16	-0.81	0.00	-6.00	0.00	6.00	1158.25	579.13	1195.08	598.43		9.58	-0.58	0.014
180.00	-4.98	-0.79	0.00	-3.96	0.00	3.96	1143.35	571.67	1158.39	580.05		9.88	-0.58	0.011
185.00	0.00	-0.74	0.00	0.00	0.00	0.00	1112.89	556.45	1086.05	543.83		10.49	-0.58	0.000

Copyright © 2020 by Tower Engineering Solutions, LLC. All rights reserved.

Seismic Segment Forces (Factored)

Structure:	CT04169-A-2-SBA		**Code:**	EIA/TIA-222-G	12/18/2020
Site Name:	Higganum		**Exposure:**	B	
Height:	185.00 (ft)		**Crest Height:**	0.00	
Base Elev:	0.000 (ft)		**Site Class:**	C - Very Dense Soil	
Gh:	1.1	**Topography:** 1	**Struct Class:**	II	Page: 22

Tower Engineering Solutions

Load Case:	0.9D + 1.0E					**Iterations**	24
Gust Response Factor	1.10			**Sds**	0.14	**Ss**	0.18
Dead Load Factor	0.90	**Seismic Load Factor**	1.00	**Sd1**	0.07	**S1**	0.06
Wind Load Factor	0.00	**Structure Frequency (f1)**	0.31	**SA**	0.02	**Seismic Importance Factor**	1.00

Top Elev (ft)	Description	Wz (lb)	a	b	c	Lateral Fs (lb)	R: 1.50
0.00		0.00	0.00	0.00	0.00	0.00	
5.00		1470.9	0.00	0.03	0.02	19.93	
10.00		1446.6	0.01	0.05	0.03	28.87	
15.00		1422.3	0.01	0.06	0.03	33.28	
20.00		1398.0	0.02	0.07	0.04	35.40	
25.00		1373.7	0.03	0.07	0.04	36.33	
30.00		1349.4	0.05	0.07	0.04	36.67	
35.00		1325.1	0.07	0.07	0.04	36.76	
40.00		1300.8	0.09	0.07	0.04	36.80	
44.00	Bot - Section 2	1023.1	0.11	0.07	0.04	29.41	
45.00		479.48	0.11	0.07	0.04	13.84	
50.00	Top - Section 1	2370.0	0.14	0.07	0.03	69.71	
55.00		1096.5	0.17	0.07	0.03	32.74	
60.00		1075.3	0.20	0.06	0.02	32.27	
65.00		1054.0	0.23	0.06	0.02	31.22	
70.00		1032.7	0.27	0.05	0.01	29.28	
75.00		1011.5	0.31	0.04	0.01	26.11	
80.00		990.25	0.35	0.03	0.01	21.36	
85.00		968.99	0.40	0.02	0.01	14.86	
88.75	Bot - Section 3	712.79	0.43	0.01	0.01	6.67	
90.00		388.70	0.45	0.00	0.01	2.78	
94.00	Top - Section 2	1229.1	0.49	-0.01	0.01	-0.48	
95.00		120.21	0.50	-0.02	0.01	-0.28	
100.00		592.82	0.55	-0.04	0.01	-7.14	
105.00		579.15	0.61	-0.06	0.02	-11.97	
110.00		565.48	0.67	-0.08	0.02	-15.38	
115.00		551.81	0.73	-0.10	0.04	-17.18	
120.00		538.14	0.80	-0.11	0.05	-17.43	
125.00		524.47	0.86	-0.12	0.07	-16.24	
130.00		510.80	0.93	-0.12	0.10	-13.79	
134.50	Bot - Section 4	448.03	1.00	-0.11	0.13	-9.55	
135.00		87.88	1.01	-0.11	0.13	-1.81	
138.75	Top - Section 3	651.32	1.06	-0.09	0.17	-9.22	
140.00		94.49	1.08	-0.08	0.18	-1.11	
145.00		371.30	1.16	-0.03	0.23	-0.18	
150.00		360.66	1.24	0.05	0.29	4.74	
155.00		350.03	1.33	0.16	0.36	10.23	
160.00		339.40	1.41	0.31	0.45	16.20	
165.00		328.76	1.50	0.51	0.55	22.61	
170.00		318.13	1.60	0.77	0.66	29.39	
175.00	Appurtenance(s)	2364.0	1.69	1.09	0.80	280.36	
177.50	Appurtenance(s)	635.76	1.74	1.28	0.88	84.37	
180.00		147.10	1.79	1.49	0.96	21.70	
185.00	Appurtenance(s)	4139.0	1.89	1.98	1.14	741.29	
	Totals:	**39,138.8**				**1,663.4**	**Total Wind:** **24,069.1**

Seismic Base Shear is Less Than 50% of Wind Force - An Analysis is NOT Required

Copyright © 2020 by Tower Engineering Solutions, LLC. All rights reserved.

Calculated Forces

Structure:	CT04169-A-2-SBA	**Code:**	EIA/TIA-222-G	12/18/2020	
Site Name:	Higganum	**Exposure:**	B		
Height:	185.00 (ft)	**Crest Height:**	0.00		
Base Elev:	0.000 (ft)	**Site Class:**	C - Very Dense Soil		
Gh:	1.1	**Topography:** 1	**Struct Class:**	II	Page: 23

Tower Engineering Solutions

Load Case: 0.9D + 1.0E

Iterations 24

Gust Response Factor	1.10			**Sds**	0.14			**Ss**	0.18
Dead Load Factor	0.90	**Seismic Load Factor**	1.00	**Sd1**	0.07			**S1**	0.06
Wind Load Factor	0.00	**Structure Frequency (f1)**	0.31	**SA**	0.02	**Seismic Importance Factor**			1.00

Seg Elev (ft)	Pu FY (-) (kips)	Vu FX (-) (kips)	Tu MY (-) (ft-kips)	Mu MZ (ft-kips)	Mu MX (ft-kips)	Resultant Moment (ft-kips)	phi Pn (kips)	phi Vn (kips)	phi Tn (ft-kips)	phi Mn (ft-kips)	Total Deflect (in)	Rotation Sway (deg)	Rotation Twist (deg)	Stress Ratio
0.00	-37.72	-1.79	0.00	-253.84	0.00	253.84	6281.65	3140.82	14160.7	7090.90		0.00	0.00	0.042
5.00	-36.37	-1.77	0.00	-244.90	0.00	244.90	6207.52	3103.76	13762.2	6891.36		0.01	-0.01	0.041
10.00	-35.00	-1.75	0.00	-236.02	0.00	236.02	6132.44	3066.22	13367.2	6693.54		0.02	-0.02	0.041
15.00	-33.64	-1.72	0.00	-227.26	0.00	227.26	6056.39	3028.19	12975.7	6497.50		0.05	-0.03	0.041
20.00	-32.31	-1.69	0.00	-218.64	0.00	218.64	5979.38	2989.69	12587.8	6303.28		0.09	-0.04	0.040
25.00	-31.00	-1.66	0.00	-210.16	0.00	210.16	5901.42	2950.71	12203.7	6110.94		0.14	-0.05	0.040
30.00	-29.72	-1.63	0.00	-201.85	0.00	201.85	5822.49	2911.25	11823.5	5920.54		0.21	-0.07	0.039
35.00	-28.45	-1.60	0.00	-193.69	0.00	193.69	5733.46	2866.73	11429.0	5722.99		0.28	-0.08	0.039
40.00	-27.21	-1.57	0.00	-185.69	0.00	185.69	5627.33	2813.67	11007.6	5512.03		0.37	-0.09	0.039
44.00	-26.23	-1.54	0.00	-179.43	0.00	179.43	5542.43	2771.21	10676.3	5346.11		0.45	-0.10	0.038
45.00	-25.79	-1.53	0.00	-177.90	0.00	177.90	5521.20	2760.60	10594.3	5305.03		0.47	-0.10	0.038
50.00	-23.58	-1.46	0.00	-170.27	0.00	170.27	4722.80	2361.40	9081.59	4547.54		0.58	-0.11	0.042
55.00	-22.52	-1.43	0.00	-162.98	0.00	162.98	4656.60	2328.30	8780.72	4396.89		0.71	-0.13	0.042
60.00	-21.48	-1.40	0.00	-155.85	0.00	155.85	4589.45	2294.72	8483.02	4247.81		0.85	-0.14	0.041
65.00	-20.46	-1.37	0.00	-148.86	0.00	148.86	4521.33	2260.66	8188.59	4100.38		1.00	-0.15	0.041
70.00	-19.46	-1.34	0.00	-142.02	0.00	142.02	4452.25	2226.13	7897.53	3954.63		1.17	-0.17	0.040
75.00	-18.48	-1.32	0.00	-135.32	0.00	135.32	4370.60	2185.30	7589.78	3800.53		1.35	-0.18	0.040
80.00	-17.51	-1.30	0.00	-128.74	0.00	128.74	4277.74	2138.87	7269.08	3639.94		1.54	-0.19	0.039
85.00	-16.57	-1.28	0.00	-122.25	0.00	122.25	4184.88	2092.44	6955.30	3482.82		1.75	-0.21	0.039
88.75	-15.87	-1.27	0.00	-117.45	0.00	117.45	4115.23	2057.61	6724.50	3367.25		1.92	-0.22	0.039
90.00	-15.51	-1.27	0.00	-115.86	0.00	115.86	4092.01	2046.01	6648.44	3329.16		1.98	-0.22	0.039
94.00	-14.34	-1.27	0.00	-110.77	0.00	110.77	2345.44	1172.72	3825.50	1915.59		2.17	-0.23	0.064
95.00	-14.22	-1.27	0.00	-109.50	0.00	109.50	2339.01	1169.51	3797.57	1901.61		2.22	-0.24	0.064
100.00	-13.61	-1.27	0.00	-103.14	0.00	103.14	2306.26	1153.13	3658.43	1831.93		2.48	-0.26	0.062
105.00	-13.02	-1.28	0.00	-96.76	0.00	96.76	2272.55	1136.28	3520.24	1762.74		2.77	-0.28	0.061
110.00	-12.44	-1.28	0.00	-90.38	0.00	90.38	2237.88	1118.94	3383.12	1694.08		3.07	-0.30	0.059
115.00	-11.87	-1.28	0.00	-83.98	0.00	83.98	2202.25	1101.13	3247.17	1626.00		3.40	-0.33	0.057
120.00	-11.31	-1.28	0.00	-77.58	0.00	77.58	2165.66	1082.83	3112.49	1558.56		3.76	-0.35	0.055
125.00	-10.77	-1.28	0.00	-71.18	0.00	71.18	2128.11	1064.06	2979.20	1491.82		4.13	-0.37	0.053
130.00	-10.24	-1.28	0.00	-64.76	0.00	64.76	2089.60	1044.80	2847.40	1425.82		4.53	-0.39	0.050
134.50	-9.77	-1.28	0.00	-59.00	0.00	59.00	2054.12	1027.06	2730.15	1367.10		4.91	-0.41	0.048
135.00	-9.68	-1.28	0.00	-58.35	0.00	58.35	2050.13	1025.07	2717.20	1360.62		4.95	-0.41	0.048
138.75	-9.04	-1.28	0.00	-53.55	0.00	53.55	1362.09	681.04	1798.87	900.77		5.28	-0.43	0.066
140.00	-8.94	-1.28	0.00	-51.95	0.00	51.95	1356.31	678.16	1778.61	890.62		5.39	-0.43	0.065
145.00	-8.53	-1.28	0.00	-45.55	0.00	45.55	1332.67	666.33	1697.93	850.23		5.86	-0.46	0.060
150.00	-8.13	-1.28	0.00	-39.15	0.00	39.15	1308.18	654.09	1617.96	810.18		6.35	-0.48	0.055
155.00	-7.75	-1.27	0.00	-32.77	0.00	32.77	1282.83	641.42	1538.80	770.54		6.87	-0.50	0.049
160.00	-7.37	-1.25	0.00	-26.44	0.00	26.44	1256.64	628.32	1460.53	731.35		7.41	-0.52	0.042
165.00	-7.00	-1.22	0.00	-20.20	0.00	20.20	1229.59	614.80	1383.27	692.66		7.96	-0.54	0.035
170.00	-6.64	-1.19	0.00	-14.08	0.00	14.08	1201.70	600.85	1307.09	654.52		8.54	-0.55	0.027
175.00	-4.45	-0.89	0.00	-8.12	0.00	8.12	1172.95	586.47	1232.10	616.96		9.12	-0.56	0.017
177.50	-3.87	-0.80	0.00	-5.89	0.00	5.89	1158.25	579.13	1195.08	598.43		9.41	-0.57	0.013
180.00	-3.73	-0.78	0.00	-3.89	0.00	3.89	1143.35	571.67	1158.39	580.05		9.71	-0.57	0.010
185.00	0.00	-0.74	0.00	0.00	0.00	0.00	1112.89	556.45	1086.05	543.83		10.31	-0.57	0.000

Copyright © 2020 by Tower Engineering Solutions, LLC. All rights reserved.

Wind Loading - Shaft

Structure:	CT04169-A-2-SBA		**Code:**	EIA/TIA-222-G	12/18/2020
Site Name:	Higganum		**Exposure:**	B	
Height:	185.00 (ft)		**Crest Height:**	0.00	
Base Elev:	0.000 (ft)		**Site Class:**	C - Very Dense Soil	
Gh:	1.1	**Topography:** 1	**Struct Class:**	II	Page: 24

Tower Engineering Solutions

Load Case: 1.0D + 1.0W 60 mph Wind

Dead Load Factor 1.00

Wind Load Factor 1.00

Iterations 25

Elev (ft)	Description	Kzt	Kz	qz (psf)	qzGh (psf)	C (mph-ft)	Cf	Ice Thick (in)	Tributary (ft)	Aa (sf)	CfAa (sf)	Wind Force X (lb)	Dead Load Ice (lb)	Tot Dead Load (lb)
0.00		1.00	0.70	6.129	6.74	235.46	0.650	0.000	0.00	0.000	0.00	0.0	0.0	0.0
5.00		1.00	0.70	6.129	6.74	231.63	0.650	0.000	5.00	23.262	15.12	101.9	0.0	1471.0
10.00		1.00	0.70	6.129	6.74	227.81	0.650	0.000	5.00	22.881	14.87	100.3	0.0	1446.7
15.00		1.00	0.70	6.129	6.74	223.99	0.650	0.000	5.00	22.500	14.63	98.6	0.0	1422.4
20.00		1.00	0.70	6.129	6.74	220.16	0.650	0.000	5.00	22.119	14.38	96.9	0.0	1398.1
25.00		1.00	0.70	6.129	6.74	216.34	0.650	0.000	5.00	21.738	14.13	95.3	0.0	1373.7
30.00		1.00	0.70	6.134	6.75	212.61	0.650	0.000	5.00	21.357	13.88	93.7	0.0	1349.4
35.00		1.00	0.73	6.410	7.05	213.43	0.650	0.000	5.00	20.977	13.63	96.1	0.0	1325.1
40.00		1.00	0.76	6.659	7.33	213.55	0.650	0.000	5.00	20.596	13.39	98.1	0.0	1300.8
44.00	Bot - Section 2	1.00	0.78	6.843	7.53	213.25	0.650	0.000	4.00	16.202	10.53	79.3	0.0	1023.2
45.00		1.00	0.79	6.887	7.58	213.12	0.650	0.000	1.00	4.087	2.66	20.1	0.0	479.5
50.00	Top - Section 1	1.00	0.81	7.098	7.81	212.24	0.650	0.000	5.00	20.204	13.13	102.5	0.0	2370.1
55.00		1.00	0.83	7.294	8.02	215.03	0.650	0.000	5.00	19.823	12.89	103.4	0.0	1096.6
60.00		1.00	0.85	7.477	8.22	213.50	0.650	0.000	5.00	19.443	12.64	103.9	0.0	1075.3
65.00		1.00	0.87	7.650	8.42	211.68	0.650	0.000	5.00	19.062	12.39	104.3	0.0	1054.1
70.00		1.00	0.89	7.814	8.60	209.62	0.650	0.000	5.00	18.681	12.14	104.4	0.0	1032.8
75.00		1.00	0.91	7.969	8.77	207.34	0.650	0.000	5.00	18.300	11.90	104.3	0.0	1011.5
80.00		1.00	0.93	8.118	8.93	204.86	0.650	0.000	5.00	17.919	11.65	104.0	0.0	990.3
85.00		1.00	0.94	8.260	9.09	202.20	0.650	0.000	5.00	17.538	11.40	103.6	0.0	969.0
88.75	Bot - Section 3	1.00	0.96	8.362	9.20	200.10	0.650	0.000	3.75	12.904	8.39	77.2	0.0	712.8
90.00		1.00	0.96	8.396	9.24	199.38	0.650	0.000	1.25	4.313	2.80	25.9	0.0	388.7
94.00	Top - Section 2	1.00	0.97	8.501	9.35	197.02	0.650	0.000	4.00	13.642	8.87	82.9	0.0	1229.2
95.00		1.00	0.97	8.526	9.38	199.24	0.650	0.000	1.00	3.372	2.19	20.6	0.0	120.2
100.00		1.00	0.99	8.652	9.52	196.16	0.650	0.000	5.00	16.634	10.81	102.9	0.0	592.8
105.00		1.00	1.00	8.774	9.65	192.95	0.650	0.000	5.00	16.253	10.56	102.0	0.0	579.2
110.00		1.00	1.02	8.891	9.78	189.64	0.650	0.000	5.00	15.872	10.32	100.9	0.0	565.5
115.00		1.00	1.03	9.005	9.91	186.21	0.650	0.000	5.00	15.491	10.07	99.7	0.0	551.8
120.00		1.00	1.04	9.115	10.03	182.68	0.650	0.000	5.00	15.111	9.82	98.5	0.0	538.1
125.00		1.00	1.05	9.222	10.14	179.06	0.650	0.000	5.00	14.730	9.57	97.1	0.0	524.5
130.00		1.00	1.07	9.326	10.26	175.35	0.650	0.000	5.00	14.349	9.33	95.7	0.0	510.8
134.50	Bot - Section 4	1.00	1.08	9.417	10.36	171.94	0.650	0.000	4.50	12.588	8.18	84.8	0.0	448.0
135.00		1.00	1.08	9.427	10.37	171.55	0.650	0.000	0.50	1.398	0.91	9.4	0.0	87.9
138.75	Top - Section 3	1.00	1.09	9.501	10.45	168.66	0.650	0.000	3.75	10.365	6.74	70.4	0.0	651.3
140.00		1.00	1.09	9.525	10.48	170.00	0.650	0.000	1.25	3.407	2.21	23.2	0.0	94.5
145.00		1.00	1.10	9.621	10.58	166.06	0.650	0.000	5.00	13.391	8.70	92.1	0.0	371.3
150.00		1.00	1.11	9.715	10.69	162.05	0.650	0.000	5.00	13.011	8.46	90.4	0.0	360.7
155.00		1.00	1.12	9.806	10.79	157.98	0.650	0.000	5.00	12.630	8.21	88.6	0.0	350.0
160.00		1.00	1.13	9.896	10.89	153.84	0.650	0.000	5.00	12.249	7.96	86.7	0.0	339.4
165.00		1.00	1.14	9.983	10.98	149.64	0.650	0.000	5.00	11.868	7.71	84.7	0.0	328.8
170.00		1.00	1.15	10.069	11.08	145.37	0.650	0.000	5.00	11.487	7.47	82.7	0.0	318.1
175.00	Appurtenance(s)	1.00	1.16	10.152	11.17	141.06	0.650	0.000	5.00	11.106	7.22	80.6	0.0	307.5
177.50	Appurtenance(s)	1.00	1.16	10.194	11.21	138.88	0.650	0.000	2.50	5.410	3.52	39.4	0.0	149.8
180.00		1.00	1.17	10.234	11.26	136.68	0.650	0.000	2.50	5.315	3.45	38.9	0.0	147.1
185.00	Appurtenance(s)	1.00	1.18	10.315	11.35	132.26	0.650	0.000	5.00	10.345	6.72	76.3	0.0	286.2
								Totals:	**185.00**			**3,562.0**		**32,743.5**

Copyright © 2020 by Tower Engineering Solutions, LLC. All rights reserved.

Discrete Appurtenance Forces

Structure:	CT04169-A-2-SBA		**Code:**	EIA/TIA-222-G	12/18/2020
Site Name:	Higganum		**Exposure:**	B	
Height:	185.00 (ft)		**Crest Height:**	0.00	
Base Elev:	0.000 (ft)		**Site Class:**	C - Very Dense Soil	
Gh:	1.1	**Topography:** 1	**Struct Class:**	II	Page: 25

Tower Engineering Solutions

Load Case: 1.0D + 1.0W 60 mph Wind

Dead Load Factor 1.00

Wind Load Factor 1.00

Iterations 25

No.	Elev (ft)	Description	Qty	qz (psf)	qzGh (psf)	Orient Factor x Ka	Ka	Total CaAa (sf)	Dead Load (lb)	Horiz Ecc (ft)	Vert Ecc (ft)	Wind FX (lb)	Mom Y (lb-ft)	Mom Z (lb-ft)
1	185.00	Lightning Rod	1	10.370	11.407	1.00	1.00	1.05	35.00	0.000	3.500	11.98	0.00	41.92
2	185.00	Ericsson 4449 B71 + B85	3	10.315	11.346	0.50	0.75	2.97	219.60	0.000	0.000	33.70	0.00	0.00
3	185.00	ALU 800 MHz RRH	3	10.315	11.346	0.50	0.75	3.75	159.00	0.000	0.000	42.59	0.00	0.00
4	185.00	Ericsson 4415 B25 RRU	3	10.315	11.346	0.50	0.75	2.80	138.90	0.000	0.000	31.81	0.00	0.00
5	185.00	RFS ACU-A20-N RET	4	10.315	11.346	0.59	0.75	0.33	4.00	0.000	0.000	3.76	0.00	0.00
6	185.00	AIR6449 B41	3	10.315	11.346	0.53	0.75	9.03	309.00	0.000	0.000	102.41	0.00	0.00
7	185.00	APXVAALL24_43-U-NA20	3	10.315	11.346	0.55	0.75	33.24	297.00	0.000	0.000	377.20	0.00	0.00
8	185.00	AIR32	3	10.315	11.346	0.65	0.75	12.74	396.60	0.000	0.000	144.59	0.00	0.00
9	185.00	Low Profile Platform	1	10.315	11.346	1.00	1.00	22.00	1500.00	0.000	0.000	249.62	0.00	0.00
10	185.00	ALU 800 MHz Filter	3	10.315	11.346	0.52	0.75	1.21	26.40	0.000	0.000	13.74	0.00	0.00
11	185.00	SitePro1 PRK 1245L	1	10.315	11.346	1.00	1.00	9.50	464.91	0.000	0.000	107.79	0.00	0.00
12	185.00	SitePro1 HRK14	1	10.315	11.346	1.00	1.00	8.13	302.36	0.000	0.000	92.24	0.00	0.00
13	177.50	Collar Mount (Andrew	1	10.194	11.213	0.56	0.75	2.81	150.00	0.000	0.000	31.54	0.00	0.00
14	177.50	Raycap DC6-48-60-18-8F	1	10.194	11.213	0.72	0.80	1.58	31.80	0.000	0.000	17.76	0.00	0.00
15	177.50	Ericsson RRU11	6	10.194	11.213	0.57	0.80	8.76	304.20	0.000	0.000	98.21	0.00	0.00
16	175.00	KMW	3	10.152	11.168	0.63	0.80	15.21	145.50	0.000	0.000	169.81	0.00	0.00
17	175.00	Powerwave 7770	6	10.152	11.168	0.62	0.80	20.36	210.00	0.000	0.000	227.43	0.00	0.00
18	175.00	Powerwave LGP21401	12	10.152	11.168	0.48	0.80	6.34	169.20	0.000	0.000	70.76	0.00	0.00
19	175.00	Powerwave LGP13519	6	10.152	11.168	0.48	0.80	0.37	31.80	0.000	0.000	4.18	0.00	0.00
20	175.00	Low Profile Platform	1	10.152	11.168	0.00	1.00	22.00	1500.00	0.000	0.000	245.69	0.00	0.00
							Totals:		**6,395.27**			**2,076.80**		

Copyright © 2020 by Tower Engineering Solutions, LLC. All rights reserved.

Total Applied Force Summary

Structure:	CT04169-A-2-SBA		**Code:**	EIA/TIA-222-G	12/18/2020
Site Name:	Higganum		**Exposure:**	B	
Height:	185.00 (ft)		**Crest Height:**	0.00	
Base Elev:	0.000 (ft)		**Site Class:**	C - Very Dense Soil	
Gh:	1.1	**Topography:** 1	**Struct Class:**	II	Page: 26

Tower Engineering Solutions

Load Case: 1.0D + 1.0W 60 mph Wind

Dead Load Factor 1.00

Wind Load Factor 1.00

Iterations 25

Elev (ft)	Description	Lateral FX (-) (lb)	Axial FY (-) (lb)	Torsion MY (lb-ft)	Moment MZ (lb-ft)
0.00		0.00	0.00	0.00	0.00
5.00		101.93	1502.91	0.00	0.00
10.00		100.26	1526.52	0.00	0.00
15.00		98.59	1502.21	0.00	0.00
20.00		96.93	1477.91	0.00	0.00
25.00		95.26	1453.61	0.00	0.00
30.00		93.67	1429.30	0.00	0.00
35.00		96.14	1405.00	0.00	0.00
40.00		98.06	1380.70	0.00	0.00
44.00		79.28	1087.06	0.00	0.00
45.00		20.12	495.46	0.00	0.00
50.00		102.53	2449.94	0.00	0.00
55.00		103.38	1176.44	0.00	0.00
60.00		103.94	1155.18	0.00	0.00
65.00		104.27	1133.91	0.00	0.00
70.00		104.37	1112.65	0.00	0.00
75.00		104.28	1091.38	0.00	0.00
80.00		104.01	1070.11	0.00	0.00
85.00		103.58	1048.85	0.00	0.00
88.75		77.15	772.68	0.00	0.00
90.00		25.89	408.66	0.00	0.00
94.00		82.92	1293.04	0.00	0.00
95.00		20.56	136.18	0.00	0.00
100.00		102.90	672.68	0.00	0.00
105.00		101.96	659.01	0.00	0.00
110.00		100.90	645.34	0.00	0.00
115.00		99.74	631.67	0.00	0.00
120.00		98.48	618.00	0.00	0.00
125.00		97.12	604.33	0.00	0.00
130.00		95.68	590.66	0.00	0.00
134.50		84.76	519.90	0.00	0.00
135.00		9.42	95.86	0.00	0.00
138.75		70.41	711.21	0.00	0.00
140.00		23.21	114.45	0.00	0.00
145.00		92.12	451.16	0.00	0.00
150.00		90.37	440.52	0.00	0.00
155.00		88.55	429.89	0.00	0.00
160.00		86.67	419.26	0.00	0.00
165.00		84.71	408.62	0.00	0.00
170.00		82.70	397.99	0.00	0.00
175.00	(28) attachments	798.48	2443.86	0.00	0.00
177.50	(8) attachments	186.94	642.92	0.00	0.00
180.00		38.89	154.26	0.00	0.00
185.00	(29) attachments	1287.72	4153.31	0.00	41.92
	Totals:	**5,638.84**	**41,914.62**	**0.00**	**41.92**

Copyright © 2020 by Tower Engineering Solutions, LLC. All rights reserved.

Calculated Forces

Structure:	CT04169-A-2-SBA	**Code:**	EIA/TIA-222-G	12/18/2020	
Site Name:	Higganum	**Exposure:**	B		
Height:	185.00 (ft)	**Crest Height:**	0.00		
Base Elev:	0.000 (ft)	**Site Class:**	C - Very Dense Soil		
Gh:	1.1 **Topography:** 1	**Struct Class:**	II	Page: 27	

Tower Engineering Solutions

Load Case: 1.0D + 1.0W 60 mph Wind

Dead Load Factor 1.00

Wind Load Factor 1.00

Iterations 25

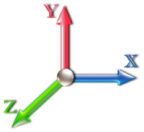

Seg Elev (ft)	Pu FY (-) (kips)	Vu FX (-) (kips)	Tu MY (-) (ft-kips)	Mu MZ (ft-kips)	Mu MX (ft-kips)	Resultant Moment (ft-kips)	phi Pn (kips)	phi Vn (kips)	phi Tn (ft-kips)	phi Mn (ft-kips)	Total Deflect (in)	Rotation Sway (deg)	Rotation Twist (deg)	Stress Ratio
0.00	-41.91	-5.65	0.00	-732.07	0.00	732.07	6281.65	3140.82	14160.7	7090.90	0.00	0.000	0.000	0.110
5.00	-40.41	-5.57	0.00	-703.82	0.00	703.82	6207.52	3103.76	13762.2	6891.36	0.02	-0.031	0.000	0.109
10.00	-38.88	-5.49	0.00	-675.97	0.00	675.97	6132.44	3066.22	13367.2	6693.54	0.07	-0.062	0.000	0.107
15.00	-37.37	-5.41	0.00	-648.53	0.00	648.53	6056.39	3028.19	12975.7	6497.50	0.15	-0.093	0.000	0.106
20.00	-35.89	-5.33	0.00	-621.49	0.00	621.49	5979.38	2989.69	12587.8	6303.28	0.26	-0.125	0.000	0.105
25.00	-34.44	-5.25	0.00	-594.84	0.00	594.84	5901.42	2950.71	12203.7	6110.94	0.41	-0.157	0.000	0.103
30.00	-33.00	-5.17	0.00	-568.60	0.00	568.60	5822.49	2911.25	11823.5	5920.54	0.59	-0.189	0.000	0.102
35.00	-31.60	-5.09	0.00	-542.75	0.00	542.75	5733.46	2866.73	11429.0	5722.99	0.81	-0.221	0.000	0.100
40.00	-30.21	-5.00	0.00	-517.31	0.00	517.31	5627.33	2813.67	11007.6	5512.03	1.05	-0.254	0.000	0.099
44.00	-29.13	-4.92	0.00	-497.32	0.00	497.32	5542.43	2771.21	10676.3	5346.11	1.28	-0.280	0.000	0.098
45.00	-28.63	-4.91	0.00	-492.39	0.00	492.39	5521.20	2760.60	10594.3	5305.03	1.34	-0.287	0.000	0.098
50.00	-26.18	-4.81	0.00	-467.84	0.00	467.84	4722.80	2361.40	9081.59	4547.54	1.66	-0.320	0.000	0.108
55.00	-25.00	-4.71	0.00	-443.80	0.00	443.80	4656.60	2328.30	8780.72	4396.89	2.01	-0.354	0.000	0.106
60.00	-23.84	-4.62	0.00	-420.22	0.00	420.22	4589.45	2294.72	8483.02	4247.81	2.40	-0.390	0.000	0.104
65.00	-22.70	-4.52	0.00	-397.13	0.00	397.13	4521.33	2260.66	8188.59	4100.38	2.83	-0.426	0.000	0.102
70.00	-21.59	-4.42	0.00	-374.53	0.00	374.53	4452.25	2226.13	7897.53	3954.63	3.29	-0.462	0.000	0.100
75.00	-20.50	-4.32	0.00	-352.43	0.00	352.43	4370.60	2185.30	7589.78	3800.53	3.80	-0.499	0.000	0.097
80.00	-19.42	-4.22	0.00	-330.82	0.00	330.82	4277.74	2138.87	7269.08	3639.94	4.34	-0.535	0.000	0.095
85.00	-18.37	-4.12	0.00	-309.73	0.00	309.73	4184.88	2092.44	6955.30	3482.82	4.92	-0.572	0.000	0.093
88.75	-17.60	-4.04	0.00	-294.29	0.00	294.29	4115.23	2057.61	6724.50	3367.25	5.38	-0.599	0.000	0.092
90.00	-17.19	-4.01	0.00	-289.25	0.00	289.25	4092.01	2046.01	6648.44	3329.16	5.54	-0.608	0.000	0.091
94.00	-15.90	-3.92	0.00	-273.20	0.00	273.20	2345.44	1172.72	3825.50	1915.59	6.06	-0.638	0.000	0.149
95.00	-15.76	-3.91	0.00	-269.28	0.00	269.28	2339.01	1169.51	3797.57	1901.61	6.19	-0.645	0.000	0.148
100.00	-15.09	-3.81	0.00	-249.75	0.00	249.75	2306.26	1153.13	3658.43	1831.93	6.90	-0.698	0.000	0.143
105.00	-14.42	-3.71	0.00	-230.70	0.00	230.70	2272.55	1136.28	3520.24	1762.74	7.66	-0.751	0.000	0.137
110.00	-13.78	-3.62	0.00	-212.14	0.00	212.14	2237.88	1118.94	3383.12	1694.08	8.47	-0.803	0.000	0.131
115.00	-13.14	-3.52	0.00	-194.06	0.00	194.06	2202.25	1101.13	3247.17	1626.00	9.34	-0.855	0.000	0.125
120.00	-12.52	-3.42	0.00	-176.47	0.00	176.47	2165.66	1082.83	3112.49	1558.56	10.26	-0.905	0.000	0.119
125.00	-11.92	-3.32	0.00	-159.36	0.00	159.36	2128.11	1064.06	2979.20	1491.82	11.24	-0.955	0.000	0.112
130.00	-11.33	-3.23	0.00	-142.74	0.00	142.74	2089.60	1044.80	2847.40	1425.82	12.26	-1.003	0.000	0.106
134.50	-10.81	-3.14	0.00	-128.21	0.00	128.21	2054.12	1027.06	2730.15	1367.10	13.23	-1.045	0.000	0.099
135.00	-10.71	-3.13	0.00	-126.65	0.00	126.65	2050.13	1025.07	2717.20	1360.62	13.34	-1.050	0.000	0.098
138.75	-10.00	-3.05	0.00	-114.91	0.00	114.91	1362.09	681.04	1798.87	900.77	14.18	-1.084	0.000	0.135
140.00	-9.88	-3.03	0.00	-111.09	0.00	111.09	1356.31	678.16	1778.61	890.62	14.46	-1.095	0.000	0.132
145.00	-9.43	-2.94	0.00	-95.94	0.00	95.94	1332.67	666.33	1697.93	850.23	15.64	-1.147	0.000	0.120
150.00	-8.99	-2.85	0.00	-81.25	0.00	81.25	1308.18	654.09	1617.96	810.18	16.86	-1.195	0.000	0.107
155.00	-8.56	-2.75	0.00	-67.02	0.00	67.02	1282.83	641.42	1538.80	770.54	18.14	-1.239	0.000	0.094
160.00	-8.14	-2.66	0.00	-53.24	0.00	53.24	1256.64	628.32	1460.53	731.35	19.46	-1.278	0.000	0.079
165.00	-7.73	-2.57	0.00	-39.92	0.00	39.92	1229.59	614.80	1383.27	692.66	20.82	-1.312	0.000	0.064
170.00	-7.34	-2.49	0.00	-27.05	0.00	27.05	1201.70	600.85	1307.09	654.52	22.21	-1.338	0.000	0.047
175.00	-4.91	-1.63	0.00	-14.62	0.00	14.62	1172.95	586.47	1232.10	616.96	23.62	-1.356	0.000	0.028
177.50	-4.27	-1.43	0.00	-10.55	0.00	10.55	1158.25	579.13	1195.08	598.43	24.33	-1.363	0.000	0.021
180.00	-4.12	-1.39	0.00	-6.97	0.00	6.97	1143.35	571.67	1158.39	580.05	25.05	-1.367	0.000	0.016
185.00	0.00	-1.29	0.00	-0.04	0.00	0.04	1112.89	556.45	1086.05	543.83	26.48	-1.371	0.000	0.000

Copyright © 2020 by Tower Engineering Solutions, LLC. All rights reserved.

Final Analysis Summary

Structure:	CT04169-A-2-SBA		**Code:**	EIA/TIA-222-G	12/18/2020
Site Name:	Higganum		**Exposure:**	B	
Height:	185.00 (ft)		**Crest Height:**	0.00	
Base Elev:	0.000 (ft)		**Site Class:**	C - Very Dense Soil	
Gh:	1.1	**Topography:** 1	**Struct Class:**	II	Page: 28

Tower Engineering Solutions

Reactions

Load Case	Shear FX (kips)	Shear FZ (kips)	Axial FY (kips)	Moment MX (ft-kips)	Moment MY (ft-kips)	Moment MZ (ft-kips)
1.2D + 1.6W 98 mph Wind	24.1	0.00	50.27	0.00	0.00	3147.22
0.9D + 1.6W 98 mph Wind	24.1	0.00	37.70	0.00	0.00	3108.06
1.2D + 1.0Di + 1.0Wi 50 mph Wind	7.1	0.00	72.97	0.00	0.00	923.20
1.2D + 1.0E	1.8	0.00	50.30	0.00	0.00	257.35
0.9D + 1.0E	1.8	0.00	37.72	0.00	0.00	253.84
1.0D + 1.0W 60 mph Wind	5.6	0.00	41.91	0.00	0.00	732.07

Max Stresses

Load Case	Pu FY (-) (kips)	Vu FX (-) (kips)	Tu MY (-) (ft-kips)	Mu MZ (ft-kips)	Mu MX (ft-kips)	Resultant Moment (ft-kips)	phi Pn (kips)	phi Vn (kips)	phi Tn (ft-kips)	phi Mn (ft-kips)	Elev (ft)	Stress Ratio
1.2D + 1.6W 98 mph Wind	-18.34	-16.88	0.00	-1177.9	0.00	-1177.9	2345.44	1172.7	3825.50	1915.59	94.00	0.623
0.9D + 1.6W 98 mph Wind	-13.57	-16.64	0.00	-1155.3	0.00	-1155.3	2345.44	1172.7	3825.50	1915.59	94.00	0.609
1.2D + 1.0Di + 1.0Wi 50 mph Wind	-33.04	-4.97	0.00	-340.53	0.00	-340.53	2345.44	1172.7	3825.50	1915.59	94.00	0.192
1.2D + 1.0E	-12.06	-1.30	0.00	-54.57	0.00	-54.57	1362.09	681.04	1798.87	900.77	138.75	0.069
0.9D + 1.0E	-9.04	-1.28	0.00	-53.55	0.00	-53.55	1362.09	681.04	1798.87	900.77	138.75	0.066
1.0D + 1.0W 60 mph Wind	-15.90	-3.92	0.00	-273.20	0.00	-273.20	2345.44	1172.7	3825.50	1915.59	94.00	0.149

Copyright © 2020 by Tower Engineering Solutions, LLC. All rights reserved.

Base Plate Summary

Structure:	CT04169-A-2-		**Code:**	EIA/TIA-222-G	12/18/2020
Site Name:	Higganum		**Exposure:**	B	
Height:	185.00 (ft)		**Crest Height:**	0.00	
Base Elev:	0.000 (ft)		**Site Class:**	C - Very Dense Soil	
Gh:	1.1	**Topography:** 1	**Struct Class:**	II	Page: 29

Tower Engineering Solutions

Reactions

Original Design	
Moment (kip-ft):	5025.00
Axial (kip):	41.00
Shear (kip):	39.00

Analysis (1.2D + 1.6W)	
Moment (kip-ft):	3147.22
Axial (kip):	50.27
Shear (kip):	24.13

Base Plate

Yield (ksi):	50.00
Width (in):	67.00
Style:	Clipped
Polygon Sides:	0.00
Clip Length (in):	15.00
Effective Len (in):	6.58
Moment (kip-in):	334.01
Allow Stress (ksi):	67.50
Applied Stress (ksi):	40.50
Stress Ratio:	0.60

Anchor Bolts

Bolt Circle:	63.00
Number Bolts:	28.00
Bolt Type:	2.25" 18J
Bolt Diameter (in):	2.25
Yield (ksi):	75.00
Ultimate (ksi):	100.00
Arrangement:	Clustered
Cluster Dist (in):	6.00
Start Angle (deg):	45.00

Compression	
Force (kip):	88.24
Allowable (kip):	260.00
Ratio:	0.35

Tension	
Force (kip):	83.03
Allowable (kip):	260.00
Ratio:	0.33

Copyright © 2020 by Tower Engineering Solutions, LLC. All rights reserved.

Monopole Mat Foundation Design

			Date
			7/30/2020
Customer Name:	SBA Communcations Corp	**EIA/TIA Standard:**	EIA-222-G
Site Name:	Higganum	**Structure Height (Ft.):**	
Site Number:	CT04169-A-2-SBA	**Engineer Name:**	T. Alajaj
Engr. Number:		**Engineer Login ID:**	

Foundation Info Obtained from:	Mapping Operation
Structure Type:	Monopole
Analysis or Design?	Analysis

Base Reactions (Factored):

Axial Load (Kips):	50.3	Shear Force (Kips):	24.1
Uplift Force (Kips):	0.0	Moment (Kips-ft):	3147.2
Allowable overstress %:	5.0%		

Foundation Geometries:

		Mods required -Yes/No ?:	No
Anchor Bolt Circle (ft.):	5.25	Depth of Base BG (ft.):	4.50
Thickness of Pad (ft):	5.00		
Length of Pad (ft.):	28	Width of Pad (ft.):	28
Final Length of pad (ft)	28.0	Final width of pad (ft):	28.0

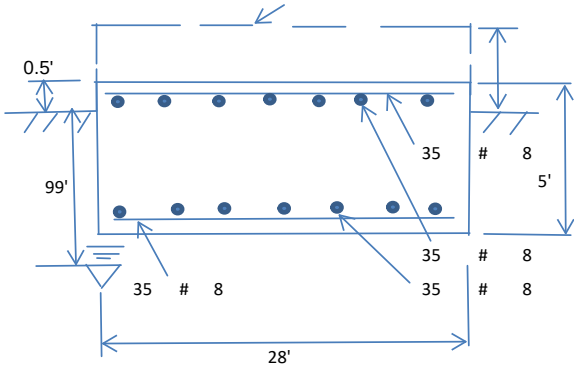

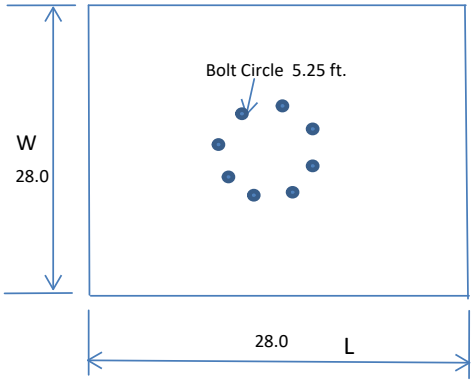

Material Properties and Reabr Info:

Concrete Strength (psi):	3000	Steel Elastic Modulus:	29000	ksi
Pad Rebar Yield (Ksi):	60	Tie Spacing (in):	12.0	
Pad Steel Rebar Size (#):	8			
Concrete Cover (in.):	3	Unit Weight of Concrete:	150.0	pcf
Rebar at the bottom of the concrete pad:				
Qty. of Rebar in Pad (L):	35	Qty. of Rebar in Pad (W):	35	
Rebar at the top of the concrete pad:				
Qty. of Rebar in Pad (L):	35	Qty. of Rebar in Pad (W):	35	
Apply 1.35 factor for e/w Per G:	1.35			

Soil Design Parameters:

Water Table B.G.S. (ft):	99.0	Unit Weight of Water:	62.4	pcf	Angle from Top of Pad:	30
Ultimate Bearing Pressure (psf):	40000	Ultimate Skin Friction:	0	Psf	Angle from Bottm of Pad:	25
Consider Friction for O.T.M. (Y/N):	No	Consider Friction for bearing (Y/N):	No		Angle from Bottm of Pad:	25
Consider soil hor. resist. for OTM.:	Yes	Reduction factor on the maximum soil bearing pressure:	1.00			

Foundation Analysis and Design:

Uplift Strength Reduction Factor:	0.75	Compression Strength Reduction Factor:	0.75
Total Dry Soil Volume (cu. Ft.):	0.00	Total Dry Soil Weight (Kips):	0.00
Total Buoyant Soil Volume (cu. Ft.):	0.00	Total Buoyant Soil Weight (Kips):	0.00
Total Effective Soil Weight (Kips):	0.00	Weight from the Concrete Block at Top (K):	0.00
Total Dry Concrete Volume (cu. Ft.):	3920.00	Total Dry Concrete Weight (Kips):	588.00
Total Buoyant Concrete Volume (cu. Ft.):	0.00	Total Buoyant Concrete Weight (Kips):	0.00
Total Effective Concrete Weight (Kips):	588.00	Total Vertical Load on Base (Kips):	638.30

Check Soil Capacities:

					Load/ Capacity Ratio	
Calculated Maxium Net Soil Pressure under the base (psf):	2043	<	Allowable Factored Soil Bearing (psf):	30000	0.07	OK!
Allowable Foundation Overturning Resistance (kips-ft.):	8113.0	>	Design Factored Momont (kips-ft):	3161	0.39	OK!
Factor of Safety Against Overturning (O. R. Moment/Design Moment):	2.57	OK!				

Check the capacities of Reinforceing Concrete:

Strength reduction factor (Flexure and axial tension):	0.90	Strength reduction factor (Shear):	0.75
Strength reduction factor (Axial compresion):	0.65	Wind Load Factor on Concrete Design:	1.00

Concrete Pad:

One-Way Design Shear Capacity (L-Direction, Kips):	1559.7	>	One-Way Factored Shear (L-D. Kips):	258.2	0.17	OK!
One-Way Design Shear Capacity (W-Direction, Kips):	1559.7	>	One-Way Factored Shear (W-D., Kips)	258.2	0.17	OK!
One-Way Design Shear Capacity (Corner-Corner. Kips):	1885.4	>	One-Way Factored Shear (C-C, Kips):	481.2	0.26	OK!
Lower Steel Pad Reinforcement Ratio (L-Direct.):	0.0015	OK!	Lower Steel Pad Reinf. Ratio (W-Direc	0.0015		
Lower Steel Pad Moment Capacity (L-Direction. Kips-ft):	6909.6	>	Moment at Bottom (L-Direct. K-Ft):	828.3	0.12	OK!
Lower Steel Pad Moment Capacity (W-Direction. Kips-ft):	6909.6	>	Moment at Bottom (W-Direct. K-Ft):	828.3	0.12	OK!
Lower Steel Pad Moment Capacity (Corner-Corner,K-ft):	9742.6	>	Moment at Bottom (C-C Dir. K-Ft):	1171.4	0.12	OK!
Upper Steel Pad Reinforcement Ratio (L-Direct.):	0.0015	OK!	Upper Steel Reinf. Ratio (W-Direct.):	0.0015		
Upper Steel Pad Moment Capacity (L-Direction. Kips-ft):	6909.6	>	Moment at the top (L-Dir Kips-Ft):	88.5	0.01	OK!
Upper Steel Pad Moment Capacity (W-Direction. Kips-ft):	6909.6	>	Moment at the top (W-Dir Kips-Ft):	88.5	0.01	OK!
Upper Steel Pad Moment Capacity (Corner-Corner. K-ft):	9742.6	>	Moment at the top (C-C Direc. K-Ft):	472.3	0.05	OK!

Pier Foundation Design For Monopole

			Date
			12/18/2020
Customer Name:	**T-Mobile Sprint**	**EIA/TIA Standard:**	EIA-222-G
Site Name:		**Structure Height (Ft.):**	185
Site Number:	CT04169-A-2-SBA	**Engineer Name:**	T. Alajaj
Engr. Number:	100513	**Engineer Login ID:**	

Foundation Info Obtained from: Drawings/Calculations

Acceptable overstress (5.0%

Structure Type: Monopole

Analysis or Design? Analysis

Base Reactions (Factored):

Axial Load (Kips):	50.3	Shear Force (Kips):	24.1	
Uplift Force (Kips):	0.0	Moment (Kips-ft):	3147.2	

Foundation Geometries:

Diameter of Pier (ft.):	7.0	Depth of Base B. G. S. :	21.0	ft.
Pier Height A. G. (ft.):	0.50			

Material Properties and Reabr Info:

Concrete Strength (psi):	3000	Steel Elastic Modulus:	29000	ksi
Vertical bar yield (ksi)	60	Tie steel yield strength:	40	ksi
Vertical Rebar Size #:	11	Tie / Stirrup Size #:	5	
Qty. of Vertical Rebars:	32	Tie Spacing:	18.0	in.
Concrete Cover (in.):	4	Concrete unit weight:	150.0	pcf

Soil Design Parameters:

Water Table B.G.S. (ft):	99.0	Unit weight of water:	62.4	psf
Ratio of Uplift/Axial Skin Friction:	1.0	Pullout failure Angle:	30	(°)
Skin Frictions are to be obtained from:		Soil Report		

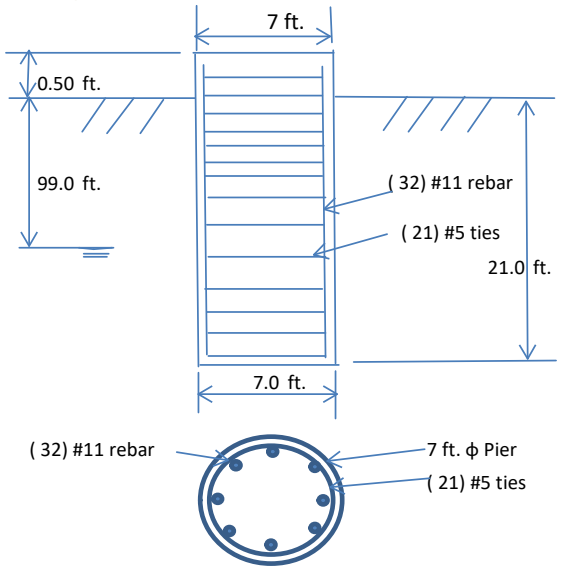

Monopole Pier Foundation

Clay

5000

Depth of Layers (ft) Top	Bottom	γ_{soil} (pcf)	ϕ (°)	Cohesion (psf)	Ultimate Skin Friction (psf)	Ultimate Bearing (psf)	Soil Types					
0.0	3.0	100	0	0		0	Clay					
3.0	14.5	100	0	11850		0	Clay					
14.5	18.5	100	0	4850		0	Clay					
18.5	23.5	100	0	4850		4000	Clay					

Soil weight Increase Factor for bouyant soils (1.0 to 1.15): 1.1

Foundation Analysis and Design:

Uplift Strength Reduction Factor:	0.75	Soil Bearing Strength Reduction Factor:	0.75	
Total Dry Soil Volume from Conical Failure (cu. Ft.):	6013	Dry Soil Weight from Conical Failure:	601	Kips
Total Buoyant Soil Volume from Conical Failure (cu. Ft.):	0	Buoyant Soil Weight from Conical Failure (Ki	0	Kips
Total Dry Concrete Volume (cu. Ft.):	827	Total Dry Concrete Weight:	124.1	Kips
Total Buoyant Concrete Volume (cu. Ft.):	0.0	Total Buoyant Concrete Weight:	0.00	Kips
Total Effective Concrete Weight (Kips):	124.1	Total Effective Soil Weight:	601.3	Kips
Total Effective Vertical Load on Base (Kips):	93.6			

Check Soil Capacities:

					Usage	
Allowable Foundation Overturning Resistance (kips-ft.):	27088.1	>	Design Factored Moment (kips-ft):	3398	0.13	OK!
Factor of Safety of Passive Soil Resistance against Moment:	7.97	OK!				

Check the capacities of Reinforceing Concrete:

Strength reduction factor (Flexure and axial tension):	0.90	Strength reduction factor (Shear):	0.75
Strength reduction factor (Axial compresion):	0.65	Wind Load Factor on Concrete Design:	1.00

Reinforcing Concrete Pier:

					Usage	
Vertical Steel Rebar Area (sq. in./each):	1.56		Tie / Stirrup Area (sq. in./each):	0.31		
Calculated Moment Capacity (Mn,Kips-Ft):	7850.8	>	Design Factored Moment (Mu, K-Ft):	3227.9	0.41	OK!
Calculated Shear Capacity (Kips):	970.0	>	Design Factored Shear (Kips):	376.1	0.39	OK!
Calculated Tension Capacity (Tn, Kips):	2695.7	>	Design Factored Tension (Tu Kips):	0.0	0.00	OK!
Calculated Compression Capacity (Pn, Kips):	7282	>	Design Factored Axial Load (Pu Kips):	50.3	0.01	OK!
Moment & Axial Strength Combination:	0.41	OK!	Max. Allowable Tie/Stirrup Spacing:	12.00	in.	
Pier Reinforcement Ratio:	0.009	Reinforcement Ratio is satisfied per ACI				

EXHIBIT 8

Tower Engineering Solutions
Phone (972) 483-0607, Fax (972) 975-9615
1320 Greenway Drive, Suite 600, Irving, Texas 75038

Antenna Mount Analysis Report

Existing 185-Ft Monopole Tower

Customer Name: SBA Communications Corp

Customer Site Number: CT04169-A-2-SBA / Higganum

Customer Site Name: Higganum

Carrier Name: T-Mobile Sprint (App#: 143995, V1)

Carrier Site ID / Name: CT33XC545

Site Location: 285 Chamberlain Hill Road

Higganum, Connecticut

Middlesex County

Latitude: 41.501764

Longitude: -72.618694

Exp.01/31/2021

STATE OF CONNECTICUT
MUSTAPHA ASSI
No. 23865
LICENSED
PROFESSIONAL ENGINEER

12/18/2020

Analysis Result:

Max Structural Usage: 72.5% [Pass]

Report Prepared By : Kiran Sharma Paudel

Introduction

The purpose of this report is to summarize the analysis results on the (1) Low Profile Platform w/ Handrail Kit at 185.00' elevation to support the proposed antenna configuration. Any modification listed under Sources of Information was assumed completed and was included in this analysis.

Sources of Information

Mount Drawings	Mapping by TEP, Dated 12/09/2020
Antenna Loading	Provided by SBA Application #: 143995, v1
Modification Drawings	N/A

Analysis Criteria

Basic Wind Speed Used in the Analysis: V_{ULT} = 127.0 mph (3-Sec. Gust) / Equivalent to
V_{ASD} = 98 mph (3-Sec. Gust)
Basic Wind Speed with Ice: 50 mph (3-Sec. Gust) with 0.75" radial ice concurrent
Operational Wind Speed: 60 mph +0" Radial ice
Standard/Codes: ANSI/TIA/EIA 222-G/2015 IBC/2018 CSBC
Exposure Category: B
Structure Class: II
Topographic Category: 1
Crest Height (Ft): 0

The site is a Risk Category II structure per IBC Table 1604.5. This site does not support emergency communication equipment for first responders such as fire departments, police, hospitals, ambulance services or any of the facilities listed for Risk Categories III and IV. The scope of work detailed in this structural analysis does not include items that are a part of emergency service as the 911 or essential facility service of an emergency response system.

Mount Information

(1) Low Profile Platform w/ Handrail Kit at 185.00' elevation

Final Antenna Configuration

3 Ericsson AIR32 KRD901146-1_B66A_B2A (Octo)
3 RFS APXVAALL24_43-U-NA20
3 Ericsson AIR6449 B41
4 RFS ACU-A20-N RET*
3 Ericsson 4415 B25
3 ALU 800 MHz RRH*
3 Ericsson 4449 B71 + B85
3 ALU 800 MHz Filter*

* Equipment listed for retaining rights. These are not shown on placement diagram.

In addition to the proposed equipment loading, a 500 lb serviceability load was also considered in this analysis in accordance with TIA requirements.

Analysis Results

Our calculations have determined that under design wind load the existing mounts will be structurally adequate to support the proposed antenna configuration. The maximum structural usage is 72.5%, which occurs in the mount pipe. The proposed equipment must be installed as stipulated in the Final Antenna Configuration section of this report. The analysis results are void if the proposed equipment is not installed in accordance with this report.

Attachments

1. Mount Photos
2. Antenna Placement Diagram
3. Mount Mapping Information
4. Analysis Calculations

Standard Conditions

1. The loading configuration as analyzed in this report is as provided from the customer. Any deviation from this design shall be communicated to TES to verify deviation will not adversely impact the analysis.

2. The analysis is based on the presumption that the antenna mount members and components along with any existing reinforcement items have been correctly and properly designed, manufactured, installed and maintained.

3. All the existing structural members were assumed to be in good condition with no physical damage or deterioration associated with corrosion. The mount analysis is not a condition assessment of the mount.

4. The mount analysis was performed in accordance with the loading provided, and if applicable the modification required to support the additional loading.

5. If the mount is modified, installation must adhere to the configuration communicated in the modification drawings.

6. The modification drawings are not intended to convey means or methods. These are the responsibility of the installing contractor.

7. Rigging plan review is available if the contractor requires for a construction class IV or other if required. Review fee would apply.

8. The mount modification package was created based upon information provided for the mount loading. The underlying tower is assumed to provide support and sufficient rigidity to support the mount loads as a tower analysis was not part of the mount analysis.

9. TES is not responsible for modifications to climbing facilities unless communicated to TES in writing.

12/09/2020 12:17

12/09/2020

Structure: CT04169-A-2-SBA - Higganum

Sector: **A**

Structure Type: Monopole

Mount Elev: 185.00

12/18/2020

Page: 1

Plan View

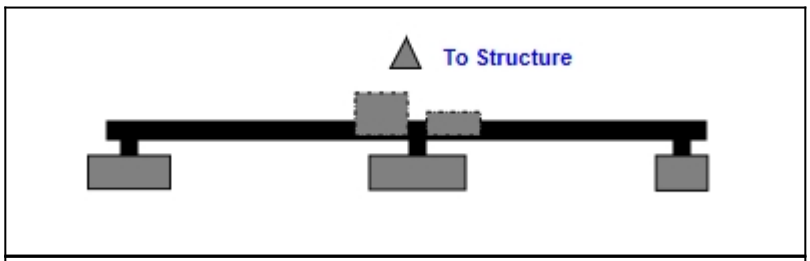

Front View

Looking Toward Structure

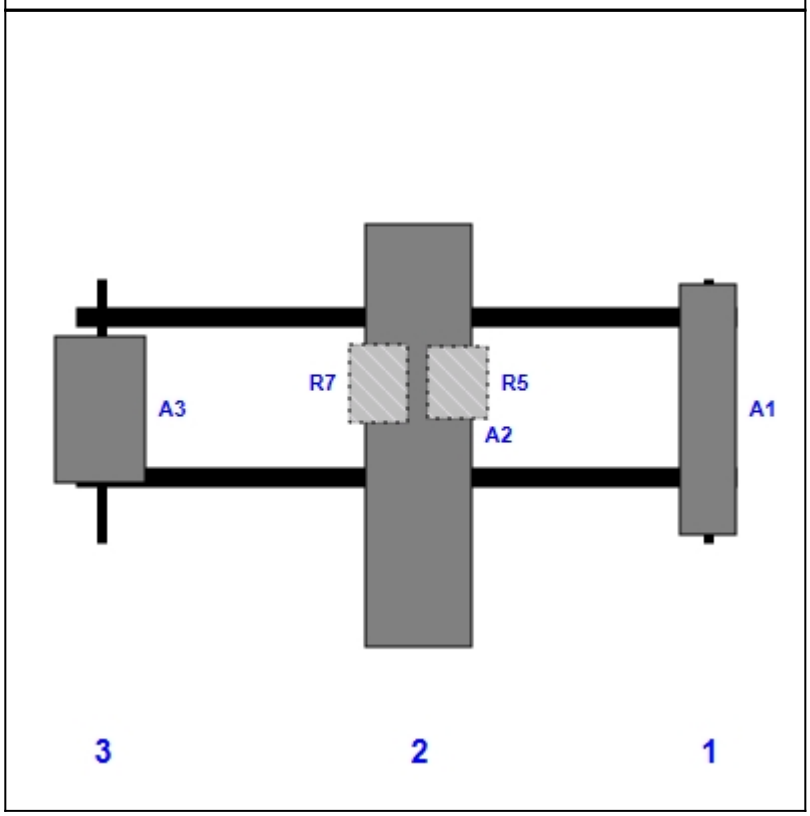

Ref	Model	Height (in)	Width (in)	H Dist Left	Pipe	Pipe Pos V	Pos	From Top	H Offset	Status	Validation
A1	AIR32 KRD901146-1_B66A_B2A (Octo)	56.60	12.90	144.00	1	a	Front	30.00			
A2	APXVAALL24_43-U-NA20	95.90	24.00	78.00	2	a	Front	36.00			
R5	4415 B25	16.50	13.40	78.00	2	a	Behind	24.00	9.00		
R7	4449 B71 + B85	17.90	13.10	78.00	2	a	Behind	24.00	-9.00		
A3	AIR6449 B41	33.10	20.50	6.00	3	a	Front	30.00			

Copyright © 2020 by Tower Engineering Solutions, LLC. All rights reserved.

Structure: CT04169-A-2-SBA - Higganum

Sector: **B**

Structure Type: Monopole

Mount Elev: 185.00

12/18/2020

Page: 2

Plan View

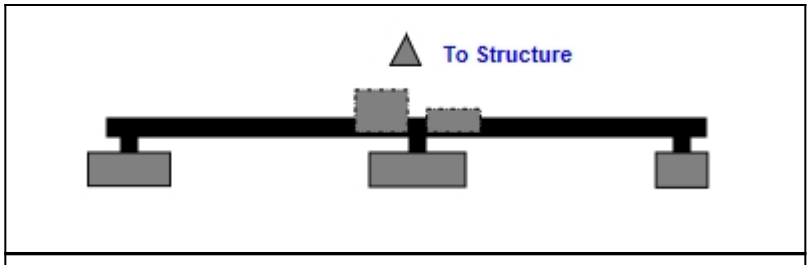

Front View

Looking Toward Structure

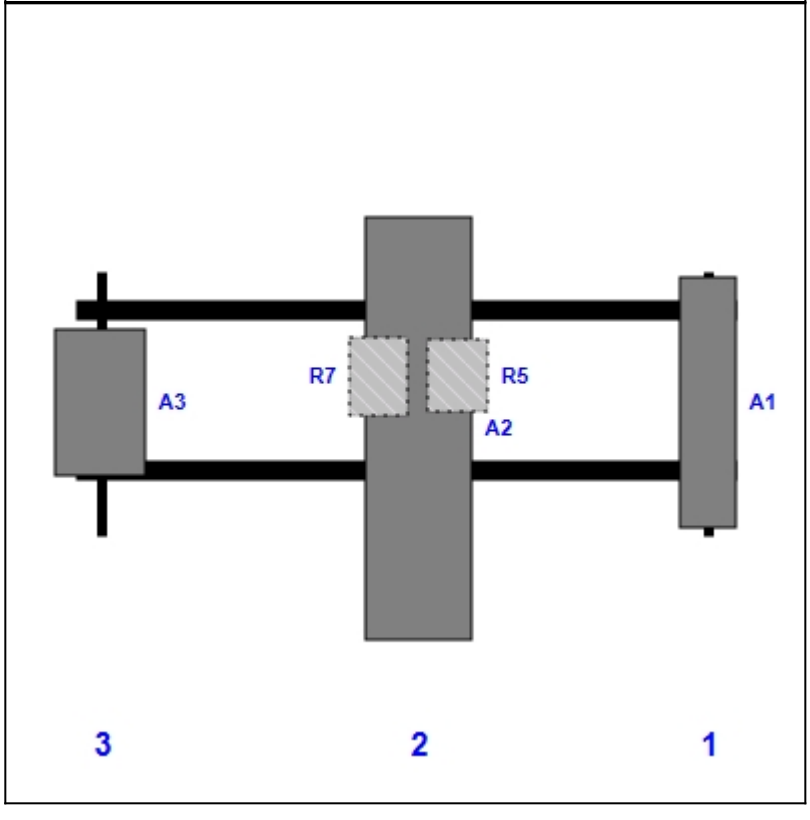

Ref	Model	Height (in)	Width (in)	H Dist Left	Pipe	Pipe Pos V	Pos	From Top	H Offset	Status	Validation
A1	AIR32 KRD901146-1_B66A_B2A (Octo)	56.60	12.90	144.00	1	a	Front	30.00			
A2	APXVAALL24_43-U-NA20	95.90	24.00	78.00	2	a	Front	36.00			
R5	4415 B25	16.50	13.40	78.00	2	a	Behind	24.00	9.00		
R7	4449 B71 + B85	17.90	13.10	78.00	2	a	Behind	24.00	-9.00		
A3	AIR6449 B41	33.10	20.50	6.00	3	a	Front	30.00			

Copyright © 2020 by Tower Engineering Solutions, LLC. All rights reserved.

Structure: CT04169-A-2-SBA - Higganum

Sector: C

Structure Type: Monopole

Mount Elev: 185.00

12/18/2020

Page: 3

Tower Engineering Solutions

Plan View

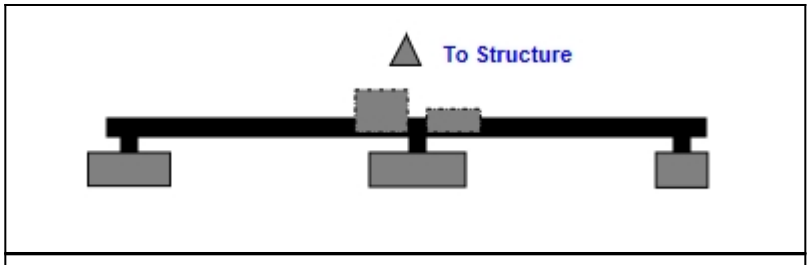

Front View

Looking Toward Structure

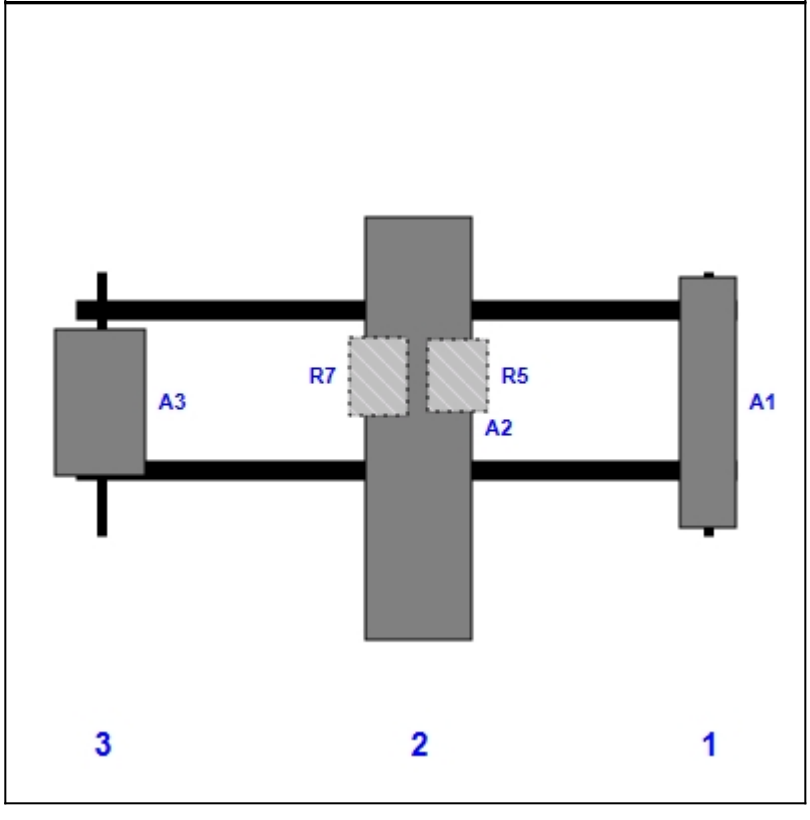

Ref	Model	Height (in)	Width (in)	H Dist Left	Pipe	Pipe Pos V	Pos	From Top	H Offset	Status	Validation
A1	AIR32 KRD901146-1_B66A_B2A (Octo)	56.60	12.90	144.00	1	a	Front	30.00			
A2	APXVAALL24_43-U-NA20	95.90	24.00	78.00	2	a	Front	36.00			
R5	4415 B25	16.50	13.40	78.00	2	a	Behind	24.00	9.00		
R7	4449 B71 + B85	17.90	13.10	78.00	2	a	Behind	24.00	-9.00		
A3	AIR6449 B41	33.10	20.50	6.00	3	a	Front	30.00			

Copyright © 2020 by Tower Engineering Solutions, LLC. All rights reserved.

V3.0 Updated on 8-31-2020

Antenna Mount Mapping Form (PATENT PENDING)

			FCC #
			1223974
Tower Owner:	SBA	**Mapping Date:**	12/9/2020
Site Name:	Higganum	**Tower Type:**	Monopole
Site Number or ID:	CT04169-A-2-SBA	**Tower Height (Ft.):**	185.417
Mapping Contractor:	TEP	**Mount Elevation (Ft.):**	185.417

This antenna mapping form is the property of TES and under PATENT PENDING. The formation contained herein is considered confidential in nature and is to be used only for the specific customer it was intended for. Reproduction, transmission, publication, modification or disclosure by any method is prohibited except by express written permission of TES. All means and methods are the responsibility of the contractor and the work shall be compliant with ANSI/ASSE A 10.48, OSHA, FCC, FAA and other safety requirements that may apply. TES is not warrantying the usability of the safety climb as it must be assessed prior to each use in compliance with OSHA requirements.

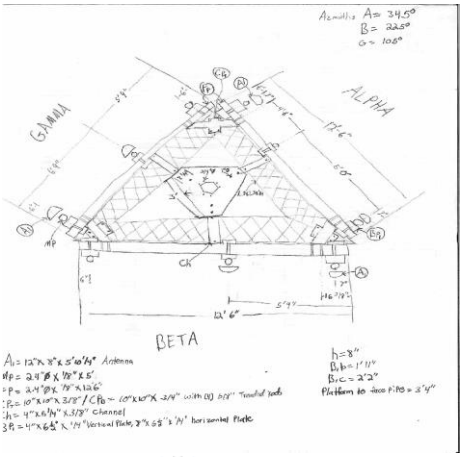

Mount Pipe Configuration and Geometries [Unit = Inches]

Sector / Position	Mount Pipe Size & Length	Vertical Offset Dimension "u"	Horizontal Offset "C1, C2, C3, etc."	Sector / Position	Mount Pipe Size & Length	Vertical Offset Dimension "u"	Horizontal Offset "C1, C2, C3, etc."
A1	2.4"Øx0.154"x60"	56.50	6.00	C1	2.4"Øx0.154"x60"	56.50	6.00
A2	2.4"Øx0.154"x60"	56.50	79.00	C2	2.4"Øx0.154"x60"	56.50	81.00
A3	2.4"Øx0.154"x60"	58.00	144.00	C3	2.4"Øx0.154"x60"	58.00	144.00
A4				C4			
A5				C5			
A6				C6			
B1	2.4"Øx0.154"x60"	56.50	8.00	D1			
B2	2.4"Øx0.154"x60"	56.50	69.00	D2			
B3	2.4"Øx0.154"x60"	58.00	144.00	D3			
B4				D4			
B5				D5			
B6				D6			

Distance between bottom rail and mount CL elevation (dim d). Unit is inches. See 'Mount Elev Ref' tab for details. :	20.00
Distance from top of bottom support rail to lowest tip of ant./eqpt. of Carrier above. (N/A if > 10 ft.) :	
Distance from top of bottom support rail to highest tip of ant./eqpt. of Carrier below. (N/A if > 10 ft.) :	10

Please enter additional infomation or comments below.

Tower Face Width at Mount Elev. (ft.):		Tower Leg Size or Pole Shaft Diameter at Mount Elev. (in.):	

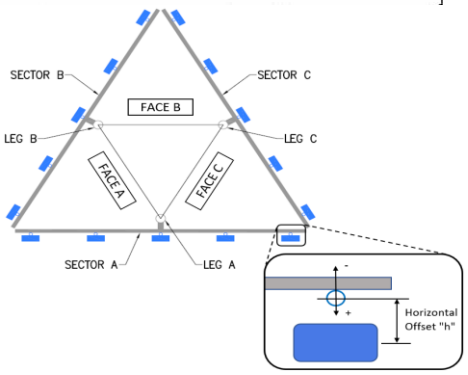

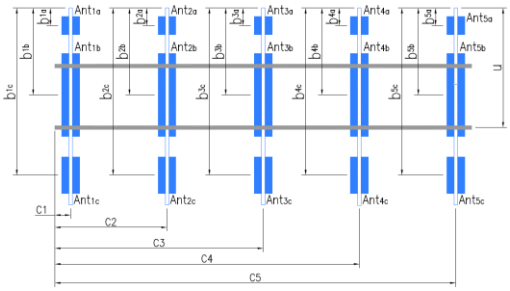

Antenna Layout (Looking Out From Tower)

	Enter antenna model. If not labeled, enter "Unknown".						Mounting Locations [Units are inches and degrees]			Photos of antennas
Ants. Items	Antenna Models if Known	Width (in.)	Depth (in.)	Height (in.)	Coax Size and Qty	Antenna Center-line (Ft.)	Vertical Distances"b_{1a}, b_{2a}, b_{3a}, b_{1b}...." (Inches)	Horiz. Offset "h" (Use "-" if Ant. is behind)	Antenna Azimuth (Degrees)	Photo Numbers
Sector A										
Ant_{1a}										
Ant_{1b}	CT33XC526	12.00	8.00	70.25		186.49	23.63	8.00	345.00	20
Ant_{1c}										
Ant_{2a}										
Ant_{2b}	EMPTY					188.459				
Ant_{2c}										
Ant_{3a}										
Ant_{3b}	CT33XC526	12.00	8.00	70.25		186.782	21.63	8.00	345.00	80
Ant_{3c}	RRH8x20-25-FEU	17.51	5.70	25.00		188.584				81
Ant_{4a}										
Ant_{4b}										
Ant_{4c}										
Ant_{5a}										
Ant_{5b}										
Ant_{5c}										
Ant on Standoff										
Ant on Standoff										
Ant on Tower	RRH2X50-800	13.00	12.20	19.00						
Ant on Tower	RRH1900-4x45	13.00	6.90	21.65						

Mount Azimuth (Degree) for Each Sector			Tower Leg Azimuth (Degree) for Each Sector	
Sector A:	345.00	Deg	Leg A:	Deg
Sector B:	105.00	Deg	Leg B:	Deg
Sector C:	225.00	Deg	Leg C:	Deg
Sector D:		Deg	Leg D:	Deg

Climbing Facility Information		
Location:		Deg
Climbing Facility	Corrosion Type:	Good condition.
	Access:	Climbing path was unobstructed.
	Condition:	Good condition.

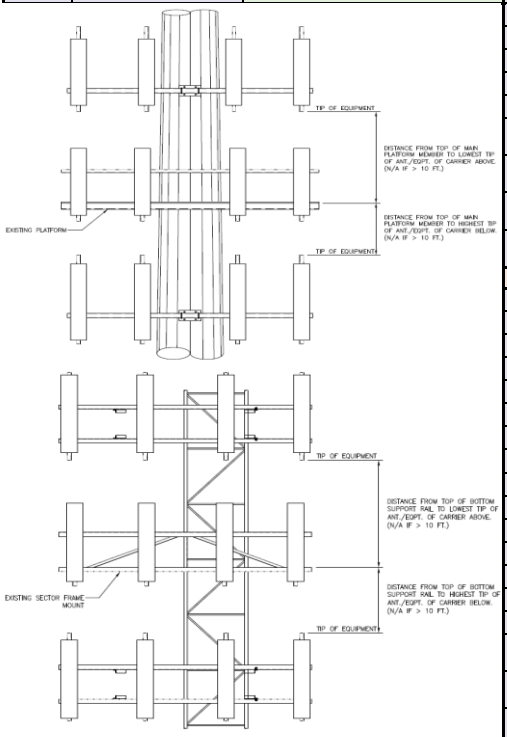

Sector B										
Ant_{1a}										
Ant_{1b}	CT33XC526	12.00	8.00	70.25		186.49	23.63	8.00	105.00	85
Ant_{1c}	RRH8x20-25-FEU	17.51	5.70	25.00		188.459				83
Ant_{2a}										
Ant_{2b}	CT33XC526	12.00	8.00	70.25		186.657	21.63	8.00	105.00	87,96
Ant_{2c}										
Ant_{3a}										
Ant_{3b}	EMPTY					188.584				
Ant_{3c}										
Ant_{4a}										
Ant_{4b}										
Ant_{4c}										
Ant_{5a}										
Ant_{5b}										
Ant_{5c}										
Ant on Standoff										
Ant on Standoff										
Ant on Tower	RRH2X50-800	13.00	12.20	19.00						8
Ant on Tower	RRH1900-4x45	13.00	6.90	21.65						11

Sector C										
Ant_{1a}										
Ant_{1b}	CT33XC526	12.00	8.00	70.25		186.49	23.63	8.00	225.00	132
Ant_{1c}	RRH8x20-25-FEU	17.51	5.70	25.00		188.459				
Ant_{2a}										
Ant_{2b}	CT33XC526	12.00	8.00	70.25		186.657	21.63	8.00	225.00	133
Ant_{2c}										
Ant_{3a}										
Ant_{3b}	EMPTY					188.584				
Ant_{3c}										
Ant_{4a}										
Ant_{4b}										
Ant_{4c}										
Ant_{5a}										
Ant_{5b}										
Ant_{5c}										
Ant on Standoff										
Ant on Standoff										
Ant on Tower	RRH2X50-800	13.00	12.20	19.00						13
Ant on Tower	RRH1900-4x45	13.00	6.90	21.65						

Sector D										
Ant_{1a}										
Ant_{1b}										
Ant_{1c}										
Ant_{2a}										
Ant_{2b}										
Ant_{2c}										
Ant_{3a}										
Ant_{3b}										
Ant_{3c}										
Ant_{4a}										
Ant_{4b}										
Ant_{4c}										
Ant_{5a}										
Ant_{5b}										
Ant_{5c}										
Ant on Standoff										
Ant on Standoff										
Ant on Tower										
Ant on Tower										

Observed Safety and Structural Issues During the Mount Mapping		
Issue #	Description of Issue	Photo #

1		
2		
3		
4		
5		
6		
7		
8		

Mapping Notes
1. Please report any visible structural or safety issues observed on the antenna mounts (Damaged members, loose connections, tilting mounts, safety climb issues, etc.)
2. If the thickness of the existing pipes or tubing can't be obtained from a general tool (such as Caliper), please use an ultrasonic measurement tool (thickness gauge) to measure the thickness.
3. Please create all required detail sketches of the mounts and insert them into the "Sketches" tab.
4. Please measure and enter the bolt sizes and types under the Members Box in the spreadsheet of the mount type.
5. Take and label the photos of the tower, mounts, connections, antennas and all measurements. Minimum 50 photos are required.
6. Please measure and report the size and length of all existing antenna mounting pipes.
7. Please measure and report the antenna information for all sectors.
8. Don't delete or rearrange any sheet or contents of any sheet from this mapping form.

Standard Conditions
1. Obvious safety and structural issues/deficiencies noticed at the time of the mount mapping are to be reported in this mapping. However, this mount mapping is not a condition assessment of the mount.

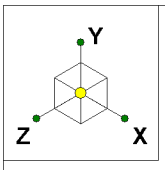

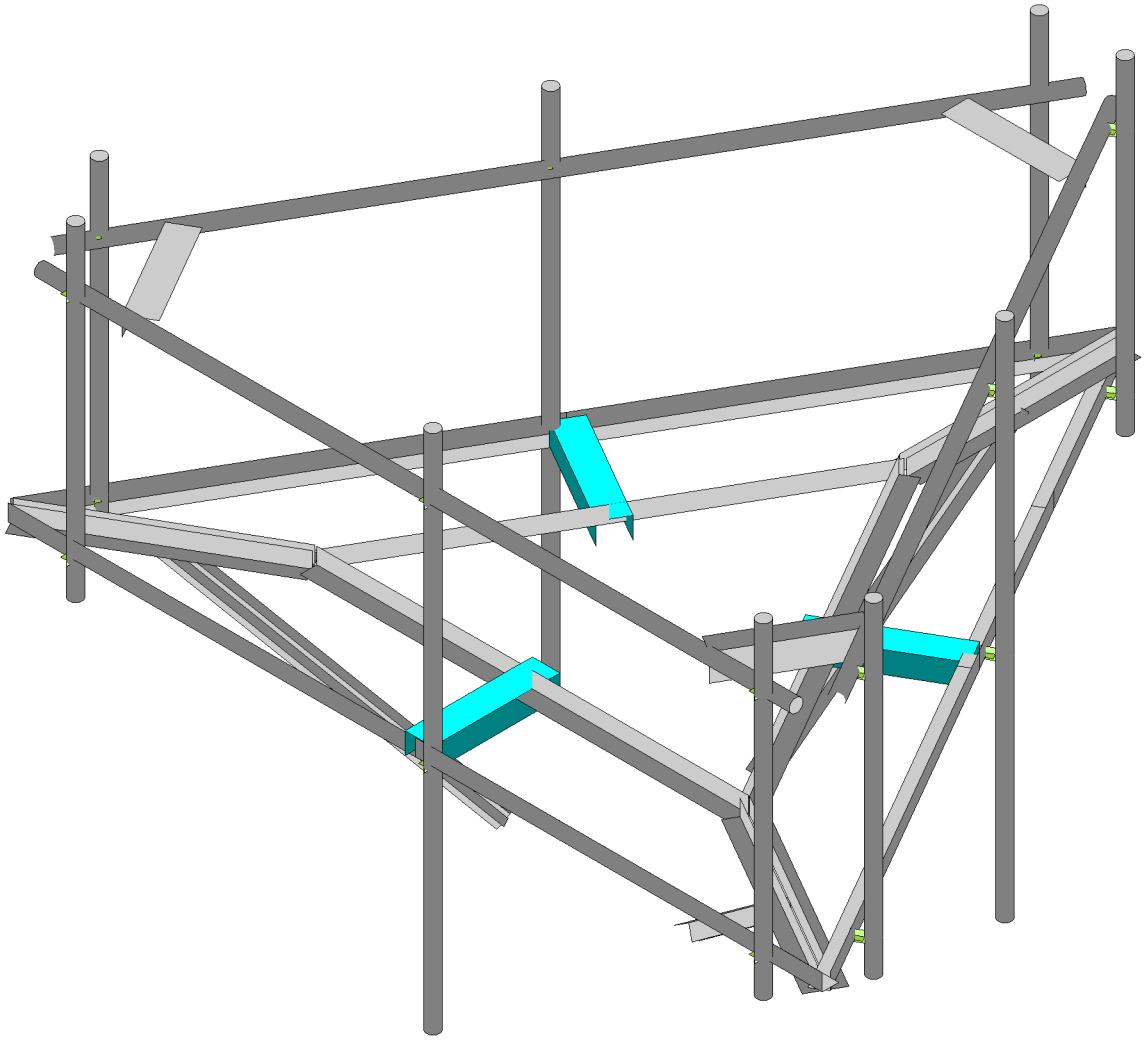

Tower Engineering Solutio...	CT04169-A-2-SBA_MT_LO_Loads Only_G	SK - 1
		Dec 18, 2020 at 1:00 PM
TES Project No. 100512		CT04169-A-2-SBA_100512_G_RIS...

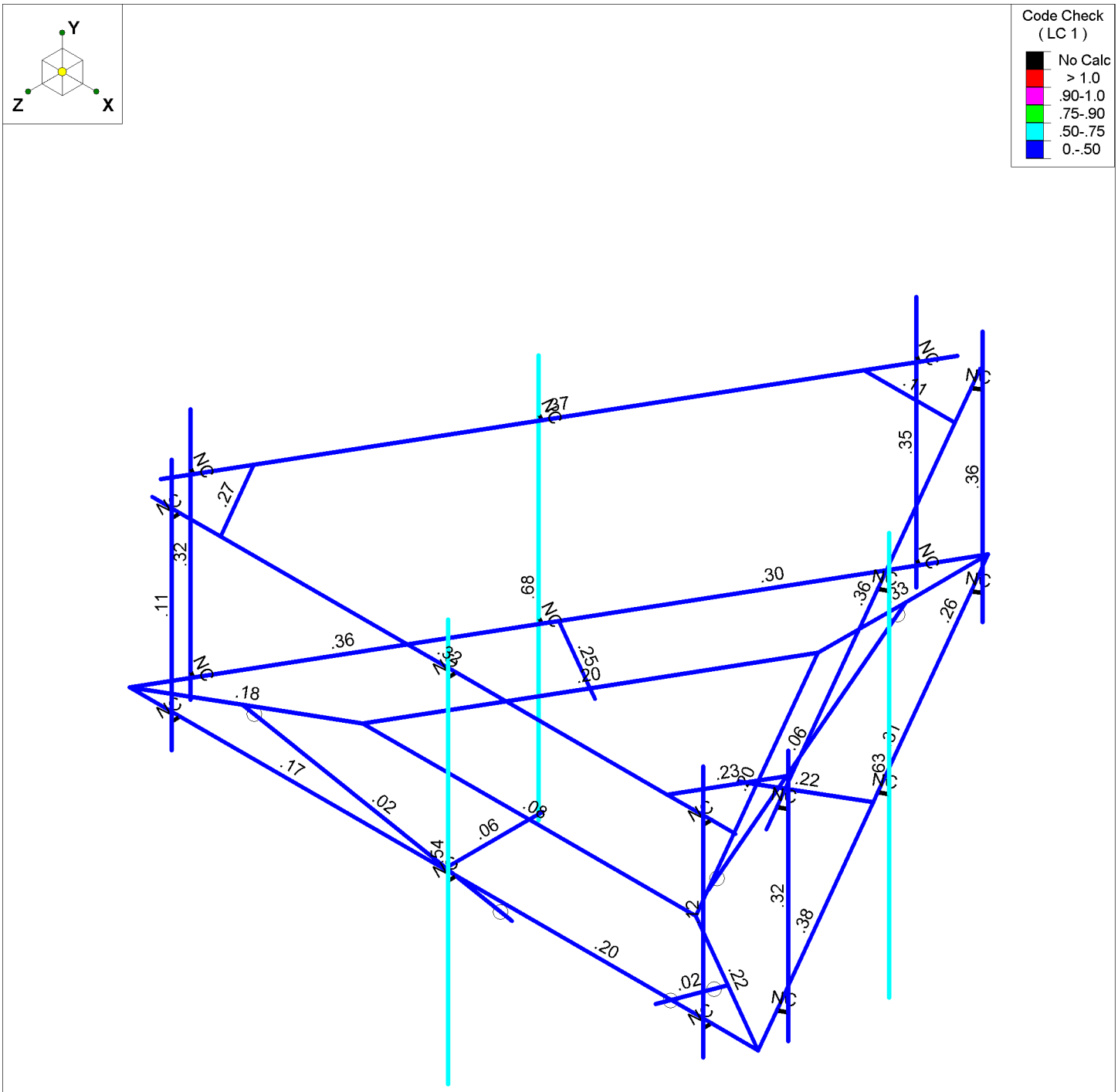

Member Code Checks Displayed
Results for LC 1, 1.2D+1.6W (Front)

Tower Engineering Solutio...	CT04169-A-2-SBA_MT_LO_Loads Only_G	SK - 2
		Dec 18, 2020 at 1:00 PM
TES Project No. 100512		CT04169-A-2-SBA_100512_G_RIS...

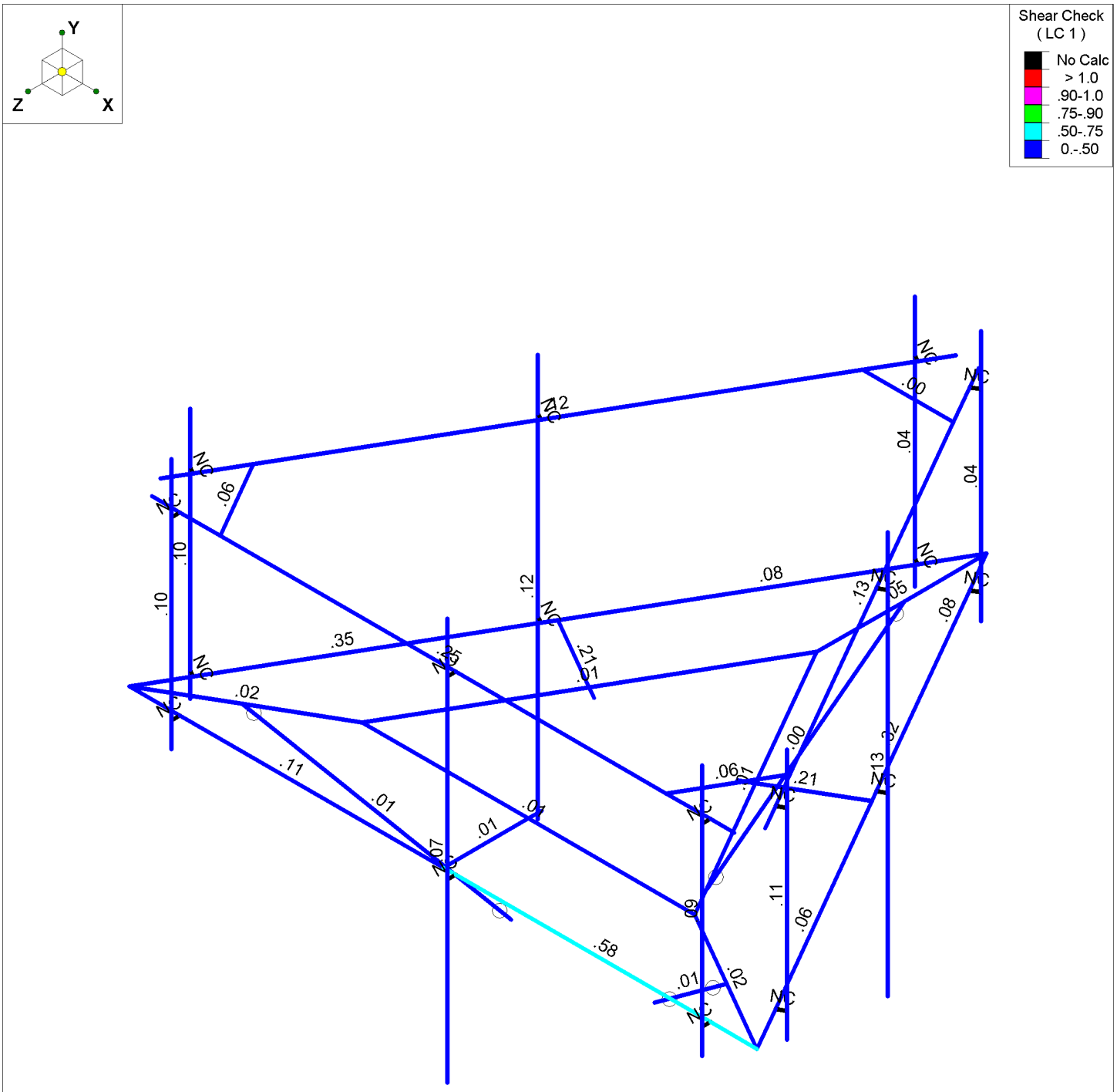

Member Shear Checks Displayed
Results for LC 1, 1.2D+1.6W (Front)

Tower Engineering Solutio...	CT04169-A-2-SBA_MT_LO_Loads Only_G	SK - 3
		Dec 18, 2020 at 1:01 PM
TES Project No. 100512		CT04169-A-2-SBA_100512_G_RIS...

Basic Load Cases

	BLC Description	Category	X Gravity	Y Gravity	Z Gravity	Joint	Point	Distribut...	Area(M...	Surface...
1	Antenna D	None					24			
2	Antenna Di	None					24			
3	Antenna W Front	None					24			
4	Antenna Wi Front	None					24			
5	Antenna W Side	None					24			
6	Antenna Wi Side	None					24			
7	Service Lm1	None					1			
8	Service Lm2	None					1			
9	Structure D	None		-1					3	
10	Structure Di	None						34	3	
11	Structure W Front	None						34		
12	Structure Wi Front	None						34		
13	Structure W Side	None						34		
14	Structure Wi Side	None						34		
15	BLC 9 Transient Area Loads	None						29		
16	BLC 10 Transient Area Loads	None						29		

Load Combinations

	Description	S...	P...	S...	B...	Fac..	B...	Fac..	B...	Fac..	B...	Fac..	B...	Fac..	B...	Fac..	B...	Fac..	B...	Fac..	B...	Fac..	B...	Fac...
1	1.2D+1.6W (Front)	Yes	Y		1	1.2	9	1.2	3	1.6	11	1.6												
2	1.2D+1.6W (Back)	Yes	Y		1	1.2	9	1.2	3	-1.6	11	-1.6												
3	1.2D+1.6W (Left)	Yes	Y		1	1.2	9	1.2	5	1.6	13	1.6												
4	1.2D+1.6W (Right)	Yes	Y		1	1.2	9	1.2	5	-1.6	13	-1.6												
5	1.2D+1.0Di+1.0Wi (Front)	Yes	Y		1	1.2	9	1.2	2	1	10	1	4	1	12	1								
6	1.2D+1.0Di+1.0Wi (Back)	Yes	Y		1	1.2	9	1.2	2	1	10	1	4	-1	12	-1								
7	1.2D+1.0Di+1.0Wi (Left)	Yes	Y		1	1.2	9	1.2	2	1	10	1	6	1	14	1								
8	1.2D+1.0Di+1.0Wi (Right)	Yes	Y		1	1.2	9	1.2	2	1	10	1	6	-1	14	-1								
9	1.2D+1.5L1+.16W (Maintain..	Yes	Y		1	1.2	9	1.2	7	1.5	3	.16	11	.16										
10	1.2D+1.5L2+.16W (Maintain..	Yes	Y		1	1.2	9	1.2	8	1.5	3	.16	11	.16										
11	1.4D	Yes	Y		1	1.4	9	1.4																

Joint Coordinates and Temperatures

	Label	X [ft]	Y [ft]	Z [ft]	Temp [F]	Detach From Diap...
1	N1	0	0	1.650581	0	
2	N2	1.429445	0	-0.825291	0	
3	N3	-1.429445	0	-0.825291	0	
4	N4	-6.2499	0	3.608381	0	
5	N5	6.2499	0	3.608381	0	
6	N6	-2e-14	0	-7.216763	0	
7	N7	-0.	0	3.608381	0	
8	N8	3.12495	0	-1.80419	0	
9	N9	-3.12495	0	-1.804191	0	
10	N10	-3.3132	0	1.912877	0	
11	N11	3.3132	0	1.912877	0	
12	N12	-1e-14	0	-3.825754	0	

Joint Coordinates and Temperatures (Continued)

	Label	X [ft]	Y [ft]	Z [ft]	Temp [F]	Detach From Diap...
13	NP1	5.3192	4.5	3.775381	0	
14	NP2	5.3192	-.5	3.775381	0	
15	NP7	-5.2439	4.5	3.775381	0	
16	NP8	-5.2439	-.5	3.775381	0	
17	N37	5.3192	0	3.608381	0	
18	N40	-5.2439	0	3.608381	0	
19	N49	0	0	1.912877	0	
20	N50	1.6566	0	-0.956438	0	
21	N51	-1.6566	0	-0.956438	0	
22	N54	-5.7981	3.5	3.608381	0	
23	N55	5.7981	3.5	3.608381	0	
24	N54A	-4.4427	3.5	3.608381	0	
25	N56	4.4427	3.5	3.608381	0	
26	N56A	6.024	3.5	3.217111	0	
27	N57	0.2259	3.5	-6.825493	0	
28	N58	5.3463	3.5	2.0433	0	
29	N59	0.9036	3.5	-5.651682	0	
30	N60	-0.2259	3.5	-6.825493	0	
31	N61	-6.024	3.5	3.217111	0	
32	N62	-0.9036	3.5	-5.651682	0	
33	N63	-5.3463	3.5	2.0433	0	
34	N64	5.3192	3.5	3.608381	0	
35	N66	-0.	3.5	3.608381	0	
36	N67	-5.2439	3.5	3.608381	0	
37	N76	1.562475	0	-4.510477	0	
38	N40A	.25	4.5	3.775381	0	
39	N41	.25	-3.5	3.775381	0	
40	N40B	.25	3.5	3.608381	0	
41	N41A	.25	0	3.608381	0	
42	N42	5.3192	0	3.775381	0	
43	N43	-5.2439	0	3.775381	0	
44	N44	5.3192	3.5	3.775381	0	
45	N45	-5.2439	3.5	3.775381	0	
46	N46	.25	3.5	3.775381	0	
47	N47	.25	0	3.775381	0	
48	N48	0.609976	4.5	-6.494253	0	
49	N49A	0.609976	-.5	-6.494253	0	
50	N50A	5.891526	4.5	2.65366	0	
51	N51A	5.891526	-.5	2.65366	0	
52	N52	0.46535	0	-6.410753	0	
53	N53	5.7469	0	2.73716	0	
54	N54B	0.46535	3.5	-6.410753	0	
55	N55A	5.7469	3.5	2.73716	0	
56	N56B	3.144576	4.5	-2.104197	0	
57	N57A	3.144576	-3.5	-2.104197	0	
58	N58A	2.99995	3.5	-2.020697	0	
59	N59A	2.99995	0	-2.020697	0	
60	N60A	0.609976	0	-6.494253	0	
61	N61A	5.891526	0	2.65366	0	
62	N62A	0.609976	3.5	-6.494253	0	
63	N63A	5.891526	3.5	2.65366	0	
64	N64A	3.144576	3.5	-2.104197	0	

Joint Coordinates and Temperatures (Continued)

	Label	X [ft]	Y [ft]	Z [ft]	Temp [F]	Detach From Diap...
65	N65	3.144576	0	-2.104197	0	
66	N66A	-5.929176	4.5	2.718872	0	
67	N67A	-5.929176	-.5	2.718872	0	
68	N68	-0.647626	4.5	-6.429041	0	
69	N69	-0.647626	-.5	-6.429041	0	
70	N70	-5.78455	0	2.802372	0	
71	N71	-0.503	0	-6.345541	0	
72	N72	-5.78455	3.5	2.802372	0	
73	N73	-0.503	3.5	-6.345541	0	
74	N74	-3.394576	4.5	-1.671184	0	
75	N75	-3.394576	-3.5	-1.671184	0	
76	N76A	-3.24995	3.5	-1.587684	0	
77	N77	-3.24995	0	-1.587684	0	
78	N78	-5.929176	0	2.718872	0	
79	N79	-0.647626	0	-6.429041	0	
80	N80	-5.929176	3.5	2.718872	0	
81	N81	-0.647626	3.5	-6.429041	0	
82	N82	-3.394576	3.5	-1.671184	0	
83	N83	-3.394576	0	-1.671184	0	
84	N84	1.429445	-3	0.825291	0	
85	N85	0	-3	-1.650581	0	
86	N86	-1.429445	-3	0.825291	0	
87	N87	-1e-14	0	-5.575754	0	
88	N89	-4.828744	0	2.787877	0	
89	N91	4.828744	0	2.787877	0	

Hot Rolled Steel Section Sets

	Label	Shape	Type	Design List	Material	Design Rules	A [in2]	Iyy [in4]	Izz [in4]	J [in4]
1	Kicker	LL2.5x2.5x3x0	Beam	Double Angl...	A36 Gr.36	Typical	1.8	1.91	1.07	.023

Cold Formed Steel Section Sets

	Label	Shape	Type	Design List	Material	Design Rul...	A [in2]	Iyy [in4]	Izz [in4]	J [in4]
1	Standoff Arm	5CU4X438	Beam	CU	A570 Gr.33	Typical	4.981	7.806	18.786	.319

Aluminum Section Sets

	Label	Shape	Type	Design List	Material	Design Rules	A [in2]	Iyy [in4]	Izz [in4]	J [in4]
1	AL1A	AACS14X13.9	Beam	AA Channel	3003-H14	Typical	11.8	44.7	401	1.19

Hot Rolled Steel Properties

	Label	E [ksi]	G [ksi]	Nu	Therm (\1E...	Density[k/ft...	Yield[ksi]	Ry	Fu[ksi]	Rt
1	A992	29000	11154	.3	.65	.49	50	1.1	65	1.1
2	A36 Gr.36	29000	11154	.3	.65	.49	36	1.5	58	1.2
3	A572 Gr.50	29000	11154	.3	.65	.49	50	1.1	65	1.1
4	A500 Gr.B RND	29000	11154	.3	.65	.527	42	1.4	58	1.3
5	A500 Gr.B Rect	29000	11154	.3	.65	.527	46	1.4	58	1.3
6	A53 Gr.B	29000	11154	.3	.65	.49	35	1.6	60	1.2

Hot Rolled Steel Properties (Continued)

	Label	E [ksi]	G [ksi]	Nu	Therm (\1E...	Density[k/ft...	Yield[ksi]	Ry	Fu[ksi]	Rt
7	A1085	29000	11154	.3	.65	.49	50	1.4	65	1.3

Cold Formed Steel Properties

	Label	E [ksi]	G [ksi]	Nu	Therm (\1E5 F)	Density[k/ft^3]	Yield[ksi]	Fu[ksi]
1	A570 Gr.33	29500	11346	.3	.65	.49	33	52
2	A607 C1 Gr.55	29500	11346	.3	.65	.49	55	70

Aluminum Properties

	Label	E [ksi]	G [ksi]	Nu	Therm (...	Density[...	Table B.4	kt	Ftu[ksi]	Fty[ksi]	Fcy[ksi]	Fsu[ksi]	Ct
1	3003-H14	10100	3787.5	.33	1.3	.173	Table B...	1	19	16	13	12	141
2	6061-T6	10100	3787.5	.33	1.3	.173	Table B...	1	38	35	35	24	141
3	6063-T5	10100	3787.5	.33	1.3	.173	Table B...	1	22	16	16	13	141
4	6063-T6	10100	3787.5	.33	1.3	.173	Table B...	1	30	25	25	19	141
5	5052-H34	10200	3787.5	.33	1.3	.173	Table B...	1	34	26	24	20	141
6	6061-T6 W	10100	3787.5	.33	1.3	.173	Table B...	1	24	15	15	15	141

Member Primary Data

	Label	I Joint	J Joint	K Joint	Rotate(deg)	Section/Shape	Type	Design List	Material	Design Rules
1	M1	N4	N7		270	L3x3x4	Beam	Single Angle	A36 Gr.36	DR1
2	M2	N5	N8		270	L3x3x4	Beam	Single Angle	A36 Gr.36	DR1
3	M3	N6	N9		270	L3x3x4	Beam	Single Angle	A36 Gr.36	DR1
4	M4	N1	N7		90	Standoff Arm	Beam	CU	A570 Gr.33	Typical
5	M5	N2	N8		90	Standoff Arm	Beam	CU	A570 Gr.33	Typical
6	M6	N3	N9		90	Standoff Arm	Beam	CU	A570 Gr.33	Typical
7	M7	N4	N10		180	LL3x3x3x3	Beam	Double Angle (...	A36 Gr.36	DR1
8	M8	N5	N11		180	LL3x3x3x3	Beam	Double Angle (...	A36 Gr.36	DR1
9	M9	N6	N12		180	LL3x3x3x3	Beam	Double Angle (...	A36 Gr.36	DR1
10	M10	N10	N11			L3x3x4	Beam	Single Angle	A36 Gr.36	DR1
11	M11	N11	N12			L3x3x4	Beam	Single Angle	A36 Gr.36	DR1
12	M12	N12	N10			L3x3x4	Beam	Single Angle	A36 Gr.36	DR1
13	MP1A	NP1	NP2			PIPE_2.0	Beam	Pipe	A53 Gr.B	DR1
14	MP3A	NP7	NP8			PIPE_2.0	Beam	Pipe	A53 Gr.B	DR1
15	M25	N54	N55			PIPE_2.0	Beam	Pipe	A53 Gr.B	Typical
16	M26	N56A	N57			PIPE_2.0	Beam	Pipe	A53 Gr.B	Typical
17	M27	N60	N61			PIPE_2.0	Beam	Pipe	A53 Gr.B	Typical
18	M28	N54A	N63		90	L5x3.5x4	Beam	Single Angle	A36 Gr.36	Typical
19	M29	N62	N59		90	L5x3.5x4	Beam	Single Angle	A36 Gr.36	Typical
20	M30	N56	N58		180	L5x3.5x4	Beam	Single Angle	A36 Gr.36	Typical
21	M31	N7	N5		270	L3x3x4	Beam	Single Angle	A36 Gr.36	DR1
22	M32	N9	N4		270	L3x3x4	Beam	Single Angle	A36 Gr.36	DR1
23	M33	N8	N76		270	L3x3x4	Beam	Single Angle	A36 Gr.36	DR1
24	M34	N76	N6		270	L3x3x4	Beam	Single Angle	A36 Gr.36	DR1
25	MP2A	N40A	N41			PIPE_2.0	Beam	Pipe	A53 Gr.B	DR1
26	M26B	N67	N45			RIGID	Beam	None	RIGID	DR1
27	M27A	N40	N43			RIGID	Beam	None	RIGID	DR1
28	M28A	N40B	N46			RIGID	Beam	None	RIGID	DR1
29	M29A	N41A	N47			RIGID	Beam	None	RIGID	DR1

Member Primary Data (Continued)

	Label	I Joint	J Joint	K Joint	Rotate(deg)	Section/Shape	Type	Design List	Material	Design Rules
30	M30A	N64	N44			RIGID	Beam	None	RIGID	DR1
31	M31A	N37	N42			RIGID	Beam	None	RIGID	DR1
32	MP1C	N48	N49A			PIPE_2.0	Beam	Pipe	A53 Gr.B	DR1
33	MP3C	N50A	N51A			PIPE_2.0	Beam	Pipe	A53 Gr.B	DR1
34	MP2C	N56B	N57A			PIPE_2.0	Beam	Pipe	A53 Gr.B	DR1
35	M35	N55A	N63A			RIGID	Beam	None	RIGID	DR1
36	M36	N53	N61A			RIGID	Beam	None	RIGID	DR1
37	M37	N58A	N64A			RIGID	Beam	None	RIGID	DR1
38	M38	N59A	N65			RIGID	Beam	None	RIGID	DR1
39	M39	N54B	N62A			RIGID	Beam	None	RIGID	DR1
40	M40	N52	N60A			RIGID	Beam	None	RIGID	DR1
41	MP1B	N66A	N67A			PIPE_2.0	Beam	Pipe	A53 Gr.B	DR1
42	MP3B	N68	N69			PIPE_2.0	Beam	Pipe	A53 Gr.B	DR1
43	MP2B	N74	N75			PIPE_2.0	Beam	Pipe	A53 Gr.B	DR1
44	M44	N73	N81			RIGID	Beam	None	RIGID	DR1
45	M45	N71	N79			RIGID	Beam	None	RIGID	DR1
46	M46	N76A	N82			RIGID	Beam	None	RIGID	DR1
47	M47	N77	N83			RIGID	Beam	None	RIGID	DR1
48	M48	N72	N80			RIGID	Beam	None	RIGID	DR1
49	M49	N70	N78			RIGID	Beam	None	RIGID	DR1
50	M50	N87	N85			Kicker	Beam	Double Angle (...	A36 Gr.36	Typical
51	M51	N89	N86			Kicker	Beam	Double Angle (...	A36 Gr.36	Typical
52	M52	N91	N84			Kicker	Beam	Double Angle (...	A36 Gr.36	Typical

Member Advanced Data

	Label	I Release	J Release	I Offset[in]	J Offset[in]	T/C Only	Physical	Analysis ...	Inactive	Seismic Design ...
1	M1						Yes			None
2	M2						Yes			None
3	M3						Yes			None
4	M4						Yes			None
5	M5						Yes			None
6	M6						Yes			None
7	M7						Yes			None
8	M8						Yes			None
9	M9						Yes			None
10	M10						Yes			None
11	M11						Yes			None
12	M12						Yes			None
13	MP1A						Yes	-z		None
14	MP3A						Yes	-z		None
15	M25						Yes			None
16	M26						Yes			None
17	M27						Yes			None
18	M28						Yes			None
19	M29						Yes			None
20	M30						Yes			None
21	M31						Yes			None
22	M32						Yes			None
23	M33						Yes			None
24	M34						Yes			None

Member Advanced Data (Continued)

	Label	I Release	J Release	I Offset[in]	J Offset[in]	T/C Only	Physical	Analysis ...	Inactive	Seismic Design ...
25	MP2A						Yes	-z		None
26	M26B						Yes			None
27	M27A						Yes			None
28	M28A						Yes			None
29	M29A						Yes			None
30	M30A						Yes			None
31	M31A						Yes			None
32	MP1C						Yes	-z		None
33	MP3C						Yes	-z		None
34	MP2C						Yes	-z		None
35	M35						Yes			None
36	M36						Yes			None
37	M37						Yes			None
38	M38						Yes			None
39	M39						Yes			None
40	M40						Yes			None
41	MP1B						Yes	-z		None
42	MP3B						Yes	-z		None
43	MP2B						Yes	-z		None
44	M44						Yes			None
45	M45						Yes			None
46	M46						Yes			None
47	M47						Yes			None
48	M48						Yes			None
49	M49						Yes			None
50	M50	BenPIN	BenPIN				Yes			None
51	M51	BenPIN	BenPIN				Yes			None
52	M52	BenPIN	BenPIN				Yes			None

Hot Rolled Steel Design Parameters

	Label	Shape	Length[ft]	Lbyy[ft]	Lbzz[ft]	Lcomp top[ft]	Lcomp bot[ft]	L-torqu...	Kyy	Kzz	Cb	Function
1	M1	L3x3x4	6.25			Lbyy						Gravity
2	M2	L3x3x4	6.25			Lbyy						Gravity
3	M3	L3x3x4	6.25			Lbyy						Gravity
4	M7	LL3x3x3x3	3.391			Lbyy						Gravity
5	M8	LL3x3x3x3	3.391			Lbyy						Gravity
6	M9	LL3x3x3x3	3.391			Lbyy						Gravity
7	M10	L3x3x4	6.626			Lbyy						Gravity
8	M11	L3x3x4	6.626			Lbyy						Gravity
9	M12	L3x3x4	6.626			Lbyy						Gravity
10	MP1A	PIPE_2.0	5			Lbyy						Gravity
11	MP3A	PIPE_2.0	5			Lbyy						Lateral
12	M25	PIPE_2.0	11.596			Lbyy						Lateral
13	M26	PIPE_2.0	11.596			Lbyy						Lateral
14	M27	PIPE_2.0	11.596			Lbyy						Lateral
15	M28	L5x3.5x4	1.807			Lbyy						Lateral
16	M29	L5x3.5x4	1.807			Lbyy						Lateral
17	M30	L5x3.5x4	1.807			Lbyy						Lateral
18	M31	L3x3x4	6.25			Lbyy						Gravity
19	M32	L3x3x4	6.25			Lbyy						Gravity

Hot Rolled Steel Design Parameters (Continued)

	Label	Shape	Length[ft]	Lbyy[ft]	Lbzz[ft]	Lcomp top[ft]	Lcomp bot[ft]	L-torqu...	Kyy	Kzz	Cb	Function
20	M33	L3x3x4	3.125			Lbyy						Gravity
21	M34	L3x3x4	3.125			Lbyy						Gravity
22	MP2A	PIPE_2.0	8			Lbyy						Lateral
23	MP1C	PIPE_2.0	5			Lbyy						Lateral
24	MP3C	PIPE_2.0	5			Lbyy						Lateral
25	MP2C	PIPE_2.0	8			Lbyy						Lateral
26	MP1B	PIPE_2.0	5			Lbyy						Lateral
27	MP3B	PIPE_2.0	5			Lbyy						Lateral
28	MP2B	PIPE_2.0	8			Lbyy						Lateral
29	M50	Kicker	4.94			Lbyy						Lateral
30	M51	Kicker	4.94			Lbyy						Lateral
31	M52	Kicker	4.94			Lbyy						Lateral

Cold Formed Steel Design Parameters

	Label	Shape	Lengt...	Lbyy[ft]	Lbzz[ft]	Lcomp t...	Lcomp ...	L-torque...	Kyy	Kzz	Cm-...	Cm-...	Cb	R	a[ft]	y sw...	z sw...
1	M4	Standoff...	1.958			Lbyy											
2	M5	Standoff...	1.958			Lbyy											
3	M6	Standoff...	1.958			Lbyy											

Aluminum Design Parameters

Label	Shape	Length[ft]	Lbyy[ft]	Lbzz[ft]	Lcomp top[ft]	Lcomp bot[ft]	L-torqu...	Kyy	Kzz	Cb	Function
No Data to Print ...											

Joint Loads and Enforced Displacements

Joint Label	L,D,M	Direction	Magnitude[(lb,k-ft), (in,rad), (lb*s^2...
No Data to Print ...			

Member Point Loads (BLC 1 : Antenna D)

	Member Label	Direction	Magnitude[lb,k-ft]	Location[ft,%]
1	MP1A	Y	-66.1	.5
2	MP1A	Y	-66.1	4.5
3	MP1B	Y	-66.1	.5
4	MP1B	Y	-66.1	4.5
5	MP1C	Y	-66.1	.5
6	MP1C	Y	-66.1	4.5
7	MP2A	Y	-61.4	0
8	MP2A	Y	-61.4	6
9	MP2B	Y	-61.4	0
10	MP2B	Y	-61.4	6
11	MP2C	Y	-61.4	0
12	MP2C	Y	-61.4	6
13	MP3A	Y	-51.5	1
14	MP3A	Y	-51.5	4
15	MP3B	Y	-51.5	1
16	MP3B	Y	-51.5	4
17	MP3C	Y	-51.5	1

Member Point Loads (BLC 1 : Antenna D) (Continued)

	Member Label	Direction	Magnitude[lb,k-ft]	Location[ft,%]
18	MP3C	Y	-51.5	4
19	MP2A	Y	-46	2
20	MP2B	Y	-46	2
21	MP2C	Y	-46	2
22	MP2A	Y	-75	2
23	MP2B	Y	-75	2
24	MP2C	Y	-75	2

Member Point Loads (BLC 2 : Antenna Di)

	Member Label	Direction	Magnitude[lb,k-ft]	Location[ft,%]
1	MP1A	Y	-93.926	.5
2	MP1A	Y	-93.926	4.5
3	MP1B	Y	-93.926	.5
4	MP1B	Y	-93.926	4.5
5	MP1C	Y	-93.926	.5
6	MP1C	Y	-93.926	4.5
7	MP2A	Y	-218.962	0
8	MP2A	Y	-218.962	6
9	MP2B	Y	-218.962	0
10	MP2B	Y	-218.962	6
11	MP2C	Y	-218.962	0
12	MP2C	Y	-218.962	6
13	MP3A	Y	-78.362	1
14	MP3A	Y	-78.362	4
15	MP3B	Y	-78.362	1
16	MP3B	Y	-78.362	4
17	MP3C	Y	-78.362	1
18	MP3C	Y	-78.362	4
19	MP2A	Y	-62.125	2
20	MP2B	Y	-62.125	2
21	MP2C	Y	-62.125	2
22	MP2A	Y	-83.64	2
23	MP2B	Y	-83.64	2
24	MP2C	Y	-83.64	2

Member Point Loads (BLC 3 : Antenna W Front)

	Member Label	Direction	Magnitude[lb,k-ft]	Location[ft,%]
1	MP1A	Z	-98.526	.5
2	MP1A	Z	-98.526	4.5
3	MP1B	Z	-78.121	.5
4	MP1B	Z	-78.121	4.5
5	MP1C	Z	-78.121	.5
6	MP1C	Z	-78.121	4.5
7	MP2A	Z	-306.325	0
8	MP2A	Z	-306.325	6
9	MP2B	Z	-175.711	0
10	MP2B	Z	-175.711	6
11	MP2C	Z	-175.711	0
12	MP2C	Z	-175.711	6
13	MP3A	Z	-85.511	1
14	MP3A	Z	-85.511	4

Member Point Loads (BLC 3 : Antenna W Front) (Continued)

	Member Label	Direction	Magnitude[lb,k-ft]	Location[ft,%]
15	MP3B	Z	-48.797	1
16	MP3B	Z	-48.797	4
17	MP3C	Z	-48.797	1
18	MP3C	Z	-48.797	4
19	MP2A	Z	-28.15	2
20	MP2B	Z	-16.347	2
21	MP2C	Z	-16.347	2
22	MP2A	Z	-29.815	2
23	MP2B	Z	-25.402	2
24	MP2C	Z	-25.402	2

Member Point Loads (BLC 4 : Antenna Wi Front)

	Member Label	Direction	Magnitude[lb,k-ft]	Location[ft,%]
1	MP1A	Z	-30.166	.5
2	MP1A	Z	-30.166	4.5
3	MP1B	Z	-24.541	.5
4	MP1B	Z	-24.541	4.5
5	MP1C	Z	-24.541	.5
6	MP1C	Z	-24.541	4.5
7	MP2A	Z	-87.389	0
8	MP2A	Z	-87.389	6
9	MP2B	Z	-52.493	0
10	MP2B	Z	-52.493	6
11	MP2C	Z	-52.493	0
12	MP2C	Z	-52.493	6
13	MP3A	Z	-26.179	1
14	MP3A	Z	-26.179	4
15	MP3B	Z	-15.803	1
16	MP3B	Z	-15.803	4
17	MP3C	Z	-15.803	1
18	MP3C	Z	-15.803	4
19	MP2A	Z	-9.543	2
20	MP2B	Z	-6.112	2
21	MP2C	Z	-6.112	2
22	MP2A	Z	-10.058	2
23	MP2B	Z	-8.828	2
24	MP2C	Z	-8.828	2

Member Point Loads (BLC 5 : Antenna W Side)

	Member Label	Direction	Magnitude[lb,k-ft]	Location[ft,%]
1	MP1A	X	71.319	.5
2	MP1A	X	71.319	4.5
3	MP1B	X	91.725	.5
4	MP1B	X	91.725	4.5
5	MP1C	X	91.725	.5
6	MP1C	X	91.725	4.5
7	MP2A	X	132.172	0
8	MP2A	X	132.172	6
9	MP2B	X	262.787	0
10	MP2B	X	262.787	6
11	MP2C	X	262.787	0

Member Point Loads (BLC 5 : Antenna W Side) (Continued)

	Member Label	Direction	Magnitude[lb,k-ft]	Location[ft,%]
12	MP2C	X	262.787	6
13	MP3A	X	36.559	1
14	MP3A	X	36.559	4
15	MP3B	X	73.273	1
16	MP3B	X	73.273	4
17	MP3C	X	73.273	1
18	MP3C	X	73.273	4
19	MP2A	X	24.826	2
20	MP2B	X	48.432	2
21	MP2C	X	48.432	2
22	MP2A	X	47.861	2
23	MP2B	X	56.688	2
24	MP2C	X	56.688	2

Member Point Loads (BLC 6 : Antenna Wi Side)

	Member Label	Direction	Magnitude[lb,k-ft]	Location[ft,%]
1	MP1A	X	22.667	.5
2	MP1A	X	22.667	4.5
3	MP1B	X	28.291	.5
4	MP1B	X	28.291	4.5
5	MP1C	X	28.291	.5
6	MP1C	X	28.291	4.5
7	MP2A	X	40.861	0
8	MP2A	X	40.861	6
9	MP2B	X	75.757	0
10	MP2B	X	75.757	6
11	MP2C	X	75.757	0
12	MP2C	X	75.757	6
13	MP3A	X	12.344	1
14	MP3A	X	12.344	4
15	MP3B	X	22.72	1
16	MP3B	X	22.72	4
17	MP3C	X	22.72	1
18	MP3C	X	22.72	4
19	MP2A	X	9.937	2
20	MP2B	X	16.799	2
21	MP2C	X	16.799	2
22	MP2A	X	16.836	2
23	MP2B	X	19.296	2
24	MP2C	X	19.296	2

Member Point Loads (BLC 7 : Service Lm1)

	Member Label	Direction	Magnitude[lb,k-ft]	Location[ft,%]
1	M1	Y	-500	0

Member Point Loads (BLC 8 : Service Lm2)

	Member Label	Direction	Magnitude[lb,k-ft]	Location[ft,%]
1	M1	Y	-500	%50

Member Distributed Loads (BLC 10 : Structure Di)

	Member Label	Direction	Start Magnitude[lb/ft,...	End Magnitude[lb/ft,F...	Start Location[ft,%]	End Location[ft,%]
1	M1	Y	-10.787	-10.787	0	%100
2	M2	Y	-10.787	-10.787	0	%100
3	M3	Y	-10.787	-10.787	0	%100
4	M4	Y	-13.604	-13.604	0	%100
5	M5	Y	-13.604	-13.604	0	%100
6	M6	Y	-13.604	-13.604	0	%100
7	M7	Y	-15.337	-15.337	0	%100
8	M8	Y	-15.337	-15.337	0	%100
9	M9	Y	-15.337	-15.337	0	%100
10	M10	Y	-10.787	-10.787	0	%100
11	M11	Y	-10.787	-10.787	0	%100
12	M12	Y	-10.787	-10.787	0	%100
13	MP1A	Y	-9.052	-9.052	0	%100
14	MP3A	Y	-9.052	-9.052	0	%100
15	M25	Y	-9.052	-9.052	0	%100
16	M26	Y	-9.052	-9.052	0	%100
17	M27	Y	-9.052	-9.052	0	%100
18	M28	Y	-14.253	-14.253	0	%100
19	M29	Y	-14.253	-14.253	0	%100
20	M30	Y	-14.253	-14.253	0	%100
21	M31	Y	-10.787	-10.787	0	%100
22	M32	Y	-10.787	-10.787	0	%100
23	M33	Y	-10.787	-10.787	0	%100
24	M34	Y	-10.787	-10.787	0	%100
25	MP2A	Y	-9.052	-9.052	0	%100
26	MP1C	Y	-9.052	-9.052	0	%100
27	MP3C	Y	-9.052	-9.052	0	%100
28	MP2C	Y	-9.052	-9.052	0	%100
29	MP1B	Y	-9.052	-9.052	0	%100
30	MP3B	Y	-9.052	-9.052	0	%100
31	MP2B	Y	-9.052	-9.052	0	%100
32	M50	Y	-13.604	-13.604	0	%100
33	M51	Y	-13.604	-13.604	0	%100
34	M52	Y	-13.604	-13.604	0	%100

Member Distributed Loads (BLC 11 : Structure W Front)

	Member Label	Direction	Start Magnitude[lb/ft,...	End Magnitude[lb/ft,F...	Start Location[ft,%]	End Location[ft,%]
1	M1	PZ	-15.135	-15.135	0	%100
2	M2	PZ	-15.135	-15.135	0	%100
3	M3	PZ	-15.135	-15.135	0	%100
4	M4	PZ	-12.612	-12.612	0	%100
5	M5	PZ	-12.612	-12.612	0	%100
6	M6	PZ	-12.612	-12.612	0	%100
7	M7	PZ	-15.135	-15.135	0	%100
8	M8	PZ	-15.135	-15.135	0	%100
9	M9	PZ	-15.135	-15.135	0	%100
10	M10	PZ	-15.135	-15.135	0	%100
11	M11	PZ	-15.135	-15.135	0	%100
12	M12	PZ	-15.135	-15.135	0	%100
13	MP1A	PZ	-7.189	-7.189	0	%100

Member Distributed Loads (BLC 11 : Structure W Front) (Continued)

	Member Label	Direction	Start Magnitude[lb/ft,...	End Magnitude[lb/ft,F...	Start Location[ft,%]	End Location[ft,%]
14	MP3A	PZ	-7.189	-7.189	0	%100
15	M25	PZ	-7.189	-7.189	0	%100
16	M26	PZ	-7.189	-7.189	0	%100
17	M27	PZ	-7.189	-7.189	0	%100
18	M28	PZ	-25.224	-25.224	0	%100
19	M29	PZ	-25.224	-25.224	0	%100
20	M30	PZ	-25.224	-25.224	0	%100
21	M31	PZ	-15.135	-15.135	0	%100
22	M32	PZ	-15.135	-15.135	0	%100
23	M33	PZ	-15.135	-15.135	0	%100
24	M34	PZ	-15.135	-15.135	0	%100
25	MP2A	PZ	-7.189	-7.189	0	%100
26	MP1C	PZ	-7.189	-7.189	0	%100
27	MP3C	PZ	-7.189	-7.189	0	%100
28	MP2C	PZ	-7.189	-7.189	0	%100
29	MP1B	PZ	-7.189	-7.189	0	%100
30	MP3B	PZ	-7.189	-7.189	0	%100
31	MP2B	PZ	-7.189	-7.189	0	%100
32	M50	PZ	-12.612	-12.612	0	%100
33	M51	PZ	-12.612	-12.612	0	%100
34	M52	PZ	-12.612	-12.612	0	%100

Member Distributed Loads (BLC 12 : Structure Wi Front)

	Member Label	Direction	Start Magnitude[lb/ft,...	End Magnitude[lb/ft,F...	Start Location[ft,%]	End Location[ft,%]
1	M1	PZ	-6.748	-6.748	0	%100
2	M2	PZ	-6.748	-6.748	0	%100
3	M3	PZ	-6.748	-6.748	0	%100
4	M4	PZ	-6.092	-6.092	0	%100
5	M5	PZ	-6.092	-6.092	0	%100
6	M6	PZ	-6.092	-6.092	0	%100
7	M7	PZ	-6.748	-6.748	0	%100
8	M8	PZ	-6.748	-6.748	0	%100
9	M9	PZ	-6.748	-6.748	0	%100
10	M10	PZ	-6.748	-6.748	0	%100
11	M11	PZ	-6.748	-6.748	0	%100
12	M12	PZ	-6.748	-6.748	0	%100
13	MP1A	PZ	-4.68	-4.68	0	%100
14	MP3A	PZ	-4.68	-4.68	0	%100
15	M25	PZ	-4.68	-4.68	0	%100
16	M26	PZ	-4.68	-4.68	0	%100
17	M27	PZ	-4.68	-4.68	0	%100
18	M28	PZ	-9.375	-9.375	0	%100
19	M29	PZ	-9.375	-9.375	0	%100
20	M30	PZ	-9.375	-9.375	0	%100
21	M31	PZ	-6.748	-6.748	0	%100
22	M32	PZ	-6.748	-6.748	0	%100
23	M33	PZ	-6.748	-6.748	0	%100
24	M34	PZ	-6.748	-6.748	0	%100
25	MP2A	PZ	-4.68	-4.68	0	%100
26	MP1C	PZ	-4.68	-4.68	0	%100
27	MP3C	PZ	-4.68	-4.68	0	%100

Member Distributed Loads (BLC 12 : Structure Wi Front) (Continued)

	Member Label	Direction	Start Magnitude[lb/ft,...	End Magnitude[lb/ft,F...	Start Location[ft,%]	End Location[ft,%]
28	MP2C	PZ	-4.68	-4.68	0	%100
29	MP1B	PZ	-4.68	-4.68	0	%100
30	MP3B	PZ	-4.68	-4.68	0	%100
31	MP2B	PZ	-4.68	-4.68	0	%100
32	M50	PZ	-6.092	-6.092	0	%100
33	M51	PZ	-6.092	-6.092	0	%100
34	M52	PZ	-6.092	-6.092	0	%100

Member Distributed Loads (BLC 13 : Structure W Side)

	Member Label	Direction	Start Magnitude[lb/ft,...	End Magnitude[lb/ft,F...	Start Location[ft,%]	End Location[ft,%]
1	M1	PX	15.135	15.135	0	%100
2	M2	PX	15.135	15.135	0	%100
3	M3	PX	15.135	15.135	0	%100
4	M4	PX	12.612	12.612	0	%100
5	M5	PX	12.612	12.612	0	%100
6	M6	PX	12.612	12.612	0	%100
7	M7	PX	15.135	15.135	0	%100
8	M8	PX	15.135	15.135	0	%100
9	M9	PX	15.135	15.135	0	%100
10	M10	PX	15.135	15.135	0	%100
11	M11	PX	15.135	15.135	0	%100
12	M12	PX	15.135	15.135	0	%100
13	MP1A	PX	7.189	7.189	0	%100
14	MP3A	PX	7.189	7.189	0	%100
15	M25	PX	7.189	7.189	0	%100
16	M26	PX	7.189	7.189	0	%100
17	M27	PX	7.189	7.189	0	%100
18	M28	PX	25.224	25.224	0	%100
19	M29	PX	25.224	25.224	0	%100
20	M30	PX	25.224	25.224	0	%100
21	M31	PX	15.135	15.135	0	%100
22	M32	PX	15.135	15.135	0	%100
23	M33	PX	15.135	15.135	0	%100
24	M34	PX	15.135	15.135	0	%100
25	MP2A	PX	7.189	7.189	0	%100
26	MP1C	PX	7.189	7.189	0	%100
27	MP3C	PX	7.189	7.189	0	%100
28	MP2C	PX	7.189	7.189	0	%100
29	MP1B	PX	7.189	7.189	0	%100
30	MP3B	PX	7.189	7.189	0	%100
31	MP2B	PX	7.189	7.189	0	%100
32	M50	PX	12.612	12.612	0	%100
33	M51	PX	12.612	12.612	0	%100
34	M52	PX	12.612	12.612	0	%100

Member Distributed Loads (BLC 14 : Structure Wi Side)

	Member Label	Direction	Start Magnitude[lb/ft,...	End Magnitude[lb/ft,F...	Start Location[ft,%]	End Location[ft,%]
1	M1	PX	6.748	6.748	0	%100
2	M2	PX	6.748	6.748	0	%100
3	M3	PX	6.748	6.748	0	%100
4	M4	PX	6.092	6.092	0	%100

Member Distributed Loads (BLC 14 : Structure Wi Side) (Continued)

	Member Label	Direction	Start Magnitude[lb/ft,...	End Magnitude[lb/ft,F...	Start Location[ft,%]	End Location[ft,%]
5	M5	PX	6.092	6.092	0	%100
6	M6	PX	6.092	6.092	0	%100
7	M7	PX	6.748	6.748	0	%100
8	M8	PX	6.748	6.748	0	%100
9	M9	PX	6.748	6.748	0	%100
10	M10	PX	6.748	6.748	0	%100
11	M11	PX	6.748	6.748	0	%100
12	M12	PX	6.748	6.748	0	%100
13	MP1A	PX	4.68	4.68	0	%100
14	MP3A	PX	4.68	4.68	0	%100
15	M25	PX	4.68	4.68	0	%100
16	M26	PX	4.68	4.68	0	%100
17	M27	PX	4.68	4.68	0	%100
18	M28	PX	9.375	9.375	0	%100
19	M29	PX	9.375	9.375	0	%100
20	M30	PX	9.375	9.375	0	%100
21	M31	PX	6.748	6.748	0	%100
22	M32	PX	6.748	6.748	0	%100
23	M33	PX	6.748	6.748	0	%100
24	M34	PX	6.748	6.748	0	%100
25	MP2A	PX	4.68	4.68	0	%100
26	MP1C	PX	4.68	4.68	0	%100
27	MP3C	PX	4.68	4.68	0	%100
28	MP2C	PX	4.68	4.68	0	%100
29	MP1B	PX	4.68	4.68	0	%100
30	MP3B	PX	4.68	4.68	0	%100
31	MP2B	PX	4.68	4.68	0	%100
32	M50	PX	6.092	6.092	0	%100
33	M51	PX	6.092	6.092	0	%100
34	M52	PX	6.092	6.092	0	%100

Member Distributed Loads (BLC 15 : BLC 9 Transient Area Loads)

	Member Label	Direction	Start Magnitude[lb/ft,...	End Magnitude[lb/ft,F...	Start Location[ft,%]	End Location[ft,%]
1	M3	Y	-1.044	-2.842	.625	2.292
2	M3	Y	-2.842	-4.096	2.292	3.958
3	M3	Y	-4.096	-4.805	3.958	5.625
4	M6	Y	-8.614	-8.614	.262	1.958
5	M7	Y	-.87	-4.317	0	1.696
6	M7	Y	-4.317	-7.764	1.696	3.391
7	M9	Y	-.899	-4.43	0	1.696
8	M9	Y	-4.43	-7.962	1.696	3.391
9	M12	Y	-3.365	-3.365	.015	6.612
10	M32	Y	-4.805	-4.096	.625	2.292
11	M32	Y	-4.096	-2.842	2.292	3.958
12	M32	Y	-2.842	-1.044	3.958	5.625
13	M1	Y	-1.044	-2.842	.625	2.292
14	M1	Y	-2.842	-4.096	2.292	3.958
15	M1	Y	-4.096	-4.805	3.958	5.625
16	M4	Y	-8.614	-8.614	.262	1.958
17	M8	Y	-.87	-4.317	0	1.696
18	M8	Y	-4.317	-7.764	1.696	3.391

Member Distributed Loads (BLC 15 : BLC 9 Transient Area Loads) (Continued)

	Member Label	Direction	Start Magnitude[lb/ft,...	End Magnitude[lb/ft,F...	Start Location[ft,%]	End Location[ft,%]
19	M10	Y	-3.365	-3.365	.015	6.612
20	M31	Y	-4.805	-4.096	.625	2.292
21	M31	Y	-4.096	-2.842	2.292	3.958
22	M31	Y	-2.842	-1.044	3.958	5.625
23	M2	Y	-1.044	-2.842	.625	2.292
24	M2	Y	-2.842	-4.096	2.292	3.958
25	M2	Y	-4.096	-4.805	3.958	5.625
26	M5	Y	-8.503	-8.503	.262	1.958
27	M11	Y	-3.372	-3.372	.018	6.574
28	M33	Y	-4.406	-4.406	.801	3.125
29	M34	Y	-.467	-4.406	0	2.5

Member Distributed Loads (BLC 16 : BLC 10 Transient Area Loads)

	Member Label	Direction	Start Magnitude[lb/ft,...	End Magnitude[lb/ft,F...	Start Location[ft,%]	End Location[ft,%]
1	M3	Y	-2.606	-7.097	.625	2.292
2	M3	Y	-7.097	-10.228	2.292	3.958
3	M3	Y	-10.228	-11.998	3.958	5.625
4	M6	Y	-21.509	-21.509	.262	1.958
5	M7	Y	-2.172	-10.778	0	1.696
6	M7	Y	-10.778	-19.385	1.696	3.391
7	M9	Y	-2.245	-11.063	0	1.696
8	M9	Y	-11.063	-19.88	1.696	3.391
9	M12	Y	-8.401	-8.401	.015	6.612
10	M32	Y	-11.998	-10.228	.625	2.292
11	M32	Y	-10.228	-7.097	2.292	3.958
12	M32	Y	-7.097	-2.606	3.958	5.625
13	M1	Y	-2.606	-7.097	.625	2.292
14	M1	Y	-7.097	-10.228	2.292	3.958
15	M1	Y	-10.228	-11.998	3.958	5.625
16	M4	Y	-21.509	-21.509	.262	1.958
17	M8	Y	-2.172	-10.778	0	1.696
18	M8	Y	-10.778	-19.385	1.696	3.391
19	M10	Y	-8.401	-8.401	.015	6.612
20	M31	Y	-11.998	-10.228	.625	2.292
21	M31	Y	-10.228	-7.097	2.292	3.958
22	M31	Y	-7.097	-2.606	3.958	5.625
23	M2	Y	-2.606	-7.097	.625	2.292
24	M2	Y	-7.097	-10.228	2.292	3.958
25	M2	Y	-10.228	-11.998	3.958	5.625
26	M5	Y	-21.231	-21.231	.262	1.958
27	M11	Y	-8.419	-8.419	.018	6.574
28	M33	Y	-11.002	-11.002	.801	3.125
29	M34	Y	-1.165	-11.002	0	2.5

Member Area Loads (BLC 9 : Structure D)

	Joint A	Joint B	Joint C	Joint D	Direction	Distribution	Magnitude[ksf]
1	N4	N10	N12	N6	Y	Two Way	-.005
2	N4	N5	N11	N10	Y	Two Way	-.005
3	N5	N6	N12	N11	Y	Two Way	-.005

Member Area Loads (BLC 10 : Structure Di)

	Joint A	Joint B	Joint C	Joint D	Direction	Distribution	Magnitude[ksf]
1	N4	N10	N12	N6	Y	Two Way	-.013
2	N4	N5	N11	N10	Y	Two Way	-.013
3	N5	N6	N12	N11	Y	Two Way	-.013

Joint Boundary Conditions

	Joint Label	X [k/in]	Y [k/in]	Z [k/in]	X Rot.[k-ft/rad]	Y Rot.[k-ft/rad]	Z Rot.[k-ft/rad]
1	N1	Reaction	Reaction	Reaction	Reaction	Reaction	Reaction
2	N2	Reaction	Reaction	Reaction	Reaction	Reaction	Reaction
3	N3	Reaction	Reaction	Reaction	Reaction	Reaction	Reaction
4	N84	Reaction	Reaction	Reaction	Reaction	Reaction	Reaction
5	N85	Reaction	Reaction	Reaction	Reaction	Reaction	Reaction
6	N86	Reaction	Reaction	Reaction	Reaction	Reaction	Reaction

Envelope Joint Reactions

	Joint		X [lb]	LC	Y [lb]	LC	Z [lb]	LC	MX [k-ft]	LC	MY [k-ft]	LC	MZ [k-ft]	LC
1	N1	max	3991.468	4	1350.003	8	1102.403	1	-.431	1	1.444	4	.081	4
2		min	-4000.377	3	352.21	9	-1002.716	2	-2.725	6	-1.426	3	-.079	3
3	N2	max	2101.81	4	1362.105	7	3377.967	1	1.376	7	1.665	2	2.356	7
4		min	-2047.466	3	405.453	4	-3449.608	2	.166	4	-1.627	1	.368	4
5	N3	max	2008.165	4	1362.674	5	3433.059	1	1.357	8	1.714	1	-.463	3
6		min	-2051.325	3	364.884	9	-3528.095	2	.223	3	-1.715	2	-2.333	5
7	N84	max	1870.091	7	1711.311	7	1085.973	7	0	1	0	1	0	1
8		min	-363.018	4	-334.243	4	-230.506	4	0	2	0	2	0	2
9	N85	max	49.594	4	1668.365	5	547.344	2	0	1	0	4	0	3
10		min	-49.625	3	-423.439	2	-2106.639	5	0	1	0	3	0	4
11	N86	max	282.402	3	1697.788	8	1077.104	8	0	1	0	2	0	2
12		min	-1854.767	8	-263.073	3	-183.958	3	0	2	0	1	0	1
13	Totals:	max	6226.918	4	8453.76	6	6146.444	1						
14		min	-6226.919	3	3099.9	1	-6146.442	2						

Envelope Member Section Forces

	Member	Sec		Axial[lb]	LC	y Shear[lb]	LC	z Shear[lb]	LC	Torque[k-...	LC	y-y Mome...	LC	z-z Mome...	LC
1	M1	1	max	654.835	4	208.517	2	523.317	6	.023	1	.135	1	.145	3
2			min	-969.819	3	-242.032	1	-122.524	1	-.025	2	-.364	2	-.531	8
3		2	max	553.327	2	59.294	3	419.93	10	.007	2	.296	3	.491	3
4			min	-866.036	1	-63.609	4	-194.683	3	-.007	1	-.273	4	-.541	4
5		3	max	553.327	2	59.294	3	195.011	4	.007	2	.421	10	.506	10
6			min	-866.036	1	-63.609	4	-209.169	3	-.007	1	-.119	4	-.247	4
7		4	max	553.327	2	65.647	1	178.321	4	.007	2	.038	10	.12	10
8			min	-866.036	1	-69.512	2	-361.246	10	-.007	1	-.046	2	-.112	7
9		5	max	553.327	2	103.483	1	163.953	4	.007	2	.142	1	.288	4
10			min	-866.036	1	-107.348	2	-375.615	10	-.007	1	-.364	10	-.427	3
11	M2	1	max	893.538	3	139.98	3	631.065	3	.017	4	.077	4	.138	1
12			min	-1203.185	4	-165.195	4	-254.631	4	-.017	3	-.34	7	-.534	6
13		2	max	576.117	3	46.95	1	218.763	2	.005	3	.335	1	.442	1
14			min	-877.844	4	-53.983	2	-194.305	1	-.005	4	-.322	2	-.503	2
15		3	max	559.733	3	58.397	4	204.277	2	.005	3	.16	1	.175	4

Envelope Member Section Forces (Continued)

	Member	Sec		Axial[lb]	LC	y Shear[lb]	LC	z Shear[lb]	LC	Torque[k-...	LC	y-y Mome...	LC	z-z Mome...	LC
16			min	-861.461	4	-64.813	3	-208.79	1	-.005	4	-.143	2	-.215	3
17		4	max	543.35	3	86.774	4	187.587	2	.005	3	.03	2	.046	2
18			min	-845.077	4	-93.19	3	-225.48	1	-.005	4	-.044	1	-.103	1
19		5	max	526.966	3	115.151	4	173.219	2	.005	3	.195	2	.278	2
20			min	-828.694	4	-121.567	3	-239.849	1	-.005	4	-.276	1	-.387	1
21	M3	1	max	926.736	1	217.422	4	534.163	5	.022	3	.158	3	.114	4
22			min	-1240.593	2	-237.48	3	-178.636	2	-.021	4	-.395	4	-.49	7
23		2	max	513.617	1	57.753	2	176.11	3	.006	4	.347	4	.447	2
24			min	-807.819	2	-56.153	1	-176.119	4	-.007	3	-.309	3	-.464	1
25		3	max	497.233	1	67.212	2	161.624	3	.006	4	.172	4	.206	2
26			min	-791.435	2	-65.612	1	-190.605	4	-.007	3	-.147	3	-.24	1
27		4	max	480.85	1	76.671	2	144.934	3	.006	4	.028	3	.023	3
28			min	-775.052	2	-75.071	1	-207.295	4	-.007	3	-.052	4	-.134	8
29		5	max	464.466	1	86.13	2	130.565	3	.006	4	.217	3	.187	1
30			min	-758.669	2	-84.53	1	-221.664	4	-.007	3	-.325	4	-.361	2
31	M4	1	max	1102.403	1	4000.389	3	-352.228	9	.081	4	2.725	6	1.426	3
32			min	-1002.716	2	-3991.491	4	-1350.036	8	-.079	3	.431	1	-1.444	4
33		2	max	1119.859	1	218.45	3	-286.101	1	.027	3	2.056	6	.327	3
34			min	-1093.311	2	-203.673	4	-1403.741	6	-.023	10	.256	1	-.356	4
35		3	max	1119.859	1	208.573	3	-271.086	1	.027	3	1.377	6	.223	3
36			min	-1093.311	2	-193.796	4	-1371.54	6	-.023	10	.12	1	-.259	4
37		4	max	1119.859	1	198.696	3	-256.07	1	.027	3	.714	6	.147	10
38			min	-1093.311	2	-183.919	4	-1339.338	6	-.023	10	-.009	1	-.167	4
39		5	max	1119.859	1	188.819	3	-241.055	1	.027	3	.152	2	.215	10
40			min	-1093.311	2	-174.042	4	-1307.137	6	-.023	10	-.131	1	-.2	2
41	M5	1	max	883.607	4	3727.554	1	-405.494	4	.067	2	2.728	7	1.627	1
42			min	-803.929	3	-3766.298	2	-1362.079	7	-.063	1	.402	4	-1.665	2
43		2	max	908.73	4	463.979	4	-278.068	4	.019	1	2.049	7	.752	4
44			min	-896.457	3	-461.186	3	-1419.608	7	-.015	2	.233	4	-.781	3
45		3	max	904.454	4	461.51	4	-263.118	4	.019	1	1.362	7	.525	4
46			min	-892.181	3	-458.717	3	-1387.608	7	-.015	2	.101	4	-.556	3
47		4	max	900.177	4	459.041	4	-248.168	4	.019	1	.69	7	.3	4
48			min	-887.904	3	-456.248	3	-1355.609	7	-.015	2	-.024	4	-.332	3
49		5	max	895.9	4	456.572	4	-233.219	4	.019	1	.142	3	.076	4
50			min	-883.627	3	-453.779	3	-1323.609	7	-.015	2	-.142	4	-.11	3
51	M6	1	max	884.635	3	3856.37	2	-364.89	9	.064	1	2.698	8	1.715	2
52			min	-803.393	4	-3792.368	1	-1362.679	5	-.066	2	.513	3	-1.714	1
53		2	max	908.374	3	611.761	4	-334.578	3	.022	2	2.025	8	.692	4
54			min	-895.231	4	-583.393	3	-1405.168	8	-.013	1	.318	3	-.722	3
55		3	max	904.097	3	609.291	4	-319.563	3	.022	2	1.345	8	.425	2
56			min	-890.954	4	-580.923	3	-1372.966	8	-.013	1	.158	3	-.467	1
57		4	max	899.82	3	606.822	4	-304.548	3	.022	2	.681	8	.222	2
58			min	-886.677	4	-578.454	3	-1340.765	8	-.013	1	.005	3	-.278	1
59		5	max	895.543	3	604.353	4	-289.533	3	.022	2	.139	4	.129	3
60			min	-882.4	4	-575.985	3	-1308.563	8	-.013	1	-.14	3	-.201	4
61	M7	1	max	1939.589	3	1164.714	8	166.971	1	.002	2	.59	2	1.003	8
62			min	-1335.018	4	-252.501	3	-167.101	2	-.003	1	-.59	1	.046	3
63		2	max	1948.478	3	1190.689	8	182.368	1	.002	2	.442	2	.257	3
64			min	-1343.908	4	-243.193	3	-182.497	2	-.003	1	-.442	1	-.214	4
65		3	max	2356.564	3	69.971	3	238.125	1	.002	2	.278	2	.442	3
66			min	-3228.415	4	-375.849	8	-236.84	2	-.002	1	-.279	1	-1.036	4
67		4	max	2365.453	3	82.786	3	253.522	1	.002	2	.071	2	.377	3

Envelope Member Section Forces (Continued)

	Member	Sec		Axial[lb]	LC	y Shear[lb]	LC	z Shear[lb]	LC	Torque[k-...	LC	y-y Mome...	LC	z-z Mome...	LC
68			min	-3237.304	4	-339.071	8	-252.236	2	-.002	1	-.07	1	-.765	4
69		5	max	2374.342	3	97.354	3	268.918	1	.002	2	.151	1	.301	3
70			min	-3246.194	4	-304.305	9	-267.633	2	-.002	1	-.149	2	-.506	4
71	M8	1	max	1988.5	4	1175.042	7	183.771	2	.003	1	.635	1	1.009	7
72			min	-1386.582	3	-310.636	4	-181.079	1	-.003	2	-.64	2	-.002	4
73		2	max	1997.389	4	1201.017	7	199.167	2	.003	1	.475	1	.257	4
74			min	-1395.471	3	-301.328	4	-196.475	1	-.003	2	-.478	2	-.216	3
75		3	max	2498.565	4	83.202	4	253.542	2	.002	1	.3	1	.488	4
76			min	-3370.485	3	-379.087	7	-252.211	1	-.003	2	-.3	2	-1.081	3
77		4	max	2507.454	4	96.017	4	268.938	2	.002	1	.079	1	.412	4
78			min	-3379.374	3	-342.309	7	-267.607	1	-.003	2	-.079	2	-.799	3
79		5	max	2516.343	4	110.585	4	284.335	2	.002	1	.156	2	.325	4
80			min	-3388.263	3	-311.793	3	-283.004	1	-.003	2	-.154	1	-.528	3
81	M9	1	max	2224.263	2	1141.314	5	239.426	3	.004	4	.817	4	.99	5
82			min	-1630.727	1	-382.911	2	-240.507	4	-.004	3	-.813	3	-.048	2
83		2	max	2224.263	2	1167.448	5	259.954	3	.004	4	.605	4	.273	2
84			min	-1630.727	1	-373.551	2	-261.036	4	-.004	3	-.601	3	-.221	1
85		3	max	2832.146	2	100.961	2	330.402	3	.003	4	.371	4	.56	2
86			min	-3649.988	1	-368.986	5	-331.374	4	-.003	3	-.369	3	-1.112	1
87		4	max	2832.146	2	113.912	2	350.931	3	.003	4	.082	4	.469	2
88			min	-3649.988	1	-334.095	1	-351.902	4	-.003	3	-.08	3	-.823	1
89		5	max	2832.146	2	128.66	2	371.46	3	.003	4	.226	3	.366	2
90			min	-3649.988	1	-319.348	1	-372.431	4	-.003	3	-.225	4	-.546	1
91	M10	1	max	1592.439	3	148.266	9	89.153	1	0	2	.072	3	.298	4
92			min	-2117.657	4	-37.73	3	-124.766	2	0	1	-.117	4	-.174	3
93		2	max	1592.439	3	131.896	9	49.037	1	0	2	.032	3	.101	4
94			min	-2117.657	4	-54.099	3	-84.65	2	0	1	-.026	4	-.107	3
95		3	max	385.589	1	115.467	9	52.362	7	0	7	.052	2	.087	1
96			min	-2179.61	3	-106.434	3	-74.938	9	0	1	-.031	1	-.195	2
97		4	max	1660.265	4	61.137	4	86.291	2	0	1	.032	4	.1	3
98			min	-2179.61	3	-122.863	3	-48.61	1	0	2	-.025	3	-.11	4
99		5	max	1660.265	4	44.768	4	126.406	2	0	1	.075	4	.315	3
100			min	-2179.61	3	-147.382	7	-88.725	1	0	2	-.118	3	-.191	4
101	M11	1	max	1298.864	4	163.071	3	76.037	4	0	1	.071	1	.348	3
102			min	-1825.794	3	-70.346	4	-109.205	3	0	2	-.118	2	-.226	4
103		2	max	1316.234	4	146.702	3	45.951	4	0	1	.033	1	.078	2
104			min	-1843.164	3	-86.715	4	-79.118	3	0	2	-.028	2	-.08	1
105		3	max	1681.493	2	130.258	3	57.901	1	0	4	.076	3	.085	4
106			min	-2171.514	1	-122.071	1	-49.032	3	0	2	-.058	4	-.181	3
107		4	max	1664.123	2	83.164	2	77.942	3	0	4	.028	3	.084	1
108			min	-2154.144	1	-138.514	1	-43.605	4	0	3	-.021	4	-.098	2
109		5	max	1646.753	2	66.932	2	108.028	3	0	4	.065	2	.342	1
110			min	-2136.773	1	-154.746	1	-73.691	4	0	3	-.104	4	-.234	2
111	M12	1	max	1675.812	2	153.987	1	74.925	3	0	4	.069	2	.337	1
112			min	-2165.596	1	-67.483	2	-107.794	4	0	3	-.109	1	-.23	2
113		2	max	1693.182	2	137.618	1	44.839	3	0	4	.027	4	.086	1
114			min	-2182.966	1	-83.852	2	-77.708	4	0	3	-.021	3	-.096	2
115		3	max	1233.208	3	121.189	1	78.742	9	0	4	.073	4	.081	3
116			min	-2200.336	1	-125.444	4	-54.132	1	0	3	-.054	3	-.201	9
117		4	max	1215.837	3	79.983	3	79.744	9	0	2	.033	1	.078	2
118			min	-1737.071	4	-141.873	4	-43.331	3	0	1	-.027	2	-.083	1
119		5	max	1198.467	3	63.613	3	108.749	4	0	2	.072	1	.337	4

Envelope Member Section Forces (Continued)

	Member	Sec		Axial[lb]	LC	y Shear[lb]	LC	z Shear[lb]	LC	Torque[k-...	LC	y-y Mome...	LC	z-z Mome...	LC
120			min	-1719.7	4	-158.243	4	-73.417	3	0	1	-.117	2	-.213	3
121	MP1A	1	max	0	1	.334	4	.415	1	0	3	0	1	0	1
122			min	0	1	-.338	3	-.416	2	0	4	0	1	0	1
123		2	max	502.235	2	336.587	4	37.827	8	.139	1	.192	2	.416	4
124			min	-328.083	1	-331.521	3	-1.062	2	-.139	2	-.207	1	-.407	3
125		3	max	507.442	2	350.965	4	45.417	1	.139	1	.182	2	.045	2
126			min	-322.877	1	-345.898	3	-15.44	2	-.139	2	-.159	1	-.042	1
127		4	max	512.648	2	365.343	4	59.795	1	.139	1	.153	2	.458	3
128			min	-317.671	1	-360.276	3	-29.818	2	-.139	2	-.094	1	-.461	4
129		5	max	0	1	.005	3	.015	2	0	4	0	1	0	1
130			min	0	2	-.005	4	-.014	1	0	3	0	2	0	1
131	MP3A	1	max	0	1	.015	4	.019	1	0	3	0	1	0	1
132			min	0	1	-.015	3	-.019	2	0	4	0	1	0	1
133		2	max	438.273	2	283.16	4	29.707	7	.132	2	.198	2	.388	4
134			min	-272.06	1	-294.101	3	3.132	4	-.135	1	-.191	1	-.387	3
135		3	max	443.479	2	297.538	4	32.48	5	.132	2	.202	2	.042	9
136			min	-266.853	1	-308.479	3	-3.863	2	-.135	1	-.166	1	-.086	10
137		4	max	448.686	2	311.916	4	41.375	1	.132	2	.189	2	.384	3
138			min	-261.647	1	-322.857	3	-18.241	2	-.135	1	-.124	1	-.356	4
139		5	max	0	1	.005	3	.017	6	0	4	0	1	0	10
140			min	0	2	-.005	4	-.015	1	0	3	0	2	0	1
141	M25	1	max	0	1	0	1	0	1	0	1	0	1	0	1
142			min	0	1	0	1	0	1	0	1	0	1	0	1
143		2	max	225.903	2	233.19	4	142.37	1	.336	1	.326	4	.154	4
144			min	-255.003	1	-243.477	3	-166.43	2	-.336	2	-.317	3	-.178	3
145		3	max	225.903	2	222.04	4	131.164	3	.336	1	.44	1	.545	3
146			min	-255.003	1	-255.551	3	-151.123	4	-.336	2	-.5	2	-.505	4
147		4	max	244.484	2	299.025	4	186.668	2	.374	2	.274	3	.123	3
148			min	-253.596	1	-282.295	3	-161.269	1	-.382	1	-.272	4	-.134	4
149		5	max	0	1	0	1	0	1	0	1	0	1	0	1
150			min	0	1	0	1	0	1	0	1	0	1	0	1
151	M26	1	max	0	1	.009	1	.007	4	0	1	0	1	0	1
152			min	0	1	0	11	-.009	2	0	1	0	1	0	1
153		2	max	261.339	1	234.613	2	176.807	4	.327	4	.313	2	.141	2
154			min	-313.506	2	-247.834	1	-195.393	3	-.328	3	-.29	1	-.165	1
155		3	max	275.778	1	222.538	2	151.797	4	.327	4	.426	4	.571	1
156			min	-327.945	2	-259.909	1	-170.384	3	-.328	3	-.46	3	-.521	2
157		4	max	254.778	3	254.768	2	145.132	1	.275	3	.248	4	.099	1
158			min	-275.891	4	-233.007	1	-135.982	2	-.282	4	-.246	3	-.112	2
159		5	max	0	1	0	11	.009	3	0	1	0	1	0	1
160			min	0	1	-.008	1	0	5	0	1	0	1	0	1
161	M27	1	max	0	1	.01	2	0	5	0	1	0	1	0	1
162			min	0	1	0	9	-.011	4	0	1	0	1	0	1
163		2	max	256.371	4	207.128	1	134.722	2	.256	3	.246	3	.138	1
164			min	-298.184	3	-218.833	2	-143.242	1	-.254	4	-.239	4	-.163	2
165		3	max	270.81	4	195.054	1	126.386	2	.256	3	.369	3	.489	2
166			min	-312.623	3	-230.908	2	-134.906	1	-.254	4	-.394	4	-.445	1
167		4	max	272.524	1	287.758	1	222.168	4	.339	4	.316	2	.086	2
168			min	-305.412	2	-269.597	2	-202.62	3	-.342	3	-.297	1	-.094	1
169		5	max	0	1	0	9	.008	2	0	1	0	1	0	1
170			min	0	1	-.008	2	-.005	3	0	1	0	1	0	1
171	M28	1	max	292.422	3	355.793	1	384.1	1	.014	1	.474	2	.565	4

Envelope Member Section Forces (Continued)

	Member	Sec		Axial[lb]	LC	y Shear[lb]	LC	z Shear[lb]	LC	Torque[k-...	LC	y-y Mome...	LC	z-z Mome...	LC
172			min	-344.195	4	-363.508	2	-403.996	2	-.014	2	-.506	1	-.553	3
173		2	max	284.526	3	360.351	1	387.919	1	.014	1	.238	2	.508	4
174			min	-336.3	4	-368.067	2	-400.177	2	-.014	2	-.278	1	-.497	3
175		3	max	276.63	3	364.91	1	391.738	1	.014	1	.105	4	.457	4
176			min	-328.404	4	-372.625	2	-396.358	2	-.014	2	-.149	3	-.445	3
177		4	max	268.735	3	369.468	1	395.556	1	.014	1	.27	4	.412	4
178			min	-320.508	4	-377.184	2	-392.539	2	-.014	2	-.313	3	-.398	3
179		5	max	260.839	3	374.027	1	399.375	1	.014	1	.433	4	.436	2
180			min	-312.613	4	-381.742	2	-388.72	2	-.014	2	-.473	3	-.414	1
181	M29	1	max	225.643	2	405.297	3	537.627	3	.017	3	.579	4	.451	1
182			min	-258.9	1	-396.46	4	-567.607	4	-.016	4	-.597	3	-.438	2
183		2	max	225.643	2	405.297	3	541.446	3	.017	3	.27	4	.426	1
184			min	-258.9	1	-396.46	4	-563.789	4	-.016	4	-.298	3	-.423	2
185		3	max	225.643	2	405.297	3	545.265	3	.017	3	.122	1	.41	1
186			min	-258.9	1	-396.46	4	-559.97	4	-.016	4	-.156	2	-.414	2
187		4	max	225.643	2	405.297	3	549.084	3	.017	3	.306	3	.401	1
188			min	-258.9	1	-396.46	4	-556.151	4	-.016	4	-.342	4	-.412	2
189		5	max	225.643	2	405.297	3	552.902	3	.017	3	.61	3	.401	1
190			min	-258.9	1	-396.46	4	-552.332	4	-.016	4	-.646	4	-.416	2
191	M30	1	max	254.835	4	456.57	1	347.141	1	.013	2	.411	4	.531	1
192			min	-306.376	3	-456.249	2	-370.885	2	-.013	1	-.439	3	-.501	2
193		2	max	246.94	4	460.389	1	351.699	1	.013	2	.264	4	.415	1
194			min	-298.481	3	-452.43	2	-375.443	2	-.013	1	-.298	3	-.391	2
195		3	max	239.044	4	464.208	1	356.258	1	.013	2	.123	4	.435	4
196			min	-290.585	3	-448.612	2	-380.002	2	-.013	1	-.162	3	-.419	3
197		4	max	231.148	4	468.027	1	360.817	1	.013	2	.308	1	.491	4
198			min	-282.69	3	-444.793	2	-384.56	2	-.013	1	-.352	2	-.49	3
199		5	max	223.253	4	471.846	1	365.375	1	.013	2	.548	1	.549	4
200			min	-274.794	3	-440.974	2	-389.119	2	-.013	1	-.597	2	-.564	3
201	M31	1	max	444.787	4	986.381	2	1224.775	8	.124	1	.245	1	.358	4
202			min	-771.767	1	-1015.805	1	108.85	3	-.145	2	-.382	2	-.466	3
203		2	max	425.779	2	83.638	3	241.315	4	.002	6	.064	3	.152	3
204			min	-773.175	1	-69.956	4	-215.421	3	0	4	-.056	4	-.142	10
205		3	max	425.779	2	83.638	3	224.625	4	.002	6	.124	4	.202	4
206			min	-773.175	1	-69.956	4	-232.111	3	0	4	-.091	3	-.188	3
207		4	max	425.779	2	83.638	3	210.139	4	.002	6	.287	4	.52	4
208			min	-773.175	1	-69.956	4	-246.597	3	0	4	-.263	3	-.545	3
209		5	max	677.782	3	294.748	1	148.103	1	.022	2	.146	1	.16	4
210			min	-1022.163	4	-243.38	2	-604.784	6	-.023	1	-.379	2	-.538	7
211	M32	1	max	840.245	1	836.184	4	1216.993	5	.134	3	.309	3	.261	1
212			min	-1162.059	2	-847.102	3	107.526	2	-.133	4	-.474	4	-.392	2
213		2	max	444.988	4	90.033	4	220.919	1	.002	4	.073	2	.158	2
214			min	-784.073	3	-75.246	3	-204.798	2	-.001	3	-.057	1	-.12	1
215		3	max	461.372	4	61.656	4	204.229	1	.002	4	.14	1	.184	3
216			min	-800.457	3	-46.869	3	-221.487	2	-.001	3	-.107	2	-.163	4
217		4	max	477.755	4	64.302	2	189.743	1	.002	4	.309	1	.418	1
218			min	-816.84	3	-48.668	1	-235.973	2	-.001	3	-.294	2	-.451	2
219		5	max	833.788	4	200.855	3	269.797	3	.015	4	.083	3	.17	1
220			min	-1175.627	3	-159.161	4	-712.451	4	-.018	3	-.346	8	-.551	6
221	M33	1	max	980.976	3	762.684	3	1244.475	7	.137	4	.234	2	.259	2
222			min	-1285.04	4	-780.033	4	135.87	4	-.137	3	-.342	1	-.347	1
223		2	max	420.442	1	85.148	1	209.921	3	0	1	.151	4	.199	4

Envelope Member Section Forces (Continued)

	Member	Sec		Axial[lb]	LC	y Shear[lb]	LC	z Shear[lb]	LC	Torque[k-...	LC	y-y Mome...	LC	z-z Mome...	LC
224			min	-748.448	2	-76.765	2	-153.965	4	0	2	-.182	3	-.22	3
225		3	max	428.634	1	80.418	1	201.299	3	0	1	.057	4	.118	4
226			min	-756.639	2	-72.035	2	-162.587	4	0	2	-.058	3	-.118	3
227		4	max	436.826	1	75.689	1	192.575	3	0	1	.055	3	.065	2
228			min	-764.831	2	-67.306	2	-171.311	4	0	2	-.033	4	-.053	1
229		5	max	445.017	1	70.959	1	183.851	3	0	1	.154	3	.188	2
230			min	-773.023	2	-62.576	2	-180.036	4	0	2	-.121	4	-.174	1
231	M34	1	max	445.017	1	70.97	1	183.189	3	0	1	.154	3	.188	2
232			min	-773.023	2	-62.279	2	-181.211	4	0	2	-.121	4	-.174	1
233		2	max	453.209	1	66.241	1	177.58	3	0	1	.241	3	.305	2
234			min	-781.215	2	-57.549	2	-186.82	4	0	2	-.205	4	-.297	1
235		3	max	461.401	1	61.511	1	170.818	3	0	1	.317	3	.416	2
236			min	-789.406	2	-52.82	2	-193.582	4	0	2	-.285	4	-.42	1
237		4	max	916.428	1	269.164	4	210.693	2	.02	3	.143	1	.237	3
238			min	-1260.548	2	-230.472	3	-603.184	1	-.022	4	-.173	2	-.338	4
239		5	max	924.62	1	283.352	4	205.297	2	.02	3	.135	4	.164	3
240			min	-1268.74	2	-244.661	3	-608.581	1	-.022	4	-.371	3	-.514	8
241	MP2A	1	max	292.642	5	211.882	4	492.117	1	.021	3	.029	5	0	1
242			min	73.68	3	-211.874	3	-492.106	2	-.021	4	.007	2	0	1
243		2	max	565.082	6	629.139	4	315.203	1	.098	4	.113	6	.441	4
244			min	101.547	1	-609.096	3	-276.285	2	-.103	3	.021	2	-.447	3
245		3	max	757.782	6	718.6	4	391.205	1	.098	4	.807	1	.927	3
246			min	192.849	1	-698.556	3	-352.287	2	-.103	3	-.66	2	-.972	4
247		4	max	-71.484	2	204.222	3	443.575	2	0	3	.026	1	.024	3
248			min	-277.27	5	-204.195	4	-443.429	1	0	8	-.026	2	-.024	4
249		5	max	0	2	.199	8	1.219	6	0	3	0	1	0	1
250			min	0	1	-.048	3	-.322	1	0	8	0	1	0	1
251	M26B	1	max	135.742	1	337.8	1	209.575	4	.466	3	.142	1	.096	2
252			min	-167.664	2	-372.778	2	-219.602	3	-.464	4	-.136	2	-.116	1
253		2	max	135.742	1	337.8	1	209.575	4	.466	3	.14	1	.111	2
254			min	-167.664	2	-372.778	2	-219.602	3	-.464	4	-.136	2	-.13	1
255		3	max	135.742	1	337.8	1	209.575	4	.466	3	.139	1	.127	2
256			min	-167.664	2	-372.778	2	-219.602	3	-.464	4	-.135	2	-.144	1
257		4	max	135.742	1	337.8	1	209.575	4	.466	3	.138	1	.143	2
258			min	-167.664	2	-372.778	2	-219.602	3	-.464	4	-.134	2	-.158	1
259		5	max	135.742	1	337.8	1	209.575	4	.466	3	.137	1	.158	2
260			min	-167.664	2	-372.778	2	-219.602	3	-.464	4	-.134	2	-.172	1
261	M27A	1	max	195.45	1	513.134	2	394.17	3	.657	3	.136	2	.032	2
262			min	-163.502	2	-197.462	1	-384.081	4	-.621	4	-.142	1	-.03	1
263		2	max	195.45	1	513.134	2	394.17	3	.657	3	.135	2	.011	2
264			min	-163.502	2	-197.462	1	-384.081	4	-.621	4	-.141	1	-.022	1
265		3	max	195.45	1	513.134	2	394.17	3	.657	3	.135	2	-.009	4
266			min	-163.502	2	-197.462	1	-384.081	4	-.621	4	-.139	1	-.031	5
267		4	max	195.45	1	513.134	2	394.17	3	.657	3	.134	2	-.005	1
268			min	-163.502	2	-197.462	1	-384.081	4	-.621	4	-.138	1	-.05	6
269		5	max	195.45	1	513.134	2	394.17	3	.657	3	.134	2	.003	1
270			min	-163.502	2	-197.462	1	-384.081	4	-.621	4	-.137	1	-.07	6
271	M28A	1	max	240.295	1	36.781	1	342.491	4	1.219	3	.21	3	.71	2
272			min	-283.142	2	-123.845	2	-323.417	3	-1.233	4	-.211	4	-.717	1
273		2	max	240.295	1	36.781	1	342.491	4	1.219	3	.197	3	.716	2
274			min	-283.142	2	-123.845	2	-323.417	3	-1.233	4	-.196	4	-.719	1
275		3	max	240.295	1	36.781	1	342.491	4	1.219	3	.183	3	.721	2

Envelope Member Section Forces (Continued)

	Member	Sec		Axial[lb]	LC	y Shear[lb]	LC	z Shear[lb]	LC	Torque[k-...	LC	y-y Mome...	LC	z-z Mome...	LC
276			min	-283.142	2	-123.845	2	-323.417	3	-1.233	4	-.182	4	-.72	1
277		4	max	240.295	1	36.781	1	342.491	4	1.219	3	.17	3	.726	2
278			min	-283.142	2	-123.845	2	-323.417	3	-1.233	4	-.168	4	-.722	1
279		5	max	240.295	1	36.781	1	342.491	4	1.219	3	.156	3	.731	2
280			min	-283.142	2	-123.845	2	-323.417	3	-1.233	4	-.153	4	-.723	1
281	M29A	1	max	924.768	1	1102.245	6	954.638	3	.89	3	.358	4	.146	2
282			min	-881.958	2	271.511	1	-973.666	4	-.946	4	-.357	3	-.123	1
283		2	max	924.768	1	1102.245	6	954.638	3	.89	3	.317	4	.128	2
284			min	-881.958	2	271.511	1	-973.666	4	-.946	4	-.318	3	-.135	1
285		3	max	924.768	1	1102.245	6	954.638	3	.89	3	.276	4	.11	2
286			min	-881.958	2	271.511	1	-973.666	4	-.946	4	-.278	3	-.146	1
287		4	max	924.768	1	1102.245	6	954.638	3	.89	3	.236	4	.092	2
288			min	-881.958	2	271.511	1	-973.666	4	-.946	4	-.238	3	-.157	1
289		5	max	924.768	1	1102.245	6	954.638	3	.89	3	.195	4	.074	2
290			min	-881.958	2	271.511	1	-973.666	4	-.946	4	-.198	3	-.182	5
291	M30A	1	max	137.054	1	411.265	1	207.432	4	.552	3	.151	2	.166	2
292			min	-177.216	2	-419.449	2	-201.815	3	-.563	4	-.151	1	-.19	1
293		2	max	137.054	1	411.265	1	207.432	4	.552	3	.149	2	.183	2
294			min	-177.216	2	-419.449	2	-201.815	3	-.563	4	-.149	1	-.207	1
295		3	max	137.054	1	411.265	1	207.432	4	.552	3	.147	2	.201	2
296			min	-177.216	2	-419.449	2	-201.815	3	-.563	4	-.147	1	-.224	1
297		4	max	137.054	1	411.265	1	207.432	4	.552	3	.145	2	.218	2
298			min	-177.216	2	-419.449	2	-201.815	3	-.563	4	-.145	1	-.242	1
299		5	max	137.054	1	411.265	1	207.432	4	.552	3	.144	2	.236	2
300			min	-177.216	2	-419.449	2	-201.815	3	-.563	4	-.143	1	-.259	1
301	M31A	1	max	235.725	1	594.322	2	487.571	3	.73	3	.151	1	.021	2
302			min	-195.559	2	-236.381	1	-493.244	4	-.737	4	-.15	2	-.023	1
303		2	max	235.725	1	594.322	2	487.571	3	.73	3	.149	1	-.004	2
304			min	-195.559	2	-236.381	1	-493.244	4	-.737	4	-.149	2	-.022	5
305		3	max	235.725	1	594.322	2	487.571	3	.73	3	.147	1	-.004	1
306			min	-195.559	2	-236.381	1	-493.244	4	-.737	4	-.147	2	-.041	6
307		4	max	235.725	1	594.322	2	487.571	3	.73	3	.145	1	.006	1
308			min	-195.559	2	-236.381	1	-493.244	4	-.737	4	-.145	2	-.063	6
309		5	max	235.725	1	594.322	2	487.571	3	.73	3	.143	1	.016	1
310			min	-195.559	2	-236.381	1	-493.244	4	-.737	4	-.144	2	-.085	6
311	MP1C	1	max	0	1	.474	4	.338	1	0	3	0	1	0	1
312			min	0	1	-.466	3	-.343	2	0	4	0	1	0	1
313		2	max	434.602	3	149.531	1	264.943	1	.16	4	.398	2	.257	4
314			min	-262.459	4	-136.257	2	-286.131	2	-.152	3	-.371	1	-.251	3
315		3	max	439.809	3	149.531	1	279.321	1	.16	4	.032	2	.111	4
316			min	-257.252	4	-136.257	2	-300.509	2	-.152	3	-.031	1	-.121	3
317		4	max	445.015	3	149.531	1	293.699	1	.16	4	.327	1	.233	2
318			min	-252.046	4	-136.257	2	-314.887	2	-.152	3	-.353	2	-.259	1
319		5	max	0	2	.015	3	.007	2	0	4	0	2	0	4
320			min	0	1	-.014	4	-.007	1	0	3	0	1	0	3
321	MP3C	1	max	0	1	.016	4	.018	1	0	3	0	1	0	1
322			min	0	1	-.016	3	-.018	2	0	4	0	1	0	1
323		2	max	468.911	3	136.471	4	225.969	1	.116	1	.354	2	.31	4
324			min	-289.613	4	-123.096	3	-229.504	2	-.132	2	-.341	1	-.312	3
325		3	max	474.118	3	150.849	4	240.347	1	.116	1	.075	4	.13	4
326			min	-284.407	4	-137.474	3	-243.882	2	-.132	2	-.067	3	-.149	3
327		4	max	479.324	3	165.227	4	254.725	1	.116	1	.304	4	.186	2

Envelope Member Section Forces (Continued)

	Member	Sec		Axial[lb]	LC	y Shear[lb]	LC	z Shear[lb]	LC	Torque[k-...	LC	y-y Mome...	LC	z-z Mome...	LC
328			min	-279.2	4	-151.852	3	-258.26	2	-.132	2	-.301	3	-.223	1
329		5	max	0	4	.011	3	.009	2	0	4	0	4	0	2
330			min	0	3	-.011	4	-.008	1	0	3	0	3	0	1
331	MP2C	1	max	292.642	6	422.067	4	281.883	1	.042	3	.029	7	0	1
332			min	73.68	3	-422.052	3	-281.898	2	-.042	4	.007	4	0	1
333		2	max	577.985	7	391.28	4	524.555	1	.108	2	.33	2	.181	4
334			min	104.637	4	-384.855	3	-561.707	2	-.107	1	-.334	1	-.204	3
335		3	max	770.684	7	510.394	4	585.73	1	.108	2	.814	1	.78	3
336			min	195.938	4	-503.97	3	-622.882	2	-.107	1	-.892	2	-.816	4
337		4	max	-71.484	3	383.767	3	264.023	2	0	4	.024	1	.026	3
338			min	-277.27	8	-383.732	4	-264.06	1	0	7	-.024	2	-.026	4
339		5	max	0	3	.55	7	.299	4	0	4	0	1	0	1
340			min	0	1	-.334	4	-.507	7	0	7	0	1	0	1
341	M35	1	max	85.292	4	356.066	4	176.459	2	.439	1	.141	4	.15	3
342			min	-105.639	3	-402.553	3	-176.283	1	-.435	2	-.128	3	-.157	4
343		2	max	85.292	4	356.066	4	176.459	2	.439	1	.134	4	.167	3
344			min	-105.639	3	-402.553	3	-176.283	1	-.435	2	-.122	3	-.172	4
345		3	max	85.292	4	356.066	4	176.459	2	.439	1	.129	2	.184	3
346			min	-105.639	3	-402.553	3	-176.283	1	-.435	2	-.115	3	-.187	4
347		4	max	85.292	4	356.066	4	176.459	2	.439	1	.136	2	.201	3
348			min	-105.639	3	-402.553	3	-176.283	1	-.435	2	-.122	1	-.202	4
349		5	max	85.292	4	356.066	4	176.459	2	.439	1	.144	2	.217	3
350			min	-105.639	3	-402.553	3	-176.283	1	-.435	2	-.129	1	-.217	4
351	M36	1	max	167.578	4	544.673	3	361.725	1	.552	1	.135	3	.021	3
352			min	-147.22	3	-214.05	4	-361.144	2	-.556	2	-.148	4	-.022	4
353		2	max	167.578	4	544.673	3	361.725	1	.552	1	.123	3	0	1
354			min	-147.22	3	-214.05	4	-361.144	2	-.556	2	-.135	4	-.02	6
355		3	max	167.578	4	544.673	3	361.725	1	.552	1	.11	3	-.004	4
356			min	-147.22	3	-214.05	4	-361.144	2	-.556	2	-.122	4	-.038	7
357		4	max	167.578	4	544.673	3	361.725	1	.552	1	.114	1	.005	4
358			min	-147.22	3	-214.05	4	-361.144	2	-.556	2	-.128	2	-.059	7
359		5	max	167.578	4	544.673	3	361.725	1	.552	1	.129	1	.013	4
360			min	-147.22	3	-214.05	4	-361.144	2	-.556	2	-.144	2	-.08	7
361	M37	1	max	205.742	4	35.266	4	285.139	2	1.139	1	.131	1	.604	3
362			min	-232.705	3	-134.536	7	-257.885	1	-1.154	2	-.138	2	-.608	4
363		2	max	205.742	4	35.266	4	285.139	2	1.139	1	.12	1	.609	3
364			min	-232.705	3	-134.536	7	-257.885	1	-1.154	2	-.126	2	-.61	4
365		3	max	205.742	4	35.266	4	285.139	2	1.139	1	.11	1	.614	3
366			min	-232.705	3	-134.536	7	-257.885	1	-1.154	2	-.114	2	-.611	4
367		4	max	205.742	4	35.266	4	285.139	2	1.139	1	.099	1	.62	3
368			min	-232.705	3	-134.536	7	-257.885	1	-1.154	2	-.102	2	-.613	4
369		5	max	205.742	4	35.266	4	285.139	2	1.139	1	.088	1	.625	3
370			min	-232.705	3	-134.536	7	-257.885	1	-1.154	2	-.09	2	-.614	4
371	M38	1	max	747.843	4	1115.586	7	882.167	1	.662	1	.242	2	.138	3
372			min	-720.905	3	275.814	4	-909.789	2	-.788	2	-.235	1	-.137	4
373		2	max	747.843	4	1115.586	7	882.167	1	.662	1	.204	2	.12	3
374			min	-720.905	3	275.814	4	-909.789	2	-.788	2	-.199	1	-.149	4
375		3	max	747.843	4	1115.586	7	882.167	1	.662	1	.166	2	.101	3
376			min	-720.905	3	275.814	4	-909.789	2	-.788	2	-.162	1	-.16	4
377		4	max	747.843	4	1115.586	7	882.167	1	.662	1	.128	2	.083	3
378			min	-720.905	3	275.814	4	-909.789	2	-.788	2	-.125	1	-.172	4
379		5	max	747.843	4	1115.586	7	882.167	1	.662	1	.09	2	.065	3

Envelope Member Section Forces (Continued)

	Member	Sec		Axial[lb]	LC	y Shear[lb]	LC	z Shear[lb]	LC	Torque[k-...	LC	y-y Mome...	LC	z-z Mome...	LC
380			min	-720.905	3	275.814	4	-909.789	2	-.788	2	-.088	1	-.214	8
381	M39	1	max	100.821	4	345.911	4	196.667	2	.535	1	.131	3	.172	3
382			min	-131.636	3	-351.448	3	-180.533	1	-.559	2	-.141	4	-.198	4
383		2	max	100.821	4	345.911	4	196.667	2	.535	1	.134	3	.187	3
384			min	-131.636	3	-351.448	3	-180.533	1	-.559	2	-.145	4	-.212	4
385		3	max	100.821	4	345.911	4	196.667	2	.535	1	.138	3	.201	3
386			min	-131.636	3	-351.448	3	-180.533	1	-.559	2	-.148	4	-.226	4
387		4	max	100.821	4	345.911	4	196.667	2	.535	1	.142	3	.216	3
388			min	-131.636	3	-351.448	3	-180.533	1	-.559	2	-.151	4	-.241	4
389		5	max	100.821	4	345.911	4	196.667	2	.535	1	.145	3	.231	3
390			min	-131.636	3	-351.448	3	-180.533	1	-.559	2	-.155	4	-.255	4
391	M40	1	max	203.127	4	527.116	3	446.864	1	.631	1	.132	4	.02	3
392			min	-172.441	3	-170.327	4	-462.869	2	-.666	2	-.122	3	-.022	4
393		2	max	203.127	4	527.116	3	446.864	1	.631	1	.143	4	-.002	3
394			min	-172.441	3	-170.327	4	-462.869	2	-.666	2	-.133	3	-.023	8
395		3	max	203.127	4	527.116	3	446.864	1	.631	1	.154	4	-.004	2
396			min	-172.441	3	-170.327	4	-462.869	2	-.666	2	-.144	3	-.042	5
397		4	max	203.127	4	527.116	3	446.864	1	.631	1	.164	4	0	4
398			min	-172.441	3	-170.327	4	-462.869	2	-.666	2	-.155	3	-.062	5
399		5	max	203.127	4	527.116	3	446.864	1	.631	1	.175	4	.006	4
400			min	-172.441	3	-170.327	4	-462.869	2	-.666	2	-.165	3	-.083	7
401	MP1B	1	max	0	1	.364	4	.373	1	0	3	0	1	0	1
402			min	0	1	-.373	3	-.39	2	0	4	0	1	0	1
403		2	max	518.224	4	127.059	4	242.167	1	.13	2	.353	2	.266	4
404			min	-330.223	3	-143.824	3	-254.413	2	-.116	1	-.348	1	-.278	3
405		3	max	523.431	4	141.437	4	256.545	1	.13	2	.045	3	.098	4
406			min	-325.016	3	-158.202	3	-268.79	2	-.116	1	-.056	4	-.089	3
407		4	max	528.637	4	155.815	4	270.923	1	.13	2	.296	3	.214	1
408			min	-319.81	3	-172.58	3	-283.168	2	-.116	1	-.322	4	-.183	2
409		5	max	0	3	.011	3	.008	2	0	4	0	3	0	1
410			min	0	4	-.011	4	-.008	1	0	3	0	4	0	2
411	MP3B	1	max	0	1	.021	4	.015	1	0	3	0	1	0	1
412			min	0	1	-.022	3	-.016	2	0	4	0	1	0	1
413		2	max	465.791	4	135.435	2	259.785	1	.151	4	.406	2	.302	4
414			min	-288.522	3	-139.269	1	-280.611	2	-.164	3	-.392	1	-.3	3
415		3	max	470.998	4	135.435	2	274.163	1	.151	4	.046	2	.166	4
416			min	-283.316	3	-139.269	1	-294.989	2	-.164	3	-.058	1	-.16	3
417		4	max	476.204	4	135.435	2	288.541	1	.151	4	.293	1	.249	1
418			min	-278.11	3	-139.269	1	-309.367	2	-.164	3	-.332	2	-.237	2
419		5	max	0	3	.015	3	.007	2	0	4	0	3	0	4
420			min	0	4	-.015	4	-.007	1	0	3	0	4	0	3
421	MP2B	1	max	292.642	7	422.039	4	281.901	1	.042	3	.029	5	0	1
422			min	73.68	1	-422.066	3	-281.904	2	-.042	4	.007	1	0	1
423		2	max	568.434	5	361.914	4	555.986	1	.103	3	.338	2	.196	4
424			min	117.409	2	-389.213	3	-557.958	2	-.11	4	-.334	1	-.168	3
425		3	max	761.133	5	481.028	4	617.161	1	.103	3	.876	1	.824	3
426			min	208.71	2	-508.327	3	-619.133	2	-.11	4	-.876	2	-.742	4
427		4	max	-71.484	4	383.716	3	264.044	2	0	8	.024	1	.026	3
428			min	-277.27	7	-383.772	4	-264.035	1	0	3	-.024	2	-.026	4
429		5	max	0	8	.318	3	.306	7	0	8	0	1	0	1
430			min	0	1	-.67	8	-.282	4	0	3	0	1	0	1
431	M44	1	max	79.942	3	354.733	3	211.691	1	.495	2	.157	3	.16	4

Envelope Member Section Forces (Continued)

	Member	Sec		Axial[lb]	LC	y Shear[lb]	LC	z Shear[lb]	LC	Torque[k-...	LC	y-y Mome...	LC	z-z Mome...	LC
432			min	-103.035	4	-399.776	4	-231.395	2	-.492	1	-.142	4	-.167	3
433		2	max	79.942	3	354.733	3	211.691	1	.495	2	.161	3	.176	4
434			min	-103.035	4	-399.776	4	-231.395	2	-.492	1	-.146	4	-.182	3
435		3	max	79.942	3	354.733	3	211.691	1	.495	2	.165	3	.193	4
436			min	-103.035	4	-399.776	4	-231.395	2	-.492	1	-.151	4	-.197	3
437		4	max	79.942	3	354.733	3	211.691	1	.495	2	.169	3	.21	4
438			min	-103.035	4	-399.776	4	-231.395	2	-.492	1	-.155	4	-.212	3
439		5	max	79.942	3	354.733	3	211.691	1	.495	2	.173	3	.226	4
440			min	-103.035	4	-399.776	4	-231.395	2	-.492	1	-.159	4	-.226	3
441	M45	1	max	173.01	3	540.991	4	416.305	2	.69	2	.135	4	.028	4
442			min	-149.931	4	-213.624	3	-396.772	1	-.622	1	-.15	3	-.028	3
443		2	max	173.01	3	540.991	4	416.305	2	.69	2	.145	4	.005	4
444			min	-149.931	4	-213.624	3	-396.772	1	-.622	1	-.16	3	-.021	7
445		3	max	173.01	3	540.991	4	416.305	2	.69	2	.156	4	-.01	2
446			min	-149.931	4	-213.624	3	-396.772	1	-.622	1	-.17	3	-.036	5
447		4	max	173.01	3	540.991	4	416.305	2	.69	2	.166	4	-.002	3
448			min	-149.931	4	-213.624	3	-396.772	1	-.622	1	-.18	3	-.056	8
449		5	max	173.01	3	540.991	4	416.305	2	.69	2	.177	4	.007	3
450			min	-149.931	4	-213.624	3	-396.772	1	-.622	1	-.19	3	-.077	8
451	M46	1	max	210.274	3	26.407	2	292.908	1	1.16	2	.126	2	.592	4
452			min	-235.782	4	-124.747	5	-280.88	2	-1.176	1	-.116	1	-.598	3
453		2	max	210.274	3	26.407	2	292.908	1	1.16	2	.114	2	.596	4
454			min	-235.782	4	-124.747	5	-280.88	2	-1.176	1	-.104	1	-.598	3
455		3	max	210.274	3	26.407	2	292.908	1	1.16	2	.102	2	.599	4
456			min	-235.782	4	-124.747	5	-280.88	2	-1.176	1	-.092	1	-.597	3
457		4	max	210.274	3	26.407	2	292.908	1	1.16	2	.091	2	.602	4
458			min	-235.782	4	-124.747	5	-280.88	2	-1.176	1	-.08	1	-.597	3
459		5	max	210.274	3	26.407	2	292.908	1	1.16	2	.084	4	.605	4
460			min	-235.782	4	-124.747	5	-280.88	2	-1.176	1	-.074	3	-.596	3
461	M47	1	max	743.393	3	1106.539	5	905.527	2	.765	2	.22	1	.135	4
462			min	-717.901	4	296.647	2	-917.042	1	-.75	1	-.23	2	-.135	3
463		2	max	743.393	3	1106.539	5	905.527	2	.765	2	.182	1	.119	4
464			min	-717.901	4	296.647	2	-917.042	1	-.75	1	-.192	2	-.148	3
465		3	max	743.393	3	1106.539	5	905.527	2	.765	2	.144	1	.102	4
466			min	-717.901	4	296.647	2	-917.042	1	-.75	1	-.155	2	-.162	3
467		4	max	743.393	3	1106.539	5	905.527	2	.765	2	.106	1	.086	4
468			min	-717.901	4	296.647	2	-917.042	1	-.75	1	-.117	2	-.175	3
469		5	max	743.393	3	1106.539	5	905.527	2	.765	2	.067	1	.07	4
470			min	-717.901	4	296.647	2	-917.042	1	-.75	1	-.079	2	-.215	7
471	M48	1	max	112.167	3	413.893	3	166.376	3	.511	2	.134	4	.144	4
472			min	-140.777	4	-434.725	4	-164.744	4	-.514	1	-.145	3	-.164	3
473		2	max	112.167	3	413.893	3	166.376	3	.511	2	.127	4	.162	4
474			min	-140.777	4	-434.725	4	-164.744	4	-.514	1	-.138	3	-.181	3
475		3	max	112.167	3	413.893	3	166.376	3	.511	2	.12	4	.18	4
476			min	-140.777	4	-434.725	4	-164.744	4	-.514	1	-.131	3	-.199	3
477		4	max	112.167	3	413.893	3	166.376	3	.511	2	.123	1	.198	4
478			min	-140.777	4	-434.725	4	-164.744	4	-.514	1	-.136	2	-.216	3
479		5	max	112.167	3	413.893	3	166.376	3	.511	2	.13	1	.216	4
480			min	-140.777	4	-434.725	4	-164.744	4	-.514	1	-.143	2	-.233	3
481	M49	1	max	191.828	3	611.393	4	428.905	2	.6	2	.154	3	.013	4
482			min	-163.23	4	-237.313	3	-425.307	1	-.573	1	-.143	4	-.016	3
483		2	max	191.828	3	611.393	4	428.905	2	.6	2	.139	3	-.002	1

Envelope Member Section Forces (Continued)

	Member	Sec		Axial[lb]	LC	y Shear[lb]	LC	z Shear[lb]	LC	Torque[k-...	LC	y-y Mome...	LC	z-z Mome...	LC
484			min	-163.23	4	-237.313	3	-425.307	1	-.573	1	-.128	4	-.025	6
485		3	max	191.828	3	611.393	4	428.905	2	.6	2	.125	3	.004	3
486			min	-163.23	4	-237.313	3	-425.307	1	-.573	1	-.114	4	-.046	8
487		4	max	191.828	3	611.393	4	428.905	2	.6	2	.125	2	.013	3
488			min	-163.23	4	-237.313	3	-425.307	1	-.573	1	-.112	1	-.068	8
489		5	max	191.828	3	611.393	4	428.905	2	.6	2	.143	2	.023	3
490			min	-163.23	4	-237.313	3	-425.307	1	-.573	1	-.13	1	-.091	8
491	M50	1	max	2638.518	5	46.673	5	49.847	3	0	4	0	1	0	1
492			min	-762.153	2	-3.956	2	-49.847	4	0	3	0	1	0	1
493		2	max	2650.604	5	23.337	5	24.923	3	0	4	.046	3	.004	2
494			min	-744.615	2	-1.978	2	-24.923	4	0	3	-.046	4	-.043	5
495		3	max	2662.69	5	0	1	0	1	0	4	.062	3	.005	2
496			min	-727.078	2	0	1	0	1	0	3	-.062	4	-.058	5
497		4	max	2674.776	5	1.978	2	24.923	4	0	4	.046	3	.004	2
498			min	-709.541	2	-23.337	5	-24.923	3	0	3	-.046	4	-.043	5
499		5	max	2686.862	5	3.956	2	49.847	4	0	4	0	1	0	1
500			min	-692.004	2	-46.673	5	-49.847	3	0	3	0	1	0	1
501	M51	1	max	2687.233	8	46.867	8	39.616	1	0	2	0	1	0	1
502			min	-498.967	3	-4.597	3	-39.616	2	0	1	0	1	0	1
503		2	max	2699.192	8	23.433	8	19.808	1	0	2	.037	1	.004	3
504			min	-481.011	3	-2.299	3	-19.808	2	0	1	-.037	2	-.043	8
505		3	max	2711.151	8	0	1	0	1	0	2	.049	1	.006	3
506			min	-463.054	3	0	1	0	1	0	1	-.049	2	-.058	8
507		4	max	2723.111	8	2.299	3	19.808	2	0	2	.037	1	.004	3
508			min	-445.097	3	-23.433	8	-19.808	1	0	1	-.037	2	-.043	8
509		5	max	2735.07	8	4.597	3	39.616	2	0	2	0	1	0	1
510			min	-427.141	3	-46.867	8	-39.616	1	0	1	0	1	0	1
511	M52	1	max	2709.512	7	46.867	7	39.616	2	0	1	0	1	0	1
512			min	-616.146	4	-4.597	4	-39.616	1	0	2	0	1	0	1
513		2	max	2721.471	7	23.433	7	19.808	2	0	1	.037	2	.004	4
514			min	-598.189	4	-2.299	4	-19.808	1	0	2	-.037	1	-.043	7
515		3	max	2733.43	7	0	1	0	1	0	1	.049	2	.006	4
516			min	-580.233	4	0	1	0	1	0	2	-.049	1	-.058	7
517		4	max	2745.389	7	2.299	4	19.808	1	0	1	.037	2	.004	4
518			min	-562.276	4	-23.433	7	-19.808	2	0	2	-.037	1	-.043	7
519		5	max	2757.349	7	4.597	4	39.616	1	0	1	0	1	0	1
520			min	-544.32	4	-46.867	7	-39.616	2	0	2	0	1	0	1

Envelope AISC 14th(360-10): LRFD Steel Code Checks

	Member	Shape	Code Check	Loc...	LC	Shear Check	Loc.....		L..	phi*Pn...	phi*Pn...	phi*Mn...	phi*Mn.....		Eqn
1	MP2A	PIPE_2.0	.725	4.5	4	.135	4.5		3	14916...	32130	1.872	1.872	1...	H1-1b
2	MP2B	PIPE_2.0	.676	4.5	1	.125	4.5		2	14916...	32130	1.872	1.872	1...	H1-1b
3	MP2C	PIPE_2.0	.670	4.5	2	.132	4.5		2	14916...	32130	1.872	1.872	2...	H1-1b
4	M7	LL3x3x3x3	.451	0	6	.059	1.625	y	8	46411....	70632	5.543	2.345	1...	H1-1b
5	M8	LL3x3x3x3	.448	0	7	.056	1.625	y	7	46411....	70632	5.543	2.345	1...	H1-1b
6	M9	LL3x3x3x3	.431	0	8	.056	1.625	y	5	46411....	70632	5.543	2.345	1...	H1-1b
7	M1	L3x3x4	.404	3.125	10	.137	0	z	2	19639....	46656	1.688	3.495	1...	H2-1
8	M25	PIPE_2.0	.403	1.45	3	.247	10....		1	7314.9...	32130	1.872	1.872	1...	H1-1b
9	M2	L3x3x4	.401	1.042	2	.112	0	z	3	19639....	46656	1.688	3.574	1...	H2-1
10	M31	L3x3x4	.397	5.273	3	.665	0	y	2	19639....	46656	1.688	3.572	1...	H2-1

Envelope AISC 14th(360-10): LRFD Steel Code Checks (Continued)

	Member	Shape	Code Check	Loc...	LC	Shear Check	Loc.....		L..	phi*Pn...	phi*Pn...	phi*Mn..	phi*Mn.....		Eqn
11	MP1A	PIPE_2.0	.392	4.479	4	.091	4.479		1	23808...	32130	1.872	1.872	2...	H1-1b
12	M32	L3x3x4	.382	5.273	2	.607	0	y	3	19639...	46656	1.688	3.579	1...	H2-1
13	M26	PIPE_2.0	.381	6.16	3	.221	1.45		3	7314.9...	32130	1.872	1.872	2...	H1-1b
14	M27	PIPE_2.0	.374	6.16	1	.232	10....		3	7314.9...	32130	1.872	1.872	1...	H1-1b
15	M3	L3x3x4	.368	1.042	4	.113	0	z	4	19639...	46656	1.688	3.565	1...	H2-1
16	MP3B	PIPE_2.0	.367	4.479	2	.128	4.479		3	23808...	32130	1.872	1.872	1...	H1-1b
17	MP1C	PIPE_2.0	.362	4.479	2	.115	4.479		4	23808...	32130	1.872	1.872	1...	H1-1b
18	MP3A	PIPE_2.0	.353	4.479	3	.107	4.479		4	23808...	32130	1.872	1.872	2...	H1-1b
19	M34	L3x3x4	.337	2.181	3	.110	3.125	y	4	37580...	46656	1.688	3.756	1...	H2-1
20	MP1B	PIPE_2.0	.319	4.479	1	.111	4.479		2	23808...	32130	1.872	1.872	1...	H1-1b
21	MP3C	PIPE_2.0	.318	4.479	1	.117	4.479		2	23808...	32130	1.872	1.872	1...	H1-1b
22	M33	L3x3x4	.305	0	1	.617	0	y	3	37580...	46656	1.688	3.756	2...	H2-1
23	M29	L5x3.5x4	.302	1.807	3	.080	1.807	z	3	52129...	67068	2.135	6.062	2...	H2-1
24	M28	L5x3.5x4	.269	1.807	1	.063	1.807	z	1	52129...	67068	2.135	6.062	1...	H2-1
25	M30	L5x3.5x4	.263	0	2	.060	1.807	z	2	52129...	67068	2.135	6.062	1...	H2-1
26	M12	L3x3x4	.203	0	1	.012	6.626	y	4	17607...	46656	1.688	3.64	2...	H2-1
27	M10	L3x3x4	.203	6.626	3	.011	6.626	y	7	17607...	46656	1.688	3.633	2...	H2-1
28	M11	L3x3x4	.201	6.626	1	.012	0	y	3	17607...	46656	1.688	3.641	2...	H2-1
29	M52	LL2.5x2.5...	.065	4.94	7	.005	4.94	z	2	42720...	58320	3.3	2.55	1...	H1-1b*
30	M51	LL2.5x2.5...	.064	4.94	8	.005	0	z	1	42720...	58320	3.3	2.55	1...	H1-1b*
31	M50	LL2.5x2.5...	.063	4.94	5	.007	0	z	3	42720...	58320	3.3	2.55	1	H1-1b*

Envelope AISI S100-10: LRFD Cold Formed Steel Code Checks

	Member	Shape	Code Check	Loc[ft]	LC	Shear Check	Loc[ft]	Dir	LC	phi*Pn[...	phi*Tn[...	phi*Mn...	phi*Mn...	Cb	Cmyy	Cmzz	Eqn
1	M4	5CU4X...	.367	0	8	.231	0	y	4	13280...	14794...	7.684	18.596	2.245	.85	.85	C5.2.2...
2	M5	5CU4X...	.377	0	7	.212	0	y	2	13280...	14794...	7.684	18.596	1.893	.85	.85	C5.1.2...
3	M6	5CU4X...	.373	0	5	.215	0	y	2	13280...	14794...	7.684	18.596	1.907	.85	.85	C5.2.2...

Envelope AA ADM1-10: ASD - Building Aluminum Code Checks

Member	Shape	Code C...	Loc[ft]	LC	Shear ...	Loc[ft]	Dir	LC	Pnc/O...	Pnt/Om...	Mny/O...	Mnz/O...	Vny/O...	Vnz/O...	Cb	Eqn
No Data to Print ...																

EXHIBIT 9

EBI Consulting

environmental | engineering | due diligence

RADIO FREQUENCY EMISSIONS ANALYSIS REPORT EVALUATION OF HUMAN EXPOSURE POTENTIAL TO NON-IONIZING EMISSIONS

T-Mobile Existing Facility

Site ID: CTHA832A

285 Chamberlain Hill Road
Higganum, Connecticut 06441

February 22, 2021

EBI Project Number: 6221000648

Site Compliance Summary	
Compliance Status:	**COMPLIANT**
Site total MPE% of FCC general population allowable limit:	**9.66%**

21 B Street, Burlington, MA 01803 · Tel: (781) 273.2500 · Fax: (781) 273.3311

February 22, 2021

T-Mobile
Attn: Jason Overbey, RF Manager
35 Griffin Road South
Bloomfield, Connecticut 06002

Emissions Analysis for Site: CTHA832A -

EBI Consulting was directed to analyze the proposed T-Mobile facility located at **285 Chamberlain Hill Road** in **Higganum, Connecticut** for the purpose of determining whether the emissions from the Proposed T-Mobile Antenna Installation located on this property are within specified federal limits.

All information used in this report was analyzed as a percentage of current Maximum Permissible Exposure (% MPE) as listed in the FCC OET Bulletin 65 Edition 97-01and ANSI/IEEE Std C95.1. The FCC regulates Maximum Permissible Exposure in units of microwatts per square centimeter ($\mu W/cm^2$). The number of $\mu W/cm^2$ calculated at each sample point is called the power density. The exposure limit for power density varies depending upon the frequencies being utilized. Wireless Carriers and Paging Services use different frequency bands each with different exposure limits; therefore, it is necessary to report results and limits in terms of percent MPE rather than power density.

All results were compared to the FCC (Federal Communications Commission) radio frequency exposure rules, 47 CFR 1.1307(b)(1) – (b)(3), to determine compliance with the Maximum Permissible Exposure (MPE) limits for General Population/Uncontrolled environments as defined below.

General population/uncontrolled exposure limits apply to situations in which the general population may be exposed or in which persons who are exposed as a consequence of their employment may not be made fully aware of the potential for exposure or cannot exercise control over their exposure. Therefore, members of the general population would always be considered under this category when exposure is not employment related, for example, in the case of a telecommunications tower that exposes persons in a nearby residential area.

Public exposure to radio frequencies is regulated and enforced in units of microwatts per square centimeter ($\mu W/cm^2$). The general population exposure limits for the 600 MHz and 700 MHz frequency bands are approximately 400 $\mu W/cm^2$ and 467 $\mu W/cm^2$, respectively. The general population exposure limit for the 1900 MHz (PCS), 2100 MHz (AWS) and 11 GHz frequency bands is 1000 $\mu W/cm^2$. Because each carrier will be using different frequency bands, and each frequency band has different exposure limits, it is necessary to report percent of MPE rather than power density.

Occupational/controlled exposure limits apply to situations in which persons are exposed as a consequence of their employment and in which those persons who are exposed have been made fully aware of the potential for exposure and can exercise control over their exposure. Occupational/controlled exposure limits also apply where exposure is of a transient nature as a result of incidental passage through a location where exposure levels may be above general population/uncontrolled limits (see below), as long as the exposed person has been made fully aware of the potential for exposure and can exercise control over his or her exposure by leaving the area or by some other appropriate means.

Additional details can be found in FCC OET 65.

CALCULATIONS

Calculations were done for the proposed T-Mobile Wireless antenna facility located at 285 Chamberlain Hill Road in Higganum, Connecticut using the equipment information listed below. All calculations were performed per the specifications under FCC OET 65. Since T-Mobile is proposing highly focused directional panel antennas, which project most of the emitted energy out toward the horizon, all calculations were performed assuming a lobe representing the maximum gain of the antenna per the antenna manufacturer's supplied specifications, minus 10 dB for directional panel antennas and 20 dB for highly focused parabolic microwave dishes, was focused at the base of the tower. For this report, the sample point is the top of a 6-foot person standing at the base of the tower.

For all calculations, all equipment was calculated using the following assumptions:

1) 2 LTE channels (600 MHz Band) were considered for each sector of the proposed installation. These Channels have a transmit power of 30 Watts per Channel.

2) 1 NR channel (600 MHz Band) was considered for each sector of the proposed installation. This Channel has a transmit power of 80 Watts.

3) 2 LTE channels (700 MHz Band) were considered for each sector of the proposed installation. These Channels have a transmit power of 30 Watts per Channel.

4) 4 GSM channels (PCS Band - 1900 MHz) were considered for each sector of the proposed installation. These Channels have a transmit power of 30 Watts per Channel.

5) 4 LTE channels (PCS Band - 1900 MHz) were considered for each sector of the proposed installation. These Channels have a transmit power of 60 Watts per Channel.

6) 2 LTE channels (AWS Band – 2100 MHz) were considered for each sector of the proposed installation. These Channels have a transmit power of 60 Watts per Channel.

7) 1 LTE channel (BRS Band - 2500 MHz) was considered for each sector of the proposed installation. This Channel has a transmit power of 120 Watts.

8) 1 NR channel (BRS Band - 2500 MHz) was considered for each sector of the proposed installation. This Channel has a transmit power of 120 Watts.

9) All radios at the proposed installation were considered to be running at full power and were uncombined in their RF transmissions paths per carrier prescribed configuration. Per FCC OET Bulletin No. 65 - Edition 97-01 recommendations to achieve the maximum anticipated value at each sample point, all power levels emitting from the proposed antenna installation are increased by a factor of 2.56 to account for possible in-phase reflections from the surrounding environment. This is rarely the case, and if so, is never continuous.

10) For the following calculations, the sample point was the top of a 6-foot person standing at the base of the tower. The maximum gain of the antenna per the antenna manufacturer's supplied specifications, minus 10 dB for directional panel antennas and 20 dB for highly focused parabolic microwave dishes, was used in this direction. This value is a very conservative estimate as gain reductions for these particular antennas are typically much higher in this direction.

11) The antennas used in this modeling are the Ericsson AIR 32 for the 1900 MHz / 1900 MHz / 2100 MHz channel(s), the RFS APXVAALL24_43-U-NA20 for the 600 MHz / 600 MHz / 700 MHz / 1900 MHz channel(s), the Ericsson AIR 6449 for the 2500 MHz / 2500 MHz channel(s) in Sector A, the Ericsson AIR 32 for the 1900 MHz / 1900 MHz / 2100 MHz channel(s), the RFS APXVAALL24_43-U-NA20 for the 600 MHz / 600 MHz / 700 MHz / 1900 MHz channel(s), the Ericsson AIR 6449 for the 2500 MHz / 2500 MHz channel(s) in Sector B, the Ericsson AIR 32 for the 1900 MHz / 1900 MHz / 2100 MHz channel(s), the RFS APXVAALL24_43-U-NA20 for the 600 MHz / 600 MHz / 700 MHz / 1900 MHz channel(s), the Ericsson AIR 6449 for the 2500 MHz / 2500 MHz channel(s) in Sector C. This is based on feedback from the carrier with regard to anticipated antenna selection. All Antenna gain values and associated transmit power levels are shown in the Site Inventory and Power Data table below. The maximum gain of the antenna per the antenna manufacturer's supplied specifications, minus 10 dB for directional panel antennas and 20 dB for highly focused parabolic microwave dishes, was used for all calculations. This value is a very conservative estimate as gain reductions for these particular antennas are typically much higher in this direction.

12) The antenna mounting height centerline of the proposed antennas is 185 feet above ground level (AGL).

13) Emissions values for additional carriers were taken from the Connecticut Siting Council active database. Values in this database are provided by the individual carriers themselves.

14) All calculations were done with respect to uncontrolled / general population threshold limits.

T-Mobile Site Inventory and Power Data

Sector:	A	Sector:	B	Sector:	C
Antenna #:	**1**	Antenna #:	**1**	Antenna #:	**1**
Make / Model:	Ericsson AIR 32	Make / Model:	Ericsson AIR 32	Make / Model:	Ericsson AIR 32
Frequency Bands:	1900 MHz / 1900 MHz / 2100 MHz	Frequency Bands:	1900 MHz / 1900 MHz / 2100 MHz	Frequency Bands:	1900 MHz / 1900 MHz / 2100 MHz
Gain:	15.35 dBd / 15.35 dBd / 15.85 dBd	Gain:	15.35 dBd / 15.35 dBd / 15.85 dBd	Gain:	15.35 dBd / 15.35 dBd / 15.85 dBd
Height (AGL):	185 feet	Height (AGL):	185 feet	Height (AGL):	185 feet
Channel Count:	8	Channel Count:	8	Channel Count:	8
Total TX Power (W):	360 Watts	Total TX Power (W):	360 Watts	Total TX Power (W):	360 Watts
ERP (W):	12,841.53	ERP (W):	12,841.53	ERP (W):	12,841.53
Antenna A1 MPE %:	**1.35%**	Antenna B1 MPE %:	**1.35%**	Antenna C1 MPE %:	**1.35%**
Antenna #:	**2**	Antenna #:	**2**	Antenna #:	**2**
Make / Model:	RFS APXVAALL24_43-U-NA20	Make / Model:	RFS APXVAALL24_43-U-NA20	Make / Model:	RFS APXVAALL24_43-U-NA20
Frequency Bands:	600 MHz / 600 MHz / 700 MHz / 1900 MHz	Frequency Bands:	600 MHz / 600 MHz / 700 MHz / 1900 MHz	Frequency Bands:	600 MHz / 600 MHz / 700 MHz / 1900 MHz
Gain:	12.95 dBd / 12.95 dBd / 13.65 dBd / 15.45 dBd	Gain:	12.95 dBd / 12.95 dBd / 13.65 dBd / 15.45 dBd	Gain:	12.95 dBd / 12.95 dBd / 13.65 dBd / 15.45 dBd
Height (AGL):	185 feet	Height (AGL):	185 feet	Height (AGL):	185 feet
Channel Count:	7	Channel Count:	7	Channel Count:	7
Total TX Power (W):	320 Watts	Total TX Power (W):	320 Watts	Total TX Power (W):	320 Watts
ERP (W):	8,360.85	ERP (W):	8,360.85	ERP (W):	8,360.85
Antenna A2 MPE %:	**1.48%**	Antenna B2 MPE %:	**1.48%**	Antenna C2 MPE %:	**1.48%**
Antenna #:	**3**	Antenna #:	**3**	Antenna #:	**3**
Make / Model:	Ericsson AIR 6449	Make / Model:	Ericsson AIR 6449	Make / Model:	Ericsson AIR 6449
Frequency Bands:	2500 MHz / 2500 MHz	Frequency Bands:	2500 MHz / 2500 MHz	Frequency Bands:	2500 MHz / 2500 MHz
Gain:	22.05 dBd / 22.05 dBd	Gain:	22.05 dBd / 22.05 dBd	Gain:	22.05 dBd / 22.05 dBd
Height (AGL):	185 feet	Height (AGL):	185 feet	Height (AGL):	185 feet
Channel Count:	2	Channel Count:	2	Channel Count:	2
Total TX Power (W):	240 Watts	Total TX Power (W):	240 Watts	Total TX Power (W):	240 Watts
ERP (W):	38,477.89	ERP (W):	38,477.89	ERP (W):	38,477.89
Antenna A3 MPE %:	**4.04%**	Antenna B3 MPE %:	**4.04%**	Antenna C3 MPE %:	**4.04%**

Site Composite MPE %	
Carrier	MPE %
T-Mobile (Max at Sector A):	6.87%
AT&T	1.13%
Sprint	1.66%
Site Total MPE % :	9.66%

T-Mobile MPE % Per Sector	
T-Mobile Sector A Total:	6.87%
T-Mobile Sector B Total:	6.87%
T-Mobile Sector C Total:	6.87%
Site Total MPE % :	9.66%

T-Mobile Maximum MPE Power Values (Sector A)

T-Mobile Frequency Band / Technology (Sector A)	# Channels	Watts ERP (Per Channel)	Height (feet)	Total Power Density (μW/cm²)	Frequency (MHz)	Allowable MPE (μW/cm²)	Calculated % MPE
T-Mobile 1900 MHz GSM	4	1028.30	185.0	4.32	1900 MHz GSM	1000	0.43%
T-Mobile 1900 MHz LTE	2	2056.61	185.0	4.32	1900 MHz LTE	1000	0.43%
T-Mobile 2100 MHz LTE	2	2307.55	185.0	4.85	2100 MHz LTE	1000	0.48%
T-Mobile 600 MHz LTE	2	591.73	185.0	1.24	600 MHz LTE	400	0.31%
T-Mobile 600 MHz NR	1	1577.94	185.0	1.66	600 MHz NR	400	0.41%
T-Mobile 700 MHz LTE	2	695.22	185.0	1.46	700 MHz LTE	467	0.31%
T-Mobile 1900 MHz LTE	2	2104.51	185.0	4.42	1900 MHz LTE	1000	0.44%
T-Mobile 2500 MHz LTE	1	19238.94	185.0	20.21	2500 MHz LTE	1000	2.02%
T-Mobile 2500 MHz NR	1	19238.94	185.0	20.21	2500 MHz NR	1000	2.02%
						Total:	**6.87%**

• NOTE: Totals may vary by approximately 0.01% due to summation of remainders in calculations.

Summary

All calculations performed for this analysis yielded results that were **within** the allowable limits for general population exposure to RF Emissions.

The anticipated maximum composite contributions from the T-Mobile facility as well as the site composite emissions value with regards to compliance with FCC's allowable limits for general population exposure to RF Emissions are shown here:

T-Mobile Sector	Power Density Value (%)
Sector A:	6.87%
Sector B:	6.87%
Sector C:	6.87%
T-Mobile Maximum MPE % (Sector A):	6.87%
Site Total:	9.66%
Site Compliance Status:	**COMPLIANT**

The anticipated composite MPE value for this site assuming all carriers present is **9.66%** of the allowable FCC established general population limit sampled at the ground level. This is based upon values listed in the Connecticut Siting Council database for existing carrier emissions.

FCC guidelines state that if a site is found to be out of compliance (over allowable thresholds), that carriers over a 5% contribution to the composite value will require measures to bring the site into compliance. For this facility, the composite values calculated were well within the allowable 100% threshold standard per the federal government.