infinigy
engineering & surveying

EM-SPRINT-NEXTEL-060-130205

February 4, 2013

Connecticut Siting Council
Ten Franklin Square
New Britain, CT 06051
Attn: Ms. Linda Roberts, Executive Director

Re: 370 Rockland Road, Guilford, CT

RECEIVED
FEB - 5 2013
CONNECTICUT
SITING COUNCIL

Dear Ms. Roberts,

On behalf of Sprint Nextel Corporation ("Sprint"), enclosed for filing are an original and two (2) copies of Sprint's Notice of Exempt Modification for Proposed Modifications to an Existing Telecommunications Facility located at the above-referenced site.

I also enclose herewith a check in the amount of $625.00 representing the fee for the Notice of Exempt Modification.

If you have any questions, please feel free to contact me.

Thank you,

By: _____

Name: David Weisman
Vertical Development LLC, an authorized representative of Sprint Nextel
Vertical Development LLC
7 Sycamore Way, Unit 1
Branford, CT 06405
Phone – 401-743-9011
Fax – 401-633-6202
DWeisman@verticaldevelopmentllc.com

CC: Mr. Joe Mazza, First Selectman
Town of Guilford
Town Hall
31 Park Street
Guilford, CT 06437

Notice of Exempt Modification

370 Rockland Road, Guilford, CT

Sprint Nextel Corporation ("Sprint") submits this Notice of Exempt Modification to the Connecticut Siting Council ("Council") pursuant to Sections 16-50j-73 and 16-50j-72(b) of the Regulations of Connecticut State Agencies ("Regulations") in connection with Sprint's planned modification of antennas and associated equipment on an existing 158.5' monopole tower located at 370 Rockland Road in the Town of Guilford. More particularly, Sprint plans to upgrade this site by adding 4G LTE technology to its facilities. The proposed modifications will not increase the tower height, extend the boundaries of the tower site, increase noise levels at the tower site boundary by six (6) decibels, or add radio frequency sending or receiving capability which increases the total radio frequency electromagnetic radiation power density measured at the tower site boundary to or above the standard adopted by the State Department of Environmental Protection pursuant to Connecticut General Statutes § 22a-162.

To better meet the growing voice and data demands of its wireless customers, Sprint is upgrading their network nationwide to include 4G technology, which will provide faster service and better overall performance. Pursuant to the 4G upgrade at this site, Sprint will add antennas, install RRHs and notch filters, and install related equipment to its equipment area within the fenced compound at the base of the tower.

The 158.5' monopole tower located at 370 Rockland Road in the Town of Guilford (lat. 41° 23' 48.66", long. 72° 41' 19.71") is owned by SBA Communications Corporation. It is in an approx. 2,400 square foot fenced compound. Sprint currently has six (6) antennas (two (2) per sector) with a centerline of 147' installed on the tower. Sprint's base station equipment is located adjacent to the base of the tower within the fenced compound. A site plan depicting this is attached.

Sprint plans to add three (3) RFS APXVSPP18-C-A20 antennas, one (1) per sector, all with a centerline of 147'. Connected to each new RFS antenna

will be one (1) ALU 800 MHz RRH with one (1) ALU 800 MHz notch filter attached to it and one (1) ALU 1900 MHz RRH, all of which will be located behind the antenna on a ring mount. After the new antennas have been tested and are deployed on-air, the six (6) previously existing antennas will be removed. The height of the monopole will not need to be increased. Sprint also plans to install a new fiber junction box on a new H-frame and a new Ciena equipment enclosure into their equipment space within the tower compound's fenced border, and to retrofit or replace the existing BTS cabinet. The compound's boundaries will not need to be extended. Other than brief, construction-related noise, these modifications will not increase noise levels at the tower site boundary by six (6) decibels.

SBA Communications Corporation commissioned Vertical Solutions, Inc., to perform a structural analysis of the tower and foundation to verify that they can support the proposed loading. According to this analysis, the tower and foundation "[W]ill satisfy the structural strength requirements of TIA/EIA-222-F-1996, Structural Standard for Steel Antenna Towers and Antennas Supporting Structures (industry standard) and the 2005 Connecticut Building Code (local building code) for:

- 80-mph fastest mile basic wind speed
- 74-mph fastest mile basic wind speed with 1/2-in radial ice"

(see the first page of Rigorous Structural Analysis, January 30, 2013). The tower is rated at 100.4% of its capacity (see first and eighth page of Rigorous Structural Analysis, January 30, 2013). Sprint commissioned EBI Consulting to perform a structural assessment of the existing mounting system. They concluded that the existing mounting system is "[C]apable of supporting the existing and proposed equipment without causing an overstress condition in the mounting system" (see the second page of Structural Assessment Letter, August 24, 2012).

The proposed modifications will not add radio frequency sending or receiving capability which increases the total radio frequency electromagnetic

radiation power density measured at the tower site boundary to or above the standard adopted by the State Department of Environmental Protection pursuant to Connecticut General Statutes § 22a-162. A radio frequency emissions analysis prepared by EBI Consulting indicates that the proposed final configuration (including other carriers on the tower) will emit 34.783% of the allowable FCC established general public limit sampled at the ground level (see the 5th page of Radio Frequency Emissions Analysis Report - Evaluation of Human Exposure Potential to Non-Ionizing Emissions, September 2, 2012). Emission values for the Sprint antennas have been calculated from the sample point, which is the top of a six foot person standing at the base of the tower. Emissions values for additional carriers were based upon values listed in Connecticut Siting Council active database (see the 3rd and 4th page of Radio Frequency Emissions Analysis Report - Evaluation of Human Exposure Potential to Non-Ionizing Emissions, September 2, 2012). The information used in the report was analyzed as a percentage of current Maximum Permissible Exposure (% MPE) as listed in the FCC OET Bulletin 65 Edition 97-01and ANSI/IEEE Std C95.1 (see the second page of Radio Frequency Emissions Analysis Report - Evaluation of Human Exposure Potential to Non-Ionizing Emissions, September 2, 2012).

In conclusion, Sprint's proposed modifications do not constitute a modification subject to the Council's review because Sprint will not change the height of the tower, will not extend the boundaries of the compound, will not increase the noise levels at the site, and will not increase the total radio frequency electromagnetic radiation power density at the site to levels above applicable standards. Therefore, Sprint respectfully requests that the Council acknowledge that this Notice of Exempt Modification meets the Council's exemption criteria.

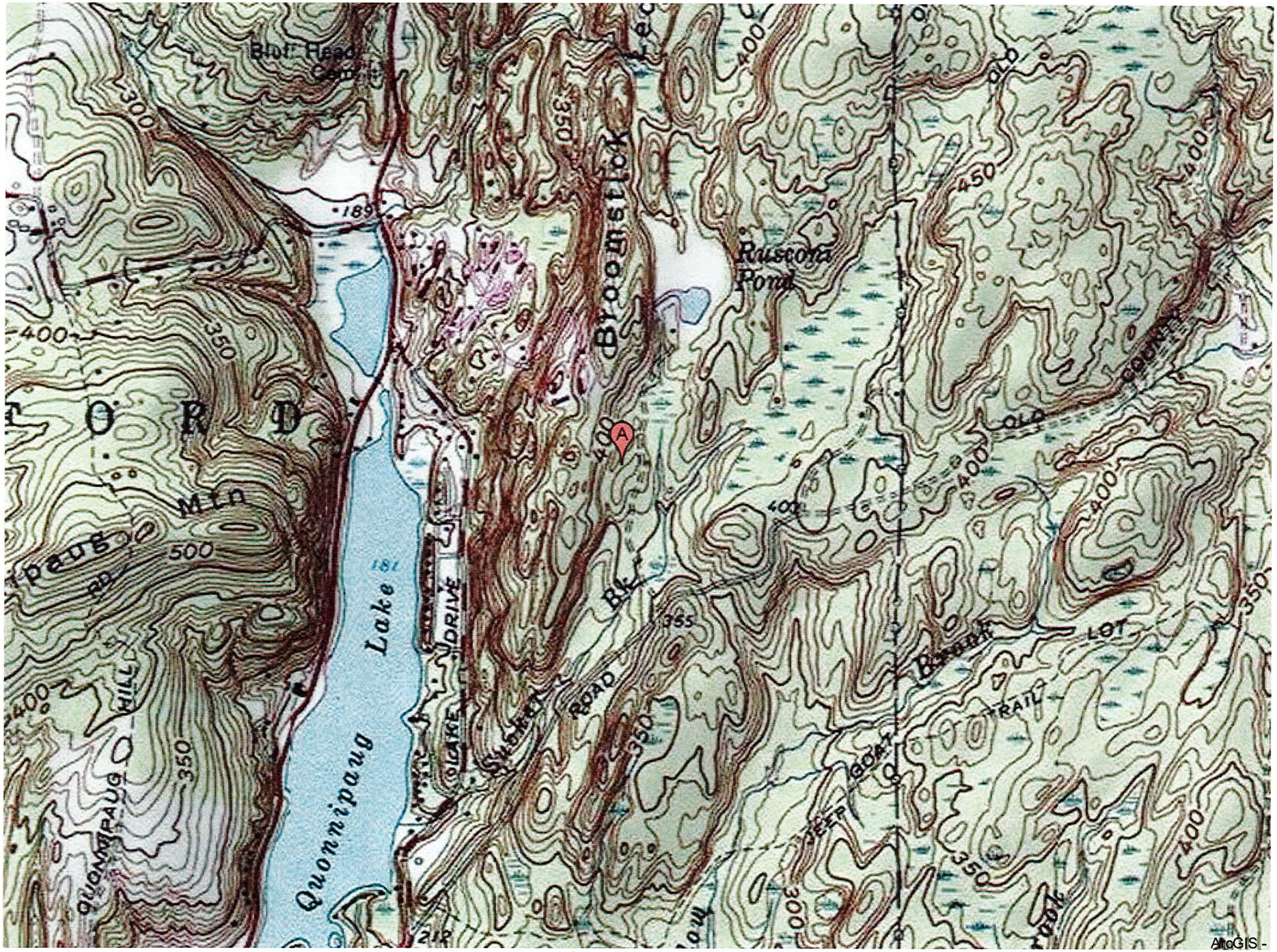

370 Rockland Road, Guilford, CT

370 Rockland Road, Guilford, CT

EBI Consulting

environmental | engineering | due diligence

RADIO FREQUENCY EMISSIONS ANALYSIS REPORT
EVALUATION OF HUMAN EXPOSURE POTENTIAL TO NON-IONIZING EMISSIONS

Sprint Existing Facility

Site ID: CT33XC087

Guilford / Durham Road
370 Rockland Road
Guilford, CT 06437

September 02, 2012

21 B Street · Burlington, MA 01803 · Tel: (781) 273.2500 · Fax: (781) 273.3311

EBI Consulting
environmental | engineering | due diligence

September 02, 2012

Sprint
Attn: RF Engineering Manager
1 International Boulevard, Suite 800
Mahwah, NJ 07495

Re: Emissions Values for Site **CT33XC087 – Guilford / Durham Road**

EBI Consulting was directed to analyze the proposed upgrades to the existing Sprint facility located at 370 Rockland Road, Guilford, CT, for the purpose of determining whether the emissions from the proposed Sprint equipment upgrades on this property are within specified federal limits.

All information used in this report was analyzed as a percentage of current Maximum Permissible Exposure (% MPE) as listed in the FCC OET Bulletin 65 Edition 97-01and ANSI/IEEE Std C95.1. The FCC regulates Maximum Permissible Exposure in units of microwatts per square centimeter (μW/cm2). The number of μW/cm2 calculated at each sample point is called the power density. The exposure limit for power density varies depending upon the frequencies being utilized. Wireless Carriers and Paging Services use different frequency bands each with different exposure limits, therefore it is necessary to report results and limits in terms of percent MPE rather than power density.

All results were compared to the FCC (Federal Communications Commission) radio frequency exposure rules, 47 CFR 1.1307(b)(1) – (b)(3), to determine compliance with the Maximum Permissible Exposure (MPE) limits for General Population/Uncontrolled environments as defined below.

General population/uncontrolled exposure limits apply to situations in which the general public may be exposed or in which persons who are exposed as a consequence of their employment may not be made fully aware of the potential for exposure or cannot exercise control over their exposure. Therefore, members of the general public would always be considered under this category when exposure is not employment related, for example, in the case of a telecommunications tower that exposes persons in a nearby residential area.

Public exposure to radio frequencies is regulated and enforced in units of microwatts per square centimeter ($\mu W/cm^2$). The general population exposure limit for the cellular band is approximately 567 $\mu W/cm^2$, and the general population exposure limit for the PCS band is 1000 $\mu W/cm^2$. Because each carrier will be using different frequency bands, and each frequency band has different exposure limits, it is necessary to report percent of MPE rather than power density.

21 B Street · Burlington, MA 01803 · Tel: (781) 273.2500 · Fax: (781) 273.3311

Occupational/controlled exposure limits apply to situations in which persons are exposed as a consequence of their employment and in which those persons who are exposed have been made fully aware of the potential for exposure and can exercise control over their exposure. Occupational/controlled exposure limits also apply where exposure is of a transient nature as a result of incidental passage through a location where exposure levels may be above general population/uncontrolled limits (see below), as long as the exposed person has been made fully aware of the potential for exposure and can exercise control over his or her exposure by leaving the area or by some other appropriate means.

Additional details can be found in FCC OET 65.

CALCULATIONS

Calculations were done for the proposed upgrades to the existing Sprint Wireless antenna facility located at 370 Rockland Road, Guilford, CT, using the equipment information listed below. All calculations were performed per the specifications under FCC OET 65. All calculations were performed assuming the main lobe of the antenna was focused at the base of the tower to present a worst case scenario. Actual values seen from this site will be dramatically less than those shown in this report. For this report the sample point is the top of a 6 foot person standing at the base of the tower.

For all calculations, all emissions were calculated using the following assumptions:

1) 2 CDMA Carriers (1900 MHz) were considered for each sector of the proposed installation.
2) 1 CDMA Carrier (850 MHz) was considered for each sector of the proposed installation
3) All radios at the proposed installation were considered to be running at full power and were uncombined in their RF transmissions paths per carrier prescribed configuration. Per FCC OET Bulletin No. 65 - Edition 97-01 recommendations to achieve the maximum anticipated value at each sample point, all power levels emitting from the proposed antenna installation are increased by a factor of 2.56 to account for possible in-phase reflections from the surrounding environment. This is rarely the case, and if so, is never continuous.
4) For the following calculations the sample point was the top of a six foot person standing at the base of the tower. The actual gain in this direction was used per the manufactures supplied specifications.
5) The antenna used in this modeling is the RFS APXVSPP18-C-A20. This is based on feedback from the carrier with regards to anticipated antenna selection. This antenna has a 15.9 dBd gain value at its main lobe at 1900 MHz and 13.4 dBd at its main lobe for 850 MHz. All calculations were performed assuming the main lobe of the antenna was focused at the base of the tower to present a worst case scenario.

6) The antenna mounting height centerline of the proposed antennas is **147.9 feet** above ground level (AGL)
7) Emissions values for additional carriers were taken from the Connecticut Siting Council active database. Values in this database are provided by the individual carriers themselves.

All calculation were done with respect to uncontrolled / general public threshold limits

Site ID	CT33XC087 - Guilford / Durham Road
Site Addresss	370 Rockland Road, Guilford, CT 06437
Site Type	Monopole

Sector 1

Antenna Number	Antenna Make	Antenna Model	Radio Type	Frequency Band	Technology	Power Out Per Channel (Watts)	Number of Channels	Composite Power	Antenna Gain in direction of sample point (dBd)	Antenna Height (ft)	analysis height	Cable Size	Cable Loss (dB)	Additional Loss	ERP	Power Density Value	Power Density Percentage
1a	RFS	APXVSPP18-C-A20	RRH	1900 MHz	CDMA / LTE	20	2	40	15.9	147.9	141.9	1/2 "	0.5	0	1386.9474	24.76288	2.47629%
1a	RFS	APXVSPP18-C-A20	RRH	850 MHz	CDMA / LTE	20	1	20	13.4	147.9	141.9	1/2 "	0.5	0	389.96892	6.962596	1.22797%
														Sector total Power Density Value:		3.704%	

Sector 2

Antenna Number	Antenna Make	Antenna Model	Radio Type	Frequency Band	Technology	Power Out Per Channel (Watts)	Number of Channels	Composite Power	Antenna Gain in direction of sample point (dBd)	Antenna Height (ft)	analysis height	Cable Size	Cable Loss (dB)	Additional Loss	ERP	Power Density Value	Power Density Percentage
2a	RFS	APXVSPP18-C-A20	RRH	1900 MHz	CDMA / LTE	20	2	40	15.9	147.9	141.9	1/2 "	0.5	0	1386.9474	24.76288	2.47629%
2a	RFS	APXVSPP18-C-A20	RRH	850 MHz	CDMA / LTE	20	1	20	13.4	147.9	141.9	1/2 "	0.5	0	389.96892	6.962596	1.22797%
														Sector total Power Density Value:		3.704%	

Sector 3

Antenna Number	Antenna Make	Antenna Model	Radio Type	Frequency Band	Technology	Power Out Per Channel (Watts)	Number of Channels	Composite Power	Antenna Gain in direction of sample point (dBd)	Antenna Height (ft)	analysis height	Cable Size	Cable Loss (dB)	Additional Loss	ERP	Power Density Value	Power Density Percentage
3a	RFS	APXVSPP18-C-A20	RRH	1900 MHz	CDMA / LTE	20	2	40	15.9	147.9	141.9	1/2 "	0.5	0	1386.9474	24.76288	2.47629%
3a	RFS	APXVSPP18-C-A20	RRH	850 MHz	CDMA / LTE	20	1	20	13.4	147.9	141.9	1/2 "	0.5	0	389.96892	6.962596	1.22797%
														Sector total Power Density Value:		3.704%	

Site Composite MPE %	
Carrier	MPE %
Sprint	11.113%
AT&T	8.250%
Verizon Wireless	15.420%
Total Site MPE %	**34.783%**

Summary

All calculations performed for this analysis yielded results that were well within the allowable limits for general public exposure to RF Emissions.

The anticipated Maximum Composite contributions from the Sprint facility are **11.113% (3.704% from each sector)** of the allowable FCC established general public limit considering all three sectors simultaneously sampled at the ground level.

The anticipated composite MPE value for this site assuming all carriers present is **34.783%** of the allowable FCC established general public limit sampled at the ground level. This is based upon values listed in the Connecticut Siting Council database for existing carrier emissions

FCC guidelines state that if a site is found to be out of compliance (over allowable thresholds), that carriers over a 5% contribution to the composite value will require measures to bring the site into compliance. For this facility, the composite values calculated were well within the allowable 100% threshold standard per the federal government

Scott Heffernan
RF Engineering Director

EBI Consulting
21 B Street
Burlington, MA 01803

PASS
(Shaft, **100%** capacity)

January 30, 2013

Mr. Dwayne Lyerly
SBA Communications Corporation
5900 Broken Sound Parkway NW
Boca Raton, FL 33487-2797
(919) 557-0555

Vertical Solutions, Inc.
PO Box 579
Holly Springs, NC 27540
(888) 321-6167
operations@verticalsolutions-inc.com

Subject	**Rigorous Structural Analysis**
Carrier Designation	**Sprint/Nextel, Reconfiguration – Overlap** **Site Number: CT33XC087** **Site Name: West Haven-rt 15**
SBA Designation	**Site Number: CT46139-A** **Site Name: West Haven-rt 15/Woodbridge** **JIRA Ticket: SBA-186**
Engineering Firm Designation	**Vertical Solutions Project: 122449.01, Revision 0**
Site Data	**370 Rockland Road, Guilford, New Haven County, CT 06437** **Latitude: N41° 23' 48.60"±; Longitude: W072° 41' 19.70"±** **Elevation: 372 ft±,** **158.5-ft Self Supporting Pole Structure (Monopole)**

Dear Mr. Lyerly,

To your request, we present our structural analysis. Our work indicates that with the proposed appurtenance configuration, the tower and foundation **will** satisfy the structural strength requirements of ANSI/TIA-222-F-1996, *Structural Standard for Steel Antenna Towers and Antenna Supporting Structures (*industry standard) and the *2005 Connecticut Building Code* (local building code) for:

- 80-mph fastest mile basic wind speed
- 74-mph fastest mile basic wind speed with 1/2" radial ice

All equipment and modifications proposed in this report shall be installed in accordance with the attached drawings for the determined available structural capacity to be effective.

We trust you find our work satisfactory. Please do not hesitate to call should you have any questions.

Sincerely,

Matthew E. Reeves, P.E.
Civil Engineer

Reviewed by: AVF

STATE OF CONNECTICUT
MICHAEL L. LASSITER
No. 25064
LICENSED
PROFESSIONAL ENGINEER
01/31/2013

Michael L. Lassiter, S.E., P.E., C.W.I.
Structural Engineer, Civil Engineer, Certified Weld Inspector
& President
CT PE License No.: 25064

Table 1: Existing, Proposed and Reserved Appurtenance Configuration

Elevation (AGL, ft)	Carrier	Mount	Equipment	Coax	Location[1]
157	Verizon	(3) T-Arms	(6) Andrew DB846F65ZAXY (3) Antel BXA-70063/6CF (4) Antel BXA-171063/8BF (2) Antel BXA-171063/12BF	(12) 1 5/8 (6) 1 5/8	Inside Outside
147	***Sprint/Nextel***	(3) T-Arms	(6) Andrew 980F90T4E-M	(6) 1 5/8	Inside
			(3) RFS APXVSPP18-C-A20	***(3) 1 1/4***	***Outside***
145		***Collar***	***(3) 1900 RRH (25 MHz)*** ***(3) 800 RRH*** ***(3) External Notch Filter*** ***(6) 1900 ACU-A20-N*** ***(3) 800 ACU-A20-N***		
137	AT&T	(3) T-Arms	(6) Kathrein AP14/17-880/1940/088D/ADT/XXP (12) TMAs	(12) 1 5/8	Inside
72	Sprint/Nextel	Stand Off	(1) GPS	(1) 1/2	Outside

1. See QP-P layout for details.

Table 2: Tower Structure Results, Percent Capacity Utilized

Elevation (ft)	Shaft	Result	Connections	Result
158.5 to 148.5	19	O. K.	14	O. K.
148.5 to 94.59	98	O. K.	-	-
94.59 to 46.59	98	O. K.	-	-
46.59 to 0	**100**	**O. K.**	96	O. K.

Table 3: Foundation Results, Percent Capacity Utilized

Component	Design	Analysis	Percent Utilized	Result
Bearing (psf)	8000	2388	30	O. K.
Overturning (kip-ft)	4404	4060	92	O. K.
Sliding (kip)	86	37	43	O. K.

Attachments:

- Project History
- Sheet QP-P, Coax configuration plan
- Program input and output – wind
- Tower improvement calculations
- Sheet FPL, Flange plate layout
- Flange plate and flange bolt calculations
- Sheet BPL, Base plate layout
- Base plate and anchor rod calculations
- Foundation analysis
- Tower improvement drawings [For Construction]

Project History

VSi Project #: 122449.01, Revision 0
SBA Site Id: CT46139-A
SBA Site Name: West Haven-rt15 /Woodbridge

Design Documents

Document	Structure	Issued Date	Document ID	Issued By	Issued To	Description
458233	CT46139-A	8/20/2003	458233_CT2015 WEST HAVEN-RT15 -WOODBRIDGE AT&T Lease Agreement.pdf	Sprint Spectrum	AT&T	Site Lease Agreement
292219	CT46139-A	3/24/2004	292219_CT2015 WEST HAVEN-RT15 -WOODBRIDGE Geotechnical Report - 03-24-2004.pdf	Jaworski Geotech, Inc	Natcomm, LLC	Geotechnical Investigation
292218	CT46139-A	7/30/2004	292218_CT2015 WEST HAVEN-RT15 -WOODBRIDGE Tower and Foundation Design Drawings - 07-30-2004.pdf	Engineered Endeavors Inc.	Sprint	Tower and Foundation Design Drawings
307913	CT46139-A	7/30/2004	20040730_TFC_CT2015.pdf	Engineered Endeavors Inc.	Sprint	Tower and Foundation Design Calculations
307912	CT46139-A	8/28/2004	307912_CT2015 WEST HAVEN-RT15 -WOODBRIDGE CT33XC087 CD-s - Signed & Sealed 8-28-04.pdf	Martinez Couch & Associates LLC	Sprint Spectrum	Construction Drawings
307915	CT46139-A	8/28/2004	307915_CT2015 WEST HAVEN-RT15 -WOODBRIDGE Construction Drawings-As Builts-8-28-04.pdf	Martinez Couch & Associates LLC	Sprint Spectrum	As-Built Drawings
307921	CT46139-A	12/17/2004	307921_CT2015 WEST HAVEN-RT15 -WOODBRIDGE Height Verification.pdf	B Saczynski	Sprint PCS	Height Verification Report
470893	CT46139-A	2/25/2005	20050225_SAR_CT2015.pdf	Semaan Engineering Solutions	Sprint	Structural Analysis
507780	CT46139-A	4/28/2005	507780_CT2015 West Haven-rt15 -Woodbridge AT&T 1st Amendment.pdf	Sprint Spectrum	New Cingular	Amendment SLA
711890	CT46139-A	9/23/2008	711890_CT2015 West Haven-rt15 -Woodbridge SLA.pdf	TowerCo	Sprint Spectrum	Site Lease Agreement
714954	CT46139-A	10/31/2008	20081031_TPD_CT2015.pdf	SiteMaster	TowerCo	Tower Profile Drawing
719736	CT46139-A	10/31/2008	20081031_TIR_CT2015.pdf	SiteMaster	TowerCo	Tower Inspection Report

vertical solutions
"execute & deliver"

Design Documents

Document	Structure	Issued Date	Document ID	Issued By	Issued To	Description
719736	CT46139-A	10/31/2008	719736_CT2015 West Haven-rt15 -Woodbridge SiteMaster Inspection Report.pdf	SiteMaster	TowerCo	Tower Inspection Report
526745	CT46139-A	2/2/2009	20090202_SAR_CT2015.pdf	Semaan Engineering Solutions	TowerCo	Structural Analysis
693323	CT46139-A	2/27/2009	20090227_SAR_CT2015.pdf	Semaan Engineering Solutions	TowerCo	Structural Analysis
694710	CT46139-A	3/12/2009	20090312_SAR_CT2015.pdf	Semaan Engineering Solutions	TowerCo	Structural Analysis
723934	CT46139-A	3/12/2009	20090312_EDP_CT2015.pdf	Semaan Engineering Solutions	TowerCo	Extension Drawings
708812	CT46139-A	3/16/2009	708812_CT2015 West Haven-rt15 -Woodbridge Site Plan.pdf	TowerCo		Site Plan
714954	CT46139-A	3/16/2009	714954_CT2015 West Haven-rt15 -Woodbridge Tower Profile.pdf	TowerCo		Tower Profile Drawing
718540	CT46139-A	5/27/2009	718540_CT2015 West Haven-rt15 -Woodbridge Verizon SLA Fully Executed.pdf	TowerCo	Cellco	Site Lease Agreement
730470	CT46139-A	7/10/2009	730470_CT2015 West Haven-rt15 -Woodbridge Tower Extension Design Drawings for Verizon.pdf	Vertical Solutions	TowerCo	Structural Analysis Report
730918	CT46139-A	7/10/2009	730918_CT2015 West Haven-rt15 -Woodbridge Vertical Structural Analysis Verizon Collo 7-10-2009.pdf	Vertical Solutions	TowerCo	Structural Analysis Report
730917	CT46139-A	7/13/2009	730917_CT2015 West Haven-rt15 -Woodbridge Vertical Extension Design Drawings Verizon 7-13-2009.pdf	Vertical Solutions	TowerCo	Structural Extension
738754	CT46139-A	7/27/2009	738754_CT2015 West Haven-rt15 -Woodbridge As-Built Extension Drawings Verizon Collo.pdf	Vertical Solutions	TowerCo	Structural Extension
740158	CT46139-A	8/6/2009	740158_CT2015 West Haven-rt15 -Woodbridge TI Extension for Verizon Closeout Pkg.pdf	Vertical Solutions	TowerCo	Closeout Package
738903	CT46139-A	8/11/2009	738903_CT2015 West Haven-rt15 -Woodbridge COL Verizon Extension 8-11-2009.pdf	Vertical Solutions	TowerCo	Close-Out Letter
740159	CT46139-A	8/17/2009	740159_CT2015 West Haven-rt15 -Woodbridge THVR for Verizon Ext 8-17-09.pdf		TowerCo	Height Verification Report

Design Documents

Document	Structure	Issued Date	Document ID	Issued By	Issued To	Description
844326	CT46139-A	8/19/2009	844326_CT2015 West Haven-rt15 -Woodbridge Email from Verizon Confirming Rent Comm Date.pdf	TowerCo	Verizon	Email Correspondence
--	CT46139-A	12/1/2011	ANTENNA+FAMILY+5_BXA-70063-6CF.pdf	Amphenol Antel		Antenna/Hardware Information
--	CT46139-A	12/1/2011	BXA-171063-12BF-EDIN-X.pdf	Amphenol Antel		Antenna/Hardware Information
--	CT46139-A	12/1/2011	BXA-171063-8BF-EDIN-X.pdf	Amphenol Antel		Antenna/Hardware Information
--	CT46139-A	12/1/2011	DB846F65ZAXY.pdf	Andrew		Antenna/Hardware Information
--	CT46139-A	12/1/2011	TowerCo Guilford North 2.doc	Verizon	TowerCo	Reconfiguration Tenant Application
857703	CT46139-A	12/13/2011	857703_CT2015+West+Haven-rt15+-Woodbridge+_Vertical_Structural+Analysis_Verizon_Reconfiguration_20111213.pdf	Vertical Solutions	TowerCo	Structural Analysis Report
--	CT46139-A	12/19/2011	CT2015 SA Loading.xls	TowerCo	Vertical Solutions	SA Loading
861313	CT46139-A	2/3/2012	861313_CT2015 West Haven-rt15 -Woodbridge Verizon 1st Amendment to SLA Fully Executed.pdf	TowerCo	Verizon	Amendment SLA
861999	CT46139-A	3/6/2012	861999_CT2015 West Haven-rt15 -Woodbridge Vertical TI Mod Design Drawings Verizon Reconfig 3-6-2012.pdf	Vertical Solutions	TowerCo	Modification Design Drawings
869495	CT46139-A	5/14/2012	869495_CT2015 West Haven-rt15 -Woodbridge Verizon 1st Amd Rent Commencement Notice.pdf	TowerCo	Verizon	Commencement Notice
--	CT46139-A	6/2/2012	CT33XC087- Sprint Vision Application- towerCo CT2015-Ver1.doc	Sprint	TowerCo	Reconfiguration Tenant Application
--	CT46139-A	6/5/2012	CT2015 Sprint Network Vision SA Loading.xls	TowerCo	Vertical Solutions	SA Loading
875238	CT46139-A	7/16/2012	875238_CT2015 West Haven-rt15 /Woodbridge _Vertical_Structural Analysis_Sprint-Nextel_Overlap_Reconfiguration_20120716	Vertical Solutions	TowerCo	Structural Analysis Report
875239	CT46139-A	7/16/2012	875239_CT2015 West Haven-rt15 /Woodbridge _Vertical_Structural Analysis_Sprint-Nextel_Final_Reconfiguration_20120716	Vertical Solutions	TowerCo	Structural Analysis Report

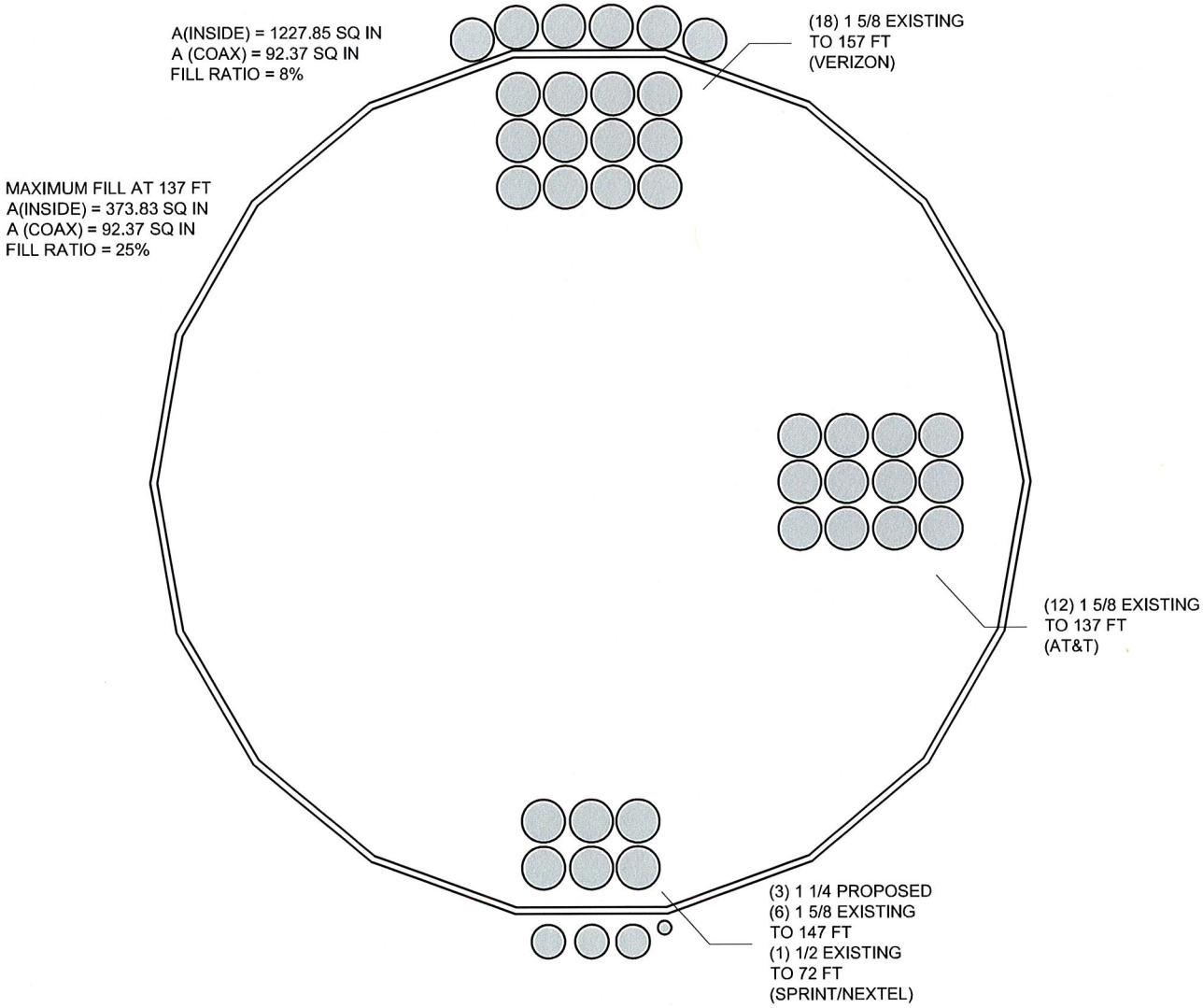

COAX CONFIGURATION PLAN - 72FT

SCALE: 1–1/2" = 1'–0"

PROJECT INFORMATION:

WEST HAVEN-RT15 / WOODBRIDGE
CT46139-A

370 ROCKLAND ROAD
GUILFORD, CT 06437
(NEW HAVEN)

REV	DATE:	Issued For:
0	1-28-13	PSAR

DRAWN BY: MER | CHECKED BY: AVF

SHEET NUMBER: **QP-P**

REVISION: 0

VSI #: 122449

PLANS PREPARED FOR:

SBA

5900 Broken Sound Parkway NW
Boca Raton, FL 33487-2797
Office (800) 487-7483

PLANS PREPARED BY:

vertical solutions

2002 Production Drive
Apex, NC 27539
Office: (888) 321-6167
Fax: (919) 321-1768

Fill Ratio

			Group 1			Group 2			Group 3			Group 4			Group 5			A_{Coax}	A_{inside}	FR	Result
Section Letter	Elevation (ft)	Section #	#	Nominal Diameter (in)	Area (in^2)	#	Nominal Diameter (in)	Area (in^2)	#	Nominal Diameter (in)	Area (in^2)	#	Nominal Diameter (in)	Area (in^2)	#	Nominal Diameter (in)	Area (in^2)	(in2)	(in2)	%	
D	157	1	12	1-5/8	36.95													36.95	291.04	**13%**	O.K.
C	147	2	12	1-5/8	36.95	6	1-5/8	18.47	0	1-1/4	0.00							55.42	327.99	**17%**	O.K.
B	137	2	12	1-5/8	36.95	6	1-5/8	18.47	0	1-1/4	0.00	12	1-5/8	36.95				92.37	373.83	**25%**	O.K.
A	72	3	12	1-5/8	36.95	6	1-5/8	18.47	0	1-1/4	0.00	12	1-5/8	36.95	0	1/2	0.00	92.37	1227.85	**8%**	O.K.
Carrier:			Verizon			Sprint						AT&T			Sprint			Max =		25% O.K.	

Section	1	2	3	4	5	6	7	8	9	10
Length (ft)	10.000	0.500	29.000	0.500	19.090	4.820	41.670	6.330	16.840	29.750
Number of Sides	1	1	18	18	18	18	18	18	18	18
Thickness (in)	0.375	0.375	0.188	0.276	0.290	0.313	0.313	0.428	0.406	0.422
Top Dia (in)	20.000	20.000	20.500	28.200	29.700	34.810	34.810	44.960	47.360	51.750
Bot Dia (in)	20.000	20.500	28.200	29.700	34.810	34.810	44.960	47.360	51.750	59.370
Grade	A53-B-35		A572-65		A572-50		A572-65		A572-50	
Weight (K)	0.8	0.0	1.4	0.0	1.9	0.6	5.6	1.3	3.6	7.5

22.8

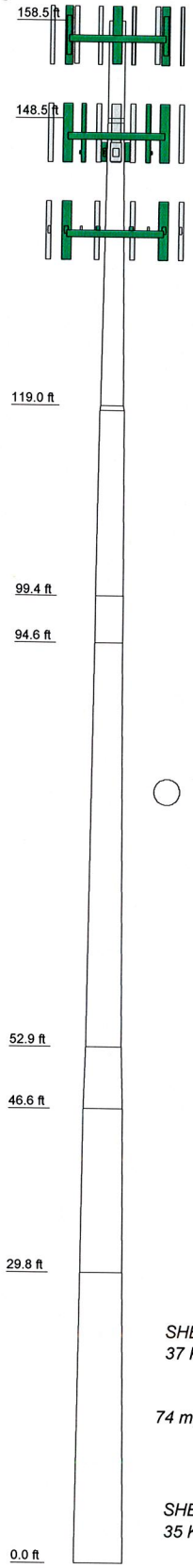

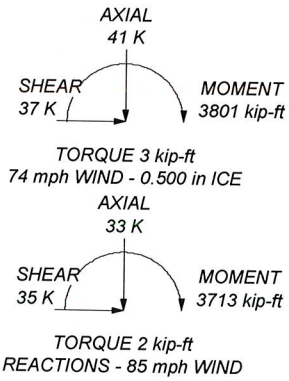

DESIGNED APPURTENANCE LOADING

TYPE	ELEVATION	TYPE	ELEVATION
(2) DB846F65ZAXY w/Mount Pipe (Verizon)	157	1900 RRH (25MHz) (Sprint)	145
(2) DB846F65ZAXY w/Mount Pipe (Verizon)	157	1900 RRH (25MHz) (Sprint)	145
(2) DB846F65ZAXY w/Mount Pipe (Verizon)	157	800 RRH 800MHz w/ ALU External Notch Filter (Sprint)	145
Antel BXA-70063/6CF w Mount Pipe (Verizon)	157	800 RRH 800MHz w/ ALU External Notch Filter (Sprint)	145
Antel BXA-70063/6CF w Mount Pipe (Verizon)	157	800 RRH 800MHz w/ ALU External Notch Filter (Sprint)	145
Antel BXA-70063/6CF w Mount Pipe (Verizon)	157	(2) 1900 ACU-A20-N (Sprint)	145
(2) Antel BXA-171063-8BF w/ MP (Verizon)	157	(2) 1900 ACU-A20-N (Sprint)	145
(2) Antel BXA-171063-8BF w/ MP (Verizon)	157	(2) 1900 ACU-A20-N (Sprint)	145
(2) Antel BXA-171063/12 BF w/MP (Verizon)	157	800 ACU-A20-N (Sprint)	145
4' x 12' T-Arm (Verizon)	157	800 ACU-A20-N (Sprint)	145
4' x 12' T-Arm (Verizon)	157	800 ACU-A20-N (Sprint)	145
4' x 12' T-Arm (Verizon)	157	Collar Bracket Assembly (Sprint)	145
RFS APXVSPP18-C-A20 w/ Mount Pipe (Sprint)	147	(2) Kathrein AP14/17-880/1940/088D/ADT/XXP w MP (ATI)	137
RFS APXVSPP18-C-A20 w/ Mount Pipe (Sprint)	147	(2) Kathrein AP14/17-880/1940/088D/ADT/XXP w MP (ATI)	137
RFS APXVSPP18-C-A20 w/ Mount Pipe (Sprint)	147	(2) Kathrein AP14/17-880/1940/088D/ADT/XXP w MP (ATI)	137
(2) DB980F90T4E-M w/Mount Pipe	147	(4) TMAs - 9"x5"x3.5" (ATI)	137
(2) DB980F90T4E-M w/Mount Pipe	147	(4) TMAs - 9"x5"x3.5" (ATI)	137
(2) DB980F90T4E-M w/Mount Pipe	147	(4) TMAs - 9"x5"x3.5" (ATI)	137
4' x 12' T-Arm (Sprint)	147	4' x 12' T-Arm (ATI)	137
4' x 12' T-Arm (Sprint)	147	4' x 12' T-Arm (ATI)	137
4' x 12' T-Arm (Sprint)	147	4' x 12' T-Arm (ATI)	137
1900 RRH (25MHz) (Sprint)	145	Pirod 4' Side Mount Standoff (1) (Sprint)	72
		GPS (Sprint)	72

MATERIAL STRENGTH

GRADE	Fy	Fu	GRADE	Fy	Fu
A53-B-35	35 ksi	63 ksi	A572-50	50 ksi	65 ksi
A572-65	65 ksi	80 ksi			

TOWER DESIGN NOTES

1. Tower is located in New Haven County, Connecticut.
2. Tower designed for a 85 mph basic wind in accordance with the TIA/EIA-222-F Standard.
3. Tower is also designed for a 74 mph basic wind with 0.50 in ice.
4. Deflections are based upon a 50 mph wind.
5. TOWER RATING: 100.4%

Vertical Solutions, Inc
2002 Production Dr.
Apex, NC 27539
Phone: (888) 321-3167
FAX: (888) 321-1768

Job: CT46139-A		
Project: SBA-186		
Client: SBA	Drawn by: MER	App'd:
Code: TIA/EIA-222-F	Date: 01/25/13	Scale: NTS
Path: C:\Users\mreeves\Documents\Work\Jobs\20130125_Job\2449_West Haven\15 Woodbridge_CT\Task 1\Models\nxTower\CT46139-A.eri		Dwg No. E-1

Tower Input Data

There is a pole section.
This tower is designed using the TIA/EIA-222-F standard.
The following design criteria apply:

Tower is located in New Haven County, Connecticut.
Basic wind speed of 85 mph.
Nominal ice thickness of 0.500 in.
Ice density of 56 pcf.
A wind speed of 74 mph is used in combination with ice.
Temperature drop of 50 °F.
Deflections calculated using a wind speed of 50 mph.
A non-linear (P-delta) analysis was used.
Pressures are calculated at each section.
Stress ratio used in pole design is 1.333.
Local bending stresses due to climbing loads, feedline supports, and appurtenance mounts are not considered.

Options

Consider Moments - Legs
Consider Moments - Horizontals
Consider Moments - Diagonals
Use Moment Magnification
√ Use Code Stress Ratios
√ Use Code Safety Factors - Guys
Escalate Ice
Always Use Max Kz
Use Special Wind Profile
Include Bolts In Member Capacity
Leg Bolts Are At Top Of Section
Secondary Horizontal Braces Leg
Use Diamond Inner Bracing (4 Sided)
Add IBC .6D+W Combination

Distribute Leg Loads As Uniform
Assume Legs Pinned
Assume Rigid Index Plate
Use Clear Spans For Wind Area
Use Clear Spans For KL/r
Retension Guys To Initial Tension
√ Bypass Mast Stability Checks
√ Use Azimuth Dish Coefficients
√ Project Wind Area of Appurt.
Autocalc Torque Arm Areas
SR Members Have Cut Ends
Sort Capacity Reports By Component
Triangulate Diamond Inner Bracing

Treat Feedline Bundles As Cylinder
Use ASCE 10 X-Brace Ly Rules
Calculate Redundant Bracing Forces
Ignore Redundant Members in FEA
SR Leg Bolts Resist Compression
All Leg Panels Have Same Allowable
Offset Girt At Foundation
√ Consider Feedline Torque
Include Angle Block Shear Check
Poles
Include Shear-Torsion Interaction
Always Use Sub-Critical Flow
Use Top Mounted Sockets

Tapered Pole Section Geometry

Section	Elevation ft	Section Length ft	Splice Length ft	Number of Sides	Top Diameter in	Bottom Diameter in	Wall Thickness in	Bend Radius in	Pole Grade
L1	158.500-148.500	10.000	0.000	Round	20.000	20.000	0.375		A53-B-35 (35 ksi)
L2	148.500-148.000	0.500	0.000	Round	20.000	20.500	0.375		A572-65 (65 ksi)
L3	148.000-119.000	29.000	0.000	18	20.500	28.200	0.188	0.750	A572-65 (65 ksi)
L4	119.000-118.500	0.500	0.000	18	28.200	29.700	0.276	1.104	A572-50 (50 ksi)
L5	118.500-99.410	19.090	0.000	18	29.700	34.810	0.290	1.159	A572-50 (50 ksi)
L6	99.410-94.590	4.820	0.000	18	34.810	34.810	0.313	1.250	A572-65

Section	Elevation ft	Section Length ft	Splice Length ft	Number of Sides	Top Diameter in	Bottom Diameter in	Wall Thickness in	Bend Radius in	Pole Grade
L7	94.590-52.920	41.670	0.000	18	34.810	44.960	0.313	1.250	(65 ksi) A572-65
L8	52.920-46.590	6.330	0.000	18	44.960	47.360	0.428	1.710	(65 ksi) A572-50
L9	46.590-29.750	16.840	0.000	18	47.360	51.750	0.406	1.623	(50 ksi) A572-50
L10	29.750-0.000	29.750		18	51.750	59.370	0.422	1.690	(50 ksi) A572-50 (50 ksi)

Tapered Pole Properties

Section	Tip Dia. in	Area in^2	I in^4	r in	C in	I/C in^3	J in^4	It/Q in^2	w in	w/t
L1	20.000	23.120	1113.917	6.947	10.000	111.392	2224.799	11.553	0.000	0
	20.000	23.120	1113.917	6.947	10.000	111.392	2224.799	11.553	0.000	0
L2	20.000	23.120	1113.917	6.947	10.000	111.392	2224.799	11.553	0.000	0
	20.500	23.709	1201.245	7.124	10.250	117.195	2399.217	11.848	0.000	0
L3	20.816	12.088	630.138	7.211	10.414	60.509	1261.105	6.045	3.278	17.483
	28.635	16.671	1652.727	9.944	14.326	115.369	3307.630	8.337	4.633	24.71
L4	28.635	24.452	2408.840	9.913	14.326	168.149	4820.850	12.228	4.478	16.23
	30.158	25.765	2818.253	10.446	15.088	186.793	5640.214	12.885	4.742	17.187
L5	30.158	27.039	2954.846	10.441	15.088	195.846	5913.579	13.522	4.717	16.286
	35.347	31.737	4778.151	12.255	17.683	270.204	9562.589	15.872	5.617	19.391
L6	35.347	34.217	5144.667	12.247	17.683	290.931	10296.103	17.112	5.577	17.845
	35.347	34.217	5144.667	12.247	17.683	290.931	10296.103	17.112	5.577	17.845
L7	35.347	34.217	5144.667	12.247	17.683	290.931	10296.103	17.112	5.577	17.845
	45.654	44.285	11152.849	15.850	22.840	488.310	22320.374	22.147	7.363	23.561
L8	45.654	60.435	15141.900	15.809	22.840	662.965	30303.725	30.223	7.160	16.747
	48.091	63.692	17724.350	16.661	24.059	736.707	35472.023	31.852	7.583	17.735
L9	48.091	60.485	16847.377	16.669	24.059	700.256	33716.922	30.248	7.621	18.778
	52.548	66.140	22028.415	18.227	26.289	837.933	44085.815	33.076	8.394	20.682
L10	52.548	68.830	22909.410	18.221	26.289	871.445	45848.964	34.421	8.364	19.798
	60.286	79.048	34702.416	20.926	30.160	1150.612	69450.495	39.532	9.706	22.972

Tower Elevation ft	Gusset Area (per face) ft^2	Gusset Thickness in	Gusset Grade	Adjust. Factor A_f	Adjust. Factor A_r	Weight Mult.	Double Angle Stitch Bolt Spacing Diagonals in	Double Angle Stitch Bolt Spacing Horizontals in
L1 158.500-148.500				1	1	1		
L2 148.500-148.000				1	1	1		
L3 148.000-119.000				1	1	1		
L4 119.000-118.500				1	1	1		
L5 118.500-99.410				1	1	1		

Tower Elevation ft	Gusset Area (per face) ft^2	Gusset Thickness in	Gusset Grade	Adjust. Factor A_f	Adjust. Factor A_r	Weight Mult.	Double Angle Stitch Bolt Spacing Diagonals in	Double Angle Stitch Bolt Spacing Horizontals in
L6 99.410-94.590				1	1	1		
L7 94.590-52.920				1	1	1		
L8 52.920-46.590				1	1	1		
L9 46.590-29.750				1	1	1		
L10 29.750-0.000				1	1	1		

Feed Line/Linear Appurtenances - Entered As Round Or Flat

Description	Sector	Component Type	Placement ft	Total Number	Number Per Row	Start/End Position	Width or Diameter in	Perimeter in	Weight plf
LDF7-50A (1-5/8 FOAM) (Verizon)	C	Surface Ar (CaAa)	157.000 - 7.000	6	6	-0.100 0.100	1.980		0.820
1-1/4" (Sprint) ****	B	Surface Ar (CaAa)	145.000 - 7.000	3	3	-0.050 0.050	1.550		0.660
LDF4RN-50A (1/2 FOAM) (Sprint)	B	Surface Ar (CaAa)	72.000 - 7.000	1	1	0.000 0.000	0.630		0.150

Feed Line/Linear Appurtenances - Entered As Area

Description	Face or Leg	Allow Shield	Component Type	Placement ft	Total Number		C_AA_A ft^2/ft	Weight plf
LDF7-50A (1-5/8 FOAM) (Verizon) ****	C	No	Inside Pole	157.000 - 0.000	12	No Ice 1/2" Ice	0.000 0.000	0.820 0.820
LDF7-50A (1-5/8 FOAM) (Sprint) ****	A	No	Inside Pole	147.000 - 0.000	6	No Ice 1/2" Ice	0.000 0.000	0.820 0.820
LDF7-50A (1-5/8 FOAM) (AT&T)	C	No	Inside Pole	137.000 - 0.000	12	No Ice 1/2" Ice	0.000 0.000	0.820 0.820

Feed Line/Linear Appurtenances Section Areas

Tower Section	Tower Elevation ft	Face	A_R ft^2	A_F ft^2	C_AA_A In Face ft^2	C_AA_A Out Face ft^2	Weight K
L1	158.500-148.500	A	0.000	0.000	0.000	0.000	0.000
		B	0.000	0.000	0.000	0.000	0.000
		C	0.000	0.000	10.098	0.000	0.125

Tower Section	Tower Elevation ft	Face	A_R ft^2	A_F ft^2	C_AA_A In Face ft^2	C_AA_A Out Face ft^2	Weight K
L2	148.500-148.000	A	0.000	0.000	0.000	0.000	0.000
		B	0.000	0.000	0.000	0.000	0.000
		C	0.000	0.000	0.594	0.000	0.007
L3	148.000-119.000	A	0.000	0.000	0.000	0.000	0.138
		B	0.000	0.000	12.090	0.000	0.051
		C	0.000	0.000	34.452	0.000	0.605
L4	119.000-118.500	A	0.000	0.000	0.000	0.000	0.002
		B	0.000	0.000	0.233	0.000	0.001
		C	0.000	0.000	0.594	0.000	0.012
L5	118.500-99.410	A	0.000	0.000	0.000	0.000	0.094
		B	0.000	0.000	8.877	0.000	0.038
		C	0.000	0.000	22.679	0.000	0.470
L6	99.410-94.590	A	0.000	0.000	0.000	0.000	0.024
		B	0.000	0.000	2.241	0.000	0.010
		C	0.000	0.000	5.726	0.000	0.119
L7	94.590-52.920	A	0.000	0.000	0.000	0.000	0.205
		B	0.000	0.000	20.579	0.000	0.085
		C	0.000	0.000	49.504	0.000	1.025
L8	52.920-46.590	A	0.000	0.000	0.000	0.000	0.031
		B	0.000	0.000	3.342	0.000	0.013
		C	0.000	0.000	7.520	0.000	0.156
L9	46.590-29.750	A	0.000	0.000	0.000	0.000	0.083
		B	0.000	0.000	8.892	0.000	0.036
		C	0.000	0.000	20.006	0.000	0.414
L10	29.750-0.000	A	0.000	0.000	0.000	0.000	0.146
		B	0.000	0.000	12.012	0.000	0.048
		C	0.000	0.000	27.027	0.000	0.697

Feed Line/Linear Appurtenances Section Areas - With Ice

Tower Section	Tower Elevation ft	Face or Leg	Ice Thickness in	A_R ft^2	A_F ft^2	C_AA_A In Face ft^2	C_AA_A Out Face ft^2	Weight K
L1	158.500-148.500	A	0.500	0.000	0.000	0.000	0.000	0.000
		B		0.000	0.000	0.000	0.000	0.000
		C		0.000	0.000	20.780	0.000	0.185
L2	148.500-148.000	A	0.500	0.000	0.000	0.000	0.000	0.000
		B		0.000	0.000	0.000	0.000	0.000
		C		0.000	0.000	1.222	0.000	0.011
L3	148.000-119.000	A	0.500	0.000	0.000	0.000	0.000	0.138
		B		0.000	0.000	31.113	0.000	0.126
		C		0.000	0.000	70.895	0.000	0.808
L4	119.000-118.500	A	0.500	0.000	0.000	0.000	0.000	0.002
		B		0.000	0.000	0.598	0.000	0.002
		C		0.000	0.000	1.222	0.000	0.016
L5	118.500-99.410	A	0.500	0.000	0.000	0.000	0.000	0.094
		B		0.000	0.000	22.844	0.000	0.092
		C		0.000	0.000	46.669	0.000	0.603
L6	99.410-94.590	A	0.500	0.000	0.000	0.000	0.000	0.024
		B		0.000	0.000	5.768	0.000	0.023
		C		0.000	0.000	11.783	0.000	0.152
L7	94.590-52.920	A	0.500	0.000	0.000	0.000	0.000	0.205
		B		0.000	0.000	52.975	0.000	0.218
		C		0.000	0.000	101.869	0.000	1.317
L8	52.920-46.590	A	0.500	0.000	0.000	0.000	0.000	0.031
		B		0.000	0.000	8.607	0.000	0.036
		C		0.000	0.000	15.475	0.000	0.200
L9	46.590-29.750	A	0.500	0.000	0.000	0.000	0.000	0.083

Tower Section	Tower Elevation ft	Face or Leg	Ice Thickness in	A_R ft^2	A_F ft^2	C_AA_A In Face ft^2	C_AA_A Out Face ft^2	Weight K
		B		0.000	0.000	22.897	0.000	0.096
		C		0.000	0.000	41.168	0.000	0.532
L10	29.750-0.000	A	0.500	0.000	0.000	0.000	0.000	0.146
		B		0.000	0.000	30.932	0.000	0.129
		C		0.000	0.000	55.616	0.000	0.857

Feed Line Center of Pressure

Section	Elevation ft	CP_X in	CP_Z in	CP_X Ice in	CP_Z Ice in
L1	158.500-148.500	0.000	1.037	0.000	1.310
L2	148.500-148.000	0.000	1.148	0.000	1.415
L3	148.000-119.000	0.327	0.887	0.427	1.008
L4	119.000-118.500	0.378	0.912	0.507	1.060
L5	118.500-99.410	0.392	0.945	0.537	1.122
L6	99.410-94.590	0.402	0.968	0.559	1.167
L7	94.590-52.920	0.444	0.986	0.642	1.206
L8	52.920-46.590	0.489	1.003	0.736	1.245
L9	46.590-29.750	0.499	1.021	0.760	1.286
L10	29.750-0.000	0.413	0.844	0.673	1.136

Discrete Tower Loads

Description	Face or Leg	Offset Type	Offsets: Horz Lateral Vert ft ft ft	Azimuth Adjustment °	Placement ft		C_AA_A Front ft^2	C_AA_A Side ft^2	Weight K
(2) DB846F65ZAXY w/Mount Pipe (Verizon)	A	From Face	4.000 0.000 0.000	0.000	157.000	No Ice 1/2" Ice	7.271 7.877	7.821 9.010	0.047 0.111
(2) DB846F65ZAXY w/Mount Pipe (Verizon)	B	From Face	4.000 0.000 0.000	0.000	157.000	No Ice 1/2" Ice	7.271 7.877	7.821 9.010	0.047 0.111
(2) DB846F65ZAXY w/Mount Pipe (Verizon)	C	From Face	4.000 0.000 0.000	0.000	157.000	No Ice 1/2" Ice	7.271 7.877	7.821 9.010	0.047 0.111
Antel BXA-70063/6CF w Mount Pipe (Verizon)	A	From Face	4.000 0.000 0.000	0.000	157.000	No Ice 1/2" Ice	7.751 8.295	6.101 7.043	0.039 0.097
Antel BXA-70063/6CF w Mount Pipe (Verizon)	B	From Face	4.000 0.000 0.000	0.000	157.000	No Ice 1/2" Ice	7.751 8.295	6.101 7.043	0.039 0.097
Antel BXA-70063/6CF w Mount Pipe (Verizon)	C	From Face	4.000 0.000 0.000	0.000	157.000	No Ice 1/2" Ice	7.751 8.295	6.101 7.043	0.039 0.097
(2) Antel BXA-171063-8BF w/ MP (Verizon)	A	From Face	4.000 0.000 0.000	0.000	157.000	No Ice 1/2" Ice	3.407 3.883	3.581 4.383	0.032 0.065

Description	Face or Leg	Offset Type	Offsets: Horz Lateral Vert ft ft ft	Azimuth Adjustment °	Placement ft		C_AA_A Front ft^2	C_AA_A Side ft^2	Weight K
(2) Antel BXA-171063-8BF	C	From Face	4.000	0.000	157.000	No Ice	3.407	3.581	0.032
w/ MP			0.000			1/2" Ice	3.883	4.383	0.065
(Verizon)			0.000						
(2) Antel BXA-171063/12 BF	B	From Face	4.000	0.000	157.000	No Ice	4.971	5.228	0.040
w/MP			0.000			1/2" Ice	5.521	6.389	0.083
(Verizon)			0.000						
4' x 12' T-Arm	A	None		0.000	157.000	No Ice	7.000	7.000	0.330
(Verizon)						1/2" Ice	9.700	9.700	0.430
4' x 12' T-Arm	B	None		0.000	157.000	No Ice	7.000	7.000	0.330
(Verizon)						1/2" Ice	9.700	9.700	0.430
4' x 12' T-Arm	C	None		0.000	157.000	No Ice	7.000	7.000	0.330
(Verizon)						1/2" Ice	9.700	9.700	0.430
****									
****									
RFS APXVSPP18-C-A20 w/	A	From Leg	3.000	0.000	147.000	No Ice	8.498	6.946	0.083
Mount Pipe			0.000			1/2" Ice	9.149	8.127	0.148
(Sprint)			0.000						
RFS APXVSPP18-C-A20 w/	B	From Leg	3.000	0.000	147.000	No Ice	8.498	6.946	0.083
Mount Pipe			0.000			1/2" Ice	9.149	8.127	0.148
(Sprint)			0.000						
RFS APXVSPP18-C-A20 w/	C	From Leg	3.000	0.000	147.000	No Ice	8.498	6.946	0.083
Mount Pipe			0.000			1/2" Ice	9.149	8.127	0.148
(Sprint)			0.000						
(2) DB980F90T4E-M	A	From Face	4.000	0.000	147.000	No Ice	4.371	3.954	0.034
w/Mount Pipe			0.000			1/2" Ice	4.959	5.045	0.071
			0.000						
(2) DB980F90T4E-M	B	From Face	4.000	0.000	147.000	No Ice	4.371	3.954	0.034
w/Mount Pipe			0.000			1/2" Ice	4.959	5.045	0.071
			0.000						
(2) DB980F90T4E-M	C	From Face	4.000	0.000	147.000	No Ice	4.371	3.954	0.034
w/Mount Pipe			0.000			1/2" Ice	4.959	5.045	0.071
			0.000						
4' x 12' T-Arm	A	None		0.000	147.000	No Ice	7.000	7.000	0.330
(Sprint)						1/2" Ice	9.700	9.700	0.430
4' x 12' T-Arm	B	None		0.000	147.000	No Ice	7.000	7.000	0.330
(Sprint)						1/2" Ice	9.700	9.700	0.430
4' x 12' T-Arm	C	None		0.000	147.000	No Ice	7.000	7.000	0.330
(Sprint)						1/2" Ice	9.700	9.700	0.430
****									
1900 RRH (25MHz)	A	From Leg	0.500	0.000	145.000	No Ice	2.907	3.801	0.044
(Sprint)			0.000			1/2" Ice	3.145	4.065	0.075
			0.000						
1900 RRH (25MHz)	B	From Leg	0.500	0.000	145.000	No Ice	2.907	3.801	0.044
(Sprint)			0.000			1/2" Ice	3.145	4.065	0.075
			0.000						
1900 RRH (25MHz)	C	From Leg	0.500	0.000	145.000	No Ice	2.907	3.801	0.044
(Sprint)			0.000			1/2" Ice	3.145	4.065	0.075
			0.000						
800 RRH 800MHz w/ ALU	A	From Leg	0.500	0.000	145.000	No Ice	0.778	0.292	0.009
External Notch Filter			0.000			1/2" Ice	0.899	0.380	0.014
(Sprint)			0.000						
800 RRH 800MHz w/ ALU	B	From Leg	0.500	0.000	145.000	No Ice	0.778	0.292	0.009
External Notch Filter			0.000			1/2" Ice	0.899	0.380	0.014
(Sprint)			0.000						
800 RRH 800MHz w/ ALU	C	From Leg	0.500	0.000	145.000	No Ice	0.778	0.292	0.009
External Notch Filter			0.000			1/2" Ice	0.899	0.380	0.014
(Sprint)			0.000						

Description	Face or Leg	Offset Type	Offsets: Horz Lateral Vert ft ft ft	Azimuth Adjustment °	Placement ft		C_AA_A Front ft^2	C_AA_A Side ft^2	Weight K
(2) 1900 ACU-A20-N (Sprint)	A	From Leg	0.500 0.000 0.000	0.000	145.000	No Ice 1/2" Ice	0.078 0.121	0.136 0.189	0.001 0.002
(2) 1900 ACU-A20-N (Sprint)	B	From Leg	0.500 0.000 0.000	0.000	145.000	No Ice 1/2" Ice	0.078 0.121	0.136 0.189	0.001 0.002
(2) 1900 ACU-A20-N (Sprint)	C	From Leg	0.500 0.000 0.000	0.000	145.000	No Ice 1/2" Ice	0.078 0.121	0.136 0.189	0.001 0.002
800 ACU-A20-N (Sprint)	A	From Leg	0.500 0.000 0.000	0.000	145.000	No Ice 1/2" Ice	0.078 0.121	0.136 0.189	0.001 0.002
800 ACU-A20-N (Sprint)	B	From Leg	0.500 0.000 0.000	0.000	145.000	No Ice 1/2" Ice	0.078 0.121	0.136 0.189	0.001 0.002
800 ACU-A20-N (Sprint)	C	From Leg	0.500 0.000 0.000	0.000	145.000	No Ice 1/2" Ice	0.078 0.121	0.136 0.189	0.001 0.002
Collar Bracket Assembly (Sprint) ****	C	None		0.000	145.000	No Ice 1/2" Ice	2.000 3.000	2.000 3.000	0.350 0.525
(2) Kathrein AP14/17-880/1940/088D/AD T/XXP w MP (AT&T)	A	From Face	4.000 0.000 0.000	0.000	137.000	No Ice 1/2" Ice	7.910 8.506	7.029 8.152	0.102 0.167
(2) Kathrein AP14/17-880/1940/088D/AD T/XXP w MP (AT&T)	B	From Face	4.000 0.000 0.000	0.000	137.000	No Ice 1/2" Ice	7.910 8.506	7.029 8.152	0.102 0.167
(2) Kathrein AP14/17-880/1940/088D/AD T/XXP w MP (AT&T)	C	From Face	4.000 0.000 0.000	0.000	137.000	No Ice 1/2" Ice	7.910 8.506	7.029 8.152	0.102 0.167
(4) TMAs - 9"x5"x3.5" (AT&T)	A	From Face	4.000 0.000 0.000	0.000	137.000	No Ice 1/2" Ice	0.438 0.533	0.306 0.392	0.010 0.014
(4) TMAs - 9"x5"x3.5" (AT&T)	B	From Face	4.000 0.000 0.000	0.000	137.000	No Ice 1/2" Ice	0.438 0.533	0.306 0.392	0.010 0.014
(4) TMAs - 9"x5"x3.5" (AT&T)	C	From Face	4.000 0.000 0.000	0.000	137.000	No Ice 1/2" Ice	0.438 0.533	0.306 0.392	0.010 0.014
4' x 12' T-Arm (AT&T)	A	None		0.000	137.000	No Ice 1/2" Ice	7.000 9.700	7.000 9.700	0.330 0.430
4' x 12' T-Arm (AT&T)	B	None		0.000	137.000	No Ice 1/2" Ice	7.000 9.700	7.000 9.700	0.330 0.430
4' x 12' T-Arm (AT&T) ****	C	None		0.000	137.000	No Ice 1/2" Ice	7.000 9.700	7.000 9.700	0.330 0.430
Pirod 4' Side Mount Standoff (1) (Sprint)	C	From Face	1.500 0.000 0.000	0.000	72.000	No Ice 1/2" Ice	2.720 4.910	2.720 4.910	0.050 0.089
GPS (Sprint)	C	From Face	3.000 0.000 0.000	0.000	72.000	No Ice 1/2" Ice	0.304 0.432	0.304 0.432	0.001 0.004

Load Combinations

Comb. No.	Description
1	Dead Only
2	Dead+Wind 0 deg - No Ice
3	Dead+Wind 30 deg - No Ice
4	Dead+Wind 60 deg - No Ice
5	Dead+Wind 90 deg - No Ice
6	Dead+Wind 120 deg - No Ice
7	Dead+Wind 150 deg - No Ice
8	Dead+Wind 180 deg - No Ice
9	Dead+Wind 210 deg - No Ice
10	Dead+Wind 240 deg - No Ice
11	Dead+Wind 270 deg - No Ice
12	Dead+Wind 300 deg - No Ice
13	Dead+Wind 330 deg - No Ice
14	Dead+Ice+Temp
15	Dead+Wind 0 deg+Ice+Temp
16	Dead+Wind 30 deg+Ice+Temp
17	Dead+Wind 60 deg+Ice+Temp
18	Dead+Wind 90 deg+Ice+Temp
19	Dead+Wind 120 deg+Ice+Temp
20	Dead+Wind 150 deg+Ice+Temp
21	Dead+Wind 180 deg+Ice+Temp
22	Dead+Wind 210 deg+Ice+Temp
23	Dead+Wind 240 deg+Ice+Temp
24	Dead+Wind 270 deg+Ice+Temp
25	Dead+Wind 300 deg+Ice+Temp
26	Dead+Wind 330 deg+Ice+Temp
27	Dead+Wind 0 deg - Service
28	Dead+Wind 30 deg - Service
29	Dead+Wind 60 deg - Service
30	Dead+Wind 90 deg - Service
31	Dead+Wind 120 deg - Service
32	Dead+Wind 150 deg - Service
33	Dead+Wind 180 deg - Service
34	Dead+Wind 210 deg - Service
35	Dead+Wind 240 deg - Service
36	Dead+Wind 270 deg - Service
37	Dead+Wind 300 deg - Service
38	Dead+Wind 330 deg - Service

Maximum Member Forces

Section No.	Elevation ft	Component Type	Condition	Gov. Load Comb.	Force K	Major Axis Moment kip-ft	Minor Axis Moment kip-ft
L1	158.5 - 148.5	Pole	Max Tension	11	0.000	-0.000	-0.000
			Max. Compression	14	-3.770	-0.158	-0.005
			Max. Mx	5	-1.709	-52.867	-0.068
			Max. My	8	-1.708	-0.027	-52.836
			Max. Vy	5	6.652	-52.867	-0.068
			Max. Vx	8	6.656	-0.027	-52.836
			Max. Torque	13			-0.758
L2	148.5 - 148	Pole	Max Tension	1	0.000	0.000	0.000

Section No.	Elevation ft	Component Type	Condition	Gov. Load Comb.	Force K	Major Axis Moment kip-ft	Minor Axis Moment kip-ft
			Max. Compression	14	-3.828	-0.158	-0.011
			Max. Mx	5	-1.751	-56.208	-0.072
			Max. My	8	-1.750	-0.029	-56.181
			Max. Vy	5	6.710	-56.208	-0.072
			Max. Vx	8	6.714	-0.029	-56.181
			Max. Torque	13			-0.725
L3	148 - 119	Pole	Max Tension	1	0.000	0.000	0.000
			Max. Compression	14	-12.189	-0.282	-0.328
			Max. Mx	5	-6.773	-485.645	-0.298
			Max. My	8	-6.771	-0.224	-485.820
			Max. Vy	5	18.408	-485.645	-0.298
			Max. Vx	8	18.413	-0.224	-485.820
			Max. Torque	2			-0.768
L4	119 - 118.5	Pole	Max Tension	1	0.000	0.000	0.000
			Max. Compression	14	-12.262	-0.285	-0.335
			Max. Mx	5	-6.848	-494.865	-0.304
			Max. My	8	-6.846	-0.228	-495.044
			Max. Vy	5	18.478	-494.865	-0.304
			Max. Vx	8	18.482	-0.228	-495.044
			Max. Torque	2			-0.770
L5	118.5 - 99.41	Pole	Max Tension	1	0.000	0.000	0.000
			Max. Compression	14	-15.346	-0.398	-0.594
			Max. Mx	5	-9.442	-874.816	-0.483
			Max. My	8	-9.441	-0.360	-875.139
			Max. Vy	18	21.518	-853.788	-1.355
			Max. Vx	21	21.533	-1.104	-854.808
			Max. Torque	22			1.015
L6	99.41 - 94.59	Pole	Max Tension	1	0.000	0.000	0.000
			Max. Compression	14	-16.212	-0.428	-0.664
			Max. Mx	5	-10.192	-979.696	-0.531
			Max. My	8	-10.191	-0.393	-980.056
			Max. Vy	18	22.378	-959.574	-1.489
			Max. Vx	21	22.393	-1.198	-960.705
			Max. Torque	22			1.090
L7	94.59 - 52.92	Pole	Max Tension	1	0.000	0.000	0.000
			Max. Compression	14	-24.649	-0.755	-1.646
			Max. Mx	18	-23.695	-2038.001	-2.991
			Max. My	21	-23.694	-2.060	-2040.389
			Max. Vy	18	29.479	-2038.001	-2.991
			Max. Vx	21	29.494	-2.060	-2040.389
			Max. Torque	17			-2.212
L8	52.92 - 46.59	Pole	Max Tension	1	0.000	0.000	0.000
			Max. Compression	14	-26.435	-0.817	-1.761
			Max. Mx	18	-25.589	-2227.702	-3.186
			Max. My	21	-25.588	-2.200	-2230.234
			Max. Vy	18	30.479	-2227.702	-3.186
			Max. Vx	21	30.493	-2.200	-2230.234
			Max. Torque	17			-2.339
L9	46.59 - 29.75	Pole	Max Tension	1	0.000	0.000	0.000
			Max. Compression	14	-31.294	-0.993	-2.091
			Max. Mx	18	-30.728	-2761.770	-3.724
			Max. My	21	-30.727	-2.581	-2764.693
			Max. Vy	18	32.975	-2761.770	-3.724
			Max. Vx	21	32.989	-2.581	-2764.693
			Max. Torque	17			-2.672
L10	29.75 - 0	Pole	Max Tension	1	0.000	0.000	0.000
			Max. Compression	14	-40.941	-1.254	-2.580
			Max. Mx	18	-40.926	-3796.093	-4.564
			Max. My	21	-40.926	-3.193	-3799.653
			Max. Vy	18	36.620	-3796.093	-4.564
			Max. Vx	21	36.633	-3.193	-3799.653

Section No.	Elevation ft	Component Type	Condition	Gov. Load Comb.	Force K	Major Axis Moment kip-ft	Minor Axis Moment kip-ft
			Max. Torque	17			-3.129

Maximum Tower Deflections - Service Wind

Section No.	Elevation ft	Horz. Deflection in	Gov. Load Comb.	Tilt °	Twist °
L1	158.5 - 148.5	39.057	32	2.459	0.005
L2	148.5 - 148	33.922	32	2.439	0.004
L3	148 - 119	33.666	32	2.437	0.004
L4	119 - 118.5	20.405	32	1.831	0.002
L5	118.5 - 99.41	20.214	32	1.822	0.002
L6	99.41 - 94.59	13.591	32	1.487	0.001
L7	94.59 - 52.92	12.133	32	1.401	0.001
L8	52.92 - 46.59	3.326	32	0.624	0.001
L9	46.59 - 29.75	2.553	32	0.543	0.000
L10	29.75 - 0	1.014	32	0.331	0.000

Critical Deflections and Radius of Curvature - Service Wind

Elevation ft	Appurtenance	Gov. Load Comb.	Deflection in	Tilt °	Twist °	Radius of Curvature ft
157.000	(2) DB846F65ZAXY w/Mount Pipe	32	38.285	2.457	0.005	70002
147.000	RFS APXVSPP18-C-A20 w/ Mount Pipe	32	33.158	2.431	0.004	5339
145.000	1900 RRH (25MHz)	32	32.147	2.412	0.004	4554
137.000	(2) Kathrein AP14/17-880/1940/088D/ADT/XXP w MP	32	28.223	2.266	0.003	3142
72.000	Pirod 4' Side Mount Standoff (1)	32	6.529	0.954	0.001	3127

Maximum Tower Deflections - Design Wind

Section No.	Elevation ft	Horz. Deflection in	Gov. Load Comb.	Tilt °	Twist °
L1	158.5 - 148.5	112.303	8	7.073	0.014
L2	148.5 - 148	97.563	8	7.017	0.013
L3	148 - 119	96.831	8	7.010	0.013
L4	119 - 118.5	59.100	21	5.271	0.007
L5	118.5 - 99.41	58.553	21	5.246	0.007
L6	99.41 - 94.59	39.538	20	4.290	0.006
L7	94.59 - 52.92	35.335	20	4.048	0.005
L8	52.92 - 46.59	9.765	20	1.827	0.002
L9	46.59 - 29.75	7.501	20	1.593	0.002
L10	29.75 - 0	2.986	20	0.974	0.001

Critical Deflections and Radius of Curvature - Design Wind

Elevation ft	Appurtenance	Gov. Load Comb.	Deflection in	Tilt °	Twist °	Radius of Curvature ft
157.000	(2) DB846F65ZAXY w/Mount Pipe	8	110.086	7.069	0.014	25134
147.000	RFS APXVSPP18-C-A20 w/ Mount Pipe	8	95.371	6.993	0.013	1914
145.000	1900 RRH (25MHz)	21	92.499	6.938	0.012	1630
137.000	(2) Kathrein AP14/17-880/1940/088D/ADT/XXP w MP	21	81.371	6.519	0.011	1120
72.000	Pirod 4' Side Mount Standoff (1)	20	19.105	2.777	0.004	1091

Compression Checks

Pole Design Data

Section No.	Elevation ft	Size	L ft	L_u ft	Kl/r	F_a ksi	A in^2	Actual P K	Allow. P_a K	Ratio $\frac{P}{P_a}$
L1	158.5 - 148.5 (1)	TP20x20x0.375	10.000	0.000	0.0	21.000	23.120	-1.708	485.523	0.004
L2	148.5 - 148 (2)	TP20.5x20x0.375	0.500	0.000	0.0	38.335	23.709	-1.750	908.902	0.002
L3	148 - 119 (3)	TP28.2x20.5x0.188	29.000	0.000	0.0	39.000	16.671	-6.771	650.167	0.010
L4	119 - 118.5 (4)	TP29.7x28.2x0.276	0.500	0.000	0.0	30.000	24.452	-6.794	733.555	0.009
L5	118.5 - 99.41 (5)	TP34.81x29.7x0.29	19.090	0.000	0.0	30.000	31.737	-9.441	952.124	0.010
L6	99.41 - 94.59 (6)	TP34.81x34.81x0.313	4.820	0.000	0.0	39.000	34.217	-10.191	1334.470	0.008
L7	94.59 - 52.92 (7)	TP44.96x34.81x0.313	41.670	0.000	0.0	39.000	44.285	-23.693	1727.100	0.014
L8	52.92 - 46.59 (8)	TP47.36x44.96x0.428	6.330	0.000	0.0	30.000	60.435	-23.731	1813.060	0.013
L9	46.59 - 29.75 (9)	TP51.75x47.36x0.406 H1-3 (1.34 CR) - 9	16.840	0.000	0.0	30.000	66.140	-30.727	1984.200	0.015
L10	29.75 - 0 (10)	TP59.37x51.75x0.422 H1-3 (1.34 CR) - 10	29.750	0.000	0.0	30.000	79.048	-40.926	2371.440	0.017

Pole Bending Design Data

Section No.	Elevation ft	Size	Actual M_x kip-ft	Actual f_{bx} ksi	Allow. F_{bx} ksi	Ratio $\frac{f_{bx}}{F_{bx}}$	Actual M_y kip-ft	Actual f_{by} ksi	Allow. F_{by} ksi	Ratio $\frac{f_{by}}{F_{by}}$
L1	158.5 - 148.5 (1)	TP20x20x0.375	52.893	-5.698	23.100	0.247	0.000	0.000	23.100	0.000
L2	148.5 - 148 (2)	TP20.5x20x0.375	56.237	-5.758	38.110	0.151	0.000	0.000	38.110	0.000
L3	148 - 119 (3)	TP28.2x20.5x0.188	485.940	-50.545	39.000	1.296	0.000	0.000	39.000	0.000
L4	119 - 118.5 (4)	TP29.7x28.2x0.276	485.940	-34.679	30.000	1.156	0.000	0.000	30.000	0.000
L5	118.5 - 99.41 (5)	TP34.81x29.7x0.29	875.308	-38.873	30.000	1.296	0.000	0.000	30.000	0.000
L6	99.41 - 94.59 (6)	TP34.81x34.81x0.313	980.242	-40.432	39.000	1.037	0.000	0.000	39.000	0.000
L7	94.59 - 52.92 (7)	TP44.96x34.81x0.313	2041.283	-50.164	39.000	1.286	0.000	0.000	39.000	0.000
L8	52.92 - 46.59 (8)	TP47.36x44.96x0.428	2041.283	-36.948	30.000	1.232	0.000	0.000	30.000	0.000
L9	46.59 - 29.75 (9)	TP51.75x47.36x0.406	2765.808	-39.609	30.000	1.320	0.000	0.000	30.000	0.000
L10	29.75 - 0 (10)	TP59.37x51.75x0.422	3801.042	-39.642	30.000	1.321	0.000	0.000	30.000	0.000

Section No.	Elevation ft	Size	Actual M_x kip-ft	Actual f_{bx} ksi	Allow. F_{bx} ksi	Ratio $\frac{f_{bx}}{F_{bx}}$	Actual M_y kip-ft	Actual f_{by} ksi	Allow. F_{by} ksi	Ratio $\frac{f_{by}}{F_{by}}$

Pole Interaction Design Data

Section No.	Elevation ft	Size	Ratio $\frac{P}{P_a}$	Ratio $\frac{f_{bx}}{F_{bx}}$	Ratio $\frac{f_{by}}{F_{by}}$	Comb. Stress Ratio	Allow. Stress Ratio	Criteria
L1	158.5 - 148.5 (1)	TP20x20x0.375	0.004	0.247	0.000	0.250 ✔	1.333	H1-3 ✔
L2	148.5 - 148 (2)	TP20.5x20x0.375	0.002	0.151	0.000	0.153 ✔	1.333	H1-3 ✔
L3	148 - 119 (3)	TP28.2x20.5x0.188	0.010	1.296	0.000	1.306 ✔	1.333	H1-3 ✔
L4	119 - 118.5 (4)	TP29.7x28.2x0.276	0.009	1.156	0.000	1.165 ✔	1.333	H1-3 ✔
L5	118.5 - 99.41 (5)	TP34.81x29.7x0.29	0.010	1.296	0.000	1.306 ✔	1.333	H1-3 ✔
L6	99.41 - 94.59 (6)	TP34.81x34.81x0.313	0.008	1.037	0.000	1.044 ✔	1.333	H1-3 ✔
L7	94.59 - 52.92 (7)	TP44.96x34.81x0.313	0.014	1.286	0.000	1.300 ✔	1.333	H1-3 ✔
L8	52.92 - 46.59 (8)	TP47.36x44.96x0.428	0.013	1.232	0.000	1.245 ✔	1.333	H1-3 ✔
L9	46.59 - 29.75 (9)	TP51.75x47.36x0.406	0.015	1.320	0.000	**1.336** ✔	1.333	H1-3 ✔
L10	29.75 - 0 (10)	TP59.37x51.75x0.422	0.017	1.321	0.000	**1.339** ✔	1.333	H1-3 ✔

Section Capacity Table

Section No.	Elevation ft	Component Type	Size	Critical Element	P K	$SF*P_{allow}$ K	% Capacity	Pass Fail
L1	158.5 - 148.5	Pole	TP20x20x0.375	1	-1.708	647.202	18.8	Pass
L2	148.5 - 148	Pole	TP20.5x20x0.375	2	-1.750	1211.566	11.5	Pass
L3	148 - 119	Pole	TP28.2x20.5x0.188	3	-6.771	866.673	98.0	Pass
L4	119 - 118.5	Pole	TP29.7x28.2x0.276	4	-6.794	977.829	87.4	Pass
L5	118.5 - 99.41	Pole	TP34.81x29.7x0.29	5	-9.441	1269.181	98.0	Pass
L6	99.41 - 94.59	Pole	TP34.81x34.81x0.313	6	-10.191	1778.848	78.3	Pass
L7	94.59 - 52.92	Pole	TP44.96x34.81x0.313	7	-23.693	2302.224	97.5	Pass
L8	52.92 - 46.59	Pole	TP47.36x44.96x0.428	8	-23.731	2416.809	93.4	Pass
L9	46.59 - 29.75	Pole	TP51.75x47.36x0.406	9	-30.727	2644.938	100.2	Pass
L10	29.75 - 0	Pole	TP59.37x51.75x0.422	10	-40.926	3161.129	100.4	Pass
							Summary	
						Pole (L10)	100.4	Pass
						RATING =	**100.4**	**Pass**

Design	0

	Initials	Date
Produced By:	MER	1/28/2013
Checked By:	AVF	1/28/2013

SELF-SUPPORTING POLE STRUCTURE REINFORCEMENT DESIGN, TIA-222-F

VSi Job #	122449	
Client Site Name:	West Haven-rt15 Woodbridge	
Client Site Number:	CT46139-A	
Hole Size Allowance:	0.0625	inches
Allowable Stress Increase	133%	
Design Percentage	100%	
	133%	

Pole Geometry									CT46139-A	122449
Section #	Sides # (12,16,18,0)	Elevation (ft) TOP	Elevation (ft) BOTTOM	Dia Across Flats (in) TOP	Dia Across Flats (in) BOTTOM	Splice (ft)	Thickness (in)	Material Specification	Taper (in/ft)	Length (ft)
1	0	158.5	148.5	20.00	20.00	0.00	0.3750	A53E-B	0.000	10.00
2	18	148.5	94.6	20.50	34.57	4.82	0.1875	A572-65	0.261	53.91
3	18	99.4	46.6	32.81	46.62	6.33	0.3125	A572-65	0.261	52.82
4	18	52.9	0.0	44.21	58.00	0.00	0.3125	A572-65	0.261	52.91

Bar Reinforcement

Section Letter	Elevation (ft)	Moment (kip-ft)	Section #	Bar # (3,4)	Bar Width (in)	Bar Thickness (in)	Bar Length (in)	OS Number	Bar Matertial Specification	OS Vall (kip)	r_{max}	r_b Pole	r_c	r_t Gross	rt Net	r_{BS}	r_p Bar	r_p Pole	r_v	t Model (in)	F_y Model (ksi)	r_l	D_o Model (in)	t_A Model (in)
																							CT46139-A	122449
H	119.00	486	2	3	**5.00**	1.5	**21**	**7**	A572-50	20.9	**82%**	38%	64%	52%	65%	27%	13%	82%	81%	0.41	50	**100%**	**29.70**	
G	99.41	875	2	3	**5.00**	1.5	**21**	**10000**	A572-50	20.9	**93%**	59%	91%	75%	93%	0%	0%	0%	0%	0.38	50	**100%**	**34.81**	**0.33**
F	94.59	980	2	3	**5.00**	1.5	**21**	**9**	A572-50	20.9	**98%**	64%	97%	79%	98%	33%	15%	96%	95%	0.37	50	**100%**	**36.07**	**0.33**
E	52.91	2052	4	3	**6.50**	1.5	**18**	**12**	A572-50	20.9	**91%**	58%	91%	77%	89%	31%	14%	55%	90%	0.49	50	**100%**	**45.71**	**0.42**
D	46.59	2242	4	3	**6.50**	1.5	**18**	**10000**	A572-50	20.9	**93%**	59%	93%	80%	92%	0%	0%	0%	0%	0.49	50	**100%**	**47.36**	**0.42**
C	29.75	2787	4	3	**6.50**	1.5	**18**	**13**	A572-50	20.9	**100%**	65%	100%	86%	98%	32%	14%	56%	92%	0.47	50	**100%**	**51.75**	**0.41**
B	29.75	2787	4	3	**7.25**	1.5	**15**	**10000**	A572-50	20.9	**92%**	62%	92%	82%	92%	0%	0%	0%	0%	0.49	50	**100%**	**51.75**	**0.45**
A	0.50	3803	4	3	**7.25**	1.5	**15**	**9**	A572-50	39.8	**100%**	73%	100%	89%	100%	49%	24%	95%	81%	0.47	50	**100%**	**59.37**	**0.46**

vertical solutions

Job No.: 122449
Date: 01/30/2013
Calculated by: MER

SELF-SUPPORTING POLE STRUCTURE REINFORCEMENT BOLTED SPLICE DESIGN, TIA-222-F

CONSTANTS:
$E \equiv 29000 \cdot ksi$

Input - Reinforcing Bar Properties

$b_{bar} := 6.50 \cdot in$ = width of reinforcement

$t_{bar} := 1.5 \cdot in$ = thickness of reinforcement

$F_{yBar} := 50 \cdot ksi$ = specified minimum yield stress of reinforcement

$F_{uBar} := 65 \cdot ksi$ = specified minimum tensile stress of reinforcement

$ASI := 133\%$ = allowable stress increase

$A_{gBar} := b_{bar} \cdot t_{bar}$ $\quad A_{gBar} = 9.75 \cdot in^2$

Input - Splice & TB's Properties

$d := 20 \cdot mm$ = diameter of ONESIDE AJAX bolts

$d_{sleeve} := 29 \cdot mm$ = outside diameter of sleeve for ONESIDE AJAX bolts

$d_{hole} := 31 \cdot mm$ = diameter of hole for ONESIDE AJAX bolts

$n := 13$ = number of ONESIDE AJAX bolts at termination

$s := 3 \cdot in$ = spacing of termination bolts

$V_{all} := 20.9 \cdot kip$ = shear breaking strength of ONESIDE AJAX

$T_{all} := 74.4 \cdot kN$ = tensile breaking strength of ONESIDE AJAX PC8.8 $\quad T_{all} = 16.7 \cdot kip$

$b_{GPL} := 4.625 \cdot in$ = width of gusset plate

$t_{GPL} := 1.125 \cdot in$ = thickness of gusset plate

$F_{yGPL} := 50 \cdot ksi$ = specified minimum yield stress of gusset plate

$F_{uGPL} := 65 \cdot ksi$ = specified minimum tensile stress of gusset plate

$n_{sPLbolt} := 13$ = number of bar termination bolts for height of gusset plate (bolt providing M_{resist})

$n_{bGPL} := 14$ = number of gusset plate termination bolts

$d_{bGPL} := 0.75 \cdot in$ = diameter of gusset plate termination bolts

$F_{vbGPL} := 21.0 \cdot ksi$ = specified minimum tensile stength of gusset plate termiantion bolt

$s_{bGPL} := 3 \cdot in$ = spacing of gusset plate termination bolts

$end_{bGPL} := 1.5 \cdot in$ = end distance of gusset plate termination bolts

$K_{GPL} := 1.0$ = effective buckling length factor of gusset plate [Table C-C2.1, LRFD-99]

$b_{SPL} := 4.625 \cdot in$ = width of splice plate

$t_{SPL} := 1.125 \cdot in$ = thickness of splice plate

$F_{ySPL} := 50 \cdot ksi$ = specified minimum yield stress of splice plate

$F_{uSPL} := 65 \cdot ksi$ = specified minimum tensile stress of splice plate

$K_{SPL} := 1.0$ = effective buckling length factor of splice plate [Table C-C2.1, LRFD-99]

$L_{SPL} := 3.25 \cdot in$ = maximum spacing between gusset/splice plate bolts

$F_{EXX} := 70 \cdot ksi$ = ultimate stress of weld electrode

$H_{GPL} := (n_{sPLbolt} + 1) \cdot s$ = height of gusset plate $\qquad H_{GPL} = 42.00 \cdot in$

$b'_{bar} := \begin{cases} b_{bar} & \text{if } b_{bar} \geq 4.5 \cdot in \\ 4.5 \cdot in & \text{if } b_{bar} < 4.5 \cdot in \end{cases} \qquad b'_{bar} = 6.5 \cdot in$

$H_{GPLcheck} := 2 \cdot end_{bGPL} + (n_{bGPL} - 1) \cdot s_{bGPL} \qquad H_{GPLcheck} = 42.00 \cdot in$

$Length_{SPL} := L_{SPL} + 2 \cdot end_{bGPL} + 2 \cdot [(n_{bGPL} - 1) \cdot s_{bGPL}] \qquad Length_{SPL} = 84.25 \cdot in$

Output: Tension on Gross

$F_{tGross} := 0.6 \cdot F_{yBar} \qquad F_{tGross} = 30.0 \cdot ksi$

$P_{tGross} := F_{tGross} \cdot A_{gBar} \qquad P_{tGross} = 292.5 \cdot kip$

Output: Tension on Net

$A_{en} := \left[b_{bar} - \left(d_{hole} + \frac{1}{16} \cdot in\right)\right] \cdot t_{bar} \qquad A_{en} = 7.826 \cdot in^2$

$F_{tNet} := 0.5 \cdot F_{uBar} \qquad F_{tNet} = 32.5 \cdot ksi$

$P_{tNet} := F_{tNet} \cdot A_{en} \qquad P_{tNet} = 254.3 \cdot kip$

SPLICE:

Output - Shear Strength of Bar Termination Bolts

$V_{max} := \min(P_{tGross}, P_{tNet}) \cdot ASI \qquad V_{max} = 338.3 \cdot kip$

$A_{bolt} := \frac{\pi}{4} \cdot d^2 \qquad A_{bolt} = 0.487 \cdot in^2$

$t_{sleeve} := \frac{d_{sleeve} - d}{2} \qquad t_{sleeve} = 0.177 \cdot in$

$A_{sleeve} := \frac{\pi}{4} \cdot \left[d_{sleeve}^2 - (d_{sleeve} - 2 \cdot t_{sleeve})^2\right] \qquad A_{sleeve} = 0.537 \cdot in^2$

$A_{assembly} := A_{sleeve} + A_{bolt} \qquad A_{assembly} = 1.024 \cdot in^2$

$F_v := \frac{V_{all}}{A_{assembly}} \qquad F_v = 20.4 \cdot ksi$

$f_v := \frac{V_{max}}{n \cdot A_{assembly}} \qquad f_v = 25.4 \cdot ksi$

$r_v := \frac{f_v}{F_v} \qquad r_v = 124 \cdot \%$

Output - Combined Tension & Shear Strength Bar Termination Bolts

- Eccentricity Normal to the Plane of the Faying Surface: Case I-NA not at CG

$P_{bMax} := V_{max}$ $\qquad P_{bMax} = 338 \cdot kip$

$edge_{bGPL} := \frac{b_{GPL}}{2}$ $\qquad edge_{bGPL} = 2.313 \cdot in$

$e := t_{bar} + (b_{GPL} - edge_{bGPL})$ $\qquad e = 3.81 \cdot in$

$b_{eff} := \begin{cases} 8 \cdot t_{GPL} & \text{if } 8 \cdot t_{GPL} \le b'_{bar} \\ b'_{bar} & \text{otherwise} \end{cases}$ $\qquad b_{eff} = 6.5 \cdot in$

$d_1 := 7.550 \cdot in$ ***** adjust until d_1 is the same (Eq 1 = Eq 2)**

$n' := \begin{cases} n_{sPLbolt} & \text{if } d_1 < s \\ (n_{sPLbolt} - 1) & \text{if } d_1 \ge s \wedge d_1 < 2 \cdot s \\ (n_{sPLbolt} - 2) & \text{if } d_1 \ge 2 \cdot s \wedge d_1 \le 3 \cdot s \\ \text{"ERROR"} & \text{otherwise} \end{cases}$ $\qquad n' = 11$

$y := \left(\frac{n'}{2} + 0.5\right) \cdot s - \left[d_1 - (n_{sPLbolt} - n') \cdot s\right]$ $\qquad y = 16.450 \cdot in$

$A_b := A_{assembly}$ $\qquad A_b = 1.02 \cdot in^2$

$\Sigma A_b := n' \cdot A_b$ $\qquad \Sigma A_b = 11.26 \cdot in^2$

Given

$\Sigma A_b \cdot y = b_{eff} \cdot d_1 \cdot \frac{d_1}{2}$

$Find(d_1) = 7.550 \cdot in$ *******

$Eq1 := \Sigma A_b \cdot y$ $\qquad Eq1 = 185.26 \cdot in^3$

$Eq2 := b_{eff} \cdot d_1 \cdot \frac{d_1}{2}$ $\qquad Eq2 = 185.26 \cdot in^3$

$c := n_{sPLbolt} \cdot s - d_1$ $\qquad c = 31.45 \cdot in$

$$y_i := \begin{bmatrix} c \\ (n_{sPLbolt} - 1) \cdot s - d_1 \\ (n_{sPLbolt} - 2) \cdot s - d_1 \\ (n_{sPLbolt} - 3) \cdot s - d_1 \\ (n_{sPLbolt} - 4) \cdot s - d_1 \\ (n_{sPLbolt} - 5) \cdot s - d_1 \\ (n_{sPLbolt} - 6) \cdot s - d_1 \\ (n_{sPLbolt} - 7) \cdot s - d_1 \\ (n_{sPLbolt} - 8) \cdot s - d_1 \\ (n_{sPLbolt} - 9) \cdot s - d_1 \\ (n_{sPLbolt} - 10) \cdot s - d_1 \\ 0 \end{bmatrix}$$

*** increase/decrease rows as needed**

$$y_i = \begin{pmatrix} 31.45 \\ 28.45 \\ 25.45 \\ 22.45 \\ 19.45 \\ 16.45 \\ 13.45 \\ 10.45 \\ 7.45 \\ 4.45 \\ 1.45 \\ 0 \end{pmatrix} \cdot in$$

$$I_x := n' \cdot \left(\frac{\pi \cdot d^4}{64}\right) + \sum\left(A_b \cdot y_i^2\right) + \frac{b_{eff} \cdot d_1^3}{12} + b_{eff} \cdot d_1 \cdot \left(\frac{d_1}{2}\right)^2 \qquad I_x = 4993.74 \cdot in^4$$

$$T_{bMax} := \frac{P_{bMax} \cdot e \cdot c}{I_x} \cdot A_b \qquad T_{bMax} = 8.3 \cdot kip$$

$$F_t := \frac{T_{all}}{A_{bolt}} \qquad F_t = 34.3 \cdot ksi$$

$$F'_t := \left[\sqrt{\left(\frac{ASI \cdot F_t}{ksi}\right)^2 - 2.15 \cdot \left(\frac{f_v}{ksi}\right)^2}\right] \cdot ksi \qquad F'_t = 26.4 \cdot ksi$$

$$f_t := \frac{T_{bMax}}{A_{bolt}} \qquad f_t = 17.1 \cdot ksi$$

$$r_{combVT} := \frac{f_t}{F'_t} \qquad r_{combVT} = 65 \cdot \%$$

Output - Bearing Strength: Reinforcing Bar

$$P_{max} := V_{max}$$

$$F_{pBar} := 1.2 \cdot F_{uBar} \qquad F_{pBar} = 78.0 \cdot ksi$$

$$f_{pBar} := \frac{P_{max}}{n \cdot t_{bar} \cdot d_{sleeve}} \qquad f_{pBar} = 15.2 \cdot ksi$$

$$r_{pBar} := \frac{f_{pBar}}{F_{pBar}} \qquad r_{pBar} = 19 \cdot \%$$

Output - Flexural Strength of Gusset Plate

$$P_{maxGPL} := \frac{P_{max}}{2} \qquad P_{maxGPL} = 169.1 \cdot kip$$

$$S_{GPL} := \frac{t_{GPL} \cdot H_{GPL}^2}{6} \qquad S_{GPL} = 330.7 \cdot in^3$$

$$f_{bGPL} := \frac{P_{maxGPL} \cdot e}{S_{GPL}} \qquad f_{bGPL} = 1.9 \cdot ksi$$

$$F_{bGPL} := 0.75 \cdot F_{yGPL} \qquad F_{bGPL} = 37.5 \cdot ksi$$

$$r_{mGPL} := \frac{f_{bGPL}}{F_{bGPL}} \qquad r_{mGPL} = 5 \cdot \%$$

$$compact_{GPL} := \begin{cases} \text{"YES"} & \text{if } \frac{b_{GPL}}{t_{GPL}} < 0.38 \cdot \sqrt{\frac{E}{F_{yGPL}}} \\ \text{"NO"} & \text{otherwise} \end{cases} \qquad compact_{GPL} = \text{"YES"}$$

Output - Compression Strength of Gusset Plate

$$r_{GPL} := \frac{t_{GPL}}{\sqrt{12}} \qquad r_{GPL} = 0.325 \cdot in$$

$$A_{gGPL} := b_{GPL} \cdot t_{GPL} \qquad A_{gGPL} = 5.20 \cdot in^2$$

$$KLr := K_{GPL} \cdot \frac{s_{bGPL}}{r_{GPL}} \qquad KLr = 9.2$$

$$C_{cGPL} := \sqrt{\frac{2 \cdot \pi^2 \cdot E}{F_{yGPL}}} \qquad C_{cGPL} = 107.0$$

$$F_{aGPL} := \begin{cases} \dfrac{\left(1 - \dfrac{KLr^2}{2 \cdot C_{cGPL}^2}\right) \cdot F_{yGPL}}{\dfrac{5}{3} + \dfrac{3}{8} \cdot \left(\dfrac{KLr}{C_{cGPL}}\right) - \dfrac{KLr^3}{8 \cdot C_{cGPL}^3}} & \text{if } KLr \le C_{cGPL} \\ \dfrac{12 \cdot \pi^2 \cdot E}{23 \cdot KLr^2} & \text{otherwise} \end{cases} \qquad F_{aGPL} = 29.3 \cdot ksi$$

$$f_{aGPL} := \frac{P_{maxGPL}}{A_{gGPL}} \qquad f_{aGPL} = 32.5 \cdot ksi$$

$$r_{cGPL} := \frac{f_{aGPL}}{F_{aGPL}} \qquad r_{cGPL} = 111 \cdot \%$$

Output - Combined Fexure & Compression Strength of Gusset Plate

$$C_m := 0.85$$

$$F'_{eGPL} := \frac{12 \cdot \pi^2 \cdot E}{23 \cdot KLr^2} \qquad F'_{eGPL} = 1750.0 \cdot ksi$$

$$Eq_{H11GPL} := \frac{f_{aGPL}}{F_{aGPL}} + \frac{C_m \cdot f_{bGPL}}{\left(1 - \dfrac{f_{aGPL}}{F'_{eGPL}}\right) \cdot F_{bGPL}} \qquad Eq_{H11GPL} = 1.154$$

$$Eq_{H12GPL} := \frac{f_{aGPL}}{0.6 \cdot F_{yGPL}} + \frac{f_{bGPL}}{F_{bGPL}} \qquad Eq_{H12GPL} = 1.135$$

$$Eq_{H13GPL} := \frac{f_{aGPL}}{F_{aGPL}} + \frac{f_{bGPL}}{F_{bGPL}} \qquad Eq_{H13GPL} = 1.161$$

$$r_{CcombGPL} := \begin{cases} Eq_{H13GPL} & \text{if } \frac{f_{aGPL}}{F_{aGPL}} \le 0.15 \\ Eq_{H11GPL} & \text{if } \frac{f_{aGPL}}{F_{aGPL}} > 0.15 \wedge Eq_{H11GPL} \ge Eq_{H12GPL} \\ Eq_{H12GPL} & \text{if } \frac{f_{aGPL}}{F_{aGPL}} > 0.15 \wedge Eq_{H12GPL} > Eq_{H11GPL} \end{cases}$$

$r_{CcombGPL} = 115 \cdot \%$

Output - Shear Strengh of Gusset Plate Bolts

$V_{maxGPL} := P_{maxGPL}$ $\qquad V_{maxGPL} = 169.1 \cdot kip$

$A_{bGPL} := \frac{\pi \cdot d_{bGPL}^2}{4}$ $\qquad A_{bGPL} = 0.442 \cdot in^2$

$f_{vbGPL} := \frac{V_{maxGPL}}{n_{bGPL} \cdot A_{bGPL}}$ $\qquad f_{vbGPL} = 27.3 \cdot ksi$

$r_{vbGPL} := \frac{f_{vbGPL}}{F_{vbGPL}}$ $\qquad r_{vbGPL} = 130 \cdot \%$

Output - Bearing Strength: Gusset Plate

$F_{pGPL} := 1.2 \cdot F_{uGPL}$ $\qquad F_{pGPL} = 78.0 \cdot ksi$

$f_{pGPL} := \frac{P_{maxGPL}}{n_{bGPL} \cdot t_{GPL} \cdot d_{bGPL}}$ $\qquad f_{pGPL} = 14.3 \cdot ksi$

$r_{bGPL} := \frac{f_{pGPL}}{F_{pGPL}}$ $\qquad r_{bGPL} = 18 \cdot \%$

Output - Tension Strength of Gusset Plate

$T_{maxGPL} := P_{maxGPL}$ $\qquad T_{maxGPL} = 169.1 \cdot kip$

- Gross Area:

$F_{tGrossGPL} := 0.6 \cdot F_{yGPL}$ $\qquad F_{tGrossGPL} = 30.0 \cdot ksi$

$f_{tGrossGPL} := \frac{T_{maxGPL}}{A_{gGPL}}$ $\qquad f_{tGrossGPL} = 32.5 \cdot ksi$

$r_{tGrossGPL} := \frac{f_{tGrossGPL}}{F_{tGrossGPL}}$ $\qquad r_{tGrossGPL} = 108 \cdot \%$

- Net Area

$A_{enGPL} := \left[b_{GPL} - \left(d_{bGPL} + \frac{1}{8} \cdot in + \frac{1}{16} \cdot in \right) \right] \cdot t_{GPL}$ $\qquad A_{enGPL} = 4.15 \cdot in^2$

$f_{tNetGPL} := f_{tGrossGPL} \cdot \frac{A_{gGPL}}{A_{enGPL}}$ $\qquad f_{tNetGPL} = 40.8 \cdot ksi$

$F_{tNetGPL} := 0.5 \cdot F_{uGPL}$ $\qquad F_{tNetGPL} = 32.5 \cdot ksi$

$r_{tNetGPL} := \frac{f_{tNetGPL}}{F_{tNetGPL}}$ $\qquad r_{tNetGPL} = 125 \cdot \%$

Output - Combined Fexure & Tension Strength of Gusset Plate

$Eq_{H21GPLgross} := \frac{f_{tGrossGPL}}{F_{tGrossGPL}} + \frac{f_{bGPL}}{F_{bGPL}}$ $\qquad Eq_{H21GPLgross} = 1.135$

$Eq_{H21GPLnet} := \frac{f_{tNetGPL}}{F_{tNetGPL}} + \frac{f_{bGPL}}{F_{bGPL}}$ $\qquad Eq_{H21GPLnet} = 1.306$

$r_{TcombGPL} := \max(Eq_{H21GPLgross}, Eq_{H21GPLnet})$ $\qquad r_{TcombGPL} = 131 \cdot \%$

Output - Shear Strength Gusset Plate

- Gross Area:

$F_{vGrossGPL} := 0.4 \cdot F_{yGPL}$ $\qquad F_{vGrossGPL} = 20.0 \cdot ksi$

$A_{vGPL} := H_{GPL} \cdot t_{GPL}$ $\qquad A_{vGPL} = 47.25 \cdot in^2$

$f_{vGrossGPL} := \frac{V_{maxGPL}}{A_{vGPL}}$ $\qquad f_{vGrossGPL} = 3.6 \cdot ksi$

$r_{vGrossGPL} := \frac{f_{vGrossGPL}}{F_{vGrossGPL}}$ $\qquad r_{vGrossGPL} = 18 \cdot \%$

- Net Area

$A_{nvGPL} := \left[H_{GPL} - \left(d_{bGPL} + \frac{1}{8} \cdot in + \frac{1}{16} \cdot in\right) \cdot n_{bGPL}\right] \cdot t_{GPL}$ $\qquad A_{nvGPL} = 32.48 \cdot in^2$

$f_{vNetGPL} := f_{vGrossGPL} \cdot \frac{A_{vGPL}}{A_{nvGPL}}$ $\qquad f_{vNetGPL} = 5.2 \cdot ksi$

$F_{vNetGPL} := 0.3 \cdot F_{uGPL}$ $\qquad F_{vNetGPL} = 19.5 \cdot ksi$

$r_{vNetGPL} := \frac{f_{vNetGPL}}{F_{vNetGPL}}$ $\qquad r_{vNetGPL} = 27 \cdot \%$

Output - Block Shear Strength of Gusset Plate

$A_{gv} := \left[\left(n_{bGPL} - 1\right) \cdot s_{bGPL} + edge_{bGPL}\right] \cdot t_{GPL}$ $\qquad A_{gv} = 46.48 \cdot in^2$

$A_{nv} := A_{gv} - \left[\left[d_{bGPL} + \left(\frac{1}{8} \cdot in\right) + \left(\frac{1}{16} \cdot in\right)\right] \cdot \left(n_{bGPL} - 0.5\right) \cdot \left(t_{GPL}\right)\right]$ $\qquad A_{nv} = 32.24 \cdot in^2$

$A_{nt} := \left[edge_{bGPL} - \frac{\left[d_{bGPL} + \left(\frac{1}{8} \cdot in\right)\right]}{2}\right] \cdot \left(t_{GPL}\right)$ $\qquad A_{nt} = 2.11 \cdot in^2$

$F_{vbsGPL} := 0.30 \cdot F_{uGPL}$ $\qquad F_{vbsGPL} = 19.5 \cdot ksi$

$F_{tbsGPL} := 0.50 \cdot F_{uGPL}$ $\qquad F_{tbsGPL} = 32.5 \cdot ksi$

$T_{bsGPLall} := A_{nv} \cdot F_{vbsGPL} + A_{nt} \cdot F_{tbsGPL}$ $\qquad T_{bsGPLall} = 697.2 \cdot kip$

$r_{bsGPL} := \dfrac{T_{maxGPL}}{T_{bsGPLall}}$ $\qquad r_{bsGPL} = 24 \cdot \%$

Output - Strength of Gusset Plate Welds

$V_{maxW} := \dfrac{P_{max}}{2}$ $\qquad V_{maxW} = 169 \cdot kip$

- Shear:

$$t_{VW} := \begin{cases} \left[t_{GPL} - \left(\frac{3}{16} + \frac{1}{4}\right) \cdot in\right] & \text{if } t_{GPL} > 1.0 \cdot in \\ \left[t_{GPL} - \left(\frac{1}{8} + \frac{1}{8}\right) \cdot in\right] & \text{if } t_{GPL} \le 1.0 \cdot in \end{cases}$$

$t_{VW} = 0.688 \cdot in$

$V_{allW} := (0.30 \cdot F_{EXX}) \cdot t_{VW} \cdot H_{GPL}$ $\qquad V_{allW} = 606.4 \cdot kip$

$r_{vW} := \dfrac{V_{maxW}}{V_{allW}}$ $\qquad r_{vW} = 28 \cdot \%$

- Tension/Flexure:

$S_w := \dfrac{t_{VW} \cdot H_{GPL}^2}{6}$ $\qquad S_w = 202.1 \cdot in^3$

$M_{allW} := (0.30 \cdot F_{EXX}) \cdot S_w$ $\qquad M_{allW} = 353.7 \cdot kip \cdot ft$

$r_{fW} := \dfrac{V_{maxW} \cdot e}{M_{allW}}$ $\qquad r_{fW} = 15 \cdot \%$

- Combined

$r_{vfW} := \sqrt{r_{vW}^2 + r_{fW}^2}$ $\qquad r_{vfW} = 32 \cdot \%$

Output - Compression Strength of Splice Plate

$P_{maxSPL} := \dfrac{P_{max}}{2}$ $\qquad P_{maxSPL} = 169.1 \cdot kip$

$r_{SPL} := \dfrac{t_{SPL}}{\sqrt{12}}$ $\qquad r_{SPL} = 0.325 \cdot in$

$A_{gSPL} := b_{SPL} \cdot t_{SPL}$ $\qquad A_{gSPL} = 5.20 \cdot in^2$

$KLr := K_{SPL} \cdot \dfrac{L_{SPL}}{r_{SPL}}$ $\qquad KLr = 10.0$

$C_{cSPL} := \sqrt{\dfrac{2 \cdot \pi^2 \cdot E}{F_{ySPL}}}$ $\qquad C_{cSPL} = 107.0$

$$F_{aSPL} := \begin{cases} \dfrac{\left(1 - \dfrac{KLr^2}{2 \cdot C_{cSPL}^2}\right) \cdot F_{ySPL}}{\dfrac{5}{3} + \dfrac{3}{8} \cdot \left(\dfrac{KLr}{C_{cSPL}}\right) - \dfrac{KLr^3}{8 \cdot C_{cSPL}^3}} & \text{if } KLr \le C_{cSPL} \\ \dfrac{12 \cdot \pi^2 \cdot E}{23 \cdot KLr^2} & \text{otherwise} \end{cases}$$

$F_{aSPL} = 29.3 \cdot ksi$

$$f_{aSPL} := \frac{P_{maxSPL}}{A_{gSPL}}$$

$f_{aSPL} = 32.5 \cdot ksi$

$$r_{cSPL} := \frac{f_{aSPL}}{F_{aSPL}}$$

$r_{cSPL} = 111 \cdot \%$

Output - Tension Strength of Splice Plate

$T_{maxSPL} := P_{maxGPL}$

$T_{maxSPL} = 169.1 \cdot kip$

- Gross Area:

$F_{tGrossSPL} := 0.6 \cdot F_{ySPL}$

$F_{tGrossSPL} = 30.0 \cdot ksi$

$$f_{tGrossSPL} := \frac{T_{maxSPL}}{A_{gSPL}}$$

$f_{tGrossSPL} = 32.5 \cdot ksi$

$$r_{tGrossSPL} := \frac{f_{tGrossSPL}}{F_{tGrossSPL}}$$

$r_{tGrossSPL} = 108 \cdot \%$

- Net Area

$$A_{enSPL} := \left[b_{SPL} - \left(d_{bGPL} + \frac{1}{8} \cdot in + \frac{1}{16} \cdot in\right)\right] \cdot t_{SPL}$$

$A_{enSPL} = 4.15 \cdot in^2$

$$f_{tNetSPL} := f_{tGrossSPL} \cdot \frac{A_{gSPL}}{A_{enSPL}}$$

$f_{tNetSPL} = 40.8 \cdot ksi$

$F_{tNetSPL} := 0.5 \cdot F_{uSPL}$

$F_{tNetSPL} = 32.5 \cdot ksi$

$$r_{tNetSPL} := \frac{f_{tNetSPL}}{F_{tNetSPL}}$$

$r_{tNetSPL} = 125 \cdot \%$

Output - Block Shear Strength of Splice Plate

$$A_{gv} := \left[\left(n_{bGPL} - 1\right) \cdot s_{bGPL} + edge_{bGPL}\right] \cdot t_{SPL}$$

$A_{gv} = 46.48 \cdot in^2$

$$A_{nv} := A_{gv} - \left[\left[d_{bGPL} + \left(\frac{1}{8} \cdot in\right) + \left(\frac{1}{16} \cdot in\right)\right] \cdot \left(n_{bGPL} - 0.5\right) \cdot \left(t_{SPL}\right)\right]$$

$A_{nv} = 32.24 \cdot in^2$

$$A_{nt} := \left[edge_{bGPL} - \frac{\left[d_{bGPL} + \left(\frac{1}{8} \cdot in\right)\right]}{2}\right] \cdot \left(t_{SPL}\right)$$

$A_{nt} = 2.11 \cdot in^2$

$F_{vbsSPL} := 0.30 \cdot F_{uSPL}$ $\qquad F_{vbsSPL} = 19.5 \cdot ksi$

$F_{tbsSPL} := 0.50 \cdot F_{uSPL}$ $\qquad F_{tbsSPL} = 32.5 \cdot ksi$

$T_{bsSPLall} := A_{nv} \cdot F_{vbsSPL} + A_{nt} \cdot F_{tbsSPL}$ $\qquad T_{bsSPLall} = 697.2 \cdot kip$

$r_{bsSPL} := \dfrac{T_{maxSPL}}{T_{bsSPLall}}$ $\qquad r_{bsGPL} = 24 \cdot \%$

Output - Bearing Strength: Splice Plate

$F_{pSPL} := 1.2 \cdot F_{uSPL}$ $\qquad F_{pGPL} = 78.0 \cdot ksi$

$f_{pSPL} := \dfrac{P_{maxSPL}}{n_{bGPL} \cdot t_{SPL} \cdot d_{bGPL}}$ $\qquad f_{pSPL} = 14.3 \cdot ksi$

$r_{bSPL} := \dfrac{f_{pSPL}}{F_{pSPL}}$ $\qquad r_{bSPL} = 18 \cdot \%$

Output - Design Summary:

$results_{TB} := \begin{pmatrix} \dfrac{r_v}{ASI} \\ r_{combVT} \end{pmatrix}$ $\qquad results_{TB} = \begin{pmatrix} 94 \\ 65 \end{pmatrix} \cdot \%$ $\qquad results_{Bar} := \dfrac{r_{pBar}}{ASI}$ $\qquad results_{Bar} = 15 \cdot \%$

$results_{GPL} := \begin{pmatrix} r_{mGPL} \\ r_{cGPL} \\ r_{CcombGPL} \\ r_{vbGPL} \\ r_{bsGPL} \\ r_{tGrossGPL} \\ r_{tNetGPL} \\ r_{TcombGPL} \\ r_{vGrossGPL} \\ r_{vNetGPL} \\ r_{bGPL} \\ r_{vW} \\ r_{fW} \\ r_{vfW} \end{pmatrix} \cdot \left(\dfrac{1}{ASI}\right)$ $\qquad results_{GPL} = \begin{pmatrix} 4 \\ 83 \\ 87 \\ 98 \\ 18 \\ 81 \\ 94 \\ 98 \\ 13 \\ 20 \\ 14 \\ 21 \\ 11 \\ 24 \end{pmatrix} \cdot \%$

$results_{SPL} := \begin{pmatrix} r_{cSPL} \\ r_{tGrossSPL} \\ r_{tNetSPL} \\ r_{bsSPL} \\ r_{bSPL} \end{pmatrix} \cdot \left(\dfrac{1}{ASI}\right)$ $\qquad results_{SPL} = \begin{pmatrix} 84 \\ 81 \\ 94 \\ 18 \\ 14 \end{pmatrix} \cdot \%$

$Max_{Utilization} := \max(results_{Bar}, results_{TB}, results_{GPL}, results_{SPL})$

$Max_{Utilization} = 98 \cdot \%$

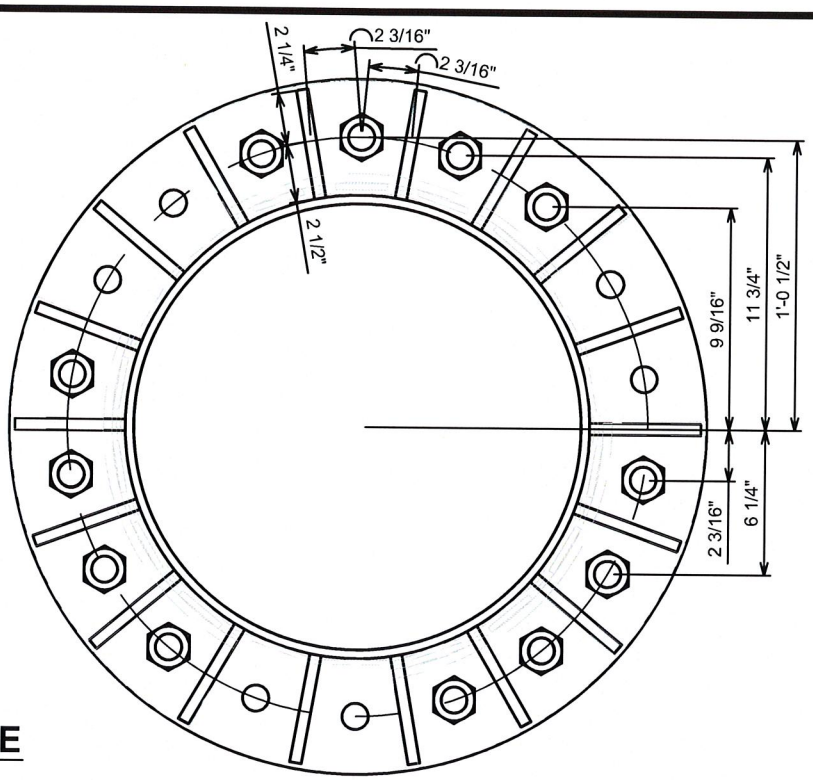

148.5-ft - FPL: ABOVE

SCALE: 1–1/2" = 1'

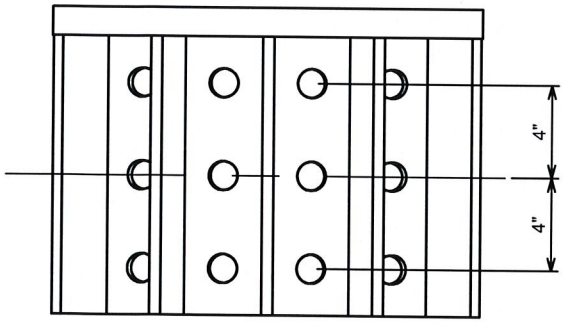

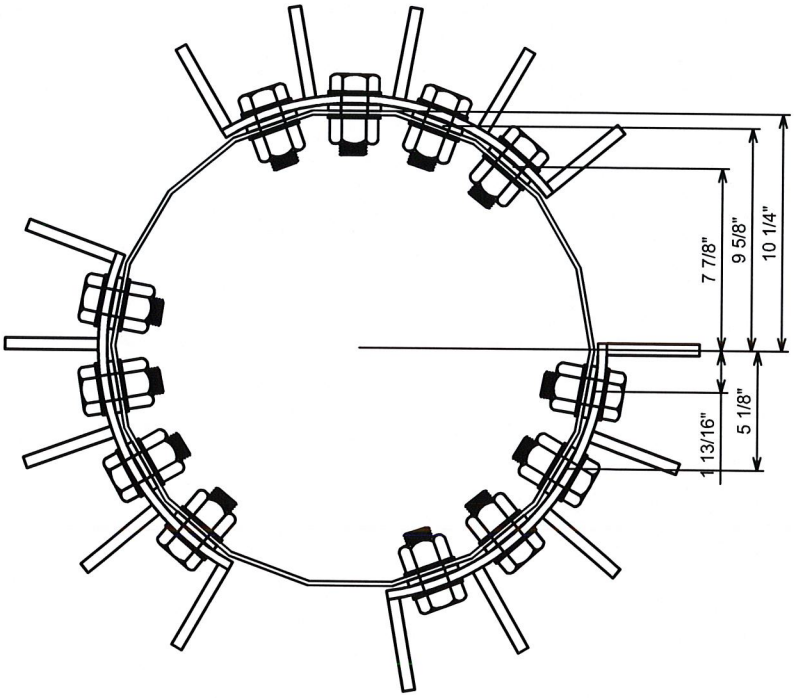

148.5-ft - FPL: BELOW

SCALE: 1–1/2" = 1'

PROJECT INFORMATION:

WEST HAVEN-RT15 / WOODBRIDGE
CT46139-A

370 ROCKLAND ROAD
GUILFORD, CT 06437
(NEW HAVEN)

REV	DATE:	Issued For:
0	1-28-13	PSAR

DRAWN BY: MER | CHECKED BY: AVF

SHEET NUMBER: **FPL**

REVISION: 0

VSI #: 122449

PLANS PREPARED FOR:

SBA

5900 Broken Sound Parkway NW
Boca Raton, FL 33487-2797
Office (800) 487-7483

PLANS PREPARED BY:

vertical solutions

2002 Production Drive
Apex, NC 27539
Office: (888) 321-6167
Fax: (919) 321-1768

Input

CONSTANTS:

$E \equiv 29000 \cdot ksi$

$K \equiv 0.8$

$ASI \equiv \frac{4}{3}$

- Reactions & Forces:

$M := 52.8 \cdot kip \cdot ft$ = max moment reaction at top of base plate

$P := 1.7 \cdot kip$ = max axial reaction at top of base plate

$P_{ADD1} := 3.8 \cdot kip$ = additional axial force to SP on opposite side of SP (left side)

$P_{ADD2} := 3.8 \cdot kip$ = additional axial force to SP on opposite side of SP (right side)

- Shaft:

$t_{shaft} := 0.375 \cdot in$ = thickness of shaft

$F_{yShaft} := 35 \cdot ksi$ = specified minimum yield stress of shaft

- Flange Plate:

$t_{fpl} := 1.25 \cdot in$ = thickness of base plate

$F_y := 50 \cdot ksi$ = specified minimum yield stress of shaft

$a := 2.1875 \cdot in$ = distance from centerline of stiffener plate on left side to center of anchor rod

$b := 2.1875 \cdot in$ = distance from centerline of stiffener plate on right side to center of anchor rod

$y := 2.5 \cdot in$ = distance from shaft wall to center of anchor rod

- Stiffener Plates:

  - SP on Left Side of AR:

$b_{SP1} := 4.75 \cdot in$ = width of stiffener plate

$t_{SP1} := 0.5 \cdot in$ = thickness of stiffener plate

$L_{SP1} := 12.0 \cdot in$ = length of stiffener plate

$clip_1 := 0.75 \cdot in$ = length of clip

$t_{VW1} := 0.25 \cdot in$ = thickness of vertical weld

$F_{ySP1} := 50 \cdot ksi$ = specified minimum yield stress of SP material

$F_{EXX1} := 70 \cdot ksi$ = specified minimum ultimate stress of weld electrode

$k_1 := b_{SP1} - y$ = distance from center of anchor rod to edge of base plate / edge of stiffener plate

$k_1 = 2.250 \cdot in$

- SP on Right Side of AR:

$b_{SP2} := 4.75 \cdot in$ = width of stiffener plate

$t_{SP2} := 0.5 \cdot in$ = thickness of stiffener plate

$L_{SP2} := 12.0 \cdot in$ = length of stiffener plate

$clip_2 := 0.75 \cdot in$ = length of clip

$t_{VW2} := 0.25 \cdot in$ = thickness of vertical weld

$F_{ySP2} := 50 \cdot ksi$ = specified minimum yield stress of SP material

$F_{EXX2} := 70 \cdot ksi$ = specified minimum ultimate stress of weld electrode

$k_2 := b_{SP2} - y$ = distance from center of anchor rod to edge of base plate / edge of stiffener plate

$k_2 = 2.250 \cdot in$

- Flange Bolts:

$$Q := \begin{pmatrix} 1 \\ 3 \\ 3 \\ 3 \\ 2 \\ 0 \\ 0 \end{pmatrix} \qquad d := \begin{pmatrix} 1 \cdot 12 + \frac{1}{2} \\ 11 + \frac{3}{4} \\ 9 + \frac{9}{6} \\ 2 + \frac{3}{16} \\ 6 + \frac{1}{4} \\ 0 \\ 0 \end{pmatrix} \cdot in \qquad A_b := \begin{pmatrix} 0.785 \\ 0.785 \\ 0.785 \\ 0.785 \\ 0.785 \\ 0 \\ 0 \end{pmatrix} in^2 \qquad F_t := \begin{pmatrix} 54.0 \\ 54.0 \\ 54.0 \\ 54.0 \\ 54.0 \\ 0 \\ 0 \end{pmatrix} \cdot ksi$$

Output - Anchor Rod, Deformation Method:

$\sum \overrightarrow{(Q)} = 12$

ϕRnt = nominal tension strength
d = distance from center
A = area of fastener
Q = quantity of fasteners

$sumQAd := \sum \overrightarrow{\left(Q \cdot d^2 \cdot A_b\right)}$ $\qquad sumQAd = 780 \cdot in^4$

$$R := \frac{M \cdot \overrightarrow{\left(d \cdot A_b\right)}}{sumQAd} + \frac{P \cdot A_b}{\sum \overrightarrow{\left(A_b \cdot Q\right)}}$$

$$f_t := \overrightarrow{\left(\frac{R}{A_b}\right)} \qquad r_{FB} := \overrightarrow{\left(\frac{f_t}{ASI \cdot F_t}\right)} \qquad R = \begin{pmatrix} 8.1 \\ 7.6 \\ 6.8 \\ 1.5 \\ 4.1 \\ 0.0 \\ 0.0 \end{pmatrix} \cdot kip \qquad f_t = \begin{pmatrix} 10.3 \\ 9.7 \\ 8.7 \\ 2.0 \\ 5.3 \\ 0.0 \\ 0.0 \end{pmatrix} \cdot ksi \qquad r_{FB} = \begin{pmatrix} 14 \\ 14 \\ 12 \\ 3 \\ 7 \\ 0 \\ 0 \end{pmatrix} \cdot \%$$

$P_{maxFP} := R_0 + 2 \cdot R_1 + R_2$

$P_{maxFP} = 30.2 \cdot kip$

Output - Check Base Plate Flexure:

$P_{maxFB} := \max(R)$ $\qquad P_{maxFB} = 8.1 \cdot kip$

$t := t_{fpl}$ $\qquad t = 1.25 \cdot in$

$k := \min(k_1, k_2)$ $\qquad k = 2.25 \cdot in$

$I_x := \frac{(a + b) \cdot t^3}{12}$ $\qquad I_x = 0.71 \cdot in^4$

$k_x := \frac{3 \cdot I_x}{y^3}$ $\qquad k_x = 0.14 \cdot in$

$S_x := \frac{I_x}{\left(\frac{t}{2}\right)}$ $\qquad S_x = 1.14 \cdot in^3$

$I_y := \frac{(y + k) \cdot t^3}{12}$ $\qquad I_y = 0.77 \cdot in^4$

$$k_y := \begin{cases} \frac{3 \cdot I_y \cdot (3 \cdot a + b)^2}{2 \cdot a^3 \cdot b^2} & \text{if } a \geq b \\ \frac{3 \cdot I_y \cdot (3 \cdot b + a)^2}{2 \cdot b^3 \cdot a^2} & \text{if } a < b \end{cases}$$ $\qquad k_y = 1.77 \cdot in$

$S_y := \frac{I_y}{\left(\frac{t}{2}\right)}$ $\qquad S_y = 1.24 \cdot in^3$

$M_{xMax} := \left(\frac{k_x}{k_x + k_y}\right) \cdot (P_{maxFB} \cdot y)$ $\qquad M_{xMax} = 0.1 \cdot kip \cdot ft$

$M'_{xAll} := ASI \cdot \left[(0.75 \cdot F_y) \cdot S_x\right]$ $\qquad M'_{xAll} = 4.7 \cdot kip \cdot ft$

$r_x := \frac{M_{xMax}}{M'_{xAll}}$ $\qquad r_x = 3 \cdot \%$

$$M_{yMax} := \begin{cases} \frac{k_y}{k_x + k_y} \cdot \left[\frac{P_{maxFB} \cdot a \cdot b^2}{(a + b)^2}\right] & \text{if } a \leq b \\ \frac{k_y}{k_x + k_y} \cdot \left[\frac{P_{maxFB} \cdot a^2 \cdot b}{(a + b)^2}\right] & \text{if } a > b \end{cases}$$ $\qquad M_{yMax} = 0.3 \cdot kip \cdot ft$

$M'_{yAll} := ASI \cdot \left[(0.75 \cdot F_y) \cdot S_y\right]$ $\qquad M'_{yAll} = 5.2 \cdot kip \cdot ft$

$r_y := \frac{M_{yMax}}{M'_{yAll}}$ $\qquad r_y = 7 \cdot \%$

$r_{FPL} := \sqrt{r_x^2 + r_y^2}$ $\qquad r_{FPL} = 7 \cdot \%$

$P_{maxShaft} := \left(\frac{k_x}{k_x + k_y}\right) \cdot P_{maxFB}$ $\qquad P_{maxShaft} = 0.6 \cdot kip$

$P_{tMaxSP} := \left(\frac{k_y}{k_x + k_y}\right) \cdot P_{maxFB}$ $\qquad P_{tMaxSP} = 7.5 \cdot kip$

Output - Calculate Forces in TSP / SP's:

$l := a + b$ $\qquad l = 4.4 \cdot in$

$P_{maxSP1} := \frac{P_{tMaxSP} \cdot b^2}{l^3} \cdot (b + 3 \cdot a)$ $\qquad P_{maxSP1} = 3.8 \cdot kip$

$P_{maxSP2} := \frac{P_{tMaxSP} \cdot a^2}{l^3} \cdot (a + 3 \cdot b)$ $\qquad P_{maxSP2} = 3.8 \cdot kip$

$P_{tMaxSP1} := P_{maxSP1} + P_{ADD1}$ $\qquad P_{tMaxSP1} = 7.6 \cdot kip$

$P_{tMaxSP2} := P_{maxSP2} + P_{ADD2}$ $\qquad P_{tMaxSP2} = 7.6 \cdot kip$

Output - Calculate SP Section Properties *(LEFT Side)*:

$L_{VW1} := L_{SP1} - clip_1$ $\qquad L_{VW1} = 11.25 \cdot in$

$L_{HW1} := b_{SP1} - clip_1$ $\qquad L_{HW1} = 4.00 \cdot in$

$\theta_1 := atan\left(\frac{b_{SP1}}{L_{SP1}}\right)$ $\qquad \theta_1 = 21.60 \cdot deg$

$B_1 := L_{SP1} \cdot \sin(\theta_1)$ $\qquad B_1 = 4.42 \cdot in$

$N_{B1} := \frac{clip_1}{(\sin(\theta_1) + \cos(\theta_1))}$ $\qquad N_{B1} = 0.578 \cdot in$

$N_1 := \frac{N_{B1}}{B_1}$ $\qquad N_1 = 0.131$

$L_1 := \sqrt{L_{SP1}^2 + b_{SP1}^2}$ $\qquad L_1 = 12.91 \cdot in$

$r_1 := \frac{t_{SP1}}{\sqrt{12}}$ $\qquad r_1 = 0.144 \cdot in$

$x_1 := \frac{b_{SP1}}{2}$ $\qquad x_1 = 2.38 \cdot in$

Output - Calculate Compressive Strength of SP:

$$C_{c1} := \sqrt{\frac{2 \cdot \pi^2 \cdot E}{F_{ySP1}}}$$ $C_{c1} = 107.0$

$$KLr_1 := \frac{K \cdot L_1}{r_1}$$ $KLr_1 = 71.5$

$$F_{crB1} := \begin{cases} \left[\dfrac{\left[1 - \dfrac{(KLr_1)^2}{2 \cdot C_{c1}^2}\right] \cdot F_{ySP1}}{\dfrac{5}{3} + \dfrac{3}{8} \cdot \left(\dfrac{KLr_1}{C_{c1}}\right) - \dfrac{(KLr_1)^3}{8 \cdot C_{c1}^3}}\right] & \text{if } KLr_1 < C_{c1} \\ \left[\dfrac{12 \cdot \pi^2 \cdot E}{23 \cdot (KLr_1)^2}\right] & \text{if } KLr_1 \geq C_{c1} \end{cases}$$ $F_{crB1} = 20.7 \cdot ksi$

$$\Delta F_{cr1} := F_{ySP1} - F_{crB1}$$ $\Delta F_{cr1} = 29.3 \cdot ksi$

$$P'_{allSP1} := \left[\frac{t_{SP1} \cdot B_1^2}{6 \cdot x_1} \cdot \left[3 \cdot F_{ySP1} \cdot \left(1 - N_1^2\right) - 2 \cdot (\Delta F_{cr1}) \cdot \left(1 - N_1^3\right)\right]\right] \cdot ASI$$ $P'_{allSP1} = 81.1 \cdot kip$

$$r_{cSP1} := \frac{P_{tMaxSP1}}{P'_{allSP1}}$$ $r_{cSP1} = 9 \cdot \%$

Output - Calculate Shear and Tensile Strength of CAN-SP:

- Calculate Forces in SP:

$$h_{V1} := clip_1 + \frac{L_{VW1}}{2}$$ $h_{V1} = 6.38 \cdot in$

$V_{maxV1} := P_{tMaxSP1}$ = shear on Vertical leg $V_{maxV1} = 7.6 \cdot kip$

$T_{maxV1} := \dfrac{P_{tMaxSP1} \cdot x_1}{h_{V1}}$ = max tension on Vertical leg $T_{maxV1} = 2.8 \cdot kip$

$V_{maxH1} := \dfrac{P_{tMaxSP1} \cdot x_1}{h_{V1}}$ = shear on Horizontal leg $V_{maxH1} = 2.8 \cdot kip$

$T_{maxH1} := P_{tMaxSP1}$ = tension on Horizontal leg $T_{maxH1} = 7.6 \cdot kip$

- Shear Strength of *Vertical* Leg of SP:

$$V'_{allV1} := \left[(0.4 \cdot F_{ySP1}) \cdot (L_{VW1} \cdot t_{SP1})\right] \cdot ASI$$ $V'_{allV1} = 150.0 \cdot kip$

$$r_{vV1} := \frac{V_{maxV1}}{V'_{allV1}}$$ $r_{vV1} = 5 \cdot \%$

- Tensile Strength of *Vertical* Leg of SP:

$T_{allV1} := \left[\left(0.6 \cdot F_{ySP1}\right) \cdot \left(L_{VW1} \cdot t_{SP1}\right)\right] \cdot ASI$ $\qquad T_{allV1} = 225.0 \cdot kip$

$r_{tV1} := \dfrac{T_{maxV1}}{T_{allV1}}$ $\qquad r_{tV1} = 1 \cdot \%$

- Combined Tension & Shear Strength of *Vertical* Leg of SP:

$r_{V1} := \left(\dfrac{T_{maxV1}}{T_{allV1}}\right) + \left(\dfrac{V_{maxV1}}{V'_{allV1}}\right)^2$ $\qquad r_{V1} = 2 \cdot \%$

- Shear Strength of *Horizontal* Leg of SP:

$V'_{allH1} := \left[\left(0.4 \cdot F_{ySP1}\right) \cdot \left(L_{HW1} \cdot t_{SP1}\right)\right] \cdot ASI$ $\qquad V'_{allH1} = 53.3 \cdot kip$

$r_{vH1} := \dfrac{V_{maxH1}}{V'_{allH1}}$ $\qquad r_{vH1} = 5 \cdot \%$

- Tensile Strength of *Horizontal* Leg of SP:

$T'_{allH1} := \left[\left(0.6 \cdot F_{ySP1}\right) \cdot \left(L_{HW1} \cdot t_{SP1}\right)\right] \cdot ASI$ $\qquad T'_{allH1}$

$r_{tH1} := \dfrac{T_{maxH1}}{T'_{allH1}}$ $\qquad r_{tH1} = 9 \cdot \%$

- Combined Tension & Shear Strength of *Horizontal* Leg of SP:

$r_{H1} := \left(\dfrac{T_{maxH1}}{T'_{allH1}}\right) + \left(\dfrac{V_{maxH1}}{V'_{allH1}}\right)^2$ $\qquad r_{H1} = 10 \cdot \%$

Output - Check Shear and Tensile Strength of Vertical SP Weld:

$\theta_v \equiv 0 \cdot deg$

$F_{w\_v1} := 0.30 \cdot F_{EXX1} \cdot \left(1.0 + 0.50 \cdot \sin\left(\theta_v\right)^{1.5}\right)$ $\qquad F_{w\_v1} = 21.0 \cdot ksi$

$\theta_t \equiv 90 \cdot deg$

$F_{w\_t1} := 0.30 \cdot F_{EXX1} \cdot \left(1.0 + 0.50 \cdot \sin\left(\theta_t\right)^{1.5}\right)$ $\qquad F_{w\_t1} = 31.5 \cdot ksi$

- Shear Strength of Vertical Weld:

$A_{wV1} := \left(0.707 \cdot t_{VW1}\right) \cdot L_{VW1}$ $\qquad A_{wV1} = 1.99 \cdot in^2$

$V'_{allVw1} := \left[2 \cdot \left(F_{w\_v1} \cdot A_{wV1}\right)\right] \cdot ASI$ $\qquad V'_{allVw1} = 111 \cdot kip$

$r_{vVw1} := \dfrac{V_{maxV1}}{V'_{allVw1}}$ $\qquad r_{vVw1} = 7 \cdot \%$

- Tensile Strength of Vertical Weld:

$T'_{allVw1} := \left[2\cdot\left(F_{w\_t1}\cdot A_{wV1}\right)\right]\cdot ASI$ $\qquad T'_{allVw1} = 167\cdot kip$

$r_{tVw1} := \dfrac{T_{maxV1}}{T'_{allVw1}}$ $\qquad r_{tVw1} = 2\cdot\%$

- Combined Tension & Shear Strength of Vertical Weld:

$r_{Vw1} := \left(\dfrac{T_{maxV1}}{T'_{allVw1}}\right) + \left(\dfrac{V_{maxV1}}{V'_{allVw1}}\right)^2$ $\qquad r_{Vw1} = 2\cdot\%$

Output - Check Design Shaft Punching Shear:

$V_{maxPS1} := T_{maxV1}$ $\qquad V_{maxPS1} = 2.8\cdot kip$

$V'_{all1} := 2\cdot\left[\left(0.4\cdot F_{yShaft}\right)\cdot\left(t_{shaft}\cdot L_{VW1}\right)\right]\cdot ASI$ $\qquad V'_{all1} = 157.5\cdot kip$

$r_{vPS1} := \dfrac{V_{maxPS1}}{V'_{all1}}$ $\qquad r_{vPS1} = 2\cdot\%$

Output - Calculate SP Section Properties *(RIGHT Side)*:

$L_{VW2} := L_{SP2} - clip_2$ $\qquad L_{VW2} = 11.25\cdot in$

$L_{HW2} := b_{SP2} - clip_2$ $\qquad L_{HW2} = 4.00\cdot in$

$\theta_2 := atan\left(\dfrac{b_{SP2}}{L_{SP2}}\right)$ $\qquad \theta_2 = 21.60\cdot deg$

$B_2 := L_{SP2}\cdot sin\left(\theta_2\right)$ $\qquad B_2 = 4.42\cdot in$

$N_{B2} := \dfrac{clip_2}{\left(sin\left(\theta_2\right) + cos\left(\theta_2\right)\right)}$ $\qquad N_{B2} = 0.578\cdot in$

$N_2 := \dfrac{N_{B2}}{B_2}$ $\qquad N_2 = 0.131$

$L_2 := \sqrt{L_{SP2}^2 + b_{SP2}^2}$ $\qquad L_2 = 12.91\cdot in$

$r_2 := \dfrac{t_{SP2}}{\sqrt{12}}$ $\qquad r_2 = 0.144\cdot in$

$x_2 := \dfrac{b_{SP2}}{2}$ $\qquad x_2 = 2.38\cdot in$

Output - Calculate Compressive Strength of SP:

$C_{c2} := \sqrt{\dfrac{2\cdot\pi^2\cdot E}{F_{ySP2}}}$ $\qquad C_{c2} = 107.0$

$KLr_2 := \dfrac{K\cdot L_2}{r_2}$ $\qquad KLr_2 = 71.5$

$$F_{crB2} := \begin{cases} \left[\dfrac{\left[1 - \dfrac{(KLr_2)^2}{2 \cdot C_{c2}^2}\right] \cdot F_{ySP2}}{\dfrac{5}{3} + \dfrac{3}{8} \cdot \left(\dfrac{KLr_2}{C_{c2}}\right) - \dfrac{(KLr_2)^3}{8 \cdot C_{c2}^3}}\right] & \text{if } KLr_2 < C_{c2} \\ \left[\dfrac{12 \cdot \pi^2 \cdot E}{23 \cdot (KLr_2)^2}\right] & \text{if } KLr_2 \geq C_{c2} \end{cases}$$

$F_{crB2} = 20.7 \cdot ksi$

$$\Delta F_{cr2} := F_{ySP2} - F_{crB2}$$

$\Delta F_{cr2} = 29.3 \cdot ksi$

$$P'_{allSP2} := \left[\frac{t_{SP2} \cdot B_2^2}{6 \cdot x_2} \cdot \left[3 \cdot F_{ySP2} \cdot \left(1 - N_2^2\right) - 2 \cdot (\Delta F_{cr2}) \cdot \left(1 - N_2^3\right)\right]\right] \cdot ASI$$

$P'_{allSP2} = 81.1 \cdot kip$

$$r_{cSP2} := \frac{P_{tMaxSP2}}{P'_{allSP2}}$$

$r_{cSP2} = 9 \cdot \%$

Output - Calculate Shear and Tensile Strength of CAN-SP:

- Calculate Forces in SP:

$$h_{V2} := clip_2 + \frac{L_{VW2}}{2}$$

$h_{V2} = 6.38 \cdot in$

$V_{maxV2} := P_{tMaxSP2}$ = shear on Vertical leg

$V_{maxV2} = 7.6 \cdot kip$

$T_{maxV2} := \dfrac{P_{tMaxSP2} \cdot x_2}{h_{V2}}$ = max tension on Vertical leg

$T_{maxV2} = 2.8 \cdot kip$

$V_{maxH2} := \dfrac{P_{tMaxSP2} \cdot x_2}{h_{V2}}$ = shear on Horizontal leg

$V_{maxH2} = 2.8 \cdot kip$

$T_{maxH2} := P_{tMaxSP2}$ = tension on Horizontal leg

$T_{maxH2} = 7.6 \cdot kip$

- Shear Strength of *Vertical* Leg of SP:

$$V'_{allV2} := \left[(0.4 \cdot F_{ySP2}) \cdot (L_{VW2} \cdot t_{SP2})\right] \cdot ASI$$

$V'_{allV2} = 150.0 \cdot kip$

$$r_{vV2} := \frac{V_{maxV2}}{V'_{allV2}}$$

$r_{vV2} = 5 \cdot \%$

- Tensile Strength of *Vertical* Leg of SP:

$$T_{allV2} := \left[(0.6 \cdot F_{ySP2}) \cdot (L_{VW2} \cdot t_{SP2})\right] \cdot ASI$$

$T_{allV2} = 225.0 \cdot kip$

$$r_{tV2} := \frac{T_{maxV2}}{T_{allV2}}$$

$r_{tV2} = 1 \cdot \%$

- Combined Tension & Shear Strength of *Vertical* Leg of SP:

$$r_{V2} := \left(\frac{T_{maxV2}}{T_{allV2}}\right) + \left(\frac{V_{maxV2}}{V'_{allV2}}\right)^2 \qquad r_{V2} = 2 \cdot \%$$

- Shear Strength of *Horizontal* Leg of SP:

$$V'_{allH2} := \left[\left(0.4 \cdot F_{ySP2}\right) \cdot \left(L_{HW2} \cdot t_{SP2}\right)\right] \cdot ASI \qquad V'_{allH2} = 53.3 \cdot kip$$

$$r_{vH2} := \frac{V_{maxH2}}{V'_{allH2}} \qquad r_{vH2} = 5 \cdot \%$$

- Tensile Strength of *Horizontal* Leg of SP:

$$T'_{allH2} := \left[\left(0.6 \cdot F_{ySP2}\right) \cdot \left(L_{HW2} \cdot t_{SP2}\right)\right] \cdot ASI \qquad T'_{allH2} = 80.0 \cdot kip$$

$$r_{tH2} := \frac{T_{maxH2}}{T'_{allH2}} \qquad r_{tH2} = 9 \cdot \%$$

- Combined Tension & Shear Strength of *Horizontal* Leg of SP:

$$r_{H2} := \left(\frac{T_{maxH2}}{T'_{allH2}}\right) + \left(\frac{V_{maxH2}}{V'_{allH2}}\right)^2 \qquad r_{H2} = 10 \cdot \%$$

Output - Check Shear and Tensile Strength of Vertical SP Weld:

$$\theta_v \equiv 0 \cdot deg$$

$$F_{w\_v2} := 0.30 \cdot F_{EXX2} \cdot \left(1.0 + 0.50 \cdot \sin\left(\theta_v\right)^{1.5}\right) \qquad F_{w\_v2} = 21.0 \cdot ksi$$

$$\theta_t \equiv 90 \cdot deg$$

$$F_{w\_t2} := 0.30 \cdot F_{EXX2} \cdot \left(1.0 + 0.50 \cdot \sin\left(\theta_t\right)^{1.5}\right) \qquad F_{w\_t2} = 31.5 \cdot ksi$$

- Shear Strength of Vertical Weld:

$$A_{wV2} := \left(0.707 \cdot t_{VW2}\right) \cdot L_{VW2} \qquad A_{wV2} = 1.99 \cdot in^2$$

$$V'_{allVw2} := \left[2 \cdot \left(F_{w\_v2} \cdot A_{wV2}\right)\right] \cdot ASI \qquad V'_{allVw2} = 111 \cdot kip$$

$$r_{vVw2} := \frac{V_{maxV2}}{V'_{allVw2}} \qquad r_{vVw2} = 7 \cdot \%$$

- Tensile Strength of Vertical Weld:

$$T'_{allVw2} := \left[2 \cdot \left(F_{w\_t2} \cdot A_{wV2}\right)\right] \cdot ASI \qquad T'_{allVw2} = 167 \cdot kip$$

$$r_{tVw2} := \frac{T_{maxV2}}{T'_{allVw2}} \qquad r_{tVw2} = 2 \cdot \%$$

- Combined Tension & Shear Strength of Vertical Weld:

$$r_{Vw2} := \left(\frac{T_{maxV2}}{T'_{allVw2}}\right) + \left(\frac{V_{maxV2}}{V'_{allVw2}}\right)^2 \qquad r_{Vw2} = 2 \cdot \%$$

Output - Check Design Shaft Punching Shear:

$V_{maxPS2} := T_{maxV2}$ $\qquad V_{maxPS2} = 2.8 \cdot kip$

$V'_{all2} := 2 \cdot \left[\left(0.4 \cdot F_{yShaft} \right) \cdot \left(t_{shaft} \cdot L_{VW2} \right) \right] \cdot ASI$ $\qquad V'_{all2} = 157.5 \cdot kip$

$r_{vPS2} := \dfrac{V_{maxPS2}}{V'_{all2}}$ $\qquad r_{vPS2} = 2 \cdot \%$

Output - Results Summary:

- Anchor Rods & Base Plate:

$result_{FB} := \max\left(r_{FB}\right)$ $\qquad result_{FB} = 14 \cdot \%$

$result_{FPL} := \begin{pmatrix} r_x \\ r_y \\ r_{FPL} \end{pmatrix}$ $\qquad result_{FPL} = \begin{pmatrix} 3 \\ 7 \\ 7 \end{pmatrix} \cdot \%$

$Max_{Utilization\_FB\_FPL} := \max\left(result_{FB}, result_{FPL}\right)$ $\qquad Max_{Utilization\_FB\_FPL} = 14 \cdot \%$

- SP on Left Side:

$result_{SP1} := \begin{pmatrix} r_{cSP1} \\ r_{vV1} \\ r_{tV1} \\ r_{V1} \\ r_{vH1} \\ r_{tH1} \\ r_{H1} \end{pmatrix}$ $\qquad result_{SP1} = \begin{pmatrix} 9 \\ 5 \\ 1 \\ 2 \\ 5 \\ 9 \\ 10 \end{pmatrix} \cdot \%$

$result_{SPweld1} := \begin{pmatrix} r_{vVw1} \\ r_{tVw1} \\ r_{Vw1} \end{pmatrix}$ $\qquad result_{SPweld1} = \begin{pmatrix} 7 \\ 2 \\ 2 \end{pmatrix} \cdot \%$

$result_{shaft1} := r_{vPS1}$ $\qquad result_{shaft1} = 2 \cdot \%$

$Max_{Utilization\_SP1} := \max\left(result_{SP1}, result_{SPweld1}, result_{shaft1}\right)$ $\qquad Max_{Utilization\_SP1} = 10 \cdot \%$

- SP on Right Side:

$$result_{SP2} := \begin{pmatrix} r_{cSP2} \\ r_{vV2} \\ r_{tV2} \\ r_{V2} \\ r_{vH2} \\ r_{tH2} \\ r_{H2} \end{pmatrix} \qquad result_{SP2} = \begin{pmatrix} 9 \\ 5 \\ 1 \\ 2 \\ 5 \\ 9 \\ 10 \end{pmatrix} \cdot \%$$

$$result_{SPweld2} := \begin{pmatrix} r_{vVw2} \\ r_{tVw2} \\ r_{Vw2} \end{pmatrix} \qquad result_{SPweld2} = \begin{pmatrix} 7 \\ 2 \\ 2 \end{pmatrix} \cdot \%$$

$$result_{shaft2} := r_{vPS2} \qquad result_{shaft2} = 2 \cdot \%$$

$$Max_{Utilization\_SP2} := \max(result_{SP2}, result_{SPweld2}, result_{shaft2}) \qquad Max_{Utilization\_SP2} = 10 \cdot \%$$

$$Max_{Utilization} := \max(Max_{Utilization\_FB\_FPL}, Max_{Utilization\_SP1}, Max_{Utilization\_SP2}) \qquad Max_{Utilization} = 14 \cdot \%$$

$t_{SP1} = 0.500 \cdot in$	$t_{SP2} = 0.500 \cdot in$
$b_{SP1} = 4.750 \cdot in$	$b_{SP2} = 4.750 \cdot in$
$L_{SP1} = 12.00 \cdot in$	$L_{SP2} = 12.00 \cdot in$

BOF-VP Bolts:

Input

CONSTANTS:

$ASI := \frac{4}{3}$

- Reactions:

$M := 52.8 \cdot kip \cdot ft$ = maximum moment on cross section

$V := 1.7 \cdot kip$ = maximum axial force on cross section

$P := 1.7 \cdot kip$ = maximum axial force on cross section

- Flange Plate / Bolt Properties:

$d_m := 2.5 \cdot in$ = distance from BOF-HP bolts to BOF-VP bolts

$P_{maxFP} := 30.2 \cdot kip$ = total tension in BOF-HP bolts

- BOF Bolts - Horizontal Layout:

FBgrade := "A325-N"

$$Q := \begin{pmatrix} 1 \\ 3 \\ 3 \\ 3 \\ 2 \\ 0 \\ 0 \end{pmatrix} \qquad d := \begin{pmatrix} 1 \cdot 12 + \frac{1}{2} \\ 11 + \frac{3}{4} \\ 9 + \frac{9}{6} \\ 2 + \frac{3}{16} \\ 6 + \frac{1}{4} \\ 0 \\ 0 \end{pmatrix} \cdot in \qquad A_b := \begin{pmatrix} 0.994 \\ 0.994 \\ 0.994 \\ 0.994 \\ 0.994 \\ 0 \\ 0 \end{pmatrix} \cdot in^2 \qquad F_v := \begin{pmatrix} 21.0 \\ 21.0 \\ 21.0 \\ 21.0 \\ 21.0 \\ 0 \\ 0 \end{pmatrix} \cdot ksi$$

- BOF Bolts - Vertical Layout:

$n_{row} := 3$ = number of rows of BOF-VP bolts

$$Q_1 := \begin{pmatrix} 2 \\ 1 \\ 0 \\ 0 \\ 0 \end{pmatrix} \qquad d_1 := \begin{pmatrix} 4 \\ 0 \\ 0 \\ 0 \\ 0 \end{pmatrix} \cdot in \qquad A_{b1} := \begin{pmatrix} 0.994 \\ 0.994 \\ 0 \\ 0 \\ 0 \end{pmatrix} \cdot in^2$$

$$n_{col} := \sum \overrightarrow{(Q)}$$

$$T_{n1} := \frac{V}{n_{col} \sum \overrightarrow{(Q_1)}} \qquad T_n := \begin{pmatrix} T_{n1} \\ T_{n1} \\ 0 \\ 0 \\ 0 \end{pmatrix}$$

Output - Allowable Bolt Shear:

$n_{bolts} := n_{row} \sum \overrightarrow{(Q)}$ $\qquad n_{bolts} = 36$

$sumQAd := \sum \overrightarrow{\left(n_{row} \cdot Q \cdot d^2 \cdot A_b\right)}$ $\qquad sumQAd = 2963 \cdot in^4$

$$V_{max} := \frac{M \cdot \overrightarrow{\left(d \cdot A_b\right)}}{sumQAd} + \frac{P \cdot A_b}{\sum \overrightarrow{\left(A_b \cdot Q\right)}}$$

$f_v := \overrightarrow{\left(\frac{V_{max}}{A_b}\right)}$ $\qquad r_v := \overrightarrow{\left(\frac{f_v}{ASI \cdot F_v}\right)}$

$$V_{max} = \begin{pmatrix} 2.8 \\ 2.6 \\ 2.4 \\ 0.6 \\ 1.5 \\ 0.0 \\ 0.0 \end{pmatrix} \cdot kip \qquad f_v = \begin{pmatrix} 2.8 \\ 2.7 \\ 2.4 \\ 0.6 \\ 1.5 \\ 0.0 \\ 0.0 \end{pmatrix} \cdot ksi \qquad r_v = \begin{pmatrix} 10 \\ 9 \\ 9 \\ 2 \\ 5 \\ 0 \\ 0 \end{pmatrix} \cdot \%$$

Output - Allowable Combined Bolt Tension & Shear:

$f_{v1} := \max(f_v)$

$$F_t := \begin{cases} \sqrt{(ASI \cdot 44 \cdot ksi)^2 - 4.39 \cdot f_{v1}^2} & \text{if FBgrade = "A325-N"} \\ \sqrt{(ASI \cdot 54 \cdot ksi)^2 - 3.75 \cdot f_{v1}^2} & \text{if FBgrade = "A490-N"} \\ \sqrt{(ASI \cdot 44 \cdot ksi)^2 - 2.15 \cdot f_{v1}^2} & \text{if FBgrade = "A325-X"} \\ \sqrt{(ASI \cdot 54 \cdot ksi)^2 - 1.82 \cdot f_{v1}^2} & \text{if FBgrade = "A490-X"} \\ 0 \cdot ksi & \text{otherwise} \end{cases}$$

$F_t = 58.369 \cdot ksi$

$n_{bolts1} := n_{col} \sum (Q_1)$ $\qquad n_{bolts1} = 36$

$sumQAd_1 := n_{col} \sum \overrightarrow{\left(Q_1 \cdot d_1^2 \cdot A_{b1}\right)}$ $\qquad sumQAd_1 = 382 \cdot in^4$

$M_t := P_{maxFP} \cdot d_m$ $\qquad M_t = 6.29 \cdot kip \cdot ft$

$$T_{max} := T_n + \frac{M_t \cdot \overrightarrow{\left(d_1 \cdot A_{b1}\right)}}{sumQAd_1}$$

$f_t := \overrightarrow{\left(\frac{T_{max}}{A_{b1}}\right)}$ $\qquad r_{vt} := \overrightarrow{\left(\frac{f_t}{F_t}\right)}$

$$T_{max} = \begin{pmatrix} 0.8 \\ 0.0 \\ 0.0 \\ 0.0 \\ 0.0 \end{pmatrix} \cdot kip \qquad f_t = \begin{pmatrix} 0.8 \\ 0.0 \\ 0.0 \\ 0.0 \\ 0.0 \end{pmatrix} \cdot ksi \qquad r_{vt} = \begin{pmatrix} 1 \\ 0 \\ 0 \\ 0 \\ 0 \end{pmatrix} \cdot \%$$

Output - Results Summary

$$result_{FlangeBolts} := \begin{pmatrix} \max(r_v) \\ \max(r_{vt}) \end{pmatrix} \qquad result_{FlangeBolts} = \begin{pmatrix} 10 \\ 1 \end{pmatrix} \cdot \%$$

$$Max_{Utilization} := \max(result_{FlangeBolts}) \qquad Max_{Utilization} = 10 \cdot \%$$

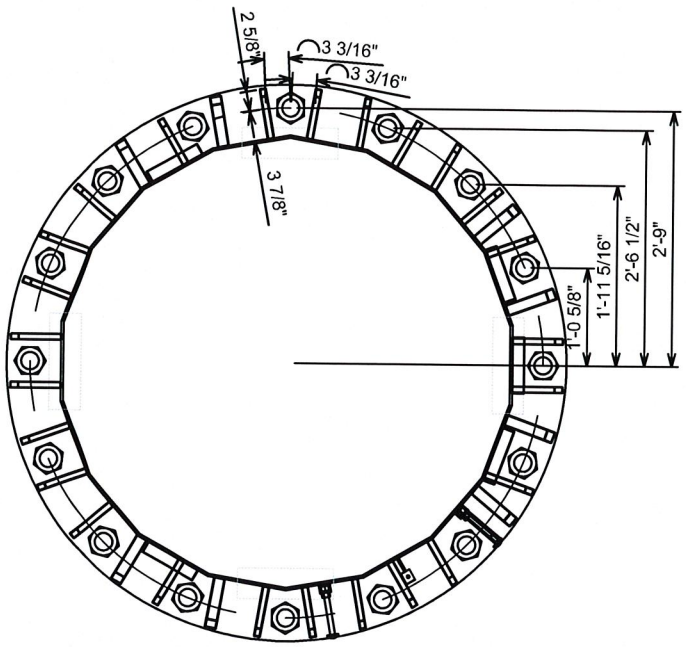

BASE PLATE LAYOUT - CASE #1

SCALE: 1/2" = 1'

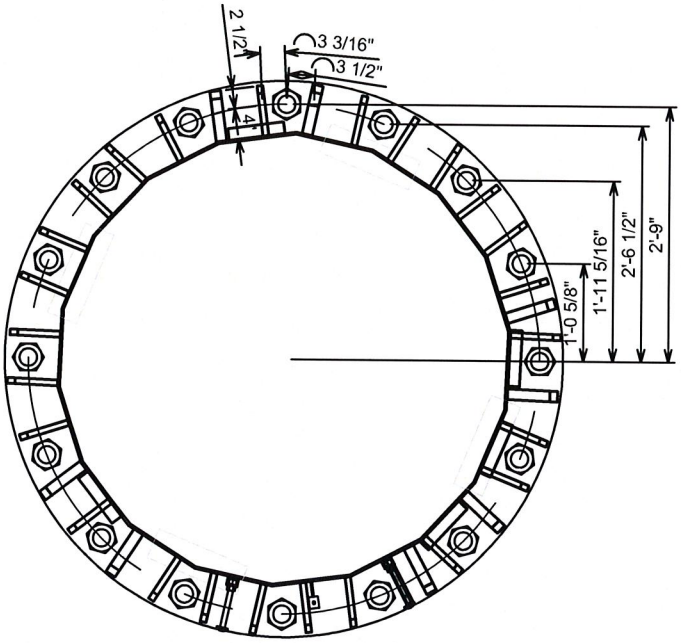

BASE PLATE LAYOUT - CASE #2

SCALE: 1/2" = 1'

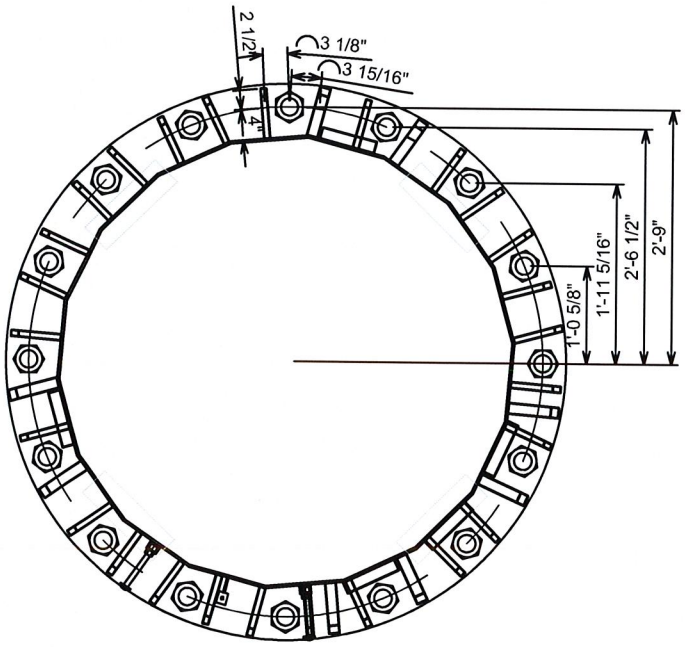

BASE PLATE LAYOUT - CASE #3

SCALE: 1/2" = 1'

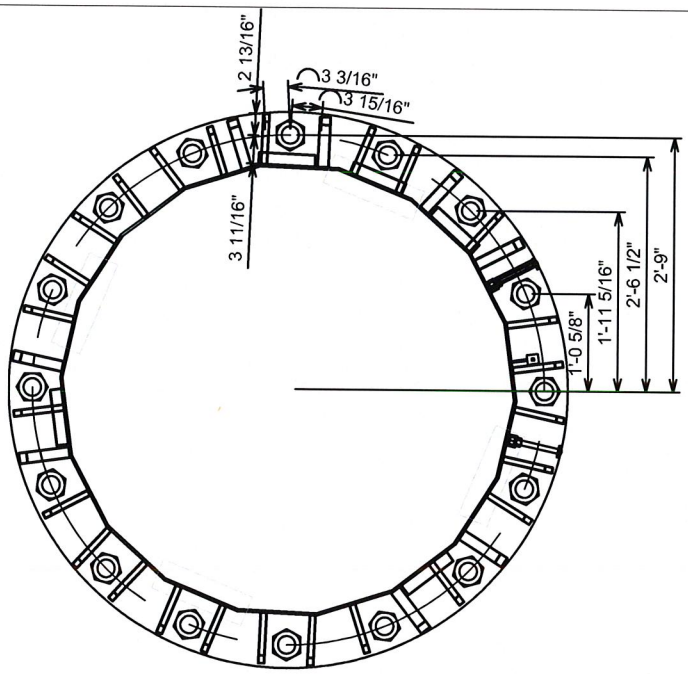

BASE PLATE LAYOUT - CASE #4

SCALE: 1/2" = 1'

PROJECT INFORMATION:

WEST HAVEN-RT15 / WOODBRIDGE
CT46139-A

370 ROCKLAND ROAD
GUILFORD, CT 06437
(NEW HAVEN)

REV	DATE:	Issued For:
0	1-28-13	PSAR

DRAWN BY: MER | CHECKED BY: AVF

SHEET NUMBER: **BPL**

REVISION: 0

VSI #: 122449

PLANS PREPARED FOR:

SBA

5900 Broken Sound Parkway NW
Boca Raton, FL 33487-2797
Office (800) 487-7483

PLANS PREPARED BY:

vertical solutions

2002 Production Drive
Apex, NC 27539
Office: (888) 321-6167
Fax: (919) 321-1768

Input

CONSTANTS:

$E \equiv 29000 \cdot ksi$

$K \equiv 0.8$

$ASI \equiv \frac{4}{3}$

- Reactions & Forces:

$M := 3801 \cdot kip \cdot ft$ = max moment reaction at top of base plate

$P := 41 \cdot kip$ = max axial reaction at top of base plate

$P_{ADD1} := 0 \cdot kip$ = additional axial force to SP on opposite side of SP (left side)

$P_{ADD2} := 0 \cdot kip$ = additional axial force to SP on opposite side of SP (right side)

- Shaft:

$t_{shaft} := 0.3125 \cdot in$ = thickness of shaft

$F_{yShaft} := 65 \cdot ksi$ = specified minimum yield stress of shaft

- Base Plate:

$t_{bpl} := 1.75 \cdot in$ = thickness of base plate

$F_y := 60 \cdot ksi$ = specified minimum yield stress of shaft

$a := 3.1875 \cdot in$ = distance from centerline of stiffener plate on left side to center of anchor rod

$b := 3.1875 \cdot in$ = distance from centerline of stiffener plate on right side to center of anchor rod

$y := 3.875 \cdot in$ = distance from shaft wall to center of anchor rod

- Bar:

$P_{uBar} := 0 \cdot kip$ = axial force from bar (see Pole Tool-F v1.6.xls)

$d_{1Bar} := 0 \cdot in$ = distance from center of bar to edge of TSP (left side)

$d_{2Bar} := 0 \cdot in$ = distance from center of bar to edge of TSP (right side)

$n := 0$ = number of termination bolts

$z := 0 \cdot in$ = height above base plate to bottom of bar / height above SP

$h := 0 \cdot in$ = height above top termination bolt to top of TSP

- Transition / Stiffener Plates:

  - TSP / SP on Left Side of AR:

$TSP1 := \text{"No"}$ = TSP on left side = "Yes"; SP on left side = "No"

$b_{SP1} := 6.5 \cdot in$ = width of stiffener plate

$t_{SP1} := 0.75 \cdot in$ = thickness of stiffener plate

$L_{SP1} := 11.25 \cdot in$ = length of stiffener plate

$clip_1 := 0.75 \cdot in$ = length of clip

$t_{VW1} := 0.3125 \cdot in$ = thickness of vertical weld

$F_{ySP1} := 50 \cdot ksi$ = specified minimum yield stress of SP material

$F_{EXX1} := 70 \cdot ksi$ = specified minimum ultimate stress of weld electrode

$k_1 := b_{SP1} - y$ = distance from center of anchor rod to edge of base plate / edge of stiffener plate

$k_1 = 2.625 \cdot in$

- TSP / SP on Right Side of AR:

$TSP2 := \text{"No"}$ = TSP on right side = "Yes"; SP on right side = "No"

$b_{SP2} := 6.5 \cdot in$ = width of stiffener plate

$t_{SP2} := 0.75 \cdot in$ = thickness of stiffener plate

$L_{SP2} := 11.25 \cdot in$ = length of stiffener plate

$clip_2 := 0.75 \cdot in$ = length of clip

$t_{VW2} := 0.3125 \cdot in$ = thickness of vertical weld

$F_{ySP2} := 50 \cdot ksi$ = specified minimum yield stress of SP material

$F_{EXX2} := 70 \cdot ksi$ = specified minimum ultimate stress of weld electrode

$k_2 := b_{SP2} - y$ = distance from center of anchor rod to edge of base plate / edge of stiffener plate

$k_2 = 2.625 \cdot in$

- Anchor Rods:

$$Q := \begin{pmatrix} 2 \\ 4 \\ 4 \\ 4 \\ 2 \\ 0 \\ 0 \end{pmatrix} \qquad d := \begin{pmatrix} 2 \cdot 12 + 9 \\ 2 \cdot 12 + 6 + \frac{1}{2} \\ 1 \cdot 12 + 11 + \frac{5}{16} \\ 1 \cdot 12 + \frac{5}{8} \\ 0 \\ 0 \\ 0 \end{pmatrix} \cdot in \qquad A_{stiff} := \begin{pmatrix} 3.98 \\ 3.98 \\ 3.98 \\ 3.98 \\ 3.98 \\ 0 \\ 0 \end{pmatrix} in^2 \qquad A_{stress} := \begin{pmatrix} 3.25 \\ 3.25 \\ 3.25 \\ 3.25 \\ 3.25 \\ 0 \\ 0 \end{pmatrix} in^2 \qquad F_t := \begin{pmatrix} 0.6 \cdot 75 \\ 0.6 \cdot 75 \\ 0.6 \cdot 75 \\ 0.6 \cdot 75 \\ 0.6 \cdot 75 \\ 0 \\ 0 \end{pmatrix} \cdot ksi$$

Output - Anchor Rod, Deformation Method:

$$R := \frac{M \cdot \overrightarrow{\left(d \cdot A_{stiff}\right)}}{sumQAd} + \frac{P \cdot A_{stiff}}{\sum \overrightarrow{\left(A_{stiff} \cdot Q\right)}} \qquad sumQAd := \sum \overrightarrow{\left(Q \cdot d^2 \cdot A_{stiff}\right)} \qquad sumQAd = 34668 \cdot in^4$$

ϕRnt = nominal tension strength
d = distance from center
A = area of fastener
Q = quantity of fasteners

$$f_t := \overrightarrow{\left(\frac{R}{A_{stress}}\right)} \qquad r_{AR} := \overrightarrow{\left(\frac{f_t}{ASI \cdot F_t}\right)}$$

$$R = \begin{pmatrix} 175.4 \\ 162.3 \\ 124.6 \\ 68.7 \\ 2.6 \\ 0.0 \\ 0.0 \end{pmatrix} \cdot kip \qquad f_t = \begin{pmatrix} 54.0 \\ 49.9 \\ 38.4 \\ 21.1 \\ 0.8 \\ 0.0 \\ 0.0 \end{pmatrix} \cdot ksi \qquad r_{AR} = \begin{pmatrix} 90 \\ 83 \\ 64 \\ 35 \\ 1 \\ 0 \\ 0 \end{pmatrix} \cdot \%$$

Output - Check Base Plate Flexure:

$P_{maxAR} := \max(R)$ $\qquad P_{maxAR} = 175 \cdot kip$

$t := t_{bpl}$ $\qquad t = 1.75 \cdot in$

$k := \min(k_1, k_2)$ $\qquad k = 2.63 \cdot in$

$I_x := \frac{(a+b) \cdot t^3}{12}$ $\qquad I_x = 2.85 \cdot in^4$

$k_x := \frac{3 \cdot I_x}{y^3}$ $\qquad k_x = 0.15 \cdot in$

$S_x := \frac{I_x}{\left(\frac{t}{2}\right)}$ $\qquad S_x = 3.25 \cdot in^3$

$I_y := \frac{(y+k) \cdot t^3}{12}$ $\qquad I_y = 2.90 \cdot in^4$

$$k_y := \begin{cases} \frac{3 \cdot I_y \cdot (3 \cdot a + b)^2}{2 \cdot a^3 \cdot b^2} & \text{if } a \geq b \\ \frac{3 \cdot I_y \cdot (3 \cdot b + a)^2}{2 \cdot b^3 \cdot a^2} & \text{if } a < b \end{cases}$$ $\qquad k_y = 2.15 \cdot in$

$S_y := \frac{I_y}{\left(\frac{t}{2}\right)}$ $\qquad S_y = 3.32 \cdot in^3$

$M_{xMax} := \left(\frac{k_x}{k_x + k_y}\right) \cdot (P_{maxAR} \cdot y)$ $\qquad M_{xMax} = 3.6 \cdot kip \cdot ft$

$M'_{xAll} := ASI \cdot \left[(0.75 \cdot F_y) \cdot S_x\right]$ $\qquad M'_{xAll} = 16.3 \cdot kip \cdot ft$

$r_x := \frac{M_{xMax}}{M'_{xAll}}$ $\qquad r_x = 22 \cdot \%$

$$M_{yMax} := \begin{cases} \frac{k_y}{k_x + k_y} \cdot \left[\frac{P_{maxAR} \cdot a \cdot b^2}{(a+b)^2}\right] & \text{if } a \leq b \\ \frac{k_y}{k_x + k_y} \cdot \left[\frac{P_{maxAR} \cdot a^2 \cdot b}{(a+b)^2}\right] & \text{if } a > b \end{cases}$$ $\qquad M_{yMax} = 10.9 \cdot kip \cdot ft$

$M'_{yAll} := ASI \cdot \left[(0.75 \cdot F_y) \cdot S_y\right]$ $\qquad M'_{yAll} = 16.6 \cdot kip \cdot ft$

$r_y := \frac{M_{yMax}}{M'_{yAll}}$ $\qquad r_y = 66 \cdot \%$

$r_{BPL} := \sqrt{r_x^2 + r_y^2}$ $\qquad r_{BPL} = 69 \cdot \%$

$P_{maxShaft} := \left(\frac{k_x}{k_x + k_y}\right) \cdot P_{maxAR}$ $\qquad P_{maxShaft} = 11.2 \cdot kip$

$P_{tMaxSP} := \left(\frac{k_y}{k_x + k_y}\right) \cdot P_{maxAR}$ $\qquad P_{tMaxSP} = 164.2 \cdot kip$

Output - Calculate Forces in TSP / SP's:

$l := a + b$ $\qquad l = 6.4 \cdot in$

$P_{maxSP1} := \frac{P_{tMaxSP} \cdot b^2}{l^3} \cdot (b + 3 \cdot a)$ $\qquad P_{maxSP1} = 82.1 \cdot kip$

$P_{maxSP2} := \frac{P_{tMaxSP} \cdot a^2}{l^3} \cdot (a + 3 \cdot b)$ $\qquad P_{maxSP2} = 82.1 \cdot kip$

$P_{uBar1} := \begin{cases} \left(1 - \frac{d_{1Bar}}{d_{1Bar} + d_{2Bar}}\right) \cdot P_{uBar} & \text{if } TSP1 = \text{"Yes"} \\ 0 & \text{if } TSP1 = \text{"No"} \end{cases}$ $\qquad P_{uBar1} = 0.0 \cdot kip$

$P_{uBar2} := \begin{cases} \left(1 - \frac{d_{2Bar}}{d_{1Bar} + d_{2Bar}}\right) \cdot P_{uBar} & \text{if } TSP2 = \text{"Yes"} \\ 0 & \text{if } TSP2 = \text{"No"} \end{cases}$ $\qquad P_{uBar2} = 0.0 \cdot kip$

$P_{tMaxSP1} := P_{maxSP1} + P_{uBar1} + P_{ADD1}$ $\qquad P_{tMaxSP1} = 82.1 \cdot kip$

$P_{tMaxSP2} := P_{maxSP2} + P_{uBar2} + P_{ADD2}$ $\qquad P_{tMaxSP2} = 82.1 \cdot kip$

Output - Calculate SP Section Properties *(LEFT Side)*:

$L_{VW1} := L_{SP1} - clip_1$ $\qquad L_{VW1} = 10.50 \cdot in$

$L_{HW1} := b_{SP1} - clip_1$ $\qquad L_{HW1} = 5.75 \cdot in$

$\theta_1 := atan\left(\frac{b_{SP1}}{L_{SP1}}\right)$ $\qquad \theta_1 = 30.02 \cdot deg$

$B_1 := L_{SP1} \cdot \sin(\theta_1)$ $\qquad B_1 = 5.63 \cdot in$

$N_{B1} := \frac{clip_1}{(\sin(\theta_1) + \cos(\theta_1))}$ $\qquad N_{B1} = 0.549 \cdot in$

$N_1 := \frac{N_{B1}}{B_1}$ $\qquad N_1 = 0.098$

$L_1 := \sqrt{L_{SP1}^2 + b_{SP1}^2}$ $\qquad L_1 = 12.99 \cdot in$

$r_1 := \frac{t_{SP1}}{\sqrt{12}}$ $\qquad r_1 = 0.217 \cdot in$

$x_1 := \frac{b_{SP1}}{2}$ $\qquad x_1 = 3.25 \cdot in$

Output - Calculate Compressive Strength of SP:

$C_{c1} := \sqrt{\frac{2 \cdot \pi^2 \cdot E}{F_{ySP1}}}$ $\qquad C_{c1} = 107.0$

$KLr_1 := \frac{K \cdot L_1}{r_1}$ $\qquad KLr_1 = 48.0$

$$F_{crB1} := \begin{cases} \left[\dfrac{\left[1 - \dfrac{(KLr_1)^2}{2 \cdot C_{c1}^2}\right] \cdot F_{ySP1}}{\dfrac{5}{3} + \dfrac{3}{8} \cdot \left(\dfrac{KLr_1}{C_{c1}}\right) - \dfrac{(KLr_1)^3}{8 \cdot C_{c1}^3}}\right] & \text{if } KLr_1 < C_{c1} \\ \left[\dfrac{12 \cdot \pi^2 \cdot E}{23 \cdot (KLr_1)^2}\right] & \text{if } KLr_1 \geq C_{c1} \end{cases}$$

$F_{crB1} = 24.7 \cdot ksi$

$\Delta F_{cr1} := F_{ySP1} - F_{crB1}$ $\qquad \Delta F_{cr1} = 25.3 \cdot ksi$

$P'_{allSP1} := \left[\frac{t_{SP1} \cdot B_1^2}{6 \cdot x_1} \cdot \left[3 \cdot F_{ySP1} \cdot \left(1 - N_1^2\right) - 2 \cdot (\Delta F_{cr1}) \cdot \left(1 - N_1^3\right)\right]\right] \cdot ASI$ $\qquad P'_{allSP1} = 159.1 \cdot kip$

$r_{cSP1} := \frac{P_{tMaxSP1}}{P'_{allSP1}}$ $\qquad r_{cSP1} = 52 \cdot \%$

Output - Calculate Shear and Tensile Strength of CAN-SP:

- Calculate Forces in SP:

$h_{V1} := clip_1 + \frac{L_{VW1}}{2}$ $\qquad h_{V1} = 6.00 \cdot in$

$V_{maxV1} := P_{tMaxSP1}$ = shear on Vertical leg $\qquad V_{maxV1} = 82.1 \cdot kip$

$T_{maxV1} := \frac{P_{tMaxSP1} \cdot x_1}{h_{V1}}$ = max tension on Vertical leg $\qquad T_{maxV1} = 44.5 \cdot kip$

$V_{maxH1} := \frac{P_{tMaxSP1} \cdot x_1}{h_{V1}}$ = shear on Horizontal leg $\qquad V_{maxH1} = 44.5 \cdot kip$

$T_{maxH1} := P_{tMaxSP1}$ = tension on Horizontal leg $\qquad T_{maxH1} = 82.1 \cdot kip$

- Shear Strength of *Vertical* Leg of SP:

$V'_{allV1} := \left[\left(0.4 \cdot F_{ySP1}\right) \cdot \left(L_{VW1} \cdot t_{SP1}\right)\right] \cdot ASI$ $\qquad V'_{allV1} = 210.0 \cdot kip$

$r_{vV1} := \dfrac{V_{maxV1}}{V'_{allV1}}$ $\qquad r_{vV1} = 39 \cdot \%$

- Tensile Strength of *Vertical* Leg of SP:

$T_{allV1} := \left[\left(0.6 \cdot F_{ySP1}\right) \cdot \left(L_{VW1} \cdot t_{SP1}\right)\right] \cdot ASI$ $\qquad T_{allV1} = 315.0 \cdot kip$

$r_{tV1} := \dfrac{T_{maxV1}}{T_{allV1}}$ $\qquad r_{tV1} = 14 \cdot \%$

- Combined Tension & Shear Strength of *Vertical* Leg of SP:

$r_{V1} := \left(\dfrac{T_{maxV1}}{T_{allV1}}\right) + \left(\dfrac{V_{maxV1}}{V'_{allV1}}\right)^2$ $\qquad r_{V1} = 29 \cdot \%$

- Shear Strength of *Horizontal* Leg of SP:

$V'_{allH1} := \left[\left(0.4 \cdot F_{ySP1}\right) \cdot \left(L_{HW1} \cdot t_{SP1}\right)\right] \cdot ASI$ $\qquad V'_{allH1} = 115.0 \cdot kip$

$r_{vH1} := \dfrac{V_{maxH1}}{V'_{allH1}}$ $\qquad r_{vH1} = 39 \cdot \%$

- Tensile Strength of *Horizontal* Leg of SP:

$T'_{allH1} := \left[\left(0.6 \cdot F_{ySP1}\right) \cdot \left(L_{HW1} \cdot t_{SP1}\right)\right] \cdot ASI$ $\qquad T'_{allH1}$

$r_{tH1} := \dfrac{T_{maxH1}}{T'_{allH1}}$ $\qquad r_{tH1} = 48 \cdot \%$

- Combined Tension & Shear Strength of *Horizontal* Leg of SP:

$r_{H1} := \left(\dfrac{T_{maxH1}}{T'_{allH1}}\right) + \left(\dfrac{V_{maxH1}}{V'_{allH1}}\right)^2$ $\qquad r_{H1} = 63 \cdot \%$

Output - Check Shear and Tensile Strength of Vertical SP Weld:

$\theta_v \equiv 0 \cdot deg$

$F_{w\_v1} := 0.30 \cdot F_{EXX1} \cdot \left(1.0 + 0.50 \cdot \sin\left(\theta_v\right)^{1.5}\right)$ $\qquad F_{w\_v1} = 21.0 \cdot ksi$

$\theta_t \equiv 90 \cdot deg$

$F_{w\_t1} := 0.30 \cdot F_{EXX1} \cdot \left(1.0 + 0.50 \cdot \sin\left(\theta_t\right)^{1.5}\right)$ $\qquad F_{w\_t1} = 31.5 \cdot ksi$

- Shear Strength of Vertical Weld:

$A_{wV1} := \left(0.707 \cdot t_{VW1}\right) \cdot L_{VW1}$ $\qquad A_{wV1} = 2.32 \cdot in^2$

$V'_{allVw1} := \left[2 \cdot \left(F_{w\_v1} \cdot A_{wV1}\right)\right] \cdot ASI$ $\qquad V'_{allVw1} = 130 \cdot kip$

$r_{vVw1} := \dfrac{V_{maxV1}}{V'_{allVw1}}$ $\qquad r_{vVw1} = 63 \cdot \%$

- Tensile Strength of Vertical Weld:

$T'_{allVw1} := \left[2\cdot\left(F_{w\_t1}\cdot A_{wV1}\right)\right]\cdot ASI$ $\qquad T'_{allVw1} = 195\cdot kip$

$r_{tVw1} := \dfrac{T_{maxV1}}{T'_{allVw1}}$ $\qquad r_{tVw1} = 23\cdot\%$

- Combined Tension & Shear Strength of Vertical Weld:

$r_{Vw1} := \left(\dfrac{T_{maxV1}}{T'_{allVw1}}\right) + \left(\dfrac{V_{maxV1}}{V'_{allVw1}}\right)^2$ $\qquad r_{Vw1} = 63\cdot\%$

Output - Check Design Shaft Punching Shear:

$V_{maxPS1} := T_{maxV1}$ $\qquad V_{maxPS1} = 44.5\cdot kip$

$V'_{all1} := 2\cdot\left[\left(0.4\cdot F_{yShaft}\right)\cdot\left(t_{shaft}\cdot L_{VW1}\right)\right]\cdot ASI$ $\qquad V'_{all1} = 227.5\cdot kip$

$r_{vPS1} := \dfrac{V_{maxPS1}}{V'_{all1}}$ $\qquad r_{vPS1} = 20\cdot\%$

Output - Calculate SP Section Properties *(RIGHT Side)*:

$L_{VW2} := L_{SP2} - clip_2$ $\qquad L_{VW2} = 10.50\cdot in$

$L_{HW2} := b_{SP2} - clip_2$ $\qquad L_{HW2} = 5.75\cdot in$

$\theta_2 := atan\left(\dfrac{b_{SP2}}{L_{SP2}}\right)$ $\qquad \theta_2 = 30.02\cdot deg$

$B_2 := L_{SP2}\cdot\sin\left(\theta_2\right)$ $\qquad B_2 = 5.63\cdot in$

$N_{B2} := \dfrac{clip_2}{\left(\sin\left(\theta_2\right) + \cos\left(\theta_2\right)\right)}$ $\qquad N_{B2} = 0.549\cdot in$

$N_2 := \dfrac{N_{B2}}{B_2}$ $\qquad N_2 = 0.098$

$L_2 := \sqrt{L_{SP2}^2 + b_{SP2}^2}$ $\qquad L_2 = 12.99\cdot in$

$r_2 := \dfrac{t_{SP2}}{\sqrt{12}}$ $\qquad r_2 = 0.217\cdot in$

$x_2 := \dfrac{b_{SP2}}{2}$ $\qquad x_2 = 3.25\cdot in$

Output - Calculate Compressive Strength of SP:

$C_{c2} := \sqrt{\dfrac{2\cdot\pi^2\cdot E}{F_{ySP2}}}$ $\qquad C_{c2} = 107.0$

$KLr_2 := \dfrac{K\cdot L_2}{r_2}$ $\qquad KLr_2 = 48.0$

$$F_{crB2} := \begin{cases} \left[\dfrac{\left[1 - \dfrac{(KLr_2)^2}{2 \cdot C_{c2}^2}\right] \cdot F_{ySP2}}{\dfrac{5}{3} + \dfrac{3}{8} \cdot \left(\dfrac{KLr_2}{C_{c2}}\right) - \dfrac{(KLr_2)^3}{8 \cdot C_{c2}^3}}\right] & \text{if } KLr_2 < C_{c2} \\ \left[\dfrac{12 \cdot \pi^2 \cdot E}{23 \cdot (KLr_2)^2}\right] & \text{if } KLr_2 \geq C_{c2} \end{cases}$$

$F_{crB2} = 24.7 \cdot ksi$

$$\Delta F_{cr2} := F_{ySP2} - F_{crB2}$$

$\Delta F_{cr2} = 25.3 \cdot ksi$

$$P'_{allSP2} := \left[\frac{t_{SP2} \cdot B_2^2}{6 \cdot x_2} \cdot \left[3 \cdot F_{ySP2} \cdot \left(1 - N_2^2\right) - 2 \cdot (\Delta F_{cr2}) \cdot \left(1 - N_2^3\right)\right]\right] \cdot ASI$$

$P'_{allSP2} = 159.1 \cdot kip$

$$r_{cSP2} := \frac{P_{tMaxSP2}}{P'_{allSP2}}$$

$r_{cSP2} = 52 \cdot \%$

Output - Calculate Shear and Tensile Strength of CAN-SP:

- Calculate Forces in SP:

$$h_{V2} := clip_2 + \frac{L_{VW2}}{2}$$

$h_{V2} = 6.00 \cdot in$

$V_{maxV2} := P_{tMaxSP2}$ = shear on Vertical leg

$V_{maxV2} = 82.1 \cdot kip$

$T_{maxV2} := \dfrac{P_{tMaxSP2} \cdot x_2}{h_{V2}}$ = max tension on Vertical leg

$T_{maxV2} = 44.5 \cdot kip$

$V_{maxH2} := \dfrac{P_{tMaxSP2} \cdot x_2}{h_{V2}}$ = shear on Horizontal leg

$V_{maxH2} = 44.5 \cdot kip$

$T_{maxH2} := P_{tMaxSP2}$ = tension on Horizontal leg

$T_{maxH2} = 82.1 \cdot kip$

- Shear Strength of *Vertical* Leg of SP:

$$V'_{allV2} := \left[(0.4 \cdot F_{ySP2}) \cdot (L_{VW2} \cdot t_{SP2})\right] \cdot ASI$$

$V'_{allV2} = 210.0 \cdot kip$

$$r_{vV2} := \frac{V_{maxV2}}{V'_{allV2}}$$

$r_{vV2} = 39 \cdot \%$

- Tensile Strength of *Vertical* Leg of SP:

$$T_{allV2} := \left[(0.6 \cdot F_{ySP2}) \cdot (L_{VW2} \cdot t_{SP2})\right] \cdot ASI$$

$T_{allV2} = 315.0 \cdot kip$

$$r_{tV2} := \frac{T_{maxV2}}{T_{allV2}}$$

$r_{tV2} = 14 \cdot \%$

- Combined Tension & Shear Strength of *Vertical* Leg of SP:

$$r_{V2} := \left(\frac{T_{maxV2}}{T_{allV2}}\right) + \left(\frac{V_{maxV2}}{V'_{allV2}}\right)^2 \qquad r_{V2} = 29 \cdot \%$$

- Shear Strength of *Horizontal* Leg of SP:

$$V'_{allH2} := \left[\left(0.4 \cdot F_{ySP2}\right) \cdot \left(L_{HW2} \cdot t_{SP2}\right)\right] \cdot ASI \qquad V'_{allH2} = 115.0 \cdot kip$$

$$r_{vH2} := \frac{V_{maxH2}}{V'_{allH2}} \qquad r_{vH2} = 39 \cdot \%$$

- Tensile Strength of *Horizontal* Leg of SP:

$$T'_{allH2} := \left[\left(0.6 \cdot F_{ySP2}\right) \cdot \left(L_{HW2} \cdot t_{SP2}\right)\right] \cdot ASI \qquad T'_{allH2} = 172.5 \cdot kip$$

$$r_{tH2} := \frac{T_{maxH2}}{T'_{allH2}} \qquad r_{tH2} = 48 \cdot \%$$

- Combined Tension & Shear Strength of *Horizontal* Leg of SP:

$$r_{H2} := \left(\frac{T_{maxH2}}{T'_{allH2}}\right) + \left(\frac{V_{maxH2}}{V'_{allH2}}\right)^2 \qquad r_{H2} = 63 \cdot \%$$

Output - Check Shear and Tensile Strength of Vertical SP Weld:

$$\theta_v \equiv 0 \cdot deg$$

$$F_{w\_v2} := 0.30 \cdot F_{EXX2} \cdot \left(1.0 + 0.50 \cdot \sin\left(\theta_v\right)^{1.5}\right) \qquad F_{w\_v2} = 21.0 \cdot ksi$$

$$\theta_t \equiv 90 \cdot deg$$

$$F_{w\_t2} := 0.30 \cdot F_{EXX2} \cdot \left(1.0 + 0.50 \cdot \sin\left(\theta_t\right)^{1.5}\right) \qquad F_{w\_t2} = 31.5 \cdot ksi$$

- Shear Strength of Vertical Weld:

$$A_{wV2} := \left(0.707 \cdot t_{VW2}\right) \cdot L_{VW2} \qquad A_{wV2} = 2.32 \cdot in^2$$

$$V'_{allVw2} := \left[2 \cdot \left(F_{w\_v2} \cdot A_{wV2}\right)\right] \cdot ASI \qquad V'_{allVw2} = 130 \cdot kip$$

$$r_{vVw2} := \frac{V_{maxV2}}{V'_{allVw2}} \qquad r_{vVw2} = 63 \cdot \%$$

- Tensile Strength of Vertical Weld:

$$T'_{allVw2} := \left[2 \cdot \left(F_{w\_t2} \cdot A_{wV2}\right)\right] \cdot ASI \qquad T'_{allVw2} = 195 \cdot kip$$

$$r_{tVw2} := \frac{T_{maxV2}}{T'_{allVw2}} \qquad r_{tVw2} = 23 \cdot \%$$

- Combined Tension & Shear Strength of Vertical Weld:

$$r_{Vw2} := \left(\frac{T_{maxV2}}{T'_{allVw2}}\right) + \left(\frac{V_{maxV2}}{V'_{allVw2}}\right)^2 \qquad r_{Vw2} = 63 \cdot \%$$

Output - Check Design Shaft Punching Shear:

$V_{maxPS2} := T_{maxV2}$ $\qquad V_{maxPS2} = 44.5 \cdot kip$

$V'_{all2} := 2 \cdot \left[\left(0.4 \cdot F_{yShaft} \right) \cdot \left(t_{shaft} \cdot L_{VW2} \right) \right] \cdot ASI$ $\qquad V'_{all2} = 227.5 \cdot kip$

$r_{vPS2} := \dfrac{V_{maxPS2}}{V'_{all2}}$ $\qquad r_{vPS2} = 20 \cdot \%$

Output - Results Summary:

- Anchor Rods & Base Plate:

$result_{AR} := \max(r_{AR})$ $\qquad result_{AR} = 90 \cdot \%$

$result_{BPL} := \begin{pmatrix} r_x \\ r_y \\ r_{BPL} \end{pmatrix}$ $\qquad result_{BPL} = \begin{pmatrix} 22 \\ 66 \\ 69 \end{pmatrix} \cdot \%$

$Max_{Utilization\_AR\_BPL} := \max(result_{AR}, result_{BPL})$ $\qquad Max_{Utilization\_AR\_BPL} = 90 \cdot \%$

- SP on Left Side:

$result_{SP1} := \begin{pmatrix} r_{cSP1} \\ r_{vV1} \\ r_{tV1} \\ r_{V1} \\ r_{vH1} \\ r_{tH1} \\ r_{H1} \end{pmatrix}$ $\qquad result_{SP1} = \begin{pmatrix} 52 \\ 39 \\ 14 \\ 29 \\ 39 \\ 48 \\ 63 \end{pmatrix} \cdot \%$

$result_{SPweld1} := \begin{pmatrix} r_{vVw1} \\ r_{tVw1} \\ r_{Vw1} \end{pmatrix}$ $\qquad result_{SPweld1} = \begin{pmatrix} 63 \\ 23 \\ 63 \end{pmatrix} \cdot \%$

$result_{shaft1} := r_{vPS1}$ $\qquad result_{shaft1} = 20 \cdot \%$

$L_{SP1reqd} := \begin{cases} [z + n \cdot (3 \cdot in) + h] & \text{if } TSP1 = \text{"Yes"} \\ \text{"N/A"} & \text{if } TSP1 = \text{"No"} \end{cases}$ $\qquad L_{SP1reqd} = \text{"N/A"} \cdot in$

$L_{SP1check} := \begin{cases} \text{"N/A"} & \text{if } TSP1 = \text{"No"} \\ \begin{cases} \text{"OK"} & \text{if } L_{SP1} \geq L_{SP1reqd} \\ \text{"NG"} & \text{if } L_{SP1} < L_{SP1reqd} \end{cases} & \text{if } TSP1 = \text{"Yes"} \end{cases}$ $\qquad L_{SP1check} = \text{"N/A"}$

$Max_{Utilization\_SP1} := \max(result_{SP1}, result_{SPweld1}, result_{shaft1})$ $\qquad Max_{Utilization\_SP1} = 63 \cdot \%$

- SP on Right Side:

$$result_{SP2} := \begin{pmatrix} r_{cSP2} \\ r_{vV2} \\ r_{tV2} \\ r_{V2} \\ r_{vH2} \\ r_{tH2} \\ r_{H2} \end{pmatrix} \qquad result_{SP2} = \begin{pmatrix} 52 \\ 39 \\ 14 \\ 29 \\ 39 \\ 48 \\ 63 \end{pmatrix} \cdot \%$$

$$result_{SPweld2} := \begin{pmatrix} r_{vVw2} \\ r_{tVw2} \\ r_{Vw2} \end{pmatrix} \qquad result_{SPweld2} = \begin{pmatrix} 63 \\ 23 \\ 63 \end{pmatrix} \cdot \%$$

$$result_{shaft2} := r_{vPS2} \qquad result_{shaft2} = 20 \cdot \%$$

$$L_{SP2reqd} := \begin{cases} [z + n \cdot (3 \cdot in) + h] & \text{if } TSP2 = \text{"Yes"} \\ \text{"N/A"} & \text{if } TSP2 = \text{"No"} \end{cases} \qquad L_{SP2reqd} = \text{"N/A"} \cdot in$$

$$L_{SP2check} := \begin{cases} \text{"N/A"} & \text{if } TSP2 = \text{"No"} \\ \begin{cases} \text{"OK"} & \text{if } L_{SP2} \geq L_{SP2reqd} \\ \text{"NG"} & \text{if } L_{SP2} < L_{SP2reqd} \end{cases} & \text{if } TSP2 = \text{"Yes"} \end{cases} \qquad L_{SP2check} = \text{"N/A"}$$

$$Max_{Utilization\_SP2} := \max(result_{SP2}, result_{SPweld2}, result_{shaft2}) \qquad Max_{Utilization\_SP2} = 63 \cdot \%$$

$$Max_{Utilization} := \max(Max_{Utilization\_AR\_BPL}, Max_{Utilization\_SP1}, Max_{Utilization\_SP2}) \qquad Max_{Utilization} = 90 \cdot \%$$

$t_{SP1} = 0.750 \cdot in$ $t_{SP2} = 0.750 \cdot in$

$b_{SP1} = 6.500 \cdot in$ $b_{SP2} = 6.500 \cdot in$

$L_{SP1} = 11.25 \cdot in$ $L_{SP2} = 11.25 \cdot in$

Input

CONSTANTS:

$E \equiv 29000 \cdot ksi$

$K \equiv 0.8$

$ASI \equiv \frac{4}{3}$

- Reactions & Forces:

$M := 3801 \cdot kip \cdot ft$ = max moment reaction at top of base plate

$P := 41 \cdot kip$ = max axial reaction at top of base plate

$P_{ADD1} := 0 \cdot kip$ = additional axial force to SP on opposite side of SP (left side)

$P_{ADD2} := 0 \cdot kip$ = additional axial force to SP on opposite side of SP (right side)

- Shaft:

$t_{shaft} := 0.3125 \cdot in$ = thickness of shaft

$F_{yShaft} := 65 \cdot ksi$ = specified minimum yield stress of shaft

- Base Plate:

$t_{bpl} := 1.75 \cdot in$ = thickness of base plate

$F_y := 60 \cdot ksi$ = specified minimum yield stress of shaft

$a := 3.1875 \cdot in$ = distance from centerline of stiffener plate on left side to center of anchor rod

$b := 3.5 \cdot in$ = distance from centerline of stiffener plate on right side to center of anchor rod

$y := 4.0 \cdot in$ = distance from shaft wall to center of anchor rod

- Bar:

$P_{uBar} := 387 \cdot kip$ = axial force from bar (see Pole Tool-F v1.6.xls)

$d_{1Bar} := 4.625 \cdot in$ = distance from center of bar to edge of TSP (left side)

$d_{2Bar} := 6.375 \cdot in$ = distance from center of bar to edge of TSP (right side)

$n := 9$ = number of termination bolts

$z := 11.75 \cdot in$ = height above base plate to bottom of bar / height above SP

$h := 6 \cdot in$ = height above top termination bolt to top of TSP

- Transition / Stiffener Plates:

  - TSP / SP on Left Side of AR:

$TSP1 := \text{"No"}$ = TSP on left side = "Yes"; SP on left side = "No"

$b_{SP1} := 6.5 \cdot in$ = width of stiffener plate

$t_{SP1} := 0.75 \cdot in$ = thickness of stiffener plate

$L_{SP1} := 11.25 \cdot in$ = length of stiffener plate

$clip_1 := 0.75 \cdot in$ = length of clip

$t_{VW1} := 0.3125 \cdot in$ = thickness of vertical weld

$F_{ySP1} := 50 \cdot ksi$ = specified minimum yield stress of SP material

$F_{EXX1} := 70 \cdot ksi$ = specified minimum ultimate stress of weld electrode

$k_1 := b_{SP1} - y$ = distance from center of anchor rod to edge of base plate / edge of stiffener plate

$k_1 = 2.500 \cdot in$

- TSP / SP on Right Side of AR:

$TSP2 := \text{"Yes"}$ = TSP on right side = "Yes"; SP on right side = "No"

$b_{SP2} := 6.5 \cdot in$ = width of stiffener plate

$t_{SP2} := 1.375 \cdot in$ = thickness of stiffener plate

$L_{SP2} := 44.75 \cdot in$ = length of stiffener plate

$clip_2 := 0.75 \cdot in$ = length of clip

$t_{VW2} := 0.3125 \cdot in$ = thickness of vertical weld

$F_{ySP2} := 50 \cdot ksi$ = specified minimum yield stress of SP material

$F_{EXX2} := 70 \cdot ksi$ = specified minimum ultimate stress of weld electrode

$k_2 := b_{SP2} - y$ = distance from center of anchor rod to edge of base plate / edge of stiffener plate

$k_2 = 2.500 \cdot in$

- Anchor Rods:

$$Q := \begin{pmatrix} 2 \\ 4 \\ 4 \\ 4 \\ 2 \\ 0 \\ 0 \end{pmatrix} \qquad d := \begin{pmatrix} 2 \cdot 12 + 9 \\ 2 \cdot 12 + 6 + \frac{1}{2} \\ 1 \cdot 12 + 11 + \frac{5}{16} \\ 1 \cdot 12 + \frac{5}{8} \\ 0 \\ 0 \\ 0 \end{pmatrix} \cdot in \qquad A_{stiff} := \begin{pmatrix} 3.98 \\ 3.98 \\ 3.98 \\ 3.98 \\ 3.98 \\ 0 \\ 0 \end{pmatrix} in^2 \qquad A_{stress} := \begin{pmatrix} 3.25 \\ 3.25 \\ 3.25 \\ 3.25 \\ 3.25 \\ 0 \\ 0 \end{pmatrix} in^2 \qquad F_t := \begin{pmatrix} 0.6 \cdot 75 \\ 0.6 \cdot 75 \\ 0.6 \cdot 75 \\ 0.6 \cdot 75 \\ 0.6 \cdot 75 \\ 0 \\ 0 \end{pmatrix} \cdot ksi$$

Output - Anchor Rod, Deformation Method:

$$R := \frac{M \cdot \overrightarrow{\left(d \cdot A_{stiff}\right)}}{sumQAd} + \frac{P \cdot A_{stiff}}{\sum \overrightarrow{\left(A_{stiff} \cdot Q\right)}} \qquad sumQAd := \sum \overrightarrow{\left(Q \cdot d^2 \cdot A_{stiff}\right)} \qquad sumQAd = 34668 \cdot in^4$$

ϕRnt = nominal tension strength
d = distance from center
A = area of fastener
Q = quantity of fasteners

$$f_t := \overrightarrow{\left(\frac{R}{A_{stress}}\right)} \qquad r_{AR} := \overrightarrow{\left(\frac{f_t}{ASI \cdot F_t}\right)}$$

$$R = \begin{pmatrix} 175.4 \\ 162.3 \\ 124.6 \\ 68.7 \\ 2.6 \\ 0.0 \\ 0.0 \end{pmatrix} \cdot kip \qquad f_t = \begin{pmatrix} 54.0 \\ 49.9 \\ 38.4 \\ 21.1 \\ 0.8 \\ 0.0 \\ 0.0 \end{pmatrix} \cdot ksi \qquad r_{AR} = \begin{pmatrix} 90 \\ 83 \\ 64 \\ 35 \\ 1 \\ 0 \\ 0 \end{pmatrix} \cdot \%$$

Output - Check Base Plate Flexure:

$P_{maxAR} := \max(R)$ $\qquad P_{maxAR} = 175 \cdot kip$

$t := t_{bpl}$ $\qquad t = 1.75 \cdot in$

$k := \min(k_1, k_2)$ $\qquad k = 2.50 \cdot in$

$I_x := \frac{(a+b) \cdot t^3}{12}$ $\qquad I_x = 2.99 \cdot in^4$

$k_x := \frac{3 \cdot I_x}{y^3}$ $\qquad k_x = 0.14 \cdot in$

$S_x := \frac{I_x}{\left(\frac{t}{2}\right)}$ $\qquad S_x = 3.41 \cdot in^3$

$I_y := \frac{(y+k) \cdot t^3}{12}$ $\qquad I_y = 2.90 \cdot in^4$

$$k_y := \begin{cases} \frac{3 \cdot I_y \cdot (3 \cdot a + b)^2}{2 \cdot a^3 \cdot b^2} & \text{if } a \geq b \\ \frac{3 \cdot I_y \cdot (3 \cdot b + a)^2}{2 \cdot b^3 \cdot a^2} & \text{if } a < b \end{cases}$$ $\qquad k_y = 1.87 \cdot in$

$S_y := \frac{I_y}{\left(\frac{t}{2}\right)}$ $\qquad S_y = 3.32 \cdot in^3$

$M_{xMax} := \left(\frac{k_x}{k_x + k_y}\right) \cdot (P_{maxAR} \cdot y)$ $\qquad M_{xMax} = 4.1 \cdot kip \cdot ft$

$M'_{xAll} := ASI \cdot \left[\left(0.75 \cdot F_y\right) \cdot S_x\right]$ $\qquad M'_{xAll} = 17.1 \cdot kip \cdot ft$

$r_x := \frac{M_{xMax}}{M'_{xAll}}$ $\qquad r_x = 24 \cdot \%$

$$M_{yMax} := \begin{cases} \frac{k_y}{k_x + k_y} \cdot \left[\frac{P_{maxAR} \cdot a \cdot b^2}{(a+b)^2}\right] & \text{if } a \leq b \\ \frac{k_y}{k_x + k_y} \cdot \left[\frac{P_{maxAR} \cdot a^2 \cdot b}{(a+b)^2}\right] & \text{if } a > b \end{cases}$$ $\qquad M_{yMax} = 11.9 \cdot kip \cdot ft$

$M'_{yAll} := ASI \cdot \left[\left(0.75 \cdot F_y\right) \cdot S_y\right]$ $\qquad M'_{yAll} = 16.6 \cdot kip \cdot ft$

$$r_y := \frac{M_{yMax}}{M'_{yAll}}$$ $r_y = 72 \cdot \%$

$$r_{BPL} := \sqrt{r_x^{\,2} + r_y^{\,2}}$$ $r_{BPL} = 75 \cdot \%$

$$P_{maxShaft} := \left(\frac{k_x}{k_x + k_y}\right) \cdot P_{maxAR}$$ $P_{maxShaft} = 12.2 \cdot kip$

$$P_{tMaxSP} := \left(\frac{k_y}{k_x + k_y}\right) \cdot P_{maxAR}$$ $P_{tMaxSP} = 163.2 \cdot kip$

Output - Calculate Forces in TSP / SP's:

$l := a + b$ $l = 6.7 \cdot in$

$$P_{maxSP1} := \frac{P_{tMaxSP} \cdot b^2}{l^3} \cdot (b + 3 \cdot a)$$ $P_{maxSP1} = 87.3 \cdot kip$

$$P_{maxSP2} := \frac{P_{tMaxSP} \cdot a^2}{l^3} \cdot (a + 3 \cdot b)$$ $P_{maxSP2} = 75.9 \cdot kip$

$$P_{uBar1} := \begin{cases} \left(1 - \frac{d_{1Bar}}{d_{1Bar} + d_{2Bar}}\right) \cdot P_{uBar} & \text{if } TSP1 = \text{"Yes"} \\ 0 & \text{if } TSP1 = \text{"No"} \end{cases}$$ $P_{uBar1} = 0.0 \cdot kip$

$$P_{uBar2} := \begin{cases} \left(1 - \frac{d_{2Bar}}{d_{1Bar} + d_{2Bar}}\right) \cdot P_{uBar} & \text{if } TSP2 = \text{"Yes"} \\ 0 & \text{if } TSP2 = \text{"No"} \end{cases}$$ $P_{uBar2} = 162.7 \cdot kip$

$P_{tMaxSP1} := P_{maxSP1} + P_{uBar1} + P_{ADD1}$ $P_{tMaxSP1} = 87.3 \cdot kip$

$P_{tMaxSP2} := P_{maxSP2} + P_{uBar2} + P_{ADD2}$ $P_{tMaxSP2} = 238.6 \cdot kip$

Output - Calculate SP Section Properties *(LEFT Side)*:

$L_{VW1} := L_{SP1} - clip_1$ $L_{VW1} = 10.50 \cdot in$

$L_{HW1} := b_{SP1} - clip_1$ $L_{HW1} = 5.75 \cdot in$

$$\theta_1 := atan\left(\frac{b_{SP1}}{L_{SP1}}\right)$$ $\theta_1 = 30.02 \cdot deg$

$B_1 := L_{SP1} \cdot \sin(\theta_1)$ $B_1 = 5.63 \cdot in$

$$N_{B1} := \frac{clip_1}{(\sin(\theta_1) + \cos(\theta_1))}$$ $N_{B1} = 0.549 \cdot in$

$$N_1 := \frac{N_{B1}}{B_1}$$ $N_1 = 0.098$

$L_1 := \sqrt{L_{SP1}^2 + b_{SP1}^2}$ $\qquad L_1 = 12.99 \cdot in$

$r_1 := \frac{t_{SP1}}{\sqrt{12}}$ $\qquad r_1 = 0.217 \cdot in$

$x_1 := \frac{b_{SP1}}{2}$ $\qquad x_1 = 3.25 \cdot in$

Output - Calculate Compressive Strength of SP:

$C_{c1} := \sqrt{\frac{2 \cdot \pi^2 \cdot E}{F_{ySP1}}}$ $\qquad C_{c1} = 107.0$

$KLr_1 := \frac{K \cdot L_1}{r_1}$ $\qquad KLr_1 = 48.0$

$$F_{crB1} := \begin{cases} \left[\dfrac{\left[1 - \dfrac{(KLr_1)^2}{2 \cdot C_{c1}^2}\right] \cdot F_{ySP1}}{\dfrac{5}{3} + \dfrac{3}{8} \cdot \left(\dfrac{KLr_1}{C_{c1}}\right) - \dfrac{(KLr_1)^3}{8 \cdot C_{c1}^3}}\right] & \text{if } KLr_1 < C_{c1} \\ \left[\dfrac{12 \cdot \pi^2 \cdot E}{23 \cdot (KLr_1)^2}\right] & \text{if } KLr_1 \geq C_{c1} \end{cases}$$

$F_{crB1} = 24.7 \cdot ksi$

$\Delta F_{cr1} := F_{ySP1} - F_{crB1}$ $\qquad \Delta F_{cr1} = 25.3 \cdot ksi$

$P'_{allSP1} := \left[\frac{t_{SP1} \cdot B_1^2}{6 \cdot x_1} \cdot \left[3 \cdot F_{ySP1} \cdot \left(1 - N_1^2\right) - 2 \cdot (\Delta F_{cr1}) \cdot \left(1 - N_1^3\right)\right]\right] \cdot ASI$ $\qquad P'_{allSP1} = 159.1 \cdot kip$

$r_{cSP1} := \frac{P_{tMaxSP1}}{P'_{allSP1}}$ $\qquad r_{cSP1} = 55 \cdot \%$

Output - Calculate Shear and Tensile Strength of CAN-SP:

- Calculate Forces in SP:

$h_{V1} := clip_1 + \frac{L_{VW1}}{2}$ $\qquad h_{V1} = 6.00 \cdot in$

$V_{maxV1} := P_{tMaxSP1}$ = shear on Vertical leg $\qquad V_{maxV1} = 87.3 \cdot kip$

$T_{maxV1} := \frac{P_{tMaxSP1} \cdot x_1}{h_{V1}}$ = max tension on Vertical leg $\qquad T_{maxV1} = 47.3 \cdot kip$

$V_{maxH1} := \frac{P_{tMaxSP1} \cdot x_1}{h_{V1}}$ = shear on Horizontal leg $\qquad V_{maxH1} = 47.3 \cdot kip$

$T_{maxH1} := P_{tMaxSP1}$ = tension on Horizontal leg $\qquad T_{maxH1} = 87.3 \cdot kip$

- Shear Strength of *Vertical* Leg of SP:

$V'_{allV1} := \left[\left(0.4 \cdot F_{ySP1}\right) \cdot \left(L_{VW1} \cdot t_{SP1}\right)\right] \cdot ASI$ $\qquad V'_{allV1} = 210.0 \cdot kip$

$r_{vV1} := \dfrac{V_{maxV1}}{V'_{allV1}}$ $\qquad r_{vV1} = 42 \cdot \%$

- Tensile Strength of *Vertical* Leg of SP:

$T_{allV1} := \left[\left(0.6 \cdot F_{ySP1}\right) \cdot \left(L_{VW1} \cdot t_{SP1}\right)\right] \cdot ASI$ $\qquad T_{allV1} = 315.0 \cdot kip$

$r_{tV1} := \dfrac{T_{maxV1}}{T_{allV1}}$ $\qquad r_{tV1} = 15 \cdot \%$

- Combined Tension & Shear Strength of *Vertical* Leg of SP:

$r_{V1} := \left(\dfrac{T_{maxV1}}{T_{allV1}}\right) + \left(\dfrac{V_{maxV1}}{V'_{allV1}}\right)^2$ $\qquad r_{V1} = 32 \cdot \%$

- Shear Strength of *Horizontal* Leg of SP:

$V'_{allH1} := \left[\left(0.4 \cdot F_{ySP1}\right) \cdot \left(L_{HW1} \cdot t_{SP1}\right)\right] \cdot ASI$ $\qquad V'_{allH1} = 115.0 \cdot kip$

$r_{vH1} := \dfrac{V_{maxH1}}{V'_{allH1}}$ $\qquad r_{vH1} = 41 \cdot \%$

- Tensile Strength of *Horizontal* Leg of SP:

$T'_{allH1} := \left[\left(0.6 \cdot F_{ySP1}\right) \cdot \left(L_{HW1} \cdot t_{SP1}\right)\right] \cdot ASI$ $\qquad T'_{allH1}$

$r_{tH1} := \dfrac{T_{maxH1}}{T'_{allH1}}$ $\qquad r_{tH1} = 51 \cdot \%$

- Combined Tension & Shear Strength of *Horizontal* Leg of SP:

$r_{H1} := \left(\dfrac{T_{maxH1}}{T'_{allH1}}\right) + \left(\dfrac{V_{maxH1}}{V'_{allH1}}\right)^2$ $\qquad r_{H1} = 68 \cdot \%$

Output - Check Shear and Tensile Strength of Vertical SP Weld:

$\theta_v \equiv 0 \cdot deg$

$F_{w\_v1} := 0.30 \cdot F_{EXX1} \cdot \left(1.0 + 0.50 \cdot \sin\left(\theta_v\right)^{1.5}\right)$ $\qquad F_{w\_v1} = 21.0 \cdot ksi$

$\theta_t \equiv 90 \cdot deg$

$F_{w\_t1} := 0.30 \cdot F_{EXX1} \cdot \left(1.0 + 0.50 \cdot \sin\left(\theta_t\right)^{1.5}\right)$ $\qquad F_{w\_t1} = 31.5 \cdot ksi$

- Shear Strength of Vertical Weld:

$A_{wV1} := \left(0.707 \cdot t_{VW1}\right) \cdot L_{VW1}$ $\qquad A_{wV1} = 2.32 \cdot in^2$

$V'_{allVw1} := \left[2 \cdot \left(F_{w\_v1} \cdot A_{wV1}\right)\right] \cdot ASI$ $\qquad V'_{allVw1} = 130 \cdot kip$

$r_{vVw1} := \dfrac{V_{maxV1}}{V'_{allVw1}}$ $\qquad r_{vVw1} = 67 \cdot \%$

- Tensile Strength of Vertical Weld:

$T'_{allVw1} := \left[2\cdot\left(F_{w\_t1}\cdot A_{wV1}\right)\right]\cdot ASI$ $\qquad T'_{allVw1} = 195\cdot kip$

$r_{tVw1} := \dfrac{T_{maxV1}}{T'_{allVw1}}$ $\qquad r_{tVw1} = 24\cdot\%$

- Combined Tension & Shear Strength of Vertical Weld:

$r_{Vw1} := \left(\dfrac{T_{maxV1}}{T'_{allVw1}}\right) + \left(\dfrac{V_{maxV1}}{V'_{allVw1}}\right)^2$ $\qquad r_{Vw1} = 69\cdot\%$

Output - Check Design Shaft Punching Shear:

$V_{maxPS1} := T_{maxV1}$ $\qquad V_{maxPS1} = 47.3\cdot kip$

$V'_{all1} := 2\cdot\left[\left(0.4\cdot F_{yShaft}\right)\cdot\left(t_{shaft}\cdot L_{VW1}\right)\right]\cdot ASI$ $\qquad V'_{all1} = 227.5\cdot kip$

$r_{vPS1} := \dfrac{V_{maxPS1}}{V'_{all1}}$ $\qquad r_{vPS1} = 21\cdot\%$

Output - Calculate SP Section Properties *(RIGHT Side)*:

$L_{VW2} := L_{SP2} - clip_2$ $\qquad L_{VW2} = 44.00\cdot in$

$L_{HW2} := b_{SP2} - clip_2$ $\qquad L_{HW2} = 5.75\cdot in$

$\theta_2 := atan\left(\dfrac{b_{SP2}}{L_{SP2}}\right)$ $\qquad \theta_2 = 8.26\cdot deg$

$B_2 := L_{SP2}\cdot\sin\left(\theta_2\right)$ $\qquad B_2 = 6.43\cdot in$

$N_{B2} := \dfrac{clip_2}{\left(\sin\left(\theta_2\right) + \cos\left(\theta_2\right)\right)}$ $\qquad N_{B2} = 0.662\cdot in$

$N_2 := \dfrac{N_{B2}}{B_2}$ $\qquad N_2 = 0.103$

$L_2 := \sqrt{L_{SP2}^2 + b_{SP2}^2}$ $\qquad L_2 = 45.22\cdot in$

$r_2 := \dfrac{t_{SP2}}{\sqrt{12}}$ $\qquad r_2 = 0.397\cdot in$

$x_2 := \dfrac{b_{SP2}}{2}$ $\qquad x_2 = 3.25\cdot in$

Output - Calculate Compressive Strength of SP:

$C_{c2} := \sqrt{\dfrac{2\cdot\pi^2\cdot E}{F_{ySP2}}}$ $\qquad C_{c2} = 107.0$

$KLr_2 := \dfrac{K\cdot L_2}{r_2}$ $\qquad KLr_2 = 91.1$

$$F_{crB2} := \begin{cases} \left[\dfrac{\left[1 - \dfrac{(KLr_2)^2}{2 \cdot C_{c2}^2}\right] \cdot F_{ySP2}}{\dfrac{5}{3} + \dfrac{3}{8} \cdot \left(\dfrac{KLr_2}{C_{c2}}\right) - \dfrac{(KLr_2)^3}{8 \cdot C_{c2}^3}}\right] & \text{if } KLr_2 < C_{c2} \\ \left[\dfrac{12 \cdot \pi^2 \cdot E}{23 \cdot (KLr_2)^2}\right] & \text{if } KLr_2 \geq C_{c2} \end{cases}$$

$F_{crB2} = 16.7 \cdot ksi$

$$\Delta F_{cr2} := F_{ySP2} - F_{crB2}$$

$\Delta F_{cr2} = 33.3 \cdot ksi$

$$P'_{allSP2} := \left[\frac{t_{SP2} \cdot B_2^2}{6 \cdot x_2} \cdot \left[3 \cdot F_{ySP2} \cdot \left(1 - N_2^2\right) - 2 \cdot (\Delta F_{cr2}) \cdot \left(1 - N_2^3\right)\right]\right] \cdot ASI$$

$P'_{allSP2} = 318.5 \cdot kip$

$$r_{cSP2} := \frac{P_{tMaxSP2}}{P'_{allSP2}}$$

$r_{cSP2} = 75 \cdot \%$

Output - Calculate Shear and Tensile Strength of CAN-SP:

- Calculate Forces in SP:

$$h_{V2} := clip_2 + \frac{L_{VW2}}{2}$$

$h_{V2} = 22.75 \cdot in$

$V_{maxV2} := P_{tMaxSP2}$ = shear on Vertical leg

$V_{maxV2} = 238.6 \cdot kip$

$T_{maxV2} := \dfrac{P_{tMaxSP2} \cdot x_2}{h_{V2}}$ = max tension on Vertical leg

$T_{maxV2} = 34.1 \cdot kip$

$V_{maxH2} := \dfrac{P_{tMaxSP2} \cdot x_2}{h_{V2}}$ = shear on Horizontal leg

$V_{maxH2} = 34.1 \cdot kip$

$T_{maxH2} := P_{tMaxSP2}$ = tension on Horizontal leg

$T_{maxH2} = 238.6 \cdot kip$

- Shear Strength of *Vertical* Leg of SP:

$$V'_{allV2} := \left[(0.4 \cdot F_{ySP2}) \cdot (L_{VW2} \cdot t_{SP2})\right] \cdot ASI$$

$V'_{allV2} = 1613.3 \cdot kip$

$$r_{vV2} := \frac{V_{maxV2}}{V'_{allV2}}$$

$r_{vV2} = 15 \cdot \%$

- Tensile Strength of *Vertical* Leg of SP:

$$T_{allV2} := \left[(0.6 \cdot F_{ySP2}) \cdot (L_{VW2} \cdot t_{SP2})\right] \cdot ASI$$

$T_{allV2} = 2420.0 \cdot kip$

$$r_{tV2} := \frac{T_{maxV2}}{T_{allV2}}$$

$r_{tV2} = 1 \cdot \%$

- Combined Tension & Shear Strength of *Vertical* Leg of SP:

$$r_{V2} := \left(\frac{T_{maxV2}}{T_{allV2}}\right) + \left(\frac{V_{maxV2}}{V'_{allV2}}\right)^2 \qquad r_{V2} = 4 \cdot \%$$

- Shear Strength of *Horizontal* Leg of SP:

$$V'_{allH2} := \left[\left(0.4 \cdot F_{ySP2}\right) \cdot \left(L_{HW2} \cdot t_{SP2}\right)\right] \cdot ASI \qquad V'_{allH2} = 210.8 \cdot kip$$

$$r_{vH2} := \frac{V_{maxH2}}{V'_{allH2}} \qquad r_{vH2} = 16 \cdot \%$$

- Tensile Strength of *Horizontal* Leg of SP:

$$T'_{allH2} := \left[\left(0.6 \cdot F_{ySP2}\right) \cdot \left(L_{HW2} \cdot t_{SP2}\right)\right] \cdot ASI \qquad T'_{allH2} = 316.3 \cdot kip$$

$$r_{tH2} := \frac{T_{maxH2}}{T'_{allH2}} \qquad r_{tH2} = 75 \cdot \%$$

- Combined Tension & Shear Strength of *Horizontal* Leg of SP:

$$r_{H2} := \left(\frac{T_{maxH2}}{T'_{allH2}}\right) + \left(\frac{V_{maxH2}}{V'_{allH2}}\right)^2 \qquad r_{H2} = 78 \cdot \%$$

Output - Check Shear and Tensile Strength of Vertical SP Weld:

$$\theta_v \equiv 0 \cdot deg$$

$$F_{w\_v2} := 0.30 \cdot F_{EXX2} \cdot \left(1.0 + 0.50 \cdot \sin\left(\theta_v\right)^{1.5}\right) \qquad F_{w\_v2} = 21.0 \cdot ksi$$

$$\theta_t \equiv 90 \cdot deg$$

$$F_{w\_t2} := 0.30 \cdot F_{EXX2} \cdot \left(1.0 + 0.50 \cdot \sin\left(\theta_t\right)^{1.5}\right) \qquad F_{w\_t2} = 31.5 \cdot ksi$$

- Shear Strength of Vertical Weld:

$$A_{wV2} := \left(0.707 \cdot t_{VW2}\right) \cdot L_{VW2} \qquad A_{wV2} = 9.72 \cdot in^2$$

$$V'_{allVw2} := \left[2 \cdot \left(F_{w\_v2} \cdot A_{wV2}\right)\right] \cdot ASI \qquad V'_{allVw2} = 544 \cdot kip$$

$$r_{vVw2} := \frac{V_{maxV2}}{V'_{allVw2}} \qquad r_{vVw2} = 44 \cdot \%$$

- Tensile Strength of Vertical Weld:

$$T'_{allVw2} := \left[2 \cdot \left(F_{w\_t2} \cdot A_{wV2}\right)\right] \cdot ASI \qquad T'_{allVw2} = 817 \cdot kip$$

$$r_{tVw2} := \frac{T_{maxV2}}{T'_{allVw2}} \qquad r_{tVw2} = 4 \cdot \%$$

- Combined Tension & Shear Strength of Vertical Weld:

$$r_{Vw2} := \left(\frac{T_{maxV2}}{T'_{allVw2}}\right) + \left(\frac{V_{maxV2}}{V'_{allVw2}}\right)^2 \qquad r_{Vw2} = 23 \cdot \%$$

Output - Check Design Shaft Punching Shear:

$V_{maxPS2} := T_{maxV2}$ $\qquad V_{maxPS2} = 34.1 \cdot kip$

$V'_{all2} := 2 \cdot \left[\left(0.4 \cdot F_{yShaft}\right) \cdot \left(t_{shaft} \cdot L_{VW2}\right)\right] \cdot ASI$ $\qquad V'_{all2} = 953.3 \cdot kip$

$r_{vPS2} := \dfrac{V_{maxPS2}}{V'_{all2}}$ $\qquad r_{vPS2} = 4 \cdot \%$

Output - Results Summary:

- Anchor Rods & Base Plate:

$result_{AR} := \max\left(r_{AR}\right)$ $\qquad result_{AR} = 90 \cdot \%$

$result_{BPL} := \begin{pmatrix} r_x \\ r_y \\ r_{BPL} \end{pmatrix}$ $\qquad result_{BPL} = \begin{pmatrix} 24 \\ 72 \\ 75 \end{pmatrix} \cdot \%$

$Max_{Utilization\_AR\_BPL} := \max\left(result_{AR}, result_{BPL}\right)$ $\qquad Max_{Utilization\_AR\_BPL} = 90 \cdot \%$

- SP on Left Side:

$result_{SP1} := \begin{pmatrix} r_{cSP1} \\ r_{vV1} \\ r_{tV1} \\ r_{V1} \\ r_{vH1} \\ r_{tH1} \\ r_{H1} \end{pmatrix}$ $\qquad result_{SP1} = \begin{pmatrix} 55 \\ 42 \\ 15 \\ 32 \\ 41 \\ 51 \\ 68 \end{pmatrix} \cdot \%$

$result_{SPweld1} := \begin{pmatrix} r_{vVw1} \\ r_{tVw1} \\ r_{Vw1} \end{pmatrix}$ $\qquad result_{SPweld1} = \begin{pmatrix} 67 \\ 24 \\ 69 \end{pmatrix} \cdot \%$

$result_{shaft1} := r_{vPS1}$ $\qquad result_{shaft1} = 21 \cdot \%$

$L_{SP1reqd} := \begin{cases} [z + n \cdot (3 \cdot in) + h] & \text{if } TSP1 = \text{"Yes"} \\ \text{"N/A"} & \text{if } TSP1 = \text{"No"} \end{cases}$ $\qquad L_{SP1reqd} = \text{"N/A"} \cdot in$

$L_{SP1check} := \begin{cases} \text{"N/A"} & \text{if } TSP1 = \text{"No"} \\ \begin{cases} \text{"OK"} & \text{if } L_{SP1} \geq L_{SP1reqd} \\ \text{"NG"} & \text{if } L_{SP1} < L_{SP1reqd} \end{cases} & \text{if } TSP1 = \text{"Yes"} \end{cases}$ $\qquad L_{SP1check} = \text{"N/A"}$

$Max_{Utilization\_SP1} := \max\left(result_{SP1}, result_{SPweld1}, result_{shaft1}\right)$ $\qquad Max_{Utilization\_SP1} = 69 \cdot \%$

- SP on Right Side:

$$result_{SP2} := \begin{pmatrix} r_{cSP2} \\ r_{vV2} \\ r_{tV2} \\ r_{V2} \\ r_{vH2} \\ r_{tH2} \\ r_{H2} \end{pmatrix} \qquad result_{SP2} = \begin{pmatrix} 75 \\ 15 \\ 1 \\ 4 \\ 16 \\ 75 \\ 78 \end{pmatrix} \cdot \%$$

$$result_{SPweld2} := \begin{pmatrix} r_{vVw2} \\ r_{tVw2} \\ r_{Vw2} \end{pmatrix} \qquad result_{SPweld2} = \begin{pmatrix} 44 \\ 4 \\ 23 \end{pmatrix} \cdot \%$$

$$result_{shaft2} := r_{vPS2} \qquad result_{shaft2} = 4 \cdot \%$$

$$L_{SP2reqd} := \begin{cases} [z + n \cdot (3 \cdot in) + h] & \text{if } TSP2 = \text{"Yes"} \\ \text{"N/A"} & \text{if } TSP2 = \text{"No"} \end{cases} \qquad L_{SP2reqd} = 44.75 \cdot in$$

$$L_{SP2check} := \begin{cases} \text{"N/A"} & \text{if } TSP2 = \text{"No"} \\ \begin{cases} \text{"OK"} & \text{if } L_{SP2} \geq L_{SP2reqd} \\ \text{"NG"} & \text{if } L_{SP2} < L_{SP2reqd} \end{cases} & \text{if } TSP2 = \text{"Yes"} \end{cases} \qquad L_{SP2check} = \text{"OK"}$$

$$Max_{Utilization\_SP2} := \max(result_{SP2}, result_{SPweld2}, result_{shaft2}) \qquad Max_{Utilization\_SP2} = 78 \cdot \%$$

$$Max_{Utilization} := \max(Max_{Utilization\_AR\_BPL}, Max_{Utilization\_SP1}, Max_{Utilization\_SP2}) \qquad Max_{Utilization} = 90 \cdot \%$$

$t_{SP1} = 0.750 \cdot in$	$t_{SP2} = 1.375 \cdot in$
$b_{SP1} = 6.500 \cdot in$	$b_{SP2} = 6.500 \cdot in$
$L_{SP1} = 11.25 \cdot in$	$L_{SP2} = 44.75 \cdot in$

Input

CONSTANTS:

$E \equiv 29000 \cdot ksi$

$K \equiv 0.8$

$ASI \equiv \frac{4}{3}$

- Reactions & Forces:

$M := 3801 \cdot kip \cdot ft$ = max moment reaction at top of base plate

$P := 41 \cdot kip$ = max axial reaction at top of base plate

$P_{ADD1} := 0 \cdot kip$ = additional axial force to SP on opposite side of SP (left side)

$P_{ADD2} := 0 \cdot kip$ = additional axial force to SP on opposite side of SP (right side)

- Shaft:

$t_{shaft} := 0.3125 \cdot in$ = thickness of shaft

$F_{yShaft} := 65 \cdot ksi$ = specified minimum yield stress of shaft

- Base Plate:

$t_{bpl} := 1.75 \cdot in$ = thickness of base plate

$F_y := 60 \cdot ksi$ = specified minimum yield stress of shaft

$a := 3.125 \cdot in$ = distance from centerline of stiffener plate on left side to center of anchor rod

$b := 3.9375 \cdot in$ = distance from centerline of stiffener plate on right side to center of anchor rod

$y := 4.0 \cdot in$ = distance from shaft wall to center of anchor rod

- Bar:

$P_{uBar} := 387 \cdot kip$ = axial force from bar (see Pole Tool-F v1.6.xls)

$d_{1Bar} := 6.375 \cdot in$ = distance from center of bar to edge of TSP (left side)

$d_{2Bar} := 4.625 \cdot in$ = distance from center of bar to edge of TSP (right side)

$n := 9$ = number of termination bolts

$z := 11.75 \cdot in$ = height above base plate to bottom of bar / height above SP

$h := 6 \cdot in$ = height above top termination bolt to top of TSP

- Transition / Stiffener Plates:

  - TSP / SP on Left Side of AR:

$TSP1 := \text{"No"}$ = TSP on left side = "Yes"; SP on left side = "No"

$b_{SP1} := 6.5 \cdot in$ = width of stiffener plate

$t_{SP1} := 0.75 \cdot in$ = thickness of stiffener plate

$L_{SP1} := 11.25 \cdot in$ = length of stiffener plate

$clip_1 := 0.75 \cdot in$ = length of clip

$t_{VW1} := 0.3125 \cdot in$ = thickness of vertical weld

$F_{ySP1} := 50 \cdot ksi$ = specified minimum yield stress of SP material

$F_{EXX1} := 70 \cdot ksi$ = specified minimum ultimate stress of weld electrode

$k_1 := b_{SP1} - y$ = distance from center of anchor rod to edge of base plate / edge of stiffener plate

$k_1 = 2.500 \cdot in$

- TSP / SP on Right Side of AR:

$TSP2 := \text{"Yes"}$ = TSP on right side = "Yes"; SP on right side = "No"

$b_{SP2} := 6.5 \cdot in$ = width of stiffener plate

$t_{SP2} := 1.375 \cdot in$ = thickness of stiffener plate

$L_{SP2} := 44.75 \cdot in$ = length of stiffener plate

$clip_2 := 0.75 \cdot in$ = length of clip

$t_{VW2} := 0.3125 \cdot in$ = thickness of vertical weld

$F_{ySP2} := 50 \cdot ksi$ = specified minimum yield stress of SP material

$F_{EXX2} := 70 \cdot ksi$ = specified minimum ultimate stress of weld electrode

$k_2 := b_{SP2} - y$ = distance from center of anchor rod to edge of base plate / edge of stiffener plate

$k_2 = 2.500 \cdot in$

- Anchor Rods:

$$Q := \begin{pmatrix} 2 \\ 4 \\ 4 \\ 4 \\ 2 \\ 0 \\ 0 \end{pmatrix} \qquad d := \begin{pmatrix} 2 \cdot 12 + 9 \\ 2 \cdot 12 + 6 + \frac{1}{2} \\ 1 \cdot 12 + 11 + \frac{5}{16} \\ 1 \cdot 12 + \frac{5}{8} \\ 0 \\ 0 \\ 0 \end{pmatrix} \cdot in \qquad A_{stiff} := \begin{pmatrix} 3.98 \\ 3.98 \\ 3.98 \\ 3.98 \\ 3.98 \\ 0 \\ 0 \end{pmatrix} in^2 \qquad A_{stress} := \begin{pmatrix} 3.25 \\ 3.25 \\ 3.25 \\ 3.25 \\ 3.25 \\ 0 \\ 0 \end{pmatrix} in^2 \qquad F_t := \begin{pmatrix} 0.6 \cdot 75 \\ 0.6 \cdot 75 \\ 0.6 \cdot 75 \\ 0.6 \cdot 75 \\ 0.6 \cdot 75 \\ 0 \\ 0 \end{pmatrix} \cdot ksi$$

Output - Anchor Rod, Deformation Method:

$$R := \frac{M \cdot \overrightarrow{\left(d \cdot A_{stiff}\right)}}{sumQAd} + \frac{P \cdot A_{stiff}}{\sum \overrightarrow{\left(A_{stiff} \cdot Q\right)}} \qquad sumQAd := \sum \overrightarrow{\left(Q \cdot d^2 \cdot A_{stiff}\right)} \qquad sumQAd = 34668 \cdot in^4$$

ϕRnt = nominal tension strength
d = distance from center
A = area of fastener
Q = quantity of fasteners

$$f_t := \overrightarrow{\left(\frac{R}{A_{stress}}\right)} \qquad r_{AR} := \overrightarrow{\left(\frac{f_t}{ASI \cdot F_t}\right)}$$

$$R = \begin{pmatrix} 175.4 \\ 162.3 \\ 124.6 \\ 68.7 \\ 2.6 \\ 0.0 \\ 0.0 \end{pmatrix} \cdot kip \qquad f_t = \begin{pmatrix} 54.0 \\ 49.9 \\ 38.4 \\ 21.1 \\ 0.8 \\ 0.0 \\ 0.0 \end{pmatrix} \cdot ksi \qquad r_{AR} = \begin{pmatrix} 90 \\ 83 \\ 64 \\ 35 \\ 1 \\ 0 \\ 0 \end{pmatrix} \cdot \%$$

Output - Check Base Plate Flexure:

$P_{maxAR} := \max(R)$ $\qquad P_{maxAR} = 175 \cdot kip$

$t := t_{bpl}$ $\qquad t = 1.75 \cdot in$

$k := \min(k_1, k_2)$ $\qquad k = 2.50 \cdot in$

$I_x := \frac{(a+b) \cdot t^3}{12}$ $\qquad I_x = 3.15 \cdot in^4$

$k_x := \frac{3 \cdot I_x}{y^3}$ $\qquad k_x = 0.15 \cdot in$

$S_x := \frac{I_x}{\left(\frac{t}{2}\right)}$ $\qquad S_x = 3.60 \cdot in^3$

$I_y := \frac{(y+k) \cdot t^3}{12}$ $\qquad I_y = 2.90 \cdot in^4$

$$k_y := \begin{cases} \frac{3 \cdot I_y \cdot (3 \cdot a + b)^2}{2 \cdot a^3 \cdot b^2} & \text{if } a \geq b \\ \frac{3 \cdot I_y \cdot (3 \cdot b + a)^2}{2 \cdot b^3 \cdot a^2} & \text{if } a < b \end{cases}$$ $\qquad k_y = 1.63 \cdot in$

$S_y := \frac{I_y}{\left(\frac{t}{2}\right)}$ $\qquad S_y = 3.32 \cdot in^3$

$M_{xMax} := \left(\frac{k_x}{k_x + k_y}\right) \cdot (P_{maxAR} \cdot y)$ $\qquad M_{xMax} = 4.9 \cdot kip \cdot ft$

$M'_{xAll} := ASI \cdot \left[(0.75 \cdot F_y) \cdot S_x\right]$ $\qquad M'_{xAll} = 18.0 \cdot kip \cdot ft$

$r_x := \frac{M_{xMax}}{M'_{xAll}}$ $\qquad r_x = 27 \cdot \%$

$$M_{yMax} := \begin{cases} \frac{k_y}{k_x + k_y} \cdot \left[\frac{P_{maxAR} \cdot a \cdot b^2}{(a+b)^2}\right] & \text{if } a \leq b \\ \frac{k_y}{k_x + k_y} \cdot \left[\frac{P_{maxAR} \cdot a^2 \cdot b}{(a+b)^2}\right] & \text{if } a > b \end{cases}$$ $\qquad M_{yMax} = 13.0 \cdot kip \cdot ft$

$M'_{yAll} := ASI \cdot \left[(0.75 \cdot F_y) \cdot S_y\right]$ $\qquad M'_{yAll} = 16.6 \cdot kip \cdot ft$

$r_y := \frac{M_{yMax}}{M'_{yAll}}$ $\qquad r_y = 78 \cdot \%$

$r_{BPL} := \sqrt{r_x^{\,2} + r_y^{\,2}}$ $\qquad r_{BPL} = 83 \cdot \%$

$P_{maxShaft} := \left(\frac{k_x}{k_x + k_y}\right) \cdot P_{maxAR}$ $\qquad P_{maxShaft} = 14.6 \cdot kip$

$P_{tMaxSP} := \left(\frac{k_y}{k_x + k_y}\right) \cdot P_{maxAR}$ $\qquad P_{tMaxSP} = 160.8 \cdot kip$

Output - Calculate Forces in TSP / SP's:

$l := a + b$ $\qquad l = 7.1 \cdot in$

$P_{maxSP1} := \frac{P_{tMaxSP} \cdot b^2}{l^3} \cdot (b + 3 \cdot a)$ $\qquad P_{maxSP1} = 94.2 \cdot kip$

$P_{maxSP2} := \frac{P_{tMaxSP} \cdot a^2}{l^3} \cdot (a + 3 \cdot b)$ $\qquad P_{maxSP2} = 66.6 \cdot kip$

$P_{uBar1} := \begin{cases} \left(1 - \frac{d_{1Bar}}{d_{1Bar} + d_{2Bar}}\right) \cdot P_{uBar} & \text{if } TSP1 = \text{"Yes"} \\ 0 & \text{if } TSP1 = \text{"No"} \end{cases}$ $\qquad P_{uBar1} = 0.0 \cdot kip$

$P_{uBar2} := \begin{cases} \left(1 - \frac{d_{2Bar}}{d_{1Bar} + d_{2Bar}}\right) \cdot P_{uBar} & \text{if } TSP2 = \text{"Yes"} \\ 0 & \text{if } TSP2 = \text{"No"} \end{cases}$ $\qquad P_{uBar2} = 224.3 \cdot kip$

$P_{tMaxSP1} := P_{maxSP1} + P_{uBar1} + P_{ADD1}$ $\qquad P_{tMaxSP1} = 94.2 \cdot kip$

$P_{tMaxSP2} := P_{maxSP2} + P_{uBar2} + P_{ADD2}$ $\qquad P_{tMaxSP2} = 290.9 \cdot kip$

Output - Calculate SP Section Properties *(LEFT Side)*:

$L_{VW1} := L_{SP1} - clip_1$ $\qquad L_{VW1} = 10.50 \cdot in$

$L_{HW1} := b_{SP1} - clip_1$ $\qquad L_{HW1} = 5.75 \cdot in$

$\theta_1 := atan\left(\frac{b_{SP1}}{L_{SP1}}\right)$ $\qquad \theta_1 = 30.02 \cdot deg$

$B_1 := L_{SP1} \cdot \sin(\theta_1)$ $\qquad B_1 = 5.63 \cdot in$

$N_{B1} := \frac{clip_1}{(\sin(\theta_1) + \cos(\theta_1))}$ $\qquad N_{B1} = 0.549 \cdot in$

$N_1 := \frac{N_{B1}}{B_1}$ $\qquad N_1 = 0.098$

$$L_1 := \sqrt{L_{SP1}^2 + b_{SP1}^2} \qquad L_1 = 12.99 \cdot in$$

$$r_1 := \frac{t_{SP1}}{\sqrt{12}} \qquad r_1 = 0.217 \cdot in$$

$$x_1 := \frac{b_{SP1}}{2} \qquad x_1 = 3.25 \cdot in$$

Output - Calculate Compressive Strength of SP:

$$C_{c1} := \sqrt{\frac{2 \cdot \pi^2 \cdot E}{F_{ySP1}}} \qquad C_{c1} = 107.0$$

$$KLr_1 := \frac{K \cdot L_1}{r_1} \qquad KLr_1 = 48.0$$

$$F_{crB1} := \begin{cases} \left[\dfrac{\left[1 - \dfrac{(KLr_1)^2}{2 \cdot C_{c1}^2}\right] \cdot F_{ySP1}}{\dfrac{5}{3} + \dfrac{3}{8} \cdot \left(\dfrac{KLr_1}{C_{c1}}\right) - \dfrac{(KLr_1)^3}{8 \cdot C_{c1}^3}}\right] & \text{if } KLr_1 < C_{c1} \\ \left[\dfrac{12 \cdot \pi^2 \cdot E}{23 \cdot (KLr_1)^2}\right] & \text{if } KLr_1 \geq C_{c1} \end{cases} \qquad F_{crB1} = 24.7 \cdot ksi$$

$$\Delta F_{cr1} := F_{ySP1} - F_{crB1} \qquad \Delta F_{cr1} = 25.3 \cdot ksi$$

$$P'_{allSP1} := \left[\frac{t_{SP1} \cdot B_1^2}{6 \cdot x_1} \cdot \left[3 \cdot F_{ySP1} \cdot \left(1 - N_1^2\right) - 2 \cdot \left(\Delta F_{cr1}\right) \cdot \left(1 - N_1^3\right)\right]\right] \cdot ASI \qquad P'_{allSP1} = 159.1 \cdot kip$$

$$r_{cSP1} := \frac{P_{tMaxSP1}}{P'_{allSP1}} \qquad r_{cSP1} = 59 \cdot \%$$

Output - Calculate Shear and Tensile Strength of CAN-SP:

- Calculate Forces in SP:

$$h_{V1} := clip_1 + \frac{L_{VW1}}{2} \qquad h_{V1} = 6.00 \cdot in$$

$V_{maxV1} := P_{tMaxSP1}$ = shear on Vertical leg $\qquad V_{maxV1} = 94.2 \cdot kip$

$T_{maxV1} := \dfrac{P_{tMaxSP1} \cdot x_1}{h_{V1}}$ = max tension on Vertical leg $\qquad T_{maxV1} = 51.0 \cdot kip$

$V_{maxH1} := \dfrac{P_{tMaxSP1} \cdot x_1}{h_{V1}}$ = shear on Horizontal leg $\qquad V_{maxH1} = 51.0 \cdot kip$

$T_{maxH1} := P_{tMaxSP1}$ = tension on Horizontal leg $\qquad T_{maxH1} = 94.2 \cdot kip$

- Shear Strength of *Vertical* Leg of SP:

$V'_{allV1} := \left[\left(0.4 \cdot F_{ySP1}\right) \cdot \left(L_{VW1} \cdot t_{SP1}\right)\right] \cdot ASI$ $\qquad V'_{allV1} = 210.0 \cdot kip$

$r_{vV1} := \dfrac{V_{maxV1}}{V'_{allV1}}$ $\qquad r_{vV1} = 45 \cdot \%$

- Tensile Strength of *Vertical* Leg of SP:

$T_{allV1} := \left[\left(0.6 \cdot F_{ySP1}\right) \cdot \left(L_{VW1} \cdot t_{SP1}\right)\right] \cdot ASI$ $\qquad T_{allV1} = 315.0 \cdot kip$

$r_{tV1} := \dfrac{T_{maxV1}}{T_{allV1}}$ $\qquad r_{tV1} = 16 \cdot \%$

- Combined Tension & Shear Strength of *Vertical* Leg of SP:

$r_{V1} := \left(\dfrac{T_{maxV1}}{T_{allV1}}\right) + \left(\dfrac{V_{maxV1}}{V'_{allV1}}\right)^2$ $\qquad r_{V1} = 36 \cdot \%$

- Shear Strength of *Horizontal* Leg of SP:

$V'_{allH1} := \left[\left(0.4 \cdot F_{ySP1}\right) \cdot \left(L_{HW1} \cdot t_{SP1}\right)\right] \cdot ASI$ $\qquad V'_{allH1} = 115.0 \cdot kip$

$r_{vH1} := \dfrac{V_{maxH1}}{V'_{allH1}}$ $\qquad r_{vH1} = 44 \cdot \%$

- Tensile Strength of *Horizontal* Leg of SP:

$T'_{allH1} := \left[\left(0.6 \cdot F_{ySP1}\right) \cdot \left(L_{HW1} \cdot t_{SP1}\right)\right] \cdot ASI$ $\qquad T'_{allH1}$

$r_{tH1} := \dfrac{T_{maxH1}}{T'_{allH1}}$ $\qquad r_{tH1} = 55 \cdot \%$

- Combined Tension & Shear Strength of *Horizontal* Leg of SP:

$r_{H1} := \left(\dfrac{T_{maxH1}}{T'_{allH1}}\right) + \left(\dfrac{V_{maxH1}}{V'_{allH1}}\right)^2$ $\qquad r_{H1} = 74 \cdot \%$

Output - Check Shear and Tensile Strength of Vertical SP Weld:

$\theta_v \equiv 0 \cdot deg$

$F_{w\_v1} := 0.30 \cdot F_{EXX1} \cdot \left(1.0 + 0.50 \cdot \sin\left(\theta_v\right)^{1.5}\right)$ $\qquad F_{w\_v1} = 21.0 \cdot ksi$

$\theta_t \equiv 90 \cdot deg$

$F_{w\_t1} := 0.30 \cdot F_{EXX1} \cdot \left(1.0 + 0.50 \cdot \sin\left(\theta_t\right)^{1.5}\right)$ $\qquad F_{w\_t1} = 31.5 \cdot ksi$

- Shear Strength of Vertical Weld:

$A_{wV1} := \left(0.707 \cdot t_{VW1}\right) \cdot L_{VW1}$ $\qquad A_{wV1} = 2.32 \cdot in^2$

$V'_{allVw1} := \left[2 \cdot \left(F_{w\_v1} \cdot A_{wV1}\right)\right] \cdot ASI$ $\qquad V'_{allVw1} = 130 \cdot kip$

$r_{vVw1} := \dfrac{V_{maxV1}}{V'_{allVw1}}$ $\qquad r_{vVw1} = 73 \cdot \%$

- Tensile Strength of Vertical Weld:

$T'_{allVw1} := \left[2\cdot\left(F_{w\_t1}\cdot A_{wV1}\right)\right]\cdot ASI$ $\qquad T'_{allVw1} = 195\cdot kip$

$r_{tVw1} := \dfrac{T_{maxV1}}{T'_{allVw1}}$ $\qquad r_{tVw1} = 26\cdot\%$

- Combined Tension & Shear Strength of Vertical Weld:

$r_{Vw1} := \left(\dfrac{T_{maxV1}}{T'_{allVw1}}\right) + \left(\dfrac{V_{maxV1}}{V'_{allVw1}}\right)^2$ $\qquad r_{Vw1} = 79\cdot\%$

Output - Check Design Shaft Punching Shear:

$V_{maxPS1} := T_{maxV1}$ $\qquad V_{maxPS1} = 51.0\cdot kip$

$V'_{all1} := 2\cdot\left[\left(0.4\cdot F_{yShaft}\right)\cdot\left(t_{shaft}\cdot L_{VW1}\right)\right]\cdot ASI$ $\qquad V'_{all1} = 227.5\cdot kip$

$r_{vPS1} := \dfrac{V_{maxPS1}}{V'_{all1}}$ $\qquad r_{vPS1} = 22\cdot\%$

Output - Calculate SP Section Properties *(RIGHT Side)*:

$L_{VW2} := L_{SP2} - clip_2$ $\qquad L_{VW2} = 44.00\cdot in$

$L_{HW2} := b_{SP2} - clip_2$ $\qquad L_{HW2} = 5.75\cdot in$

$\theta_2 := atan\left(\dfrac{b_{SP2}}{L_{SP2}}\right)$ $\qquad \theta_2 = 8.26\cdot deg$

$B_2 := L_{SP2}\cdot\sin(\theta_2)$ $\qquad B_2 = 6.43\cdot in$

$N_{B2} := \dfrac{clip_2}{\left(\sin(\theta_2) + \cos(\theta_2)\right)}$ $\qquad N_{B2} = 0.662\cdot in$

$N_2 := \dfrac{N_{B2}}{B_2}$ $\qquad N_2 = 0.103$

$L_2 := \sqrt{L_{SP2}^2 + b_{SP2}^2}$ $\qquad L_2 = 45.22\cdot in$

$r_2 := \dfrac{t_{SP2}}{\sqrt{12}}$ $\qquad r_2 = 0.397\cdot in$

$x_2 := \dfrac{b_{SP2}}{2}$ $\qquad x_2 = 3.25\cdot in$

Output - Calculate Compressive Strength of SP:

$C_{c2} := \sqrt{\dfrac{2\cdot\pi^2\cdot E}{F_{ySP2}}}$ $\qquad C_{c2} = 107.0$

$KLr_2 := \dfrac{K\cdot L_2}{r_2}$ $\qquad KLr_2 = 91.1$

$$F_{crB2} := \begin{cases} \left[\dfrac{\left[1 - \dfrac{(KLr_2)^2}{2 \cdot C_{c2}^2}\right] \cdot F_{ySP2}}{\dfrac{5}{3} + \dfrac{3}{8} \cdot \left(\dfrac{KLr_2}{C_{c2}}\right) - \dfrac{(KLr_2)^3}{8 \cdot C_{c2}^3}}\right] & \text{if } KLr_2 < C_{c2} \\ \left[\dfrac{12 \cdot \pi^2 \cdot E}{23 \cdot (KLr_2)^2}\right] & \text{if } KLr_2 \geq C_{c2} \end{cases}$$

$F_{crB2} = 16.7 \cdot ksi$

$\Delta F_{cr2} := F_{ySP2} - F_{crB2}$

$\Delta F_{cr2} = 33.3 \cdot ksi$

$$P'_{allSP2} := \left[\frac{t_{SP2} \cdot B_2^2}{6 \cdot x_2} \cdot \left[3 \cdot F_{ySP2} \cdot \left(1 - N_2^2\right) - 2 \cdot (\Delta F_{cr2}) \cdot \left(1 - N_2^3\right)\right]\right] \cdot ASI$$

$P'_{allSP2} = 318.5 \cdot kip$

$$r_{cSP2} := \frac{P_{tMaxSP2}}{P'_{allSP2}}$$

$r_{cSP2} = 91 \cdot \%$

Output - Calculate Shear and Tensile Strength of CAN-SP:

- Calculate Forces in SP:

$$h_{V2} := clip_2 + \frac{L_{VW2}}{2}$$

$h_{V2} = 22.75 \cdot in$

$V_{maxV2} := P_{tMaxSP2}$ = shear on Vertical leg

$V_{maxV2} = 290.9 \cdot kip$

$$T_{maxV2} := \frac{P_{tMaxSP2} \cdot x_2}{h_{V2}}$$ = max tension on Vertical leg

$T_{maxV2} = 41.6 \cdot kip$

$$V_{maxH2} := \frac{P_{tMaxSP2} \cdot x_2}{h_{V2}}$$ = shear on Horizontal leg

$V_{maxH2} = 41.6 \cdot kip$

$T_{maxH2} := P_{tMaxSP2}$ = tension on Horizontal leg

$T_{maxH2} = 290.9 \cdot kip$

- Shear Strength of *Vertical* Leg of SP:

$V'_{allV2} := \left[(0.4 \cdot F_{ySP2}) \cdot (L_{VW2} \cdot t_{SP2})\right] \cdot ASI$

$V'_{allV2} = 1613.3 \cdot kip$

$$r_{vV2} := \frac{V_{maxV2}}{V'_{allV2}}$$

$r_{vV2} = 18 \cdot \%$

- Tensile Strength of *Vertical* Leg of SP:

$T_{allV2} := \left[(0.6 \cdot F_{ySP2}) \cdot (L_{VW2} \cdot t_{SP2})\right] \cdot ASI$

$T_{allV2} = 2420.0 \cdot kip$

$$r_{tV2} := \frac{T_{maxV2}}{T_{allV2}}$$

$r_{tV2} = 2 \cdot \%$

- Combined Tension & Shear Strength of *Vertical* Leg of SP:

$$r_{V2} := \left(\frac{T_{maxV2}}{T_{allV2}}\right) + \left(\frac{V_{maxV2}}{V'_{allV2}}\right)^2 \qquad r_{V2} = 5 \cdot \%$$

- Shear Strength of *Horizontal* Leg of SP:

$$V'_{allH2} := \left[\left(0.4 \cdot F_{ySP2}\right) \cdot \left(L_{HW2} \cdot t_{SP2}\right)\right] \cdot ASI \qquad V'_{allH2} = 210.8 \cdot kip$$

$$r_{vH2} := \frac{V_{maxH2}}{V'_{allH2}} \qquad r_{vH2} = 20 \cdot \%$$

- Tensile Strength of *Horizontal* Leg of SP:

$$T'_{allH2} := \left[\left(0.6 \cdot F_{ySP2}\right) \cdot \left(L_{HW2} \cdot t_{SP2}\right)\right] \cdot ASI \qquad T'_{allH2} = 316.3 \cdot kip$$

$$r_{tH2} := \frac{T_{maxH2}}{T'_{allH2}} \qquad r_{tH2} = 92 \cdot \%$$

- Combined Tension & Shear Strength of *Horizontal* Leg of SP:

$$r_{H2} := \left(\frac{T_{maxH2}}{T'_{allH2}}\right) + \left(\frac{V_{maxH2}}{V'_{allH2}}\right)^2 \qquad r_{H2} = 96 \cdot \%$$

Output - Check Shear and Tensile Strength of Vertical SP Weld:

$$\theta_v \equiv 0 \cdot deg$$

$$F_{w\_v2} := 0.30 \cdot F_{EXX2} \cdot \left(1.0 + 0.50 \cdot \sin\left(\theta_v\right)^{1.5}\right) \qquad F_{w\_v2} = 21.0 \cdot ksi$$

$$\theta_t \equiv 90 \cdot deg$$

$$F_{w\_t2} := 0.30 \cdot F_{EXX2} \cdot \left(1.0 + 0.50 \cdot \sin\left(\theta_t\right)^{1.5}\right) \qquad F_{w\_t2} = 31.5 \cdot ksi$$

- Shear Strength of Vertical Weld:

$$A_{wV2} := \left(0.707 \cdot t_{VW2}\right) \cdot L_{VW2} \qquad A_{wV2} = 9.72 \cdot in^2$$

$$V'_{allVw2} := \left[2 \cdot \left(F_{w\_v2} \cdot A_{wV2}\right)\right] \cdot ASI \qquad V'_{allVw2} = 544 \cdot kip$$

$$r_{vVw2} := \frac{V_{maxV2}}{V'_{allVw2}} \qquad r_{vVw2} = 53 \cdot \%$$

- Tensile Strength of Vertical Weld:

$$T'_{allVw2} := \left[2 \cdot \left(F_{w\_t2} \cdot A_{wV2}\right)\right] \cdot ASI \qquad T'_{allVw2} = 817 \cdot kip$$

$$r_{tVw2} := \frac{T_{maxV2}}{T'_{allVw2}} \qquad r_{tVw2} = 5 \cdot \%$$

- Combined Tension & Shear Strength of Vertical Weld:

$$r_{Vw2} := \left(\frac{T_{maxV2}}{T'_{allVw2}}\right) + \left(\frac{V_{maxV2}}{V'_{allVw2}}\right)^2 \qquad r_{Vw2} = 34 \cdot \%$$

Output - Check Design Shaft Punching Shear:

$V_{maxPS2} := T_{maxV2}$ $\qquad V_{maxPS2} = 41.6 \cdot kip$

$V'_{all2} := 2 \cdot \left[\left(0.4 \cdot F_{yShaft}\right) \cdot \left(t_{shaft} \cdot L_{VW2}\right) \right] \cdot ASI$ $\qquad V'_{all2} = 953.3 \cdot kip$

$r_{vPS2} := \dfrac{V_{maxPS2}}{V'_{all2}}$ $\qquad r_{vPS2} = 4 \cdot \%$

Output - Results Summary:

- Anchor Rods & Base Plate:

$result_{AR} := \max\left(r_{AR}\right)$ $\qquad result_{AR} = 90 \cdot \%$

$result_{BPL} := \begin{pmatrix} r_x \\ r_y \\ r_{BPL} \end{pmatrix}$ $\qquad result_{BPL} = \begin{pmatrix} 27 \\ 78 \\ 83 \end{pmatrix} \cdot \%$

$Max_{Utilization\_AR\_BPL} := \max\left(result_{AR}, result_{BPL}\right)$ $\qquad Max_{Utilization\_AR\_BPL} = 90 \cdot \%$

- SP on Left Side:

$result_{SP1} := \begin{pmatrix} r_{cSP1} \\ r_{vV1} \\ r_{tV1} \\ r_{V1} \\ r_{vH1} \\ r_{tH1} \\ r_{H1} \end{pmatrix}$ $\qquad result_{SP1} = \begin{pmatrix} 59 \\ 45 \\ 16 \\ 36 \\ 44 \\ 55 \\ 74 \end{pmatrix} \cdot \%$

$result_{SPweld1} := \begin{pmatrix} r_{vVw1} \\ r_{tVw1} \\ r_{Vw1} \end{pmatrix}$ $\qquad result_{SPweld1} = \begin{pmatrix} 73 \\ 26 \\ 79 \end{pmatrix} \cdot \%$

$result_{shaft1} := r_{vPS1}$ $\qquad result_{shaft1} = 22 \cdot \%$

$L_{SP1reqd} := \begin{cases} [z + n \cdot (3 \cdot in) + h] & \text{if } TSP1 = \text{"Yes"} \\ \text{"N/A"} & \text{if } TSP1 = \text{"No"} \end{cases}$ $\qquad L_{SP1reqd} = \text{"N/A"} \cdot in$

$L_{SP1check} := \begin{cases} \text{"N/A"} & \text{if } TSP1 = \text{"No"} \\ \begin{cases} \text{"OK"} & \text{if } L_{SP1} \geq L_{SP1reqd} \\ \text{"NG"} & \text{if } L_{SP1} < L_{SP1reqd} \end{cases} & \text{if } TSP1 = \text{"Yes"} \end{cases}$ $\qquad L_{SP1check} = \text{"N/A"}$

$Max_{Utilization\_SP1} := \max\left(result_{SP1}, result_{SPweld1}, result_{shaft1}\right)$ $\qquad Max_{Utilization\_SP1} = 79 \cdot \%$

- SP on Right Side:

$$result_{SP2} := \begin{pmatrix} r_{cSP2} \\ r_{vV2} \\ r_{tV2} \\ r_{V2} \\ r_{vH2} \\ r_{tH2} \\ r_{H2} \end{pmatrix} \qquad result_{SP2} = \begin{pmatrix} 91 \\ 18 \\ 2 \\ 5 \\ 20 \\ 92 \\ 96 \end{pmatrix} \cdot \%$$

$$result_{SPweld2} := \begin{pmatrix} r_{vVw2} \\ r_{tVw2} \\ r_{Vw2} \end{pmatrix} \qquad result_{SPweld2} = \begin{pmatrix} 53 \\ 5 \\ 34 \end{pmatrix} \cdot \%$$

$$result_{shaft2} := r_{vPS2} \qquad result_{shaft2} = 4 \cdot \%$$

$$L_{SP2reqd} := \begin{cases} [z + n \cdot (3 \cdot in) + h] & \text{if } TSP2 = \text{"Yes"} \\ \text{"N/A"} & \text{if } TSP2 = \text{"No"} \end{cases} \qquad L_{SP2reqd} = 44.75 \cdot in$$

$$L_{SP2check} := \begin{cases} \text{"N/A"} & \text{if } TSP2 = \text{"No"} \\ \begin{cases} \text{"OK"} & \text{if } L_{SP2} \geq L_{SP2reqd} \\ \text{"NG"} & \text{if } L_{SP2} < L_{SP2reqd} \end{cases} & \text{if } TSP2 = \text{"Yes"} \end{cases} \qquad L_{SP2check} = \text{"OK"}$$

$$Max_{Utilization\_SP2} := \max(result_{SP2}, result_{SPweld2}, result_{shaft2}) \qquad Max_{Utilization\_SP2} = 96 \cdot \%$$

$$Max_{Utilization} := \max(Max_{Utilization\_AR\_BPL}, Max_{Utilization\_SP1}, Max_{Utilization\_SP2}) \qquad Max_{Utilization} = 96 \cdot \%$$

$t_{SP1} = 0.750 \cdot in$ $t_{SP2} = 1.375 \cdot in$

$b_{SP1} = 6.500 \cdot in$ $b_{SP2} = 6.500 \cdot in$

$L_{SP1} = 11.25 \cdot in$ $L_{SP2} = 44.75 \cdot in$

Input

CONSTANTS:

$E \equiv 29000 \cdot ksi$

$K \equiv 0.8$

$ASI \equiv \frac{4}{3}$

- Reactions & Forces:

$M := 3801 \cdot kip \cdot ft$ = max moment reaction at top of base plate

$P := 41 \cdot kip$ = max axial reaction at top of base plate

$P_{ADD1} := 0 \cdot kip$ = additional axial force to SP on opposite side of SP (left side)

$P_{ADD2} := 0 \cdot kip$ = additional axial force to SP on opposite side of SP (right side)

- Shaft:

$t_{shaft} := 0.3125 \cdot in$ = thickness of shaft

$F_{yShaft} := 65 \cdot ksi$ = specified minimum yield stress of shaft

- Base Plate:

$t_{bpl} := 1.75 \cdot in$ = thickness of base plate

$F_y := 60 \cdot ksi$ = specified minimum yield stress of shaft

$a := 3.1875 \cdot in$ = distance from centerline of stiffener plate on left side to center of anchor rod

$b := 3.9375 \cdot in$ = distance from centerline of stiffener plate on right side to center of anchor rod

$y := 3.6875 \cdot in$ = distance from shaft wall to center of anchor rod

- Bar:

$P_{uBar} := 387 \cdot kip$ = axial force from bar (see Pole Tool-F v1.6.xls)

$d_{1Bar} := 5.4375 \cdot in$ = distance from center of bar to edge of TSP (left side)

$d_{2Bar} := 4.5 \cdot in$ = distance from center of bar to edge of TSP (right side)

$n := 9$ = number of termination bolts

$z := 11.75 \cdot in$ = height above base plate to bottom of bar / height above SP

$h := 6 \cdot in$ = height above top termination bolt to top of TSP

- Transition / Stiffener Plates:

  - TSP / SP on Left Side of AR:

$TSP1 := \text{"No"}$ = TSP on left side = "Yes"; SP on left side = "No"

$b_{SP1} := 6.5 \cdot in$ = width of stiffener plate

$t_{SP1} := 0.75 \cdot in$ = thickness of stiffener plate

$L_{SP1} := 11.25 \cdot in$ = length of stiffener plate

$clip_1 := 0.75 \cdot in$ = length of clip

$t_{VW1} := 0.3125 \cdot in$ = thickness of vertical weld

$F_{ySP1} := 50 \cdot ksi$ = specified minimum yield stress of SP material

$F_{EXX1} := 70 \cdot ksi$ = specified minimum ultimate stress of weld electrode

$k_1 := b_{SP1} - y$ = distance from center of anchor rod to edge of base plate / edge of stiffener plate

$k_1 = 2.813 \cdot in$

- TSP / SP on Right Side of AR:

$TSP2 := \text{"Yes"}$ = TSP on right side = "Yes"; SP on right side = "No"

$b_{SP2} := 6.5 \cdot in$ = width of stiffener plate

$t_{SP2} := 1.375 \cdot in$ = thickness of stiffener plate

$L_{SP2} := 44.75 \cdot in$ = length of stiffener plate

$clip_2 := 0.75 \cdot in$ = length of clip

$t_{VW2} := 0.3125 \cdot in$ = thickness of vertical weld

$F_{ySP2} := 50 \cdot ksi$ = specified minimum yield stress of SP material

$F_{EXX2} := 70 \cdot ksi$ = specified minimum ultimate stress of weld electrode

$k_2 := b_{SP2} - y$ = distance from center of anchor rod to edge of base plate / edge of stiffener plate

$k_2 = 2.813 \cdot in$

- Anchor Rods:

$$Q := \begin{pmatrix} 2 \\ 4 \\ 4 \\ 4 \\ 2 \\ 0 \\ 0 \end{pmatrix} \quad d := \begin{pmatrix} 2 \cdot 12 + 9 \\ 2 \cdot 12 + 6 + \frac{1}{2} \\ 1 \cdot 12 + 11 + \frac{5}{16} \\ 1 \cdot 12 + \frac{5}{8} \\ 0 \\ 0 \\ 0 \end{pmatrix} \cdot in \quad A_{stiff} := \begin{pmatrix} 3.98 \\ 3.98 \\ 3.98 \\ 3.98 \\ 3.98 \\ 0 \\ 0 \end{pmatrix} in^2 \quad A_{stress} := \begin{pmatrix} 3.25 \\ 3.25 \\ 3.25 \\ 3.25 \\ 3.25 \\ 0 \\ 0 \end{pmatrix} in^2 \quad F_t := \begin{pmatrix} 0.6 \cdot 75 \\ 0.6 \cdot 75 \\ 0.6 \cdot 75 \\ 0.6 \cdot 75 \\ 0.6 \cdot 75 \\ 0 \\ 0 \end{pmatrix} \cdot ksi$$

Output - Anchor Rod, Deformation Method:

$$R := \frac{M \cdot \overrightarrow{\left(d \cdot A_{stiff}\right)}}{sumQAd} + \frac{P \cdot A_{stiff}}{\sum \overrightarrow{\left(A_{stiff} \cdot Q\right)}} \qquad sumQAd := \sum \overrightarrow{\left(Q \cdot d^2 \cdot A_{stiff}\right)}$$

$sumQAd = 34668 \cdot in^4$

ϕRnt = nominal tension strength
d = distance from center
A = area of fastener
Q = quantity of fasteners

$$f_t := \overrightarrow{\left(\frac{R}{A_{stress}}\right)} \qquad r_{AR} := \overrightarrow{\left(\frac{f_t}{ASI \cdot F_t}\right)}$$

$$R = \begin{pmatrix} 175.4 \\ 162.3 \\ 124.6 \\ 68.7 \\ 2.6 \\ 0.0 \\ 0.0 \end{pmatrix} \cdot kip \quad f_t = \begin{pmatrix} 54.0 \\ 49.9 \\ 38.4 \\ 21.1 \\ 0.8 \\ 0.0 \\ 0.0 \end{pmatrix} \cdot ksi \quad r_{AR} = \begin{pmatrix} 90 \\ 83 \\ 64 \\ 35 \\ 1 \\ 0 \\ 0 \end{pmatrix} \cdot \%$$

Output - Check Base Plate Flexure:

$P_{maxAR} := \max(R)$ $\qquad P_{maxAR} = 175 \cdot kip$

$t := t_{bpl}$ $\qquad t = 1.75 \cdot in$

$k := \min(k_1, k_2)$ $\qquad k = 2.81 \cdot in$

$$I_x := \frac{(a+b) \cdot t^3}{12} \qquad I_x = 3.18 \cdot in^4$$

$$k_x := \frac{3 \cdot I_x}{y^3} \qquad k_x = 0.19 \cdot in$$

$$S_x := \frac{I_x}{\left(\frac{t}{2}\right)} \qquad S_x = 3.64 \cdot in^3$$

$$I_y := \frac{(y+k) \cdot t^3}{12} \qquad I_y = 2.90 \cdot in^4$$

$$k_y := \begin{cases} \dfrac{3 \cdot I_y \cdot (3 \cdot a + b)^2}{2 \cdot a^3 \cdot b^2} & \text{if } a \geq b \\ \dfrac{3 \cdot I_y \cdot (3 \cdot b + a)^2}{2 \cdot b^3 \cdot a^2} & \text{if } a < b \end{cases} \qquad k_y = 1.58 \cdot in$$

$$S_y := \frac{I_y}{\left(\frac{t}{2}\right)} \qquad S_y = 3.32 \cdot in^3$$

$$M_{xMax} := \left(\frac{k_x}{k_x + k_y}\right) \cdot (P_{maxAR} \cdot y) \qquad M_{xMax} = 5.8 \cdot kip \cdot ft$$

$$M'_{xAll} := ASI \cdot \left[(0.75 \cdot F_y) \cdot S_x\right] \qquad M'_{xAll} = 18.2 \cdot kip \cdot ft$$

$$r_x := \frac{M_{xMax}}{M'_{xAll}} \qquad r_x = 32 \cdot \%$$

$$M_{yMax} := \begin{cases} \dfrac{k_y}{k_x + k_y} \cdot \left[\dfrac{P_{maxAR} \cdot a \cdot b^2}{(a+b)^2}\right] & \text{if } a \leq b \\ \dfrac{k_y}{k_x + k_y} \cdot \left[\dfrac{P_{maxAR} \cdot a^2 \cdot b}{(a+b)^2}\right] & \text{if } a > b \end{cases} \qquad M_{yMax} = 12.7 \cdot kip \cdot ft$$

$$M'_{yAll} := ASI \cdot \left[(0.75 \cdot F_y) \cdot S_y\right] \qquad M'_{yAll} = 16.6 \cdot kip \cdot ft$$

$r_y := \frac{M_{yMax}}{M'_{yAll}}$ $\qquad r_y = 77 \cdot \%$

$r_{BPL} := \sqrt{r_x^2 + r_y^2}$ $\qquad r_{BPL} = 83 \cdot \%$

$P_{maxShaft} := \left(\frac{k_x}{k_x + k_y}\right) \cdot P_{maxAR}$ $\qquad P_{maxShaft} = 18.9 \cdot kip$

$P_{tMaxSP} := \left(\frac{k_y}{k_x + k_y}\right) \cdot P_{maxAR}$ $\qquad P_{tMaxSP} = 156.5 \cdot kip$

Output - Calculate Forces in TSP / SP's:

$l := a + b$ $\qquad l = 7.1 \cdot in$

$P_{maxSP1} := \frac{P_{tMaxSP} \cdot b^2}{l^3} \cdot (b + 3 \cdot a)$ $\qquad P_{maxSP1} = 90.6 \cdot kip$

$P_{maxSP2} := \frac{P_{tMaxSP} \cdot a^2}{l^3} \cdot (a + 3 \cdot b)$ $\qquad P_{maxSP2} = 65.9 \cdot kip$

$P_{uBar1} := \begin{cases} \left(1 - \frac{d_{1Bar}}{d_{1Bar} + d_{2Bar}}\right) \cdot P_{uBar} & \text{if } TSP1 = \text{"Yes"} \\ 0 & \text{if } TSP1 = \text{"No"} \end{cases}$ $\qquad P_{uBar1} = 0.0 \cdot kip$

$P_{uBar2} := \begin{cases} \left(1 - \frac{d_{2Bar}}{d_{1Bar} + d_{2Bar}}\right) \cdot P_{uBar} & \text{if } TSP2 = \text{"Yes"} \\ 0 & \text{if } TSP2 = \text{"No"} \end{cases}$ $\qquad P_{uBar2} = 211.8 \cdot kip$

$P_{tMaxSP1} := P_{maxSP1} + P_{uBar1} + P_{ADD1}$ $\qquad P_{tMaxSP1} = 90.6 \cdot kip$

$P_{tMaxSP2} := P_{maxSP2} + P_{uBar2} + P_{ADD2}$ $\qquad P_{tMaxSP2} = 277.7 \cdot kip$

Output - Calculate SP Section Properties *(LEFT Side)*:

$L_{VW1} := L_{SP1} - clip_1$ $\qquad L_{VW1} = 10.50 \cdot in$

$L_{HW1} := b_{SP1} - clip_1$ $\qquad L_{HW1} = 5.75 \cdot in$

$\theta_1 := atan\left(\frac{b_{SP1}}{L_{SP1}}\right)$ $\qquad \theta_1 = 30.02 \cdot deg$

$B_1 := L_{SP1} \cdot sin(\theta_1)$ $\qquad B_1 = 5.63 \cdot in$

$N_{B1} := \frac{clip_1}{(sin(\theta_1) + cos(\theta_1))}$ $\qquad N_{B1} = 0.549 \cdot in$

$N_1 := \frac{N_{B1}}{B_1}$ $\qquad N_1 = 0.098$

$$L_1 := \sqrt{L_{SP1}^2 + b_{SP1}^2} \qquad L_1 = 12.99 \cdot in$$

$$r_1 := \frac{t_{SP1}}{\sqrt{12}} \qquad r_1 = 0.217 \cdot in$$

$$x_1 := \frac{b_{SP1}}{2} \qquad x_1 = 3.25 \cdot in$$

Output - Calculate Compressive Strength of SP:

$$C_{c1} := \sqrt{\frac{2 \cdot \pi^2 \cdot E}{F_{ySP1}}} \qquad C_{c1} = 107.0$$

$$KLr_1 := \frac{K \cdot L_1}{r_1} \qquad KLr_1 = 48.0$$

$$F_{crB1} := \begin{cases} \left[\dfrac{\left[1 - \dfrac{(KLr_1)^2}{2 \cdot C_{c1}^2}\right] \cdot F_{ySP1}}{\dfrac{5}{3} + \dfrac{3}{8} \cdot \left(\dfrac{KLr_1}{C_{c1}}\right) - \dfrac{(KLr_1)^3}{8 \cdot C_{c1}^3}}\right] & \text{if } KLr_1 < C_{c1} \\ \left[\dfrac{12 \cdot \pi^2 \cdot E}{23 \cdot (KLr_1)^2}\right] & \text{if } KLr_1 \geq C_{c1} \end{cases} \qquad F_{crB1} = 24.7 \cdot ksi$$

$$\Delta F_{cr1} := F_{ySP1} - F_{crB1} \qquad \Delta F_{cr1} = 25.3 \cdot ksi$$

$$P'_{allSP1} := \left[\frac{t_{SP1} \cdot B_1^2}{6 \cdot x_1} \cdot \left[3 \cdot F_{ySP1} \cdot \left(1 - N_1^2\right) - 2 \cdot \left(\Delta F_{cr1}\right) \cdot \left(1 - N_1^3\right)\right]\right] \cdot ASI \qquad P'_{allSP1} = 159.1 \cdot kip$$

$$r_{cSP1} := \frac{P_{tMaxSP1}}{P'_{allSP1}} \qquad r_{cSP1} = 57 \cdot \%$$

Output - Calculate Shear and Tensile Strength of CAN-SP:

- Calculate Forces in SP:

$$h_{V1} := clip_1 + \frac{L_{VW1}}{2} \qquad h_{V1} = 6.00 \cdot in$$

$V_{maxV1} := P_{tMaxSP1}$ = shear on Vertical leg $\qquad V_{maxV1} = 90.6 \cdot kip$

$T_{maxV1} := \dfrac{P_{tMaxSP1} \cdot x_1}{h_{V1}}$ = max tension on Vertical leg $\qquad T_{maxV1} = 49.1 \cdot kip$

$V_{maxH1} := \dfrac{P_{tMaxSP1} \cdot x_1}{h_{V1}}$ = shear on Horizontal leg $\qquad V_{maxH1} = 49.1 \cdot kip$

$T_{maxH1} := P_{tMaxSP1}$ = tension on Horizontal leg $\qquad T_{maxH1} = 90.6 \cdot kip$

- Shear Strength of *Vertical* Leg of SP:

$V'_{allV1} := \left[\left(0.4 \cdot F_{ySP1}\right) \cdot \left(L_{VW1} \cdot t_{SP1}\right)\right] \cdot ASI$ $\qquad V'_{allV1} = 210.0 \cdot kip$

$r_{vV1} := \dfrac{V_{maxV1}}{V'_{allV1}}$ $\qquad r_{vV1} = 43 \cdot \%$

- Tensile Strength of *Vertical* Leg of SP:

$T_{allV1} := \left[\left(0.6 \cdot F_{ySP1}\right) \cdot \left(L_{VW1} \cdot t_{SP1}\right)\right] \cdot ASI$ $\qquad T_{allV1} = 315.0 \cdot kip$

$r_{tV1} := \dfrac{T_{maxV1}}{T_{allV1}}$ $\qquad r_{tV1} = 16 \cdot \%$

- Combined Tension & Shear Strength of *Vertical* Leg of SP:

$r_{V1} := \left(\dfrac{T_{maxV1}}{T_{allV1}}\right) + \left(\dfrac{V_{maxV1}}{V'_{allV1}}\right)^2$ $\qquad r_{V1} = 34 \cdot \%$

- Shear Strength of *Horizontal* Leg of SP:

$V'_{allH1} := \left[\left(0.4 \cdot F_{ySP1}\right) \cdot \left(L_{HW1} \cdot t_{SP1}\right)\right] \cdot ASI$ $\qquad V'_{allH1} = 115.0 \cdot kip$

$r_{vH1} := \dfrac{V_{maxH1}}{V'_{allH1}}$ $\qquad r_{vH1} = 43 \cdot \%$

- Tensile Strength of *Horizontal* Leg of SP:

$T'_{allH1} := \left[\left(0.6 \cdot F_{ySP1}\right) \cdot \left(L_{HW1} \cdot t_{SP1}\right)\right] \cdot ASI$ $\qquad T'_{allH1}$

$r_{tH1} := \dfrac{T_{maxH1}}{T'_{allH1}}$ $\qquad r_{tH1} = 52 \cdot \%$

- Combined Tension & Shear Strength of *Horizontal* Leg of SP:

$r_{H1} := \left(\dfrac{T_{maxH1}}{T'_{allH1}}\right) + \left(\dfrac{V_{maxH1}}{V'_{allH1}}\right)^2$ $\qquad r_{H1} = 71 \cdot \%$

Output - Check Shear and Tensile Strength of Vertical SP Weld:

$\theta_v \equiv 0 \cdot deg$

$F_{w\_v1} := 0.30 \cdot F_{EXX1} \cdot \left(1.0 + 0.50 \cdot \sin\left(\theta_v\right)^{1.5}\right)$ $\qquad F_{w\_v1} = 21.0 \cdot ksi$

$\theta_t \equiv 90 \cdot deg$

$F_{w\_t1} := 0.30 \cdot F_{EXX1} \cdot \left(1.0 + 0.50 \cdot \sin\left(\theta_t\right)^{1.5}\right)$ $\qquad F_{w\_t1} = 31.5 \cdot ksi$

- Shear Strength of Vertical Weld:

$A_{wV1} := \left(0.707 \cdot t_{VW1}\right) \cdot L_{VW1}$ $\qquad A_{wV1} = 2.32 \cdot in^2$

$V'_{allVw1} := \left[2 \cdot \left(F_{w\_v1} \cdot A_{wV1}\right)\right] \cdot ASI$ $\qquad V'_{allVw1} = 130 \cdot kip$

$r_{vVw1} := \dfrac{V_{maxV1}}{V'_{allVw1}}$ $\qquad r_{vVw1} = 70 \cdot \%$

- Tensile Strength of Vertical Weld:

$T'_{allVw1} := \left[2\cdot\left(F_{w\_t1}\cdot A_{wV1}\right)\right]\cdot ASI$ $\qquad T'_{allVw1} = 195\cdot kip$

$r_{tVw1} := \dfrac{T_{maxV1}}{T'_{allVw1}}$ $\qquad r_{tVw1} = 25\cdot\%$

- Combined Tension & Shear Strength of Vertical Weld:

$r_{Vw1} := \left(\dfrac{T_{maxV1}}{T'_{allVw1}}\right) + \left(\dfrac{V_{maxV1}}{V'_{allVw1}}\right)^2$ $\qquad r_{Vw1} = 74\cdot\%$

Output - Check Design Shaft Punching Shear:

$V_{maxPS1} := T_{maxV1}$ $\qquad V_{maxPS1} = 49.1\cdot kip$

$V'_{all1} := 2\cdot\left[\left(0.4\cdot F_{yShaft}\right)\cdot\left(t_{shaft}\cdot L_{VW1}\right)\right]\cdot ASI$ $\qquad V'_{all1} = 227.5\cdot kip$

$r_{vPS1} := \dfrac{V_{maxPS1}}{V'_{all1}}$ $\qquad r_{vPS1} = 22\cdot\%$

Output - Calculate SP Section Properties *(RIGHT Side)*:

$L_{VW2} := L_{SP2} - clip_2$ $\qquad L_{VW2} = 44.00\cdot in$

$L_{HW2} := b_{SP2} - clip_2$ $\qquad L_{HW2} = 5.75\cdot in$

$\theta_2 := atan\left(\dfrac{b_{SP2}}{L_{SP2}}\right)$ $\qquad \theta_2 = 8.26\cdot deg$

$B_2 := L_{SP2}\cdot\sin\left(\theta_2\right)$ $\qquad B_2 = 6.43\cdot in$

$N_{B2} := \dfrac{clip_2}{\left(\sin\left(\theta_2\right) + \cos\left(\theta_2\right)\right)}$ $\qquad N_{B2} = 0.662\cdot in$

$N_2 := \dfrac{N_{B2}}{B_2}$ $\qquad N_2 = 0.103$

$L_2 := \sqrt{L_{SP2}^2 + b_{SP2}^2}$ $\qquad L_2 = 45.22\cdot in$

$r_2 := \dfrac{t_{SP2}}{\sqrt{12}}$ $\qquad r_2 = 0.397\cdot in$

$x_2 := \dfrac{b_{SP2}}{2}$ $\qquad x_2 = 3.25\cdot in$

Output - Calculate Compressive Strength of SP:

$C_{c2} := \sqrt{\dfrac{2\cdot\pi^2\cdot E}{F_{ySP2}}}$ $\qquad C_{c2} = 107.0$

$KLr_2 := \dfrac{K\cdot L_2}{r_2}$ $\qquad KLr_2 = 91.1$

$$F_{crB2} := \begin{cases} \left[\dfrac{\left[1 - \dfrac{(KLr_2)^2}{2 \cdot C_{c2}^2}\right] \cdot F_{ySP2}}{\dfrac{5}{3} + \dfrac{3}{8} \cdot \left(\dfrac{KLr_2}{C_{c2}}\right) - \dfrac{(KLr_2)^3}{8 \cdot C_{c2}^3}}\right] & \text{if } KLr_2 < C_{c2} \\ \left[\dfrac{12 \cdot \pi^2 \cdot E}{23 \cdot (KLr_2)^2}\right] & \text{if } KLr_2 \geq C_{c2} \end{cases}$$

$F_{crB2} = 16.7 \cdot ksi$

$\Delta F_{cr2} := F_{ySP2} - F_{crB2}$ $\qquad \Delta F_{cr2} = 33.3 \cdot ksi$

$$P'_{allSP2} := \left[\frac{t_{SP2} \cdot B_2^2}{6 \cdot x_2} \cdot \left[3 \cdot F_{ySP2} \cdot \left(1 - N_2^2\right) - 2 \cdot (\Delta F_{cr2}) \cdot \left(1 - N_2^3\right)\right]\right] \cdot ASI$$

$P'_{allSP2} = 318.5 \cdot kip$

$r_{cSP2} := \dfrac{P_{tMaxSP2}}{P'_{allSP2}}$ $\qquad r_{cSP2} = 87 \cdot \%$

Output - Calculate Shear and Tensile Strength of CAN-SP:

- Calculate Forces in SP:

$h_{V2} := clip_2 + \dfrac{L_{VW2}}{2}$ $\qquad h_{V2} = 22.75 \cdot in$

$V_{maxV2} := P_{tMaxSP2}$ = shear on Vertical leg $\qquad V_{maxV2} = 277.7 \cdot kip$

$T_{maxV2} := \dfrac{P_{tMaxSP2} \cdot x_2}{h_{V2}}$ = max tension on Vertical leg $\qquad T_{maxV2} = 39.7 \cdot kip$

$V_{maxH2} := \dfrac{P_{tMaxSP2} \cdot x_2}{h_{V2}}$ = shear on Horizontal leg $\qquad V_{maxH2} = 39.7 \cdot kip$

$T_{maxH2} := P_{tMaxSP2}$ = tension on Horizontal leg $\qquad T_{maxH2} = 277.7 \cdot kip$

- Shear Strength of *Vertical* Leg of SP:

$V'_{allV2} := \left[(0.4 \cdot F_{ySP2}) \cdot (L_{VW2} \cdot t_{SP2})\right] \cdot ASI$ $\qquad V'_{allV2} = 1613.3 \cdot kip$

$r_{vV2} := \dfrac{V_{maxV2}}{V'_{allV2}}$ $\qquad r_{vV2} = 17 \cdot \%$

- Tensile Strength of *Vertical* Leg of SP:

$T_{allV2} := \left[(0.6 \cdot F_{ySP2}) \cdot (L_{VW2} \cdot t_{SP2})\right] \cdot ASI$ $\qquad T_{allV2} = 2420.0 \cdot kip$

$r_{tV2} := \dfrac{T_{maxV2}}{T_{allV2}}$ $\qquad r_{tV2} = 2 \cdot \%$

- Combined Tension & Shear Strength of *Vertical* Leg of SP:

$$r_{V2} := \left(\frac{T_{maxV2}}{T_{allV2}}\right) + \left(\frac{V_{maxV2}}{V'_{allV2}}\right)^2 \qquad r_{V2} = 5 \cdot \%$$

- Shear Strength of *Horizontal* Leg of SP:

$$V'_{allH2} := \left[\left(0.4 \cdot F_{ySP2}\right) \cdot \left(L_{HW2} \cdot t_{SP2}\right)\right] \cdot ASI \qquad V'_{allH2} = 210.8 \cdot kip$$

$$r_{vH2} := \frac{V_{maxH2}}{V'_{allH2}} \qquad r_{vH2} = 19 \cdot \%$$

- Tensile Strength of *Horizontal* Leg of SP:

$$T'_{allH2} := \left[\left(0.6 \cdot F_{ySP2}\right) \cdot \left(L_{HW2} \cdot t_{SP2}\right)\right] \cdot ASI \qquad T'_{allH2} = 316.3 \cdot kip$$

$$r_{tH2} := \frac{T_{maxH2}}{T'_{allH2}} \qquad r_{tH2} = 88 \cdot \%$$

- Combined Tension & Shear Strength of *Horizontal* Leg of SP:

$$r_{H2} := \left(\frac{T_{maxH2}}{T'_{allH2}}\right) + \left(\frac{V_{maxH2}}{V'_{allH2}}\right)^2 \qquad r_{H2} = 91 \cdot \%$$

Output - Check Shear and Tensile Strength of Vertical SP Weld:

$$\theta_v \equiv 0 \cdot deg$$

$$F_{w\_v2} := 0.30 \cdot F_{EXX2} \cdot \left(1.0 + 0.50 \cdot \sin\left(\theta_v\right)^{1.5}\right) \qquad F_{w\_v2} = 21.0 \cdot ksi$$

$$\theta_t \equiv 90 \cdot deg$$

$$F_{w\_t2} := 0.30 \cdot F_{EXX2} \cdot \left(1.0 + 0.50 \cdot \sin\left(\theta_t\right)^{1.5}\right) \qquad F_{w\_t2} = 31.5 \cdot ksi$$

- Shear Strength of Vertical Weld:

$$A_{wV2} := \left(0.707 \cdot t_{VW2}\right) \cdot L_{VW2} \qquad A_{wV2} = 9.72 \cdot in^2$$

$$V'_{allVw2} := \left[2 \cdot \left(F_{w\_v2} \cdot A_{wV2}\right)\right] \cdot ASI \qquad V'_{allVw2} = 544 \cdot kip$$

$$r_{vVw2} := \frac{V_{maxV2}}{V'_{allVw2}} \qquad r_{vVw2} = 51 \cdot \%$$

- Tensile Strength of Vertical Weld:

$$T'_{allVw2} := \left[2 \cdot \left(F_{w\_t2} \cdot A_{wV2}\right)\right] \cdot ASI \qquad T'_{allVw2} = 817 \cdot kip$$

$$r_{tVw2} := \frac{T_{maxV2}}{T'_{allVw2}} \qquad r_{tVw2} = 5 \cdot \%$$

- Combined Tension & Shear Strength of Vertical Weld:

$$r_{Vw2} := \left(\frac{T_{maxV2}}{T'_{allVw2}}\right) + \left(\frac{V_{maxV2}}{V'_{allVw2}}\right)^2 \qquad r_{Vw2} = 31 \cdot \%$$

Output - Check Design Shaft Punching Shear:

$V_{maxPS2} := T_{maxV2}$ $\qquad V_{maxPS2} = 39.7 \cdot kip$

$V'_{all2} := 2 \cdot \left[\left(0.4 \cdot F_{yShaft} \right) \cdot \left(t_{shaft} \cdot L_{VW2} \right) \right] \cdot ASI$ $\qquad V'_{all2} = 953.3 \cdot kip$

$r_{vPS2} := \dfrac{V_{maxPS2}}{V'_{all2}}$ $\qquad r_{vPS2} = 4 \cdot \%$

Output - Results Summary:

- Anchor Rods & Base Plate:

$result_{AR} := \max(r_{AR})$ $\qquad result_{AR} = 90 \cdot \%$

$result_{BPL} := \begin{pmatrix} r_x \\ r_y \\ r_{BPL} \end{pmatrix}$ $\qquad result_{BPL} = \begin{pmatrix} 32 \\ 77 \\ 83 \end{pmatrix} \cdot \%$

$Max_{Utilization\_AR\_BPL} := \max(result_{AR}, result_{BPL})$ $\qquad Max_{Utilization\_AR\_BPL} = 90 \cdot \%$

- SP on Left Side:

$result_{SP1} := \begin{pmatrix} r_{cSP1} \\ r_{vV1} \\ r_{tV1} \\ r_{V1} \\ r_{vH1} \\ r_{tH1} \\ r_{H1} \end{pmatrix}$ $\qquad result_{SP1} = \begin{pmatrix} 57 \\ 43 \\ 16 \\ 34 \\ 43 \\ 52 \\ 71 \end{pmatrix} \cdot \%$

$result_{SPweld1} := \begin{pmatrix} r_{vVw1} \\ r_{tVw1} \\ r_{Vw1} \end{pmatrix}$ $\qquad result_{SPweld1} = \begin{pmatrix} 70 \\ 25 \\ 74 \end{pmatrix} \cdot \%$

$result_{shaft1} := r_{vPS1}$ $\qquad result_{shaft1} = 22 \cdot \%$

$L_{SP1reqd} := \begin{cases} [z + n \cdot (3 \cdot in) + h] & \text{if } TSP1 = \text{"Yes"} \\ \text{"N/A"} & \text{if } TSP1 = \text{"No"} \end{cases}$ $\qquad L_{SP1reqd} = \text{"N/A"} \cdot in$

$L_{SP1check} := \begin{cases} \text{"N/A"} & \text{if } TSP1 = \text{"No"} \\ \begin{cases} \text{"OK"} & \text{if } L_{SP1} \geq L_{SP1reqd} \\ \text{"NG"} & \text{if } L_{SP1} < L_{SP1reqd} \end{cases} & \text{if } TSP1 = \text{"Yes"} \end{cases}$ $\qquad L_{SP1check} = \text{"N/A"}$

$Max_{Utilization\_SP1} := \max(result_{SP1}, result_{SPweld1}, result_{shaft1})$ $\qquad Max_{Utilization\_SP1} = 74 \cdot \%$

- SP on Right Side:

$$result_{SP2} := \begin{pmatrix} r_{cSP2} \\ r_{vV2} \\ r_{tV2} \\ r_{V2} \\ r_{vH2} \\ r_{tH2} \\ r_{H2} \end{pmatrix} \qquad result_{SP2} = \begin{pmatrix} 87 \\ 17 \\ 2 \\ 5 \\ 19 \\ 88 \\ 91 \end{pmatrix} \cdot \%$$

$$result_{SPweld2} := \begin{pmatrix} r_{vVw2} \\ r_{tVw2} \\ r_{Vw2} \end{pmatrix} \qquad result_{SPweld2} = \begin{pmatrix} 51 \\ 5 \\ 31 \end{pmatrix} \cdot \%$$

$$result_{shaft2} := r_{vPS2} \qquad result_{shaft2} = 4 \cdot \%$$

$$L_{SP2reqd} := \begin{cases} [z + n \cdot (3 \cdot in) + h] & \text{if } TSP2 = \text{"Yes"} \\ \text{"N/A"} & \text{if } TSP2 = \text{"No"} \end{cases} \qquad L_{SP2reqd} = 44.75 \cdot in$$

$$L_{SP2check} := \begin{cases} \text{"N/A"} & \text{if } TSP2 = \text{"No"} \\ \begin{cases} \text{"OK"} & \text{if } L_{SP2} \geq L_{SP2reqd} \\ \text{"NG"} & \text{if } L_{SP2} < L_{SP2reqd} \end{cases} & \text{if } TSP2 = \text{"Yes"} \end{cases} \qquad L_{SP2check} = \text{"OK"}$$

$$Max_{Utilization\_SP2} := \max(result_{SP2}, result_{SPweld2}, result_{shaft2}) \qquad Max_{Utilization\_SP2} = 91 \cdot \%$$

$$Max_{Utilization} := \max(Max_{Utilization\_AR\_BPL}, Max_{Utilization\_SP1}, Max_{Utilization\_SP2}) \qquad Max_{Utilization} = 91 \cdot \%$$

$t_{SP1} = 0.750 \cdot in$	$t_{SP2} = 1.375 \cdot in$
$b_{SP1} = 6.500 \cdot in$	$b_{SP2} = 6.500 \cdot in$
$L_{SP1} = 11.25 \cdot in$	$L_{SP2} = 44.75 \cdot in$

```
================================================================================

                 LPILE Plus for Windows, Version 5.0 (5.0.47)

                 Analysis of Individual Piles and Drilled Shafts
                Subjected to Lateral Loading Using the p-y Method

                        (c) 1985-2010 by Ensoft, Inc.
                            All Rights Reserved

================================================================================

This program is licensed to:

MER
Vertical Solutions, Inc.

--------------------------------------------------------------------------------
                              Files Used for Analysis
--------------------------------------------------------------------------------

Path to file locations:      C:\Users\mreeves\Documents\Work\Jobs\20130125_Jobs\2449_West Haven-rt15
Woodbridge_CT\Task 1\Additional Calculations\FND\
Name of input data file:     CT46139-A.lpd
Name of output file:         CT46139-A.lpo
Name of plot output file:    CT46139-A.lpp
Name of runtime file:        CT46139-A.lpr


--------------------------------------------------------------------------------
                              Time and Date of Analysis
--------------------------------------------------------------------------------

          Date:  January 25, 2013     Time:  16:37:40


--------------------------------------------------------------------------------
                                  Problem Title
--------------------------------------------------------------------------------

CT46139-A


--------------------------------------------------------------------------------
                                 Program Options
--------------------------------------------------------------------------------

Units Used in Computations - US Customary Units: Inches, Pounds

Basic Program Options:

Analysis Type 2:
- Computation of Ultimate Bending Moment of Cross Section (Section Design)


--------------------------------------------------------------------------------
   Computations of Nominal Moment Capacity and Nonlinear Bending Stiffness
--------------------------------------------------------------------------------

Number of sections =  1


Pile Section No.  1

The sectional shape is a circular drilled shaft (bored pile).

Outside Diameter                        =      96.0000 in

Material Properties:

Compressive Strength of Concrete        =       4.000 kip/in**2
Yield Stress of Reinforcement           =        60. kip/in**2
Modulus of Elasticity of Reinforcement  =      29000. kip/in**2
Number of Reinforcing Bars              =          36
Area of Single Bar                      =     0.79000 in**2
Number of Rows of Reinforcing Bars      =          19
Area of Steel                           =      28.440 in**2
Area of Shaft                           =    7238.229 in**2
Percentage of Steel Reinforcement       =       0.393 percent
Cover Thickness (edge to bar center)    =       4.000 in

Unfactored Axial Squash Load Capacity   =    26219.68 kip

Distribution and Area of Steel Reinforcement

 Row          Area of        Distance to
```


Number	Reinforcement in**2	Centroidal Axis in
1	0.790	44.000
2	1.580	43.332
3	1.580	41.346
4	1.580	38.105
5	1.580	33.706
6	1.580	28.283
7	1.580	22.000
8	1.580	15.049
9	1.580	7.641
10	1.580	0.000
11	1.580	-7.641
12	1.580	-15.049
13	1.580	-22.000
14	1.580	-28.283
15	1.580	-33.706
16	1.580	-38.105
17	1.580	-41.346
18	1.580	-43.332
19	0.790	-44.000

Axial Thrust Force = 0.00 lbs

Bending Moment in-lbs	Bending Stiffness lb-in2	Bending Curvature rad/in	Maximum Strain in/in	Neutral Axis Position inches	Max. Concrete Stress psi	Max. Steel Stress psi
9947923.	1.591668E+13	6.250000E-07	0.00003010	48.16366911	105.80014	800.46650
19792209.	1.583377E+13	0.00000125	0.00006020	48.16334009	211.89456	1600.92108
29532857.	1.575086E+13	0.00000188	0.00009031	48.16300249	315.28328	2401.36326
39169867.	1.566795E+13	0.00000250	0.00012041	48.16266203	416.96638	3201.79300
39169867.	1.253436E+13	0.00000313	0.00005741	18.36995745	196.74109	6672.72261
39169867.	1.044530E+13	0.00000375	0.00006893	18.38045454	235.52384	8006.12557
39169867.	8.953112E+12	0.00000438	0.00008046	18.39099169	274.11675	9339.14293
39169867.	7.833973E+12	0.00000500	0.00009201	18.40157461	312.51931	10671.77168
39169867.	6.963532E+12	0.00000563	0.00010357	18.41220331	350.73097	12004.00933
39169867.	6.267179E+12	0.00000625	0.00011514	18.42287493	388.75108	13335.85392
39169867.	5.697435E+12	0.00000688	0.00012673	18.43359232	426.57911	14667.30253
39169867.	5.222649E+12	0.00000750	0.00013833	18.44435549	464.21446	15998.35268
39169867.	4.820907E+12	0.00000813	0.00014995	18.45516443	501.65654	17329.00188
39169867.	4.476556E+12	0.00000875	0.00016158	18.46601915	538.90473	18659.24764
39169867.	4.178119E+12	0.00000938	0.00017322	18.47692251	575.95850	19989.08669
39169867.	3.916987E+12	0.00001000	0.00018488	18.48787165	612.81714	21318.51722
39169867.	3.686576E+12	0.00001063	0.00019655	18.49886942	649.48013	22647.53586
39169867.	3.481766E+12	0.00001125	0.00020824	18.50991297	685.94673	23976.14089
39169867.	3.298515E+12	0.00001188	0.00021994	18.52100515	722.21638	25304.32885
39169867.	3.133589E+12	0.00001250	0.00023165	18.53214598	758.28845	26632.09708
39169867.	2.984371E+12	0.00001313	0.00024338	18.54333830	794.16240	27959.44186
39169867.	2.848718E+12	0.00001375	0.00025513	18.55457926	829.83744	29286.36152
39169867.	2.724860E+12	0.00001438	0.00026688	18.56586885	865.31292	30612.85342
39169867.	2.611324E+12	0.00001500	0.00027866	18.57720995	900.58827	31938.91367
39169867.	2.506871E+12	0.00001563	0.00029045	18.58860254	935.66281	33264.53947
39169867.	2.410453E+12	0.00001625	0.00030225	18.60004663	970.53586	34589.72802
39169867.	2.321177E+12	0.00001688	0.00031407	18.61154222	1005.20671	35914.47652
39169867.	2.238278E+12	0.00001750	0.00032590	18.62309217	1039.67482	37238.78072
39169867.	2.161096E+12	0.00001813	0.00033775	18.63469076	1073.93915	38562.64067
39169867.	2.089060E+12	0.00001875	0.00034962	18.64634657	1107.99944	39886.04905
39169867.	2.021671E+12	0.00001938	0.00036150	18.65805387	1141.85467	41209.00598
39169867.	1.958493E+12	0.00002000	0.00037340	18.66981554	1175.50423	42531.50699
39169867.	1.899145E+12	0.00002063	0.00038531	18.68163443	1208.94756	43853.54741
39169867.	1.843288E+12	0.00002125	0.00039724	18.69350767	1242.18374	45175.12590
40069498.	1.831748E+12	0.00002188	0.00040918	18.70543528	1275.21199	46496.23950
41197097.	1.830982E+12	0.00002250	0.00042114	18.71742010	1308.03172	47816.88338
42323675.	1.830213E+12	0.00002313	0.00043312	18.72946215	1340.64215	49137.05445
43449232.	1.829441E+12	0.00002375	0.00044511	18.74156427	1373.04269	50456.74761
44573745.	1.828666E+12	0.00002438	0.00045712	18.75372076	1405.23214	51775.96364
46819657.	1.827109E+12	0.00002563	0.00048119	18.77821398	1468.97570	54412.93974
49061358.	1.825539E+12	0.00002688	0.00050533	18.80294466	1531.86646	57047.95501
51298800.	1.823957E+12	0.00002813	0.00052954	18.82791853	1593.89807	59680.97895
53180445.	1.810398E+12	0.00002938	0.00055248	18.80799437	1651.60728	60000.00000
54650130.	1.784494E+12	0.00003063	0.00057391	18.73995352	1704.46955	60000.00000
55856811.	1.752371E+12	0.00003188	0.00059432	18.64521074	1753.93731	60000.00000
56971640.	1.719899E+12	0.00003313	0.00061437	18.54709482	1801.80371	60000.00000
57903034.	1.684452E+12	0.00003438	0.00063367	18.43396139	1847.09281	60000.00000
58832591.	1.651441E+12	0.00003563	0.00065300	18.32969713	1891.81121	60000.00000
59555021.	1.615051E+12	0.00003688	0.00067137	18.20653868	1933.59068	60000.00000
60263322.	1.580677E+12	0.00003813	0.00068970	18.09060431	1974.70685	60000.00000
60970114.	1.548447E+12	0.00003938	0.00070807	17.98275805	2015.30482	60000.00000
61549196.	1.515057E+12	0.00004063	0.00072578	17.86543608	2053.81880	60000.00000
62072699.	1.482333E+12	0.00004188	0.00074323	17.74870348	2091.18355	60000.00000
62594926.	1.451477E+12	0.00004313	0.00076070	17.63931227	2128.07751	60000.00000
62965792.	1.418947E+12	0.00004438	0.00078100	17.59999895	2170.65391	60000.00000
63669536.	1.395497E+12	0.00004563	0.00079999	17.53396654	2209.67262	60000.00000
64036369.	1.366109E+12	0.00004688	0.00081599	17.40776682	2241.73397	60000.00000
64402255.	1.338229E+12	0.00004813	0.00083201	17.28856230	2273.40190	60000.00000

64767169.	1.311740E+12	0.00004938	0.00084806	17.17582083	2304.67444	60000.00000
65131129.	1.286541E+12	0.00005063	0.00086412	17.06907034	2335.55044	60000.00000
65494120.	1.262537E+12	0.00005188	0.00088021	16.96787882	2366.02813	60000.00000
65856141.	1.239645E+12	0.00005313	0.00089632	16.87185717	2396.10595	60000.00000
66127521.	1.216138E+12	0.00005438	0.00091169	16.76668596	2424.30349	60000.00000
66378984.	1.193330E+12	0.00005563	0.00092691	16.66367483	2451.82519	60000.00000
66629655.	1.171510E+12	0.00005688	0.00094216	16.56552458	2478.98900	60000.00000
66879496.	1.150615E+12	0.00005813	0.00095743	16.47191763	2505.79292	60000.00000
67128533.	1.130586E+12	0.00005938	0.00097272	16.38257360	2532.23610	60000.00000
67376754.	1.111369E+12	0.00006063	0.00098802	16.29722929	2558.31700	60000.00000
67624158.	1.092916E+12	0.00006188	0.00100334	16.21564436	2584.03427	60000.00000
67870715.	1.075180E+12	0.00006313	0.00101869	16.13759279	2609.38599	60000.00000
68116462.	1.058120E+12	0.00006438	0.00103405	16.06287718	2634.37150	60000.00000
68415930.	1.042528E+12	0.00006563	0.00105000	16.00000048	2659.95743	60000.00000
69097678.	1.033236E+12	0.00006688	0.00107000	16.00000048	2691.84232	60000.00000
69097678.	1.014278E+12	0.00006813	0.00108604	15.94184732	2716.58114	60000.00000
69097678.	9.960026E+11	0.00006938	0.00109989	15.85421133	2737.36767	60000.00000
69097678.	9.783742E+11	0.00007063	0.00111375	15.76990271	2757.85832	60000.00000
69201627.	9.628052E+11	0.00007188	0.00112763	15.68875265	2778.05244	60000.00000
69357217.	9.484748E+11	0.00007313	0.00114152	15.61059809	2797.94867	60000.00000
69512187.	9.346176E+11	0.00007438	0.00115544	15.53528738	2817.54574	60000.00000
69820315.	9.082317E+11	0.00007688	0.00118331	15.39265680	2855.83910	60000.00000
70125968.	8.834768E+11	0.00007938	0.00121125	15.25984240	2892.92321	60000.00000
70429129.	8.602031E+11	0.00008188	0.00123926	15.13595438	2928.78912	60000.00000
70633008.	8.371319E+11	0.00008438	0.00126580	15.00204134	2961.42792	60000.00000
70829458.	8.153031E+11	0.00008688	0.00129231	14.87554979	2992.86418	60000.00000
71023819.	7.946721E+11	0.00008938	0.00131889	14.75680590	3023.20413	60000.00000
71216051.	7.751407E+11	0.00009188	0.00134553	14.64518023	3052.43949	60000.00000
71406134.	7.566213E+11	0.00009438	0.00137222	14.54011202	3080.56212	60000.00000
71594058.	7.390354E+11	0.00009688	0.00139898	14.44110060	3107.56398	60000.00000
71594058.	7.204434E+11	0.00009938	0.00143100	14.39999914	3138.70320	60000.00000
71986394.	7.066149E+11	0.00010188	0.00146700	14.39999914	3171.85620	60000.00000
72240927.	6.921286E+11	0.00010438	0.00149375	14.31135035	3194.57324	60000.00000
72407741.	6.774993E+11	0.00010688	0.00151919	14.21466208	3214.99596	60000.00000
72572649.	6.635214E+11	0.00010938	0.00154470	14.12294340	3234.39793	60000.00000
72683717.	6.496869E+11	0.00011188	0.00156888	14.02349710	3251.72226	60000.00000
72782574.	6.363504E+11	0.00011438	0.00159283	13.92638826	3267.92494	60000.00000
72879848.	6.235709E+11	0.00011688	0.00161684	13.83388281	3283.22579	60000.00000
72975520.	6.113133E+11	0.00011938	0.00164089	13.74569464	3297.61831	60000.00000
73069567.	5.995452E+11	0.00012188	0.00166500	13.66156054	3311.09588	60000.00000
73161998.	5.882372E+11	0.00012438	0.00168917	13.58124304	3323.65211	60000.00000
73252788.	5.773619E+11	0.00012688	0.00171339	13.50451899	3335.28016	60000.00000
73341911.	5.668940E+11	0.00012938	0.00173766	13.43118238	3345.97315	60000.00000
73429352.	5.568102E+11	0.00013188	0.00176199	13.36104441	3355.72417	60000.00000
73515118.	5.470893E+11	0.00013438	0.00178637	13.29393339	3364.52639	60000.00000
73599186.	5.377109E+11	0.00013688	0.00181081	13.22968626	3372.37260	60000.00000
73681527.	5.286567E+11	0.00013938	0.00183531	13.16815138	3379.25553	60000.00000
73762143.	5.199094E+11	0.00014188	0.00185987	13.10919142	3385.16791	60000.00000
73841003.	5.114528E+11	0.00014438	0.00188448	13.05267477	3390.10223	60000.00000
73918095.	5.032721E+11	0.00014688	0.00190915	12.99848127	3394.05094	60000.00000
73993410.	4.953534E+11	0.00014938	0.00193388	12.94649935	3397.00637	60000.00000
74066924.	4.876835E+11	0.00015188	0.00195867	12.89662313	3398.96067	60000.00000
74138605.	4.802501E+11	0.00015438	0.00198353	12.84875250	3399.90589	60000.00000
74203151.	4.730081E+11	0.00015688	0.00200840	12.80252695	3396.55784	60000.00000
74664887.	4.684856E+11	0.00015938	0.00204000	12.80000067	3388.73564	60000.00000
75138743.	4.641776E+11	0.00016188	0.00207200	12.80000067	3380.80872	60000.00000
75603044.	4.599425E+11	0.00016438	0.00210400	12.80000067	3374.99119	60000.00000
76057790.	4.557770E+11	0.00016688	0.00213600	12.80000067	3382.44305	60000.00000
76057790.	4.490497E+11	0.00016938	0.00216019	12.75388098	3386.87449	60000.00000
76057790.	4.425180E+11	0.00017188	0.00218227	12.69683218	3390.25627	60000.00000
76057790.	4.361737E+11	0.00017438	0.00220440	12.64173746	3393.14427	60000.00000
76057790.	4.240156E+11	0.00017938	0.00224884	12.53708696	3397.41811	60000.00000
76057790.	4.125168E+11	0.00018438	0.00229351	12.43935442	3399.65411	60000.00000
76057790.	4.016253E+11	0.00018938	0.00233858	12.34892321	3396.24581	60000.00000
76057790.	3.912941E+11	0.00019438	0.00238405	12.26522112	3387.40068	60000.00000
76057790.	3.814811E+11	0.00019938	0.00242967	12.18645144	3378.51687	60000.00000
76057790.	3.721482E+11	0.00020438	0.00247544	12.11226797	3369.59353	60000.00000
76057790.	3.632611E+11	0.00020938	0.00252137	12.04235888	3366.35814	60000.00000
76057790.	3.547885E+11	0.00021438	0.00256745	11.97643805	3375.13097	60000.00000
76057790.	3.467022E+11	0.00021938	0.00261369	11.91424513	3382.62223	60000.00000
76057790.	3.389762E+11	0.00022438	0.00266009	11.85554838	3388.80846	60000.00000
76057790.	3.315871E+11	0.00022938	0.00270666	11.80013323	3393.66513	60000.00000
76057790.	3.245132E+11	0.00023438	0.00275339	11.74780798	3397.16701	60000.00000
76057790.	3.177349E+11	0.00023938	0.00280030	11.69839239	3399.28773	60000.00000
76057790.	3.112339E+11	0.00024438	0.00284739	11.65172625	3399.99438	60000.00000
76057790.	3.049936E+11	0.00024938	0.00289511	11.60945177	3392.67085	60000.00000
76057790.	2.989987E+11	0.00025438	0.00294271	11.56840754	3385.37632	60000.00000
76057790.	2.932349E+11	0.00025938	0.00298784	11.51936388	3378.73850	60000.00000
76057790.	2.876890E+11	0.00026438	0.00303303	11.47246599	3372.08036	60000.00000
76057790.	2.823491E+11	0.00026938	0.00307831	11.42758799	3365.40237	60000.00000
76057790.	2.772038E+11	0.00027438	0.00312366	11.38463259	3358.70358	60000.00000
76057790.	2.722426E+11	0.00027938	0.00316909	11.34349108	3351.98439	60000.00000
76057790.	2.674560E+11	0.00028438	0.00321483	11.30489588	3345.18258	60000.00000
76057790.	2.628347E+11	0.00028938	0.00326116	11.26965380	3348.91039	60000.00000
76057790.	2.583704E+11	0.00029438	0.00330757	11.23591089	3356.78983	60000.00000
76057790.	2.540552E+11	0.00029938	0.00335408	11.20360136	3364.04404	60000.00000
76057790.	2.498819E+11	0.00030438	0.00340900	11.19999933	3373.40731	60000.00000
76057790.	2.458434E+11	0.00030938	0.00346500	11.19999933	3381.65023	60000.00000

76057790.	2.419333E+11	0.00031438	0.00352100	11.19999933	3388.36838	60000.00000
76057790.	2.381457E+11	0.00031938	0.00357700	11.19999933	3393.56178	60000.00000
76057790.	2.344749E+11	0.00032438	0.00363300	11.19999933	3397.23040	60000.00000

Unfactored (Nominal) Moment Capacity at Concrete Strain of 0.003 = 76057.78972 in-kip

The analysis ended normally.

CONCRETE BEAM FLEXURAL DESIGN

VSi Job No.: 122449
Date: 01/28/2013
Calculated by: MER

Variables:

$\Phi \equiv 0.9$ = factor for bending

$\beta 1 := 0.85$ = for fc < OR = 4 ksi (ref. Leet Eq. 3.22)

$fy := 60 \cdot ksi$ = steel yield strength (ksi)

$fc := 4 \cdot ksi$ = concrete strength (ksi)

$b := 24.5ft$ = width of section (in)

$depth := 3.0 \cdot ft$ = total depth of section (in)

$bardia := 1.0in$ = diameter of tension reinf. bar (in)

$stirrup := 1.0 \cdot in$ = diameter of shear stirrups (in)

$clr := 3.0 \cdot in$ = clearance for tension reinf (in)

$Mu := 1837 \cdot ft \cdot kip$ = factored moment on section (in-kip)

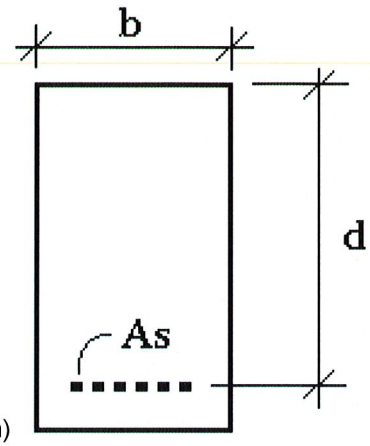

$d := depth - clr - stirrup - \frac{bardia}{2}$ = depth to center of tension reinf (in)

$d = 31.5 \cdot in$

$As_{selected} := 38 \cdot 0.79 \cdot in^2$ = area of steel selected to use in section (1/2 As max ?)

$As_{selected} = 30.02 \cdot in^2$

Determine area of steel REQUIRED to carry bending moment:

$A := -\left(\frac{fy^2}{1.7 \cdot b \cdot fc}\right)$ $B := fy \cdot d$ $C := -\left(\frac{Mu}{\Phi}\right)$

$As_{reqd} := \frac{-B + \sqrt{B^2 - 4 \cdot A \cdot C}}{2 \cdot A}$ $As_{reqd} = 13.12 \cdot in^2$ => REQUIRED area of steel for moment

Determine min and max area of steel for section:

$Asb := \frac{0.85 \cdot \beta 1 \cdot fc \cdot b \cdot d}{fy} \cdot \left(\frac{87000 \cdot psi}{87000 \cdot psi + fy}\right)$ $Asb = 264.001 \cdot in^2$ @ Asb = balanced area of steel

$As_{max} := 0.75 \cdot Asb$ $As_{max} = 198.0 \cdot in^2$ => max. area of steel reinf. for section

$As_{min} := .0018 \cdot b \cdot depth$ $As_{min} = 19.1 \cdot in^2$ => min. area of steel reinf. for section

Determine moment capacity using selected As:

$\rho := \frac{As_{selected}}{b \cdot d}$ $\rho = 0.00324$

$Mn := \Phi \cdot \rho \cdot fy \cdot b \cdot d^2 \cdot \left(1 - \frac{\rho \cdot fy}{1.7 \cdot fc}\right)$ $Mn = 49603 \cdot in \cdot kip$ => capacity of section w/ selected As

$Mu = 22044 \cdot kip \cdot in$

$Mn = 4134 \cdot kip \cdot ft$ => capacity of section w/ selected As

Constants:

$psi \equiv \frac{lb}{in^2}$ $ksi \equiv 1000 \cdot psi$ $kip \equiv 1000 \cdot lb$

CONCRETE BEAM FLEXURAL DESIGN

VSi Job No.: 122449
Date: 01/28/2013
Calculated by: MER

Variables:

$\Phi \equiv 0.9$ = factor for bending

$\beta 1 := 0.85$ = for fc < OR = 4 ksi (ref. Leet Eq. 3.22)

$fy := 60 \cdot ksi$ = steel yield strength (ksi)

$fc := 4 \cdot ksi$ = concrete strength (ksi)

$b := 24.5ft$ = width of section (in)

$depth := 3.0 \cdot ft$ = total depth of section (in)

$bardia := 1.0in$ = diameter of tension reinf. bar (in)

$stirrup := 1.0 \cdot in$ = diameter of shear stirrups (in)

$clr := 3.0 \cdot in$ = clearance for tension reinf (in)

$Mu := 878 \cdot ft \cdot kip$ = factored moment on section (in-kip)

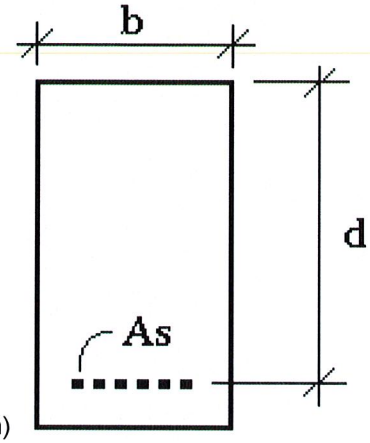

$d := depth - clr - stirrup - \frac{bardia}{2}$ = depth to center of tension reinf (in)

$d = 31.5 \cdot in$

$As_{selected} := 22 \cdot 0.79 \cdot in^2$ = area of steel selected to use in section (1/2 As max ?)

$As_{selected} = 17.38 \cdot in^2$

Determine area of steel REQUIRED to carry bending moment:

$A := -\left(\frac{fy^2}{1.7 \cdot b \cdot fc}\right)$ $B := fy \cdot d$ $C := -\left(\frac{Mu}{\Phi}\right)$

$As_{reqd} := \frac{-B + \sqrt{B^2 - 4 \cdot A \cdot C}}{2 \cdot A}$ $As_{reqd} = 6.23 \cdot in^2$ => REQUIRED area of steel for moment

Determine min and max area of steel for section:

$Asb := \frac{0.85 \cdot \beta 1 \cdot fc \cdot b \cdot d}{fy} \cdot \left(\frac{87000 \cdot psi}{87000 \cdot psi + fy}\right)$ $Asb = 264.001 \cdot in^2$ @ Asb = balanced area of steel

$As_{max} := 0.75 \cdot Asb$ $As_{max} = 198.0 \cdot in^2$ => max. area of steel reinf. for section

$As_{min} := .0018 \cdot b \cdot depth$ $As_{min} = 19.1 \cdot in^2$ => min. area of steel reinf. for section

Determine moment capacity using selected As:

$\rho := \frac{As_{selected}}{b \cdot d}$ $\rho = 0.00188$

$Mn := \Phi \cdot \rho \cdot fy \cdot b \cdot d^2 \cdot \left(1 - \frac{\rho \cdot fy}{1.7 \cdot fc}\right)$ $Mn = 29074 \cdot in \cdot kip$ => capacity of section w/ selected As

$Mu = 10536 \cdot kip \cdot in$

$Mn = 2423 \cdot kip \cdot ft$ => capacity of section w/ selected As

Constants:

$psi \equiv \frac{lb}{in^2}$ $ksi \equiv 1000 \cdot psi$ $kip \equiv 1000 \cdot lb$

VSi Job No.: 122449
Date: 01/28/2013
Calculated by: MER

PAD AND PIER FOUNDATION DESIGN FOR SELF-SUPPORTING POLE STRUCTURE: ANSI TIA-222-F

Inputs: Reactions

$M := 3801 \cdot k \cdot ft$ = Overturning moment at top of pier, unfactored

$P := 41 \cdot k$ = Axial load at top of pier unfactored

$V := 37 \cdot k$ = Shear load at top of pier unfactored

Inputs: Concrete

$B_{pad} := 24.5 \cdot ft$ = Pad width (and length)

$B_{pier} := 8.0 \cdot ft$ = Pier diameter

$H := 12 \cdot in$ = Distance from top of pier to top of grade

$z_{pad} := 6.0 \cdot ft$ = Pad depth

$t_{pad} := 3.0 \cdot ft$ = Pad thickness

$f'_c := 4000 \cdot psi$ = specified 28-day compressive strength

$\gamma_c := 150 \cdot pcf$ = Density of concrete

Inputs: Rebar and Anchorage

$d_{tie} := 0.5 \cdot in$ = diameter of tie in pier

$d_{vert} := 1.0 \cdot in$ = diameter of verticals in pier

$n_{vert} := 36$ = number of verticals in pier

$d_{hTop} := 1.0 \cdot in$ = diameter of horizontal bars in top of pad - #7

$n_{hTop} := 32$ = number of horizontal bars in top of pad

$d_{hBot} := 1.0 \cdot in$ = diameter of horizontal bars in bottom of pad - #9

$n_{hBot} := 22$ = number of horizontal bars in bottom of pad

$cover := 3 \cdot in$ = distanced from outside of concrete to edge of rebar

$BC := 66.0 \cdot in$ = bolt-circle diameter for anchor rods

$d_{template} := 6 \cdot in$ = anchor rod template width

$embed := 72 \cdot in$ = anchor rod embedment

$f_y := 60 \cdot ksi$ = specified minimum yield strength of rebar

Inputs: Strength

$\Phi M_{nPier} := 5704.3 \cdot k \cdot ft$ = nominal flexural resistance, positive moment [Pier.lpd (A-02)]

$\Phi M_{nBot} := 4134 \cdot k \cdot ft$ = nominal flexural resistance, positive moment [BM-FLEX_MnPadBot.xmcd (A-03)]

$\Phi M_{nTop} := 2423 \cdot k \cdot ft$ = nominal flexural resistance, negative moment [BM-FLEX_MnPadTop.xmcd (A-03)]

Inputs: Soil

$\gamma_s := 120 \cdot pcf$ = Density of soil

$q'_{all} := 8000 \cdot psf$ = Net allowable bearing pressure

$\psi := 0.5$ = coefficient of friction

CONSTANTS:

$kip \equiv 1000 \cdot lbf$

$ksi \equiv \frac{kip}{in^2}$

$G \equiv 11200 \cdot ksi$

$E \equiv 29000 \cdot ksi$

$pcf \equiv \frac{lb}{ft^3}$

$psf \equiv \frac{lb}{ft^2}$

$k \equiv 1000 \cdot lb$

$\Phi_s \equiv 0.75$

Ouput: Factored Reactions

$M_u := 1.3 \cdot M$ = Overturning moment at top of pier, factored $M_u = 4941 \cdot k \cdot ft$

$P_u := 1.3P$ = Axial load at top of pier, factored $P_u = 53 \cdot k$

$V_u := 1.3V$ = Shear load at top of pier, factored $V_u = 48 \cdot k$

Output: Dead Loads

$$V_{pier} := \frac{\pi \cdot B_{pier}^2}{4}\left(z_{pad} - t_{pad} + H\right)$$

$$D_{pier} := V_{pier} \cdot \gamma_c \qquad D_{pier} = 30.2 \cdot k$$

$$V_{pad} := B_{pad}^2 \cdot t_{pad}$$

$$D_{pad} := V_{pad} \cdot \gamma_c \qquad D_{pad} = 270.1 \cdot k$$

$$V_{soil} := B_{pad}^2 \cdot \left(z_{pad} - t_{pad}\right) - V_{pier} + \frac{\pi \cdot B_{pier}^2}{4} \cdot H$$

$$D_{soil} := V_{soil} \cdot \gamma_s \qquad D_{soil} = 198.0 \cdot k$$

Output: Eccentricity:

$$P_{total} := D_{pier} + D_{pad} + D_{soil} + P \qquad P_{total} = 539.3 \cdot k$$

$$M_{total} := M + V \cdot \left(H + z_{pad}\right) \qquad M_{total} = 4060 \cdot k \cdot ft$$

$$ecc := \frac{M_{total}}{P_{total}} \qquad ecc = 7.53\ ft$$

$$limit := \frac{B_{pad}}{6} \qquad limit = 4.08\ ft$$

$$X := 3 \cdot \left(\frac{B_{pad}}{2} - ecc\right) \qquad X = 14.16\ ft$$

Output: Bearing pressures, unfactored (bottom)

$$q_{max1} := \frac{P_{total}}{B_{pad}^2} + \frac{M_{total}}{B_{pad}^3} \qquad q_{max1} = 2555 \cdot psf$$

$$q_{max2} := \frac{2 \cdot P_{total}}{3 \cdot B_{pad}^2 \cdot \left(0.5 - \frac{ecc}{B_{pad}}\right)} \qquad q_{max2} = 3108 \cdot psf$$

$$q_{max} := if\left(ecc > \frac{B_{pad}}{6}, q_{max2}, q_{max1}\right) \qquad q_{max} = 3108 \cdot psf$$

$$q_{min1} := \frac{P_{total}}{B_{pad}^2} + \frac{M_{total}}{B_{pad}^3} \qquad q_{min1} = 1174 \cdot psf$$

$$B_{cant} := \frac{B_{pad} - B_{pier}}{2}$$ $B_{cant} = 8.25\,ft$

$$q_{pier1} := q_{min1} + (q_{max1} - q_{min1}) \cdot \frac{B_{pad} - B_{cant}}{B_{pad}}$$

$$q_{pier2} := q_{max} \cdot \left(\frac{X - B_{cant}}{X}\right)$$

$$q_{pier} := \text{if}(ecc < limit, q_{pier1}, \text{if}(q_{pier2} > 0, q_{pier2}, 0))$$ $q_{pier} = 1298 \cdot psf$

$$q'_{max} := q_{max} - \gamma_s \cdot z_{pad}$$ $q'_{max} = 2388 \cdot psf$

Calculate qu, Bottom

$$q_{uMax} := 1.3 \cdot [q_{max} - \gamma_c \cdot t_{pad} - \gamma_s \cdot (z_{pad} - t_{pad})]$$ $q_{uMax} = 2987 \cdot psf$

$$q_{uPier} := 1.3 \cdot [q_{pier} - \gamma_c t_{pad} - \gamma_s \cdot (z_{pad} - t_{pad})]$$ $q_{uPier} = 634 \cdot psf$

Calculate qu, Top

$$q_{uTop} := 1.3[\gamma_c t_{pad} + \gamma_s \cdot (z_{pad} - t_{pad})]$$ $q_{uTop} = 1053 \cdot psf$

Calculate shear nominal resistances

$$A_{pier} := \frac{\pi \cdot B_{pier}^2}{4}$$ $A_{pier} = 7238 \cdot in^2$

$$\Phi V_{cPier} := 0.85 \cdot 2 \cdot \frac{\sqrt{\frac{f'_c}{psi}}}{1000} \cdot \frac{A_{pier}}{in^2} \cdot 1k$$ $\Phi V_{cPier} = 778 \cdot k$

$$d_{Bot} := t_{pad} - cover - 1.5 \cdot d_{hBot}$$ $d_{Bot} = 31.50 \cdot in$

$$\Phi V_{cPad} := 0.85 \cdot 2 \cdot \frac{\sqrt{\frac{f'_c}{psi}}}{1000} \left(\frac{B_{pad}}{1 \cdot in} \cdot \frac{d_{Bot}}{1 \cdot in}\right) \cdot 1k$$ $\Phi V_{cPad} = 996 \cdot k$

Calculate Factored Forces in Pier:

$$M_{uPier} := M_u + V_u \cdot (H + z_{pad} - t_{pad})$$ $M_{uPier} = 5134 \cdot k \cdot ft$

$$V_{uPier} := V_u$$ $V_{uPier} = 48 \cdot k$

Calculate Factored Forces in Pad, Postive:

$$R_r := \text{if}(q_{uPier} > 0 \cdot psf, q_{uPier} \cdot B_{pad} \cdot B_{cant}, 0)$$

$$R_t := \text{if}\left[X < B_{cant}, \frac{1}{2} \cdot q_{uMax} \cdot X \cdot B_{pad}, \frac{1}{2} \cdot (q_{uMax} - q_{uPier}) \cdot B_{cant} \cdot B_{pad}\right]$$

$M_{uR} := R_r \cdot \frac{B_{cant}}{2}$

$M_{uT} := \text{if}\left[X > B_{cant}, R_t \cdot \frac{2}{3} \cdot B_{cant}, R_t \cdot \left(B_{cant} - \frac{X}{3}\right)\right]$

$M_{uBot} := M_{uR} + M_{uT}$ $\qquad M_{uBot} = 1837 \cdot k \cdot ft$

$V_{uBot} := R_r + R_t$ $\qquad V_{uBot} = 366 \cdot k$

Calculate Factored Forces in Pad, Negative:

$M_{uTop} := q_{uTop} \cdot B_{cant} \cdot B_{pad} \cdot \frac{B_{cant}}{2}$ $\qquad M_{uTop} = 878 \cdot k \cdot ft$

$V_{uTop} := q_{uTop} \cdot B_{cant} \cdot B_{pad}$ $\qquad V_{uTop} = 213 \cdot k$

Calculate Overturning Stability:

$OTM_{total} := M + V \cdot (H + z_{pad})$ $\qquad OTM_{total} = 4060 \cdot k \cdot ft$

$OTM_r := P_{total} \cdot \frac{B_{pad}}{2}$ $\qquad OTM_r = 6606 \cdot k \cdot ft$

Calculate Sliding Stability:

$H_{total} := V$ $\qquad H_{total} = 37 \cdot k$

$H_r := (D_{pier} + D_{pad} + P) \cdot \psi$ $\qquad H_r = 171 \cdot k$

Design Checks, Soil:

$r_{q'} := \frac{q'_{max}}{q'_{all}}$ Net Bearing Pressure $\qquad r_{q'} = 30 \cdot \%$

$r_{OTM} := \frac{OTM_{total}}{\frac{OTM_r}{1.5}}$ Overturning Stability $\qquad r_{OTM} = 92 \cdot \%$

$r_H := \frac{H_{total}}{\frac{H_r}{2.0}}$ Sliding Stability $\qquad r_H = 43 \cdot \%$

Design Checks, Pier Structure:

$r_{mPier} := \frac{M_{uPier}}{\Phi M_{nPier}}$ $\qquad r_{mPier} = 90 \cdot \%$

$r_{vPier} := \frac{V_{uPier}}{\Phi V_{cPier}}$ $\qquad r_{vPier} = 6 \cdot \%$

Design Checks, Pad Structure:

$$r_{mBot} := \frac{M_{uBot}}{\Phi M_{nBot}}$$ $r_{mBot} = 44 \cdot \%$

$$r_{vBot} := \frac{V_{uBot}}{\Phi V_{cPad}}$$ $r_{vBot} = 37 \cdot \%$

$$r_{mTop} := \frac{M_{uTop}}{\Phi M_{nTop}}$$ $r_{mTop} = 36 \cdot \%$

$$r_{vTop} := \frac{V_{uTop}}{\Phi V_{cPad}}$$ $r_{vTop} = 21 \cdot \%$

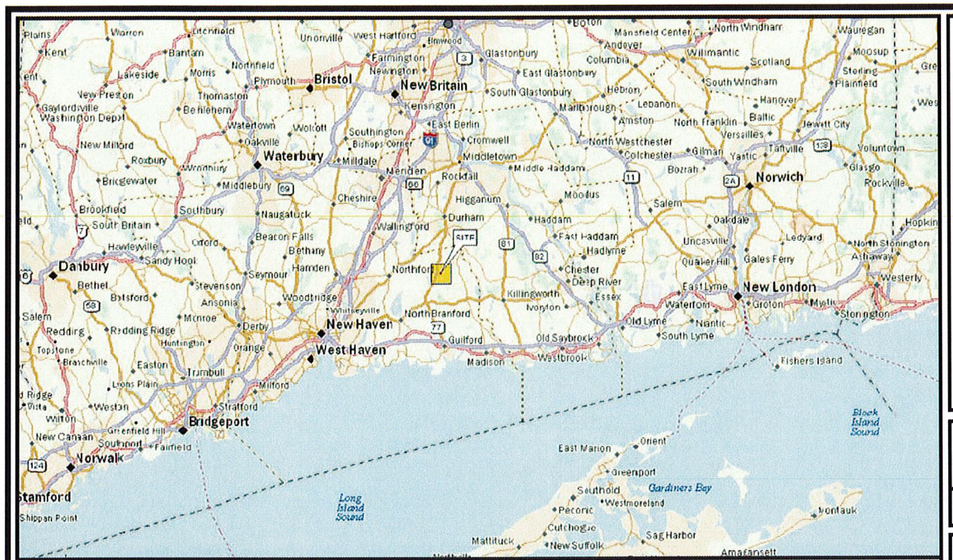

PROXIMITY MAP

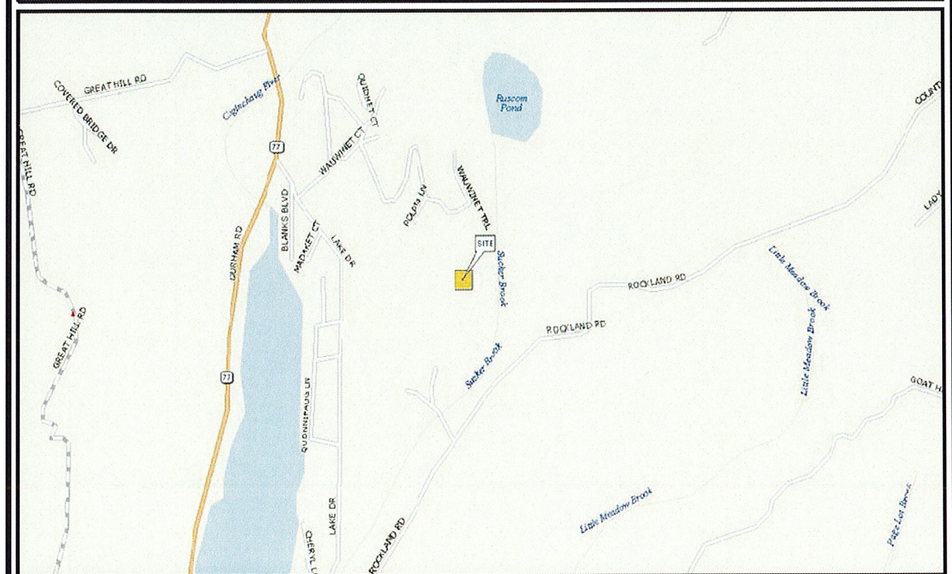

LOCATION MAP

START AT TWEED-NEW HAVEN AIRPORT. GO STRAIGHT (NNE) ON ACCESS RD. IN 0.12 MI KEEP RIGHT (WNW) ON TO <UNNAMED>. IN 0.01 MI TURN RIGHT (NNE) ON TO BURR ST. IN 0.13 MI TURN RIGHT (ESE) ON TO DODGE AVE. IN 0.61 MI TURN LEFT (NNE) ON TO THOMPSON AVE. IN 0.65 MI GO STRAIGHT (N) ON TO SR 100 (HIGH ST). IN 0.34 MI KEEP RIGHT (E) ON TO I-95 N (CONNECTICUT TPKE|GOVERNOR JOHN DAVIS LODGE TPKE) RAMP. IN 0.02 MI KEEP RIGHT (E) ON I-95 N (CONNECTICUT TPKE|GOVERNOR JOHN DAVIS LODGE TPKE) RAMP. IN 4.69 MI KEEP RIGHT (WSW) ON TO US 1 (E MAIN ST) RAMP 55. IN 0.36 MI GO STRAIGHT (N) ON US 1 (E MAIN ST) RAMP. IN 0.02 MI KEEP RIGHT (NE) ON TO US 1 (E MAIN ST). IN 0.27 MI KEEP LEFT (NNE) ON TO SR 139 (N BRANFORD RD). IN 2.39 MI KEEP RIGHT (ENE) ON TO SR 22 (SR 80|FOXON RD). IN 0.09 MI KEEP LEFT (NE) ON TO SR 80 (FOXON RD). IN 3.18 MI TURN LEFT (NNE) ON TO SR 77 (DURHAM RD). IN 3.70 MI TURN RIGHT (SSE) ON TO LAKE DR. IN 0.08 MI TURN LEFT (NE) ON TO MOHAWK TRL. IN 0.11 MI TURN RIGHT (ENE) ON TO WAUWINET CT. IN 0.07 MI TURN RIGHT (ESE) ON TO WAUWINET TRL. IN 0.43 MI FINISH AT SITE.

DRIVING DIRECTIONS

PROJECT INFORMATION:

PROJECT NAME:

WEST HAVEN-RT15 /WOODBRIDGE

CT46139-A

PROJECT LOCATION:

370 ROCKLAND ROAD
GUILFORD, CT 06437
(NEW HAVEN COUNTY)

LATTITUDE	N41° 23' 48.60"
LONGITUDE	W72° 41' 19.70"
GROUND ELEVATION	372'

2-C CERTIFICATION (REF: SBA)

SITE CONSTRUCTON MANAGER:

NAME	SBA COMMUNICATIONS CORPORATION
ADDRESS	5900 BROKEN SOUND PARKWAY NW
CITY, STATE, ZIP	BOCA RATON, FL 33487-2797
CONTACT	DWAYNE LYERLY
PHONE	(919) 557-0555

SITE APPLICANT:

NAME	SPRINT
ADDRESS	6391 SPRINT PKWY MAILSTOP
CITY, STATE, ZIP	OVERLAND, KS 66251
CONTACT	MARK KULIK
EMAIL	Mark.kulik@alcatel-lucent.com

SURVEYOR:

NAME	N/A
ADDRESS	N/A
CITY, STATE, ZIP	N/A
CONTACT	N/A
PHONE	N/A

CIVIL ENGINEER:

NAME	VERTICAL SOLUTIONS
ADDRESS	2002 PRODUCTION DRIVE
CITY, STATE, ZIP	APEX, NC 27539
CONTACT	MIKE LASSITER
PHONE	(888) 321-6167

ELECTRICAL ENGINEER:

NAME	N/A
ADDRESS	N/A
CITY, STATE, ZIP	N/A
CONTACT	N/A
PHONE	N/A

PROPERTY INFORMATION:

NAME	WEST HAVEN-RT15 /WOODBRIDGE
ADDRESS	370 ROCKLAND ROAD
CITY, STATE, ZIP	GUILFORD, CT 06437
CONTACT	MICHAEL VILLA
PHONE	(412) 445-4325

UTILITIES:

POWER COMPANY	N/A
CONTACT	N/A
PHONE	N/A
TELEPHONE COMPANY	N/A
CONTACT	N/A
PHONE	N/A
PHONE # NEAR SITE	N/A

CONTACT INFORMATION

PROJECT DESCRIPTION:
STRUCTURAL UPGRADE

TOWER TYPE:
158.5' SELF SUPPORTING POLE STRUCTURE

AREA OF CONSTRUCTION:
N/A

PROJECT INFORMATION

CONNECTICUT ONE CALL
CALL BEFORE YOU DIG
1-800-922-4455

ONE CALL

SHEET	DESCRIPTION	REV
T-1	TITLE SHEET	0
N-1	PROJECT NOTES	0
N-2	PROJECT NOTES	0
B-1	BILL OF MATERIALS	0
D-1	DEMOLITION DETAILS	0
S-1	TOWER ELEVATION AND MODIFICATION SCHEDULE	0
S-2	CONSTRUCTION DETAILS	0
S-3	CONSTRUCTION DETAILS	0
S-4	CONSTRUCTION DETAILS	0
S-5	CONSTRUCTION DETAILS	0
S-6	FABRICATION DETAILS	0
S-7	FABRICATION DETAILS	0
S-8	FABRICATION DETAILS	0
S-9	FABRICATION DETAILS	0

INDEX OF SHEETS

PLANS PREPARED FOR:

SBA

5900 BROKEN SOUND PARKWAY NW
BOCA RATON, FL 33487-2797
(919) 557-0555

PROJECT INFORMATION:

WEST HAVEN-RT15 /WOODBRIDGE
CT46139-A

370 ROCKLAND ROAD
GUILFORD, CT 06437
(NEW HAVEN COUNTY)

PLANS PREPARED BY:

vertical solutions

2002 PRODUCTION DRIVE
APEX, NC 27539
OFFICE: (888) 321-6167
www.verticalsolutions-inc.com

REV	DATE	ISSUED FOR:
0	01-30-13	CONSTRUCTION

DRAWN BY: MEA | CHECKED BY: MER

SHEET TITLE:

TITLE SHEET

SHEET NUMBER: **T-1**

REVISION: **0**

VSI #: 122449

SEAL:

STATE OF CONNECTICUT
MICHAEL L. LASSITER
No. 25064
LICENSED
PROFESSIONAL ENGINEER

January 30, 2013

GENERAL NOTES:

1. ALL REFERENCES TO TOWER OWNER IN THESE DOCUMENTS SHALL BE CONSIDERED AS SBA OR ITS DESIGNATED REPRESENTATIVE.

2. ALL WORK PRESENTED ON THESE DRAWINGS MUST BE COMPLETED BY THE CONTRACTOR UNLESS NOTED OTHERWISE. THE CONTRACTOR MUST HAVE CONSIDERABLE EXPERIENCE IN PERFORMANCE OF WORK SIMILAR TO THAT DESCRIBED HEREIN. BY ACCEPTANCE OF THIS ASSIGNMENT, THE CONTRACTOR IS ATTESTING THAT HE DOES HAVE SUFFICENT EXPERIENCE AND ABILITY, THAT HE IS KNOWLEDGEABLE OF THE WORK TO BE PERFORMED AND THAT HE IS PROPERLY LICENSED AND PROPERLY REGISTERED TO DO THIS WORK IN THE STATE OF CONNECTICUT.

3. THE STRUCTURE IS DESIGNED IN ACCORDANCE WITH ANSI/TIA-222-F-1996, FOR A 80 MPH FASTEST MILE BASIC WIND SPEED. ALL WORK SHALL BE COMPLETED IN ACCORDANCE WITH THE CONNECTICUT STATE BUILDING CODE, 2005 EDITION.

4. UNLESS SHOWN OR NOTED OTHERWISE ON THE CONTRACT DRAWINGS, OR IN THE SPECIFICATIONS, THE FOLLOWING NOTES SHALL APPLY TO THE MATERIALS LISTED HEREIN, AND TO THE PROCEDURES TO BE USED ON THIS PROJECT.

5. ALL PRODUCT MANUFACTURER'S INSTRUCTIONS SHALL BE FOLLOWED EXACTLY AND SHALL SUPERCEDE ANY CONFLICTING NOTES ENCLOSED HEREIN.

6. IT IS THE CONTRACTOR'S SOLE RESPONSIBILITY TO DETERMINE MODIFICATION PROCEDURE AND SEQUENCE TO INSURE THE SAFETY OF THE STRUCTURE AND IT'S COMPONENT PARTS DURING ERECTION AND/OR FIELD MODIFICATIONS. THIS INCLUDES, BUT IS NOT LIMITED TO, THE ADDITION OF TEMPORARY BRACING, GUYS OR TIE-DOWNS THAT MAY BE NECESSARY, SUCH MATERIAL SHALL BE REMOVED AND SHALL REMAIN THE PROPERTY OF THE CONTRACTOR AFTER THE COMPLETION OF THE PROJECT.

7. ALL DIMENSIONS, ELEVATIONS, AND EXISTING CONDITIONS SHOWN ON THE DRAWINGS SHALL BE FIELD VERIFIED BY THE CONTRACTOR PRIOR TO BEGINNING ANY MATERIALS ORDERING, FABRICATION OR CONSTRUCTION WORK ON THIS PROJECT. CONTRACTOR SHALL NOT SCALE CONTRACT DRAWINGS IN LIEU OF FIELD VERIFICATION. ANY DISCREPANCIES SHALL BE IMMEDIATELY BROUGHT TO THE ATTENTION OF THE OWNER AND THE OWNER'S ENGINEER. THE DISCREPANCIES MUST BE RESOLVED BEFORE THE CONTRACTOR IS TO PROCEED WITH THE WORK. THE CONTRACT DOCUMENTS DO NOT INDICATE THE METHOD OF CONSTRUCTION. THE CONTRACTOR SHALL SUPERVISE AND DIRECT THE WORK AND SHALL BE SOLELY RESPONSIBLE FOR ALL CONSTRUCTION MEANS, METHODS, TECHNIQUES, SEQUENCES, AND PROCEDURES. OBSERVATION VISITS TO THE SITE BY THE OWNER AND/OR THE ENGINEER SHALL NOT INCLUDE INSPECTION OF THE PROTECTIVE MEASURES AND PROCEDURES.

8. ALL MATERIALS AND EQUIPMENT FURNISHED SHALL BE NEW AND OF GOOD QUALITY, FREE FROM FAULTS AND DEFECTS AND IN COMFORMANCE WITH THE CONTRACT DOCUMENTS. ANY AND ALL SUBSTITUTIONS MUST BE PROPERLY APPROVED AND AUTHORIZED IN WRITING BY THE OWNER AND ENGINEER PRIOR TO INSTALLATION. THE CONTRACTOR SHALL FURNISH SATISFACTORY EVIDENCE AS TO THE KIND AND QUALITY OF THE MATERIALS AND EQUIPMENT BEING SUBSTITUTED.

9. THE CONTRACTOR SHALL BE RESPONSIBLE FOR INITIATING, MAINTAINING AND SUPERVISING ALL SAFETY PRECAUTIONS AND PROGRAMS IN CONNECTION WITH THE WORK. THE CONTRACTOR IS RESPONSIBLE FOR INSURING THAT THIS PROJECT AND RELATED WORK COMPLIES WITH ALL APPLICABLE AND LOCAL, STATE, AND FEDERAL SAFETY CODES AND REGULATIONS GOVERNING THIS WORK.

10. ACCESS TO THE PROPOSED WORK SITE MAY BE RESTRICTED. THE CONTRACTOR SHALL COORDINATE INTENDED CONSTRUCTION ACTIVITY, INCLUDING WORK SCHEDULE AND MATERIALS ACCESS, WITH THE RESIDENT LEASING AGENT FOR APPROVAL.

11. BILL OF MATERIALS AND PART NUMBERS LISTED ON THE CONSTRUCTION DRAWINGS ARE INTENDED TO AID THE CONTRACTOR/OWNER. CONTRACTOR/OWNER SHALL VERIFY PARTS AND QUANTITIES WITH THE MANUFACTURER PRIOR TO BIDDING AND/OR ORDERING MATERIALS.

12. CONTRACTOR SHALL SECURE ALL NECESSARY PERMITS FOR THIS PROJECT FROM ALL APPLICABLE GOVERNING AGENCIES.

13. ALL PERMITS THAT MUST BE OBTAINED ARE THE RESPONSIBILITY OF THE CONTRACTOR. THE CONTRACTOR WILL BE RESPONSIBLE FOR ABIDING BY ALL CONDITIONS AND REQUIREMENTS OF THE PERMITS.

14. 24 HOURS BEFORE THE BEGINNING OF ANY CONSTRUCTION, THE CONTRACTOR MUST NOTIFY THE APPLICABLE JURISDICTIONAL (STATE, COUNTY OR CITY) ENGINEER.

15. THE CONTRACTOR SHALL REWORK (DRY, SCARIFY, ETC.) ALL MATERIAL NOT SUITABLE FOR SUBGRADE IN ITS PRESENT STATE. IF THE MATERIAL REMAINS UNSUITABLE AFTER REWORKING, THE CONTRACTOR SHALL UNDERCUT THIS MATERIAL AND REPLACE IT WITH APPROVED MATERIAL. IF PAVING IS TO BE DONE, ALL SUBGRADES SHALL BE PROOFROLLED WITH A FULLY LOADED TANDEM AXLE DUMP TRUCK PRIOR TO PAVING. ANY SOFT MATERIAL SHALL BE REWORKED OR REPLACED.

16. THE CONTRACTOR IS REQUIRED TO MAINTAIN ALL PIPES, DITCHES, AND OTHER DRAINAGE STRUCTURES FREE FROM OBSTRUCTION UNTIL WORK IS ACCEPTED BY THE OWNER. THE CONTRACTOR IS RESPONSIBLE FOR ANY DAMAGES CAUSED BY FAILURE TO MAINTAIN DRAINAGE STRUCTURE IN OPERABLE CONDITION.

17. ALL MATERIALS AND WORKMANSHIP SHALL BE WARRANTED FOR ONE YEAR FROM ACCEPTANCE DATE.

18. ALL DIMENSIONS SHALL BE VERIFIED WITH THE PLANS (LATEST REVISION) PRIOR TO COMMENCING CONSTRUCTION. THE OWNER SHALL HAVE A SET OF APPROVED PLANS AVAILABLE AT THE SITE AT ALL TIMES WHILE WORK IS BEING PERFORMED. A DESIGNATED RESPONSIBLE EMPLOYEE SHALL BE AVAILABLE FOR CONTACT BY GOVERNING AGENCY INSPECTORS.

STRUCTURAL STEEL NOTES:

1. THE FABRICATION AND ERECTION OF STRUCTURAL STEEL SHALL CONFORM TO THE AISC SPECIFICATION FOR THE MANUAL OF STEEL CONSTRUCTION, ALLOWABLE STRESS DESIGN, 9TH EDITION.

2. UNLESS OTHERWISE NOTED, ALL STRUCTURAL ELEMENTS SHALL CONFORM TO THE FOLLOWING REQUIREMENTS:
   A. ALL SHAPES SHALL BE ASTM A572-50, PLATES A36, TUBES A500-C, PIPES A500-C
   B. ALL BOLTS SHALL BE GALVANIZED A325 HIGH STRENGTH BOLTS.
   C. ALL NUTS SHALL BE CARBON AND ALLOY STEEL NUTS.
   D. ALL WASHERS SHALL BE ASTM F436 HARDENED STEEL WASHERS.

3. ALL CONNECTIONS NOT FULLY DETAILED ON THESE PLANS SHALL BE DETAILED BY THE FABRICATOR IN ACCORDANCE WITH AISC SPECIFICATION FOR MANUAL OF STEEL CONSTRUCTION, ALLOWABLE STRESS DESIGN, 9TH EDITION.

4. HOLES SHALL NOT BE FLAME CUT THRU STEEL UNLESS APPROVED BY THE ENGINEER.

5. HOT-DIP GALVANIZE ALL ITEMS UNLESS OTHERWISE NOTED, AFTER FABRICATION WHERE PRACTICABLE. GALVANIZING: ASTM A123, ASTM A153/153M OR ASTM A653/653M, G90, AS APPLICABLE.

6. REPAIR DAMAGED SURFACES WITH GALVANIZING REPAIR METHOD AND PAINT CONFORMING TO ASTM OR BY APPLICATION OF STICK OR THICK PASTE MATERIAL SPECIFICALLY DESIGNED FOR REPAIR OF GALVANIZING. CLEAN AREAS TO BE REPAIRED AND REMOVE SLAG FROM WELDS. HEAT SURFACES TO WHICH STICK OR PASTE MATERIAL IS APPLIED, WITH A TORCH, TO A TEMPERATURE SUFFICIENT TO MELT THE METALLICS IN STICK OR PASTE; SPREAD MOLTEN MATERIAL UNIFORMLY OVER SURFACES TO BE COATED AND WIPE OFF EXCESS MATERIAL.

7. A NUT LOCKING DEVICE SHALL BE INSTALLED ON ALL PROPOSED AND/OR REPLACED BOLTS.

8. ALL PROPOSED AND/OR REPLACED BOLTS SHALL BE OF SUFFICIENT LENGTH TO EXCLUDE THE THREADS FROM THE SHEAR PLANE.

9. ALL PROPOSED AND/OR REPLACED BOLTS SHALL BE OF SUFFICIENT LENGTH SUCH THAT THE END OF THE BOLT BE AT LEAST FLUSH WITH THE FACE OF THE NUT. IT IS NOT PERMITTED FOR THE BOLT END TO BE BELOW THE FACE OF THE NUT AFTER TIGHTENING IS COMPLETED.

10. DO NOT OVER TORQUE ASSEMBLY BOLTS. GALVANIZING ON BOLT NUTS AND STEEL PARTS MAY ACT AS A LUBRICANT, THUS OVER TIGHTENING MAY OCCUR AND MAY CAUSE BOLTS TO CRACK AND SNAP OFF.

BOLT TIGHTENING PROCEDURE:

1. TIGHTEN FLANGE BOLTS BY AISC- "TURN OF THE NUT" METHOD, USING THE CHART BELOW:

BOLT LENGTHS UP TO AND INCLUDING FOUR DIA.

3/4"	BOLTS UP TO AND INCLUDING 4.0 LENGTH	+1/3 TURN BEYOND SNUG TIGHT
7/8"	BOLTS UP TO AND INCLUDING 3.5 LENGTH	+1/3 TURN BEYOND SNUG TIGHT
1"	BOLTS UP TO AND INCLUDING 4.0 LENGTH	+1/3 TURN BEYOND SNUG TIGHT
1-1/8"	BOLTS UP TO AND INCLUDING 4.5 LENGTH	+1/3 TURN BEYOND SNUG TIGHT
1-1/4"	BOLTS UP TO AND INCLUDING 5.0 LENGTH	+1/3 TURN BEYOND SNUG TIGHT
1-1/2"	BOLTS UP TO AND INCLUDING 6.0 LENGTH	+1/3 TURN BEYOND SNUG TIGHT

BOLT LENGTH OVER FOUR DIA. BUT NOT EXCEEDING 8 DIA.

3/4"	BOLTS 4.25 TO 6.0 INCH LENGTH	+1/2 TURN BEYOND SNUG TIGHT
7/8"	BOLTS 3.75 TO 7.0 INCH LENGTH	+1/2 TURN BEYOND SNUG TIGHT
1"	BOLTS 4.25 TO 8.0 INCH LENGTH	+1/2 TURN BEYOND SNUG TIGHT
1-1/8"	BOLTS 4.75 TO 9.0 INCH LENGTH	+1/2 TURN BEYOND SNUG TIGHT
1-1/4"	BOLTS 5.25 TO 10.0 INCH LENGTH	+1/2 TURN BEYOND SNUG TIGHT
1-1/2"	BOLTS 6.25 TO 12.0 INCH LENGTH	+1/2 TURN BEYOND SNUG TIGHT

2. SPLICE BOLTS SUBJECT TO DIRECT TENSION SHALL BE INSTALLED AND TIGHTENED AS PER SECTION 8(d)(1) OF THE AISC MANUAL OF STEEL CONSTRUCTION. THE INSTALLATION PROCEDURE IS PARAPHRASED AS FOLLOWS:

"FASTENERS SHALL BE INSTALLED IN PROPERLY ALIGNED HOLES AND BE TIGHTENED BY ONE OF THE METHODS DESCRIBED IN SUBSECTION 8(d)(1) THROUGH 8(d)(4).

8(d)(1) TURN-OF-THE-NUT TIGHTENING.
BOLTS SHALL BE INSTALLED IN ALL HOLES OF THE CONNECTION AND BROUGHT TO A SNUG TIGHT CONDITION. SNUG TIGHT IS DEFINED AS THE TIGHTNESS THAT EXISTS WHEN THE PLIES OF A JOINT ARE IN FIRM CONTACT. THIS MAY BE OBTAINED BY A FEW IMPACTS OF AN IMPACT WRENCH OR THE FULL EFFORT OF A MAN USING AN ORDINARY SPUD WRENCH. SNUG TIGHTENING SHALL PROGRESS SYSTEMATICALLY...UNTIL ALL THE BOLTS ARE SIMULTANEOUSLY SNUG TIGHT AND THE CONNECTION IS FULLY COMPACTED. FOLLOWING THIS INITIAL OPERATION ALL BOLTS IN THE CONNECTION SHALL BE TIGHTENED FURTHER BY THE APPLICABLE AMOUNT OF ROTATION SPECIFIED ABOVE. DURING THE TIGHTENING OPERATION THERE SHALL BE NO ROTATION OF THE PART NOT TURNED BY THE WRENCH. TIGHTENING SHALL PROGRESS SYSTEMATICALLY.

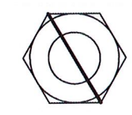

BEFORE 1/3 TURN

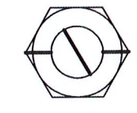

AFTER 1/3 TURN

PLANS PREPARED FOR:

SBA

5900 BROKEN SOUND PARKWAY NW
BOCA RATON, FL 33487-2797
(919) 557-0555

PROJECT INFORMATION:

WEST HAVEN-RT15 /WOODBRIDGE

CT46139-A

370 ROCKLAND ROAD
GUILFORD, CT 06437
(NEW HAVEN COUNTY)

PLANS PREPARED BY:

vertical solutions

2002 PRODUCTION DRIVE
APEX, NC 27539
OFFICE: (888) 321-6167
www.verticalsolutions-inc.com

REV	DATE	ISSUED FOR:
0	01-30-13	CONSTRUCTION

DRAWN BY: MEA | CHECKED BY: MER

SHEET TITLE:

PROJECT NOTES

SHEET NUMBER: **N-1**

REVISION: 0

VSI #: 122449

SEAL:

STATE OF CONNECTICUT
MICHAEL L. LASSITE
No. 25084
LICENSED
PROFESSIONAL ENGINEER

January 30, 2013

APPLICABLE CODES AND STANDARDS

1. ANSI/TIA STRUCTURAL STANDARDS FOR STEEL ANTENNA TOWERS AND ANTENNA SUPPORTING STRUCTURES, 222-F-1996 EDITION.

2. 2005 CONNECTICUT STATE BUILDING CODE.

3. ACI 318: AMERICAN CONCRETE INSTITUTE, BUILDING CODE REQUIREMENTS FOR STRUCTURAL CONCRETE, 318-05.

4. CRSI: CONCRETE REINFORCING STEEL INSTITUTE, MANUAL OF STANDARD PRACTICE, LATEST EDITION.

5. AISC: AMERICAN INSTITUTE OF STEEL CONSTRUCTION, MANUAL OF STEEL CONSTRUCTION, LATEST EDITION.

6. AWS: AMERICAN WELDING SOCIETY D1.1, STRUCTURAL WELDING CODE, LATEST EDITION.

STRUCTURAL STEEL

1. ALL DETAILING, FABRICATION AND ERECTION OF STRUCTURAL STEEL SHALL CONFORM TO THE AISC SPECIFICATIONS, LATEST EDITION.

2. ALL EXPOSED STRUCTURAL STEEL MEMBERS SHALL BE HOT-DIPPED GALVANIZED AFTER FABRICATION PER ASTM A123. EXPOSED STEEL HARDWARE AND ANCHOR BOLTS SHALL BE GALVANIZED PER ASTM A153 OR B695.

3. ALL U-BOLTS SHALL BE ASTM A307 OR EQUIVALENT, WITH LOCKING DEVICE, UNLESS NOTED OTHERWISE.

WELDING

1. ALL WELDING SHALL BE PERFORMED BY WELDERS CURRENTLY STATE OR AWS CERTIFIED TO THE AWS D1.1 STRUCTURAL WELDING CODE, LATEST EDITION.

2. ALL FIELD WELDING SHALL UTILIZE LOW HYDROGEN ELECTRODES.

3. PRIOR TO FIELD WELDING, GRIND OFF GALVANIZING TO 1/2" BEYOND ALL FIELD WELD SURFACES.

4. ALL FIELD CUT, FIELD WELDED, OR DAMAGED GALVANIZING SURFACES SHALL BE REPAIRED WITH ZINC RICH PAINT (95% ZINC CONTENT) PER ASTM A780.

5. PRIOR TO FIELD WELDING, CONTRACTOR SHALL CLEAR THE INTERIOR OF MONOPOLE OF FLAMMABLE DEBRIS. COAXIAL CABLE SHALL BE SHIFTED AWAY FROM PROXIMITY OF THE WELD AND/OR COVERED WITH A HEAT RESISTANT BLANKET.

PAINT

1. CLEAN AND PAINT PROPOSED STEEL ACCORDING TO FAA ADVISORY CIRCULAR AC 70/7460-1K.

REINFORCEMENT STEEL

1. ALL REINFORCEMENT BARS ARE ASTM A572 GRADE 50, Fy = 50 ksi, Fu = 65 ksi.

FIELD WELDS

1. ALL FIELD WELDS SHALL BE MADE WITH E70XX WELD RODS.

GENERAL NOTES:

1. ALL METHODS, MATERIAL AND WORKMANSHIP SHALL FOLLOW THE DICTATES OF GOOD CONSTRUCTION PRACTICES.
2. ALL WORK INDICATED ON THESE DRAWINGS SHALL BE PERFORMED BY QUALIFIED CONTRACTORS EXPERIENCED IN TOWER AND FOUNDATION CONSTRUCTION.
3. THE CONTRACTOR SHALL NOTIFY THE ENGINEER OF RECORD IMMEDIATELY OF ANY INSTALLATION INTERFERENCES. ALL NEW WORK SHALL ACCOMMODATE EXISTING CONDITIONS. DETAILS NOT SPECIFICALLY SHOWN ON THE DRAWINGS SHALL FOLLOW SIMILAR DETAILS FOR THIS JOB.
4. ANY SUBSTITUTIONS MUST CONFORM TO THE REQUIREMENTS OF THE NOTES AND SPECIFICATIONS AND SHOULD BE SIMILAR TO THOSE SHOWN. ALL SUBSTITUTIONS SHALL BE SUBMITTED TO THE ENGINEER OF RECORD FOR REVIEW AND APPROVAL PRIOR TO FABRICATION.
5. ANY MANUFACTURED DESIGN ELEMENTS MUST CONFORM TO THE REQUIREMENTS OF THESE NOTES AND SPECIFICATIONS AND SHOULD BE SIMILAR TO THOSE SHOWN. THESE DESIGN ELEMENTS MUST BE STAMPED BY AN ENGINEER PROFESSIONALLY REGISTERED IN THE STATE OF THE PROJECT, AND SUBMITTED TO THE ENGINEER OF RECORD FOR APPROVAL PRIOR TO FABRICATION.
6. ALL WORK SHALL BE DONE IN ACCORDANCE WITH LOCAL CODES AND OSHA SAFETY REGULATIONS.
7. THE CONTRACTOR IS RESPONSIBLE FOR THE DESIGN AND EXECUTION OF ALL MISCELLANEOUS SHORING, BRACING, TEMPORARY SUPPORTS, ETC. NECESSARY TO PROVIDE A COMPLETE AND STABLE STRUCTURE AS SHOWN ON THESE DRAWINGS.
8. ANY STEEL WHICH HAS BEEN FIELD CUT OR WELDED SHALL BE COLD GALVANIZED WITH 95% ZINC RICH PAINT PER ASTM A780.
9. CONTRACTOR'S PROPOSED INSTALLATION SHALL NOT INTERFERE, NOR DENY ACCESS TO, ANY EXISTING OPERATIONAL AND SAFETY EQUIPMENT.

SPECIAL INSPECTION

1. A QUALIFIED INDEPENDENT TESTING LABORATORY, EMPLOYED BY THE OWNER, SHALL PERFORM INSPECTION AND TESTING IN ACCORDANCE WITH CSBC 2005, SECTION 1704 AS REQUIRED BY PROJECT SPECIFICATIONS FOR THE FOLLOWING CONSTRUCTION WORK:
   a) STRUCTURAL WELDING
   b) HIGH STRENGTH BOLTS
2. THE INSPECTION AGENCY SHALL SUBMIT INSPECTION AND TEST REPORTS TO THE BUILDING DEPARTMENT, THE ENGINEER OF RECORD, AND THE OWNER IN ACCORDANCE WITH CSBC 2005, SECTION 1704. UNLESS THE FABRICATOR IS APPROVED BY THE BUILDING OFFICIAL TO PERFORM SUCH WORK WITHOUT THE SPECIAL INSPECTIONS.

FIELD BOLTS

1. ALL STITCH, SPLICE & TERMINATION BOLTS ARE 20 mm ONESIDE BOLTS BY AJAX.
   a) BOLTS SHALL MEET AS 1252, PROPERTRY CLASS 8.8 (SIMILAR TO ASTM A325M)
   b) Fu = 120 ksi
2. EACH BOLT SHALL INCLUDE A 29 mm O.D. BY 20 mm I.D. SLEEVE (Fu=120 ksi)
3. BOLT HOLES SHALL BE 31 mm MAXIMUM.

PLANS PREPARED FOR:

SBA

5900 BROKEN SOUND PARKWAY NW
BOCA RATON, FL 33487-2797
(919) 557-0555

PROJECT INFORMATION:

WEST HAVEN-RT15 /WOODBRIDGE

CT46139-A

370 ROCKLAND ROAD
GUILFORD, CT 06437
(NEW HAVEN COUNTY)

PLANS PREPARED BY:

vertical solutions

2002 PRODUCTION DRIVE
APEX, NC 27539
OFFICE: (888) 321-6167
www.verticalsolutions-inc.com

REV	DATE	ISSUED FOR:
0	01-30-13	CONSTRUCTION

DRAWN BY: MEA | CHECKED BY: MER

SHEET TITLE:

PROJECT NOTES

SHEET NUMBER: **N-2**

REVISION: **0**

VSI #: 122449

SEAL:

STATE OF CONNECTICUT
MICHAEL L. LASSITER
No. 25064
LICENSED
PROFESSIONAL ENGINEER

January 30, 2013

BILL OF MATERIAL - MONOPOLE REINFORCEMENT

MARK NO.	DESCRIPTION	SIZE	QTY
RB-01	REINFORCING BAR 01	ASTM A572-50 ℞ 1 1/2" x 7 1/4" x 28'-9 1/4"	2
RB-01A	REINFORCING BAR 01A	ASTM A572-50 ℞ 1 1/2" x 7 1/4" x 7'-11 1/4"	2
RB-01B	REINFORCING BAR 01B	ASTM A572-50 ℞ 1 1/2" x 7 1/4" x 25'-7"	1
RB-02	REINFORCING BAR 02	ASTM A572-50 ℞ 1 1/2" x 6 1/2" x 23'-3"	3
RB-03	REINFORCING BAR 03	ASTM A572-50 ℞ 1 1/2" x 5" x 24'-6"	3
RB-VP	REINFORCING BAR VERTICAL PLATE	ASTM A572-50 ℞ 1 1/8"	12
SPL-01	SPLICE PLATE 01	ASTM A572-50 ℞ 1 1/8"	6
TSP	TRANSITION STIFFENER PLATE	ASTM A572-50 ℞ 1 3/8"	8
SP	STIFFENER PLATE	ASTM A572-50 ℞ 3/4"	32
SB	STITCH BOLT (AJAX)*	20-mmØ - STANDARD LENGTH ONESIDE W/ 30-mmØ SLEEVE	284
HSB-01	HIGH STRENGTH BOLT	ASTM A490-X 1 1/8"Ø x 3 3/4" (2) FLAT WASHERS (1) SPLIT WASHER	97
HSB-02	HIGH STRENGTH BOLT	ASTM A325 3/4"Ø x 2 1/2" (2) FLAT WASHERS (1) SPLIT WASHER	168
-	WELD ELECTRODE	E70XX	TBD

NOTES:
1. LABEL BARS WITH BAR #.
2. BARS ARE TO BE ASTM A572 GRADE 50 STEEL & HOT-DIP GALVANIZED.
3. HOLES IN BARS ARE 31mmØ & DIMENSIONED TO CENTERS.
4. BOTTOM OF BARS ON LEFT AS SHOWN.
5. SEE SLEEVE CHART FOR AJAX SLEEVE SIZE AND QUANTITY.

* = A325 1 1/8"Ø MAY BE USED.

AJAX SLEEVE

SLEEVE SIZE	QTY
30-mmØ O.D. x 20-mmØ I.D. x 1.69"	158
30-mmØ O.D. x 20-mmØ I.D. x 2.005"	45
30-mmØ O.D. x 20-mmØ I.D. x 1.885"	30
30-mmØ O.D. x 20-mmØ I.D. x 1.57"	51

NOTE:
1. 45'-6"± TOTAL NEEDED.

PHOTO CHECKLIST

1. CONTRACTOR SHALL SUBMIT THE FOLLOWING PHOTOS TO VERTICAL SOLUTIONS. IF PHOTOS DON'T MEET THE SATISFACTION OF OWNER OR ENGINEER OF RECORD, CONTRACTOR SHALL RETURN TO SITE AT HIS OWN EXPENSE TO OBTAIN ADDITIONAL PHOTOS. AS AN ALTERNATE, CONTRACTOR MAY RETAIN VERTICAL SOLUTIONS TO EXECUTE AN INSPECTION FOR A FEE. TOWERCO MAY ALSO ELECT TO RETAIN VERTICAL SOLUTIONS IF CONTRACTOR SCHEDULE DOES NOT MEET PROJECT TIMELINES. CONTACT inspection@verticalsolutions-inc.com FOR FEE AMOUNT AND / OR SCHEDULE.

BAR REINFORCEMENT - SELF SUPPORTING POLE STRUCTURE

COMPLETE (Y/N)	PHOTOGRAPH(S) DESCRIPTION
	BOTTOM OF RB#1 TO RB#5, INCLUDING ALL TERMINATION BOLTS. MAKE SURE RB'S ARE LABELED PER FIGURE BELOW.
	FULL ELEVATION OF RB#1 TO RB#5, INCLUDING FULL LENGTH OF BAR.
	TOP OF RB#1 TO RB#5, INCLUDING ALL TERMINATION BOLTS.
	LABEL AND PHOTO EACH TRANSITION STIFFENER PLATE EACH SIDE AFTER WELDING AND PRIOR TO COLD GALVANIZING.
	LABEL AND PHOTO EACH TRANSITION STIFFENER PLATE EACH SIDE AFTER COLD GALVANIZING.
	LABEL AND PHOTO EACH STIFFENER PLATE EACH SIDE AFTER WELDING AND PRIOR TO COLD GALVANIZING.
	LABEL AND PHOTO EACH STIFFENER PLATE EACH SIDE AFTER COLD GALVANIZING.

NOTES:
1. MAKE SURE ALL FASTENERS ARE CLEARLY MARKED AND TURNED PER "BOLT TIGHTENING PROCEDURE".

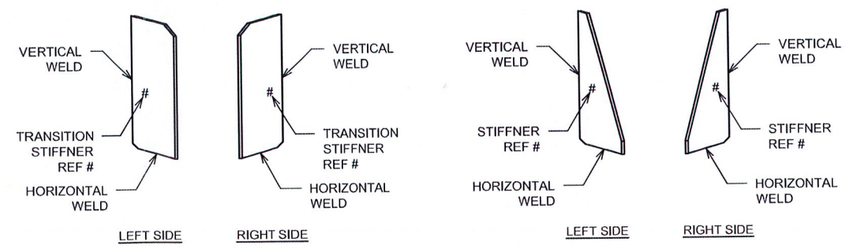

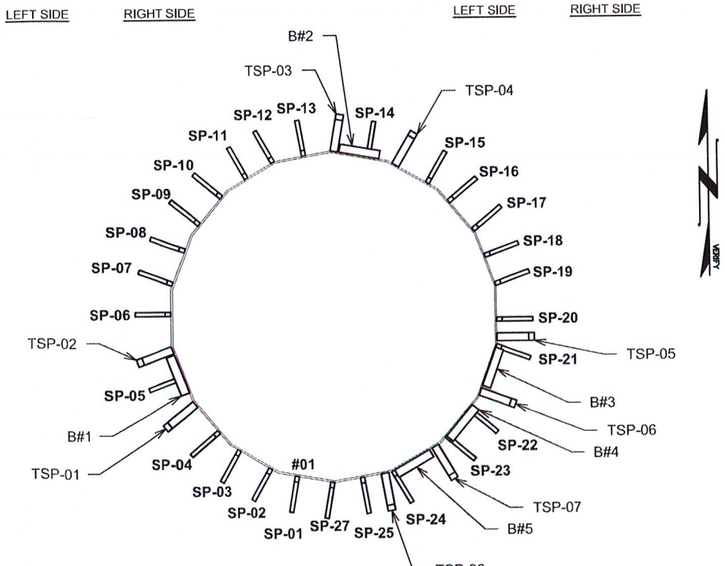

FIGURE

PLANS PREPARED FOR:

SBA

5900 BROKEN SOUND PARKWAY NW
BOCA RATON, FL 33487-2797
(919) 557-0555

PROJECT INFORMATION:

WEST HAVEN-RT15 /WOODBRIDGE

CT46139-A

370 ROCKLAND ROAD
GUILFORD, CT 06437
(NEW HAVEN COUNTY)

PLANS PREPARED BY:

vertical solutions

2002 PRODUCTION DRIVE
APEX, NC 27539
OFFICE: (888) 321-6167
www.verticalsolutions-inc.com

REV	DATE	ISSUED FOR:
0	01-30-13	CONSTRUCTION

DRAWN BY: MEA | CHECKED BY: MER

SHEET TITLE:

BILL OF MATERIALS

SHEET NUMBER: **B-1**

REVISION: 0

VSI #: 122449

SEAL:

STATE OF CONNECTICUT
MICHAEL L. LASSITER
No. 25004
LICENSED
PROFESSIONAL ENGINEER

January 30, 2013

NOTE:
1. TOWER SHOWN FROM FLAT 4.
2. REMOVE (3) REINFORCING BARS.

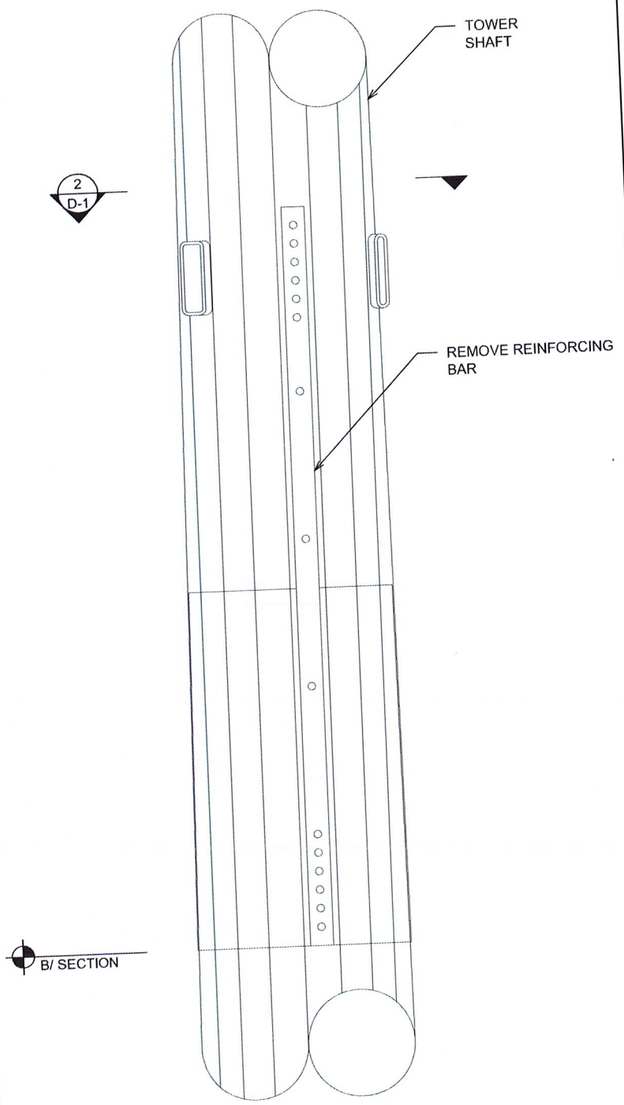

1 / D-1 **SECTION ELEVATION**
SCALE: 1/2" = 1'-0"

NOTE:
1. #XX DENOTES FLAT NUMBER.
2. REMOVE (3) REINFORCING BARS.

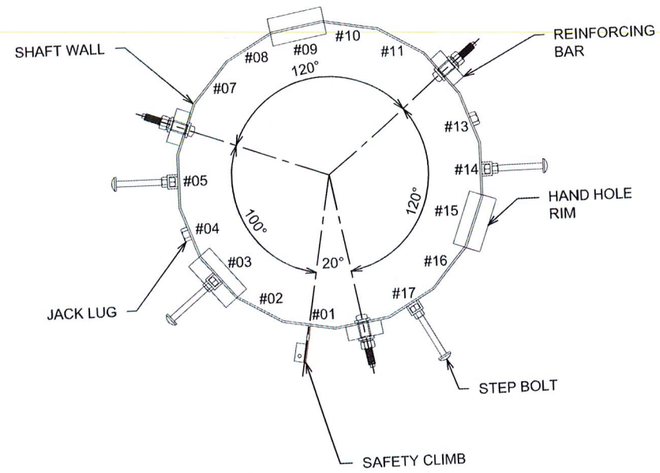

2 / S-2 **SECTION ELEVATION**
SCALE: 3/4" = 1'-0"

PLANS PREPARED FOR:

SBA

5900 BROKEN SOUND PARKWAY NW
BOCA RATON, FL 33487-2797
(919) 557-0555

PROJECT INFORMATION:

WEST HAVEN-RT15 /WOODBRIDGE

CT46139-A

370 ROCKLAND ROAD
GUILFORD, CT 06437
(NEW HAVEN COUNTY)

PLANS PREPARED BY:

vertical solutions

2002 PRODUCTION DRIVE
APEX, NC 27539
OFFICE: (888) 321-6167
www.verticalsolutions-inc.com

REV	DATE	ISSUED FOR:
0	01-30-13	CONSTRUCTION

DRAWN BY: MEA | CHECKED BY: MER

SHEET TITLE:

DEMOLITION DETAILS

SHEET NUMBER: **D-1**

REVISION: **0**

VSI #: 122449

SEAL:

STATE OF CONNECTICUT
MICHAEL L. LASSITER
No. 25064
LICENSED
PROFESSIONAL ENGINEER

January 30, 2013

SECTION	01	02	03	EXTENSION
LENGTH (FT)	52.750	52.833	54.084	10.000
# SIDES	18	18	18	ROUND
THICK. (IN.)	0.315	0.315	0.195	0.375
LAP SPLICE (FT)	6.333	4.833	-	-
TOP DIA. (IN)	44.32	32.89	20.50	20.00
BOT DIA. (FT)	58.00	46.59	34.52	20.00

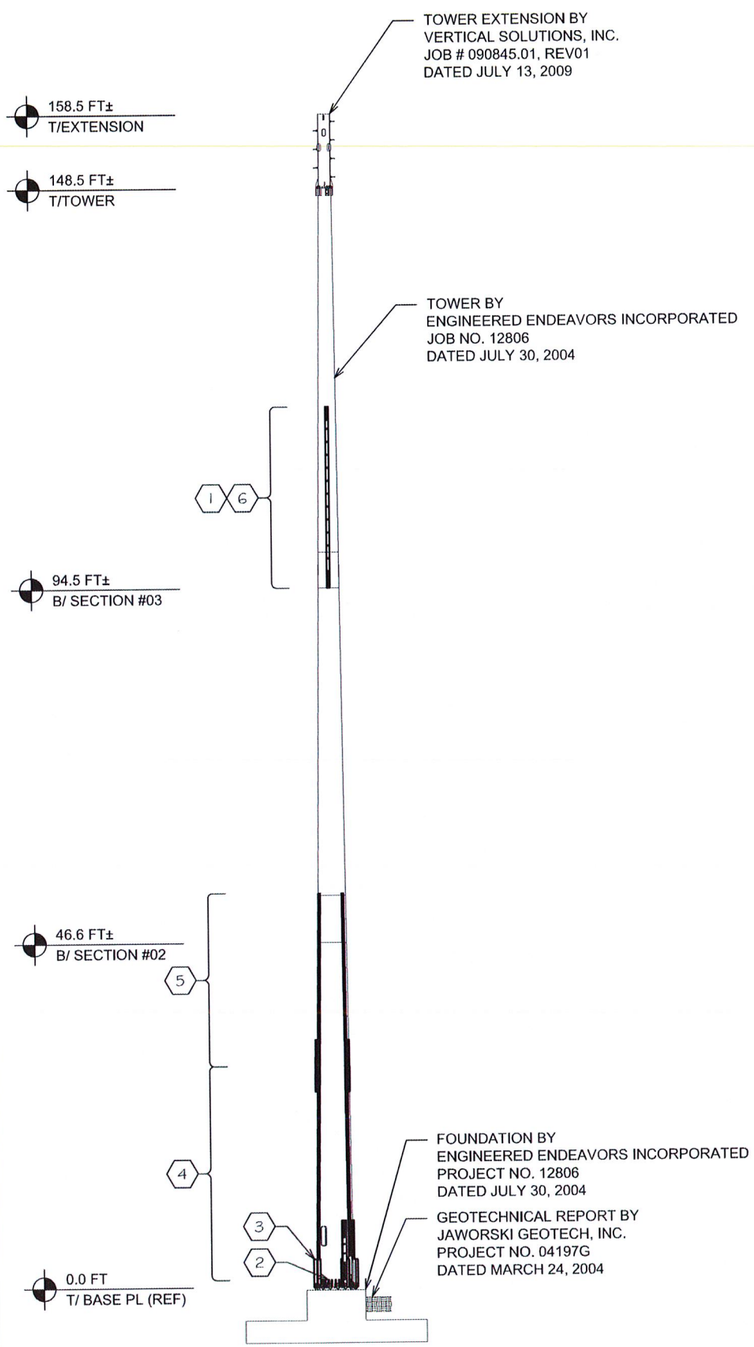

TOWER ELEVATION 7

SCALE: 1" = 20'

MODIFICATION DESIGN PROVISIONS

THIS MODIFICATION DESIGN IS BASED ON VERTICAL SOLUTIONS STRUCTURAL ANALYSIS REPORT, VSI JOB #122449 REV 00. DATED JANUARY 30, 2013. THIS REPORT IS BASED ON A SPECIFIC ANTENNA AND COAX CONFIGURATION, SEE THE REPORT FOR ANTENNA AND COAX LOADING. ANY OTHER ANTENNA CONFIGURATION REQUIRES REVIEW BY VERTICAL SOLUTIONS.

CONSTRUCTION INTERFERENCES

EXISTING AND PROPOSED ANTENNAS, MOUNTS, COAX, AND HAND-HOLE RIMS ARE NOT SHOWN FOR CLARITY. CONTRACTOR SHALL COORDINATE WITH THE TOWER OWNER WITH RESPECT TO INTERFERENCES TO REINFORCEMENT. CONTRACTOR SHALL FIELD VERIFY TOWER DIMENSION PRIOR TO FABRICATION.

FIELD VERIFICATION

PRE-MODIFICATION INSPECTION REPORT BY VERTICAL SOLUTIONS INC., JOB # 122499 DATED DECEMBER 27, 2012.

MODIFICATION SCHEDULE

NO.	MODIFICATION DESCRIPTION
1	REMOVE EXISTING BARS FROM 94.5'± - 104.5'±, SEE SHEET D-1.
2	INSTALL (32) STIFFENER PLATES, SEE SHEET S-2.
3	INSTALL (8) TRANSITION STIFFENERS, SEE SHEET S-2.
4	INSTALL (3) REINFORCING BARS, SEE SHEET S-2.
5	INSTALL (3) REINFORCING BARS, SEE SHEET S-2.
6	INSTALL (3) REINFORCING BARS, SEE SHEET S-2.
7	CONTRACTOR SHALL PROVIDE CONSTRUCTION PROGRESS PHOTOS, AS WELL AS PROJECT COMPLETION PHOTOS, ALONG WITH STEEL & CONCRETE CERTIFICATION FOR VERTICAL SOLUTIONS, INC. TO COMPLETE A POST MODIFICATION LETTER. SEE NOTES ON B-1.

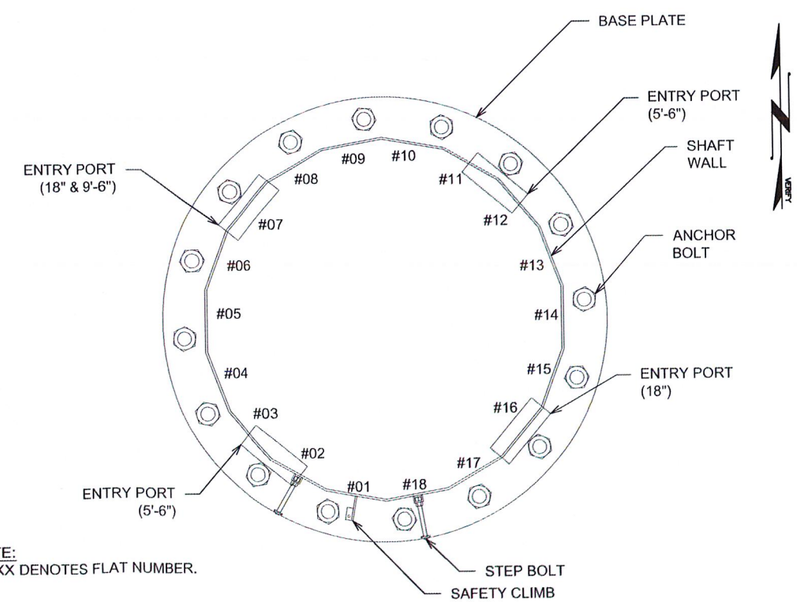

NOTE:
1. #XX DENOTES FLAT NUMBER.

SECTION @ BASE 6.0'

SCALE: 1/2" = 1'-0"

PLANS PREPARED FOR:

SBA

5900 BROKEN SOUND PARKWAY NW
BOCA RATON, FL 33487-2797
(919) 557-0555

PROJECT INFORMATION:

WEST HAVEN-RT15 /WOODBRIDGE

CT46139-A

370 ROCKLAND ROAD
GUILFORD, CT 06437
(NEW HAVEN COUNTY)

PLANS PREPARED BY:

vertical solutions

2002 PRODUCTION DRIVE
APEX, NC 27539
OFFICE: (888) 321-6167
www.verticalsolutions-inc.com

REV	DATE	ISSUED FOR:
0	01-30-13	CONSTRUCTION

DRAWN BY: MEA | CHECKED BY: MER

SHEET TITLE:

TOWER ELEVATION AND MODIFICATION SCHEDULE

SHEET NUMBER: **S-1**

REVISION: 0

VSI #: 122449

SEAL:

STATE OF CONNECTICUT
MICHAEL L. LASSITER
No. 25064
LICENSED
PROFESSIONAL ENGINEER

January 30, 2013

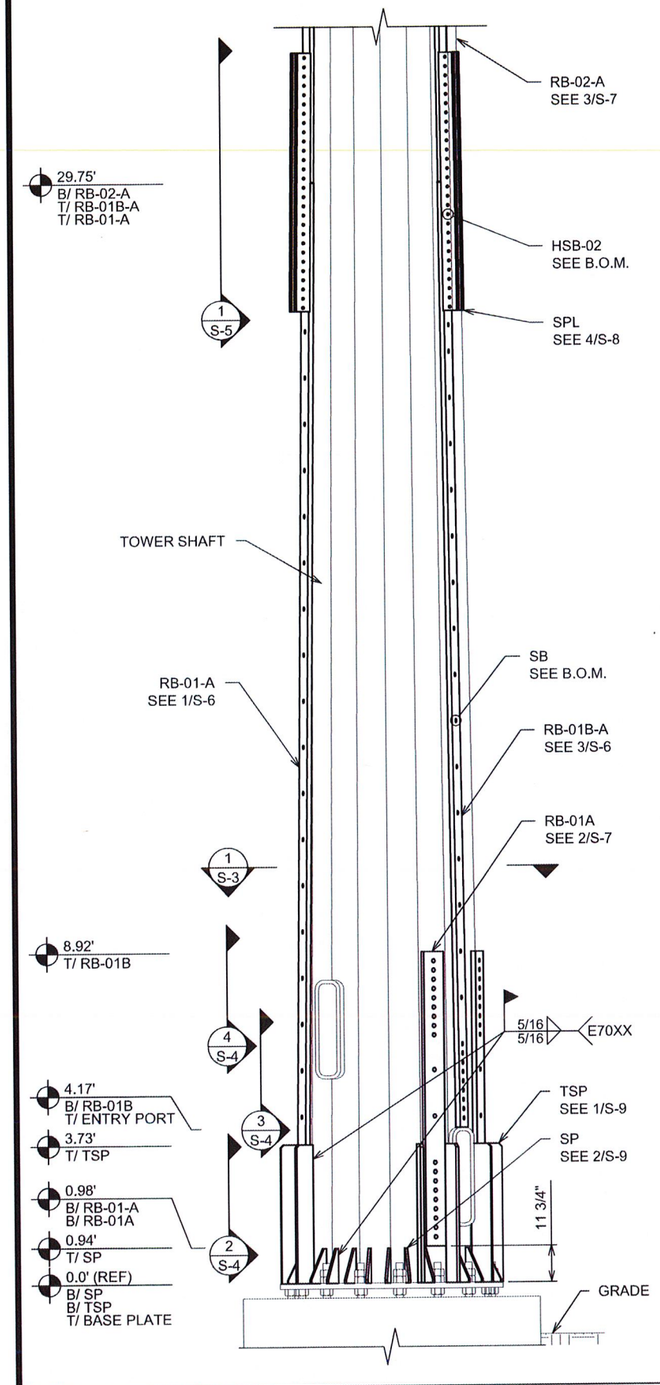

1 S-2 **SECTION ELEVATION**

SCALE: 1/4" = 1'-0"

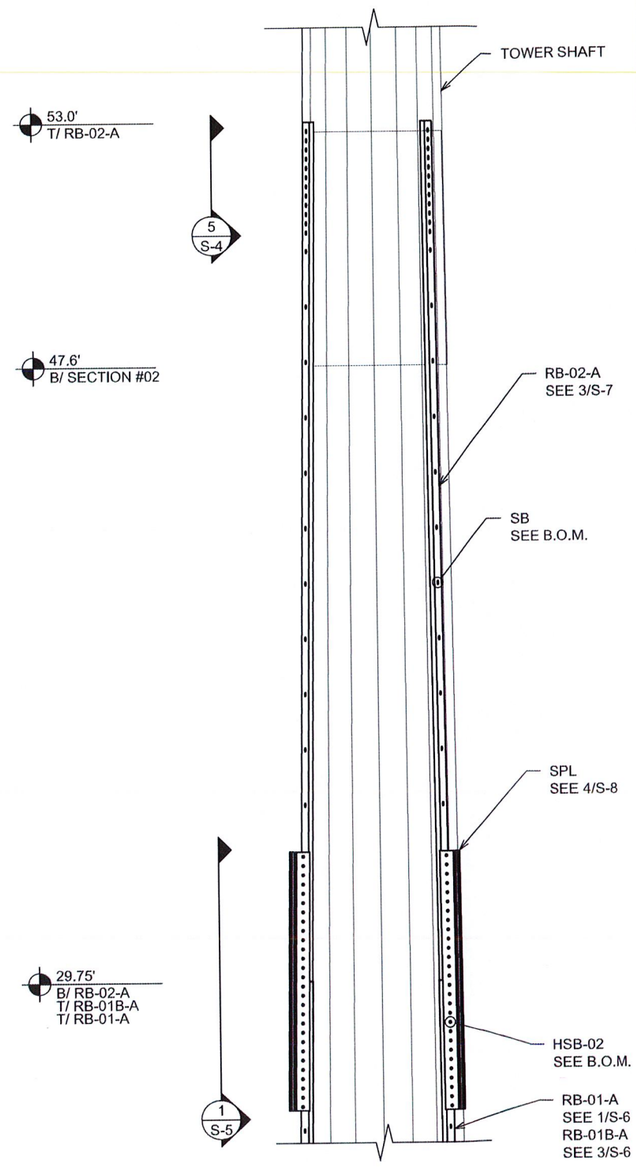

2 S-2 **SECTION ELEVATION**

SCALE: 1/4" = 1'-0"

NOTE:
1. REUSE EXISTING TERMINATION HOLES IN TOWER TO MOUNT RB-03.

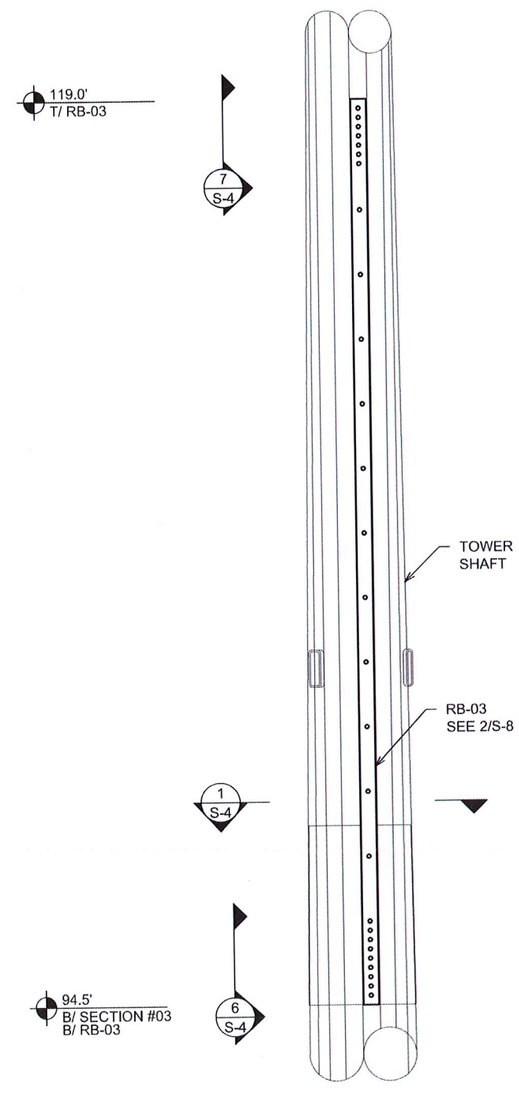

3 S-2 **SECTION ELEVATION**

SCALE: 1/4" = 1'-0"

PLANS PREPARED FOR:

SBA

5900 BROKEN SOUND PARKWAY NW
BOCA RATON, FL 33487-2797
(919) 557-0555

PROJECT INFORMATION:

WEST HAVEN-RT15 /WOODBRIDGE

CT46139-A

370 ROCKLAND ROAD
GUILFORD, CT 06437
(NEW HAVEN COUNTY)

PLANS PREPARED BY:

vertical solutions

2002 PRODUCTION DRIVE
APEX, NC 27539
OFFICE: (888) 321-6167
www.verticalsolutions-inc.com

REV	DATE	ISSUED FOR:
0	01-30-13	CONSTRUCTION

DRAWN BY: MEA | CHECKED BY: MER

SHEET TITLE:

CONSTRUCTION DETAILS

SHEET NUMBER: **S-2**

REVISION: 0

VSI #: 122449

SEAL:

STATE OF CONNECTICUT
MICHAEL L. LASSITER
No. 25064
LICENSED
PROFESSIONAL ENGINEER

January 30, 2013

NOTE:
1. #XX DENOTES FLAT NUMBER.
2. TSP TO BE PERPENDICULAR TO SHAFT WALL.
3. SP TO BE PERPENDICULAR TO SHAFT WALL.
4. * DENOTES DIMENSION ALONG SHAFT WALL.
5. RB-01A ON FLAT #15 & #17 TO BE OFFSET ON FLAT BY A MAX OF 1 3/4"

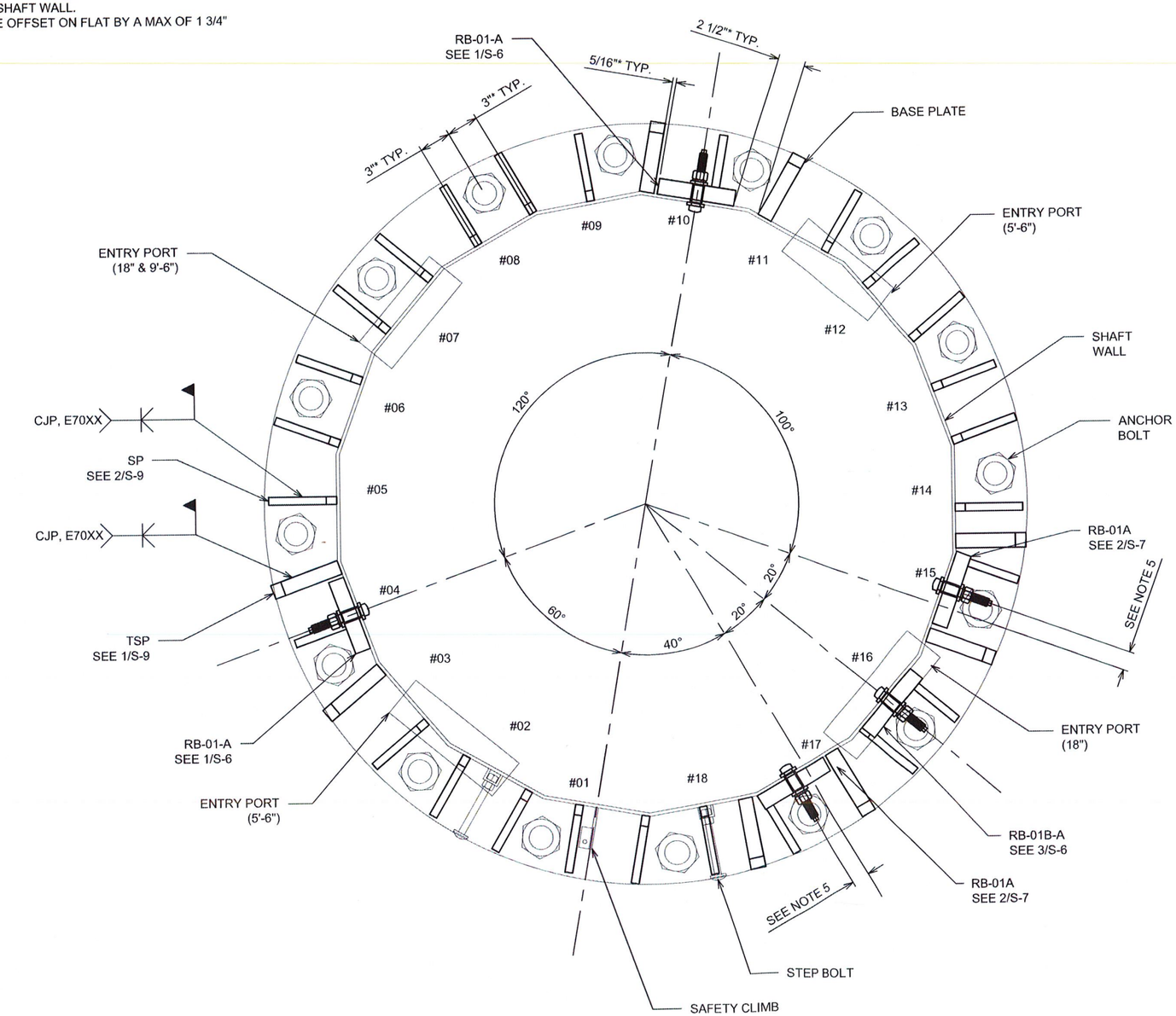

1 / S-3 **TOWER PLAN**

SCALE: 1" = 1'-0"

PLANS PREPARED FOR:

SBA

5900 BROKEN SOUND PARKWAY NW
BOCA RATON, FL 33487-2797
(919) 557-0555

PROJECT INFORMATION:

WEST HAVEN-RT15 /WOODBRIDGE

CT46139-A

370 ROCKLAND ROAD
GUILFORD, CT 06437
(NEW HAVEN COUNTY)

PLANS PREPARED BY:

vertical solutions

2002 PRODUCTION DRIVE
APEX, NC 27539
OFFICE: (888) 321-6167
www.verticalsolutions-inc.com

REV	DATE	ISSUED FOR:
0	01-30-13	CONSTRUCTION

DRAWN BY: MEA | CHECKED BY: MER

SHEET TITLE:

CONSTRUCTION DETAILS

SHEET NUMBER: **S-3**

REVISION: **0**

VSI #: 122449

SEAL:

STATE OF CONNECTICUT
MICHAEL L. LASSITER
No. 25064
LICENSED
PROFESSIONAL ENGINEER

January 30, 2013

NOTE:
1. #XX DENOTES FLAT NUMBER.
2. REUSE EXISTING TERMINATION HOLES IN TOWER TO MOUNT RB-03.

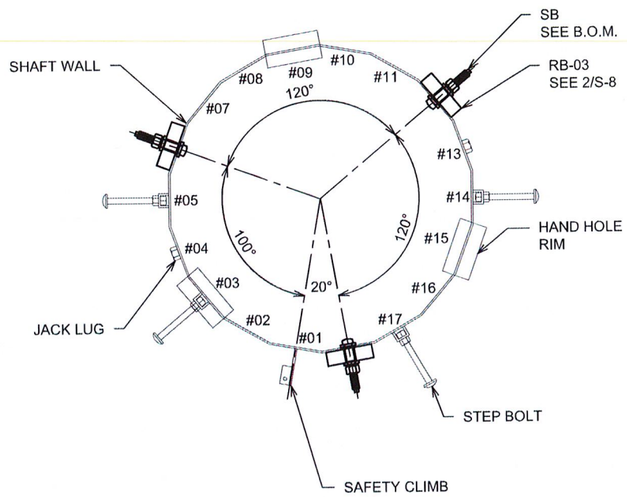

1 S-4 **TOWER PLAN**
SCALE: 1" = 1'-0"

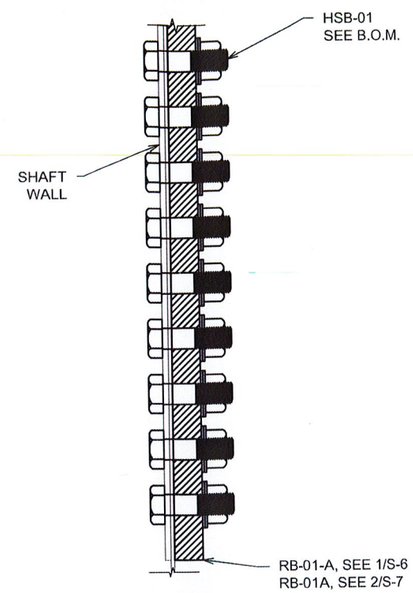

2 S-4 **RB-01A & RB-01-A BOT.**
SCALE: 1 1/2" = 1'-0"

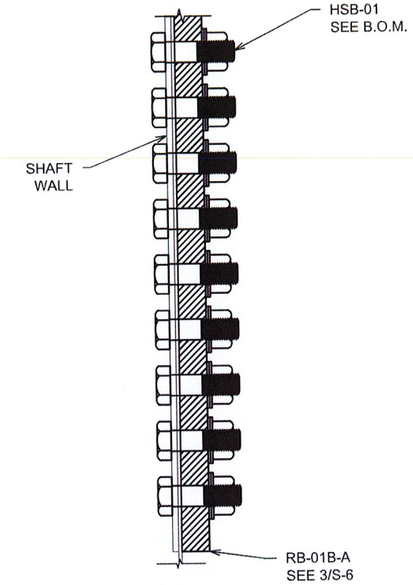

3 S-4 **RB-01B-A BOT TERM.**
SCALE: 1 1/2" = 1'-0"

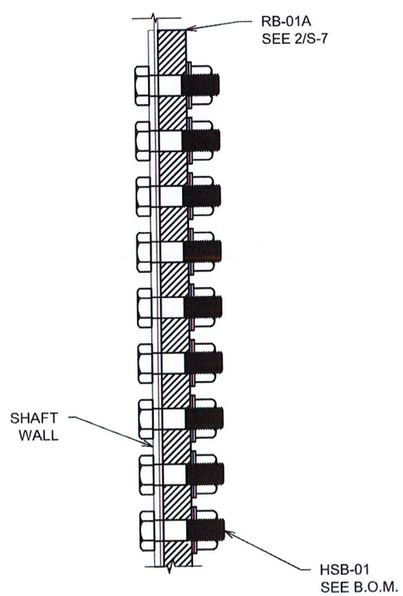

4 S-4 **RB-01A TOP TERM.**
SCALE: 1 1/2" = 1'-0"

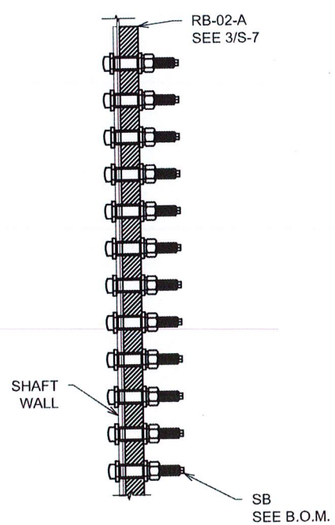

5 S-4 **RB-02-A TOP TERM.**
SCALE: 1" = 1'-0"

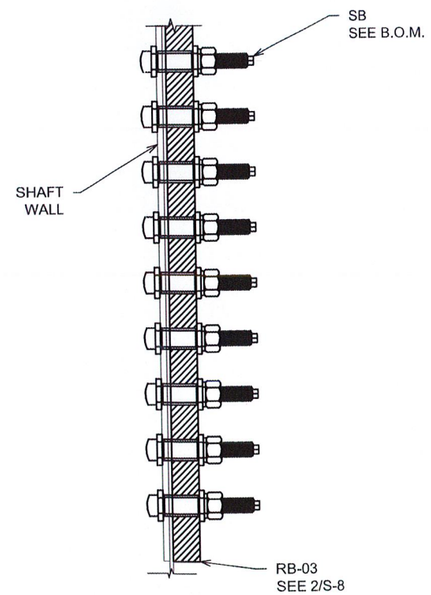

6 S-4 **RB-03 BOTTOM TERM.**
SCALE: 1 1/2" = 1'-0"

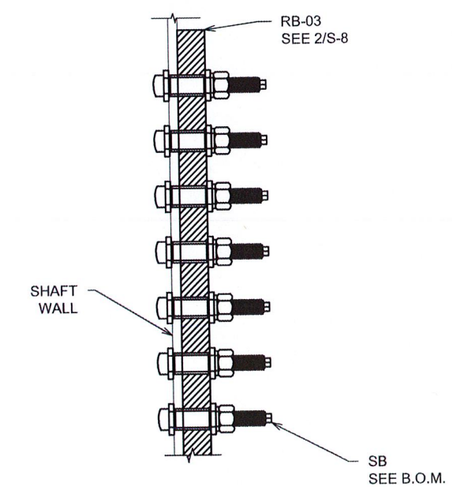

7 S-4 **RB-03 TOP TERMINATION**
SCALE: 1 1/2" = 1'-0"

PLANS PREPARED FOR:

SBA

5900 BROKEN SOUND PARKWAY NW
BOCA RATON, FL 33487-2797
(919) 557-0555

PROJECT INFORMATION:

WEST HAVEN-RT15 /WOODBRIDGE

CT46139-A

370 ROCKLAND ROAD
GUILFORD, CT 06437
(NEW HAVEN COUNTY)

PLANS PREPARED BY:

vertical solutions

2002 PRODUCTION DRIVE
APEX, NC 27539
OFFICE: (888) 321-6167
www.verticalsolutions-inc.com

REV	DATE	ISSUED FOR:
0	01-30-13	CONSTRUCTION

DRAWN BY: MEA | CHECKED BY: MER

SHEET TITLE:

CONSTRUCTION DETAILS

SHEET NUMBER: **S-4**

REVISION: **0**

VSI #: 122449

SEAL:

STATE OF CONNECTICUT
MICHAEL L. LASSITER
No. 25064
LICENSED
PROFESSIONAL ENGINEER

January 30, 2013

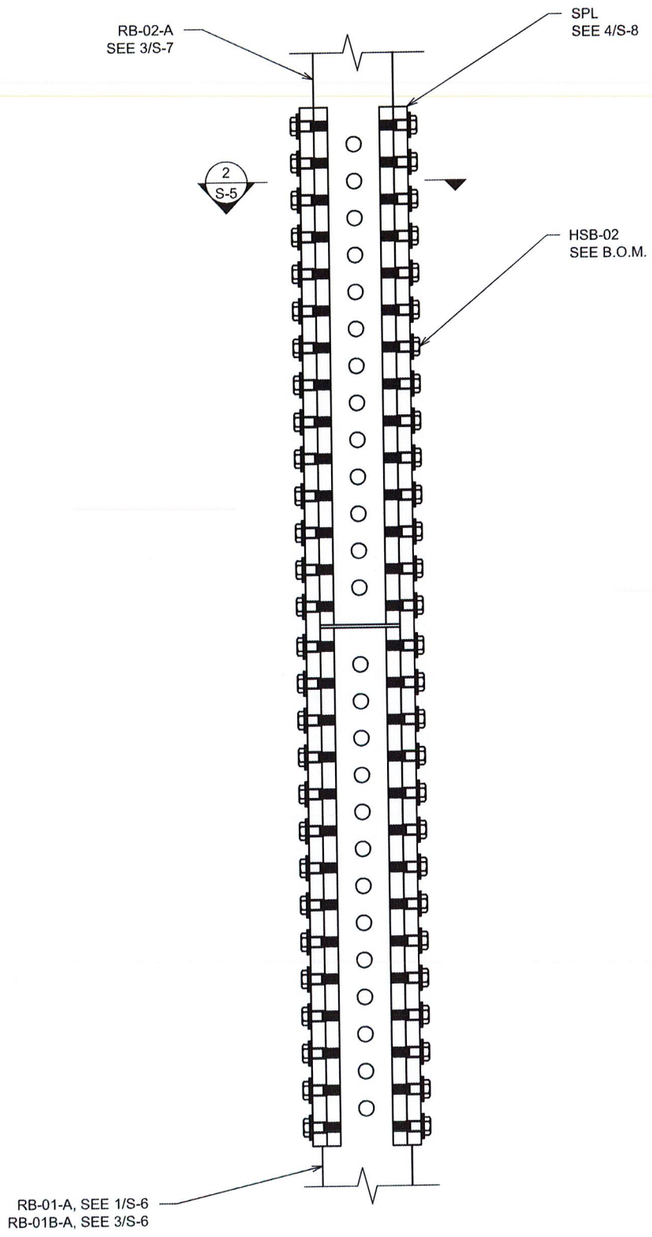

1 / S-5 **SPLICE CONNECTION - ELEVATION**

SCALE: 1" = 1'-0"

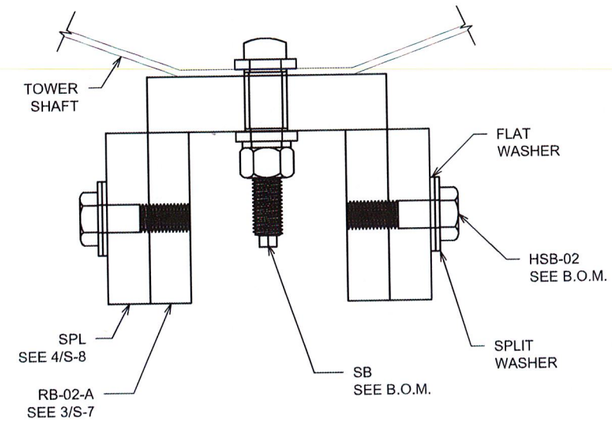

2 / S-5 **SPLICE CONNECTION - PLAN**

SCALE: 3" = 1'-0"

PLANS PREPARED FOR:

SBA

5900 BROKEN SOUND PARKWAY NW
BOCA RATON, FL 33487-2797
(919) 557-0555

PROJECT INFORMATION:

WEST HAVEN-RT15 /WOODBRIDGE

CT46139-A

370 ROCKLAND ROAD
GUILFORD, CT 06437
(NEW HAVEN COUNTY)

PLANS PREPARED BY:

vertical solutions

2002 PRODUCTION DRIVE
APEX, NC 27539
OFFICE: (888) 321-6167
www.verticalsolutions-inc.com

REV	DATE	ISSUED FOR:
0	01-30-13	CONSTRUCTION

DRAWN BY: MEA | CHECKED BY: MER

SHEET TITLE:

CONSTRUCTION DETAILS

SHEET NUMBER: **S-5**

REVISION: **0**

VSI #: 122449

SEAL:

STATE OF CONNECTICUT
MICHAEL L. LASSITER
No. 25064
LICENSED
PROFESSIONAL ENGINEER

January 30, 2013

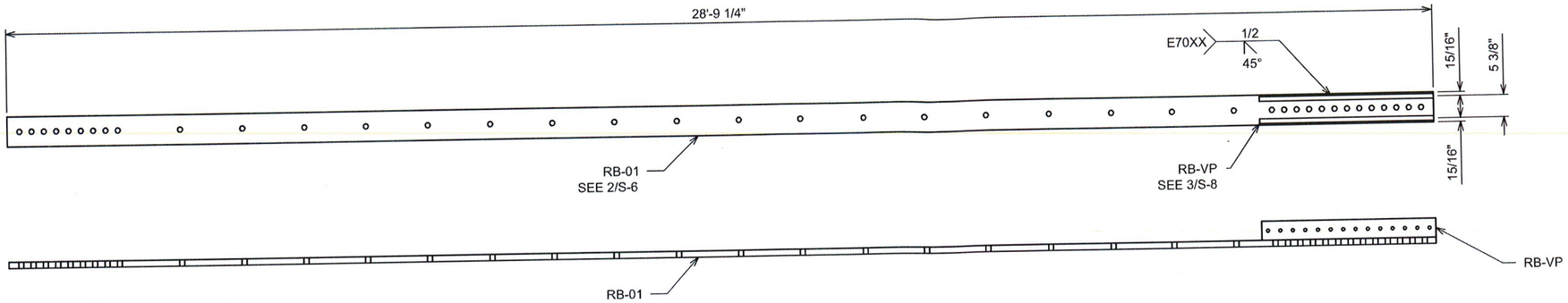

1 / S-6 RB-01 ASSEMBLY

SCALE: 3/8" = 1'-0"

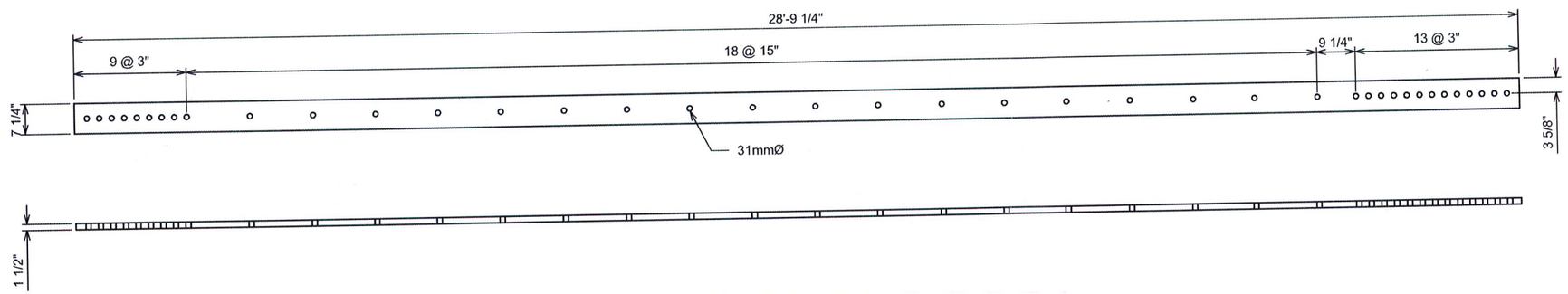

2 / S-6 RB-01 DETAIL

SCALE: 3/8" = 1'-0"

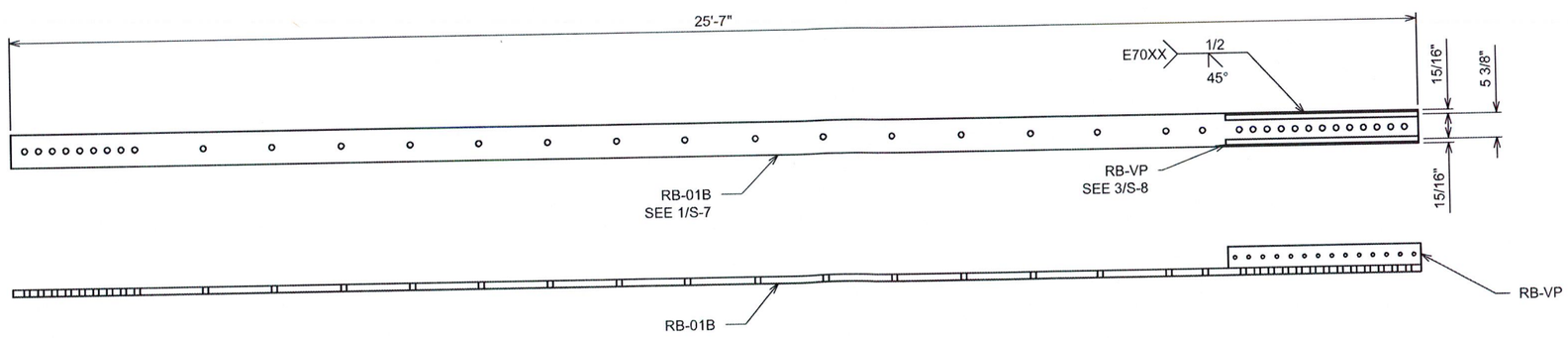

3 / S-6 RB-01B ASSEMBLY

SCALE: 3/8" = 1'-0"

PLANS PREPARED FOR:

SBA

5900 BROKEN SOUND PARKWAY NW
BOCA RATON, FL 33487-2797
(919) 557-0555

PROJECT INFORMATION:

WEST HAVEN-RT15 /WOODBRIDGE

CT46139-A

370 ROCKLAND ROAD
GUILFORD, CT 06437
(NEW HAVEN COUNTY)

PLANS PREPARED BY:

vertical solutions

2002 PRODUCTION DRIVE
APEX, NC 27539
OFFICE: (888) 321-6167
www.verticalsolutions-inc.com

REV	DATE	ISSUED FOR:
0	01-30-13	CONSTRUCTION

DRAWN BY: MEA | CHECKED BY: MER

SHEET TITLE:

FABRICATION DETAILS

SHEET NUMBER: **S-6**

REVISION: **0**

VSI #: 122449

SEAL:

STATE OF CONNECTICUT
MICHAEL L. LASSITER
No. 25064
LICENSED
PROFESSIONAL ENGINEER

January 30, 2013

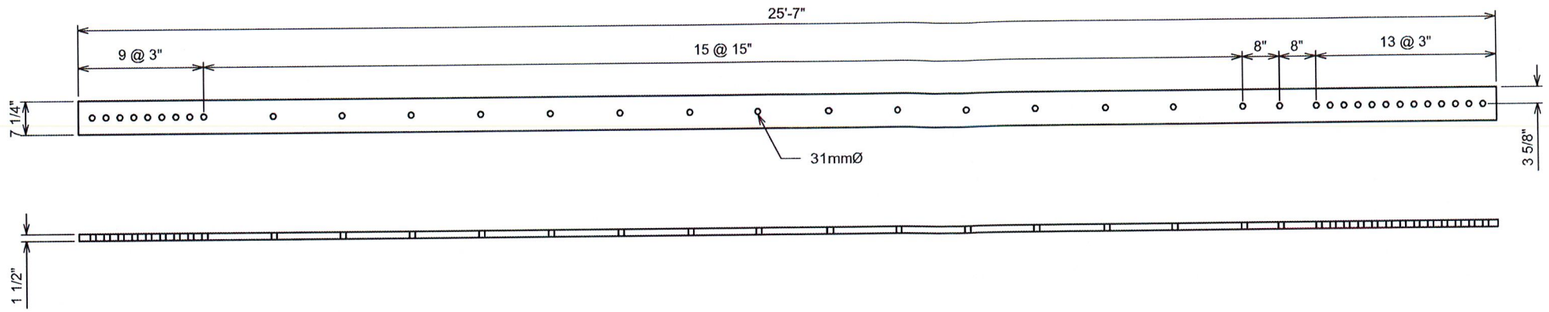

1 / S-7 RB-01B DETAIL

SCALE: 3/8" = 1'-0"

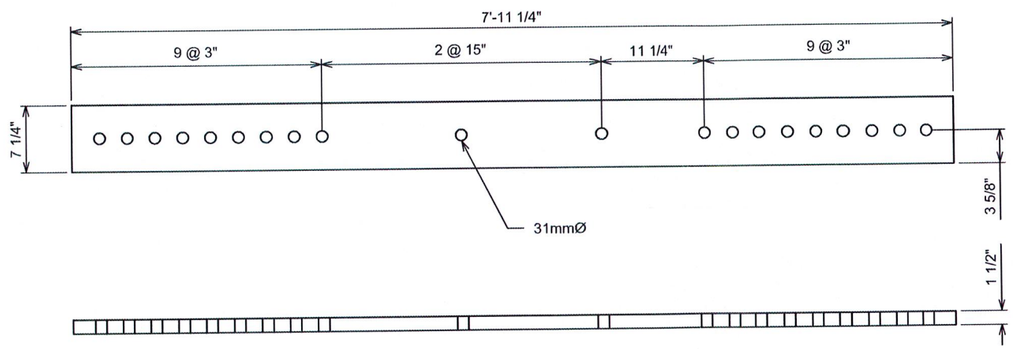

2 / S-7 RB-01A DETAIL

SCALE: 3/4" = 1'-0"

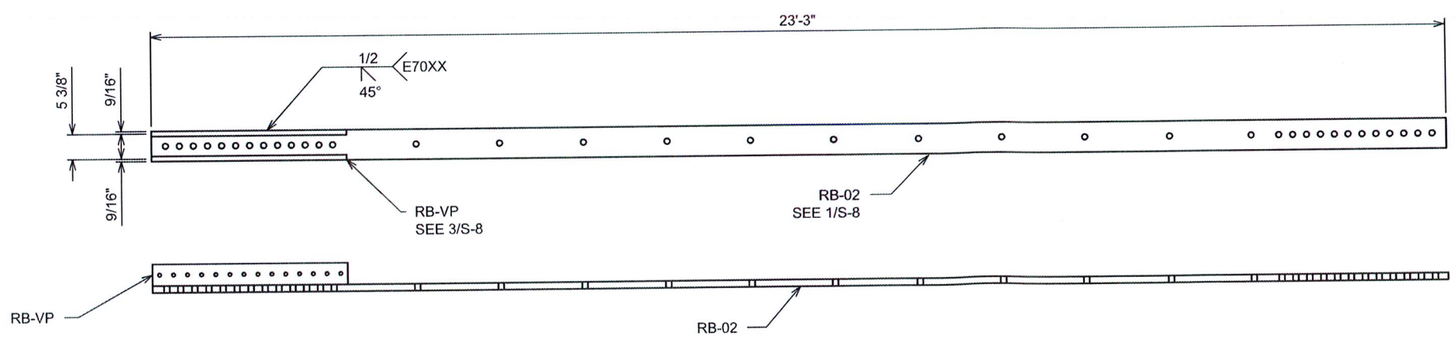

3 / S-7 RB-02 ASSEMBLY

SCALE: 3/8" = 1'-0"

PLANS PREPARED FOR:

SBA

5900 BROKEN SOUND PARKWAY NW
BOCA RATON, FL 33487-2797
(919) 557-0555

PROJECT INFORMATION:

WEST HAVEN-RT15 /WOODBRIDGE

CT46139-A

370 ROCKLAND ROAD
GUILFORD, CT 06437
(NEW HAVEN COUNTY)

PLANS PREPARED BY:

vertical solutions

2002 PRODUCTION DRIVE
APEX, NC 27539
OFFICE: (888) 321-6167
www.verticalsolutions-inc.com

REV	DATE	ISSUED FOR:
0	01-30-13	CONSTRUCTION

DRAWN BY: MEA | CHECKED BY: MER

SHEET TITLE:

FABRICATION DETAILS

SHEET NUMBER: **S-7**

REVISION: **0**

VSI #: 122449

SEAL:

STATE OF CONNECTICUT
MICHAEL L. LASSITER
No. 25064
LICENSED
PROFESSIONAL ENGINEER

January 30, 2013

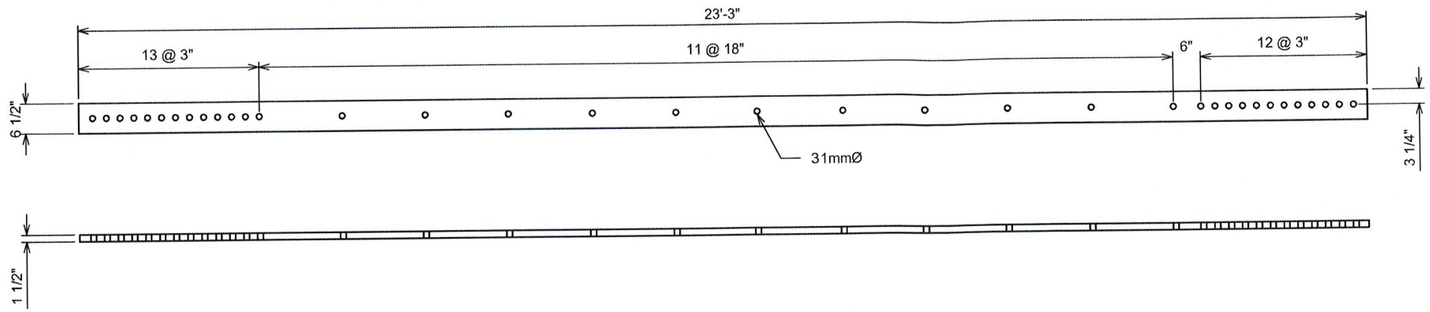

1 / S-8 RB-02 DETAIL

SCALE: 3/8" = 1'-0"

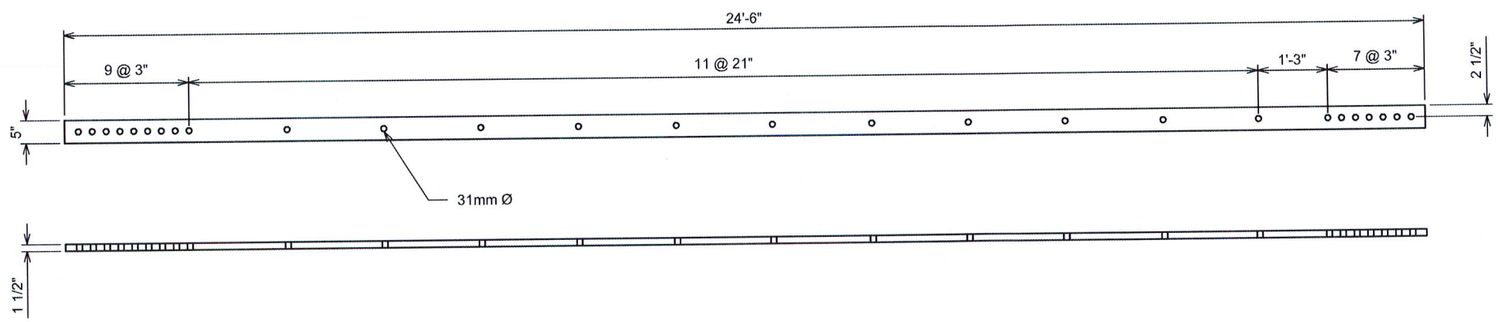

2 / S-8 RB-03 DETAIL

SCALE: 3/8" = 1'-0"

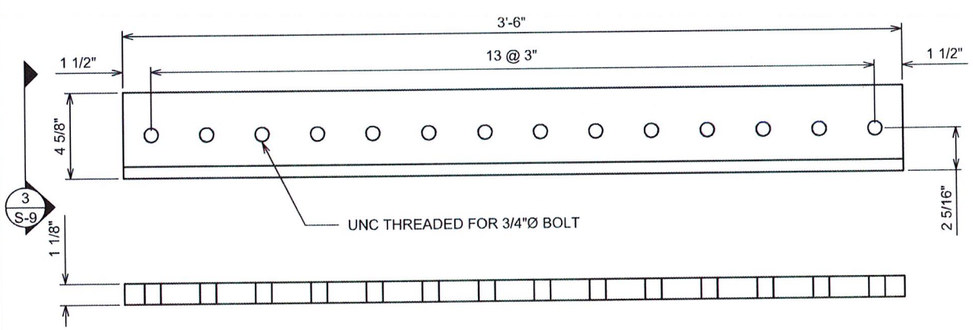

3 / S-8 RB-VP DETAIL

SCALE: 1 1/2" = 1'-0"

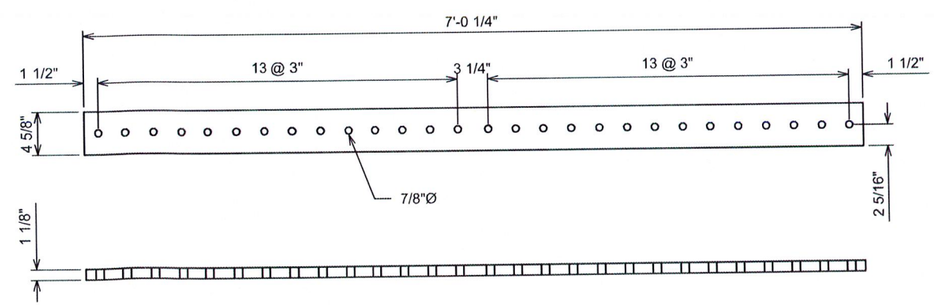

4 / S-8 SPL DETAIL

SCALE: 3/4" = 1'-0"

PLANS PREPARED FOR:

SBA

5900 BROKEN SOUND PARKWAY NW
BOCA RATON, FL 33487-2797
(919) 557-0555

PROJECT INFORMATION:

WEST HAVEN-RT15 /WOODBRIDGE

CT46139-A

370 ROCKLAND ROAD
GUILFORD, CT 06437
(NEW HAVEN COUNTY)

PLANS PREPARED BY:

vertical solutions

2002 PRODUCTION DRIVE
APEX, NC 27539
OFFICE: (888) 321-6167
www.verticalsolutions-inc.com

REV	DATE	ISSUED FOR:
0	01-30-13	CONSTRUCTION

DRAWN BY: MEA | CHECKED BY: MER

SHEET TITLE:

FABRICATION DETAILS

SHEET NUMBER: **S-8**

REVISION: 0

VSI #: 122449

SEAL:

STATE OF CONNECTICUT
MICHAEL L. LASSITER
No. 25064
LICENSED
PROFESSIONAL ENGINEER

January 30, 2013

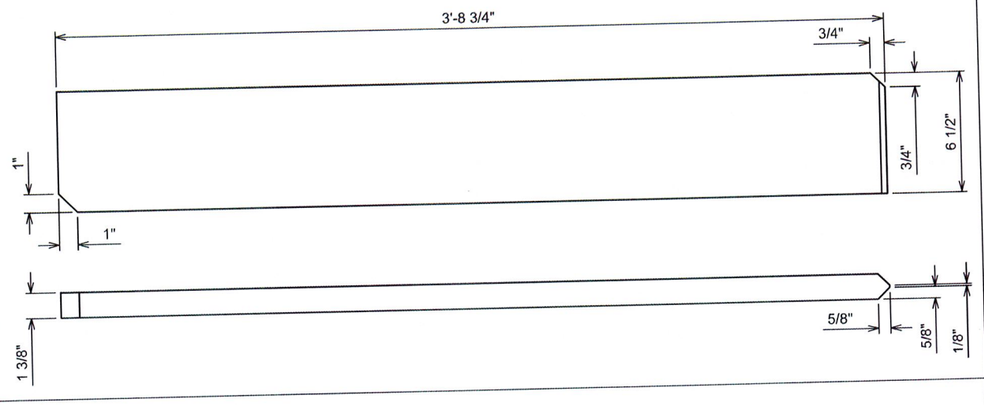

1 / S-9 **TSP DETAIL**
SCALE: 1 1/2" = 1'-0"

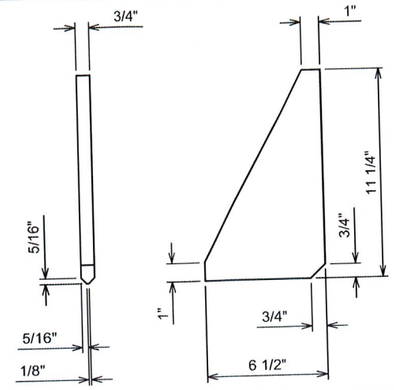

2 / S-9 **SP DETAIL**
SCALE: 1 1/2" = 1'-0"

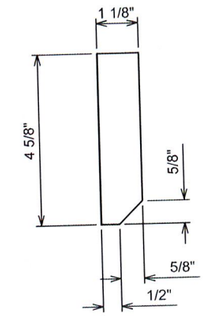

3 / S-9 **RB-VP SECTION**
SCALE: 3" = 1'-0"

PLANS PREPARED FOR:

SBA

5900 BROKEN SOUND PARKWAY NW
BOCA RATON, FL 33487-2797
(919) 557-0555

PROJECT INFORMATION:

WEST HAVEN-RT15 /WOODBRIDGE

CT46139-A

370 ROCKLAND ROAD
GUILFORD, CT 06437
(NEW HAVEN COUNTY)

PLANS PREPARED BY:

vertical solutions

2002 PRODUCTION DRIVE
APEX, NC 27539
OFFICE: (888) 321-6167
www.verticalsolutions-inc.com

REV	DATE	ISSUED FOR:
0	01-30-13	CONSTRUCTION

DRAWN BY: MEA | CHECKED BY: MER

SHEET TITLE:

FABRICATION DETAILS

SHEET NUMBER: **S-9**

REVISION: **0**

VSI #: 122449

SEAL:

STATE OF CONNECTICUT
MICHAEL L. LASSITER
No. 25664
LICENSED
PROFESSIONAL ENGINEER

January 30, 2013