Filed by:
G. Scott Shepherd, Sr. Property Specialist - SBA Communications
134 Flanders Rd., Suite 125, Westborough, MA 01581
508.251.0720 x 3807 - GShepherd@sbasite.com

January 15, 2021

Melanie A. Bachman
Executive Director
Connecticut Siting Council
Ten Franklin Square
New Britain, CT 06051

RE: Notice of Exempt Modification
52 Stadley Rough Road, Danbury, CT 06811
Latitude: 41.433102
Longitude: -73.431916
T-Mobile Site #: CT11796G_Anchor

Dear Ms. Bachman:

T-Mobile currently maintains six (6) antennas at the 137-foot level of the existing 139-foot Monopole Tower at 52 Stadley Rough Road, Danbury, CT. The 139-foot tower is owned by SBA Towers II LLC. The property is owned by Christ the Shepherd Church. T-Mobile now intends to add three (3) 2500 MHz antennas.

The new antennas support 5G services and would be installed at the 137-foot level of the tower.

Please note: Per the Connecticut Siting Council Website: CSC COVID 19 Guidelines.
In order to prevent the spread of Coronavirus and protect the health and safety of our members and staff, as of March 18, 2020, the Connecticut Siting Council shall convert to full remote operations until March 30, 2020. Please be advised that during this time period, all hard copy filing requirements will be waived in lieu of an electronic filing. Please also be advised that the March 26, 2020 regular meeting shall be held via teleconference. The Council's website is not equipped with an on-line filing fee receipt service. Therefore, filing fees and/or direct cost charges associated with matters received electronically during the above-mentioned time period will be directly invoiced at a later date.

Planned Modifications:

TOWER

<u>Remove:</u>

- N/A

Remove and Replace:

- (3) T-Arms (Sitepro RDS-272) – (Remove) / (1) Low Profile Platform with HRK (Sitepro RMQP-4096-HRK) (Replace)

Install New:

- (3) Ericsson AIR6449 B41 - 2500 MHz antenna
- (3) Ericsson 4415 B25 – RRU
- (3) Commscope SDX1926Q-43 - Diplexer

Existing Equipment to Remain:

- (3) RFS APXVAARR18_43-U-NA20 - L600/700/2100 MHz antenna
- (3) Ericsson AIR32 KRD901146-1-B66 –L2100/1900 MHz antenna
- (3) Ericsson KRY 112 144/1 – TMAs
- (3) Ericsson Radio 4449 B71+B12 – RRUs
- (6) 1-5/8" Coax
- (3) 1-5/8" Fiber

Entitlements:

- (6) 1-5/8" Coax
- (1) 1-5/8" fiber
- (1) 1-1/4" HCS Fiber

GROUND

Install New:

- (2) Ericsson B160 Battery Cabinet
- Equipment inside existing RBS6102 equipment cabinet

Existing Equipment to Remain:

(1) GPS antenna mounted on existing ice bridge

Remove and Replace:

- N/A

This facility was approved by the Council under Docket No 366 on April 23, 2009. The approval called for the construction of a 140' monopole with a vegetative buffer, architectural compound fence, and space for public safety services provided at no cost to the City. A recalculated power density report was to be provided when site conditions caused a change in power density levels. Upon the establishment of any new State or federal RF standards applicable to the facility, the site was to be brought into compliance. And any nonfunctioning antennas or associated equipment was to be removed within 60 days. The original approval also called for flush mounted antennas. In order to effectively address the need for increased speed and capacity while observing the site conditions, on February 29, 2016, Council approved T-Mobile's installation of a slight mount with an 8-inch standoff (EM-T-Mobile-034-160205) -- smaller than Verizon's and AT&T's existing mounts, which both use approximately 14-inch standoffs. Please see attached.

Please accept this letter as notification pursuant to Regulations of Connecticut State Agencies §16-50j-73, for construction that constitutes an exempt modification pursuant to R.C.S.A. §16.50j-72(b)(2). In accordance with R.C.S.A. § 16.50j-73, a copy of this letter is being sent to the City of Danbury's Mayor, Joseph M. Cavo, Director of Planning and Zoning, Sharon Calitro, and Deputy Planning Director, Jennifer Emminger, as well as to the property owner. (Separate notice is not being sent to tower owner, as it belongs to SBA.)

The planned modifications to the facility fall squarely within those activities explicitly provided for in R.C.S.A. §16.50j-72(b)(2).

1. The proposed modifications will not result in an increase in the height of the existing structure.
2. The proposed modification will not require the extension of the site boundary.
3. The proposed modifications will not increase noise levels at the facility by six decibels or more, or to levels that exceed state and local criteria.
4. The operation of the replacement antennas will not increase radio frequency emissions at the facility to a level at or above the Federal Communications Commission safety standard.
5. The proposed modification will not cause a change or alteration in the physical or environmental characteristics of the site.
6. The existing structure and its foundation can support the proposed loading.

For the foregoing reasons, T-Mobile respectfully submits that the proposed modifications to the above-referenced telecommunication facility constitute an exempt modifications under R.C.S.A. § 16-50j-72(b)(2).

Sincerely,

G. Scott Shepherd
Sr. Property Specialist
SBA COMMUNICATIONS CORPORATION
134 Flanders Rd., Suite 125
Westborough, MA 01581
508.251.0720 x3804 + T / 508.366.2610 + F
508.868.6000 + C
GShepherd@SBASite.com

Attachments

cc: The Honorable Joseph M. Cavo, Mayor of the City of Danbury / with attachments
City of Danbury, 155 Deer Hill Ave., Danbury CT 06810
Sharon Calitro, ACIP, Director, Planning and Zoning and Jennifer Emminger, AICP, Deputy Planning Director, Planning and Zoning / with attachments
City of Danbury, 155 Deer Hill Ave., 1st Floor, Danbury CT 06810
Christ the Shepherd Church / with attachments
52 Stadley Rough Road, Danbury CT 06811

EXHIBIT LIST

Exhibit 1	Check Copy	To be invoiced at a later date per Covid 19 Guidelines
Exhibit 2	Notification Receipts	x
Exhibit 3	Property Card	x
Exhibit 4	Property Map	x
Exhibit 5	Original Zoning Approval	CSC Docket No. 366 dated 4/23/2009
Exhibit 6	Construction Drawings	Chappell dated 12/30/20
Exhibit 7	Structural Analysis	TES dated 11/13/20
Exhibit 8	Mount Analysis	TES dated 11/11/20
Exhibit 9	EME Report	Transcom dated 12/2/20

EXHIBIT 1

Normally, Exhibit 1 would contain a copy of the check for the filing fee.

EXHIBIT 2

ORIGIN ID:BBFA (508) 614-0389
RICK WOODS
SBA COMMUNICATIONS CORPORATION
134 FLANDERS RD
SUITE 125
WESTBOROUGH, MA 01581
UNITED STATES US

SHIP DATE: 15JAN21
ACTWGT: 1.00 LB
CAD: 105843304/INET4280

BILL SENDER

TO **MELANIE A. BACHMAN EXEC. DIR**
CONNECTICUT SITING COUNCIL
TEN FRANKLIN SQUARE

NEW BRITAIN CT 06051
(508) 251-0720 X 3807 REF: 10-56-92009-6089
INV:
PO: DEPT:

56BJ1/1136/B766

J202020070601uv

FedEx Express

MON - 18 JAN 10:30A
PRIORITY OVERNIGHT

TRK# 0201 **7826 5927 4303**

SE BDLA

06051
BDL
CT-US

After printing this label:
1. Use the 'Print' button on this page to print your label to your laser or inkjet printer.
2. Fold the printed page along the horizontal line.
3. Place label in shipping pouch and affix it to your shipment so that the barcode portion of the label can be read and scanned.

Warning: Use only the printed original label for shipping. Using a photocopy of this label for shipping purposes is fraudulent and could result in additional billing charges, along with the cancellation of your FedEx account number.
Use of this system constitutes your agreement to the service conditions in the current FedEx Service Guide, available on fedex.com.FedEx will not be responsible for any claim in excess of $100 per package, whether the result of loss, damage, delay, non-delivery,misdelivery,or misinformation, unless you declare a higher value, pay an additional charge, document your actual loss and file a timely claim.Limitations found in the current FedEx Service Guide apply. Your right to recover from FedEx for any loss, including intrinsic value of the package, loss of sales, income interest, profit, attorney's fees, costs, and other forms of damage whether direct, incidental,consequential, or special is limited to the greater of $100 or the authorized declared value. Recovery cannot exceed actual documented loss.Maximum for items of extraordinary value is $1,000, e.g. jewelry, precious metals, negotiable instruments and other items listed in our ServiceGuide. Written claims must be filed within strict time limits, see current FedEx Service Guide.

ORIGIN ID:BBFA (508) 614-0389
RICK WOODS
SBA COMMUNICATIONS CORPORATION
134 FLANDERS RD
SUITE 125
WESTBOROUGH, MA 01581
UNITED STATES US

SHIP DATE: 15JAN21
ACTWGT: 1.00 LB
CAD: 105843304/INET4280

BILL SENDER

TO **HONORABLE JOSEPH M. CAVO, MAYOR**
CITY OF DANBURY
155 DEER HILL AVE.

DANBURY CT 06810
(508) 251-0720 X 3807 REF: 10-56-92009-6089
INV:
PO: DEPT:

56BJ1/1136/B766

J202020070601uv

FedEx Express

MON - 18 JAN 10:30A
PRIORITY OVERNIGHT

TRK# 0201 **7826 5968 0321**

SH DXRA

06810
CT-US **SWF**

After printing this label:
1. Use the 'Print' button on this page to print your label to your laser or inkjet printer.
2. Fold the printed page along the horizontal line.
3. Place label in shipping pouch and affix it to your shipment so that the barcode portion of the label can be read and scanned.

Warning: Use only the printed original label for shipping. Using a photocopy of this label for shipping purposes is fraudulent and could result in additional billing charges, along with the cancellation of your FedEx account number.
Use of this system constitutes your agreement to the service conditions in the current FedEx Service Guide, available on fedex.com.FedEx will not be responsible for any claim in excess of $100 per package, whether the result of loss, damage, delay, non-delivery,misdelivery,or misinformation, unless you declare a higher value, pay an additional charge, document your actual loss and file a timely claim.Limitations found in the current FedEx Service Guide apply. Your right to recover from FedEx for any loss, including intrinsic value of the package, loss of sales, income interest, profit, attorney's fees, costs, and other forms of damage whether direct, incidental,consequential, or special is limited to the greater of $100 or the authorized declared value. Recovery cannot exceed actual documented loss.Maximum for items of extraordinary value is $1,000, e.g. jewelry, precious metals, negotiable instruments and other items listed in our ServiceGuide. Written claims must be filed within strict time limits, see current FedEx Service Guide.

ORIGIN ID:BBFA (508) 614-0389
RICK WOODS
SBA COMMUNICATIONS CORPORATION
134 FLANDERS RD
SUITE 125
WESTBOROUGH, MA 01581
UNITED STATES US

SHIP DATE: 15JAN21
ACTWGT: 1.00 LB
CAD: 105843304/INET4280

BILL SENDER

TO **SHARON CALITRO,AICP, DIR. P&Z**
CITY OF DANBURY
JENNIFER EMMINGER, AICP, DEPUTY P&Z
155 DEER HILL AVE.
DANBURY CT 06810
(508) 251-0720 X 3807 REF: 10-56-92009-6089
INV:
PO: DEPT:

56BJ1/1136/B766

J202020070601uv

FedEx Express

MON - 18 JAN 10:30A
PRIORITY OVERNIGHT

TRK# 0201 **7826 5986 7341**

SH DXRA

06810
SWF
CT-US

After printing this label:
1. Use the 'Print' button on this page to print your label to your laser or inkjet printer.
2. Fold the printed page along the horizontal line.
3. Place label in shipping pouch and affix it to your shipment so that the barcode portion of the label can be read and scanned.

Warning: Use only the printed original label for shipping. Using a photocopy of this label for shipping purposes is fraudulent and could result in additional billing charges, along with the cancellation of your FedEx account number.
Use of this system constitutes your agreement to the service conditions in the current FedEx Service Guide, available on fedex.com.FedEx will not be responsible for any claim in excess of $100 per package, whether the result of loss, damage, delay, non-delivery,misdelivery,or misinformation, unless you declare a higher value, pay an additional charge, document your actual loss and file a timely claim.Limitations found in the current FedEx Service Guide apply. Your right to recover from FedEx for any loss, including intrinsic value of the package, loss of sales, income interest, profit, attorney's fees, costs, and other forms of damage whether direct, incidental,consequential, or special is limited to the greater of $100 or the authorized declared value. Recovery cannot exceed actual documented loss.Maximum for items of extraordinary value is $1,000, e.g. jewelry, precious metals, negotiable instruments and other items listed in our ServiceGuide. Written claims must be filed within strict time limits, see current FedEx Service Guide.

ORIGIN ID:BBFA (508) 614-0389
RICK WOODS
SBA COMMUNICATIONS CORPORATION
134 FLANDERS RD
SUITE 125
WESTBOROUGH, MA 01581
UNITED STATES US

SHIP DATE: 15JAN21
ACTWGT: 1.00 LB
CAD: 105843304/INET4280

BILL SENDER

TO

CHRIST THE SHEPHERD CHURCH
52 STADLEY ROUGH RD.

DANBURY CT 06811
(508) 251-0720 X 3807 REF: 10-56-92009-6089
INV:
PO: DEPT:

FedEx Express

J202020070601uv

56BJ1/1136/B766

MON - 18 JAN 10:30A
PRIORITY OVERNIGHT

TRK# 0201 **7826 5999 6958**

SH DXRA

06811
CT-US **SWF**

After printing this label:
1. Use the 'Print' button on this page to print your label to your laser or inkjet printer.
2. Fold the printed page along the horizontal line.
3. Place label in shipping pouch and affix it to your shipment so that the barcode portion of the label can be read and scanned.

Warning: Use only the printed original label for shipping. Using a photocopy of this label for shipping purposes is fraudulent and could result in additional billing charges, along with the cancellation of your FedEx account number.
Use of this system constitutes your agreement to the service conditions in the current FedEx Service Guide, available on fedex.com.FedEx will not be responsible for any claim in excess of $100 per package, whether the result of loss, damage, delay, non-delivery,misdelivery,or misinformation, unless you declare a higher value, pay an additional charge, document your actual loss and file a timely claim.Limitations found in the current FedEx Service Guide apply. Your right to recover from FedEx for any loss, including intrinsic value of the package, loss of sales, income interest, profit, attorney's fees, costs, and other forms of damage whether direct, incidental,consequential, or special is limited to the greater of $100 or the authorized declared value. Recovery cannot exceed actual documented loss.Maximum for items of extraordinary value is $1,000, e.g. jewelry, precious metals, negotiable instruments and other items listed in our ServiceGuide. Written claims must be filed within strict time limits, see current FedEx Service Guide.

EXHIBIT 3

52 STADLEY ROUGH RD

Location	52 STADLEY ROUGH RD	**Mblu**	K07/ / 19/ 1/
Acct#	1	**Owner**	CHRIST THE SHEPHERD CHURCH PCA
Assessment	$173,800	**Appraisal**	$248,300
PID	128447	**Building Count**	1

Current Value

Appraisal			
Valuation Year	**Improvements**	**Land**	**Total**
2017	$232,200	$16,100	$248,300
Assessment			
Valuation Year	**Improvements**	**Land**	**Total**
2017	$162,500	$11,300	$173,800

Owner of Record

Owner	CHRIST THE SHEPHERD CHURCH PCA	**Sale Price**	$450,000
Co-Owner		**Book & Page**	1948/ 939
Address	52 STADLEY ROUGH RD DANBURY, CT 06811	**Sale Date**	07/25/2007
		Instrument	25

Ownership History

Ownership History				
Owner	**Sale Price**	**Book & Page**	**Instrument**	**Sale Date**
CHRIST THE SHEPHERD CHURCH PCA	$450,000	1948/ 939	25	07/25/2007

Building Information

Building 1 : Section 1

Year Built:	
Living Area:	0
Replacement Cost:	$0
Building Percent Good:	
Replacement Cost Less Depreciation:	$0

Building Attributes	
Field	**Description**

Style	Vacant Land
Model	
Grade:	
Stories:	
Occupancy	
Exterior Wall 1	
Exterior Wall 2	
Roof Structure:	
Roof Cover	
Interior Wall 1	
Interior Wall 2	
Interior Flr 1	
Interior Flr 2	
Heat Fuel	
Heat Type:	
AC Type:	
Total Bedrooms:	
Total Bthrms:	
Total Half Baths:	
Total Xtra Fixtrs:	
Total Rooms:	
Bath Style:	
Kitchen Style:	
Fireplaces	
Whirlpool	
Addn'l Kitchen	
Bsm Gar	
Fin Bsm Area	
Fin Bsm Qual	
Nhbd	
MH Park	

Building Photo

(http://images.vgsi.com/photos2/DanburyCTPhotos//default.jpg)

Building Layout

(http://images.vgsi.com/photos2/DanburyCTPhotos//Sketches/12

Building Sub-Areas (sq ft)			Legend
Code	**Description**	**Gross Area**	**Living Area**
UST	Unf. Storage	3,616	0
		3,616	0

Extra Features

Extra Features	Legend
No Data for Extra Features	

Land

Land Use

Land Line Valuation

Use Code	200V	**Size (Acres)**	0
Description	Commercial MDL-00	**Frontage**	0
Zone	RA40	**Depth**	0
Neighborhood	3000	**Assessed Value**	$11,300
Alt Land Appr	No	**Appraised Value**	$16,100
Category			

Outbuildings

Outbuildings						Legend
Code	**Description**	**Sub Code**	**Sub Description**	**Size**	**Value**	**Bldg #**
	CELL TOWER AREA			3498	$232,200	1

Valuation History

Appraisal			
Valuation Year	**Improvements**	**Land**	**Total**
2017	$232,200	$16,100	$248,300
2016	$232,200	$16,100	$248,300
2015	$232,200	$16,100	$248,300

Assessment			
Valuation Year	**Improvements**	**Land**	**Total**
2017	$162,500	$11,300	$173,800
2016	$162,500	$11,300	$173,800
2015	$162,500	$11,300	$173,800

(c) 2019 Vision Government Solutions, Inc. All rights reserved.

EXHIBIT 4

Danbury CT - TaxMap

Tasks

Found 1 assessor records.
Found 2 parcels.

Selected | All | Clear

Parcel ID	Owner	Street Name
K070190000	CHRIST THE SHEPHERD CHURCH PCA	STADLEY ROUGH RD

Navigate | Zoom In | Full Extent | Back | Forward

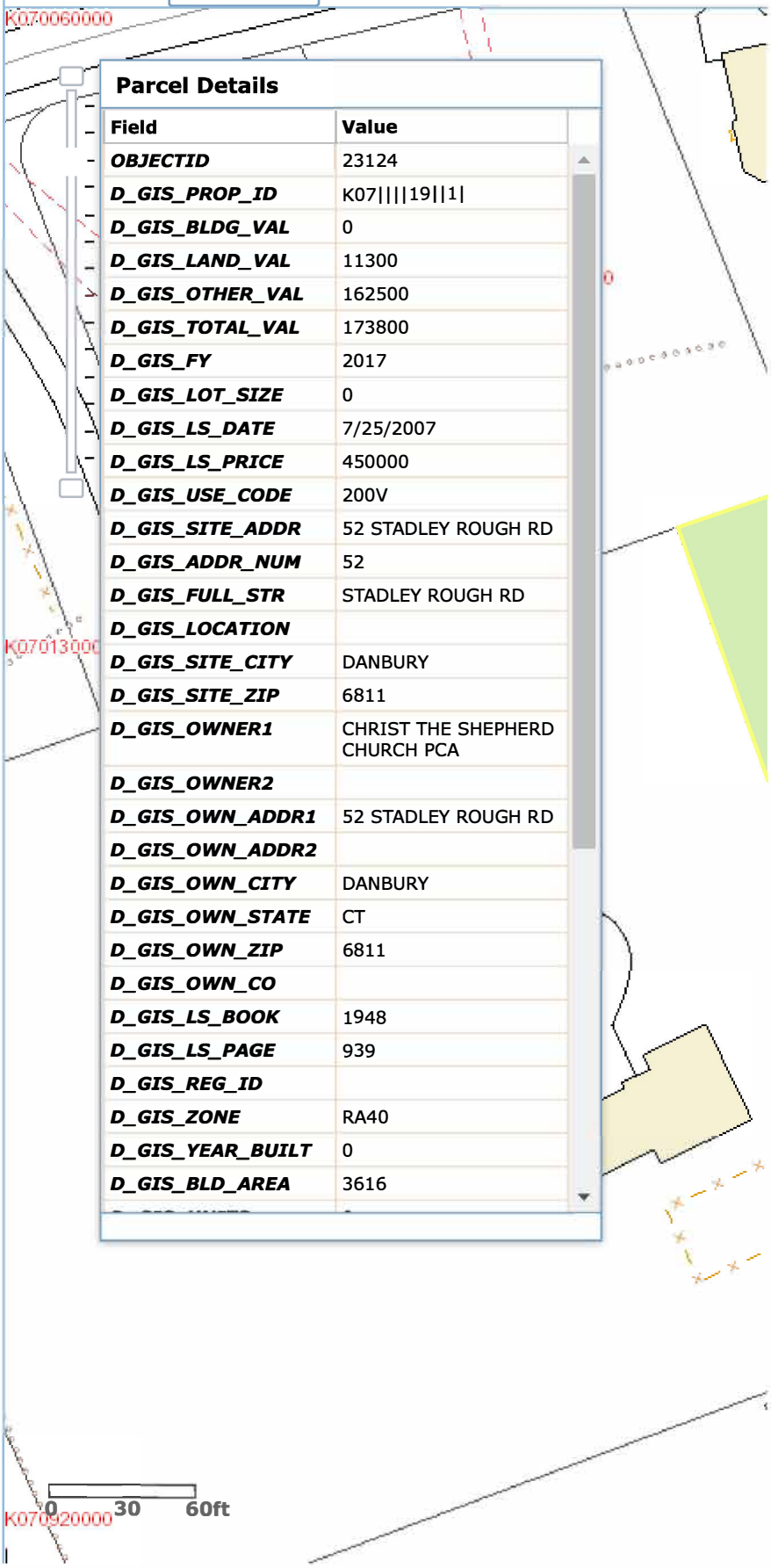

Parcel Details

Field	Value
OBJECTID	23124
D_GIS_PROP_ID	K07||||19||1|
D_GIS_BLDG_VAL	0
D_GIS_LAND_VAL	11300
D_GIS_OTHER_VAL	162500
D_GIS_TOTAL_VAL	173800
D_GIS_FY	2017
D_GIS_LOT_SIZE	0
D_GIS_LS_DATE	7/25/2007
D_GIS_LS_PRICE	450000
D_GIS_USE_CODE	200V
D_GIS_SITE_ADDR	52 STADLEY ROUGH RD
D_GIS_ADDR_NUM	52
D_GIS_FULL_STR	STADLEY ROUGH RD
D_GIS_LOCATION	
D_GIS_SITE_CITY	DANBURY
D_GIS_SITE_ZIP	6811
D_GIS_OWNER1	CHRIST THE SHEPHERD CHURCH PCA
D_GIS_OWNER2	
D_GIS_OWN_ADDR1	52 STADLEY ROUGH RD
D_GIS_OWN_ADDR2	
D_GIS_OWN_CITY	DANBURY
D_GIS_OWN_STATE	CT
D_GIS_OWN_ZIP	6811
D_GIS_OWN_CO	
D_GIS_LS_BOOK	1948
D_GIS_LS_PAGE	939
D_GIS_REG_ID	
D_GIS_ZONE	RA40
D_GIS_YEAR_BUILT	0
D_GIS_BLD_AREA	3616

EXHIBIT 5

DOCKET NO. 366 - Optasite Towers LLC and Omnipoint Communications, Inc. application for a Certificate of Environmental Compatibility and Public Need for the construction, maintenance and operation of a telecommunications facility located at 52 Stadley Rough Road in Danbury, Connecticut.	}	Connecticut
	}	Siting
	}	Council

April 23, 2009

Decision and Order

Pursuant to the foregoing Findings of Fact and Opinion, the Connecticut Siting Council (Council) finds that the effects associated with the construction, operation, and maintenance of a telecommunications facility, including effects on the natural environment; ecological integrity and balance; public health and safety; scenic, historic, and recreational values; forests and parks; air and water purity; and fish and wildlife are not disproportionate, either alone or cumulatively with other effects, when compared to need, are not in conflict with the policies of the State concerning such effects, and are not sufficient reason to deny the application, and therefore directs that a Certificate of Environmental Compatibility and Public Need, as provided by General Statutes § 16-50k, be issued to Optasite Towers LLC, hereinafter referred to as the Certificate Holder, for a telecommunications facility at 52 Stadley Rough Road, Danbury, Connecticut.

The facility shall be constructed, operated, and maintained substantially as specified in the Council's record in this matter, and subject to the following conditions:

1. The tower shall be constructed as a monopole, no taller than necessary to provide the proposed telecommunications services, sufficient to accommodate the antennas of Omnipoint Communications, Inc. and other entities, both public and private, but such tower shall not exceed a height of 140 feet above ground level. All antennas attached to the monopole shall be flush-mounted.

2. The Certificate Holder shall shift, to the extent feasible, the compound to the north and east to help retain the existing vegetative buffer.

3. The Certificate Holder shall incorporate an architectural treatment for the fence of the facility compound and any equipment shelters therein that is consistent with and amenable to adjacent land uses.

4. The Certificate Holder shall prepare a Development and Management (D&M) Plan for this site in compliance with Sections 16-50j-75 through 16-50j-77 of the Regulations of Connecticut State Agencies. The D&M Plan shall be served on the City of Danbury for comment, and all parties and intervenors as listed in the service list, and submitted to and approved by the Council prior to the commencement of facility construction and shall include:

a) a final site plan(s) of site development to include specifications for the tower, tower foundation, antennas, equipment compound, radio equipment, access road, utility line, and landscaping that will provide additional vegetative buffering for the adjacent properties; and

b) construction plans for site clearing, grading, landscaping, water drainage, and erosion and sedimentation controls consistent with the 2002 Connecticut Guidelines for Soil Erosion and Sediment Control, as amended.

5. The Certificate Holder shall, prior to the commencement of operation, provide the Council worst-case modeling of the electromagnetic radio frequency power density of all proposed entities' antennas at the closest point of uncontrolled access to the tower base, consistent with Federal Communications Commission, Office of Engineering and Technology, Bulletin No. 65, August 1997. The Certificate Holder shall ensure a recalculated report of the electromagnetic radio frequency power density be submitted to the Council if and when circumstances in operation cause a change in power density above the levels calculated and provided pursuant to this Decision and Order.

6. Upon the establishment of any new State or federal radio frequency standards applicable to frequencies of this facility, the facility granted herein shall be brought into compliance with such standards.

7. The Certificate Holder shall permit public or private entities to share space on the proposed tower for fair consideration, or shall provide any requesting entity with specific legal, technical, environmental, or economic reasons precluding such tower sharing.

8. The Certificate Holder shall provide reasonable space on the tower for no compensation for any City of Danbury public safety services (police, fire and medical services), provided such use can be accommodated and is compatible with the structural integrity of the tower.

9. Unless otherwise approved by the Council, if the facility authorized herein is not fully constructed and providing wireless services within eighteen months from the date of the mailing of the Council's Findings of Fact, Opinion, and Decision and Order (collectively called "Final Decision"), this Decision and Order shall be void, and the Certificate Holder shall dismantle the tower and remove all associated equipment or reapply for any continued or new use to the Council before any such use is made. The time between the filing and resolution of any appeals of the Council's Final Decision shall not be counted in calculating this deadline.

10. Any request for extension of the time period referred to in Condition 9 shall be filed with the Council not later than 60 days prior to the expiration date of this Certificate and shall be served on all parties and intervenors, as listed in the service list, and the City of Danbury. Any proposed modifications to this Decision and Order shall likewise be so served.

11. If the facility ceases to provide wireless services for a period of one year, this Decision and Order shall be void, and the Certificate Holder shall dismantle the tower and remove all associated equipment or reapply for any continued or new use to the Council before any such use is made.

12. The Certificate Holder shall remove any nonfunctioning antenna, and associated antenna mounting equipment, within 60 days of the date the antenna ceased to function.

13. In accordance with Section 16-50j-77 of the Regulations of Connecticut State Agencies, the Certificate Holder shall provide the Council with written notice two weeks prior to the commencement of site construction activities. In addition, the Certificate Holder shall provide the Council with written notice of the completion of site construction and the commencement of site operation.

Pursuant to General Statutes § 16-50p, the Council hereby directs that a copy of the Findings of Fact, Opinion, and Decision and Order be served on each person listed below, and notice of issuance shall be published in the Danbury News-Times.

By this Decision and Order, the Council disposes of the legal rights, duties, and privileges of each party named or admitted to the proceeding in accordance with Section 16-50j-17 of the Regulations of Connecticut State Agencies.

The parties and intervenors to this proceeding are:

APPLICANT	**ITS REPRESENTATIVE**
Optasite Towers LLC and Omnipoint Communications, Inc. One Research Drive, Suite 200C Westborough, MA 01581	Christopher B. Fisher, Esq. Lucia Chiocchio, Esq. Cuddy & Feder LLP 445 Hamilton Avenue, 14th Floor White Plains, New York 10601
City of Danbury	Laszlo L. Pinter, Esq. Robin Edwards, Esq. City of Danbury 155 Deer Hill Avenue Danbury, CT 06810

STATE OF CONNECTICUT

CONNECTICUT SITING COUNCIL

Ten Franklin Square, New Britain, CT 06051

Phone: (860) 827-2935 Fax: (860) 827-2950

E-Mail: siting.council@ct.gov

www.ct.gov/csc

February 29, 2016

Kri Pelletier
Property Specialist
SBA Communications Corporation
134 Flanders Road, Suite 125
Westborough, MA 01581

RE: **EM-T-MOBILE-034-160205** – T-Mobile notice of intent to modify an existing telecommunications facility located at 52 Stadley Rough Road, Danbury, Connecticut.

Dear Ms. Pelletier:

The Connecticut Siting Council (Council) hereby acknowledges your notice to modify this existing telecommunications facility, pursuant to Section 16-50j-73 of the Regulations of Connecticut State Agencies with the following conditions:

1. Any deviation from the proposed modification as specified in this notice and supporting materials with the Council shall render this acknowledgement invalid;

2. Any material changes to this modification as proposed shall require the filing of a new notice with the Council;

3. Within 45 days after completion of construction, the Council shall be notified in writing that construction has been completed;

4. Any nonfunctioning antenna and associated antenna mounting equipment on this facility owned and operated by T-Mobile shall be removed within 60 days of the date the antenna ceased to function;

5. The validity of this action shall expire one year from the date of this letter; and

6. The applicant may file a request for an extension of time beyond the one year deadline provided that such request is submitted to the Council not less than 60 days prior to the expiration.

The proposed modifications including the placement of all necessary equipment and shelters within the tower compound are to be implemented as specified here and in your notice dated February 4, 2016. The modifications are in compliance with the exception criteria in Section 16-50j-72 (b) of the Regulations of Connecticut State Agencies as changes to an existing facility site that would not increase tower height, extend the boundaries of the tower site by any dimension, increase noise levels at the tower site boundary by six decibels or more, and increase the total radio frequencies electromagnetic radiation power density measured at the tower site boundary to or above the standards adopted by the Federal Communications Commission pursuant to Section 704 of the Telecommunications Act of 1996 and by the state Department of Energy and Environmental Protection pursuant to Connecticut General Statutes § 22a-162. This facility has also been carefully modeled to ensure that radio frequency emissions are conservatively below state and federal standards applicable to the frequencies now used on this tower.

This decision is under the exclusive jurisdiction of the Council. Please be advised that the validity of this action shall expire one year from the date of this letter. Any additional change to this facility will require explicit notice to this agency pursuant to Regulations of Connecticut State Agencies Section 16-50j-73. Such notice shall include all relevant information regarding the proposed change with cumulative worst-case modeling of radio frequency exposure at the closest point of uncontrolled access to the tower base, consistent with Federal Communications Commission, Office of Engineering and Technology, Bulletin 65. Thank you for your attention and cooperation.

Very truly yours,

Melanie A. Bachman
Acting Executive Director

MAB/CH/lm

c: The Honorable Mark D. Boughton, Mayor, City of Danbury
Sharon Calitro, Director of Planning & Zoning, City of Danbury
Christ the Shepard Church

EXHIBIT 6

CT796/OPTASITECANDLE_FT

52 STADLEY ROUGH ROAD
DANBURY, CT 06811
FAIRFIELD COUNTY

SITE NO.: CT11796G

RF DESIGN GUIDELINE: 67D5A997DB OUTDOOR

APPROVALS

PROJECT MANAGER:	DATE:	ZONING/SITE ACQ.:	DATE:
CONSTRUCTION:	DATE:	OPERATIONS:	DATE:
RF ENGINEERING:	DATE:	TOWER OWNER:	DATE:

T-MOBILE TECHNICIAN SITE SAFETY NOTES

LOCATION	SPECIAL RESTRICTIONS
SECTOR A:	ACCESS BY CERTIFIED CLIMBER
SECTOR B:	ACCESS BY CERTIFIED CLIMBER
SECTOR C:	ACCESS BY CERTIFIED CLIMBER
GPS/LMU:	UNRESTRICTED
RADIO CABINETS:	UNRESTRICTED
PPC DISCONNECT:	UNRESTRICTED
MAIN CIRCUIT D/C:	UNRESTRICTED
NIU/T DEMARC:	UNRESTRICTED
OTHER/SPECIAL:	NONE

SITE NOTES

1. THIS IS AN UNMANNED AND RESTRICTED ACCESS TELECOMMUNICATION FACILITY, AND IS NOT FOR HUMAN HABITATION. IT WILL BE USED FOR THE TRANSMISSION OF RADIO SIGNAL FOR THE PURPOSE OF PROVIDING PUBLIC CELLULAR SERVICE.
   - ADA COMPLIANCE NOT REQUIRED.
   - POTABLE WATER OR SANITARY SERVICE IS NOT REQUIRED.
   - NO OUTDOOR STORAGE OR ANY SOLID WASTE RECEPTACLES REQUIRED.
2. CONTRACTOR SHALL VERIFY ALL PLANS, EXISTING DIMENSIONS, AND CONDITIONS ON JOB SITE. CONTRACTOR SHALL IMMEDIATELY NOTIFY THE ARCHITECT/ENGINEER IN WRITING OF ANY DISCREPANCIES BEFORE PROCEEDING WITH THE WORK. FAILURE TO NOTIFY THE ARCHITECT/ENGINEER PLACE THE RESPONSIBILITY ON THE CONTRACTOR TO CORRECT THE DISCREPANCIES AT THE CONTRACTOR'S EXPENSE.
3. NEW CONSTRUCTION WILL CONFORM TO ALL APPLICABLE CODES AND ORDINANCES.
   - BUILDING CODE: 2018 CONNECTICUT STATE BUILDING CODE
   - ELECTRICAL CODE: 2017 NATIONAL ELECTRICAL CODE
   - STRUCTURAL CODE: TIA/EIA-222-G STRUCTURAL STANDARDS FOR ANTENNA SUPPORTING STRUCTURES AND ANTENNAS.

GENERAL NOTES

1. THE CONTRACTOR SHALL GIVE ALL NOTICES AND COMPLY WITH ALL LAWS, ORDINANCES, RULES, REGULATIONS AND LAWFUL ORDERS OF ANY PUBLIC AUTHORITY, MUNICIPAL AND UTILITY COMPANY SPECIFICATIONS, AND LOCAL AND STATE JURISDICTIONAL CODES BEARING ON THE PERFORMANCE OF THE WORK. THE WORK PERFORMED ON THE PROJECT AND THE MATERIALS INSTALLED SHALL BE IN STRICT ACCORDANCE WITH ALL APPLICABLE CODES, REGULATIONS, AND ORDINANCES.
2. THE ARCHITECT/ENGINEER HAVE MADE EVERY EFFORT TO SET FORTH IN THE CONSTRUCTION AND CONTRACT DOCUMENTS THE COMPLETE SCOPE OF WORK. THE CONTRACTOR BIDDING THE JOB IS NEVERTHELESS CAUTIONED THAT MINOR OMISSIONS OR ERRORS IN THE DRAWINGS AND OR SPECIFICATIONS SHALL NOT EXCUSE SAID CONTRACTOR FROM COMPLETING THE PROJECT AND IMPROVEMENTS IN ACCORDANCE WITH THE INTENT OF THESE DOCUMENTS.
3. THE CONTRACTOR OR BIDDER SHALL BEAR THE RESPONSIBILITY OF NOTIFYING (IN WRITING) THE OMNIPOINT REPRESENTATIVE OF ANY CONFLICTS, ERRORS, OR OMISSIONS PRIOR TO THE SUBMISSION OF CONTRACTOR'S PROPOSAL OR PERFORMANCE OF WORK. IN THE EVENT OF DISCREPANCIES THE CONTRACTOR SHALL PRICE THE MORE COSTLY OR EXTENSIVE WORK, UNLESS DIRECTED IN WRITING OTHERWISE.
4. THE SCOPE OF WORK SHALL INCLUDE FURNISHING ALL MATERIALS, EQUIPMENT, LABOR AND ALL OTHER MATERIALS AND LABOR DEEMED NECESSARY TO COMPLETE THE WORK/PROJECT AS DESCRIBED HEREIN.
5. THE CONTRACTOR SHALL VISIT THE JOB SITE PRIOR TO THE SUBMISSION OF BIDS OR PERFORMING WORK TO FAMILIARIZE HIMSELF WITH THE FIELD CONDITIONS AND TO VERIFY THAT THE PROJECT CAN BE CONSTRUCTED IN ACCORDANCE WITH THE CONTRACT DOCUMENTS.
6. THE CONTRACTOR SHALL OBTAIN AUTHORIZATION TO PROCEED WITH CONSTRUCTION PRIOR TO STARTING WORK ON ANY ITEM NOT CLEARLY DEFINED BY THE CONSTRUCTION DRAWINGS/CONTRACT DOCUMENTS.
7. THE CONTRACTOR SHALL INSTALL ALL EQUIPMENT AND MATERIALS ACCORDING TO THE MANUFACTURER'S/VENDOR'S SPECIFICATIONS UNLESS NOTED OTHERWISE OR WHERE LOCAL CODES OR ORDINANCES TAKE PRECEDENCE.
8. THE CONTRACTOR SHALL PROVIDE A FULL SET OF CONSTRUCTION DOCUMENTS AT THE SITE UPDATED WITH THE LATEST REVISIONS AND ADDENDUMS OR CLARIFICATIONS AVAILABLE FOR THE USE BY ALL PERSONNEL INVOLVED WITH THE PROJECT.
9. THE CONTRACTOR SHALL SUPERVISE AND DIRECT THE PROJECT DESCRIBED HEREIN. THE CONTRACTOR SHALL BE SOLELY RESPONSIBLE FOR ALL CONSTRUCTION MEANS, METHODS, TECHNIQUES, SEQUENCES AND PROCEDURES AND FOR COORDINATING ALL PORTIONS OF THE WORK UNDER THE CONTRACT.
10. THE CONTRACTOR IS RESPONSIBLE FOR PROVIDING ALL NECESSARY CONSTRUCTION CONTROL SURVEYS, ESTABLISHING AND MAINTAINING ALL LINES AND GRADES REQUIRED TO CONSTRUCT ALL IMPROVEMENTS AS SHOWN HEREIN.
11. THE CONTRACTOR SHALL BE RESPONSIBLE FOR OBTAINING ALL PERMITS AND INSPECTIONS WHICH MAY BE REQUIRED FOR THE WORK BY THE ARCHITECT/ENGINEER, THE STATE, COUNTY OR LOCAL GOVERNMENT AUTHORITY.
12. THE CONTRACTOR SHALL MAKE NECESSARY PROVISIONS TO PROTECT EXISTING IMPROVEMENTS, EASEMENTS, PAVING, CURBING, ETC. DURING CONSTRUCTION. UPON COMPLETION OF WORK, THE CONTRACTOR SHALL REPAIR ANY DAMAGE THAT MAY HAVE OCCURRED DUE TO CONSTRUCTION ON OR ABOUT THE PROPERTY.
13. THE CONTRACTOR SHALL KEEP THE GENERAL WORK AREA CLEAN AND HAZARD FREE DURING CONSTRUCTION AND DISPOSE OF ALL DIRT, DEBRIS, RUBBISH AND REMOVE EQUIPMENT NOT SPECIFIED AS REMAINING ON THE PROPERTY. PREMISES SHALL BE LEFT IN CLEAN CONDITION AND FREE FROM PAINT SPOTS, DUST, OR SMUDGES OF ANY NATURE.
14. THE CONTRACTOR SHALL COMPLY WITH ALL OSHA REQUIREMENTS AS THEY APPLY TO THIS PROJECT.
15. THE CONTRACTOR SHALL NOTIFY THE PROJECT OWNER'S REPRESENTATIVE WHERE A CONFLICT OCCURS ON ANY OF THE CONTRACT DOCUMENTS. THE CONTRACTOR IS NOT TO ORDER MATERIAL OR CONSTRUCT ANY PORTION OF THE WORK THAT IS IN CONFLICT UNTIL CONFLICT IS RESOLVED BY THE LESSEE/LICENSEE REPRESENTATIVE.
16. THE CONTRACTOR SHALL VERIFY ALL DIMENSIONS, ELEVATIONS, PROPERTY LINES, ETC. ON THE JOB.
17. ALL UNDERGROUND UTILITY INFORMATION WAS DETERMINED FROM SURFACE INVESTIGATIONS AND EXISTING PLANS OF RECORD. THE CONTRACTOR SHALL LOCATE ALL UNDERGROUND UTILITIES IN THE FIELD PRIOR TO ANY SITE WORK.

AT LEAST 72 HOURS PRIOR TO DIGGING, THE CONTRACTOR IS REQUIRED TO CALL DIG SAFE AT 811

VICINITY MAP

SCALE: 1" = 1000'-0"

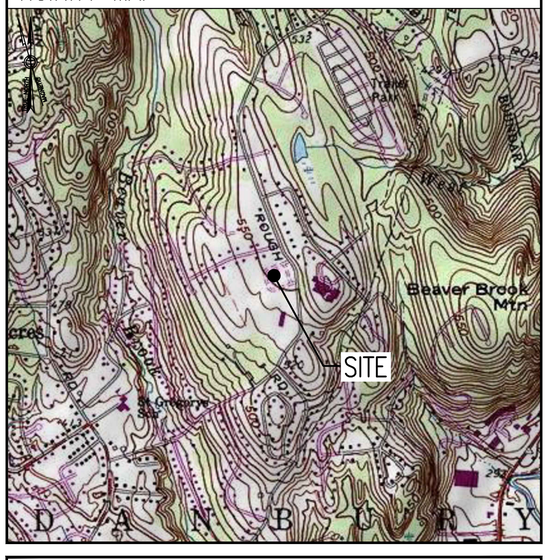

DIRECTIONS

TURN LEFT ONTO S WASHINGTON ST. TURN RIGHT ONTO MA-123 E. TURN LEFT TO MERGE ONTO I-495 NORTH TOWARD MANSFIELD/MARLBORO. MERGE ONTO I-495 NORTH. TAKE EXIT 22 TO MERGE ONTO I-90 WEST TOWARD ALBANY. TAKE EXIT 9 FOR I-84 TOWARD HARTFORD CT/NEW YORK CITY. CONTINUE ONTO I-84. TAKE EXIT 7 TO MERGE ONTO US-202 EAST/US-7 NORTH TOWARD NEW MILFORD/BROOKFIELD. TAKE EXIT 11 FOR US-202 EAST TOWARD FEDERAL ROAD. TURN RIGHT ONTO WHITE TURKEY ROAD EXT. TURN RIGHT ONTO FEDERAL ROAD. TURN LEFT ONTO NABBY ROAD. TURN LEFT ONTO PALMER ROAD. TURN RIGHT ONTO STADLEY ROUGH ROAD. TURN RIGHT TO STAY ON STADLEY ROUGH ROAD. TURN LEFT, SITE WILL BE ON THE RIGHT.

SHEET INDEX

SHT. NO.	DESCRIPTION	VER.
T-1	TITLE SHEET	1
GN-1	GENERAL NOTES	1
A-1	COMPOUND & EQUIPMENT PLANS	1
A-2	TOWER ELEVATION & ANTENNA PLANS	1
A-3	SITE DETAILS	1
A-4	ANTENNA & FEEDLINE CHARTS	1
E-1	ELECTRIC & GROUNDING DETAILS	1

DO NOT SCALE DRAWINGS

CONTRACTOR SHALL VERIFY ALL PLANS AND EXISTING DIMENSIONS AND CONDITIONS ON THE JOB SITE AND SHALL IMMEDIATELY NOTIFY THE PROJECT OWNER'S REPRESENTATIVE IN WRITING OF DISCREPANCIES BEFORE PROCEEDING WITH THE WORK OR BE RESPONSIBLE FOR SAME.

PROJECT SUMMARY

SITE NUMBER:	CT11796G
SBA SITE NUMBER:	CT13549-S
SBA SITE NAME:	DANBURY 1
SITE ADDRESS:	52 STADLEY ROUGH ROAD DANBURY, CT 06811
PROPERTY OWNER:	CHRIST THE SHEPHERD CHURCH PCA 52 STADLEY ROUGH ROAD DANBURY, CT 06811
TOWER OWNER:	SBA TOWERS II, LLC 8501 CONGRESS AVENUE BOCA RATON, FL 33487 PHONE: 561-226-9523
COUNTY:	FAIRFIELD COUNTY
ZONING DISTRICT:	RA-40 (SINGLE FAMILY RESIDENTIAL)
STRUCTURE TYPE:	MONOPOLE
STRUCTURE HEIGHT:	139'
APPLICANT:	T-MOBILE NORTHEAST LLC 15 COMMERCE WAY, SUITE B NORTON, MA 02766
SBA RSM:	STEPHEN ROTH PHONE: 860-539-4920 EMAIL: SRoth@sbasite.com
ARCHITECT:	CHAPPELL ENGINEERING ASSOCIATES, LLC. 201 BOSTON POST ROAD WEST, SUITE 101 MARLBOROUGH, MA 01752
STRUCTURAL ENGINEER:	CHAPPELL ENGINEERING ASSOCIATES, LLC. 201 BOSTON POST ROAD WEST, SUITE 101 MARLBOROUGH, MA 01752
SITE CONTROL POINT:	LATITUDE: N.41.433610° N41°26'01.00" LONGITUDE W.73.430554° W73°25'49.99"

SPECIAL ZONING NOTE:
BASED ON INFORMATION PROVIDED BY T-MOBILE REGULATORY COMPLIANCE PROFESSIONALS AND LEGAL COUNSEL, THIS TELECOMMUNICATIONS EQUIPMENT DEPLOYMENT IS CONSIDERED AN ELIGIBLE FACILITY UNDER THE MIDDLE CLASS TAX RELIEF AND JOB CREATION ACT OF 2012, 47 USC 1455(A), SECTION 6409(A), AND IS SUBJECT TO AN ELIGIBLE FACILITY REQUEST, EXPEDITED REVIEW, AND LIMITED/PARTIAL ZONING PRE-EMPTION FOR LOCAL DISCRETIONARY PERMITS (VARIANCE, SPECIAL PERMIT, SITE PLAN REVIEW, OR ADMINISTRATIVE REVIEW).

T-MOBILE NORTHEAST LLC
15 COMMERCE WAY, SUITE B
NORTON, MA 02766
(508) 286-2700

SBA COMMUNICATIONS CORP.
134 FLANDERS ROAD, SUITE 125
WESTBOROUGH, MA 01581
(508) 251-0720

CHAPPELL ENGINEERING ASSOCIATES, LLC
Civil Structural Land Surveying
R.K. EXECUTIVE CENTRE
201 BOSTON POST ROAD WEST, SUITE 101
MARLBOROUGH, MA 01752
(508) 481-7400
www.chappellengineering.com

STATE OF CONNECTICUT
JAMES M. FITZGERALD
No. 25997
LICENSED
PROFESSIONAL CIVIL ENGINEER
12/30/20

CHECKED BY: JMT

APPROVED BY: JMT

SUBMITTALS

REV.	DATE	DESCRIPTION	BY
1	12/30/20	ISSUED FOR CONSTRUCTION	JRV
0	11/16/20	ISSUED FOR REVIEW	JRV

SITE NUMBER:
CT11796G

SITE ADDRESS:
52 STADLEY ROUGH ROAD
DANBURY, CT 06811

SHEET TITLE
TITLE SHEET

SHEET NUMBER
T-1

1815.165

GENERAL NOTES:

1. FOR THE PURPOSE OF CONSTRUCTION DRAWINGS, THE FOLLOWING DEFINITIONS SHALL APPLY:
   CONTRACTOR – T–MOBILE
   SUBCONTRACTOR – GENERAL CONTRACTOR (CONSTRUCTION)
   OWNER – T–MOBILE
   OEM – ORIGINAL EQUIPMENT MANUFACTURER

2. PRIOR TO THE SUBMISSION OF BIDS, THE BIDDING SUBCONTRACTOR SHALL VISIT THE CELL SITE TO FAMILIARIZE WITH THE EXISTING CONDITIONS AND TO CONFIRM THAT THE WORK CAN BE ACCOMPLISHED AS SHOWN ON THE CONSTRUCTION DRAWINGS. ANY DISCREPANCY FOUND SHALL BE BROUGHT TO THE ATTENTION OF CONTRACTOR.

3. ALL MATERIALS FURNISHED AND INSTALLED SHALL BE IN STRICT ACCORDANCE WITH ALL APPLICABLE CODES, REGULATIONS, AND ORDINANCES. SUBCONTRACTOR SHALL ISSUE ALL APPROPRIATE NOTICES AND COMPLY WITH ALL LAWS, ORDINANCES, RULES, REGULATIONS, AND LAWFUL ORDERS OF ANY PUBLIC AUTHORITY REGARDING THE PERFORMANCE OF THE WORK.

4. ALL WORK CARRIED OUT SHALL COMPLY WITH ALL APPLICABLE MUNICIPAL AND UTILITY COMPANY SPECIFICATIONS AND LOCAL, STATE AND FEDERAL JURISDICTIONAL CODES, ORDINANCES AND APPLICABLE REGULATIONS.

5. DRAWINGS PROVIDED HERE ARE NOT TO BE SCALED AND ARE INTENDED TO SHOW OUTLINE ONLY.

6. UNLESS NOTED OTHERWISE, THE WORK SHALL INCLUDE FURNISHING MATERIALS, EQUIPMENT, APPURTENANCES, AND LABOR NECESSARY TO COMPLETE ALL INSTALLATIONS AS INDICATED ON THE DRAWINGS.

7. THE SUBCONTRACTOR SHALL INSTALL ALL EQUIPMENT AND MATERIALS IN ACCORDANCE WITH MANUFACTURER'S RECOMMENDATIONS UNLESS SPECIFICALLY STATED OTHERWISE.

8. IF THE SPECIFIED EQUIPMENT CANNOT BE INSTALLED AS SHOWN ON THESE DRAWINGS, THE SUBCONTRACTOR SHALL PROPOSE AN ALTERNATIVE INSTALLATION FOR APPROVAL BY THE CONTRACTOR.

9. SUBCONTRACTOR SHALL DETERMINE ACTUAL ROUTING OF CONDUIT, POWER, T1 CABLES AND GROUNDING CABLES AS SHOWN ON THE POWER, GROUNDING AND TELCO PLAN DRAWING. SUBCONTRACTOR SHALL UTILIZE EXISTING TRAYS AND/OR SHALL ADD NEW TRAYS AS NECESSARY. SUBCONTRACTOR SHALL CONFIRM THE ACTUAL ROUTING WITH THE CONTRACTOR AND/OR LANDLORD PRIOR TO CONSTRUCTION.

10. THE SUBCONTRACTOR SHALL PROTECT EXISTING IMPROVEMENTS, PAVEMENTS, CURBS, LANDSCAPING AND STRUCTURES. ANY DAMAGED PART SHALL BE REPAIRED AT SUBCONTRACTOR'S EXPENSE TO THE SATISFACTION OF THE OWNER.

11. SUBCONTRACTOR SHALL LEGALLY AND PROPERLY DISPOSE OF ALL SCRAP MATERIALS SUCH AS COAXIAL CABLES AND OTHER ITEMS REMOVED FROM THE EXISTING FACILITY.

12. SUBCONTRACTOR SHALL LEAVE PREMISES IN CLEAN CONDITION AND RETURN DISTURBED AREAS TO ORIGINAL CONDITIONS.

13. THE SUBCONTRACTOR SHALL SUPERVISE AND DIRECT THE PROJECT DESCRIBED HEREIN. THE SUBCONTRACTOR SHALL BE SOLELY RESPONSIBLE FOR ALL CONSTRUCTION MEANS, METHODS, TECHNIQUES, SEQUENCES, AND PROCEDURES FOR COORDINATING ALL PORTIONS OF THE WORK UNDER THE CONTRACT.

14. SUBCONTRACTOR SHALL NOTIFY CHAPPELL ENGINEERING ASSOCIATES, LLC 48 HOURS IN ADVANCE OF POURING CONCRETE OR BACKFILLING TRENCHES, SEALING ROOF AND WALL PENETRATIONS AND POST DOWNS, FINISHING NEW WALLS OR FINAL ELECTRICAL CONNECTIONS FOR ENGINEERING REVIEW.

15. CONSTRUCTION SHALL COMPLY WITH ALL T–MOBILE STANDARDS AND SPECIFICATIONS.

16. SUBCONTRACTOR SHALL VERIFY ALL EXISTING DIMENSIONS AND CONDITIONS PRIOR TO COMMENCING ANY WORK. ALL DIMENSIONS OF EXISTING CONSTRUCTION SHOWN ON THE DRAWINGS MUST BE VERIFIED. SUBCONTRACTOR SHALL NOTIFY THE CONTRACTOR OF ANY DISCREPANCIES PRIOR TO ORDERING MATERIAL OR PROCEEDING WITH CONSTRUCTION.

17. THE EXISTING CELL SITES ARE IN FULL COMMERCIAL OPERATION. ANY CONSTRUCTION WORK BY SUBCONTRACTOR SHALL NOT DISRUPT THE EXISTING NORMAL OPERATION. ANY WORK ON EXISTING EQUIPMENT MUST BE COORDINATED WITH CONTRACTOR. ALSO, WORK SHOULD BE SCHEDULED FOR AN APPROPRIATE MAINTENANCE WINDOW USUALLY IN LOW TRAFFIC PERIODS AFTER MIDNIGHT.

18. IF THE EXISTING CELL SITE IS ACTIVE, ALL SAFETY PRECAUTIONS MUST BE TAKEN WHEN WORKING AROUND HIGH LEVELS OF ELECTROMAGNETIC RADIATION. EQUIPMENT SHOULD BE SHUTDOWN PRIOR TO PERFORMING ANY WORK THAT COULD EXPOSE THE WORKERS TO DANGER. PERSONAL RF EXPOSURE MONITORS ARE TO BE WORN TO ALERT OF ANY DANGEROUS EXPOSURE LEVELS.

SITE WORK GENERAL NOTES:

1. THE SUBCONTRACTOR SHALL CONTACT UTILITY LOCATING SERVICES PRIOR TO THE START OF CONSTRUCTION.

2. ALL EXISTING ACTIVE SEWER, WATER, GAS, ELECTRIC, AND OTHER UTILITIES WHERE ENCOUNTERED IN THE WORK, SHALL BE PROTECTED AT ALL TIMES, AND WHERE REQUIRED FOR THE PROPER EXECUTION OF THE WORK, SHALL BE RELOCATED AS DIRECTED BY ENGINEERS. EXTREME CAUTION SHOULD BE USED BY THE SUBCONTRACTOR WHEN EXCAVATING OR DRILLING PIERS AROUND OR NEAR UTILITIES. SUBCONTRACTOR SHALL PROVIDE SAFETY TRAINING FOR THE WORKING CREW. THIS WILL INCLUDE BUT NOT BE LIMITED TO A) FALL PROTECTION B) CONFINED SPACE C) ELECTRICAL SAFETY D) TRENCHING AND EXCAVATION.

3. ALL SITE WORK SHALL BE AS INDICATED ON THE DRAWINGS AND PROJECT SPECIFICATIONS.

4. IF NECESSARY, RUBBISH, STUMPS, DEBRIS, STICKS, STONES AND OTHER REFUSE SHALL BE REMOVED FROM THE SITE AND DISPOSED OF LEGALLY.

5. THE SITE SHALL BE GRADED TO CAUSE SURFACE WATER TO FLOW AWAY FROM THE BTS EQUIPMENT AND TOWER AREAS.

6. NO FILL OR EMBANKMENT MATERIAL SHALL BE PLACED ON FROZEN GROUND. FROZEN MATERIALS, SNOW OR ICE SHALL NOT BE PLACED IN ANY FILL OR EMBANKMENT.

7. THE SUB GRADE SHALL BE COMPACTED AND BROUGHT TO A SMOOTH UNIFORM GRADE PRIOR TO FINISHED SURFACE APPLICATION.

8. ALL EXISTING INACTIVE SEWER, WATER, GAS, ELECTRIC AND OTHER UTILITIES, WHICH INTERFERE WITH THE EXECUTION OF THE WORK, SHALL BE REMOVED AND/OR CAPPED, PLUGGED OR OTHERWISE DISCONTINUED AT POINTS WHICH WILL NOT INTERFERE WITH THE EXECUTION OF THE WORK, SUBJECT TO THE APPROVAL OF ENGINEERING, OWNER AND/OR LOCAL UTILITIES.

9. THE AREAS OF THE OWNERS PROPERTY DISTURBED BY THE WORK AND NOT COVERED BY THE TOWER, EQUIPMENT OR DRIVEWAY, SHALL BE GRADED TO A UNIFORM SLOPE AND STABILIZED TO PREVENT EROSION AS SPECIFIED IN THE PROJECT SPECIFICATIONS.

10. SUBCONTRACTOR SHALL MINIMIZE DISTURBANCE TO EXISTING SITE DURING CONSTRUCTION. EROSION CONTROL MEASURES, IF REQUIRED DURING CONSTRUCTION, SHALL BE IN CONFORMANCE WITH THE LOCAL GUIDELINES FOR EROSION AND SEDIMENT CONTROL.

11. THE SUBCONTRACTOR SHALL PROVIDE SITE SIGNAGE IN ACCORDANCE WITH THE T–MOBILE SPECIFICATION FOR SITE SIGNAGE.

CONCRETE AND REINFORCING STEEL NOTES:

1. ALL CONCRETE WORK SHALL BE IN ACCORDANCE WITH THE ACI 301, ACI 318, ACI 336, ASTM A184, ASTM A185 AND THE DESIGN AND CONSTRUCTION SPECIFICATION FOR CAST–IN–PLACE CONCRETE.

2. ALL CONCRETE SHALL HAVE A MINIMUM COMPRESSIVE STRENGTH OF 3000 PSI AT 28 DAYS, UNLESS NOTED OTHERWISE. A HIGHER STRENGTH (400PSI) MAY BE USED. ALL CONCRETE WORK SHALL BE IN ACCORDANCE WITH THE ACI 381 CODE REQUIREMENTS

3. REINFORCING STEEL SHALL CONFORM TO ASTM A 615, GRADE 60, DEFORMED UNLESS NOTED OTHERWISE. WELDED WIRE FABRIC SHALL CONFORM TO ASTM A 185 WELDED STEEL WIRE FABRIC UNLESS NOTED OTHERWISE. SPLICES SHALL BE CLASS "B" AND ALL HOOKS SHALL BE STANDARD, UNO.

4. THE FOLLOWING MINIMUM CONCRETE COVER SHALL BE PROVIDED FOR REINFORCING STEEL UNLESS SHOWN OTHERWISE ON DRAWINGS:
   CONCRETE CAST AGAINST EARTH.....3 IN.
   CONCRETE EXPOSED TO EARTH OR WEATHER:
   #6 AND LARGER .....2 IN.
   #5 AND SMALLER & WWF .....1½ IN.
   CONCRETE NOT EXPOSED TO EARTH OR WEATHER
   OR NOT CAST AGAINST THE GROUND:
   SLAB AND WALL .....¾ IN.
   BEAMS AND COLUMNS .....1½ IN.

5. A CHAMFER ¾" SHALL BE PROVIDED AT ALL EXPOSED EDGES OF CONCRETE, UNO, IN ACCORDANCE WITH ACI 301 SECTION 4.2.4.

6. INSTALLATION OF CONCRETE EXPANSION/WEDGE ANCHORS SHALL BE PER MANUFACTURER'S WRITTEN RECOMMENDED PROCEDURE. THE ANCHOR BOLT, DOWEL OR ROD SHALL CONFORM TO THE MANUFACTURERS RECOMMENDATION FOR EMBEDMENT DEPTH OR AS SHOWN ON THE DRAWINGS. NO REBAR SHALL BE CUT WITHOUT PRIOR CONTRACTOR APPROVAL WHEN DRILLING HOLES IN CONCRETE. SPECIAL INSPECTIONS, REQUIRED BY GOVERNING CODES, SHALL BE PERFORMED IN ORDER TO MAINTAIN MANUFACTURER'S MAXIMUM ALLOWABLE LOADS. ALL EXPANSION/WEDGE ANCHORS SHALL BE STAINLESS STEEL OR HOT DIPPED GALVANIZED. EXPANSION BOLTS SHALL BE PROVIDED BY SIMPSON OR APPROVED EQUAL.

7. CONCRETE CYLINDER TIES ARE NOT REQUIRED FOR SLAB ON GRADE WHEN CONCRETE IS LESS THAN 50 CUBIC YARDS (IBC1905.6.2.3) IN THAT EVENT THE FOLLOWING RECORDS SHALL BE PROVIDED BY THE CONCRETE SUPPLIER;
   (A) RESULTS OF CONCRETE CYLINDER TEST PERFORMED AT THE SUPPLIERS PLANT.
   (B) CERTIFICATION OF MINIMUM COMPRESSIVE STRENGTH FOR THE CONCRETE GRADE SUPPLIED.
FOR GREATER THAN 50 CUBIC YARDS THE GC SHALL PERFORM THE CONCRETE CYLINDER TEST.

8. AS AN ALTERNATIVE TO ITEM 7. TEST CYLINDERS SHALL BE TAKEN INITIALLY AND THEREAFTER FOR EVERY 50 YARDS OF CONCRETE FROM EACH DIFFERENT BATCH PLANT.

9. EQUIPMENT SHALL NOT BE PLACED ON NEW PADS FOR SEVEN DAYS AFTER PAD IS POURED, UNLESS IT IS VERIFIED BY CYLINDER TESTS THAT COMPRESSIVE STRENGTH HAS BEEN ATTAINED.

STRUCTURAL STEEL NOTES:

1. ALL STEEL WORK SHALL BE PAINTED OR GALVANIZED IN ACCORDANCE WITH THE DRAWINGS AND T–MOBILE SPECIFICATIONS UNLESS OTHERWISE NOTED. STRUCTURAL STEEL SHALL BE ASTM–A–36 UNLESS OTHERWISE NOTED ON THE SITE SPECIFIC DRAWINGS. STEEL DESIGN, INSTALLATION AND BOLTING SHALL BE IN ACCORDANCE WITH THE AMERICAN INSTITUTE OF STEEL CONSTRUCTION (AISC) "MANUAL OF STEEL CONSTRUCTION".

2. ALL WELDING SHALL BE PERFORMED USING E70XX ELECTRODES AND WELDING SHALL CONFORM TO AISC AND AWS D1.1. WHERE FILLET WELD SIZES ARE NOT SHOWN, PROVIDE THE MINIMUM SIZE PER TABLE J2.4 IN THE AISC "MANUAL OF STEEL CONSTRUCTION", 9TH EDITION. PAINTED SURFACES SHALL BE TOUCHED UP.

3. BOLTED CONNECTIONS SHALL USE BEARING TYPE ASTM A325 BOLTS (¾"ø) AND SHALL HAVE MINIMUM OF TWO BOLTS UNLESS NOTED OTHERWISE. ALL BOLTS SHALL BE GALVANIZED OR STAINLESS STEEL.

4. NON–STRUCTURAL CONNECTIONS FOR STEEL GRATING MAY USE ⅝" DIA. ASTM A 307 BOLTS (GALV) UNLESS NOTED OTHERWISE.

5. CONTRACTOR SHALL SUBMIT SHOP DRAWINGS FOR ENGINEER REVIEW & APPROVAL ON PROJECTS REQUIRING STRUCTURAL STEEL

6. ALL STRUCTURAL STEEL WORK SHALL BE DONE IN ACCORDANCE WITH AISC SPECIFICATIONS.

SOIL COMPACTION NOTES FOR SLAB ON GRADE:

1. EXCAVATE AS REQUIRED TO REMOVE VEGETATION AND TOPSOIL TO EXPOSE NATURAL SUBGRADE AND PLACE CRUSHED STONE AS REQUIRED.

2. COMPACTION CERTIFICATION: AN INSPECTION AND WRITTEN CERTIFICATION BY A QUALIFIED GEOTECHNICAL TECHNICIAN OR ENGINEER IS ACCEPTABLE.

3. AS AN ALTERNATE TO INSPECTION AND WRITTEN CERTIFICATION, THE "UNDISTURBED SOIL" BASE SHALL BE COMPACTED WITH "COMPACTION EQUIPMENT", LISTED BELOW, TO AT LEAST 90% MODIFIED PROCTOR MAXIMUM DENSITY PER ASTM D 1557 METHOD C.

4. COMPACTED SUBBASE SHALL BE UNIFORM AND LEVELED. PROVIDE 6" MINIMUM CRUSHED STONE OR GRAVEL COMPACTED IN 3" LIFTS ABOVE COMPACTED SOIL. GRAVEL SHALL BE NATURAL OR CRUSHED WITH 100% PASSING #1 SIEVE.

5. AS AN ALTERNATE TO ITEMS 2 AND 3, THE SUBGRADE SOILS WITH 5 PASSES OR A MEDIUM SIZED VIBRATORY PLATE COMPACTOR (SUCH AS BOMAG BPR 30/38) OR HAND–OPERATED SINGLE DRUM VIBRATORY ROLLER (SUCH AS BOMAG BW 55E). AND SOFT AREAS THAT ARE ENCOUNTERED SHOULD BE REMOVED AND REPLACED WITH A WELL–GRADED GRANULAR FILL AND COMPACTED AS STATED ABOVE.

COMPACTION EQUIPMENT:

1. HAND OPERATED DOUBLE DRUN, VIBRATORY ROLLER, VIBRATORY PLATE COMPACTOR OR JUMPING JACK COMPACTOR.

CONSTRUCTION NOTES:

1. FIELD VERIFICATION:
SUBCONTRACTOR SHALL FIELD VERIFY SCOPE OF WORK, T–MOBILE ANTENNA PLATFORM LOCATION AND UTILITY TRENCHWORK.

2. COORDINATION OF WORK:
SUBCONTRACTOR SHALL COORDINATE RF WORK AND PROCEDURES WITH CONTRACTOR.

3. CABLE LADDER RACK:
SUBCONTRACTOR SHALL FURNISH AND INSTALL CABLE LADDER RACK, CABLE TRAY AND/OR ICE BRIDGE, AND CONDUIT AS REQUIRED TO SUPPORT CABLES TO THE NEW BTS LOCATION.

ELECTRICAL INSTALLATION NOTES:

1. WIRING, RACEWAY, AND SUPPORT METHODS AND MATERIALS SHALL COMPLY WITH THE REQUIREMENTS OF THE NEC AND TELCORDIA.

2. SUBCONTRACTOR SHALL MODIFY OR INSTALL CABLE TRAY SYSTEM AS REQUIRED TO SUPPORT RF AND TRANSPORT CABLING TO THE NEW BTS EQUIPMENT. SUBCONTRACTOR SHALL SUBMIT MODIFICATIONS TO CONTRACTOR FOR APPROVAL.

3. ALL CIRCUITS SHALL BE SEGREGATED AND MAINTAIN MINIMUM CABLE SEPARATION AS REQUIRED BY THE NEC AND TELCORDIA.

4. CABLES SHALL NOT BE ROUTED THROUGH LADDER–STYLE CABLE TRAY RUNGS.

5. EACH END OF EVERY POWER, GROUNDING, AND T1 CONDUCTOR AND CABLE SHALL BE LABELED WITH COLOR–CODED INSULATION OR ELECTRICAL TAPE (3M BRAND, 1/2 INCH PLASTIC ELECTRICAL TAPE WITH UV PROTECTION, OR EQUAL). THE IDENTIFICATION METHOD SHALL CONFORM WITH NEC AND OSHA, AND MATCH INSTALLATION REQUIREMENTS.

6. POWER PHASE CONDUCTORS (I.E., HOTS) SHALL BE LABELED WITH COLOR–CODED INSULATION OR ELECTRICAL TAPE (3M BRAND, ½ INCH PLASTIC ELECTRICAL TAPE WITH UV PROTECTION, OR EQUAL). PHASE CONDUCTOR COLOR CODES SHALL CONFORM WITH THE NEC AND OSHA.

7. ALL ELECTRICAL COMPONENTS SHALL BE CLEARLY LABELED WITH ENGRAVED LAMACOID PLASTIC LABELS. ALL EQUIPMENT SHALL BE LABELED WITH THEIR VOLTAGE RATING, PHASE CONFIGURATION, WIRE CONFIGURATION, POWER OR AMPACITY RATING, AND BRANCH CIRCUIT ID NUMBERS (I.E., PANELBOARD AND CIRCUIT ID'S).

8. PANELBOARDS (ID NUMBERS) AND INTERNAL CIRCUIT BREAKERS (CIRCUIT ID NUMBERS) SHALL BE CLEARLY LABELED WITH ENGRAVED LAMACOID PLASTIC LABELS.

9. ALL TIE WRAPS SHALL BE CUT FLUSH WITH APPROVED CUTTING TOOL TO REMOVE SHARP EDGES.

10. POWER, CONTROL, AND EQUIPMENT GROUND WIRING IN TUBING OR CONDUIT SHALL BE SINGLE CONDUCTOR (#34 AWG OR LARGER), 600 V, OIL RESISTANT THHN OR THWN–2, CLASS B STRANDED COPPER CABLE RATED FOR 90 °C (WET AND DRY) OPERATION; LISTED OR LABELED FOR THE LOCATION AND RACEWAY SYSTEM USED, UNLESS OTHERWISE SPECIFIED.

11. SUPPLEMENTAL EQUIPMENT GROUND WIRING LOCATED INDOORS SHALL BE SINGLE CONDUCTOR (#6 AWG OR LARGER), 600 V, OIL RESISTANT THHN OR THWN–2 GREEN INSULATION, CLASS B STRANDED COPPER CABLE RATED FOR 90 °C (WET AND DRY) OPERATION; LISTED OR LABELED FOR THE LOCATION AND RACEWAY SYSTEM USED, UNLESS OTHERWISE SPECIFIED.

12. SUPPLEMENTAL EQUIPMENT GROUND WIRING LOCATED OUTDOORS, OR BELOW GRADE, SHALL BE SINGLE CONDUCTOR #2 AWG SOLID TINNED COPPER CABLE, UNLESS OTHERWISE SPECIFIED.

13. POWER AND CONTROL WIRING, NOT IN TUBING OR CONDUIT, SHALL BE MULTI–CONDUCTOR, TYPE TC CABLE (#34 AWG OR LARGER), 600 V, OIL RESISTANT THHN OR THWN–2, CLASS B STRANDED COPPER CABLE RATED FOR 90 °C (WET AND DRY) OPERATION; WITH OUTER JACKET; LISTED OR LABELED FOR THE LOCATION USED, UNLESS OTHERWISE SPECIFIED.

14. ALL POWER AND GROUNDING CONNECTIONS SHALL BE CRIMP–STYLE, COMPRESSION WIRE LUGS AND WIRENUTS BY HARGER (OR EQUAL). LUGS AND WIRENUTS SHALL BE RATED FOR OPERATION AT NO LESS THAN 75°C (90°C IF AVAILABLE).

15. RACEWAY AND CABLE TRAY SHALL BE LISTED OR LABELED FOR ELECTRICAL USE IN ACCORDANCE WITH NEMA, UL, ANSI/IEEE AND NEC.

16. NEW RACEWAY OR CABLE TRAY WILL MATCH THE EXISTING INSTALLATION WHERE POSSIBLE.

17. ELECTRICAL METALLIC TUBING (EMT) OR RIGID NONMETALLIC CONDUIT (I.E., RIGID PVC SCHEDULE 40 OR RIGID PVC SCHEDULE 80 FOR LOCATIONS SUBJECT TO PHYSICAL DAMAGE) SHALL BE USED FOR EXPOSED INDOOR LOCATIONS.

18. ELECTRICAL METALLIC TUBING (EMT), ELECTRICAL NONMETALLIC TUBING (ENT), OR RIGID NONMETALLIC CONDUIT (RIGID PVC, SCHEDULE 40) SHALL BE USED FOR CONCEALED INDOOR LOCATIONS.

19. GALVANIZED STEEL INTERMEDIATE METALLIC CONDUIT (IMC) SHALL BE USED FOR OUTDOOR LOCATIONS ABOVE GRADE.

20. RIGID NONMETALLIC CONDUIT (I.E., RIGID PVC SCHEDULE 40 OR RIGID PVC SCHEDULE 80) SHALL BE USED UNDERGROUND; DIRECT BURIED, IN AREAS OF OCCASIONAL LIGHT VEHICLE TRAFFIC OR ENCASED IN REINFORCED CONCRETE IN AREAS OF HEAVY VEHICLE TRAFFIC.

21. LIQUID–TIGHT FLEXIBLE METALLIC CONDUIT (LIQUID–TITE FLEX) SHALL BE USED INDOORS AND OUTDOORS, WHERE VIBRATION OCCURS OR FLEXIBILITY IS NEEDED.

22. CONDUIT AND TUBING FITTINGS SHALL BE THREADED OR COMPRESSION–TYPE AND APPROVED FOR THE LOCATION USED. SETSCREW FITTINGS ARE NOT ACCEPTABLE.

23. CABINETS, BOXES AND WIREWAYS SHALL BE LISTED OR LABELED FOR ELECTRICAL USE IN ACCORDANCE WITH NEMA, UL, ANSI/IEEE AND NEC.

24. CABINETS, BOXES AND WIREWAYS TO MATCH THE EXISTING INSTALLATION WHERE POSSIBLE.

25. WIREWAYS SHALL BE EPOXY–COATED (GRAY) AND INCLUDE A HINGED COVER, DESIGNED TO SWING OPEN DOWNWARD; SHALL BE PANDUIT TYPE E (OR EQUAL); AND RATED NEMA 1 (OR BETTER) INDOORS, OR NEMA 3R (OR BETTER) OUTDOORS.

26. EQUIPMENT CABINETS, TERMINAL BOXES, JUNCTION BOXES, AND PULL BOXES SHALL BE GALVANIZED OR EPOXY–COATED SHEET STEEL, SHALL MEET OR EXCEED UL 50, AND RATED NEMA 1 (OR BETTER) INDOORS, OR NEMA 3R (OR BETTER) OUTDOORS.

27. METAL RECEPTACLE, SWITCH, AND DEVICE BOXES SHALL BE GALVANIZED, EPOXY–COATED, OR NON–CORRODING; SHALL MEET OR EXCEED UL 514A AND NEMA OS 1; AND RATED NEMA 1 (OR BETTER) INDOORS, OR WEATHER PROTECTED (WP OR BETTER) OUTDOORS.

28. NONMETALLIC RECEPTACLE, SWITCH, AND DEVICE BOXES SHALL MEET OR EXCEED NEMA OS 2; AND RATED NEMA 1 (OR BETTER) INDOORS, OR WEATHER PROTECTED (WP OR BETTER) OUTDOORS.

29. THE SUBCONTRACTOR SHALL NOTIFY AND OBTAIN NECESSARY AUTHORIZATION FROM THE CONTRACTOR BEFORE COMMENCING WORK ON THE AC POWER DISTRIBUTION PANELS.

30. THE SUBCONTRACTOR SHALL PROVIDE NECESSARY TAGGING ON THE BREAKERS, CABLES AND DISTRIBUTION PANELS IN ACCORDANCE WITH THE APPLICABLE CODES AND STANDARDS TO SAFEGUARD AGAINST LIFE AND PROPERTY.

31. ALL ELECTRICAL WORK SHALL BE PERFORMED IN ACCORDANCE WITH THE PROJECT SPECIFICATIONS, NEC AND ALL APPLICABLE LOCAL CODES.

32. CONDUIT ROUTINGS ARE SCHEMATIC. SUBCONTRACTOR SHALL INSTALL CONDUITS SO THAT ACCESS TO EQUIPMENT IS NOT BLOCKED.

T-MOBILE
NORTHEAST LLC

15 COMMERCE WAY, SUITE B
NORTON, MA 02766
(508) 286–2700

SBA

SBA COMMUNICATIONS CORP.
134 FLANDERS ROAD, SUITE 125
WESTBOROUGH, MA 01581
(508) 251–0720

CHAPPELL ENGINEERING ASSOCIATES, LLC
Civil ·Structural ·Land Surveying

R.K. EXECUTIVE CENTRE
201 BOSTON POST ROAD WEST, SUITE 101
MARLBOROUGH, MA 01752
(508) 481–7400
www.chappellengineering.com

STATE OF CONNECTICUT
JAMES M. FITZGERALD
No. 25997
LICENSED
PROFESSIONAL CIVIL ENGINEER

12/30/20

CHECKED BY: JMT

APPROVED BY: JMT

SUBMITTALS

REV.	DATE	DESCRIPTION	BY
1	12/30/20	ISSUED FOR CONSTRUCTION	JRV
0	11/16/20	ISSUED FOR REVIEW	JRV

SITE NUMBER:
CT11796G

SITE ADDRESS:
52 STADLEY ROUGH ROAD
DANBURY, CT 06811

SHEET TITLE
GENERAL NOTES

SHEET NUMBER
GN-1

1815.165

SPECIAL PRE-CONSTRUCTION WORK NOTE (SBA-PROVIDED TOWER STRUCTURAL ANALYSIS SPECIAL EQUIPMENT INSTALLATION REQUIREMENTS):
GENERAL CONTRACTOR SHALL FURNISH AND INSTALL ALL SPECIAL OR SUPPLEMENTAL ADDITIONAL TOWER-MOUNTED EQUIPMENT PER RECOMMENDATIONS FROM SBA-PROVIDED TOWER STRUCTURAL ANALYSIS FOR ANY SPECIAL SHIELDING OF TOWER TOP EQUIPMENT AND FOR ANY SPECIAL FEEDLINE BUNDLING OR RELOCATION.

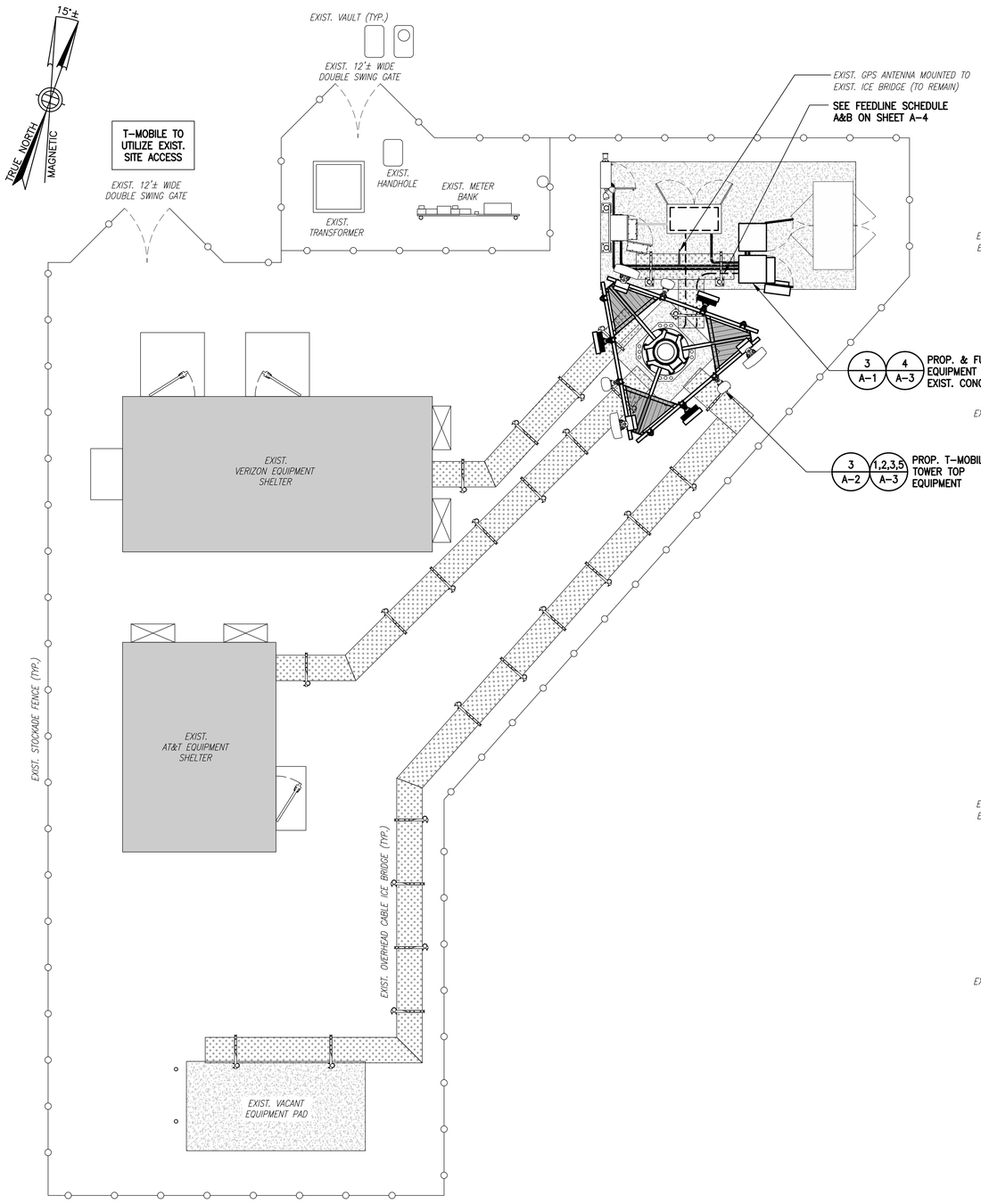

COMPOUND PLAN (1 / A-1)
SCALE: 1" = 5'-0"
0 5'-0" 10'-0" 15'-0"

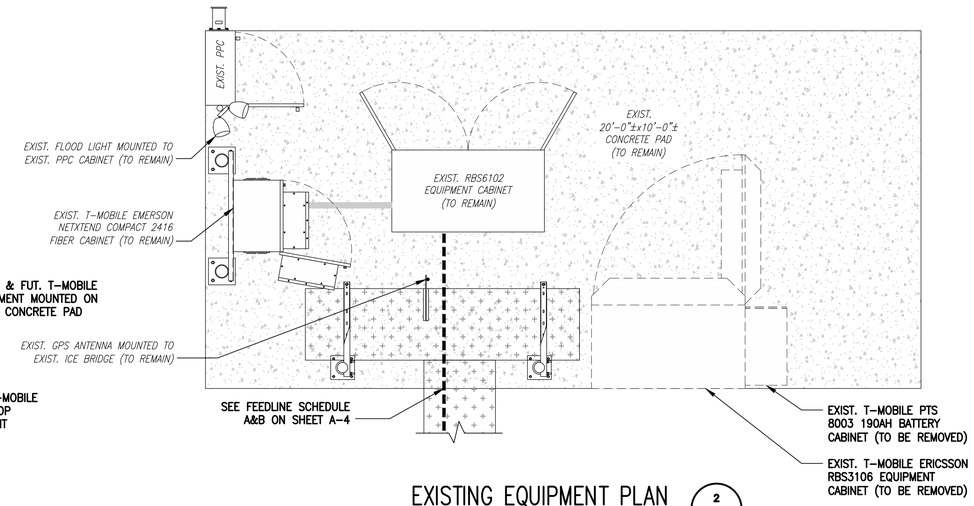

EXISTING EQUIPMENT PLAN (2 / A-1)
SCALE: 1/2" = 1'-0"
0 2'-0" 4'-0" 6'-0"

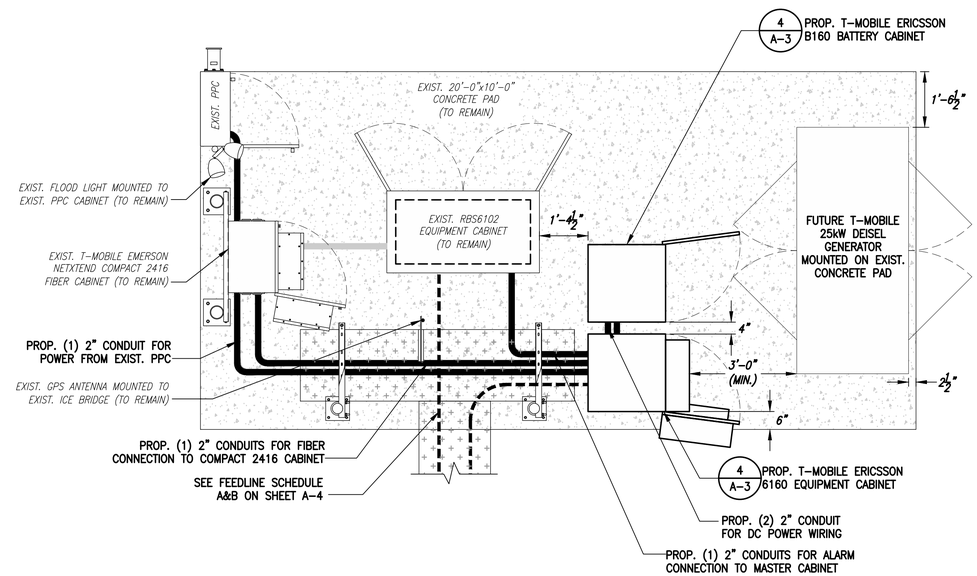

PROPOSED EQUIPMENT PLAN (3 / A-1)
SCALE: 1/2" = 1'-0"
0 2'-0" 4'-0" 6'-0"

MOUNT NOTE:
REFER TO MOUNT ANALYSIS DONE BY TOWER ENGINEERING SOLUTIONS DATED 11/11/2020 FOR ADDITIONAL MOUNTING DETAILS

T-MOBILE NORTHEAST LLC
15 COMMERCE WAY, SUITE B
NORTON, MA 02766
(508) 286-2700

SBA
SBA COMMUNICATIONS CORP.
134 FLANDERS ROAD, SUITE 125
WESTBOROUGH, MA 01581
(508) 251-0720

CHAPPELL ENGINEERING ASSOCIATES, LLC
Civil Structural Land Surveying
R.K. EXECUTIVE CENTRE
201 BOSTON POST ROAD WEST, SUITE 101
MARLBOROUGH, MA 01752
(508) 481-7400
www.chappellengineering.com

STATE OF CONNECTICUT
JAMES M. FITZGERALD
No. 25997
LICENSED
PROFESSIONAL CIVIL ENGINEER
12/30/20

CHECKED BY: JMT

APPROVED BY: JMT

SUBMITTALS

REV.	DATE	DESCRIPTION	BY
1	12/30/20	ISSUED FOR CONSTRUCTION	JRV
0	11/16/20	ISSUED FOR REVIEW	JRV

SITE NUMBER:
CT11796G

SITE ADDRESS:
52 STADLEY ROUGH ROAD
DANBURY, CT 06811

SHEET TITLE
COMPOUND & EQUIPMENT PLAN

SHEET NUMBER
A-1

1815.165

SPECIAL PRE-CONSTRUCTION WORK NOTE (SBA-PROVIDED TOWER STRUCTURAL ANALYSIS SPECIAL EQUIPMENT INSTALLATION REQUIREMENTS):
GENERAL CONTRACTOR SHALL FURNISH AND INSTALL ALL SPECIAL OR SUPPLEMENTAL ADDITIONAL TOWER-MOUNTED EQUIPMENT PER RECOMMENDATIONS FROM SBA-PROVIDED TOWER STRUCTURAL ANALYSIS FOR ANY SPECIAL SHIELDING OF TOWER TOP EQUIPMENT AND FOR ANY SPECIAL FEEDLINE BUNDLING OR RELOCATION.

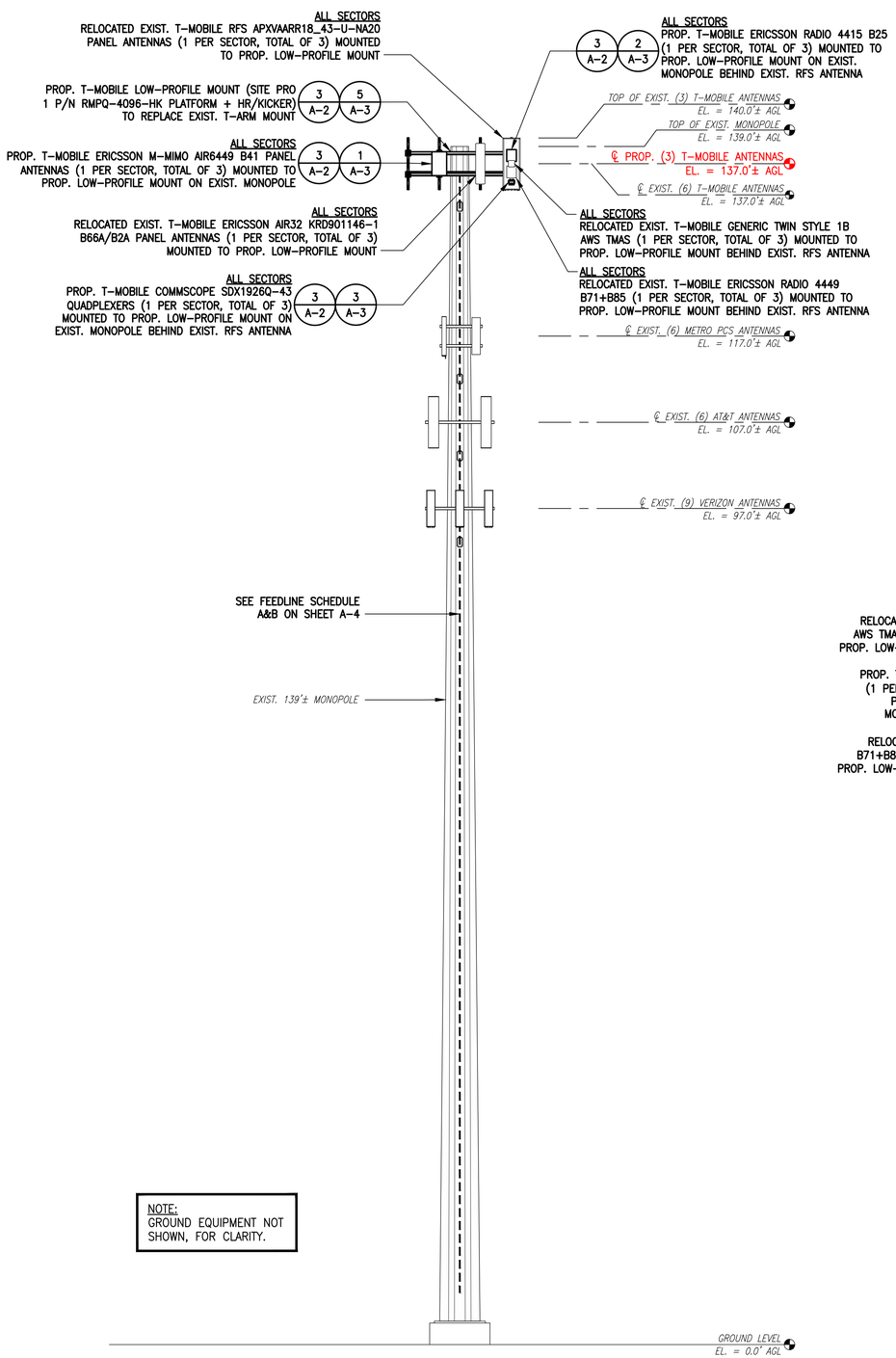

TOWER ELEVATION (1 / A-2)
SCALE: 1" = 8'
0 4' 8' 16' 24'

NOTE:
GROUND EQUIPMENT NOT SHOWN, FOR CLARITY.

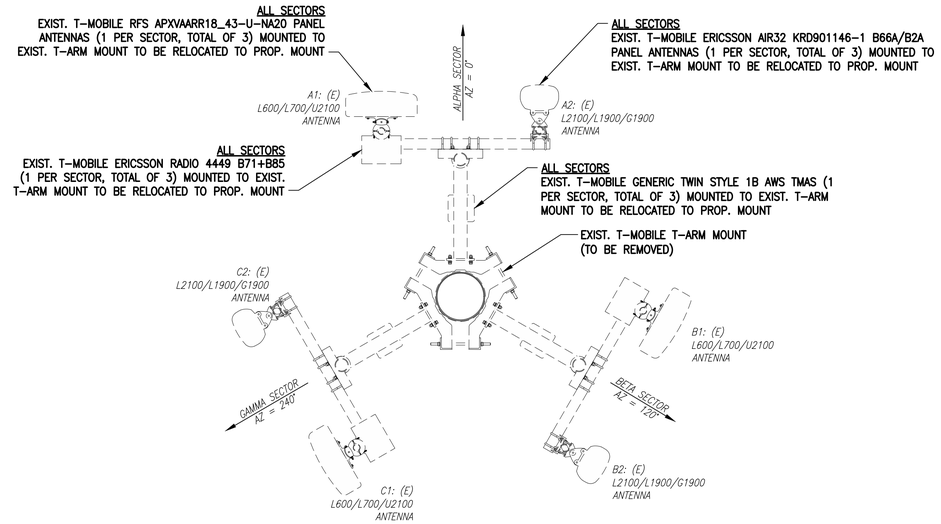

EXISTING ANTENNA PLAN (2 / A-2)
SCALE: 1/2" = 1'-0"
NORTH

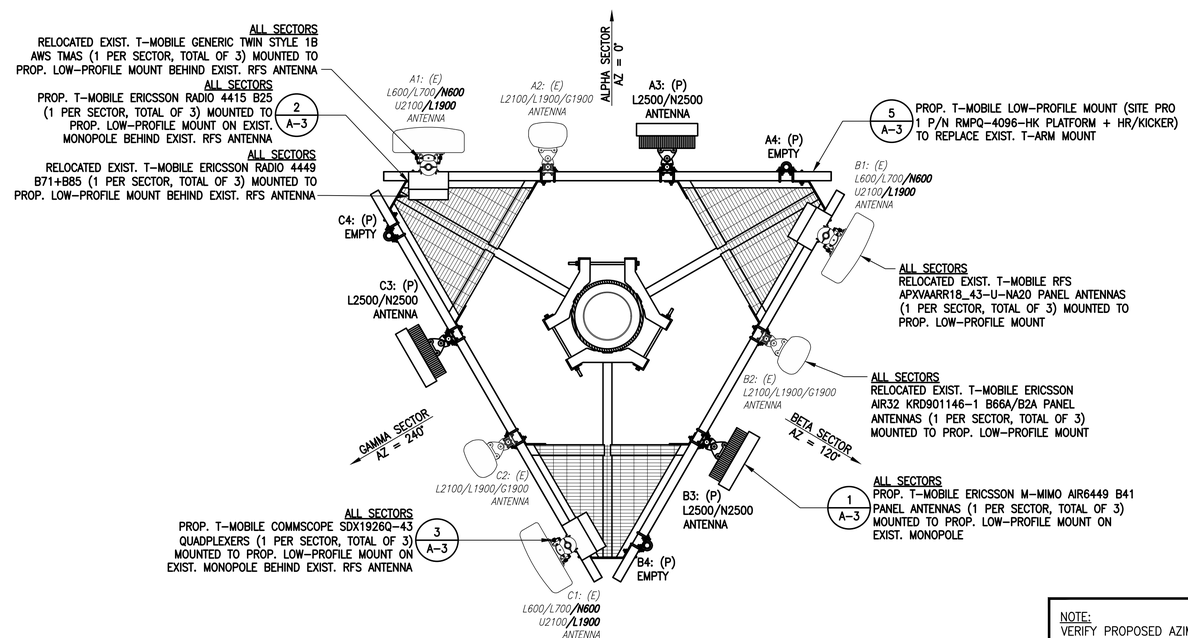

PROPOSED ANTENNA PLAN (3 / A-2)
SCALE: 1/2" = 1'-0"
NORTH

NOTE:
VERIFY PROPOSED AZIMUTHS WITH RF ENGINEER PRIOR TO INSTALLATION.

ANTENNA STATUS LEGEND:

EMPTY – EMPTY PIPE

(E) – EXISTING
(P) – INSTALL
(F) – FUTURE

MOUNT NOTE:
REFER TO MOUNT ANALYSIS DONE BY TOWER ENGINEERING SOLUTIONS DATED 11/11/2020 FOR ADDITIONAL MOUNTING DETAILS

T-MOBILE NORTHEAST LLC
15 COMMERCE WAY, SUITE B
NORTON, MA 02766
(508) 286-2700

SBA
SBA COMMUNICATIONS CORP.
134 FLANDERS ROAD, SUITE 125
WESTBOROUGH, MA 01581
(508) 251-0720

CHAPPELL ENGINEERING ASSOCIATES, LLC
Civil · Structural · Land Surveying
R.K. EXECUTIVE CENTRE
201 BOSTON POST ROAD WEST, SUITE 101
MARLBOROUGH, MA 01752
(508) 481-7400
www.chappellengineering.com

STATE OF CONNECTICUT · JAMES M. FITZGERALD · No. 25997 · LICENSED · PROFESSIONAL CIVIL ENGINEER
12/30/20

CHECKED BY: JMT

APPROVED BY: JMT

SUBMITTALS

REV.	DATE	DESCRIPTION	BY
1	12/30/20	ISSUED FOR CONSTRUCTION	JRV
0	11/16/20	ISSUED FOR REVIEW	JRV

SITE NUMBER:
CT11796G

SITE ADDRESS:
52 STADLEY ROUGH ROAD
DANBURY, CT 06811

SHEET TITLE
TOWER ELEVATIONS & ANTENNA PLAN

SHEET NUMBER
A-2

1815.165

ERICSSON M-MIMO AIR6449
B41 ANTENNA
DIMENSIONS: 33.1"H x 20.5"W x 8.3"D
WEIGHT: 103.0 lbs
QUANTITY: 1 PER SECTOR, TOTAL OF 3

ANTENNA DETAILS (1 / A-3)
SCALE: N.T.S.

ERICSSON RADIO 4415 B25
DIMENSIONS: 16.5"H x 13.4"W x 5.9"D
WEIGHT: 46.0 lbs
QUANTITY: 1 PER SECTOR, TOTAL OF 3

RADIO DETAILS (2 / A-3)
SCALE: N.T.S.

COMMSCOPE SDX1926Q-43
QUADPLEXER
DIMENSIONS: 4.2"H x 6.9"W x 2.9"D
WEIGHT: 6.2 lbs
QUANTITY: 1 PER SECTOR, TOTAL OF 3

DIPLEXER DETAIL (3 / A-3)
SCALE: N.T.S.

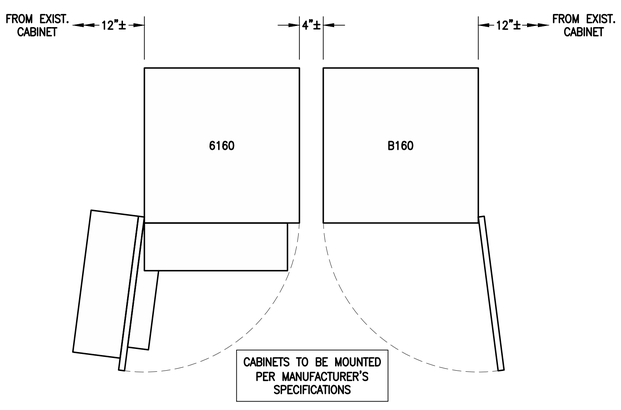

ERICSSON 6160 SITE
SUPPORT CABINET
DIMENSIONS: 63.25"H x 26.0"W x 34.0"D
WEIGHT: 680.0 lbs
QUANTITY: TOTAL OF 1

ERICSSON B160
BATTERY CABINET
DIMENSIONS: 63.25"H x 26.0"W x 26.0"D
WEIGHT: 1771.0 lbs
QUANTITY: TOTAL OF 1

EQUIPMENT DETAIL (4 / A-3)
SCALE: N.T.S.

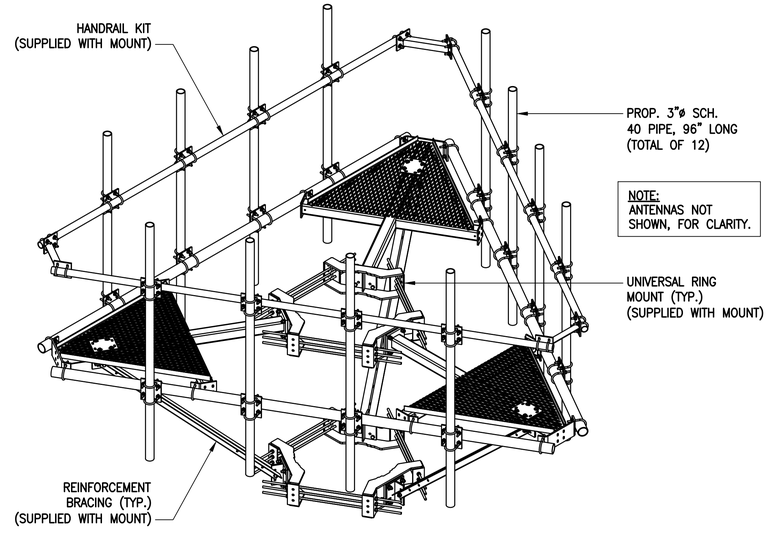

SITE-PRO 1 12'-6" LOW-PROFILE CO-LOCATION PLATFORM W/HANDRAIL KIT
PART NUMBERS: RMQP-4096-HK
(TOTAL OF 1 REQUIRED)

TYPICAL SITE PRO 1
12'-6" PLATFORM MOUNT (5 / A-3)
SCALE: N.T.S.

MOUNT NOTE:
REFER TO MOUNT ANALYSIS DONE BY TOWER ENGINEERING SOLUTIONS DATED 11/11/2020 FOR ADDITIONAL MOUNTING DETAILS

T-MOBILE NORTHEAST LLC
15 COMMERCE WAY, SUITE B
NORTON, MA 02766
(508) 286-2700

SBA
SBA COMMUNICATIONS CORP.
134 FLANDERS ROAD, SUITE 125
WESTBOROUGH, MA 01581
(508) 251-0720

CHAPPELL ENGINEERING ASSOCIATES, LLC
Civil ·Structural ·Land Surveying
R.K. EXECUTIVE CENTRE
201 BOSTON POST ROAD WEST, SUITE 101
MARLBOROUGH, MA 01752
(508) 481-7400
www.chappellengineering.com

STATE OF CONNECTICUT
JAMES M. FITZGERALD
No. 25997
LICENSED
PROFESSIONAL CIVIL ENGINEER
12/30/20

CHECKED BY: JMT

APPROVED BY: JMT

SUBMITTALS

REV.	DATE	DESCRIPTION	BY
1	12/30/20	ISSUED FOR CONSTRUCTION	JRV
0	11/16/20	ISSUED FOR REVIEW	JRV

SITE NUMBER:
CT11796G

SITE ADDRESS:
52 STADLEY ROUGH ROAD
DANBURY, CT 06811

SHEET TITLE
SITE DETAILS

SHEET NUMBER
A-3

1815.165

FINAL ANTENNA CONFIGURATION

SECTOR	ANTENNA	RAD CENTER	AZIMUTH (TRUE NORTH)	MECHANICAL DOWNTILT	ELECTRICAL DOWNTILT	BAND	TMA/RADIOS	SIGNAL CABLES
ALPHA	A2 RFS APXVAARR18_43-U-NA20	137'± AGL	0°	0°	6°	L700/L600/**N600**	RADIO 4449 B71+B85	(6) 1-5/8" COAX CABLES (3) 1-5/8" (6x12) HCS FIBER CABLES **(1) 1-5/8" (6x12) HCS FIBER CABLES**
					6°	U2100/**L1900**	**RADIO 4415 B25** **SDX1926Q-43 QUADPLEXER** GENERIC TWIN STYLE 1B AWS TMA	
	A1 ERICSSON AIR32 KRD901146-1 B66A/B2A	137'± AGL	0°	0°	6°	L2100/G1900/L1900	–	
	A3 **ERICSSON M-MIMO AIR6449 B41**	**137'± AGL**	**0°**	**0°**	**6°**	**L2500/N2500**	**–**	
BETA	B2 RFS APXVAARR18_43-U-NA20	137'± AGL	120°	0°	6°	L700/L600/**N600**	RADIO 4449 B71+B85	
					6°	U2100/**L1900**	**RADIO 4415 B25** **SDX1926Q-43 QUADPLEXER** GENERIC TWIN STYLE 1B AWS TMA	
	B1 ERICSSON AIR32 KRD901146-1 B66A/B2A	137'± AGL	120°	0°	6°	L2100/G1900/L1900	–	
	B3 **ERICSSON M-MIMO AIR6449 B41**	**137'± AGL**	**120°**	**0°**	**6°**	**L2500/N2500**	**–**	
GAMMA	C2 RFS APXVAARR18_43-U-NA20	137'± AGL	240°	0°	6°	L700/L600/**N600**	RADIO 4449 B71+B85	
					6°	U2100/**L1900**	**RADIO 4415 B25** **SDX1926Q-43 QUADPLEXER** GENERIC TWIN STYLE 1B AWS TMA	
	C1 ERICSSON AIR32 KRD901146-1 B66A/B2A	137'± AGL	240°	0°	6°	L2100/G1900/L1900	–	
	C3 **ERICSSON M-MIMO AIR6449 B41**	**137'± AGL**	**240°**	**0°**	**6°**	**L2500/N2500**	**–**	

CABLE NOTE: (E)(3) 1-5/8" COAX CABLES & (1) 1-1/4" (9x18) HCS FIBER CABLE TO BE REMOVED. SEE FEEDLINE SCHEDULE A & B BELOW.

NOTE: RFDS REV5 – 09/25/20

FEEDLINE SCHEDULE

SCHEDULE	FEEDLINES		LOCATION
A	EXISTING TO REMAIN:	(6) 1-5/8" COAX CABLES (3) 1-5/8" (6x12) HCS FIBER CABLES	ROUTED PER STRUCTURAL ANALYSIS
	EXISTING TO BE REMOVED:	(3) 1-5/8" COAX CABLES (1) 1-1/4" (9x18) HCS FIBER CABLE	
B	**PROPOSED:**	**(1) 1-5/8" (6x12) HCS FIBER CABLES**	

NOTE:
EXISTING T-MOBILE EQUIPMENT FEEDLINE INVENTORY BASED ON OBSERVED FIELD CONDITIONS. RFDS AND FEEDLINE LEASING ENTITLEMENTS MAY DIFFER.

T-MOBILE NORTHEAST LLC
15 COMMERCE WAY, SUITE B
NORTON, MA 02766
(508) 286-2700

SBA COMMUNICATIONS CORP.
134 FLANDERS ROAD, SUITE 125
WESTBOROUGH, MA 01581
(508) 251-0720

CHAPPELL ENGINEERING ASSOCIATES, LLC
Civil Structural Land Surveying
R.K. EXECUTIVE CENTRE
201 BOSTON POST ROAD WEST, SUITE 101
MARLBOROUGH, MA 01752
(508) 481-7400
www.chappellengineering.com

STATE OF CONNECTICUT ★ JAMES M. FITZGERALD ★ No. 25997 LICENSED PROFESSIONAL CIVIL ENGINEER
12/30/20

CHECKED BY: JMT

APPROVED BY: JMT

SUBMITTALS

REV.	DATE	DESCRIPTION	BY
1	12/30/20	ISSUED FOR CONSTRUCTION	JRV
0	11/16/20	ISSUED FOR REVIEW	JRV

SITE NUMBER:
CT11796G

SITE ADDRESS:
52 STADLEY ROUGH ROAD
DANBURY, CT 06811

SHEET TITLE
ANTENNA & FEEDLINE CHARTS

SHEET NUMBER
A-4

1815.165

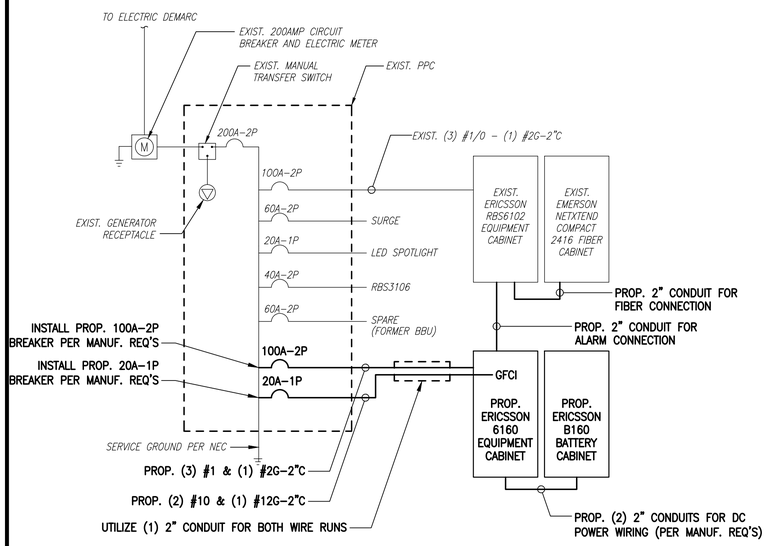

ONE LINE DIAGRAM (1 / E–1)
SCALE: NOT TO SCALE

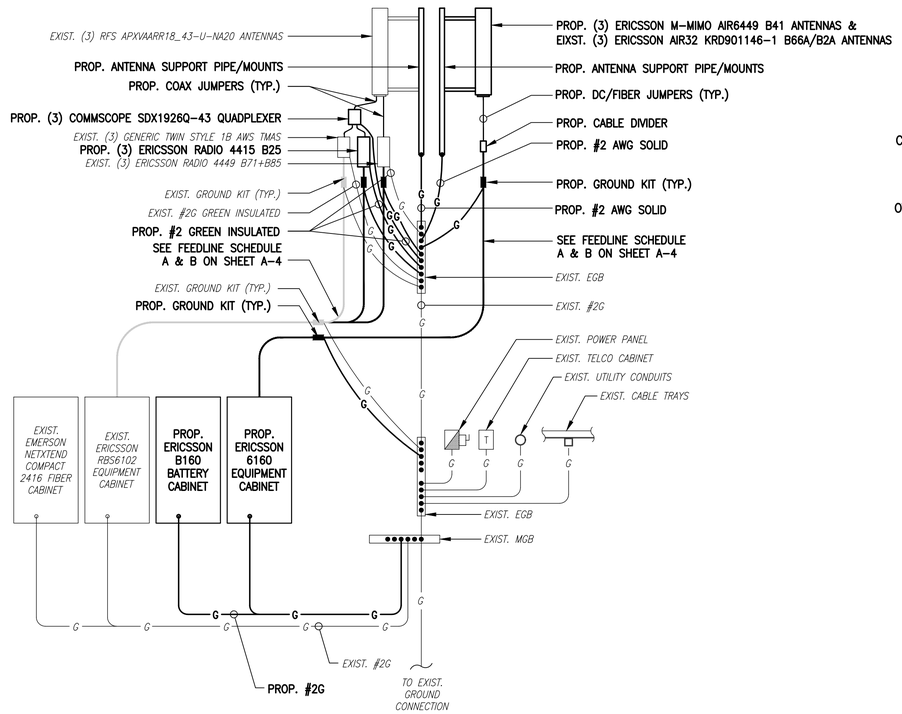

GROUNDING RISER DIAGRAM (2 / E–1)
SCALE: NOT TO SCALE

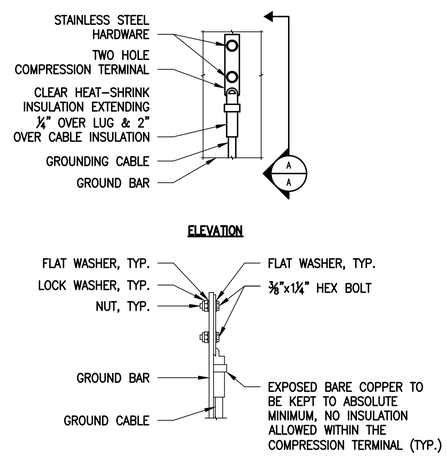

NOTES:
1. "DOUBLING UP" OR "STACKING" OF CONNECTION IS NOT PERMITTED.
2. OXIDE INHIBITING COMPOUND TO BE USED AT ALL LOCATIONS.
3. CADWELL DOWNLEADS FROM UPPER EGB, LOWER EGB AND MGB.

TYPICAL GROUND BAR CONNECTIONS DETAIL (3 / E–1)
SCALE: NOT TO SCALE

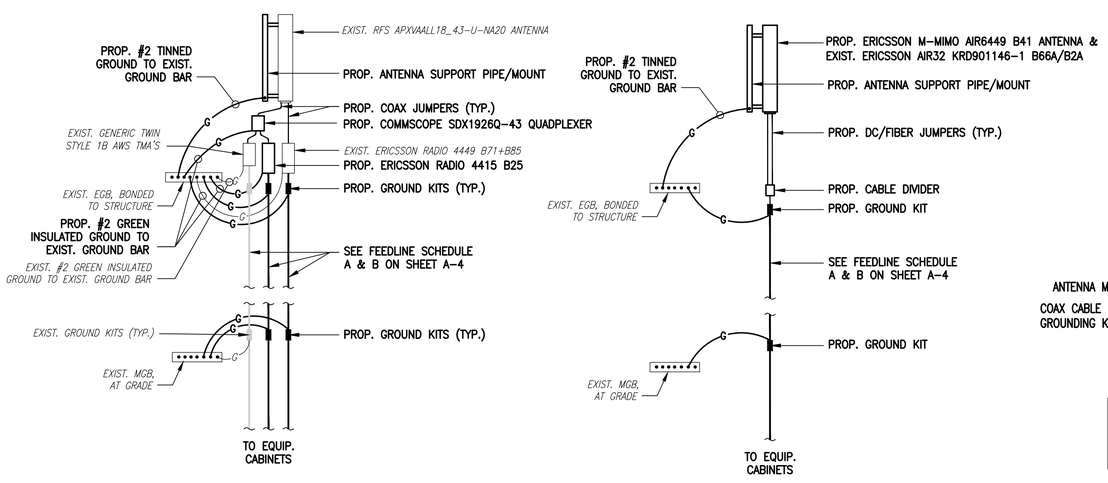

COAX CABLE CONNECTION AND GROUNDING DETAIL (4 / E–1)
SCALE: NOT TO SCALE

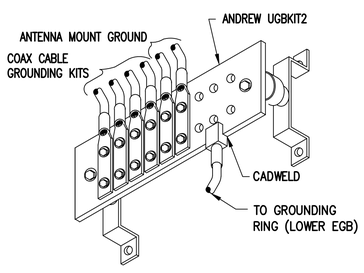

GROUND BAR (EGB) (5 / E–1)
SCALE: NOT TO SCALE

ELECTRICAL AND GROUNDING NOTES

1. ALL ELECTRICAL WORK SHALL CONFORM TO THE REQUIREMENTS OF THE NATIONAL ELECTRICAL CODE (NEC) AS WELL AS APPLICABLE STATE AND LOCAL CODES.
2. ALL ELECTRICAL ITEMS SHALL BE U.L. APPROVED OR LISTED AND PROCURED PER SPECIFICATION REQUIREMENTS.
3. THE ELECTRICAL WORK INCLUDES ALL LABOR AND MATERIAL DESCRIBED BY DRAWINGS AND SPECIFICATION INCLUDING INCIDENTAL WORK TO PROVIDE COMPLETE OPERATING AND APPROVED ELECTRICAL SYSTEM.
4. GENERAL CONTRACTOR SHALL PAY FEES FOR PERMITS, AND IS RESPONSIBLE FOR OBTAINING SAID PERMITS AND COORDINATION OF INSPECTIONS.
5. ELECTRICAL AND TELCO WIRING OUTSIDE A BUILDING AND EXPOSED TO WEATHER SHALL BE IN WATER TIGHT GALVANIZED RIGID STEEL CONDUITS OR SCHEDULE 80 PVC (AS PERMITTED BY CODE) AND WHERE REQUIRED IN LIQUID TIGHT FLEXIBLE METAL OR NONMETALLIC CONDUITS.
6. BURIED CONDUIT SHALL BE SCHEDULE 40 PVC.
7. ELECTRICAL WIRING SHALL BE COPPER WITH TYPE XHHW, THWN, OR THHNINSULATION.
8. RUN ELECTRICAL CONDUIT OR CABLE BETWEEN ELECTRICAL UTILITY DEMARCATION POINT AND PROJECT OWNER CELL SITE PPC AS INDICATED ON THIS DRAWING. PROVIDE FULL LENGTH PULL ROPE. COORDINATE INSTALLATION WITH UTILITY COMPANY.
9. RUN TELCO CONDUIT OR CABLE BETWEEN TELEPHONE UTILITY DEMARCATION POINT AND PROJECT OWNER CELL SITE TELCO CABINET AND BTS CABINET AS INDICATED ON THIS DRAWING PROVIDE FULL LENGTH PULL ROPE IN INSTALLED TELCO CONDUIT. PROVIDE GREENLEE CONDUIT MEASURING TAPE AT EACH END.
10. WHERE CONDUIT BETWEEN BTS AND PROJECT OWNER CELL SITE PPC AND BETWEEN BTS AND PROJECT OWNER CELL SITE TELCO SERVICE CABINET ARE UNDERGROUND USE PVC, SCHEDULE 40 CONDUIT. ABOVE THE GROUND PORTION OF THESE CONDUITS SHALL BE PVC CONDUIT.
11. ALL EQUIPMENT LOCATED OUTSIDE SHALL HAVE NEMA 3R ENCLOSURE.
12. PPC SUPPLIED BY PROJECT OWNER.
13. GROUNDING SHALL COMPLY WITH NEC ART. 250. ADDITIONALLY, GROUNDING, BONDING AND LIGHTNING PROTECTION SHALL BE DONE IN ACCORDANCE WITH "T–MOBILE BTS SITE GROUNDING STANDARDS".
14. GROUND COAXIAL CABLE SHIELDS MINIMUM AT BOTH ENDS USING MANUFACTURERS COAX CABLE GROUNDING KITS SUPPLIED BY PROJECT OWNER.
15. USE #6 COPPER STRANDED WIRE WITH GREEN COLOR INSULATION FOR ABOVE GRADE GROUNDING (UNLESS OTHERWISE SPECIFIED) AND #2 SOLID TINNED BARE COPPER WIRE FOR BELOW GRADE GROUNDING AS INDICATED ON THE DRAWING.
16. ALL GROUND CONNECTIONS TO BE BURNDY HYGROUND COMPRESSION TYPE CONNECTORS OR CADWELD EXOTHERMIC WELD. DO NOT ALLOW BARE COPPER WIRE TO BE IN CONTACT WITH GALVANIZED STEEL.
17. ROUTE GROUNDING CONDUCTORS ALONG THE SHORTEST AND STRAIGHTEST PATH POSSIBLE, EXCEPT AS OTHERWISE INDICATED. GROUNDING LEADS SHOULD NEVER BE BENT AT RIGHT ANGLE. ALWAYS MAKE AT LEAST 12" RADIUS BENDS. #6 WIRE CAN BE BENT AT 6" RADIUS WHEN NECESSARY. BOND ANY METAL OBJECTS WITHIN 6 FEET OF PROJECT OWNER EQUIPMENT OR CABINET TO MASTER GROUND BAR OR GROUNDING RING.
18. CONNECTIONS TO GROUND BARS SHALL BE MADE WITH TWO HOLE COMPRESSION TYPE COPPER LUGS. APPLY OXIDE INHIBITING COMPOUND TO ALL LOCATIONS.
19. APPLY OXIDE INHIBITING COMPOUND TO ALL COMPRESSION TYPE GROUND CONNECTIONS.
20. CONTRACTOR SHALL PROVIDE AND INSTALL OMNI DIRECTIONAL ELECTRONIC MARKER SYSTEM (EMS) BALLS OVER EACH GROUND ROD AND BONDING POINT BETWEEN EXIST. TOWER/ MONOPOLE GROUNDING RING AND EQUIPMENT GROUNDING RING.
21. CONTRACTOR SHALL TEST COMPLETED GROUND SYSTEM AND RECORD RESULTS FOR PROJECT CLOSE–OUT DOCUMENTATION. 5 OHMNS MINIMUM RESISTANCE REQUIRED.
22. CONTRACTOR SHALL CONDUCT ANTENNA, COAX, AND LNA RETURN–LOSS AND DISTANCE– TO–FAULT MEASUREMENTS (SWEEP TESTS) AND RECORD RESULTS FOR PROJECT CLOSE OUT.

T-MOBILE NORTHEAST LLC
15 COMMERCE WAY, SUITE B
NORTON, MA 02766
(508) 286–2700

SBA COMMUNICATIONS CORP.
134 FLANDERS ROAD, SUITE 125
WESTBOROUGH, MA 01581
(508) 251–0720

CHAPPELL ENGINEERING ASSOCIATES, LLC
Civil Structural Land Surveying
R.K. EXECUTIVE CENTRE
201 BOSTON POST ROAD WEST, SUITE 101
MARLBOROUGH, MA 01752
(508) 481–7400
www.chappellengineering.com

STATE OF CONNECTICUT ★ JAMES M. FITZGERALD ★ No. 25997 LICENSED PROFESSIONAL CIVIL ENGINEER
12/30/20

CHECKED BY: JMT

APPROVED BY: JMT

SUBMITTALS

REV.	DATE	DESCRIPTION	BY
1	12/30/20	ISSUED FOR CONSTRUCTION	JRV
0	11/16/20	ISSUED FOR REVIEW	JRV

SITE NUMBER:
CT11796G

SITE ADDRESS:
52 STADLEY ROUGH ROAD
DANBURY, CT 06811

SHEET TITLE
ELECTRIC & GROUNDING DETAILS

SHEET NUMBER
E-1

1815.165

EXHIBIT 7

Tower Engineering Solutions
Phone (972) 483-0607, Fax (972) 975-9615
1320 Greenway Drive, Suite 600, Irving, Texas 75038

Structural Analysis Report

Existing 139 ft SABRE Monopole

Customer Name: SBA Communications Corp

Customer Site Number: CT13549-S

Customer Site Name: Danbury 1

Carrier Name: T-Mobile (App#: 141491, V#1)

Carrier Site ID / Name: CT11796G / Danbury

Site Location: 52 Stadley Rough Road

Danbury, Connecticut

Fairfield County

Latitude: 41.433102

Longitude: -73.431916

STATE OF CONNECTICUT
JARRYD TIBBETTS
No. 34170
LICENSED
PROFESSIONAL ENGINEER
11/13/20

Analysis Result:

Max Structural Usage: 87.4% [Pass]

Max Foundation Usage: 76.1% [Pass]

Additional Usage Caused by New Mount: +12.0%

Report Prepared By: Mukunda Pokharel

Introduction

The purpose of this report is to summarize the analysis results on the 139 ft SABRE Monopole to support the proposed antennas and transmission lines in addition to those currently installed. Any modification listed under Sources of Information was assumed completed and was included in this analysis.

Sources of Information

Tower Drawings	Sabre Towers and Poles, Job # 10-01206 Dated 01/28/2010
Foundation Drawing	Sabre Towers and Poles, Job # 10-01206 Dated 01/28/2010
Geotechnical Report	Tower Engineering Professionals, Project # 091184.01 Dated 05/13/2009
Modification Drawings	N/A
Mount Analysis	TES, Project # 99448 Dated 11/11/2020

Analysis Criteria

The rigorous analysis was performed in accordance with the requirements and stipulations of the TIA-222-G-2**.** In accordance with this standard, the structure was analyzed using **TESPoles,** a proprietary analysis software. The program considers the structure as an elastic 3-D model with second-order effects and temperature effects incorporated in the analysis. The analysis was performed using multiple wind directions.

Wind Speed Used in the Analysis:	Ultimate Design Wind Speed V_{ult} = 120 mph (3-Sec. Gust)/ Nominal Design Wind Speed V_{asd} = 93 mph (3-Sec. Gust)
Wind Speed with Ice:	50 mph (3-Sec. Gust) with 3/4" radial ice concurrent
Operational Wind Speed:	60 mph + 0" Radial ice
Standard/Codes:	TIA-222-G-2 / 2015 IBC / 2018 Connecticut State Building Code
Exposure Category:	C
Structure Class:	II
Topographic Category:	1
Crest Height:	0 ft
Seismic Parameters:	S_S = 0.217, S_1 = 0.067

This structural analysis is based upon the tower being classified as a Structure Class II; however, if a different classification is required subsequent to the date hereof, the tower classification will be changed to meet such requirement and a new structural analysis will be run.

Existing Antennas, Mounts and Transmission Lines

The table below summarizes the antennas, mounts and transmission lines that were considered in the analysis as existing on the tower.

Items	Elevation (ft.)	Qty.	Antenna Descriptions	Mount Type & Qty.	Transmission Lines	Owner
-	137.0	3	RFS APXVAARR18_43-U-NA20	(3) T-Arms [Sitepro RDS-272]	(9) 1 5/8" Coax (4) 1 5/8" Fiber	T-Mobile
-		3	Ericsson Air 32 KRD901146_1_B66A_B2A			
-		3	Ericsson KRY 112 144/1			
-		3	Ericsson Radio 4449 B71+B12			
8	107.0	3	CCI OPA-65R-LCUU-H6	(1) Commscope MC-HPM1250-B (1) Commscope RR-RM1560	(6) 3/4" DC Power (2) 3/8" Fiber (6) 7/8" Coax	AT&T
9		3	KMW EPBQ-652L8H6-L2			
10		3	CCI DTMABP7819VG12A TMA			
11		3	Ericsson RRUS-11 700MHz			
12		3	Ericsson RRUS-12			
13		3	Ericsson RRUS-32			
14		3	Ericsson RRUS 4449 B5/B12			
15		3	Ericsson RRUS 4426 B66			
16		3	Ericsson RRUS-A2			
17		3	Kaelus DBC2055F1V1			
18		3	Raycap DC6-48-60-18-8F			
19	97.0	3	Antel BXA-70063/6CF	(3) Stand off	(12) 1 5/8" (1) 1 5/8" Fiber	Verizon
20		3	Antel BXA-171063/12CF			
21		3	Andrew DBXNH-6565A-VTM			
22		3	Alcatel RRH2x40-AWS			
23		6	RFS FD9R6004/2C-3L			
24		1	RFS DB-T1-6Z-8AB-0Z			
25	87.0	3	Comba ODI2-065R18K-GQ	(3) Standoff Sector frame [Commscope SF-SU7-2-96]	(1) 1 1/4" Hybrid	Dish Network
26		2	Ericsson 4415			
27		3	Ericsson 0208			

Proposed Carrier's Final Configuration of Antennas, Mounts and Transmission Lines

Information pertaining to the proposed carrier's final configuration of antennas and transmission lines was provided by SBA Communications Corp. The proposed antennas and lines are listed below.

Items	Elevation (ft)	Qty.	Antenna Descriptions	Mount Type & Qty.	Transmission Lines	Owner
1	137.0	3	RFS - APXVAARR18_43-U-NA20 - Panel	(1) Low Profile Platform with HRK [Sitepro RMQP-4096-HRK]	(9) 1 5/8" Coax (4) 1 5/8" Fiber	T-Mobile
2		3	Ericsson - Air 32 KRD901146_1_B66A_B2A - Panel			
3		3	Ericsson - AIR6449 B41 - Panel			
4		3	Ericsson - KRY 112 144/1 - Panel			
5		3	Commscope - SDX1926Q-43 - Diplexer			
6		3	Ericsson - 4449 B71+B85 - RRU			
7		3	Ericsson - 4415 B25 - RRU			

See the attached coax layout for the line placement considered in the analysis.

Analysis Results

The results of the structural analysis, performed for the wind and ice loading and antenna equipment as defined above, are summarized as the following:

	Pole shafts	Anchor Bolts	Base Plate
Max. Usage:	**87.4%**	**70.7%**	**67.1%**
Pass/Fail	**Pass**	**Pass**	**Pass**

Foundations

	Moment (Kip-Ft)	Shear (Kips)	Axial (Kips)
Analysis Reactions	2347.7	23.8	31.8

The foundation has been investigated using the supplied documents and soils report and was found adequate. Therefore, no modification to the foundation will be required.

Operational Condition (Rigidity):

Operational characteristics of the tower are found to be within the limits prescribed by TIA-222 for the installed antennas. The maximum twist/sway at the elevation of the proposed equipment is 1.9896 degrees under the operational wind speed as specified in the Analysis Criteria.

Conclusions

Based on the analysis results, the existing structure and its foundation were found to be adequate to safely support the existing and proposed equipment and meet the minimum requirements per the TIA-222 Standard under the design basic wind speed as specified in the Analysis Criteria.

Standard Conditions

1. This analysis was performed based on the information supplied to **(TES) Tower Engineering Solutions, LLC.** Verification of the information provided was not included in the Scope of Work for **TES**. The accuracy of the analysis is dependent on the accuracy of the information provided.

2. The structural analysis was performance based upon the evidence available at the time of this report. All information provided by the client is considered to be accurate.

3. The analyses will be performed based on the codes as specified by the client or based on the best knowledge of the engineering staff of **TES**. In the absence of information to the contrary, all work will be performed in accordance with the latest relevant revision of ANSI/TIA-222. If wind speed and/or ice loads are different from the minimum values recommended by the ANSI/TIA-222 standard or other codes, **TES** should be notified in writing and the applicable minimum values provided by the client.

4. The configuration of the existing mounts, antennas, coax and other appurtenances were supplied by the customer for the current structural analysis. **TES** has not visited the tower site to verify the adequacy of the information provided. If there is any discrepancy found in the report regarding the existing conditions, **TES** should be notified immediately to evaluate the effect of the discrepancy on the analysis results.

5. The client will assume responsibility for rework associated with the differences in initially provided information, including tower and foundation information, existing and/or proposed equipment and transmission lines.

6. If a feasibility analysis was performed, final acceptance of changed conditions shall be based upon a rigorous structural analysis.

Usage Diagram - Max Ratio 87.38% at 53.3ft

Structure:	CT13549-S-SBA	**Code:**	EIA/TIA-222-G	11/13/2020
Site Name:	Danbury 1	**Exposure:**	C	
Height:	139.00 (ft)	**Gh:**	1.1	
Base Elev:	0.000 (ft)			Page: 1

Tower Engineering Solutions

Dead Load Factor: 1.20

Wind Load Factor: 1.60

Load Case : 1.2D + 1.6W 93 mph Wind

Iterations: 26

Copyright © 2020 by Tower Engineering Solutions, LLC. All rights reserved.

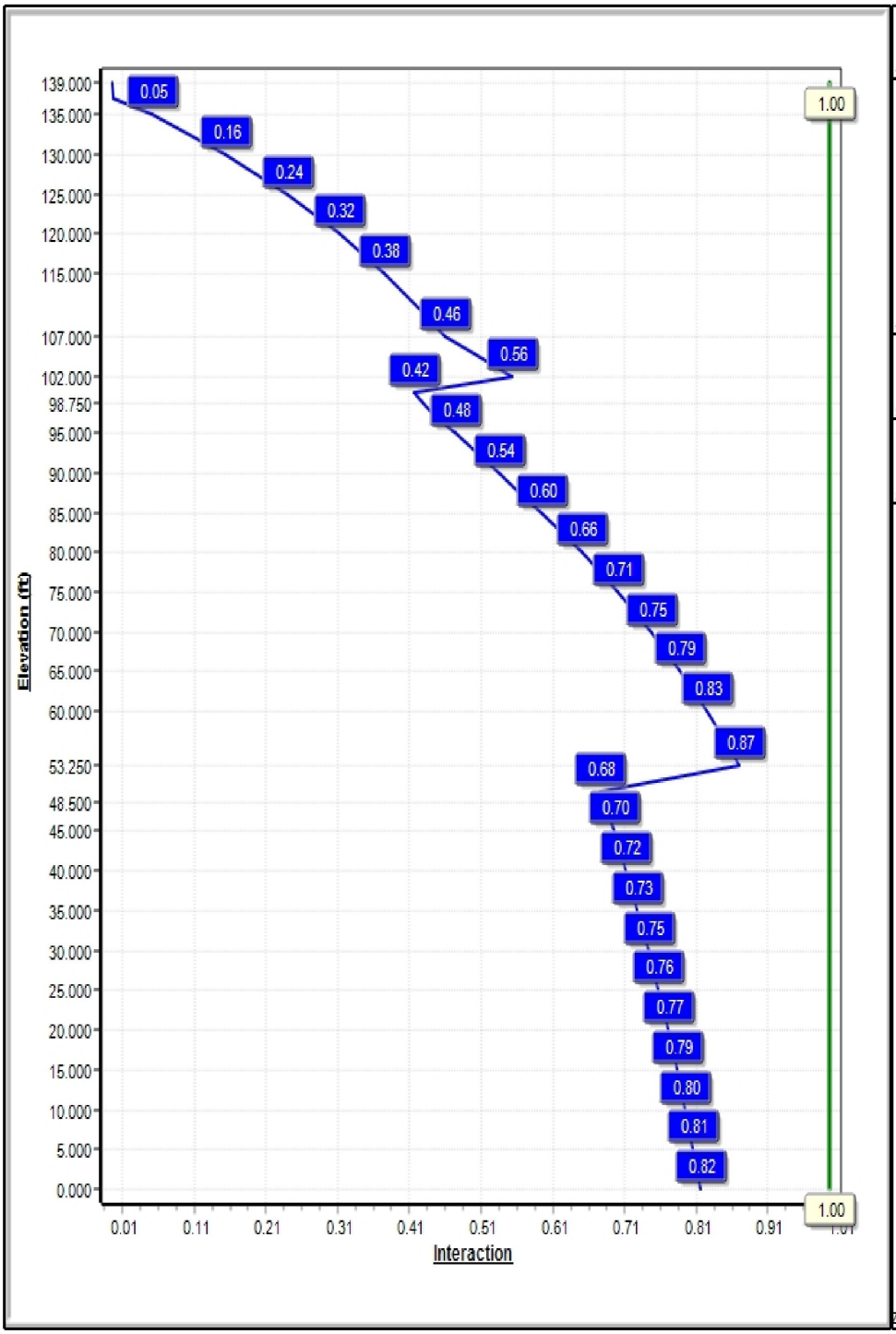

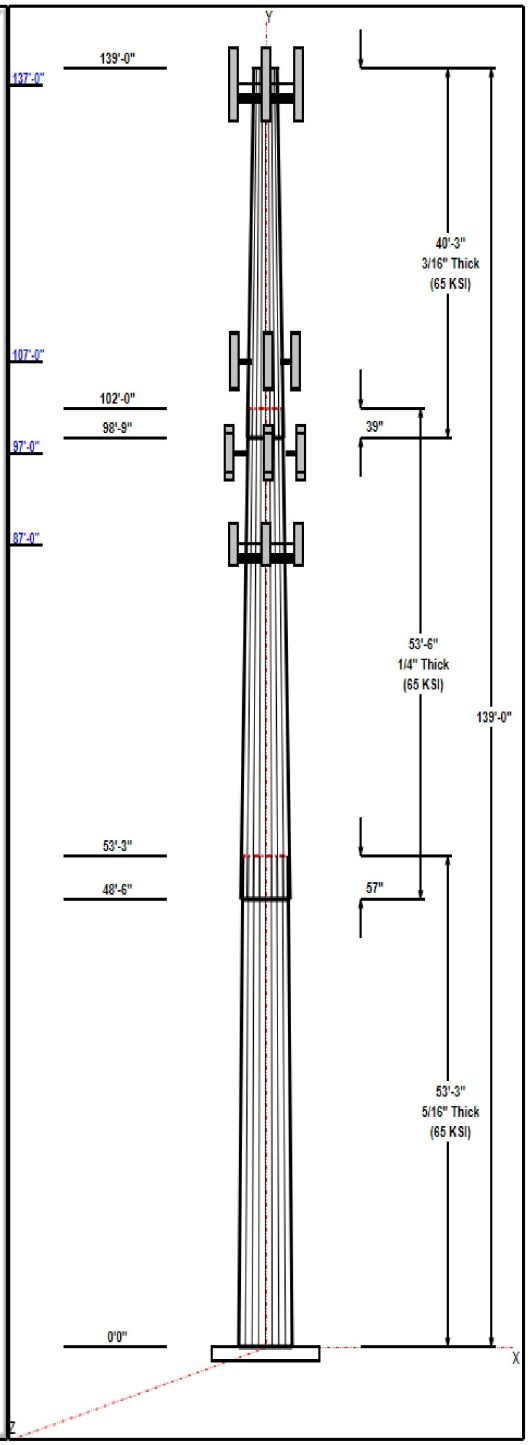

Structure: CT13549-S-SBA

Type:	Tapered	**Base Shape:**	18 Sided	11/13/2020	
Site Name:	Danbury 1	**Taper:**	0.23097		
Height:	139.00 (ft)				
Base Elev:	0.00 (ft)			Page: 2	

Tower Engineering Solutions

Shaft Properties

Seq	Length (ft)	Top (in)	Bottom (in)	Thick (in)	Joint Type	Taper	Grade (ksi)
1	53.25	34.93	47.23	0.313		0.23097	65
2	53.50	24.17	36.53	0.250	Slip	0.23097	65
3	40.25	16.00	25.30	0.188	Slip	0.23097	65

Discrete Appurtenances

Attach Elev (ft)	Force Elev (ft)	Qty	Description	Carrier
139.00	139.00	1	6' Lightning rod	
137.00	137.00	3	AIR6449 B41	T-Mobile
137.00	137.00	3	KRY 112 144/1	T-Mobile
137.00	137.00	3	RFS	T-Mobile
137.00	137.00	3	Air 32	T-Mobile
137.00	137.00	3	Radio 4449 B71+B12	T-Mobile
137.00	137.00	1	SDX1926Q-43	T-Mobile
137.00	137.00	1	RMQP-4096-HRK	T-Mobile
137.00	137.00	3	4415 B25	T-Mobile
107.00	107.00	3	RRUS 4449 B5/B12	AT&T
107.00	107.00	3	RRUS-11 700MHz	AT&T
107.00	107.00	3	RRUS 12	AT&T
107.00	107.00	3	RRUS A2	AT&T
107.00	107.00	3	RRUS-32	AT&T
107.00	107.00	3	DC6-48-60-18-8F	AT&T
107.00	107.00	3	OPA-65R-LCUU-H6	AT&T
107.00	107.00	3	EPBQ-652L8H6-L2	AT&T
107.00	107.00	3	DBC20056F1V1	AT&T
107.00	107.00	3	DTMABP7819VG12A	AT&T
107.00	107.00	3	RRUS-E2	AT&T
107.00	107.00	1	Collar Mount Commscope	AT&T
107.00	107.00	3	T-Arm Commscope	AT&T
97.00	97.00	3	Standoff	Verizon
97.00	97.00	3	BXA-70063/6CF	Verizon
97.00	97.00	3	BXA-171063/12CF	Verizon
97.00	97.00	3	DBXNH-6565A-VTM	Verizon
97.00	97.00	3	RRH2x40-AWS	Verizon
97.00	97.00	6	FD9R6004/2C-3L (3.1 lbs)	Verizon
97.00	97.00	1	DB-T1-6Z-8AB-0Z	Verizon
87.00	87.00	3	ODI2-065R18K-GQ	Dish Network
87.00	87.00	3	SF-SU7-2-96	Dish Network
87.00	87.00	2	4415	Dish Network
87.00	87.00	3	0208	Dish Network

Linear Appurtenances

Elev From (ft)	Elev To (ft)	Placement	Description	Carrier
0.00	139.00	Outside	Safety Cable	
0.00	139.00	Outside	Step bolts (ladder)	
0.00	137.00	Inside	1 5/8" Coax	T-Mobile
0.00	137.00	Inside	1 5/8" Hybrid	T-Mobile
0.00	107.00	Inside	3/4" DC	AT&T
0.00	107.00	Inside	3/8" Fiber	AT&T
0.00	107.00	Inside	7/8" Coax	AT&T
0.00	97.00	Inside	1 5/8" Coax	Verizon
0.00	97.00	Inside	1 5/8" Fiber	Verizon
0.00	87.00	Inside	1 1/4" Hybrid	Dish Network

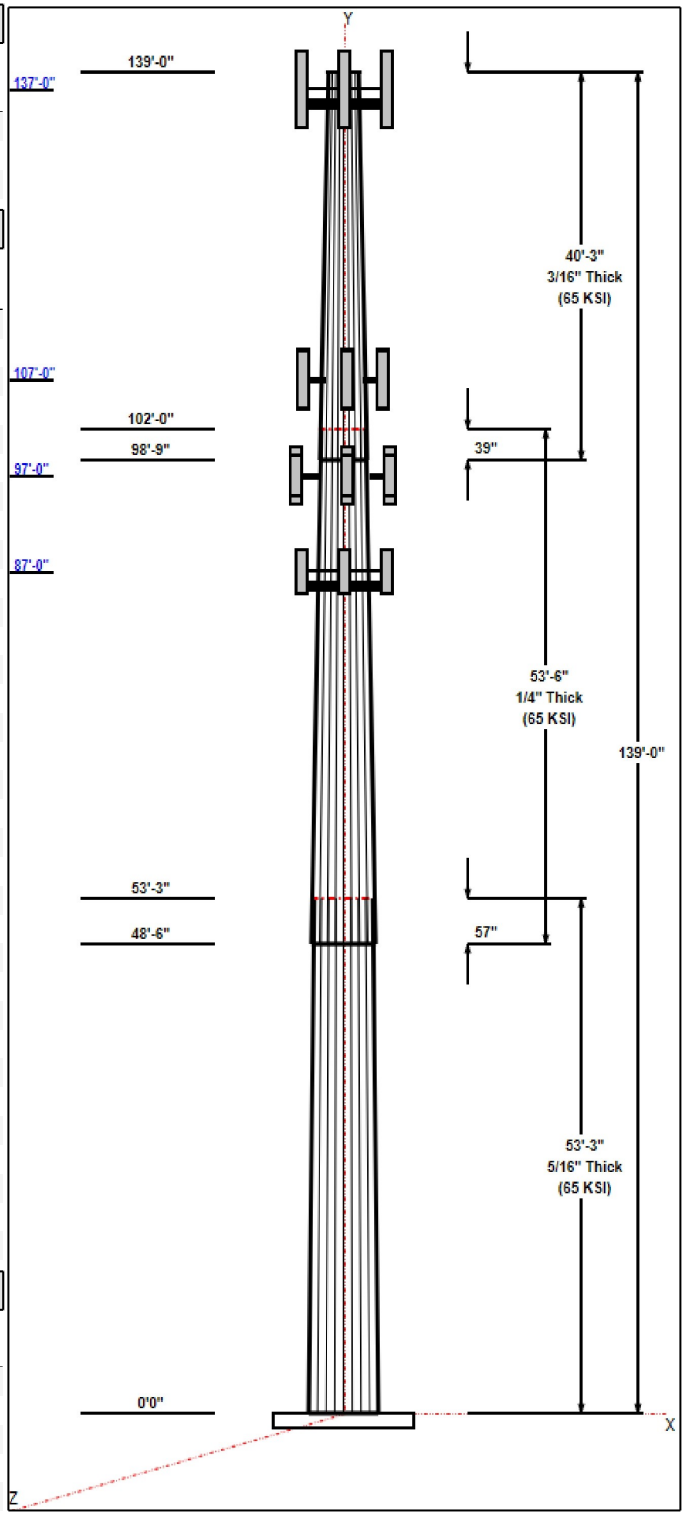

Copyright © 2020 by Tower Engineering Solutions, LLC. All rights reserved.

Anchor Bolts

Qty	Specifications	Grade (ksi)	Arrangement
12	2.25" 18J	75.0	Cluster

Base Plate

Thickness (in)	Specifications (in)	Grade (ksi)	Geometry
2.7500	51.5	50.0	Clipped

Reactions

Load Case	Moment (FT-Kips)	Shear (Kips)	Axial (Kips)
1.2D + 1.6W 93 mph Wind	2347.7	23.8	31.8
0.9D + 1.6W 93 mph Wind	2315.4	23.7	23.8
1.2D + 1.0Di + 1.0Wi 50 mph Wind	742.8	7.5	52.1
1.2D + 1.0E	185.6	1.6	31.9
0.9D + 1.0E	182.6	1.6	23.9
1.0D + 1.0W 60 mph Wind	606.4	6.2	26.5

Copyright © 2020 by Tower Engineering Solutions, LLC. All rights reserved.

Structure: CT13549-S-SBA - Coax Line Placement

Type: Monopole
Site Name: Danbury 1
Height: 139.00 (ft)

11/13/2020

Tower Engineering Solutions

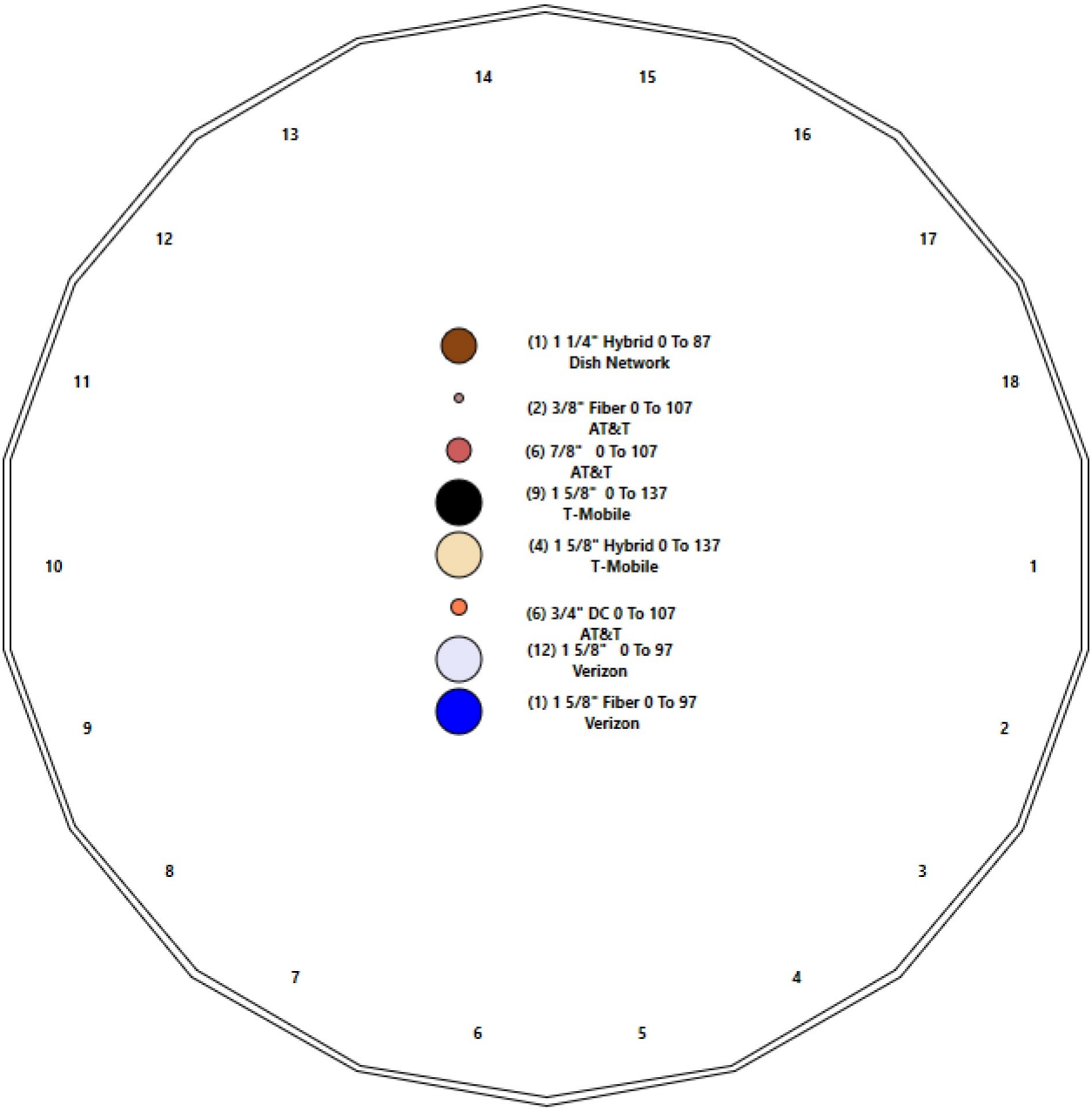

Copyright © 2020 by Tower Engineering Solutions, LLC. All rights reserved.

Shaft Properties

Structure:	CT13549-S-SBA		**Code:**	EIA/TIA-222-G	11/13/2020
Site Name:	Danbury 1		**Exposure:**	C	
Height:	139.00 (ft)		**Crest Height:**	0.00	
Base Elev:	0.000 (ft)		**Site Class:**	D - Stiff Soil	
Gh:	1.1	**Topography:** 1	**Struct Class:**	II	Page: 5

Tower Engineering Solutions

Sec. No.	Shape	Length (ft)	Thick (in)	Fy (ksi)	Joint Type	Overlap (in)	Weight (lb)
1	18	53.250	0.3125	65		0.00	7,327
2	18	53.500	0.2500	65	Slip	57.00	4,348
3	18	40.250	0.1875	65	Slip	39.00	1,668
					Total Shaft Weight:		**13,342**

	Bottom						Top						
Sec. No.	**Dia (in)**	**Elev (ft)**	**Area (sqin)**	**Ix (in^4)**	**W/t Ratio**	**D/t Ratio**	**Dia (in)**	**Elev (ft)**	**Area (sqin)**	**Ix (in^4)**	**W/t Ratio**	**D/t Ratio**	**Taper**
1	47.23	0.00	46.53	12941.93	25.24	151.14	34.93	53.25	34.34	5198.89	18.30	111.7	0.230971
2	36.53	48.50	28.79	4786.42	24.35	146.11	24.17	102.00	18.98	1372.20	15.64	96.68	0.230971
3	25.30	98.75	14.94	1190.25	22.38	134.92	16.00	139.00	9.41	297.27	13.64	85.33	0.230971

Copyright © 2020 by Tower Engineering Solutions, LLC. All rights reserved.

Load Summary

Structure:	CT13549-S-SBA	**Code:**	EIA/TIA-222-G	11/13/2020	
Site Name:	Danbury 1	**Exposure:**	C		
Height:	139.00 (ft)	**Crest Height:**	0.00		
Base Elev:	0.000 (ft)	**Site Class:**	D - Stiff Soil		
Gh:	1.1 **Topography:** 1	**Struct Class:**	II	Page: 6	

Discrete Appurtenances

No.	Elev (ft)	Description	Qty	No Ice Weight (lb)	No Ice CaAa (sf)	No Ice CaAa Factor	Ice Weight (lb)	Ice CaAa (sf)	Ice CaAa Factor	Hor. Ecc. (ft)	Vert Ecc (ft)
1	139.00	6' Lightning rod	1	6.50	0.38	1.00	42.53	1.459	1.00	0.00	0.00
2	137.00	AIR6449 B41	3	103.00	5.65	0.71	238.88	6.592	0.71	0.00	0.00
3	137.00	KRY 112 144/1	3	11.00	0.41	0.67	21.68	0.881	0.67	0.00	0.00
4	137.00	RFS APXVAARR18_43-U-NA20	3	128.00	20.24	0.70	541.69	22.122	0.70	0.00	0.00
5	137.00	Air 32 KRD901146_1_B66A_B2A	3	132.20	6.51	0.87	314.61	7.679	0.87	0.00	0.00
6	137.00	Radio 4449 B71+B12	3	70.00	1.65	0.67	137.47	2.182	0.67	0.00	0.00
7	137.00	SDX1926Q-43	1	7.00	0.38	0.67	16.60	0.832	0.67	0.00	0.00
8	137.00	RMQP-4096-HRK	1	2449.00	46.00	1.00	4990.28	77.822	1.00	0.00	0.00
9	137.00	4415 B25	3	46.30	1.86	0.67	106.37	2.419	0.67	0.00	0.00
10	107.00	RRUS 4449 B5/B12	3	85.00	1.65	0.67	198.76	4.261	0.67	0.00	0.00
11	107.00	RRUS-11 700MHz	3	50.70	2.52	0.67	136.29	3.148	0.67	0.00	0.00
12	107.00	RRUS 12	3	58.00	3.15	0.67	149.55	3.838	0.67	0.00	0.00
13	107.00	RRUS A2	3	21.20	1.86	0.67	56.11	2.801	0.67	0.00	0.00
14	107.00	RRUS-32	3	77.00	3.87	0.67	186.06	4.078	0.67	0.00	0.00
15	107.00	DC6-48-60-18-8F	3	31.80	1.47	0.67	91.57	2.147	0.67	0.00	0.00
16	107.00	OPA-65R-LCUU-H6	3	80.00	9.66	0.79	302.78	10.978	0.79	0.00	0.00
17	107.00	EPBQ-652L8H6-L2	3	72.80	9.66	0.85	343.47	14.704	0.85	0.00	0.00
18	107.00	DBC20056F1V1	3	6.60	0.41	0.67	19.83	0.720	0.67	0.00	0.00
19	107.00	DTMABP7819VG12A	3	19.20	1.14	0.67	43.87	1.884	0.67	0.00	0.00
20	107.00	RRUS-E2	3	77.00	1.65	0.67	123.37	2.209	0.67	0.00	0.00
21	107.00	Collar Mount Commscope	1	122.40	5.00	1.00	411.53	13.436	1.00	0.00	0.00
22	107.00	T-Arm Commscope MC-HPM1250-B	3	178.00	10.00	0.75	298.13	18.436	0.75	0.00	0.00
23	97.00	Standoff	3	350.00	8.00	0.75	583.91	14.683	0.75	0.00	0.00
24	97.00	BXA-70063/6CF	3	17.00	7.57	0.70	152.66	10.216	0.70	0.00	0.00
25	97.00	BXA-171063/12CF	3	15.00	4.78	0.84	106.74	7.038	0.84	0.00	0.00
26	97.00	DBXNH-6565A-VTM	3	34.20	5.37	0.80	155.54	7.261	0.80	0.00	0.00
27	97.00	RRH2x40-AWS	3	44.00	2.52	0.67	102.13	3.691	0.67	0.00	0.00
28	97.00	FD9R6004/2C-3L (3.1 lbs)	6	3.10	0.36	0.67	10.78	0.784	0.67	0.00	0.00
29	97.00	DB-T1-6Z-8AB-0Z	1	18.90	4.80	1.00	155.45	5.634	1.00	0.00	0.00
30	87.00	ODI2-065R18K-GQ	3	25.10	4.85	0.70	125.99	5.780	0.70	0.00	0.00
31	87.00	SF-SU7-2-96	3	395.00	15.10	0.75	760.58	33.068	0.75	0.00	0.00
32	87.00	4415	2	44.10	1.86	0.67	89.03	2.402	0.67	0.00	0.00
33	87.00	0208	3	19.80	1.37	0.67	52.89	1.842	0.67	0.00	0.00
		Totals:	**91**	**9,154.30**			**21,911.92**				

Linear Appurtenances

Bottom Elev. (ft)	Top Elev. (ft)	Description	Exposed Width	Exposed
0.00	139.00	(1) Safety Cable	0.00	Outside
0.00	139.00	(1) Step bolts (ladder)	0.00	Outside
0.00	137.00	(9) 1 5/8" Coax	0.00	Inside
0.00	137.00	(4) 1 5/8" Hybrid	0.00	Inside
0.00	107.00	(6) 3/4" DC	0.00	Inside
0.00	107.00	(2) 3/8" Fiber	0.00	Inside
0.00	107.00	(6) 7/8" Coax	0.00	Inside
0.00	97.00	(12) 1 5/8" Coax	0.00	Inside

Copyright © 2020 by Tower Engineering Solutions, LLC. All rights reserved.

Discrete Appurtenances

No.	Elev (ft)	Description	Qty	No Ice Weight (lb)	No Ice CaAa (sf)	No Ice CaAa Factor	Ice Weight (lb)	Ice CaAa (sf)	Ice CaAa Factor	Hor. Ecc. (ft)	Vert Ecc (ft)
0.00	97.00	(1) 1 5/8" Fiber			0.00	Inside					
0.00	87.00	(1) 1 1/4" Hybrid			0.00	Inside					

Copyright © 2020 by Tower Engineering Solutions, LLC. All rights reserved.

Shaft Section Properties

Structure:	CT13549-S-SBA	**Code:**	EIA/TIA-222-G	11/13/2020	
Site Name:	Danbury 1	**Exposure:**	C		
Height:	139.00 (ft)	**Crest Height:**	0.00		
Base Elev:	0.000 (ft)	**Site Class:**	D - Stiff Soil		
Gh:	1.1 **Topography:** 1	**Struct Class:**	II	Page: 8	

TES Tower Engineering Solutions

Increment Length: **5 (ft)**

Elev (ft)	Description	Thick (in)	Dia (in)	Area (in^2)	Ix (in^4)	W/t Ratio	D/t Ratio	Fpy (ksi)	S (in^3)	Weight (lb)
0.00		0.3125	47.230	46.535	12941.9	25.24	151.14	71.7	539.7	0.0
5.00		0.3125	46.075	45.389	12009.6	24.59	147.44	72.5	513.4	782.0
10.00		0.3125	44.920	44.244	11123.1	23.94	143.74	73.2	487.7	762.5
15.00		0.3125	43.765	43.098	10281.4	23.28	140.05	74.0	462.7	743.0
20.00		0.3125	42.611	41.953	9483.2	22.63	136.35	74.8	438.3	723.5
25.00		0.3125	41.456	40.807	8727.5	21.98	132.66	75.5	414.7	704.0
30.00		0.3125	40.301	39.662	8013.0	21.33	128.96	76.3	391.6	684.5
35.00		0.3125	39.146	38.517	7338.6	20.68	125.27	77.1	369.2	665.1
40.00		0.3125	37.991	37.371	6703.2	20.03	121.57	77.8	347.5	645.6
45.00		0.3125	36.836	36.226	6105.5	19.37	117.88	78.6	326.5	626.1
48.50	Bot - Section 2	0.3125	36.028	35.424	5709.0	18.92	115.29	79.1	312.1	426.7
50.00		0.3125	35.681	35.080	5544.5	18.72	114.18	79.4	306.1	326.2
53.25	Top - Section 1	0.2500	35.431	27.915	4365.2	23.58	141.72	0.0	0.0	695.8
55.00		0.2500	35.027	27.594	4216.4	23.29	140.11	74.0	237.1	165.3
60.00		0.2500	33.872	26.678	3810.2	22.48	135.49	75.0	221.6	461.7
65.00		0.2500	32.717	25.762	3430.9	21.66	130.87	75.9	206.5	446.1
70.00		0.2500	31.562	24.845	3077.6	20.85	126.25	76.9	192.1	430.5
75.00		0.2500	30.407	23.929	2749.5	20.04	121.63	77.8	178.1	414.9
80.00		0.2500	29.252	23.012	2445.6	19.22	117.01	78.8	164.7	399.3
85.00		0.2500	28.097	22.096	2164.9	18.41	112.39	79.8	151.8	383.7
87.00		0.2500	27.636	21.730	2059.0	18.08	110.54	80.1	146.7	149.1
90.00		0.2500	26.943	21.180	1906.6	17.59	107.77	80.7	139.4	219.0
95.00		0.2500	25.788	20.263	1669.7	16.78	103.15	81.7	127.5	352.6
97.00		0.2500	25.326	19.897	1580.7	16.45	101.30	82.1	122.9	136.7
98.75	Bot - Section 3	0.2500	24.922	19.576	1505.5	16.17	99.69	82.4	119.0	117.5
100.00		0.2500	24.633	19.347	1453.2	15.96	98.53	82.5	116.2	146.0
102.00	Top - Section 2	0.1875	24.546	14.496	1086.7	21.67	130.91	0.0	0.0	230.0
105.00		0.1875	23.853	14.083	996.5	21.02	127.22	76.7	82.3	145.9
107.00		0.1875	23.391	13.809	939.3	20.59	124.75	77.2	79.1	94.9
110.00		0.1875	22.698	13.396	857.7	19.93	121.06	78.0	74.4	138.9
115.00		0.1875	21.543	12.709	732.3	18.85	114.90	79.2	67.0	222.1
120.00		0.1875	20.388	12.022	619.8	17.76	108.74	80.5	59.9	210.4
125.00		0.1875	19.234	11.334	519.5	16.68	102.58	81.8	53.2	198.7
130.00		0.1875	18.079	10.647	430.6	15.59	96.42	82.5	46.9	187.0
135.00		0.1875	16.924	9.960	352.5	14.50	90.26	82.5	41.0	175.3
137.00		0.1875	16.462	9.685	324.1	14.07	87.80	82.5	38.8	66.8
139.00		0.1875	16.000	9.410	297.3	13.64	85.33	82.5	36.6	65.0
										13342.3

Copyright © 2020 by Tower Engineering Solutions, LLC. All rights reserved.

Wind Loading - Shaft

Structure:	CT13549-S-SBA		**Code:**	EIA/TIA-222-G	11/13/2020
Site Name:	Danbury 1		**Exposure:**	C	
Height:	139.00 (ft)		**Crest Height:**	0.00	
Base Elev:	0.000 (ft)		**Site Class:**	D - Stiff Soil	
Gh:	1.1	**Topography:** 1	**Struct Class:**	II	Page: 9

Tower Engineering Solutions

Load Case: 1.2D + 1.6W 93 mph Wind

Dead Load Factor 1.20

Wind Load Factor 1.60

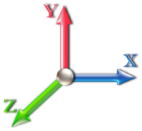

Iterations 26

Elev (ft)	Description	Kzt	Kz	qz (psf)	qzGh (psf)	C (mph-ft)	Cf	Ice Thick (in)	Tributary (ft)	Aa (sf)	CfAa (sf)	Wind Force X (lb)	Dead Load Ice (lb)	Tot Dead Load (lb)
0.00		1.00	0.85	17.879	19.67	342.67	0.650	0.000	0.00	0.000	0.00	0.0	0.0	0.0
5.00		1.00	0.85	17.879	19.67	334.29	0.650	0.000	5.00	19.738	12.83	403.7	0.0	938.4
10.00		1.00	0.85	17.879	19.67	325.91	0.650	0.000	5.00	19.250	12.51	393.7	0.0	915.0
15.00		1.00	0.85	17.879	19.67	317.53	0.650	0.000	5.00	18.761	12.19	383.7	0.0	891.6
20.00		1.00	0.90	18.971	20.87	318.45	0.650	0.000	5.00	18.273	11.88	396.6	0.0	868.2
25.00		1.00	0.95	19.883	21.87	317.18	0.650	0.000	5.00	17.784	11.56	404.5	0.0	844.8
30.00		1.00	0.98	20.661	22.73	314.32	0.650	0.000	5.00	17.295	11.24	408.8	0.0	821.5
35.00		1.00	1.01	21.343	23.48	310.31	0.650	0.000	5.00	16.807	10.92	410.4	0.0	798.1
40.00		1.00	1.04	21.951	24.15	305.42	0.650	0.000	5.00	16.318	10.61	409.8	0.0	774.7
45.00		1.00	1.07	22.502	24.75	299.83	0.650	0.000	5.00	15.830	10.29	407.5	0.0	751.3
48.50	Bot - Section 2	1.00	1.09	22.860	25.15	295.57	0.650	0.000	3.50	10.790	7.01	282.2	0.0	512.0
50.00		1.00	1.09	23.007	25.31	293.67	0.650	0.000	1.50	4.614	3.00	121.5	0.0	391.4
53.25	Top - Section 1	1.00	1.11	23.314	25.65	289.40	0.650	0.000	3.25	9.847	6.40	262.6	0.0	835.0
55.00		1.00	1.12	23.473	25.82	291.19	0.650	0.000	1.75	5.217	3.39	140.1	0.0	198.3
60.00		1.00	1.14	23.907	26.30	284.18	0.650	0.000	5.00	14.575	9.47	398.6	0.0	554.0
65.00		1.00	1.16	24.313	26.74	276.81	0.650	0.000	5.00	14.087	9.16	391.8	0.0	535.3
70.00		1.00	1.17	24.696	27.17	269.13	0.650	0.000	5.00	13.598	8.84	384.2	0.0	516.6
75.00		1.00	1.19	25.057	27.56	261.17	0.650	0.000	5.00	13.109	8.52	375.8	0.0	497.9
80.00		1.00	1.21	25.400	27.94	252.97	0.650	0.000	5.00	12.621	8.20	366.7	0.0	479.2
85.00		1.00	1.22	25.726	28.30	244.53	0.650	0.000	5.00	12.132	7.89	357.1	0.0	460.5
87.00	Appurtenance(s)	1.00	1.23	25.852	28.44	241.10	0.650	0.000	2.00	4.716	3.07	139.5	0.0	179.0
90.00		1.00	1.24	26.037	28.64	235.90	0.650	0.000	3.00	6.928	4.50	206.3	0.0	262.8
95.00		1.00	1.25	26.336	28.97	227.08	0.650	0.000	5.00	11.155	7.25	336.1	0.0	423.1
97.00	Appurtenance(s)	1.00	1.26	26.451	29.10	223.50	0.650	0.000	2.00	4.325	2.81	130.9	0.0	164.0
98.75	Bot - Section 3	1.00	1.26	26.551	29.21	220.34	0.650	0.000	1.75	3.720	2.42	113.0	0.0	141.0
100.00		1.00	1.27	26.621	29.28	218.08	0.650	0.000	1.25	2.660	1.73	81.0	0.0	175.2
102.00	Top - Section 2	1.00	1.27	26.733	29.41	214.44	0.650	0.000	2.00	4.193	2.73	128.2	0.0	276.0
105.00		1.00	1.28	26.896	29.59	212.26	0.650	0.000	3.00	6.143	3.99	189.0	0.0	175.0
107.00	Appurtenance(s)	1.00	1.28	27.003	29.70	208.57	0.650	0.000	2.00	3.998	2.60	123.5	0.0	113.9
110.00		1.00	1.29	27.161	29.88	202.98	0.650	0.000	3.00	5.850	3.80	181.8	0.0	166.6
115.00		1.00	1.30	27.416	30.16	193.55	0.650	0.000	5.00	9.359	6.08	293.5	0.0	266.5
120.00		1.00	1.32	27.663	30.43	184.00	0.650	0.000	5.00	8.871	5.77	280.7	0.0	252.5
125.00		1.00	1.33	27.902	30.69	174.33	0.650	0.000	5.00	8.382	5.45	267.5	0.0	238.4
130.00		1.00	1.34	28.133	30.95	164.54	0.650	0.000	5.00	7.893	5.13	254.0	0.0	224.4
135.00		1.00	1.35	28.358	31.19	154.64	0.650	0.000	5.00	7.405	4.81	240.2	0.0	210.4
137.00	Appurtenance(s)	1.00	1.35	28.446	31.29	150.65	0.650	0.000	2.00	2.825	1.84	91.9	0.0	80.2
139.00	Appurtenance(s)	1.00	1.36	28.533	31.39	146.65	0.650	0.000	2.00	2.747	1.79	89.7	0.0	78.0
								Totals:	**139.00**			**9,846.2**		**16,010.8**

Copyright © 2020 by Tower Engineering Solutions, LLC. All rights reserved.

Discrete Appurtenance Forces

Structure:	CT13549-S-SBA		**Code:**	EIA/TIA-222-G	11/13/2020
Site Name:	Danbury 1		**Exposure:**	C	
Height:	139.00 (ft)		**Crest Height:**	0.00	
Base Elev:	0.000 (ft)		**Site Class:**	D - Stiff Soil	
Gh:	1.1	**Topography:** 1	**Struct Class:**	II	Page: 10

Tower Engineering Solutions

Load Case: 1.2D + 1.6W 93 mph Wind

Dead Load Factor 1.20

Wind Load Factor 1.60

Iterations 26

No.	Elev (ft)	Description	Qty	qz (psf)	qzGh (psf)	Orient Factor x Ka	Ka	Total CaAa (sf)	Dead Load (lb)	Horiz Ecc (ft)	Vert Ecc (ft)	Wind FX (lb)	Mom Y (lb-ft)	Mom Z (lb-ft)
1	139.00	6' Lightning rod	1	28.533	31.386	1.00	1.00	0.38	7.80	0.000	0.000	19.08	0.00	0.00
2	137.00	Air 32	3	28.446	31.290	0.65	0.75	12.74	475.92	0.000	0.000	637.99	0.00	0.00
3	137.00	AIR6449 B41	3	28.446	31.290	0.53	0.75	9.03	370.80	0.000	0.000	451.87	0.00	0.00
4	137.00	RFS	3	28.446	31.290	0.52	0.75	31.88	460.80	0.000	0.000	1595.95	0.00	0.00
5	137.00	KRY 112 144/1	3	28.446	31.290	0.50	0.75	0.62	39.60	0.000	0.000	30.94	0.00	0.00
6	137.00	SDX1926Q-43	1	28.446	31.290	0.50	0.75	0.19	8.40	0.000	0.000	9.56	0.00	0.00
7	137.00	RMQP-4096-HRK	1	28.446	31.290	1.00	1.00	46.00	2938.80	0.000	0.000	2302.96	0.00	0.00
8	137.00	4415 B25	3	28.446	31.290	0.50	0.75	2.80	166.68	0.000	0.000	140.38	0.00	0.00
9	137.00	Radio 4449 B71+B12	3	28.446	31.290	0.50	0.75	2.49	252.00	0.000	0.000	124.53	0.00	0.00
10	107.00	DBC20056F1V1	3	27.003	29.704	0.54	0.80	0.66	23.76	0.000	0.000	31.33	0.00	0.00
11	107.00	OPA-65R-LCUU-H6	3	27.003	29.704	0.63	0.80	18.32	288.00	0.000	0.000	870.46	0.00	0.00
12	107.00	EPBQ-652L8H6-L2	3	27.003	29.704	0.68	0.80	19.71	262.08	0.000	0.000	936.57	0.00	0.00
13	107.00	Collar Mount Commscope	1	27.003	29.704	1.00	1.00	5.00	146.88	0.000	0.000	237.63	0.00	0.00
14	107.00	DTMABP7819VG12A	3	27.003	29.704	0.54	0.80	1.83	69.12	0.000	0.000	87.12	0.00	0.00
15	107.00	RRUS-E2	3	27.003	29.704	0.54	0.80	2.65	277.20	0.000	0.000	126.10	0.00	0.00
16	107.00	T-Arm Commscope	3	27.003	29.704	0.56	0.75	16.88	640.80	0.000	0.000	802.00	0.00	0.00
17	107.00	DC6-48-60-18-8F	3	27.003	29.704	0.54	0.80	2.36	114.48	0.000	0.000	112.34	0.00	0.00
18	107.00	RRUS A2	3	27.003	29.704	0.54	0.80	2.99	76.32	0.000	0.000	142.14	0.00	0.00
19	107.00	RRUS 12	3	27.003	29.704	0.54	0.80	5.07	208.80	0.000	0.000	240.73	0.00	0.00
20	107.00	RRUS-11 700MHz	3	27.003	29.704	0.54	0.80	4.05	182.52	0.000	0.000	192.58	0.00	0.00
21	107.00	RRUS 4449 B5/B12	3	27.003	29.704	0.54	0.80	2.65	306.00	0.000	0.000	126.10	0.00	0.00
22	107.00	RRUS-32	3	27.003	29.704	0.54	0.80	6.22	277.20	0.000	0.000	295.75	0.00	0.00
23	97.00	BXA-171063/12CF	3	26.451	29.096	0.67	0.80	9.64	54.00	0.000	0.000	448.62	0.00	0.00
24	97.00	Standoff	3	26.451	29.096	0.56	0.75	13.50	1260.00	0.000	0.000	628.48	0.00	0.00
25	97.00	BXA-70063/6CF	3	26.451	29.096	0.56	0.80	12.72	61.20	0.000	0.000	592.06	0.00	0.00
26	97.00	RRH2x40-AWS	3	26.451	29.096	0.54	0.80	4.05	158.40	0.000	0.000	188.65	0.00	0.00
27	97.00	DBXNH-6565A-VTM	3	26.451	29.096	0.64	0.80	10.31	123.12	0.000	0.000	479.99	0.00	0.00
28	97.00	FD9R6004/2C-3L (3.1 lbs)	6	26.451	29.096	0.54	0.80	1.16	22.32	0.000	0.000	53.90	0.00	0.00
29	97.00	DB-T1-6Z-8AB-0Z	1	26.451	29.096	1.00	1.00	4.80	22.68	0.000	0.000	223.46	0.00	0.00
30	87.00	0208	3	25.852	28.438	0.54	0.80	2.20	71.28	0.000	0.000	100.23	0.00	0.00
31	87.00	4415	2	25.852	28.438	0.54	0.80	1.99	105.84	0.000	0.000	90.72	0.00	0.00
32	87.00	SF-SU7-2-96	3	25.852	28.438	0.56	0.75	25.48	1422.00	0.000	0.000	1159.40	0.00	0.00
33	87.00	ODI2-065R18K-GQ	3	25.852	28.438	0.56	0.80	8.15	90.36	0.000	0.000	370.73	0.00	0.00
							Totals:		**10,985.16**			**13,850.36**		

Copyright © 2020 by Tower Engineering Solutions, LLC. All rights reserved.

Total Applied Force Summary

Structure:	CT13549-S-SBA		**Code:**	EIA/TIA-222-G	11/13/2020
Site Name:	Danbury 1		**Exposure:**	C	
Height:	139.00 (ft)		**Crest Height:**	0.00	
Base Elev:	0.000 (ft)		**Site Class:**	D - Stiff Soil	
Gh:	1.1	**Topography:** 1	**Struct Class:**	II	Page: 11

Tower Engineering Solutions

Load Case: 1.2D + 1.6W 93 mph Wind

Dead Load Factor 1.20

Wind Load Factor 1.60

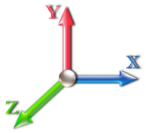

Iterations 26

Elev (ft)	Description	Lateral FX (-) (lb)	Axial FY (-) (lb)	Torsion MY (lb-ft)	Moment MZ (lb-ft)
0.00		0.00	0.00	0.00	0.00
5.00		403.73	1148.11	0.00	0.00
10.00		393.73	1124.72	0.00	0.00
15.00		383.74	1101.34	0.00	0.00
20.00		396.56	1077.95	0.00	0.00
25.00		404.52	1054.56	0.00	0.00
30.00		408.80	1031.18	0.00	0.00
35.00		410.35	1007.79	0.00	0.00
40.00		409.78	984.41	0.00	0.00
45.00		407.49	961.02	0.00	0.00
48.50		282.17	658.80	0.00	0.00
50.00		121.45	454.30	0.00	0.00
53.25		262.63	971.33	0.00	0.00
55.00		140.09	271.73	0.00	0.00
60.00		398.63	763.75	0.00	0.00
65.00		391.81	745.04	0.00	0.00
70.00		384.17	726.33	0.00	0.00
75.00		375.78	707.62	0.00	0.00
80.00		366.73	688.91	0.00	0.00
85.00		357.06	670.20	0.00	0.00
87.00	(11) attachments	1860.57	1952.32	0.00	0.00
90.00		206.35	386.28	0.00	0.00
95.00		336.08	628.82	0.00	0.00
97.00	(22) attachments	2746.04	1948.01	0.00	0.00
98.75		113.00	184.53	0.00	0.00
100.00		81.02	206.24	0.00	0.00
102.00		128.24	325.72	0.00	0.00
105.00		189.02	249.61	0.00	0.00
107.00	(37) attachments	4324.34	3036.76	0.00	0.00
110.00		181.77	220.89	0.00	0.00
115.00		293.54	356.93	0.00	0.00
120.00		280.72	342.90	0.00	0.00
125.00		267.55	328.86	0.00	0.00
130.00		254.04	314.83	0.00	0.00
135.00		240.22	300.80	0.00	0.00
137.00	(20) attachments	5386.11	4829.39	0.00	0.00
139.00	(1) attachments	108.74	88.92	0.00	0.00
	Totals:	**23,696.60**	**31,850.90**	**0.00**	**0.00**

Copyright © 2020 by Tower Engineering Solutions, LLC. All rights reserved.

Linear Appurtenance Segment Forces (Factored)

Structure:	CT13549-S-SBA	**Code:**	EIA/TIA-222-G	11/13/2020	
Site Name:	Danbury 1	**Exposure:**	C		
Height:	139.00 (ft)	**Crest Height:**	0.00		
Base Elev:	0.000 (ft)	**Site Class:**	D - Stiff Soil		
Gh:	1.1 **Topography:** 1	**Struct Class:**	II	Page: 12	

Load Case: 1.2D + 1.6W 93 mph Wind

Dead Load Factor 1.20

Wind Load Factor 1.60

Iterations 26

Top Elev (ft)	Description	Wind Exposed	Length (ft)	Ca	Exposed Width (in)	Area (sqft)	CaAa (sqft)	Ra	Cf Adjust Factor	qz (psf)	F X (lb)	Dead Load (lb)
5.00	Safety Cable	Yes	5.00	0.000	0.00	0.00	0.00	0.000	0.000	17.879	0.00	1.64
5.00	Step bolts (ladder)	Yes	5.00	0.000	0.00	0.00	0.00	0.000	0.000	17.879	0.00	6.24
10.00	Safety Cable	Yes	5.00	0.000	0.00	0.00	0.00	0.000	0.000	17.879	0.00	1.64
10.00	Step bolts (ladder)	Yes	5.00	0.000	0.00	0.00	0.00	0.000	0.000	17.879	0.00	6.24
15.00	Safety Cable	Yes	5.00	0.000	0.00	0.00	0.00	0.000	0.000	17.879	0.00	1.64
15.00	Step bolts (ladder)	Yes	5.00	0.000	0.00	0.00	0.00	0.000	0.000	17.879	0.00	6.24
20.00	Safety Cable	Yes	5.00	0.000	0.00	0.00	0.00	0.000	0.000	18.971	0.00	1.64
20.00	Step bolts (ladder)	Yes	5.00	0.000	0.00	0.00	0.00	0.000	0.000	18.971	0.00	6.24
25.00	Safety Cable	Yes	5.00	0.000	0.00	0.00	0.00	0.000	0.000	19.883	0.00	1.64
25.00	Step bolts (ladder)	Yes	5.00	0.000	0.00	0.00	0.00	0.000	0.000	19.883	0.00	6.24
30.00	Safety Cable	Yes	5.00	0.000	0.00	0.00	0.00	0.000	0.000	20.661	0.00	1.64
30.00	Step bolts (ladder)	Yes	5.00	0.000	0.00	0.00	0.00	0.000	0.000	20.661	0.00	6.24
35.00	Safety Cable	Yes	5.00	0.000	0.00	0.00	0.00	0.000	0.000	21.343	0.00	1.64
35.00	Step bolts (ladder)	Yes	5.00	0.000	0.00	0.00	0.00	0.000	0.000	21.343	0.00	6.24
40.00	Safety Cable	Yes	5.00	0.000	0.00	0.00	0.00	0.000	0.000	21.951	0.00	1.64
40.00	Step bolts (ladder)	Yes	5.00	0.000	0.00	0.00	0.00	0.000	0.000	21.951	0.00	6.24
45.00	Safety Cable	Yes	5.00	0.000	0.00	0.00	0.00	0.000	0.000	22.502	0.00	1.64
45.00	Step bolts (ladder)	Yes	5.00	0.000	0.00	0.00	0.00	0.000	0.000	22.502	0.00	6.24
48.50	Safety Cable	Yes	3.50	0.000	0.00	0.00	0.00	0.000	0.000	22.860	0.00	1.15
48.50	Step bolts (ladder)	Yes	3.50	0.000	0.00	0.00	0.00	0.000	0.000	22.860	0.00	4.37
50.00	Safety Cable	Yes	1.50	0.000	0.00	0.00	0.00	0.000	0.000	23.007	0.00	0.49
50.00	Step bolts (ladder)	Yes	1.50	0.000	0.00	0.00	0.00	0.000	0.000	23.007	0.00	1.87
53.25	Safety Cable	Yes	3.25	0.000	0.00	0.00	0.00	0.000	0.000	23.314	0.00	1.06
53.25	Step bolts (ladder)	Yes	3.25	0.000	0.00	0.00	0.00	0.000	0.000	23.314	0.00	4.06
55.00	Safety Cable	Yes	1.75	0.000	0.00	0.00	0.00	0.000	0.000	23.473	0.00	0.57
55.00	Step bolts (ladder)	Yes	1.75	0.000	0.00	0.00	0.00	0.000	0.000	23.473	0.00	2.18
60.00	Safety Cable	Yes	5.00	0.000	0.00	0.00	0.00	0.000	0.000	23.907	0.00	1.64
60.00	Step bolts (ladder)	Yes	5.00	0.000	0.00	0.00	0.00	0.000	0.000	23.907	0.00	6.24
65.00	Safety Cable	Yes	5.00	0.000	0.00	0.00	0.00	0.000	0.000	24.313	0.00	1.64
65.00	Step bolts (ladder)	Yes	5.00	0.000	0.00	0.00	0.00	0.000	0.000	24.313	0.00	6.24
70.00	Safety Cable	Yes	5.00	0.000	0.00	0.00	0.00	0.000	0.000	24.696	0.00	1.64
70.00	Step bolts (ladder)	Yes	5.00	0.000	0.00	0.00	0.00	0.000	0.000	24.696	0.00	6.24
75.00	Safety Cable	Yes	5.00	0.000	0.00	0.00	0.00	0.000	0.000	25.057	0.00	1.64
75.00	Step bolts (ladder)	Yes	5.00	0.000	0.00	0.00	0.00	0.000	0.000	25.057	0.00	6.24
80.00	Safety Cable	Yes	5.00	0.000	0.00	0.00	0.00	0.000	0.000	25.400	0.00	1.64
80.00	Step bolts (ladder)	Yes	5.00	0.000	0.00	0.00	0.00	0.000	0.000	25.400	0.00	6.24
85.00	Safety Cable	Yes	5.00	0.000	0.00	0.00	0.00	0.000	0.000	25.726	0.00	1.64
85.00	Step bolts (ladder)	Yes	5.00	0.000	0.00	0.00	0.00	0.000	0.000	25.726	0.00	6.24
87.00	Safety Cable	Yes	2.00	0.000	0.00	0.00	0.00	0.000	0.000	25.852	0.00	0.66
87.00	Step bolts (ladder)	Yes	2.00	0.000	0.00	0.00	0.00	0.000	0.000	25.852	0.00	2.50
90.00	Safety Cable	Yes	3.00	0.000	0.00	0.00	0.00	0.000	0.000	26.037	0.00	0.98
90.00	Step bolts (ladder)	Yes	3.00	0.000	0.00	0.00	0.00	0.000	0.000	26.037	0.00	3.74
95.00	Safety Cable	Yes	5.00	0.000	0.00	0.00	0.00	0.000	0.000	26.336	0.00	1.64
95.00	Step bolts (ladder)	Yes	5.00	0.000	0.00	0.00	0.00	0.000	0.000	26.336	0.00	6.24
97.00	Safety Cable	Yes	2.00	0.000	0.00	0.00	0.00	0.000	0.000	26.451	0.00	0.66
97.00	Step bolts (ladder)	Yes	2.00	0.000	0.00	0.00	0.00	0.000	0.000	26.451	0.00	2.50
98.75	Safety Cable	Yes	1.75	0.000	0.00	0.00	0.00	0.000	0.000	26.551	0.00	0.57

Copyright © 2020 by Tower Engineering Solutions, LLC. All rights reserved.

Linear Appurtenance Segment Forces (Factored)

Structure:	CT13549-S-SBA	**Code:**	EIA/TIA-222-G	11/13/2020	
Site Name:	Danbury 1	**Exposure:**	C		
Height:	139.00 (ft)	**Crest Height:**	0.00		
Base Elev:	0.000 (ft)	**Site Class:**	D - Stiff Soil		
Gh:	1.1 **Topography:** 1	**Struct Class:**	II	Page: 13	

Load Case: 1.2D + 1.6W 93 mph Wind

Dead Load Factor 1.20

Wind Load Factor 1.60

Iterations 26

Top Elev (ft)	Description	Wind Exposed	Length (ft)	Ca	Exposed Width (in)	Area (sqft)	CaAa (sqft)	Ra	Cf Adjust Factor	qz (psf)	F X (lb)	Dead Load (lb)
98.75	Step bolts (ladder)	Yes	1.75	0.000	0.00	0.00	0.00	0.000	0.000	26.551	0.00	2.18
100.00	Safety Cable	Yes	1.25	0.000	0.00	0.00	0.00	0.000	0.000	26.621	0.00	0.41
100.00	Step bolts (ladder)	Yes	1.25	0.000	0.00	0.00	0.00	0.000	0.000	26.621	0.00	1.56
102.00	Safety Cable	Yes	2.00	0.000	0.00	0.00	0.00	0.000	0.000	26.733	0.00	0.66
102.00	Step bolts (ladder)	Yes	2.00	0.000	0.00	0.00	0.00	0.000	0.000	26.733	0.00	2.50
105.00	Safety Cable	Yes	3.00	0.000	0.00	0.00	0.00	0.000	0.000	26.896	0.00	0.98
105.00	Step bolts (ladder)	Yes	3.00	0.000	0.00	0.00	0.00	0.000	0.000	26.896	0.00	3.74
107.00	Safety Cable	Yes	2.00	0.000	0.00	0.00	0.00	0.000	0.000	27.003	0.00	0.66
107.00	Step bolts (ladder)	Yes	2.00	0.000	0.00	0.00	0.00	0.000	0.000	27.003	0.00	2.50
110.00	Safety Cable	Yes	3.00	0.000	0.00	0.00	0.00	0.000	0.000	27.161	0.00	0.98
110.00	Step bolts (ladder)	Yes	3.00	0.000	0.00	0.00	0.00	0.000	0.000	27.161	0.00	3.74
115.00	Safety Cable	Yes	5.00	0.000	0.00	0.00	0.00	0.000	0.000	27.416	0.00	1.64
115.00	Step bolts (ladder)	Yes	5.00	0.000	0.00	0.00	0.00	0.000	0.000	27.416	0.00	6.24
120.00	Safety Cable	Yes	5.00	0.000	0.00	0.00	0.00	0.000	0.000	27.663	0.00	1.64
120.00	Step bolts (ladder)	Yes	5.00	0.000	0.00	0.00	0.00	0.000	0.000	27.663	0.00	6.24
125.00	Safety Cable	Yes	5.00	0.000	0.00	0.00	0.00	0.000	0.000	27.902	0.00	1.64
125.00	Step bolts (ladder)	Yes	5.00	0.000	0.00	0.00	0.00	0.000	0.000	27.902	0.00	6.24
130.00	Safety Cable	Yes	5.00	0.000	0.00	0.00	0.00	0.000	0.000	28.133	0.00	1.64
130.00	Step bolts (ladder)	Yes	5.00	0.000	0.00	0.00	0.00	0.000	0.000	28.133	0.00	6.24
135.00	Safety Cable	Yes	5.00	0.000	0.00	0.00	0.00	0.000	0.000	28.358	0.00	1.64
135.00	Step bolts (ladder)	Yes	5.00	0.000	0.00	0.00	0.00	0.000	0.000	28.358	0.00	6.24
137.00	Safety Cable	Yes	2.00	0.000	0.00	0.00	0.00	0.000	0.000	28.446	0.00	0.66
137.00	Step bolts (ladder)	Yes	2.00	0.000	0.00	0.00	0.00	0.000	0.000	28.446	0.00	2.50
139.00	Safety Cable	Yes	2.00	0.000	0.00	0.00	0.00	0.000	0.000	28.533	0.00	0.66
139.00	Step bolts (ladder)	Yes	2.00	0.000	0.00	0.00	0.00	0.000	0.000	28.533	0.00	2.50
										Totals:	**0.0**	**219.0**

Copyright © 2020 by Tower Engineering Solutions, LLC. All rights reserved.

Calculated Forces

Structure:	CT13549-S-SBA	**Code:**	EIA/TIA-222-G	11/13/2020	
Site Name:	Danbury 1	**Exposure:**	C		
Height:	139.00 (ft)	**Crest Height:**	0.00		
Base Elev:	0.000 (ft)	**Site Class:**	D - Stiff Soil		
Gh:	1.1 **Topography:** 1	**Struct Class:**	II	Page: 14	

Load Case: 1.2D + 1.6W 93 mph Wind

Dead Load Factor 1.20

Wind Load Factor 1.60

Iterations 26

Seg Elev (ft)	Pu FY (-) (kips)	Vu FX (-) (kips)	Tu MY (-) (ft-kips)	Mu MZ (ft-kips)	Mu MX (ft-kips)	Resultant Moment (ft-kips)	phi Pn (kips)	phi Vn (kips)	phi Tn (ft-kips)	phi Mn (ft-kips)	Total Deflect (in)	Rotation Sway (deg)	Rotation Twist (deg)	Stress Ratio
0.00	-31.80	-23.77	0.00	-2347.7	0.00	2347.74	3003.53	1501.76	5797.25	2902.93	0.00	0.000	0.000	0.820
5.00	-30.55	-23.50	0.00	-2228.9	0.00	2228.91	2960.91	1480.45	5573.38	2790.83	0.13	-0.252	0.000	0.809
10.00	-29.32	-23.23	0.00	-2111.4	0.00	2111.43	2916.70	1458.35	5350.68	2679.32	0.54	-0.509	0.000	0.798
15.00	-28.12	-22.96	0.00	-1995.2	0.00	1995.29	2870.92	1435.46	5129.40	2568.51	1.21	-0.771	0.000	0.787
20.00	-26.94	-22.68	0.00	-1880.4	0.00	1880.47	2823.56	1411.78	4909.74	2458.52	2.16	-1.039	0.000	0.775
25.00	-25.78	-22.38	0.00	-1767.0	0.00	1767.09	2774.61	1387.31	4691.94	2349.46	3.40	-1.313	0.000	0.762
30.00	-24.66	-22.06	0.00	-1655.2	0.00	1655.21	2724.09	1362.04	4476.23	2241.44	4.92	-1.592	0.000	0.748
35.00	-23.55	-21.74	0.00	-1544.9	0.00	1544.91	2671.99	1335.99	4262.83	2134.58	6.74	-1.876	0.000	0.733
40.00	-22.47	-21.41	0.00	-1436.2	0.00	1436.21	2618.30	1309.15	4051.97	2029.00	8.86	-2.165	0.000	0.717
45.00	-21.44	-21.06	0.00	-1329.1	0.00	1329.16	2563.04	1281.52	3843.87	1924.79	11.28	-2.458	0.000	0.699
48.50	-20.74	-20.80	0.00	-1255.4	0.00	1255.46	2523.41	1261.71	3699.97	1852.74	13.16	-2.669	0.000	0.686
50.00	-20.24	-20.71	0.00	-1224.2	0.00	1224.26	2506.19	1253.10	3638.77	1822.09	14.02	-2.762	0.000	0.680
53.25	-19.23	-20.45	0.00	-1156.9	0.00	1156.95	1850.79	925.39	2677.47	1340.72	15.97	-2.960	0.000	0.874
55.00	-18.88	-20.38	0.00	-1121.1	0.00	1121.16	1837.85	918.92	2627.99	1315.95	17.07	-3.069	0.000	0.863
60.00	-18.01	-20.05	0.00	-1019.2	0.00	1019.29	1799.82	899.91	2487.54	1245.62	20.48	-3.430	0.000	0.829
65.00	-17.17	-19.72	0.00	-919.05	0.00	919.05	1760.21	880.10	2348.61	1176.05	24.27	-3.792	0.000	0.792
70.00	-16.35	-19.39	0.00	-820.45	0.00	820.45	1719.02	859.51	2211.45	1107.37	28.43	-4.153	0.000	0.751
75.00	-15.55	-19.06	0.00	-723.52	0.00	723.52	1676.25	838.13	2076.26	1039.67	32.97	-4.510	0.000	0.706
80.00	-14.79	-18.72	0.00	-628.24	0.00	628.24	1631.90	815.95	1943.29	973.09	37.87	-4.859	0.000	0.655
85.00	-14.07	-18.37	0.00	-534.62	0.00	534.62	1585.97	792.99	1812.75	907.72	43.14	-5.197	0.000	0.598
87.00	-12.25	-16.37	0.00	-497.89	0.00	497.89	1567.16	783.58	1761.26	881.94	45.35	-5.333	0.000	0.573
90.00	-11.82	-16.18	0.00	-448.78	0.00	448.78	1538.46	769.23	1684.87	843.69	48.76	-5.529	0.000	0.540
95.00	-11.17	-15.82	0.00	-367.87	0.00	367.87	1489.37	744.69	1559.88	781.10	54.70	-5.834	0.000	0.479
97.00	-9.49	-12.91	0.00	-336.22	0.00	336.22	1469.29	734.65	1510.75	756.50	57.17	-5.954	0.000	0.451
98.75	-9.30	-12.79	0.00	-313.63	0.00	313.63	1451.52	725.76	1468.18	735.18	59.37	-6.056	0.000	0.433
100.00	-9.08	-12.71	0.00	-297.64	0.00	297.64	1437.39	718.70	1436.71	719.42	60.96	-6.129	0.000	0.420
102.00	-8.74	-12.56	0.00	-272.22	0.00	272.22	990.34	495.17	991.38	496.43	63.55	-6.240	0.000	0.558
105.00	-8.48	-12.37	0.00	-234.53	0.00	234.53	971.88	485.94	945.01	473.21	67.51	-6.398	0.000	0.505
107.00	-5.93	-7.75	0.00	-209.79	0.00	209.79	959.26	479.63	914.39	457.88	70.22	-6.525	0.000	0.465
110.00	-5.70	-7.56	0.00	-186.55	0.00	186.55	939.85	469.93	868.93	435.11	74.36	-6.705	0.000	0.435
115.00	-5.35	-7.26	0.00	-148.73	0.00	148.73	906.24	453.12	794.52	397.85	81.52	-6.983	0.000	0.380
120.00	-5.01	-6.96	0.00	-112.45	0.00	112.45	871.06	435.53	722.01	361.54	88.96	-7.236	0.000	0.317
125.00	-4.70	-6.66	0.00	-77.67	0.00	77.67	834.29	417.15	651.64	326.30	96.64	-7.455	0.000	0.244
130.00	-4.41	-6.38	0.00	-44.35	0.00	44.35	791.03	395.51	580.02	290.44	104.52	-7.622	0.000	0.159
135.00	-4.14	-6.11	0.00	-12.45	0.00	12.45	739.97	369.98	507.20	253.97	112.54	-7.715	0.000	0.055
137.00	-0.07	-0.12	0.00	-0.24	0.00	0.24	719.55	359.77	479.43	240.07	115.76	-7.726	0.000	0.001
139.00	0.00	-0.11	0.00	0.00	0.00	0.00	699.12	349.56	452.45	226.56	118.99	-7.726	0.000	0.000

Copyright © 2020 by Tower Engineering Solutions, LLC. All rights reserved.

Wind Loading - Shaft

Structure:	CT13549-S-SBA		**Code:**	EIA/TIA-222-G	11/13/2020
Site Name:	Danbury 1		**Exposure:**	C	
Height:	139.00 (ft)		**Crest Height:**	0.00	
Base Elev:	0.000 (ft)		**Site Class:**	D - Stiff Soil	
Gh:	1.1	**Topography:** 1	**Struct Class:**	II	Page: 15

Tower Engineering Solutions

Load Case: 0.9D + 1.6W 93 mph Wind

Dead Load Factor 0.90

Wind Load Factor 1.60

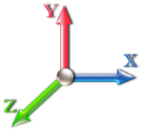

Iterations 26

Elev (ft)	Description	Kzt	Kz	qz (psf)	qzGh (psf)	C (mph-ft)	Cf	Ice Thick (in)	Tributary (ft)	Aa (sf)	CfAa (sf)	Wind Force X (lb)	Dead Load Ice (lb)	Tot Dead Load (lb)
0.00		1.00	0.85	17.879	19.67	342.67	0.650	0.000	0.00	0.000	0.00	0.0	0.0	0.0
5.00		1.00	0.85	17.879	19.67	334.29	0.650	0.000	5.00	19.738	12.83	403.7	0.0	703.8
10.00		1.00	0.85	17.879	19.67	325.91	0.650	0.000	5.00	19.250	12.51	393.7	0.0	686.3
15.00		1.00	0.85	17.879	19.67	317.53	0.650	0.000	5.00	18.761	12.19	383.7	0.0	668.7
20.00		1.00	0.90	18.971	20.87	318.45	0.650	0.000	5.00	18.273	11.88	396.6	0.0	651.2
25.00		1.00	0.95	19.883	21.87	317.18	0.650	0.000	5.00	17.784	11.56	404.5	0.0	633.6
30.00		1.00	0.98	20.661	22.73	314.32	0.650	0.000	5.00	17.295	11.24	408.8	0.0	616.1
35.00		1.00	1.01	21.343	23.48	310.31	0.650	0.000	5.00	16.807	10.92	410.4	0.0	598.6
40.00		1.00	1.04	21.951	24.15	305.42	0.650	0.000	5.00	16.318	10.61	409.8	0.0	581.0
45.00		1.00	1.07	22.502	24.75	299.83	0.650	0.000	5.00	15.830	10.29	407.5	0.0	563.5
48.50	Bot - Section 2	1.00	1.09	22.860	25.15	295.57	0.650	0.000	3.50	10.790	7.01	282.2	0.0	384.0
50.00		1.00	1.09	23.007	25.31	293.67	0.650	0.000	1.50	4.614	3.00	121.5	0.0	293.5
53.25	Top - Section 1	1.00	1.11	23.314	25.65	289.40	0.650	0.000	3.25	9.847	6.40	262.6	0.0	626.3
55.00		1.00	1.12	23.473	25.82	291.19	0.650	0.000	1.75	5.217	3.39	140.1	0.0	148.7
60.00		1.00	1.14	23.907	26.30	284.18	0.650	0.000	5.00	14.575	9.47	398.6	0.0	415.5
65.00		1.00	1.16	24.313	26.74	276.81	0.650	0.000	5.00	14.087	9.16	391.8	0.0	401.5
70.00		1.00	1.17	24.696	27.17	269.13	0.650	0.000	5.00	13.598	8.84	384.2	0.0	387.5
75.00		1.00	1.19	25.057	27.56	261.17	0.650	0.000	5.00	13.109	8.52	375.8	0.0	373.4
80.00		1.00	1.21	25.400	27.94	252.97	0.650	0.000	5.00	12.621	8.20	366.7	0.0	359.4
85.00		1.00	1.22	25.726	28.30	244.53	0.650	0.000	5.00	12.132	7.89	357.1	0.0	345.4
87.00	Appurtenance(s)	1.00	1.23	25.852	28.44	241.10	0.650	0.000	2.00	4.716	3.07	139.5	0.0	134.2
90.00		1.00	1.24	26.037	28.64	235.90	0.650	0.000	3.00	6.928	4.50	206.3	0.0	197.1
95.00		1.00	1.25	26.336	28.97	227.08	0.650	0.000	5.00	11.155	7.25	336.1	0.0	317.3
97.00	Appurtenance(s)	1.00	1.26	26.451	29.10	223.50	0.650	0.000	2.00	4.325	2.81	130.9	0.0	123.0
98.75	Bot - Section 3	1.00	1.26	26.551	29.21	220.34	0.650	0.000	1.75	3.720	2.42	113.0	0.0	105.8
100.00		1.00	1.27	26.621	29.28	218.08	0.650	0.000	1.25	2.660	1.73	81.0	0.0	131.4
102.00	Top - Section 2	1.00	1.27	26.733	29.41	214.44	0.650	0.000	2.00	4.193	2.73	128.2	0.0	207.0
105.00		1.00	1.28	26.896	29.59	212.26	0.650	0.000	3.00	6.143	3.99	189.0	0.0	131.3
107.00	Appurtenance(s)	1.00	1.28	27.003	29.70	208.57	0.650	0.000	2.00	3.998	2.60	123.5	0.0	85.4
110.00		1.00	1.29	27.161	29.88	202.98	0.650	0.000	3.00	5.850	3.80	181.8	0.0	125.0
115.00		1.00	1.30	27.416	30.16	193.55	0.650	0.000	5.00	9.359	6.08	293.5	0.0	199.9
120.00		1.00	1.32	27.663	30.43	184.00	0.650	0.000	5.00	8.871	5.77	280.7	0.0	189.3
125.00		1.00	1.33	27.902	30.69	174.33	0.650	0.000	5.00	8.382	5.45	267.5	0.0	178.8
130.00		1.00	1.34	28.133	30.95	164.54	0.650	0.000	5.00	7.893	5.13	254.0	0.0	168.3
135.00		1.00	1.35	28.358	31.19	154.64	0.650	0.000	5.00	7.405	4.81	240.2	0.0	157.8
137.00	Appurtenance(s)	1.00	1.35	28.446	31.29	150.65	0.650	0.000	2.00	2.825	1.84	91.9	0.0	60.2
139.00	Appurtenance(s)	1.00	1.36	28.533	31.39	146.65	0.650	0.000	2.00	2.747	1.79	89.7	0.0	58.5
								Totals:	**139.00**			**9,846.2**		**12,008.1**

Copyright © 2020 by Tower Engineering Solutions, LLC. All rights reserved.

Discrete Appurtenance Forces

Structure:	CT13549-S-SBA		**Code:**	EIA/TIA-222-G	11/13/2020
Site Name:	Danbury 1		**Exposure:**	C	
Height:	139.00 (ft)		**Crest Height:**	0.00	
Base Elev:	0.000 (ft)		**Site Class:**	D - Stiff Soil	
Gh:	1.1	**Topography:** 1	**Struct Class:**	II	Page: 16

Tower Engineering Solutions

Load Case: 0.9D + 1.6W 93 mph Wind

Dead Load Factor 0.90

Wind Load Factor 1.60

Iterations 26

No.	Elev (ft)	Description	Qty	qz (psf)	qzGh (psf)	Orient Factor x Ka	Ka	Total CaAa (sf)	Dead Load (lb)	Horiz Ecc (ft)	Vert Ecc (ft)	Wind FX (lb)	Mom Y (lb-ft)	Mom Z (lb-ft)
1	139.00	6' Lightning rod	1	28.533	31.386	1.00	1.00	0.38	5.85	0.000	0.000	19.08	0.00	0.00
2	137.00	Air 32	3	28.446	31.290	0.65	0.75	12.74	356.94	0.000	0.000	637.99	0.00	0.00
3	137.00	AIR6449 B41	3	28.446	31.290	0.53	0.75	9.03	278.10	0.000	0.000	451.87	0.00	0.00
4	137.00	RFS	3	28.446	31.290	0.52	0.75	31.88	345.60	0.000	0.000	1595.95	0.00	0.00
5	137.00	KRY 112 144/1	3	28.446	31.290	0.50	0.75	0.62	29.70	0.000	0.000	30.94	0.00	0.00
6	137.00	SDX1926Q-43	1	28.446	31.290	0.50	0.75	0.19	6.30	0.000	0.000	9.56	0.00	0.00
7	137.00	RMQP-4096-HRK	1	28.446	31.290	1.00	1.00	46.00	2204.10	0.000	0.000	2302.96	0.00	0.00
8	137.00	4415 B25	3	28.446	31.290	0.50	0.75	2.80	125.01	0.000	0.000	140.38	0.00	0.00
9	137.00	Radio 4449 B71+B12	3	28.446	31.290	0.50	0.75	2.49	189.00	0.000	0.000	124.53	0.00	0.00
10	107.00	DBC20056F1V1	3	27.003	29.704	0.54	0.80	0.66	17.82	0.000	0.000	31.33	0.00	0.00
11	107.00	OPA-65R-LCUU-H6	3	27.003	29.704	0.63	0.80	18.32	216.00	0.000	0.000	870.46	0.00	0.00
12	107.00	EPBQ-652L8H6-L2	3	27.003	29.704	0.68	0.80	19.71	196.56	0.000	0.000	936.57	0.00	0.00
13	107.00	Collar Mount Commscope	1	27.003	29.704	1.00	1.00	5.00	110.16	0.000	0.000	237.63	0.00	0.00
14	107.00	DTMABP7819VG12A	3	27.003	29.704	0.54	0.80	1.83	51.84	0.000	0.000	87.12	0.00	0.00
15	107.00	RRUS-E2	3	27.003	29.704	0.54	0.80	2.65	207.90	0.000	0.000	126.10	0.00	0.00
16	107.00	T-Arm Commscope	3	27.003	29.704	0.56	0.75	16.88	480.60	0.000	0.000	802.00	0.00	0.00
17	107.00	DC6-48-60-18-8F	3	27.003	29.704	0.54	0.80	2.36	85.86	0.000	0.000	112.34	0.00	0.00
18	107.00	RRUS A2	3	27.003	29.704	0.54	0.80	2.99	57.24	0.000	0.000	142.14	0.00	0.00
19	107.00	RRUS 12	3	27.003	29.704	0.54	0.80	5.07	156.60	0.000	0.000	240.73	0.00	0.00
20	107.00	RRUS-11 700MHz	3	27.003	29.704	0.54	0.80	4.05	136.89	0.000	0.000	192.58	0.00	0.00
21	107.00	RRUS 4449 B5/B12	3	27.003	29.704	0.54	0.80	2.65	229.50	0.000	0.000	126.10	0.00	0.00
22	107.00	RRUS-32	3	27.003	29.704	0.54	0.80	6.22	207.90	0.000	0.000	295.75	0.00	0.00
23	97.00	BXA-171063/12CF	3	26.451	29.096	0.67	0.80	9.64	40.50	0.000	0.000	448.62	0.00	0.00
24	97.00	Standoff	3	26.451	29.096	0.56	0.75	13.50	945.00	0.000	0.000	628.48	0.00	0.00
25	97.00	BXA-70063/6CF	3	26.451	29.096	0.56	0.80	12.72	45.90	0.000	0.000	592.06	0.00	0.00
26	97.00	RRH2x40-AWS	3	26.451	29.096	0.54	0.80	4.05	118.80	0.000	0.000	188.65	0.00	0.00
27	97.00	DBXNH-6565A-VTM	3	26.451	29.096	0.64	0.80	10.31	92.34	0.000	0.000	479.99	0.00	0.00
28	97.00	FD9R6004/2C-3L (3.1 lbs)	6	26.451	29.096	0.54	0.80	1.16	16.74	0.000	0.000	53.90	0.00	0.00
29	97.00	DB-T1-6Z-8AB-0Z	1	26.451	29.096	1.00	1.00	4.80	17.01	0.000	0.000	223.46	0.00	0.00
30	87.00	0208	3	25.852	28.438	0.54	0.80	2.20	53.46	0.000	0.000	100.23	0.00	0.00
31	87.00	4415	2	25.852	28.438	0.54	0.80	1.99	79.38	0.000	0.000	90.72	0.00	0.00
32	87.00	SF-SU7-2-96	3	25.852	28.438	0.56	0.75	25.48	1066.50	0.000	0.000	1159.40	0.00	0.00
33	87.00	ODI2-065R18K-GQ	3	25.852	28.438	0.56	0.80	8.15	67.77	0.000	0.000	370.73	0.00	0.00
							Totals:		**8,238.87**			**13,850.36**		

Copyright © 2020 by Tower Engineering Solutions, LLC. All rights reserved.

Total Applied Force Summary

Structure:	CT13549-S-SBA		**Code:**	EIA/TIA-222-G	11/13/2020
Site Name:	Danbury 1		**Exposure:**	C	
Height:	139.00 (ft)		**Crest Height:**	0.00	
Base Elev:	0.000 (ft)		**Site Class:**	D - Stiff Soil	
Gh:	1.1	**Topography:** 1	**Struct Class:**	II	Page: 17

Tower Engineering Solutions

Load Case: 0.9D + 1.6W 93 mph Wind

Dead Load Factor 0.90

Wind Load Factor 1.60

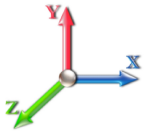

Iterations 26

Elev (ft)	Description	Lateral FX (-) (lb)	Axial FY (-) (lb)	Torsion MY (lb-ft)	Moment MZ (lb-ft)
0.00		0.00	0.00	0.00	0.00
5.00		403.73	861.08	0.00	0.00
10.00		393.73	843.54	0.00	0.00
15.00		383.74	826.00	0.00	0.00
20.00		396.56	808.46	0.00	0.00
25.00		404.52	790.92	0.00	0.00
30.00		408.80	773.38	0.00	0.00
35.00		410.35	755.84	0.00	0.00
40.00		409.78	738.30	0.00	0.00
45.00		407.49	720.76	0.00	0.00
48.50		282.17	494.10	0.00	0.00
50.00		121.45	340.73	0.00	0.00
53.25		262.63	728.50	0.00	0.00
55.00		140.09	203.80	0.00	0.00
60.00		398.63	572.81	0.00	0.00
65.00		391.81	558.78	0.00	0.00
70.00		384.17	544.75	0.00	0.00
75.00		375.78	530.71	0.00	0.00
80.00		366.73	516.68	0.00	0.00
85.00		357.06	502.65	0.00	0.00
87.00	(11) attachments	1860.57	1464.24	0.00	0.00
90.00		206.35	289.71	0.00	0.00
95.00		336.08	471.62	0.00	0.00
97.00	(22) attachments	2746.04	1461.01	0.00	0.00
98.75		113.00	138.40	0.00	0.00
100.00		81.02	154.68	0.00	0.00
102.00		128.24	244.29	0.00	0.00
105.00		189.02	187.21	0.00	0.00
107.00	(37) attachments	4324.34	2277.57	0.00	0.00
110.00		181.77	165.67	0.00	0.00
115.00		293.54	267.70	0.00	0.00
120.00		280.72	257.17	0.00	0.00
125.00		267.55	246.65	0.00	0.00
130.00		254.04	236.12	0.00	0.00
135.00		240.22	225.60	0.00	0.00
137.00	(20) attachments	5386.11	3622.04	0.00	0.00
139.00	(1) attachments	108.74	66.69	0.00	0.00
	Totals:	**23,696.60**	**23,888.18**	**0.00**	**0.00**

Copyright © 2020 by Tower Engineering Solutions, LLC. All rights reserved.

Linear Appurtenance Segment Forces (Factored)

Structure:	CT13549-S-SBA	**Code:**	EIA/TIA-222-G	11/13/2020	
Site Name:	Danbury 1	**Exposure:**	C		
Height:	139.00 (ft)	**Crest Height:**	0.00		
Base Elev:	0.000 (ft)	**Site Class:**	D - Stiff Soil		
Gh:	1.1 **Topography:** 1	**Struct Class:**	II	Page: 18	

Load Case: 0.9D + 1.6W 93 mph Wind

Iterations 26

Dead Load Factor 0.90

Wind Load Factor 1.60

Top Elev (ft)	Description	Wind Exposed	Length (ft)	Ca	Exposed Width (in)	Area (sqft)	CaAa (sqft)	Ra	Cf Adjust Factor	qz (psf)	F X (lb)	Dead Load (lb)
5.00	Safety Cable	Yes	5.00	0.000	0.00	0.00	0.00	0.000	0.000	17.879	0.00	1.23
5.00	Step bolts (ladder)	Yes	5.00	0.000	0.00	0.00	0.00	0.000	0.000	17.879	0.00	4.68
10.00	Safety Cable	Yes	5.00	0.000	0.00	0.00	0.00	0.000	0.000	17.879	0.00	1.23
10.00	Step bolts (ladder)	Yes	5.00	0.000	0.00	0.00	0.00	0.000	0.000	17.879	0.00	4.68
15.00	Safety Cable	Yes	5.00	0.000	0.00	0.00	0.00	0.000	0.000	17.879	0.00	1.23
15.00	Step bolts (ladder)	Yes	5.00	0.000	0.00	0.00	0.00	0.000	0.000	17.879	0.00	4.68
20.00	Safety Cable	Yes	5.00	0.000	0.00	0.00	0.00	0.000	0.000	18.971	0.00	1.23
20.00	Step bolts (ladder)	Yes	5.00	0.000	0.00	0.00	0.00	0.000	0.000	18.971	0.00	4.68
25.00	Safety Cable	Yes	5.00	0.000	0.00	0.00	0.00	0.000	0.000	19.883	0.00	1.23
25.00	Step bolts (ladder)	Yes	5.00	0.000	0.00	0.00	0.00	0.000	0.000	19.883	0.00	4.68
30.00	Safety Cable	Yes	5.00	0.000	0.00	0.00	0.00	0.000	0.000	20.661	0.00	1.23
30.00	Step bolts (ladder)	Yes	5.00	0.000	0.00	0.00	0.00	0.000	0.000	20.661	0.00	4.68
35.00	Safety Cable	Yes	5.00	0.000	0.00	0.00	0.00	0.000	0.000	21.343	0.00	1.23
35.00	Step bolts (ladder)	Yes	5.00	0.000	0.00	0.00	0.00	0.000	0.000	21.343	0.00	4.68
40.00	Safety Cable	Yes	5.00	0.000	0.00	0.00	0.00	0.000	0.000	21.951	0.00	1.23
40.00	Step bolts (ladder)	Yes	5.00	0.000	0.00	0.00	0.00	0.000	0.000	21.951	0.00	4.68
45.00	Safety Cable	Yes	5.00	0.000	0.00	0.00	0.00	0.000	0.000	22.502	0.00	1.23
45.00	Step bolts (ladder)	Yes	5.00	0.000	0.00	0.00	0.00	0.000	0.000	22.502	0.00	4.68
48.50	Safety Cable	Yes	3.50	0.000	0.00	0.00	0.00	0.000	0.000	22.860	0.00	0.86
48.50	Step bolts (ladder)	Yes	3.50	0.000	0.00	0.00	0.00	0.000	0.000	22.860	0.00	3.28
50.00	Safety Cable	Yes	1.50	0.000	0.00	0.00	0.00	0.000	0.000	23.007	0.00	0.37
50.00	Step bolts (ladder)	Yes	1.50	0.000	0.00	0.00	0.00	0.000	0.000	23.007	0.00	1.40
53.25	Safety Cable	Yes	3.25	0.000	0.00	0.00	0.00	0.000	0.000	23.314	0.00	0.80
53.25	Step bolts (ladder)	Yes	3.25	0.000	0.00	0.00	0.00	0.000	0.000	23.314	0.00	3.04
55.00	Safety Cable	Yes	1.75	0.000	0.00	0.00	0.00	0.000	0.000	23.473	0.00	0.43
55.00	Step bolts (ladder)	Yes	1.75	0.000	0.00	0.00	0.00	0.000	0.000	23.473	0.00	1.64
60.00	Safety Cable	Yes	5.00	0.000	0.00	0.00	0.00	0.000	0.000	23.907	0.00	1.23
60.00	Step bolts (ladder)	Yes	5.00	0.000	0.00	0.00	0.00	0.000	0.000	23.907	0.00	4.68
65.00	Safety Cable	Yes	5.00	0.000	0.00	0.00	0.00	0.000	0.000	24.313	0.00	1.23
65.00	Step bolts (ladder)	Yes	5.00	0.000	0.00	0.00	0.00	0.000	0.000	24.313	0.00	4.68
70.00	Safety Cable	Yes	5.00	0.000	0.00	0.00	0.00	0.000	0.000	24.696	0.00	1.23
70.00	Step bolts (ladder)	Yes	5.00	0.000	0.00	0.00	0.00	0.000	0.000	24.696	0.00	4.68
75.00	Safety Cable	Yes	5.00	0.000	0.00	0.00	0.00	0.000	0.000	25.057	0.00	1.23
75.00	Step bolts (ladder)	Yes	5.00	0.000	0.00	0.00	0.00	0.000	0.000	25.057	0.00	4.68
80.00	Safety Cable	Yes	5.00	0.000	0.00	0.00	0.00	0.000	0.000	25.400	0.00	1.23
80.00	Step bolts (ladder)	Yes	5.00	0.000	0.00	0.00	0.00	0.000	0.000	25.400	0.00	4.68
85.00	Safety Cable	Yes	5.00	0.000	0.00	0.00	0.00	0.000	0.000	25.726	0.00	1.23
85.00	Step bolts (ladder)	Yes	5.00	0.000	0.00	0.00	0.00	0.000	0.000	25.726	0.00	4.68
87.00	Safety Cable	Yes	2.00	0.000	0.00	0.00	0.00	0.000	0.000	25.852	0.00	0.49
87.00	Step bolts (ladder)	Yes	2.00	0.000	0.00	0.00	0.00	0.000	0.000	25.852	0.00	1.87
90.00	Safety Cable	Yes	3.00	0.000	0.00	0.00	0.00	0.000	0.000	26.037	0.00	0.74
90.00	Step bolts (ladder)	Yes	3.00	0.000	0.00	0.00	0.00	0.000	0.000	26.037	0.00	2.81
95.00	Safety Cable	Yes	5.00	0.000	0.00	0.00	0.00	0.000	0.000	26.336	0.00	1.23
95.00	Step bolts (ladder)	Yes	5.00	0.000	0.00	0.00	0.00	0.000	0.000	26.336	0.00	4.68
97.00	Safety Cable	Yes	2.00	0.000	0.00	0.00	0.00	0.000	0.000	26.451	0.00	0.49
97.00	Step bolts (ladder)	Yes	2.00	0.000	0.00	0.00	0.00	0.000	0.000	26.451	0.00	1.87
98.75	Safety Cable	Yes	1.75	0.000	0.00	0.00	0.00	0.000	0.000	26.551	0.00	0.43

Copyright © 2020 by Tower Engineering Solutions, LLC. All rights reserved.

Linear Appurtenance Segment Forces (Factored)

Structure:	CT13549-S-SBA	**Code:**	EIA/TIA-222-G	11/13/2020	
Site Name:	Danbury 1	**Exposure:**	C		
Height:	139.00 (ft)	**Crest Height:**	0.00		
Base Elev:	0.000 (ft)	**Site Class:**	D - Stiff Soil		
Gh:	1.1 **Topography:** 1	**Struct Class:**	II	Page: 19	

Load Case: 0.9D + 1.6W 93 mph Wind

Dead Load Factor 0.90

Wind Load Factor 1.60

Iterations 26

Top Elev (ft)	Description	Wind Exposed	Length (ft)	Ca	Exposed Width (in)	Area (sqft)	CaAa (sqft)	Ra	Cf Adjust Factor	qz (psf)	F X (lb)	Dead Load (lb)
98.75	Step bolts (ladder)	Yes	1.75	0.000	0.00	0.00	0.00	0.000	0.000	26.551	0.00	1.64
100.00	Safety Cable	Yes	1.25	0.000	0.00	0.00	0.00	0.000	0.000	26.621	0.00	0.31
100.00	Step bolts (ladder)	Yes	1.25	0.000	0.00	0.00	0.00	0.000	0.000	26.621	0.00	1.17
102.00	Safety Cable	Yes	2.00	0.000	0.00	0.00	0.00	0.000	0.000	26.733	0.00	0.49
102.00	Step bolts (ladder)	Yes	2.00	0.000	0.00	0.00	0.00	0.000	0.000	26.733	0.00	1.87
105.00	Safety Cable	Yes	3.00	0.000	0.00	0.00	0.00	0.000	0.000	26.896	0.00	0.74
105.00	Step bolts (ladder)	Yes	3.00	0.000	0.00	0.00	0.00	0.000	0.000	26.896	0.00	2.81
107.00	Safety Cable	Yes	2.00	0.000	0.00	0.00	0.00	0.000	0.000	27.003	0.00	0.49
107.00	Step bolts (ladder)	Yes	2.00	0.000	0.00	0.00	0.00	0.000	0.000	27.003	0.00	1.87
110.00	Safety Cable	Yes	3.00	0.000	0.00	0.00	0.00	0.000	0.000	27.161	0.00	0.74
110.00	Step bolts (ladder)	Yes	3.00	0.000	0.00	0.00	0.00	0.000	0.000	27.161	0.00	2.81
115.00	Safety Cable	Yes	5.00	0.000	0.00	0.00	0.00	0.000	0.000	27.416	0.00	1.23
115.00	Step bolts (ladder)	Yes	5.00	0.000	0.00	0.00	0.00	0.000	0.000	27.416	0.00	4.68
120.00	Safety Cable	Yes	5.00	0.000	0.00	0.00	0.00	0.000	0.000	27.663	0.00	1.23
120.00	Step bolts (ladder)	Yes	5.00	0.000	0.00	0.00	0.00	0.000	0.000	27.663	0.00	4.68
125.00	Safety Cable	Yes	5.00	0.000	0.00	0.00	0.00	0.000	0.000	27.902	0.00	1.23
125.00	Step bolts (ladder)	Yes	5.00	0.000	0.00	0.00	0.00	0.000	0.000	27.902	0.00	4.68
130.00	Safety Cable	Yes	5.00	0.000	0.00	0.00	0.00	0.000	0.000	28.133	0.00	1.23
130.00	Step bolts (ladder)	Yes	5.00	0.000	0.00	0.00	0.00	0.000	0.000	28.133	0.00	4.68
135.00	Safety Cable	Yes	5.00	0.000	0.00	0.00	0.00	0.000	0.000	28.358	0.00	1.23
135.00	Step bolts (ladder)	Yes	5.00	0.000	0.00	0.00	0.00	0.000	0.000	28.358	0.00	4.68
137.00	Safety Cable	Yes	2.00	0.000	0.00	0.00	0.00	0.000	0.000	28.446	0.00	0.49
137.00	Step bolts (ladder)	Yes	2.00	0.000	0.00	0.00	0.00	0.000	0.000	28.446	0.00	1.87
139.00	Safety Cable	Yes	2.00	0.000	0.00	0.00	0.00	0.000	0.000	28.533	0.00	0.49
139.00	Step bolts (ladder)	Yes	2.00	0.000	0.00	0.00	0.00	0.000	0.000	28.533	0.00	1.87
										Totals:	**0.0**	**164.3**

Copyright © 2020 by Tower Engineering Solutions, LLC. All rights reserved.

Calculated Forces

Structure:	CT13549-S-SBA		**Code:**	EIA/TIA-222-G	11/13/2020
Site Name:	Danbury 1		**Exposure:**	C	
Height:	139.00 (ft)		**Crest Height:**	0.00	
Base Elev:	0.000 (ft)		**Site Class:**	D - Stiff Soil	
Gh:	1.1	**Topography:** 1	**Struct Class:**	II	Page: 20

Load Case: 0.9D + 1.6W 93 mph Wind

Dead Load Factor 0.90

Wind Load Factor 1.60

Iterations 26

Seg Elev (ft)	Pu FY (-) (kips)	Vu FX (-) (kips)	Tu MY (-) (ft-kips)	Mu MZ (ft-kips)	Mu MX (ft-kips)	Resultant Moment (ft-kips)	phi Pn (kips)	phi Vn (kips)	phi Tn (ft-kips)	phi Mn (ft-kips)	Total Deflect (in)	Rotation Sway (deg)	Rotation Twist (deg)	Stress Ratio
0.00	-23.84	-23.75	0.00	-2315.4	0.00	2315.42	3003.53	1501.76	5797.25	2902.93	0.00	0.000	0.000	0.806
5.00	-22.87	-23.44	0.00	-2196.6	0.00	2196.68	2960.91	1480.45	5573.38	2790.83	0.13	-0.248	0.000	0.795
10.00	-21.93	-23.14	0.00	-2079.4	0.00	2079.47	2916.70	1458.35	5350.68	2679.32	0.53	-0.501	0.000	0.784
15.00	-21.00	-22.85	0.00	-1963.7	0.00	1963.76	2870.92	1435.46	5129.40	2568.51	1.19	-0.760	0.000	0.772
20.00	-20.10	-22.53	0.00	-1849.5	0.00	1849.53	2823.56	1411.78	4909.74	2458.52	2.13	-1.024	0.000	0.760
25.00	-19.21	-22.20	0.00	-1736.8	0.00	1736.88	2774.61	1387.31	4691.94	2349.46	3.35	-1.293	0.000	0.746
30.00	-18.34	-21.86	0.00	-1625.8	0.00	1625.88	2724.09	1362.04	4476.23	2241.44	4.85	-1.567	0.000	0.732
35.00	-17.49	-21.52	0.00	-1516.5	0.00	1516.57	2671.99	1335.99	4262.83	2134.58	6.64	-1.846	0.000	0.717
40.00	-16.66	-21.16	0.00	-1409.0	0.00	1409.00	2618.30	1309.15	4051.97	2029.00	8.72	-2.129	0.000	0.701
45.00	-15.87	-20.80	0.00	-1303.1	0.00	1303.19	2563.04	1281.52	3843.87	1924.79	11.11	-2.417	0.000	0.684
48.50	-15.34	-20.53	0.00	-1230.4	0.00	1230.40	2523.41	1261.71	3699.97	1852.74	12.95	-2.623	0.000	0.670
50.00	-14.95	-20.43	0.00	-1199.6	0.00	1199.60	2506.19	1253.10	3638.77	1822.09	13.79	-2.714	0.000	0.665
53.25	-14.18	-20.17	0.00	-1133.2	0.00	1133.20	1850.79	925.39	2677.47	1340.72	15.71	-2.909	0.000	0.853
55.00	-13.90	-20.08	0.00	-1097.9	0.00	1097.90	1837.85	918.92	2627.99	1315.95	16.80	-3.016	0.000	0.842
60.00	-13.23	-19.73	0.00	-997.51	0.00	997.51	1799.82	899.91	2487.54	1245.62	20.14	-3.369	0.000	0.809
65.00	-12.58	-19.38	0.00	-898.87	0.00	898.87	1760.21	880.10	2348.61	1176.05	23.86	-3.723	0.000	0.772
70.00	-11.95	-19.04	0.00	-801.96	0.00	801.96	1719.02	859.51	2211.45	1107.37	27.95	-4.076	0.000	0.732
75.00	-11.33	-18.69	0.00	-706.78	0.00	706.78	1676.25	838.13	2076.26	1039.67	32.40	-4.424	0.000	0.687
80.00	-10.74	-18.35	0.00	-613.33	0.00	613.33	1631.90	815.95	1943.29	973.09	37.21	-4.766	0.000	0.637
85.00	-10.20	-17.99	0.00	-521.60	0.00	521.60	1585.97	792.99	1812.75	907.72	42.38	-5.096	0.000	0.582
87.00	-8.86	-16.03	0.00	-485.63	0.00	485.63	1567.16	783.58	1761.26	881.94	44.54	-5.228	0.000	0.557
90.00	-8.52	-15.83	0.00	-437.54	0.00	437.54	1538.46	769.23	1684.87	843.69	47.88	-5.420	0.000	0.525
95.00	-8.03	-15.48	0.00	-358.38	0.00	358.38	1489.37	744.69	1559.88	781.10	53.71	-5.717	0.000	0.465
97.00	-6.83	-12.61	0.00	-327.42	0.00	327.42	1469.29	734.65	1510.75	756.50	56.13	-5.833	0.000	0.438
98.75	-6.69	-12.50	0.00	-305.34	0.00	305.34	1451.52	725.76	1468.18	735.18	58.28	-5.933	0.000	0.420
100.00	-6.52	-12.41	0.00	-289.72	0.00	289.72	1437.39	718.70	1436.71	719.42	59.84	-6.003	0.000	0.408
102.00	-6.27	-12.27	0.00	-264.89	0.00	264.89	990.34	495.17	991.38	496.43	62.38	-6.112	0.000	0.541
105.00	-6.07	-12.08	0.00	-228.08	0.00	228.08	971.88	485.94	945.01	473.21	66.26	-6.265	0.000	0.489
107.00	-4.26	-7.54	0.00	-203.92	0.00	203.92	959.26	479.63	914.39	457.88	68.91	-6.389	0.000	0.450
110.00	-4.09	-7.36	0.00	-181.29	0.00	181.29	939.85	469.93	868.93	435.11	72.97	-6.564	0.000	0.421
115.00	-3.83	-7.05	0.00	-144.50	0.00	144.50	906.24	453.12	794.52	397.85	79.98	-6.834	0.000	0.368
120.00	-3.58	-6.76	0.00	-109.23	0.00	109.23	871.06	435.53	722.01	361.54	87.25	-7.080	0.000	0.306
125.00	-3.35	-6.47	0.00	-75.45	0.00	75.45	834.29	417.15	651.64	326.30	94.77	-7.292	0.000	0.235
130.00	-3.13	-6.20	0.00	-43.08	0.00	43.08	791.03	395.51	580.02	290.44	102.48	-7.454	0.000	0.153
135.00	-2.93	-5.93	0.00	-12.10	0.00	12.10	739.97	369.98	507.20	253.97	110.32	-7.546	0.000	0.052
137.00	-0.05	-0.12	0.00	-0.23	0.00	0.23	719.55	359.77	479.43	240.07	113.48	-7.556	0.000	0.001
139.00	0.00	-0.11	0.00	0.00	0.00	0.00	699.12	349.56	452.45	226.56	116.63	-7.556	0.000	0.000

Copyright © 2020 by Tower Engineering Solutions, LLC. All rights reserved.

Wind Loading - Shaft

Structure:	CT13549-S-SBA		**Code:**	EIA/TIA-222-G	11/13/2020
Site Name:	Danbury 1		**Exposure:**	C	
Height:	139.00 (ft)		**Crest Height:**	0.00	
Base Elev:	0.000 (ft)		**Site Class:**	D - Stiff Soil	
Gh:	1.1	**Topography:** 1	**Struct Class:**	II	Page: 21

Tower Engineering Solutions

Load Case: 1.2D + 1.0Di + 1.0Wi 50 mph Wind

Dead Load Factor 1.20

Wind Load Factor 1.00

Iterations 26

Elev (ft)	Description	Kzt	Kz	qz (psf)	qzGh (psf)	C (mph-ft)	Cf	Ice Thick (in)	Tributary (ft)	Aa (sf)	CfAa (sf)	Wind Force X (lb)	Dead Load Ice (lb)	Tot Dead Load (lb)
0.00		1.00	0.85	5.168	5.68	0.00	1.200	0.000	0.00	0.000	0.00	0.0	0.0	0.0
5.00		1.00	0.85	5.168	5.68	0.00	1.200	1.242	5.00	20.773	24.93	141.7	368.1	1306.5
10.00		1.00	0.85	5.168	5.68	0.00	1.200	1.331	5.00	20.359	24.43	138.9	385.7	1300.7
15.00		1.00	0.85	5.168	5.68	0.00	1.200	1.386	5.00	19.916	23.90	135.9	392.1	1283.7
20.00		1.00	0.90	5.483	6.03	0.00	1.200	1.427	5.00	19.462	23.35	140.9	393.5	1261.8
25.00		1.00	0.95	5.747	6.32	0.00	1.200	1.459	5.00	19.000	22.80	144.1	392.1	1237.0
30.00		1.00	0.98	5.972	6.57	0.00	1.200	1.486	5.00	18.534	22.24	146.1	388.9	1210.3
35.00		1.00	1.01	6.169	6.79	0.00	1.200	1.509	5.00	18.064	21.68	147.1	384.2	1182.3
40.00		1.00	1.04	6.345	6.98	0.00	1.200	1.529	5.00	17.592	21.11	147.3	378.5	1153.2
45.00		1.00	1.07	6.504	7.15	0.00	1.200	1.547	5.00	17.119	20.54	147.0	371.9	1123.2
48.50	Bot - Section 2	1.00	1.09	6.608	7.27	0.00	1.200	1.559	3.50	11.699	14.04	102.0	256.9	768.9
50.00		1.00	1.09	6.650	7.32	0.00	1.200	1.564	1.50	5.005	6.01	43.9	110.9	502.3
53.25	Top - Section 1	1.00	1.11	6.739	7.41	0.00	1.200	1.574	3.25	10.699	12.84	95.2	237.0	1072.0
55.00		1.00	1.12	6.785	7.46	0.00	1.200	1.579	1.75	5.677	6.81	50.8	126.7	325.0
60.00		1.00	1.14	6.910	7.60	0.00	1.200	1.592	5.00	15.902	19.08	145.1	353.7	907.7
65.00		1.00	1.16	7.028	7.73	0.00	1.200	1.605	5.00	15.424	18.51	143.1	345.0	880.3
70.00		1.00	1.17	7.138	7.85	0.00	1.200	1.617	5.00	14.946	17.93	140.8	336.0	852.6
75.00		1.00	1.19	7.243	7.97	0.00	1.200	1.628	5.00	14.466	17.36	138.3	326.6	824.5
80.00		1.00	1.21	7.342	8.08	0.00	1.200	1.639	5.00	13.987	16.78	135.5	317.0	796.2
85.00		1.00	1.22	7.436	8.18	0.00	1.200	1.649	5.00	13.506	16.21	132.6	307.1	767.6
87.00	Appurtenance(s)	1.00	1.23	7.473	8.22	0.00	1.200	1.653	2.00	5.267	6.32	52.0	121.2	300.2
90.00		1.00	1.24	7.526	8.28	0.00	1.200	1.658	3.00	7.757	9.31	77.1	178.2	441.0
95.00		1.00	1.25	7.612	8.37	0.00	1.200	1.667	5.00	12.544	15.05	126.0	286.6	709.7
97.00	Appurtenance(s)	1.00	1.26	7.646	8.41	0.00	1.200	1.671	2.00	4.882	5.86	49.3	113.0	276.9
98.75	Bot - Section 3	1.00	1.26	7.675	8.44	0.00	1.200	1.674	1.75	4.209	5.05	42.6	97.5	238.6
100.00		1.00	1.27	7.695	8.46	0.00	1.200	1.676	1.25	3.010	3.61	30.6	70.0	245.2
102.00	Top - Section 2	1.00	1.27	7.727	8.50	0.00	1.200	1.679	2.00	4.753	5.70	48.5	110.3	386.3
105.00		1.00	1.28	7.774	8.55	0.00	1.200	1.684	3.00	6.985	8.38	71.7	161.5	336.6
107.00	Appurtenance(s)	1.00	1.28	7.805	8.59	0.00	1.200	1.687	2.00	4.560	5.47	47.0	106.0	219.8
110.00		1.00	1.29	7.851	8.64	0.00	1.200	1.692	3.00	6.696	8.04	69.4	155.0	321.6
115.00		1.00	1.30	7.925	8.72	0.00	1.200	1.699	5.00	10.775	12.93	112.7	247.3	513.7
120.00		1.00	1.32	7.996	8.80	0.00	1.200	1.707	5.00	10.293	12.35	108.6	236.0	488.5
125.00		1.00	1.33	8.065	8.87	0.00	1.200	1.714	5.00	9.810	11.77	104.4	224.7	463.1
130.00		1.00	1.34	8.132	8.95	0.00	1.200	1.720	5.00	9.327	11.19	100.1	213.2	437.6
135.00		1.00	1.35	8.197	9.02	0.00	1.200	1.727	5.00	8.844	10.61	95.7	201.6	411.9
137.00	Appurtenance(s)	1.00	1.35	8.222	9.04	0.00	1.200	1.729	2.00	3.402	4.08	36.9	78.7	159.0
139.00	Appurtenance(s)	1.00	1.36	8.247	9.07	0.00	1.200	1.732	2.00	3.324	3.99	36.2	76.9	154.8
								Totals:	**139.00**			**3,625.2**		**24,860.3**

Copyright © 2020 by Tower Engineering Solutions, LLC. All rights reserved.

Discrete Appurtenance Forces

Structure:	CT13549-S-SBA		**Code:**	EIA/TIA-222-G	11/13/2020
Site Name:	Danbury 1		**Exposure:**	C	
Height:	139.00 (ft)		**Crest Height:**	0.00	
Base Elev:	0.000 (ft)		**Site Class:**	D - Stiff Soil	
Gh:	1.1	**Topography:** 1	**Struct Class:**	II	Page: 22

Tower Engineering Solutions

Load Case: 1.2D + 1.0Di + 1.0Wi 50 mph Wind

Dead Load Factor 1.20

Wind Load Factor 1.00

Iterations 26

No.	Elev (ft)	Description	Qty	qz (psf)	qzGh (psf)	Orient Factor x Ka	Ka	Total CaAa (sf)	Dead Load (lb)	Horiz Ecc (ft)	Vert Ecc (ft)	Wind FX (lb)	Mom Y (lb-ft)	Mom Z (lb-ft)
1	139.00	6' Lightning rod	1	8.247	9.072	1.00	1.00	1.46	38.53	0.000	0.000	13.24	0.00	0.00
2	137.00	Air 32	3	8.222	9.044	0.65	0.75	15.03	1023.15	0.000	0.000	135.96	0.00	0.00
3	137.00	AIR6449 B41	3	8.222	9.044	0.53	0.75	10.53	683.34	0.000	0.000	95.24	0.00	0.00
4	137.00	RFS	3	8.222	9.044	0.52	0.75	34.84	1701.86	0.000	0.000	315.13	0.00	0.00
5	137.00	KRY 112 144/1	3	8.222	9.044	0.50	0.75	1.33	62.35	0.000	0.000	12.01	0.00	0.00
6	137.00	SDX1926Q-43	1	8.222	9.044	0.50	0.75	0.42	15.20	0.000	0.000	3.78	0.00	0.00
7	137.00	RMQP-4096-HRK	1	8.222	9.044	1.00	1.00	77.82	4690.08	0.000	0.000	703.86	0.00	0.00
8	137.00	4415 B25	3	8.222	9.044	0.50	0.75	3.65	346.89	0.000	0.000	32.98	0.00	0.00
9	137.00	Radio 4449 B71+B12	3	8.222	9.044	0.50	0.75	3.29	454.42	0.000	0.000	29.75	0.00	0.00
10	107.00	DBC20056F1V1	3	7.805	8.586	0.54	0.80	1.16	55.05	0.000	0.000	9.94	0.00	0.00
11	107.00	OPA-65R-LCUU-H6	3	7.805	8.586	0.63	0.80	20.81	956.35	0.000	0.000	178.71	0.00	0.00
12	107.00	EPBQ-652L8H6-L2	3	7.805	8.586	0.68	0.80	30.00	1074.08	0.000	0.000	257.55	0.00	0.00
13	107.00	Collar Mount Commscope	1	7.805	8.586	1.00	1.00	13.44	398.01	0.000	0.000	115.36	0.00	0.00
14	107.00	DTMABP7819VG12A	3	7.805	8.586	0.54	0.80	3.03	121.24	0.000	0.000	26.01	0.00	0.00
15	107.00	RRUS-E2	3	7.805	8.586	0.54	0.80	3.55	416.30	0.000	0.000	30.49	0.00	0.00
16	107.00	T-Arm Commscope	3	7.805	8.586	0.56	0.75	31.11	875.20	0.000	0.000	267.12	0.00	0.00
17	107.00	DC6-48-60-18-8F	3	7.805	8.586	0.54	0.80	3.45	240.69	0.000	0.000	29.64	0.00	0.00
18	107.00	RRUS A2	3	7.805	8.586	0.54	0.80	4.50	150.45	0.000	0.000	38.68	0.00	0.00
19	107.00	RRUS 12	3	7.805	8.586	0.54	0.80	6.17	483.44	0.000	0.000	52.99	0.00	0.00
20	107.00	RRUS-11 700MHz	3	7.805	8.586	0.54	0.80	5.06	439.28	0.000	0.000	43.46	0.00	0.00
21	107.00	RRUS 4449 B5/B12	3	7.805	8.586	0.54	0.80	6.85	647.28	0.000	0.000	58.82	0.00	0.00
22	107.00	RRUS-32	3	7.805	8.586	0.54	0.80	6.56	604.39	0.000	0.000	56.30	0.00	0.00
23	97.00	BXA-171063/12CF	3	7.646	8.410	0.67	0.80	14.19	247.01	0.000	0.000	119.34	0.00	0.00
24	97.00	Standoff	3	7.646	8.410	0.56	0.75	24.78	1751.72	0.000	0.000	208.39	0.00	0.00
25	97.00	BXA-70063/6CF	3	7.646	8.410	0.56	0.80	17.16	346.39	0.000	0.000	144.34	0.00	0.00
26	97.00	RRH2x40-AWS	3	7.646	8.410	0.54	0.80	5.93	280.60	0.000	0.000	49.91	0.00	0.00
27	97.00	DBXNH-6565A-VTM	3	7.646	8.410	0.64	0.80	13.94	378.25	0.000	0.000	117.25	0.00	0.00
28	97.00	FD9R6004/2C-3L (3.1 lbs)	6	7.646	8.410	0.54	0.80	2.52	54.62	0.000	0.000	21.22	0.00	0.00
29	97.00	DB-T1-6Z-8AB-0Z	1	7.646	8.410	1.00	1.00	5.63	159.23	0.000	0.000	47.38	0.00	0.00
30	87.00	0208	3	7.473	8.220	0.54	0.80	2.96	148.65	0.000	0.000	24.34	0.00	0.00
31	87.00	4415	2	7.473	8.220	0.54	0.80	2.58	175.29	0.000	0.000	21.17	0.00	0.00
32	87.00	SF-SU7-2-96	3	7.473	8.220	0.56	0.75	55.80	2053.73	0.000	0.000	458.69	0.00	0.00
33	87.00	ODI2-065R18K-GQ	3	7.473	8.220	0.56	0.80	9.71	327.02	0.000	0.000	79.82	0.00	0.00
							Totals:		**21,400.08**			**3,798.89**		

Copyright © 2020 by Tower Engineering Solutions, LLC. All rights reserved.

Total Applied Force Summary

Structure:	CT13549-S-SBA		**Code:**	EIA/TIA-222-G	11/13/2020
Site Name:	Danbury 1		**Exposure:**	C	
Height:	139.00 (ft)		**Crest Height:**	0.00	
Base Elev:	0.000 (ft)		**Site Class:**	D - Stiff Soil	
Gh:	1.1	**Topography:** 1	**Struct Class:**	II	Page: 23

Tower Engineering Solutions

Load Case: 1.2D + 1.0Di + 1.0Wi 50 mph Wind

Dead Load Factor 1.20

Wind Load Factor 1.00

Iterations 26

Elev (ft)	Description	Lateral FX (-) (lb)	Axial FY (-) (lb)	Torsion MY (lb-ft)	Moment MZ (lb-ft)
0.00		0.00	0.00	0.00	0.00
5.00		141.71	1540.15	0.00	0.00
10.00		138.89	1537.43	0.00	0.00
15.00		135.87	1522.49	0.00	0.00
20.00		140.87	1502.13	0.00	0.00
25.00		144.14	1478.61	0.00	0.00
30.00		146.10	1453.00	0.00	0.00
35.00		147.10	1425.89	0.00	0.00
40.00		147.34	1397.62	0.00	0.00
45.00		146.98	1368.45	0.00	0.00
48.50		102.04	940.85	0.00	0.00
50.00		43.94	576.04	0.00	0.00
53.25		95.18	1232.14	0.00	0.00
55.00		50.85	411.27	0.00	0.00
60.00		145.06	1154.80	0.00	0.00
65.00		143.09	1127.99	0.00	0.00
70.00		140.83	1100.78	0.00	0.00
75.00		138.30	1073.21	0.00	0.00
80.00		135.55	1045.33	0.00	0.00
85.00		132.57	1017.15	0.00	0.00
87.00	(11) attachments	635.97	3104.76	0.00	0.00
90.00		77.06	588.61	0.00	0.00
95.00		126.05	956.09	0.00	0.00
97.00	(22) attachments	757.11	3593.41	0.00	0.00
98.75		42.63	296.41	0.00	0.00
100.00		30.57	286.49	0.00	0.00
102.00		48.48	452.48	0.00	0.00
105.00		71.68	436.01	0.00	0.00
107.00	(37) attachments	1212.06	6747.93	0.00	0.00
110.00		69.39	400.95	0.00	0.00
115.00		112.72	646.30	0.00	0.00
120.00		108.64	621.38	0.00	0.00
125.00		104.44	596.30	0.00	0.00
130.00		100.12	571.08	0.00	0.00
135.00		95.69	545.73	0.00	0.00
137.00	(20) attachments	1365.64	9189.83	0.00	0.00
139.00	(1) attachments	49.43	213.96	0.00	0.00
	Totals:	**7,424.05**	**52,153.06**	**0.00**	**0.00**

Copyright © 2020 by Tower Engineering Solutions, LLC. All rights reserved.

Linear Appurtenance Segment Forces (Factored)

Structure:	CT13549-S-SBA	**Code:**	EIA/TIA-222-G	11/13/2020	
Site Name:	Danbury 1	**Exposure:**	C		
Height:	139.00 (ft)	**Crest Height:**	0.00		
Base Elev:	0.000 (ft)	**Site Class:**	D - Stiff Soil		
Gh:	1.1 **Topography:** 1	**Struct Class:**	II	Page: 24	

Load Case: 1.2D + 1.0Di + 1.0Wi 50 mph Wind

Dead Load Factor 1.20

Wind Load Factor 1.00

Iterations 26

Top Elev (ft)	Description	Wind Exposed	Length (ft)	Ca	Exposed Width (in)	Area (sqft)	CaAa (sqft)	Ra	Cf Adjust Factor	qz (psf)	F X (lb)	Dead Load (lb)
5.00	Safety Cable	Yes	5.00	0.000	0.00	0.00	0.00	0.000	0.000	5.168	0.00	12.93
5.00	Step bolts (ladder)	Yes	5.00	0.000	0.00	0.00	0.00	0.000	0.000	5.168	0.00	18.85
10.00	Safety Cable	Yes	5.00	0.000	0.00	0.00	0.00	0.000	0.000	5.168	0.00	14.46
10.00	Step bolts (ladder)	Yes	5.00	0.000	0.00	0.00	0.00	0.000	0.000	5.168	0.00	20.46
15.00	Safety Cable	Yes	5.00	0.000	0.00	0.00	0.00	0.000	0.000	5.168	0.00	15.46
15.00	Step bolts (ladder)	Yes	5.00	0.000	0.00	0.00	0.00	0.000	0.000	5.168	0.00	21.51
20.00	Safety Cable	Yes	5.00	0.000	0.00	0.00	0.00	0.000	0.000	5.483	0.00	16.21
20.00	Step bolts (ladder)	Yes	5.00	0.000	0.00	0.00	0.00	0.000	0.000	5.483	0.00	22.31
25.00	Safety Cable	Yes	5.00	0.000	0.00	0.00	0.00	0.000	0.000	5.747	0.00	16.83
25.00	Step bolts (ladder)	Yes	5.00	0.000	0.00	0.00	0.00	0.000	0.000	5.747	0.00	22.95
30.00	Safety Cable	Yes	5.00	0.000	0.00	0.00	0.00	0.000	0.000	5.972	0.00	17.35
30.00	Step bolts (ladder)	Yes	5.00	0.000	0.00	0.00	0.00	0.000	0.000	5.972	0.00	23.50
35.00	Safety Cable	Yes	5.00	0.000	0.00	0.00	0.00	0.000	0.000	6.169	0.00	17.80
35.00	Step bolts (ladder)	Yes	5.00	0.000	0.00	0.00	0.00	0.000	0.000	6.169	0.00	23.98
40.00	Safety Cable	Yes	5.00	0.000	0.00	0.00	0.00	0.000	0.000	6.345	0.00	18.21
40.00	Step bolts (ladder)	Yes	5.00	0.000	0.00	0.00	0.00	0.000	0.000	6.345	0.00	24.40
45.00	Safety Cable	Yes	5.00	0.000	0.00	0.00	0.00	0.000	0.000	6.504	0.00	18.58
45.00	Step bolts (ladder)	Yes	5.00	0.000	0.00	0.00	0.00	0.000	0.000	6.504	0.00	24.79
48.50	Safety Cable	Yes	3.50	0.000	0.00	0.00	0.00	0.000	0.000	6.608	0.00	13.17
48.50	Step bolts (ladder)	Yes	3.50	0.000	0.00	0.00	0.00	0.000	0.000	6.608	0.00	17.53
50.00	Safety Cable	Yes	1.50	0.000	0.00	0.00	0.00	0.000	0.000	6.650	0.00	5.67
50.00	Step bolts (ladder)	Yes	1.50	0.000	0.00	0.00	0.00	0.000	0.000	6.650	0.00	7.54
53.25	Safety Cable	Yes	3.25	0.000	0.00	0.00	0.00	0.000	0.000	6.739	0.00	12.43
53.25	Step bolts (ladder)	Yes	3.25	0.000	0.00	0.00	0.00	0.000	0.000	6.739	0.00	16.48
55.00	Safety Cable	Yes	1.75	0.000	0.00	0.00	0.00	0.000	0.000	6.785	0.00	6.73
55.00	Step bolts (ladder)	Yes	1.75	0.000	0.00	0.00	0.00	0.000	0.000	6.785	0.00	8.91
60.00	Safety Cable	Yes	5.00	0.000	0.00	0.00	0.00	0.000	0.000	6.910	0.00	19.51
60.00	Step bolts (ladder)	Yes	5.00	0.000	0.00	0.00	0.00	0.000	0.000	6.910	0.00	25.76
65.00	Safety Cable	Yes	5.00	0.000	0.00	0.00	0.00	0.000	0.000	7.028	0.00	19.78
65.00	Step bolts (ladder)	Yes	5.00	0.000	0.00	0.00	0.00	0.000	0.000	7.028	0.00	26.04
70.00	Safety Cable	Yes	5.00	0.000	0.00	0.00	0.00	0.000	0.000	7.138	0.00	20.03
70.00	Step bolts (ladder)	Yes	5.00	0.000	0.00	0.00	0.00	0.000	0.000	7.138	0.00	26.31
75.00	Safety Cable	Yes	5.00	0.000	0.00	0.00	0.00	0.000	0.000	7.243	0.00	20.27
75.00	Step bolts (ladder)	Yes	5.00	0.000	0.00	0.00	0.00	0.000	0.000	7.243	0.00	26.56
80.00	Safety Cable	Yes	5.00	0.000	0.00	0.00	0.00	0.000	0.000	7.342	0.00	20.49
80.00	Step bolts (ladder)	Yes	5.00	0.000	0.00	0.00	0.00	0.000	0.000	7.342	0.00	26.79
85.00	Safety Cable	Yes	5.00	0.000	0.00	0.00	0.00	0.000	0.000	7.436	0.00	20.71
85.00	Step bolts (ladder)	Yes	5.00	0.000	0.00	0.00	0.00	0.000	0.000	7.436	0.00	27.02
87.00	Safety Cable	Yes	2.00	0.000	0.00	0.00	0.00	0.000	0.000	7.473	0.00	8.32
87.00	Step bolts (ladder)	Yes	2.00	0.000	0.00	0.00	0.00	0.000	0.000	7.473	0.00	10.84
90.00	Safety Cable	Yes	3.00	0.000	0.00	0.00	0.00	0.000	0.000	7.526	0.00	12.55
90.00	Step bolts (ladder)	Yes	3.00	0.000	0.00	0.00	0.00	0.000	0.000	7.526	0.00	16.34
95.00	Safety Cable	Yes	5.00	0.000	0.00	0.00	0.00	0.000	0.000	7.612	0.00	21.11
95.00	Step bolts (ladder)	Yes	5.00	0.000	0.00	0.00	0.00	0.000	0.000	7.612	0.00	27.44
97.00	Safety Cable	Yes	2.00	0.000	0.00	0.00	0.00	0.000	0.000	7.646	0.00	8.47
97.00	Step bolts (ladder)	Yes	2.00	0.000	0.00	0.00	0.00	0.000	0.000	7.646	0.00	11.01
98.75	Safety Cable	Yes	1.75	0.000	0.00	0.00	0.00	0.000	0.000	7.675	0.00	7.44

Copyright © 2020 by Tower Engineering Solutions, LLC. All rights reserved.

Linear Appurtenance Segment Forces (Factored)

Structure:	CT13549-S-SBA	**Code:**	EIA/TIA-222-G	11/13/2020	
Site Name:	Danbury 1	**Exposure:**	C		
Height:	139.00 (ft)	**Crest Height:**	0.00		
Base Elev:	0.000 (ft)	**Site Class:**	D - Stiff Soil		
Gh:	1.1 **Topography:** 1	**Struct Class:**	II	Page: 25	

Load Case: 1.2D + 1.0Di + 1.0Wi 50 mph Wind

Dead Load Factor 1.20

Wind Load Factor 1.00

Iterations 26

Top Elev (ft)	Description	Wind Exposed	Length (ft)	Ca	Exposed Width (in)	Area (sqft)	CaAa (sqft)	Ra	Cf Adjust Factor	qz (psf)	F X (lb)	Dead Load (lb)
98.75	Step bolts (ladder)	Yes	1.75	0.000	0.00	0.00	0.00	0.000	0.000	7.675	0.00	9.65
100.00	Safety Cable	Yes	1.25	0.000	0.00	0.00	0.00	0.000	0.000	7.695	0.00	5.32
100.00	Step bolts (ladder)	Yes	1.25	0.000	0.00	0.00	0.00	0.000	0.000	7.695	0.00	6.91
102.00	Safety Cable	Yes	2.00	0.000	0.00	0.00	0.00	0.000	0.000	7.727	0.00	8.55
102.00	Step bolts (ladder)	Yes	2.00	0.000	0.00	0.00	0.00	0.000	0.000	7.727	0.00	11.08
105.00	Safety Cable	Yes	3.00	0.000	0.00	0.00	0.00	0.000	0.000	7.774	0.00	12.89
105.00	Step bolts (ladder)	Yes	3.00	0.000	0.00	0.00	0.00	0.000	0.000	7.774	0.00	16.69
107.00	Safety Cable	Yes	2.00	0.000	0.00	0.00	0.00	0.000	0.000	7.805	0.00	8.62
107.00	Step bolts (ladder)	Yes	2.00	0.000	0.00	0.00	0.00	0.000	0.000	7.805	0.00	11.16
110.00	Safety Cable	Yes	3.00	0.000	0.00	0.00	0.00	0.000	0.000	7.851	0.00	12.99
110.00	Step bolts (ladder)	Yes	3.00	0.000	0.00	0.00	0.00	0.000	0.000	7.851	0.00	16.80
115.00	Safety Cable	Yes	5.00	0.000	0.00	0.00	0.00	0.000	0.000	7.925	0.00	21.82
115.00	Step bolts (ladder)	Yes	5.00	0.000	0.00	0.00	0.00	0.000	0.000	7.925	0.00	28.18
120.00	Safety Cable	Yes	5.00	0.000	0.00	0.00	0.00	0.000	0.000	7.996	0.00	21.98
120.00	Step bolts (ladder)	Yes	5.00	0.000	0.00	0.00	0.00	0.000	0.000	7.996	0.00	28.34
125.00	Safety Cable	Yes	5.00	0.000	0.00	0.00	0.00	0.000	0.000	8.065	0.00	22.14
125.00	Step bolts (ladder)	Yes	5.00	0.000	0.00	0.00	0.00	0.000	0.000	8.065	0.00	28.51
130.00	Safety Cable	Yes	5.00	0.000	0.00	0.00	0.00	0.000	0.000	8.132	0.00	22.29
130.00	Step bolts (ladder)	Yes	5.00	0.000	0.00	0.00	0.00	0.000	0.000	8.132	0.00	28.67
135.00	Safety Cable	Yes	5.00	0.000	0.00	0.00	0.00	0.000	0.000	8.197	0.00	22.43
135.00	Step bolts (ladder)	Yes	5.00	0.000	0.00	0.00	0.00	0.000	0.000	8.197	0.00	28.82
137.00	Safety Cable	Yes	2.00	0.000	0.00	0.00	0.00	0.000	0.000	8.222	0.00	9.00
137.00	Step bolts (ladder)	Yes	2.00	0.000	0.00	0.00	0.00	0.000	0.000	8.222	0.00	11.55
139.00	Safety Cable	Yes	2.00	0.000	0.00	0.00	0.00	0.000	0.000	8.247	0.00	9.02
139.00	Step bolts (ladder)	Yes	2.00	0.000	0.00	0.00	0.00	0.000	0.000	8.247	0.00	11.57
										Totals:	**0.0**	**1,256.8**

Copyright © 2020 by Tower Engineering Solutions, LLC. All rights reserved.

Calculated Forces

Structure:	CT13549-S-SBA	**Code:**	EIA/TIA-222-G	11/13/2020	
Site Name:	Danbury 1	**Exposure:**	C		
Height:	139.00 (ft)	**Crest Height:**	0.00		
Base Elev:	0.000 (ft)	**Site Class:**	D - Stiff Soil		
Gh:	1.1 **Topography:** 1	**Struct Class:**	II	Page: 26	

Load Case: 1.2D + 1.0Di + 1.0Wi 50 mph Wind

Dead Load Factor 1.20

Wind Load Factor 1.00

Iterations 26

Seg Elev (ft)	Pu FY (-) (kips)	Vu FX (-) (kips)	Tu MY (-) (ft-kips)	Mu MZ (ft-kips)	Mu MX (ft-kips)	Resultant Moment (ft-kips)	phi Pn (kips)	phi Vn (kips)	phi Tn (ft-kips)	phi Mn (ft-kips)	Total Deflect (in)	Rotation Sway (deg)	Rotation Twist (deg)	Stress Ratio
0.00	-52.15	-7.46	0.00	-742.75	0.00	742.75	3003.53	1501.76	5797.25	2902.93	0.00	0.000	0.000	0.273
5.00	-50.60	-7.39	0.00	-705.45	0.00	705.45	2960.91	1480.45	5573.38	2790.83	0.04	-0.080	0.000	0.270
10.00	-49.05	-7.32	0.00	-668.51	0.00	668.51	2916.70	1458.35	5350.68	2679.32	0.17	-0.161	0.000	0.266
15.00	-47.52	-7.25	0.00	-631.92	0.00	631.92	2870.92	1435.46	5129.40	2568.51	0.38	-0.244	0.000	0.263
20.00	-46.01	-7.17	0.00	-595.70	0.00	595.70	2823.56	1411.78	4909.74	2458.52	0.68	-0.329	0.000	0.259
25.00	-44.52	-7.08	0.00	-559.86	0.00	559.86	2774.61	1387.31	4691.94	2349.46	1.08	-0.416	0.000	0.254
30.00	-43.05	-6.99	0.00	-524.46	0.00	524.46	2724.09	1362.04	4476.23	2241.44	1.56	-0.504	0.000	0.250
35.00	-41.62	-6.90	0.00	-489.51	0.00	489.51	2671.99	1335.99	4262.83	2134.58	2.13	-0.594	0.000	0.245
40.00	-40.21	-6.80	0.00	-455.04	0.00	455.04	2618.30	1309.15	4051.97	2029.00	2.81	-0.686	0.000	0.240
45.00	-38.84	-6.69	0.00	-421.06	0.00	421.06	2563.04	1281.52	3843.87	1924.79	3.57	-0.779	0.000	0.234
48.50	-37.89	-6.60	0.00	-397.65	0.00	397.65	2523.41	1261.71	3699.97	1852.74	4.17	-0.845	0.000	0.230
50.00	-37.31	-6.58	0.00	-387.75	0.00	387.75	2506.19	1253.10	3638.77	1822.09	4.44	-0.875	0.000	0.228
53.25	-36.07	-6.50	0.00	-366.37	0.00	366.37	1850.79	925.39	2677.47	1340.72	5.06	-0.938	0.000	0.293
55.00	-35.66	-6.49	0.00	-355.00	0.00	355.00	1837.85	918.92	2627.99	1315.95	5.41	-0.972	0.000	0.289
60.00	-34.49	-6.39	0.00	-322.57	0.00	322.57	1799.82	899.91	2487.54	1245.62	6.49	-1.086	0.000	0.278
65.00	-33.35	-6.29	0.00	-290.63	0.00	290.63	1760.21	880.10	2348.61	1176.05	7.69	-1.201	0.000	0.266
70.00	-32.24	-6.19	0.00	-259.19	0.00	259.19	1719.02	859.51	2211.45	1107.37	9.01	-1.315	0.000	0.253
75.00	-31.16	-6.09	0.00	-228.25	0.00	228.25	1676.25	838.13	2076.26	1039.67	10.44	-1.428	0.000	0.238
80.00	-30.11	-5.98	0.00	-197.82	0.00	197.82	1631.90	815.95	1943.29	973.09	12.00	-1.538	0.000	0.222
85.00	-29.09	-5.86	0.00	-167.93	0.00	167.93	1585.97	792.99	1812.75	907.72	13.67	-1.644	0.000	0.203
87.00	-26.00	-5.15	0.00	-156.21	0.00	156.21	1567.16	783.58	1761.26	881.94	14.37	-1.687	0.000	0.194
90.00	-25.41	-5.09	0.00	-140.75	0.00	140.75	1538.46	769.23	1684.87	843.69	15.45	-1.748	0.000	0.183
95.00	-24.45	-4.97	0.00	-115.28	0.00	115.28	1489.37	744.69	1559.88	781.10	17.33	-1.844	0.000	0.164
97.00	-20.88	-4.11	0.00	-105.35	0.00	105.35	1469.29	734.65	1510.75	756.50	18.11	-1.881	0.000	0.154
98.75	-20.58	-4.06	0.00	-98.17	0.00	98.17	1451.52	725.76	1468.18	735.18	18.80	-1.913	0.000	0.148
100.00	-20.30	-4.03	0.00	-93.09	0.00	93.09	1437.39	718.70	1436.71	719.42	19.31	-1.936	0.000	0.144
102.00	-19.84	-3.98	0.00	-85.03	0.00	85.03	990.34	495.17	991.38	496.43	20.13	-1.971	0.000	0.191
105.00	-19.41	-3.91	0.00	-73.08	0.00	73.08	971.88	485.94	945.01	473.21	21.38	-2.020	0.000	0.174
107.00	-12.70	-2.47	0.00	-65.25	0.00	65.25	959.26	479.63	914.39	457.88	22.24	-2.060	0.000	0.156
110.00	-12.30	-2.40	0.00	-57.84	0.00	57.84	939.85	469.93	868.93	435.11	23.55	-2.115	0.000	0.146
115.00	-11.66	-2.28	0.00	-45.83	0.00	45.83	906.24	453.12	794.52	397.85	25.81	-2.201	0.000	0.128
120.00	-11.04	-2.16	0.00	-34.42	0.00	34.42	871.06	435.53	722.01	361.54	28.16	-2.279	0.000	0.108
125.00	-10.44	-2.05	0.00	-23.61	0.00	23.61	834.29	417.15	651.64	326.30	30.58	-2.346	0.000	0.085
130.00	-9.88	-1.93	0.00	-13.38	0.00	13.38	791.03	395.51	580.02	290.44	33.07	-2.397	0.000	0.059
135.00	-9.34	-1.81	0.00	-3.74	0.00	3.74	739.97	369.98	507.20	253.97	35.60	-2.425	0.000	0.027
137.00	-0.21	-0.06	0.00	-0.12	0.00	0.12	719.55	359.77	479.43	240.07	36.61	-2.428	0.000	0.001
139.00	0.00	-0.05	0.00	0.00	0.00	0.00	699.12	349.56	452.45	226.56	37.63	-2.428	0.000	0.000

Copyright © 2020 by Tower Engineering Solutions, LLC. All rights reserved.

Seismic Segment Forces (Factored)

Structure:	CT13549-S-SBA		**Code:**	EIA/TIA-222-G	11/13/2020
Site Name:	Danbury 1		**Exposure:**	C	
Height:	139.00 (ft)		**Crest Height:**	0.00	
Base Elev:	0.000 (ft)		**Site Class:**	D - Stiff Soil	
Gh:	1.1	**Topography:** 1	**Struct Class:**	II	Page: 27

Tower Engineering Solutions

Load Case:	1.2D + 1.0E					**Iterations**	24
Gust Response Factor	1.10			**Sds**	0.23	**Ss**	0.22
Dead Load Factor	1.20	**Seismic Load Factor**	1.00	**Sd1**	0.11	**S1**	0.07
Wind Load Factor	0.00	**Structure Frequency (f1)**	0.33	**SA**	0.04	**Seismic Importance Factor**	1.00

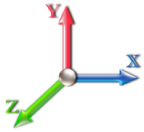

Top Elev (ft)	Description	Wz (lb)	a	b	c	Lateral Fs (lb)	R: 1.50
0.00		0.00	0.00	0.00	0.00	0.00	
5.00		781.99	0.00	0.03	0.02	20.32	
10.00		762.50	0.01	0.05	0.03	27.59	
15.00		743.01	0.02	0.07	0.04	30.31	
20.00		723.53	0.04	0.07	0.04	31.15	
25.00		704.04	0.06	0.07	0.04	31.27	
30.00		684.55	0.09	0.07	0.04	31.21	
35.00		665.06	0.12	0.07	0.03	31.13	
40.00		645.57	0.16	0.07	0.03	30.93	
45.00		626.08	0.20	0.06	0.02	30.28	
48.50	Bot - Section 2	426.66	0.23	0.06	0.02	20.41	
50.00		326.16	0.24	0.06	0.02	15.42	
53.25	Top - Section 1	695.84	0.28	0.05	0.01	31.41	
55.00		165.27	0.30	0.05	0.01	7.16	
60.00		461.69	0.35	0.03	0.01	16.16	
65.00		446.10	0.41	0.01	0.01	9.41	
70.00		430.51	0.48	-0.01	0.01	0.92	
75.00		414.92	0.55	-0.03	0.01	-7.74	
80.00		399.33	0.63	-0.06	0.02	-14.60	
85.00		383.74	0.71	-0.09	0.03	-18.47	
87.00	Appurtenance(s)	1557.0	0.74	-0.10	0.04	-78.82	
90.00		219.02	0.79	-0.11	0.05	-11.40	
95.00		352.56	0.88	-0.12	0.08	-17.05	
97.00	Appurtenance(s)	1554.7	0.92	-0.12	0.10	-69.75	
98.75	Bot - Section 3	117.53	0.95	-0.12	0.11	-4.80	
100.00		145.97	0.98	-0.11	0.12	-5.47	
102.00	Top - Section 2	230.01	1.02	-0.11	0.14	-7.16	
105.00		145.87	1.08	-0.08	0.17	-2.86	
107.00	Appurtenance(s)	2489.2	1.12	-0.06	0.20	-26.21	
110.00		138.86	1.18	-0.01	0.24	0.71	
115.00		222.07	1.29	0.11	0.33	8.17	
120.00		210.38	1.41	0.30	0.44	15.87	
125.00		198.69	1.53	0.57	0.58	24.09	
130.00		187.00	1.65	0.95	0.74	32.63	
135.00		175.30	1.78	1.46	0.95	41.25	
137.00	Appurtenance(s)	3994.3	1.84	1.71	1.04	1045.68	
139.00	Appurtenance(s)	71.48	1.89	1.98	1.14	20.70	
	Totals:	**22,496.6**				**1,289.9**	**Total Wind:** **23,696.6**

Seismic Base Shear is Less Than 50% of Wind Force - An Analysis is NOT Required

Copyright © 2020 by Tower Engineering Solutions, LLC. All rights reserved.

Calculated Forces

Structure:	CT13549-S-SBA	**Code:**	EIA/TIA-222-G	11/13/2020	
Site Name:	Danbury 1	**Exposure:**	C		
Height:	139.00 (ft)	**Crest Height:**	0.00		
Base Elev:	0.000 (ft)	**Site Class:**	D - Stiff Soil		
Gh:	1.1	**Topography:** 1	**Struct Class:**	II	Page: 28

Tower Engineering Solutions

Load Case: 1.2D + 1.0E

Iterations 24

Gust Response Factor	1.10			**Sds**	0.23			**Ss**	0.22
Dead Load Factor	1.20	**Seismic Load Factor**	1.00	**Sd1**	0.11			**S1**	0.07
Wind Load Factor	0.00	**Structure Frequency (f1)**	0.33	**SA**	0.04	**Seismic Importance Factor**			1.00

Seg Elev (ft)	Pu FY (-) (kips)	Vu FX (-) (kips)	Tu MY (-) (ft-kips)	Mu MZ (ft-kips)	Mu MX (ft-kips)	Resultant Moment (ft-kips)	phi Pn (kips)	phi Vn (kips)	phi Tn (ft-kips)	phi Mn (ft-kips)	Total Deflect (in)	Rotation Sway (deg)	Rotation Twist (deg)	Stress Ratio
0.00	-31.85	-1.56	0.00	-185.63	0.00	185.63	3003.53	1501.76	5797.25	2902.93		0.00	0.00	0.075
5.00	-30.70	-1.55	0.00	-177.83	0.00	177.83	2960.91	1480.45	5573.38	2790.83		0.01	-0.02	0.074
10.00	-29.58	-1.53	0.00	-170.09	0.00	170.09	2916.70	1458.35	5350.68	2679.32		0.04	-0.04	0.074
15.00	-28.47	-1.51	0.00	-162.43	0.00	162.43	2870.92	1435.46	5129.40	2568.51		0.10	-0.06	0.073
20.00	-27.40	-1.49	0.00	-154.87	0.00	154.87	2823.56	1411.78	4909.74	2458.52		0.17	-0.08	0.073
25.00	-26.34	-1.47	0.00	-147.42	0.00	147.42	2774.61	1387.31	4691.94	2349.46		0.27	-0.11	0.072
30.00	-25.31	-1.44	0.00	-140.09	0.00	140.09	2724.09	1362.04	4476.23	2241.44		0.40	-0.13	0.072
35.00	-24.30	-1.42	0.00	-132.86	0.00	132.86	2671.99	1335.99	4262.83	2134.58		0.55	-0.15	0.071
40.00	-23.32	-1.40	0.00	-125.76	0.00	125.76	2618.30	1309.15	4051.97	2029.00		0.72	-0.18	0.071
45.00	-22.35	-1.37	0.00	-118.77	0.00	118.77	2563.04	1281.52	3843.87	1924.79		0.92	-0.21	0.070
48.50	-21.70	-1.36	0.00	-113.96	0.00	113.96	2523.41	1261.71	3699.97	1852.74		1.08	-0.22	0.070
50.00	-21.24	-1.34	0.00	-111.93	0.00	111.93	2506.19	1253.10	3638.77	1822.09		1.15	-0.23	0.070
53.25	-20.27	-1.31	0.00	-107.57	0.00	107.57	1850.79	925.39	2677.47	1340.72		1.32	-0.25	0.091
55.00	-20.00	-1.31	0.00	-105.27	0.00	105.27	1837.85	918.92	2627.99	1315.95		1.41	-0.26	0.091
60.00	-19.23	-1.30	0.00	-98.71	0.00	98.71	1799.82	899.91	2487.54	1245.62		1.70	-0.30	0.090
65.00	-18.49	-1.30	0.00	-92.19	0.00	92.19	1760.21	880.10	2348.61	1176.05		2.03	-0.33	0.089
70.00	-17.76	-1.31	0.00	-85.68	0.00	85.68	1719.02	859.51	2211.45	1107.37		2.40	-0.37	0.088
75.00	-17.05	-1.32	0.00	-79.14	0.00	79.14	1676.25	838.13	2076.26	1039.67		2.80	-0.41	0.086
80.00	-16.36	-1.32	0.00	-72.56	0.00	72.56	1631.90	815.95	1943.29	973.09		3.25	-0.45	0.085
85.00	-15.69	-1.32	0.00	-65.95	0.00	65.95	1585.97	792.99	1812.75	907.72		3.74	-0.49	0.083
87.00	-13.74	-1.31	0.00	-63.30	0.00	63.30	1567.16	783.58	1761.26	881.94		3.94	-0.50	0.081
90.00	-13.35	-1.32	0.00	-59.37	0.00	59.37	1538.46	769.23	1684.87	843.69		4.27	-0.53	0.079
95.00	-12.72	-1.32	0.00	-52.78	0.00	52.78	1489.37	744.69	1559.88	781.10		4.84	-0.57	0.076
97.00	-10.77	-1.30	0.00	-50.15	0.00	50.15	1469.29	734.65	1510.75	756.50		5.09	-0.59	0.074
98.75	-10.59	-1.30	0.00	-47.87	0.00	47.87	1451.52	725.76	1468.18	735.18		5.30	-0.60	0.072
100.00	-10.38	-1.30	0.00	-46.25	0.00	46.25	1437.39	718.70	1436.71	719.42		5.46	-0.61	0.072
102.00	-10.06	-1.30	0.00	-43.64	0.00	43.64	990.34	495.17	991.38	496.43		5.72	-0.63	0.098
105.00	-9.81	-1.30	0.00	-39.74	0.00	39.74	971.88	485.94	945.01	473.21		6.13	-0.66	0.094
107.00	-6.77	-1.27	0.00	-37.13	0.00	37.13	959.26	479.63	914.39	457.88		6.41	-0.68	0.088
110.00	-6.55	-1.27	0.00	-33.32	0.00	33.32	939.85	469.93	868.93	435.11		6.85	-0.71	0.084
115.00	-6.19	-1.26	0.00	-26.96	0.00	26.96	906.24	453.12	794.52	397.85		7.62	-0.76	0.075
120.00	-5.85	-1.25	0.00	-20.63	0.00	20.63	871.06	435.53	722.01	361.54		8.44	-0.81	0.064
125.00	-5.52	-1.22	0.00	-14.39	0.00	14.39	834.29	417.15	651.64	326.30		9.31	-0.85	0.051
130.00	-5.20	-1.19	0.00	-8.27	0.00	8.27	791.03	395.51	580.02	290.44		10.22	-0.88	0.035
135.00	-4.90	-1.14	0.00	-2.33	0.00	2.33	739.97	369.98	507.20	253.97		11.15	-0.90	0.016
137.00	-0.09	-0.02	0.00	-0.04	0.00	0.04	719.55	359.77	479.43	240.07		11.52	-0.90	0.000
139.00	0.00	-0.02	0.00	0.00	0.00	0.00	699.12	349.56	452.45	226.56		11.90	-0.90	0.000

Copyright © 2020 by Tower Engineering Solutions, LLC. All rights reserved.

Seismic Segment Forces (Factored)

Structure:	CT13549-S-SBA		**Code:**	EIA/TIA-222-G	11/13/2020
Site Name:	Danbury 1		**Exposure:**	C	
Height:	139.00 (ft)		**Crest Height:**	0.00	
Base Elev:	0.000 (ft)		**Site Class:**	D - Stiff Soil	
Gh:	1.1	**Topography:** 1	**Struct Class:**	II	Page: 29

Tower Engineering Solutions

Load Case:	0.9D + 1.0E					**Iterations**	24
Gust Response Factor	1.10			**Sds**	0.23	**Ss**	0.22
Dead Load Factor	0.90	**Seismic Load Factor**	1.00	**Sd1**	0.11	**S1**	0.07
Wind Load Factor	0.00	**Structure Frequency (f1)**	0.33	**SA**	0.04	**Seismic Importance Factor**	1.00

Top Elev (ft)	Description	Wz (lb)	a	b	c	Lateral Fs (lb)	R: 1.50
0.00		0.00	0.00	0.00	0.00	0.00	
5.00		781.99	0.00	0.03	0.02	20.32	
10.00		762.50	0.01	0.05	0.03	27.59	
15.00		743.01	0.02	0.07	0.04	30.31	
20.00		723.53	0.04	0.07	0.04	31.15	
25.00		704.04	0.06	0.07	0.04	31.27	
30.00		684.55	0.09	0.07	0.04	31.21	
35.00		665.06	0.12	0.07	0.03	31.13	
40.00		645.57	0.16	0.07	0.03	30.93	
45.00		626.08	0.20	0.06	0.02	30.28	
48.50	Bot - Section 2	426.66	0.23	0.06	0.02	20.41	
50.00		326.16	0.24	0.06	0.02	15.42	
53.25	Top - Section 1	695.84	0.28	0.05	0.01	31.41	
55.00		165.27	0.30	0.05	0.01	7.16	
60.00		461.69	0.35	0.03	0.01	16.16	
65.00		446.10	0.41	0.01	0.01	9.41	
70.00		430.51	0.48	-0.01	0.01	0.92	
75.00		414.92	0.55	-0.03	0.01	-7.74	
80.00		399.33	0.63	-0.06	0.02	-14.60	
85.00		383.74	0.71	-0.09	0.03	-18.47	
87.00	Appurtenance(s)	1557.0	0.74	-0.10	0.04	-78.82	
90.00		219.02	0.79	-0.11	0.05	-11.40	
95.00		352.56	0.88	-0.12	0.08	-17.05	
97.00	Appurtenance(s)	1554.7	0.92	-0.12	0.10	-69.75	
98.75	Bot - Section 3	117.53	0.95	-0.12	0.11	-4.80	
100.00		145.97	0.98	-0.11	0.12	-5.47	
102.00	Top - Section 2	230.01	1.02	-0.11	0.14	-7.16	
105.00		145.87	1.08	-0.08	0.17	-2.86	
107.00	Appurtenance(s)	2489.2	1.12	-0.06	0.20	-26.21	
110.00		138.86	1.18	-0.01	0.24	0.71	
115.00		222.07	1.29	0.11	0.33	8.17	
120.00		210.38	1.41	0.30	0.44	15.87	
125.00		198.69	1.53	0.57	0.58	24.09	
130.00		187.00	1.65	0.95	0.74	32.63	
135.00		175.30	1.78	1.46	0.95	41.25	
137.00	Appurtenance(s)	3994.3	1.84	1.71	1.04	1045.68	
139.00	Appurtenance(s)	71.48	1.89	1.98	1.14	20.70	
	Totals:	**22,496.6**				**1,289.9**	**Total Wind:** **23,696.6**

Seismic Base Shear is Less Than 50% of Wind Force - An Analysis is NOT Required

Copyright © 2020 by Tower Engineering Solutions, LLC. All rights reserved.

Calculated Forces

Structure:	CT13549-S-SBA	**Code:**	EIA/TIA-222-G	11/13/2020	
Site Name:	Danbury 1	**Exposure:**	C		
Height:	139.00 (ft)	**Crest Height:**	0.00		
Base Elev:	0.000 (ft)	**Site Class:**	D - Stiff Soil		
Gh:	1.1	**Topography:** 1	**Struct Class:**	II	Page: 30

Tower Engineering Solutions

Load Case: 0.9D + 1.0E

Iterations 24

Gust Response Factor	1.10			**Sds**	0.23			**Ss**	0.22
Dead Load Factor	0.90	**Seismic Load Factor**	1.00	**Sd1**	0.11			**S1**	0.07
Wind Load Factor	0.00	**Structure Frequency (f1)**	0.33	**SA**	0.04	**Seismic Importance Factor**			1.00

Seg Elev (ft)	Pu FY (-) (kips)	Vu FX (-) (kips)	Tu MY (-) (ft-kips)	Mu MZ (ft-kips)	Mu MX (ft-kips)	Resultant Moment (ft-kips)	phi Pn (kips)	phi Vn (kips)	phi Tn (ft-kips)	phi Mn (ft-kips)	Total Deflect (in)	Rotation Sway (deg)	Rotation Twist (deg)	Stress Ratio
0.00	-23.89	-1.56	0.00	-182.59	0.00	182.59	3003.53	1501.76	5797.25	2902.93		0.00	0.00	0.071
5.00	-23.03	-1.55	0.00	-174.80	0.00	174.80	2960.91	1480.45	5573.38	2790.83		0.01	-0.02	0.070
10.00	-22.18	-1.53	0.00	-167.08	0.00	167.08	2916.70	1458.35	5350.68	2679.32		0.04	-0.04	0.070
15.00	-21.36	-1.50	0.00	-159.45	0.00	159.45	2870.92	1435.46	5129.40	2568.51		0.09	-0.06	0.070
20.00	-20.55	-1.48	0.00	-151.94	0.00	151.94	2823.56	1411.78	4909.74	2458.52		0.17	-0.08	0.069
25.00	-19.76	-1.45	0.00	-144.55	0.00	144.55	2774.61	1387.31	4691.94	2349.46		0.27	-0.10	0.069
30.00	-18.98	-1.43	0.00	-137.29	0.00	137.29	2724.09	1362.04	4476.23	2241.44		0.39	-0.13	0.068
35.00	-18.22	-1.40	0.00	-130.15	0.00	130.15	2671.99	1335.99	4262.83	2134.58		0.54	-0.15	0.068
40.00	-17.49	-1.38	0.00	-123.14	0.00	123.14	2618.30	1309.15	4051.97	2029.00		0.71	-0.18	0.067
45.00	-16.77	-1.35	0.00	-116.25	0.00	116.25	2563.04	1281.52	3843.87	1924.79		0.91	-0.20	0.067
48.50	-16.27	-1.33	0.00	-111.52	0.00	111.52	2523.41	1261.71	3699.97	1852.74		1.06	-0.22	0.067
50.00	-15.93	-1.32	0.00	-109.52	0.00	109.52	2506.19	1253.10	3638.77	1822.09		1.13	-0.23	0.066
53.25	-15.20	-1.29	0.00	-105.24	0.00	105.24	1850.79	925.39	2677.47	1340.72		1.29	-0.25	0.087
55.00	-15.00	-1.29	0.00	-102.98	0.00	102.98	1837.85	918.92	2627.99	1315.95		1.38	-0.26	0.086
60.00	-14.42	-1.28	0.00	-96.55	0.00	96.55	1799.82	899.91	2487.54	1245.62		1.67	-0.29	0.086
65.00	-13.86	-1.27	0.00	-90.17	0.00	90.17	1760.21	880.10	2348.61	1176.05		1.99	-0.32	0.085
70.00	-13.32	-1.28	0.00	-83.81	0.00	83.81	1719.02	859.51	2211.45	1107.37		2.35	-0.36	0.083
75.00	-12.79	-1.28	0.00	-77.42	0.00	77.42	1676.25	838.13	2076.26	1039.67		2.75	-0.40	0.082
80.00	-12.27	-1.29	0.00	-71.01	0.00	71.01	1631.90	815.95	1943.29	973.09		3.19	-0.44	0.080
85.00	-11.77	-1.29	0.00	-64.58	0.00	64.58	1585.97	792.99	1812.75	907.72		3.66	-0.48	0.079
87.00	-10.30	-1.28	0.00	-62.01	0.00	62.01	1567.16	783.58	1761.26	881.94		3.87	-0.49	0.077
90.00	-10.01	-1.28	0.00	-58.17	0.00	58.17	1538.46	769.23	1684.87	843.69		4.18	-0.52	0.075
95.00	-9.54	-1.28	0.00	-51.76	0.00	51.76	1489.37	744.69	1559.88	781.10		4.75	-0.56	0.073
97.00	-8.08	-1.27	0.00	-49.19	0.00	49.19	1469.29	734.65	1510.75	756.50		4.98	-0.58	0.071
98.75	-7.94	-1.27	0.00	-46.97	0.00	46.97	1451.52	725.76	1468.18	735.18		5.20	-0.59	0.069
100.00	-7.78	-1.27	0.00	-45.38	0.00	45.38	1437.39	718.70	1436.71	719.42		5.35	-0.60	0.068
102.00	-7.54	-1.27	0.00	-42.83	0.00	42.83	990.34	495.17	991.38	496.43		5.61	-0.62	0.094
105.00	-7.35	-1.27	0.00	-39.02	0.00	39.02	971.88	485.94	945.01	473.21		6.01	-0.64	0.090
107.00	-5.07	-1.25	0.00	-36.47	0.00	36.47	959.26	479.63	914.39	457.88		6.28	-0.67	0.085
110.00	-4.91	-1.25	0.00	-32.72	0.00	32.72	939.85	469.93	868.93	435.11		6.71	-0.70	0.080
115.00	-4.64	-1.24	0.00	-26.47	0.00	26.47	906.24	453.12	794.52	397.85		7.47	-0.75	0.072
120.00	-4.38	-1.23	0.00	-20.26	0.00	20.26	871.06	435.53	722.01	361.54		8.27	-0.79	0.061
125.00	-4.13	-1.20	0.00	-14.13	0.00	14.13	834.29	417.15	651.64	326.30		9.12	-0.83	0.048
130.00	-3.90	-1.17	0.00	-8.12	0.00	8.12	791.03	395.51	580.02	290.44		10.01	-0.86	0.033
135.00	-3.67	-1.12	0.00	-2.29	0.00	2.29	739.97	369.98	507.20	253.97		10.93	-0.88	0.014
137.00	-0.07	-0.02	0.00	-0.04	0.00	0.04	719.55	359.77	479.43	240.07		11.29	-0.88	0.000
139.00	0.00	-0.02	0.00	0.00	0.00	0.00	699.12	349.56	452.45	226.56		11.66	-0.88	0.000

Copyright © 2020 by Tower Engineering Solutions, LLC. All rights reserved.

Wind Loading - Shaft

Structure:	CT13549-S-SBA		**Code:**	EIA/TIA-222-G	11/13/2020
Site Name:	Danbury 1		**Exposure:**	C	
Height:	139.00 (ft)		**Crest Height:**	0.00	
Base Elev:	0.000 (ft)		**Site Class:**	D - Stiff Soil	
Gh:	1.1	**Topography:** 1	**Struct Class:**	II	Page: 31

Tower Engineering Solutions

Load Case: 1.0D + 1.0W 60 mph Wind

Dead Load Factor 1.00

Wind Load Factor 1.00

Iterations 25

Elev (ft)	Description	Kzt	Kz	qz (psf)	qzGh (psf)	C (mph-ft)	Cf	Ice Thick (in)	Tributary (ft)	Aa (sf)	CfAa (sf)	Wind Force X (lb)	Dead Load Ice (lb)	Tot Dead Load (lb)
0.00		1.00	0.85	7.442	8.19	221.08	0.650	0.000	0.00	0.000	0.00	0.0	0.0	0.0
5.00		1.00	0.85	7.442	8.19	215.67	0.650	0.000	5.00	19.738	12.83	105.0	0.0	782.0
10.00		1.00	0.85	7.442	8.19	210.27	0.650	0.000	5.00	19.250	12.51	102.4	0.0	762.5
15.00		1.00	0.85	7.442	8.19	204.86	0.650	0.000	5.00	18.761	12.19	99.8	0.0	743.0
20.00		1.00	0.90	7.896	8.69	205.45	0.650	0.000	5.00	18.273	11.88	103.2	0.0	723.5
25.00		1.00	0.95	8.276	9.10	204.63	0.650	0.000	5.00	17.784	11.56	105.2	0.0	704.0
30.00		1.00	0.98	8.600	9.46	202.79	0.650	0.000	5.00	17.295	11.24	106.3	0.0	684.5
35.00		1.00	1.01	8.883	9.77	200.20	0.650	0.000	5.00	16.807	10.92	106.8	0.0	665.1
40.00		1.00	1.04	9.137	10.05	197.04	0.650	0.000	5.00	16.318	10.61	106.6	0.0	645.6
45.00		1.00	1.07	9.366	10.30	193.44	0.650	0.000	5.00	15.830	10.29	106.0	0.0	626.1
48.50	Bot - Section 2	1.00	1.09	9.515	10.47	190.69	0.650	0.000	3.50	10.790	7.01	73.4	0.0	426.7
50.00		1.00	1.09	9.576	10.53	189.46	0.650	0.000	1.50	4.614	3.00	31.6	0.0	326.2
53.25	Top - Section 1	1.00	1.11	9.704	10.67	186.71	0.650	0.000	3.25	9.847	6.40	68.3	0.0	695.8
55.00		1.00	1.12	9.770	10.75	187.86	0.650	0.000	1.75	5.217	3.39	36.4	0.0	165.3
60.00		1.00	1.14	9.951	10.95	183.34	0.650	0.000	5.00	14.575	9.47	103.7	0.0	461.7
65.00		1.00	1.16	10.120	11.13	178.59	0.650	0.000	5.00	14.087	9.16	101.9	0.0	446.1
70.00		1.00	1.17	10.279	11.31	173.63	0.650	0.000	5.00	13.598	8.84	99.9	0.0	430.5
75.00		1.00	1.19	10.430	11.47	168.50	0.650	0.000	5.00	13.109	8.52	97.8	0.0	414.9
80.00		1.00	1.21	10.572	11.63	163.20	0.650	0.000	5.00	12.621	8.20	95.4	0.0	399.3
85.00		1.00	1.22	10.708	11.78	157.76	0.650	0.000	5.00	12.132	7.89	92.9	0.0	383.7
87.00	Appurtenance(s)	1.00	1.23	10.761	11.84	155.55	0.650	0.000	2.00	4.716	3.07	36.3	0.0	149.1
90.00		1.00	1.24	10.838	11.92	152.19	0.650	0.000	3.00	6.928	4.50	53.7	0.0	219.0
95.00		1.00	1.25	10.962	12.06	146.50	0.650	0.000	5.00	11.155	7.25	87.4	0.0	352.6
97.00	Appurtenance(s)	1.00	1.26	11.010	12.11	144.19	0.650	0.000	2.00	4.325	2.81	34.0	0.0	136.7
98.75	Bot - Section 3	1.00	1.26	11.051	12.16	142.16	0.650	0.000	1.75	3.720	2.42	29.4	0.0	117.5
100.00		1.00	1.27	11.081	12.19	140.70	0.650	0.000	1.25	2.660	1.73	21.1	0.0	146.0
102.00	Top - Section 2	1.00	1.27	11.127	12.24	138.35	0.650	0.000	2.00	4.193	2.73	33.4	0.0	230.0
105.00		1.00	1.28	11.195	12.31	136.94	0.650	0.000	3.00	6.143	3.99	49.2	0.0	145.9
107.00	Appurtenance(s)	1.00	1.28	11.240	12.36	134.56	0.650	0.000	2.00	3.998	2.60	32.1	0.0	94.9
110.00		1.00	1.29	11.305	12.44	130.95	0.650	0.000	3.00	5.850	3.80	47.3	0.0	138.9
115.00		1.00	1.30	11.412	12.55	124.87	0.650	0.000	5.00	9.359	6.08	76.4	0.0	222.1
120.00		1.00	1.32	11.514	12.67	118.71	0.650	0.000	5.00	8.871	5.77	73.0	0.0	210.4
125.00		1.00	1.33	11.614	12.78	112.47	0.650	0.000	5.00	8.382	5.45	69.6	0.0	198.7
130.00		1.00	1.34	11.710	12.88	106.15	0.650	0.000	5.00	7.893	5.13	66.1	0.0	187.0
135.00		1.00	1.35	11.803	12.98	99.77	0.650	0.000	5.00	7.405	4.81	62.5	0.0	175.3
137.00	Appurtenance(s)	1.00	1.35	11.840	13.02	97.19	0.650	0.000	2.00	2.825	1.84	23.9	0.0	66.8
139.00	Appurtenance(s)	1.00	1.36	11.876	13.06	94.61	0.650	0.000	2.00	2.747	1.79	23.3	0.0	65.0
								Totals:	**139.00**			**2,561.5**		**13,342.3**

Copyright © 2020 by Tower Engineering Solutions, LLC. All rights reserved.

Discrete Appurtenance Forces

Structure:	CT13549-S-SBA		**Code:**	EIA/TIA-222-G	11/13/2020
Site Name:	Danbury 1		**Exposure:**	C	
Height:	139.00 (ft)		**Crest Height:**	0.00	
Base Elev:	0.000 (ft)		**Site Class:**	D - Stiff Soil	
Gh:	1.1	**Topography:** 1	**Struct Class:**	II	Page: 32

Tower Engineering Solutions

Load Case: 1.0D + 1.0W 60 mph Wind

Dead Load Factor 1.00

Wind Load Factor 1.00

Iterations 25

No.	Elev (ft)	Description	Qty	qz (psf)	qzGh (psf)	Orient Factor x Ka	Ka	Total CaAa (sf)	Dead Load (lb)	Horiz Ecc (ft)	Vert Ecc (ft)	Wind FX (lb)	Mom Y (lb-ft)	Mom Z (lb-ft)
1	139.00	6' Lightning rod	1	11.876	13.064	1.00	1.00	0.38	6.50	0.000	0.000	4.96	0.00	0.00
2	137.00	Air 32	3	11.840	13.024	0.65	0.75	12.74	396.60	0.000	0.000	165.97	0.00	0.00
3	137.00	AIR6449 B41	3	11.840	13.024	0.53	0.75	9.03	309.00	0.000	0.000	117.55	0.00	0.00
4	137.00	RFS	3	11.840	13.024	0.52	0.75	31.88	384.00	0.000	0.000	415.18	0.00	0.00
5	137.00	KRY 112 144/1	3	11.840	13.024	0.50	0.75	0.62	33.00	0.000	0.000	8.05	0.00	0.00
6	137.00	SDX1926Q-43	1	11.840	13.024	0.50	0.75	0.19	7.00	0.000	0.000	2.49	0.00	0.00
7	137.00	RMQP-4096-HRK	1	11.840	13.024	1.00	1.00	46.00	2449.00	0.000	0.000	599.10	0.00	0.00
8	137.00	4415 B25	3	11.840	13.024	0.50	0.75	2.80	138.90	0.000	0.000	36.52	0.00	0.00
9	137.00	Radio 4449 B71+B12	3	11.840	13.024	0.50	0.75	2.49	210.00	0.000	0.000	32.40	0.00	0.00
10	107.00	DBC20056F1V1	3	11.240	12.364	0.54	0.80	0.66	19.80	0.000	0.000	8.15	0.00	0.00
11	107.00	OPA-65R-LCUU-H6	3	11.240	12.364	0.63	0.80	18.32	240.00	0.000	0.000	226.45	0.00	0.00
12	107.00	EPBQ-652L8H6-L2	3	11.240	12.364	0.68	0.80	19.71	218.40	0.000	0.000	243.64	0.00	0.00
13	107.00	Collar Mount Commscope	1	11.240	12.364	1.00	1.00	5.00	122.40	0.000	0.000	61.82	0.00	0.00
14	107.00	DTMABP7819VG12A	3	11.240	12.364	0.54	0.80	1.83	57.60	0.000	0.000	22.66	0.00	0.00
15	107.00	RRUS-E2	3	11.240	12.364	0.54	0.80	2.65	231.00	0.000	0.000	32.80	0.00	0.00
16	107.00	T-Arm Commscope	3	11.240	12.364	0.56	0.75	16.88	534.00	0.000	0.000	208.64	0.00	0.00
17	107.00	DC6-48-60-18-8F	3	11.240	12.364	0.54	0.80	2.36	95.40	0.000	0.000	29.22	0.00	0.00
18	107.00	RRUS A2	3	11.240	12.364	0.54	0.80	2.99	63.60	0.000	0.000	36.98	0.00	0.00
19	107.00	RRUS 12	3	11.240	12.364	0.54	0.80	5.07	174.00	0.000	0.000	62.62	0.00	0.00
20	107.00	RRUS-11 700MHz	3	11.240	12.364	0.54	0.80	4.05	152.10	0.000	0.000	50.10	0.00	0.00
21	107.00	RRUS 4449 B5/B12	3	11.240	12.364	0.54	0.80	2.65	255.00	0.000	0.000	32.80	0.00	0.00
22	107.00	RRUS-32	3	11.240	12.364	0.54	0.80	6.22	231.00	0.000	0.000	76.94	0.00	0.00
23	97.00	BXA-171063/12CF	3	11.010	12.111	0.67	0.80	9.64	45.00	0.000	0.000	116.71	0.00	0.00
24	97.00	Standoff	3	11.010	12.111	0.56	0.75	13.50	1050.00	0.000	0.000	163.50	0.00	0.00
25	97.00	BXA-70063/6CF	3	11.010	12.111	0.56	0.80	12.72	51.00	0.000	0.000	154.02	0.00	0.00
26	97.00	RRH2x40-AWS	3	11.010	12.111	0.54	0.80	4.05	132.00	0.000	0.000	49.08	0.00	0.00
27	97.00	DBXNH-6565A-VTM	3	11.010	12.111	0.64	0.80	10.31	102.60	0.000	0.000	124.87	0.00	0.00
28	97.00	FD9R6004/2C-3L (3.1 lbs)	6	11.010	12.111	0.54	0.80	1.16	18.60	0.000	0.000	14.02	0.00	0.00
29	97.00	DB-T1-6Z-8AB-0Z	1	11.010	12.111	1.00	1.00	4.80	18.90	0.000	0.000	58.13	0.00	0.00
30	87.00	0208	3	10.761	11.837	0.54	0.80	2.20	59.40	0.000	0.000	26.08	0.00	0.00
31	87.00	4415	2	10.761	11.837	0.54	0.80	1.99	88.20	0.000	0.000	23.60	0.00	0.00
32	87.00	SF-SU7-2-96	3	10.761	11.837	0.56	0.75	25.48	1185.00	0.000	0.000	301.61	0.00	0.00
33	87.00	ODI2-065R18K-GQ	3	10.761	11.837	0.56	0.80	8.15	75.30	0.000	0.000	96.45	0.00	0.00
							Totals:		**9,154.30**			**3,603.11**		

Copyright © 2020 by Tower Engineering Solutions, LLC. All rights reserved.

Total Applied Force Summary

Structure:	CT13549-S-SBA		**Code:**	EIA/TIA-222-G	11/13/2020
Site Name:	Danbury 1		**Exposure:**	C	
Height:	139.00 (ft)		**Crest Height:**	0.00	
Base Elev:	0.000 (ft)		**Site Class:**	D - Stiff Soil	
Gh:	1.1	**Topography:** 1	**Struct Class:**	II	Page: 33

Tower Engineering Solutions

Load Case: 1.0D + 1.0W 60 mph Wind

Dead Load Factor 1.00

Wind Load Factor 1.00

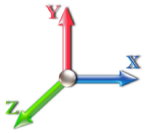

Iterations 25

Elev (ft)	Description	Lateral FX (-) (lb)	Axial FY (-) (lb)	Torsion MY (lb-ft)	Moment MZ (lb-ft)
0.00		0.00	0.00	0.00	0.00
5.00		105.03	956.76	0.00	0.00
10.00		102.43	937.27	0.00	0.00
15.00		99.83	917.78	0.00	0.00
20.00		103.16	898.29	0.00	0.00
25.00		105.23	878.80	0.00	0.00
30.00		106.35	859.31	0.00	0.00
35.00		106.75	839.83	0.00	0.00
40.00		106.60	820.34	0.00	0.00
45.00		106.01	800.85	0.00	0.00
48.50		73.41	549.00	0.00	0.00
50.00		31.60	378.59	0.00	0.00
53.25		68.32	809.44	0.00	0.00
55.00		36.44	226.44	0.00	0.00
60.00		103.70	636.45	0.00	0.00
65.00		101.93	620.86	0.00	0.00
70.00		99.94	605.27	0.00	0.00
75.00		97.76	589.68	0.00	0.00
80.00		95.40	574.09	0.00	0.00
85.00		92.89	558.50	0.00	0.00
87.00	(11) attachments	484.02	1626.94	0.00	0.00
90.00		53.68	321.90	0.00	0.00
95.00		87.43	524.02	0.00	0.00
97.00	(22) attachments	714.37	1623.34	0.00	0.00
98.75		29.40	153.78	0.00	0.00
100.00		21.08	171.86	0.00	0.00
102.00		33.36	271.43	0.00	0.00
105.00		49.17	208.01	0.00	0.00
107.00	(37) attachments	1124.96	2530.64	0.00	0.00
110.00		47.29	184.08	0.00	0.00
115.00		76.36	297.44	0.00	0.00
120.00		73.03	285.75	0.00	0.00
125.00		69.60	274.05	0.00	0.00
130.00		66.09	262.36	0.00	0.00
135.00		62.49	250.67	0.00	0.00
137.00	(20) attachments	1401.17	4024.49	0.00	0.00
139.00	(1) attachments	28.29	74.10	0.00	0.00
	Totals:	**6,164.57**	**26,542.42**	**0.00**	**0.00**

Copyright © 2020 by Tower Engineering Solutions, LLC. All rights reserved.

Linear Appurtenance Segment Forces (Factored)

Structure:	CT13549-S-SBA	**Code:**	EIA/TIA-222-G	11/13/2020	
Site Name:	Danbury 1	**Exposure:**	C		
Height:	139.00 (ft)	**Crest Height:**	0.00		
Base Elev:	0.000 (ft)	**Site Class:**	D - Stiff Soil		
Gh:	1.1 **Topography:** 1	**Struct Class:**	II	Page: 34	

Load Case: 1.0D + 1.0W 60 mph Wind

Dead Load Factor 1.00

Wind Load Factor 1.00

Iterations 25

Top Elev (ft)	Description	Wind Exposed	Length (ft)	Ca	Exposed Width (in)	Area (sqft)	CaAa (sqft)	Ra	Cf Adjust Factor	qz (psf)	F X (lb)	Dead Load (lb)
5.00	Safety Cable	Yes	5.00	0.000	0.00	0.00	0.00	0.000	0.000	7.442	0.00	1.37
5.00	Step bolts (ladder)	Yes	5.00	0.000	0.00	0.00	0.00	0.000	0.000	7.442	0.00	5.20
10.00	Safety Cable	Yes	5.00	0.000	0.00	0.00	0.00	0.000	0.000	7.442	0.00	1.37
10.00	Step bolts (ladder)	Yes	5.00	0.000	0.00	0.00	0.00	0.000	0.000	7.442	0.00	5.20
15.00	Safety Cable	Yes	5.00	0.000	0.00	0.00	0.00	0.000	0.000	7.442	0.00	1.37
15.00	Step bolts (ladder)	Yes	5.00	0.000	0.00	0.00	0.00	0.000	0.000	7.442	0.00	5.20
20.00	Safety Cable	Yes	5.00	0.000	0.00	0.00	0.00	0.000	0.000	7.896	0.00	1.37
20.00	Step bolts (ladder)	Yes	5.00	0.000	0.00	0.00	0.00	0.000	0.000	7.896	0.00	5.20
25.00	Safety Cable	Yes	5.00	0.000	0.00	0.00	0.00	0.000	0.000	8.276	0.00	1.37
25.00	Step bolts (ladder)	Yes	5.00	0.000	0.00	0.00	0.00	0.000	0.000	8.276	0.00	5.20
30.00	Safety Cable	Yes	5.00	0.000	0.00	0.00	0.00	0.000	0.000	8.600	0.00	1.37
30.00	Step bolts (ladder)	Yes	5.00	0.000	0.00	0.00	0.00	0.000	0.000	8.600	0.00	5.20
35.00	Safety Cable	Yes	5.00	0.000	0.00	0.00	0.00	0.000	0.000	8.883	0.00	1.37
35.00	Step bolts (ladder)	Yes	5.00	0.000	0.00	0.00	0.00	0.000	0.000	8.883	0.00	5.20
40.00	Safety Cable	Yes	5.00	0.000	0.00	0.00	0.00	0.000	0.000	9.137	0.00	1.37
40.00	Step bolts (ladder)	Yes	5.00	0.000	0.00	0.00	0.00	0.000	0.000	9.137	0.00	5.20
45.00	Safety Cable	Yes	5.00	0.000	0.00	0.00	0.00	0.000	0.000	9.366	0.00	1.37
45.00	Step bolts (ladder)	Yes	5.00	0.000	0.00	0.00	0.00	0.000	0.000	9.366	0.00	5.20
48.50	Safety Cable	Yes	3.50	0.000	0.00	0.00	0.00	0.000	0.000	9.515	0.00	0.96
48.50	Step bolts (ladder)	Yes	3.50	0.000	0.00	0.00	0.00	0.000	0.000	9.515	0.00	3.64
50.00	Safety Cable	Yes	1.50	0.000	0.00	0.00	0.00	0.000	0.000	9.576	0.00	0.41
50.00	Step bolts (ladder)	Yes	1.50	0.000	0.00	0.00	0.00	0.000	0.000	9.576	0.00	1.56
53.25	Safety Cable	Yes	3.25	0.000	0.00	0.00	0.00	0.000	0.000	9.704	0.00	0.89
53.25	Step bolts (ladder)	Yes	3.25	0.000	0.00	0.00	0.00	0.000	0.000	9.704	0.00	3.38
55.00	Safety Cable	Yes	1.75	0.000	0.00	0.00	0.00	0.000	0.000	9.770	0.00	0.48
55.00	Step bolts (ladder)	Yes	1.75	0.000	0.00	0.00	0.00	0.000	0.000	9.770	0.00	1.82
60.00	Safety Cable	Yes	5.00	0.000	0.00	0.00	0.00	0.000	0.000	9.951	0.00	1.37
60.00	Step bolts (ladder)	Yes	5.00	0.000	0.00	0.00	0.00	0.000	0.000	9.951	0.00	5.20
65.00	Safety Cable	Yes	5.00	0.000	0.00	0.00	0.00	0.000	0.000	10.120	0.00	1.37
65.00	Step bolts (ladder)	Yes	5.00	0.000	0.00	0.00	0.00	0.000	0.000	10.120	0.00	5.20
70.00	Safety Cable	Yes	5.00	0.000	0.00	0.00	0.00	0.000	0.000	10.279	0.00	1.37
70.00	Step bolts (ladder)	Yes	5.00	0.000	0.00	0.00	0.00	0.000	0.000	10.279	0.00	5.20
75.00	Safety Cable	Yes	5.00	0.000	0.00	0.00	0.00	0.000	0.000	10.430	0.00	1.37
75.00	Step bolts (ladder)	Yes	5.00	0.000	0.00	0.00	0.00	0.000	0.000	10.430	0.00	5.20
80.00	Safety Cable	Yes	5.00	0.000	0.00	0.00	0.00	0.000	0.000	10.572	0.00	1.37
80.00	Step bolts (ladder)	Yes	5.00	0.000	0.00	0.00	0.00	0.000	0.000	10.572	0.00	5.20
85.00	Safety Cable	Yes	5.00	0.000	0.00	0.00	0.00	0.000	0.000	10.708	0.00	1.37
85.00	Step bolts (ladder)	Yes	5.00	0.000	0.00	0.00	0.00	0.000	0.000	10.708	0.00	5.20
87.00	Safety Cable	Yes	2.00	0.000	0.00	0.00	0.00	0.000	0.000	10.761	0.00	0.55
87.00	Step bolts (ladder)	Yes	2.00	0.000	0.00	0.00	0.00	0.000	0.000	10.761	0.00	2.08
90.00	Safety Cable	Yes	3.00	0.000	0.00	0.00	0.00	0.000	0.000	10.838	0.00	0.82
90.00	Step bolts (ladder)	Yes	3.00	0.000	0.00	0.00	0.00	0.000	0.000	10.838	0.00	3.12
95.00	Safety Cable	Yes	5.00	0.000	0.00	0.00	0.00	0.000	0.000	10.962	0.00	1.37
95.00	Step bolts (ladder)	Yes	5.00	0.000	0.00	0.00	0.00	0.000	0.000	10.962	0.00	5.20
97.00	Safety Cable	Yes	2.00	0.000	0.00	0.00	0.00	0.000	0.000	11.010	0.00	0.55
97.00	Step bolts (ladder)	Yes	2.00	0.000	0.00	0.00	0.00	0.000	0.000	11.010	0.00	2.08
98.75	Safety Cable	Yes	1.75	0.000	0.00	0.00	0.00	0.000	0.000	11.051	0.00	0.48

Copyright © 2020 by Tower Engineering Solutions, LLC. All rights reserved.

Linear Appurtenance Segment Forces (Factored)

Structure:	CT13549-S-SBA	**Code:**	EIA/TIA-222-G	11/13/2020	
Site Name:	Danbury 1	**Exposure:**	C		
Height:	139.00 (ft)	**Crest Height:**	0.00		
Base Elev:	0.000 (ft)	**Site Class:**	D - Stiff Soil		
Gh:	1.1 **Topography:** 1	**Struct Class:**	II	Page: 35	

Load Case: 1.0D + 1.0W 60 mph Wind

Dead Load Factor 1.00

Wind Load Factor 1.00

Iterations 25

Top Elev (ft)	Description	Wind Exposed	Length (ft)	Ca	Exposed Width (in)	Area (sqft)	CaAa (sqft)	Ra	Cf Adjust Factor	qz (psf)	F X (lb)	Dead Load (lb)
98.75	Step bolts (ladder)	Yes	1.75	0.000	0.00	0.00	0.00	0.000	0.000	11.051	0.00	1.82
100.00	Safety Cable	Yes	1.25	0.000	0.00	0.00	0.00	0.000	0.000	11.081	0.00	0.34
100.00	Step bolts (ladder)	Yes	1.25	0.000	0.00	0.00	0.00	0.000	0.000	11.081	0.00	1.30
102.00	Safety Cable	Yes	2.00	0.000	0.00	0.00	0.00	0.000	0.000	11.127	0.00	0.55
102.00	Step bolts (ladder)	Yes	2.00	0.000	0.00	0.00	0.00	0.000	0.000	11.127	0.00	2.08
105.00	Safety Cable	Yes	3.00	0.000	0.00	0.00	0.00	0.000	0.000	11.195	0.00	0.82
105.00	Step bolts (ladder)	Yes	3.00	0.000	0.00	0.00	0.00	0.000	0.000	11.195	0.00	3.12
107.00	Safety Cable	Yes	2.00	0.000	0.00	0.00	0.00	0.000	0.000	11.240	0.00	0.55
107.00	Step bolts (ladder)	Yes	2.00	0.000	0.00	0.00	0.00	0.000	0.000	11.240	0.00	2.08
110.00	Safety Cable	Yes	3.00	0.000	0.00	0.00	0.00	0.000	0.000	11.305	0.00	0.82
110.00	Step bolts (ladder)	Yes	3.00	0.000	0.00	0.00	0.00	0.000	0.000	11.305	0.00	3.12
115.00	Safety Cable	Yes	5.00	0.000	0.00	0.00	0.00	0.000	0.000	11.412	0.00	1.37
115.00	Step bolts (ladder)	Yes	5.00	0.000	0.00	0.00	0.00	0.000	0.000	11.412	0.00	5.20
120.00	Safety Cable	Yes	5.00	0.000	0.00	0.00	0.00	0.000	0.000	11.514	0.00	1.37
120.00	Step bolts (ladder)	Yes	5.00	0.000	0.00	0.00	0.00	0.000	0.000	11.514	0.00	5.20
125.00	Safety Cable	Yes	5.00	0.000	0.00	0.00	0.00	0.000	0.000	11.614	0.00	1.37
125.00	Step bolts (ladder)	Yes	5.00	0.000	0.00	0.00	0.00	0.000	0.000	11.614	0.00	5.20
130.00	Safety Cable	Yes	5.00	0.000	0.00	0.00	0.00	0.000	0.000	11.710	0.00	1.37
130.00	Step bolts (ladder)	Yes	5.00	0.000	0.00	0.00	0.00	0.000	0.000	11.710	0.00	5.20
135.00	Safety Cable	Yes	5.00	0.000	0.00	0.00	0.00	0.000	0.000	11.803	0.00	1.37
135.00	Step bolts (ladder)	Yes	5.00	0.000	0.00	0.00	0.00	0.000	0.000	11.803	0.00	5.20
137.00	Safety Cable	Yes	2.00	0.000	0.00	0.00	0.00	0.000	0.000	11.840	0.00	0.55
137.00	Step bolts (ladder)	Yes	2.00	0.000	0.00	0.00	0.00	0.000	0.000	11.840	0.00	2.08
139.00	Safety Cable	Yes	2.00	0.000	0.00	0.00	0.00	0.000	0.000	11.876	0.00	0.55
139.00	Step bolts (ladder)	Yes	2.00	0.000	0.00	0.00	0.00	0.000	0.000	11.876	0.00	2.08
										Totals:	**0.0**	**182.5**

Copyright © 2020 by Tower Engineering Solutions, LLC. All rights reserved.

Calculated Forces

Structure:	CT13549-S-SBA	**Code:**	EIA/TIA-222-G	11/13/2020	
Site Name:	Danbury 1	**Exposure:**	C		
Height:	139.00 (ft)	**Crest Height:**	0.00		
Base Elev:	0.000 (ft)	**Site Class:**	D - Stiff Soil		
Gh:	1.1 **Topography:** 1	**Struct Class:**	II	Page: 36	

Tower Engineering Solutions

Load Case: 1.0D + 1.0W 60 mph Wind

Dead Load Factor 1.00

Wind Load Factor 1.00

Iterations 25

Seg Elev (ft)	Pu FY (-) (kips)	Vu FX (-) (kips)	Tu MY (-) (ft-kips)	Mu MZ (ft-kips)	Mu MX (ft-kips)	Resultant Moment (ft-kips)	phi Pn (kips)	phi Vn (kips)	phi Tn (ft-kips)	phi Mn (ft-kips)	Total Deflect (in)	Rotation Sway (deg)	Rotation Twist (deg)	Stress Ratio
0.00	-26.54	-6.18	0.00	-606.38	0.00	606.38	3003.53	1501.76	5797.25	2902.93	0.00	0.000	0.000	0.218
5.00	-25.58	-6.10	0.00	-575.48	0.00	575.48	2960.91	1480.45	5573.38	2790.83	0.03	-0.065	0.000	0.215
10.00	-24.63	-6.03	0.00	-544.97	0.00	544.97	2916.70	1458.35	5350.68	2679.32	0.14	-0.131	0.000	0.212
15.00	-23.71	-5.95	0.00	-514.83	0.00	514.83	2870.92	1435.46	5129.40	2568.51	0.31	-0.199	0.000	0.209
20.00	-22.80	-5.87	0.00	-485.06	0.00	485.06	2823.56	1411.78	4909.74	2458.52	0.56	-0.268	0.000	0.205
25.00	-21.92	-5.79	0.00	-455.69	0.00	455.69	2774.61	1387.31	4691.94	2349.46	0.88	-0.339	0.000	0.202
30.00	-21.05	-5.71	0.00	-426.73	0.00	426.73	2724.09	1362.04	4476.23	2241.44	1.27	-0.411	0.000	0.198
35.00	-20.20	-5.62	0.00	-398.19	0.00	398.19	2671.99	1335.99	4262.83	2134.58	1.74	-0.484	0.000	0.194
40.00	-19.38	-5.53	0.00	-370.10	0.00	370.10	2618.30	1309.15	4051.97	2029.00	2.29	-0.558	0.000	0.190
45.00	-18.57	-5.44	0.00	-342.44	0.00	342.44	2563.04	1281.52	3843.87	1924.79	2.91	-0.634	0.000	0.185
48.50	-18.02	-5.37	0.00	-323.41	0.00	323.41	2523.41	1261.71	3699.97	1852.74	3.40	-0.688	0.000	0.182
50.00	-17.64	-5.35	0.00	-315.36	0.00	315.36	2506.19	1253.10	3638.77	1822.09	3.62	-0.712	0.000	0.180
53.25	-16.83	-5.28	0.00	-297.99	0.00	297.99	1850.79	925.39	2677.47	1340.72	4.12	-0.763	0.000	0.231
55.00	-16.59	-5.26	0.00	-288.75	0.00	288.75	1837.85	918.92	2627.99	1315.95	4.41	-0.791	0.000	0.228
60.00	-15.95	-5.17	0.00	-262.47	0.00	262.47	1799.82	899.91	2487.54	1245.62	5.28	-0.884	0.000	0.220
65.00	-15.32	-5.08	0.00	-236.62	0.00	236.62	1760.21	880.10	2348.61	1176.05	6.26	-0.978	0.000	0.210
70.00	-14.71	-5.00	0.00	-211.21	0.00	211.21	1719.02	859.51	2211.45	1107.37	7.33	-1.070	0.000	0.199
75.00	-14.12	-4.91	0.00	-186.23	0.00	186.23	1676.25	838.13	2076.26	1039.67	8.51	-1.162	0.000	0.188
80.00	-13.54	-4.82	0.00	-161.69	0.00	161.69	1631.90	815.95	1943.29	973.09	9.77	-1.252	0.000	0.174
85.00	-12.98	-4.73	0.00	-137.58	0.00	137.58	1585.97	792.99	1812.75	907.72	11.13	-1.339	0.000	0.160
87.00	-11.36	-4.22	0.00	-128.12	0.00	128.12	1567.16	783.58	1761.26	881.94	11.70	-1.374	0.000	0.153
90.00	-11.03	-4.17	0.00	-115.47	0.00	115.47	1538.46	769.23	1684.87	843.69	12.58	-1.425	0.000	0.144
95.00	-10.51	-4.08	0.00	-94.64	0.00	94.64	1489.37	744.69	1559.88	781.10	14.11	-1.503	0.000	0.128
97.00	-8.90	-3.32	0.00	-86.49	0.00	86.49	1469.29	734.65	1510.75	756.50	14.75	-1.534	0.000	0.120
98.75	-8.75	-3.29	0.00	-80.67	0.00	80.67	1451.52	725.76	1468.18	735.18	15.32	-1.560	0.000	0.116
100.00	-8.58	-3.27	0.00	-76.55	0.00	76.55	1437.39	718.70	1436.71	719.42	15.73	-1.579	0.000	0.112
102.00	-8.30	-3.24	0.00	-70.01	0.00	70.01	990.34	495.17	991.38	496.43	16.40	-1.608	0.000	0.149
105.00	-8.09	-3.19	0.00	-60.31	0.00	60.31	971.88	485.94	945.01	473.21	17.42	-1.648	0.000	0.136
107.00	-5.60	-1.99	0.00	-53.93	0.00	53.93	959.26	479.63	914.39	457.88	18.12	-1.681	0.000	0.124
110.00	-5.41	-1.94	0.00	-47.96	0.00	47.96	939.85	469.93	868.93	435.11	19.19	-1.727	0.000	0.116
115.00	-5.11	-1.86	0.00	-38.24	0.00	38.24	906.24	453.12	794.52	397.85	21.04	-1.798	0.000	0.102
120.00	-4.83	-1.79	0.00	-28.91	0.00	28.91	871.06	435.53	722.01	361.54	22.96	-1.864	0.000	0.086
125.00	-4.56	-1.71	0.00	-19.97	0.00	19.97	834.29	417.15	651.64	326.30	24.94	-1.920	0.000	0.067
130.00	-4.30	-1.64	0.00	-11.41	0.00	11.41	791.03	395.51	580.02	290.44	26.97	-1.963	0.000	0.045
135.00	-4.05	-1.57	0.00	-3.20	0.00	3.20	739.97	369.98	507.20	253.97	29.04	-1.987	0.000	0.018
137.00	-0.07	-0.03	0.00	-0.06	0.00	0.06	719.55	359.77	479.43	240.07	29.88	-1.990	0.000	0.000
139.00	0.00	-0.03	0.00	0.00	0.00	0.00	699.12	349.56	452.45	226.56	30.71	-1.990	0.000	0.000

Copyright © 2020 by Tower Engineering Solutions, LLC. All rights reserved.

Reactions

Load Case	Shear FX (kips)	Shear FZ (kips)	Axial FY (kips)	Moment MX (ft-kips)	Moment MY (ft-kips)	Moment MZ (ft-kips)
1.2D + 1.6W 93 mph Wind	23.8	0.00	31.80	0.00	0.00	2347.74
0.9D + 1.6W 93 mph Wind	23.7	0.00	23.84	0.00	0.00	2315.42
1.2D + 1.0Di + 1.0Wi 50 mph Wind	7.5	0.00	52.15	0.00	0.00	742.75
1.2D + 1.0E	1.6	0.00	31.85	0.00	0.00	185.63
0.9D + 1.0E	1.6	0.00	23.89	0.00	0.00	182.59
1.0D + 1.0W 60 mph Wind	6.2	0.00	26.54	0.00	0.00	606.38

Max Stresses

Load Case	Pu FY (-) (kips)	Vu FX (-) (kips)	Tu MY (-) (ft-kips)	Mu MZ (ft-kips)	Mu MX (ft-kips)	Resultant Moment (ft-kips)	phi Pn (kips)	phi Vn (kips)	phi Tn (ft-kips)	phi Mn (ft-kips)	Elev (ft)	Stress Ratio
1.2D + 1.6W 93 mph Wind	-19.23	-20.45	0.00	-1156.9	0.00	-1156.9	1850.79	925.39	2677.47	1340.72	53.25	0.874
0.9D + 1.6W 93 mph Wind	-14.18	-20.17	0.00	-1133.2	0.00	-1133.2	1850.79	925.39	2677.47	1340.72	53.25	0.853
1.2D + 1.0Di + 1.0Wi 50 mph Wind	-36.07	-6.50	0.00	-366.37	0.00	-366.37	1850.79	925.39	2677.47	1340.72	53.25	0.293
1.2D + 1.0E	-10.06	-1.30	0.00	-43.64	0.00	-43.64	990.34	495.17	991.38	496.43	102.00	0.098
0.9D + 1.0E	-7.54	-1.27	0.00	-42.83	0.00	-42.83	990.34	495.17	991.38	496.43	102.00	0.094
1.0D + 1.0W 60 mph Wind	-16.83	-5.28	0.00	-297.99	0.00	-297.99	1850.79	925.39	2677.47	1340.72	53.25	0.231

Copyright © 2020 by Tower Engineering Solutions, LLC. All rights reserved.

Base Plate Summary

Structure:	CT13549-S-SB		**Code:**	EIA/TIA-222-G	11/13/2020
Site Name:	Danbury 1		**Exposure:**	C	
Height:	139.00 (ft)		**Crest Height:**	0.00	
Base Elev:	0.000 (ft)		**Site Class:**	D - Stiff Soil	
Gh:	1.1	**Topography:** 1	**Struct Class:**	II	Page: 38

Tower Engineering Solutions

Reactions

Original Design	
Moment (kip-ft):	2074.00
Axial (kip):	21.70
Shear (kip):	20.70

Analysis (1.2D + 1.6W)	
Moment (kip-ft):	2347.74
Axial (kip):	31.80
Shear (kip):	23.77

Base Plate

Yield (ksi):	50.00
Width (in):	51.50
Style:	Clipped
Polygon Sides:	4.00
Clip Length (in):	9.00
Effective Len (in):	9.88
Moment (kip-in):	563.92
Allow Stress (ksi):	67.50
Applied Stress (ksi):	45.23
Stress Ratio:	0.67

Anchor Bolts

Bolt Circle:	53.50
Number Bolts:	12.00
Bolt Type:	2.25" 18J
Bolt Diameter (in):	2.25
Yield (ksi):	75.00
Ultimate (ksi):	100.00
Arrangement:	Clustered
Cluster Dist (in):	6.00
Start Angle (deg):	45.00

Compression	
Force (kip):	179.88
Allowable (kip):	260.00
Ratio:	0.71

Tension	
Force (kip):	171.19
Allowable (kip):	260.00
Ratio:	0.67

Copyright © 2020 by Tower Engineering Solutions, LLC. All rights reserved.

Monopole Mat Foundation Design

			Date
			11/13/2020
Customer Name:	T-Mobile	**EIA/TIA Standard:**	EIA-222-G
Site Name:		**Structure Height (Ft.):**	139
Site Number:	CT13549-S-SBA	**Engineer Name:**	J. Tibbetts
Engr. Number:	99449	**Engineer Login ID:**	

Foundation Info Obtained from:	Drawings/Calculations
Structure Type:	Monopole
Analysis or Design?	Analysis

Base Reactions (Factored):

Axial Load (Kips):	31.8	Shear Force (Kips):	23.8
Uplift Force (Kips):	0.0	Moment (Kips-ft):	2347.7
Allowable overstress %:	5.0%		

Foundation Geometries:

		Mods required -Yes/No ?:	No
Diameter of Pier (ft.):	5.5	Depth of Base BG (ft.):	6.5
Pier Height A. G. (ft.):	0.50	Thickness of Pad (ft):	5.00
Length of Pad (ft.):	19	Width of Pad (ft.):	19
Final Length of pad (ft)	19.0	Final width of pad (ft):	19.0

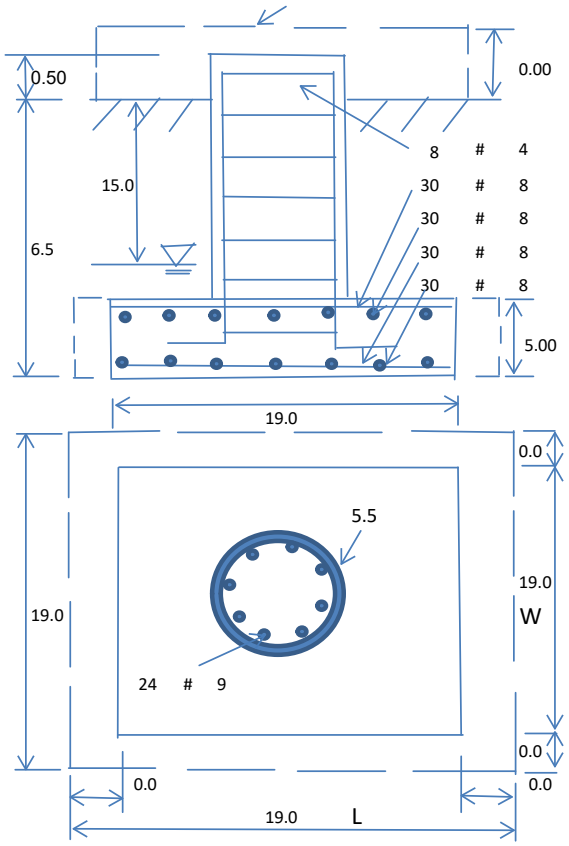

Material Properties and Reabr Info:

Concrete Strength (psi):	4000	Steel Elastic Modulus:	29000	ksi
Vertical bar yield (ksi)	60	Tie steel yield (ksi):	60	
Vertical Rebar Size #:	9	Tie / Stirrup Size #:	4	
Qty. of Vertical Rebars:	24	Tie Spacing (in):	12.0	
Pad Rebar Yield (Ksi):	60	Pad Steel Rebar Size (#):	8	
Concrete Cover (in.):	3	Unit Weight of Concrete:	150.0	pcf

Rebar at the bottom of the concrete pad:

Qty. of Rebar in Pad (L):	30	Qty. of Rebar in Pad (W):	30

Rebar at the top of the concrete pad:

Qty. of Rebar in Pad (L):	30	Qty. of Rebar in Pad (W):	30
Apply 1.35 factor for e/w Per G:	1.35		

Soil Design Parameters:

Soil Unit Weight (pcf):	115.0	Soil Buoyant Weight:	50.0	Pcf		
Water Table B.G.S. (ft):	15.0	Unit Weight of Water:	62.4	pcf	Angle from Top of Pad:	30
Ultimate Bearing Pressure (psf):	8600	Ultimate Skin Friction:	0	Psf	Angle from Bottm of Pad:	25
Consider Friction for O.T.M. (Y/N):	No	Consider Friction for bearing (Y/N):	No		Angle from Bottm of Pad:	25
Consider soil hor. resist. for OTM.:	Yes	Reduction factor on the maximum soil bearing pressure:				1.00

Foundation Analysis and Design: Uplift Strength Reduction Factor: 0.75 Compression Strength Reduction Factor: 0.75

Total Dry Soil Volume (cu. Ft.):	505.86	Total Dry Soil Weight (Kips):	58.17
Total Buoyant Soil Volume (cu. Ft.):	0.00	Total Buoyant Soil Weight (Kips):	0.00
Total Effective Soil Weight (Kips):	58.17	Weight from the Concrete Block at Top (K):	0.00
Total Dry Concrete Volume (cu. Ft.):	1852.52	Total Dry Concrete Weight (Kips):	277.88
Total Buoyant Concrete Volume (cu. Ft.):	0.00	Total Buoyant Concrete Weight (Kips):	0.00
Total Effective Concrete Weight (Kips):	277.88	Total Vertical Load on Base (Kips):	367.85

Check Soil Capacities:

					Load/ Capacity Ratio	
Calculated Maxium Net Soil Pressure under the base (psf):	3888	<	Allowable Factored Soil Bearing (psf):	6450	0.60	OK!
Allowable Foundation Overturning Resistance (kips-ft.):	3175.3	>	Design Factored Momont (kips-ft):	2329	0.73	OK!
Factor of Safety Against Overturning (O. R. Moment/Design Moment):	1.36	OK!				

Check the capacities of Reinforceing Concrete:

Strength reduction factor (Flexure and axial tension):	0.90	Strength reduction factor (Shear):	0.75			
Strength reduction factor (Axial compresion):	0.65	Wind Load Factor on Concrete Design:	1.00			
				Load/ Capacity Ratio		
(1) Concrete Pier:						
Vertical Steel Rebar Area (sq. in./each):	1.00		Tie / Stirrup Area (sq. in./each):	0.20		
Calculated Moment Capacity (Mn,Kips-Ft):	3146.1	>	Design Factored Moment (Mu, Kips-F	2395.3	0.76	OK!
Calculated Shear Capacity (Kips):	430.2	>	Design Factored Shear (Kips):	23.8	0.06	OK!
Calculated Tension Capacity (Tn, Kips):	1296.0	>	Design Factored Tension (Tu Kips):	0.0	0.00	OK!
Calculated Compression Capacity (Pn, Kips):	6006.2	>	Design Factored Axial Load (Pu Kips):	31.8	0.01	OK!
Moment & Axial Strength Combination:	0.76	OK!	Check Tie Spacing (Design/Required):		1	OK!
Pier Reinforcement Ratio:	0.007		Reinforcement Ratio is satisfied per ACI			
(2).Concrete Pad:						
One-Way Design Shear Capacity (L-Direction, Kips):	1222.1	>	One-Way Factored Shear (L-D. Kips):	97.5	0.08	OK!
One-Way Design Shear Capacity (W-Direction, Kips):	1222.1	>	One-Way Factored Shear (W-D., Kips)	97.5	0.08	OK!
One-Way Design Shear Capacity (Corner-Corner. Kips):	768.9	>	One-Way Factored Shear (C-C, Kips):	102.8	0.13	OK!
Lower Steel Pad Reinforcement Ratio (L-Direct.):	0.0018	OK!	Lower Steel Pad Reinf. Ratio (W-Direc	0.0018		
Lower Steel Pad Moment Capacity (L-Direction. Kips-ft):	5927.9	>	Moment at Bottom (L-Dir. K-Ft):	746.1	0.13	OK!
Lower Steel Pad Moment Capacity (W-Direction. Kips-ft):	5927.9	>	Moment at Bottom (W-Dir. K-Ft):	746.1	0.13	OK!
Lower Steel Pad Moment Capacity (Corner-Corner,K-ft):	8347.7	>	Moment at Bottom (C-C Dir. K-Ft):	1055.1	0.13	OK!
Upper Steel Pad Reinforcement Ratio (L-Direct.):	0.0018	OK!	Upper Steel Reinf. Ratio (W-Dir.):	0.0018		
Upper Steel Pad Moment Capacity (L-Direc. Kips-ft):	5927.9	>	Moment at the top (L-Dir K-Ft):	351.5	0.06	OK!
Upper Steel Pad Moment Capacity (W-Direc. Kips-ft):	5927.9	>	Moment at the top (W-Dir K-Ft):	351.5	0.06	OK!
Upper Steel Pad Moment Capacity (Corner-Corner. K-ft):	8347.7	>	Moment at the top (C-C Dir. K-Ft):	330.2	0.04	OK!
(3).Check Punching Shear Capacity due to Moment in the Pier:						
Moment transferred by punching shear:	939.1	k-ft.	Max. factored shear stress v_{u_CD}:		3.0	Psi
Max. factored shear stress v_{u_AB}:	5.0	Psi	Factored shear Strength ϕv_n:		189.7	Psi
Max. factored shear stress v_u:	5.0	Psi	Check Usage of Punching Shear Capacity:		0.03	OK!

EXHIBIT 8

Tower Engineering Solutions
Phone (972) 483-0607, Fax (972) 975-9615
1320 Greenway Drive, Suite 600, Irving, Texas 75038

Antenna Mount Analysis Report

Existing 140-Ft Monopole Tower

Customer Name: SBA Communications Corp

Customer Site Number: CT13549-S-SBA / Danbury 1

Customer Site Name: Danbury 1

Carrier Name: T-Mobile (App#: 141491, V1)

Carrier Site ID / Name: CT11796G / Danbury

Site Location: 52 Stadley Rough Road

Danbury, Connecticut

Fairfield County

Latitude: 41.433102

Longitude: -73.431916

STATE OF CONNECTICUT
JARRYD TIBBETTS
No. 34170
LICENSED
PROFESSIONAL ENGINEER
11/11/20

Analysis Result:

Max Structural Usage: 40.2% [Pass]

Report Prepared By : Mariana Franco

NOTE: The proposed Site Pro RMQP-4096-HRK is not currently installed on the tower. The proposed mount was assumed to be installed per the manufacturer's instructions, and it was assumed that the mount can be installed properly on the pole. TES cannot verify that the proposed Site Pro RMQP-4096-HRK will fit properly and is not liable for any fit-up issues during installation.

Introduction

The purpose of this report is to summarize the analysis results on the (1) Site Pro RMQP-4096-HRK low profile platform with HRK at 137.00' elevation to support the proposed antenna configuration. Any modification listed under Sources of Information was assumed completed and was included in this analysis.

Sources of Information

Mount Drawings	Drawings by SitePro
Antenna Loading	Provided by SBA
Modification Drawings	N/A

Analysis Criteria

Basic Wind Speed Used in the Analysis: V_{ULT} = 120.0 mph (3-Sec. Gust) / Equivalent to
V_{ASD} = 93 mph (3-Sec. Gust)
Basic Wind Speed with Ice: 50 mph (3-Sec. Gust) with 1" radial ice concurrent
Operational Wind Speed: 60 mph +0" Radial ice
Standard/Codes: ANSI/TIA/EIA 222-G/ 2015 IBC
Exposure Category: C
Structure Class: II
Topographic Category: 1
Crest Height (Ft): 0

The site is a Risk Category II structure per IBC Table 1604.5. This site does not support emergency communication equipment for first responders such as fire departments, police, hospitals, ambulance services or any of the facilities listed for Risk Categories III and IV. The scope of work detailed in this structural analysis does not include items that are a part of emergency service as the 911 or essential facility service of an emergency response system.

Mount Information

(1) Site Pro RMQP-4096-HRK low profile platform with HRK at 137.00' elevation

Final Antenna Configuration

3 RFS APXVAARR18_43-U-NA20
3 Ericsson Air 32 KRD901146_1_B66A_B2A
3 Ericsson KRY 112 144/1
3 Ericsson 4449 B71+B85
3 Ericsson AIR6449 B41
3 Commscope SDX1926Q-43
3 Ericsson 4415 B25

In addition to the proposed equipment loading, a 500 lb serviceability load was also considered in this analysis in accordance with TIA requirements.

Analysis Results

Our calculations have determined that under design wind load the existing mounts will be structurally adequate to support the proposed antenna configuration. The maximum structural usage is 40.2%, which occurs in the support rail. The proposed equipment must be installed as stipulated in the Final Antenna Configuration section of this report. The analysis results are void if the proposed equipment is not installed in accordance with this report.

The proposed Site Pro RMQP-4096-HRK is not currently installed on the tower. The proposed mount was assumed to be installed per the manufacturer's instructions, and it was assumed that the mount can be installed properly on the pole. TES cannot verify that the proposed Site Pro RMQP-4096-HRK will fit properly and is not liable for any fit-up issues during installation.

Attachments

1. Mount Assembly Drawings
2. Antenna Placement Diagram
3. Analysis Calculations

Standard Conditions

1. The loading configuration as analyzed in this report is as provided from the customer. Any deviation from this design shall be communicated to TES to verify deviation will not adversely impact the analysis.

2. The analysis is based on the presumption that the antenna mount members and components along with any existing reinforcement items have been correctly and properly designed, manufactured, installed and maintained.

3. All the existing structural members were assumed to be in good condition with no physical damage or deterioration associated with corrosion. The mount analysis is not a condition assessment of the mount.

4. The mount analysis was performed in accordance with the loading provided, and if applicable the modification required to support the additional loading.

5. If the mount is modified, installation must adhere to the configuration communicated in the modification drawings.

6. The modification drawings are not intended to convey means or methods. These are the responsibility of the installing contractor.

7. Rigging plan review is available if the contractor requires for a construction class IV or other if required. Review fee would apply.

8. The mount modification package was created based upon information provided for the mount loading. The underlying tower is assumed to provide support and sufficient rigidity to support the mount loads as a tower analysis was not part of the mount analysis.

9. TES is not responsible for modifications to climbing facilities unless communicated to TES in writing.

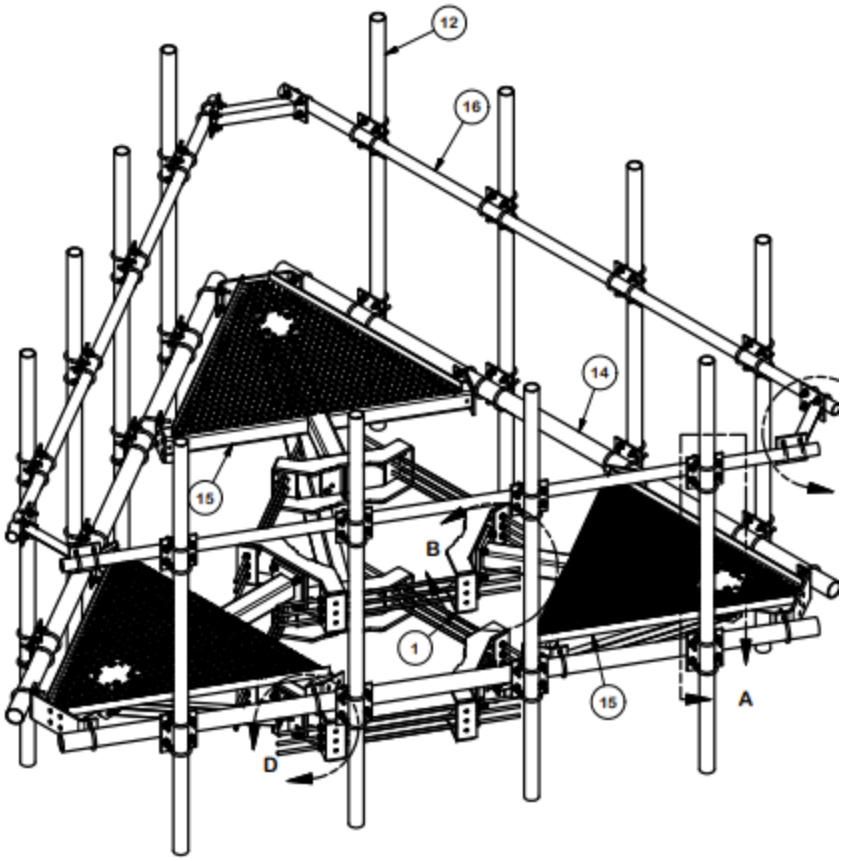
12
16
14
15
B
1
15
A
D

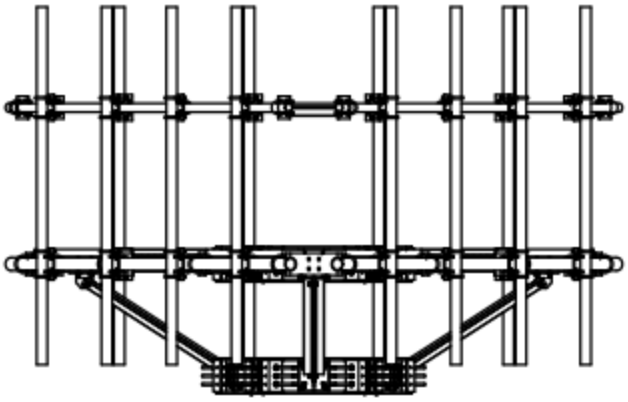

Structure: CT13549-S-SBA - Danbury 1

Sector: **A**

Structure Type: Monopole

Mount Elev: 137.00

11/11/2020

Page: 1

Tower Engineering Solutions

Plan View

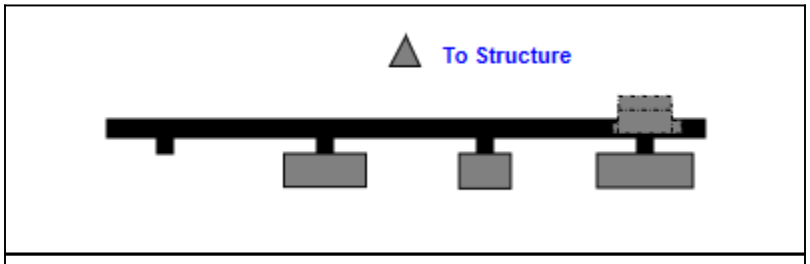

Front View

Looking Toward Structure

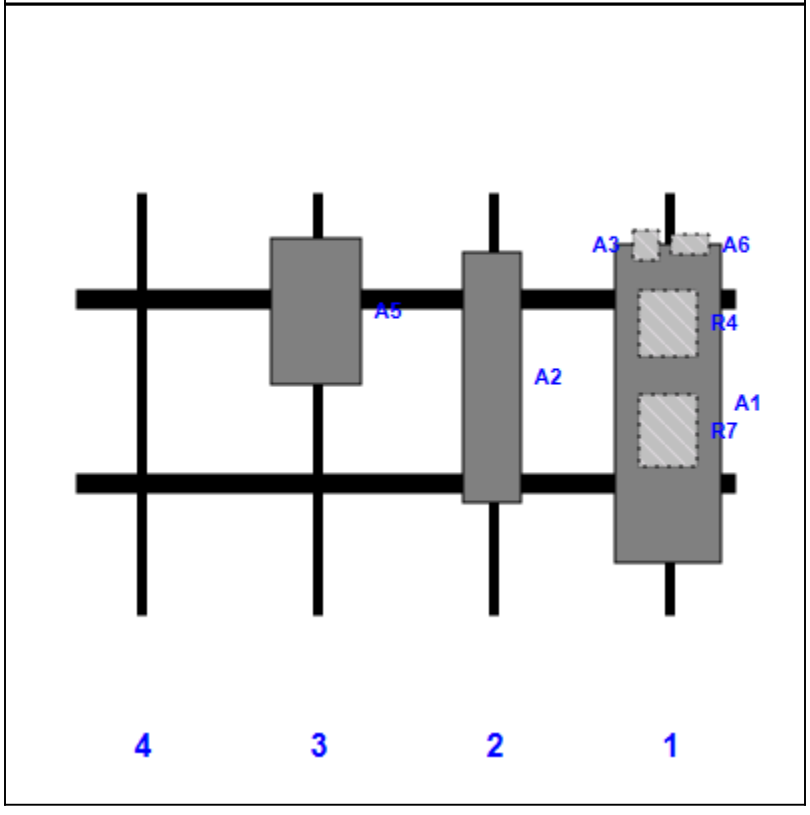

Ref #	Model	Height (in)	Width (in)	H Dist Left	Pipe #	Pipe Pos V	Pos	From Top	H Offset	Status	Validation
A1	RFS APXVAARR18_43-U-NA20	72.00	24.00	135.00	1	a	Front	48.00			
A3	KRY 112 144/1	6.90	6.10	135.00	1	a	Behind	12.00	-5.00		
R4	4449 B71+B85	15.00	13.20	135.00	1	a	Behind	30.00			
A6	SDX1926Q-43	4.60	8.30	135.00	1	a	Behind	12.00	5.00		
R7	4415 B25	16.50	13.50	135.00	1	a	Behind	54.00			
A2	Air 32 KRD901146_1_B66A_B2A	56.60	12.90	95.00	2	a	Front	42.00			
A5	AIR6449 B41	33.10	20.50	55.00	3	a	Front	27.00			

Copyright © 2020 by Tower Engineering Solutions, LLC. All rights reserved.

Structure: CT13549-S-SBA - Danbury 1

Sector: **B**

Structure Type: Monopole

Mount Elev: 137.00

11/11/2020

Page: 2

Plan View

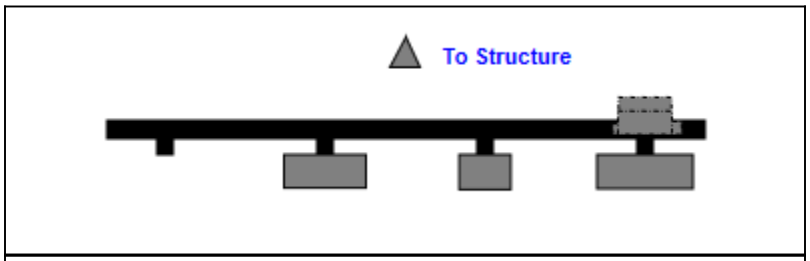

Front View

Looking Toward Structure

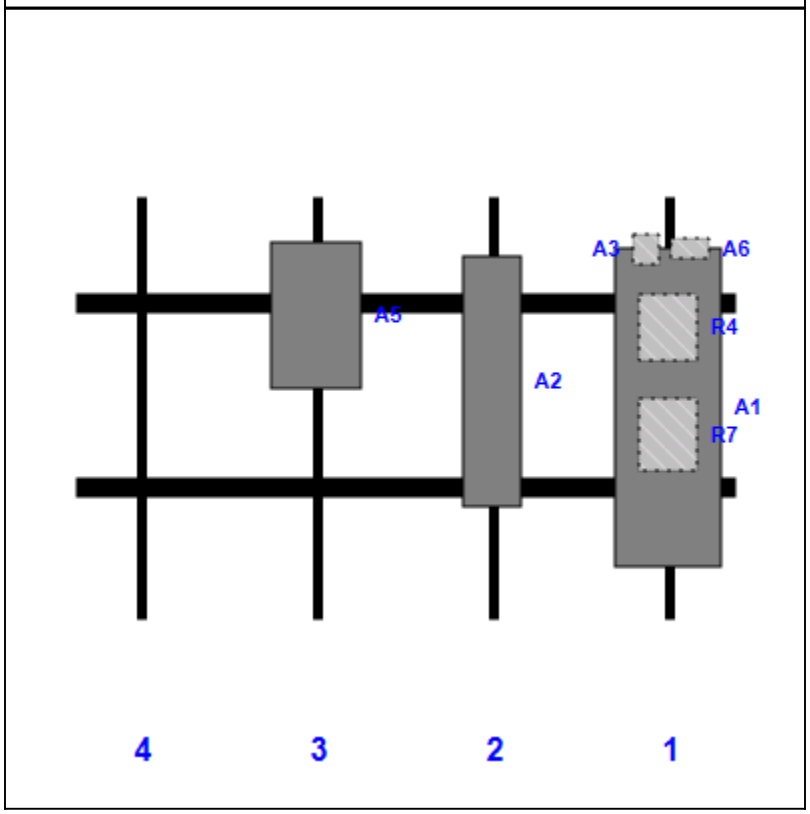

Ref #	Model	Height (in)	Width (in)	H Dist Left	Pipe #	Pipe Pos V	Pos	From Top	H Offset	Status	Validation
A1	RFS APXVAARR18_43-U-NA20	72.00	24.00	135.00	1	a	Front	48.00			
A3	KRY 112 144/1	6.90	6.10	135.00	1	a	Behind	12.00	-5.00		
R4	4449 B71+B85	15.00	13.20	135.00	1	a	Behind	30.00			
A6	SDX1926Q-43	4.60	8.30	135.00	1	a	Behind	12.00	5.00		
R7	4415 B25	16.50	13.50	135.00	1	a	Behind	54.00			
A2	Air 32 KRD901146_1_B66A_B2A	56.60	12.90	95.00	2	a	Front	42.00			
A5	AIR6449 B41	33.10	20.50	55.00	3	a	Front	27.00			

Copyright © 2020 by Tower Engineering Solutions, LLC. All rights reserved.

Structure: CT13549-S-SBA - Danbury 1

Sector: C

Structure Type: Monopole

Mount Elev: 137.00

11/11/2020

Page: 3

Plan View

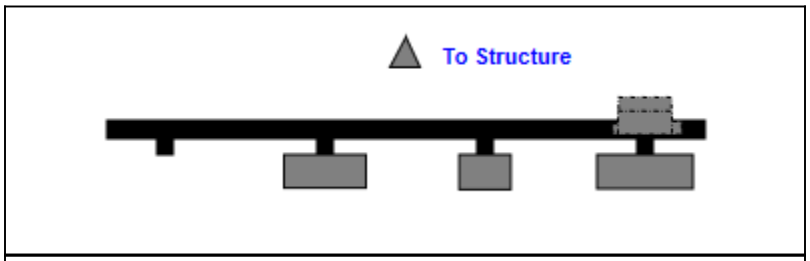

Front View

Looking Toward Structure

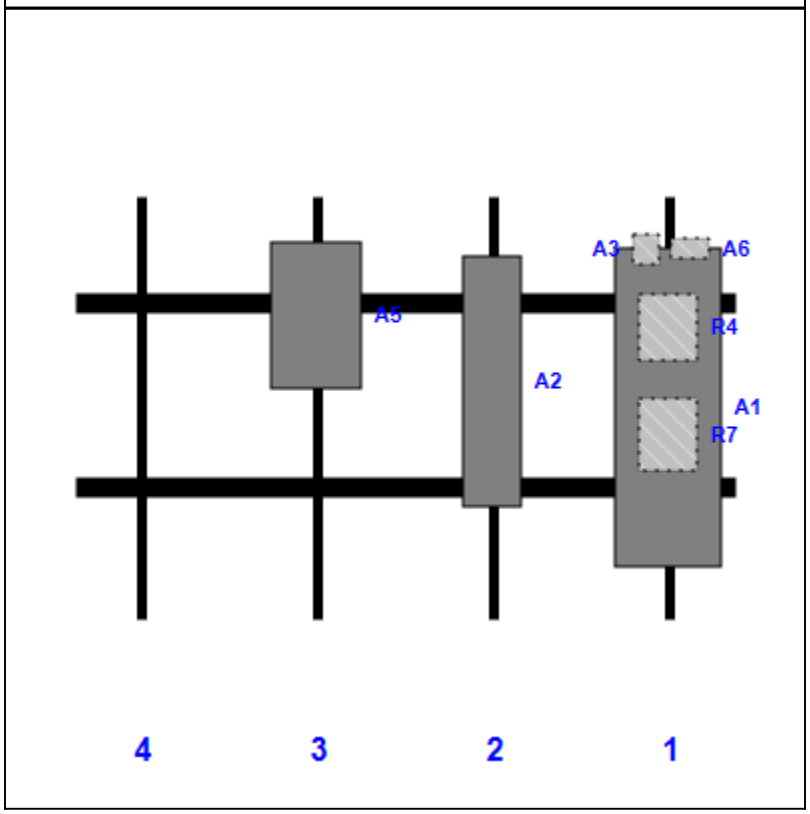

Ref #	Model	Height (in)	Width (in)	H Dist Left	Pipe #	Pipe Pos V	Pos	From Top	H Offset	Status	Validation
A1	RFS APXVAARR18_43-U-NA20	72.00	24.00	135.00	1	a	Front	48.00			
A3	KRY 112 144/1	6.90	6.10	135.00	1	a	Behind	12.00	-5.00		
R4	4449 B71+B85	15.00	13.20	135.00	1	a	Behind	30.00			
A6	SDX1926Q-43	4.60	8.30	135.00	1	a	Behind	12.00	5.00		
R7	4415 B25	16.50	13.50	135.00	1	a	Behind	54.00			
A2	Air 32 KRD901146_1_B66A_B2A	56.60	12.90	95.00	2	a	Front	42.00			
A5	AIR6449 B41	33.10	20.50	55.00	3	a	Front	27.00			

Copyright © 2020 by Tower Engineering Solutions, LLC. All rights reserved.

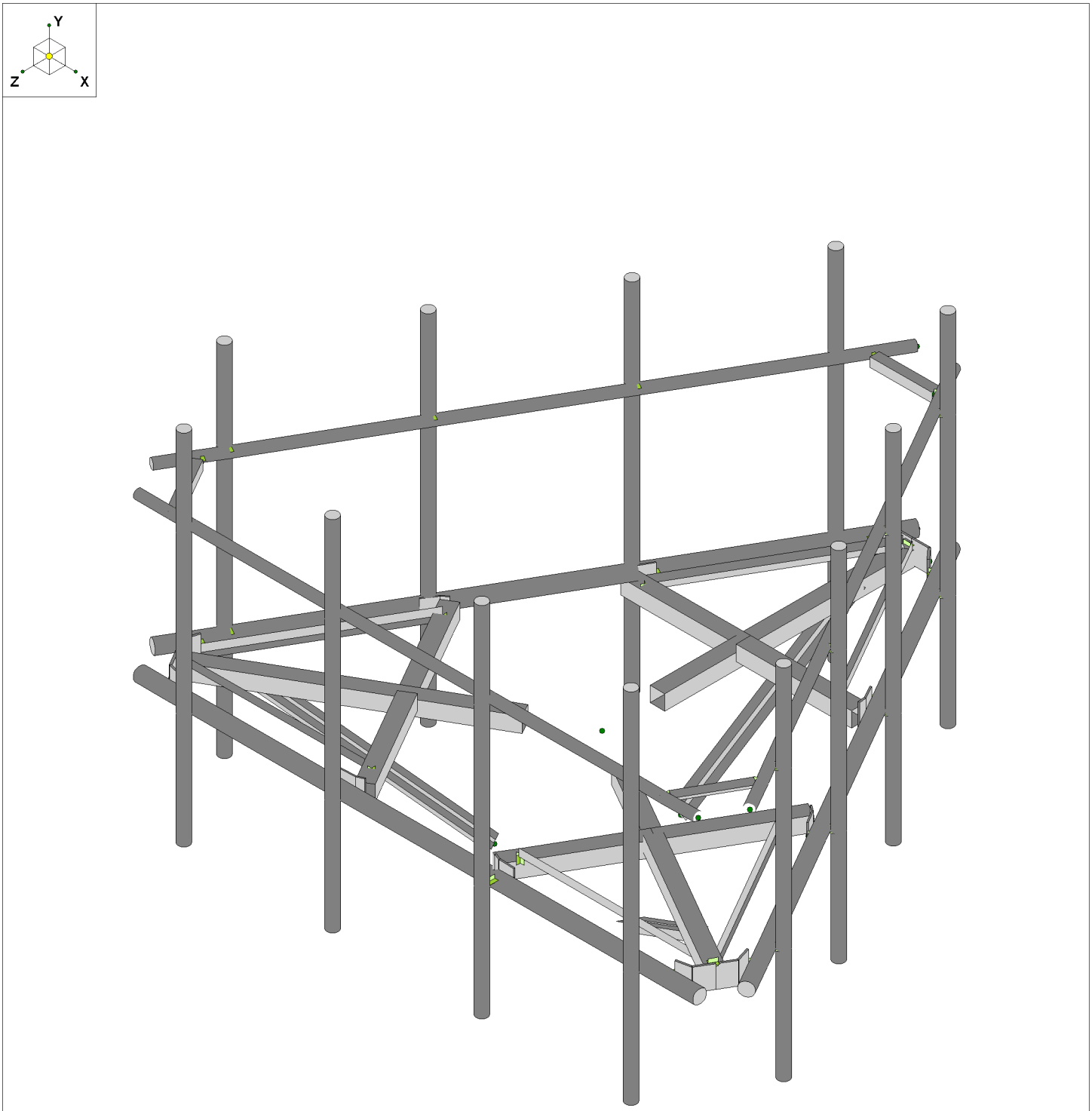

Tower Engineering Solutio...	CT13549-S-SBA_MT_LO_Loads Only_G	SK - 1
		Nov 11, 2020 at 10:30 AM
TES Project No. 99448		CT13549-S-SBA_99448_G_RISA_L...

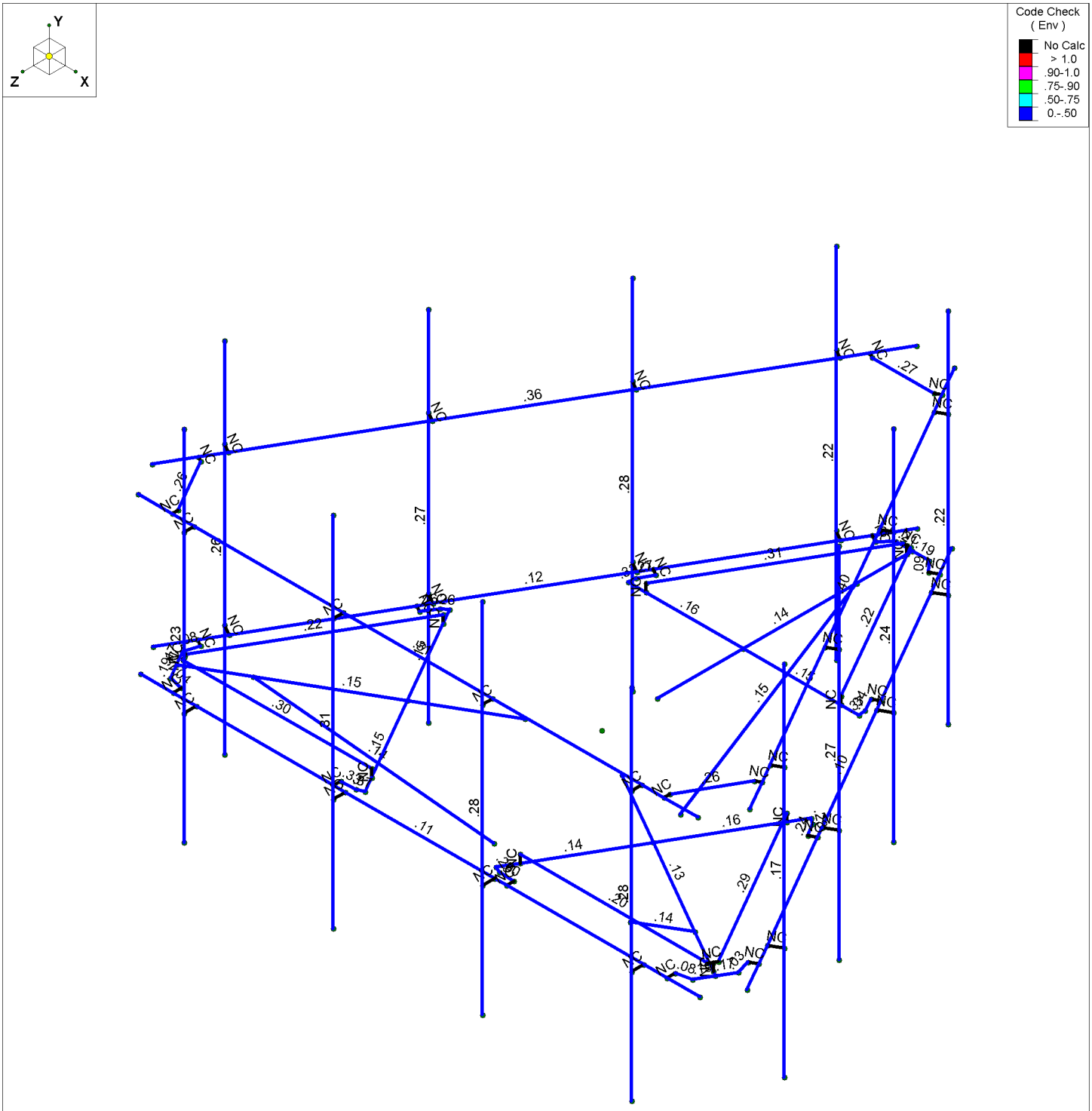

Member Code Checks Displayed (Enveloped)
Results for LC 1, 1.2D+1.6W (Front)

Tower Engineering Solutio...	CT13549-S-SBA_MT_LO_Loads Only_G	SK - 2
		Nov 11, 2020 at 10:33 AM
TES Project No. 99448		CT13549-S-SBA_99448_G_RISA_L...

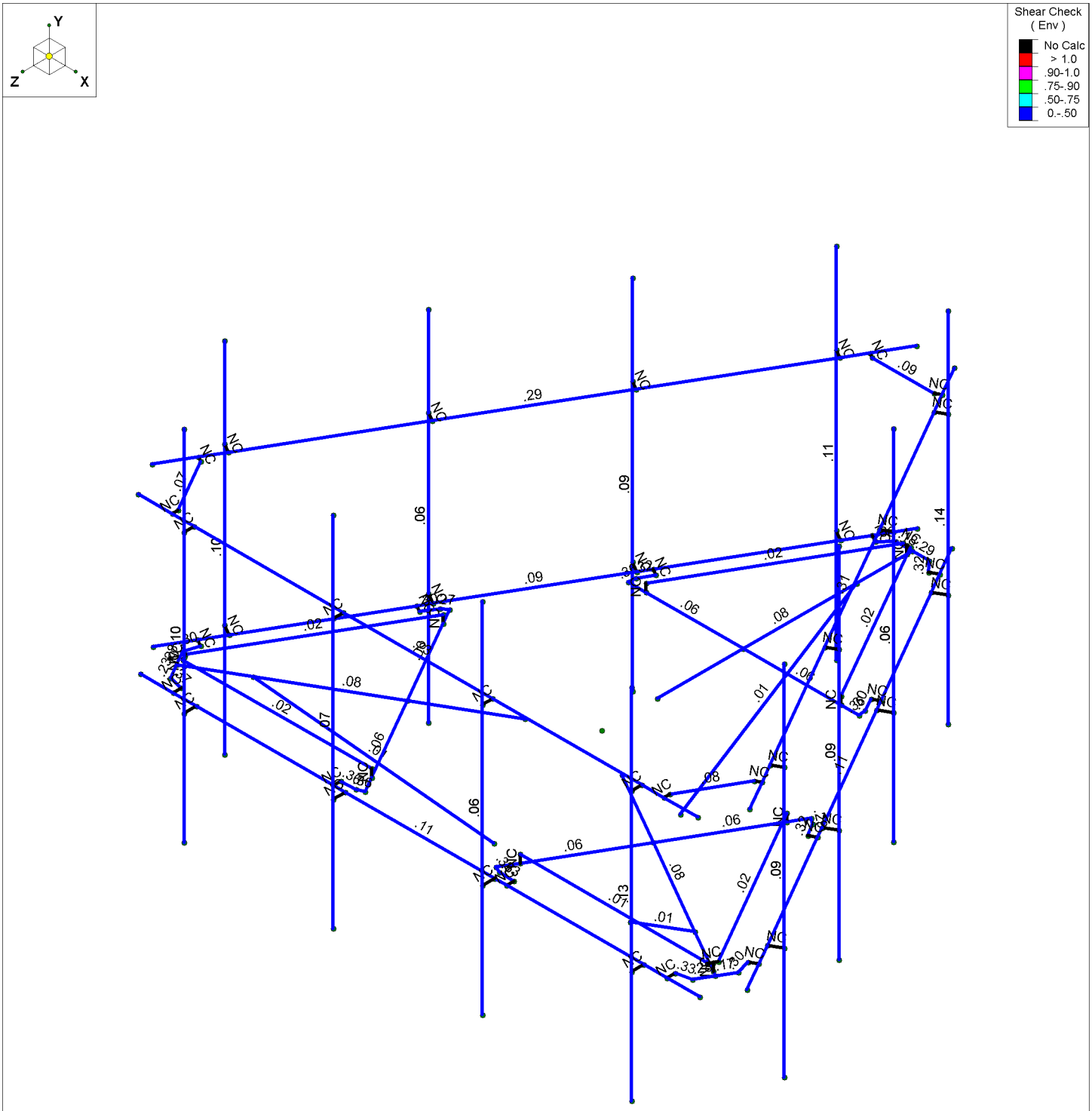

Member Shear Checks Displayed (Enveloped)
Results for LC 1, 1.2D+1.6W (Front)

Tower Engineering Solutio...	CT13549-S-SBA_MT_LO_Loads Only_G	SK - 3
		Nov 11, 2020 at 10:33 AM
TES Project No. 99448		CT13549-S-SBA_99448_G_RISA_L...

Basic Load Cases

	BLC Description	Category	X Gravity	Y Gravity	Z Gravity	Joint	Point	Distributed	Area(Me...	Surface(P...
1	Antenna D	None					30			
2	Antenna Di	None					30			
3	Antenna W Front	None					30			
4	Antenna Wi Front	None					30			
5	Antenna W Side	None					30			
6	Antenna Wi Side	None					30			
7	Service Lm1	None					1			
8	Service Lm2	None					1			
9	Structure D	None		-1					5	
10	Structure Di	None						63	3	
11	Structure W Front	None						63		
12	Structure Wi Front	None						63		
13	Structure W Side	None						63		
14	Structure Wi Side	None						63		
15	BLC 9 Transient Area...	None						33		
16	BLC 10 Transient Are...	None						33		

Load Combinations

	Description	So..	P...	S...	BLC	Fac..	BLC	Fac..	BLC	Fac..	BLC	Fac..	BLC	Fac..	BLC	Fac..	BLC	Fac..	BLC	Fac..	BLC	Fac..	BLC	Fac...
1	1.2D+1.6W (Front)	Yes	Y		1	1.2	9	1.2	3	1.6	11	1.6												
2	1.2D+1.6W (Back)	Yes	Y		1	1.2	9	1.2	3	-1.6	11	-1.6												
3	1.2D+1.6W (Left)	Yes	Y		1	1.2	9	1.2	5	1.6	13	1.6												
4	1.2D+1.6W (Right)	Yes	Y		1	1.2	9	1.2	5	-1.6	13	-1.6												
5	1.2D+1.0Di+1.0Wi (Front)	Yes	Y		1	1.2	9	1.2	2	1	10	1	4	1	12	1								
6	1.2D+1.0Di+1.0Wi (Back)	Yes	Y		1	1.2	9	1.2	2	1	10	1	4	-1	12	-1								
7	1.2D+1.0Di+1.0Wi (Left)	Yes	Y		1	1.2	9	1.2	2	1	10	1	6	1	14	1								
8	1.2D+1.0Di+1.0Wi (Right)	Yes	Y		1	1.2	9	1.2	2	1	10	1	6	-1	14	-1								
9	1.2D+1.5L1+.16W (Mai...	Yes	Y		1	1.2	9	1.2	7	1.5	3	.16	11	.16										
10	1.2D+1.5L2+.16W (Mai...	Yes	Y		1	1.2	9	1.2	8	1.5	3	.16	11	.16										
11	1.4D	Yes	Y		1	1.4	9	1.4																

Joint Coordinates and Temperatures

	Label	X [ft]	Y [ft]	Z [ft]	Temp [F]	Detach From Diap...
1	N1	-0.385009	0	-7.437655	0	
2	N2	-6.635009	0	3.387663	0	
3	N3	0	0	0	0	
4	N4	-2e-6	0	-1.25	0	
5	N5	1.081879	0	0.626131	0	
6	N6	-1.08189	0	0.626111	0	
7	N7	-6.26837	0	2.752624	0	
8	N8	-4.476703	0	-0.350634	0	
9	N9	-2.542964	0	-3.699968	0	
10	N10	-0.751297	0	-6.803226	0	
11	N11	0.751294	0	-6.803226	0	
12	N12	2.542961	0	-3.699969	0	

Joint Coordinates and Temperatures (Continued)

	Label	X [ft]	Y [ft]	Z [ft]	Temp [F]	Detach From Diap...
13	N13	4.4767	0	-0.350634	0	
14	N14	6.268366	0	2.752623	0	
15	N15	5.517079	0	4.052258	0	
16	N16	1.933747	0	4.052258	0	
17	N17	-1.933731	0	4.052258	0	
18	N18	-5.517066	0	4.052258	0	
19	N19	2.74821	0	1.58668	0	
20	N20	1.657954	0	3.475059	0	
21	N21	3.837512	0	-0.300046	0	
22	N22	6.017548	0	3.474233	0	
23	N23	5.830048	0	3.798993	0	
24	N24	6.205048	0	3.149473	0	
25	N25	1.45821	0	3.821026	0	
26	N26	4.03821	0	-0.647666	0	
27	N27	-2.747572	0	1.587792	0	
28	N28	-6.016909	0	3.475345	0	
29	N29	-0.000002	0	-3.17171	0	
30	N30	-0.000002	0	-6.946816	0	
31	N31	-0.000002	-2.5	-1.761664	0	
32	N32	1.524093	-2.5	0.881444	0	
33	N33	-1.524141	-2.5	0.881444	0	
34	N34	-0.000002	0	-5.696816	0	
35	N35	4.935016	0	2.849233	0	
36	N36	-4.934377	0	2.850345	0	
37	N37	-0.424846	3.5	-7.460655	0	
38	N38	-6.674846	3.5	3.364663	0	
39	N39	-6.294927	3.5	2.706625	0	
40	N40	-0.804412	3.5	-6.803226	0	
41	N41	-1.249032	5.5	-6.493123	0	
42	N42	-1.249032	-2.5	-6.493123	0	
43	N43	-6.249032	5.5	2.167131	0	
44	N44	-6.249032	-2.5	2.167131	0	
45	N45	-2.915532	5.5	-3.606661	0	
46	N46	-2.915532	-2.5	-3.606661	0	
47	N47	-4.582532	5.5	-0.719332	0	
48	N48	-4.582532	-2.5	-0.719332	0	
49	N49	-4.998693	5.5	4.328256	0	
50	N50	-4.998693	-2.5	4.328256	0	
51	N51	5.001307	5.5	4.328255	0	
52	N52	5.001307	-2.5	4.328255	0	
53	N53	-1.665693	5.5	4.328256	0	
54	N54	-1.665693	-2.5	4.328256	0	
55	N55	1.668306	5.5	4.328256	0	
56	N56	1.668306	-2.5	4.328256	0	
57	N57	6.247726	5.5	2.164868	0	
58	N58	6.247726	-2.5	2.164868	0	
59	N59	1.247726	5.5	-6.495386	0	
60	N60	1.247726	-2.5	-6.495386	0	
61	N61	4.581226	5.5	-0.721595	0	
62	N62	4.581226	-2.5	-0.721595	0	
63	N63	2.914226	5.5	-3.608924	0	
64	N64	2.914226	-2.5	-3.608924	0	

Joint Coordinates and Temperatures (Continued)

	Label	X [ft]	Y [ft]	Z [ft]	Temp [F]	Detach From Diap...
65	N65	-4.999652	0	4.052258	0	
66	N66	5.000348	0	4.052258	0	
67	N67	-1.666652	0	4.052258	0	
68	N68	1.667348	0	4.052258	0	
69	N69	6.008702	0	2.302871	0	
70	N70	1.008702	0	-6.357383	0	
71	N71	4.342202	0	-0.583592	0	
72	N72	2.675202	0	-3.470921	0	
73	N73	-1.010009	0	-6.355123	0	
74	N74	-6.010009	0	2.305131	0	
75	N75	-2.676509	0	-3.468661	0	
76	N76	-4.343509	0	-0.581332	0	
77	N77	-6.248698	0	4.052258	0	
78	N78	6.251302	0	4.052258	0	
79	N79	6.633703	0	3.385405	0	
80	N80	0.383703	0	-7.439913	0	
81	N81	-6.248698	3.5	4.098257	0	
82	N82	6.251302	3.5	4.098257	0	
83	N83	6.673539	3.5	3.362405	0	
84	N84	0.423539	3.5	-7.462912	0	
85	N85	-1.249032	3.5	-6.493123	0	
86	N86	-1.249032	0	-6.493123	0	
87	N87	-6.249032	0	2.167131	0	
88	N88	-2.915532	0	-3.606661	0	
89	N89	-4.582532	0	-0.719332	0	
90	N90	-6.249032	3.5	2.167131	0	
91	N91	-2.915532	3.5	-3.606661	0	
92	N92	-4.582532	3.5	-0.719332	0	
93	N93	-4.998693	3.5	4.328256	0	
94	N94	-4.998693	0	4.328256	0	
95	N95	5.001307	0	4.328255	0	
96	N96	-1.665693	0	4.328256	0	
97	N97	1.668306	0	4.328256	0	
98	N98	5.001307	3.5	4.328256	0	
99	N99	-1.665693	3.5	4.328256	0	
100	N100	1.668306	3.5	4.328256	0	
101	N101	6.247726	3.5	2.164868	0	
102	N102	6.247726	0	2.164868	0	
103	N103	1.247726	0	-6.495386	0	
104	N104	4.581226	0	-0.721595	0	
105	N105	2.914226	0	-3.608924	0	
106	N106	1.247726	3.5	-6.495386	0	
107	N107	4.581226	3.5	-0.721595	0	
108	N108	2.914226	3.5	-3.608924	0	
109	N109	-1.049846	3.5	-6.378123	0	
110	N110	-6.049846	3.5	2.282131	0	
111	N111	-2.716346	3.5	-3.49166	0	
112	N112	-4.383346	3.5	-0.604331	0	
113	N113	-4.998693	3.5	4.098257	0	
114	N114	5.001307	3.5	4.098257	0	
115	N115	-1.665693	3.5	4.098257	0	
116	N116	1.668306	3.5	4.098257	0	

Joint Coordinates and Temperatures (Continued)

	Label	X [ft]	Y [ft]	Z [ft]	Temp [F]	Detach From Diap...
117	N117	6.048537	3.5	2.27987	0	
118	N118	1.048537	3.5	-6.380384	0	
119	N119	4.382037	3.5	-0.606593	0	
120	N120	2.715037	3.5	-3.493922	0	
121	N121	-6.182344	3.5	2.771625	0	
122	N122	-0.691829	3.5	-6.738226	0	
123	N123	5.491469	3.5	4.098257	0	
124	N124	-5.48956	3.5	4.098257	0	
125	N125	5.491469	3.5	3.968255	0	
126	N126	-5.48956	3.5	3.968255	0	
127	N127	0.803456	3.5	-6.804878	0	
128	N128	6.29397	3.5	2.704973	0	
129	N129	0.690875	3.5	-6.739879	0	
130	N130	6.181389	3.5	2.769971	0	
131	N131	-6.112485	0	2.842624	0	
132	N132	-0.595413	0	-6.713226	0	
133	N133	5.518027	0	3.872255	0	
134	N134	-5.516118	0	3.872255	0	
135	N135	0.594458	0	-6.714879	0	
136	N136	6.111531	0	2.840971	0	
137	N137	-4.338139	0	-0.270634	0	
138	N138	-2.4044	0	-3.619968	0	
139	N139	1.934693	0	3.892255	0	
140	N140	-1.932785	0	3.892255	0	
141	N141	2.403445	0	-3.621621	0	
142	N142	4.337184	0	-0.272287	0	
143	N143	1.60136	0	3.882255	0	
144	N144	4.162812	0	-0.554309	0	
145	N145	1.657954	0.1745	3.475059	0	
146	N146	3.837512	0.1745	-0.300047	0	
147	N147	5.909295	0	3.411733	0	
148	N148	5.909295	0.1745	3.411733	0	
149	N149	5.867545	0.1745	3.484046	0	
150	N150	5.951045	0.1745	3.33942	0	
151	N151	2.180365	0	-3.173104	0	
152	N152	-2.178752	0	-3.173103	0	
153	N153	0.375	0	-6.948466	0	
154	N154	-0.375	0	-6.948466	0	
155	N155	2.58	0	-3.17336	0	
156	N156	-2.58	0	-3.17336	0	
157	N157	2.561452	0	-3.327946	0	
158	N158	-2.561452	0	-3.327946	0	
159	N159	2.180513	0.1745	-3.17336	0	
160	N160	-2.178604	0.1745	-3.17336	0	
161	N161	-0.000002	0	-6.823463	0	
162	N162	-0.000002	0.1745	-6.823463	0	
163	N163	0.0835	0.1745	-6.823466	0	
164	N164	-0.0835	0.1745	-6.823466	0	
165	N165	-3.838467	0	-0.301699	0	
166	N166	-1.658909	0	3.473407	0	
167	N167	-6.205048	0	3.149473	0	
168	N168	-5.830048	0	3.798993	0	

Joint Coordinates and Temperatures (Continued)

	Label	X [ft]	Y [ft]	Z [ft]	Temp [F]	Detach From Diap...
169	N169	-4.03821	0	-0.647666	0	
170	N170	-1.45821	0	3.821026	0	
171	N171	-4.162812	0	-0.554309	0	
172	N172	-1.60136	0	3.882255	0	
173	N173	-3.838467	0.1745	-0.3017	0	
174	N174	-1.658908	0.1745	3.473406	0	
175	N175	-5.910577	0	3.413955	0	
176	N176	-5.909295	0.1745	3.411733	0	
177	N177	-5.951045	0.1745	3.33942	0	
178	N178	-5.867545	0.1745	3.484046	0	

Hot Rolled Steel Section Sets

	Label	Shape	Type	Design List	Material	Design Rules	A [in2]	Iyy [in4]	Izz [in4]	J [in4]
1	Footrails	PIPE_3.0	Beam	Pipe	A53 Gr.B	Typical	2.07	2.85	2.85	5.69
2	Grating Angl...	L2x2x3	Beam	Single Angle	A36 Gr.36	Typical	.722	.271	.271	.009
3	Handrails	PIPE_2.0	Beam	Pipe	A53 Gr.B	Typical	1.02	.627	.627	1.25
4	Standoff Arm	HSS4x4x4	Beam	SquareTube	A500 Gr.46	Typical	3.37	7.8	7.8	12.8
5	Plan Bracing	HSS4x4x4	Beam	SquareTube	A500 Gr.46	Typical	3.37	7.8	7.8	12.8
6	Kickers	LL2.5x2.5x3...	Beam	Double Angle ...	A36 Gr.36	Typical	1.8	2.46	1.07	.023
7	Mount Pipes	PIPE_2.5	Beam	Pipe	A53 Gr.B	Typical	1.61	1.45	1.45	2.89
8	Footrail Con...	PL1/2x6	Beam	RECT	A36 Gr.36	Typical	3	.063	9	.237
9	Plan Bracing...	PL3/8x6	Beam	RECT	A36 Gr.36	Typical	2.25	.026	6.75	.101
10	Handrail Cor...	L2.5x2.5x4	Beam	Single Angle	A36 Gr.36	Typical	1.19	.692	.692	.026

Cold Formed Steel Section Sets

	Label	Shape	Type	Design List	Material	Design Rules	A [in2]	Iyy [in4]	Izz [in4]	J [in4]
1	CF1A	1.5CU1.25X...	Beam	CU	A570_33	Typical	.131	.022	.052	5.4e-5

Aluminum Section Sets

	Label	Shape	Type	Design List	Material	Design Rules	A [in2]	Iyy [in4]	Izz [in4]	J [in4]
1	AL1	AA CS14X1...	Beam	AA Channel	3003-H14	Typical	11.8	44.7	401	1.19

Hot Rolled Steel Properties

	Label	E [ksi]	G [ksi]	Nu	Therm (\1E...	Density[k/ft...	Yield[ksi]	Ry	Fu[ksi]	Rt
1	A36 Gr.36	29000	11154	.3	.65	.49	36	1.5	58	1.2
2	A572 Gr.50	29000	11154	.3	.65	.49	50	1.1	58	1.2
3	A992	29000	11154	.3	.65	.49	50	1.1	58	1.2
4	A500 Gr.42	29000	11154	.3	.65	.49	42	1.3	58	1.1
5	A500 Gr.46	29000	11154	.3	.65	.49	46	1.2	58	1.1
6	A53 Gr.B	29000	11154	.3	.65	.49	35	1.5	58	1.2
7	Q235	29000	11154	.3	.65	.49	34	1.5	58	1.2
8	J429-Gr5	29000	11154	.3	.65	.49	92	1.5	120	1.2

Cold Formed Steel Properties

	Label	E [ksi]	G [ksi]	Nu	Therm (\1E5 F)	Density[k/ft^3]	Yield[ksi]	Fu[ksi]
1	A570_33	29500	11346	.3	.65	.49	33	52
2	A607_C1_55	29500	11346	.3	.65	.49	55	70

Aluminum Properties

	Label	E [ksi]	G [ksi]	Nu	Therm (...	Density[...	Table B.4	kt	Ftu[ksi]	Fty[ksi]	Fcy[ksi]	Fsu[ksi]	Ct
1	3003-H14	10100	3787.5	.33	1.3	.173	Table B...	1	19	16	13	12	141
2	6061-T6	10100	3787.5	.33	1.3	.173	Table B...	1	38	35	35	24	141
3	6063-T5	10100	3787.5	.33	1.3	.173	Table B...	1	22	16	16	13	141
4	6063-T6	10100	3787.5	.33	1.3	.173	Table B...	1	30	25	25	19	141
5	5052-H34	10200	3787.5	.33	1.3	.173	Table B...	1	34	26	24	20	141
6	6061-T6 W	10100	3787.5	.33	1.3	.173	Table B...	1	24	15	15	15	141

Member Primary Data

	Label	I Joint	J Joint	K Joint	Rotate(deg)	Section/Shape	Type	Design List	Material	Design Rules
1	M1	N30	N4			Standoff Arm	Beam	SquareTube	A500 Gr.46	Typical
2	M2	N28	N6			Standoff Arm	Beam	SquareTube	A500 Gr.46	Typical
3	M3	N22	N24			Footrail Conne...	Beam	RECT	A36 Gr.36	Typical
4	M4	N22	N23			Footrail Conne...	Beam	RECT	A36 Gr.36	Typical
5	M5	N26	N144			Plan Bracing C...	Beam	RECT	A36 Gr.36	Typical
6	M6	N144	N142			Plan Bracing C...	Beam	RECT	A36 Gr.36	Typical
7	M7	N25	N143			Plan Bracing C...	Beam	RECT	A36 Gr.36	Typical
8	M8	N143	N139			Plan Bracing C...	Beam	RECT	A36 Gr.36	Typical
9	M9	N149	N145			Grating Angles	Beam	Single Angle	A36 Gr.36	Typical
10	M10	N150	N146		270	Grating Angles	Beam	Single Angle	A36 Gr.36	Typical
11	M11	N24	N136			Footrail Conne...	Beam	RECT	A36 Gr.36	Typical
12	M12	N23	N133			Footrail Conne...	Beam	RECT	A36 Gr.36	Typical
13	M13	N22	N5			Standoff Arm	Beam	SquareTube	A500 Gr.46	Typical
14	M14	N26	N19			Plan Bracing	Beam	SquareTube	A500 Gr.46	Typical
15	M15	N19	N25			Plan Bracing	Beam	SquareTube	A500 Gr.46	Typical
16	M16	N77	N78			Footrails	Beam	Pipe	A53 Gr.B	Typical
17	M17	N79	N80			Footrails	Beam	Pipe	A53 Gr.B	Typical
18	M18	N1	N2			Footrails	Beam	Pipe	A53 Gr.B	Typical
19	M19	N31	N34			Kickers	Beam	Double Angle (...	A36 Gr.36	Typical
20	M20	N32	N35			Kickers	Beam	Double Angle (...	A36 Gr.36	Typical
21	M21	N33	N36			Kickers	Beam	Double Angle (...	A36 Gr.36	Typical
22	M22	N37	N38			Handrails	Beam	Pipe	A53 Gr.B	Typical
23	M23	N81	N82			Handrails	Beam	Pipe	A53 Gr.B	Typical
24	M24	N83	N84			Handrails	Beam	Pipe	A53 Gr.B	Typical
25	M25	N130	N125		180	Handrail Corne...	Beam	Single Angle	A36 Gr.36	Typical
26	MP4A	N41	N42			Mount Pipes	Beam	Pipe	A53 Gr.B	Typical
27	MP1A	N43	N44			Mount Pipes	Beam	Pipe	A53 Gr.B	Typical
28	MP3A	N45	N46			Mount Pipes	Beam	Pipe	A53 Gr.B	Typical
29	MP2A	N47	N48			Mount Pipes	Beam	Pipe	A53 Gr.B	Typical
30	MP4C	N49	N50			Mount Pipes	Beam	Pipe	A53 Gr.B	Typical
31	MP1C	N51	N52			Mount Pipes	Beam	Pipe	A53 Gr.B	Typical
32	MP3C	N53	N54			Mount Pipes	Beam	Pipe	A53 Gr.B	Typical
33	MP2C	N55	N56			Mount Pipes	Beam	Pipe	A53 Gr.B	Typical
34	MP4B	N57	N58			Mount Pipes	Beam	Pipe	A53 Gr.B	Typical

Member Primary Data (Continued)

	Label	I Joint	J Joint	K Joint	Rotate(deg)	Section/Shape	Type	Design List	Material	Design Rules
35	MP1B	N59	N60			Mount Pipes	Beam	Pipe	A53 Gr.B	Typical
36	MP3B	N61	N62			Mount Pipes	Beam	Pipe	A53 Gr.B	Typical
37	MP2B	N63	N64			Mount Pipes	Beam	Pipe	A53 Gr.B	Typical
38	M38	N74	N87			RIGID	None	None	RIGID	Typical
39	M39	N76	N89			RIGID	None	None	RIGID	Typical
40	M40	N75	N88			RIGID	None	None	RIGID	Typical
41	M41	N73	N86			RIGID	None	None	RIGID	Typical
42	M42	N66	N95			RIGID	None	None	RIGID	Typical
43	M43	N68	N97			RIGID	None	None	RIGID	Typical
44	M44	N67	N96			RIGID	None	None	RIGID	Typical
45	M45	N65	N94			RIGID	None	None	RIGID	Typical
46	M46	N70	N103			RIGID	None	None	RIGID	Typical
47	M47	N72	N105			RIGID	None	None	RIGID	Typical
48	M48	N71	N104			RIGID	None	None	RIGID	Typical
49	M49	N69	N102			RIGID	None	None	RIGID	Typical
50	M50	N110	N90			RIGID	None	None	RIGID	Typical
51	M51	N112	N92			RIGID	None	None	RIGID	Typical
52	M52	N111	N91			RIGID	None	None	RIGID	Typical
53	M53	N109	N85			RIGID	None	None	RIGID	Typical
54	M54	N114	N98			RIGID	None	None	RIGID	Typical
55	M55	N116	N100			RIGID	None	None	RIGID	Typical
56	M56	N115	N99			RIGID	None	None	RIGID	Typical
57	M57	N113	N93			RIGID	None	None	RIGID	Typical
58	M58	N118	N106			RIGID	None	None	RIGID	Typical
59	M59	N120	N108			RIGID	None	None	RIGID	Typical
60	M60	N119	N107			RIGID	None	None	RIGID	Typical
61	M61	N117	N101			RIGID	None	None	RIGID	Typical
62	M62	N39	N121			RIGID	None	None	RIGID	Typical
63	M63	N40	N122			RIGID	None	None	RIGID	Typical
64	M64	N123	N125			RIGID	None	None	RIGID	Typical
65	M65	N124	N126			RIGID	None	None	RIGID	Typical
66	M66	N127	N129			RIGID	None	None	RIGID	Typical
67	M67	N128	N130			RIGID	None	None	RIGID	Typical
68	M68	N122	N129		180	Handrail Corne...	Beam	Single Angle	A36 Gr.36	Typical
69	M69	N126	N121		180	Handrail Corne...	Beam	Single Angle	A36 Gr.36	Typical
70	M70	N10	N132			RIGID	None	None	RIGID	Typical
71	M71	N7	N131			RIGID	None	None	RIGID	Typical
72	M72	N18	N134			RIGID	None	None	RIGID	Typical
73	M73	N15	N133			RIGID	None	None	RIGID	Typical
74	M74	N14	N136			RIGID	None	None	RIGID	Typical
75	M75	N11	N135			RIGID	None	None	RIGID	Typical
76	M76	N8	N137			RIGID	None	None	RIGID	Typical
77	M77	N9	N138			RIGID	None	None	RIGID	Typical
78	M78	N16	N139			RIGID	None	None	RIGID	Typical
79	M79	N17	N140			RIGID	None	None	RIGID	Typical
80	M80	N12	N141			RIGID	None	None	RIGID	Typical
81	M81	N13	N142			RIGID	None	None	RIGID	Typical
82	M82	N21	N146			RIGID	None	None	RIGID	Typical
83	M83	N20	N145			RIGID	None	None	RIGID	Typical
84	M84	N147	N148			RIGID	None	None	RIGID	Typical
85	M85	N149	N150			RIGID	None	None	RIGID	Typical
86	M86	N30	N154			Footrail Conne...	Beam	RECT	A36 Gr.36	Typical

Member Primary Data (Continued)

	Label	I Joint	J Joint	K Joint	Rotate(deg)	Section/Shape	Type	Design List	Material	Design Rules
87	M87	N30	N153			Footrail Conne...	Beam	RECT	A36 Gr.36	Typical
88	M88	N156	N158			Plan Bracing C...	Beam	RECT	A36 Gr.36	Typical
89	M89	N158	N138			Plan Bracing C...	Beam	RECT	A36 Gr.36	Typical
90	M90	N155	N157			Plan Bracing C...	Beam	RECT	A36 Gr.36	Typical
91	M91	N157	N141			Plan Bracing C...	Beam	RECT	A36 Gr.36	Typical
92	M92	N163	N159			Grating Angles	Beam	Single Angle	A36 Gr.36	Typical
93	M93	N164	N160		270	Grating Angles	Beam	Single Angle	A36 Gr.36	Typical
94	M94	N154	N132			Footrail Conne...	Beam	RECT	A36 Gr.36	Typical
95	M95	N153	N135			Footrail Conne...	Beam	RECT	A36 Gr.36	Typical
96	M96	N156	N29			Plan Bracing	Beam	SquareTube	A500 Gr.46	Typical
97	M97	N29	N155			Plan Bracing	Beam	SquareTube	A500 Gr.46	Typical
98	M98	N152	N160			RIGID	None	None	RIGID	Typical
99	M99	N151	N159			RIGID	None	None	RIGID	Typical
100	M100	N161	N162			RIGID	None	None	RIGID	Typical
101	M101	N163	N164			RIGID	None	None	RIGID	Typical
102	M102	N28	N168			Footrail Conne...	Beam	RECT	A36 Gr.36	Typical
103	M103	N28	N167			Footrail Conne...	Beam	RECT	A36 Gr.36	Typical
104	M104	N170	N172			Plan Bracing C...	Beam	RECT	A36 Gr.36	Typical
105	M105	N172	N140			Plan Bracing C...	Beam	RECT	A36 Gr.36	Typical
106	M106	N169	N171			Plan Bracing C...	Beam	RECT	A36 Gr.36	Typical
107	M107	N171	N137			Plan Bracing C...	Beam	RECT	A36 Gr.36	Typical
108	M108	N177	N173			Grating Angles	Beam	Single Angle	A36 Gr.36	Typical
109	M109	N178	N174		270	Grating Angles	Beam	Single Angle	A36 Gr.36	Typical
110	M110	N168	N134			Footrail Conne...	Beam	RECT	A36 Gr.36	Typical
111	M111	N167	N131			Footrail Conne...	Beam	RECT	A36 Gr.36	Typical
112	M112	N170	N27			Plan Bracing	Beam	SquareTube	A500 Gr.46	Typical
113	M113	N27	N169			Plan Bracing	Beam	SquareTube	A500 Gr.46	Typical
114	M114	N166	N174			RIGID	None	None	RIGID	Typical
115	M115	N165	N173			RIGID	None	None	RIGID	Typical
116	M116	N175	N176			RIGID	None	None	RIGID	Typical
117	M117	N177	N178			RIGID	None	None	RIGID	Typical

Member Advanced Data

	Label	I Release	J Release	I Offset[in]	J Offset[in]	T/C Only	Physical	Analysis ...	Inactive	Seismic Design ...
1	M1						Yes			None
2	M2						Yes			None
3	M3						Yes			None
4	M4						Yes			None
5	M5						Yes			None
6	M6		BenPIN				Yes			None
7	M7						Yes			None
8	M8		BenPIN				Yes			None
9	M9						Yes			None
10	M10						Yes			None
11	M11		BenPIN				Yes			None
12	M12		BenPIN				Yes			None
13	M13						Yes			None
14	M14						Yes			None
15	M15						Yes			None
16	M16						Yes			None

Member Advanced Data (Continued)

	Label	I Release	J Release	I Offset[in]	J Offset[in]	T/C Only	Physical	Analysis ...	Inactive	Seismic Design ...
17	M17						Yes			None
18	M18						Yes			None
19	M19	BenPIN	BenPIN				Yes			None
20	M20	BenPIN	BenPIN				Yes			None
21	M21	BenPIN	BenPIN				Yes			None
22	M22						Yes			None
23	M23						Yes			None
24	M24						Yes			None
25	M25						Yes			None
26	MP4A						Yes			None
27	MP1A						Yes			None
28	MP3A						Yes			None
29	MP2A						Yes			None
30	MP4C						Yes			None
31	MP1C						Yes			None
32	MP3C						Yes			None
33	MP2C						Yes			None
34	MP4B						Yes			None
35	MP1B						Yes			None
36	MP3B						Yes			None
37	MP2B						Yes			None
38	M38						Yes			None
39	M39						Yes			None
40	M40						Yes			None
41	M41						Yes			None
42	M42						Yes			None
43	M43						Yes			None
44	M44						Yes			None
45	M45						Yes			None
46	M46						Yes			None
47	M47						Yes			None
48	M48						Yes			None
49	M49						Yes			None
50	M50						Yes			None
51	M51						Yes			None
52	M52						Yes			None
53	M53						Yes			None
54	M54						Yes			None
55	M55						Yes			None
56	M56						Yes			None
57	M57						Yes			None
58	M58						Yes			None
59	M59						Yes			None
60	M60						Yes			None
61	M61						Yes			None
62	M62						Yes			None
63	M63						Yes			None
64	M64						Yes			None
65	M65						Yes			None
66	M66						Yes			None
67	M67						Yes			None
68	M68						Yes			None

Member Advanced Data (Continued)

	Label	I Release	J Release	I Offset[in]	J Offset[in]	T/C Only	Physical	Analysis ...	Inactive	Seismic Design ...
69	M69						Yes			None
70	M70						Yes			None
71	M71						Yes			None
72	M72						Yes			None
73	M73						Yes			None
74	M74						Yes			None
75	M75						Yes			None
76	M76						Yes			None
77	M77						Yes			None
78	M78						Yes			None
79	M79						Yes			None
80	M80						Yes			None
81	M81						Yes			None
82	M82						Yes			None
83	M83						Yes			None
84	M84						Yes			None
85	M85						Yes			None
86	M86						Yes			None
87	M87						Yes			None
88	M88						Yes			None
89	M89		BenPIN				Yes			None
90	M90						Yes			None
91	M91		BenPIN				Yes			None
92	M92						Yes			None
93	M93						Yes			None
94	M94		BenPIN				Yes			None
95	M95		BenPIN				Yes			None
96	M96						Yes			None
97	M97						Yes			None
98	M98						Yes			None
99	M99						Yes			None
100	M100						Yes			None
101	M101						Yes			None
102	M102						Yes			None
103	M103						Yes			None
104	M104						Yes			None
105	M105		BenPIN				Yes			None
106	M106						Yes			None
107	M107		BenPIN				Yes			None
108	M108						Yes			None
109	M109						Yes			None
110	M110		BenPIN				Yes			None
111	M111		BenPIN				Yes			None
112	M112						Yes			None
113	M113						Yes			None
114	M114						Yes			None
115	M115						Yes			None
116	M116						Yes			None
117	M117						Yes			None

Hot Rolled Steel Design Parameters

	Label	Shape	Length...	Lbyy[ft]	Lbzz[ft]	Lcomp to...	Lcomp bo...	L-torq...	Kyy	Kzz	Cb	Funct...
1	M1	Standoff Arm	5.697			Lbyy			2.1	2.1		Lateral
2	M2	Standoff Arm	5.698			Lbyy			2.1	2.1		Lateral
3	M3	Footrail Connection Plates	.375			Lbyy			.65	.65		Lateral
4	M4	Footrail Connection Plates	.375			Lbyy			.65	.65		Lateral
5	M5	Plan Bracing Connection Plates	.156			Lbyy			.65	.65		Lateral
6	M6	Plan Bracing Connection Plates	.332			Lbyy			.8	.8		Lateral
7	M7	Plan Bracing Connection Plates	.156			Lbyy			.65	.65		Lateral
8	M8	Plan Bracing Connection Plates	.333			Lbyy			.8	.8		Lateral
9	M9	Grating Angles	4.21			Lbyy			.65	.65		Lateral
10	M10	Grating Angles	4.209			Lbyy			.65	.65		Lateral
11	M11	Footrail Connection Plates	.322			Lbyy			.8	.8		Lateral
12	M12	Footrail Connection Plates	.321			Lbyy			.8	.8		Lateral
13	M13	Standoff Arm	5.698			Lbyy			2.1	2.1		Lateral
14	M14	Plan Bracing	2.58			Lbyy			1	1		Lateral
15	M15	Plan Bracing	2.58			Lbyy			1	1		Lateral
16	M16	Footrails	12.5			Lbyy			1	1		Lateral
17	M17	Footrails	12.5			Lbyy			1	1		Lateral
18	M18	Footrails	12.5			Lbyy			1	1		Lateral
19	M19	Kickers	4.662			Lbyy			1	1		Lateral
20	M20	Kickers	4.664			Lbyy			1	1		Lateral
21	M21	Kickers	4.664			Lbyy			1	1		Lateral
22	M22	Handrails	12.5			Lbyy			1	1		Lateral
23	M23	Handrails	12.5			Lbyy			1	1		Lateral
24	M24	Handrails	12.5			Lbyy			1	1		Lateral
25	M25	Handrail Corner Braces	1.383			Lbyy			.65	.65		Lateral
26	MP4A	Mount Pipes	8			Lbyy			1	1		Lateral
27	MP1A	Mount Pipes	8			Lbyy			1	1		Lateral
28	MP3A	Mount Pipes	8			Lbyy			1	1		Lateral
29	MP2A	Mount Pipes	8			Lbyy			1	1		Lateral
30	MP4C	Mount Pipes	8			Lbyy			1	1		Lateral
31	MP1C	Mount Pipes	8			Lbyy			1	1		Lateral
32	MP3C	Mount Pipes	8			Lbyy			1	1		Lateral
33	MP2C	Mount Pipes	8			Lbyy			1	1		Lateral
34	MP4B	Mount Pipes	8			Lbyy			1	1		Lateral
35	MP1B	Mount Pipes	8			Lbyy			1	1		Lateral
36	MP3B	Mount Pipes	8			Lbyy			1	1		Lateral
37	MP2B	Mount Pipes	8			Lbyy			1	1		Lateral
38	M68	Handrail Corner Braces	1.383			Lbyy			.65	.65		Lateral
39	M69	Handrail Corner Braces	1.383			Lbyy			.65	.65		Lateral
40	M86	Footrail Connection Plates	.375			Lbyy			.65	.65		Lateral
41	M87	Footrail Connection Plates	.375			Lbyy			.65	.65		Lateral
42	M88	Plan Bracing Connection Plates	.156			Lbyy			.65	.65		Lateral
43	M89	Plan Bracing Connection Plates	.332			Lbyy			.8	.8		Lateral
44	M90	Plan Bracing Connection Plates	.156			Lbyy			.65	.65		Lateral
45	M91	Plan Bracing Connection Plates	.333			Lbyy			.8	.8		Lateral
46	M92	Grating Angles	4.21			Lbyy			.65	.65		Lateral
47	M93	Grating Angles	4.209			Lbyy			.65	.65		Lateral
48	M94	Footrail Connection Plates	.322			Lbyy			.8	.8		Lateral
49	M95	Footrail Connection Plates	.321			Lbyy			.8	.8		Lateral
50	M96	Plan Bracing	2.58			Lbyy			1	1		Lateral
51	M97	Plan Bracing	2.58			Lbyy			1	1		Lateral

Hot Rolled Steel Design Parameters (Continued)

	Label	Shape	Length...	Lbyy[ft]	Lbzz[ft]	Lcomp to...	Lcomp bo...	L-torq...	Kyy	Kzz	Cb	Funct...
52	M102	Footrail Connection Plates	.374			Lbyy			.65	.65		Lateral
53	M103	Footrail Connection Plates	.376			Lbyy			.65	.65		Lateral
54	M104	Plan Bracing Connection Plates	.156			Lbyy			.65	.65		Lateral
55	M105	Plan Bracing Connection Plates	.332			Lbyy			.8	.8		Lateral
56	M106	Plan Bracing Connection Plates	.156			Lbyy			.65	.65		Lateral
57	M107	Plan Bracing Connection Plates	.333			Lbyy			.8	.8		Lateral
58	M108	Grating Angles	4.21			Lbyy			.65	.65		Lateral
59	M109	Grating Angles	4.209			Lbyy			.65	.65		Lateral
60	M110	Footrail Connection Plates	.322			Lbyy			.8	.8		Lateral
61	M111	Footrail Connection Plates	.321			Lbyy			.8	.8		Lateral
62	M112	Plan Bracing	2.579			Lbyy			1	1		Lateral
63	M113	Plan Bracing	2.581			Lbyy			1	1		Lateral

Cold Formed Steel Design Parameters

Label	Shape	Lengt...	Lbyy[ft]	Lbzz[ft]	Lcomp to...	Lcomp b...	Kyy	Kzz	Cm-yy	Cm-zz	Cb	R	y sway	z sway
No Data to Print ...														

Aluminum Design Parameters

Label	Shape	Length[ft]	Lbyy[ft]	Lbzz[ft]	Lcomp top[ft]	Lcomp bot[ft]	L-torqu...	Kyy	Kzz	Cb	Function
No Data to Print ...											

Member Point Loads (BLC 1 : Antenna D)

	Member Label	Direction	Magnitude[lb,k-ft]	Location[ft,%]
1	MP1A	Y	-53	1
2	MP1A	Y	-53	7
3	MP1B	Y	-53	1
4	MP1B	Y	-53	7
5	MP1C	Y	-53	1
6	MP1C	Y	-53	7
7	MP2A	Y	-66.1	1
8	MP2A	Y	-66.1	6
9	MP2B	Y	-66.1	1
10	MP2B	Y	-66.1	6
11	MP2C	Y	-66.1	1
12	MP2C	Y	-66.1	6
13	MP1A	Y	-11	1
14	MP1B	Y	-11	1
15	MP1C	Y	-11	1
16	MP1A	Y	-70	2.5
17	MP1B	Y	-70	2.5
18	MP1C	Y	-70	2.5
19	MP3A	Y	-51.5	1
20	MP3A	Y	-51.5	3.5
21	MP3B	Y	-51.5	1
22	MP3B	Y	-51.5	3.5
23	MP3C	Y	-51.5	1
24	MP3C	Y	-51.5	3.5

Member Point Loads (BLC 1 : Antenna D) (Continued)

	Member Label	Direction	Magnitude[lb,k-ft]	Location[ft,%]
25	MP1A	Y	-7.9	1
26	MP1B	Y	-7.9	1
27	MP1C	Y	-7.9	1
28	MP1A	Y	-46.3	4.5
29	MP1B	Y	-46.3	4.5
30	MP1C	Y	-46.3	4.5

Member Point Loads (BLC 2 : Antenna Di)

	Member Label	Direction	Magnitude[lb,k-ft]	Location[ft,%]
1	MP1A	Y	-227.718	1
2	MP1A	Y	-227.718	7
3	MP1B	Y	-227.718	1
4	MP1B	Y	-227.718	7
5	MP1C	Y	-227.718	1
6	MP1C	Y	-227.718	7
7	MP2A	Y	-128.29	1
8	MP2A	Y	-128.29	6
9	MP2B	Y	-128.29	1
10	MP2B	Y	-128.29	6
11	MP2C	Y	-128.29	1
12	MP2C	Y	-128.29	6
13	MP1A	Y	-25.538	1
14	MP1B	Y	-25.538	1
15	MP1C	Y	-25.538	1
16	MP1A	Y	-97.818	2.5
17	MP1B	Y	-97.818	2.5
18	MP1C	Y	-97.818	2.5
19	MP3A	Y	-106.877	1
20	MP3A	Y	-106.877	3.5
21	MP3B	Y	-106.877	1
22	MP3B	Y	-106.877	3.5
23	MP3C	Y	-106.877	1
24	MP3C	Y	-106.877	3.5
25	MP1A	Y	-26.414	1
26	MP1B	Y	-26.414	1
27	MP1C	Y	-26.414	1
28	MP1A	Y	-87.671	4.5
29	MP1B	Y	-87.671	4.5
30	MP1C	Y	-87.671	4.5

Member Point Loads (BLC 3 : Antenna W Front)

	Member Label	Direction	Magnitude[lb,k-ft]	Location[ft,%]
1	MP1A	Z	-234.676	1
2	MP1A	Z	-234.676	7
3	MP1B	Z	-130.93	1
4	MP1B	Z	-130.93	7
5	MP1C	Z	-130.93	1
6	MP1C	Z	-130.93	7
7	MP2A	Z	-100.442	1
8	MP2A	Z	-100.442	6
9	MP2B	Z	-80.404	1

Member Point Loads (BLC 3 : Antenna W Front) (Continued)

	Member Label	Direction	Magnitude[lb,k-ft]	Location[ft,%]
10	MP2B	Z	-80.404	6
11	MP2C	Z	-80.404	1
12	MP2C	Z	-80.404	6
13	MP1A	Z	-9.622	1
14	MP1B	Z	-5.144	1
15	MP1C	Z	-5.144	1
16	MP1A	Z	-25.658	2.5
17	MP1B	Z	-20.055	2.5
18	MP1C	Z	-20.055	2.5
19	MP3A	Z	-88.395	1
20	MP3A	Z	-88.395	3.5
21	MP3B	Z	-50.443	1
22	MP3B	Z	-50.443	3.5
23	MP3C	Z	-50.443	1
24	MP3C	Z	-50.443	3.5
25	MP1A	Z	-5.006	1
26	MP1B	Z	-2.736	1
27	MP1C	Z	-2.736	1
28	MP1A	Z	-29.1	4.5
29	MP1B	Z	-16.899	4.5
30	MP1C	Z	-16.899	4.5

Member Point Loads (BLC 4 : Antenna Wi Front)

	Member Label	Direction	Magnitude[lb,k-ft]	Location[ft,%]
1	MP1A	Z	-75.806	1
2	MP1A	Z	-75.806	7
3	MP1B	Z	-45.549	1
4	MP1B	Z	-45.549	7
5	MP1C	Z	-45.549	1
6	MP1C	Z	-45.549	7
7	MP2A	Z	-36.281	1
8	MP2A	Z	-36.281	6
9	MP2B	Z	-29.74	1
10	MP2B	Z	-29.74	6
11	MP2C	Z	-29.74	1
12	MP2C	Z	-29.74	6
13	MP1A	Z	-5.058	1
14	MP1B	Z	-3.675	1
15	MP1C	Z	-3.675	1
16	MP1A	Z	-10.788	2.5
17	MP1B	Z	-8.838	2.5
18	MP1C	Z	-8.838	2.5
19	MP3A	Z	-31.473	1
20	MP3A	Z	-31.473	3.5
21	MP3B	Z	-19.3	1
22	MP3B	Z	-19.3	3.5
23	MP3C	Z	-19.3	1
24	MP3C	Z	-19.3	3.5
25	MP1A	Z	-3.214	1
26	MP1B	Z	-2.184	1
27	MP1C	Z	-2.184	1

Member Point Loads (BLC 4 : Antenna Wi Front) (Continued)

	Member Label	Direction	Magnitude[lb,k-ft]	Location[ft,%]
28	MP1A	Z	-11.903	4.5
29	MP1B	Z	-7.781	4.5
30	MP1C	Z	-7.781	4.5

Member Point Loads (BLC 5 : Antenna W Side)

	Member Label	Direction	Magnitude[lb,k-ft]	Location[ft,%]
1	MP1A	X	96.348	1
2	MP1A	X	96.348	7
3	MP1B	X	200.094	1
4	MP1B	X	200.094	7
5	MP1C	X	200.094	1
6	MP1C	X	200.094	7
7	MP2A	X	73.724	1
8	MP2A	X	73.724	6
9	MP2B	X	93.762	1
10	MP2B	X	93.762	6
11	MP2C	X	93.762	1
12	MP2C	X	93.762	6
13	MP1A	X	4.868	1
14	MP1B	X	10.839	1
15	MP1C	X	10.839	1
16	MP1A	X	36.375	2.5
17	MP1B	X	47.581	2.5
18	MP1C	X	47.581	2.5
19	MP3A	X	37.792	1
20	MP3A	X	37.792	3.5
21	MP3B	X	75.744	1
22	MP3B	X	75.744	3.5
23	MP3C	X	75.744	1
24	MP3C	X	75.744	3.5
25	MP1A	X	3.958	1
26	MP1B	X	8.499	1
27	MP1C	X	8.499	1
28	MP1A	X	25.663	4.5
29	MP1B	X	50.066	4.5
30	MP1C	X	50.066	4.5

Member Point Loads (BLC 6 : Antenna Wi Side)

	Member Label	Direction	Magnitude[lb,k-ft]	Location[ft,%]
1	MP1A	X	35.464	1
2	MP1A	X	35.464	7
3	MP1B	X	65.721	1
4	MP1B	X	65.721	7
5	MP1C	X	65.721	1
6	MP1C	X	65.721	7
7	MP2A	X	27.559	1
8	MP2A	X	27.559	6
9	MP2B	X	34.101	1
10	MP2B	X	34.101	6
11	MP2C	X	34.101	1
12	MP2C	X	34.101	6

Member Point Loads (BLC 6 : Antenna Wi Side) (Continued)

	Member Label	Direction	Magnitude[lb,k-ft]	Location[ft,%]
13	MP1A	X	4.286	1
14	MP1B	X	6.129	1
15	MP1C	X	6.129	1
16	MP1A	X	16.377	2.5
17	MP1B	X	20.277	2.5
18	MP1C	X	20.277	2.5
19	MP3A	X	15.242	1
20	MP3A	X	15.242	3.5
21	MP3B	X	27.415	1
22	MP3B	X	27.415	3.5
23	MP3C	X	27.415	1
24	MP3C	X	27.415	3.5
25	MP1A	X	3.681	1
26	MP1B	X	5.742	1
27	MP1C	X	5.742	1
28	MP1A	X	12.814	4.5
29	MP1B	X	21.059	4.5
30	MP1C	X	21.059	4.5

Member Point Loads (BLC 7 : Service Lm1)

	Member Label	Direction	Magnitude[lb,k-ft]	Location[ft,%]
1	M16	Y	-500	0

Member Point Loads (BLC 8 : Service Lm2)

	Member Label	Direction	Magnitude[lb,k-ft]	Location[ft,%]
1	M16	Y	-500	%50

Member Area Loads (BLC 9 : Structure D)

	Joint A	Joint B	Joint C	Joint D	Direction	Distribution	Magnitude[ksf]
1	N150	N149	N145	N146	Y	Two Way	-.005
2	N164	N163	N159	N160	Y	Two Way	-.005
3	N178	N177	N173	N174	Y	Two Way	-.005
4	N164	N163	N159	N160	Y	Two Way	-.005
5	N178	N177	N173	N174	Y	Two Way	-.005

Member Area Loads (BLC 10 : Structure Di)

	Joint A	Joint B	Joint C	Joint D	Direction	Distribution	Magnitude[ksf]
1	N150	N149	N145	N146	Y	Two Way	-.015
2	N164	N163	N159	N160	Y	Two Way	-.015
3	N178	N177	N173	N174	Y	Two Way	-.015

Joint Boundary Conditions

	Joint Label	X [k/in]	Y [k/in]	Z [k/in]	X Rot.[k-ft/rad]	Y Rot.[k-ft/rad]	Z Rot.[k-ft/rad]
1	N3						
2	N5	Reaction	Reaction	Reaction	Reaction	Reaction	Reaction
3	N29						
4	N6	Reaction	Reaction	Reaction	Reaction	Reaction	Reaction

Joint Boundary Conditions (Continued)

	Joint Label	X [k/in]	Y [k/in]	Z [k/in]	X Rot.[k-ft/rad]	Y Rot.[k-ft/rad]	Z Rot.[k-ft/rad]
5	N4	Reaction	Reaction	Reaction	Reaction	Reaction	Reaction
6	N31	Reaction	Reaction	Reaction	Reaction	Reaction	Reaction
7	N32	Reaction	Reaction	Reaction	Reaction	Reaction	Reaction
8	N33	Reaction	Reaction	Reaction	Reaction	Reaction	Reaction

Envelope Joint Reactions

	Joint		X [lb]	LC	Y [lb]	LC	Z [lb]	LC	MX [k-ft]	LC	MY [k-ft]	LC	MZ [k-ft]	LC
1	N5	max	3045.029	4	806.171	5	1461.24	1	.033	1	.464	2	.938	5
2		min	-5131.567	3	241.606	2	-2657.841	2	-.862	6	-.45	1	.052	2
3	N6	max	5313.727	4	820.268	7	1658.164	1	.149	1	1.86	1	-.159	9
4		min	-3126.294	3	102.174	9	-2934.969	2	-.582	10	-1.848	2	-1.163	5
5	N4	max	1293.141	4	818.544	6	6333.744	1	1.17	6	1.795	3	.494	3
6		min	-1288.387	3	222.775	10	-3803.988	2	.313	10	-1.781	4	-.358	4
7	N31	max	47.278	4	3463.783	5	227.831	2	0	1	0	4	0	7
8		min	-47.178	3	-144.207	2	-5348.083	5	0	1	0	7	0	4
9	N32	max	4513.894	7	3378.008	7	2612.373	7	0	1	0	1	0	1
10		min	-44.159	4	-39.546	4	-44.59	4	0	2	0	2	0	2
11	N33	max	35.932	3	3423.949	8	2649.947	8	0	8	0	9	0	9
12		min	-4575.832	8	-33.531	3	-39.881	3	0	9	0	8	0	8
13	Totals:	max	6953.081	4	11671.525	6	6876.366	1						
14		min	-6953.031	3	3800.495	3	-6876.31	2						

Envelope Member Section Forces

	Member	Sec		Axial[lb]	LC	y Shear[lb]	LC	z Shear[lb]	LC	Torque[k-...	LC	y-y Mome...	LC	z-z Mome...	LC
1	M1	1	max	951.583	2	231.375	2	822.467	4	.453	4	.089	4	-.014	2
2			min	-982.784	1	-1778.682	5	-791.27	3	-.678	3	-.115	3	-.224	5
3		2	max	3581.111	2	1288.839	5	24.171	2	.27	4	.101	3	1.698	5
4			min	-5923.602	1	-26.494	2	-14.206	1	-.481	3	-.096	4	-.65	2
5		3	max	3581.111	2	1237.026	5	37.287	4	.27	4	.095	3	.389	1
6			min	-5923.602	1	-46.093	2	-27.908	3	-.481	3	-.077	4	-.599	2
7		4	max	3803.988	2	-202.935	10	1244.686	4	.358	4	.376	2	.043	6
8			min	-6333.744	1	-765.485	6	-1239.712	3	-.494	3	-.397	1	-.007	1
9		5	max	3803.988	2	-222.533	10	1292.22	4	.358	4	1.781	4	1.17	6
10			min	-6333.744	1	-817.299	6	-1287.247	3	-.494	3	-1.795	3	.313	10
11	M2	1	max	764.492	3	169.438	3	638.154	2	.373	2	.072	2	-.007	3
12			min	-800.061	4	-1756.665	8	-620.729	1	-.602	1	-.1	1	-.228	8
13		2	max	3091.552	3	1271.833	8	38.591	4	.259	9	.07	4	1.659	8
14			min	-5433.272	4	20.395	3	-28.381	3	-.465	5	-.066	2	-.552	3
15		3	max	3112.141	3	1220.004	8	34.726	2	.259	9	.116	4	.356	4
16			min	-5453.861	4	.791	3	-25.322	1	-.465	5	-.097	3	-.568	3
17		4	max	3302.32	3	-82.271	9	1160.345	2	.277	10	.433	4	.084	9
18			min	-5831.984	4	-767.094	7	-1152.016	1	-.39	1	-.455	3	-.015	10
19		5	max	3322.909	3	-101.875	9	1196.007	2	.277	10	1.848	2	1.172	7
20			min	-5852.573	4	-818.922	7	-1187.677	1	-.39	1	-1.86	1	.215	9
21	M3	1	max	422.512	3	590.834	7	366.027	4	.124	2	.132	3	.484	3
22			min	-348.144	4	-249.073	4	-405.348	3	-.096	1	-.126	4	-.27	4
23		2	max	424.544	3	587.817	7	362.507	4	.124	2	.094	3	.433	3
24			min	-350.176	4	-250.222	4	-401.828	3	-.096	1	-.092	4	-.246	4
25		3	max	426.577	3	584.8	7	358.987	4	.124	2	.057	3	.382	3

Envelope Member Section Forces (Continued)

	Member	Sec		Axial[lb]	LC	y Shear[lb]	LC	z Shear[lb]	LC	Torque[k-...	LC	y-y Mome...	LC	z-z Mome...	LC
26			min	-352.209	4	-251.37	4	-398.307	3	-.096	1	-.058	4	-.223	4
27		4	max	428.609	3	581.784	7	355.466	4	.124	2	.02	3	.331	3
28			min	-354.241	4	-252.519	4	-394.787	3	-.096	1	-.024	4	-.199	4
29		5	max	430.642	3	578.767	7	351.946	4	.124	2	.009	1	.28	3
30			min	-356.273	4	-253.667	4	-391.267	3	-.096	1	-.017	3	-.176	4
31	M4	1	max	686.12	3	1188.806	6	537.006	3	.012	4	.177	4	.838	6
32			min	-589.722	4	-7.952	1	-536.792	4	-.19	5	-.155	3	-.126	1
33		2	max	684.088	3	1185.789	6	533.486	3	.012	4	.127	4	.726	6
34			min	-587.69	4	-9.101	1	-533.272	4	-.19	5	-.105	3	-.125	1
35		3	max	682.055	3	1182.772	6	529.966	3	.012	4	.077	4	.615	6
36			min	-585.657	4	-10.249	1	-529.751	4	-.19	5	-.055	3	-.124	1
37		4	max	680.023	3	1179.755	6	526.446	3	.012	4	.059	1	.505	6
38			min	-583.625	4	-11.397	1	-526.231	4	-.19	5	-.036	2	-.123	1
39		5	max	677.99	3	1176.739	6	522.925	3	.012	4	.062	1	.394	6
40			min	-581.593	4	-12.546	1	-522.711	4	-.19	5	-.038	2	-.122	1
41	M5	1	max	1360.776	4	819.792	6	189.911	5	.078	3	.108	4	.398	7
42			min	-1069.546	3	116.021	1	-63.398	2	-.125	4	-.11	3	.014	4
43		2	max	1359.84	4	818.667	6	189.582	5	.078	3	.112	4	.366	7
44			min	-1068.611	3	115.663	1	-62.15	2	-.125	4	-.111	3	.009	4
45		3	max	1358.905	4	817.543	6	189.253	5	.078	3	.117	4	.334	7
46			min	-1067.676	3	115.305	1	-60.902	2	-.125	4	-.112	3	.005	4
47		4	max	1357.97	4	816.418	6	188.923	5	.078	3	.122	4	.303	7
48			min	-1066.741	3	114.948	1	-59.654	2	-.125	4	-.114	3	0	4
49		5	max	1357.035	4	815.293	6	188.594	5	.078	3	.127	4	.271	7
50			min	-1065.806	3	114.59	1	-58.406	2	-.125	4	-.115	3	-.005	4
51	M6	1	max	1308.657	4	815.368	6	352.69	3	.133	3	.127	4	.269	6
52			min	-1004.233	3	114.584	1	-388.275	4	-.118	4	-.115	3	.037	1
53		2	max	1306.801	4	812.973	6	349.687	3	.133	3	.095	4	.201	6
54			min	-1002.377	3	113.823	1	-385.273	4	-.118	4	-.086	3	.028	1
55		3	max	1304.945	4	810.578	6	346.685	3	.133	3	.063	4	.134	6
56			min	-1000.52	3	113.061	1	-382.271	4	-.118	4	-.057	3	.019	1
57		4	max	1303.088	4	808.183	6	343.683	3	.133	3	.031	4	.067	6
58			min	-998.664	3	112.299	1	-379.269	4	-.118	4	-.028	3	.009	1
59		5	max	1301.232	4	805.788	6	340.68	3	.133	3	0	1	0	1
60			min	-996.808	3	111.538	1	-376.266	4	-.118	4	0	1	0	1
61	M7	1	max	1630.912	1	786.532	7	65.41	3	.144	1	.141	2	.371	7
62			min	-1285.746	2	7.279	4	-202.174	8	-.098	2	-.137	1	.004	4
63		2	max	1630.207	1	785.407	7	65.108	3	.144	1	.141	2	.34	7
64			min	-1285.042	2	6.921	4	-202.094	8	-.098	2	-.142	1	.004	4
65		3	max	1629.503	1	784.282	7	64.807	3	.144	1	.142	2	.309	7
66			min	-1284.337	2	6.563	4	-202.015	8	-.098	2	-.147	1	.004	4
67		4	max	1628.798	1	783.158	7	64.506	3	.144	1	.143	2	.279	7
68			min	-1283.632	2	6.206	4	-201.935	8	-.098	2	-.153	1	.003	4
69		5	max	1628.093	1	782.033	7	64.204	3	.144	1	.144	2	.248	7
70			min	-1282.928	2	5.848	4	-201.856	8	-.098	2	-.158	1	.003	4
71	M8	1	max	1564.964	1	781.906	7	481.357	1	.127	1	.144	2	.259	7
72			min	-1202.048	2	5.697	4	-439.815	2	-.14	2	-.158	1	.001	4
73		2	max	1564.839	1	779.497	7	477.187	1	.127	1	.107	2	.194	7
74			min	-1201.923	2	4.931	4	-435.645	2	-.14	2	-.118	1	0	4
75		3	max	1564.714	1	777.088	7	473.017	1	.127	1	.071	2	.129	7
76			min	-1201.798	2	4.165	4	-431.475	2	-.14	2	-.078	1	0	4
77		4	max	1564.588	1	774.68	7	468.847	1	.127	1	.035	2	.064	7

Envelope Member Section Forces (Continued)

	Member	Sec		Axial[lb]	LC	y Shear[lb]	LC	z Shear[lb]	LC	Torque[k-...	LC	y-y Mome...	LC	z-z Mome...	LC
78			min	-1201.673	2	3.399	4	-427.304	2	-.14	2	-.039	1	0	4
79		5	max	1564.463	1	772.271	7	464.677	1	.127	1	0	1	0	1
80			min	-1201.547	2	2.633	4	-423.134	2	-.14	2	0	1	0	1
81	M9	1	max	1259.351	2	88.276	7	25.546	2	0	1	-.002	4	.093	7
82			min	-1732.913	1	9.926	4	-31.387	1	0	2	-.054	6	-.028	4
83		2	max	1259.314	2	62.813	7	7.983	2	0	1	.009	4	.04	3
84			min	-1732.876	1	3.812	4	-14.173	5	0	2	-.011	3	-.028	4
85		3	max	1259.276	2	23.576	7	7.292	4	0	1	.024	8	.012	3
86			min	-1732.838	1	-6.269	4	-13.083	3	0	2	-.002	3	-.025	8
87		4	max	1259.239	2	7.011	3	21.3	1	0	1	.015	5	-.005	2
88			min	-1732.801	1	-31.466	8	-27.142	2	0	2	-.005	2	-.024	5
89		5	max	1259.201	2	-1.304	3	38.863	1	0	1	.03	1	.018	1
90			min	-1732.763	1	-64.569	8	-44.704	2	0	2	-.042	2	-.022	2
91	M10	1	max	1047.947	3	10.79	3	110.487	6	0	3	-.009	4	0	1
92			min	-1481.59	4	-27.456	8	18.923	1	0	8	-.075	7	-.154	6
93		2	max	1040.321	3	3.369	1	84.873	6	0	3	.005	1	.008	1
94			min	-1473.965	4	-22.991	6	12.765	1	0	8	-.017	6	-.063	6
95		3	max	1032.696	3	3.266	4	45.067	6	0	3	.021	5	.017	4
96			min	-1466.34	4	-22.461	7	2.52	1	0	8	-.003	2	-.015	3
97		4	max	1025.071	3	16.397	4	9.461	2	0	3	.018	8	.033	8
98			min	-1458.715	4	-28.602	3	-14.879	5	0	8	-.005	3	.008	2
99		5	max	1017.446	3	29.527	4	.54	2	0	3	.024	4	.033	3
100			min	-1451.089	4	-41.732	3	-50.086	5	0	8	-.033	7	-.013	4
101	M11	1	max	579.32	3	578.59	7	53.858	2	.163	4	.009	1	.185	7
102			min	-500.946	4	-254.488	4	-28.665	1	-.22	3	-.017	3	-.083	4
103		2	max	578.2	3	575.997	7	53.518	2	.163	4	.007	4	.138	7
104			min	-499.826	4	-255.475	4	-28.325	1	-.22	3	-.013	3	-.062	4
105		3	max	577.079	3	573.404	7	53.302	3	.163	4	.005	4	.092	7
106			min	-498.705	4	-256.462	4	-27.986	1	-.22	3	-.009	3	-.041	4
107		4	max	575.959	3	570.81	7	56.997	3	.163	4	.003	4	.046	7
108			min	-497.585	4	-257.45	4	-31.23	4	-.22	3	-.005	3	-.021	4
109		5	max	574.839	3	568.217	7	60.693	3	.163	4	0	1	0	1
110			min	-496.465	4	-258.437	4	-34.925	4	-.22	3	0	1	0	1
111	M12	1	max	844.781	3	1176.671	6	124.706	2	.237	2	.062	1	.375	6
112			min	-779.845	4	-11.896	1	-199.516	1	-.163	1	-.038	2	-.004	1
113		2	max	843.888	3	1174.093	6	120.904	2	.237	2	.046	1	.281	6
114			min	-778.952	4	-12.877	1	-195.714	1	-.163	1	-.028	2	-.003	1
115		3	max	842.996	3	1171.514	6	117.102	2	.237	2	.03	1	.187	6
116			min	-778.059	4	-13.859	1	-191.912	1	-.163	1	-.018	2	-.002	1
117		4	max	842.103	3	1168.936	6	113.3	2	.237	2	.015	1	.094	6
118			min	-777.166	4	-14.84	1	-188.11	1	-.163	1	-.009	2	-.001	1
119		5	max	841.21	3	1166.357	6	109.498	2	.237	2	0	1	0	1
120			min	-776.274	4	-15.822	1	-184.309	1	-.163	1	0	1	0	1
121	M13	1	max	904.497	4	131.956	4	651.045	1	.323	1	.059	1	-.012	1
122			min	-940.756	3	-1743.619	7	-611.633	2	-.55	2	-.085	2	-.225	6
123		2	max	3047.959	4	1261.433	7	54.608	2	.179	1	.131	2	1.636	7
124			min	-5265.141	3	1.362	4	-44.595	1	-.456	6	-.127	1	-.509	4
125		3	max	3068.542	4	1209.604	7	23.056	8	.179	1	.184	2	.298	3
126			min	-5285.724	3	-18.242	4	-11.47	3	-.456	6	-.165	1	-.497	4
127		4	max	3277.218	4	-221.452	2	785.685	1	.303	1	.673	2	.04	5
128			min	-5682.664	3	-752.745	5	-780.291	2	-.447	2	-.694	1	-.016	10
129		5	max	3297.802	4	-241.056	2	821.356	1	.303	1	.45	1	1.149	5

Envelope Member Section Forces (Continued)

	Member	Sec		Axial[lb]	LC	y Shear[lb]	LC	z Shear[lb]	LC	Torque[k-...	LC	y-y Mome...	LC	z-z Mome...	LC
130			min	-5703.248	3	-804.573	5	-815.961	2	-.447	2	-.464	2	.318	2
131	M14	1	max	157.545	3	-115.872	1	1336.225	4	0	4	.11	3	.056	1
132			min	-282.812	4	-818.721	6	-1058.517	3	-.39	7	-.108	4	-.145	6
133		2	max	473.93	4	-145.101	1	108.997	4	-.084	3	.431	4	.437	7
134			min	-394.969	3	-885.622	6	-231.255	7	-.483	8	-.322	3	-.166	4
135		3	max	483.252	4	-153.976	1	125.143	4	-.084	3	.506	4	1.013	7
136			min	-404.29	3	-909.087	6	-236.19	7	-.483	8	-.464	3	-.07	4
137		4	max	492.574	4	-162.852	1	141.289	4	-.084	3	.592	4	1.605	7
138			min	-413.612	3	-932.553	6	-245.025	3	-.483	8	-.617	3	.033	4
139		5	max	501.895	4	-171.728	1	157.435	4	-.084	3	.688	4	2.212	7
140			min	-422.934	3	-956.018	6	-261.17	3	-.483	8	-.78	3	.141	4
141	M15	1	max	610.742	1	936.798	7	226.688	2	.503	5	.76	1	2.094	7
142			min	-536.047	2	69.017	4	-142.363	1	.012	2	-.798	2	.046	4
143		2	max	601.42	1	913.332	7	221.306	2	.503	5	.67	1	1.498	7
144			min	-526.725	2	60.141	4	-136.981	1	.012	2	-.654	2	.005	4
145		3	max	592.098	1	889.867	7	215.924	2	.503	5	.584	1	.916	6
146			min	-517.403	2	51.266	4	-131.599	1	.012	2	-.513	2	-.031	4
147		4	max	582.776	1	866.402	7	210.542	2	.503	5	.501	1	.386	6
148			min	-508.081	2	42.39	4	-126.217	1	.012	2	-.375	2	-.16	1
149		5	max	168.075	2	785.518	7	1275.056	2	.359	7	.141	2	.076	2
150			min	-322.29	1	6.847	4	-1603.399	1	.005	4	-.137	1	-.149	1
151	M16	1	max	0	1	0	1	0	1	0	1	0	1	0	1
152			min	0	1	-750	9	0	1	0	1	0	1	0	1
153		2	max	294.548	4	237.761	4	189.909	2	.144	1	.14	4	.149	9
154			min	-282.939	3	-258.363	3	-182.922	1	-.231	2	-.149	3	-.068	3
155		3	max	1042.89	2	399.21	4	71.957	1	.134	3	.209	1	.02	2
156			min	-1401.658	1	-344.451	3	-65.098	2	-.179	4	-.199	2	-.562	10
157		4	max	111.121	1	172.651	8	176.494	1	.305	2	.087	1	.009	1
158			min	-122.738	2	-93.25	3	-167.618	2	-.292	1	-.115	2	-.142	6
159		5	max	0	1	0	1	0	1	0	1	0	1	0	1
160			min	0	1	0	1	0	1	0	1	0	1	0	1
161	M17	1	max	0	1	.005	1	.004	3	0	1	0	1	0	1
162			min	0	1	0	7	-.004	1	0	1	0	1	0	1
163		2	max	324.437	3	214.967	2	187.741	3	.244	4	.131	2	.076	2
164			min	-299.704	4	-238.437	1	-181.487	4	-.332	3	-.143	1	-.082	1
165		3	max	942.589	3	325.585	2	40.97	3	.121	1	.193	4	.02	3
166			min	-1297.08	4	-267.016	1	-33.058	4	-.165	2	-.184	3	-.083	8
167		4	max	166.374	4	169.055	7	219.946	2	.247	1	.084	1	.002	4
168			min	-181.718	3	-98.54	4	-211.704	1	-.235	2	-.11	2	-.146	7
169		5	max	0	1	.001	5	.003	3	0	1	0	1	0	1
170			min	0	1	-.003	3	0	5	0	1	0	1	0	1
171	M18	1	max	0	1	.004	4	.003	1	0	1	0	1	0	1
172			min	0	1	0	5	-.002	4	0	1	0	1	0	1
173		2	max	327.395	1	184.904	1	149.454	1	.204	2	.053	1	.078	3
174			min	-315.635	2	-205.347	2	-143.387	2	-.292	1	-.061	2	-.088	4
175		3	max	848.247	4	358.557	1	87.607	1	.102	4	.168	3	.006	4
176			min	-1205.551	3	-302.178	2	-80.706	2	-.145	3	-.161	4	-.081	7
177		4	max	81.642	9	174.907	5	210.307	3	.29	4	.032	2	-.01	10
178			min	-59.402	1	-104.508	2	-201.995	4	-.278	3	-.075	5	-.137	5
179		5	max	0	1	.001	8	0	5	0	1	0	1	0	1
180			min	0	1	-.003	1	-.005	4	0	1	0	1	0	1
181	M19	1	max	6371.552	5	58.114	5	48.626	4	0	4	0	1	0	1

Envelope Member Section Forces (Continued)

	Member	Sec		Axial[lb]	LC	y Shear[lb]	LC	z Shear[lb]	LC	Torque[k-...	LC	y-y Mome...	LC	z-z Mome...	LC
182			min	-269.634	2	.479	2	-48.626	3	0	7	0	1	0	1
183		2	max	6358.971	5	29.057	5	24.313	4	0	4	.043	4	0	2
184			min	-285.232	2	.24	2	-24.313	3	0	7	-.043	3	-.051	5
185		3	max	6346.39	5	0	1	0	1	0	4	.057	4	0	2
186			min	-300.831	2	0	1	0	1	0	7	-.057	3	-.068	5
187		4	max	6333.809	5	-.24	2	24.313	3	0	4	.043	4	0	2
188			min	-316.429	2	-29.057	5	-24.313	4	0	7	-.043	3	-.051	5
189		5	max	6321.228	5	-.479	2	48.626	3	0	4	0	1	0	1
190			min	-332.027	2	-58.114	5	-48.626	4	0	7	0	1	0	1
191	M20	1	max	6213.487	7	58.692	7	38.207	1	0	1	0	1	0	1
192			min	-72.3	4	-.934	4	-38.207	2	0	2	0	1	0	1
193		2	max	6201.336	7	29.346	7	19.103	1	0	1	.033	1	0	4
194			min	-89.026	4	-.467	4	-19.103	2	0	2	-.033	2	-.051	7
195		3	max	6189.184	7	0	1	0	1	0	1	.045	1	.001	4
196			min	-105.753	4	0	1	0	1	0	2	-.045	2	-.068	7
197		4	max	6177.033	7	.467	4	19.103	2	0	1	.033	1	0	4
198			min	-122.48	4	-29.346	7	-19.103	1	0	2	-.033	2	-.051	7
199		5	max	6164.882	7	.934	4	38.207	2	0	1	0	1	0	1
200			min	-139.207	4	-58.692	7	-38.207	1	0	2	0	1	0	1
201	M21	1	max	6299.258	8	58.692	8	38.194	2	0	9	0	1	0	1
202			min	-61.077	3	-.935	3	-38.194	1	0	8	0	1	0	1
203		2	max	6287.107	8	29.346	8	19.097	2	0	9	.033	2	0	3
204			min	-77.805	3	-.467	3	-19.097	1	0	8	-.033	1	-.051	8
205		3	max	6274.955	8	0	1	0	1	0	9	.045	2	.001	3
206			min	-94.532	3	0	1	0	1	0	8	-.045	1	-.068	8
207		4	max	6262.804	8	.467	3	19.097	1	0	9	.033	2	0	3
208			min	-111.259	3	-29.346	8	-19.097	2	0	8	-.033	1	-.051	8
209		5	max	6250.653	8	.935	3	38.194	1	0	9	0	1	0	1
210			min	-127.986	3	-58.692	8	-38.194	2	0	8	0	1	0	1
211	M22	1	max	0	1	.005	1	.003	2	0	1	0	1	0	1
212			min	0	1	-.002	4	-.014	4	0	1	0	1	0	1
213		2	max	272.648	4	227.331	1	126.892	2	.116	3	.137	3	.046	4
214			min	-309.919	3	-182.471	2	-167.773	1	-.144	4	-.138	4	-.05	3
215		3	max	186.723	1	256.82	1	33.349	2	.059	2	.11	3	-.002	9
216			min	-149.745	2	-227.604	2	-45.557	1	-.071	1	-.13	4	-.012	7
217		4	max	421.97	1	230.927	1	104.664	4	.144	4	.104	3	.034	1
218			min	-370.689	2	-244.775	2	-86.877	3	-.138	3	-.121	4	-.044	2
219		5	max	0	1	0	6	.01	1	0	1	0	1	0	1
220			min	0	1	-.006	3	-.013	4	0	1	0	1	0	1
221	M23	1	max	0	1	0	1	0	1	0	1	0	1	0	1
222			min	0	1	0	1	0	1	0	1	0	1	0	1
223		2	max	147.831	2	234.572	4	70.855	1	.152	1	.11	1	.038	3
224			min	-185.258	1	-189.829	3	-110.898	2	-.18	2	-.11	2	-.043	4
225		3	max	200.79	10	286.963	4	46.409	3	.047	3	.142	1	.004	9
226			min	-129.578	1	-258.227	3	-58.238	4	-.058	4	-.163	2	-.012	8
227		4	max	452.348	4	280.874	4	84.782	2	.152	2	.158	1	.026	2
228			min	-403.714	3	-293.289	3	-66.614	1	-.146	1	-.175	2	-.036	1
229		5	max	0	1	0	1	0	1	0	1	0	1	0	1
230			min	0	1	0	1	0	1	0	1	0	1	0	1
231	M24	1	max	0	1	.006	3	.01	4	0	1	0	1	0	1
232			min	0	1	0	5	-.013	1	0	1	0	1	0	1
233		2	max	195.935	1	171.919	2	142.329	4	.158	4	.129	2	.043	1

Envelope Member Section Forces (Continued)

	Member	Sec		Axial[lb]	LC	y Shear[lb]	LC	z Shear[lb]	LC	Torque[k-...	LC	y-y Mome...	LC	z-z Mome...	LC
234			min	-237.637	2	-128.015	1	-182.785	3	-.186	3	-.13	1	-.048	2
235		3	max	180.661	3	233.739	2	37.078	1	.049	4	.14	4	-.002	1
236			min	-144.741	4	-203.508	1	-48.181	2	-.061	3	-.161	3	-.012	6
237		4	max	310.729	3	229.142	2	104.517	1	.124	3	.166	4	.04	3
238			min	-258.817	4	-242	1	-87.084	2	-.118	4	-.183	3	-.05	4
239		5	max	0	1	.002	4	.016	3	0	1	0	1	0	1
240			min	0	1	-.007	2	-.003	1	0	1	0	1	0	1
241	M25	1	max	247.772	1	305.227	2	320.783	1	.01	2	.153	3	.43	2
242			min	-359.27	2	-382.041	1	-355.375	2	-.009	1	-.091	4	-.387	1
243		2	max	245.762	4	306.907	2	318.988	1	.01	2	.12	3	.268	2
244			min	-356.212	3	-380.361	1	-353.579	2	-.009	1	-.085	4	-.216	1
245		3	max	248.881	4	308.587	2	317.192	1	.01	2	.088	3	.23	3
246			min	-359.33	3	-378.681	1	-351.784	2	-.009	1	-.08	4	-.168	4
247		4	max	251.999	4	310.266	2	315.397	1	.01	2	.063	2	.313	3
248			min	-362.448	3	-377.002	1	-349.989	2	-.009	1	-.079	1	-.244	4
249		5	max	255.117	4	311.946	2	313.602	1	.01	2	.053	2	.398	3
250			min	-365.566	3	-375.322	1	-348.194	2	-.009	1	-.095	8	-.322	4
251	MP4A	1	max	0	1	.036	4	.021	4	0	1	0	1	0	1
252			min	0	1	-.069	7	-.032	7	0	1	0	1	0	1
253		2	max	471.986	4	225.423	2	183.642	1	.308	4	.235	2	.424	4
254			min	-295.887	3	-281.046	1	-159.056	2	-.288	3	-.286	1	-.421	3
255		3	max	485.134	4	225.423	2	212.429	1	.308	4	.11	1	.229	5
256			min	-282.738	3	-281.046	1	-187.843	2	-.288	3	-.112	2	-.107	2
257		4	max	-13.148	1	28.846	3	28.803	2	0	1	.029	1	.029	3
258			min	-42.34	5	-28.852	4	-28.802	1	0	1	-.029	2	-.029	4
259		5	max	0	1	.059	3	.033	7	0	1	0	1	0	1
260			min	0	1	-.092	8	-.026	4	0	1	0	1	0	1
261	MP1A	1	max	0	1	.522	8	.413	5	0	1	0	1	0	1
262			min	0	1	-.338	7	-.277	2	0	1	0	1	0	1
263		2	max	480.174	8	.178	1	427.964	1	.258	3	.485	2	.198	3
264			min	-287.597	3	-197.39	3	-427.952	2	-.285	4	-.055	9	-.198	4
265		3	max	704.332	8	29.889	2	285.551	1	.258	3	.167	1	.108	7
266			min	-190.448	3	-93.576	5	-399.26	2	-.285	4	-.264	2	-.038	4
267		4	max	-76.748	1	183.103	3	404.289	2	0	1	.404	1	.183	3
268			min	-333.659	5	-183.141	4	-404.34	1	0	1	-.404	2	-.183	4
269		5	max	0	1	.159	3	.082	3	0	1	0	1	0	1
270			min	0	1	-.533	8	-.488	8	0	1	0	1	0	1
271	MP3A	1	max	0	1	.393	4	.176	1	0	1	0	1	0	1
272			min	0	1	-.385	3	-.178	2	0	1	0	1	0	1
273		2	max	270.036	7	147.683	2	310.185	1	.177	1	.431	2	.299	2
274			min	74.948	2	-211.06	1	-258.743	2	-.137	2	-.539	1	-.341	1
275		3	max	481.053	7	235.329	4	480.404	1	.177	1	.181	1	.238	3
276			min	87.433	4	-298.046	3	-428.962	2	-.137	2	-.186	2	-.154	4
277		4	max	-13.148	1	28.845	3	28.806	2	0	1	.029	1	.029	3
278			min	-42.34	5	-28.856	4	-28.808	1	0	1	-.029	2	-.029	4
279		5	max	0	1	.058	3	.035	3	0	1	0	1	0	1
280			min	0	1	-.115	8	-.048	8	0	1	0	1	0	1
281	MP2A	1	max	0	1	.497	8	.276	1	0	1	0	1	0	1
282			min	0	1	-.453	3	-.265	2	0	1	0	1	0	1
283		2	max	258.512	6	171.484	4	398.744	1	.121	3	.538	2	.294	2
284			min	92.468	1	-204.35	3	-401.093	2	-.129	4	-.564	1	-.294	1
285		3	max	300.852	6	200.271	4	427.531	1	.121	3	.262	1	.251	3

Envelope Member Section Forces (Continued)

	Member	Sec		Axial[lb]	LC	y Shear[lb]	LC	z Shear[lb]	LC	Torque[k-...	LC	y-y Mome...	LC	z-z Mome...	LC
286			min	77.354	4	-233.136	3	-429.88	2	-.129	4	-.293	2	-.186	4
287		4	max	-76.604	1	123.457	3	157.46	2	0	1	.03	1	.03	3
288			min	-208.428	5	-123.521	4	-157.494	1	0	1	-.03	2	-.03	4
289		5	max	0	1	.303	3	.158	3	0	1	0	1	0	1
290			min	0	1	-.57	8	-.29	8	0	1	0	1	0	1
291	MP4C	1	max	0	1	.023	8	.074	5	0	1	0	1	0	1
292			min	0	1	-.016	3	-.039	2	0	1	0	1	0	1
293		2	max	516.539	2	345.937	4	134.441	4	.305	2	.219	3	.543	4
294			min	-342.281	1	-297.192	3	-98.717	3	-.285	1	-.191	4	-.501	3
295		3	max	529.687	2	374.724	4	134.441	4	.305	2	.197	6	.122	3
296			min	-329.133	1	-325.979	3	-98.717	3	-.285	1	-.076	1	-.177	4
297		4	max	-13.148	2	28.8	3	28.855	2	0	1	.029	1	.029	3
298			min	-42.34	6	-28.796	4	-28.851	1	0	1	-.029	2	-.029	4
299		5	max	0	1	.029	7	.089	6	0	1	0	1	0	1
300			min	0	1	-.01	9	-.064	1	0	1	0	1	0	1
301	MP1C	1	max	0	1	.265	8	.392	5	0	1	0	1	0	1
302			min	0	1	-.217	7	-.627	6	0	1	0	1	0	1
303		2	max	487.235	6	380.094	4	251.267	1	.33	1	.252	1	.104	2
304			min	-307.175	1	-380.089	3	-251.283	2	-.357	2	-.269	3	-.385	3
305		3	max	711.394	6	292.873	4	192.876	7	.33	1	.167	7	.284	3
306			min	-210.027	1	-367.758	3	-80.512	4	-.357	2	.016	4	-.23	4
307		4	max	-76.748	1	348.896	3	238.538	2	0	1	.239	1	.349	3
308			min	-333.659	5	-348.921	4	-238.481	1	0	1	-.239	2	-.349	4
309		5	max	0	1	.017	4	.764	6	0	1	0	1	0	1
310			min	0	1	-.17	6	-.206	1	0	1	0	1	0	1
311	MP3C	1	max	0	1	.099	4	.456	1	0	1	0	1	0	1
312			min	0	1	-.105	7	-.462	2	0	1	0	1	0	1
313		2	max	268.39	8	422.074	4	109.952	1	.133	2	.11	1	.711	4
314			min	74.948	3	-346.528	3	-109.957	2	-.093	1	-.11	2	-.597	3
315		3	max	479.407	8	572.052	4	189.57	1	.133	2	.206	1	.185	3
316			min	94.566	3	-496.505	3	-161.624	2	-.093	1	-.131	2	-.223	4
317		4	max	-13.148	2	28.793	3	28.87	2	0	1	.029	1	.029	3
318			min	-42.34	5	-28.79	4	-28.861	1	0	1	-.029	2	-.029	4
319		5	max	0	1	.019	7	.129	6	0	1	0	1	0	1
320			min	0	1	-.003	4	-.074	1	0	1	0	1	0	1
321	MP2C	1	max	0	1	.127	4	.582	1	0	1	0	1	0	1
322			min	0	1	-.128	3	-.622	6	0	1	0	1	0	1
323		2	max	263.46	5	471.531	4	158.015	1	.103	1	.159	1	.731	4
324			min	92.468	2	-456.442	3	-158.039	2	-.111	2	-.159	2	-.707	3
325		3	max	305.801	5	500.318	4	154.604	1	.103	1	.29	1	.235	3
326			min	37.724	10	-485.229	3	-125.626	2	-.111	2	-.219	2	-.241	4
327		4	max	-76.604	2	148.822	3	132.168	2	0	1	.03	1	.029	3
328			min	-208.428	5	-148.82	4	-132.097	1	0	1	-.03	2	-.029	4
329		5	max	0	1	.034	7	.689	6	0	1	0	1	0	1
330			min	0	1	-.038	10	-.393	1	0	1	0	1	0	1
331	MP4B	1	max	0	1	.057	8	.022	1	0	1	0	1	0	1
332			min	0	1	-.031	3	-.045	6	0	1	0	1	0	1
333		2	max	419.228	3	64.942	1	246.311	1	.254	3	.547	2	.034	1
334			min	-247.071	4	-57.835	2	-304.954	2	-.235	4	-.526	1	-.085	6
335		3	max	433.937	7	64.942	1	275.098	1	.254	3	.153	4	.037	2
336			min	-233.923	4	-57.835	2	-333.741	2	-.235	4	-.249	3	-.117	5
337		4	max	-13.148	1	28.831	3	28.815	2	0	1	.029	1	.029	3

Envelope Member Section Forces (Continued)

	Member	Sec		Axial[lb]	LC	y Shear[lb]	LC	z Shear[lb]	LC	Torque[k-...	LC	y-y Mome...	LC	z-z Mome...	LC
338			min	-42.34	5	-28.83	4	-28.821	1	0	1	-.029	2	-.029	4
339		5	max	0	1	.054	7	.028	2	0	1	0	1	0	1
340			min	0	1	-.043	4	-.059	5	0	1	0	1	0	1
341	MP1B	1	max	0	1	.387	4	.327	5	0	1	0	1	0	1
342			min	0	1	-.605	7	-.249	6	0	1	0	1	0	1
343		2	max	473.957	7	380.265	4	120.474	1	.33	4	.279	3	.381	3
344			min	-269.617	4	-380.281	3	-251.117	2	-.356	3	-.318	4	-.381	4
345		3	max	698.116	7	254.386	1	181.349	1	.33	4	.2	1	.073	2
346			min	-172.468	4	-135.213	2	-162.955	2	-.356	3	-.201	2	-.219	5
347		4	max	-76.748	4	349.161	3	238.303	2	0	1	.238	1	.349	3
348			min	-333.659	5	-349.099	4	-238.311	1	0	1	-.238	2	-.349	4
349		5	max	0	1	.741	7	.112	4	0	1	0	1	0	1
350			min	0	1	-.161	4	-.234	7	0	1	0	1	0	1
351	MP3B	1	max	0	1	.37	4	.207	5	0	1	0	1	0	1
352			min	0	1	-.371	3	-.198	2	0	1	0	1	0	1
353		2	max	272.138	6	116.015	4	265.396	1	.199	3	.521	2	.202	1
354			min	74.948	1	-129.24	3	-345.99	2	-.159	4	-.432	1	-.275	2
355		3	max	483.156	6	265.992	4	374.891	1	.199	3	.168	1	.148	3
356			min	87.492	1	-279.217	3	-455.485	2	-.159	4	-.24	2	-.195	4
357		4	max	-13.148	4	28.85	3	28.808	2	0	1	.029	1	.029	3
358			min	-42.34	7	-28.843	4	-28.816	1	0	1	-.029	2	-.029	4
359		5	max	0	1	.094	7	.027	4	0	1	0	1	0	1
360			min	0	1	-.056	4	-.069	7	0	1	0	1	0	1
361	MP2B	1	max	0	1	.526	4	.258	7	0	1	0	1	0	1
362			min	0	1	-.546	3	-.226	4	0	1	0	1	0	1
363		2	max	264.995	8	237.001	4	323.023	1	.108	2	.498	2	.299	1
364			min	92.468	1	-220.03	3	-352.074	2	-.115	1	-.482	1	-.323	2
365		3	max	307.335	8	265.788	4	351.81	1	.108	2	.193	1	.279	3
366			min	59.464	3	-248.817	3	-380.861	2	-.115	1	-.235	2	-.337	4
367		4	max	-76.604	1	149.181	3	131.804	2	0	1	.03	1	.03	3
368			min	-208.428	5	-149.121	4	-131.843	1	0	1	-.03	2	-.03	4
369		5	max	0	1	.559	7	.183	4	0	1	0	1	0	1
370			min	0	1	-.319	4	-.35	7	0	1	0	1	0	1
371	M38	1	max	413.562	2	1224.174	8	776.083	2	.371	4	.321	3	.153	3
372			min	-317.5	1	-46.152	3	-698.134	1	-.201	3	-.369	4	-.21	4
373		2	max	413.562	2	1224.174	8	776.083	2	.371	4	.306	3	.156	3
374			min	-317.5	1	-46.152	3	-698.134	1	-.201	3	-.348	4	-.259	4
375		3	max	413.562	2	1224.174	8	776.083	2	.371	4	.29	3	.159	3
376			min	-317.5	1	-46.152	3	-698.134	1	-.201	3	-.327	4	-.307	4
377		4	max	413.562	2	1224.174	8	776.083	2	.371	4	.274	3	.163	3
378			min	-317.5	1	-46.152	3	-698.134	1	-.201	3	-.306	4	-.391	8
379		5	max	413.562	2	1224.174	8	776.083	2	.371	4	.258	3	.166	3
380			min	-317.5	1	-46.152	3	-698.134	1	-.201	3	-.285	4	-.475	8
381	M39	1	max	267.948	3	593.179	6	615.139	2	.76	2	.218	3	.279	1
382			min	-238.908	4	180.876	4	-629.254	1	-.787	1	-.222	4	-.284	2
383		2	max	267.948	3	593.179	6	615.139	2	.76	2	.194	3	.265	1
384			min	-238.908	4	180.876	4	-629.254	1	-.787	1	-.199	4	-.298	2
385		3	max	267.948	3	593.179	6	615.139	2	.76	2	.17	3	.252	1
386			min	-238.908	4	180.876	4	-629.254	1	-.787	1	-.175	4	-.312	2
387		4	max	267.948	3	593.179	6	615.139	2	.76	2	.145	3	.238	1
388			min	-238.908	4	180.876	4	-629.254	1	-.787	1	-.152	4	-.327	2
389		5	max	267.948	3	593.179	6	615.139	2	.76	2	.121	3	.224	1

Envelope Member Section Forces (Continued)

	Member	Sec		Axial[lb]	LC	y Shear[lb]	LC	z Shear[lb]	LC	Torque[k-...	LC	y-y Mome...	LC	z-z Mome...	LC
390			min	-238.908	4	180.876	4	-629.254	1	-.787	1	-.129	4	-.341	2
391	M40	1	max	219.075	3	565.596	7	495.033	2	.802	2	.335	1	.341	4
392			min	-192.304	4	111.904	4	-570.801	1	-.955	1	-.274	2	-.36	3
393		2	max	219.075	3	565.596	7	495.033	2	.802	2	.295	1	.333	4
394			min	-192.304	4	111.904	4	-570.801	1	-.955	1	-.24	2	-.377	3
395		3	max	219.075	3	565.596	7	495.033	2	.802	2	.256	1	.326	4
396			min	-192.304	4	111.904	4	-570.801	1	-.955	1	-.206	2	-.394	3
397		4	max	219.075	3	565.596	7	495.033	2	.802	2	.217	1	.318	4
398			min	-192.304	4	111.904	4	-570.801	1	-.955	1	-.171	2	-.411	3
399		5	max	219.075	3	565.596	7	495.033	2	.802	2	.177	1	.31	4
400			min	-192.304	4	111.904	4	-570.801	1	-.955	1	-.137	2	-.428	3
401	M41	1	max	155.27	3	530.731	8	325.391	2	.539	2	.247	4	.193	2
402			min	-113.867	4	-257.7	3	-373.583	1	-.667	1	-.213	3	-.276	1
403		2	max	155.27	3	530.731	8	325.391	2	.539	2	.262	4	.195	2
404			min	-113.867	4	-257.7	3	-373.583	1	-.667	1	-.232	3	-.296	1
405		3	max	155.27	3	530.731	8	325.391	2	.539	2	.277	4	.198	2
406			min	-113.867	4	-257.7	3	-373.583	1	-.667	1	-.251	3	-.317	1
407		4	max	155.27	3	530.731	8	325.391	2	.539	2	.293	4	.201	2
408			min	-113.867	4	-257.7	3	-373.583	1	-.667	1	-.269	3	-.337	1
409		5	max	155.27	3	530.731	8	325.391	2	.539	2	.308	4	.203	2
410			min	-113.867	4	-257.7	3	-373.583	1	-.667	1	-.288	3	-.357	1
411	M42	1	max	350.478	1	1231.02	6	825.202	3	.408	3	.313	1	.17	4
412			min	-251.213	2	-66.728	1	-750.729	4	-.241	4	-.36	2	-.226	3
413		2	max	350.478	1	1231.02	6	825.202	3	.408	3	.317	1	.153	4
414			min	-251.213	2	-66.728	1	-750.729	4	-.241	4	-.359	2	-.255	3
415		3	max	350.478	1	1231.02	6	825.202	3	.408	3	.321	1	.146	1
416			min	-251.213	2	-66.728	1	-750.729	4	-.241	4	-.358	2	-.3	7
417		4	max	350.478	1	1231.02	6	825.202	3	.408	3	.325	1	.15	1
418			min	-251.213	2	-66.728	1	-750.729	4	-.241	4	-.357	2	-.378	7
419		5	max	350.478	1	1231.02	6	825.202	3	.408	3	.33	1	.155	1
420			min	-251.213	2	-66.728	1	-750.729	4	-.241	4	-.357	2	-.46	6
421	M43	1	max	339.462	1	597.951	5	692.644	3	.859	3	.275	4	.358	2
422			min	-311.239	2	143.366	10	-707.516	4	-.887	4	-.278	3	-.363	1
423		2	max	339.462	1	597.951	5	692.644	3	.859	3	.226	4	.347	2
424			min	-311.239	2	143.366	10	-707.516	4	-.887	4	-.23	3	-.379	1
425		3	max	339.462	1	597.951	5	692.644	3	.859	3	.177	4	.336	2
426			min	-311.239	2	143.366	10	-707.516	4	-.887	4	-.182	3	-.396	1
427		4	max	339.462	1	597.951	5	692.644	3	.859	3	.129	4	.324	2
428			min	-311.239	2	143.366	10	-707.516	4	-.887	4	-.134	3	-.412	1
429		5	max	339.462	1	597.951	5	692.644	3	.859	3	.103	1	.313	2
430			min	-311.239	2	143.366	10	-707.516	4	-.887	4	-.111	2	-.428	1
431	M44	1	max	245.554	1	564.156	8	553.78	3	.901	3	.275	4	.383	2
432			min	-218.083	2	120.814	3	-628.762	4	-1.051	4	-.214	3	-.402	1
433		2	max	245.554	1	564.156	8	553.78	3	.901	3	.231	4	.374	2
434			min	-218.083	2	120.814	3	-628.762	4	-1.051	4	-.176	3	-.417	1
435		3	max	245.554	1	564.156	8	553.78	3	.901	3	.188	4	.364	2
436			min	-218.083	2	120.814	3	-628.762	4	-1.051	4	-.138	3	-.432	1
437		4	max	245.554	1	564.156	8	553.78	3	.901	3	.145	4	.354	2
438			min	-218.083	2	120.814	3	-628.762	4	-1.051	4	-.1	3	-.447	1
439		5	max	245.554	1	564.156	8	553.78	3	.901	3	.133	2	.345	2
440			min	-218.083	2	120.814	3	-628.762	4	-1.051	4	-.093	1	-.462	1
441	M45	1	max	135.667	4	555.497	2	382.951	3	.582	3	.295	2	.164	3

Envelope Member Section Forces (Continued)

	Member	Sec		Axial[lb]	LC	y Shear[lb]	LC	z Shear[lb]	LC	Torque[k-...	LC	y-y Mome...	LC	z-z Mome...	LC
442			min	-99.826	3	-303.597	1	-431.355	4	-.71	4	-.262	1	-.248	4
443		2	max	135.667	4	555.497	2	382.951	3	.582	3	.297	2	.155	3
444			min	-99.826	3	-303.597	1	-431.355	4	-.71	4	-.268	1	-.256	4
445		3	max	135.667	4	555.497	2	382.951	3	.582	3	.3	2	.146	3
446			min	-99.826	3	-303.597	1	-431.355	4	-.71	4	-.274	1	-.265	4
447		4	max	135.667	4	555.497	2	382.951	3	.582	3	.302	2	.138	3
448			min	-99.826	3	-303.597	1	-431.355	4	-.71	4	-.279	1	-.28	8
449		5	max	135.667	4	555.497	2	382.951	3	.582	3	.305	2	.129	3
450			min	-99.826	3	-303.597	1	-431.355	4	-.71	4	-.285	1	-.309	8
451	M46	1	max	517.791	4	1217.573	7	537.603	1	.418	1	.25	2	.19	2
452			min	-418.624	3	-30.167	4	-463.731	2	-.25	2	-.297	1	-.246	1
453		2	max	517.791	4	1217.573	7	537.603	1	.418	1	.232	4	.186	2
454			min	-418.624	3	-30.167	4	-463.731	2	-.25	2	-.274	3	-.288	1
455		3	max	517.791	4	1217.573	7	537.603	1	.418	1	.265	4	.182	2
456			min	-418.624	3	-30.167	4	-463.731	2	-.25	2	-.301	3	-.33	1
457		4	max	517.791	4	1217.573	7	537.603	1	.418	1	.297	4	.178	2
458			min	-418.624	3	-30.167	4	-463.731	2	-.25	2	-.329	3	-.394	5
459		5	max	517.791	4	1217.573	7	537.603	1	.418	1	.33	4	.175	2
460			min	-418.624	3	-30.167	4	-463.731	2	-.25	2	-.356	3	-.476	5
461	M47	1	max	350.045	4	599.547	8	547.099	1	.679	1	.263	2	.41	3
462			min	-322.001	3	162.06	3	-563.358	2	-.71	2	-.266	1	-.414	4
463		2	max	350.045	4	599.547	8	547.099	1	.679	1	.224	2	.399	3
464			min	-322.001	3	162.06	3	-563.358	2	-.71	2	-.228	1	-.431	4
465		3	max	350.045	4	599.547	8	547.099	1	.679	1	.186	2	.388	3
466			min	-322.001	3	162.06	3	-563.358	2	-.71	2	-.19	1	-.447	4
467		4	max	350.045	4	599.547	8	547.099	1	.679	1	.147	2	.377	3
468			min	-322.001	3	162.06	3	-563.358	2	-.71	2	-.153	1	-.463	4
469		5	max	350.045	4	599.547	8	547.099	1	.679	1	.108	2	.365	3
470			min	-322.001	3	162.06	3	-563.358	2	-.71	2	-.115	1	-.48	4
471	M48	1	max	217.316	4	567.861	6	427.733	1	.693	1	.294	3	.338	3
472			min	-188.798	3	113.026	1	-503.499	2	-.846	2	-.234	4	-.357	4
473		2	max	217.316	4	567.861	6	427.733	1	.693	1	.271	3	.325	3
474			min	-188.798	3	113.026	1	-503.499	2	-.846	2	-.215	4	-.369	4
475		3	max	217.316	4	567.861	6	427.733	1	.693	1	.247	3	.312	3
476			min	-188.798	3	113.026	1	-503.499	2	-.846	2	-.196	4	-.381	4
477		4	max	217.316	4	567.861	6	427.733	1	.693	1	.223	3	.3	3
478			min	-188.798	3	113.026	1	-503.499	2	-.846	2	-.178	4	-.393	4
479		5	max	217.316	4	567.861	6	427.733	1	.693	1	.199	3	.287	3
480			min	-188.798	3	113.026	1	-503.499	2	-.846	2	-.159	4	-.405	4
481	M49	1	max	146.116	2	518.764	7	319.987	1	.425	1	.308	3	.132	4
482			min	-108.544	1	-207.609	4	-367.847	2	-.55	2	-.278	4	-.215	3
483		2	max	146.116	2	518.764	7	319.987	1	.425	1	.295	3	.146	4
484			min	-108.544	1	-207.609	4	-367.847	2	-.55	2	-.267	4	-.246	3
485		3	max	146.116	2	518.764	7	319.987	1	.425	1	.281	3	.16	4
486			min	-108.544	1	-207.609	4	-367.847	2	-.55	2	-.257	4	-.278	3
487		4	max	146.116	2	518.764	7	319.987	1	.425	1	.267	3	.175	4
488			min	-108.544	1	-207.609	4	-367.847	2	-.55	2	-.246	4	-.31	3
489		5	max	146.116	2	518.764	7	319.987	1	.425	1	.254	3	.189	4
490			min	-108.544	1	-207.609	4	-367.847	2	-.55	2	-.235	4	-.341	3
491	M50	1	max	239.825	3	385.7	3	69.837	2	.826	2	.294	4	.27	1
492			min	-338.127	4	-363.419	4	-148.747	1	-.728	1	-.249	3	-.356	2
493		2	max	239.825	3	385.7	3	69.837	2	.826	2	.291	4	.279	1

Envelope Member Section Forces (Continued)

	Member	Sec		Axial[lb]	LC	y Shear[lb]	LC	z Shear[lb]	LC	Torque[k-...	LC	y-y Mome...	LC	z-z Mome...	LC
494			min	-338.127	4	-363.419	4	-148.747	1	-.728	1	-.251	3	-.366	2
495		3	max	239.825	3	385.7	3	69.837	2	.826	2	.289	4	.288	1
496			min	-338.127	4	-363.419	4	-148.747	1	-.728	1	-.253	3	-.376	2
497		4	max	239.825	3	385.7	3	69.837	2	.826	2	.287	4	.297	1
498			min	-338.127	4	-363.419	4	-148.747	1	-.728	1	-.256	3	-.387	2
499		5	max	239.825	3	385.7	3	69.837	2	.826	2	.285	4	.305	1
500			min	-338.127	4	-363.419	4	-148.747	1	-.728	1	-.258	3	-.397	2
501	M51	1	max	36.289	3	27.546	4	251.211	1	.777	2	.166	4	.133	4
502			min	-64.963	4	-14.481	10	-236.996	2	-.8	1	-.162	3	-.117	3
503		2	max	36.289	3	27.546	4	251.211	1	.777	2	.157	4	.132	4
504			min	-64.963	4	-14.481	10	-236.996	2	-.8	1	-.152	3	-.116	3
505		3	max	36.289	3	27.546	4	251.211	1	.777	2	.148	4	.13	4
506			min	-64.963	4	-14.481	10	-236.996	2	-.8	1	-.141	3	-.115	3
507		4	max	36.289	3	27.546	4	251.211	1	.777	2	.138	4	.128	4
508			min	-64.963	4	-14.481	10	-236.996	2	-.8	1	-.131	3	-.115	3
509		5	max	36.289	3	27.546	4	251.211	1	.777	2	.129	4	.127	4
510			min	-64.963	4	-14.481	10	-236.996	2	-.8	1	-.121	3	-.114	3
511	M52	1	max	83.912	2	62.305	4	226.457	1	.67	2	.172	2	.155	4
512			min	-113.603	1	-72.094	3	-149.883	2	-.785	1	-.229	1	-.138	3
513		2	max	83.912	2	62.305	4	226.457	1	.67	2	.163	2	.151	4
514			min	-113.603	1	-72.094	3	-149.883	2	-.785	1	-.216	1	-.134	3
515		3	max	83.912	2	62.305	4	226.457	1	.67	2	.155	2	.147	4
516			min	-113.603	1	-72.094	3	-149.883	2	-.785	1	-.203	1	-.129	3
517		4	max	83.912	2	62.305	4	226.457	1	.67	2	.146	2	.144	4
518			min	-113.603	1	-72.094	3	-149.883	2	-.785	1	-.19	1	-.125	3
519		5	max	83.912	2	62.305	4	226.457	1	.67	2	.137	2	.14	4
520			min	-113.603	1	-72.094	3	-149.883	2	-.785	1	-.177	1	-.121	3
521	M53	1	max	130.044	2	309.46	3	274.209	1	.423	4	.239	3	.187	2
522			min	-166.347	1	-458.759	4	-225.462	2	-.467	3	-.271	4	-.193	1
523		2	max	130.044	2	309.46	3	274.209	1	.423	4	.251	3	.199	4
524			min	-166.347	1	-458.759	4	-225.462	2	-.467	3	-.28	4	-.197	3
525		3	max	130.044	2	309.46	3	274.209	1	.423	4	.263	3	.226	4
526			min	-166.347	1	-458.759	4	-225.462	2	-.467	3	-.289	4	-.215	3
527		4	max	130.044	2	309.46	3	274.209	1	.423	4	.276	3	.252	4
528			min	-166.347	1	-458.759	4	-225.462	2	-.467	3	-.298	4	-.232	3
529		5	max	130.044	2	309.46	3	274.209	1	.423	4	.288	3	.278	4
530			min	-166.347	1	-458.759	4	-225.462	2	-.467	3	-.308	4	-.25	3
531	M54	1	max	255.493	1	404.762	1	118.035	3	.765	3	.36	2	.201	4
532			min	-354.98	2	-382.118	2	-192.034	4	-.669	4	-.315	1	-.286	3
533		2	max	255.493	1	404.762	1	118.035	3	.765	3	.359	2	.195	4
534			min	-354.98	2	-382.118	2	-192.034	4	-.669	4	-.319	1	-.282	3
535		3	max	255.493	1	404.762	1	118.035	3	.765	3	.359	2	.189	4
536			min	-354.98	2	-382.118	2	-192.034	4	-.669	4	-.323	1	-.278	3
537		4	max	255.493	1	404.762	1	118.035	3	.765	3	.358	2	.183	4
538			min	-354.98	2	-382.118	2	-192.034	4	-.669	4	-.326	1	-.273	3
539		5	max	255.493	1	404.762	1	118.035	3	.765	3	.357	2	.177	4
540			min	-354.98	2	-382.118	2	-192.034	4	-.669	4	-.33	1	-.269	3
541	M55	1	max	33.447	1	67.915	10	292.599	4	.886	3	.15	3	.172	2
542			min	-61.523	2	-29.911	1	-277.515	3	-.91	4	-.147	4	-.155	1
543		2	max	33.447	1	67.915	10	292.599	4	.886	3	.134	3	.17	2
544			min	-61.523	2	-29.911	1	-277.515	3	-.91	4	-.13	4	-.154	1
545		3	max	33.447	1	67.915	10	292.599	4	.886	3	.118	3	.167	2

Envelope Member Section Forces (Continued)

	Member	Sec		Axial[lb]	LC	y Shear[lb]	LC	z Shear[lb]	LC	Torque[k-...	LC	y-y Mome...	LC	z-z Mome...	LC
546			min	-61.523	2	-29.911	1	-277.515	3	-.91	4	-.113	4	-.152	1
547		4	max	33.447	1	67.915	10	292.599	4	.886	3	.112	2	.165	2
548			min	-61.523	2	-29.911	1	-277.515	3	-.91	4	-.105	1	-.15	1
549		5	max	33.447	1	67.915	10	292.599	4	.886	3	.111	2	.162	2
550			min	-61.523	2	-29.911	1	-277.515	3	-.91	4	-.103	1	-.148	1
551	M56	1	max	31.494	1	55.346	3	271.464	4	.747	3	.107	3	.16	2
552			min	-58.594	2	-71.676	9	-196.299	3	-.861	4	-.164	4	-.143	1
553		2	max	31.494	1	55.346	3	271.464	4	.747	3	.095	3	.158	2
554			min	-58.594	2	-71.676	9	-196.299	3	-.861	4	-.148	4	-.141	1
555		3	max	31.494	1	55.346	3	271.464	4	.747	3	.087	1	.156	2
556			min	-58.594	2	-71.676	9	-196.299	3	-.861	4	-.135	2	-.138	1
557		4	max	31.494	1	55.346	3	271.464	4	.747	3	.09	1	.154	2
558			min	-58.594	2	-71.676	9	-196.299	3	-.861	4	-.134	2	-.136	1
559		5	max	31.494	1	55.346	3	271.464	4	.747	3	.093	1	.152	2
560			min	-58.594	2	-71.676	9	-196.299	3	-.861	4	-.133	2	-.133	1
561	M57	1	max	98.45	3	355.381	1	316.477	4	.53	3	.266	1	.201	3
562			min	-134.338	4	-503.738	2	-268.284	3	-.572	4	-.296	2	-.207	4
563		2	max	98.45	3	355.381	1	316.477	4	.53	3	.271	1	.206	3
564			min	-134.338	4	-503.738	2	-268.284	3	-.572	4	-.298	2	-.203	4
565		3	max	98.45	3	355.381	1	316.477	4	.53	3	.275	1	.21	3
566			min	-134.338	4	-503.738	2	-268.284	3	-.572	4	-.3	2	-.199	4
567		4	max	98.45	3	355.381	1	316.477	4	.53	3	.28	1	.214	3
568			min	-134.338	4	-503.738	2	-268.284	3	-.572	4	-.302	2	-.195	4
569		5	max	98.45	3	355.381	1	316.477	4	.53	3	.285	1	.219	3
570			min	-134.338	4	-503.738	2	-268.284	3	-.572	4	-.305	2	-.191	4
571	M58	1	max	298.447	4	366.697	4	-3.164	4	.585	4	.374	3	.208	3
572			min	-397.773	3	-346.611	3	-113.58	5	-.488	3	-.329	4	-.294	4
573		2	max	298.447	4	366.697	4	-3.164	4	.585	4	.37	3	.228	3
574			min	-397.773	3	-346.611	3	-113.58	5	-.488	3	-.329	4	-.315	4
575		3	max	298.447	4	366.697	4	-3.164	4	.585	4	.365	3	.248	3
576			min	-397.773	3	-346.611	3	-113.58	5	-.488	3	-.329	4	-.336	4
577		4	max	298.447	4	366.697	4	-3.164	4	.585	4	.361	3	.268	3
578			min	-397.773	3	-346.611	3	-113.58	5	-.488	3	-.33	4	-.357	4
579		5	max	298.447	4	366.697	4	-3.164	4	.585	4	.356	3	.288	3
580			min	-397.773	3	-346.611	3	-113.58	5	-.488	3	-.33	4	-.378	4
581	M59	1	max	28.978	2	45.7	3	240.673	2	.703	1	.167	1	.185	3
582			min	-58.574	1	-29.236	4	-224.761	1	-.729	2	-.163	2	-.168	4
583		2	max	28.978	2	45.7	3	240.673	2	.703	1	.154	1	.183	3
584			min	-58.574	1	-29.236	4	-224.761	1	-.729	2	-.149	2	-.166	4
585		3	max	28.978	2	45.7	3	240.673	2	.703	1	.141	1	.18	3
586			min	-58.574	1	-29.236	4	-224.761	1	-.729	2	-.135	2	-.164	4
587		4	max	28.978	2	45.7	3	240.673	2	.703	1	.128	1	.177	3
588			min	-58.574	1	-29.236	4	-224.761	1	-.729	2	-.122	2	-.163	4
589		5	max	28.978	2	45.7	3	240.673	2	.703	1	.115	1	.175	3
590			min	-58.574	1	-29.236	4	-224.761	1	-.729	2	-.108	2	-.161	4
591	M60	1	max	92.693	4	62.273	1	263.929	2	.57	1	.18	4	.125	3
592			min	-120.45	3	-74.728	2	-187.959	1	-.684	2	-.237	3	-.109	4
593		2	max	92.693	4	62.273	1	263.929	2	.57	1	.175	4	.125	3
594			min	-120.45	3	-74.728	2	-187.959	1	-.684	2	-.228	3	-.108	4
595		3	max	92.693	4	62.273	1	263.929	2	.57	1	.17	4	.126	3
596			min	-120.45	3	-74.728	2	-187.959	1	-.684	2	-.218	3	-.108	4
597		4	max	92.693	4	62.273	1	263.929	2	.57	1	.164	4	.127	3

Envelope Member Section Forces (Continued)

	Member	Sec		Axial[lb]	LC	y Shear[lb]	LC	z Shear[lb]	LC	Torque[k-...	LC	y-y Mome...	LC	z-z Mome...	LC
598			min	-120.45	3	-74.728	2	-187.959	1	-.684	2	-.209	3	-.108	4
599		5	max	92.693	4	62.273	1	263.929	2	.57	1	.159	4	.127	3
600			min	-120.45	3	-74.728	2	-187.959	1	-.684	2	-.199	3	-.108	4
601	M61	1	max	105.113	4	259.727	4	267.912	2	.498	1	.257	4	.186	1
602			min	-143.882	3	-406.656	3	-220.301	1	-.538	2	-.286	3	-.192	2
603		2	max	105.113	4	259.727	4	267.912	2	.498	1	.252	4	.201	1
604			min	-143.882	3	-406.656	3	-220.301	1	-.538	2	-.278	3	-.199	2
605		3	max	105.113	4	259.727	4	267.912	2	.498	1	.246	4	.217	1
606			min	-143.882	3	-406.656	3	-220.301	1	-.538	2	-.27	3	-.206	2
607		4	max	105.113	4	259.727	4	267.912	2	.498	1	.241	4	.232	1
608			min	-143.882	3	-406.656	3	-220.301	1	-.538	2	-.262	3	-.213	2
609		5	max	105.113	4	259.727	4	267.912	2	.498	1	.236	4	.248	1
610			min	-143.882	3	-406.656	3	-220.301	1	-.538	2	-.254	3	-.219	2
611	M62	1	max	354.127	3	373.105	1	256.952	1	.192	2	.344	2	.325	1
612			min	-470.162	4	-436.071	2	-284.646	2	-.15	1	-.314	1	-.406	2
613		2	max	354.127	3	373.105	1	256.952	1	.192	2	.335	2	.312	1
614			min	-470.162	4	-436.071	2	-284.646	2	-.15	1	-.305	1	-.391	2
615		3	max	354.127	3	373.105	1	256.952	1	.192	2	.325	2	.3	1
616			min	-470.162	4	-436.071	2	-284.646	2	-.15	1	-.297	1	-.377	2
617		4	max	354.127	3	373.105	1	256.952	1	.192	2	.316	2	.288	1
618			min	-470.162	4	-436.071	2	-284.646	2	-.15	1	-.289	1	-.363	2
619		5	max	354.127	3	373.105	1	256.952	1	.192	2	.307	2	.276	1
620			min	-470.162	4	-436.071	2	-284.646	2	-.15	1	-.28	1	-.349	2
621	M63	1	max	265.996	2	496.9	4	505.457	3	.134	4	.324	4	.317	4
622			min	-343.475	1	-418.64	3	-417.521	4	-.127	3	-.408	3	-.296	3
623		2	max	265.996	2	496.9	4	505.457	3	.134	4	.31	4	.301	4
624			min	-343.475	1	-418.64	3	-417.521	4	-.127	3	-.391	3	-.282	3
625		3	max	265.996	2	496.9	4	505.457	3	.134	4	.297	4	.284	4
626			min	-343.475	1	-418.64	3	-417.521	4	-.127	3	-.375	3	-.268	3
627		4	max	265.996	2	496.9	4	505.457	3	.134	4	.283	4	.268	4
628			min	-343.475	1	-418.64	3	-417.521	4	-.127	3	-.358	3	-.255	3
629		5	max	265.996	2	496.9	4	505.457	3	.134	4	.269	4	.252	4
630			min	-343.475	1	-418.64	3	-417.521	4	-.127	3	-.342	3	-.241	3
631	M64	1	max	359.619	1	313.669	2	260.464	4	.129	1	.34	3	.21	2
632			min	-475.586	2	-373.884	1	-285.425	3	-.087	2	-.312	4	-.291	1
633		2	max	359.619	1	313.669	2	260.464	4	.129	1	.331	3	.2	2
634			min	-475.586	2	-373.884	1	-285.425	3	-.087	2	-.304	4	-.278	1
635		3	max	359.619	1	313.669	2	260.464	4	.129	1	.321	3	.19	2
636			min	-475.586	2	-373.884	1	-285.425	3	-.087	2	-.295	4	-.266	1
637		4	max	359.619	1	313.669	2	260.464	4	.129	1	.312	3	.18	2
638			min	-475.586	2	-373.884	1	-285.425	3	-.087	2	-.287	4	-.254	1
639		5	max	359.619	1	313.669	2	260.464	4	.129	1	.303	3	.17	2
640			min	-475.586	2	-373.884	1	-285.425	3	-.087	2	-.278	4	-.242	1
641	M65	1	max	165.588	3	444.012	2	427.41	4	.099	2	.316	3	.243	2
642			min	-242.065	4	-365.021	1	-338.638	3	-.092	1	-.402	4	-.221	1
643		2	max	165.588	3	444.012	2	427.41	4	.099	2	.305	3	.229	2
644			min	-242.065	4	-365.021	1	-338.638	3	-.092	1	-.388	4	-.209	1
645		3	max	165.588	3	444.012	2	427.41	4	.099	2	.294	3	.214	2
646			min	-242.065	4	-365.021	1	-338.638	3	-.092	1	-.374	4	-.197	1
647		4	max	165.588	3	444.012	2	427.41	4	.099	2	.283	3	.2	2
648			min	-242.065	4	-365.021	1	-338.638	3	-.092	1	-.36	4	-.186	1
649		5	max	165.588	3	444.012	2	427.41	4	.099	2	.272	3	.185	2

Envelope Member Section Forces (Continued)

	Member	Sec		Axial[lb]	LC	y Shear[lb]	LC	z Shear[lb]	LC	Torque[k-...	LC	y-y Mome...	LC	z-z Mome...	LC
650			min	-242.065	4	-365.021	1	-338.638	3	-.092	1	-.346	4	-.174	1
651	M66	1	max	341.888	4	428.186	3	215.83	3	.188	4	.293	4	.332	3
652			min	-457.066	3	-487.944	4	-246.697	4	-.147	3	-.261	3	-.412	4
653		2	max	341.888	4	428.186	3	215.83	3	.188	4	.285	4	.318	3
654			min	-457.066	3	-487.944	4	-246.697	4	-.147	3	-.254	3	-.396	4
655		3	max	341.888	4	428.186	3	215.83	3	.188	4	.277	4	.304	3
656			min	-457.066	3	-487.944	4	-246.697	4	-.147	3	-.247	3	-.38	4
657		4	max	341.888	4	428.186	3	215.83	3	.188	4	.269	4	.29	3
658			min	-457.066	3	-487.944	4	-246.697	4	-.147	3	-.24	3	-.365	4
659		5	max	341.888	4	428.186	3	215.83	3	.188	4	.261	4	.276	3
660			min	-457.066	3	-487.944	4	-246.697	4	-.147	3	-.233	3	-.349	4
661	M67	1	max	275.818	4	382.515	1	489.426	2	.117	1	.349	1	.27	1
662			min	-354.72	3	-304.379	2	-400.486	1	-.11	2	-.435	2	-.249	2
663		2	max	275.818	4	382.515	1	489.426	2	.117	1	.336	1	.258	1
664			min	-354.72	3	-304.379	2	-400.486	1	-.11	2	-.419	2	-.239	2
665		3	max	275.818	4	382.515	1	489.426	2	.117	1	.323	1	.246	1
666			min	-354.72	3	-304.379	2	-400.486	1	-.11	2	-.403	2	-.229	2
667		4	max	275.818	4	382.515	1	489.426	2	.117	1	.31	1	.233	1
668			min	-354.72	3	-304.379	2	-400.486	1	-.11	2	-.387	2	-.219	2
669		5	max	275.818	4	382.515	1	489.426	2	.117	1	.297	1	.221	1
670			min	-354.72	3	-304.379	2	-400.486	1	-.11	2	-.371	2	-.209	2
671	M68	1	max	327.792	2	419.662	3	383.362	4	.011	3	.134	5	.434	3
672			min	-438.192	1	-496.083	4	-416.006	3	-.011	4	-.068	2	-.392	4
673		2	max	327.783	2	421.342	3	383.362	4	.011	3	.114	1	.23	3
674			min	-438.184	1	-494.403	4	-416.006	3	-.011	4	-.079	2	-.177	4
675		3	max	327.774	2	423.021	3	383.362	4	.011	3	.1	1	.212	1
676			min	-438.175	1	-492.723	4	-416.006	3	-.011	4	-.091	2	-.151	2
677		4	max	327.766	2	424.701	3	383.362	4	.011	3	.088	1	.251	4
678			min	-438.167	1	-491.044	4	-416.006	3	-.011	4	-.105	2	-.18	3
679		5	max	327.757	2	426.381	3	383.362	4	.011	3	.079	1	.464	4
680			min	-438.158	1	-489.364	4	-416.006	3	-.011	4	-.121	2	-.386	3
681	M69	1	max	312.762	3	365.801	1	262.702	2	.008	1	.136	8	.374	4
682			min	-423.963	4	-443.212	2	-296.916	1	-.007	2	-.054	3	-.33	3
683		2	max	309.635	3	367.481	1	264.512	2	.008	1	.1	4	.271	4
684			min	-420.837	4	-441.532	2	-298.727	1	-.007	2	-.065	3	-.218	3
685		3	max	306.508	3	369.16	1	266.322	2	.008	1	.085	4	.169	4
686			min	-417.71	4	-439.853	2	-300.537	1	-.007	2	-.076	3	-.107	3
687		4	max	303.382	3	370.84	1	268.132	2	.008	1	.071	4	.326	2
688			min	-414.583	4	-438.173	2	-302.347	1	-.007	2	-.088	3	-.255	1
689		5	max	300.255	3	372.52	1	269.942	2	.008	1	.06	4	.499	2
690			min	-411.457	4	-436.493	2	-304.157	1	-.007	2	-.102	3	-.42	1
691	M70	1	max	244.689	1	217.303	2	664.651	2	.048	3	.13	1	.204	4
692			min	-201.915	2	-559.196	5	-724.873	1	-.062	4	-.12	2	-.199	3
693		2	max	244.689	1	217.303	2	664.651	2	.048	3	.098	1	.219	4
694			min	-201.915	2	-559.196	5	-724.873	1	-.062	4	-.09	2	-.201	3
695		3	max	244.689	1	217.303	2	664.651	2	.048	3	.065	1	.234	4
696			min	-201.915	2	-559.196	5	-724.873	1	-.062	4	-.06	2	-.203	3
697		4	max	244.689	1	217.303	2	664.651	2	.048	3	.033	1	.249	4
698			min	-201.915	2	-559.196	5	-724.873	1	-.062	4	-.03	2	-.205	3
699		5	max	244.689	1	217.303	2	664.651	2	.048	3	0	2	.264	4
700			min	-201.915	2	-559.196	5	-724.873	1	-.062	4	0	4	-.207	3
701	M71	1	max	421.591	2	82.34	3	830.061	2	.05	4	.141	1	.09	1

Envelope Member Section Forces (Continued)

	Member	Sec		Axial[lb]	LC	y Shear[lb]	LC	z Shear[lb]	LC	Torque[k-...	LC	y-y Mome...	LC	z-z Mome...	LC
702			min	-335.059	1	-1192.952	8	-781.145	1	-.033	3	-.149	2	-.134	2
703		2	max	421.591	2	82.34	3	830.061	2	.05	4	.105	1	.113	4
704			min	-335.059	1	-1192.952	8	-781.145	1	-.033	3	-.112	2	-.128	3
705		3	max	421.591	2	82.34	3	830.061	2	.05	4	.07	1	.146	4
706			min	-335.059	1	-1192.952	8	-781.145	1	-.033	3	-.075	2	-.132	3
707		4	max	421.591	2	82.34	3	830.061	2	.05	4	.035	1	.179	4
708			min	-335.059	1	-1192.952	8	-781.145	1	-.033	3	-.037	2	-.136	3
709		5	max	421.591	2	82.34	3	830.061	2	.05	4	0	3	.212	4
710			min	-335.059	1	-1192.952	8	-781.145	1	-.033	3	0	8	-.139	3
711	M72	1	max	234.769	4	194.03	1	667.342	3	.049	1	.131	4	.183	2
712			min	-194.087	3	-834.282	9	-727.545	4	-.061	2	-.12	3	-.178	1
713		2	max	234.769	4	194.03	1	667.342	3	.049	1	.098	4	.205	2
714			min	-194.087	3	-834.282	9	-727.545	4	-.061	2	-.09	3	-.187	1
715		3	max	234.769	4	194.03	1	667.342	3	.049	1	.065	4	.227	2
716			min	-194.087	3	-834.282	9	-727.545	4	-.061	2	-.06	3	-.196	1
717		4	max	234.769	4	194.03	1	667.342	3	.049	1	.033	4	.248	2
718			min	-194.087	3	-834.282	9	-727.545	4	-.061	2	-.03	3	-.205	1
719		5	max	234.769	4	194.03	1	667.342	3	.049	1	0	7	.27	2
720			min	-194.087	3	-834.282	9	-727.545	4	-.061	2	0	3	-.213	1
721	M73	1	max	330.203	3	17.437	1	785.703	3	.055	2	.133	4	.111	2
722			min	-245.786	4	-1166.642	6	-739.411	4	-.038	1	-.141	3	-.156	1
723		2	max	330.203	3	17.437	1	785.703	3	.055	2	.1	4	.141	2
724			min	-245.786	4	-1166.642	6	-739.411	4	-.038	1	-.106	3	-.156	1
725		3	max	330.203	3	17.437	1	785.703	3	.055	2	.067	4	.171	2
726			min	-245.786	4	-1166.642	6	-739.411	4	-.038	1	-.071	3	-.157	1
727		4	max	330.203	3	17.437	1	785.703	3	.055	2	.033	4	.201	2
728			min	-245.786	4	-1166.642	6	-739.411	4	-.038	1	-.035	3	-.158	1
729		5	max	330.203	3	17.437	1	785.703	3	.055	2	0	1	.23	2
730			min	-245.786	4	-1166.642	6	-739.411	4	-.038	1	0	2	-.159	1
731	M74	1	max	185.35	3	257.37	4	477.147	4	.035	4	.099	3	.155	1
732			min	-140.527	4	-568.902	7	-547.939	3	-.048	3	-.086	4	-.149	2
733		2	max	185.35	3	257.37	4	477.147	4	.035	4	.074	3	.16	1
734			min	-140.527	4	-568.902	7	-547.939	3	-.048	3	-.064	4	-.142	2
735		3	max	185.35	3	257.37	4	477.147	4	.035	4	.049	3	.166	3
736			min	-140.527	4	-568.902	7	-547.939	3	-.048	3	-.043	4	-.136	4
737		4	max	185.35	3	257.37	4	477.147	4	.035	4	.025	3	.191	3
738			min	-140.527	4	-568.902	7	-547.939	3	-.048	3	-.021	4	-.148	4
739		5	max	185.35	3	257.37	4	477.147	4	.035	4	0	2	.215	3
740			min	-140.527	4	-568.902	7	-547.939	3	-.048	3	0	4	-.159	4
741	M75	1	max	430.196	4	29.189	2	657.888	4	.055	3	.108	3	.125	3
742			min	-338.856	3	-1176.261	5	-598.153	3	-.037	4	-.118	4	-.169	4
743		2	max	430.196	4	29.189	2	657.888	4	.055	3	.081	3	.15	3
744			min	-338.856	3	-1176.261	5	-598.153	3	-.037	4	-.089	4	-.165	4
745		3	max	430.196	4	29.189	2	657.888	4	.055	3	.054	3	.175	3
746			min	-338.856	3	-1176.261	5	-598.153	3	-.037	4	-.059	4	-.161	4
747		4	max	430.196	4	29.189	2	657.888	4	.055	3	.027	3	.199	3
748			min	-338.856	3	-1176.261	5	-598.153	3	-.037	4	-.03	4	-.157	4
749		5	max	430.196	4	29.189	2	657.888	4	.055	3	0	3	.224	3
750			min	-338.856	3	-1176.261	5	-598.153	3	-.037	4	0	6	-.152	4
751	M76	1	max	440.968	3	-30.073	1	1230.828	4	.003	3	.254	3	.071	1
752			min	-411.434	4	-757.288	6	-1585.083	3	-.004	4	-.197	4	-.133	2
753		2	max	440.968	3	-30.073	1	1230.828	4	.003	3	.19	3	.082	4

Envelope Member Section Forces (Continued)

	Member	Sec		Axial[lb]	LC	y Shear[lb]	LC	z Shear[lb]	LC	Torque[k-...	LC	y-y Mome...	LC	z-z Mome...	LC
754			min	-411.434	4	-757.288	6	-1585.083	3	-.004	4	-.148	4	-.124	3
755		3	max	440.968	3	-30.073	1	1230.828	4	.003	3	.127	3	.096	4
756			min	-411.434	4	-757.288	6	-1585.083	3	-.004	4	-.098	4	-.121	3
757		4	max	440.968	3	-30.073	1	1230.828	4	.003	3	.063	3	.111	4
758			min	-411.434	4	-757.288	6	-1585.083	3	-.004	4	-.049	4	-.117	3
759		5	max	440.968	3	-30.073	1	1230.828	4	.003	3	0	4	.125	4
760			min	-411.434	4	-757.288	6	-1585.083	3	-.004	4	0	8	-.113	3
761	M77	1	max	451.998	3	-72.809	2	1127.825	2	.004	4	.134	1	.11	4
762			min	-423.605	4	-811.505	5	-840.695	1	-.004	3	-.18	2	-.173	3
763		2	max	451.998	3	-72.809	2	1127.825	2	.004	4	.101	1	.117	4
764			min	-423.605	4	-811.505	5	-840.695	1	-.004	3	-.135	2	-.161	3
765		3	max	451.998	3	-72.809	2	1127.825	2	.004	4	.067	1	.124	4
766			min	-423.605	4	-811.505	5	-840.695	1	-.004	3	-.09	2	-.149	3
767		4	max	451.998	3	-72.809	2	1127.825	2	.004	4	.034	1	.132	4
768			min	-423.605	4	-811.505	5	-840.695	1	-.004	3	-.045	2	-.136	3
769		5	max	451.998	3	-72.809	2	1127.825	2	.004	4	0	3	.139	4
770			min	-423.605	4	-811.505	5	-840.695	1	-.004	3	0	1	-.124	3
771	M78	1	max	489.865	1	-2.547	4	1190.289	2	.003	1	.249	1	.099	2
772			min	-460.999	2	-771.888	7	-1553.675	1	-.003	2	-.19	2	-.159	1
773		2	max	489.865	1	-2.547	4	1190.289	2	.003	1	.186	1	.109	2
774			min	-460.999	2	-771.888	7	-1553.675	1	-.003	2	-.143	2	-.151	1
775		3	max	489.865	1	-2.547	4	1190.289	2	.003	1	.124	1	.119	2
776			min	-460.999	2	-771.888	7	-1553.675	1	-.003	2	-.095	2	-.143	1
777		4	max	489.865	1	-2.547	4	1190.289	2	.003	1	.062	1	.13	2
778			min	-460.999	2	-771.888	7	-1553.675	1	-.003	2	-.048	2	-.135	1
779		5	max	489.865	1	-2.547	4	1190.289	2	.003	1	0	9	.14	2
780			min	-460.999	2	-771.888	7	-1553.675	1	-.003	2	0	2	-.127	1
781	M79	1	max	561.332	1	-61.073	3	1123.344	1	.005	2	.13	2	.106	2
782			min	-532.999	2	-814.944	8	-810.564	2	-.005	1	-.18	1	-.168	1
783		2	max	561.332	1	-61.073	3	1123.344	1	.005	2	.097	2	.117	2
784			min	-532.999	2	-814.944	8	-810.564	2	-.005	1	-.135	1	-.161	1
785		3	max	561.332	1	-61.073	3	1123.344	1	.005	2	.065	2	.129	2
786			min	-532.999	2	-814.944	8	-810.564	2	-.005	1	-.09	1	-.153	1
787		4	max	561.332	1	-61.073	3	1123.344	1	.005	2	.032	2	.14	2
788			min	-532.999	2	-814.944	8	-810.564	2	-.005	1	-.045	1	-.145	1
789		5	max	561.332	1	-61.073	3	1123.344	1	.005	2	0	2	.151	2
790			min	-532.999	2	-814.944	8	-810.564	2	-.005	1	0	5	-.137	1
791	M80	1	max	546.114	4	-29.49	2	874.135	1	.002	4	.195	2	.11	3
792			min	-522.875	3	-760.353	5	-1220.524	2	-.002	3	-.14	1	-.17	4
793		2	max	546.114	4	-29.49	2	874.135	1	.002	4	.146	2	.115	3
794			min	-522.875	3	-760.353	5	-1220.524	2	-.002	3	-.105	1	-.157	4
795		3	max	546.114	4	-29.49	2	874.135	1	.002	4	.098	2	.12	3
796			min	-522.875	3	-760.353	5	-1220.524	2	-.002	3	-.07	1	-.144	4
797		4	max	546.114	4	-29.49	2	874.135	1	.002	4	.049	2	.125	3
798			min	-522.875	3	-760.353	5	-1220.524	2	-.002	3	-.035	1	-.131	4
799		5	max	546.114	4	-29.49	2	874.135	1	.002	4	0	4	.13	3
800			min	-522.875	3	-760.353	5	-1220.524	2	-.002	3	0	2	-.118	4
801	M81	1	max	422.48	4	-110.691	1	1285.096	4	.006	3	.157	3	.073	3
802			min	-388.102	3	-804.837	6	-980.866	3	-.005	4	-.206	4	-.137	4
803		2	max	422.48	4	-110.691	1	1285.096	4	.006	3	.118	3	.088	3
804			min	-388.102	3	-804.837	6	-980.866	3	-.005	4	-.154	4	-.132	4
805		3	max	422.48	4	-110.691	1	1285.096	4	.006	3	.078	3	.103	3

Envelope Member Section Forces (Continued)

	Member	Sec		Axial[lb]	LC	y Shear[lb]	LC	z Shear[lb]	LC	Torque[k-...	LC	y-y Mome...	LC	z-z Mome...	LC
806			min	-388.102	3	-804.837	6	-980.866	3	-.005	4	-.103	4	-.127	4
807		4	max	422.48	4	-110.691	1	1285.096	4	.006	3	.039	3	.118	3
808			min	-388.102	3	-804.837	6	-980.866	3	-.005	4	-.051	4	-.123	4
809		5	max	422.48	4	-110.691	1	1285.096	4	.006	3	0	4	.133	3
810			min	-388.102	3	-804.837	6	-980.866	3	-.005	4	0	3	-.118	4
811	M82	1	max	49.927	5	703.772	4	901.078	3	.026	4	.215	4	.119	4
812			min	-.34	2	-474.365	3	-1269.348	4	-.046	3	-.157	3	-.083	3
813		2	max	49.927	5	703.772	4	901.078	3	.026	4	.159	4	.088	4
814			min	-.34	2	-474.365	3	-1269.348	4	-.046	3	-.118	3	-.062	3
815		3	max	49.927	5	703.772	4	901.078	3	.026	4	.104	4	.057	4
816			min	-.34	2	-474.365	3	-1269.348	4	-.046	3	-.079	3	-.041	3
817		4	max	49.927	5	703.772	4	901.078	3	.026	4	.049	4	.026	4
818			min	-.34	2	-474.365	3	-1269.348	4	-.046	3	-.039	3	-.021	3
819		5	max	49.927	5	703.772	4	901.078	3	.026	4	.004	1	.002	1
820			min	-.34	2	-474.365	3	-1269.348	4	-.046	3	-.011	10	-.007	10
821	M83	1	max	63.995	8	1732.851	1	33.871	1	.045	2	.008	2	.294	1
822			min	1.19	3	-1259.31	2	-42.982	2	-.034	1	-.006	1	-.206	2
823		2	max	63.995	8	1732.851	1	33.871	1	.045	2	.006	2	.219	1
824			min	1.19	3	-1259.31	2	-42.982	2	-.034	1	-.005	1	-.151	2
825		3	max	63.995	8	1732.851	1	33.871	1	.045	2	.004	2	.143	1
826			min	1.19	3	-1259.31	2	-42.982	2	-.034	1	-.003	1	-.096	2
827		4	max	63.995	8	1732.851	1	33.871	1	.045	2	.002	2	.073	5
828			min	1.19	3	-1259.31	2	-42.982	2	-.034	1	-.002	1	-.041	2
829		5	max	63.995	8	1732.851	1	33.871	1	.045	2	0	2	.028	6
830			min	1.19	3	-1259.31	2	-42.982	2	-.034	1	0	1	-.01	10
831	M84	1	max	196.747	7	1087.892	2	1263.451	4	.144	1	.102	3	.125	2
832			min	36.911	4	-1785.589	1	-888.963	3	-.158	2	-.292	8	-.429	5
833		2	max	196.747	7	1087.892	2	1263.451	4	.144	1	.063	3	.078	2
834			min	36.911	4	-1785.589	1	-888.963	3	-.158	2	-.251	8	-.361	5
835		3	max	196.747	7	1087.892	2	1263.451	4	.144	1	.024	3	.03	2
836			min	36.911	4	-1785.589	1	-888.963	3	-.158	2	-.209	8	-.293	5
837		4	max	196.747	7	1087.892	2	1263.451	4	.144	1	-.012	1	-.017	2
838			min	36.911	4	-1785.589	1	-888.963	3	-.158	2	-.168	6	-.226	5
839		5	max	196.747	7	1087.892	2	1263.451	4	.144	1	-.006	1	.007	4
840			min	36.911	4	-1785.589	1	-888.963	3	-.158	2	-.141	6	-.18	7
841	M85	1	max	605.996	2	-9.811	4	1104.701	2	.016	4	.021	4	.052	7
842			min	-834.896	1	-87.97	7	-1518.152	1	-.09	7	-.034	3	-.009	4
843		2	max	605.996	2	-9.837	4	1104.701	2	.016	4	.051	2	.055	7
844			min	-834.896	1	-88.06	7	-1518.152	1	-.09	7	-.082	1	-.009	4
845		3	max	605.996	2	111.276	6	1296.374	4	.138	6	.097	2	.089	6
846			min	-834.896	1	-88.15	7	-1518.152	1	-.061	3	-.145	1	.015	4
847		4	max	512.803	3	111.186	6	1296.374	4	.138	6	.019	3	.085	6
848			min	-717.06	4	18.934	1	-914.225	3	.007	1	-.091	8	.005	1
849		5	max	512.803	3	111.096	6	1296.374	4	.138	6	.008	1	.08	6
850			min	-717.06	4	18.908	1	-914.225	3	.007	1	-.058	6	.004	1
851	M86	1	max	571.828	1	580.912	5	505.373	2	.134	3	.177	1	.429	8
852			min	-505.022	2	-208.853	2	-539.225	1	-.105	4	-.172	2	-.181	3
853		2	max	571.849	1	577.896	5	500.68	2	.134	3	.127	1	.38	8
854			min	-505.043	2	-210.002	2	-534.531	1	-.105	4	-.125	2	-.177	3
855		3	max	571.87	1	574.879	5	495.986	2	.134	3	.077	1	.336	4
856			min	-505.063	2	-211.15	2	-529.838	1	-.105	4	-.078	2	-.173	3
857		4	max	571.89	1	571.862	5	491.293	2	.134	3	.027	1	.304	4

Envelope Member Section Forces (Continued)

	Member	Sec		Axial[lb]	LC	y Shear[lb]	LC	z Shear[lb]	LC	Torque[k-...	LC	y-y Mome...	LC	z-z Mome...	LC
858			min	-505.084	2	-212.299	2	-525.144	1	-.105	4	-.032	2	-.169	3
859		5	max	571.911	1	568.845	5	486.599	2	.134	3	.014	2	.272	4
860			min	-505.105	2	-213.447	2	-520.451	1	-.105	4	-.022	1	-.165	3
861	M87	1	max	708.055	4	1198.596	5	450.18	1	.028	3	.175	2	.814	5
862			min	-598.867	3	-21.016	2	-448.016	2	-.2	8	-.153	1	-.054	4
863		2	max	708.034	4	1195.579	5	445.487	1	.028	3	.133	2	.704	7
864			min	-598.846	3	-22.165	2	-443.323	2	-.2	8	-.111	1	-.064	4
865		3	max	708.013	4	1192.563	5	440.793	1	.028	3	.092	2	.597	7
866			min	-598.826	3	-23.313	2	-438.629	2	-.2	8	-.07	1	-.074	4
867		4	max	707.993	4	1189.546	5	436.1	1	.028	3	.051	2	.49	7
868			min	-598.805	3	-24.462	2	-433.936	2	-.2	8	-.029	1	-.083	4
869		5	max	707.972	4	1186.529	5	431.406	1	.028	3	.085	4	.383	7
870			min	-598.784	3	-25.61	2	-429.242	2	-.2	8	-.061	3	-.093	4
871	M88	1	max	1120.906	2	825.846	5	267.616	2	.106	4	.167	3	.396	5
872			min	-845.099	1	78.695	2	-180.658	1	-.153	3	-.171	4	.015	2
873		2	max	1120.675	2	824.722	5	267.644	2	.106	4	.162	3	.364	5
874			min	-844.868	1	78.338	2	-180.686	1	-.153	3	-.162	4	.012	2
875		3	max	1120.445	2	823.597	5	267.672	2	.106	4	.157	3	.332	5
876			min	-844.638	1	77.98	2	-180.714	1	-.153	3	-.153	4	.009	2
877		4	max	1120.214	2	822.473	5	267.699	2	.106	4	.152	3	.3	5
878			min	-844.407	1	77.622	2	-180.741	1	-.153	3	-.145	4	.006	2
879		5	max	1119.984	2	821.348	5	267.727	2	.106	4	.147	3	.268	5
880			min	-844.177	1	77.265	2	-180.769	1	-.153	3	-.136	4	.003	2
881	M89	1	max	1139.855	2	821.334	5	417.356	4	.139	4	.147	3	.271	5
882			min	-852.235	1	77.708	2	-449.229	3	-.124	3	-.136	4	.025	2
883		2	max	1138.123	2	818.939	5	414.137	4	.139	4	.11	3	.203	5
884			min	-850.504	1	76.946	2	-446.01	3	-.124	3	-.102	4	.019	2
885		3	max	1136.392	2	816.544	5	410.918	4	.139	4	.073	3	.135	5
886			min	-848.773	1	76.184	2	-442.791	3	-.124	3	-.068	4	.013	2
887		4	max	1134.661	2	814.149	5	407.699	4	.139	4	.036	3	.067	5
888			min	-847.042	1	75.423	2	-439.572	3	-.124	3	-.034	4	.006	2
889		5	max	1132.93	2	811.754	5	404.48	4	.139	4	0	1	0	1
890			min	-845.311	1	74.661	2	-436.353	3	-.124	3	0	1	0	1
891	M90	1	max	1274.037	2	774.974	5	107.867	4	.151	4	.202	3	.373	5
892			min	-944.694	1	36.201	2	-238.383	7	-.105	3	-.198	4	-.006	2
893		2	max	1273.807	2	773.849	5	105.946	4	.151	4	.193	3	.343	5
894			min	-944.463	1	35.843	2	-237.876	7	-.105	3	-.194	4	-.008	2
895		3	max	1273.576	2	772.724	5	104.025	4	.151	4	.185	3	.313	5
896			min	-944.233	1	35.485	2	-237.369	7	-.105	3	-.19	4	-.009	2
897		4	max	1273.346	2	771.6	5	102.104	4	.151	4	.177	3	.283	5
898			min	-944.002	1	35.128	2	-236.862	7	-.105	3	-.186	4	-.01	2
899		5	max	1273.115	2	770.475	5	100.183	4	.151	4	.169	3	.253	5
900			min	-943.772	1	34.77	2	-236.355	7	-.105	3	-.182	4	-.012	2
901	M91	1	max	1233.788	2	770.393	5	552.341	4	.118	4	.169	3	.255	5
902			min	-887.01	1	35.252	2	-513.247	3	-.13	3	-.182	4	.011	2
903		2	max	1232.046	2	767.984	5	549.105	4	.118	4	.126	3	.191	5
904			min	-885.269	1	34.486	2	-510.011	3	-.13	3	-.136	4	.008	2
905		3	max	1230.305	2	765.575	5	545.868	4	.118	4	.084	3	.127	5
906			min	-883.527	1	33.72	2	-506.774	3	-.13	3	-.09	4	.005	2
907		4	max	1228.563	2	763.167	5	542.631	4	.118	4	.042	3	.064	5
908			min	-881.785	1	32.954	2	-503.537	3	-.13	3	-.045	4	.003	2
909		5	max	1226.822	2	760.758	5	539.394	4	.118	4	0	1	0	1

Envelope Member Section Forces (Continued)

	Member	Sec		Axial[lb]	LC	y Shear[lb]	LC	z Shear[lb]	LC	Torque[k-...	LC	y-y Mome...	LC	z-z Mome...	LC
910			min	-880.044	1	32.188	2	-500.3	3	-.13	3	0	1	0	1
911	M92	1	max	1029.217	1	99.168	8	25.368	3	0	4	-.01	2	.099	8
912			min	-1485.472	2	22.599	3	-31.596	4	0	3	-.06	5	-.009	2
913		2	max	1021.631	1	70.693	8	12.164	3	0	4	.008	3	.036	1
914			min	-1477.886	2	13.473	3	-18.391	4	0	3	-.009	4	-.025	2
915		3	max	1014.045	1	24.478	8	7.197	2	0	4	.029	7	.009	1
916			min	-1470.3	2	-3.586	3	-13.352	1	0	3	.003	1	-.03	6
917		4	max	1006.459	1	-2.56	4	11.555	2	0	4	.017	6	-.003	3
918			min	-1462.714	2	-39.343	7	-17.711	1	0	3	-.005	1	-.026	8
919		5	max	998.873	1	-16.086	4	21.222	4	0	4	.014	4	.021	2
920			min	-1455.128	2	-77.658	7	-27.449	3	0	3	-.045	7	-.011	1
921	M93	1	max	806.266	1	22.78	4	122.002	7	0	4	-.019	2	-.007	2
922			min	-1221.409	2	-35.272	3	31.331	4	0	7	-.081	5	-.161	7
923		2	max	798.685	1	9.573	4	93.332	7	0	4	.004	4	.014	2
924			min	-1213.828	2	-26.079	7	22.116	4	0	7	-.016	7	-.064	5
925		3	max	791.104	1	5.702	2	46.383	7	0	4	.026	8	.023	2
926			min	-1206.247	2	-23.213	5	4.728	4	0	7	.001	3	-.011	1
927		4	max	783.523	1	10.054	2	-.394	3	0	4	.02	6	.036	7
928			min	-1198.666	2	-25.086	5	-23.763	8	0	7	-.004	1	.009	4
929		5	max	775.942	1	17.557	3	-15.133	3	0	4	.01	3	.023	1
930			min	-1191.086	2	-30.049	4	-64.789	8	0	7	-.04	8	-.018	2
931	M94	1	max	769.299	1	568.719	5	63.331	1	.213	3	.014	2	.182	5
932			min	-701.372	2	-214.035	2	-40.502	2	-.271	4	-.022	1	-.07	2
933		2	max	767.286	1	566.125	5	65.217	1	.213	3	.011	2	.136	5
934			min	-699.359	2	-215.022	2	-42.389	2	-.271	4	-.016	1	-.052	2
935		3	max	765.273	1	563.532	5	67.103	1	.213	3	.007	2	.09	5
936			min	-697.346	2	-216.009	2	-44.275	2	-.271	4	-.011	1	-.035	2
937		4	max	763.26	1	560.939	5	68.989	1	.213	3	.004	2	.045	5
938			min	-695.333	2	-216.996	2	-46.161	2	-.271	4	-.006	1	-.018	2
939		5	max	761.246	1	558.345	5	70.875	1	.213	3	0	1	0	1
940			min	-693.32	2	-217.984	2	-48.047	2	-.271	4	0	1	0	1
941	M95	1	max	749.965	4	1186.748	5	194.903	3	.231	3	.085	4	.379	5
942			min	-669.493	3	-26.442	2	-269.647	4	-.157	4	-.061	3	-.009	2
943		2	max	747.963	4	1184.17	5	192.772	3	.231	3	.064	4	.284	5
944			min	-667.492	3	-27.424	2	-267.516	4	-.157	4	-.046	3	-.007	2
945		3	max	745.962	4	1181.591	5	190.641	3	.231	3	.042	4	.189	5
946			min	-665.49	3	-28.405	2	-265.385	4	-.157	4	-.03	3	-.005	2
947		4	max	743.96	4	1179.013	5	188.511	3	.231	3	.021	4	.094	5
948			min	-663.488	3	-29.387	2	-263.255	4	-.157	4	-.015	3	-.002	2
949		5	max	741.958	4	1176.434	5	186.38	3	.231	3	0	1	0	1
950			min	-661.486	3	-30.369	2	-261.124	4	-.157	4	0	1	0	1
951	M96	1	max	280.543	1	-77.917	2	1080.767	2	-.008	2	.171	4	.089	4
952			min	-397.148	2	-825.449	5	-818.099	1	-.386	5	-.167	3	-.164	3
953		2	max	559.587	3	-120.014	2	76.463	2	-.079	4	.427	2	.415	5
954			min	-481.808	4	-907.888	5	-211.136	5	-.493	7	-.319	1	-.112	2
955		3	max	559.601	3	-128.89	2	97.991	2	-.079	4	.483	2	1.008	5
956			min	-481.822	4	-931.354	5	-217.715	5	-.493	7	-.442	1	-.032	2
957		4	max	559.615	3	-137.765	2	119.519	2	-.079	4	.553	2	1.616	5
958			min	-481.836	4	-954.819	5	-224.295	5	-.493	7	-.579	1	.054	2
959		5	max	559.629	3	-146.641	2	141.046	2	-.079	4	.637	2	2.24	5
960			min	-481.85	4	-978.285	5	-244.102	1	-.493	7	-.729	1	.146	2
961	M97	1	max	678.185	4	939.899	5	183.756	5	.509	8	.488	2	2.13	5

Envelope Member Section Forces (Continued)

	Member	Sec		Axial[lb]	LC	y Shear[lb]	LC	z Shear[lb]	LC	Torque[k-...	LC	y-y Mome...	LC	z-z Mome...	LC
962			min	-604.821	3	105.902	2	-81.491	2	.009	3	-.528	1	.018	2
963		2	max	678.172	4	916.434	5	177.177	5	.509	8	.442	2	1.531	5
964			min	-604.807	3	97.026	2	-59.964	2	.009	3	-.428	1	-.047	2
965		3	max	678.158	4	892.968	5	170.597	5	.509	8	.41	2	.948	5
966			min	-604.793	3	88.15	2	-38.436	2	.009	3	-.342	1	-.107	2
967		4	max	678.144	4	869.503	5	164.017	5	.509	8	.393	2	.379	5
968			min	-604.779	3	79.274	2	-20.568	4	.009	3	-.27	1	-.161	2
969		5	max	135.044	1	774.3	5	935.272	1	.364	5	.202	3	.091	3
970			min	-307.882	6	35.291	2	-1249.242	2	-.013	2	-.198	4	-.163	4
971	M98	1	max	63.976	8	1191.212	2	31.28	8	.016	2	.003	3	.218	2
972			min	13.84	3	-776.008	1	-15.778	3	-.041	5	-.005	8	-.13	1
973		2	max	63.976	8	1191.212	2	31.28	8	.016	2	.002	3	.166	2
974			min	13.84	3	-776.008	1	-15.778	3	-.041	5	-.004	4	-.097	1
975		3	max	63.976	8	1191.212	2	31.28	8	.016	2	.002	3	.114	2
976			min	13.84	3	-776.008	1	-15.778	3	-.041	5	-.003	4	-.063	1
977		4	max	63.976	8	1191.212	2	31.28	8	.016	2	.001	3	.062	2
978			min	13.84	3	-776.008	1	-15.778	3	-.041	5	-.001	4	-.029	1
979		5	max	63.976	8	1191.212	2	31.28	8	.016	2	0	7	.021	4
980			min	13.84	3	-776.008	1	-15.778	3	-.041	5	0	4	-.007	3
981	M99	1	max	77.039	7	715.576	2	1267.196	2	.029	1	.141	1	.131	2
982			min	15.252	4	-482.816	1	-874.677	1	-.017	2	-.233	2	-.078	1
983		2	max	77.039	7	715.576	2	1267.196	2	.029	1	.103	1	.1	2
984			min	15.252	4	-482.816	1	-874.677	1	-.017	2	-.177	2	-.057	1
985		3	max	77.039	7	715.576	2	1267.196	2	.029	1	.065	1	.069	2
986			min	15.252	4	-482.816	1	-874.677	1	-.017	2	-.122	2	-.035	1
987		4	max	77.039	7	715.576	2	1267.196	2	.029	1	.027	1	.042	6
988			min	15.252	4	-482.816	1	-874.677	1	-.017	2	-.072	6	-.014	1
989		5	max	77.039	7	715.576	2	1267.196	2	.029	1	.006	4	.02	7
990			min	15.252	4	-482.816	1	-874.677	1	-.017	2	-.035	7	-.004	4
991	M100	1	max	220.337	5	929.421	4	1584.818	1	.191	4	.535	6	.182	4
992			min	59.525	2	-907.126	3	-2349.63	2	-.206	3	-.138	1	-.197	3
993		2	max	220.337	5	929.421	4	1584.818	1	.191	4	.453	6	.142	4
994			min	59.525	2	-907.126	3	-2349.63	2	-.206	3	-.069	1	-.158	3
995		3	max	220.337	5	929.421	4	1584.818	1	.191	4	.37	6	.101	4
996			min	59.525	2	-907.126	3	-2349.63	2	-.206	3	0	1	-.118	3
997		4	max	220.337	5	929.421	4	1584.818	1	.191	4	.287	6	.061	4
998			min	59.525	2	-907.126	3	-2349.63	2	-.206	3	.07	1	-.079	3
999		5	max	220.337	5	929.421	4	1584.818	1	.191	4	.244	5	.02	4
1000			min	59.525	2	-907.126	3	-2349.63	2	-.206	3	.017	2	-.041	7
1001	M101	1	max	515.869	1	-23.307	3	890.056	1	0	2	.02	3	.055	5
1002			min	-739.746	2	-98.768	8	-1288.887	2	-.096	5	-.034	4	0	2
1003		2	max	515.869	1	-23.359	3	890.056	1	0	2	.054	3	.059	5
1004			min	-739.746	2	-98.885	8	-1288.887	2	-.096	5	-.084	4	.002	2
1005		3	max	515.869	1	123.124	7	892.468	3	.147	5	.047	1	.095	5
1006			min	-739.746	2	-99.001	8	-1288.887	2	-.055	4	-.135	4	.012	2
1007		4	max	410.278	1	123.008	7	1060.785	2	.147	5	.034	4	.09	5
1008			min	-604.553	2	31.543	4	-694.495	1	.016	2	-.096	7	.011	2
1009		5	max	410.278	1	122.892	7	1060.785	2	.147	5	.013	4	.085	5
1010			min	-604.553	2	31.491	4	-694.495	1	.016	2	-.061	7	.01	2
1011	M102	1	max	579.768	4	842.864	9	494.542	3	.16	9	.174	4	.537	9
1012			min	-514.157	3	-185.554	1	-527.951	4	-.076	2	-.169	3	-.272	1
1013		2	max	577.742	4	841.72	9	491.034	3	.16	9	.124	4	.459	9

Envelope Member Section Forces (Continued)

	Member	Sec		Axial[lb]	LC	y Shear[lb]	LC	z Shear[lb]	LC	Torque[k-...	LC	y-y Mome...	LC	z-z Mome...	LC
1014			min	-512.131	3	-186.699	1	-524.443	4	-.076	2	-.123	3	-.255	1
1015		3	max	575.717	4	840.575	9	487.526	3	.16	9	.076	4	.398	2
1016			min	-510.106	3	-187.843	1	-520.935	4	-.076	2	-.077	3	-.237	1
1017		4	max	573.691	4	839.431	9	484.018	3	.16	9	.027	4	.353	2
1018			min	-508.08	3	-188.988	1	-517.427	4	-.076	2	-.031	3	-.22	1
1019		5	max	571.666	4	838.286	9	480.51	3	.16	9	.014	3	.308	2
1020			min	-506.055	3	-190.132	1	-513.919	4	-.076	2	-.021	4	-.202	1
1021	M103	1	max	792.272	2	1215.295	8	516.591	2	.025	1	.145	1	.849	8
1022			min	-692.939	1	-73.487	3	-514.331	1	-.197	6	-.123	2	-.151	3
1023		2	max	790.233	2	1212.268	8	515.413	2	.025	1	.111	3	.734	8
1024			min	-690.899	1	-74.64	3	-513.153	1	-.197	6	-.089	4	-.144	3
1025		3	max	788.193	2	1209.241	8	514.236	2	.025	1	.086	3	.62	8
1026			min	-688.86	1	-75.792	3	-511.976	1	-.197	6	-.064	4	-.136	3
1027		4	max	786.154	2	1206.213	8	513.059	2	.025	1	.062	3	.507	8
1028			min	-686.821	1	-76.944	3	-510.798	1	-.197	6	-.039	4	-.129	3
1029		5	max	784.115	2	1203.186	8	511.881	2	.025	1	.071	2	.394	8
1030			min	-684.781	1	-78.097	3	-509.621	1	-.197	6	-.048	1	-.122	3
1031	M104	1	max	1263.19	1	829.466	8	203.65	3	.106	2	.194	1	.389	8
1032			min	-965.345	2	65.803	3	-119.393	4	-.153	1	-.195	2	.037	3
1033		2	max	1262.485	1	828.342	8	203.349	3	.106	2	.19	1	.356	8
1034			min	-964.64	2	65.445	3	-119.092	4	-.153	1	-.187	2	.034	3
1035		3	max	1261.781	1	827.217	8	203.048	3	.106	2	.187	1	.324	8
1036			min	-963.935	2	65.088	3	-118.79	4	-.153	1	-.18	2	.03	1
1037		4	max	1261.076	1	826.093	8	202.746	3	.106	2	.183	1	.294	6
1038			min	-963.231	2	64.73	3	-118.489	4	-.153	1	-.173	2	.022	1
1039		5	max	1260.371	1	824.968	8	202.445	3	.106	2	.18	1	.264	6
1040			min	-962.526	2	64.373	3	-118.187	4	-.153	1	-.166	2	.013	1
1041	M105	1	max	1143.187	1	824.973	8	510.434	2	.152	2	.18	1	.272	8
1042			min	-829.931	2	64.181	3	-550.801	1	-.137	1	-.166	2	.021	3
1043		2	max	1143.062	1	822.578	8	506.288	2	.152	2	.134	1	.204	8
1044			min	-829.806	2	63.419	3	-546.655	1	-.137	1	-.124	2	.015	3
1045		3	max	1142.937	1	820.183	8	502.142	2	.152	2	.089	1	.136	8
1046			min	-829.681	2	62.658	3	-542.508	1	-.137	1	-.083	2	.01	3
1047		4	max	1142.812	1	817.788	8	497.996	2	.152	2	.044	1	.068	8
1048			min	-829.556	2	61.896	3	-538.362	1	-.137	1	-.041	2	.005	3
1049		5	max	1142.687	1	815.393	8	493.849	2	.152	2	0	1	0	1
1050			min	-829.431	2	61.135	3	-534.216	1	-.137	1	0	1	0	1
1051	M106	1	max	1645.5	3	772.331	6	191.959	2	.118	3	.146	1	.37	8
1052			min	-1308.777	4	36.21	1	-293.686	1	-.072	4	-.138	2	.007	3
1053		2	max	1644.565	3	771.207	6	190.711	2	.118	3	.134	1	.34	8
1054			min	-1307.842	4	35.853	1	-292.438	1	-.072	4	-.13	2	.003	3
1055		3	max	1643.63	3	770.082	6	189.462	2	.118	3	.123	1	.311	8
1056			min	-1306.907	4	35.495	1	-291.19	1	-.072	4	-.123	2	-.001	3
1057		4	max	1642.695	3	768.958	6	188.214	2	.118	3	.12	4	.282	8
1058			min	-1305.972	4	35.137	1	-289.942	1	-.072	4	-.129	3	-.005	3
1059		5	max	1641.76	3	767.833	6	186.966	2	.118	3	.124	4	.253	8
1060			min	-1305.037	4	34.78	1	-288.694	1	-.072	4	-.137	3	-.009	3
1061	M107	1	max	1604.637	3	767.706	6	415.678	3	.113	3	.124	4	.254	6
1062			min	-1250.381	4	34.791	1	-378.588	4	-.125	4	-.137	3	.011	1
1063		2	max	1602.77	3	765.297	6	412.658	3	.113	3	.093	4	.191	6
1064			min	-1248.514	4	34.025	1	-375.568	4	-.125	4	-.102	3	.008	1
1065		3	max	1600.904	3	762.888	6	409.637	3	.113	3	.062	4	.127	6

Envelope Member Section Forces (Continued)

	Member	Sec		Axial[lb]	LC	y Shear[lb]	LC	z Shear[lb]	LC	Torque[k-...	LC	y-y Mome...	LC	z-z Mome...	LC
1066			min	-1246.647	4	33.259	1	-372.548	4	-.125	4	-.068	3	.005	1
1067		4	max	1599.037	3	760.479	6	406.617	3	.113	3	.031	4	.063	6
1068			min	-1244.781	4	32.493	1	-369.527	4	-.125	4	-.034	3	.003	1
1069		5	max	1597.17	3	758.071	6	403.597	3	.113	3	0	1	0	1
1070			min	-1242.914	4	31.727	1	-366.507	4	-.125	4	0	1	0	1
1071	M108	1	max	1331.167	4	99.957	6	14.395	1	0	2	-.01	3	.101	6
1072			min	-1794.696	3	18.785	1	-20.546	2	0	1	-.061	8	-.022	1
1073		2	max	1323.544	4	71.481	6	9.972	1	0	2	.009	1	.037	9
1074			min	-1787.073	3	9.658	1	-16.123	2	0	1	-.01	2	-.024	1
1075		3	max	1315.92	4	25.267	6	7.583	3	0	2	.028	5	.008	4
1076			min	-1779.449	3	-7.401	1	-13.728	4	0	1	.003	2	-.03	7
1077		4	max	1308.297	4	1.131	2	20.723	3	0	2	.017	7	-.003	1
1078			min	-1771.826	3	-40.334	5	-26.867	4	0	1	-.006	4	-.026	6
1079		5	max	1300.673	4	-12.395	2	33.862	3	0	2	.017	3	.029	3
1080			min	-1764.202	3	-78.649	5	-40.006	4	0	1	-.047	8	-.019	4
1081	M109	1	max	991.736	2	26.37	2	122.348	8	0	9	-.017	3	-.002	3
1082			min	-1432.788	1	-38.902	1	30.205	3	0	5	-.082	6	-.162	8
1083		2	max	991.692	2	8.812	2	93.677	8	0	9	.005	3	.016	3
1084			min	-1432.743	1	-25.966	5	20.991	3	0	5	-.016	8	-.065	8
1085		3	max	991.648	2	3.042	3	46.729	8	0	9	.026	6	.023	3
1086			min	-1432.699	1	-22.348	8	3.603	3	0	5	.001	4	-.011	4
1087		4	max	991.603	2	13.774	1	.74	4	0	9	.019	7	.036	5
1088			min	-1432.655	1	-28.133	6	-24.161	7	0	5	0	4	.003	9
1089		5	max	991.559	2	31.332	1	-14	4	0	9	.018	1	.022	6
1090			min	-1432.61	1	-43.864	2	-65.187	7	0	5	-.044	2	-.017	9
1091	M110	1	max	765.269	4	838.294	9	64.797	4	.219	1	.014	3	.27	9
1092			min	-697.194	3	-190.341	1	-41.732	3	-.277	2	-.021	4	-.062	1
1093		2	max	764.376	4	837.307	9	65.005	4	.219	1	.01	3	.202	9
1094			min	-696.301	3	-191.329	1	-41.94	3	-.277	2	-.016	4	-.047	1
1095		3	max	763.483	4	836.32	9	65.213	4	.219	1	.007	3	.135	9
1096			min	-695.408	3	-192.316	1	-42.149	3	-.277	2	-.011	4	-.031	1
1097		4	max	762.59	4	835.332	9	65.422	4	.219	1	.003	3	.067	9
1098			min	-694.515	3	-193.303	1	-42.357	3	-.277	2	-.005	4	-.016	1
1099		5	max	761.697	4	834.345	9	65.63	4	.219	1	0	1	0	1
1100			min	-693.622	3	-194.29	1	-42.565	3	-.277	2	0	1	0	1
1101	M111	1	max	908.766	2	1203.24	8	150.839	1	.217	4	.071	2	.384	8
1102			min	-841.557	1	-78.529	3	-221.007	2	-.143	3	-.048	1	-.026	3
1103		2	max	907.657	2	1200.661	8	150.505	1	.217	4	.053	2	.288	8
1104			min	-840.447	1	-79.511	3	-220.672	2	-.143	3	-.036	1	-.019	3
1105		3	max	906.548	2	1198.083	8	150.17	1	.217	4	.035	2	.192	8
1106			min	-839.338	1	-80.492	3	-220.338	2	-.143	3	-.024	1	-.013	3
1107		4	max	905.439	2	1195.505	8	149.835	1	.217	4	.018	2	.096	8
1108			min	-838.229	1	-81.474	3	-220.003	2	-.143	3	-.012	1	-.007	3
1109		5	max	904.33	2	1192.926	8	149.501	1	.217	4	0	1	0	1
1110			min	-837.12	1	-82.456	3	-219.669	2	-.143	3	0	1	0	1
1111	M112	1	max	157.831	4	-65.314	3	1264.802	1	-.027	1	.195	2	.082	2
1112			min	-274.105	3	-828.725	8	-980.827	2	-.379	6	-.194	1	-.157	1
1113		2	max	688.696	1	-109.834	3	43.484	1	-.073	2	.304	1	.423	6
1114			min	-611.153	2	-910.553	8	-216.238	6	-.496	5	-.193	2	-.143	1
1115		3	max	698.013	1	-118.705	3	48.864	1	-.073	2	.334	1	.99	6
1116			min	-620.47	2	-934.006	8	-217.882	6	-.496	5	-.291	2	.011	1
1117		4	max	707.33	1	-127.576	3	54.243	1	-.073	2	.367	1	1.584	8

Envelope Member Section Forces (Continued)

	Member	Sec		Axial[lb]	LC	y Shear[lb]	LC	z Shear[lb]	LC	Torque[k-...	LC	y-y Mome...	LC	z-z Mome...	LC
1118			min	-629.787	2	-957.46	8	-219.526	6	-.496	5	-.391	2	.143	3
1119		5	max	716.648	1	-136.448	3	59.622	1	-.073	2	.404	1	2.209	8
1120			min	-639.105	2	-980.914	8	-221.17	6	-.496	5	-.495	2	.228	3
1121	M113	1	max	543.667	3	935.174	6	244.845	4	.503	7	.799	3	2.109	8
1122			min	-470.568	4	114.117	1	-160.966	3	.047	4	-.838	4	.098	3
1123		2	max	534.341	3	911.697	6	228.691	4	.503	7	.701	3	1.522	8
1124			min	-461.242	4	105.237	1	-144.812	3	.047	4	-.685	4	-.008	3
1125		3	max	525.014	3	888.22	6	212.537	4	.503	7	.612	3	.951	8
1126			min	-451.916	4	96.357	1	-128.658	3	.047	4	-.542	4	-.109	3
1127		4	max	515.688	3	864.743	6	196.383	4	.503	7	.535	3	.403	4
1128			min	-442.589	4	87.477	1	-112.504	3	.047	4	-.411	4	-.203	3
1129		5	max	249.969	4	770.968	6	1288.531	4	.363	8	.146	1	.061	1
1130			min	-401.001	3	35.928	1	-1608.547	3	-.007	3	-.138	2	-.138	6
1131	M114	1	max	65.063	7	991.665	2	29.258	1	.021	1	.007	2	.154	2
1132			min	13.783	4	-1432.701	1	-40.431	2	-.046	6	-.005	1	-.245	1
1133		2	max	65.063	7	991.665	2	29.258	1	.021	1	.005	2	.11	2
1134			min	13.783	4	-1432.701	1	-40.431	2	-.046	6	-.004	1	-.183	1
1135		3	max	65.063	7	991.665	2	29.258	1	.021	1	.004	2	.067	2
1136			min	13.783	4	-1432.701	1	-40.431	2	-.046	6	-.003	1	-.12	1
1137		4	max	65.063	7	991.665	2	29.258	1	.021	1	.002	2	.024	2
1138			min	13.783	4	-1432.701	1	-40.431	2	-.046	6	-.002	1	-.058	1
1139		5	max	65.063	7	991.665	2	29.258	1	.021	1	0	9	.006	10
1140			min	13.783	4	-1432.701	1	-40.431	2	-.046	6	0	5	-.025	9
1141	M115	1	max	78.308	5	617.485	4	1145.498	4	.045	4	.276	3	.098	4
1142			min	12.558	2	-856.888	3	-1542.501	3	-.032	3	-.184	4	-.153	3
1143		2	max	78.308	5	617.485	4	1145.498	4	.045	4	.209	3	.071	4
1144			min	12.558	2	-856.888	3	-1542.501	3	-.032	3	-.134	4	-.116	3
1145		3	max	78.308	5	617.485	4	1145.498	4	.045	4	.141	3	.045	4
1146			min	12.558	2	-856.888	3	-1542.501	3	-.032	3	-.084	4	-.079	3
1147		4	max	78.308	5	617.485	4	1145.498	4	.045	4	.074	7	.018	4
1148			min	12.558	2	-856.888	3	-1542.501	3	-.032	3	-.034	4	-.043	7
1149		5	max	78.308	5	617.485	4	1145.498	4	.045	4	.034	5	.004	2
1150			min	12.558	2	-856.888	3	-1542.501	3	-.032	3	-.006	2	-.02	5
1151	M116	1	max	211.421	8	2159.31	3	822.718	2	.153	2	.303	5	.459	7
1152			min	29.763	3	-1474.249	4	-1205.403	1	-.172	1	-.102	2	-.153	4
1153		2	max	211.421	8	2159.31	3	822.718	2	.153	2	.262	5	.385	7
1154			min	29.763	3	-1474.249	4	-1205.403	1	-.172	1	-.066	2	-.089	4
1155		3	max	211.421	8	2159.31	3	822.718	2	.153	2	.222	5	.312	7
1156			min	29.763	3	-1474.249	4	-1205.403	1	-.172	1	-.03	2	-.024	4
1157		4	max	211.421	8	2159.31	3	822.718	2	.153	2	.181	5	.238	7
1158			min	29.763	3	-1474.249	4	-1205.403	1	-.172	1	.006	2	.04	4
1159		5	max	211.421	8	2159.31	3	822.718	2	.153	2	.15	8	.191	8
1160			min	29.763	3	-1474.249	4	-1205.403	1	-.172	1	.012	3	.021	3
1161	M117	1	max	652.839	4	-18.789	1	1160.492	4	.007	1	.023	1	.056	6
1162			min	-876.936	3	-99.621	6	-1565.433	3	-.098	6	-.037	2	-.004	1
1163		2	max	652.839	4	-18.841	1	1160.492	4	.007	1	.035	4	.061	6
1164			min	-876.936	3	-99.738	6	-1565.433	3	-.098	6	-.066	3	-.003	1
1165		3	max	652.839	4	122.963	8	1261.919	1	.149	8	.084	4	.096	8
1166			min	-876.936	3	-99.854	6	-1565.433	3	-.069	2	-.142	1	.01	3
1167		4	max	470.054	2	122.847	8	1261.919	1	.149	8	.042	2	.091	8
1168			min	-680.952	1	30.601	3	-873.305	2	.011	3	-.099	5	.008	3
1169		5	max	470.054	2	122.731	8	1261.919	1	.149	8	.011	3	.086	8

Envelope Member Section Forces (Continued)

	Member	Sec		Axial[lb]	LC	y Shear[lb]	LC	z Shear[lb]	LC	Torque[k-...	LC	y-y Mome...	LC	z-z Mome...	LC
1170			min	-680.952	1	30.549	3	-873.305	2	.011	3	-.058	5	.007	3

Envelope AISC 14th(360-10): LRFD Steel Code Checks

	Member	Shape	Code Check	Loc[ft]	LC	Shear Check	Loc[ft]	Dir	LC	phi*Pnc...	phi*Pnt ...	phi*Mn ...	phi*Mn ...	Cb	Eqn
1	M24	PIPE_2.0	.402	11.328	4	.308	11.7...		4	6295.422	32130	1.872	1.872	4...	H3-6
2	M90	PL3/8x6	.372	0	3	.356	0	y	4	72263.1...	72900	.57	9.113	1...	H1-1b
3	M104	PL3/8x6	.369	0	2	.356	0	y	1	72263.1...	72900	.57	9.113	1...	H1-1b
4	M22	PIPE_2.0	.360	11.328	2	.288	11.7...		2	6295.422	32130	1.872	1.872	4...	H3-6
5	M91	PL3/8x6	.340	0	4	.302	0	y	3	69476.0...	72900	.57	9.113	1...	H1-1b
6	M105	PL3/8x6	.332	0	1	.357	0	y	2	69512.4...	72900	.57	9.113	1...	H1-1b
7	M88	PL3/8x6	.319	0	4	.361	0	y	3	72263.1...	72900	.57	9.113	1...	H1-1b
8	MP3C	PIPE_2.5	.312	5.5	4	.071	5.5		4	30038.4...	50715	3.596	3.596	2...	H1-1b
9	M23	PIPE_2.0	.310	11.198	4	.227	11.7...		1	6295.422	32130	1.872	1.872	4...	H1-1b
10	M93	L2x2x3	.306	0	7	.023	0	z	7	16079.0...	23392.8	.558	1.239	2...	H2-1
11	M109	L2x2x3	.301	0	5	.022	0	z	5	16079.0...	23392.8	.558	1.239	2...	H2-1
12	M8	PL3/8x6	.296	0	1	.330	0	y	2	69476.0...	72900	.57	9.113	1...	H1-1b
13	M7	PL3/8x6	.290	.156	1	.336	0	y	1	72263.1...	72900	.57	9.113	1...	H1-1b
14	M10	L2x2x3	.285	0	6	.021	0	z	6	16079.0...	23392.8	.558	1.239	2...	H2-1
15	MP2C	PIPE_2.5	.282	5.5	4	.061	5.5		3	30038.4...	50715	3.596	3.596	2...	H1-1b
16	MP1C	PIPE_2.5	.282	5.5	3	.129	2		2	30038.4...	50715	3.596	3.596	2...	H1-1b
17	MP3A	PIPE_2.5	.281	5.5	1	.092	5.5		1	30038.4...	50715	3.596	3.596	2...	H1-1b
18	M89	PL3/8x6	.275	0	3	.324	0	y	4	69512.4...	72900	.57	9.113	1...	H1-1b
19	M68	L2.5x2.5x4	.274	1.383	4	.093	0	y	4	37553.0...	38556	1.114	2.537	2...	H2-1
20	MP2A	PIPE_2.5	.268	5.5	2	.059	5.5		4	30038.4...	50715	3.596	3.596	1...	H1-1b
21	MP3B	PIPE_2.5	.268	5.5	2	.087	5.5		3	30038.4...	50715	3.596	3.596	2...	H1-1b
22	M25	L2.5x2.5x4	.265	0	2	.076	0	y	1	37553.0...	38556	1.114	2.537	2...	H2-1
23	M106	PL3/8x6	.264	0	2	.272	0	y	3	72263.1...	72900	.57	9.113	1...	H1-1b
24	M69	L2.5x2.5x4	.263	0	4	.073	0	y	2	37553.0...	38556	1.114	2.537	1...	H2-1
25	MP1A	PIPE_2.5	.259	5.5	2	.104	2		4	30038.4...	50715	3.596	3.596	2...	H1-1b
26	M107	PL3/8x6	.255	0	3	.299	0	y	4	69476.0...	72900	.57	9.113	1...	H1-1b
27	MP2B	PIPE_2.5	.237	5.5	2	.063	5.5		1	30038.4...	50715	3.596	3.596	2...	H1-1b
28	M6	PL3/8x6	.236	0	4	.318	0	y	3	69512.4...	72900	.57	9.113	1...	H1-1b
29	M5	PL3/8x6	.233	.156	4	.289	0	y	4	72263.1...	72900	.57	9.113	2...	H1-1b
30	MP4C	PIPE_2.5	.226	5.5	4	.099	2		2	30038.4...	50715	3.596	3.596	2...	H1-1b
31	M92	L2x2x3	.224	0	8	.015	0	y	8	16076.33	23392.8	.558	1.239	2...	H2-1
32	M108	L2x2x3	.222	0	6	.015	0	y	6	16076.33	23392.8	.558	1.239	2...	H2-1
33	MP4A	PIPE_2.5	.222	5.5	1	.111	5.5		4	30038.4...	50715	3.596	3.596	2...	H1-1b
34	MP1B	PIPE_2.5	.222	5.5	1	.137	2		3	30038.4...	50715	3.596	3.596	2...	H1-1b
35	M86	PL1/2x6	.209	0	1	.176	.375	y	3	95121.1...	97200	1.012	12.15	1...	H1-1b
36	M9	L2x2x3	.199	0	5	.013	0	y	5	16076.33	23392.8	.558	1.239	2...	H2-1
37	M87	PL1/2x6	.195	0	1	.287	0	y	8	95121.08	97200	1.012	12.15	1...	H1-1b
38	M102	PL1/2x6	.193	0	4	.231	0	y	9	95135.1...	97200	1.012	12.15	1...	H1-1b
39	M4	PL1/2x6	.187	0	4	.276	0	y	7	95121.1...	97200	1.012	12.15	1...	H1-1b
40	MP4B	PIPE_2.5	.173	5.5	2	.093	5.5		3	30038.4...	50715	3.596	3.596	2...	H1-1b
41	M103	PL1/2x6	.173	0	1	.284	0	y	6	95107.0...	97200	1.012	12.15	1...	H1-1b
42	M3	PL1/2x6	.173	0	3	.167	0	y	2	95121.1...	97200	1.012	12.15	1...	H1-1b
43	M14	HSS4x4x4	.162	2.58	7	.060	2.58	y	6	135684...	139518	16.181	16.181	1...	H1-1b
44	M96	HSS4x4x4	.161	2.58	5	.061	2.58	y	7	135684...	139518	16.181	16.181	1...	H1-1b
45	M112	HSS4x4x4	.155	2.579	6	.060	2.579	y	5	135688...	139518	16.181	16.181	1...	H1-1b
46	M2	HSS4x4x4	.154	5.698	2	.084	1.247	y	8	76621.0...	139518	16.181	16.181	2...	H1-1b

Envelope AISC 14th(360-10): LRFD Steel Code Checks (Continued)

	Member	Shape	Code Check	Loc[ft]	LC	Shear Check	Loc[ft]	Dir	LC	phi*Pnc...	phi*Pnt ...	phi*Mn ...	phi*Mn ...	Cb	Eqn
47	M113	HSS4x4x4	.151	0	8	.061	0	y	6	135681...	139518	16.181	16.181	1...	H1-1b
48	M97	HSS4x4x4	.147	0	5	.061	0	y	8	135684...	139518	16.181	16.181	1...	H1-1b
49	M19	LL2.5x2.5x3x3	.146	0	5	.005	0	y	7	43654.3...	58320	3.954	2.55	1	H1-1b*
50	M21	LL2.5x2.5x3x3	.144	0	8	.006	4.664	y	8	43642.9...	58320	3.954	2.55	1...	H1-1b*
51	M15	HSS4x4x4	.144	0	6	.059	0	y	5	135684...	139518	16.181	16.181	1...	H1-1b
52	M1	HSS4x4x4	.142	5.697	4	.083	1.246	y	7	76647.6...	139518	16.181	16.181	2...	H1-1b
53	M20	LL2.5x2.5x3x3	.142	0	7	.006	0	y	6	43642.7...	58320	3.954	2.55	1...	H1-1b*
54	M13	HSS4x4x4	.129	1.306	7	.083	1.247	y	6	76621.0...	139518	16.181	16.181	2...	H1-1b
55	M18	PIPE_3.0	.118	4.687	1	.091	8.073		4	28250.5...	65205	5.749	5.749	4...	H1-1b
56	M16	PIPE_3.0	.111	7.812	4	.107	8.073		1	28250.5...	65205	5.749	5.749	4...	H1-1b
57	M17	PIPE_3.0	.102	7.812	2	.106	8.073		4	28250.5...	65205	5.749	5.749	3...	H1-1b
58	M95	PL1/2x6	.091	0	4	.315	0	y	3	94902.3...	97200	1.012	12.15	1...	H1-1b
59	M111	PL1/2x6	.082	0	2	.302	0	y	4	94902.3...	97200	1.012	12.15	1...	H1-1b
60	M12	PL1/2x6	.077	0	7	.326	0	y	2	94902.3...	97200	1.012	12.15	1...	H1-1b
61	M94	PL1/2x6	.039	0	1	.362	0	y	4	94875.8...	97200	1.012	12.15	1...	H1-1b
62	M110	PL1/2x6	.035	0	4	.373	0	y	2	94875.8...	97200	1.012	12.15	1...	H1-1b
63	M11	PL1/2x6	.034	0	3	.301	0	y	3	94875.8...	97200	1.012	12.15	1...	H1-1b

Envelope None Cold Formed Steel Code Checks

Member	Shape	Code Check	Loc[ft]	LC	Shear...	Loc[ft]	Dir	LC	Pn[lb]	Tn[lb]	Mnyy[k-...	Mnzz[k-...	Cb	Cmyy	Cmzz	Eqn
No Data to Print ...																

Envelope AA ADM1-15: ASD - Building Aluminum Code Checks

Member	Shape	Code C...	Loc[ft]	LC	Shear ...	Loc[ft]	Dir	LC	Pnc/O...	Pnt/Om...	Mny/O...	Mnz/O...	Vny/O...	Vnz/O...	Cb	Eqn
No Data to Print ...																

EXHIBIT 9

EBI Consulting

environmental | engineering | due diligence

RADIO FREQUENCY EMISSIONS ANALYSIS REPORT EVALUATION OF HUMAN EXPOSURE POTENTIAL TO NON-IONIZING EMISSIONS

T-Mobile Existing Facility

Site ID: CT11796G

CT796/OptasiteCandle_FT
52 Stadley Rough Road
Danbury, Connecticut 06811

December 2, 2020

EBI Project Number: 6220006077

Site Compliance Summary	
Compliance Status:	**COMPLIANT**
Site total MPE% of FCC general population allowable limit:	**29.84%**

21 B Street, Burlington, MA 01803 · Tel: (781) 273.2500 · Fax: (781) 273.3311

December 2, 2020

T-Mobile
Attn: Jason Overbey, RF Manager
35 Griffin Road South
Bloomfield, Connecticut 06002

Emissions Analysis for Site: CT11796G - CT796/OptasiteCandle_FT

EBI Consulting was directed to analyze the proposed T-Mobile facility located at **52 Stadley Rough Road** in **Danbury, Connecticut** for the purpose of determining whether the emissions from the Proposed T-Mobile Antenna Installation located on this property are within specified federal limits.

All information used in this report was analyzed as a percentage of current Maximum Permissible Exposure (% MPE) as listed in the FCC OET Bulletin 65 Edition 97-01and ANSI/IEEE Std C95.1. The FCC regulates Maximum Permissible Exposure in units of microwatts per square centimeter ($\mu W/cm^2$). The number of $\mu W/cm^2$ calculated at each sample point is called the power density. The exposure limit for power density varies depending upon the frequencies being utilized. Wireless Carriers and Paging Services use different frequency bands each with different exposure limits; therefore, it is necessary to report results and limits in terms of percent MPE rather than power density.

All results were compared to the FCC (Federal Communications Commission) radio frequency exposure rules, 47 CFR 1.1307(b)(1) – (b)(3), to determine compliance with the Maximum Permissible Exposure (MPE) limits for General Population/Uncontrolled environments as defined below.

General population/uncontrolled exposure limits apply to situations in which the general population may be exposed or in which persons who are exposed as a consequence of their employment may not be made fully aware of the potential for exposure or cannot exercise control over their exposure. Therefore, members of the general population would always be considered under this category when exposure is not employment related, for example, in the case of a telecommunications tower that exposes persons in a nearby residential area.

Public exposure to radio frequencies is regulated and enforced in units of microwatts per square centimeter ($\mu W/cm^2$). The general population exposure limits for the 600 MHz and 700 MHz frequency bands are approximately 400 $\mu W/cm^2$ and 467 $\mu W/cm^2$, respectively. The general population exposure limit for the 1900 MHz (PCS), 2100 MHz (AWS) and 11 GHz frequency bands is 1000 $\mu W/cm^2$. Because each carrier will be using different frequency bands, and each frequency band has different exposure limits, it is necessary to report percent of MPE rather than power density.

Occupational/controlled exposure limits apply to situations in which persons are exposed as a consequence of their employment and in which those persons who are exposed have been made fully aware of the potential for exposure and can exercise control over their exposure. Occupational/controlled exposure limits also apply where exposure is of a transient nature as a result of incidental passage through a location where exposure levels may be above general population/uncontrolled limits (see below), as long as the exposed person has been made fully aware of the potential for exposure and can exercise control over his or her exposure by leaving the area or by some other appropriate means.

Additional details can be found in FCC OET 65.

CALCULATIONS

Calculations were done for the proposed T-Mobile Wireless antenna facility located at 52 Stadley Rough Road in Danbury, Connecticut using the equipment information listed below. All calculations were performed per the specifications under FCC OET 65. Since T-Mobile is proposing highly focused directional panel antennas, which project most of the emitted energy out toward the horizon, all calculations were performed assuming a lobe representing the maximum gain of the antenna per the antenna manufacturer's supplied specifications, minus 10 dB for directional panel antennas and 20 dB for highly focused parabolic microwave dishes, was focused at the base of the tower. For this report, the sample point is the top of a 6-foot person standing at the base of the tower.

For all calculations, all equipment was calculated using the following assumptions:

1) 2 LTE channels (600 MHz Band) were considered for each sector of the proposed installation. These Channels have a transmit power of 30 Watts per Channel.

2) 1 NR channel (600 MHz Band) was considered for each sector of the proposed installation. This Channel has a transmit power of 80 Watts.

3) 2 LTE channels (700 MHz Band) were considered for each sector of the proposed installation. These Channels have a transmit power of 30 Watts per Channel.

4) 4 GSM channels (PCS Band - 1900 MHz) were considered for each sector of the proposed installation. These Channels have a transmit power of 30 Watts per Channel.

5) 4 LTE channels (PCS Band - 1900 MHz) were considered for each sector of the proposed installation. These Channels have a transmit power of 60 Watts per Channel.

6) 2 UMTS channels (AWS Band - 2100 MHz) were considered for each sector of the proposed installation. These Channels have a transmit power of 30 Watts per Channel.

7) 2 LTE channels (AWS Band – 2100 MHz) were considered for each sector of the proposed installation. These Channels have a transmit power of 60 Watts per Channel.

8) 1 LTE channel (BRS Band - 2500 MHz) was considered for each sector of the proposed installation. This Channel has a transmit power of 120 Watts.

9) 1 NR channel (BRS Band - 2500 MHz) was considered for each sector of the proposed installation. This Channel has a transmit power of 120 Watts.

10) All radios at the proposed installation were considered to be running at full power and were uncombined in their RF transmissions paths per carrier prescribed configuration. Per FCC OET Bulletin No. 65 - Edition 97-01 recommendations to achieve the maximum anticipated value at each sample point, all power levels emitting from the proposed antenna installation are increased by a factor of 2.56 to account for possible in-phase reflections from the surrounding environment. This is rarely the case, and if so, is never continuous.

11) For the following calculations, the sample point was the top of a 6-foot person standing at the base of the tower. The maximum gain of the antenna per the antenna manufacturer's supplied specifications, minus 10 dB for directional panel antennas and 20 dB for highly focused parabolic microwave dishes, was used in this direction. This value is a very conservative estimate as gain reductions for these particular antennas are typically much higher in this direction.

12) The antennas used in this modeling are the RFS APXVAARR18_43-U-NA20 for the 600 MHz / 600 MHz / 700 MHz / 1900 MHz / 2100 MHz channel(s), the Ericsson AIR 32 for the 1900 MHz / 1900 MHz / 2100 MHz channel(s), the Ericsson AIR 6449 for the 2500 MHz / 2500 MHz channel(s) in Sector A, the RFS APXVAARR18_43-U-NA20 for the 600 MHz / 600 MHz / 700 MHz / 1900 MHz / 2100 MHz channel(s), the Ericsson AIR 32 for the 1900 MHz / 1900 MHz / 2100 MHz channel(s), the Ericsson AIR 6449 for the 2500 MHz / 2500 MHz channel(s) in Sector B, the RFS APXVAARR18_43-U-NA20 for the 600 MHz / 600 MHz / 700 MHz / 1900 MHz / 2100 MHz channel(s), the Ericsson AIR 32 for the 1900 MHz / 1900 MHz / 2100 MHz channel(s), the Ericsson AIR 6449 for the 2500 MHz / 2500 MHz channel(s) in Sector C. This is based on feedback from the carrier with regard to anticipated antenna selection. All Antenna gain values and associated transmit power levels are shown in the Site Inventory and Power Data table below. The maximum gain of the antenna per the antenna manufacturer's supplied specifications, minus 10 dB for directional panel antennas and 20 dB for highly focused parabolic microwave dishes, was used for all calculations. This value is a very conservative

estimate as gain reductions for these particular antennas are typically much higher in this direction.

13) The antenna mounting height centerline of the proposed antennas is 137 feet above ground level (AGL).

14) Emissions values for additional carriers were taken from the Connecticut Siting Council active database. Values in this database are provided by the individual carriers themselves.

15) All calculations were done with respect to uncontrolled / general population threshold limits.

T-Mobile Site Inventory and Power Data

Sector:	A	Sector:	B	Sector:	C
Antenna #:	**1**	Antenna #:	**1**	Antenna #:	**1**
Make / Model:	RFS APXVAARR18_43-U-NA20	Make / Model:	RFS APXVAARR18_43-U-NA20	Make / Model:	RFS APXVAARR18_43-U-NA20
Frequency Bands:	600 MHz / 600 MHz / 700 MHz / 1900 MHz / 2100 MHz	Frequency Bands:	600 MHz / 600 MHz / 700 MHz / 1900 MHz / 2100 MHz	Frequency Bands:	600 MHz / 600 MHz / 700 MHz / 1900 MHz / 2100 MHz
Gain:	11.95 dBd / 11.95 dBd / 12.35 dBd / 14.85 dBd / 15.55 dBd	Gain:	11.95 dBd / 11.95 dBd / 12.35 dBd / 14.85 dBd / 15.55 dBd	Gain:	11.95 dBd / 11.95 dBd / 12.35 dBd / 14.85 dBd / 15.55 dBd
Height (AGL):	137 feet	Height (AGL):	137 feet	Height (AGL):	137 feet
Channel Count:	9	Channel Count:	9	Channel Count:	9
Total TX Power (W):	380 Watts	Total TX Power (W):	380 Watts	Total TX Power (W):	380 Watts
ERP (W):	9,043.63	ERP (W):	9,043.63	ERP (W):	9,043.63
Antenna A1 MPE %:	**2.59%**	Antenna B1 MPE %:	**2.59%**	Antenna C1 MPE %:	**2.59%**
Antenna #:	**2**	Antenna #:	**2**	Antenna #:	**2**
Make / Model:	Ericsson AIR 32	Make / Model:	Ericsson AIR 32	Make / Model:	Ericsson AIR 32
Frequency Bands:	1900 MHz / 1900 MHz / 2100 MHz	Frequency Bands:	1900 MHz / 1900 MHz / 2100 MHz	Frequency Bands:	1900 MHz / 1900 MHz / 2100 MHz
Gain:	15.35 dBd / 15.35 dBd / 15.85 dBd	Gain:	15.35 dBd / 15.35 dBd / 15.85 dBd	Gain:	15.35 dBd / 15.35 dBd / 15.85 dBd
Height (AGL):	137 feet	Height (AGL):	137 feet	Height (AGL):	137 feet
Channel Count:	8	Channel Count:	8	Channel Count:	8
Total TX Power (W):	360 Watts	Total TX Power (W):	360 Watts	Total TX Power (W):	360 Watts
ERP (W):	12,841.53	ERP (W):	12,841.53	ERP (W):	12,841.53
Antenna A2 MPE %:	**2.46%**	Antenna B2 MPE %:	**2.46%**	Antenna C2 MPE %:	**2.46%**
Antenna #:	**3**	Antenna #:	**3**	Antenna #:	**3**
Make / Model:	Ericsson AIR 6449	Make / Model:	Ericsson AIR 6449	Make / Model:	Ericsson AIR 6449
Frequency Bands:	2500 MHz / 2500 MHz	Frequency Bands:	2500 MHz / 2500 MHz	Frequency Bands:	2500 MHz / 2500 MHz
Gain:	22.05 dBd / 22.05 dBd	Gain:	22.05 dBd / 22.05 dBd	Gain:	22.05 dBd / 22.05 dBd
Height (AGL):	137 feet	Height (AGL):	137 feet	Height (AGL):	137 feet
Channel Count:	2	Channel Count:	2	Channel Count:	2
Total TX Power (W):	240 Watts	Total TX Power (W):	240 Watts	Total TX Power (W):	240 Watts
ERP (W):	38,477.89	ERP (W):	38,477.89	ERP (W):	38,477.89
Antenna A3 MPE %:	**7.37%**	Antenna B3 MPE %:	**7.37%**	Antenna C3 MPE %:	**7.37%**

Site Composite MPE %	
Carrier	MPE %
T-Mobile (Max at Sector A):	12.42%
AT&T	7.9%
Dish Wireless	3.22%
Clearwire	0.18%
Metro PCS	0.39%
Verizon	5.73%
Site Total MPE % :	29.84%

T-Mobile MPE % Per Sector	
T-Mobile Sector A Total:	12.42%
T-Mobile Sector B Total:	12.42%
T-Mobile Sector C Total:	12.42%
Site Total MPE % :	29.84%

T-Mobile Maximum MPE Power Values (Sector A)

T-Mobile Frequency Band / Technology (Sector A)	# Channels	Watts ERP (Per Channel)	Height (feet)	Total Power Density (μW/cm²)	Frequency (MHz)	Allowable MPE (μW/cm²)	Calculated % MPE
T-Mobile 600 MHz LTE	2	470.03	137.0	1.80	600 MHz LTE	400	0.45%
T-Mobile 600 MHz NR	1	1253.40	137.0	2.40	600 MHz NR	400	0.60%
T-Mobile 700 MHz LTE	2	515.37	137.0	1.97	700 MHz LTE	467	0.42%
T-Mobile 1900 MHz LTE	2	1832.95	137.0	7.02	1900 MHz LTE	1000	0.70%
T-Mobile 2100 MHz UMTS	2	1076.77	137.0	4.13	2100 MHz UMTS	1000	0.41%
T-Mobile 1900 MHz GSM	4	1028.30	137.0	7.88	1900 MHz GSM	1000	0.79%
T-Mobile 1900 MHz LTE	2	2056.61	137.0	7.88	1900 MHz LTE	1000	0.79%
T-Mobile 2100 MHz LTE	2	2307.55	137.0	8.84	2100 MHz LTE	1000	0.88%
T-Mobile 2500 MHz LTE	1	19238.94	137.0	36.85	2500 MHz LTE	1000	3.69%
T-Mobile 2500 MHz NR	1	19238.94	137.0	36.85	2500 MHz NR	1000	3.69%
						Total:	**12.42%**

• NOTE: Totals may vary by approximately 0.01% due to summation of remainders in calculations.

Summary

All calculations performed for this analysis yielded results that were **within** the allowable limits for general population exposure to RF Emissions.

The anticipated maximum composite contributions from the T-Mobile facility as well as the site composite emissions value with regards to compliance with FCC's allowable limits for general population exposure to RF Emissions are shown here:

T-Mobile Sector	Power Density Value (%)
Sector A:	12.42%
Sector B:	12.42%
Sector C:	12.42%
T-Mobile Maximum MPE % (Sector A):	12.42%
Site Total:	29.84%
Site Compliance Status:	**COMPLIANT**

The anticipated composite MPE value for this site assuming all carriers present is **29.84%** of the allowable FCC established general population limit sampled at the ground level. This is based upon values listed in the Connecticut Siting Council database for existing carrier emissions.

FCC guidelines state that if a site is found to be out of compliance (over allowable thresholds), that carriers over a 5% contribution to the composite value will require measures to bring the site into compliance. For this facility, the composite values calculated were well within the allowable 100% threshold standard per the federal government.