Post-Mod Rigorous Structural Analysis Report

AT&T | Danbury East Site #CT2157 | FA 10035077

Owner: Crown Castle - Danbury East Site #852850

Danbury, Connecticut

May 27, 2020

MEI PROJECT ID: CT05942M-20V0

MALOUF ENGINEERING INTL., INC.

STRUCTURAL CONSULTANTS

17950 PRESTON ROAD, SUITE 720 ▪ DALLAS, TEXAS 75252 ▪ TEL. 972 -783-2578 FAX 972-783-2583

www.maloufengineering.com

PROFESSIONAL MEMBER

ACEC MEMBER

MALOUF ENGINEERING INTL., INC.

STRUCTURAL CONSULTANTS

May 27, 2020

Mr. Miguel Nobre
Vertical Resources Group
Auburn, MA 01501

POST-MOD RIGOROUS STRUCTURAL ANALYSIS

Structure/Make/Model:	110 ft **Monopole**		EEI / 18-Sided	
Client/Site Name/#:	**Vertical resources Group | AT&T**		**Danbury East #CT2157 FA #10035077**	
Owner/Site Name/#:	Crown Castle		Danbury East - BU#852850	
MEI Project ID:	**CT05942M-20V0**			
Location:	48 Newtown Road Danbury, Connecticut 06810		Fairfield County FCC #N/A	
	LAT	41-24-12.25 N	LON	73-25-27.95 W

EXECUTIVE SUMMARY:

Malouf Engineering Int'l (MEI), as requested, has performed a rigorous structural analysis and modification design of the above-mentioned structure to assess the impact of the changed condition as noted in Table 1.

Based on the stress analysis performed, the existing structure **is in conformance** with the Int'l Building Code (IBC) / ANSI/TIA-**222-G** Standard for the loading considered under the criteria listed and referenced in the report sections **after proper installation of the recommended structural strengthening modifications outlined** – tower rated at 96.5% / 98.9% - Pole / Foundation.

The installation of the proposed changed condition as noted in Table 1 is structurally acceptable after proper installation of the proposed strengthening modifications. Refer to modification drawings for details.

MEI appreciates the opportunity of providing our continuing professional services to you. If you have any questions or need further assistance on this or other projects, please contact us.

Respectfully submitted,

MALOUF ENGINEERING INT'L, INC.

Analysis performed by:

Krishna Manda, PE
Sr. Project Engineer

Reviewed & Approved by:

STATE OF CONNECTICUT
E. MARK MALOUF
No. 17715
LICENSED
PROFESSIONAL ENGINEER

E. Mark Malouf, PE
Connecticut #17715
972-783-2578 ext. 106
mmalouf@maloufengineering.com

5/27/2020

TABLE OF CONTENTS

1. INTRODUCTION & SCOPE ***4***

2. SOURCE OF DATA ***4***

Background Information: 4

3. ANALYSIS CRITERIA ***5***

Appurtenances Configuration 5

4. ANALYSIS PROCEDURE ***7***

Analysis Program 7

Assumptions 7

5. ANALYSIS RESULTS ***8***

6. FINDINGS & RECOMMENDATIONS ***9***

7. REPORT DISCLAIMER ***10***

APPENDIX 1 - ANALYSIS PRINTOUT & GRAPHICS ***11***

APPENDIX 2 – SOURCE / CHANGED CONDITION ***12***

Separate Attachment:

Modification Design Drawings

This report is not to be reproduced or copied in whole or in part without MEI's written consent. **2020, MEI, Inc. ©**

1. INTRODUCTION & SCOPE

A rigorous structural analysis and modification design were performed by Malouf Engineering Int'l (MEI), as requested and authorized by Mr. Miguel Nobre, Vertical Resources Group, on behalf of AT&T, to determine the acceptance of the proposed changed conditions in conformance with the IBC / ANSI/TIA-222-G Standard, "*Structural Standard for Antenna Supporting Structures and Antennas*".

The scope of this independent analysis is to determine the overall stability and the adequacy of structural members, foundations, and member connections, as available and stated. This analysis considers the structure to have been properly installed and maintained with no structural defects. Installation procedures and related loading are not within the scope of this analysis and should be performed and evaluated by a competent person of the erection contractor.

The different report sections detail the applicable information used in this evaluation, relating to the tower data, the appurtenances configuration and the wind and ice loading considered.

2. SOURCE OF DATA

The following information has been used in this evaluation as source data that accurately represent the existing structure and the related appurtenances:

	Source	Information	Reference
STRUCTURE			
Tower	Vertical Resources / Mr. Miguel Nobre	Previous SA & Mods [Structural Components]	Job #100216 Dated 07/14/2010
		Modification Drawings [Hudson Design Group]	Ref. #CT2157 Dated 04/25/2016
Foundation	Vertical Resources / Mr. Miguel Nobre	Previous Structural Analysis report (SA) [Hudson Design Group]	Ref. #CT2157 Dated 05/17/2018
Material Grade	Limited details available from supplied documents – Refer to Appendix		
CURRENT APPURTENANCES			
	Vertical Resources / Mr. Miguel Nobre	Previous SA [Hudson Design Group]	Ref. #CT2157 Dated 05/17/2018
CHANGED CONDITION			
	Vertical Resources / Mr. Miguel Nobre	AT&T RFDS	Dated 01/09/2019
		Email Instructions	Dated 11/07/2019

Background Information:

Based on available information, the following is known regarding this structure:

DESIGNER / FABRICATOR	EEI / 18-Sided
ORIGINAL DESIGN CRITERIA	TIA 222-F – Unknown
PRIOR STRUCTURAL MODIFICATIONS	Pole Mods and extension as per Structural Components Job #100216 Dated 07/14/2010, Mods per CHA project 22702.1013.28000 R1 Dated 07/07/2011, Hudson Design Group Ref. #CT2157 Dated 05/17/2018 – Assumed to be installed properly and maintained.

This report is not to be reproduced or copied in whole or in part without MEI's written consent. 2020, MEI, Inc. ©

3. ANALYSIS CRITERIA

The structural analysis performed used the following criteria:

CODE / STANDARD	2018 CT Bldg. Code / 2015 Int'l Building Code / ANSI/TIA-222-G-4 Standard	
LOADING CASES	*Full Wind*:	120 Mph Ultimate gust [equiv. 93 Mph (3-sec gust)] w/No Radial Ice**
	Iced Case:	50 Mph + 0.75" Radial Ice
	Service:	60 Mph
	Seismic:	S_s = 0.214 / S_1 = 0.067 / Site Class: Default Soil
STRUCTURE CRITERIA	*Risk Category (Structural Class)*: Class II	
	Exposure Category: 'B' – *Topographic Category:* 1	

Appurtenances Configuration

The following appurtenances configuration is denoted by the *summation of Tables 1 & 2*:

Table 1: Tenant with Changed Condition Appurtenances Configuration

Elev (ft)	Tenant	Ants Qty	Appurtenance Model / Description	Mount Description	Lines Qty	Line size & Location
100	AT&T	3	Sirius XM ION-M23 SDARS RRU Boxes			
		3	Commscope CBC23SR-43 Diplexers			
Appurtenances to Remain						
100	AT&T	1	HPA-65R-BUU-H6 Panel Antenna	(3)12ft HD V-Frame Mounts (Sabre #C10857801) 3-Way Close Contact Mount w/ Pipes	12 4 2 2	1 5/8" – (E) DC Power Cables – (I) Fiber Cables – (I) DC Power Cables – (E)
		1	800-10965 Panel Antenna			
		1	OPA-65R-LCUU-H6 Panel Antenna			
		2	SBNHH-1D65A Panel Antennas			
		2	800-10964 Panel Antennas			
		2	OPA-65R-LCUU-H4 Panel Antennas			
		3	7770.00 Panel Antennas			
		3	RRUS-11 Boxes			
		3	RRUS-32 B2 Boxes			
		3	RRUS-4478 B14 Boxes			
		3	RRUS-32 B66 Boxes			
		3	RRUS-32 B30 Boxes			
		6	TPX-070821 Triplexer			
		6	LGP21401 TMA'S Boxes			
		2	DC6-48-60-18-8F Supressor Boxes			
		1	DC6-48-60-0-8F Supressor Box			

Table 2: Remaining Tenants Current and Reserved/Future Appurtenances

Elev (ft)	Tenant	Ants Qty	Appurtenance Model / Description	Mount Description	Lines Qty	Line size & Location
90	VzW	1	BXA-80063-6BF Panel Antenna	Platform w/ Handrails / Corner Outriggers / Ladder	12 2	1 5/8" – (I) 1-5/8" (6x12) Hybrid (HFT1206-24SV2-xx) or Equiv. – (I)
		2	BXA-80080-6CF Panel Antennas			
		6	JAHH-65B-R3B Panel Antennas			
		3	B25 RRH4x30-4R Boxes			
		3	RRH4x45 (AWS) Boxes			
		3	B13 RRH4x30W-4R Boxes			
		3	B5 RRH 4x30-4R Boxes			
		2	DB-T1-6Z-8AB-0Z Distribution Boxes			

This report is not to be reproduced or copied in whole or in part without MEI's written consent. **2020, MEI, Inc. ©**

Notes:

1. **As per 2015 IBC for Ultimate 3-sec gust wind speed converted to nominal 3-sec gust wind speed as per Sect. 1609.3.1 as required to be used in ANSI/TIA-222-G Standard per exception 5 of Sect. 1609.1.1.
2. All elevations are measured from tower base.
3. Please note appurtenances not listed above are to be removed/not present as per data supplied.
4. (I) = Internal; (E) = External; (FZ) = Within Face Zone; (OFZ) = Outside Face Zone - as per TIA-222-G.
5. The above appurtenances represent MEI's understanding of the appurtenances configuration. If different than above, the analysis is invalid. Please contact MEI if any discrepancies are found.

This report is not to be reproduced or copied in whole or in part without MEI's written consent. **2020, MEI, Inc. ©**

4. ANALYSIS PROCEDURE

The subject structure is analyzed for feasibility of the installation of the proposed changed condition previously noted. The data records furnished were reviewed and a computer stress analysis was performed in accordance with the TIA-222 Standard provisions and with the agreed scope of work terms and the results of this analysis are reported.

Analysis Program

The computer program used to model the structure is a rigorous Finite Element Analysis program, tnxTower (ver. 8.07), a commercially available program by Tower Numerics Inc. The latticed structures members are modeled using beam/truss and cable members and the pole members using tubular beam elements. The structural parameters and geometry of the members are included in the model. The dead loads, temperature loads and the wind loads are internally calculated by the program for the different wind directions and then applied as external loads on the structure. Any applicable exemptions, as per Section 15.6 of the TIA-222-G Standard for existing structures originally designed in accordance with a previous revision of the TIA-222 Standard, have been taken.

Assumptions

This engineering study is based on the theoretical capacity of the members and is not a condition assessment of the structure. This analysis is based on information supplied, and therefore, its results are based on and as accurate as that supplied data. MEI has made no independent determination, nor is it required to, of its accuracy. The following assumptions were made for this structural stress analysis:

- This existing tower is assumed, for the purpose of this analysis, to have been properly maintained and to be in good condition with no structural defects and with no deterioration to its member capacities.
- The member sizes and configuration are considered accurate as supplied. The material grade is as per data supplied and/or as assumed and as stated.
- Limited details of Flange plate at 96ft are available and assumed to be acceptable.
- The appurtenances configuration is as supplied and/or as stated in the report. It is assumed to be complete and accurate. All antennas, mounts, feed lines are assumed to be properly installed and supported as per manufacturer requirements.
- Some assumptions are made regarding antennas and mounts sizes and their projected areas based on best interpretation of data supplied and of best knowledge of antenna type & industry practice.
- Mounts/Platforms are considered adequate to support the loading. No actual analysis of the platform/mount itself is performed, with the analysis being limited to analyzing the structure.
- The soil parameters are as per data supplied or as assumed and as stated. If no data is available, the foundation system is assumed to support the structure with its new reactions.
- All welds and connections are assumed to develop at least the member capacity, unless determined otherwise and explicitly stated in this report.
- All prior structural modifications, if any, are assumed to be as per data supplied/available, and to have been properly installed and to be fully effective.

If any of the above assumptions are not valid or have been made in error, this analysis results may be invalided, MEI should be contacted to review any contradictory information to determine its effect.

This report is not to be reproduced or copied in whole or in part without MEI's written consent. 2020, MEI, Inc. ©

5. ANALYSIS RESULTS

The results of the structural stress analysis based on data available and with the previous listed criteria, indicated the following:

Note: The Wind loading controls over the Seismic loading as per TIA Section 2.7.

STRUCTURAL STRENGTHENING REQUIRED	
1	Field weld stiffener plates to the base plate as detailed.
2	Install overlapping/splice plates at Elev. 20ft (Refer modification details).
3	Install end bolts onto the existing reinforcing plates at Elev. 72ft and 21ft as shown.
4	Field verify location of plates and interferences, prior to fabrication.
5	Perform any Maintenance work as required & applicable to bring the structure into good operational condition.

Prior to implementation of the changed conditions and modifications, the data designated on the design documents requiring field verification shall be validated. Rigging and temporary supports required for the erection/modification shall be determined, documented, furnished and installed by the erector/contractor accounting for the loads imposed on the structure due to the proposed construction method.

Table 3: Stress Analysis Results – AFTER PROPER INSTALLATION OF MODS

Component Type	Maximum Stress Ratio	Controlling Elev. (ft) / Component	Pass/Fail	Comment
POLE	96.5%	30 – 25	**Pass**	
BASE PLATE	91.0%	Bending	**Pass**	
ANCHOR RODS	93.0%	Tension	**Pass**	
FOUNDATION	**98.9%**	**Pier Length**	**Pass**	

Table 4: Serviceability Requirements

	Maximum Value	TIA Requirement (10dB)	Pass/Fail	Comment
TWIST/SWAY	1.4754 Deg.	4 Deg. from Vert. or Horiz. Axis	**Pass**	
HORIZONTAL DISPLACEMENT	16.42 In./ 1.24% of Ht.	3.0% of Height	**Pass**	

Notes:

1. The Maximum Stress Ratio is the percentage that the maximum load in the member is relative to the allowable load as determined by Code requirements.
2. Refer to the Appendix 1 for more details on the member loads.
3. A maximum stress ratio between 100% and 105% may be considered as *Acceptable* according to industry standard practice.

This report is not to be reproduced or copied in whole or in part without MEI's written consent. **2020, MEI, Inc. ©**

6. FINDINGS & RECOMMENDATIONS

- Based on the rigorous stress analysis results, the subject structure is **rated at 96.5% / 98.9%** of its support capacity (controlling component: Pole/Foundation) with the proposed changed condition considered. Please refer to Table 3 and to Appendix 1 for more details of the analysis results.

- Based on the stress analysis performed, the existing structure **is in conformance** with the IBC / ANSI/TIA **222-G** Standard for the loading considered under the criteria listed and referenced in the report sections **after proper installation of the recommended structural strengthening modifications outlined**.

- ***The installation of the proposed changed condition as noted in Table 1 is structurally acceptable after proper installation of the proposed strengthening modifications.*** Please refer to modification drawings for details.

- This structure is at maximum support capacity for the appurtenances and loading criteria considered even after its modification. Therefore, no changes to the configuration considered should be made without performing a new proper evaluation.

Rigging and temporary supports required for the erection/modification shall be determined, documented, furnished and installed by the erector/contractor accounting for the loads imposed on the structure due to the proposed construction method.

This report is not to be reproduced or copied in whole or in part without MEI's written consent. **2020, MEI, Inc. ©**

7. REPORT DISCLAIMER

The engineering services rendered by **M**alouf **E**ngineering **I**nternational, Inc. *('MEI') in connection with this Structural Analysis are limited to a computer analysis of the tower structure, size and capacity of its members. MEI does not analyze the fabrication, including welding and connection capacities, except as included in this Report.*

The analysis performed, and the conclusions contained herein are based on the assumption that the tower has been properly installed and maintained, including, but not limited to the following:

1. Proper alignment and plumbness.
2. Correct guy tensions, as applicable.
3. Correct bolt tightness or slip jacking of sleeved connections.
4. No significant deterioration or damage to any structural component.

Furthermore, the information and conclusions contained in this Report were determined by application of the current "state-of-the-art" engineering and analysis procedures and formulae. MALOUF ENGINEERING INTERNATIONAL, INC. assumes no obligation to revise any of the information or conclusions contained in this Report in the event that such engineering and analysis procedures and formulae are hereafter modified or revised. In addition, under no circumstances will MALOUF ENGINEERING INTERNATIONAL, INC. have any obligation or responsibility whatsoever for or on account of consequential or incidental damages sustained by any person, firm or organization as a result of any information or conclusions contained in the Report, and the maximum liability of MALOUF ENGINEERING INTERNATIONAL, INC., if any, pursuant to this Report shall be limited to the total funds actually received by MALOUF ENGINEERING INTERNATIONAL, INC. for preparation of this Report.

Customer has requested MALOUF ENGINEERING INTERNATIONAL, INC. to prepare and submit to Customer an engineering analysis with respect to the Subject Tower and has further requested MALOUF ENGINEERING INTERNATIONAL, INC. to make appropriate recommendations regarding suggested structural modifications and changes to the Subject Tower. In making such request of MALOUF ENGINEERING INTERNATIONAL, INC., Customer has informed MALOUF ENGINEERING INTERNATIONAL, INC. that Customer will make a determination as to whether or not to implement any of the changes or modifications which may be suggested by MALOUF ENGINEERING INTERNATIONAL, INC. and that Customer will have any such changes or modifications made by riggers, erectors and other subcontractors of Customer's choice. MALOUF ENGINEERING INTERNATIONAL, INC. shall have the right to rely upon the accuracy of the information supplied by the customer and shall not be held responsible for the Customer's misrepresentation or omission of relevant fact whether intentional or otherwise.

Customer hereby agrees and acknowledges that MALOUF ENGINEERING INTERNATIONAL, INC. shall have no liability whatsoever to Customer or to others for any work or services performed by any persons other than MALOUF ENGINEERING INTERNATIONAL, INC. in connection with the implementation of services including but not limited to any services rendered for Customer or for others by riggers, erectors or other subcontractors. Customer acknowledges and agrees that any riggers, erectors or subcontractors retained or employed by Customer shall be solely responsible to Customer and to others for the quality of work performed by them and that MALOUF ENGINEERING INTERNATIONAL, INC. shall have no liability or responsibility whatsoever as a result of any negligence or breach of contract by any such rigger, erector or subcontractor and that Customer and rigger, erector, or subcontractor will provide MALOUF ENGINEERING INTERNATIONAL, INC. with a Certificate of Insurance naming MALOUF ENGINEERING INTERNATIONAL, INC. as additional insured.

This report is not to be reproduced or copied in whole or in part without MEI's written consent. **2020, MEI, Inc. ©**

APPENDIX 1 - ANALYSIS PRINTOUT & GRAPHICS

AFTER NOTED MODIFICATIONS

This report is not to be reproduced or copied in whole or in part without MEI's written consent. 2020, MEI, Inc. ©

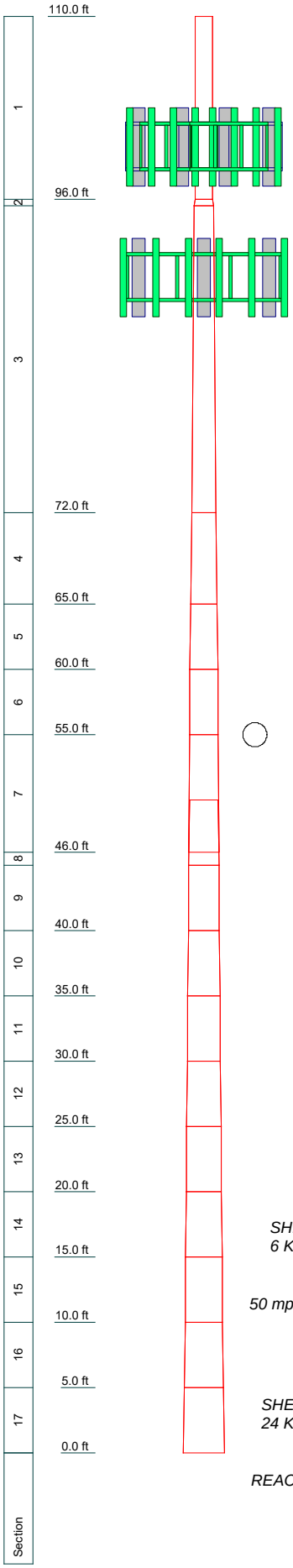

DESIGNED APPURTENANCE LOADING

TYPE	ELEVATION	TYPE	ELEVATION
HPA-65R-BUU-H6 w/ Pipe Mounts (ATT / E)	100	ION-M23 SDARS RRU (ATT / P)	100
800-10965 w/ Pipe Mount (ATT / E)	100	ION-M23 SDARS RRU (ATT / P)	100
OPA-65R-LCUU-H6 w/ Pipe Mounts (ATT / E)	100	ION-M23 SDARS RRU (ATT / P)	100
7770.00 Panels w/ Pipe Mount (ATT / E)	100	CBC23SR-43 Diplexer (ATT / P)	100
SBNHH-1D65A w/ pipe mount (ATT / E)	100	CBC23SR-43 Diplexer (ATT / P)	100
800-10964 w/ Pipe Mount (ATT / E)	100	CBC23SR-43 Diplexer (ATT / P)	100
OPA-65R-LCUU-H4 w/ Pipe Mounts (ATT / E)	100	12ft HD V-Frame Mount (Sabre #C10857801) (ATT / E)	100
7770.00 Panels w/ Pipe Mount (ATT / E)	100	12ft HD V-Frame Mount (Sabre #C10857801) (ATT / E)	100
SBNHH-1D65A w/ pipe mount (ATT / E)	100	12ft HD V-Frame Mount (Sabre #C10857801) (ATT / E)	100
800-10964 w/ Pipe Mount (ATT / E)	100	3-Way Close Contact Mount w/ Pipes (ATT / E)	100
OPA-65R-LCUU-H4 w/ Pipe Mounts (ATT / E)	100	Plate (E)	96
7770.00 Panels w/ Pipe Mount (ATT / E)	100	BXA-80063-6BF w/ Pipe Mount (VzW / E)	90
RRUS-11 (ATT) (ATT / E)	100	BXA-80080-6CF w/ Pipe Mount (VzW / E)	90
RRUS-11 (ATT) (ATT / E)	100	BXA-80080-6CF w/ Pipe Mount (VzW / E)	90
RRUS-11 (ATT) (ATT / E)	100	(2) JAHH-65B-R3B w/ Pipe Mount (VzW / E)	90
RRUS-32 B2 (ATT / E)	100	(2) JAHH-65B-R3B w/ Pipe Mount (VzW / E)	90
RRUS-32 B2 (ATT / E)	100	(2) JAHH-65B-R3B w/ Pipe Mount (VzW / E)	90
RRUS-32 B2 (ATT / E)	100	B25 RRH4x30-4R (VzW / E)	90
RRUS-4478 B14 (ATT / E)	100	B25 RRH4x30-4R (VzW / E)	90
RRUS-4478 B14 (ATT / E)	100	B25 RRH4x30-4R (VzW / E)	90
RRUS-4478 B14 (ATT / E)	100	RRH4x45 (AWS) (VzW / E)	90
RRUS-32 B66 (ATT / E)	100	RRH4x45 (AWS) (VzW / E)	90
RRUS-32 B66 (ATT / E)	100	RRH4x45 (AWS) (VzW / E)	90
RRUS-32 B66 (ATT / E)	100	B13 RRH4x30W-4R (VzW / E)	90
RRUS-32 B30 (ATT / E)	100	B13 RRH4x30W-4R (VzW / E)	90
RRUS-32 B30 (ATT / E)	100	B13 RRH4x30W-4R (VzW / E)	90
RRUS-32 B30 (ATT / E)	100	B5 RRH 4x30-4R (VzW / E)	90
(2) TPX-070821 Triplexer (ATT / E)	100	B5 RRH 4x30-4R (VzW / E)	90
(2) TPX-070821 Triplexer (ATT / E)	100	B5 RRH 4x30-4R (VzW / E)	90
(2) TPX-070821 Triplexer (ATT / E)	100	DB-T1-6Z-8AB-0Z DISTRIBUTION BOX (VzW / E)	90
(2) LGP21401 TMA'S (ATT / E)	100	DB-T1-6Z-8AB-0Z DISTRIBUTION BOX (VzW / E)	90
(2) LGP21401 TMA'S (ATT / E)	100	(2) Empty Pipe Mount (VzW / E)	90
(2) LGP21401 TMA'S (ATT / E)	100	(2) Empty Pipe Mount (VzW / E)	90
Raycap DC6-48-60-18-8F SUPRESSOR (ATT / E)	100	(2) Empty Pipe Mount (VzW / E)	90
Raycap DC6-48-60-18-8F SUPRESSOR (ATT / E)	100	Platform w/ Handrails / corner supports (VzW / E)	90
Raycap DC6-48-60-0-8F SUPRESSOR (ATT / E)	100		

MATERIAL STRENGTH

GRADE	Fy	Fu	GRADE	Fy	Fu
A500-46	46 ksi	62 ksi	A588-46	46 ksi	67 ksi
A572-65	65 ksi	80 ksi	A570-45	45 ksi	60 ksi
A572-50	50 ksi	65 ksi			

ALL REACTIONS ARE FACTORED

AXIAL 56 K

SHEAR 6 K

TORQUE 1 kip-ft

50 mph WIND - 0.7500 in ICE

AXIAL 28 K

SHEAR 24 K

MOMENT 1789 kip-ft

TORQUE 4 kip-ft

REACTIONS - 93 mph WIND

TOWER DESIGN NOTES

1. Tower is located in Fairfield County, Connecticut.
2. Tower designed for Exposure B to the TIA-222-G Standard.
3. Tower designed for a 93 mph basic wind in accordance with the TIA-222-G Standard.
4. Tower is also designed for a 50 mph basic wind with 0.75 in ice. Ice is considered to increase in thickness with height.
5. Deflections are based upon a 60 mph wind.
6. Tower Structure Class II.
7. Topographic Category 1 with Crest Height of 0.00 ft
8. TOWER RATING: 96.5%

MALOUF ENGINEERING INTL., INC. STRUCTURAL CONSULTANTS
maloufengineering.com

Malouf Engineering Int'l Inc.
17950 Preston Road, STE 720
Dallas, Texas 75252
Phone: (972) 783 2578
FAX: (972) 783 2583

Job: **110 ft MONOPOLE - Danbury East #CT2157 - FA 1003507**		
Project: **CT05942M-20V0-RUN-II (Modification Analysis)**		
Client: VRG / AT&T	Drawn by: KM	App'd:
Code: TIA-222-G	Date: 05/27/20	Scale: NTS
Path: C:\MEIProjects\2020\02\CT05942M\CT05942M-20V0_VRGx_AT&T_Danbury East_Mods\2-Working Data\RUN-II\CT05942M-20V0-RUN-II.eri		Dwg No. E-1

TIA-222-G - Service - 60 mph

Maximum Values

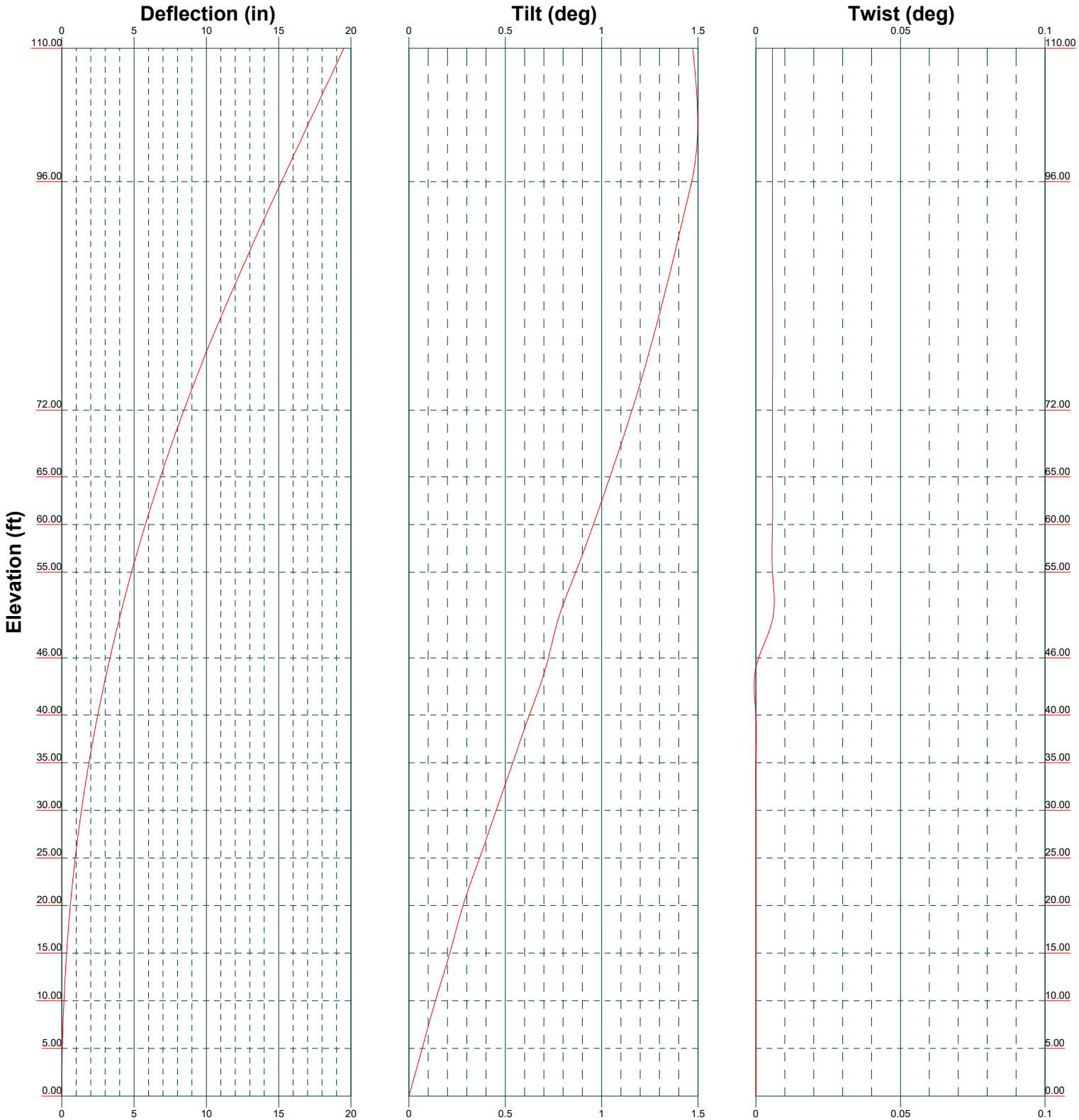

MALOUF ENGINEERING INTL., INC.
STRUCTURAL CONSULTANTS
maloufengineering.com

Malouf Engineering Int'l Inc.
17950 Preston Road, STE 720
Dallas, Texas 75252
Phone: (972) 783 2578
FAX: (972) 783 2583

Job: ***110 ft MONOPOLE - Danbury East #CT2157 - FA 1003507***		
Project: ***CT05942M-20V0-RUN-II (Modification Analysis)***		
Client: VRG / AT&T	Drawn by: KM	App'd:
Code: TIA-222-G	Date: 05/27/20	Scale: NTS
Path: C:\MEI\Projects\2020\Q2\CT05942M\CT05942M-20V0_VRGx_AT&T_Danbury East_Mods\2-Working Data\RUN-II\CT05942M-20V0-RUN-I.eri		Dwg No. E-5

Tower Input Data

The tower is a monopole.
This tower is designed using the TIA-222-G standard.
The following design criteria apply:

Tower is located in Fairfield County, Connecticut.
ASCE 7-10 Wind Data is used (wind speeds converted to nominal values).
Basic wind speed of 93 mph.
Structure Class II.
Exposure Category B.
Topographic Category 1.
Crest Height 0.00 ft.
Nominal ice thickness of 0.7500 in.
Ice thickness is considered to increase with height.
Ice density of 56 pcf.
A wind speed of 50 mph is used in combination with ice.
Temperature drop of 50 °F.
Deflections calculated using a wind speed of 60 mph.
A non-linear (P-delta) analysis was used.
Pressures are calculated at each section.
Stress ratio used in pole design is 1.
Local bending stresses due to climbing loads, feed line supports, and appurtenance mounts are not considered.

Feed Line/Linear Appurtenances - Entered As Round Or Flat

Description	*Placement* ft	*Total Number*	*Weight* plf
1 5/8 (AT&T / E)	100.00 - 15.00	3	1.04
1 5/8 (AT&T / E)	100.00 - 15.00	9	1.04
3/4" DC Power Cable (AT&T / E)	100.00 - 15.00	2	0.80

Feed Line/Linear Appurtenances - Entered As Area

Description	*Placement* ft	*Total Number*	*Weight* plf
DC Power Cable (AT&T / E)	100.00 - 15.00	4	0.80 0.80 0.80
Fiber Cable (AT&T / E)	100.00 - 15.00	2	0.60 0.60 0.60
1 5/8 (VzW / E)	90.00 - 15.00	12	1.04 1.04 1.04
1-5/8" (6x12) Hybrid (HFT1206-24SV2-x	90.00 - 15.00	2	1.78 1.78
x) or Equiv. (VzW / E)			1.78
Safety Line 3/8 (E)	110.00 - 0.00	1	0.22 0.75 1.28

Discrete Tower Loads

Description	Placement	Weight
	ft	K
HPA-65R-BUU-H6 w/ Pipe Mounts (ATT / E)	100.00	0.09 0.17 0.26
800-10965 w/ Pipe Mount (ATT / E)	100.00	0.15 0.25 0.36
OPA-65R-LCUU-H6 w/ Pipe Mounts (ATT / E)	100.00	0.10 0.17 0.26
7770.00 Panels w/ Pipe Mount (ATT / E)	100.00	0.04 0.09 0.15
SBNHH-1D65A w/ pipe mount (ATT / E)	100.00	0.06 0.12 0.18
800-10964 w/ Pipe Mount (ATT / E)	100.00	0.12 0.20 0.28
OPA-65R-LCUU-H4 w/ Pipe Mounts (ATT / E)	100.00	0.08 0.13 0.20
7770.00 Panels w/ Pipe Mount (ATT / E)	100.00	0.04 0.09 0.15
SBNHH-1D65A w/ pipe mount (ATT / E)	100.00	0.06 0.12 0.18
800-10964 w/ Pipe Mount (ATT / E)	100.00	0.12 0.20 0.28
OPA-65R-LCUU-H4 w/ Pipe Mounts (ATT / E)	100.00	0.08 0.13 0.20
7770.00 Panels w/ Pipe Mount (ATT / E)	100.00	0.04 0.09 0.15
RRUS-11 (AT&T) (ATT / E)	100.00	0.06 0.08 0.11
RRUS-11 (AT&T) (ATT / E)	100.00	0.06 0.08 0.11
RRUS-11 (AT&T) (ATT / E)	100.00	0.06 0.08 0.11
RRUS-32 B2 (ATT / E)	100.00	0.05 0.07 0.10
RRUS-32 B2 (ATT / E)	100.00	0.05 0.07 0.10
RRUS-32 B2 (ATT / E)	100.00	0.05 0.07 0.10

Description	Placement	Weight
	ft	K
RRUS-4478 B14 (ATT / E)	100.00	0.06 0.07 0.09
RRUS-4478 B14 (ATT / E)	100.00	0.06 0.07 0.09
RRUS-4478 B14 (ATT / E)	100.00	0.06 0.07 0.09
RRUS-32 B66 (ATT / E)	100.00	0.06 0.08 0.11
RRUS-32 B66 (ATT / E)	100.00	0.06 0.08 0.11
RRUS-32 B66 (ATT / E)	100.00	0.06 0.08 0.11
RRUS-32 B30 (ATT / E)	100.00	0.06 0.08 0.11
RRUS-32 B30 (ATT / E)	100.00	0.06 0.08 0.11
RRUS-32 B30 (ATT / E)	100.00	0.06 0.08 0.11
(2) TPX-070821 Triplexer (ATT / E)	100.00	0.01 0.01 0.02
(2) TPX-070821 Triplexer (ATT / E)	100.00	0.01 0.01 0.02
(2) TPX-070821 Triplexer (ATT / E)	100.00	0.01 0.01 0.02
(2) LGP21401 TMA'S (ATT / E)	100.00	0.02 0.03 0.04
(2) LGP21401 TMA'S (ATT / E)	100.00	0.02 0.03 0.04
(2) LGP21401 TMA'S (ATT / E)	100.00	0.02 0.03 0.04
Raycap DC6-48-60-18-8F SUPRESSOR (ATT / E)	100.00	0.02 0.04 0.05
Raycap DC6-48-60-18-8F SUPRESSOR (ATT / E)	100.00	0.02 0.04 0.05
Raycap DC6-48-60-0-8F SUPRESSOR (ATT / E)	100.00	0.03 0.05 0.07

Description	Placement	Weight
	ft	K
ION-M23 SDARS RRU	100.00	0.06
(ATT / P)		0.08
		0.09
ION-M23 SDARS RRU	100.00	0.06
(ATT / P)		0.08
		0.09
ION-M23 SDARS RRU	100.00	0.06
(ATT / P)		0.08
		0.09
CBC23SR-43 Diplexer	100.00	0.01
(ATT / P)		0.01
		0.02
CBC23SR-43 Diplexer	100.00	0.01
(ATT / P)		0.01
		0.02
CBC23SR-43 Diplexer	100.00	0.01
(ATT / P)		0.01
		0.02
12ft HD V-Frame Mount	100.00	0.47
(Sabre #C10857801)		0.65
(ATT / E)		0.82
12ft HD V-Frame Mount	100.00	0.47
(Sabre #C10857801)		0.65
(ATT / E)		0.82
12ft HD V-Frame Mount	100.00	0.47
(Sabre #C10857801)		0.65
(ATT / E)		0.82
3-Way Close Contact Mount	100.00	0.70
w/ Pipes		0.95
(ATT / E)		1.20
Plate	96.00	0.25
(E)		0.37
		0.49
BXA-80063-6BF w/ Pipe	90.00	0.06
Mount		0.12
(VzW / E)		0.19
BXA-80080-6CF w/ Pipe	90.00	0.05
Mount		0.11
(VzW / E)		0.18
BXA-80080-6CF w/ Pipe	90.00	0.05
Mount		0.11
(VzW / E)		0.18
(2) JAHH-65B-R3B w/ Pipe	90.00	0.11
Mount		0.19
(VzW / E)		0.27
(2) JAHH-65B-R3B w/ Pipe	90.00	0.11
Mount		0.19
(VzW / E)		0.27
(2) JAHH-65B-R3B w/ Pipe	90.00	0.11
Mount		0.19
(VzW / E)		0.27
B25 RRH4x30-4R	90.00	0.06
(VzW / E)		0.08

Description	Placement	Weight
	ft	K
		0.10
B25 RRH4x30-4R	90.00	0.06
(VzW / E)		0.08
		0.10
B25 RRH4x30-4R	90.00	0.06
(VzW / E)		0.08
		0.10
RRH4x45 (AWS)	90.00	0.07
(VzW / E)		0.10
		0.13
RRH4x45 (AWS)	90.00	0.07
(VzW / E)		0.10
		0.13
RRH4x45 (AWS)	90.00	0.07
(VzW / E)		0.10
		0.13
B13 RRH4x30W-4R	90.00	0.06
(VzW / E)		0.08
		0.10
B13 RRH4x30W-4R	90.00	0.06
(VzW / E)		0.08
		0.10
B13 RRH4x30W-4R	90.00	0.06
(VzW / E)		0.08
		0.10
B5 RRH 4x30-4R	90.00	0.06
(VzW / E)		0.08
		0.10
B5 RRH 4x30-4R	90.00	0.06
(VzW / E)		0.08
		0.10
B5 RRH 4x30-4R	90.00	0.06
(VzW / E)		0.08
		0.10
DB-T1-6Z-8AB-0Z	90.00	0.04
DISTRIBUTION BOX		0.08
(VzW / E)		0.12
DB-T1-6Z-8AB-0Z	90.00	0.04
DISTRIBUTION BOX		0.08
(VzW / E)		0.12
(2) Empty Pipe Mount	90.00	0.03
(VzW / E)		0.05
		0.07
(2) Empty Pipe Mount	90.00	0.03
(VzW / E)		0.05
		0.07
(2) Empty Pipe Mount	90.00	0.03
(VzW / E)		0.05
		0.07
Platform w/ Handrails /	90.00	2.15
corner supports		3.00
(VzW / E)		3.85

Maximum Tower Deflections - Service Wind

Section No.	Elevation ft	Horz. Deflection in	Gov. Load Comb.	Tilt °	Twist °
L1	110 - 96	19.509	50	1.4748	0.0057
L2	96 - 95.5	15.191	50	1.4641	0.0055
L3	95.5 - 72	15.038	50	1.4619	0.0055
L4	72 - 65	8.440	50	1.1561	0.0047
L5	65 - 60	6.826	50	1.0444	0.0042
L6	60 - 55	5.777	50	0.9579	0.0038
L7	55 - 46	4.821	50	0.8675	0.0034
L8	50 - 45	3.963	50	0.7714	0.0030
L9	45 - 40	3.183	50	0.7091	0.0028
L10	40 - 35	2.485	50	0.6243	0.0024
L11	35 - 30	1.876	50	0.5387	0.0021
L12	30 - 25	1.357	50	0.4528	0.0017
L13	25 - 20	0.927	50	0.3672	0.0014
L14	20 - 15	0.588	50	0.2819	0.0010
L15	15 - 10	0.330	50	0.2108	0.0007
L16	10 - 5	0.146	50	0.1400	0.0005
L17	5 - 0	0.036	50	0.0697	0.0002

Critical Deflections and Radius of Curvature - Service Wind

Elevation ft	Appurtenance	Gov. Load Comb.	Deflection in	Tilt °	Twist °	Radius of Curvature ft
100.00	HPA-65R-BUU-H6 w/ Pipe Mounts	50	16.420	1.4754	0.0056	40535
96.00	Plate	50	15.191	1.4641	0.0055	16679
90.00	BXA-80063-6BF w/ Pipe Mount	50	13.376	1.4203	0.0056	6425

Maximum Tower Deflections - Design Wind

Section No.	Elevation ft	Horz. Deflection in	Gov. Load Comb.	Tilt °	Twist °
L1	110 - 96	84.146	24	6.3723	0.0241
L2	96 - 95.5	65.551	24	6.3273	0.0232
L3	95.5 - 72	64.891	24	6.3181	0.0232
L4	72 - 65	36.446	24	4.9996	0.0198
L5	65 - 60	29.479	24	4.5162	0.0178
L6	60 - 55	24.952	24	4.1419	0.0163
L7	55 - 46	20.824	24	3.7507	0.0147
L8	50 - 45	17.116	24	3.3347	0.0129
L9	45 - 40	13.748	24	3.0654	0.0118
L10	40 - 35	10.732	24	2.6982	0.0103
L11	35 - 30	8.102	24	2.3278	0.0088
L12	30 - 25	5.860	24	1.9565	0.0073
L13	25 - 20	4.005	24	1.5865	0.0058
L14	20 - 15	2.538	24	1.2177	0.0043
L15	15 - 10	1.424	24	0.9102	0.0031
L16	10 - 5	0.631	24	0.6046	0.0020
L17	5 - 0	0.157	24	0.3010	0.0010

Base Plate Design Data

Plate Thickness in	Actual Allowable Ratio Bolt Tension K	Actual Allowable Ratio Plate Stress ksi	Controlling Condition	Ratio
1.5000	226.53 243.58 0.93	48.84 54.00 0.91	Plate	0.93

*Base Plate Evaluated Using Mathcad

Section Capacity Table

Section No.	Elevation ft	Component Type	Size	Critical Element	P K	$øP_{allow}$ K	% Capacity	Pass Fail
L1	110 - 96	Pole	TP16x16x0.375	1	-5.72	762.08	11.0	Pass
L2	96 - 95.5	Pole	TP17.5949x16x0.25	2	-6.01	928.51	11.5	Pass
L3	95.5 - 72	Pole	TP22.5252x17.5949x0.25	3	-12.65	1313.19	56.7	Pass
L4	72 - 65	Pole	TP23.9938x22.5252x0.25*	4	-13.77	1420.75	65.9	Pass
L5	65 - 60	Pole	TP25.0428x23.9938x0.25*	5	-14.61	1461.62	72.8	Pass
L6	60 - 55	Pole	TP26.0918x25.0428x0.25*	6	-15.48	1509.80	78.6	Pass
L7	55 - 46	Pole	TP27.1408x26.0918x0.25*	7	-16.37	1525.06	87.2	Pass
L8	46 - 45	Pole	TP27.559x26.0366x0.3125*	8	-17.67	1561.58	93.3	Pass
L9	45 - 40	Pole	TP28.608x27.559x0.3125*	9	-18.73	1822.61	86.7	Pass
L10	40 - 35	Pole	TP29.657x28.608x0.3125*	10	-19.82	1871.08	90.5	Pass
L11	35 - 30	Pole	TP30.706x29.657x0.3125*	11	-20.93	1923.13	93.7	Pass
L12	30 - 25	Pole	TP31.755x30.706x0.3125*	12	-22.08	1979.31	96.5	Pass
L13	25 - 20	Pole	TP32.804x31.755x0.3125*	13	-23.25	2205.91	91.3	Pass
L14	20 - 15	Pole	TP33.853x32.804x0.3125**	14	-24.59	2437.80	87.2	Pass
L15	15 - 10	Pole	TP34.902x33.853x0.3125**	15	-25.74	2492.14	89.3	Pass
L16	10 - 5	Pole	TP35.951x34.902x0.3125**	16	-26.92	2545.10	91.3	Pass
L17	5 - 0	Pole	TP37x35.951x0.3125**	17	-28.13	2596.69	93.1	Pass
							Summary	
						Pole (L12)	96.5	Pass
						Base Plate	93.0	Pass
						RATING =	**96.5**	**Pass**

*Pole reinforced with (3) Plates
**Pole reinforced with (3) Channels

APPENDIX 2 – SOURCE / CHANGED CONDITION

This report is not to be reproduced or copied in whole or in part without MEI's written consent. 2020, MEI, Inc. ©

Subject: FW: SA Quotes - AT&T CT2157
Attachments: 10035077.CT2157.CD.LTE.RFMod.Rev1.05.21.2019.pdf; NEW-ENGLAND_CONNECTICUT_CTL02157_2019-Cell-Site-RF-Modifications_IP-Repeater---Type-1_sp656b_PTN_10035077_16327_01-09-2019_Preliminary-Approved_v1.00.pdf

From: Vertical Resources Group <mnobre@verticalresourcesgrp.com>
Sent: Thursday, November 7, 2019 9:39 AM
To: Mark Malouf <mmalouf@maloufengineering.com>
Cc: MEI Admin <execadmin@maloufengineering.com>
Subject: RE: SA Quotes - AT&T CT2157

Dropbox link to the last pics we took is below.
https://www.dropbox.com/sh/90gchv51jt03hj7/AABKmaeSAQDQ-OAq4ORAvVkWa?dl=0

Proposed AT&T changes are as follows:
EXISTING TO REMAIN:
100' (1) CCI HPA65RBUUH6 (LTEPCS/700bc pos #1)
100' (1) Kathrein 800-10965 (LTE700b14/AWS pos #2)
100' (1) CCI OPA65RLCUUH6 (LTE850/WCS/700de pos #3)
100' (2) Andrew SBNHH1D65A (LTEPCS/700bc pos #1)
100' (2) Kathrein 800-10964 (LTE700b14/AWS pos #2)
100' (2) CCI OPA65RLCUUH4 (LTE850/WCS/700de pos #3)
100' (3) Powerwave 7770 (UMTS850 pos #4)

100' (6) LGP21401 (UMTS850 TMA pos #4)
100' (6) CCI TPX070821 (LTE850/700de pos#3)
100' (3) RRUS11 (LTE700bc pos#1)
100' (3) RRUS32b2 (LTEPCS pos#1)
100' (3) RRUS4478b14 (LTE700b14 pos #2)
100' (3) RRUS32b66 (LTEAWS pos#2)
100' (3) RRUS32b30 (LTEWCS pos #3)
100' Raycap Surge Arrestors (2) DC64860188F (1) DC6486008F

0-100' (12) Coaxial Cables 1.625"
0-100' (2) Fiber trunks, (6) DC trunks

PROPOSED NEW:
100' (3) Sirius XM ionM23 SDARS radio (SXM pos#4)
100' (3) Commscope CBC23SR-43 (LTEWCS/SXM combiner pos#4)

Miguel Nobre
Vertical Resources Group
23 MidState Dr., #210
Auburn, MA 01501
P: 508-981-9590
F: 508-519-8939

Section 1 - RFDS GENERAL INFORMATION

RFDS NAME:	CTL02157	DATE:	01/09/2019	RF DESIGN ENG:	Parminder Singh
ISSUE:	Bronze Standard	Approved? (Y/N):	Yes	RF DESIGN PHONE:	
REVISION:	Preliminary	RF MANAGER:	John Benedetto	RF DESIGN EMAIL:	SP656B@ATT.COM
INITIATIVE /PROJECT:	SXM WCS Repeater				

RF PERF ENG:		RFDS PROGRAM TYPE:	2019 Cell Site RF Modifications
RF PERF PHONE:		RFDS TECHNOLOGY:	IP Repeater - Type 1
RF PERF EMAIL:		STATE/STATUS:	Preliminary/Approved
RFDS VERSION:	1.00	RFDS ID:	2776201
GSM FREQUENCY:		Created By: sp656b	Updated By: sp656b
UMTS FREQUENCY:	850	Date Created: 1/9/2019 11:30:41 AM	Date Updated: 1/21/2019 3:52:28 PM
LTE FREQUENCY:	700, 850, 1900, AWS, WCS		
5G FREQUENCY:			
I-PLAN JOB # 1:	NER-RCTB-18-09241	IPLAN PRD GRP || SUB GRP #1:	Cell Site RF Modifications || IP Repeater - Type 1
I-PLAN JOB # 2:		IPLAN PRD GRP || SUB GRP #2:	
I-PLAN JOB # 3:		IPLAN PRD GRP || SUB GRP #3:	
I-PLAN JOB # 4:		IPLAN PRD GRP || SUB GRP #4:	
I-PLAN JOB # 5:		IPLAN PRD GRP || SUB GRP #5:	
I-PLAN JOB # 6:		IPLAN PRD GRP || SUB GRP #6:	
I-PLAN JOB # 7:		IPLAN PRD GRP || SUB GRP #7:	
I-PLAN JOB # 8:		IPLAN PRD GRP || SUB GRP #8:	

Section 2 - LOCATION INFORMATION

USID:	16327	FA LOCATION CODE:	10035077	LOCATION NAME:	DANBURY EAST
REGION:	NORTHEAST	MARKET CLUSTER:	NEW ENGLAND	MARKET:	CONNECTICUT
ADDRESS:	48 NEWTOWN ROAD	CITY:	DANBURY	STATE:	CT
ZIP CODE:	06810	COUNTY:	FAIRFIELD	LONG (DEC. DEG.):	-73.4244000
LATITUDE (D-M-S):	41d 24m11.88s	LONGITUDE (D-M-S):	-73d -25m-27.84s	LAT (DEC. DEG.):	41.4033000
DIRECTIONS, ACCESS AND EQUIPMENT LOCATION:	CTL02157TAKE ROUTE 17 NORTH TO RIDGEWOOD AVE. FOLLOW RIDGEWOOD AVENUE TO THE GARDEN STATE PARKWAY GET ON GOING NORTH. STAY ON THE GARDEN STATE PARKWAY NORTH UNTIL YOU GET TO THE NEW YORK STATE THRUWAY (RT. 87 SOUTH) TOWARDS THE TAPPAN ZEE BRIDGE. CROSS THE TAPPAN ZEE BRIDGE AND GET OFF AT EXIT 8 (CROSS WESTCHESTER PARKWAY /RT. 287). TAKE RT. 287 EAST TO 684 NORTH. GET OFF EXIT FOR 84-EAST DANBURY FOLLOW TO EXIT 8. MAKE RIGHT AT THE BOTTOM OF THE RAMP. FOLLOW ON STONY HILL RDON THE RIGHT ABOUT 1 = BEHIND (RENT A WRECK CAR RENTAL)MONO-POLE. DRIVEWAY AROUND BACK OF BUILDING. DEMARC IS IN GRAY BOX ON THE OUTSIDE OF BUILDING LEFT OF STAIRS (NEXTEL BOX) .ET 61 HCGS 724487 FOR THE CKT ID THAT WE WERE WORKING ON FOR THIS SITE, HCGS724487 SN, PLEASE LET WHOEVER HAS TO CORRECT THE GRANITE PATH THAT THE CONNECTION IN THE BPT TELLABS DACS IS 130-5 - 156-7. THERE IS NO MDTW LEG TO THE CIRCUIT. ALL THE MDTW INFORMATION ON THE ORIGINAL GRANITE PATH NEEDS TO BE REMOVED. IF THEY HAVE ANY QUESTIONS, HAVE THEM CALL ME. THANKS,				

ORACLE PTN # 1:		PACE JOB # 1:	MRCTB037940
ORACLE PTN # 2:		PACE JOB # 2:	
ORACLE PTN # 3:		PACE JOB # 3:	
ORACLE PTN # 4:		PACE JOB # 4:	
ORACLE PTN # 5:		PACE JOB # 5:	
ORACLE PTN # 6:		PACE JOB # 6:	
ORACLE PTN # 7:		PACE JOB # 7:	
ORACLE PTN # 8:		PACE JOB # 8:	
BORDER CELL WITH CONTOUR COORD:		SEARCH RING NAME:	
AM STUDY REQ'D (Y/N):	No	SEARCH_RING_ID:	
FREQ COORD:		BTA:	MSA / RSA:
OPS DISTRICT:	CT-South	LAC(GSM):	
OPS ZONE:	NE_CT_S_FRFD_NW_CS	LAC(UMTS):	05991
RF DISTRICT:	NPO Triage	BSC(GSM):	
RF ZONE:	Hotseat	RNC(UMTS):	BRPTCT04CR0R05
PARENT NAME(GSM):		MME POOL ID(LTE):	FF01
PARENT NAME(UMTS):	BRIDGEPORT RNC05		

Section 3 - LICENSE COVERAGE/FILING INFORMATION

CGSA - NO FILING TRIGGERED (Yes/No):	No	CGSA LOSS:		PCS REDUCED - UPS ZIP:	
CGSA - MINOR FILING NEEDED (Yes/No)::	No	CGSA EXT AGMT NEEDED:		PCS POPS REDUCED:	
CGSA - MAJOR FILING NEEDED (Yes/No):	Yes	CGSA SCORECARD UPDATED:			

CGSA CALL SIGNS:	

Section 4 - TOWER/REGULATORY INFORMATION

STRUCTURE AT&T OWNED?:	No	GROUND ELEVATION (ft):		STRUCTURE TYPE:	MONOPOLE
ADDITIONAL REGULATORY?:	No	HEIGHT OVERALL (ft):	110.00	FCC ASR NUMBER:	NR
SUB-LEASE RIGHTS?:	No	STRUCTURE HEIGHT (ft):	110.00		
LIGHTING TYPE:					

MARKET LOCATION 700 MHz Band:			
MARKET LOCATION 850 MHz Band:			
MARKET LOCATION 1900 MHz Band:			
MARKET LOCATION AWS Band:			
MARKET LOCATION WCS Band:			
MARKET LOCATION Future Band:			

Section 5 - E-911 INFORMATION - existing

	PSAP NAME:	PSAP ID:	E911 PHASE:	MPC SVC PROVIDER:	LMU REQUIRED:	ESRN:	DATE LIVE PH1:	DATE LIVE PH2:		
SECTOR A E-911						0				
SECTOR B						0				
SECTOR C						0				
SECTOR D										
SECTOR E										
SECTOR F										
OMNI										

Section 5 - E-911 INFORMATION - final

	PSAP NAME:	PSAP ID:	E911 PHASE:	MPC SVC PROVIDER:	LMU REQUIRED:	ESRN:	DATE LIVE PH1:	DATE LIVE PH2:		
SECTOR A E-911						0				
SECTOR B						0				
SECTOR C						0				
SECTOR D										
SECTOR E										
SECTOR F										
OMNI										

Section 6 - RBS GENERAL INFORMATION - existing

	UMTS 1ST RBS	LTE 1ST RBS	LTE 2ND RBS									
RBS ID:	210623	360156	590962									
CTS COMMON ID:	CTV2157	CTL02157	CTL00857R									
CELL ID / BCF:	CTV2157	CTL02157	CTL00857R									
BTA/TID:	321U	321L	321L									
4-9 DIGIT SITE ID:	2157	2157	00857									
COW OR TOY?:	No	No	No									
CELL SITE TYPE:												
SITE TYPE:												
BTS LOCATION ID:												
BASE STATION TYPE:												
EQUIPMENT NAME:	DANBURY EAST	DANBURY EAST	DANBURY EAST									
DISASTER PRIORITY:												

Section 6 - RBS GENERAL INFORMATION - final

	UMTS 1ST RBS	LTE 1ST RBS	LTE 2ND RBS									
RBS ID:	210623	360156	590962									
CTS COMMON ID:	CTV2157	CTL02157	CTL00857R									
CELL ID / BCF:	CTV2157	CTL02157	CTL00857R									
BTA/TID:	321U	321L	321L									
4-9 DIGIT SITE ID:	2157	2157	00857									
COW OR TOY?:	No	No	No									
CELL SITE TYPE:	SECTORIZED	SECTORIZED	SECTORIZED									
SITE TYPE:	MACRO-CONVENTIONAL	MACRO-CONVENTIONAL	MACRO-CONVENTIONAL									
BTS LOCATION ID:	INTERNAL	INTERNAL	INTERNAL									
BASE STATION TYPE:	BASE	BASE	BASE									
EQUIPMENT NAME:	DANBURY EAST	DANBURY EAST	DANBURY EAST									
DISASTER PRIORITY:	0	3	3									

Section 7 - RBS SPECIFIC INFORMATION - existing

	UMTS 1ST RBS	LTE 1ST RBS	LTE 2ND RBS									
RAC:												
EQUIPMENT VENDOR:												
EQUIPMENT TYPE:												
BASEBAND CONFIGURATION:												
LOCATION:												
CABINET LOCATION:												
MARKET STATE CODE:												
AGPS:	Yes	Yes	Yes									
NODE B NUMBER:	0	2157	857									

Section 7 - RBS SPECIFIC INFORMATION - final

	UMTS 1ST RBS	LTE 1ST RBS	LTE 2ND RBS									
RAC:												
EQUIPMENT VENDOR:	ERICSSON	ERICSSON	ERICSSON									
EQUIPMENT TYPE:	3206 INDOOR	6601 INDOOR MU	6601 INDOOR MU									
BASEBAND CONFIGURATION:		2x6601 / 2x5216 / 2xXMU03 + IDLe										
LOCATION:												
CABINET LOCATION:												
MARKET STATE CODE:		CT	CT									
AGPS:	Yes	Yes	Yes									
NODE B NUMBER:	0	2157	857									

Section 8 - RBS/SECTOR ASSOCIATION - existing

	UMTS 1ST RBS	LTE 1ST RBS	LTE 2ND RBS																			
CTS Common ID	CTV2157	CTL02157	CTL00857R																			
Soft Sector IDs	CTV21571	CTL02157_3A_1	CTL00857_2A_2																			
	CTV21572	CTL02157_3B_1	CTL00857_2B_2																			
	CTV21573	CTL02157_3C_1	CTL00857_2C_2																			
		CTL02157_7A_1	CTL00857_7A_2_E																			
		CTL02157_7B_1	CTL00857_7A_3_F																			
		CTL02157_7C_1	CTL00857_7B_2_E																			
		CTL02157_9A_1	CTL00857_7B_3_F																			
		CTL02157_9A_2	CTL00857_7C_2_E																			
		CTL02157_9B_1	CTL00857_7C_3_F																			
		CTL02157_9B_2	CTL00857_8A_1																			
		CTL02157_9C_1	CTL00857_8B_1																			
		CTL02157_9C_2	CTL00857_8C_1																			

Section 8 - RBS/SECTOR ASSOCIATION - final

	UMTS 1ST RBS	LTE 1ST RBS	LTE 2ND RBS																			
CTS Common ID	CTV2157	CTL02157	CTL00857R																			
Soft Sector IDs	CTV21571	CTL02157_3A_1	CTL00857_2A_2																			
	CTV21572	CTL02157_3B_1	CTL00857_2B_2																			
	CTV21573	CTL02157_3C_1	CTL00857_2C_2																			
		CTL02157_7A_1	CTL00857_7A_2_E																			
		CTL02157_7B_1	CTL00857_7A_3_F																			
		CTL02157_7C_1	CTL00857_7B_2_E																			
		CTL02157_9A_1	CTL00857_7B_3_F																			
		CTL02157_9A_2	CTL00857_7C_2_E																			
		CTL02157_9B_1	CTL00857_7C_3_F																			
		CTL02157_9B_2	CTL00857_8A_1																			
		CTL02157_9C_1	CTL00857_8B_1																			
		CTL02157_9C_2	CTL00857_8C_1																			

Section 9 - SOFT SECTOR ID - existing

	UMTS 1ST 850	LTE 1ST 700	LTE 1ST 850	LTE 1ST 1900	LTE 1ST WCS	LTE 4TH 700	LTE 4TH 1900	LTE 4TH AWS	LTE 5TH 700																	
USEID (excluding Hard Sector)	16327.850.3G.1																									
SECTOR A SOFT SECTOR ID	CTV21571	CTL02157_7A_1	CTL00857_8A_1	CTL02157_9A_1	CTL02157_3A_1	CTL00857_7A_2_E	CTL02157_9A_2	CTL00857_2A_2	CTL00857_7A_3_F																	
SECTOR B	CTV21572	CTL02157_7B_1	CTL00857_8B_1	CTL02157_9B_1	CTL02157_3B_1	CTL00857_7B_2_E	CTL02157_9B_2	CTL00857_2B_2	CTL00857_7B_3_F																	
SECTOR C	CTV21573	CTL02157_7C_1	CTL00857_8C_1	CTL02157_9C_1	CTL02157_3C_1	CTL00857_7C_2_E	CTL02157_9C_2	CTL00857_2C_2	CTL00857_7C_3_F																	
SECTOR D																										
SECTOR E																										
SECTOR F																										
OMNI																										

Section 9 - SOFT SECTOR ID - final

	UMTS 1ST 850	LTE 1ST 700	LTE 1ST 850	LTE 1ST 1900	LTE 1ST WCS	LTE 4TH 700	LTE 4TH 1900	LTE 4TH AWS	LTE 5TH 700																	
USEID (excluding Hard Sector)	16327.850.3G.1																									
SECTOR A SOFT SECTOR ID	CTV21571	CTL02157_7A_1	CTL00857_8A_1	CTL02157_9A_1	CTL02157_3A_1	CTL00857_7A_2_E	CTL02157_9A_2	CTL00857_2A_2	CTL00857_7A_3_F																	
SECTOR B	CTV21572	CTL02157_7B_1	CTL00857_8B_1	CTL02157_9B_1	CTL02157_3B_1	CTL00857_7B_2_E	CTL02157_9B_2	CTL00857_2B_2	CTL00857_7B_3_F																	
SECTOR C	CTV21573	CTL02157_7C_1	CTL00857_8C_1	CTL02157_9C_1	CTL02157_3C_1	CTL00857_7C_2_E	CTL02157_9C_2	CTL00857_2C_2	CTL00857_7C_3_F																	
SECTOR D																										
SECTOR E																										
SECTOR F																										
OMNI																										

Section 9 - Cell Number - existing

	UMTS 1ST 850	LTE 1ST 700	LTE 1ST 850	LTE 1ST 1900	LTE 1ST WCS	LTE 4TH 700	LTE 4TH 1900	LTE 4TH AWS	LTE 5TH 700																
USEID (excluding Hard Sector)	16327.850.3G.1																								
SECTOR A CELL NUMBER		15	1	8	149	185	178	192	171																
SECTOR B		16	2	9	150	186	179	193	172																
SECTOR C		17	3	10	151	187	180	194	173																
SECTOR D																									
SECTOR E																									
SECTOR F																									
OMNI																									

Section 9 - Cell Number - final

	UMTS 1ST 850	LTE 1ST 700	LTE 1ST 850	LTE 1ST 1900	LTE 1ST WCS	LTE 4TH 700	LTE 4TH 1900	LTE 4TH AWS	LTE 5TH 700																
USEID (excluding Hard Sector)	16327.850.3G.1																								
SECTOR A CELL NUMBER		15	1	8	149	185	178	192	171																
SECTOR B		16	2	9	150	186	179	193	172																
SECTOR C		17	3	10	151	187	180	194	173																
SECTOR D																									
SECTOR E																									
SECTOR F																									
OMNI																									

Section 10 - CID/SAC - existing

	UMTS 1ST 850	LTE 1ST 700	LTE 1ST 850	LTE 1ST 1900	LTE 1ST WCS	LTE 4TH 700	LTE 4TH 1900	LTE 4TH AWS	LTE 5TH 700																		
SECTOR A CID/SAC	21571																										
SECTOR B	21572																										
SECTOR C	21573																										
SECTOR D																											
SECTOR E																											
SECTOR F																											
OMNI																											

Section 10 - CID/SAC - final

	UMTS 1ST 850	LTE 1ST 700	LTE 1ST 850	LTE 1ST 1900	LTE 1ST WCS	LTE 4TH 700	LTE 4TH 1900	LTE 4TH AWS	LTE 5TH 700																		
SECTOR A CID/SAC	21571																										
SECTOR B	21572																										
SECTOR C	21573																										
SECTOR D																											
SECTOR E																											
SECTOR F																											
OMNI																											

Section 15A - CURRENT TOWER CONFIGURATION - SECTOR A (OR OMNI)

ANTENNA POSITION is LEFT to RIGHT from BACK OF ANTENNA (unless otherwise specified)	ANTENNA POSITION 1		ANTENNA POSITION 2		ANTENNA POSITION 3		ANTENNA POSITION 4		ANTENNA POSITION 5		ANTENNA POSITION 6		ANTENNA POSITION 7	
ANTENNA MAKE - MODEL	HPA-65R-BUU-H6		800-10965		OPA-65R-LCUU-H6		7770							
ANTENNA VENDOR	CCI		Kathrein		CCI Products		Powerwave							
ANTENNA SIZE (H x W x D)	72X14.8X9		78.7X20X6.9		72X14.8X7.4		55X11X5							
ANTENNA WEIGHT	51		108.6		73		35							
AZIMUTH	10		10		10		143							
MAGNETIC DECLINATION														
RADIATION CENTER (feet)	100		100		100		100							
ANTENNA TIP HEIGHT	103		103		103		102							
MECHANICAL DOWNTILT	0		0		0		0							
FEEDER AMOUNT					Fiber + 2 Coax		2							
VERTICAL SEPARATION from ANTENNA ABOVE (TIP to TIP)														
VERTICAL SEPARATION from ANTENNA BELOW (TIP to TIP)														
HORIZONTAL SEPARATION from CLOSEST ANTENNA to LEFT (CENTERLINE to CENTERLINE)														
HORIZONTAL SEPARATION from CLOSEST ANTENNA to RIGHT (CENTERLINE to CENTERLINE)														
HORIZONTAL SEPARATION from ANOTHER ANTENNA (which antenna # / # of inches)				36										
Antenna RET Motor (QTY/MODEL)						Internal	2	Powerwave 7020						
SURGE ARRESTOR (QTY/MODEL)	1	DC/Fiber Squid	1	DC Squid	5	DC/Fiber Squid+ (4)APTDC-BDFDM-DBW								
DIPLEXER (QTY/MODEL)					4	CCI Triplexer -TPX-070821	2	Powerwave / LGP 21901						
DUPLEXER (QTY/MODEL)														
Antenna RET CONTROL UNIT (QTY/MODEL)		LTE RRH		LTE RRH		LTE RRH	1	Powerwave 7070						
DC BLOCK (QTY/MODEL)														
TMA/LNA (QTY/MODEL)							2	Powerwave LGP 21401 (DB - 850 Bypass)						
CURRENT INJECTORS FOR TMA (QTY/MODEL)							2	Polyphaser 1000860						
PDU FOR TMAS (QTY/MODEL)							1	LGP 12104 (1900 AND 850 Bypass TMA)						
FILTER (QTY/MODEL)														
SQUID (QTY/MODEL)														
FIBER TRUNK (QTY/MODEL)														
DC TRUNK (QTY/MODEL)														
REPEATER (QTY/MODEL)														
RRH - 700 band (QTY/MODEL)	1	RRUS-11 (REUSE ONLY)	1	B14 4478	1	RRUS-E2 B29								
RRH - 850 band (QTY/MODEL)					1	RRUS-11 (REUSE ONLY)								
RRH - 1900 band (QTY/MODEL)	1	RRUS-32 B2												
RRH - AWS band (QTY/MODEL)			1	RRUS-32 B66										
RRH - WCS band (QTY/MODEL)					1	RRUS-32								
Additional RRH #1 - any band (QTY/MODEL)														
Additional RRH #2 - any band (QTY/MODEL)														
Additional Component 1 (QTY/MODEL)					2	Kathrein / 782-10253 (1) & 782-10254 (1)								
Additional Component 2 (QTY/MODEL)														
Additional Component 3 (QTY/MODEL)														
Local Market Note 1														
Local Market Note 2														
Local Market Note 3														

PORT SPECIFIC FIELDS	PORT NUMBER	USEID (CSSng)	USEID (Atoll)	ATOLL TXID	ATOLL CELL ID	TX/RX ?	TECHNOLOGY/FREQUENCY	ANTENNA ATOLL	ANTENNA GAIN	ELECTRICAL AZIMUTH	ELECTRICAL TILT	RRH LOCATION (Top/Bottom/Integrated/None)	FEEDERS TYPE	FEEDER LENGTH (feet)	RXAIT KIT MODULE?	TRIPLEXER or LLC (QTY)	TRIPLEXER or LLC (MODEL)	SCPA/MCPA MODULE?	HATCHPLATE POWER (Watts)	ERP (Watts)	Antenna RET Name	CABLE NUMBER	CABLE ID (CSSNG)
ANTENNA POSITION 1	PORT 1	16327.A.700.4G.1	16327.A.700.4G.1	CTL02157_7A_1	CTL02157_7A_1		LTE 700	HPA-65R-BUU-H6_719MHz_02DT	15.6	10	2	TOP	FIBER	0						1475.7065		1	
	PORT 3	16327.A.1900.4G.1	16327.A.1900.4G.1	CTL02157_9A_1	CTL02157_9A_1		LTE 1900	HPA-65R-BUU-H6_1930MHz_03DT	17.29	10	2	TOP	FIBER	0						3664.3757		2	
	PORT 4	16327.A.1900.4G.4	16327.A.1900.4G.4	CTL02157_9A_2	CTL02157_9A_2		LTE 1900	HPA-65R-BUU-H6_1930MHz_03DT	17.29	10	2	TOP	FIBER	0						3664.3757		2	

ANTENNA POSITION 2	**PORT 1**	16327.A.700.4G.5	16327.A.700.4G.5	CTL00857_7A_3_F	CTL00857_7A_3_F		LTE 700	80010965_777MHz_02DT	15.6	10		TOP	FIBER	0						1475.7065		3	
	PORT 3	16327.A.AWS.4G.4	16327.A.AWS.4G.4	CTL00857_2A_2	CTL00857_2A_2		LTE AWS	80010965_2133MHz_03DT	15.2	10		TOP	FIBER	0						3837.0724		3	
ANTENNA POSITION 3	**PORT 1**	16327.A.850.4G.2	16327.A.850.4G.1	CTL00857_8A_1	CTL00857_8A_1		LTE 850	OPA-65R-LCUU-H6_849MHz_03DT	14.6	10	3	Bottom	Commscope 1-5/8 (850)	131						889.2011		5	
	PORT 2	16327.A.700.4G.5	16327.A.700.4G.4	CTL00857_7A_2_E	CTL00857_7A_2_E		LTE 700	OPA-65R-LCUU-H6_719MHz_03DT	13.9	10	3	Bottom	Commscope 1-5/8 (850)	131						574.1164		5	
	PORT 3	16327.A.WCS.4G.1	16327.A.WCS.4G.1	CTL02157_3A_1	CTL02157_3A_1		LTE WCS	OPA-65R-LCUU-H6_2350MHz_03DT	17.5	10	3	TOP	FIBER	0						1227.4392		6	
ANTENNA POSITION 4	**PORT 1**	16327.A.850.3G.1	16327.A.850.3G.1	CTV21571	CTV21571		UMTS 850	7770.00.850.08	13.5	143	8	None	Commscope 1-5/8 (850)	131						275.42		7	

Section 15B - CURRENT TOWER CONFIGURATION - SECTOR B

ANTENNA POSITION is LEFT to RIGHT from BACK OF ANTENNA (unless otherwise specified)	ANTENNA POSITION 1		ANTENNA POSITION 2		ANTENNA POSITION 3		ANTENNA POSITION 4		ANTENNA POSITION 5		ANTENNA POSITION 6		ANTENNA POSITION 7	
ANTENNA MAKE - MODEL	SBNHH-1D65A		800-10964		OPA-65R-LCUU-H4		7770							
ANTENNA VENDOR	Andrew		Kathrein		CCI Products		Powerwave							
ANTENNA SIZE (H x W x D)	55X11.9X7.1		55.2X11.8X6		48X14.4X7.3		55X11X5							
ANTENNA WEIGHT	33.5		40.8		57		35							
AZIMUTH	130		130		130		263							
MAGNETIC DECLINATION														
RADIATION CENTER (feet)	100		100		100		100							
ANTENNA TIP HEIGHT	102		102		102		102							
MECHANICAL DOWNTILT	0		0		0		0							
FEEDER AMOUNT					Fiber + 2 Coax		2							
VERTICAL SEPARATION from ANTENNA ABOVE (TIP to TIP)														
VERTICAL SEPARATION from ANTENNA BELOW (TIP to TIP)														
HORIZONTAL SEPARATION from CLOSEST ANTENNA to LEFT (CENTERLINE to CENTERLINE)														
HORIZONTAL SEPARATION from CLOSEST ANTENNA to RIGHT (CENTERLINE to CENTERLINE)														
HORIZONTAL SEPARATION from ANOTHER ANTENNA (which antenna # / # of inches)				36										
Antenna RET Motor (QTY/MODEL)						Internal	2	Powerwave 7020						
SURGE ARRESTOR (QTY/MODEL)					4	APTDC-BDFDM-DBW								
DIPLEXER (QTY/MODEL)					4	CCI Triplexer -TPX-070821	2	Powerwave / LGP 21901						
DUPLEXER (QTY/MODEL)														
Antenna RET CONTROL UNIT (QTY/MODEL)		LTE RRH		LTE RRH		LTE RRH								
DC BLOCK (QTY/MODEL)														
TMA/LNA (QTY/MODEL)							2	Powerwave LGP 21401 (DB - 850 Bypass)						
CURRENT INJECTORS FOR TMA (QTY/MODEL)							2	Polyphaser 1000860						
PDU FOR TMAS (QTY/MODEL)														
FILTER (QTY/MODEL)														
SQUID (QTY/MODEL)														
FIBER TRUNK (QTY/MODEL)														
DC TRUNK (QTY/MODEL)														
REPEATER (QTY/MODEL)														
RRH - 700 band (QTY/MODEL)	1	RRUS-11 (REUSE ONLY)	1	B14 4478	1	RRUS-E2 B29								
RRH - 850 band (QTY/MODEL)					1	RRUS-11 (REUSE ONLY)								
RRH - 1900 band (QTY/MODEL)	1	RRUS-32 B2												
RRH - AWS band (QTY/MODEL)			1	RRUS-32 B66										
RRH - WCS band (QTY/MODEL)					1	RRUS-32								
Additional RRH #1 - any band (QTY/MODEL)														
Additional RRH #2 - any band (QTY/MODEL)														
Additional Component 1 (QTY/MODEL)					2	Kathrein / 782-10253 (1) & 782-10254 (1)								
Additional Component 2 (QTY/MODEL)														
Additional Component 3 (QTY/MODEL)														
Local Market Note 1														
Local Market Note 2														
Local Market Note 3														

PORT SPECIFIC FIELDS	PORT NUMBER	USEID (CSSng)	USEID (Atoll)	ATOLL TXID	ATOLL CELL ID	TX/RX ?	TECHNOLOGY/FREQUENCY	ANTENNA ATOLL	ANTENNA GAIN	ELECTRICAL AZIMUTH	ELECTRICAL TILT	RRH LOCATION (Top/Bottom/Integrated/None)	FEEDERS TYPE	FEEDER LENGTH (feet)	RXAIT KIT MODULE?	TRIPLEXER or LLC (QTY)	TRIPLEXER or LLC (MODEL)	SCPA/MCPA MODULE?	HATCHPLATE POWER (Watts)	ERP (Watts)	Antenna RET Name	CABLE NUMBER	CABLE ID (CSSNG)
ANTENNA POSITION 1	PORT 1	16327.B.700.4G.1	16327.B.700.4G.1	CTL02157_7B_1	CTL02157_7B_1		LTE 700	SBNHH-1D65A_722MHz_03DT	14.1	130	3	TOP	FIBER	0						1475.7065		9	
	PORT 3	16327.B.1900.4G.1	16327.B.1900.4G.1	CTL02157_9B_1	CTL02157_9B_1		LTE 1900	SBNHH-1D65A_1930MHz_03DT	16.3	130	3	TOP	FIBER	0						3664.3757		10	
	PORT 4	16327.B.1900.4G.4	16327.B.1900.4G.4	CTL02157_9B_2	CTL02157_9B_2		LTE 1900	SBNHH-1D65A_1930MHz_03DT	16.3	130	3	TOP	FIBER	0						3664.3757		10	

ANTENNA POSITION 2	**PORT 1**	16327.B.700.4G.5	16327.B.700.4G.5	CTL00857_7B_3_F	CTL00857_7B_3_F		LTE 700	80010964_777MHz_03DT	14.1	130		TOP	FIBER	0						1475.7065		11	
	PORT 3	16327.B.AWS.4G.4	16327.B.AWS.4G.4	CTL00857_2B_2	CTL00857_2B_2		LTE AWS	80010964_2133MHz_03DT	16.1	130		TOP	FIBER	0						3837.0724		11	
ANTENNA POSITION 3	**PORT 1**	16327.B.850.4G.2	16327.B.850.4G.1	CTL00857_8B_1	CTL00857_8B_1		LTE 850	OPA-65R-LCUU-H4_849MHz_03DT	13.3	130	3	Bottom	Commscope 1-5/8 (850)	131						659.1738		13	
	PORT 2	16327.B.700.4G.5	16327.B.700.4G.4	CTL00857_7B_2_E	CTL00857_7B_2_E		LTE 700	OPA-65R-LCUU-H4_719MHz_03DT	12.7	130	3	Bottom	Commscope 1-5/8 (850)	131						574.1164		13	
	PORT 3	16327.B.WCS.4G.1	16327.B.WCS.4G.1	CTL02157_3B_1	CTL02157_3B_1		LTE WCS	OPA-65R-LCUU-H4_2310MHz_03DT	16.7	130	3	TOP	FIBER	0						1044.7202		14	
ANTENNA POSITION 4	**PORT 1**	16327.B.850.3G.1	16327.B.850.3G.1	CTV21572	CTV21572		UMTS 850	7770.00.850.10	13.5	263	10	None	Commscope 1-5/8 (850)	131						275.42		15	

Section 15C - CURRENT TOWER CONFIGURATION - SECTOR C

ANTENNA POSITION is LEFT to RIGHT from BACK OF ANTENNA (unless otherwise specified)	ANTENNA POSITION 1		ANTENNA POSITION 2		ANTENNA POSITION 3		ANTENNA POSITION 4		ANTENNA POSITION 5		ANTENNA POSITION 6		ANTENNA POSITION 7	
ANTENNA MAKE - MODEL	SBNHH-1D65A		800-10964		OPA-65R-LCUU-H4		7770							
ANTENNA VENDOR	Andrew		Kathrein		CCI Products		Powerwave							
ANTENNA SIZE (H x W x D)	55X11.9X7.1		55.2X11.8X6		48X14.4X7.3		55X11X5							
ANTENNA WEIGHT	33.5		40.8		57		35							
AZIMUTH	250		250		250		23							
MAGNETIC DECLINATION														
RADIATION CENTER (feet)	100		100		100		100							
ANTENNA TIP HEIGHT	102		102		102		102							
MECHANICAL DOWNTILT	0		0		0		0							
FEEDER AMOUNT					Fiber + 2 Coax		2							
VERTICAL SEPARATION from ANTENNA ABOVE (TIP to TIP)														
VERTICAL SEPARATION from ANTENNA BELOW (TIP to TIP)														
HORIZONTAL SEPARATION from CLOSEST ANTENNA to LEFT (CENTERLINE to CENTERLINE)														
HORIZONTAL SEPARATION from CLOSEST ANTENNA to RIGHT (CENTERLINE to CENTERLINE)														
HORIZONTAL SEPARATION from ANOTHER ANTENNA (which antenna # / # of inches)				36										
Antenna RET Motor (QTY/MODEL)						Internal	2	Powerwave 7020						
SURGE ARRESTOR (QTY/MODEL)					4	APTDC-BDFDM-DBW								
DIPLEXER (QTY/MODEL)					4	CCI Triplexer -TPX-070821	2	Powerwave / LGP 21901						
DUPLEXER (QTY/MODEL)														
Antenna RET CONTROL UNIT (QTY/MODEL)		LTE RRH		LTE RRH		LTE RRH								
DC BLOCK (QTY/MODEL)														
TMA/LNA (QTY/MODEL)							2	Powerwave LGP 21401 (DB - 850 Bypass)						
CURRENT INJECTORS FOR TMA (QTY/MODEL)							2	Polyphaser 1000860						
PDU FOR TMAS (QTY/MODEL)														
FILTER (QTY/MODEL)														
SQUID (QTY/MODEL)														
FIBER TRUNK (QTY/MODEL)														
DC TRUNK (QTY/MODEL)														
REPEATER (QTY/MODEL)														
RRH - 700 band (QTY/MODEL)	1	RRUS-11 (REUSE ONLY)	1	B14 4478	1	RRUS-E2 B29								
RRH - 850 band (QTY/MODEL)					1	RRUS-11 (REUSE ONLY)								
RRH - 1900 band (QTY/MODEL)	1	RRUS-32 B2												
RRH - AWS band (QTY/MODEL)			1	RRUS-32 B66										
RRH - WCS band (QTY/MODEL)					1	RRUS-32								
Additional RRH #1 - any band (QTY/MODEL)														
Additional RRH #2 - any band (QTY/MODEL)														
Additional Component 1 (QTY/MODEL)					2	Kathrein / 782-10253 (1) & 782-10254 (1)								
Additional Component 2 (QTY/MODEL)														
Additional Component 3 (QTY/MODEL)														
Local Market Note 1														
Local Market Note 2														
Local Market Note 3														

PORT SPECIFIC FIELDS	PORT NUMBER	USEID (CSSng)	USEID (Atoll)	ATOLL TXID	ATOLL CELL ID	TX/RX ?	TECHNOLOGY/FREQUENCY	ANTENNA ATOLL	ANTENNA GAIN	ELECTRICAL AZIMUTH	ELECTRICAL TILT	RRH LOCATION (Top/Bottom/Integrated/None)	FEEDERS TYPE	FEEDER LENGTH (feet)	RXAIT KIT MODULE?	TRIPLEXER or LLC (QTY)	TRIPLEXER or LLC (MODEL)	SCPA/MCPA MODULE?	HATCHPLATE POWER (Watts)	ERP (Watts)	Antenna RET Name	CABLE NUMBER	CABLE ID (CSSNG)
ANTENNA POSITION 1	PORT 1	16327.C.700.4G.1	16327.C.700.4G.1	CTL02157_7C_1	CTL02157_7C_1		LTE 700	SBNHH-1D65A_722MHz_08DT	14.1	250	8	TOP	FIBER	0						1475.7065		17	
	PORT 3	16327.C.1900.4G.1	16327.C.1900.4G.1	CTL02157_9C_1	CTL02157_9C_1		LTE 1900	SBNHH-1D65A_1930MHz_05DT	16.3	250	5	TOP	FIBER	0						3664.3757		18	
	PORT 4	16327.C.1900.4G.4	16327.C.1900.4G.4	CTL02157_9C_2	CTL02157_9C_2		LTE 1900	SBNHH-1D65A_1930MHz_05DT	16.3	250	5	TOP	FIBER	0						3664.3757		18	

ANTENNA POSITION 2	**PORT 1**	16327.C.700.4G.5	16327.C.700.4G.5	CTL00857_7C_3_F	CTL00857_7C_3_F		LTE 700	80010964_777MHz_08DT	14.1	250		TOP	FIBER	0						1475.7065		19	
	PORT 3	16327.C.AWS.4G.4	16327.C.AWS.4G.4	CTL00857_2C_2	CTL00857_2C_2		LTE AWS	80010964_2133MHz_03DT	16.1	250		TOP	FIBER	0						3837.0724		19	
ANTENNA POSITION 3	**PORT 1**	16327.C.850.4G.2	16327.C.850.4G.1	CTL00857_8C_1	CTL00857_8C_1		LTE 850	OPA-65R-LCUU-H4_849MHz_08DT	13.4	250	8	Bottom	Commscope 1-5/8 (850)	131						659.1738		21	
	PORT 2	16327.C.700.4G.5	16327.C.700.4G.4	CTL00857_7C_2_E	CTL00857_7C_2_E		LTE 700	OPA-65R-LCUU-H4_719MHz_08DT	12.6	250	8	Bottom	Commscope 1-5/8 (850)	131						574.1164		21	
	PORT 3	16327.C.WCS.4G.1	16327.C.WCS.4G.1	CTL02157_3C_1	CTL02157_3C_1		LTE WCS	OPA-65R-LCUU-H4_2310MHz_03DT	16.7	250	3	TOP	FIBER	0						1044.7202		22	
ANTENNA POSITION 4	**PORT 1**	16327.C.850.3G.1	16327.C.850.3G.1	CTV21573	CTV21573		UMTS 850	7770.00.850.10	13.5	23	10	None	Commscope 1-5/8 (850)	131						275.42		23	

Section 16A - PLANNED/PROPOSED TOWER CONFIGURATION - SECTOR A (OR OMNI)

ANTENNA POSITION is LEFT to RIGHT from BACK OF ANTENNA (unless otherwise specified)	ANTENNA POSITION 1		ANTENNA POSITION 2		ANTENNA POSITION 3		ANTENNA POSITION 4		ANTENNA POSITION 5		ANTENNA POSITION 6		ANTENNA POSITION 7	
Existing Antenna?					Yes									
ANTENNA MAKE - MODEL														
ANTENNA VENDOR														
ANTENNA SIZE (H x W x D)														
ANTENNA WEIGHT														
AZIMUTH														
MAGNETIC DECLINATION														
RADIATION CENTER (feet)														
ANTENNA TIP HEIGHT														
MECHANICAL DOWNTILT														
FEEDER AMOUNT														
VERTICAL SEPARATION from ANTENNA ABOVE (TIP to TIP)														
VERTICAL SEPARATION from ANTENNA BELOW (TIP to TIP)														
HORIZONTAL SEPARATION from CLOSEST ANTENNA to LEFT (CENTERLINE to CENTERLINE)														
HORIZONTAL SEPARATION from CLOSEST ANTENNA to RIGHT (CENTERLINE to CENTERLINE)														
HORIZONTAL SEPARATION from ANOTHER ANTENNA (which antenna # / # of inches)														
Antenna RET Motor (QTY/MODEL)														
SURGE ARRESTOR (QTY/MODEL)														
DIPLEXER (QTY/MODEL)					1	CBC23SR-43								
DUPLEXER (QTY/MODEL)														
Antenna RET CONTROL UNIT (QTY/MODEL)														
DC BLOCK (QTY/MODEL)														
TMA/LNA (QTY/MODEL)														
CURRENT INJECTORS FOR TMA (QTY/MODEL)														
PDU FOR TMAS (QTY/MODEL)														
FILTER (QTY/MODEL)														
SQUID (QTY/MODEL)														
FIBER TRUNK (QTY/MODEL)														
DC TRUNK (QTY/MODEL)														
REPEATER (QTY/MODEL)					1	SDARS remote								
RRH - 700 band (QTY/MODEL)														
RRH - 850 band (QTY/MODEL)														
RRH - 1900 band (QTY/MODEL)														
RRH - AWS band (QTY/MODEL)														
RRH - WCS band (QTY/MODEL)														
Additional RRH #1 - any band (QTY/MODEL)														
Additional RRH #2 - any band (QTY/MODEL)														
Additional Component 1 (QTY/MODEL)														
Additional Component 2 (QTY/MODEL)														
Additional Component 3 (QTY/MODEL)														
Local Market Note 1	Add diplexer CBC23SR-43. Add SDARS remote 1 per sector.Add ION M23 Main Unit w/3 OTRX.													
Local Market Note 2														
Local Market Note 3														

PORT SPECIFIC FIELDS	PORT NUMBER	USEID (CSSng)	USEID (Atoll)	ATOLL TXID	ATOLL CELL ID	TX/RX ?	TECHNOLOGY/FREQUENCY	ANTENNA ATOLL	ANTENNA GAIN	ELECTRICAL AZIMUTH	ELECTRICAL TILT	RRH LOCATION (Top/Bottom/Integrated/None)	FEEDERS TYPE	FEEDER LENGTH (feet)	RXAIT KIT MODULE?	TRIPLEXER or LLC (QTY)	TRIPLEXER or LLC (MODEL)	SCPA/MCPA MODULE?	HATCHPLATE POWER (Watts)	ERP (Watts)	Antenna RET Name	CABLE NUMBER	CABLE ID (CSSNG)
ANTENNA POSITION 3	PORT 3	16327.A.WCS.4G.1	16327.A.WCS.4G.1	CTL02157_3A_1	CTL02157_3A_1		LTE WCS	OPA-65R-LCUU-H6_2350MHz_03DT	17.5	10	3	TOP	FIBER	0						1227.4392		6	

Section 16B - PLANNED/PROPOSED TOWER CONFIGURATION - SECTOR B

ANTENNA POSITION is LEFT to RIGHT from BACK OF ANTENNA (unless otherwise specified)	ANTENNA POSITION 1		ANTENNA POSITION 2		ANTENNA POSITION 3		ANTENNA POSITION 4		ANTENNA POSITION 5		ANTENNA POSITION 6		ANTENNA POSITION 7	
Existing Antenna?					Yes									
ANTENNA MAKE - MODEL														
ANTENNA VENDOR														
ANTENNA SIZE (H x W x D)														
ANTENNA WEIGHT														
AZIMUTH														
MAGNETIC DECLINATION														
RADIATION CENTER (feet)														
ANTENNA TIP HEIGHT														
MECHANICAL DOWNTILT														
FEEDER AMOUNT														
VERTICAL SEPARATION from ANTENNA ABOVE (TIP to TIP)														
VERTICAL SEPARATION from ANTENNA BELOW (TIP to TIP)														
HORIZONTAL SEPARATION from CLOSEST ANTENNA to LEFT (CENTERLINE to CENTERLINE)														
HORIZONTAL SEPARATION from CLOSEST ANTENNA to RIGHT (CENTERLINE to CENTERLINE)														
HORIZONTAL SEPARATION from ANOTHER ANTENNA (which antenna # / # of inches)														
Antenna RET Motor (QTY/MODEL)														
SURGE ARRESTOR (QTY/MODEL)														
DIPLEXER (QTY/MODEL)					1	CBC23SR-43								
DUPLEXER (QTY/MODEL)														
Antenna RET CONTROL UNIT (QTY/MODEL)														
DC BLOCK (QTY/MODEL)														
TMA/LNA (QTY/MODEL)														
CURRENT INJECTORS FOR TMA (QTY/MODEL)														
PDU FOR TMAS (QTY/MODEL)														
FILTER (QTY/MODEL)														
SQUID (QTY/MODEL)														
FIBER TRUNK (QTY/MODEL)														
DC TRUNK (QTY/MODEL)														
REPEATER (QTY/MODEL)					1	SDARS remote								
RRH - 700 band (QTY/MODEL)														
RRH - 850 band (QTY/MODEL)														
RRH - 1900 band (QTY/MODEL)														
RRH - AWS band (QTY/MODEL)														
RRH - WCS band (QTY/MODEL)														
Additional RRH #1 - any band (QTY/MODEL)														
Additional RRH #2 - any band (QTY/MODEL)														
Additional Component 1 (QTY/MODEL)														
Additional Component 2 (QTY/MODEL)														
Additional Component 3 (QTY/MODEL)														
Local Market Note 1	Add diplexer CBC23SR-43. Add SDARS remote 1 per sector.Add ION M23 Main Unit w/3 OTRX.													
Local Market Note 2														
Local Market Note 3														

PORT SPECIFIC FIELDS	PORT NUMBER	USEID (CSSng)	USEID (Atoll)	ATOLL TXID	ATOLL CELL ID	TX/RX ?	TECHNOLOGY/FREQUENCY	ANTENNA ATOLL	ANTENNA GAIN	ELECTRICAL AZIMUTH	ELECTRICAL TILT	RRH LOCATION (Top/Bottom/Integrated/None)	FEEDERS TYPE	FEEDER LENGTH (feet)	RXAIT KIT MODULE?	TRIPLEXER or LLC (QTY)	TRIPLEXER or LLC (MODEL)	SCPA/MCPA MODULE?	HATCHPLATE POWER (Watts)	ERP (Watts)	Antenna RET Name	CABLE NUMBER	CABLE ID (CSSNG)
ANTENNA POSITION 3	PORT 3	16327.B.WCS.4G.1	16327.B.WCS.4G.1	CTL02157_3B_1	CTL02157_3B_1		LTE WCS	OPA-65R-LCUU-H4_2310MHz_03DT	16.7	130	3	TOP	FIBER	0						1044.7202		14	

Section 16C - PLANNED/PROPOSED TOWER CONFIGURATION - SECTOR C

ANTENNA POSITION is LEFT to RIGHT from BACK OF ANTENNA (unless otherwise specified)	ANTENNA POSITION 1		ANTENNA POSITION 2		ANTENNA POSITION 3		ANTENNA POSITION 4		ANTENNA POSITION 5		ANTENNA POSITION 6		ANTENNA POSITION 7	
Existing Antenna?					Yes									
ANTENNA MAKE - MODEL														
ANTENNA VENDOR														
ANTENNA SIZE (H x W x D)														
ANTENNA WEIGHT														
AZIMUTH														
MAGNETIC DECLINATION														
RADIATION CENTER (feet)														
ANTENNA TIP HEIGHT														
MECHANICAL DOWNTILT														
FEEDER AMOUNT														
VERTICAL SEPARATION from ANTENNA ABOVE (TIP to TIP)														
VERTICAL SEPARATION from ANTENNA BELOW (TIP to TIP)														
HORIZONTAL SEPARATION from CLOSEST ANTENNA to LEFT (CENTERLINE to CENTERLINE)														
HORIZONTAL SEPARATION from CLOSEST ANTENNA to RIGHT (CENTERLINE to CENTERLINE)														
HORIZONTAL SEPARATION from ANOTHER ANTENNA (which antenna # / # of inches)														
Antenna RET Motor (QTY/MODEL)														
SURGE ARRESTOR (QTY/MODEL)														
DIPLEXER (QTY/MODEL)					1	CBC23SR-43								
DUPLEXER (QTY/MODEL)														
Antenna RET CONTROL UNIT (QTY/MODEL)														
DC BLOCK (QTY/MODEL)														
TMA/LNA (QTY/MODEL)														
CURRENT INJECTORS FOR TMA (QTY/MODEL)														
PDU FOR TMAS (QTY/MODEL)														
FILTER (QTY/MODEL)														
SQUID (QTY/MODEL)														
FIBER TRUNK (QTY/MODEL)														
DC TRUNK (QTY/MODEL)														
REPEATER (QTY/MODEL)					1	SDARS remote								
RRH - 700 band (QTY/MODEL)														
RRH - 850 band (QTY/MODEL)														
RRH - 1900 band (QTY/MODEL)														
RRH - AWS band (QTY/MODEL)														
RRH - WCS band (QTY/MODEL)														
Additional RRH #1 - any band (QTY/MODEL)														
Additional RRH #2 - any band (QTY/MODEL)														
Additional Component 1 (QTY/MODEL)														
Additional Component 2 (QTY/MODEL)														
Additional Component 3 (QTY/MODEL)														
Local Market Note 1	Add diplexer CBC23SR-43. Add SDARS remote 1 per sector.Add ION M23 Main Unit w/3 OTRX.													
Local Market Note 2														
Local Market Note 3														

PORT SPECIFIC FIELDS	PORT NUMBER	USEID (CSSng)	USEID (Atoll)	ATOLL TXID	ATOLL CELL ID	TX/RX ?	TECHNOLOGY/FREQUENCY	ANTENNA ATOLL	ANTENNA GAIN	ELECTRICAL AZIMUTH	ELECTRICAL TILT	RRH LOCATION (Top/Bottom/Integrated/None)	FEEDERS TYPE	FEEDER LENGTH (feet)	RXAIT KIT MODULE?	TRIPLEXER or LLC (QTY)	TRIPLEXER or LLC (MODEL)	SCPA/MCPA MODULE?	HATCHPLATE POWER (Watts)	ERP (Watts)	Antenna RET Name	CABLE NUMBER	CABLE ID (CSSNG)
ANTENNA POSITION 3	PORT 3	16327.C.WCS.4G.1	16327.C.WCS.4G.1	CTL02157_3C_1	CTL02157_3C_1		LTE WCS	OPA-65R-LCUU-H4_2310MHz_03DT	16.7	250	3	TOP	FIBER	0						1044.7202		22	

Section 17A - FINAL TOWER CONFIGURATION - SECTOR A (OR OMNI)

ANTENNA POSITION is LEFT to RIGHT from BACK OF ANTENNA (unless otherwise specified)	ANTENNA POSITION 1		ANTENNA POSITION 2		ANTENNA POSITION 3		ANTENNA POSITION 4		ANTENNA POSITION 5		ANTENNA POSITION 6		ANTENNA POSITION 7	
ANTENNA MAKE - MODEL	HPA-65R-BUU-H6		800-10965		OPA-65R-LCUU-H6		7770							
ANTENNA VENDOR	CCI		Kathrein		CCI Products		Powerwave							
ANTENNA SIZE (H x W x D)	72X14.8X9		78.7X20X6.9		72X14.8X7.4		55X11X5							
ANTENNA WEIGHT	51		108.6		73		35							
AZIMUTH	10		10		10		143							
MAGNETIC DECLINATION														
RADIATION CENTER (feet)	100		100		100		100							
ANTENNA TIP HEIGHT	103		103		103		102							
MECHANICAL DOWNTILT	0		0		0		0							
FEEDER AMOUNT					Fiber + 2 Coax		2							
VERTICAL SEPARATION from ANTENNA ABOVE (TIP to TIP)														
VERTICAL SEPARATION from ANTENNA BELOW (TIP to TIP)														
HORIZONTAL SEPARATION from CLOSEST ANTENNA to LEFT (CENTERLINE to CENTERLINE)														
HORIZONTAL SEPARATION from CLOSEST ANTENNA to RIGHT (CENTERLINE to CENTERLINE)														
HORIZONTAL SEPARATION from ANOTHER ANTENNA (which antenna # / # of inches)				36										
Antenna RET Motor (QTY/MODEL)						Internal	2	Powerwave 7020						
SURGE ARRESTOR (QTY/MODEL)	1	DC/Fiber Squid	1	DC Squid	5	DC/Fiber Squid+ (4)APTDC-BDFDM-DBW								
DIPLEXER (QTY/MODEL)					5	CCI Triplexer -TPX-070821 + CBC23SR-43	2	Powerwave / LGP 21901						
DUPLEXER (QTY/MODEL)														
Antenna RET CONTROL UNIT (QTY/MODEL)		LTE RRH		LTE RRH		LTE RRH	1	Powerwave 7070						
DC BLOCK (QTY/MODEL)														
TMA/LNA (QTY/MODEL)							2	Powerwave LGP 21401 (DB - 850 Bypass)						
CURRENT INJECTORS FOR TMA (QTY/MODEL)							2	Polyphaser 1000860						
PDU FOR TMAS (QTY/MODEL)							1	LGP 12104 (1900 AND 850 Bypass TMA)						
FILTER (QTY/MODEL)														
SQUID (QTY/MODEL)														
FIBER TRUNK (QTY/MODEL)														
DC TRUNK (QTY/MODEL)														
REPEATER (QTY/MODEL)					1	SDARS remote								
RRH - 700 band (QTY/MODEL)	1	RRUS-11 (REUSE ONLY)	1	B14 4478	1	RRUS-E2 B29								
RRH - 850 band (QTY/MODEL)					1	RRUS-11 (REUSE ONLY)								
RRH - 1900 band (QTY/MODEL)	1	RRUS-32 B2												
RRH - AWS band (QTY/MODEL)			1	RRUS-32 B66										
RRH - WCS band (QTY/MODEL)					1	RRUS-32								
Additional RRH #1 - any band (QTY/MODEL)														
Additional RRH #2 - any band (QTY/MODEL)														
Additional Component 1 (QTY/MODEL)														
Additional Component 2 (QTY/MODEL)					2	Kathrein / 782-10253 (1) & 782-10254 (1)								
Additional Component 3 (QTY/MODEL)														
Local Market Note 1	Add diplexer CBC23SR-43. Add SDARS remote 1 per sector.Add ION M23 Main Unit w/3 OTRX.													
Local Market Note 2														
Local Market Note 3														

PORT SPECIFIC FIELDS	PORT NUMBER	USEID (CSSng)	USEID (Atoll)	ATOLL TXID	ATOLL CELL ID	TX/RX ?	TECHNOLOGY/FREQUENCY	ANTENNA ATOLL	ANTENNA GAIN	ELECTRICAL AZIMUTH	ELECTRICAL TILT	RRH LOCATION (Top/Bottom/Integrated/None)	FEEDERS TYPE	FEEDER LENGTH (feet)	RXAIT KIT MODULE?	TRIPLEXER or LLC (QTY)	TRIPLEXER or LLC (MODEL)	SCPA/MCPA MODULE?	HATCHPLATE POWER (Watts)	ERP (Watts)	Antenna RET Name	CABLE NUMBER	CABLE ID (CSSNG)
ANTENNA POSITION 1	PORT 1	16327.A.700.4G.1	16327.A.700.4G.1	CTL02157_7A_1	CTL02157_7A_1		LTE 700	HPA-65R-BUU-H6_719MHz_02DT	15.6	10	2	TOP	FIBER	0						1475.7065		1	
	PORT 3	16327.A.1900.4G.1	16327.A.1900.4G.1	CTL02157_9A_1	CTL02157_9A_1		LTE 1900	HPA-65R-BUU-H6_1930MHz_03DT	17.29	10	2	TOP	FIBER	0						3664.3757		2	
	PORT 4	16327.A.1900.4G.4	16327.A.1900.4G.4	CTL02157_9A_2	CTL02157_9A_2		LTE 1900	HPA-65R-BUU-H6_1930MHz_03DT	17.29	10	2	TOP	FIBER	0						3664.3757		2	

ANTENNA POSITION 2	**PORT 1**	16327.A.700.4G.5,16327.A.700.4G.6	16327.A.700.4G.5	CTL00857_7A_3_F	CTL00857_7A_3_F		LTE 700	80010965_777MHz_02DT	15.6	10		TOP	FIBER	0						1475.7065		3	
	PORT 3	16327.A.AWS.4G.4	16327.A.AWS.4G.4	CTL00857_2A_2	CTL00857_2A_2		LTE AWS	80010965_2133MHz_03DT	15.2	10		TOP	FIBER	0						3837.0724		3	
ANTENNA POSITION 3	**PORT 1**	16327.A.850.4G.2	16327.A.850.4G.1	CTL00857_8A_1	CTL00857_8A_1		LTE 850	OPA-65R-LCUU-H6_849MHz_03DT	14.6	10	3	Bottom	Commscope 1-5/8 (850)	131						889.2011		5	
	PORT 2	16327.A.700.4G.5	16327.A.700.4G.4	CTL00857_7A_2_E	CTL00857_7A_2_E		LTE 700	OPA-65R-LCUU-H6_719MHz_03DT	13.9	10	3	Bottom	Commscope 1-5/8 (850)	131						574.1164		5	
	PORT 3	16327.A.WCS.4G.1	16327.A.WCS.4G.1	CTL02157_3A_1	CTL02157_3A_1		LTE WCS	OPA-65R-LCUU-H6_2350MHz_03DT	17.5	10	3	TOP	FIBER	0						1227.4392		6	
ANTENNA POSITION 4	**PORT 1**	16327.A.850.3G.1	16327.A.850.3G.1	CTV21571	CTV21571		UMTS 850	7770.00.850.08	13.5	143	8	None	Commscope 1-5/8 (850)	131						275.42		7	

Section 17B - FINAL TOWER CONFIGURATION - SECTOR B

ANTENNA POSITION is LEFT to RIGHT from BACK OF ANTENNA (unless otherwise specified)	ANTENNA POSITION 1		ANTENNA POSITION 2		ANTENNA POSITION 3		ANTENNA POSITION 4		ANTENNA POSITION 5		ANTENNA POSITION 6		ANTENNA POSITION 7	
ANTENNA MAKE - MODEL	SBNHH-1D65A		800-10964		OPA-65R-LCUU-H4		7770							
ANTENNA VENDOR	Andrew		Kathrein		CCI Products		Powerwave							
ANTENNA SIZE (H x W x D)	55X11.9X7.1		55.2X11.8X6		48X14.4X7.3		55X11X5							
ANTENNA WEIGHT	33.5		40.8		57		35							
AZIMUTH	130		130		130		263							
MAGNETIC DECLINATION														
RADIATION CENTER (feet)	100		100		100		100							
ANTENNA TIP HEIGHT	102		102		102		102							
MECHANICAL DOWNTILT	0		0		0		0							
FEEDER AMOUNT					Fiber + 2 Coax		2							
VERTICAL SEPARATION from ANTENNA ABOVE (TIP to TIP)														
VERTICAL SEPARATION from ANTENNA BELOW (TIP to TIP)														
HORIZONTAL SEPARATION from CLOSEST ANTENNA to LEFT (CENTERLINE to CENTERLINE)														
HORIZONTAL SEPARATION from CLOSEST ANTENNA to RIGHT (CENTERLINE to CENTERLINE)														
HORIZONTAL SEPARATION from ANOTHER ANTENNA (which antenna # / # of inches)				36										
Antenna RET Motor (QTY/MODEL)						Internal	2	Powerwave 7020						
SURGE ARRESTOR (QTY/MODEL)					4	APTDC-BDFDM-DBW								
DIPLEXER (QTY/MODEL)					5	CCI Triplexer -TPX-070821 + CBC23SR-43	2	Powerwave / LGP 21901						
DUPLEXER (QTY/MODEL)														
Antenna RET CONTROL UNIT (QTY/MODEL)		LTE RRH		LTE RRH		LTE RRH								
DC BLOCK (QTY/MODEL)														
TMA/LNA (QTY/MODEL)							2	Powerwave LGP 21401 (DB - 850 Bypass)						
CURRENT INJECTORS FOR TMA (QTY/MODEL)							2	Polyphaser 1000860						
PDU FOR TMAS (QTY/MODEL)														
FILTER (QTY/MODEL)														
SQUID (QTY/MODEL)														
FIBER TRUNK (QTY/MODEL)														
DC TRUNK (QTY/MODEL)														
REPEATER (QTY/MODEL)					1	SDARS remote								
RRH - 700 band (QTY/MODEL)	1	RRUS-11 (REUSE ONLY)	1	B14 4478	1	RRUS-E2 B29								
RRH - 850 band (QTY/MODEL)					1	RRUS-11 (REUSE ONLY)								
RRH - 1900 band (QTY/MODEL)	1	RRUS-32 B2												
RRH - AWS band (QTY/MODEL)			1	RRUS-32 B66										
RRH - WCS band (QTY/MODEL)					1	RRUS-32								
Additional RRH #1 - any band (QTY/MODEL)														
Additional RRH #2 - any band (QTY/MODEL)														
Additional Component 1 (QTY/MODEL)														
Additional Component 2 (QTY/MODEL)					2	Kathrein / 782-10253 (1) & 782-10254 (1)								
Additional Component 3 (QTY/MODEL)														
Local Market Note 1	Add diplexer CBC23SR-43. Add SDARS remote 1 per sector.Add ION M23 Main Unit w/3 OTRX.													
Local Market Note 2														
Local Market Note 3														

PORT SPECIFIC FIELDS	PORT NUMBER	USEID (CSSng)	USEID (Atoll)	ATOLL TXID	ATOLL CELL ID	TX/RX ?	TECHNOLOGY/FREQUENCY	ANTENNA ATOLL	ANTENNA GAIN	ELECTRICAL AZIMUTH	ELECTRICAL TILT	RRH LOCATION (Top/Bottom/Integrated/None)	FEEDERS TYPE	FEEDER LENGTH (feet)	RXAIT KIT MODULE?	TRIPLEXER or LLC (QTY)	TRIPLEXER or LLC (MODEL)	SCPA/MCPA MODULE?	HATCHPLATE POWER (Watts)	ERP (Watts)	Antenna RET Name	CABLE NUMBER	CABLE ID (CSSNG)
ANTENNA POSITION 1	PORT 1	16327.B.700.4G.1	16327.B.700.4G.1	CTL02157_7B_1	CTL02157_7B_1		LTE 700	SBNHH-1D65A_722MHz_03DT	14.1	130	3	TOP	FIBER	0						1475.7065		9	
	PORT 3	16327.B.1900.4G.1	16327.B.1900.4G.1	CTL02157_9B_1	CTL02157_9B_1		LTE 1900	SBNHH-1D65A_1930MHz_03DT	16.3	130	3	TOP	FIBER	0						3664.3757		10	
	PORT 4	16327.B.1900.4G.4	16327.B.1900.4G.4	CTL02157_9B_2	CTL02157_9B_2		LTE 1900	SBNHH-1D65A_1930MHz_03	16.3	130	3	TOP	FIBER	0						3664.3757		10	

								DT															
ANTENNA POSITION 2	**PORT 1**	16327.B.700.4G.5,16327.B.700.4G.6	16327.B.700.4G.5	CTL00857_7B_3_F	CTL00857_7B_3_F		LTE 700	80010964_777MHz_03DT	14.1	130		TOP	FIBER	0						1475.7065		11	
	PORT 3	16327.B.AWS.4G.4	16327.B.AWS.4G.4	CTL00857_2B_2	CTL00857_2B_2		LTE AWS	80010964_2133MHz_03DT	16.1	130		TOP	FIBER	0						3837.0724		11	
ANTENNA POSITION 3	**PORT 1**	16327.B.850.4G.2	16327.B.850.4G.1	CTL00857_8B_1	CTL00857_8B_1		LTE 850	OPA-65R-LCUU-H4_849MHz_03DT	13.3	130	3	Bottom	Commscope 1-5/8 (850)	131						659.1738		13	
	PORT 2	16327.B.700.4G.5	16327.B.700.4G.4	CTL00857_7B_2_E	CTL00857_7B_2_E		LTE 700	OPA-65R-LCUU-H4_719MHz_03DT	12.7	130	3	Bottom	Commscope 1-5/8 (850)	131						574.1164		13	
	PORT 3	16327.B.WCS.4G.1	16327.B.WCS.4G.1	CTL02157_3B_1	CTL02157_3B_1		LTE WCS	OPA-65R-LCUU-H4_2310MHz_03DT	16.7	130	3	TOP	FIBER	0						1044.7202		14	
ANTENNA POSITION 4	**PORT 1**	16327.B.850.3G.1	16327.B.850.3G.1	CTV21572	CTV21572		UMTS 850	7770.00.850.10	13.5	263	10	None	Commscope 1-5/8 (850)	131						275.42		15	

Section 17C - FINAL TOWER CONFIGURATION - SECTOR C

ANTENNA POSITION is LEFT to RIGHT from BACK OF ANTENNA (unless otherwise specified)	ANTENNA POSITION 1		ANTENNA POSITION 2		ANTENNA POSITION 3		ANTENNA POSITION 4		ANTENNA POSITION 5		ANTENNA POSITION 6		ANTENNA POSITION 7	
ANTENNA MAKE - MODEL	SBNHH-1D65A		800-10964		OPA-65R-LCUU-H4		7770							
ANTENNA VENDOR	Andrew		Kathrein		CCI Products		Powerwave							
ANTENNA SIZE (H x W x D)	55X11.9X7.1		55.2X11.8X6		48X14.4X7.3		55X11X5							
ANTENNA WEIGHT	33.5		40.8		57		35							
AZIMUTH	250		250		250		23							
MAGNETIC DECLINATION														
RADIATION CENTER (feet)	100		100		100		100							
ANTENNA TIP HEIGHT	102		102		102		102							
MECHANICAL DOWNTILT	0		0		0		0							
FEEDER AMOUNT					Fiber + 2 Coax		2							
VERTICAL SEPARATION from ANTENNA ABOVE (TIP to TIP)														
VERTICAL SEPARATION from ANTENNA BELOW (TIP to TIP)														
HORIZONTAL SEPARATION from CLOSEST ANTENNA to LEFT (CENTERLINE to CENTERLINE)														
HORIZONTAL SEPARATION from CLOSEST ANTENNA to RIGHT (CENTERLINE to CENTERLINE)														
HORIZONTAL SEPARATION from ANOTHER ANTENNA (which antenna # / # of inches)				36										
Antenna RET Motor (QTY/MODEL)						Internal	2	Powerwave 7020						
SURGE ARRESTOR (QTY/MODEL)					4	APTDC-BDFDM-DBW								
DIPLEXER (QTY/MODEL)					5	CCI Triplexer -TPX-070821 + CBC23SR-43	2	Powerwave / LGP 21901						
DUPLEXER (QTY/MODEL)														
Antenna RET CONTROL UNIT (QTY/MODEL)		LTE RRH		LTE RRH		LTE RRH								
DC BLOCK (QTY/MODEL)														
TMA/LNA (QTY/MODEL)							2	Powerwave LGP 21401 (DB - 850 Bypass)						
CURRENT INJECTORS FOR TMA (QTY/MODEL)							2	Polyphaser 1000860						
PDU FOR TMAS (QTY/MODEL)														
FILTER (QTY/MODEL)														
SQUID (QTY/MODEL)														
FIBER TRUNK (QTY/MODEL)														
DC TRUNK (QTY/MODEL)														
REPEATER (QTY/MODEL)					1	SDARS remote								
RRH - 700 band (QTY/MODEL)	1	RRUS-11 (REUSE ONLY)	1	B14 4478	1	RRUS-E2 B29								
RRH - 850 band (QTY/MODEL)					1	RRUS-11 (REUSE ONLY)								
RRH - 1900 band (QTY/MODEL)	1	RRUS-32 B2												
RRH - AWS band (QTY/MODEL)			1	RRUS-32 B66										
RRH - WCS band (QTY/MODEL)					1	RRUS-32								
Additional RRH #1 - any band (QTY/MODEL)														
Additional RRH #2 - any band (QTY/MODEL)														
Additional Component 1 (QTY/MODEL)														
Additional Component 2 (QTY/MODEL)					2	Kathrein / 782-10253 (1) & 782-10254 (1)								
Additional Component 3 (QTY/MODEL)														
Local Market Note 1	Add diplexer CBC23SR-43. Add SDARS remote 1 per sector.Add ION M23 Main Unit w/3 OTRX.													
Local Market Note 2														
Local Market Note 3														

PORT SPECIFIC FIELDS	PORT NUMBER	USEID (CSSng)	USEID (Atoll)	ATOLL TXID	ATOLL CELL ID	TX/RX ?	TECHNOLOGY/FREQUENCY	ANTENNA ATOLL	ANTENNA GAIN	ELECTRICAL AZIMUTH	ELECTRICAL TILT	RRH LOCATION (Top/Bottom/Integrated/None)	FEEDERS TYPE	FEEDER LENGTH (feet)	RXAIT KIT MODULE?	TRIPLEXER or LLC (QTY)	TRIPLEXER or LLC (MODEL)	SCPA/MCPA MODULE?	HATCHPLATE POWER (Watts)	ERP (Watts)	Antenna RET Name	CABLE NUMBER	CABLE ID (CSSNG)
ANTENNA POSITION 1	PORT 1	16327.C.700.4G.1	16327.C.700.4G.1	CTL02157_7C_1	CTL02157_7C_1		LTE 700	SBNHH-1D65A_722MHz_08DT	14.1	250	8	TOP	FIBER	0						1475.7065		17	
	PORT 3	16327.C.1900.4G.1	16327.C.1900.4G.1	CTL02157_9C_1	CTL02157_9C_1		LTE 1900	SBNHH-1D65A_1930MHz_05DT	16.3	250	5	TOP	FIBER	0						3664.3757		18	
	PORT 4	16327.C.1900.4G.4	16327.C.1900.4G.4	CTL02157_9C_2	CTL02157_9C_2		LTE 1900	SBNHH-1D65A_1930MHz_05	16.3	250	5	TOP	FIBER	0						3664.3757		18	

								DT															
ANTENNA POSITION 2	**PORT 1**	16327.C.700.4G.5,16327.C.700.4G.6	16327.C.700.4G.5	CTL00857_7C_3_F	CTL00857_7C_3_F		LTE 700	80010964_777MHz_08DT	14.1	250		TOP	FIBER	0						1475.7065		19	
	PORT 3	16327.C.AWS.4G.4	16327.C.AWS.4G.4	CTL00857_2C_2	CTL00857_2C_2		LTE AWS	80010964_2133MHz_03DT	16.1	250		TOP	FIBER	0						3837.0724		19	
ANTENNA POSITION 3	**PORT 1**	16327.C.850.4G.2	16327.C.850.4G.1	CTL00857_8C_1	CTL00857_8C_1		LTE 850	OPA-65R-LCUU-H4_849MHz_08DT	13.4	250	8	Bottom	Commscope 1-5/8 (850)	131						659.1738		21	
	PORT 2	16327.C.700.4G.5	16327.C.700.4G.4	CTL00857_7C_2_E	CTL00857_7C_2_E		LTE 700	OPA-65R-LCUU-H4_719MHz_08DT	12.6	250	8	Bottom	Commscope 1-5/8 (850)	131						574.1164		21	
	PORT 3	16327.C.WCS.4G.1	16327.C.WCS.4G.1	CTL02157_3C_1	CTL02157_3C_1		LTE WCS	OPA-65R-LCUU-H4_2310MHz_03DT	16.7	250	3	TOP	FIBER	0						1044.7202		22	
ANTENNA POSITION 4	**PORT 1**	16327.C.850.3G.1	16327.C.850.3G.1	CTV21573	CTV21573		UMTS 850	7770.00.850.10	13.5	23	10	None	Commscope 1-5/8 (850)	131						275.42		23	

Diagram - Sector A Diagram File Name - CT2157_ABC_WCS Repeater_1.vsd

Atoll Site Name - CTL02157 Location Name - DANBURY EAST Market - CONNECTICUT Market Cluster - NEW ENGLAND

Comments: Important Note: For detailed radio to antenna wiring refer to the latest 4T4R Antenna/ radio Port connections Field Notice (RF-HW-2016-265)

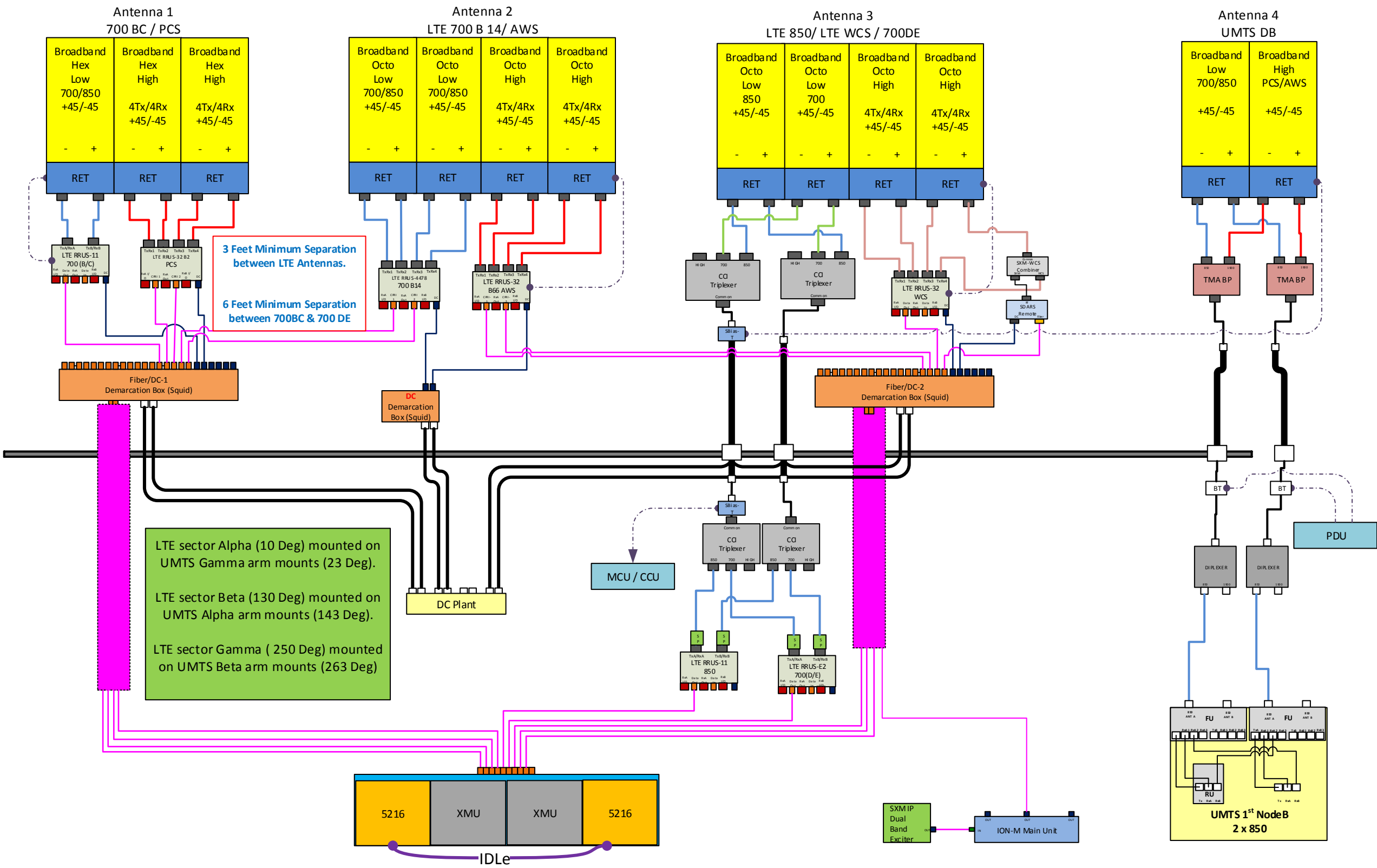

Diagram - Sector B Diagram File Name - CT2157_ABC_WCS Repeater_1.vsd

Atoll Site Name - CTL02157 Location Name - DANBURY EAST Market - CONNECTICUT Market Cluster - NEW ENGLAND

Comments: Important Note: For detailed radio to antenna wiring refer to the latest 4T4R Antenna/ radio Port connections Field Notice (RF-HW-2016-265)

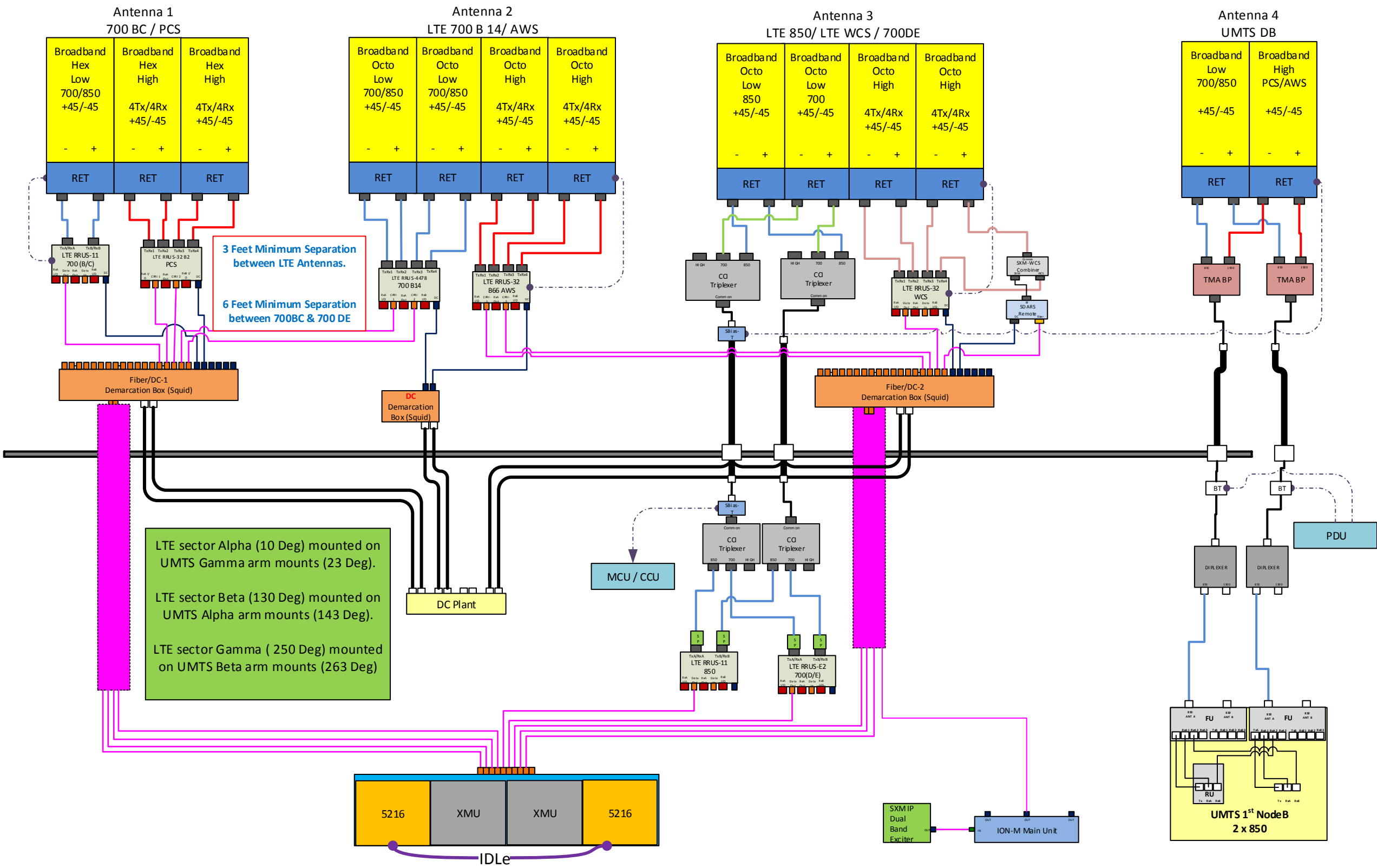

Diagram - Sector C Diagram File Name - CT2157_ABC_WCS Repeater_1.vsd

Atoll Site Name - CTL02157 Location Name - DANBURY EAST Market - CONNECTICUT Market Cluster - NEW ENGLAND

Comments: Important Note: For detailed radio to antenna wiring refer to the latest 4T4R Antenna/ radio Port connections Field Notice (RF-HW-2016-265)

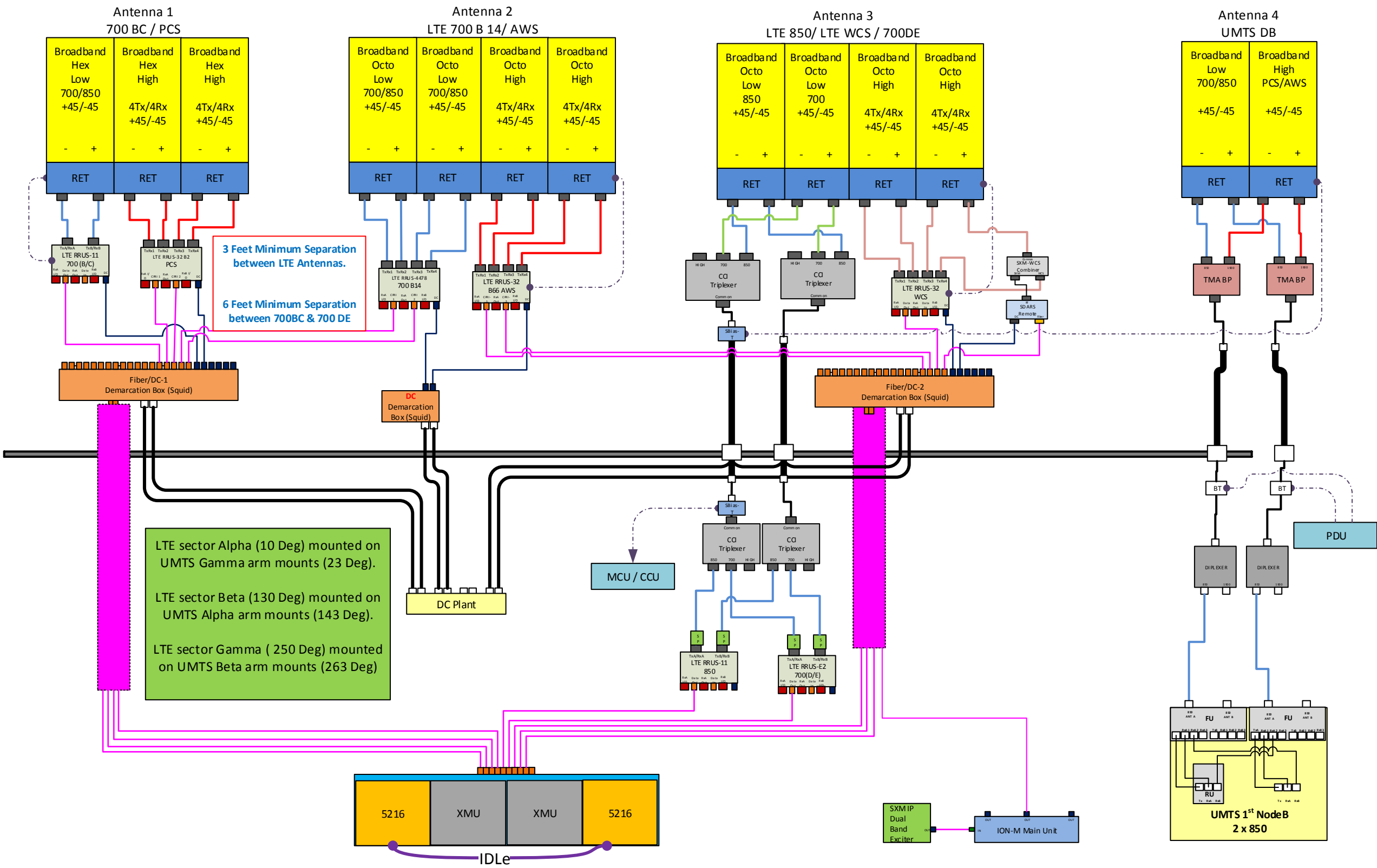

WORKFLOW SUMMARY							
Date	FROM State / Status	FROM ATTUID	TO State / Status	TO ATTUID	Operation	Comments	PACE Status
01/10/2019	Preliminary In Progress	sp656b	Preliminary Submitted for Approval	SN2450	Promote	Prelim RFDS	NER-RCTB-18-09241 MRCTB037940 SUCCESS 01/10/2019 11:55:23 AM
01/15/2019	Preliminary Submitted for Approval	SN2450	Preliminary Submitted for Approval	JH495H	Reassign		
01/21/2019	Preliminary Submitted for Approval	JH495H	Preliminary In Progress	sp656b	Pull Back	PACE UPDATE	
01/21/2019	Preliminary In Progress	sp656b	Preliminary Submitted for Approval	SN2450	Promote	Prelim RFDS	NER-RCTB-18-09241 FAILURE 01/21/2019 4:48:18 PM
01/22/2019	Preliminary Submitted for Approval	SN2450	Preliminary Approved	DC5778	Promote		