MORIAH KING
Empire Telecom USA LLC
16 Esquire Road
Billerica, MA 01862
339-234-8975
moking@empiretelecomm.com

June 11, 2020

To Melanie A. Bachman
Executive Director
Connecticut Siting Council
10 Franklin Square
New Britain, CT 06051

Regarding:	Notice of Exempt Modification – Equipment Modification
Property Address:	48 Newton Rd, Danbury CT 06810
Applicant:	AT&T Mobility ("AT&T", Site # CT2157)
Coordinates:	LONG -73.4244000 / LAT 41.4033000

Dear Ms. Bachman:

AT&T currently maintains a wireless telecommunications facility on an existing 110-foot monopole at the above-referenced address. Said monopole is owned by Crown Castle and the underlying property owner is 48 Newton Road Corporation.

AT&T desires to modify its existing telecommunications facility by adding (3) RRUs, (3) Combiners, (1) 1 Main Unit, ancillary equipment and cables, and a tower modification reinforcement. The centerline height of the existing antennas and ancillary tower-mounted equipment is and will remain at 100 feet.

Please accept this letter as notification pursuant to R.C.S.A. §16-50j-73, for construction that constitutes an exempt modification pursuant to R.C.S.A. §16-50j-72 (b)(2). In accordance with R.C.S.A. §16-50j-73, a copy of this letter is being sent to Mark D Boughton, Mayor of the City of Danbury; Sharon B Calitro, Director of Planning & Zoning of the City of Danbury; 48 Newton Road Corporation, as the property owner; and Crown Castle, as the tower owner.

The planned modifications to AT&T's facility fall squarely within those activities explicitly provided for in R.C.S.A. §16-50j-72 (b)(2). Specifically:

1. The planned modification will not result in an increase in the height of the existing structure. The modified equipment will be installed at the existing height of 100 feet on the 110-foot monopole.

2. The proposed modifications will not involve any changes to AT&T's ground-space footprint, and therefore and therefore will not require an extension of the site boundary.

3. The proposed modification will not increase the noise level at the facility by six decibels or more, or to levels that exceed state and local criteria.

4. The operation of the modified facility will not increase radio frequency (RF) emissions at the facility to a level at or above Federal Communications Commission (FCC) safety standard. An RF emissions calculation (enclosed) for AT&T's modified facility is herein provided.

5. The proposed modifications will not cause a change or alteration in the physical or environmental characteristics of the site.

6. The existing structure and its foundation can support the proposed AT&T's loading with proposed modifications. Please see enclosed structural analysis with completed by Malouf Engineering Intl., Inc, dated May 27th, 2020**.**

For the foregoing reasons, AT&T respectfully requests that the proposed installation be allowed within the exempt modifications under R.C.S.A. §16-50j-72 (b)(2).

Sincerely,

Moriah king

Moriah King
339-234-8975
Site Acquisition Specialist
Empire Telecom USA, LLC
moking@empiretelecomm.com

Enclosures: Exhibit 1 – Field Card and GIS Map
Exhibit 2 – Construction Drawings
Exhibit 3 – Structural Analysis
Exhibit 4 – RF Emissions Analysis Report Evaluation

cc:

Mark D. Boughton Mayor 155 Deer Hill Ave Danbury, CT 06810

Sharon B. Calitro, AICP Director Planning & Zoning 155 Deer Hill Avenue Danbury, CT 06810

48 Newton Road Corporation 50 Newton Road Danbury CT 06810

April Brown Crown Castle 12 Gill Street, Suite 5800, Woburn, MA 01801

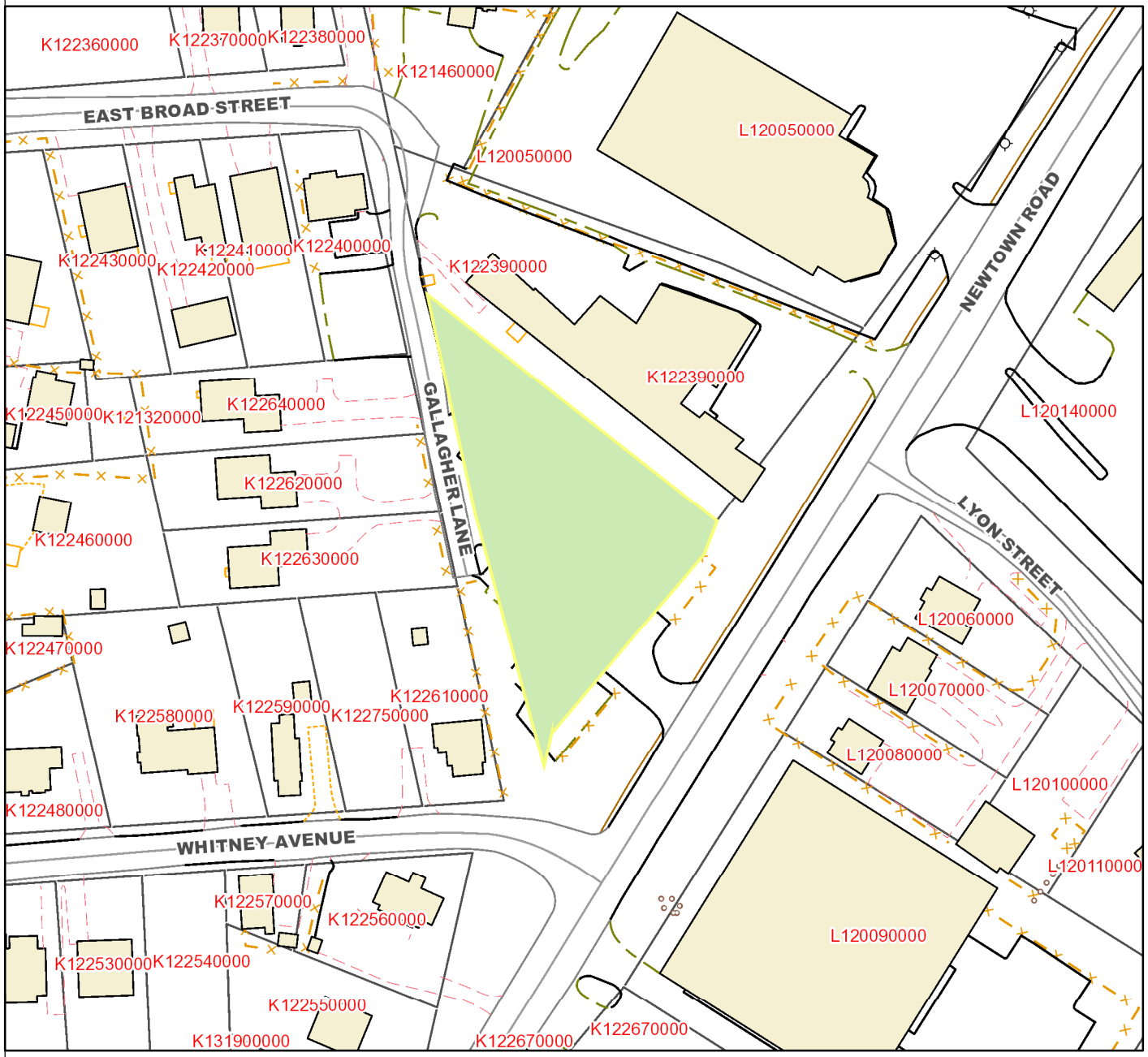

Channel
Stream
Paved
Unpaved
Driveway (Paved)
Driveway (Unpaved)
Light Pole
Building
Foundation
House Trailer
Ruins
Deck
Bridges
Curb
Road (Paved)
Road (Unpaved)
Fence
Stone Wall
Parking (Paved)
Parking (Unpaved)
Sidewalk
Other
Parcel
Private Right of Way
Public Right of Way
Rail Right of Way
Traffic Island
Water

Not a legal survey.

48 NEWTOWN

Location	48 NEWTOWN	**Mblu**	K12/ / 265/ /
Acct#		**Owner**	48 NEWTOWN ROAD CORPORATION
Assessment	$909,000	**Appraisal**	$1,298,500
PID	7333	**Building Count**	1

Current Value

Appraisal			
Valuation Year	**Improvements**	**Land**	**Total**
2017	$904,400	$394,100	$1,298,500

Assessment			
Valuation Year	**Improvements**	**Land**	**Total**
2017	$633,100	$275,900	$909,000

Owner of Record

Owner	48 NEWTOWN ROAD CORPORATION	**Sale Price**	$0
Co-Owner		**Book & Page**	1706/ 908
Address	50 NEWTOWN RD DANBURY, CT 06810	**Sale Date**	11/08/2004
		Instrument	29

Ownership History

Ownership History				
Owner	**Sale Price**	**Book & Page**	**Instrument**	**Sale Date**
48 NEWTOWN ROAD CORPORATION	$0	1706/ 908	29	11/08/2004
MORRIS JULIA B NOMINEE	$0	1706/ 906	29	11/08/2004
FORTY EIGHT NEWTOWN ROAD	$0	1041/0377		03/04/1993

Building Information

Building 1 : Section 1

Year Built:	1988
Living Area:	5,680
Replacement Cost:	$725,793
Building Percent Good:	81

Building Photo

Building Photo
(http://images.vgsi.com/photos2/DanburyCTPhotos//\00\03\05/58.jpg)

Replacement Cost
Less Depreciation: $587,900

Building Attributes	
Field	**Description**
STYLE	Restaurant
MODEL	Commercial
Grade	Average
Stories:	2
Occupancy	4
Exterior Wall 1	Concr/Cinder
Exterior Wall 2	Glass/Thermo.
Roof Structure	Gable/Hip
Roof Cover	Metal/Tin
Interior Wall 1	Drywall/Sheet
Interior Wall 2	
Interior Floor 1	Ceram Clay Til
Interior Floor 2	Carpet
Heating Fuel	Gas
Heating Type	Forced Air-Duc
AC Type	Central
Bldg Use	Comm/Res MDL-94
Total Rooms	
Total Bedrms	00
Total Baths	0
1st Floor Use:	201
Heat/AC	HEAT/AC SPLIT
Frame Type	MASONRY
Baths/Plumbing	AVERAGE
Ceiling/Wall	SUS-CEIL & WL
Rooms/Prtns	AVERAGE
Wall Height	12
% Comn Wall	0

Building Layout

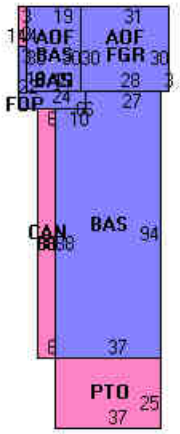

(http://images.vgsi.com/photos2/DanburyCTPhotos//Sketches/7333_7333.j

Building Sub-Areas (sq ft)			Legend
Code	**Description**	**Gross Area**	**Living Area**
BAS	First Floor	4,180	4,180
AOF	Office, (Average)	1,500	1,500
CAN	Canopy	528	0
FGR	Garage	930	0
FOP	Open Porch	42	0
PTO	Patio	925	0
		8,105	5,680

Building 1 : Section 1

Year Built: 1988
Living Area: 0
Replacement Cost: $725,793
Building Percent Good: 81
Replacement Cost
Less Depreciation: $587,900

Building Attributes	
Field	**Description**
Style	Outbuildings

Model	
Grade:	
Stories:	
Occupancy	
Exterior Wall 1	
Exterior Wall 2	
Roof Structure:	
Roof Cover	
Interior Wall 1	
Interior Wall 2	
Interior Flr 1	
Interior Flr 2	
Heat Fuel	
Heat Type:	
AC Type:	
Total Bedrooms:	
Total Bthrms:	
Total Half Baths:	
Total Xtra Fixtrs:	
Total Rooms:	
Bath Style:	
Kitchen Style:	
Fireplaces	
Whirlpool	
Addn'l Kitchen	
Bsm Gar	
Fin Bsm Area	
Fin Bsm Qual	
Nhbd	
MH Park	

Building Photo

(http://images.vgsi.com/photos2/DanburyCTPhotos//\00\02\70/15.jpg)

Building Layout

Building Layout
(http://images.vgsi.com/photos2/DanburyCTPhotos//Sketches/7333_10498

Building Sub-Areas (sq ft)	Legend
No Data for Building Sub-Areas	

Extra Features

Extra Features	Legend
No Data for Extra Features	

Land

Land Use

Use Code	201

Land Line Valuation

Size (Acres)	0.6

Description	Comm/Res MDL-94	**Frontage**	0
Zone	CG20	**Depth**	0
Neighborhood	6000	**Assessed Value**	$275,900
Alt Land Appr	No	**Appraised Value**	$394,100
Category			

Outbuildings

Outbuildings						Legend
Code	**Description**	**Sub Code**	**Sub Description**	**Size**	**Value**	**Bldg #**
CEL	Cell Tower			1 UNITS	$300,000	1
PAV1	Paving-Asphalt			10500 S.F.	$16,500	1

Valuation History

Appraisal			
Valuation Year	**Improvements**	**Land**	**Total**
2018	$900,700	$394,100	$1,294,800
2017	$900,700	$394,100	$1,294,800
2016	$764,800	$375,300	$1,140,100

Assessment			
Valuation Year	**Improvements**	**Land**	**Total**
2018	$630,500	$275,900	$906,400
2017	$630,500	$275,900	$906,400
2016	$535,400	$262,700	$798,100

(c) 2020 Vision Government Solutions, Inc. All rights reserved.

PROJECT INFORMATION

SCOPE OF WORK	UNMANNED COMMUNICATIONS FACILITY MODIFICATIONS INCLUDING: -(P) SIRIUS-XM NEW COMMSCOPE ION-M23 SDARS REMOTE RADIO ON NEW RR-FA3 MOUNT (1/SECT., 3 TOT.) -(P) SIRIUS-XM NEW COMMSCOPE CBC23SR-43 COMBINER ON NEW RR-FA3 MOUNT (1/SECT., 3 TOT.) -(P) AT&T ALPHA/BETA/GAMMA LTEWCS RRUS-32 TxRx4 PORT TO BE CONNECTED TO NEW COMMSCOPE SXM/WCS DIPLEXER CBC23SR43 (1/SECT., 3 TOT.) -(P) TOWER MODIFICATION PER MALOUF ENGINEERING REINFORCEMENT PLANS MEI PROJECT 'CT05942M-20V0' DATED 5-27-2020 IN SHELTER: -SIRIUS-XM EQUIPMENT NEW CommScope RACK -ADD 2.5A BREAKER IN AT&T POWER PLANT FOR SIRIUS-XM EQUIPMENT -SIRIUS-XM DC CABLES BETWEEN AT&T POWER PLANT AND SIRIUS-XM EQUIPMENT
SITE NUMBER:	CT2157
SITE NAME:	DANBURY EAST
SITE ADDRESS:	48 NEWTOEN ROAD DANBURY, CT 06810
TOWER OWNER:	CROWN CASTLE 2000 CORPORATE DRIVE CANONSBURG, PA 15317
APPLICANT:	AT&T 550 COCHITUATE RD SUITES 13 & 14 FRAMINGHAM, MA 01701
NOC CONTACT:	TEL 866-915-5600
COORDINATES	LAT. N41° 24' 11.88" LONG. W73° 25' 27.84"
RAD CENTER:	±100'
DEED REFERENCE:	N/A
SITE PARCEL NO.:	N/A
CURRENT ZONING:	N/A
HORIZONTAL DATUM:	(NAD) 1983

SITE NUMBER: CT2157 FA: 10035077
SITE NAME: DANBURY EAST
PROJECT: RF MOD // IP REPEATER MRTCB037940

DRAWING INDEX

		REV
01	TITLE SHEET	3
02	NOTES	3
03	SITE PLAN & EQUIPMENT PLAN	3
04	ELEVATION VIEW & ANTENNA LAYOUT	3
05	GROUNDING DETAILS	3
06	TOWER MOD DETAILS I	3
07	TOWER MOD DETAILS II	3
08	TOWER MOD DETAILS III	3
09	TOWER MOD DETAILS IV	3
10	TOWER MOD DETAILS V	3
11	TOWER MOD DETAILS VI	3

CONNECTICUT ONE CALL SYSTEM, INC. 1-800-922-4455 STOP-CALL BEFORE YOU DIG!

CONNECTICUT LAW REQUIRES TWO WORKING DAYS NOTICE PRIOR TO ANY EARTH MOVING ACTIVITIES BY CALLING 800-922-4455 OR DIAL 811

CONTACT & UTILITY INFORMATION

CONTACT	CONTACT	COMPANY	PHONE NO.
ENGINEERING:	MIGUEL NOBRE	VRG	(508) 981-9590
SITE ACQUISITION:	DAVID COOPER	EMPIRE	(617) 639-4908
CONSTRUCTION:	GREG DORMAN	EMPIRE	(484) 683-1750
UTILITIES			
POWER:	WORK REQUEST GROUP	NATIONAL GRID	(800) 375-7405
TELCO:	.	VERIZON	(800) 941-9900

LOCATION MAP

DIRECTIONS: FROM ROCKY HILL, TAKE I-91 SOUTH. TAKE I-91 SOUTH EXIT 18 TOWARDS I-691 WEST. PROCEED WEST ON I-691. MERGE WITH I-84 WEST. TAKE I-84 WEST EXIT #8 (NEWTOWN RD.) PROCEED WEST ON RT-6 (NEWTOWN RD.) TURN RIGHT ON WHITNEY AVE. TURN IMMEDIATE RIGHT ON GALLAGHER LANE, SITE WILL BE ON RIGHT.

SITE ACCESS: LOCKED GATE

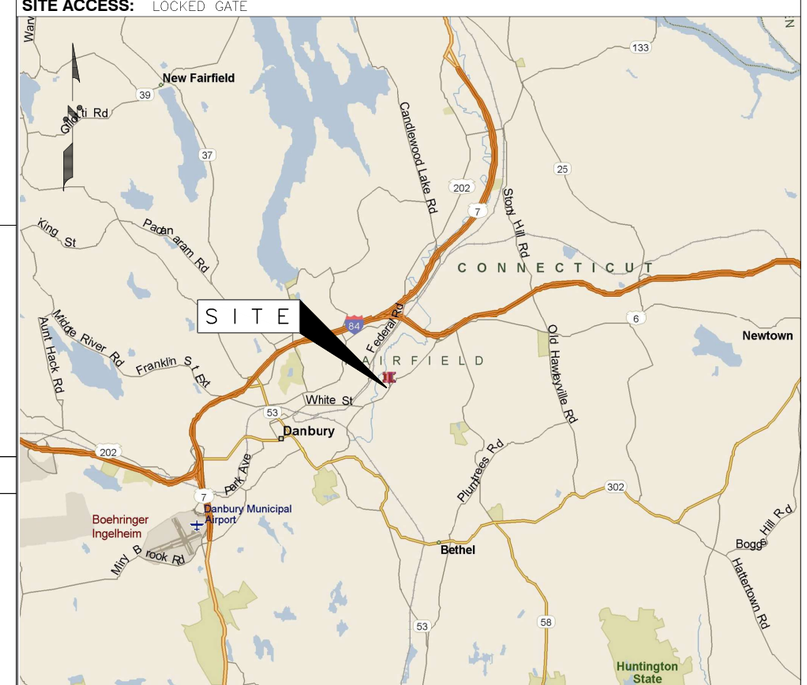

APPLICABLE BUILDING CODES AND STANDARDS

SUBCONTRACTOR'S WORK SHALL COMPLY WITH PROJECT STANDARDS AND SPECIFICATIONS. SUBCONTRACTOR WORK SHALL COMPLY WITH ALL APPLICABLE NATIONAL, STATE, AND LOCAL CODES AS ADOPTED BY THE LOCAL AUTHORITY HAVING JURISDICTION (AHJ) FOR THE LOCATION. THE EDITION OF THE AHJ ADOPTED CODES AND STANDARDS IN EFFECT ON THE DATE OF CONTRACT AWARD SHALL GOVERN THE DESIGN.

BUILDING CODE:
CONNECTICUT STATE BUILDING CODE

ELECTRICAL CODE:
NATIONAL ELECTRICAL CODE LATEST EDITION
SUBCONTRACTOR'S WORK SHALL COMPLY WITH THE LATEST EDITION OF THE FOLLOWING STANDARDS.
AMERICAN CONCRETE INSTITUTE (ACI) 318, BUILDING CODE REQUIREMENTS FOR STRUCTURAL CONCRETE
AMERICAN INSTITUTE OF STEEL CONSTRUCTION (AISC), MANUAL OF STEEL CONSTRUCTION, ASD, NINTH EDITION
AMERICAN NATIONAL STANDARDS INSTITUTE/TELECOMMUNICATIONS INDUSTRY ASSOCIATION (ANSI/TIA) 222-F OR G AS APPLICABLE, STRUCTURAL STANDARDS FOR STEEL ANTENNA TOWER AND ANTENNA SUPPORTING STRUCTURES:
TIA 607, COMMERCIAL BUILDING GROUNDING AND BONDING REQUIREMENTS FOR TELECOMMUNICATIONS

INSTITUTE FOR ELECTRICAL AND ELECTRONICS ENGINEERS (IEEE) 81, GUIDE FOR MEASURING EARTH RESISTIVITY, GROUND IMPEDANCE, AND EARTH SURFACE POTENTIALS OF A GROUND SYSTEM
IEEE 1100 (1999) RECOMMENDED PRACTICE FOR POWERING AND GROUNDING OF ELECTRONIC EQUIPMENT

IEEE C62.41, RECOMMENDED PRACTICES ON SURGE VOLTAGES IN LOW VOLTAGE AC POWER CIRCUITS (FOR LOCATION CATEGORY "C3" AND "HIGH SYSTEM EXPOSURE")

TELCORDIA GR-1503, COAXIAL CABLE CONNECTIONS

ANSI T1.311, FOR TELECOM – DC POWER SYSTEMS – TELECOM, ENVIRONMENTAL PROTECTION

FOR ANY CONFLICTS BETWEEN SECTIONS OF LISTED CODES AND STANDARDS REGARDING MATERIAL, METHODS OF CONSTRUCTION, OR OTHER REQUIREMENTS, THE MOST RESTRICTIVE REQUIREMENT SHALL GOVERN. WHERE THERE IS CONFLICT BETWEEN A GENERAL REQUIREMENT AND A SPECIFIC REQUIREMENT, THE SPECIFIC REQUIREMENT SHALL GOVERN.

VRG
VERTICAL RESOURCES GRP.
23 MIDSTATE DR., #210
AUBURN, MA 01501
Tel. (508) 981-9590
Fax (508) 519-8939
mnobre@verticalresourcesgrp.com

EMPIRE telecom
EMPIRE TELECOM USA, LLC
16 ESQUIRE ROAD
BILLERICA, MA 01821

SITE NUMBER: CT2157
SITE NAME: DANBURY E.
PROJECT: RF MOD // IP

48 NEWTOWN ROAD
DANBURY, CT 06810
FAIRFIELD COUNTY

at&t
550 COCHITUATE RD
SUITES 13 & 14
FRAMINGHAM, MA 01701

NO.	DATE	REVISION	BY	CHK	APP'D
3	05/27/20	ADDED TOWER MODS	E.L.P.	G.A.M.	
2	10/11/19	GENERAL REVISIONS	E.L.P.	G.A.M.	
1	08/26/19	GENERAL REVISIONS	E.L.P.	G.A.M.	
0	05/22/19	FOR CONSTRUCTION	E.L.P.	G.A.M.	

SCALE | DESIGNED BY: M.N. | DRAWN BY: G.A.M.

STATE OF CONNECTICUT JAMES P. STRUNK No. 8657 REGISTERED PROFESSIONAL ENGINEER

AT&T

TITLE SHEET

JOB NUMBER	DRAWING NUMBER	REV
CT2157-IPRepeater	01	3

GENERAL NOTES

1. FOR THE PURPOSE OF CONSTRUCTION DRAWING, THE FOLLOWING DEFINITIONS SHALL APPLY:

CONTRACTOR	–	PRIME CONTRACTOR
SUBCONTRACTOR	–	GENERAL CONTRACTOR (CONSTRUCTION)
OWNER	–	AT&T WIRELESS
OEM	–	ORIGINAL EQUIPMENT MANUFACTURER

2. PRIOR TO THE SUBMISSION OF BIDS, THE BIDDING SUBCONTRACTOR SHALL VISIT THE CELL SITE TO FAMILIARIZE WITH THE EXISTING CONDITIONS AND TO CONFIRM THAT THE WORK CAN BE ACCOMPLISHED AS SHOWN ON THE CONSTRUCTION DRAWINGS. ANY DISCREPANCY FOUND SHALL BE BROUGHT TO THE ATTENTION OF CONTRACTOR.

3. ALL MATERIALS FURNISHED AND INSTALLED SHALL BE IN STRICT ACCORDANCE WITH ALL APPLICABLE CODES, REGULATIONS, AND ORDINANCES. SUBCONTRACTOR SHALL ISSUE ALL APPROPRIATE NOTICES AND COMPLY WITH ALL LAWS, ORDINANCES, RULES, REGULATIONS, AND LAWFUL ORDERS OF ANY PUBLIC AUTHORITY REGARDING THE PERFORMANCE OF THE WORK.

ALL WORK CARRIED OUT SHALL COMPLY WITH ALL APPLICABLE MUNICIPAL AND UTILITY COMPANY SPECIFICATIONS AND LOCAL JURISDICTIONAL CODES, ORDINANCES AND APPLICABLE REGULATIONS.

4. DRAWINGS PROVIDED HERE ARE NOT TO SCALE UNLESS OTHERWISE NOTED AND ARE INTENDED TO SHOW OUTLINE ONLY.

5. UNLESS NOTED OTHERWISE, THE WORK SHALL INCLUDE FURNISHING MATERIALS, EQUIPMENT, APPURTENANCES, AND LABOR NECESSARY TO COMPLETE ALL INSTALLATIONS AS INDICATED ON THE DRAWINGS.

6. THE SUBCONTRACTOR SHALL INSTALL ALL EQUIPMENT AND MATERIALS IN ACCORDANCE WITH MANUFACTURER'S RECOMMENDATIONS UNLESS SPECIFICALLY STATED OTHERWISE.

7. IF THE SPECIFIED EQUIPMENT CANNOT BE INSTALLED AS SHOWN ON THESE DRAWINGS, THE SUBCONTRACTOR SHALL PROPOSE AN ALTERNATIVE INSTALLATION FOR APPROVAL BY THE CONTRACTOR.

8. SUBCONTRACTOR SHALL DETERMINE ACTUAL ROUTING OF CONDUIT, POWER AND T1 CABLES, GROUNDING CABLES AS SHOWN ON THE POWER, GROUNDING AND TELCO PLAN DRAWING. ROUTING OF CONDUIT FOR POWER AND TELCO SHALL BE APPROVED BY OWNER OF SITE.

9. THE SUBCONTRACTOR SHALL PROTECT EXISTING IMPROVEMENTS, PAVEMENTS, CURBS, LANDSCAPING AND STRUCTURES. ANY DAMAGED PART SHALL BE REPAIRED AT SUBCONTRACTOR'S EXPENSE TO THE SATISFACTION OF OWNER.

10. SUBCONTRACTOR SHALL LEGALLY AND PROPERLY DISPOSE OF ALL SCRAP MATERIALS SUCH AS COAXIAL CABLES AND OTHER ITEMS REMOVED FROM THE EXISTING FACILITY. ANTENNAS REMOVED SHALL BE RETURNED TO THE OWNER'S DESIGNATED LOCATION.

11. SUBCONTRACTOR SHALL LEAVE PREMISES IN CLEAN CONDITION.

SITE WORK GENERAL NOTES

1. THE SUBCONTRACTOR SHALL CONTACT UTILITY LOCATING SERVICES PRIOR TO THE START OF CONSTRUCTION.

2. ALL EXISTING ACTIVE SEWER, WATER, GAS, ELECTRIC, AND OTHER UTILITIES WHERE ENCOUNTERED IN THE WORK, SHALL BE PROTECTED AT ALL TIMES, AND WHERE REQUIRED FOR THE PROPER EXECUTION OF THE WORK, SHALL BE RELOCATED AS DIRECTED BY CONTRACTOR. EXTREME CAUTION SHOULD BE USED BY THE SUBCONTRACTOR WHEN EXCAVATING OR DRILLING PIERS AROUND OR NEAR UTILITIES. SUBCONTRACTOR SHALL PROVIDE SAFETY TRAINING FOR THE WORKING CREW. THIS WILL INCLUDE BUT NOT BE LIMITED TO A) FALL PROTECTION B) CONFINED SPACE C) ELECTRICAL SAFETY D) TRENCHING & EXCAVATION.

3. ALL SITE WORK SHALL BE AS INDICATED ON THE DRAWINGS AND PROJECT SPECIFICATIONS.

4. IF NECESSARY, RUBBISH, STUMPS, DEBRIS, STICKS, STONES, TOP SOIL AND OTHER REFUSE SHALL BE REMOVED FROM THE SITE AND DISPOSED OF LEGALLY.

5. ALL EXISTING INACTIVE SEWER, WATER, GAS, ELECTRIC AND OTHER UTILITIES, WHICH INTERFERE WITH THE EXECUTION OF THE WORK, SHALL BE REMOVED AND/OR CAPPED, PLUGGED OR OTHERWISE DISCONTINUED AT POINTS WHICH WILL NOT INTERFERE WITH THE EXECUTION OF THE WORK, SUBJECT TO THE APPROVAL OF CONTRACTOR, OWNER AND/OR LOCAL UTILITIES.

6. SUBCONTRACTOR SHALL MINIMIZE DISTURBANCE TO EXISTING SITE DURING CONSTRUCTION.

7. THE SUBCONTRACTOR SHALL PROVIDE SITE SIGNAGE IN ACCORDANCE WITH THE OWNER SPECIFICATION FOR SITE SIGNAGE.

8. THE SITE SHALL BE GRADED TO CAUSE SURFACE WATER TO FLOW AWAY FROM THE TRANSMISSION EQUIPMENT AND TOWER AREAS.

9. NO FILL OR EMBANKMENT MATERIAL SHALL BE PLACED ON FROZEN GROUND. FROZEN MATERIALS, SNOW OR ICE SHALL NOT BE PLACED IN ANY FILL OR EMBANKMENT.

10. THE SUB GRADE SHALL BE COMPACTED AND BROUGHT TO A SMOOTH UNIFORM GRADE PRIOR TO FINISHED SURFACE APPLICATION, SEE DETAIL 303.

11. THE AREAS OF THE OWNERS PROPERTY DISTURBED BY THE WORK AND NOT COVERED BY THE TOWER, EQUIPMENT OR DRIVEWAY, SHALL BE GRADED TO A UNIFORM SLOPE, AND STABILIZED TO PREVENT EROSION.

12. EROSION CONTROL MEASURES, IF REQUIRED DURING CONSTRUCTION, SHALL BE IN CONFORMANCE WITH THE LOCAL JURISDICTION'S GUIDELINES FOR EROSION AND SEDIMENT CONTROL.

13. ALL EARTH WORK SHALL BE PERFORMED IN ACCORDANCE WITH TECHNICAL SPECIFICATION FOR CONSTRUCTION OF RADIO ACCESS NETWORK SITES.

STRUCTURAL STEEL NOTES:

1. ALL STEEL WORK SHALL BE GALVANIZED IN ACCORDANCE WITH ASTM A123 (HOT–DIP) UNLESS NOTED OTHERWISE. STRUCTURAL STEEL SHALL BE ASTM–A–36 UNLESS OTHERWISE NOTED ON THE SITE SPECIFIC DRAWINGS. STEEL DESIGN, INSTALLATION AND BOLTING SHALL BE PERFORMED IN ACCORDANCE WITH THE AMERICAN INSTITUTE OF STEEL CONSTRUCTION (AISC) "MANUAL OF STEEL CONSTRUCTION".

2. ALL WELDING SHALL BE PERFORMED USING E70XX ELECTRODES AND WELDING SHALL CONFORM TO AISC. WHERE FILLET WELD SIZES ARE NOT SHOWN, PROVIDE THE MINIMUM SIZE PER TABLE J2.4 IN THE AISC "MANUAL OF STEEL CONSTRUCTION". PAINTED SURFACES SHALL BE TOUCHED UP.

3. BOLTED CONNECTIONS SHALL BE ASTM A325 BEARING TYPE (3/4"ø) CONNECTIONS AND SHALL HAVE MINIMUM OF TWO BOLTS UNLESS NOTED OTHERWISE. STEEL FASTENER HARDWARE SHALL BE GALVANIZED IN ACCORDANCE WITH ASTM A153 (HOT–DIP)

4. NON–STRUCTURAL CONNECTIONS FOR STEEL GRATING MAY USE 5/8" DIA. ASTM A 307 BOLTS UNLESS NOTED OTHERWISE.

5. INSTALLATION OF CONCRETE EXPANSION/WEDGE ANCHOR, SHALL BE PER MANUFACTURER'S WRITTEN RECOMMENDED PROCEDURE. THE ANCHOR BOLT, DOWEL OR ROD SHALL CONFORM TO MANUFACTURER'S RECOMMENDATION FOR EMBEDMENT DEPTH OR AS SHOWN ON THE DRAWINGS. NO REBAR SHALL BE CUT WITHOUT PRIOR CONTRACTOR APPROVAL WHEN DRILLING HOLES IN CONCRETE. SPECIAL INSPECTIONS, REQUIRED BY GOVERNING CODES, SHALL BE PERFORMED IN ORDER TO MAINTAIN MANUFACTURER'S MAXIMUM ALLOWABLE LOADS. ALL EXPANSION/WEDGE ANCHORS SHALL BE STAINLESS STEEL OR HOT DIPPED GALVANIZED. EXPANSION BOLTS SHALL BE PROVIDED BY RAMSET/REDHEAD, HILTI OR APPROVED EQUAL.

6. ALL STRUCTURAL STEEL SHALL BE SUPPLIED IN ACCORDANCE WITH TECHNICAL SPECIFICATION FOR CONSTRUCTION OF RADIO ACCESS NETWORK SITES.

CONCRETE AND REINFORCING STEEL NOTES:

1. ALL CONCRETE WORK SHALL BE IN ACCORDANCE WITH THE ACI 301, ACI 318, ACI 336, ASTM A184, ASTM A185 AND THE DESIGN AND CONSTRUCTION SPECIFICATION FOR CAST–IN–PLACE CONCRETE.

2. ALL CONCRETE SHALL HAVE A MINIMUM COMPRESSIVE STRENGTH OF 4000 PSI AT 28 DAYS, UNLESS NOTED OTHERWISE. A HIGHER STRENGTH (4000 PSI) MAY BE USED.

3. REINFORCING STEEL SHALL CONFORM TO ASTM A 615, GRADE 60, DEFORMED UNLESS NOTED OTHERWISE. WELDED WIRE FABRIC SHALL CONFORM TO ASTM A 185 WELDED STEEL WIRE FABRIC UNLESS NOTED OTHERWISE. SPLICES SHALL BE CLASS "B" AND ALL HOOKS SHALL BE STANDARD, UNO.

4. THE FOLLOWING MINIMUM CONCRETE COVER SHALL BE PROVIDED FOR REINFORCING STEEL UNLESS SHOWN OTHERWISE ON DRAWINGS:

CONCRETE CAST AGAINST EARTH.....3 IN.
CONCRETE EXPOSED TO EARTH OR WEATHER:

#6 AND LARGER .....2 INCH
#5 AND SMALLER & WWF.....1 1/2 INCH

CONCRETE NOT EXPOSED TO EARTH OR WEATHER OR NOT CAST AGAINST THE GROUND:

SLAB AND WALL .....3/4 INCH
BEAMS AND COLUMNS.....1 1/2 INCH

5. A 3/4" CHAMFER SHALL BE PROVIDED AT ALL EXPOSED EDGES OF CONCRETE, UNO, IN ACCORDANCE WITH ACI 301 SECTION 4.2.4.

6. INSTALLATION OF CONCRETE EXPANSION/WEDGE ANCHOR, SHALL BE PER MANUFACTURER'S WRITTEN RECOMMENDED PROCEDURE. THE ANCHOR BOLT, DOWEL OR ROD SHALL CONFORM TO MANUFACTURER'S RECOMMENDATION FOR EMBEDMENT DEPTH OR AS SHOWN ON THE DRAWINGS. NO REBAR SHALL BE CUT WITHOUT PRIOR CONTRACTOR APPROVAL WHEN DRILLING HOLES IN CONCRETE. SPECIAL INSPECTIONS, REQUIRED BY GOVERNING CODES, SHALL BE PERFORMED IN ORDER TO MAINTAIN MANUFACTURER'S MAXIMUM ALLOWABLE LOADS. ALL EXPANSION/WEDGE ANCHORS SHALL BE STAINLESS STEEL OR HOT DIPPED GALVANIZED. EXPANSION BOLTS SHALL BE PROVIDED BY RAMSET/REDHEAD HILTI OR APPROVED EQUAL.

7. CONCRETE CYLINDER TEST IS NOT REQUIRED FOR SLAB ON GRADE WHEN CONCRETE IS LESS THAN 50 CUBIC YARDS (IBC 1905.6.2.3) IN THAT EVENT THE FOLLOWING RECORDS SHALL BE PROVIDED BY THE CONCRETE SUPPLIER;
(A) RESULTS OF CONCRETE CYLINDER TESTS PERFORMED AT THE SUPPLIER'S PLANT,

(B) CERTIFICATION OF MINIMUM COMPRESSIVE STRENGTH FOR THE CONCRETE GRADE SUPPLIED.

FOR GREATER THAN 50 CUBIC YARDS THE GC SHALL PERFORM THE CONCRETE CYLINDER TEST.

8. AS AN ALTERNATIVE TO ITEM 7, TEST CYLINDERS SHALL BE TAKEN INITIALLY AND THEREAFTER FOR EVERY 50 YARDS OF CONCRETE FROM EACH DIFFERENT BATCH PLANT.

9. EQUIPMENT SHALL NOT BE PLACED ON NEW PADS FOR SEVEN DAYS AFTER PAD IS POURED, UNLESS IT IS VERIFIED BY TESTS THAT COMPRESSIVE STRENGTH HAS BEEN ATTAINED.

10. ALL CONCRETE SHALL BE SUPPLIED IN ACCORDANCE WITH TECHNICAL SPECIFICATION FOR CONSTRUCTION OF RADIO ACCESS NETWORK SITES.

SOIL COMPACTION NOTES FOR SLAB ON GRADE:

1. EXCAVATE AS REQUIRED TO REMOVE VEGETATION AND TOPSOIL, EXPOSE UNDISTURBED NATURAL SUBGRADE AND PLACE CRUSHED STONE AS REQUIRED.

2. COMPACTION CERTIFICATION: AN INSPECTION AND WRITTEN CERTIFICATION BY A QUALIFIED GEOTECHNICAL TECHNICIAN OR ENGINEER IS ACCEPTABLE.

3. AS AN ALTERNATIVE TO INSPECTION AND WRITTEN CERTIFICATION, THE "UNDISTURBED SOIL" BASE SHALL BE COMPACTED WITH "COMPACTION EQUIPMENT", LISTED BELOW, TO AT LEAST 90% MODIFIED PROCTOR MAXIMUM DENSITY PER ASTM D 1557 METHOD C.

4. COMPACTED SUBBASE SHALL BE UNIFORM AND LEVELED. PROVIDE 6" MINIMUM CRUSHED STONE OR GRAVEL COMPACTED IN 3" LIFTS ABOVE COMPACTED SOIL. GRAVEL SHALL BE NATURAL OR CRUSHED WITH 100% PASSING 1" SIEVE.

5. AS AN ALTERNATIVE TO ITEMS 2 AND 3 PROOF ROLL THE SUBGRADE SOILS WITH 5 PASSES OF A MEDIUM SIZED VIBRATORY PLATE COMPACTOR (SUCH AS BOMAG BPR 30/38) OR HAND–OPERATED SINGLE DRUM VIBRATORY ROLLER (SUCH AS BOMAG BW 55E). ANY SOFT AREAS THAT ARE ENCOUNTERED SHOULD BE REMOVED AND REPLACED WITH A WELL–GRADED GRANULAR FILL, AND COMPACTED AS STATED ABOVE.

6. COMPACTION CRITERIA FOR OTHER FILL AREAS ON SITE SHALL MEET THE SAME REQUIREMENTS AS NOTED ABOVE.

7. SOIL COMPACTION SHALL BE PERFORMED IN ACCORDANCE WITH TECHNICAL SPECIFICATION FOR CONSTRUCTION OF RADIO ACCESS NETWORK SITES.

COMPACTION EQUIPMENT:

HAND OPERATED DOUBLE DRUM, VIBRATORY ROLLER, VIBRATORY PLATE COMPACTOR OR JUMPING JACK COMPACTOR.

ELECTRICAL INSTALLATION NOTES

1. ALL ELECTRICAL WORK SHALL BE PERFORMED IN ACCORDANCE WITH THE PROJECT SPECIFICATIONS, NEC AND ALL APPLICABLE LOCAL CODES.

2. CONDUIT ROUTINGS ARE SCHEMATIC. SUBCONTRACTOR SHALL INSTALL CONDUITS SO THAT ACCESS TO EQUIPMENT IS NOT BLOCKED.

3. WIRING, RACEWAY AND SUPPORT METHODS AND MATERIALS SHALL COMPLY WITH THE REQUIREMENTS OF THE NEC AND TELCORDIA.

4. ALL CIRCUITS SHALL BE SEGREGATED AND MAINTAIN MINIMUM CABLE SEPARATION AS REQUIRED BY THE NEC AND TELCORDIA.

5. CABLES SHALL NOT BE ROUTED THROUGH LADDER–STYLE CABLE TRAY RUNGS.

6. EACH END OF EVERY POWER, POWER PHASE CONDUCTOR (I.E., HOTS), GROUNDING, AND T1 CONDUCTOR AND CABLE SHALL BE LABELED WITH COLOR–CODED INSULATION OR ELECTRICAL TAPE (3M BRAND, 1/2 INCH PLASTIC ELECTRICAL TAPE WITH UV PROTECTION, OR EQUAL). THE IDENTIFICATION METHOD SHALL CONFORM WITH NEC & OSHA.

7. ALL ELECTRICAL COMPONENTS SHALL BE CLEARLY LABELED WITH PERMANENT LABELS. ALL EQUIPMENT SHALL BE LABELED WITH THEIR VOLTAGE RATING, PHASE CONFIGURATION, WIRE CONFIGURATION, POWER OR AMPACITY RATING, AND BRANCH CIRCUIT ID NUMBERS (I.E., PANELBOARD AND CIRCUIT ID'S). NO HAND WRITTEN LABELS ALLOWED.

8. PANELBOARDS (ID NUMBERS) AND INTERNAL CIRCUIT BREAKERS (CIRCUIT ID NUMBERS) SHALL BE CLEARLY LABELED. NO HAND WRITTEN LABELS ALLOWED.

9. ALL TIE WRAPS SHALL BE CUT FLUSH WITH APPROVED CUTTING TOOL TO REMOVE SHARP EDGES.

10. POWER, CONTROL, AND EQUIPMENT GROUND WIRING IN TUBING OR CONDUIT SHALL BE SINGLE CONDUCTOR (SIZE 14 AWG OR LARGER), 600V, OIL RESISTANT THHN OR THWN–2, CLASS B STRANDED COPPER CABLE RATED FOR 90 °C (WET AND DRY) OPERATION; LISTED OR LABELED FOR THE LOCATION AND RACEWAY SYSTEM USED, UNLESS OTHERWISE SPECIFIED.

11. SUPPLEMENTAL EQUIPMENT GROUND WIRING LOCATED INDOORS SHALL BE SINGLE CONDUCTOR (SIZE 6 AWG OR LARGER), 600V, OIL RESISTANT THHN OR THWN–2 GREEN INSULATION, CLASS B STRANDED COPPER CABLE RATED FOR 90 °C (WET AND DRY) OPERATION; LISTED OR LABELED FOR THE LOCATION AND RACEWAY SYSTEM USED, UNLESS OTHERWISE SPECIFIED.

12. POWER AND CONTROL WIRING, NOT IN TUBING OR CONDUIT, SHALL BE MULTI–CONDUCTOR, TYPE TC CABLE (SIZE 14 AWG OR LARGER), 600V, OIL RESISTANT THHN OR THWN–2, CLASS B STRANDED COPPER CABLE RATED FOR 90 °C (WET AND DRY) OPERATION; WITH OUTER JACKET; LISTED OR LABELED FOR THE LOCATION USED, UNLESS OTHERWISE SPECIFIED.

13. ALL POWER AND POWER GROUNDING CONNECTIONS SHALL BE CRIMP–STYLE, COMPRESSION WIRE LUGS AND WIRENUTS BY THOMAS AND BETTS (OR EQUAL). LUGS AND WIRENUTS SHALL BE RATED FOR OPERATION AT NO LESS THAN 75°C (90°C IF AVAILABLE).

14. RACEWAY AND CABLE TRAY SHALL BE LISTED OR LABELED FOR ELECTRICAL USE IN ACCORDANCE WITH NEMA, UL, ANSI/IEEE, AND NEC.

ELECTRICAL INSTALLATION NOTES (cont.)

15. ELECTRICAL METALLIC TUBING (EMT) OR RIGID NONMETALLIC CONDUIT (I.E., RIGID PVC SCHEDULE 40, OR RIGID PVC SCHEDULE 80 FOR LOCATIONS SUBJECT TO PHYSICAL DAMAGE) SHALL BE USED FOR EXPOSED INDOOR LOCATIONS.

16. ELECTRICAL METALLIC TUBING (EMT), ELECTRICAL NONMETALLIC TUBING (ENT), OR RIGID NONMETALLIC CONDUIT (RIGID PVC, SCHEDULE 40) SHALL BE USED FOR CONCEALED INDOOR LOCATIONS.

17. GALVANIZED STEEL INTERMEDIATE METALLIC CONDUIT (IMC) SHALL BE USED FOR OUTDOOR LOCATIONS ABOVE GRADE.

18. RIGID NONMETALLIC CONDUIT (I.E., RIGID PVC SCHEDULE 40 OR RIGID PVC SCHEDULE 80) SHALL BE USED UNDERGROUND; DIRECT BURIED, IN AREAS OF OCCASIONAL LIGHT VEHICLE TRAFFIC OR ENCASED IN REINFORCED CONCRETE IN AREAS OF HEAVY VEHICLE TRAFFIC.

19. LIQUID–TIGHT FLEXIBLE METALLIC CONDUIT (LIQUID–TITE FLEX) SHALL BE USED INDOORS AND OUTDOORS, WHERE VIBRATION OCCURS OR FLEXIBILITY IS NEEDED.

20. CONDUIT AND TUBING FITTINGS SHALL BE THREADED OR COMPRESSION–TYPE AND APPROVED FOR THE LOCATION USED. SETSCREW FITTINGS ARE NOT ACCEPTABLE.

21. CABINETS, BOXES, AND WIREWAYS SHALL BE LISTED OR LABELED FOR ELECTRICAL USE IN ACCORDANCE WITH NEMA, UL, ANSI/IEEE, AND NEC.

22. WIREWAYS SHALL BE EPOXY–COATED (GRAY) AND INCLUDE A HINGED COVER, DESIGNED TO SWING OPEN DOWNWARD; SHALL BE PANDUIT TYPE E (OR EQUAL); AND RATED NEMA 1 (OR BETTER) INDOORS, OR NEMA 3R (OR BETTER) OUTDOORS.

23. EQUIPMENT CABINETS, TERMINAL BOXES, JUNCTION BOXES, AND PULL BOXES SHALL BE GALVANIZED OR EPOXY–COATED SHEET STEEL, SHALL MEET OR EXCEED UL 50, AND RATED NEMA 1 (OR BETTER) INDOORS, OR NEMA 3R (OR BETTER) OUTDOORS

24. METAL RECEPTACLE, SWITCH, AND DEVICE BOXES SHALL BE GALVANIZED, EPOXY–COATED, OR NON–CORRODING; SHALL MEET OR EXCEED UL 514A AND NEMA OS 1; AND RATED NEMA 1 (OR BETTER) INDOORS, OR WEATHER PROTECTED (WP OR BETTER) OUTDOORS.

25. NONMETALLIC RECEPTACLE, SWITCH, AND DEVICE BOXES SHALL MEET OR EXCEED NEMA OS 2; AND RATED NEMA 1 (OR BETTER) INDOORS, OR WEATHER PROTECTED (WP OR BETTER) OUTDOORS.

26. THE SUBCONTRACTOR SHALL NOTIFY AND OBTAIN NECESSARY AUTHORIZATION FROM THE CONTRACTOR BEFORE COMMENCING WORK ON THE AC POWER DISTRIBUTION PANELS.

27. THE SUBCONTRACTOR SHALL PROVIDE NECESSARY TAGGING ON THE BREAKERS, CABLES AND DISTRIBUTION PANELS IN ACCORDANCE WITH THE APPLICABLE CODES AND STANDARDS TO SAFEGUARD AGAINST LIFE AND PROPERTY.

VRG
VERTICAL RESOURCES GRP.
23 MIDSTATE DR., #210
AUBURN, MA 01501
Tel. (508) 981–9590
Fax (508) 519–8939
mnobre@verticalresourcesgrp.com

EMPIRE telecom
EMPIRE TELECOM USA, LLC
16 ESQUIRE ROAD
BILLERICA, MA 01821

SITE NUMBER: CT2157
SITE NAME: DANBURY E.
PROJECT: RF MOD // IP

48 NEWTOWN ROAD
DANBURY, CT 06810
FAIRFIELD COUNTY

at&t
550 COCHITUATE RD
SUITES 13 & 14
FRAMINGHAM, MA 01701

NO.	DATE	REVISION	BY	CHK	APP'D
3	05/27/20	ADDED TOWER MODS	E.L.P.	G.A.M.	
2	10/11/19	GENERAL REVISIONS	E.L.P.	G.A.M.	
1	08/26/19	GENERAL REVISIONS	E.L.P.	G.A.M.	
0	05/22/19	FOR CONSTRUCTION	E.L.P.	G.A.M.	

SCALE | DESIGNED BY: M.N. | DRAWN BY: G.A.M.

STATE OF CONNECTICUT
JAMES P. STRAKE
No. 8657
REGISTERED PROFESSIONAL ENGINEER

AT&T

NOTES

JOB NUMBER	DRAWING NUMBER	REV.
CT2157–IPRepeater	02	3

GENERAL NOTES

1. THE CELLULAR INSTALLATION IS AN UNMANNED PRIVATE AND SECURED COMPOUND. IT IS ONLY ACCESSED BY TRAINED TECHNICIANS FOR PERIODIC ROUTINE MAINTENANCE AND THEREFORE DOES NOT REQUIRE ANY WATER OR SANITARY SEWER SERVICE. THE FACILITY IS NOT GOVERNED BY REGULATIONS REQUIRING PUBLIC ACCESS PER ADA REQUIREMENTS.
2. CONSTRUCTION, MAINTENANCE & OPERATION OF PROPOSED TOWER FACILITY WILL BE HELD IN ACCORDANCE WITH ALL APPLICABLE LOCAL, STATE & FEDERAL REGULATIONS AND GUIDELINES.

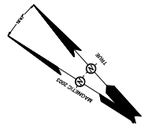

AT&T RF SYSTEM SCHEDULE

POSITION	SECTOR	STATUS	BAND	ANTENNA MAKE	ANTENNA MODEL	SIZE(INCHES) (LxWxH)	RAD CTR. FT. AGL	AZIMUTH	TMA DIPLEXER COMBINER	REMOTE RADIOS	RADIO LOCATION	SIZE(INCHES) (LxWxH)	FEEDER TYPE	FEEDER LENGTH	RAYCAP
1	Alpha	EXISTING	LTE700bc/PCS	CCI	HPA65RBUUH6	72.0x14.8x9.0	±100'	10°		1 RRUS-11 1 RRUS-32b2	TOWER TOWER	19.7x17.0x7.2 22.4x12.1x7.0			(E2) DC6-48-60-18-8F (E1) DC6-48-60-0-8F
2	Alpha	EXISTING	LTE700b14/AWS	KATHREIN	800-10965	78.7x20.0x6.9	±100'	10°		1 RRUS-4478 1 RRUS-32b66	TOWER TOWER	18.1x13.4x8.5 22.4x12.1x7.0	(E1) Fiber Trunk (E2) DC Trunk	(E2) 131'	
3	Alpha	EXISTING	**LTE700de/850 LTEWCS/SIRIUSXM**	CCI	OPA65RLCUUH6	72.0x14.8x7.4	±100'	10°	2-03 TPX070821 L 2-03 TPX070821 B **1-COM CBC235R43 T1**	1 RRUS-E1 1 RRUS-E2 **1 ION23 SDARS**	SHELTER SHELTER **TOWER**	19.7x17.0x7.2 20.5x18.0x7.5 **32.7x 6.1x5.8**	(E2) 1-5/8" COAX	(E2) 131'	
4	Gamma	EXISTING	UMTS850	POWERWAVE	7770	55.0x11.0x5.0	±100'	23°	2-PCS LGP21401 L 2-PCS LGP21401 B	--		--	(E2) 1-5/8" COAX	(E2) 131'	
1	Beta	EXISTING	LTE700bc/PCS	ANDREW	SBNHH1D65A	55.0x11.9x7.1	±100'	130°		1 RRUS-11 1 RRUS-32b2	TOWER TOWER	19.7x17.0x7.2 22.4x12.1x7.0			
2	Beta	EXISTING	LTE700b14/AWS	KATHREIN	800-10964	59.0x20.0x6.9	±100'	130°		1 RRUS-4478 1 RRUS-32b66	TOWER TOWER	18.1x13.4x8.5 22.4x12.1x7.0	(E1) Fiber Trunk (E2) DC Trunk		
3	Beta	EXISTING	**LTE700de/850 LTEWCS/SIRIUSXM**	CCI	OPA65RLCUUH4	48.0x14.8x7.4	±100'	130°	2-03 TPX070821 L 2-03 TPX070821 B **1-COM CBC235R43 T1**	1 RRUS-E1 1 RRUS-E2 **1 ION23 SDARS**	SHELTER SHELTER **TOWER**	19.7x17.0x7.2 20.5x18.0x7.5 **32.7x 6.1x5.8**	(E2) 1-5/8" COAX	(E2) 131'	
4	Alpha	EXISTING	UMTS850	POWERWAVE	7770	55.0x11.0x5.0	±100'	143°	2-PCS LGP21401 L 2-PCS LGP21401 B	--		--	(E2) 1-5/8" COAX	(E2) 131'	
1	Gamma	EXISTING	LTE700bc/PCS	ANDREW	SBNHH1D65A	55.0x11.9x7.1	±100'	250°		1 RRUS-11 1 RRUS-32b2	TOWER TOWER	19.7x17.0x7.2 22.4x12.1x7.0			
2	Gamma	EXISTING	LTE700b14/AWS	KATHREIN	800-10964	59.0x20.0x6.9	±100'	250°		1 RRUS-4478 1 RRUS-32b66	TOWER TOWER	18.1x13.4x8.5 22.4x12.1x7.0	(E2) DC Trunk		
3	Gamma	EXISTING	**LTE700de/850 LTEWCS/SIRIUSXM**	CCI	OPA65RLCUUH4	48.0x14.8x7.4	±100'	250°	2-03 TPX070821 L 2-03 TPX070821 B **1-COM CBC235R43 T1**	1 RRUS-E1 1 RRUS-E2 **1 ION23 SDARS**	SHELTER SHELTER **TOWER**	19.7x17.0x7.2 20.5x18.0x7.5 **32.7x 6.1x5.8**	(E2) 1-5/8" COAX	(E2) 131'	
4	Beta	EXISTING	UMTS850	POWERWAVE	7770	55.0x11.0x5.0	±100'	263°	2-PCS LGP21401 L 2-PCS LGP21401 B	--		--	(E2) 1-5/8" COAX	(E2) 131'	

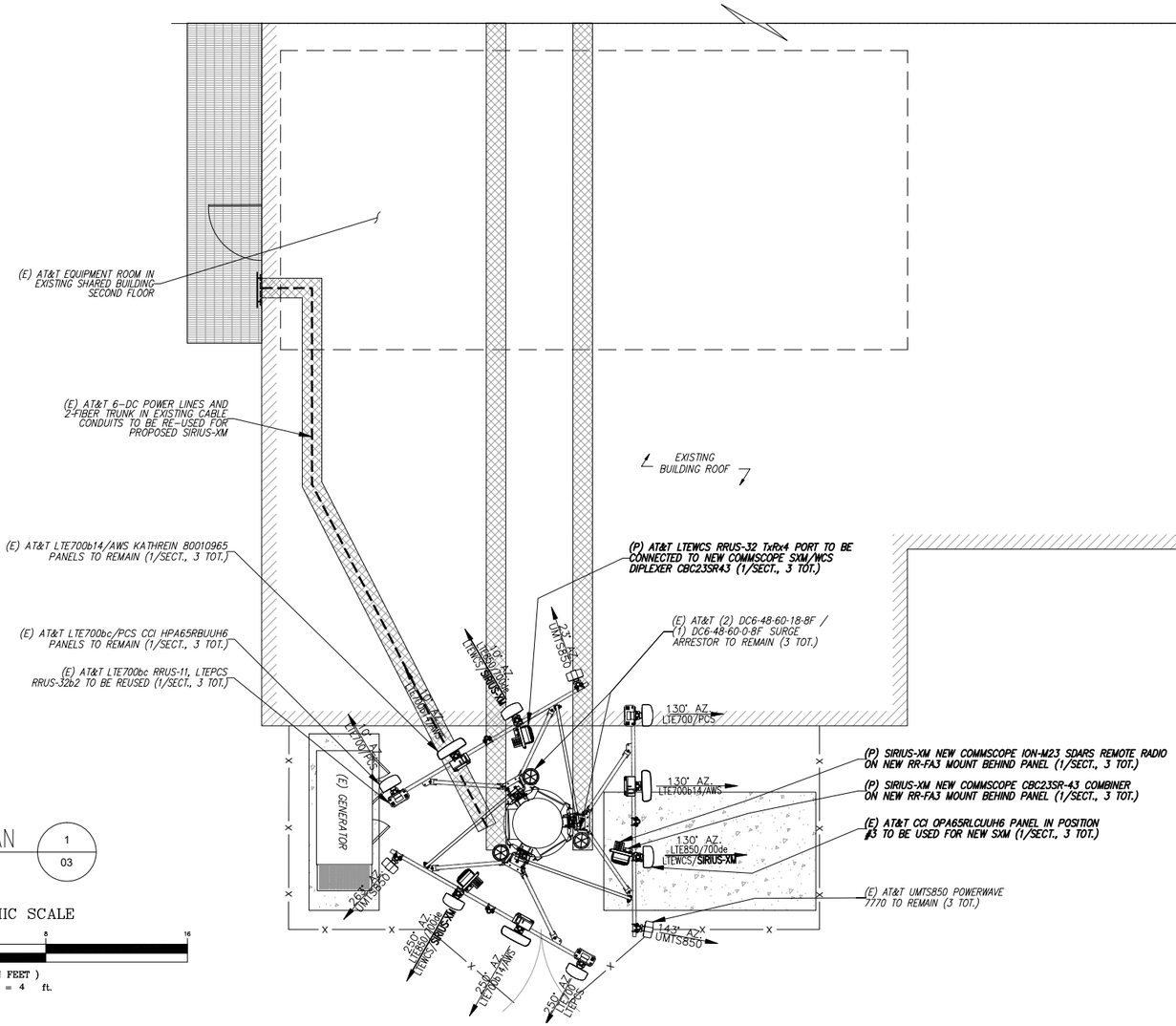

COMPOUND PLAN 1/03
SCALE: 1" = 4'

GRAPHIC SCALE
4 0 2 4 8 16
(IN FEET)
1 inch = 4 ft.

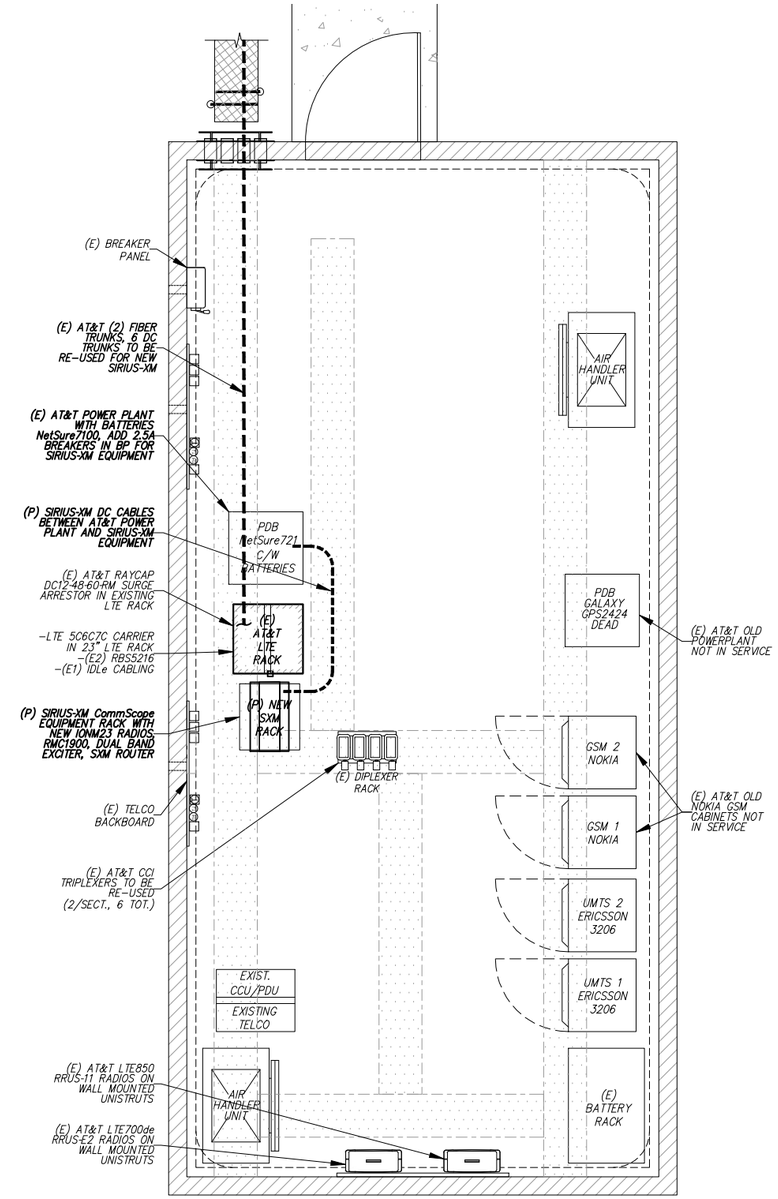

EQUIPMENT PLAN 2/03
SCALE: 1" = 2'

VRG
VERTICAL RESOURCES GRP.
23 MIDSTATE DR., #210
AUBURN, MA 01501
Tel. (508) 981-9590
Fax (508) 519-8939
mnobre@verticalresourcesgrp.com

EMPIRE telecom
EMPIRE TELECOM USA, LLC
16 ESQUIRE ROAD
BILLERICA, MA 01821

SITE NUMBER: CT2157
SITE NAME: DANBURY E.
PROJECT: RF MOD // IP

48 NEWTOWN ROAD
DANBURY, CT 06810
FAIRFIELD COUNTY

at&t
550 COCHITUATE RD
SUITES 13 & 14
FRAMINGHAM, MA 01701

NO.	DATE	REVISION	BY	CHK	APP'D
3	05/27/20	ADDED TOWER MODS	E.L.P.	G.A.M.	
2	10/11/19	GENERAL REVISIONS	E.L.P.	G.A.M.	
1	08/26/19	GENERAL REVISIONS	E.L.P.	G.A.M.	
0	05/22/19	FOR CONSTRUCTION	E.L.P.	G.A.M.	

SCALE | DESIGNED BY: M.N. | DRAWN BY: G.A.M.

STATE OF CONNECTICUT
JAMES P. STROPE
No. 8657
REGISTERED PROFESSIONAL ENGINEER

AT&T

SITE PLAN & EQUIPMENT PLAN

JOB NUMBER	DRAWING NUMBER	REV.
CT2157-IPRepeater	03	3

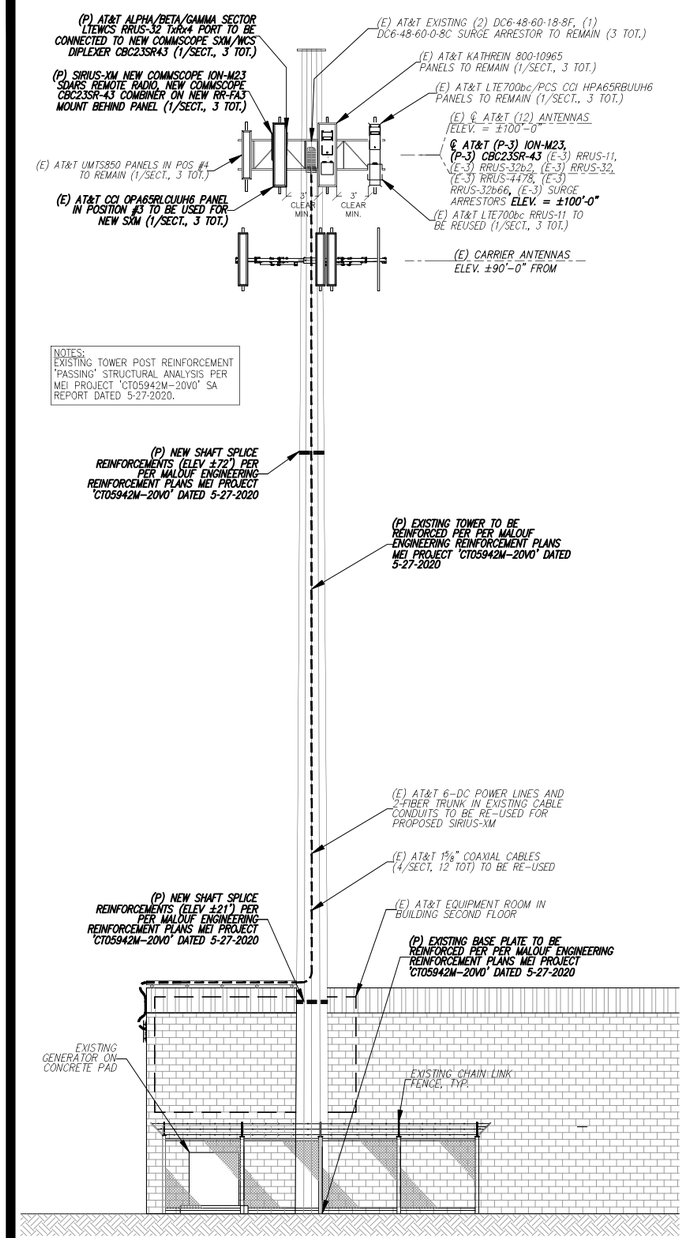

ELEVATION VIEW 1 / 04

SCALE: 1" = 10'

GRAPHIC SCALE

10 0 5 10 20 40

(IN FEET)
1 inch = 10 ft.

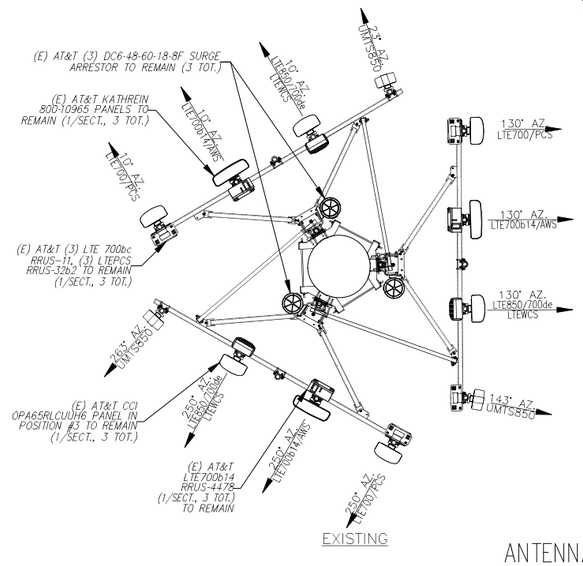

EXISTING

NOTES:
REFER TO FINAL RF DATA SHEET FOR FINAL ANTENNA SETTINGS AND CONFIGURATIONS

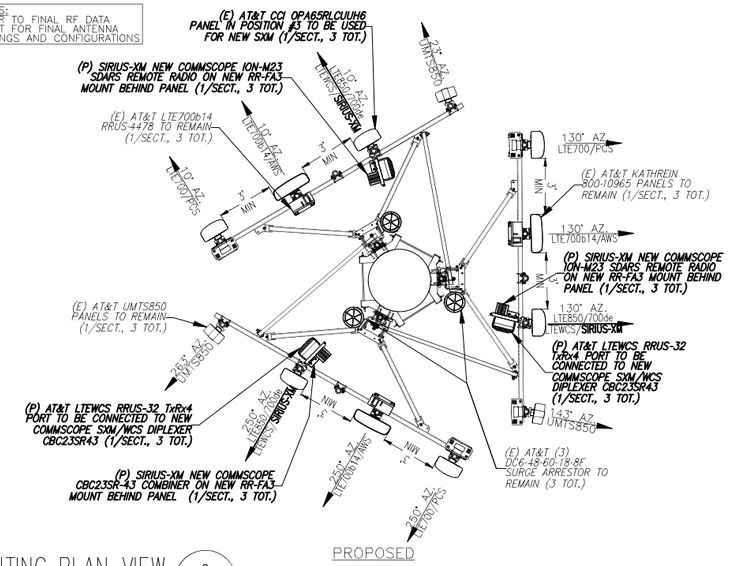

PROPOSED

ANTENNA MOUNTING PLAN VIEW 2 / 04

SCALE: N.T.S.

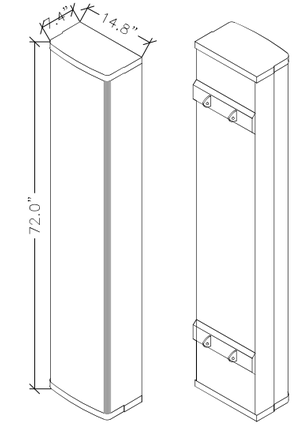

ISOMETRIC FRONT VIEW

ISOMETRIC REAR VIEW

(E) LTE700de/850/ WCS ANTENNA DETAIL 3 / 04

SCALE: N.T.S.

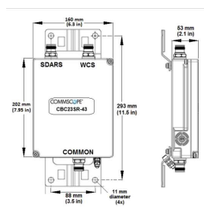

(P) LTEWCS/SDARS Commscope COMBINER 4 / 04

SCALE: N.T.S.

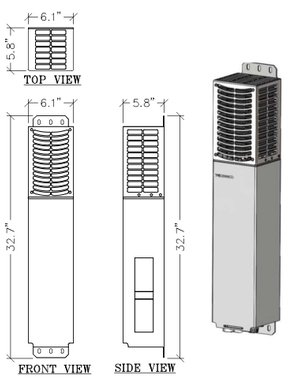

(P) SIRIUS-XM IONM23 SDARS RADIO 5 / 04

SCALE: N.T.S.

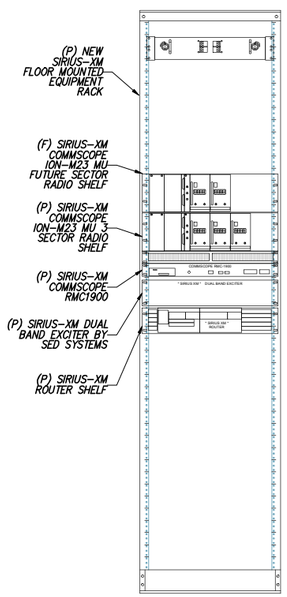

ELEVATION VIEW

(P) SIRIUS-XM EQUIPMENT RACK 6 / 04

SCALE: N.T.S.

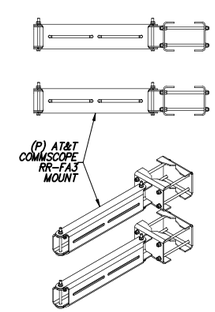

(P) AT&T SIRIUS-XM TRI-BRACKET MOUNT 8 / 04

SCALE: N.T.S.

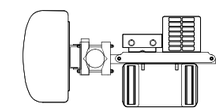

PLAN VIEW

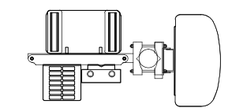

PLAN VIEW

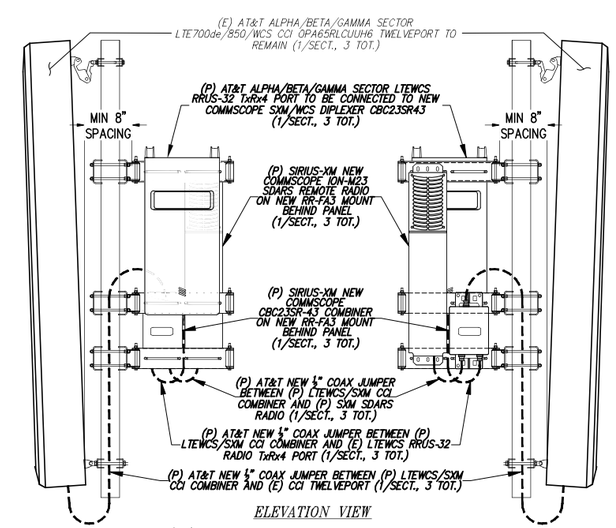

ELEVATION VIEW

(P) POS #3 LTEWCS SIRIUS-XM MOUNTING DETAIL 9 / 04

SCALE: N.T.S.

VRG
VERTICAL RESOURCES GRP.
23 MIDSTATE DR., #210
AUBURN, MA 01501
Tel. (508) 981-9590
Fax (508) 519-8939
mnobre@verticalresourcesgrp.com

EMPIRE telecom
EMPIRE TELECOM USA, LLC
16 ESQUIRE ROAD
BILLERICA, MA 01821

SITE NUMBER: CT2157
SITE NAME: DANBURY E.
PROJECT: RF MOD // IP

48 NEWTOWN ROAD
DANBURY, CT 06810
FAIRFIELD COUNTY

at&t
550 COCHITUATE RD
SUITES 13 & 14
FRAMINGHAM, MA 01701

NO.	DATE	REVISION	BY	CHK	APP'D
3	05/27/20	ADDED TOWER MODS	E.L.P.	G.A.M.	
2	10/11/19	GENERAL REVISIONS	E.L.P.	G.A.M.	
1	08/26/19	GENERAL REVISIONS	E.L.P.	G.A.M.	
0	05/22/19	FOR CONSTRUCTION	E.L.P.	G.A.M.	

SCALE | DESIGNED BY: M.N. | DRAWN BY: G.A.M.

STATE OF CONNECTICUT JAMES P. STROHE No. 8657 REGISTERED PROFESSIONAL ENGINEER

AT&T

ELEVATION VIEW & ANTENNA LAYOUT

JOB NUMBER	DRAWING NUMBER	REV
CT2157-IPRepeater	04	3

NOTE:
DO NOT INSTALL CABLE GROUND KIT AT A BEND AND ALWAYS DIRECT GROUND WIRE DOWN TO CIGBE

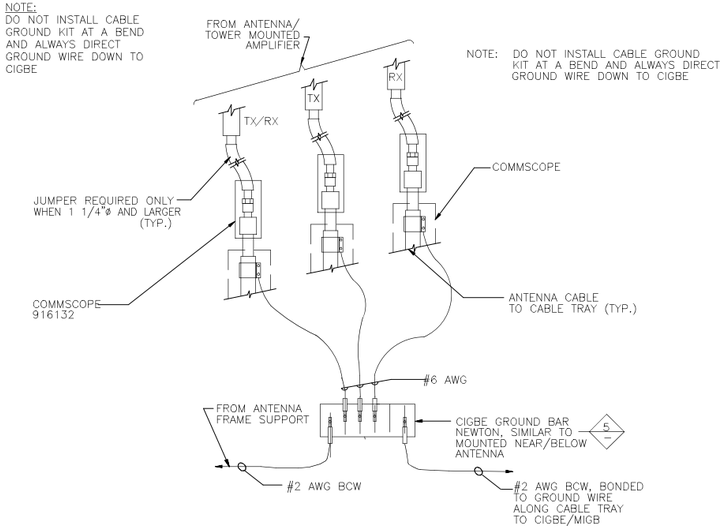

CONNECTION OF GROUND WIRES TO GROUNDING BAR (CIGBE) 1/05

SCALE: N.T.S.

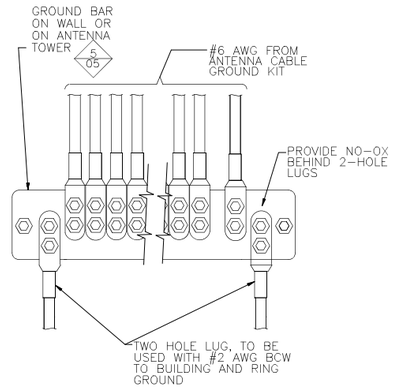

INSTALLATION OF GROUND WIRE TO GROUND BAR 2/05

SCALE: N.T.S.

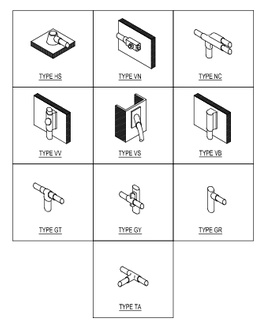

GROUNDING CONNECTION DETAIL 5/05

SCALE: N.T.S.

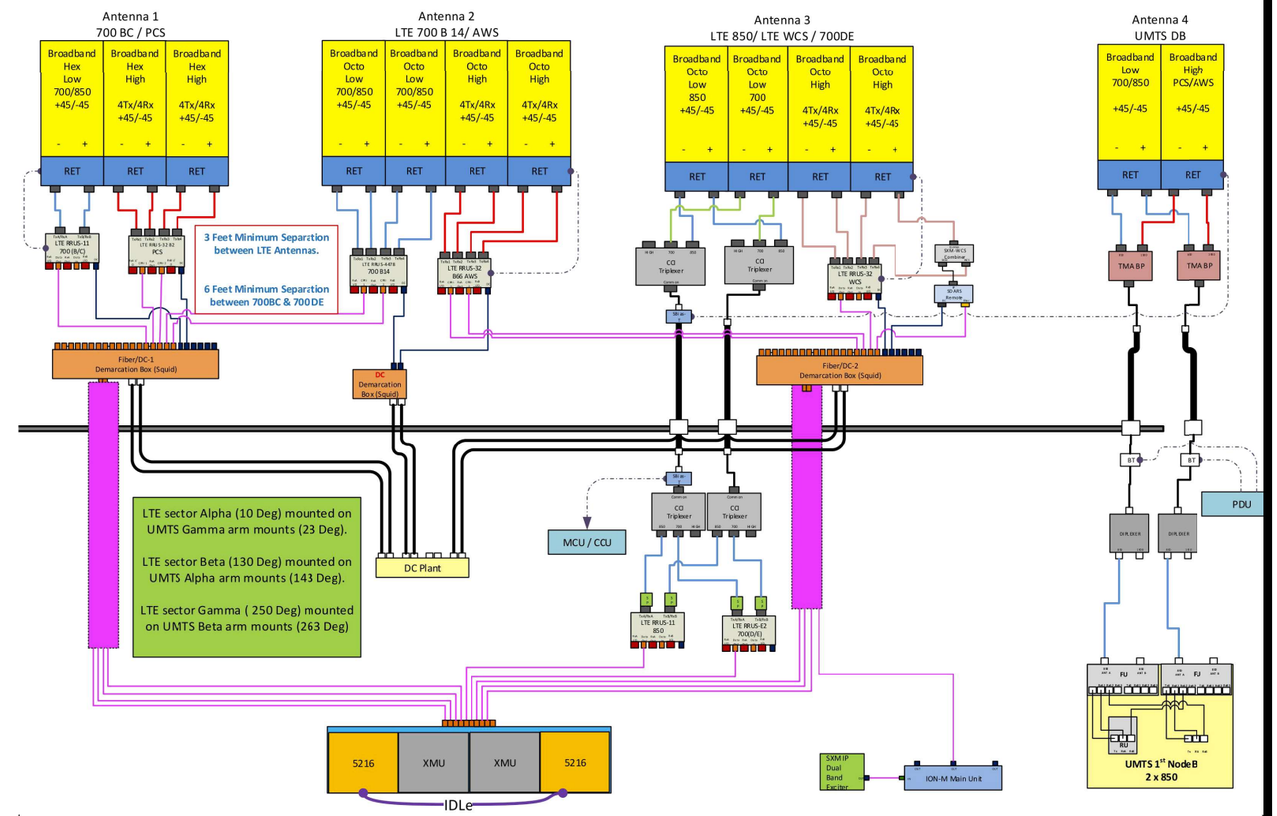

ALPHA/BETA/GAMMA SIRIUS-XM PLUMBING DIAGRAM 3/05

SCALE: N.T.S.

NOTE:
1. CONTRACTOR TO CONFIRM ALL PARTS
2. INSTALL ALL EQUIPMENT PER MANUFACTURERS RECOMMENDATIONS

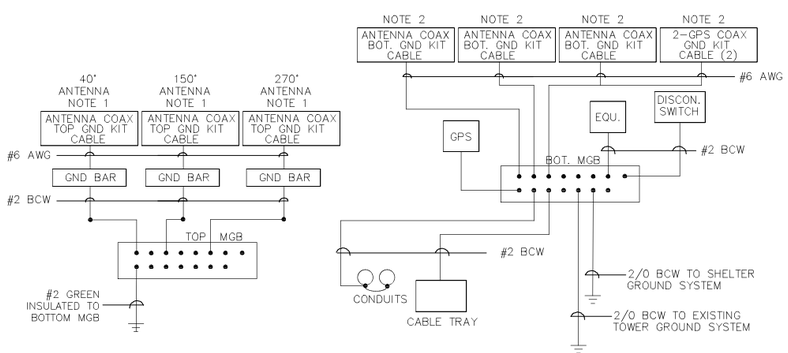

NOTE:
1. BOND ANTENNA GROUNDING KIT CABLE TO TOP CIGBE
2. BOND ANTENNA GROUNDING KIT CABLE TO BOTTOM CIGBE

SCHEMATIC GROUNDING DIAGRAM 4/05

SCALE: N.T.S.

NEWTON INSTRUMENT COMPANY, INC.
BUTNER, N.C. OR APPROVED EQUAL

ITEM	REQ.	PART NO.	DESCRIPTION
1	1	1/4"x4"x12"	PRE DRILLED GND. BAR
2	2	A-6056	WALL MTG. BRKT.
3	2	3061-4	INSULATORS
4	2	3012-13	5/8"-11x4" H.H.C.S.
5	4	3015-8	5/8 LOCKWASHER
6	2	3014-8	5/8"-11 HEX NUT

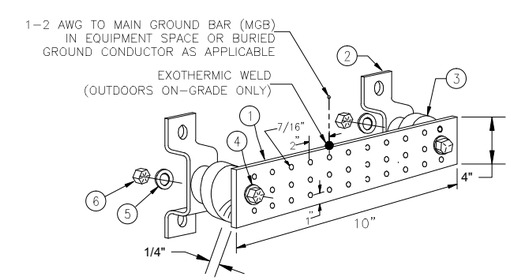

GROUND BAR DETAIL 6/05

SCALE: N.T.S.

VRG
VERTICAL RESOURCES GRP.
23 MIDSTATE DR., #210
AUBURN, MA 01501
Tel. (508) 981-9590
Fax (508) 519-8939
mnobre@verticalresourcesgrp.com

EMPIRE telecom
EMPIRE TELECOM USA, LLC
16 ESQUIRE ROAD
BILLERICA, MA 01821

SITE NUMBER: CT2157
SITE NAME: DANBURY E.
PROJECT: RF MOD // IP

48 NEWTOWN ROAD
DANBURY, CT 06810
FAIRFIELD COUNTY

at&t
550 COCHITUATE RD
SUITES 13 & 14
FRAMINGHAM, MA 01701

NO.	DATE	REVISION	BY	CHK	APP'D
3	05/27/20	ADDED TOWER MODS	E.L.P.	G.A.M.	
2	10/11/19	GENERAL REVISIONS	E.L.P.	G.A.M.	
1	08/26/19	GENERAL REVISIONS	E.L.P.	G.A.M.	
0	05/22/19	FOR CONSTRUCTION	E.L.P.	G.A.M.	

SCALE | DESIGNED BY: M.N. | DRAWN BY: G.A.M.

STATE OF CONNECTICUT JAMES P. STRUKE No. 8657 PROFESSIONAL ENGINEER

AT&T

GROUNDING DETAILS

JOB NUMBER	DRAWING NUMBER	REV.
CT2157-IPRepeater	05	3

(*)NOTE:
PREVIOUS STRUCTURAL MODIFICATIONS / REINFORCEMENTS AS PER MEI REPORT AND DRAWINGS ARE CONSIDERED INSTALLED.
[STRUCTURAL COMPONENTS JOB #100216 - DATED 07.14.10]
[CHA PROJECT 22702.1013.28000 R1 - DATED 07.07.11]
[HUDSON DESIGN GROUP REF. #CT2157 - DATED 04.25.16]
(·····DENOTES PREVIOUS MODS DONE BY OTHERS)

TOWER HEIGHT & TYPE:	110 FT± MONOPOLE
SITE NAME:	DANBURY EAST #CT2157
SITE LOCATION:	FAIRFIELD COUNTY, DANBURY, CT 06810
TOWER MANUF. / MODEL:	EEI / 18-SIDED
ORIGINAL DESIGN CRITERIA:	ANSI-222-F UNKNOWN
ANALYSIS CRITERIA:	ANSI/TIA-222-G-4 120 (93) / 50 MPH + 0.00"/0.75" ICE
SITE SPECIFICATIONS:	CLASS II / EXP. B / TOPO. 1 / Ss < 1.0

PERFORM MAINTENANCE WORK AS REQUIRED TO BRING STRUCTURE INTO GOOD OPERATIONAL CONDITION.

REFER SHEET T02 - T03 FOR TECH. SPEC. NOTES

MODIFICATION LEGEND

RANGE OF NEW SHAFT SPLICE PLATES

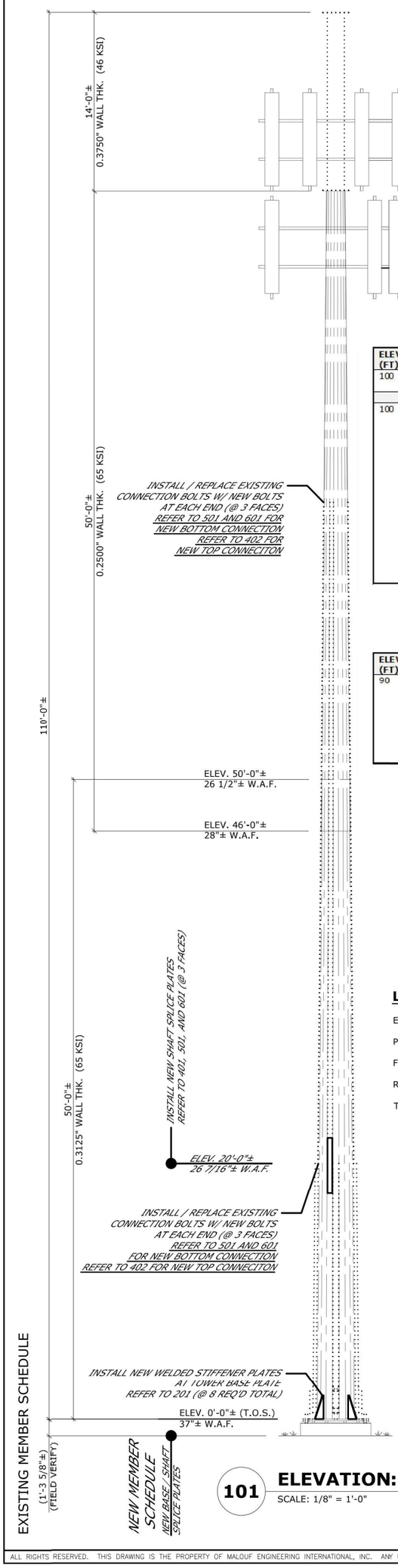

101 ELEVATION: 110 FT± MONOPOLE

SCALE: 1/8" = 1'-0"

ELEV (FT)	TENANT	ANTS QTY	APPURTENANCE MODEL / DESCRIPTION	MOUNT DESCRIPTION	LINES QTY	LINE SIZE & LOCATION
100	AT&T	3	SIRIUS XM ION-M23 SDARS RRU BOXES			
		3	COMMSCOPE CBC23SR-43 DIPLEXERS			
APPURTENANCES TO REMAIN						
100	AT&T	1	HPA-65R-BUU-H6 PANEL ANTENNA	(3)12FT HD V-FRAME MOUNTS (SABRE #C10857801) 3-WAY CLOSE CONTACT MOUNT W/ PIPES	12	1 5/8" – (E) DC POWER CABLES – (I) FIBER CABLES – (I) DC POWER CABLES – (E)
		1	800-10965 PANEL ANTENNA		4	
		1	OPA-65R-LCUU-H6 PANEL ANTENNA			
		2	SBNHH-1D65A PANEL ANTENNAS		2	
		2	800-10964 PANEL ANTENNAS			
		2	OPA-65R-LCUU-H4 PANEL ANTENNAS		2	
		3	7770.00 PANEL ANTENNAS			
		3	RRUS-11 BOXES			
		3	RRUS-32 B2 BOXES			
		3	RRUS-4478 B14 BOXES			
		3	RRUS-32 B66 BOXES			
		3	RRUS-32 B30 BOXES			
		6	TPX-070821 TRIPLEXER			
		6	LGP21401 TMA'S BOXES			
		2	DC6-48-60-18-8F SUPRESSOR BOXES			
		1	DC6-48-60-0-8F SUPRESSOR BOX			

102 PROPOSED CHANGED APPURTENANCES SCHEDULE

ELEV (FT)	TENANT	ANTS QTY	APPURTENANCE MODEL / DESCRIPTION	MOUNT DESCRIPTION	LINES QTY	LINE SIZE & LOCATION
90	VZW	1	DXA-80060-6BF PANEL ANTENNA	PLATFORM W/ HANDRAILS / CORNER OUTRIGGERS / LADDER	12	1 5/8" – (I) 1-5/8" (6X12) HYBRID (HFT1206-24SV2-XX) OR EQUIV. – (I)
		2	BXA-80080-6CF PANEL ANTENNAS		2	
		6	JAHH-65B-R3B PANEL ANTENNAS			
		3	B25 RRH4X30-4R BOXES			
		3	RRH4X45 (AWS) BOXES			
		3	B13 RRH4X30W-4R BOXES			
		3	B5 RRH 4X30-4R BOXES			
		2	DB-T1-6Z-8AB-0Z DISTRIBUTION BOXES			

103 EXISTING / RESERVED APPURTENANCES SCHEDULE

No.	QTY.	DESCRIPTION	ELEV.	TENANT
1	3	1 5/8"	100'	AT&T / E
2	9	1 5/8"	100'	AT&T / E
3	4	DC POWER CABLE	100'	AT&T / E
4	2	FIBER CABLE	100'	AT&T / E
5	2	3/4" DC POWER CABLE	100'	AT&T / E
6	12	1 5/8"	90'	VzW / E
7	2	1-5/8" (6X12) HYBRID (HFT1206-24SV2-XX) OR EQUIV.	90'	VzW / E

LEGEND:

E = EXISTING #X
P = PROPOSED #X
F = FUTURE #X
R = REMOVE #X
TO RELOCATE

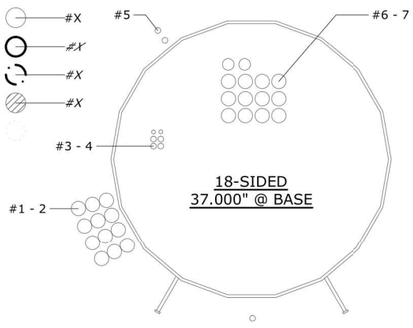

PLEASE CONTACT ENGINEER IF LINE LAYOUT IS DIFFERENT FROM WHAT IS SHOWN BELOW.

104 SCHEMATIC TX-LINE LAYOUT

SCALE: NOT TO SCALE

NOTES:
1. Tx LINE LAYOUT IS SCHEMATIC ONLY, BASED UPON LIMITED DATA AND PHOTOS PROVIDED.
2. NEW BRACKET SUPPORT SPECIFICATION BY OTHERS.

ALL RIGHTS RESERVED. THIS DRAWING IS THE PROPERTY OF MALOUF ENGINEERING INTERNATIONAL, INC. ANY USE, REPRODUCTION, ADAPTATION, DISCLOSURE, OR DISTRIBUTION IN WHOLE OR IN PART WITHOUT WRITTEN PERMISSION OF MEI, INC. IS STRICTLY PROHIBITED.

VERTICAL RESOURCES GROUP / AT&T
MONOPOLE REINFORCEMENT SCHEDULE AND TX-LINE LAYOUT
MEI PROJECT ID: CT05942M-20V0
SHEET NUMBER: S01
REV.: 0

STATE OF CONNECTICUT
MARK MALOUF
MAY 27, 2020

ALL SCALES SHOWN ARE BASED ON DRAWING SIZE OF 11" x 17"

NO.	DATE	REVISIONS	DRAWN	CHK'D	APP'D
0	05/27/20	ISSUED FOR CONSTRUCTION	BJB	KMM	MM

AT&T

DANBURY EAST #CT2157
110 FT± MONOPOLE
48 NEWTON ROAD, DANBURY, CT 06810
LAT: 41-24-12.25 N - LON: 73-25-27.95 W

MALOUF ENGINEERING INTERNATIONAL, INC.
STRUCTURAL CONSULTANTS
17350 PRESTON ROAD SUITE 720
DALLAS, TEXAS 75252-5635
972-783-2578 (fax: 2583)
www.maloufengineering.com
© MEI, INC. 2020

AT&T
TOWER MODIFICATION DETAILS I

JOB NUMBER	DRAWING NUMBER	REV
CT2157-RPRepeater	06	3

NO.	DATE	REVISION	BY	CHK	APP'D
3	05/27/20	ADDED TOWER MODS	E.L.P.	G.A.M.	
2	10/11/19	GENERAL REVISIONS	E.L.P.	G.A.M.	
1	08/26/19	GENERAL REVISIONS	E.L.P.	G.A.M.	
0	05/22/19	FOR CONSTRUCTION	E.L.P.	G.A.M.	

SCALE | DESIGNED BY: M.N. | DRAWN BY: G.A.M.

at&t
550 COCHITUATE RD
SUITES 13 & 14
FRAMINGHAM, MA 01701

SITE NUMBER: CT2157
SITE NAME: DANBURY E.
PROJECT: RF MOD // IP
48 NEWTOWN ROAD
DANBURY, CT 06810
FAIRFIELD COUNTY

EMPIRE telecom
EMPIRE TELECOM USA, LLC
16 ESQUIRE ROAD
BILLERICA, MA 01821

VRG
VERTICAL RESOURCES GRP.
23 MIDSTATE DR. #210
AUBURN, MA 01501
Tel: (508) 981-9590
Fax: (508) 519-8939
mndbre@verticalresourcesgrp.com

ALL RIGHTS RESERVED. THIS DRAWING SHALL REMAIN THE PROPERTY OF MALOUF ENGINEERING INTERNATIONAL, INC. NO PART THEREOF SHALL BE REPRODUCED, COPIED, ADAPTED, DISCLOSED, OR DISTRIBUTED TO OTHERS WITHOUT WRITTEN PERMISSION OF MEI, INC.

REFER SHEET T02 - T03 FOR TECH. SPEC. NOTES

NOTE:
LAYOUTS WERE CREATED FROM LIMITED DATA AND PHOTOS PROVIDED, FIELD VERIFICATION OF FIT FOR REINFORCEMENT IS RECOMMENDED PRIOR TO BID AND FABRICATION. IF ANY ISSUES ARE FOUND THAT INTERFERE WITH REINFORCEMENT INSTALLATION DURING VERIFICATION PROCESS PLEASE CONTACT ENGINEER AND SUPPLY APPLICABLE POLE INFORMATION.

(*) NOTE:
LOCATIONS OF EXISTING REINFORCEMENT, EXISTING BOLTS, AND PORTHOLES ARE ESTIMATED FROM LIMITED DATA AND PHOTOS; ACTUAL NORTH DIRECTION ORIENTATION IS NOT KNOWN. FIELD VERIFY LOCATION OF ALL PLATES AND ADJUST AS REQ'D FOR FIT.

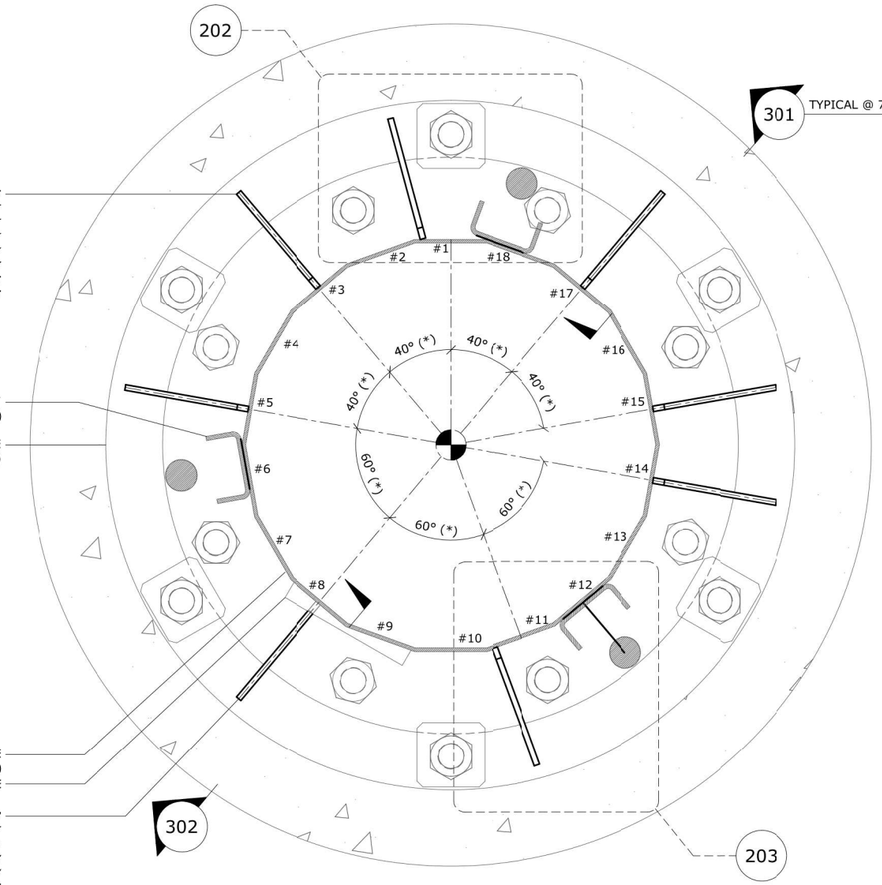

201 PLAN VIEW: NEW BASE PLATE WELDED STIFFENERS
SCALE: 1" = 1'-0" (@ BASE OF POLE)

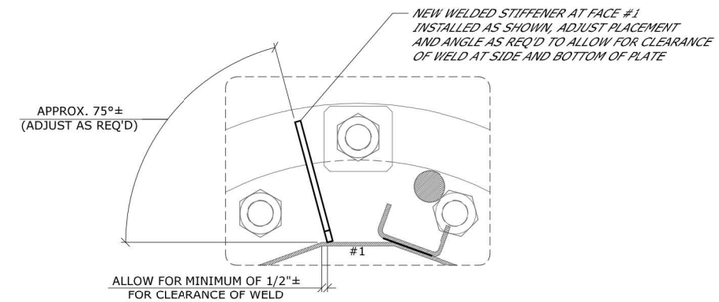

202 DETAIL: NEW BASE PLATE WELDED STIFFENERS
SCALE: 1" = 1'-0" (NEW STIFFENER @ FACE #1)

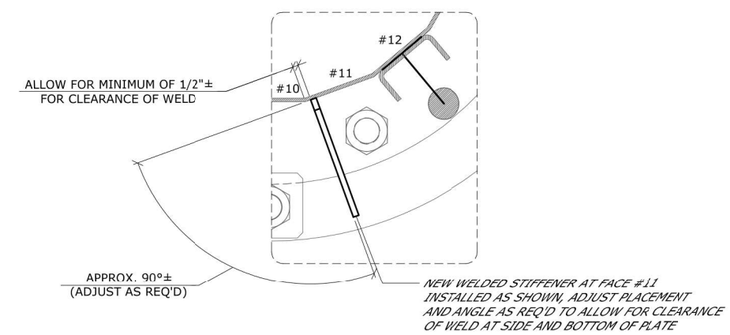

203 DETAIL: NEW BASE PLATE WELDED STIFFENERS
SCALE: 1" = 1'-0" (NEW STIFFENER @ FACE #11)

REFER 101 FOR MEMBER SIZES AND SCHEDULES.

MALOUF ENGINEERING INTERNATIONAL, INC.
STRUCTURAL CONSULTANTS
17950 PRESTON ROAD SUITE 720
DALLAS, TEXAS 75252-5635
972-783-2578 (fax: 2583)
www.maloufengineering.com
© MEI, INC. 2020

DANBURY EAST #CT2157
110 FT± MONOPOLE
48 NEWTON ROAD, DANBURY, CT 06810
LAT: 41-24-12.25 N - LON: 73-25-27.95 W

AT&T

NO.	DATE	REVISIONS	DRAWN	ENG'D.	APP'D.
0	05/27/20	ISSUED FOR CONSTRUCTION	BDB	KMM	MM

STATE OF CONNECTICUT · ELMARK MALOUF · 17715 · LICENSED PROFESSIONAL ENGINEER
MAY 27, 2020

VERTICAL RESOURCES GROUP / AT&T
BASE PLATE REINFORCEMENT

MEI PROJECT ID	SHEET NUMBER	REV.
CT05942M-20V0	S02	0

VRG
VERTICAL RESOURCES GRP.
23 MIDSTATE DR., #210
AUBURN, MA 01501
Tel. (508) 981-9590
Fax (508) 519-8939
mnobre@verticalresourcesgrp.com

EMPIRE telecom
EMPIRE TELECOM USA, LLC
16 ESQUIRE ROAD
BILLERICA, MA 01821

SITE NUMBER: CT2157
SITE NAME: DANBURY E.
PROJECT: RF MOD // IP
48 NEWTOWN ROAD
DANBURY, CT 06810
FAIRFIELD COUNTY

at&t
550 COCHITUATE RD
SUITES 13 & 14
FRAMINGHAM, MA 01701

NO.	DATE	REVISION	BY	CHK	APP'D
3	05/27/20	ADDED TOWER MODS	E.L.P.	G.A.M.	
2	10/11/19	GENERAL REVISIONS	E.L.P.	G.A.M.	
1	08/26/19	GENERAL REVISIONS	E.L.P.	G.A.M.	
0	05/22/19	FOR CONSTRUCTION	E.L.P.	G.A.M.	

SCALE | DESIGNED BY: M.N. | DRAWN BY: G.A.M.

AT&T

TOWER MODIFICATION DETAILS II

JOB NUMBER	DRAWING NUMBER	REV.
CT2157-IPRepeater	07	3

REFER SHEET T02 - T03 FOR TECH. SPEC. NOTES

ALL RIGHTS RESERVED. THIS DRAWING SHALL REMAIN THE PROPERTY OF MALOUF ENGINEERING INTERNATIONAL, INC. NO PART THEREOF SHALL BE REPRODUCED, COPIED, ADAPTED, DISCLOSED, OR DISTRIBUTED TO OTHERS WITHOUT WRITTEN PERMISSION OF MEI, INC.

NOTE:
LAYOUTS WERE CREATED FROM LIMITED DATA AND PHOTOS PROVIDED, FIELD VERIFICATION OF FIT FOR REINFORCEMENT IS RECOMMENDED PRIOR TO BID AND FABRICATION. IF ANY ISSUES ARE FOUND THAT INTERFERE WITH REINFORCEMENT INSTALLATION DURING VERIFICATION PROCESS PLEASE CONTACT ENGINEER AND SUPPLY APPLICABLE POLE INFORMATION.

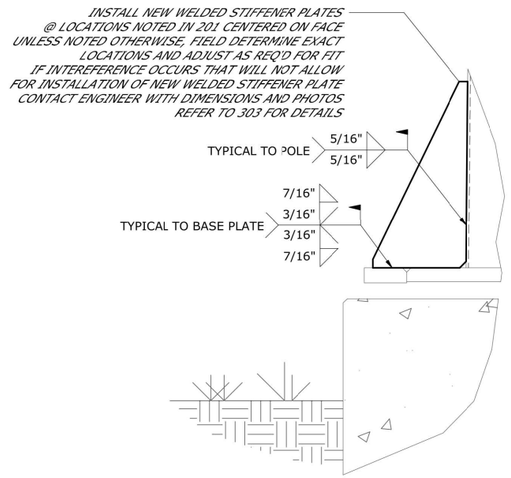

301 ELEVATION: TYPICAL WELD DETAILS FOR STIFFENERS

SCALE: 3/4" = 1'-0" (TYPICAL @ ALL LOCATIONS UNLESS NOTED OTHERWISE)

(*) DIMENSIONS APPROX. FOR BIDDING PURPOSES; FIELD VERIFY / DETERMINE AND ADJUST AS REQ'D.

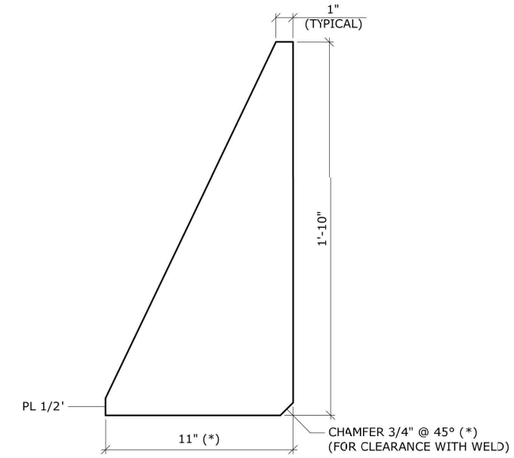

303 DETAIL: TYPICAL STIFFENER PLATE

SCALE: 1 1/2" = 1'-0" (7 REQUIRED TOTAL)

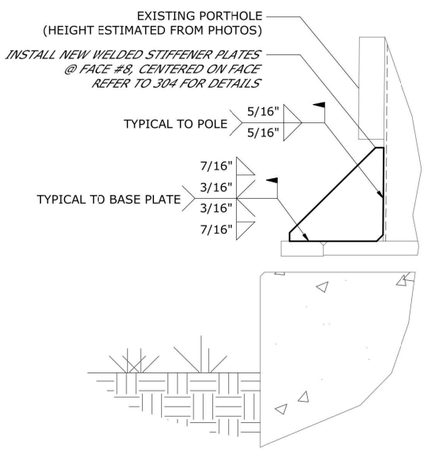

302 ELEVATION: TYPICAL WELD DETAILS FOR STIFFENERS

SCALE: 3/4" = 1'-0" (@ FACE #)

(*) DIMENSIONS APPROX. FOR BIDDING PURPOSES; FIELD VERIFY / DETERMINE AND ADJUST AS REQ'D.

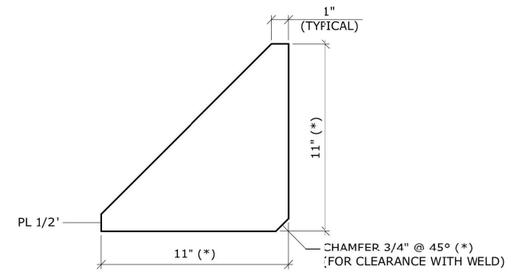

304 DETAIL: STIFFENER PLATE (@ FACE #8)

SCALE: 1 1/2" = 1'-0" (1 REQ'D / BELOW PORTHOLE)

REFER 101 FOR MEMBER SIZES AND SCHEDULES.

MALOUF ENGINEERING INTERNATIONAL, INC.
STRUCTURAL CONSULTANTS
17950 PRESTON ROAD SUITE 720
DALLAS, TEXAS 75252-5635
972-783-2578 (fax: 2583)
www.maloufengineering.com
© MEI, INC. 2020

DANBURY EAST #CT2157
110 FT± MONOPOLE
48 NEWTON ROAD, DANBURY, CT 06810
LAT: 41-24-12.25 N - LON: 73-25-27.95 W

AT&T

NO.	DATE	REVISIONS	DRAWN	ENG'D	APP'D
0	05/27/20	ISSUED FOR CONSTRUCTION	BDB	KMM	MM

STATE OF CONNECTICUT · ELMARK MALOUF · No. 17715 · LICENSED PROFESSIONAL ENGINEER

MAY 27, 2020

VERTICAL RESOURCES GROUP / AT&T

BASE PLATE REINFORCEMENT CONT.

MEI PROJECT ID	SHEET NUMBER	REV.
CT05942M-20V0	S03	0

VRG
VERTICAL RESOURCES GRP.
23 MIDSTATE DR., #210
AUBURN, MA 01501
Tel. (508) 981-9590
Fax (508) 519-8939
mnobre@verticalresourcesgrp.com

EMPIRE telecom
EMPIRE TELECOM USA, LLC
16 ESQUIRE ROAD
BILLERICA, MA 01821

SITE NUMBER: CT2157
SITE NAME: DANBURY E.
PROJECT: RF MOD // IP
48 NEWTOWN ROAD
DANBURY, CT 06810
FAIRFIELD COUNTY

at&t
550 COCHITUATE RD
SUITES 13 & 14
FRAMINGHAM, MA 01701

NO.	DATE	REVISION	BY	CHK	APP'D
3	05/27/20	ADDED TOWER MODS	E.L.P.	G.A.M.	
2	10/11/19	GENERAL REVISIONS	E.L.P.	G.A.M.	
1	08/26/19	GENERAL REVISIONS	E.L.P.	G.A.M.	
0	05/22/19	FOR CONSTRUCTION	E.L.P.	G.A.M.	

SCALE | DESIGNED BY: M.N. | DRAWN BY: G.A.M.

AT&T

TOWER MODIFICATION DETAILS III

JOB NUMBER	DRAWING NUMBER	REV.
CT2157-IPRepeater	08	3

ALL RIGHTS RESERVED. THIS DRAWING SHALL REMAIN THE PROPERTY OF MALOUF ENGINEERING INTERNATIONAL, INC. NO PART THEREOF SHALL BE REPRODUCED, COPIED, ADAPTED, DISCLOSED, OR DISTRIBUTED TO OTHERS WITHOUT WRITTEN PERMISSION OF MEI, INC.

NOTES:
1) FIELD VERIFY AND LOCATE REINFORCEMENT ABOUT SHAFT AS SHOWN AND AS REQ'D TO AVOID ANY EXISTING INTERFERENCES, SUCH AS COAX PORT HOLES, STEP BOLTS, AND SAFETY CLIMB.
2) EACH SHAFT REINFORCEMENT MUST BE (3) EMPTY FACES FROM THE NEXT REINFORCEMENT, AS SHOWN.
3) ONE REINFORCEMENT MAY BE ADJUSTED BY ±1 FACE IF REQUIRED TO AVOID INTERFERENCE.

(*) NOTE:
LOCATIONS OF EXISTING REINFORCEMENT, EXISTING BOLTS, AND PORTHOLES ARE ESTIMATED FROM LIMITED DATA AND PHOTOS; ACTUAL NORTH DIRECTION ORIENTATION IS NOT KNOWN. FIELD VERIFY LOCATION OF ALL PLATES AND ADJUST AS REQ'D FOR FIT.

NOTE:
LAYOUTS WERE CREATED FROM LIMITED DATA AND PHOTOS PROVIDED, FIELD VERIFICATION OF FIT FOR REINFORCEMENT IS RECOMMENDED PRIOR TO BID AND FABRICATION. IF ANY ISSUES ARE FOUND THAT INTERFERE WITH REINFORCEMENT INSTALLATION DURING VERIFICATION PROCESS PLEASE CONTACT ENGINEER AND SUPPLY APPLICABLE POLE INFORMATION.

REFER SHEET T02 - T03 FOR TECH. SPEC. NOTES

NOTE: ALL HOLLO-BOLTS ARE TO BE INSTALLED AS PER MANUFACTURER INSTRUCTIONS W/ ALL RELATED HARDWARE.
HOLLO-BOLTS ARE DISTRIBUTED BY:
UCC STEELWORK CONNECTIONS INC.
320 GATEWAY PARK DRIVE, UNIT 2
NORTH SYRACUSE, NY 13212
(800)308-1043

FIELD TO VERIFY ALL NEW & EXISTING PLATE THICKNESSES RELATIVE TO SIZE/LENGTH OF APPROPRIATE HOLLO-BOLT PRODUCTS PRIOR TO PURCHASE.

ALTERNATELY EQUIVALENT BOX-BOLTS BY LNA SOLUTIONS MAY BE USED. INSTALL AS PER MANUFACTURER INSTRUCTIONS W/ ALL RELATED HARDWARE.
CONTACT LNA SOLUTIONS FOR DETAILS
(888)724-2323

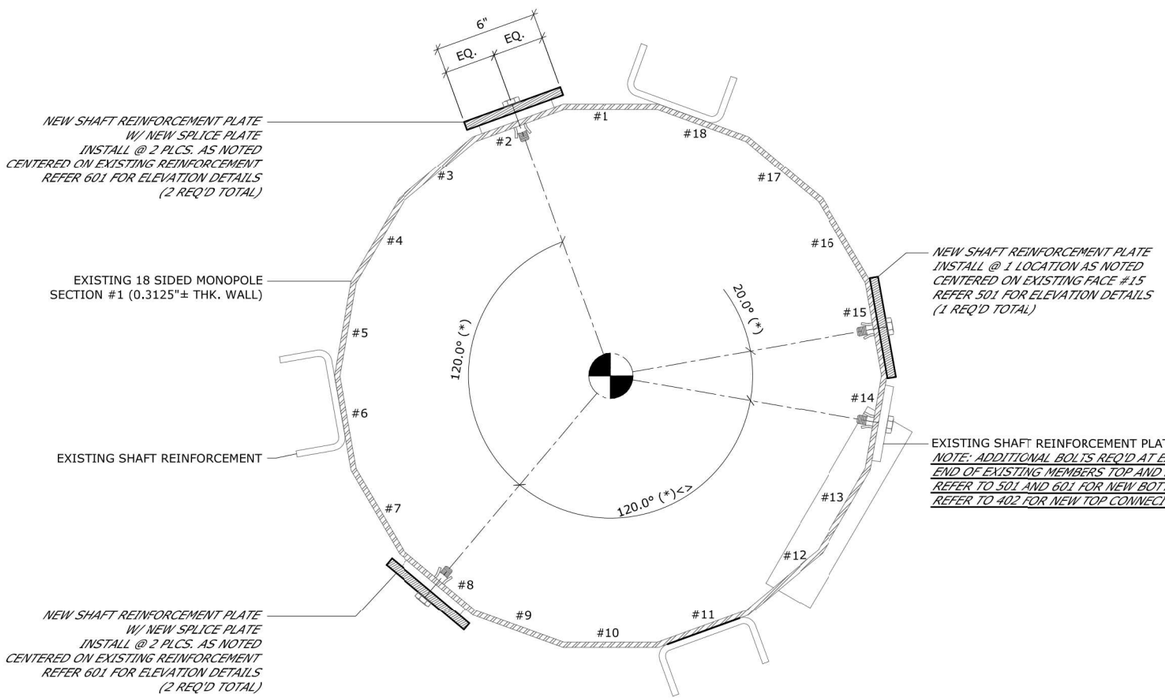

401 **SECTION: NEW SHAFT REINFORCEMENT**
SCALE: 1 1/2" = 1'-0"

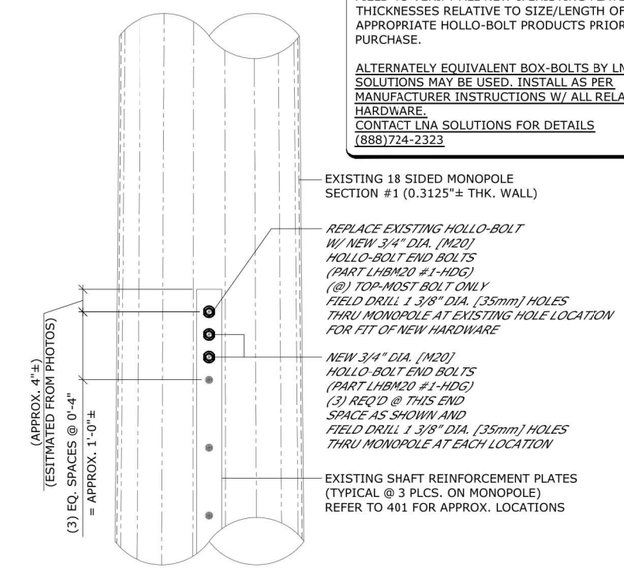

402 **ELEVATION: NEW TOP CONNECTION @ EXISTING PLATES**
SCALE: N.T.S.
(TYPICAL @ 3 LOCATIONS)

REFER 101 FOR MEMBER SIZES AND SCHEDULES.

MALOUF ENGINEERING INTERNATIONAL, INC.
STRUCTURAL CONSULTANTS
17950 PRESTON ROAD SUITE 720
DALLAS, TEXAS 75252-5635
972-783-2578 (fax: 2583)
www.maloufengineering.com
© MEI, INC. 2020

DANBURY EAST #CT2157
110 FT± MONOPOLE
48 NEWTON ROAD, DANBURY, CT 06810
LAT: 41-24-12.25 N - LON: 73-25-27.95 W

AT&T

NO.	DATE	REVISIONS	DRAWN	ENG'D	APP'D
0	05/27/20	ISSUED FOR CONSTRUCTION	BDB	KMM	MM

STATE OF CONNECTICUT · ERIC MARK MALOUF · No. 17715 · LICENSED PROFESSIONAL ENGINEER
MAY 27, 2020

VERTICAL RESOURCES GROUP / AT&T
NEW SHAFT REINFORCEMENT DETAILS

MEI PROJECT ID	SHEET NUMBER	REV.
CT05942M-20V0	**S04**	0

VRG
VERTICAL RESOURCES GRP.
23 MIDSTATE DR., #210
AUBURN, MA 01501
Tel. (508) 981-9590
Fax (508) 519-8939
mnobre@verticalresourcesgrp.com

EMPIRE telecom
EMPIRE TELECOM USA, LLC
16 ESQUIRE ROAD
BILLERICA, MA 01821

SITE NUMBER: CT2157
SITE NAME: DANBURY E.
PROJECT: RF MOD // IP
48 NEWTOWN ROAD
DANBURY, CT 06810
FAIRFIELD COUNTY

at&t
550 COCHITUATE RD
SUITES 13 & 14
FRAMINGHAM, MA 01701

NO.	DATE	REVISION	BY	CHK	APP'D
3	05/27/20	ADDED TOWER MODS	E.L.P.	G.A.M.	
2	10/11/19	GENERAL REVISIONS	E.L.P.	G.A.M.	
1	08/26/19	GENERAL REVISIONS	E.L.P.	G.A.M.	
0	05/22/19	FOR CONSTRUCTION	E.L.P.	G.A.M.	

SCALE | DESIGNED BY: M.N. | DRAWN BY: G.A.M.

AT&T
TOWER MODIFICATION DETAILS IV

JOB NUMBER	DRAWING NUMBER	REV
CT2157-IPRepeater	09	3

ALL RIGHTS RESERVED. THIS DRAWING SHALL REMAIN THE PROPERTY OF MALOUF ENGINEERING INTERNATIONAL, INC. NO PART THEREOF SHALL BE REPRODUCED, COPIED, ADAPTED, DISCLOSED, OR DISTRIBUTED TO OTHERS WITHOUT WRITTEN PERMISSION OF MEI, INC.

NOTE:
LAYOUTS WERE CREATED FROM LIMITED DATA AND PHOTOS PROVIDED, FIELD VERIFICATION OF FIT FOR REINFORCEMENT IS RECOMMENDED PRIOR TO BID AND FABRICATION. IF ANY ISSUES ARE FOUND THAT INTERFERE WITH REINFORCEMENT INSTALLATION DURING VERIFICATION PROCESS PLEASE CONTACT ENGINEER AND SUPPLY APPLICABLE POLE INFORMATION.

REFER SHEET T02 - T03 FOR TECH. SPEC. NOTES

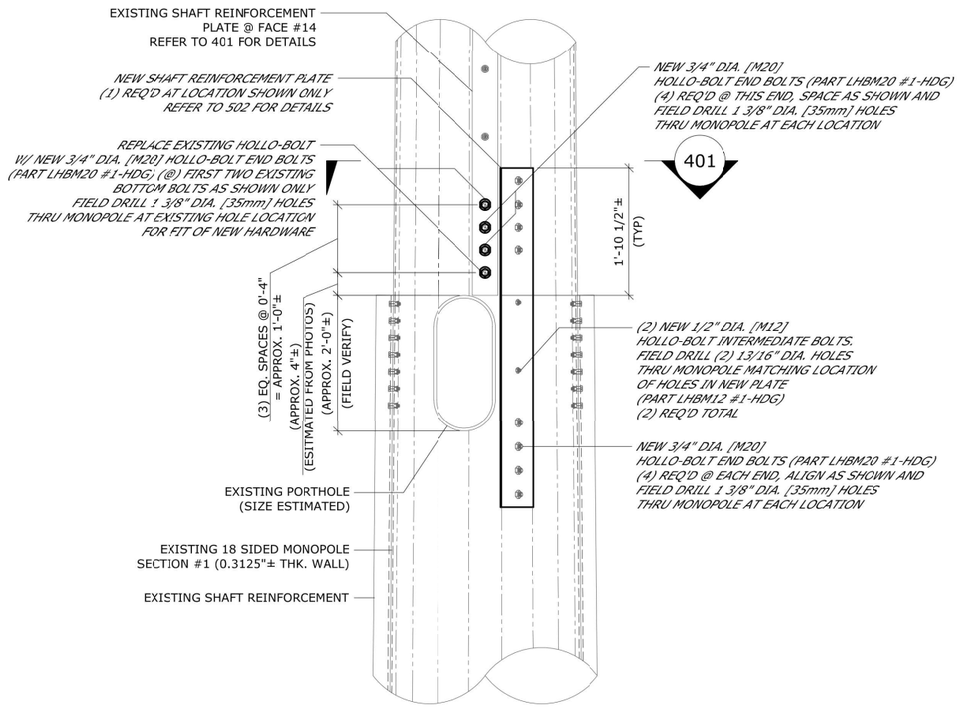

501 **ELEVATION: NEW SHAFT REINFORCEMENT**
SCALE: 1/2" = 1'-0" (TYPICAL @ FACE #14)

NOTE: ALL HOLLO-BOLTS ARE TO BE INSTALLED AS PER MANUFACTURER INSTRUCTIONS W/ ALL RELATED HARDWARE.
HOLLO-BOLTS ARE DISTRIBUTED BY:
UCC STEELWORK CONNECTIONS INC.
320 GATEWAY PARK DRIVE, UNIT 2
NORTH SYRACUSE, NY 13212
(800)308-1043

FIELD TO VERIFY ALL NEW & EXISTING PLATE THICKNESSES RELATIVE TO SIZE/LENGTH OF APPROPRIATE HOLLO-BOLT PRODUCTS PRIOR TO PURCHASE.

ALTERNATELY EQUIVALENT BOX-BOLTS BY LNA SOLUTIONS MAY BE USED. INSTALL AS PER MANUFACTURER INSTRUCTIONS W/ ALL RELATED HARDWARE.
CONTACT LNA SOLUTIONS FOR DETAILS
(888)724-2323

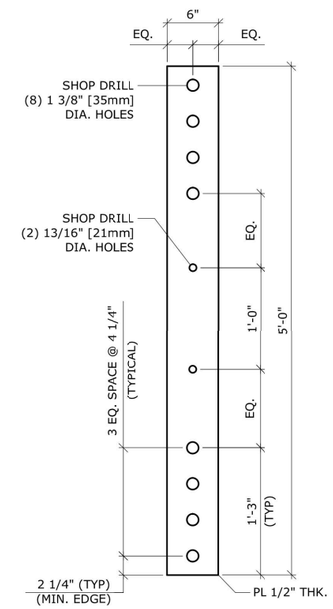

502 **DETAIL: NEW SHAFT REINFORCEMENT PLATE**
SCALE: 3/4" = 1'-0" (1 REQUIRED TOTAL / @ PORTHOLE)

REFER 101 FOR MEMBER SIZES AND SCHEDULES.

MALOUF ENGINEERING INTERNATIONAL, INC.
STRUCTURAL CONSULTANTS
17950 PRESTON ROAD SUITE 720
DALLAS, TEXAS 75252-5635
972-783-2578 (fax: 2583)
www.maloufengineering.com
© MEI, INC. 2020

DANBURY EAST #CT2157
110 FT± MONOPOLE
48 NEWTON ROAD, DANBURY, CT 06810
LAT: 41-24-12.25 N - LON: 73-25-27.95 W

AT&T

NO.	DATE	REVISIONS	DRAWN	ENG'D	APP'D
0	05/27/20	ISSUED FOR CONSTRUCTION	BDB	KMM	MM

STATE OF CONNECTICUT · J. MARK MALOUF · No. 17715 · LICENSED PROFESSIONAL ENGINEER
MAY 27, 2020

VERTICAL RESOURCES GROUP / AT&T
NEW SHAFT REINFORCEMENT DETAILS CONT.

MEI PROJECT ID	SHEET NUMBER	REV.
CT05942M-20V0	**S05**	0

VRG
VERTICAL RESOURCES GRP.
23 MIDSTATE DR., #210
AUBURN, MA 01501
Tel. (508) 981-9590
Fax (508) 519-8939
mnobre@verticalresourcesgrp.com

EMPIRE telecom
EMPIRE TELECOM USA, LLC
16 ESQUIRE ROAD
BILLERICA, MA 01821

SITE NUMBER: CT2157
SITE NAME: DANBURY E.
PROJECT: RF MOD // IP
48 NEWTOWN ROAD
DANBURY, CT 06810
FAIRFIELD COUNTY

at&t
550 COCHITUATE RD
SUITES 13 & 14
FRAMINGHAM, MA 01701

NO.	DATE	REVISION	BY	CHK	APP'D
3	05/27/20	ADDED TOWER MODS	E.L.P.	G.A.M.	
2	10/11/19	GENERAL REVISIONS	E.L.P.	G.A.M.	
1	08/26/19	GENERAL REVISIONS	E.L.P.	G.A.M.	
0	05/22/19	FOR CONSTRUCTION	E.L.P.	G.A.M.	

SCALE | DESIGNED BY: M.N. | DRAWN BY: G.A.M.

AT&T
TOWER MODIFICATION DETAILS V

JOB NUMBER	DRAWING NUMBER	REV
CT2157-IPRepeater	10	3

ALL RIGHTS RESERVED. THIS DRAWING SHALL REMAIN THE PROPERTY OF MALOUF ENGINEERING INTERNATIONAL, INC. NO PART THEREOF SHALL BE REPRODUCED, COPIED, ADAPTED, DISCLOSED, OR DISTRIBUTED TO OTHERS WITHOUT WRITTEN PERMISSION OF MEI, INC.

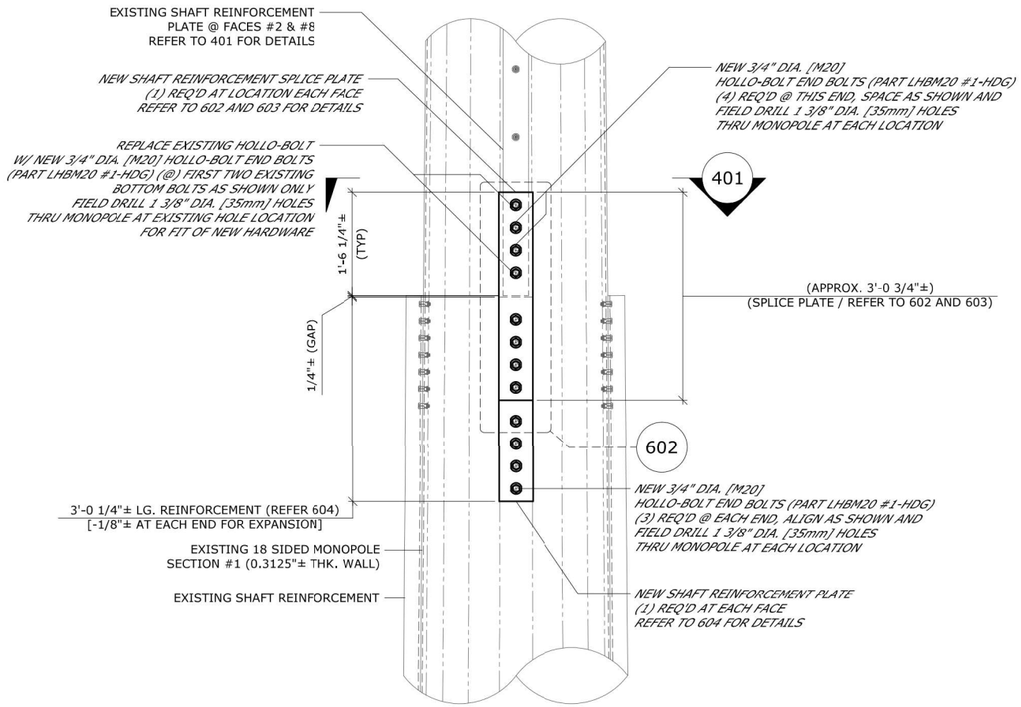

601 ELEVATION: NEW SHAFT REINFORCEMENT

SCALE: 1/2" = 1'-0" (TYPICAL @ FACES #2 & 8)

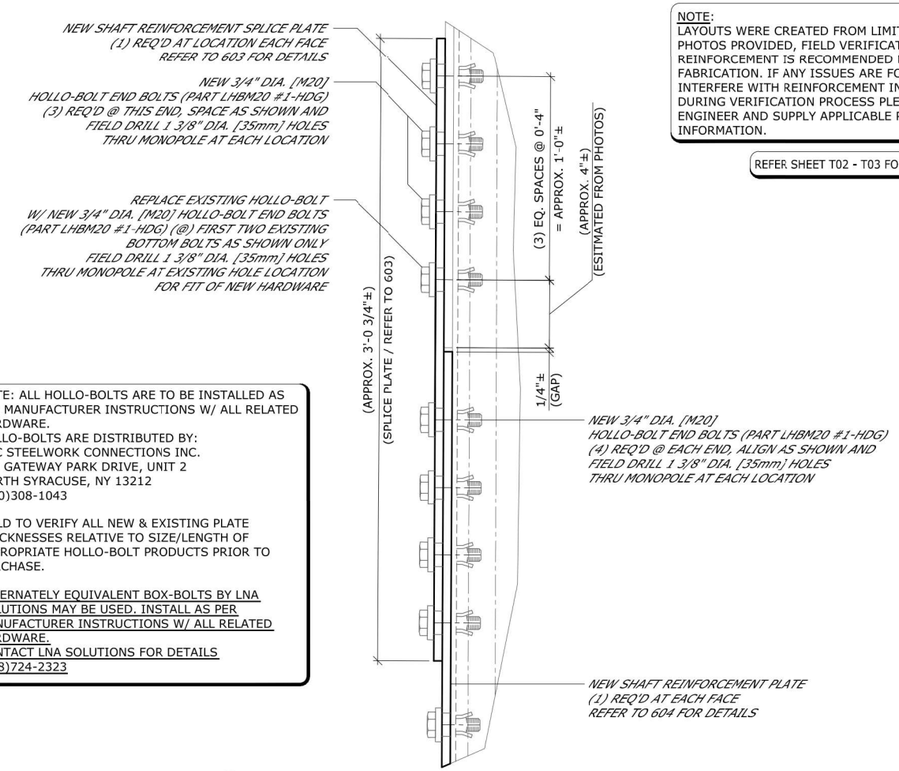

NOTE: ALL HOLLO-BOLTS ARE TO BE INSTALLED AS PER MANUFACTURER INSTRUCTIONS W/ ALL RELATED HARDWARE.
HOLLO-BOLTS ARE DISTRIBUTED BY:
UCC STEELWORK CONNECTIONS INC.
320 GATEWAY PARK DRIVE, UNIT 2
NORTH SYRACUSE, NY 13212
(800)308-1043

FIELD TO VERIFY ALL NEW & EXISTING PLATE THICKNESSES RELATIVE TO SIZE/LENGTH OF APPROPRIATE HOLLO-BOLT PRODUCTS PRIOR TO PURCHASE.

ALTERNATELY EQUIVALENT BOX-BOLTS BY LNA SOLUTIONS MAY BE USED. INSTALL AS PER MANUFACTURER INSTRUCTIONS W/ ALL RELATED HARDWARE.
CONTACT LNA SOLUTIONS FOR DETAILS
(888)724-2323

NOTE:
LAYOUTS WERE CREATED FROM LIMITED DATA AND PHOTOS PROVIDED, FIELD VERIFICATION OF FIT FOR REINFORCEMENT IS RECOMMENDED PRIOR TO BID AND FABRICATION. IF ANY ISSUES ARE FOUND THAT INTERFERE WITH REINFORCEMENT INSTALLATION DURING VERIFICATION PROCESS PLEASE CONTACT ENGINEER AND SUPPLY APPLICABLE POLE INFORMATION.

REFER SHEET T02 - T03 FOR TECH. SPEC. NOTES

602 SECTION: NEW SHAFT REINFORCEMENT SPLICE

SCALE: 1 1/2" = 1'-0" (1 FACE SHOWN / 2 FACES TOTAL)

(*) DIMENSIONS APPROX. FOR BIDDING PURPOSES; FIELD VERIFY / DETERMINE AND ADJUST AS REQ'D.

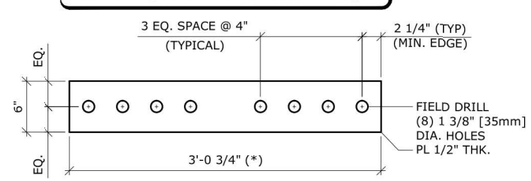

603 DETAIL: NEW SHAFT REINFORCEMENT SPLICE PLATE

SCALE: 3/4" = 1'-0" (2 REQUIRED TOTAL)

(*) DIMENSIONS APPROX. FOR BIDDING PURPOSES; FIELD VERIFY / DETERMINE AND ADJUST AS REQ'D.

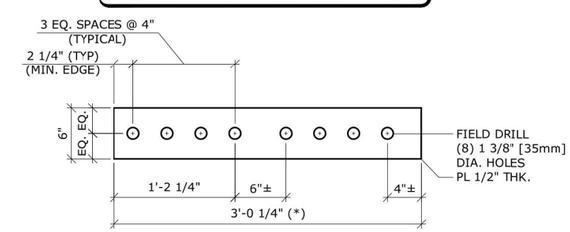

604 DETAIL: NEW SHAFT REINFORCEMENT PLATE

SCALE: 3/4" = 1'-0" (2 REQUIRED TOTAL)

REFER 101 FOR MEMBER SIZES AND SCHEDULES.

MALOUF ENGINEERING INTERNATIONAL, INC.
STRUCTURAL CONSULTANTS
17950 PRESTON ROAD SUITE 720
DALLAS, TEXAS 75252-5635
972-783-2578 (fax: 2583)
www.maloufengineering.com
© MEI, INC. 2020

DANBURY EAST #CT2157
110 FT± MONOPOLE
48 NEWTON ROAD, DANBURY, CT 06810
LAT: 41-24-12.25 N - LON: 73-25-27.95 W

AT&T

NO.	DATE	REVISIONS	DRAWN	ENG'D	APP'D
0	05/27/20	ISSUED FOR CONSTRUCTION	BDB	KMN	MM

STATE OF CONNECTICUT · E. MARK MALOUF · No. 17715 · LICENSED PROFESSIONAL ENGINEER
MAY 27, 2020

VERTICAL RESOURCES GROUP / AT&T
NEW SHAFT REINFORCEMENT DETAILS CONT.

MEI PROJECT ID	SHEET NUMBER	REV.
CT05942M-20V0	S06	0

VRG
VERTICAL RESOURCES GRP.
23 MIDSTATE DR., #210
AUBURN, MA 01501
Tel. (508) 981-9590
Fax (508) 519-8939
mnobre@verticalresourcesgrp.com

EMPIRE telecom
EMPIRE TELECOM USA, LLC
16 ESQUIRE ROAD
BILLERICA, MA 01821

SITE NUMBER: CT2157
SITE NAME: DANBURY E.
PROJECT: RF MOD // IP
48 NEWTOWN ROAD
DANBURY, CT 06810
FAIRFIELD COUNTY

at&t
550 COCHITUATE RD
SUITES 13 & 14
FRAMINGHAM, MA 01701

NO.	DATE	REVISION	BY	CHK	APP'D
5	05/27/20	ADDED TOWER MODS	E.L.P.	G.A.M.	
4	10/11/19	GENERAL REVISIONS	E.L.P.	G.A.M.	
3	08/26/19	GENERAL REVISIONS	E.L.P.	G.A.M.	
2	05/22/19	FOR CONSTRUCTION	E.L.P.	G.A.M.	

SCALE | DESIGNED BY: M.N. | DRAWN BY: G.A.M.

AT&T
TOWER MODIFICATION DETAILS VI

JOB NUMBER	DRAWING NUMBER	REV.
CT2157-IPRepeater	11	3

ALL RIGHTS RESERVED. THIS DRAWING SHALL REMAIN THE PROPERTY OF MALOUF ENGINEERING INTERNATIONAL, INC. NO PART THEREOF SHALL BE REPRODUCED, COPIED, ADAPTED, DISCLOSED, OR DISTRIBUTED TO OTHERS WITHOUT WRITTEN PERMISSION OF MEI, INC.

PROJECT TEAM

CLIENT:
MIGUEL NOBRE
VERTICAL RESOURCES GROUP
MNOBRE@VERTICALRESOURCESGRP.COM
508-981-9590

CARRIER:
AT&T

OWNER:
CROWN CASTLE
(SITE: DANBURY EAST BU#852850)

STRUCTURAL ENGINEER:
MALOUF ENGINEERING INTERNATIONAL, INC.
17950 PRESTON RD, SUITE 720
DALLAS, TX 75252

MEI CONTACT:
KRISHNA MANDA, PE
972-783-2578 X105
KMANDA@MALOUFENGINEERING.COM

PROJECT INFORMATION

AT&T

DANBURY EAST #CT2157
FA #10035077
110 FT± MONOPOLE

48 NEWTON ROAD, DANBURY, CT 06810
LAT: 41-24-12.25 N - LON: 73-25-27.95 W

DRAWING INDEX

T01	TITLE SHEET
T02	TECHNICAL SPECIFICATION NOTES
T03	TECH. SPEC. NOTES, POST-MOD INSPECTION, AND CHECKLIST
S01	MONOPOLE REINFORCEMENT SCHEDULE AND TX-LINE LAYOUT
S02	BASE PLATE REINFORCEMENT
S03	BASE PLATE REINFORCEMENT CONT.
S04	NEW SHAFT REINFORCEMENT DETAILS
S05	NEW SHAFT REINFORCEMENT DETAILS CONT.
S06	NEW SHAFT REINFORCEMENT DETAILS CONT.

STRUCTURE ELEVATION PHOTO

VICINITY MAP

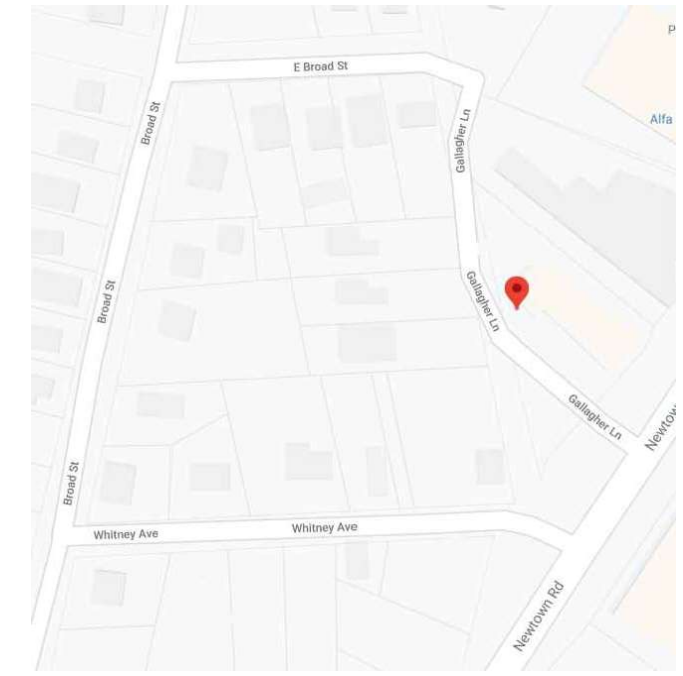

CODE COMPLIANCE

ALL WORK SHALL BE PERFORMED AND MATERIAL INSTALLED IN ACCORDANCE WITH THE CURRENT EDITIONS OF THE FOLLOWING CODES AS ADOPTED BY THE LOCAL GOVERNING AUTHORITIES.

STRUCTURAL CODE: 2018 CT BLDG. CODE | 2015 IBC
LOADING CRITERIA: ANSI-TIA-222-G-4

SCOPE OF WORK

1. THESE DRAWINGS INDICATE THE MAJOR OPERATIONS TO BE PERFORMED, BUT DO NOT SHOW EVERY FIELD CONDITION THAT MAY BE ENCOUNTERED. THEREFORE, PRIOR TO BIDDING AND TO BEGINNING OF WORK, THE CONTRACTOR SHALL GET FAMILIARIZED WITH THE WORK NOTED AND SHALL PERFORM A FIELD SITE VISIT TO SURVEY THE STRUCTURE FOR FIELD VERIFICATION / DETERMINATION OF REQUIRED WORK AND THE JOB SITE THOROUGHLY TO MINIMIZE FUTURE FIELD PROBLEMS.
2. THE MODIFICATION WORK SCHEDULE IS AS SHOWN ON SHEET S01 WITH THE FOLLOWING MAIN ITEMS:
   - FIELD WELD NEW STIFFENER PLATES TO THE BASE PLATE AS SHOWN AND DETAILED IN MODIFICATION DRAWINGS.
   - INSTALL OVERLAPPING / SPLICE PLATES AT ELEVATION 20 FT± AS SHOWN AND DETAILED.
   - INSTALL END BOLTS ONTO THE EXISTING REINFORCING PLATES AT ELEVATIONS 21 FT± AND 72 FT± AS SHOWN AND DETAILED.
   - FIELD VERIFY LOCATIONS OF PLATES AND INTERFERENCES, PRIOR TO FABRICATION.
   - PERFORM ANY MAINTENANCE WORK AS REQUIRED AND APPLICABLE TO BRING THE STRUCTURE INTO GOOD OPERATIONAL CONDITION. ALL SAFETY MEASURES AND PRECAUTIONS SHALL BE TAKEN AS REQ'D BY CODE AND INDUSTRY STANDARDS.
   - CONTRACTOR TO PERFORM FIELD DETERMINATION / VERIFICATION BEFORE FABRICATION.

MALOUF ENGINEERING INTERNATIONAL, INC.
STRUCTURAL CONSULTANTS
17950 PRESTON ROAD SUITE 720
DALLAS, TEXAS 75252-5635
972-783-2578 (fax: 2583)
www.maloufengineering.com

© MEI, INC. 2020

DANBURY EAST #CT2157
110 FT± MONOPOLE
48 NEWTON ROAD, DANBURY, CT 06810
LAT: 41-24-12.25 N - LON: 73-25-27.95 W

AT&T

NO.	DATE	REVISIONS	DRAWN	ENG'D.	APP'D.
0	05/27/20	ISSUED FOR CONSTRUCTION	BDB	KMM	MM

STATE OF CONNECTICUT · E. MARK MALOUF · No. 17715 · LICENSED PROFESSIONAL ENGINEER
MAY 27, 2020

VERTICAL RESOURCES GROUP / AT&T

TITLE SHEET

MEI PROJECT ID	SHEET NUMBER	REV.
CT05942M-20V0	T01	0

ALL RIGHTS RESERVED. THIS DRAWING SHALL REMAIN THE PROPERTY OF MALOUF ENGINEERING INTERNATIONAL, INC. NO PART THEREOF SHALL BE REPRODUCED, COPIED, ADAPTED, DISCLOSED, OR DISTRIBUTED TO OTHERS WITHOUT WRITTEN PERMISSION OF MEI, INC.

GENERAL NOTES

1. STRUCTURAL MODIFICATIONS HAVE BEEN DESIGNED IN CONFORMANCE WITH THE NOTED BUILDING CODE & STANDARD. MATERIALS, FABRICATION, INSTALLATION, AND ALL OTHER SERVICES PROVIDED BY THE CONTRACTOR SHALL CONFORM TO THE NOTED CODES / STANDARDS AND THE CONTRACT SPECIFICATIONS.
2. SOURCE DATA REGARDING SUBJECT STRUCTURE HAVE BEEN OBTAINED FROM SUPPLIED / OBTAINED DOCUMENTS. ACTUAL SITE DIMENSIONS SHOULD BE DETERMINED / VERIFIED PRIOR TO FABRICATION OF ANY MATERIAL OR PROVISION FOR FIELD ADAPTATION SHOULD BE MADE. THIS DESIGN IS BEING PROVIDED WITHOUT A CONDITION ASSESSMENT BY THE ENGINEER. CONTRACTOR SHALL PERFORM A COMPLETE CONDITION ASSESSMENT PRIOR TO ORDERING ANY REINFORCING MATERIALS AND NOTIFY ENGINEER OF ANY CONDITION THAT WOULD AFFECT THE DESIGN OR THE WORK SPECIFIED. ANY CHANGES, DISCREPANCIES &/OR MODIFICATIONS THAT MAY BE REQUIRED DUE TO THE EXISTING CONDITIONS SHALL NEED TO BE RESOLVED BEFORE PROCEEDING WITH THE WORK.
3. ALL CONSTRUCTION WORK SHALL BE PERFORMED AND INSTALLED BY A CONTRACTOR WITH MIN. 5 YEARS EXPERIENCE IN SIMILAR WORK. ALL WORK SHALL BE PERFORMED IN A WORKMANLIKE MANNER IN ACCORDANCE WITH ACCEPTED CONSTRUCTION AND INDUSTRY PRACTICE.
4. CONTRACTOR SHALL PERFORM A SITE VISIT TO CONFIRM RELEVANT EXISTING STRUCTURE DIMENSIONS, PROPOSED REINFORCING DIMENSIONS, CLEARANCES AND DETERMINE ANY INTERFERENCES, SITE CONSTRAINTS, UTILITIES AND ALL OTHER INFORMATION NECESSARY TO PERFORM THE WORK. THE CONTRACTOR SHALL NOT START FABRICATION OR CONSTRUCTION PRIOR TO PERFORMING THIS SITE VISIT AND VALIDATING THE INFORMATION ON THESE DRAWINGS AND ANY ADDITIONAL INFORMATION REQUIRED TO BID AND TO SUCCESSFULLY PERFORM THE WORK.
5. MATERIAL QUANTITIES AND LENGTH ARE FOR BIDDING PURPOSE - CONTRACTOR TO BE RESPONSIBLE FOR REQUIRED QUANTITIES AND PROPER FIT AND CLEARANCES OF NEW MATERIAL.
6. ALL MATERIAL SPECIFIED MUST BE NEW AND FREE OF ANY DEFECTS. ANY MATERIAL SUBSTITUTIONS, INCLUDING BUT NOT LIMITED TO ALTERED SIZES AND/OR STRENGTHS, MUST BE APPROVED BY THE OWNER AND ENGINEER IN WRITING PRIOR TO FABRICATION / ORDERING / INSTALLATION. CONTRACTOR SHALL PROVIDE DOCUMENTATION TO ENGINEER FOR DETERMINING IF SUBSTITUTE IS SUITABLE FOR USE AND MEETS THE ORIGINAL DESIGN CRITERIA. DIFFERENCES FROM THE ORIGINAL DESIGN, INCLUDING MAINTENANCE, REPAIR AND REPLACEMENT, SHALL BE NOTED. COSTS ASSOCIATED WITH THE SUBSTITUTION (INCLUDING REVIEW & RE-DESIGN COSTS) SHALL BE THE RESPONSIBILITY OF THE CONTRACTOR.
7. ALL PERMITS, LICENSES, APPROVALS, AND OTHER REQUIREMENTS FOR CONSTRUCTION SHALL BE THE RESPONSIBILITY OF THE CONTRACTOR OR AS DESIGNATED BY THE OWNER. THE CONTRACTOR SHALL BE RESPONSIBLE FOR PROVIDING AMPLE NOTICE TO BUILDING INSPECTION DEPARTMENT TO SCHEDULE ANY REQUIRED INSPECTIONS.
8. CONTRACTOR, INCLUDING LOWER TIER CONTRACTORS, SHALL ASSUME SOLE AND COMPLETE RESPONSIBILITY FOR MEANS AND METHODS OF CONSTRUCTION AND OF JOB SITE CONDITIONS DURING THE CONSTRUCTION WORK, INCLUDING SAFETY OF ALL PERSONS AND PROPERTY AND INCLUDING BUT NOT LIMITED TO, ERECTION PLANS, RIGGING PLANS, CLIMBING PLANS, AND RESCUE PLANS. THIS REQUIREMENT SHALL APPLY CONTINUOUSLY AND NOT BE LIMITED TO NORMAL WORKING HOURS.
9. CONTRACTOR IS RESPONSIBLE FOR ENGAGING A MODIFICATION INSPECTOR AT THE TIME OF AWARD TO COORDINATE AN INSPECTION SCHEDULE AND ENSURE PROPER DOCUMENTATION IS RETAINED THROUGHOUT THE PROJECT. FOUNDATION WORK, IF APPLICABLE, REQUIRES INSPECTION PRIOR TO THE CONCRETE POUR AND MAY INVOLVE A SEPARATE INSPECTION VISIT. REFER TO TABLE FOR MODIFICATION INSPECTION CHECKLIST. CONTACT ENGINEER TO OBTAIN PRICING TO COMPLETE FINAL AND/OR FOUNDATION INSPECTION SERVICES, IF NOT ALREADY COORDINATED WITH THE OWNER / CARRIER. INSTALLATION OF PROPOSED LOADING PRIOR TO COMPLETION OF POST MODIFICATION INSPECTION IS PROHIBITED WITHOUT PRIOR APPROVAL FROM OWNER AND ENGINEER OF RECORD.
10. EXISTING STRUCTURE IS ASSUMED TO BE IN GOOD CONDITION AND FREE FROM STRUCTURAL DEFECTS. AT MINIMUM ANSI/TIA-222 RECOMMENDED INSPECTIONS AND ALL MAINTENANCE TYPE & DEFICIENCY REPAIR WORK IS ASSUMED COMPLETED. INSPECTION & MAINTENANCE OF NEW REINFORCEMENTS SHALL BE IMPLEMENTED SUCH AS TO AVOID ANY DETERIORATION OR CORROSION OF REINFORCEMENT.
11. REFER TO OWNER REQUIREMENTS FOR NEW MEMBERS PAINT, OTHERWISE PAINT NEW MEMBERS WITH A FINISH COAT OF ACRYLIC PAINT TO MATCH EXISTING PAINT AT THAT ELEVATION.
12. ALL EXISTING PAINTED GALVANIZED SURFACES DAMAGED DURING REHAB WORK SHALL BE WIRE BRUSHED CLEAN, REPAIRED BY COLD GALVANIZING BRUSH APPLIED PAINT (ZRC OR EQUAL), AND REPAINTED TO MATCH THE EXISTING FINISH (AS APPLICABLE).

COMPONENTS SPECIFIED

1. HOLLO-BOLTS SHALL BE AS CALLED FOR ON PLANS AND AS MANUFACTURED BY LINDAPTER USA (866-566-2658) OR EQUIVALENT BOX-BOLT BY LNA SOLUTIONS, ANN ARBOR, MI (888-724-2323). BOLTS TO BE HOT-DIPPED GALVANIZED TYPE. BOLTS TO BE INSTALLED AND TORQUED AS PER MANUFACTURER'S RECOMMENDATIONS.

INSTALLATION NOTES

1. ALL INSTALLATION PROCEDURES, SAFEGUARDS AND MEANS AND METHODS OF CONSTRUCTION ARE THE SOLE RESPONSIBILITY OF THE CONTRACTOR. ALL WORK SHALL FOLLOW SAFE WORK PRACTICES WITH APPROPRIATE FALL PROTECTION AND SHALL BE PERFORMED IN ACCORDANCE WITH ANSI/ASSP A10.48 AND ANSI/TIA-322 OR ANSI/TIA1019-A CONSTRUCTION STANDARDS, OSHA REQUIREMENTS, INDUSTRY PRACTICE AND NATE GUIDELINES. RIGGING PLANS SHALL BE PREPARED IN ACCORDANCE WITH NOTED STANDARDS. ALL ERECTION STRESSES SHALL BE THE RESPONSIBILITY OF THE CONTRACTOR AND SHALL BE REVIEWED/PERFORMED BY A COMPETENT PROFESSIONAL EXPERIENCED IN SIMILAR WORK.
2. MINIMUM RECOMMENDED WEATHER CONDITION THAT INSURES A SAFE WORKING CONDITION SHOULD BE OBSERVED: WIND SPEED NOT TO EXCEED 10-15 MPH AT GROUND LEVEL, NO THUNDERSTORMS FORECASTED, AND WITH TOWER STEEL TEMPERATURE BETWEEN 20 F & 105 F. FOLLOW ALL APPLICABLE INDUSTRY AND OSHA SAFETY GUIDELINES.
3. CONTRACTOR SHALL WORK WITHIN THE LIMITS OF THE SITE COMPOUND/ OWNER'S PROPERTY OR LEASE AREA AND APPROVED EASEMENTS. IT IS THE RESPONSIBILITY OF THE CONTRACTOR TO VERIFY WORK IS WITHIN THESE BOUNDARIES. ANY WORK OUTSIDE THESE BOUNDARIES SHALL BE APPROVED IN WRITING BY THE LAND OWNER PRIOR TO MOBILIZATION.
4. FAA / FCC FILING AND LIGHTING MAY BE REQUIRED. ALL GOVERNMENTAL REGULATORY DETERMINATIONS AND FILINGS ARE TO BE COMPLIED WITH AND SHALL BE BY OTHERS.
5. TOWER SHALL BE PROPERLY BRACED AND CARE SHALL BE TAKEN IN THE REMOVAL AND REPLACEMENT OF ANY TOWER MEMBER IN ACCORDANCE WITH RECOGNIZED INDUSTRY STANDARDS AND PROCEDURES.
6. ALL PRECAUTIONS AND EFFORTS SHALL BE TAKEN TO INSURE THE STRUCTURE STABILITY DURING THE MODIFICATIONS WORK. BRACING MEMBERS / FRAMES WITH CAPACITY MATCHING MEMBERS BEING WORKED ON SHALL BE REQUIRED AND USED. CONTRACTOR IS RESPONSIBLE FOR ALL TEMPORARY LOCAL AND GLOBAL SHORING OF THE STRUCTURE AND ALL SHORING OF SURROUNDING BUILDINGS, PADS, AND OTHER OUTDOOR SITE OBSTRUCTIONS.
7. PRIOR TO INSTALLATION, INSURE THAT POLE HAS PROPERLY ASSEMBLED POLE SECTIONS - DOES NOT EXHIBIT SIGNIFICANT VISIBLE AIR GAPS (IN EXCESS OF 3/16 IN ON OPPOSITE FLATS). A MINIMUM JACKING FORCE OF 10,000 LBS MUST THEN BE APPLIED TO EACH SIDE OF THE POLE DURING JACKING. THIS FORCE MAY BE APPLIED USING MIN. TWO (2) SIX TON COME-A-LONGS UNDER THE FULL EFFORT OF ONE MAN EACH. JACKING FORCES OF 12,000 LBS MINIMUM MAY BE REQUIRED.
8. IN AREAS TO BE MODIFIED, CONTRACTOR IS RESPONSIBLE FOR TEMPORARILY REMOVING ANY COAXES, T-BRACKETS, MOUNTS, OR ANY OTHER APPURTENANCES INTERFERING WITH THE WORK. ALL APPURTENANCES MUST BE REPLACED AND/OR RESTORED TO ORIGINAL LOCATION. AS APPLICABLE, RE-WORK ATTACHMENTS THAT REQUIRE MODIFICATIONS TO PROPERLY FIT MODIFIED MEMBERS. THESE CUSTOMIZATIONS ARE TO BE DESIGNED BY OTHERS AND MAINTAIN ORIGINAL CAPACITY. ANY CARRIER DOWNTIME MUST BE COORDINATED WITH THE OWNER / CARRIER IN WRITING.
9. CAULKING SHALL BE PROVIDED AROUND PERIMETER OF ALL MODIFICATION MEMBERS TO ENSURE COMPLETE SEAL BETWEEN EXISTING STRUCTURE AND REINFORCING MEMBERS IN FULL CONTACT WITH EXISTING STEEL. SEALANT IS TO BE EXTERIOR GRADE, PAINTABLE SILICONE CAULKING AS MANUFACTURED BY DOW OR EQUIVALENT.
10. THE CLIMBING FACILITIES, SAFETY CLIMB AND ALL ASSOCIATED HARDWARE SHALL NOT BE IMPEDED OR MODIFIED WITHOUT THE WRITTEN CONSENT OF THE OWNER.
11. ALL SAFETY EQUIPMENT SHALL BE INSPECTED ACCORDING TO ALL OSHA AND INDUSTRY SCHEDULED INTERVALS AND ALL INSPECTIONS SHALL BE DOCUMENTED PER APPLICABLE CODES AND STANDARDS.
12. FASTENERS SHALL BE INSTALLED IN PROPERLY ALIGNED HOLES. ALL BOLTS AT EVERY CONNECTION SHALL BE INSTALLED SNUG FIT UNTIL THE SECTION IS FULLY COMPACTED, AND THEN TIGHTENED ADDITIONALLY IN ACCORDANCE WITH THE AISC "TURN-OF-THE-NUT" METHOD. TIGHTENING SHALL PROGRESS SYSTEMATICALLY.
13. BOLT LENGTHS UP TO AND INCLUDING FOUR DIAMETERS SHALL BE TENSIONED 1/3 TURN BEYOND SNUG FIT. BOLT LENGTHS OVER 4 DIAMETERS SHALL BE 1/2 TURN BEYOND SNUG TIGHT.
14. NO WELDING, TORCH CUTTING, OR OPEN FLAME OF ANY TYPE IS PERMITTED ON THIS STRUCTURE AND ON THIS CONSTRUCTION SITE UNLESS DIRECTLY SPECIFIED WITHIN THESE DRAWINGS.
15. ALL MANUFACTURERS HARDWARE AND ASSEMBLY INSTRUCTIONS SHALL BE FOLLOWED. DEVIATION FROM THE INSTRUCTIONS IS UNACCEPTABLE AND REQUIRES WRITTEN APPROVAL FROM THE ENGINEER.
16. FOR ANY STEEL MEMBER DAMAGED DURING MODS WORK AND AFTER ANY FIELD HOLE PUNCHING/DRILLING OR CUTTING HAS BEEN COMPLETED, WIRE BRUSH CLEAN THESE SURFACES AND REPAIR USING COLD GALVANIZING BRUSH APPLIED PAINT (TWO COATS OF ZRC OR EQUAL), AND REPAINT TO MATCH THE EXISTING FINISH (AS APPLICABLE).
17. UPON COMPLETION OF ALL WORK, THE SITE SHALL BE CLEANED OF ALL DEBRIS AS REQUIRED. ANY SURPLUS MATERIALS NOT REMOVED FROM THE SITE SHALL BE NEATLY STORED IN AN AREA DESIGNATED BY THE OWNER REPRESENTATIVE.

STEEL / FABRICATION NOTES

1. ALL STEEL FABRICATION AND INSTALLATION SHALL BE PERFORMED IN ACCORDANCE WITH THE LATEST EDITION OF THE AMERICAN INSTITUTE OF STEEL CONSTRUCTION (AISC) MANUAL AND SPECIFICATIONS "SPECIFICATIONS FOR THE DESIGN, FABRICATION AND ERECTION OF STRUCTURAL STEEL FOR BUILDINGS".
2. THESE DRAWINGS SHOW RELATED DETAILS BUT ARE NOT SHOP DRAWINGS. SHOP DRAWINGS SHALL BE PREPARED IN ACCORDANCE WITH AISC DETAILING REQUIREMENTS. DIMENSIONAL TOLERANCES SHALL BE IN ACCORDANCE WITH THE AISC CODE OF STANDARD PRACTICE AND ASTM A7 REQUIREMENTS.
3. ALL NEW MEMBERS, UNLESS NOTED OTHERWISE, SHALL MAINTAIN THE EXISTING MEMBER WORK LINES AND NOT INTRODUCE ECCENTRICITIES INTO THE STRUCTURE.
4. ALL CONNECTIONS NOT FULLY DETAILED ON THESE PLANS SHALL BE DETAILED BY THE STEEL FABRICATOR IN ACCORDANCE WITH THE AISC STEEL CONSTRUCTION MANUAL, AISC 360-10 LRFD.
5. ALL WELDING SHALL BE PERFORMED BY AWS CERTIFIED WELDERS AND BE IN ACCORDANCE WITH AWS D1.1/D1.1M, "STRUCTURAL WELDING CODE-STEEL"(LATEST EDITION).
6. FOR ALL WELDING, UNLESS NOTED OTHERWISE, USE E70XX ELECTRODES FOR SMAW PROCESS AND E7XT-XX ELECTRODES FOR FCAW PROCESS.
7. FOR WELDING ON MONOPOLE SHAFTS, USE 80 KSI LOW HYDROGEN ELECTRODES. ELECTRODES SHALL BE APPROPRIATE FOR THE WELDING POSITION REQUIRED TO MAKE THE JOINT.
8. COOLING EFFECTS OF THE WELDED MATERIAL SHALL BE TAKEN INTO CONSIDERATION (I.E. EXPANSION OF HOT MATERIAL AND CONTRACTION OF COOLED MATERIAL).
9. ALL NEW STEEL SHALL BE HOT-DIPPED GALVANIZED PER ASTM A123, ASTM A153/A153M, OR ASTM A653 G90, AS APPLICABLE FOR FULL WEATHER PROTECTION. FOR HIGH STRENGTH STEEL FASTENERS WHERE HOT-DIPPED GALVANIZING IS NOT PERMITTED, DACROMET F1136 GRADE 3 COATING (OR ENGINEER APPROVED EQUIVALENT) SHALL BE USED.
10. PRIOR TO GALVANIZING, ALL FABRICATED STEEL SHALL BE THOROUGHLY SHOP INSPECTED AND QUANTITIES COUNTED ACCORDING TO THE BEST QUALITY CONTROL AND INSPECTION METHODS.
11. MATERIAL MAY BE CUT BY SHEARING, SAWING, OR CUTTING WITH A ROUTER OR GAS CUT. MATERIAL GREATER THAN 1/2" THICKNESS SHALL NOT BE SHEARED. THICK MATERIAL GREATER THAN 2" SHALL HAVE EDGES GRINDED PRIOR TO WELDING & HAVE CHARPY V-NOTCH TEST CERTIFIED FOR ALL OF ITS THICKNESS.
12. CUT EDGES SHALL BE TRUE AND SMOOTH, AND FREE FROM EXCESSIVE BURRS AND RAGGED BREAKS. SHEARED EDGES OF THICK PLATES SHALL BE PLANED TO A DEPTH OF 1/4". RE-ENTRANT CUTS SHALL BE AVOIDED. IF USED, THEY SHALL BE FILLETED BY DRILLING PRIOR TO CUTTING.
13. ALL BOLTS SHALL HAVE WASHERS AND ANCO LOCKNUTS AND BE NEW HIGH STRENGTH GALVANIZED BOLTS AS NOTED BELOW OR OTHERWISE.
14. WHERE NOTED, A490 BOLTS, WASHERS, AND HEAVY ANCO LOCKNUTS SHALL BE NEW HIGH STRENGTH TYPE 'X' (THREADS EXCLUDED) AND SHALL BE CERTIFIED TO CONFORM TO ASTM A490 SPECIFICATIONS. NO HOT-DIP OR MECHANICAL GALVANIZING OF A490 BOLTS IS ALLOWED. PROTECTIVE COATING ON THE A490 BOLTS SHALL BE IN CONFORMANCE WITH ASTM F1136 - GRADE 3 FOR BOLTS AND GRADE 5 FOR NUTS. ALTERNATELY, MAGNI-COAT BOLTS OR FIELD PAINT BOLTS WITH 2 COATS OF ZINC-RICH PAINT AFTER INSTALLATION.
15. ALL BOLT ASSEMBLIES FOR STRUCTURAL MEMBERS WILL REQUIRE LOCKING DEVICES TO BE INSTALLED IN CONFORMANCE WITH NOTED STANDARDS/SPECIFICATIONS.
16. THE FINISHED DIAMETER OF BOLT HOLES SHALL NOT BE MORE THAN 1/16" LARGER THAN THE NOMINAL BOLT DIAMETER AND SHALL NOT BE FLAME CUT THROUGH STEEL, UNLESS OTHERWISE NOTED.
17. ANY BOLT REMOVED FROM EXISTING TOWER STRUCTURE SHALL BE REPLACED WITH A NEW ASTM A325 HIGH STRENGTH BOLT OF EQUAL DIAMETER SIZE AND OF SUFFICIENT LENGTH TO EXCLUDE THE THREADS, U.N.O.
18. ALL BOLT HOLES EDGE DISTANCES SHALL BE 1 1/2" UNLESS OTHERWISE NOTED.
19. FIELD PUNCH / DRILL HOLES AS REQUIRED FOR ACCURATE FIT OF MODIFICATION MEMBER.
20. NEW STEEL MATERIAL SHALL BE MILL CERTIFIED AND SHALL CONFORM TO THE FOLLOWING STEEL SPECIFICATIONS UNLESS NOTED OTHERWISE:

MATERIAL	ASTM SPECIFICATIONS
U-BOLTS	A193 B7, A449 OR SAE J429 (GR. 5 - 1/2" DIA. & GR. 8 - 5/8" DIA.)
BOLTS - 1/2" DIA. & GREATER	F3125 GRADE A325X
BOLTS - 1/2" DIA.	SAE J429 GRADE 5 TYPE X
BOLTS - 3/8" DIA.	A307 OR SAE J429 GRADE 5
BASE PLATE STIFFENERS	A572 GRADE 65 (MIN. 65.0 KSI YIELD)
SHAFT REINFORCEMENT, SPLICE PLATES	A572 GRADE 65 (MIN. 65.0 KSI YIELD)

MALOUF ENGINEERING INTERNATIONAL, INC.
STRUCTURAL CONSULTANTS
17950 PRESTON ROAD SUITE 720
DALLAS, TEXAS 75252-5635
972-783-2578 (fax: 2583)
www.maloufengineering.com
© MEI, INC. 2020

DANBURY EAST #CT2157
110 FT± MONOPOLE
48 NEWTON ROAD, DANBURY, CT 06810
LAT: 41-24-12.25 N - LON: 73-25-27.95 W

AT&T

NO.	DATE	REVISIONS	DRAWN	ENG'D.	APP'D.
0	05/27/20	ISSUED FOR CONSTRUCTION	BDB	KMM	MM

STATE OF CONNECTICUT · E. MARK MALOUF · No. 17715 · LICENSED PROFESSIONAL ENGINEER
MAY 27, 2020

VERTICAL RESOURCES GROUP / AT&T

TECHNICAL SPECIFICATION NOTES

MEI PROJECT ID	SHEET NUMBER	REV.
CT05942M-20V0	**T02**	0

ALL RIGHTS RESERVED. THIS DRAWING SHALL REMAIN THE PROPERTY OF MALOUF ENGINEERING INTERNATIONAL, INC. NO PART THEREOF SHALL BE REPRODUCED, COPIED, ADAPTED, DISCLOSED, OR DISTRIBUTED TO OTHERS WITHOUT WRITTEN PERMISSION OF MEI, INC.

COMPONENTS SPECIFIED

1. HOLLO-BOLTS SHALL BE AS CALLED FOR ON PLANS AND AS MANUFACTURED BY LINDAPTER USA (866-566-2658) OR EQUIVALENT BOX-BOLT BY LNA SOLUTIONS, ANN ARBOR, MI (888-724-2323). BOLTS TO BE HOT-DIPPED GALVANIZED TYPE. BOLTS TO BE INSTALLED AND TORQUED AS PER MANUFACTURER'S RECOMMENDATIONS.
2. PRIOR TO INSTALLATION, INSURE THAT POLE HAS PROPERLY ASSEMBLED POLE SECTIONS - DOES NOT EXHIBIT SIGNIFICANT VISIBLE AIR GAPS (IN EXCESS OF 3/16 IN ON OPPOSITE FLATS). A MINIMUM JACKING FORCE OF 10,000 LBS MUST THEN BE APPLIED TO EACH SIDE OF THE POLE DURING JACKING. THIS FORCE MAY BE APPLIED USING MIN. TWO (2) SIX TON COME-A-LONGS UNDER THE FULL EFFORT OF ONE MAN EACH. JACKING FORCES OF 12,000LBS MINIMUM MAY BE REQUIRED
3. BONDING ADHESIVE AS MANUFACTURED BY FIVE STAR PRODUCTS, FAIRFIELD, CT, (203)336-7900, OF APPROVED EQUIVALENT, SHALL BE USED. FOLLOW MANUFACTURER INSTALLATION AND PREPARATION INSTRUCTIONS.

BOLT TIGHTENING PROCEDURE

1. TIGHTEN BOLTS BY AISC "TURN OF THE NUT" METHOD USING THE CHART BELOW:

   BOLT LENGTHS UP TO AND INCLUDING FOUR DIAMETERS:
   + 1/3 TURN BEYOND SNUG TIGHT
   BOLT LENGTHS OVER FOUR AND UP TO EIGHT DIAMETERS:
   + 1/2 TURN BEYOND SNUG TIGHT

2. ALL ONE-SIDED BOLTS SHALL BE TIGHTENED IN ACCORDANCE WITH MANUFACTURER RECOMMENDATIONS

3. SPLICE BOLTS SUBJECT TO DIRECT TENSION SHALL BE INSTALLED AND TIGHTENED AS PER SECTION 8(D)(1) OF THE AISC MANUAL OF STEEL CONSTRUCTION. THE INSTALLATION PROCEDURE IS AS FOLLOWS:

   "FASTENERS SHALL BE INSTALLED IN PROPERLY ALIGNED HOLES AND BE TIGHTENED BY ONE OF THE METHODS DESCRIBED IN SUBSECTION 8(D)(1) THROUGH 8(D)(4).

   8(D)(1) TURN-OF-THE-NUT TIGHTENING:

   BOLTS SHALL BE INSTALLED IN ALL HOLES OF THE CONNECTION AND BROUGHT TO A SNUG TIGHT CONDITION. SNUG TIGHT IS DEFINED AS THE TIGHTNESS THAT EXISTS WHEN THE PLIES OF A JOINT ARE IN FIRM CONTACT. THIS MAY BE OBTAINED BY A FEW IMPACTS OF AN IMPACT WRENCH OR THE FULL EFFORT OF A MAN USING AN ORDINARY SPUD WRENCH. SNUG TIGHTENING SHALL PROGRESS SYSTEMATICALLY...UNTIL ALL THE BOLTS ARE SIMULTANEOUSLY SNUG TIGHT AND THE CONNECTION IS FULLY COMPACTED. FOLLOWING THIS INITIAL OPERATION, ALL BOLTS IN THE CONNECTION SHALL BE TIGHTENED FURTHER BY THE APPLICABLE AMOUNT OF ROTATION SPECIFIED ABOVE. DURING THE TIGHTENING OPERATION, THERE SHALL BE NO ROTATION OF THE PART NOT TURNED BY THE WRENCH. TIGHTENING SHALL PROGRESS SYSTEMATICALLY.

BEFORE 1/3 TURN AFTER 1/3 TURN

ALLOWABLE ANGLE COPE

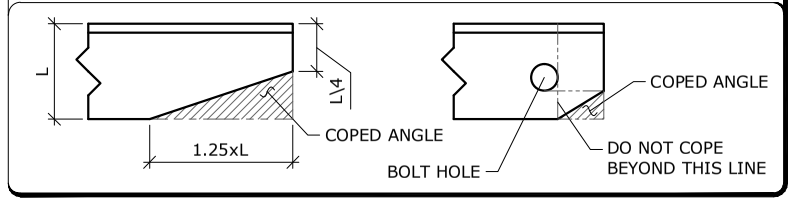

USUAL GAGES FOR ANGLES IN INCHES

LEG	8	7	6	5	4	3 1/2	3	2 1/2	2	1 3/4	1 1/2	1 3/8	1 1/4	1
G	4 1/2	4	3 1/2	3	2 1/2	2	1 3/4	1 3/8	1 1/8	1	7/8	7/8	3/4	5/8
G1	3	2 1/2	2 1/4	2										
G2	3	3	2 1/2	1 3/4										

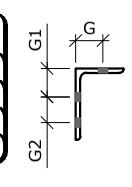

1. ALL DIMENSIONS REPRESENTED IN THE ABOVE TABLE ARE AISC MINIMUM REQUIREMENTS. CONTRACTOR SHALL VERIFY EXISTING CONDITIONS IN FIELD AND NOTIFY ENGINEER IF DISTANCES ARE LESS THAN THOSE PROVIDED.
2. THE DIMENSIONS PROVIDED ARE MINIMUM REQUIREMENTS. ACTUAL DIMENSIONS OR PROPOSED MEMBERS WITHIN THESE DRAWINGS MAY VARY FROM THE AISC MINIMUM REQUIREMENTS.

POST-MODIFICATION INSPECTION NOTES

GENERAL

THE POST-MODIFICATION INSPECTION (PMI) IS A VISUAL INSPECTION OF TOWER MODIFICATIONS AND A REVIEW OF CONSTRUCTION INSPECTIONS AND OTHER REPORTS TO ENSURE THE INSTALLATION WAS PERFORMED IN ACCORDANCE WITH THE MODIFICATION DESIGN DRAWINGS BY THE ENGINEER OF RECORD (EOR).

ALL PMI'S SHALL BE CONDUCTED BY A QUALIFIED TOWER INSPECTION VENDOR (QTIV) THAT IS APPROVED TO PERFORM ELEVATED WORK AND HAS QUALIFIED RELATED EXPERIENCE.

TO ENSURE THAT THE REQUIREMENTS OF THE PMI ARE MET, IT IS VITAL THAT THE GENERAL CONTRACTOR (GC) AND THE PMI INSPECTOR BEGIN COMMUNICATING AND COORDINATING AS SOON AS APPROVAL IS RECEIVED TO DEVELOP A SCHEDULE TO CONDUCT ON-SITE INSPECTIONS.

GENERAL CONTRACTOR

THE GC IS REQUIRED TO, AT A MINIMUM:
- REVIEW THE REQUIREMENTS OF THE PMI CHECKLIST
- WORK WITH THE PMI INSPECTOR TO DEVELOP A SCHEDULE TO CONDUCT ON-SITE PMI INSPECTIONS, INCLUDING FOUNDATION INSPECTIONS.
- BETTER UNDERSTAND ALL INSPECTION AND TESTING REQUIREMENTS.

THE GC SHALL PERFORM AND RECORD THE TEST AND INSPECTION RESULTS IN ACCORDANCE WITH THE REQUIREMENTS OF THE PMI CHECKLIST.

RECOMMENDATIONS

THE FOLLOWING RECOMMENDATIONS AND SUGGESTIONS ARE OFFERED TO ENHANCE THE EFFICIENCY AND EFFECTIVENESS OF DELIVERING A PMI REPORT:
- IT IS SUGGESTED THAT THE GC PROVIDE A MINIMUM OF 5 BUSINESS DAYS NOTICE, PREFERABLY 10, TO THE PMI INSPECTOR AS TO WHEN THE SITE WILL BE READY FOR THE MI TO BE CONDUCTED.
- IT MAY BE BENEFICIAL TO INSTALL ALL TOWER MODIFICATIONS PRIOR TO CONDUCTING THE FOUNDATION INSPECTIONS TO ALLOW FOUNDATION AND MI INSPECTION(S) TO COMMENCE WITH ONE SITE VISIT.
- WHEN POSSIBLE, IT IS PREFERRED TO HAVE THE GC AND PMI INSPECTOR ON-SITE DURING THE PMI TO HAVE ANY DEFICIENCIES CORRECTED DURING THE INITIAL PMI. THEREFORE, THE GC MAY CHOOSE TO COORDINATE THE PMI CAREFULLY TO ENDURE ALL CONSTRUCTION FACILITIES ARE AT THEIR DISPOSAL WHEN THE PMI INSPECTOR IS ON SITE.

CORRECTION OF FAILING PMI'S

IF THE POST-MODIFICATION INSTALLATION WOULD FAIL THE PMI ("FAILED MI"), THE GC SHALL WORK TO COORDINATE A REMEDIATION PLAN IN ONE OF TWO WAYS:
- CORRECT FAILING ISSUES TO COMPLY WITH THE SPECIFICATIONS CONTAINED IN THE ORIGINAL CONTRACT DOCUMENTS AND COORDINATE A SUPPLEMENT PMI.
- OR, WITH OWNER'S APPROVAL, THE GC MAY WORK WITH THE EOR TO RE-ANALYZE THE MODIFICATION/REINFORCEMENT USING THE AS-BUILT CONDITION

REQUIRED PHOTOS

BETWEEN THE GC AND THE PMI INSPECTOR THE FOLLOWING PHOTOGRAPHS, AT A MINIMUM, ARE TO BE TAKEN AND INCLUDED IN THE PMI REPORT:

- PRE-CONSTRUCTION GENERAL SITE CONDITION
  - PHOTOGRAPHS DURING THE REINFORCEMENT MODIFICATION CONSTRUCTION.
  - RAW MATERIALS
  - PHOTOS OF ALL CRITICAL DETAILS
  - FOUNDATION MODIFICATIONS
  - WELD PREPARATION
  - BOLT INSTALLATION AND TORQUE
  - FINAL INSTALLED CONDITION
  - SURFACE COATING REPAIR
- POST CONSTRUCTION PHOTOGRAPHS
- FINAL IN-FIELD CONDITION

SPECIAL INSPECTION & PMI CHECKLIST

REQ'D	REPORT ITEM	BRIEF DESCRIPTION
	PRE-CONSTRUCTION	
X	MI CHECKLIST	THIS CHECKLIST SHALL BE INCLUDED IN THE MI REPORT
X	EOR APPROVED SHOP DRAWINGS	FABRICATION DRAWINGS SHALL BE SUBMITTED TO THE ENGINEER OF RECORD FOR REVIEW. THE CONTRACTOR SHALL PROVIDE APPROVED SHOP DRAWINGS TO THE MI INSPECTOR FOR INCLUSION IN THE MI REPORT.
N/A	FABRICATOR CERTIFIED WELD INSPECTION	A LETTER FROM THE FABRICATOR, STATING THAT THE WORK WAS PREFORMED IN ACCORDANCE WITH INDUSTRY STANDARDS AND THE CONTRACT DOCUMENTS SHALL BE PROVIDED TO THE MI INSPECTOR FOR INCLUSION IN THE MI REPORT.
X	MATERIAL CERT. REPORT (MTR)	MILL CERTIFICATION SHALL BE PROVIDED FOR ALL STEEL AS SPECIFIED IN THE MODIFICATION DRAWINGS AND THIS DOCUMENTATION SHALL BE PROVIDED TO THE MI INSPECTOR FOR INCLUSION IN THE MI REPORT.
N/A	FABRICATOR NDE INSPECTION	CRITICAL SHOP WELDS THAT REQUIRE TESTER ARE NOTED ON THESE CONTRACT DRAWINGS. A CERTIFIED WELD INSPECTOR SHALL PERFORM NON-DESTRUCTIVE EXAMINATION AND REPORT SHALL BE PROVIDED TO THE MI INSPECTOR FOR INCLUSION IN THE MI REPORT.
N/A	NDE REPORT OF MONOPOLE BASE PLATE	A NDE OF THE POLE TO BASE PLATE CONNECTION IS REQUIRED AND WRITTEN REPORT SHALL BE PROVIDED TO THE MI INSPECTOR FOR INCLUSION IN THE MI REPORT.
X	PACKING SLIPS	THE MATERIAL SHIPPING LIST SHALL BE PROVIDED TO THE MI INSPECTOR FOR INCLUSION IN THE MI REPORT.
	CONSTRUCTION	
X	CONSTRUCTION INSPECTIONS	A LETTER FROM THE GENERAL CONTRACTOR STATING THAT THE WORKMANSHIP WAS PERFORMED IN ACCORDANCE WITH INDUSTRY STANDARDS AND THESE CONTRACT DRAWINGS SHALL BE PROVIDED TO THE MI INSPECTOR FOR INCLUSION IN THE MI REPORT.
N/A	FOUNDATION INSPECTIONS	A VISUAL OBSERVATION OF THE EXCAVATION AND REBAR SHALL BE PERFORMED BEFORE PLACING THE CONCRETE. A WRITTEN REPORT SHALL BE PROVIDED TO THE MI INSPECTOR FOR INCLUSION IN THE MI REPORT.
N/A	CONCRETE COMP. STRENGTH AND SLUMP TESTS	THE CONCRETE MIX DESIGN, SLUMP TEST, AND COMPRESSIVE STRENGTH TESTS SHALL BE PROVIDED TO THE MI INSPECTOR FOR INCLUSION IN THE MI REPORT.
N/A	POST INSTALLED ANCHOR ROD VERIFICATION	POST INSTALLED ANCHOR ROD VERIFICATION SHALL BE PERFORMED IN ACCORDANCE WITH ACI318 AND MANUFACTURERS REQUIREMENTS AND A REPORT SHALL BE PROVIDED TO THE MI INSPECTOR FOR INCLUSION IN THE MI REPORT.
N/A	BASE PLATE GROUT VERIFICATION	THE GENERAL CONTRACTOR SHALL PROVIDE DOCUMENTATION TO THE MI INSPECTOR THAT VERIFIES THAT THE GROUT WAS INSTALLED IN ACCORDANCE WITH MEI SPECS FOR INCLUSION IN THE MI REPORT.
X	CONTRACTOR'S CERTIFIED WELD INSPECTION	A CERTIFIED WELD INSPECTOR SHALL INSPECT AND TEST AS NECESSARY ALL FIELD WELDS. A REPORT SHALL BE PROVIDED TO THE MI INSPECTOR FOR INCLUSION IN THE MI REPORT.
N/A	EARTHWORK: LIFT AND DENSITY	FOUNDATION SUB-GRADES SHALL BE INSPECTED AND APPROVED BY A GEOTECHNICAL ENGINEER AND A REPORT SHALL BE PROVIDED TO THE MI INSPECTOR FOR INCLUSION IN THE MI REPORT.
X	ON SITE COLD GALVANIZING VERIFICATION	THE GENERAL CONTRACTOR SHALL PROVIDE DOCUMENTATION TO MI INSPECTOR VERIFYING THAT ANY ON-SITE COLD GALVANIZING WAS APPLIED IN ACCORDANCE WITH MANUF. INSTRUCTIONS.
N/A	GUY WIRE TENSION REPORT	THE GENERAL CONTRACTOR SHALL PROVIDE A REPORT TO THE MI INSPECTOR INDICATING THE TEMPERATURE AND TENSION IN EVERY GUY CABLE AS PART OF PLUMB AND TENSION PROCEDURE FOR INCLUSION IN THE MI REPORT.
X	GC AS-BUILT DOCUMENTS	THE GENERAL CONTRACTOR SHALL SUBMIT A COPY OF THE CONTRACT DRAWINGS EITHER STATING "INSTALLED AS DESIGNED" OR NOTING ANY CHANGES THAT WERE REQ'D AND APPR'D BY THE ENGINEER OF RECORD DUE TO FIELD CONDITIONS.
	POST-CONSTRUCTION	
X	MI INSPECTOR REDLINE OF RECORD DRAWING(S)	THE MI INSPECTOR SHALL OBSERVE AND REPORT ANY DISCREPANCIES BETWEEN THE CONTRACTORS REDLINE DRAWING AND THE ACTUAL COMPLETED INSTALLATION.
N/A	POST INSTALLED ANCHOR ROD PULL-OUT TESTING	POST-INSTALLED ANCHOR RODS SHALL BE TESTED IN ACCORDANCE WITH MANUF. REQUIREMENTS AND A REPORT SHALL BE PROVIDED TO THE MI INSPECTOR FOR INCLUSION IN THE MI REPORT.
X	PHOTOGRAPHS	PHOTOGRAPHS SHALL BE SUBMITTED TO THE MI WHICH DOCUMENT ALL PHASES OF THE CONSTRUCTION. THE PHOTOS SHALL BE ORGANIZED IN A MANNER THAT EASILY IDENTIFIES THE EXACT LOCATION OF THE PHOTO.
ADDITIONAL TESTING AND INSPECTIONS:		

NOTES: X DENOTES A DOCUMENT NEEDED FOR THE MI REPORT
N/A DENOTES A DOCUMENT THAT IS NOT REQUIRED FOR THE MI REPORT

MALOUF ENGINEERING INTERNATIONAL, INC.
STRUCTURAL CONSULTANTS
17950 PRESTON ROAD SUITE 720
DALLAS, TEXAS 75252-5635
972-783-2578 (fax: 2583)
www.maloufengineering.com
© MEI, INC. 2020

DANBURY EAST #CT2157
110 FT± MONOPOLE
48 NEWTON ROAD, DANBURY, CT 06810
LAT: 41-24-12.25 N - LON: 73-25-27.95 W

AT&T

NO.	DATE	REVISIONS	DRAWN	ENG'D.	APP'D.
0	05/27/20	ISSUED FOR CONSTRUCTION	BDB	KMM	MM

STATE OF CONNECTICUT · E. MARK MALOUF · No. 17715 · LICENSED PROFESSIONAL ENGINEER
MAY 27, 2020

VERTICAL RESOURCES GROUP / AT&T

TECH. SPEC. NOTES, POST-MOD INSPECTION, AND CHECKLIST

MEI PROJECT ID	SHEET NUMBER	REV.
CT05942M-20V0	T03	0

(*)NOTE:
PREVIOUS STRUCTURAL MODIFICATIONS / REINFORCEMENTS AS PER MEI REPORT AND DRAWINGS ARE CONSIDERED INSTALLED.
[STRUCTURAL COMPONENTS JOB #100216 - DATED 07.14.10]
[CHA PROJECT 22702.1013.28000 R1 - DATED 07.07.11]
[HUDSON DESIGN GROUP REF. #CT2157 - DATED 04.25.16]
(·····DENOTES PREVIOUS MODS DONE BY OTHERS)

TOWER HEIGHT & TYPE:	110 FT± MONOPOLE
SITE NAME:	DANBURY EAST #CT2157
SITE LOCATION:	FAIRFIELD COUNTY, DANBURY, CT 06810
TOWER MANUF. / MODEL:	EEI / 18-SIDED
ORIGINAL DESIGN CRITERIA:	ANSI-222-F UNKNOWN
ANALYSIS CRITERIA:	ANSI/TIA-222-G-4 120 (93) / 50 MPH + 0.00"/0.75" ICE
SITE SPECIFICATIONS:	CLASS II / EXP. B / TOPO. 1 / Ss < 1.0

PERFORM MAINTENANCE WORK AS REQUIRED TO BRING STRUCTURE INTO GOOD OPERATIONAL CONDITION.

REFER SHEET T02 - T03 FOR TECH. SPEC. NOTES

MODIFICATION LEGEND

RANGE OF NEW SHAFT SPLICE PLATES

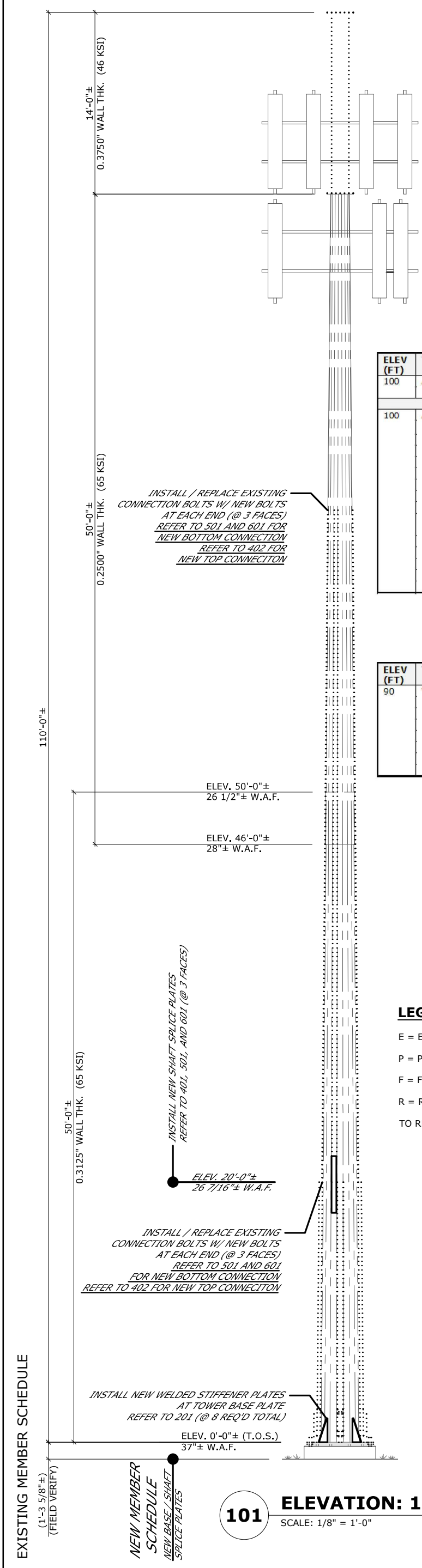

101 **ELEVATION: 110 FT± MONOPOLE**
SCALE: 1/8" = 1'-0"

ELEV (FT)	TENANT	ANTS QTY	APPURTENANCE MODEL / DESCRIPTION	MOUNT DESCRIPTION	LINES QTY	LINE SIZE & LOCATION
100	AT&T	3	SIRIUS XM ION-M23 SDARS RRU BOXES			
		3	COMMSCOPE CBC23SR-43 DIPLEXERS			
APPURTENANCES TO REMAIN						
100	AT&T	1	HPA 65R BUU H6 PANEL ANTENNA	(3)12FT HD V FRAME MOUNTS (SABRE #C10857801) 3-WAY CLOSE CONTACT MOUNT W/ PIPES	12	1 5/8" (E) DC POWER CABLES – (I) FIBER CABLES – (I) DC POWER CABLES – (E)
		1	800-10965 PANEL ANTENNA		4	
		1	OPA-65R-LCUU-H6 PANEL ANTENNA			
		2	SBNHH-1D65A PANEL ANTENNAS		2	
		2	800-10964 PANEL ANTENNAS			
		2	OPA-65R-LCUU-H4 PANEL ANTENNAS		2	
		3	7770.00 PANEL ANTENNAS			
		3	RRUS-11 BOXES			
		3	RRUS-32 B2 BOXES			
		3	RRUS-4478 B14 BOXES			
		3	RRUS-32 B66 BOXES			
		3	RRUS-32 B30 BOXES			
		6	TPX-070821 TRIPLEXER			
		6	LGP21401 TMA'S BOXES			
		2	DC6-48-60-18-8F SUPRESSOR BOXES			
		1	DC6-48-60-0-8F SUPRESSOR BOX			

102 **PROPOSED CHANGED APPURTENANCES SCHEDULE**

ELEV (FT)	TENANT	ANTS QTY	APPURTENANCE MODEL / DESCRIPTION	MOUNT DESCRIPTION	LINES QTY	LINE SIZE & LOCATION
90	VZW	1	BXA-80063-6BF PANEL ANTENNA	PLATFORM W/ HANDRAILS / CORNER OUTRIGGERS / LADDER	12	1 5/8" – (I)
		2	BXA-80080-6CF PANEL ANTENNAS		2	1-5/8" (6X12) HYBRID (HFT1206-24SV2-XX) OR EQUIV. – (I)
		6	JAHH-65B-R3B PANEL ANTENNAS			
		3	B25 RRH4X30-4R BOXES			
		3	RRH4X45 (AWS) BOXES			
		3	B13 RRH4X30W-4R BOXES			
		3	B5 RRH 4X30-4R BOXES			
		2	DB-T1-6Z-8AB-0Z DISTRIBUTION BOXES			

103 **EXISTING / RESERVED APPURTENANCES SCHEDULE**

No.	QTY.	DESCRIPTION	ELEV.	TENANT
1	3	1 5/8"	100'	AT&T / E
2	9	1 5/8"	100'	AT&T / E
3	4	DC POWER CABLE	100'	AT&T / E
4	2	FIBER CABLE	100'	AT&T / E
5	2	3/4" DC POWER CABLE	100'	AT&T / E
6	12	1 5/8"	90'	VzW / E
7	2	1-5/8" (6X12) HYBRID (HFT1206-24SV2-XX) OR EQUIV.	90'	VzW / E

LEGEND:

E = EXISTING #X
P = PROPOSED #X
F = FUTURE #X
R = REMOVE #X
TO RELOCATE

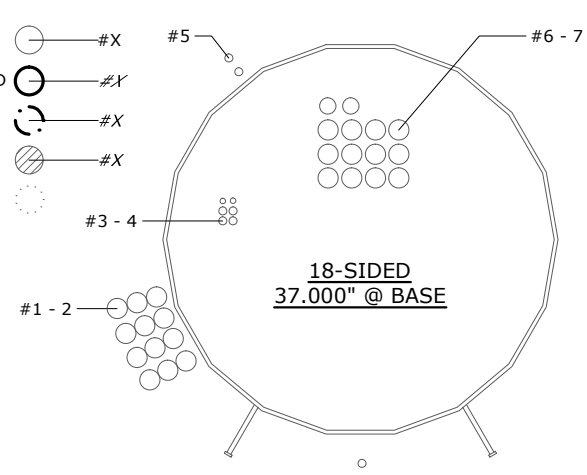

PLEASE CONTACT ENGINEER IF LINE LAYOUT IS DIFFERENT FROM WHAT IS SHOWN BELOW.

104 **SCHEMATIC TX-LINE LAYOUT**
SCALE: NOT TO SCALE

NOTES:
1. Tx LINE LAYOUT IS SCHEMATIC ONLY, BASED UPON LIMITED DATA AND PHOTOS PROVIDED.
2. NEW BRACKET SUPPORT SPECIFICATION BY OTHERS.

VERTICAL RESOURCES GROUP / AT&T
MONOPOLE REINFORCEMENT SCHEDULE AND TX-LINE LAYOUT
MEI PROJECT ID: CT05942M-20V0
SHEET NUMBER: S01
REV. 0

STATE OF CONNECTICUT MARK MALOUF LICENSED PROFESSIONAL ENGINEER
MAY 27, 2020

ALL SCALES SHOWN ARE BASED ON DRAWING SIZE OF 11" x 17"

NO.	DATE	REVISIONS	DRAWN	ENG'D.	APP'D.
0	05/27/20	ISSUED FOR CONSTRUCTION	BDB	KMM	MM

AT&T

DANBURY EAST #CT2157
110 FT± MONOPOLE
48 NEWTON ROAD, DANBURY, CT 06810
LAT: 41-24-12.25 N - LON: 73-25-27.95 W

MALOUF ENGINEERING INTERNATIONAL, INC.
STRUCTURAL CONSULTANTS
17950 PRESTON ROAD SUITE 720
DALLAS, TEXAS 75252-5635
972-783-2578 (fax: 2583)
www.maloufengineering.com

© MEI, INC. 2020

ALL RIGHTS RESERVED. THIS DRAWING IS THE PROPERTY OF MALOUF ENGINEERING INTERNATIONAL, INC. ANY USE, REPRODUCTION, ADAPTATION, DISCLOSURE, OR DISTRIBUTION IN WHOLE OR IN PART WITHOUT WRITTEN PERMISSION OF MEI, INC. IS STRICTLY PROHIBITED.

ALL RIGHTS RESERVED. THIS DRAWING SHALL REMAIN THE PROPERTY OF MALOUF ENGINEERING INTERNATIONAL, INC. NO PART THEREOF SHALL BE REPRODUCED, COPIED, ADAPTED, DISCLOSED, OR DISTRIBUTED TO OTHERS WITHOUT WRITTEN PERMISSION OF MEI, INC.

REFER SHEET T02 - T03 FOR TECH. SPEC. NOTES

NOTE:
LAYOUTS WERE CREATED FROM LIMITED DATA AND PHOTOS PROVIDED, FIELD VERIFICATION OF FIT FOR REINFORCEMENT IS RECOMMENDED PRIOR TO BID AND FABRICATION. IF ANY ISSUES ARE FOUND THAT INTERFERE WITH REINFORCEMENT INSTALLATION DURING VERIFICATION PROCESS PLEASE CONTACT ENGINEER AND SUPPLY APPLICABLE POLE INFORMATION.

(*) NOTE:
LOCATIONS OF EXISTING REINFORCEMENT, EXISTING BOLTS, AND PORTHOLES ARE ESTIMATED FROM LIMITED DATA AND PHOTOS; ACTUAL NORTH DIRECTION ORIENTATION IS NOT KNOWN. FIELD VERIFY LOCATION OF ALL PLATES AND ADJUST AS REQ'D FOR FIT.

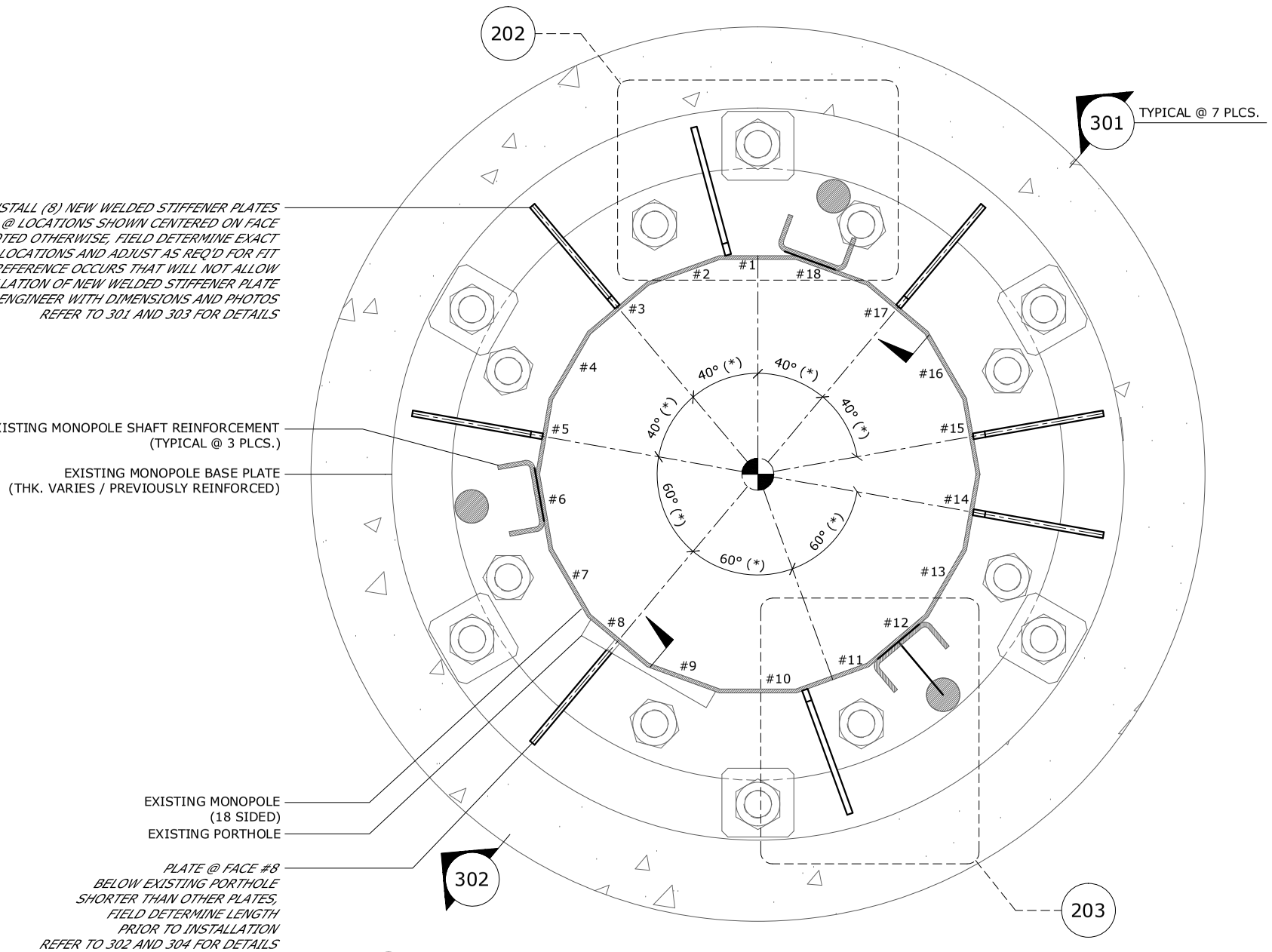

201 PLAN VIEW: NEW BASE PLATE WELDED STIFFENERS

SCALE: 1" = 1'-0" (@ BASE OF POLE)

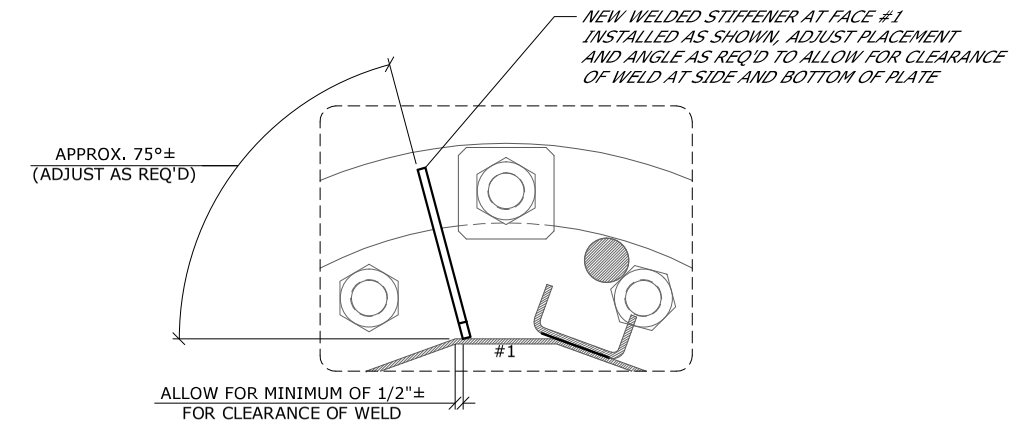

202 DETAIL: NEW BASE PLATE WELDED STIFFENERS

SCALE: 1" = 1'-0" (NEW STIFFENER @ FACE #1)

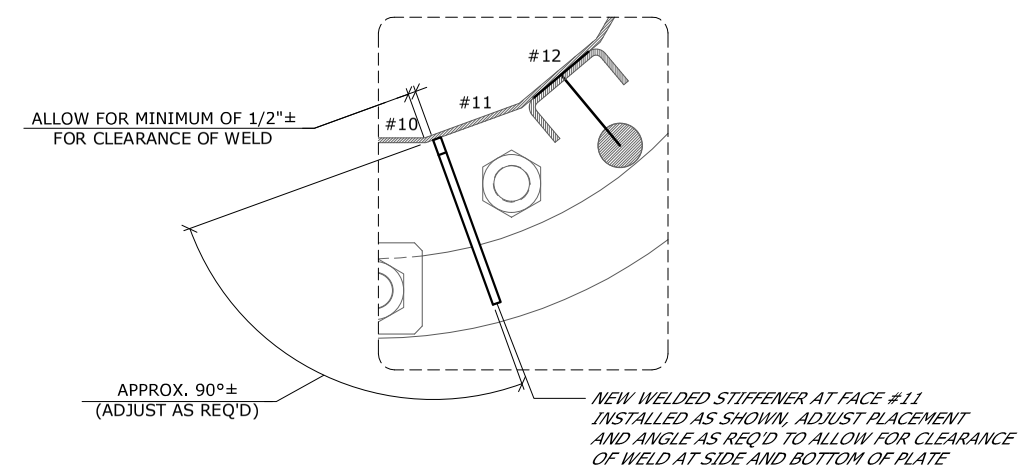

203 DETAIL: NEW BASE PLATE WELDED STIFFENERS

SCALE: 1" = 1'-0" (NEW STIFFENER @ FACE #11)

REFER 101 FOR MEMBER SIZES AND SCHEDULES.

MALOUF ENGINEERING INTERNATIONAL, INC.
STRUCTURAL CONSULTANTS
17950 PRESTON ROAD SUITE 720
DALLAS, TEXAS 75252-5635
972-783-2578 (fax: 2583)
www.maloufengineering.com
© MEI, INC. 2020

DANBURY EAST #CT2157
110 FT± MONOPOLE
48 NEWTON ROAD, DANBURY, CT 06810
LAT: 41-24-12.25 N - LON: 73-25-27.95 W

AT&T

NO.	DATE	REVISIONS	DRAWN	ENG'D.	APP'D.
0	05/27/20	ISSUED FOR CONSTRUCTION	BDB	KMM	MM

STATE OF CONNECTICUT · MARK MALOUF · LICENSED PROFESSIONAL ENGINEER
MAY 27, 2020

VERTICAL RESOURCES GROUP / AT&T

BASE PLATE REINFORCEMENT

MEI PROJECT ID	SHEET NUMBER	REV.
CT05942M-20V0	S02	0

REFER SHEET T02 - T03 FOR TECH. SPEC. NOTES

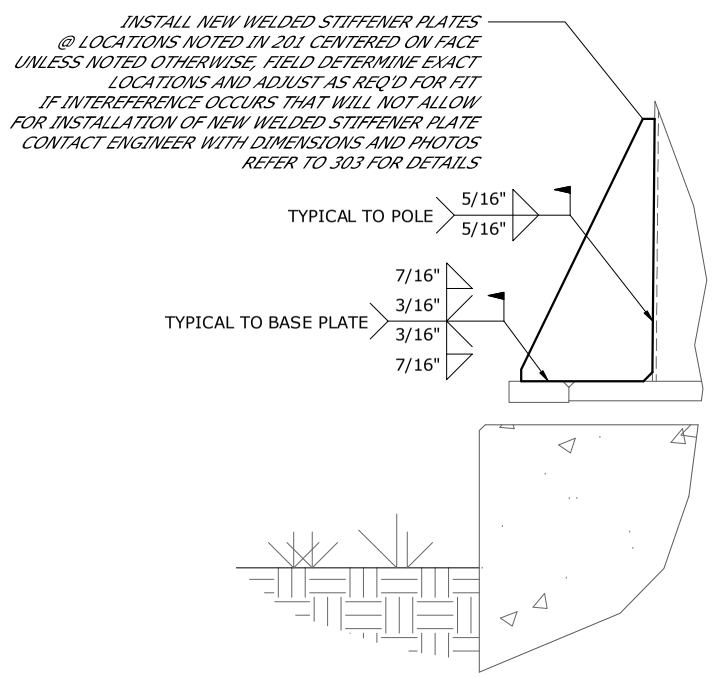

301 ELEVATION: TYPICAL WELD DETAILS FOR STIFFENERS

SCALE: 3/4" = 1'-0" (TYPICAL @ ALL LOCATIONS UNLESS NOTED OTHERWISE)

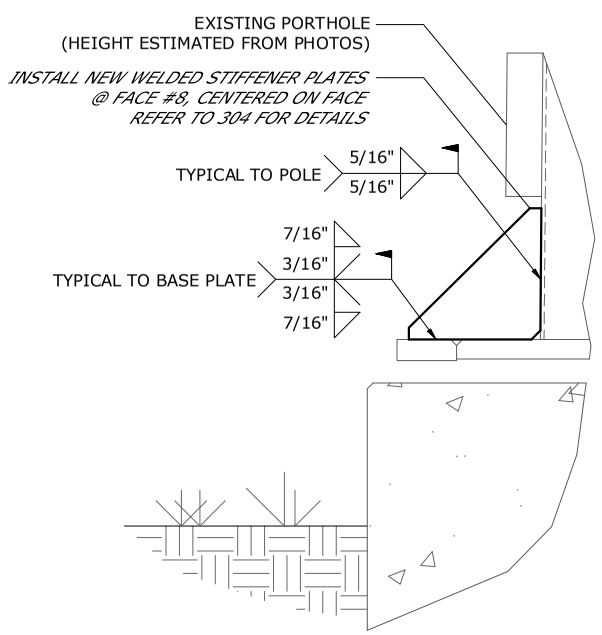

302 ELEVATION: TYPICAL WELD DETAILS FOR STIFFENERS

SCALE: 3/4" = 1'-0" (@ FACE #)

NOTE:
LAYOUTS WERE CREATED FROM LIMITED DATA AND PHOTOS PROVIDED, FIELD VERIFICATION OF FIT FOR REINFORCEMENT IS RECOMMENDED PRIOR TO BID AND FABRICATION. IF ANY ISSUES ARE FOUND THAT INTERFERE WITH REINFORCEMENT INSTALLATION DURING VERIFICATION PROCESS PLEASE CONTACT ENGINEER AND SUPPLY APPLICABLE POLE INFORMATION.

(*) DIMENSIONS APPROX. FOR BIDDING PURPOSES; FIELD VERIFY / DETERMINE AND ADJUST AS REQ'D.

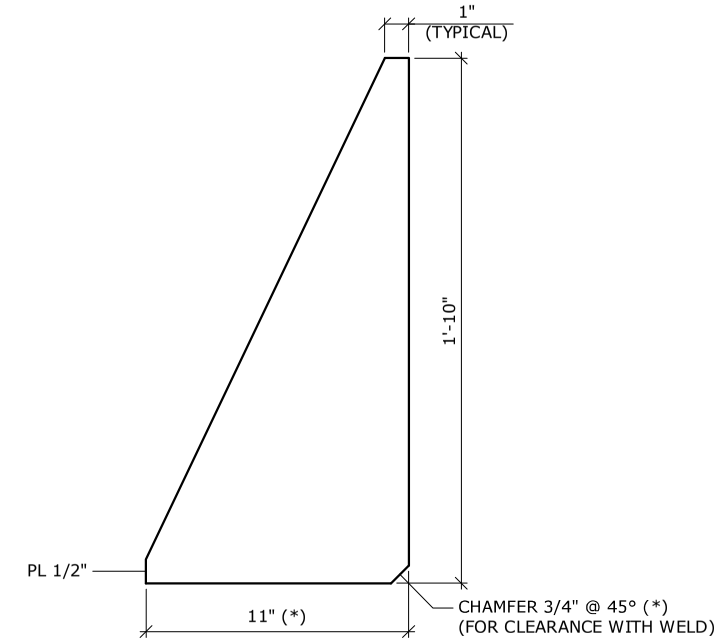

303 DETAIL: TYPICAL STIFFENER PLATE

SCALE: 1 1/2" = 1'-0" (7 REQUIRED TOTAL)

(*) DIMENSIONS APPROX. FOR BIDDING PURPOSES; FIELD VERIFY / DETERMINE AND ADJUST AS REQ'D.

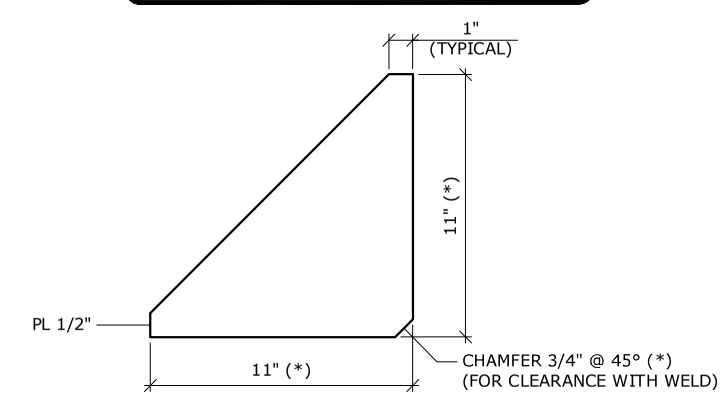

304 DETAIL: STIFFENER PLATE (@ FACE #8)

SCALE: 1 1/2" = 1'-0" (1 REQ'D / BELOW PORTHOLE)

REFER 101 FOR MEMBER SIZES AND SCHEDULES.

ALL RIGHTS RESERVED. THIS DRAWING SHALL REMAIN THE PROPERTY OF MALOUF ENGINEERING INTERNATIONAL, INC. NO PART THEREOF SHALL BE REPRODUCED, COPIED, ADAPTED, DISCLOSED, OR DISTRIBUTED TO OTHERS WITHOUT WRITTEN PERMISSION OF MEI, INC.

MALOUF ENGINEERING INTERNATIONAL, INC.
STRUCTURAL CONSULTANTS
17950 PRESTON ROAD SUITE 720
DALLAS, TEXAS 75252-5635
972-783-2578 (fax: 2583)
www.maloufengineering.com
© MEI, INC. 2020

DANBURY EAST #CT2157
110 FT± MONOPOLE
48 NEWTON ROAD, DANBURY, CT 06810
LAT: 41-24-12.25 N - LON: 73-25-27.95 W

AT&T

NO.	DATE	REVISIONS	DRAWN	ENG'D.	APP'D.
0	05/27/20	ISSUED FOR CONSTRUCTION	BDB	KMM	MM

STATE OF CONNECTICUT
E. MARK MALOUF
No. 17715
LICENSED PROFESSIONAL ENGINEER
MAY 27, 2020

VERTICAL RESOURCES GROUP / AT&T
BASE PLATE REINFORCEMENT CONT.

MEI PROJECT ID	SHEET NUMBER	REV.
CT05942M-20V0	S03	0

ALL RIGHTS RESERVED. THIS DRAWING SHALL REMAIN THE PROPERTY OF MALOUF ENGINEERING INTERNATIONAL, INC. NO PART THEREOF SHALL BE REPRODUCED, COPIED, ADAPTED, DISCLOSED, OR DISTRIBUTED TO OTHERS WITHOUT WRITTEN PERMISSION OF MEI, INC.

NOTES:
1) FIELD VERIFY AND LOCATE REINFORCEMENT ABOUT SHAFT AS SHOWN AND AS REQ'D TO AVOID ANY EXISTING INTERFERENCES, SUCH AS COAX PORT HOLES, STEP BOLTS, AND SAFETY CLIMB.
2) EACH SHAFT REINFORCEMENT MUST BE (3) EMPTY FACES FROM THE NEXT REINFORCEMENT, AS SHOWN.
3) ONE REINFORCEMENT MAY BE ADJUSTED BY ±1 FACE IF REQUIRED TO AVOID INTERFERENCE.

(*) NOTE:
LOCATIONS OF EXISTING REINFORCEMENT, EXISTING BOLTS, AND PORTHOLES ARE ESTIMATED FROM LIMITED DATA AND PHOTOS; ACTUAL NORTH DIRECTION ORIENTATION IS NOT KNOWN. FIELD VERIFY LOCATION OF ALL PLATES AND ADJUST AS REQ'D FOR FIT.

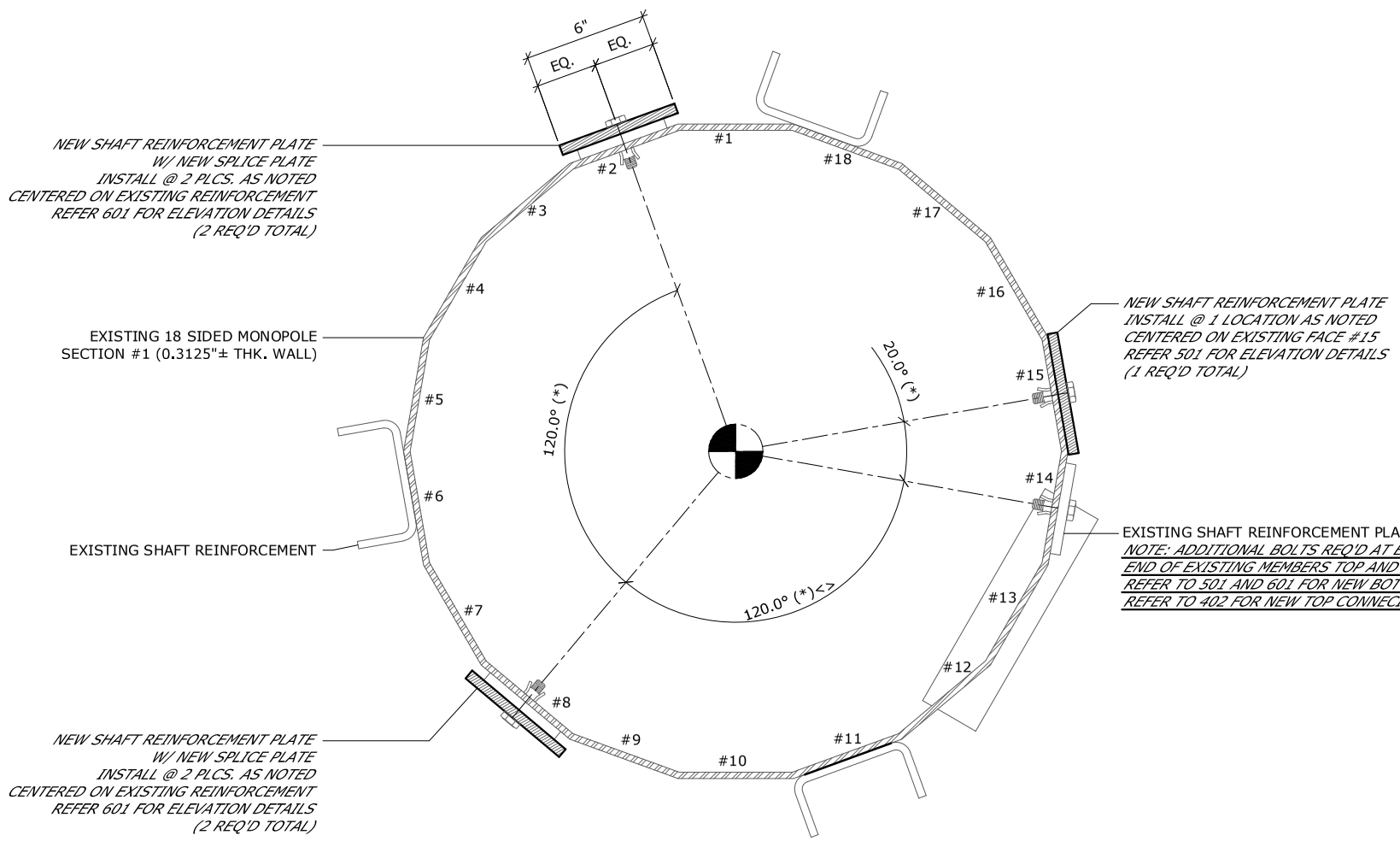

401 SECTION: NEW SHAFT REINFORCEMENT
SCALE: 1 1/2" = 1'-0"

NOTE:
LAYOUTS WERE CREATED FROM LIMITED DATA AND PHOTOS PROVIDED, FIELD VERIFICATION OF FIT FOR REINFORCEMENT IS RECOMMENDED PRIOR TO BID AND FABRICATION. IF ANY ISSUES ARE FOUND THAT INTERFERE WITH REINFORCEMENT INSTALLATION DURING VERIFICATION PROCESS PLEASE CONTACT ENGINEER AND SUPPLY APPLICABLE POLE INFORMATION.

REFER SHEET T02 - T03 FOR TECH. SPEC. NOTES

NOTE: ALL HOLLO-BOLTS ARE TO BE INSTALLED AS PER MANUFACTURER INSTRUCTIONS W/ ALL RELATED HARDWARE.
HOLLO-BOLTS ARE DISTRIBUTED BY:
UCC STEELWORK CONNECTIONS INC.
320 GATEWAY PARK DRIVE, UNIT 2
NORTH SYRACUSE, NY 13212
(800)308-1043

FIELD TO VERIFY ALL NEW & EXISTING PLATE THICKNESSES RELATIVE TO SIZE/LENGTH OF APPROPRIATE HOLLO-BOLT PRODUCTS PRIOR TO PURCHASE.

ALTERNATELY EQUIVALENT BOX-BOLTS BY LNA SOLUTIONS MAY BE USED. INSTALL AS PER MANUFACTURER INSTRUCTIONS W/ ALL RELATED HARDWARE.
CONTACT LNA SOLUTIONS FOR DETAILS
(888)724-2323

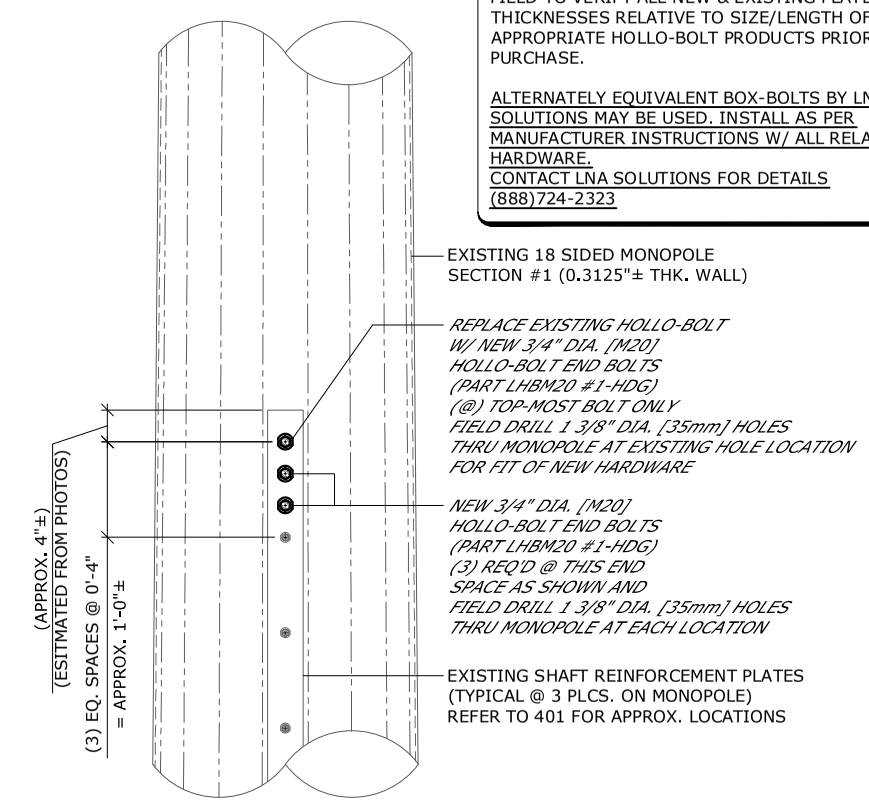

402 ELEVATION: NEW TOP CONNECTION @ EXISTING PLATES
SCALE: N.T.S.
(TYPICAL @ 3 LOCATIONS)

REFER 101 FOR MEMBER SIZES AND SCHEDULES.

MALOUF ENGINEERING INTERNATIONAL, INC.
STRUCTURAL CONSULTANTS
17950 PRESTON ROAD SUITE 720
DALLAS, TEXAS 75252-5635
972-783-2578 (fax: 2583)
www.maloufengineering.com
© MEI, INC. 2020

DANBURY EAST #CT2157
110 FT± MONOPOLE
48 NEWTON ROAD, DANBURY, CT 06810
LAT: 41-24-12.25 N - LON: 73-25-27.95 W

AT&T

NO.	DATE	REVISIONS	DRAWN	ENG'D.	APP'D.
0	05/27/20	ISSUED FOR CONSTRUCTION	BDB	KMM	MM

STATE OF CONNECTICUT
E. MARK MALOUF
No. 17715
LICENSED PROFESSIONAL ENGINEER
MAY 27, 2020

VERTICAL RESOURCES GROUP / AT&T

NEW SHAFT REINFORCEMENT DETAILS

MEI PROJECT ID	SHEET NUMBER	REV.
CT05942M-20V0	S04	0

ALL RIGHTS RESERVED. THIS DRAWING SHALL REMAIN THE PROPERTY OF MALOUF ENGINEERING INTERNATIONAL, INC. NO PART THEREOF SHALL BE REPRODUCED, COPIED, ADAPTED, DISCLOSED, OR DISTRIBUTED TO OTHERS WITHOUT WRITTEN PERMISSION OF MEI, INC.

NOTE:
LAYOUTS WERE CREATED FROM LIMITED DATA AND PHOTOS PROVIDED, FIELD VERIFICATION OF FIT FOR REINFORCEMENT IS RECOMMENDED PRIOR TO BID AND FABRICATION. IF ANY ISSUES ARE FOUND THAT INTERFERE WITH REINFORCEMENT INSTALLATION DURING VERIFICATION PROCESS PLEASE CONTACT ENGINEER AND SUPPLY APPLICABLE POLE INFORMATION.

REFER SHEET T02 - T03 FOR TECH. SPEC. NOTES

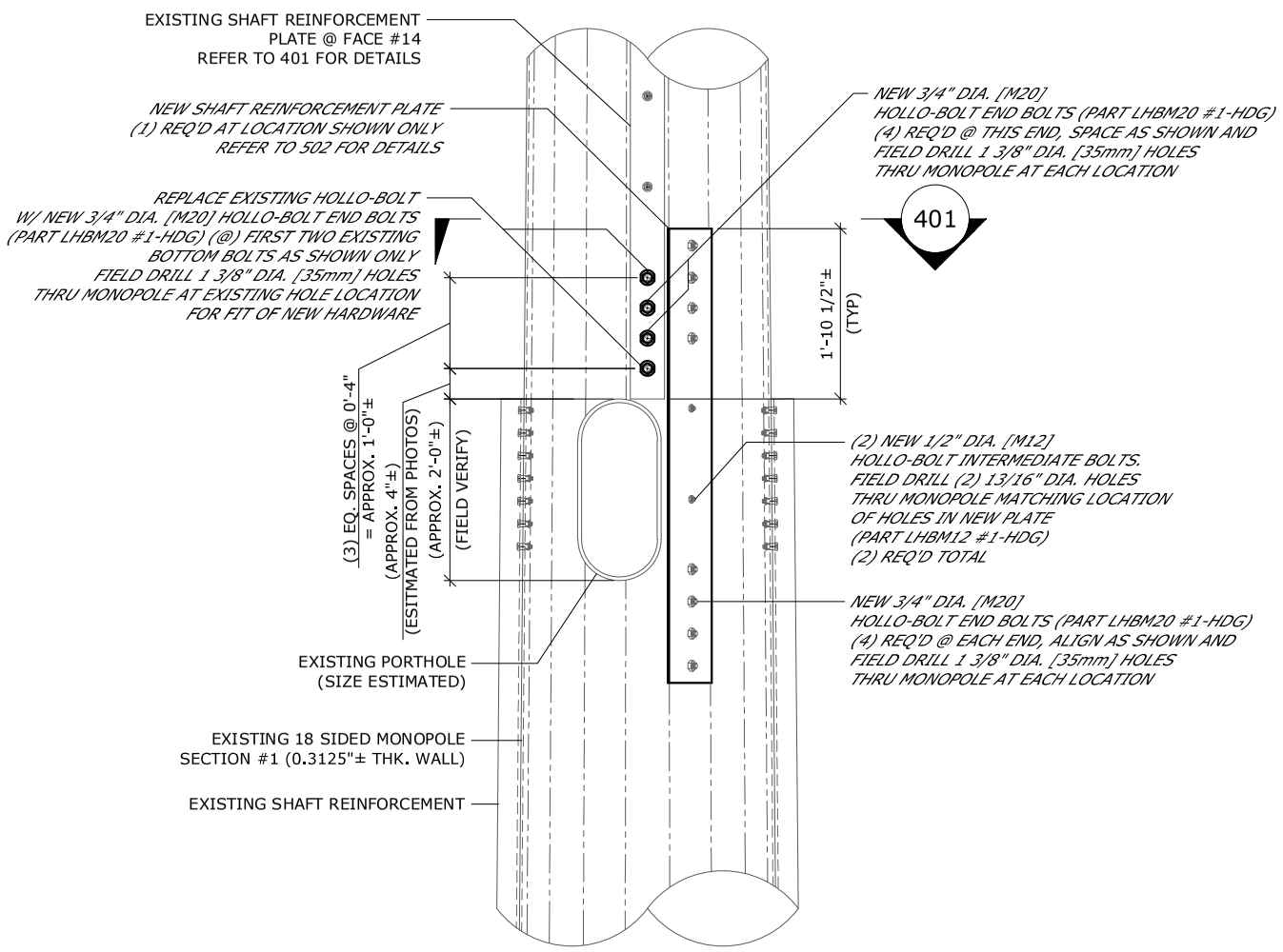

501 ELEVATION: NEW SHAFT REINFORCEMENT
SCALE: 1/2" = 1'-0"
(TYPICAL @ FACE #14)

NOTE: ALL HOLLO-BOLTS ARE TO BE INSTALLED AS PER MANUFACTURER INSTRUCTIONS W/ ALL RELATED HARDWARE.
HOLLO-BOLTS ARE DISTRIBUTED BY:
UCC STEELWORK CONNECTIONS INC.
320 GATEWAY PARK DRIVE, UNIT 2
NORTH SYRACUSE, NY 13212
(800)308-1043

FIELD TO VERIFY ALL NEW & EXISTING PLATE THICKNESSES RELATIVE TO SIZE/LENGTH OF APPROPRIATE HOLLO-BOLT PRODUCTS PRIOR TO PURCHASE.

ALTERNATELY EQUIVALENT BOX-BOLTS BY LNA SOLUTIONS MAY BE USED. INSTALL AS PER MANUFACTURER INSTRUCTIONS W/ ALL RELATED HARDWARE.
CONTACT LNA SOLUTIONS FOR DETAILS
(888)724-2323

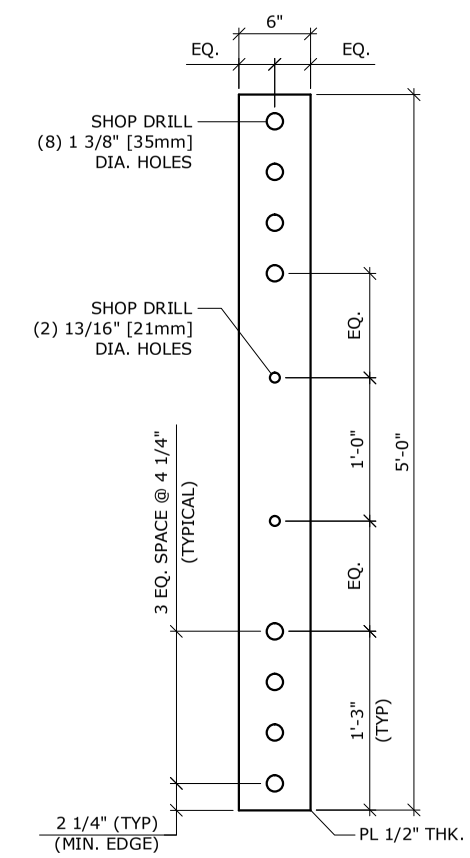

502 DETAIL: NEW SHAFT REINFORCEMENT PLATE
SCALE: 3/4" = 1'-0"
(1 REQUIRED TOTAL / @ PORTHOLE)

REFER 101 FOR MEMBER SIZES AND SCHEDULES.

MALOUF ENGINEERING INTERNATIONAL, INC.
STRUCTURAL CONSULTANTS
17950 PRESTON ROAD SUITE 720
DALLAS, TEXAS 75252-5635
972-783-2578 (fax: 2583)
www.maloufengineering.com
© MEI, INC. 2020

DANBURY EAST #CT2157
110 FT± MONOPOLE
48 NEWTON ROAD, DANBURY, CT 06810
LAT: 41-24-12.25 N - LON: 73-25-27.95 W

AT&T

NO.	DATE	REVISIONS	DRAWN	ENG'D.	APP'D.
0	05/27/20	ISSUED FOR CONSTRUCTION	BDB	KMM	MM

STATE OF CONNECTICUT
E. MARK MALOUF
No. 17715
LICENSED PROFESSIONAL ENGINEER
MAY 27, 2020

VERTICAL RESOURCES GROUP / AT&T
NEW SHAFT REINFORCEMENT DETAILS CONT.

MEI PROJECT ID	SHEET NUMBER	REV.
CT05942M-20V0	S05	0

ALL RIGHTS RESERVED. THIS DRAWING SHALL REMAIN THE PROPERTY OF MALOUF ENGINEERING INTERNATIONAL, INC. NO PART THEREOF SHALL BE REPRODUCED, COPIED, ADAPTED, DISCLOSED, OR DISTRIBUTED TO OTHERS WITHOUT WRITTEN PERMISSION OF MEI, INC.

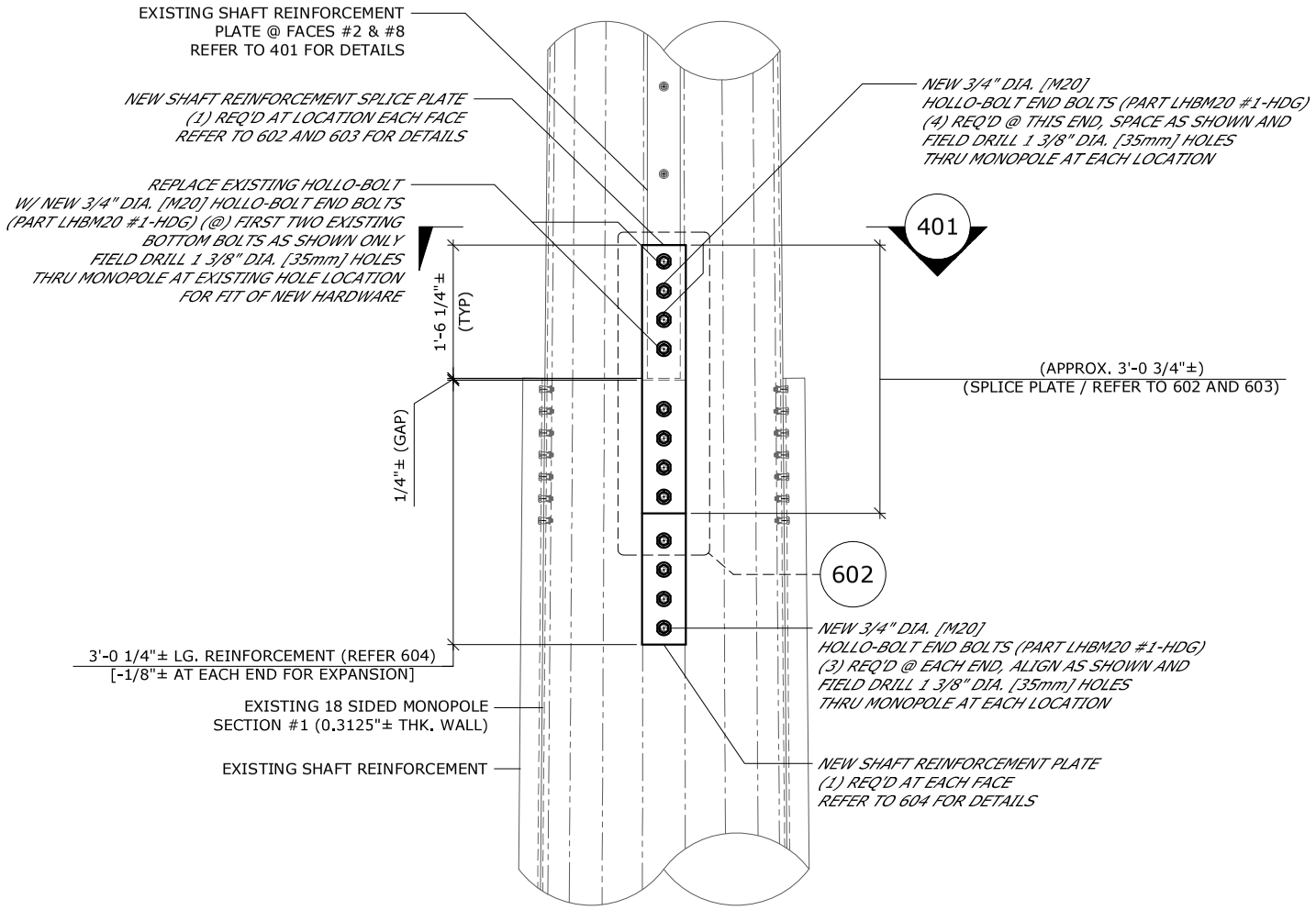

601 ELEVATION: NEW SHAFT REINFORCEMENT

SCALE: 1/2" = 1'-0" (TYPICAL @ FACES #2 & 8)

NOTE: ALL HOLLO-BOLTS ARE TO BE INSTALLED AS PER MANUFACTURER INSTRUCTIONS W/ ALL RELATED HARDWARE.
HOLLO-BOLTS ARE DISTRIBUTED BY:
UCC STEELWORK CONNECTIONS INC.
320 GATEWAY PARK DRIVE, UNIT 2
NORTH SYRACUSE, NY 13212
(800)308-1043

FIELD TO VERIFY ALL NEW & EXISTING PLATE THICKNESSES RELATIVE TO SIZE/LENGTH OF APPROPRIATE HOLLO-BOLT PRODUCTS PRIOR TO PURCHASE.

ALTERNATELY EQUIVALENT BOX-BOLTS BY LNA SOLUTIONS MAY BE USED. INSTALL AS PER MANUFACTURER INSTRUCTIONS W/ ALL RELATED HARDWARE.
CONTACT LNA SOLUTIONS FOR DETAILS
(888)724-2323

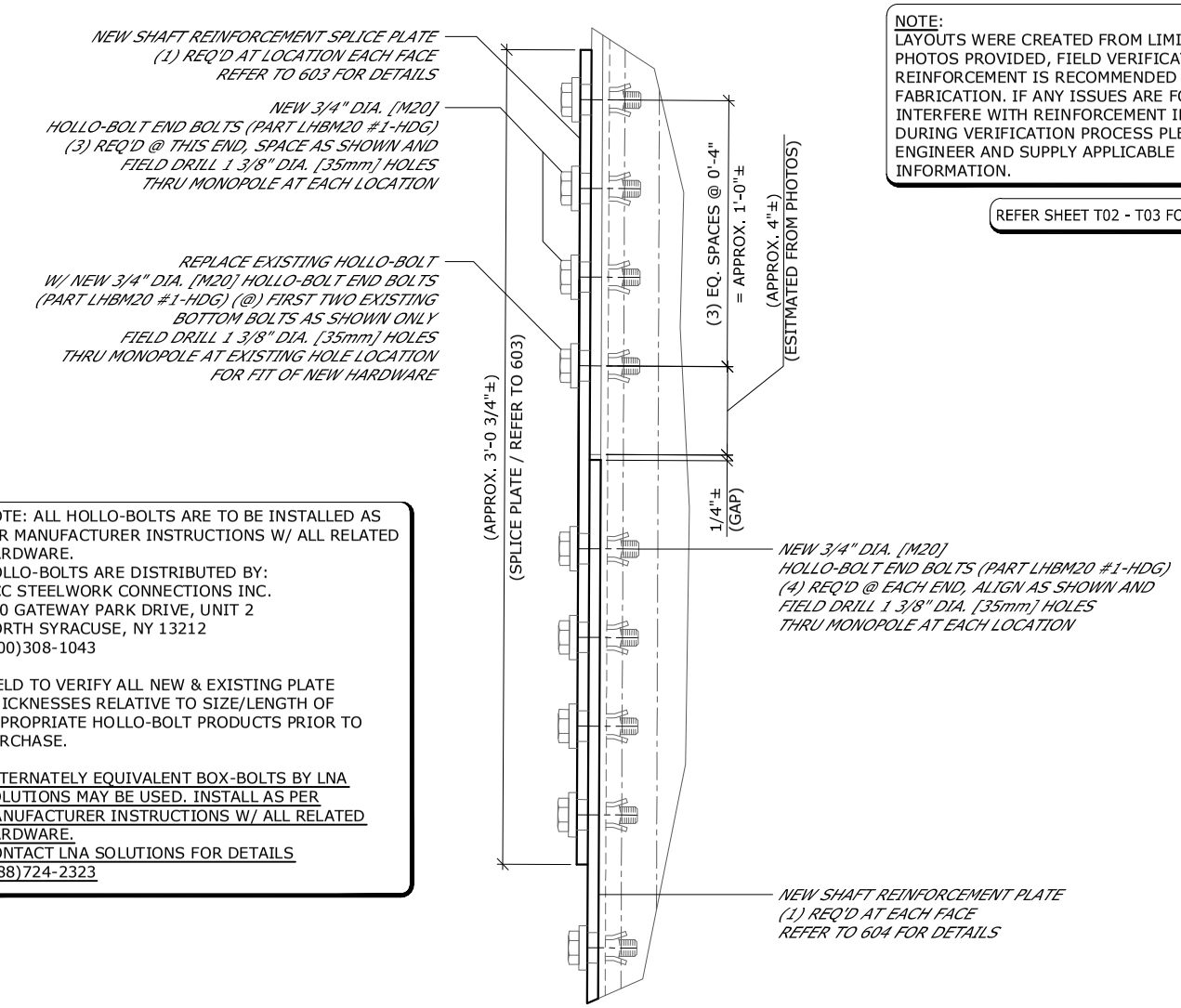

NOTE:
LAYOUTS WERE CREATED FROM LIMITED DATA AND PHOTOS PROVIDED, FIELD VERIFICATION OF FIT FOR REINFORCEMENT IS RECOMMENDED PRIOR TO BID AND FABRICATION. IF ANY ISSUES ARE FOUND THAT INTERFERE WITH REINFORCEMENT INSTALLATION DURING VERIFICATION PROCESS PLEASE CONTACT ENGINEER AND SUPPLY APPLICABLE POLE INFORMATION.

REFER SHEET T02 - T03 FOR TECH. SPEC. NOTES

602 SECTION: NEW SHAFT REINFORCEMENT SPLICE

SCALE: 1 1/2" = 1'-0" (1 FACE SHOWN / 2 FACES TOTAL)

(*) DIMENSIONS APPROX. FOR BIDDING PURPOSES; FIELD VERIFY / DETERMINE AND ADJUST AS REQ'D.

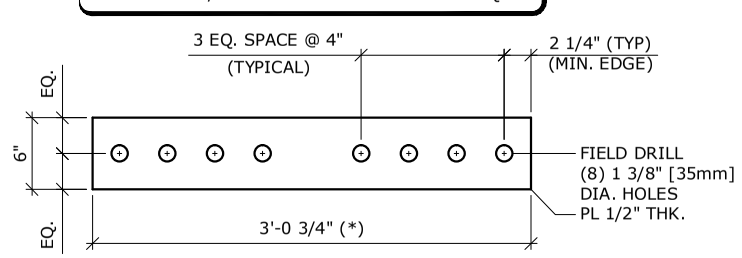

603 DETAIL: NEW SHAFT REINFORCEMENT SPLICE PLATE

SCALE: 3/4" = 1'-0" (2 REQUIRED TOTAL)

(*) DIMENSIONS APPROX. FOR BIDDING PURPOSES; FIELD VERIFY / DETERMINE AND ADJUST AS REQ'D.

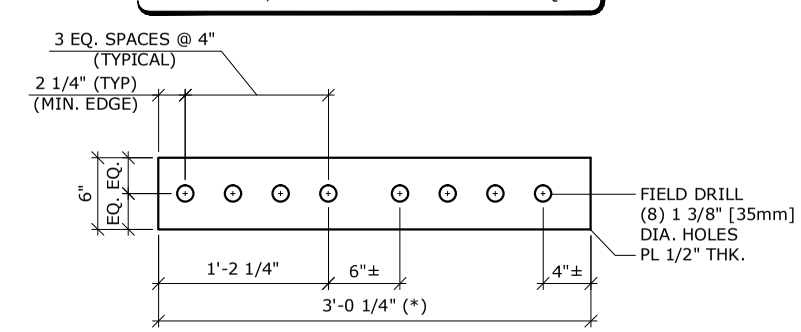

604 DETAIL: NEW SHAFT REINFORCEMENT PLATE

SCALE: 3/4" = 1'-0" (2 REQUIRED TOTAL)

REFER 101 FOR MEMBER SIZES AND SCHEDULES.

MALOUF ENGINEERING INTERNATIONAL, INC.
STRUCTURAL CONSULTANTS
17950 PRESTON ROAD SUITE 720
DALLAS, TEXAS 75252-5635
972-783-2578 (fax: 2583)
www.maloufengineering.com
© MEI, INC. 2020

DANBURY EAST #CT2157
110 FT± MONOPOLE
48 NEWTON ROAD, DANBURY, CT 06810
LAT: 41-24-12.25 N - LON: 73-25-27.95 W

AT&T

NO.	DATE	REVISIONS	DRAWN	ENG'D	APP'D.
0	05/27/20	ISSUED FOR CONSTRUCTION	BDB	KMM	MM

STATE OF CONNECTICUT · BENJAMIN MARK MALOUF · No. 17715 · LICENSED PROFESSIONAL ENGINEER
MAY 27, 2020

VERTICAL RESOURCES GROUP / AT&T

NEW SHAFT REINFORCEMENT DETAILS CONT.

MEI PROJECT ID	SHEET NUMBER	REV.
CT05942M-20V0	S06	0