Crown Castle
3 Corporate Park Drive, Suite 101
Clifton Park, NY 12065

June 1, 2022

Melanie A. Bachman
Executive Director
Connecticut Siting Council
10 Franklin Square
New Britain, CT 06051

RE: **Notice of Exempt Modification for T-Mobile: CT11516A**
Crown Site ID# 876385
Riley Mountain Road, Coventry, CT 06238
Latitude: 41° 47′ 56.21″ / Longitude: -72° 19′ 55.88″

Dear Ms. Bachman:

T-Mobile currently maintains four (4) antennas at the 137-foot mount on the existing 152-foot monopole tower located at Riley Mountain Road, Coventry, CT. The property is owned by James & Concetta Wallbeoff Trustees, and the tower is owned by Crown Castle. T-Mobile now intends to replace three (3) antennas, add three (3) new antennas and ancillary equipment at the 137ft level. This modification/proposal includes hardware that is both 4G (LTE) and 5G capable through remote software configuration and either or both services may be turned on or off at various times.

Panned Modification:

Tower:

Installed New:

(3) Ericsson Air 6419 B41 Antennas
(3) Commscope- W-65A-R1 Antennas
(3) Ericsson-Radio 4460 B25+ B66 RRU
(2) Hybrid Cable 6x24

Remove:

(3) EMS – RR90-17-02DP Antennas
(3) Ericsson Twin Style 1BX -KRY 112 144/2 TMAs
(3) Ericsson Twin Style 1A-KRY 112 71/2 TMAs
(12) 1-5/8" Coaxial Cables

Ground:

Install New:

(1) 6160 Cabinet
(1.) CSR IXRE V2 (GEN2)
(2) RP 6651

(1) PSU 4813 Voltage Booster

Remove:

(6) RUS01 B2 Radio From 6201 Cabinet
(2) Ericsson 4415 B66A Radios
(1) PTS Cabinet

The facility was approved by the Town of Coventry Planning and Zoning on September 6, 2000.

Please accept this letter as notification pursuant to Regulations of Connecticut State Agencies §16-50j-73, for construction that constitutes an exempt modification pursuant to R.C.S.A. § 16-50j-72(b)(2). In accordance with R.C.S.A. § 16-50j-73, a copy of this letter is being sent to John Elsesser, Town Manager, Town of Coventry, Eric Trott, Director of Land Use, Town of Coventry. James & Concetta Wallbeoff Trustees, Property Owner and Crown Castle is the tower owner.

1. The proposed modifications will not result in an increase in the height of the existing tower.

2. The proposed modifications will not require the extension of the site boundary.

3. The proposed modification will not increase noise levels at the facility by six decibels or more, or to levels that exceed state and local criteria.

4. The operation of the replacement antennas will not increase radio frequency emissions at the facility to a level at or above the Federal Communication Commission safety standard.
5. The proposed modifications will not cause a change or alteration in the physical or environmental characteristics of the site.

6. The existing structure and its foundation can support the proposed loading.

For the foregoing reasons, T-Mobile respectfully submits that the proposed modifications to the above-reference telecommunications facility constitutes an exempt modification under R.C.S.A. § 16-50j-72(b)(2). Please send approval/rejection letter to Attn: Jeffrey Barbadora.

Sincerely,

Jeffrey Barbadora
Site Acquisition Specialist
1800 W. Park Drive
Westborough, MA 01581
(781) 970-0053
Jeff.Barbadora@crowncastle.com

Attachments
cc:

John Elsesser, Town Manager
Town of Coventry
1712 Main Street
Coventry, CT 06238
860-742-6324

Eric Trott, Director of Land Use
Town of Coventry
1712 Main Street
Coventry, CT 06238
860-742-4062

James & Concetta Wallbeoff Trustees – Property Owner
PO Box 8430
Kansas City MO 64114

Crown Castle - Tower Owner

By: Pollansky Seconded: Terry
Motion carried with the following vote:
For: Unanimous Against: None Abstain: None

3. **Town of Andover - P&Z referral re: Planned residential development for older persons - Bear Swamp Road.**

Trott briefly reviewed this project for 9 buildings (31 total units) of elderly housing on 18.2 acres off of Bear Swamp Road in Andover. This proposed project has no significant impact to the Town of Coventry.

NEW BUSINESS -

None.

DECISIONS -

1. **00-18S - Special permit application of Sprint Spectrum, LP (DBA Sprint PCS); to establish a telecommunications facility, 150' monopole, and associated ground equipment; property located on Riley Mountain Road (Assessor's Map 11, Block 29-A, Lots 2,3); RU-40 Zone.**

MOTION: The Planning and Zoning Commission here by approves 00-18S - Special permit application of Sprint Spectrum, LP (DBA Sprint PCS); to establish a telecommunications facility, 150' monopole, and associated ground equipment; property located on Riley Mountain Road (Assessor's Map 11, Block 29-A, Lots 2,3); RU-40 Zone, with the following conditions:

1. The pole is to be expandable for possible future use.
2. The amount of carriers on the 150' pole is to be 6 rather than 3.
3. The Town of Coventry has access to public safety communication.

By: Pollansky Seconded: Terry
Motion carried with the following vote:
For: Unanimous Against: None Abstain: None

4. **00-19ZR - Zoning amendment application of William and Karen Mudano to revise Sections 2.6.1.a, 2.6.2.a, 3.4.1, and 16 (River Aquifer Zone) of the zoning regulations.**

There was further discussion of Merisotis' concerns that the proposed amendments may be contrary to the goals for the RA Zone. It was his opinion that these proposals would not add to the protection of the zone, but would increase the property value and facilitate the potential of subdivision. Pollansky felt that the RA Zone is sufficiently protected within the regulations, allowing for a large house would not reduce this protection. Pollansky felt it was unlikely that the proposed changes would significantly change the value of property in the zone.

Town of Coventry

CT33XC55 gw

1712 Main Street • Coventry, CT 06238 • Fax (860) 742-8911

CERTIFIED MAIL # 7099 3400 0007 2017 0083
September 6, 2000

Attorney Thomas J. Regan, Esq.
Brown, Rudnik, Freed, and Gesmer
185 Asylum Street
Hartford CT 06107

Dear Attorney Regan:

At its regular meeting on August 28, 2000, the Coventry Planning and Zoning Commission made the following decision:

> To approve application 00-18S of Sprint Spectrum, LP (DBA sprint PCS), to establish a telecommunications facility, 150' monopole, and associated ground equipment; property located on Riley Mountain Road (Assessor's Map 11, Block 29-A, Lots 2,3); RU-40 Zone.
>
> The following conditions apply:
>
> 1. The pole is to be expandable for possible future use.
> 2. The amount of carriers on the 150' pole is to be six rather than three.
> 3. The town of Coventry has access to public safety communication.

I wish to remind you that you must file an 8-3d form with the Town Clerk's office in addition to final mylar(s) of the approved plan. Please see the attached information for further instruction. Also, it is requested that you place this approval letter on the final plans.

Sincerely,

Eric M. Trott
Director of Planning and Development

EMT/lpe

/enclosure

cc: Sprint Spectrum, L.P.
Goodkind & O'Dea, Inc.
James Wallbeoff, Jr.

00-185 PRINT

POST APPROVAL GUIDE FOR SPECIAL PERMIT/ EXCEPTION OR VARIANCE

If you have received approval from the Coventry Zoning Board of Appeals or the Planning and Zoning Commission for a special permit/exception or variance, the following requirements must be completed before the issuance of a zoning permit:

FOR SPECIAL EXCEPTION, PERMIT, OR *VARIANCE:

1. An 8-3d form of approval must be filed with the Town Clerk's office. The form cannot be filed until the fifteen day appeal period has ended (15 days from the date of legal notice publication; not date of Commission/Board approval). The form will be prepared at the Planning office and available for filing after September 16, 2000 (There is a filing fee which you pay at the Clerk's office at the time you file the 8-3d form).

FOR SPECIAL EXCEPTION/PERMIT:

1. You must file a Mylar of final plans with the Town Clerk's office within 90 days of approval date. However, the Mylar cannot be filed until after the fifteen day appeal period has ended, which will be after September 16, 2000 (There is a filing fee which you pay at the Clerk's office at the time you file the Mylar.)

Section 4.3.c.5 of the zoning regulations states:

Endorsement and Filing. Within sixty-five days of the Commission/Board approval, the applicant shall submit one (1) set of final plans on Mylar and six (6) sets on paper (please note: in some cases we may accept three (3) copies for special exceptions), reflecting all conditions or modifications required by the Commission/Board, and accompanied by signed, sworn statements of the applicant's land surveyor, engineer, architect, and any other professional who has participated in the preparation of the application materials, to the effect that the plans submitted are the same as those approved by the Commission/Board except for the depiction of modifications and conditions required by the Commission/Board in its approval vote. If, upon considering the statements and reviewing the plans submitted, the Commission/Board shall find them to be in accordance with the final approval, they shall be endorsed by the signature of the Chairman, Vice-Chairman, or Secretary of the Commission/Board, as the case may be. Thereafter, it shall be the responsibility of the applicant to file one (1) set of endorsed Mylar plans in the office of the Town Clerk. In accordance with Section 8-3d of the Connecticut General Statutes, no Special Permit/Exception shall be effective until the final, endorsed plans are filed with the Town Clerk, and **any plans not so filed within ninety (90) days following the Commission's/Board's vote of approval shall become null and void**. Any Special Permit/Exception site plan filed in the Town Clerk's office without the endorsement of the Commission's/Board's Chairman, Vice-Chairman, or Secretary shall likewise be void.

*In the case where a variance has been granted, it is recommended that if you have not already done so, you may want to submit your application for building permit and zoning permit to the Building office prior to the appeal period ending. This may possibly help to speed up your application process/review and avoid a delay in obtaining your permits.

Revised 03/10/98

The Birthplace of Nathan Hale

COVENTRY CONNECTICUT

TOWN OF COVENTRY CONNECTICUT
GIS & Real Property Information
1712 Main St.
Coventry, CT 06238
ph 860-742-6324

Property Search

Name: ex. Smith

House No: 400

Street: RILEY MOUNTAIN RD

Parcel Id: ex. 018 0049 0001

GO

Information Updates

GIS Parcel Maps Updated
TBD

Property Info Data Updated
TBD

Current Parcel Count
6,671 +/-

Detailed Parcel Information

GIS ID
011 0029A 0003T

Parcel ID
011 0029A 0003T

Unique ID
6054

Owner
WALLBEOFF JAMES +
CONCETTA TRUSTEES

Location
400 RILEY MOUNTAIN RD

MAILING ADDRESS
PO BOX 8430
KANSAS CITY MO 64114

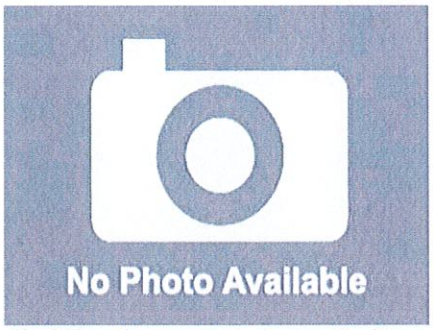

Quick Links: **Quick Map** **Summary Card** **Assessor Tax Map**

Scroll Down For Complete Property Detail

PARCEL VALUATIONS

	Appraised Value	Assessed Value
Buildings	0	0
Land	357500	250300

Property Search

Name: ex. Smith

House No: 400

Street: RILEY MOUNTAIN RD

Parcel Id: ex. 018 0049 0001

GO

Information Updates

GIS Parcel Maps Updated
TBD

Property Info Data Updated
TBD

Current Parcel Count
6,671 +/-

PARCEL VALUATIONS

	Appraised Value	Assessed Value
Buildings	0	0
Land	357500	250300
TOTAL:	568900	398200

PROPERTY INFORMATION

Total Acres	1
Land Use	Resid Vacant
Land Class Code	R
Zoning	GR80
Census Tract	
Neighborhood	
Lot Utilities	Septic

SALE INFORMATION

Sale Date	2002-09-23
Sale Price	0
Book / Page	0770/0286

Property Search

Name: ex. Smith

House No:
400

Street:
RILEY MOUNTAIN RD

Parcel Id: ex. 018 0049 0001

GO

Information Updates

GIS Parcel Maps Updated
TBD

Property Info Data Updated
TBD

Current Parcel Count
6,671 +/-

Sale Price	0
Book / Page	0770/0286

BUILDING AREA

Building Gross - sqft	
Living Area - sqft	0

CONSTRUCTION DETAILS

Building Style	UNKNOWN
Building Condition	
Number of Rooms	0
Number of Bedrooms	0
Number of Bathrooms	0
Stories	
Roof Structure	NA
Primary Exterior Wall Type	NA
Heating/Cooling Type	NA
AC_Type	NA
Heating Fuel	NA

Back

Exhibit C

Construction Drawings

Barbadora, Jeff

From: TrackingUpdates@fedex.com
Sent: Thursday, June 2, 2022 10:59 AM
To: Barbadora, Jeff
Subject: FedEx Shipment 777015369184: Your package has been delivered

CAUTION: This email originated from outside of the organization. Do not click links or open attachments unless you recognize the sender and know the content is safe.

FedEx®

Hi. Your package was delivered Thu, 06/02/2022 at 10:55am.

Delivered to 1712 MAIN ST, COVENTRY, CT 06238
Received by L.USE

OBTAIN PROOF OF DELIVERY

TRACKING NUMBER 777015369184

FROM	Jeff Barbadora 1800 W. Park Drive WESTBOROUGH, MA, US, 01581
TO	Town of Coventry John Elsesser - Town Manager 1712 Main Street COVENTRY, CT, US, 06238
REFERENCE	799001.7680
SHIPPER REFERENCE	799001.7680
SHIP DATE	Wed 6/01/2022 06:18 PM
DELIVERED TO	Receptionist/Front Desk
PACKAGING TYPE	FedEx Pak
ORIGIN	WESTBOROUGH, MA, US, 01581
DESTINATION	COVENTRY, CT, US, 06238
SPECIAL HANDLING	Deliver Weekday
NUMBER OF PIECES	1
TOTAL SHIPMENT WEIGHT	1.00 LB
SERVICE TYPE	FedEx Priority Overnight

Barbadora, Jeff

From: TrackingUpdates@fedex.com
Sent: Thursday, June 2, 2022 10:59 AM
To: Barbadora, Jeff
Subject: FedEx Shipment 777015387746: Your package has been delivered

CAUTION: This email originated from outside of the organization. Do not click links or open attachments unless you recognize the sender and know the content is safe.

FedEx®

Hi. Your package was delivered Thu, 06/02/2022 at 10:55am.

Delivered to 1712 MAIN ST, COVENTRY, CT 06238
Received by L.USE

OBTAIN PROOF OF DELIVERY

TRACKING NUMBER 777015387746

FROM	Jeff Barbadora 1800 W. Park Drive WESTBOROUGH, MA, US, 01581
TO	Town of Coventry Eric Trott, Director of Land Use 1712 Main Street COVENTRY, CT, US, 06238
REFERENCE	799001.7680
SHIPPER REFERENCE	799001.7680
SHIP DATE	Wed 6/01/2022 06:18 PM
DELIVERED TO	Receptionist/Front Desk
PACKAGING TYPE	FedEx Pak
ORIGIN	WESTBOROUGH, MA, US, 01581
DESTINATION	COVENTRY, CT, US, 06238
SPECIAL HANDLING	Deliver Weekday
NUMBER OF PIECES	1
TOTAL SHIPMENT WEIGHT	1.00 LB
SERVICE TYPE	FedEx Priority Overnight

UNITED STATES POSTAL SERVICE.

NATICK STATION
15 COMMON ST
NATICK, MA 01760-4762
(800)275-8777

06/02/2022 09:00 AM

Product	Qty	Unit Price	Price
PM Express 1-Day Flat Rate Env	1		$26.95
Kansas City, MO 64114 Flat Rate Signature Waiver Scheduled Delivery Date Fri 06/03/2022 06:00 PM Money Back Guarantee Tracking #: EI372188723US			
Insurance Up to $100.00 included			$0.00
Total			$26.95
PM Express 1-Day Flat Rate Env	1		$26.95
Willington, CT 06279 Flat Rate Signature Waiver Scheduled Delivery Date Fri 06/03/2022 06:00 PM Money Back Guarantee Tracking #: EI372188737US			
Insurance Up to $100.00 included			$0.00
Total			$26.95
Grand Total:			$53.90
Credit Card Remitted Card Name: VISA Account #: XXXXXXXXXXXX5201 Approval #: 555459 Transaction #: 798 AID: A0000000980840 AL: US DEBIT PIN: Not Required		Chip	$53.90

Coventry

****
Every household in the U.S. is now
eligible to receive a third set
of 8 free test kits.
Go to www.covidtests.gov
****

Save this receipt as evidence of
insurance. For information on filing an
insurance claim go to
https://www.usps.com/help/claims.htm
or call 1-800-222-1811

Text your tracking number to 28777 (2USPS)
to get the latest status. Standard Message
and Data rates may apply. You may also
visit www.usps.com USPS Tracking or call
1-800-222-1811.

Preview your Mail
Track your Packages
Sign up for FREE @
https://informeddelivery.usps.com

All sales final on stamps and postage.
Refunds for guaranteed services only.
Thank you for your business.

EI 372 108 237 US

EI 372 108 237 US

Date: **April 1, 2022**

Tower Engineering Professionals
326 Tryon Road
Raleigh, NC 27603
(919) 661-6351

Subject: Structural Analysis Report

Carrier Designation:	***T-Mobile* Co-Locate**	
	Site Number:	CT11516A
	Site Name:	CT516/Coventry - Sprint
Crown Castle Designation:	**BU Number:**	876385
	Site Name:	N. Coventry / Wallbeoff
	JDE Job Number:	710878
	Work Order Number:	2094550
	Order Number:	610492 Rev. 0
Engineering Firm Designation:	**TEP Project Number:**	217672.680871
Site Data:	**Reilly Mtn. Rd., Coventry, Tolland County, CT 6238** **Latitude *41° 47' 56.21"*, Longitude *-72° 19' 55.88"*** **152 Foot - Monopole Tower**	

Tower Engineering Professionals is pleased to submit this **"Structural Analysis Report"** to determine the structural integrity of the above-mentioned tower.

The purpose of the analysis is to determine acceptability of the tower stress level. Based on our analysis we have determined the tower stress level for the structure and foundation, under the following load case, to be:

LC7: Proposed Equipment Configuration **Sufficient Capacity - 34.3%**

This analysis utilizes an ultimate 3-second gust wind speed of 119 mph as required by the 2018 Connecticut State Building Code. Applicable Standard references and design criteria are listed in Section 2 - Analysis Criteria.

Structural analysis prepared by: Gautam Sopal, E.I. / CLT

Respectfully submitted by:

Aaron T. Rucker, P.E.

STATE OF CONNECTICUT
AARON THOMAS RUCKER
32608
LICENSED
PROFESSIONAL ENGINEER

Electronic Copy

04/01/2022

TABLE OF CONTENTS

1) INTRODUCTION

This tower is a 152-ft monopole tower designed by Engineered Endeavors, Inc.

2) ANALYSIS CRITERIA

TIA-222 Revision:	TIA-222-H
Risk Category:	II
Wind Speed:	119 mph
Exposure Category:	B
Topographic Factor:	1.0
Ice Thickness:	1.5 in
Wind Speed with Ice:	50 mph
Service Wind Speed:	60 mph

Table 1 - Proposed Equipment Configuration

Mounting Level (ft)	Center Line Elevation (ft)	Number of Antennas	Antenna Manufacturer	Antenna Model	Number of Feed Lines	Feed Line Size (in)
133.0	136.0	3	Ericsson	AIR 6419 B41_TMO w/ Mount Pipe	3	1-5/8
		3	Commscope	VV-65A-R1_TMO w/ Mount Pipe		
		3	RFS Celwave	APXVAARR24_43-U-NA20 w/ Mount Pipe		
		3	Ericsson	RADIO 4449 B71 B85A_ T-MOBILE		
		3	Ericsson	RADIO 4460 B2/B25 B66_TMO		
	133.0	1	Tower Mounts	Platform Mount [LP 304-1]		
		1	Site Pro 1	HRK-14 Support Rail		

Table 2 - Other Considered Equipment

Mounting Level (ft)	Center Line Elevation (ft)	Number of Antennas	Antenna Manufacturer	Antenna Model	Number of Feed Lines	Feed Line Size (in)
151.0	161.0	1	Dbspectra	DS9A09F36D-N	2 2 1	1-5/8 7/8 1/2
	158.0	1	Dbspectra	DS2C00F36D-D		
	151.0	1	Bird Technologies Group	430-94C-09168-M-110/48		
		2	Tower Mounts	Pipe Mount [PM 601-1]		
150.0	152.0	3	Commscope	NNVV-65B-R4 w/ Mount Pipe	4	1-1/4
		3	RFS Celwave	APXVTM14-ALU-I20 w/ Mount Pipe		
		3	Nokia	FZHN		
		3	Alcatel Lucent	PCS 1900MHZ 4X45W-65MHZ		
		6	Alcatel Lucent	RRH2X50-800		
	150.0	1	Tower Mounts	Platform Mount [LP 602-1_KCKR]		

Mounting Level (ft)	Center Line Elevation (ft)	Number of Antennas	Antenna Manufacturer	Antenna Model	Number of Feed Lines	Feed Line Size (in)
124.0	126.0	3	Andrew	LNX-6514DS-A1M w/ Mount Pipe	8	1-5/8
		3	Commscope	NHHSS-65B-R2B w/ Mount Pipe		
		3	Commscope	NHH-65B-R2B w/ Mount Pipe		
		3	Samsung Telecom.	MT6407-77A w/ Mount Pipe		
		2	Raycap	RCMDC-3315-PF-48		
		3	Samsung Telecom.	RFV01U-D1A		
		3	Samsung Telecom.	RFV01U-D2A		
		3	Samsung Telecom.	CBRS RT4401-48A		
	124.0	1	Tower Mounts	Platform Mount [LP 304-1]		
		3	Commscope	BSAMNT-SBS-1-2		
116.0	120.0	3	Powerwave Technologies	7770.00 w/ Mount Pipe	12 4 2	1-1/4 3/4 3/8
		2	Kathrein	80010965 w/ Mount Pipe		
		1	Kathrein	80010966 w/ Mount Pipe		
		2	CCI Antennas	HPA-65R-BUU-H6 w/ Mount Pipe		
		1	CCI Antennas	HPA-65R-BUU-H8 w/ Mount Pipe		
		6	Powerwave Technologies	7020.00		
		3	Ericsson	RRUS 4478 B14		
		3	Ericsson	RRUS 32		
		2	Raycap	DC6-48-60-18-8F		
		3	Ericsson	RRUS-11		
		3	Ericsson	RRUS 32 B2		
	116.0	6	Powerwave Technologies	LGP21401		
		1	Tower Mounts	Platform Mount [LP 1201-1_HR-1]		
107.0	107.0	1	Tower Mounts	Commscope MC-PK8-DSH	1	1-1/2
	106.0	3	JMA Wireless	MX08FRO665-21 w/ Mount Pipe		
		3	Fujitsu	TA08025-B604		
		3	Fujitsu	TA08025-B605		
		1	Raycap	RDIDC-9181-PF-48		
74.0	75.0	1	Lucent	KS24019-L112A	1	1/2
	74.0	1	Tower Mounts	Side Arm Mount [SO 701-1]		

3) ANALYSIS PROCEDURE

Table 3 - Documents Provided

Document	Reference	Source
Geotechnical Report	1531969	CCISites
Tower Foundation Drawings	1441268	CCISites
Tower Manufacturer Drawings	1614566	CCISites

3.1) Analysis Method

tnxTower (version 8.1.1.0), a commercially available analysis software package, was used to create a three-dimensional model of the tower and calculate member stresses for various loading cases. Selected output from the analysis is included in Appendix A. When applicable, Crown Castle has calculated and provided the effective area for panel antennas using approved methods following the intent of the TIA-222 Standard.

3.2) Assumptions

1) The tower and structures were maintained in accordance with the TIA-222 Standard.
2) The configuration of antennas, transmission cables, mounts and other appurtenances are as specified in Tables 1 and 2, and the referenced drawings.

This analysis may be affected if any assumptions are not valid or have been made in error. Tower Engineering Professionals should be notified to determine the effect on the structural integrity of the tower.

4) ANALYSIS RESULTS

Table 4 - Section Capacity (Summary)

Section No.	Elevation (ft)	Component Type	Size	Critical Element	P (k)	ϕP_{allow} (k)	% Capacity	Pass / Fail
L1	152 - 137.42	Pole	TP37.31x33.03x0.3125	1	-5.22	2161.65	2.5	Pass
L2	137.42 - 91.09	Pole	TP50.15x35.1673x0.375	2	-31.75	3493.83	17.7	Pass
L3	91.09 - 44.79	Pole	TP62.86x47.413x0.4375	3	-49.08	5115.60	25.4	Pass
L4	44.79 - 0	Pole	TP75x59.537x0.5	4	-77.67	7262.37	27.7	Pass
							Summary	
						Pole (L4)	27.7	Pass
						RATING =	**27.7**	**Pass**

Table 5 - Tower Component Stresses vs. Capacity - LC7

Notes	Component	Elevation (ft)	% Capacity	Pass / Fail
1,2	Anchor Rods	-	24.6	Pass
1,2	Base Plate	-	34.3	Pass
1,2	Base Foundation Structural	-	31.2	Pass
1,2	Base Foundation Soil Interaction	-	33.8	Pass

Structure Rating (max from all components) =	34.3%

Notes:
1) See additional documentation in "Appendix C - Additional Calculations" for calculations supporting the % capacity listed.
2) Rating per TIA-222-H Section 15.5

4.1) Recommendations

1) The tower and its foundation have sufficient capacity to carry the proposed load configuration. No modifications are required at this time.

APPENDIX A

TNXTOWER OUTPUT

Section	Length (ft)	Number of Sides	Thickness (in)	Socket Length (ft)	Top Dia (in)	Bot Dia (in)	Grade	Weight (K)
1	14.58	18	0.3125	5.17	33.0300	37.3100		1.7
2	51.50	18	0.3750	6.83	35.1673	50.1500		8.8
3	53.13	18	0.4375	8.42	47.4130	62.8600	A572-65	13.7
4	53.21	18	0.5000		59.5370	75.0000		19.2
								43.5

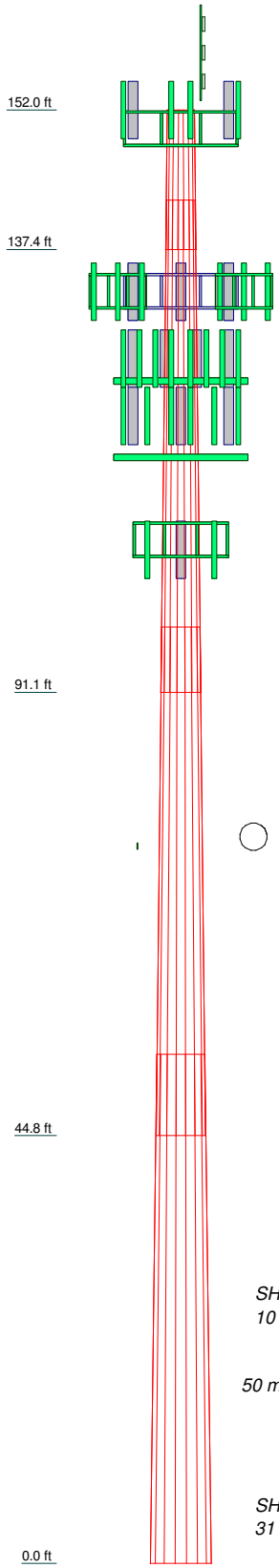

MATERIAL STRENGTH

GRADE	Fy	Fu	GRADE	Fy	Fu
A572-65	65 ksi	80 ksi			

TOWER DESIGN NOTES

1. Tower is located in Tolland County, Connecticut.
2. Tower designed for Exposure B to the TIA-222-H Standard.
3. Tower designed for a 119 mph basic wind in accordance with the TIA-222-H Standard.
4. Tower is also designed for a 50 mph basic wind with 1.50 in ice. Ice is considered to increase in thickness with height.
5. Deflections are based upon a 60 mph wind.
6. Tower Risk Category II.
7. Topographic Category 1 with Crest Height of 0.00 ft
8. TOWER RATING: 27.7%

ALL REACTIONS ARE FACTORED

AXIAL 118 K

SHEAR 10 K — *MOMENT 1009 kip-ft*

TORQUE 1 kip-ft
50 mph WIND - 1.5000 in ICE

AXIAL 78 K

SHEAR 31 K — *MOMENT 3259 kip-ft*

TORQUE 1 kip-ft
REACTIONS - 119 mph WIND

Tower Engineering Professionals

Tower Engineering Professionals
326 Tryon Road
Raleigh, NC 27603
Phone: (919) 661-6351
FAX: (919) 661-6350

Job: ***N. Coventry / Wallbeoff (BU 876385)***			
Project: ***TEP No. 217672.680871***			
Client: Crown Castle	Drawn by: VPM	App'd:	
Code: TIA-222-H	Date: 04/01/22	Scale: NTS	
Path:		Dwg No. E-1	

Tower Input Data

The tower is a monopole.
This tower is designed using the TIA-222-H standard.
The following design criteria apply:

Tower is located in Tolland County, Connecticut.
Tower base elevation above sea level: 707.00 ft.
Basic wind speed of 119 mph.
Risk Category II.
Exposure Category B.
Simplified Topographic Factor Procedure for wind speed-up calculations is used.
Topographic Category: 1.
Crest Height: 0.00 ft.
Nominal ice thickness of 1.5000 in.
Ice thickness is considered to increase with height.
Ice density of 56 pcf.
A wind speed of 50 mph is used in combination with ice.
Temperature drop of 50 °F.
Deflections calculated using a wind speed of 60 mph.
A non-linear (P-delta) analysis was used.
Pressures are calculated at each section.
Stress ratio used in pole design is 1.
Tower analysis based on target reliabilities in accordance with Annex S.
Load Modification Factors used: $K_{es}(F_w) = 0.95$, $K_{es}(t_i) = 0.85$.
Maximum demand-capacity ratio is: 1.05.
Local bending stresses due to climbing loads, feed line supports, and appurtenance mounts are not considered.

Options

Consider Moments - Legs
Consider Moments - Horizontals
Consider Moments - Diagonals
Use Moment Magnification
√ Use Code Stress Ratios
√ Use Code Safety Factors - Guys
Escalate Ice
Always Use Max Kz
Use Special Wind Profile
Include Bolts In Member Capacity
Leg Bolts Are At Top Of Section
Secondary Horizontal Braces Leg
Use Diamond Inner Bracing (4 Sided)
SR Members Have Cut Ends
SR Members Are Concentric

Distribute Leg Loads As Uniform
Assume Legs Pinned
√ Assume Rigid Index Plate
√ Use Clear Spans For Wind Area
Use Clear Spans For KL/r
Retension Guys To Initial Tension
√ Bypass Mast Stability Checks
√ Use Azimuth Dish Coefficients
√ Project Wind Area of Appurt.
Autocalc Torque Arm Areas
Add IBC .6D+W Combination
√ Sort Capacity Reports By Component
Triangulate Diamond Inner Bracing
Treat Feed Line Bundles As Cylinder
Ignore KL/ry For 60 Deg. Angle Legs

Use ASCE 10 X-Brace Ly Rules
Calculate Redundant Bracing Forces
Ignore Redundant Members in FEA
SR Leg Bolts Resist Compression
All Leg Panels Have Same Allowable
Offset Girt At Foundation
√ Consider Feed Line Torque
Include Angle Block Shear Check
Use TIA-222-H Bracing Resist. Exemption
Use TIA-222-H Tension Splice Exemption

Poles

√ Include Shear-Torsion Interaction
Always Use Sub-Critical Flow
Use Top Mounted Sockets
√ Pole Without Linear Attachments
Pole With Shroud Or No Appurtenances
Outside and Inside Corner Radii Are Known

Tapered Pole Section Geometry

Section	Elevation ft	Section Length ft	Splice Length ft	Number of Sides	Top Diameter in	Bottom Diameter in	Wall Thickness in	Bend Radius in	Pole Grade
L1	152.00-137.42	14.58	5.17	18	33.0300	37.3100	0.3125	1.2500	A572-65 (65 ksi)
L2	137.42-91.09	51.50	6.83	18	35.1673	50.1500	0.3750	1.5000	A572-65 (65 ksi)
L3	91.09-44.79	53.13	8.42	18	47.4130	62.8600	0.4375	1.7500	A572-65 (65 ksi)
L4	44.79-0.00	53.21		18	59.5370	75.0000	0.5000	2.0000	A572-65 (65 ksi)

Tapered Pole Properties

Section	Tip Dia. in	Area in^2	I in^4	r in	C in	I/C in^3	J in^4	It/Q in^2	w in	w/t
L1	33.4913	32.4517	4388.6882	11.6147	16.7792	261.5546	8783.1512	16.2289	5.2633	16.842
	37.8374	36.6969	6346.1675	13.1341	18.9535	334.8286	12700.6855	18.3519	6.0166	19.253
L2	37.1793	41.4116	6333.2445	12.3513	17.8650	354.5056	12674.8225	20.7097	5.5295	14.745
	50.8658	59.2447	18544.2574	17.6701	25.4762	727.9052	37112.9158	29.6280	8.1664	21.777
L3	50.0933	65.2313	18185.9528	16.6763	24.0858	755.0490	36395.8351	32.6219	7.5747	17.314
	63.7622	86.6814	42672.2855	22.1600	31.9329	1336.3118	85400.7203	43.3490	10.2934	23.528
L4	62.8629	93.6917	41255.9431	20.9581	30.2448	1364.0682	82566.1717	46.8547	9.5985	19.197
	76.0799	118.2315	82905.4718	26.4475	38.1000	2175.9966	165920.0328	59.1270	12.3200	24.64

Tower Elevation ft	Gusset Area (per face) ft^2	Gusset Thickness in	Gusset Grade	Adjust. Factor A_f	Adjust. Factor A_r	Weight Mult.	Double Angle Stitch Bolt Spacing Diagonals in	Double Angle Stitch Bolt Spacing Horizontals in	Double Angle Stitch Bolt Spacing Redundants in
L1 152.00-137.42				1	1	1			
L2 137.42-91.09				1	1	1			
L3 91.09-44.79				1	1	1			
L4 44.79-0.00				1	1	1			

Feed Line/Linear Appurtenances - Entered As Round Or Flat

Description	Face or Leg	Allow Shield	Exclude From Torque Calculation	Component Type	Placement ft	Total Number	Number Per Row	Clear Spacing in	Width or Diameter in	Perimeter in	Weight plf
**											

Feed Line/Linear Appurtenances - Entered As Area

Description	Face or Leg	Allow Shield	Exclude From Torque Calculation	Component Type	Placement ft	Total Number		C_AA_A ft^2/ft	Weight plf
Safety									
Safety Line 3/8	A	No	No	CaAa (Out Of Face)	152.00 - 0.00	1	No Ice	0.04	0.22
							1/2" Ice	0.14	0.75
							1" Ice	0.24	1.28
							2" Ice	0.44	2.34
Step Pegs (5/8" SR) 7-in. w/30" step	A	No	No	CaAa (Out Of Face)	152.00 - 0.00	1	No Ice	0.03	0.49
							1/2" Ice	0.14	1.01
							1" Ice	0.23	2.07
							2" Ice	0.43	6.09
151									
HCC 78-50J(7/8")	A	No	No	Inside Pole	151.00 - 0.00	2	No Ice	0.00	0.53
							1/2" Ice	0.00	0.53
							1" Ice	0.00	0.53
							2" Ice	0.00	0.53
FLC 12-50J(1/2")	A	No	No	Inside Pole	151.00 - 0.00	1	No Ice	0.00	0.17
							1/2" Ice	0.00	0.17
							1" Ice	0.00	0.17
							2" Ice	0.00	0.17
FLC 158-50J(1-5/8")	A	No	No	Inside Pole	151.00 - 0.00	2	No Ice	0.00	0.92
							1/2" Ice	0.00	0.92
							1" Ice	0.00	0.92
							2" Ice	0.00	0.92
150									
HB114-1-0813U4-M5J(1-1/4)	C	No	No	Inside Pole	150.00 - 0.00	3	No Ice	0.00	1.20
							1/2" Ice	0.00	1.20
							1" Ice	0.00	1.20
							2" Ice	0.00	1.20
HB114-13U3M12-XXXF(1-1/4)	C	No	No	Inside Pole	150.00 - 0.00	1	No Ice	0.00	0.99
							1/2" Ice	0.00	0.99
							1" Ice	0.00	0.99
							2" Ice	0.00	0.99
133									
HCS 6X12 4AWG(1-5/8")	C	No	No	Inside Pole	133.00 - 0.00	1	No Ice	0.00	2.40
							1/2" Ice	0.00	2.40
							1" Ice	0.00	2.40
							2" Ice	0.00	2.40
HB158-21U6S24-xxM_TMO(1-5/8)	C	No	No	Inside Pole	133.00 - 0.00	2	No Ice	0.00	2.50
							1/2" Ice	0.00	2.50
							1" Ice	0.00	2.50
							2" Ice	0.00	2.50
124									
LDF7-50A(1-5/8")	C	No	No	Inside Pole	124.00 - 0.00	6	No Ice	0.00	0.82
							1/2" Ice	0.00	0.82
							1" Ice	0.00	0.82
							2" Ice	0.00	0.82
HB158-1-08U8-S8J18(1-5/8)	C	No	No	Inside Pole	124.00 - 0.00	2	No Ice	0.00	1.30
							1/2" Ice	0.00	1.30
							1" Ice	0.00	1.30
							2" Ice	0.00	1.30
116									
LCF114-50J(1-1/4)	A	No	No	Inside Pole	116.00 - 0.00	12	No Ice	0.00	0.70
							1/2" Ice	0.00	0.70
							1" Ice	0.00	0.70
							2" Ice	0.00	0.70
WR-VG86ST-BRD(3/4)	A	No	No	Inside Pole	116.00 - 0.00	4	No Ice	0.00	0.58
							1/2" Ice	0.00	0.58
							1" Ice	0.00	0.58
							2" Ice	0.00	0.58
FB-L98B-034-XXX(3/8)	A	No	No	Inside Pole	116.00 - 0.00	2	No Ice	0.00	0.06
							1/2" Ice	0.00	0.06

Description	Face or Leg	Allow Shield	Exclude From Torque Calculation	Component Type	Placement ft	Total Number		C_AA_A ft^2/ft	Weight plf
							1" Ice	0.00	0.06
							2" Ice	0.00	0.06
2" Flexible Conduit	A	No	No	Inside Pole	116.00 - 0.00	2	No Ice	0.00	0.34
							1/2" Ice	0.00	0.34
							1" Ice	0.00	0.34
							2" Ice	0.00	0.34
107									
CU12PSM9P6XXX(1-1/2)	B	No	No	Inside Pole	107.00 - 0.00	1	No Ice	0.00	2.35
							1/2" Ice	0.00	2.35
							1" Ice	0.00	2.35
							2" Ice	0.00	2.35
74									
LDF4-50A(1/2)	C	No	No	Inside Pole	74.00 - 0.00	1	No Ice	0.00	0.15
							1/2" Ice	0.00	0.15
							1" Ice	0.00	0.15
							2" Ice	0.00	0.15
**									

Feed Line/Linear Appurtenances Section Areas

Tower Section	Tower Elevation ft	Face	A_R ft^2	A_F ft^2	C_AA_A In Face ft^2	C_AA_A Out Face ft^2	Weight K
L1	152.00-137.42	A	0.000	0.000	0.000	1.057	0.05
		B	0.000	0.000	0.000	0.000	0.00
		C	0.000	0.000	0.000	0.000	0.06
L2	137.42-91.09	A	0.000	0.000	0.000	3.359	0.46
		B	0.000	0.000	0.000	0.000	0.04
		C	0.000	0.000	0.000	0.000	0.77
L3	91.09-44.79	A	0.000	0.000	0.000	3.357	0.71
		B	0.000	0.000	0.000	0.000	0.11
		C	0.000	0.000	0.000	0.000	0.91
L4	44.79-0.00	A	0.000	0.000	0.000	3.247	0.69
		B	0.000	0.000	0.000	0.000	0.11
		C	0.000	0.000	0.000	0.000	0.88

Feed Line/Linear Appurtenances Section Areas - With Ice

Tower Section	Tower Elevation ft	Face or Leg	Ice Thickness in	A_R ft^2	A_F ft^2	C_AA_A In Face ft^2	C_AA_A Out Face ft^2	Weight K
L1	152.00-137.42	A	1.478	0.000	0.000	0.000	9.677	0.13
		B		0.000	0.000	0.000	0.000	0.00
		C		0.000	0.000	0.000	0.000	0.06
L2	137.42-91.09	A	1.443	0.000	0.000	0.000	30.748	0.70
		B		0.000	0.000	0.000	0.000	0.04
		C		0.000	0.000	0.000	0.000	0.77
L3	91.09-44.79	A	1.370	0.000	0.000	0.000	30.072	0.93
		B		0.000	0.000	0.000	0.000	0.11
		C		0.000	0.000	0.000	0.000	0.91
L4	44.79-0.00	A	1.224	0.000	0.000	0.000	27.788	0.89

Tower Section	Tower Elevation ft	Face or Leg	Ice Thickness in	A_R ft^2	A_F ft^2	C_AA_A In Face ft^2	C_AA_A Out Face ft^2	Weight K
		B		0.000	0.000	0.000	0.000	0.11
		C		0.000	0.000	0.000	0.000	0.88

Feed Line Center of Pressure

Section	Elevation ft	CP_X in	CP_Z in	CP_X Ice in	CP_Z Ice in
L1	152.00-137.42	0.0000	-0.6555	0.0000	-2.7762
L2	137.42-91.09	0.0000	-0.6602	0.0000	-2.9023
L3	91.09-44.79	0.0000	-0.6647	0.0000	-2.9789
L4	44.79-0.00	0.0000	-0.6675	0.0000	-2.9456

Note: For pole sections, center of pressure calculations do not consider feed line shielding.

Discrete Tower Loads

Description	Face or Leg	Offset Type	Offsets: Horz Lateral Vert ft ft ft	Azimuth Adjustment °	Placement ft		C_AA_A Front ft^2	C_AA_A Side ft^2	Weight K
151									
DS9A09F36D-N	A	From Leg	1.00	0.0000	151.00	No Ice	6.33	6.33	0.08
			0.00			1/2" Ice	8.47	8.47	0.12
			10.00			1" Ice	10.63	10.63	0.18
						2" Ice	14.99	14.99	0.34
DS2C00F36D-D	B	From Leg	1.00	0.0000	151.00	No Ice	4.08	4.08	0.04
			0.00			1/2" Ice	5.47	5.47	0.07
			7.00			1" Ice	6.88	6.88	0.11
						2" Ice	9.55	9.55	0.21
430-94C-09168-M-110/48	B	From Leg	1.00	0.0000	151.00	No Ice	1.03	1.03	0.02
			0.00			1/2" Ice	1.17	1.17	0.03
			0.00			1" Ice	1.32	1.32	0.04
						2" Ice	1.64	1.64	0.07
Pipe Mount [PM 601-1]	A	From Leg	0.50	0.0000	151.00	No Ice	1.32	1.32	0.07
			0.00			1/2" Ice	1.58	1.58	0.08
			0.00			1" Ice	1.84	1.84	0.09
						2" Ice	2.40	2.40	0.13
Pipe Mount [PM 601-1]	B	From Leg	0.50	0.0000	151.00	No Ice	1.32	1.32	0.07
			0.00			1/2" Ice	1.58	1.58	0.08
			0.00			1" Ice	1.84	1.84	0.09
						2" Ice	2.40	2.40	0.13
150									
NNVV-65B-R4 w/ Mount Pipe	A	From Centroid-Leg	4.00	0.0000	150.00	No Ice	7.55	4.23	0.11
			0.00			1/2" Ice	8.04	4.67	0.20
			2.00			1" Ice	8.53	5.12	0.30
						2" Ice	9.56	6.05	0.53
NNVV-65B-R4 w/ Mount	B	From	4.00	0.0000	150.00	No Ice	7.55	4.23	0.11

Description	Face or Leg	Offset Type	Offsets: Horz Lateral Vert ft ft ft	Azimuth Adjustment °	Placement ft		C_AA_A Front ft^2	C_AA_A Side ft^2	Weight K
Pipe		Centroid-Leg	0.00 2.00			1/2" Ice 1" Ice 2" Ice	8.04 8.53 9.56	4.67 5.12 6.05	0.20 0.30 0.53
NNVV-65B-R4 w/ Mount Pipe	C	From Centroid-Leg	4.00 0.00 2.00	0.0000	150.00	No Ice 1/2" Ice 1" Ice 2" Ice	7.55 8.04 8.53 9.56	4.23 4.67 5.12 6.05	0.11 0.20 0.30 0.53
APXVTM14-ALU-I20 w/ Mount Pipe	A	From Centroid-Leg	4.00 0.00 2.00	0.0000	150.00	No Ice 1/2" Ice 1" Ice 2" Ice	4.09 4.48 4.88 5.71	2.86 3.23 3.61 4.40	0.08 0.13 0.19 0.33
APXVTM14-ALU-I20 w/ Mount Pipe	B	From Centroid-Leg	4.00 0.00 2.00	0.0000	150.00	No Ice 1/2" Ice 1" Ice 2" Ice	4.09 4.48 4.88 5.71	2.86 3.23 3.61 4.40	0.08 0.13 0.19 0.33
APXVTM14-ALU-I20 w/ Mount Pipe	C	From Centroid-Leg	4.00 0.00 2.00	0.0000	150.00	No Ice 1/2" Ice 1" Ice 2" Ice	4.09 4.48 4.88 5.71	2.86 3.23 3.61 4.40	0.08 0.13 0.19 0.33
FZHN	A	From Centroid-Leg	4.00 0.00 2.00	0.0000	150.00	No Ice 1/2" Ice 1" Ice 2" Ice	2.03 2.21 2.39 2.79	0.62 0.73 0.84 1.10	0.05 0.06 0.08 0.12
FZHN	B	From Centroid-Leg	4.00 0.00 2.00	0.0000	150.00	No Ice 1/2" Ice 1" Ice 2" Ice	2.03 2.21 2.39 2.79	0.62 0.73 0.84 1.10	0.05 0.06 0.08 0.12
FZHN	C	From Centroid-Leg	4.00 0.00 2.00	0.0000	150.00	No Ice 1/2" Ice 1" Ice 2" Ice	2.03 2.21 2.39 2.79	0.62 0.73 0.84 1.10	0.05 0.06 0.08 0.12
PCS 1900MHZ 4X45W-65MHZ	A	From Centroid-Leg	4.00 0.00 2.00	0.0000	150.00	No Ice 1/2" Ice 1" Ice 2" Ice	2.32 2.53 2.74 3.19	2.24 2.44 2.65 3.09	0.06 0.08 0.11 0.17
PCS 1900MHZ 4X45W-65MHZ	B	From Centroid-Leg	4.00 0.00 2.00	0.0000	150.00	No Ice 1/2" Ice 1" Ice 2" Ice	2.32 2.53 2.74 3.19	2.24 2.44 2.65 3.09	0.06 0.08 0.11 0.17
PCS 1900MHZ 4X45W-65MHZ	C	From Centroid-Leg	4.00 0.00 2.00	0.0000	150.00	No Ice 1/2" Ice 1" Ice 2" Ice	2.32 2.53 2.74 3.19	2.24 2.44 2.65 3.09	0.06 0.08 0.11 0.17
(2) RRH2X50-800	A	From Centroid-Leg	4.00 0.00 2.00	0.0000	150.00	No Ice 1/2" Ice 1" Ice 2" Ice	2.13 2.32 2.51 2.92	1.77 1.95 2.13 2.51	0.05 0.07 0.10 0.16
(2) RRH2X50-800	B	From Centroid-Leg	4.00 0.00 2.00	0.0000	150.00	No Ice 1/2" Ice 1" Ice 2" Ice	2.13 2.32 2.51 2.92	1.77 1.95 2.13 2.51	0.05 0.07 0.10 0.16
(2) RRH2X50-800	C	From Centroid-Leg	4.00 0.00 2.00	0.0000	150.00	No Ice 1/2" Ice 1" Ice 2" Ice	2.13 2.32 2.51 2.92	1.77 1.95 2.13 2.51	0.05 0.07 0.10 0.16
Platform Mount [LP 602-1_KCKR]	C	None		0.0000	150.00	No Ice 1/2" Ice	42.30 49.04	42.30 49.04	1.62 2.38

Description	Face or Leg	Offset Type	Offsets: Horz Lateral Vert ft ft ft	Azimuth Adjustment °	Placement ft		C_AA_A Front ft^2	C_AA_A Side ft^2	Weight K
						1" Ice	55.87	55.87	3.27
						2" Ice	69.85	69.85	5.40
Transition Ladder	C	From Centroid-Leg	2.00 0.00 -4.00	0.0000	150.00	No Ice	6.00	6.00	0.16
						1/2" Ice	8.00	8.00	0.24
						1" Ice	10.00	10.00	0.32
						2" Ice	14.00	14.00	0.48
2.4" Dia x 6-ft Pipe	A	From Centroid-Leg	4.00 0.00 0.00	0.0000	150.00	No Ice	1.43	1.43	0.02
						1/2" Ice	1.93	1.93	0.03
						1" Ice	2.30	2.30	0.05
						2" Ice	3.06	3.06	0.09
2.4" Dia x 6-ft Pipe	B	From Centroid-Leg	4.00 0.00 0.00	0.0000	150.00	No Ice	1.43	1.43	0.02
						1/2" Ice	1.93	1.93	0.03
						1" Ice	2.30	2.30	0.05
						2" Ice	3.06	3.06	0.09
2.4" Dia x 6-ft Pipe	C	From Centroid-Leg	4.00 0.00 0.00	0.0000	150.00	No Ice	1.43	1.43	0.02
						1/2" Ice	1.93	1.93	0.03
						1" Ice	2.30	2.30	0.05
						2" Ice	3.06	3.06	0.09
133									
AIR 6419 B41_TMO w/ Mount Pipe	A	From Centroid-Face	4.00 0.00 3.00	0.0000	133.00	No Ice	6.58	3.50	0.11
						1/2" Ice	7.06	3.90	0.16
						1" Ice	7.57	4.32	0.22
						2" Ice	8.62	5.20	0.36
AIR 6419 B41_TMO w/ Mount Pipe	B	From Centroid-Face	4.00 0.00 3.00	0.0000	133.00	No Ice	6.58	3.50	0.11
						1/2" Ice	7.06	3.90	0.16
						1" Ice	7.57	4.32	0.22
						2" Ice	8.62	5.20	0.36
AIR 6419 B41_TMO w/ Mount Pipe	C	From Centroid-Face	4.00 0.00 3.00	0.0000	133.00	No Ice	6.58	3.50	0.11
						1/2" Ice	7.06	3.90	0.16
						1" Ice	7.57	4.32	0.22
						2" Ice	8.62	5.20	0.36
VV-65A-R1_TMO w/ Mount Pipe	A	From Centroid-Face	4.00 0.00 3.00	0.0000	133.00	No Ice	4.46	2.69	0.05
						1/2" Ice	4.91	3.10	0.10
						1" Ice	5.36	3.52	0.15
						2" Ice	6.32	4.41	0.28
VV-65A-R1_TMO w/ Mount Pipe	B	From Centroid-Face	4.00 0.00 3.00	0.0000	133.00	No Ice	4.46	2.69	0.05
						1/2" Ice	4.91	3.10	0.10
						1" Ice	5.36	3.52	0.15
						2" Ice	6.32	4.41	0.28
VV-65A-R1_TMO w/ Mount Pipe	C	From Centroid-Face	4.00 0.00 3.00	0.0000	133.00	No Ice	4.46	2.69	0.05
						1/2" Ice	4.91	3.10	0.10
						1" Ice	5.36	3.52	0.15
						2" Ice	6.32	4.41	0.28
APXVAARR24_43-U-NA20 w/ Mount Pipe	A	From Centroid-Face	4.00 0.00 3.00	0.0000	133.00	No Ice	14.69	6.87	0.19
						1/2" Ice	15.46	7.55	0.31
						1" Ice	16.23	8.25	0.46
						2" Ice	17.82	9.67	0.79
APXVAARR24_43-U-NA20 w/ Mount Pipe	B	From Centroid-Face	4.00 0.00 3.00	0.0000	133.00	No Ice	14.69	6.87	0.19
						1/2" Ice	15.46	7.55	0.31
						1" Ice	16.23	8.25	0.46
						2" Ice	17.82	9.67	0.79
APXVAARR24_43-U-NA20 w/ Mount Pipe	C	From Centroid-Face	4.00 0.00 3.00	0.0000	133.00	No Ice	14.69	6.87	0.19
						1/2" Ice	15.46	7.55	0.31
						1" Ice	16.23	8.25	0.46
						2" Ice	17.82	9.67	0.79
RADIO 4449 B71 B85A_T-MOBILE	A	From Centroid-Fa	4.00 0.00	0.0000	133.00	No Ice	1.97	1.59	0.07
						1/2" Ice	2.15	1.75	0.09

Description	Face or Leg	Offset Type	Offsets: Horz Lateral Vert ft ft ft	Azimuth Adjustment °	Placement ft		C_AA_A Front ft^2	C_AA_A Side ft^2	Weight K
		ce	3.00			1" Ice	2.33	1.92	0.12
						2" Ice	2.72	2.28	0.17
RADIO 4449 B71 B85A_T-MOBILE	B	From Centroid-Fa ce	4.00 0.00 3.00	0.0000	133.00	No Ice 1/2" Ice 1" Ice 2" Ice	1.97 2.15 2.33 2.72	1.59 1.75 1.92 2.28	0.07 0.09 0.12 0.17
RADIO 4449 B71 B85A_T-MOBILE	C	From Centroid-Fa ce	4.00 0.00 3.00	0.0000	133.00	No Ice 1/2" Ice 1" Ice 2" Ice	1.97 2.15 2.33 2.72	1.59 1.75 1.92 2.28	0.07 0.09 0.12 0.17
RADIO 4460 B2/B25 B66_TMO	A	From Centroid-Fa ce	4.00 0.00 3.00	0.0000	133.00	No Ice 1/2" Ice 1" Ice 2" Ice	2.14 2.32 2.51 2.91	1.69 1.85 2.02 2.39	0.11 0.13 0.16 0.22
RADIO 4460 B2/B25 B66_TMO	B	From Centroid-Fa ce	4.00 0.00 3.00	0.0000	133.00	No Ice 1/2" Ice 1" Ice 2" Ice	2.14 2.32 2.51 2.91	1.69 1.85 2.02 2.39	0.11 0.13 0.16 0.22
RADIO 4460 B2/B25 B66_TMO	C	From Centroid-Fa ce	4.00 0.00 3.00	0.0000	133.00	No Ice 1/2" Ice 1" Ice 2" Ice	2.14 2.32 2.51 2.91	1.69 1.85 2.02 2.39	0.11 0.13 0.16 0.22
Platform Mount [LP 304-1_HR-1]	C	None		0.0000	133.00	No Ice 1/2" Ice 1" Ice 2" Ice	21.41 26.62 31.66 41.38	21.41 26.62 31.66 41.38	1.60 2.06 2.60 3.96
124									
LNX-6514DS-A1M w/ Mount Pipe	A	From Centroid-Le g	4.00 0.00 2.00	0.0000	124.00	No Ice 1/2" Ice 1" Ice 2" Ice	4.09 4.49 4.89 5.71	3.30 3.68 4.06 4.87	0.06 0.13 0.20 0.38
LNX-6514DS-A1M w/ Mount Pipe	B	From Centroid-Le g	4.00 0.00 2.00	0.0000	124.00	No Ice 1/2" Ice 1" Ice 2" Ice	4.09 4.49 4.89 5.71	3.30 3.68 4.06 4.87	0.06 0.13 0.20 0.38
LNX-6514DS-A1M w/ Mount Pipe	C	From Centroid-Le g	4.00 0.00 2.00	0.0000	124.00	No Ice 1/2" Ice 1" Ice 2" Ice	4.09 4.49 4.89 5.71	3.30 3.68 4.06 4.87	0.06 0.13 0.20 0.38
NHHSS-65B-R2B w/ Mount Pipe	A	From Centroid-Le g	4.00 0.00 2.00	0.0000	124.00	No Ice 1/2" Ice 1" Ice 2" Ice	3.89 4.27 4.65 5.43	3.14 3.50 3.87 4.63	0.09 0.15 0.23 0.41
NHHSS-65B-R2B w/ Mount Pipe	B	From Centroid-Le g	4.00 0.00 2.00	0.0000	124.00	No Ice 1/2" Ice 1" Ice 2" Ice	3.89 4.27 4.65 5.43	3.14 3.50 3.87 4.63	0.09 0.15 0.23 0.41
NHHSS-65B-R2B w/ Mount Pipe	C	From Centroid-Le g	4.00 0.00 2.00	0.0000	124.00	No Ice 1/2" Ice 1" Ice 2" Ice	3.89 4.27 4.65 5.43	3.14 3.50 3.87 4.63	0.09 0.15 0.23 0.41
NHH-65B-R2B w/ Mount Pipe	A	From Centroid-Le g	4.00 0.00 2.00	0.0000	124.00	No Ice 1/2" Ice 1" Ice 2" Ice	4.09 4.48 4.88 5.70	3.29 3.67 4.06 4.86	0.07 0.13 0.21 0.39
NHH-65B-R2B w/ Mount Pipe	B	From Centroid-Le	4.00 0.00	0.0000	124.00	No Ice 1/2" Ice	4.09 4.48	3.29 3.67	0.07 0.13

Description	Face or Leg	Offset Type	Offsets: Horz Lateral Vert ft ft ft	Azimuth Adjustment °	Placement ft		C_AA_A Front ft^2	C_AA_A Side ft^2	Weight K
		g	2.00			1" Ice	4.88	4.06	0.21
						2" Ice	5.70	4.86	0.39
NHH-65B-R2B w/ Mount Pipe	C	From Centroid-Le	4.00 0.00	0.0000	124.00	No Ice 1/2" Ice	4.09 4.48	3.29 3.67	0.07 0.13
		g	2.00			1" Ice	4.88	4.06	0.21
						2" Ice	5.70	4.86	0.39
MT6407-77A w/ Mount Pipe	A	From Centroid-Le	4.00 0.00	0.0000	124.00	No Ice 1/2" Ice	4.91 5.26	2.68 3.14	0.10 0.14
		g	2.00			1" Ice	5.61	3.62	0.18
						2" Ice	6.36	4.63	0.29
MT6407-77A w/ Mount Pipe	B	From Centroid-Le	4.00 0.00	0.0000	124.00	No Ice 1/2" Ice	4.91 5.26	2.68 3.14	0.10 0.14
		g	2.00			1" Ice	5.61	3.62	0.18
						2" Ice	6.36	4.63	0.29
MT6407-77A w/ Mount Pipe	C	From Centroid-Le	4.00 0.00	0.0000	124.00	No Ice 1/2" Ice	4.91 5.26	2.68 3.14	0.10 0.14
		g	2.00			1" Ice	5.61	3.62	0.18
						2" Ice	6.36	4.63	0.29
RCMDC-3315-PF-48	A	From Centroid-Le	4.00 0.00	0.0000	124.00	No Ice 1/2" Ice	3.36 3.60	2.19 2.39	0.03 0.06
		g	2.00			1" Ice	3.84	2.61	0.09
						2" Ice	4.34	3.05	0.17
RCMDC-3315-PF-48	B	From Centroid-Le	4.00 0.00	0.0000	124.00	No Ice 1/2" Ice	3.36 3.60	2.19 2.39	0.03 0.06
		g	2.00			1" Ice	3.84	2.61	0.09
						2" Ice	4.34	3.05	0.17
RFV01U-D1A	A	From Centroid-Le	4.00 0.00	0.0000	124.00	No Ice 1/2" Ice	1.88 2.05	1.25 1.39	0.08 0.10
		g	2.00			1" Ice	2.22	1.54	0.12
						2" Ice	2.60	1.86	0.18
RFV01U-D1A	B	From Centroid-Le	4.00 0.00	0.0000	124.00	No Ice 1/2" Ice	1.88 2.05	1.25 1.39	0.08 0.10
		g	2.00			1" Ice	2.22	1.54	0.12
						2" Ice	2.60	1.86	0.18
RFV01U-D1A	C	From Centroid-Le	4.00 0.00	0.0000	124.00	No Ice 1/2" Ice	1.88 2.05	1.25 1.39	0.08 0.10
		g	2.00			1" Ice	2.22	1.54	0.12
						2" Ice	2.60	1.86	0.18
RFV01U-D2A	A	From Centroid-Le	4.00 0.00	0.0000	124.00	No Ice 1/2" Ice	1.88 2.05	1.01 1.14	0.07 0.09
		g	2.00			1" Ice	2.22	1.28	0.11
						2" Ice	2.60	1.59	0.15
RFV01U-D2A	B	From Centroid-Le	4.00 0.00	0.0000	124.00	No Ice 1/2" Ice	1.88 2.05	1.01 1.14	0.07 0.09
		g	2.00			1" Ice	2.22	1.28	0.11
						2" Ice	2.60	1.59	0.15
RFV01U-D2A	C	From Centroid-Le	4.00 0.00	0.0000	124.00	No Ice 1/2" Ice	1.88 2.05	1.01 1.14	0.07 0.09
		g	2.00			1" Ice	2.22	1.28	0.11
						2" Ice	2.60	1.59	0.15
CBRS RT4401-48A	A	From Centroid-Le	4.00 0.00	0.0000	124.00	No Ice 1/2" Ice	0.99 1.12	0.50 0.60	0.02 0.03
		g	2.00			1" Ice	1.26	0.70	0.04
						2" Ice	1.55	0.94	0.06
CBRS RT4401-48A	B	From Centroid-Le	4.00 0.00	0.0000	124.00	No Ice 1/2" Ice	0.99 1.12	0.50 0.60	0.02 0.03
		g	2.00			1" Ice	1.26	0.70	0.04

Description	Face or Leg	Offset Type	Offsets: Horz Lateral Vert ft ft ft	Azimuth Adjustment °	Placement ft		C_AA_A Front ft^2	C_AA_A Side ft^2	Weight K
						2" Ice	1.55	0.94	0.06
CBRS RT4401-48A	C	From Centroid-Leg	4.00 0.00 2.00	0.0000	124.00	No Ice	0.99	0.50	0.02
						1/2" Ice	1.12	0.60	0.03
						1" Ice	1.26	0.70	0.04
						2" Ice	1.55	0.94	0.06
Platform Mount [LP 304-1]	C	None		0.0000	124.00	No Ice	17.49	17.49	1.35
						1/2" Ice	21.37	21.37	1.71
						1" Ice	25.28	25.28	2.13
						2" Ice	33.17	33.17	3.16
Mount Reinforcement Specifications	C	None		0.0000	124.00	No Ice	28.63	28.63	0.28
						1/2" Ice	37.31	37.31	0.67
						1" Ice	45.80	45.80	0.94
						2" Ice	62.38	62.38	1.63
6' x 2" Mount Pipe	A	From Centroid-Leg	4.00 0.00 0.00	0.0000	124.00	No Ice	1.43	1.43	0.02
						1/2" Ice	1.92	1.92	0.03
						1" Ice	2.29	2.29	0.05
						2" Ice	3.06	3.06	0.09
6' x 2" Mount Pipe	B	From Centroid-Leg	4.00 0.00 0.00	0.0000	124.00	No Ice	1.43	1.43	0.02
						1/2" Ice	1.92	1.92	0.03
						1" Ice	2.29	2.29	0.05
						2" Ice	3.06	3.06	0.09
6' x 2" Mount Pipe	C	From Centroid-Leg	4.00 0.00 0.00	0.0000	124.00	No Ice	1.43	1.43	0.02
						1/2" Ice	1.92	1.92	0.03
						1" Ice	2.29	2.29	0.05
						2" Ice	3.06	3.06	0.09
116									
7770.00 w/ Mount Pipe	A	From Centroid-Leg	4.00 0.00 4.00	0.0000	116.00	No Ice	3.39	2.32	0.06
						1/2" Ice	3.75	2.66	0.10
						1" Ice	4.12	3.02	0.15
						2" Ice	4.89	3.75	0.28
7770.00 w/ Mount Pipe	B	From Centroid-Leg	4.00 0.00 4.00	0.0000	116.00	No Ice	3.39	2.32	0.06
						1/2" Ice	3.75	2.66	0.10
						1" Ice	4.12	3.02	0.15
						2" Ice	4.89	3.75	0.28
7770.00 w/ Mount Pipe	C	From Centroid-Leg	4.00 0.00 4.00	0.0000	116.00	No Ice	3.39	2.32	0.06
						1/2" Ice	3.75	2.66	0.10
						1" Ice	4.12	3.02	0.15
						2" Ice	4.89	3.75	0.28
80010965 w/ Mount Pipe	A	From Centroid-Leg	4.00 0.00 4.00	0.0000	116.00	No Ice	12.26	5.79	0.14
						1/2" Ice	13.03	6.47	0.23
						1" Ice	13.80	7.17	0.33
						2" Ice	15.41	8.60	0.57
80010965 w/ Mount Pipe	B	From Centroid-Leg	4.00 0.00 4.00	0.0000	116.00	No Ice	12.26	5.79	0.14
						1/2" Ice	13.03	6.47	0.23
						1" Ice	13.80	7.17	0.33
						2" Ice	15.41	8.60	0.57
80010966 w/ Mount Pipe	C	From Centroid-Leg	4.00 0.00 4.00	0.0000	116.00	No Ice	14.61	6.84	0.16
						1/2" Ice	15.47	7.63	0.27
						1" Ice	16.35	8.42	0.39
						2" Ice	18.14	10.06	0.68
HPA-65R-BUU-H6 w/ Mount Pipe	A	From Centroid-Leg	4.00 0.00 4.00	0.0000	116.00	No Ice	9.22	6.25	0.07
						1/2" Ice	9.98	6.96	0.14
						1" Ice	10.76	7.70	0.22
						2" Ice	12.36	9.22	0.42
HPA-65R-BUU-H6 w/ Mount Pipe	B	From Centroid-Leg	4.00 0.00 4.00	0.0000	116.00	No Ice	9.22	6.25	0.07
						1/2" Ice	9.98	6.96	0.14
						1" Ice	10.76	7.70	0.22

Description	Face or Leg	Offset Type	Offsets: Horz Lateral Vert ft ft ft	Azimuth Adjustment °	Placement ft		C_AA_A Front ft^2	C_AA_A Side ft^2	Weight K
						2" Ice	12.36	9.22	0.42
HPA-65R-BUU-H8 w/ Mount Pipe	C	From Centroid-Leg	4.00 0.00 4.00	0.0000	116.00	No Ice	12.25	8.33	0.10
						1/2" Ice	13.19	9.23	0.19
						1" Ice	14.16	10.15	0.30
						2" Ice	16.14	12.05	0.54
(2) LGP21401	A	From Centroid-Leg	4.00 0.00 0.00	0.0000	116.00	No Ice	1.10	0.21	0.01
						1/2" Ice	1.24	0.27	0.02
						1" Ice	1.38	0.35	0.03
						2" Ice	1.69	0.52	0.05
(2) LGP21401	B	From Centroid-Leg	4.00 0.00 0.00	0.0000	116.00	No Ice	1.10	0.21	0.01
						1/2" Ice	1.24	0.27	0.02
						1" Ice	1.38	0.35	0.03
						2" Ice	1.69	0.52	0.05
(2) LGP21401	C	From Centroid-Leg	4.00 0.00 0.00	0.0000	116.00	No Ice	1.10	0.21	0.01
						1/2" Ice	1.24	0.27	0.02
						1" Ice	1.38	0.35	0.03
						2" Ice	1.69	0.52	0.05
(2) 7020.00	A	From Centroid-Leg	4.00 0.00 4.00	0.0000	116.00	No Ice	0.10	0.17	0.00
						1/2" Ice	0.15	0.24	0.01
						1" Ice	0.20	0.31	0.01
						2" Ice	0.33	0.48	0.02
(2) 7020.00	B	From Centroid-Leg	4.00 0.00 4.00	0.0000	116.00	No Ice	0.10	0.17	0.00
						1/2" Ice	0.15	0.24	0.01
						1" Ice	0.20	0.31	0.01
						2" Ice	0.33	0.48	0.02
(2) 7020.00	C	From Centroid-Leg	4.00 0.00 4.00	0.0000	116.00	No Ice	0.10	0.17	0.00
						1/2" Ice	0.15	0.24	0.01
						1" Ice	0.20	0.31	0.01
						2" Ice	0.33	0.48	0.02
RRUS 4478 B14	A	From Centroid-Leg	4.00 0.00 4.00	0.0000	116.00	No Ice	1.84	1.06	0.06
						1/2" Ice	2.01	1.20	0.08
						1" Ice	2.19	1.34	0.09
						2" Ice	2.57	1.66	0.14
RRUS 4478 B14	B	From Centroid-Leg	4.00 0.00 4.00	0.0000	116.00	No Ice	1.84	1.06	0.06
						1/2" Ice	2.01	1.20	0.08
						1" Ice	2.19	1.34	0.09
						2" Ice	2.57	1.66	0.14
RRUS 4478 B14	C	From Centroid-Leg	4.00 0.00 4.00	0.0000	116.00	No Ice	1.84	1.06	0.06
						1/2" Ice	2.01	1.20	0.08
						1" Ice	2.19	1.34	0.09
						2" Ice	2.57	1.66	0.14
RRUS 32	A	From Centroid-Leg	4.00 0.00 4.00	0.0000	116.00	No Ice	2.86	1.78	0.06
						1/2" Ice	3.08	1.97	0.08
						1" Ice	3.32	2.17	0.10
						2" Ice	3.81	2.58	0.16
RRUS 32	B	From Centroid-Leg	4.00 0.00 4.00	0.0000	116.00	No Ice	2.86	1.78	0.06
						1/2" Ice	3.08	1.97	0.08
						1" Ice	3.32	2.17	0.10
						2" Ice	3.81	2.58	0.16
RRUS 32	C	From Centroid-Leg	4.00 0.00 4.00	0.0000	116.00	No Ice	2.86	1.78	0.06
						1/2" Ice	3.08	1.97	0.08
						1" Ice	3.32	2.17	0.10
						2" Ice	3.81	2.58	0.16
(2) DC6-48-60-18-8F	A	From Centroid-Leg	4.00 0.00 4.00	0.0000	116.00	No Ice	1.21	1.21	0.03
						1/2" Ice	1.89	1.89	0.05
						1" Ice	2.11	2.11	0.08
						2" Ice	2.57	2.57	0.14

Description	Face or Leg	Offset Type	Offsets: Horz Lateral Vert ft ft ft	Azimuth Adjustment °	Placement ft		C_AA_A Front ft^2	C_AA_A Side ft^2	Weight K
RRUS-11	A	From Centroid-Leg	4.00 0.00 4.00	0.0000	116.00	No Ice 1/2" Ice 1" Ice 2" Ice	2.79 3.00 3.21 3.67	1.19 1.34 1.50 1.84	0.05 0.07 0.10 0.15
RRUS-11	B	From Centroid-Leg	4.00 0.00 4.00	0.0000	116.00	No Ice 1/2" Ice 1" Ice 2" Ice	2.79 3.00 3.21 3.67	1.19 1.34 1.50 1.84	0.05 0.07 0.10 0.15
RRUS-11	C	From Centroid-Leg	4.00 0.00 4.00	0.0000	116.00	No Ice 1/2" Ice 1" Ice 2" Ice	2.79 3.00 3.21 3.67	1.19 1.34 1.50 1.84	0.05 0.07 0.10 0.15
RRUS 32 B2	A	From Centroid-Leg	4.00 0.00 4.00	0.0000	116.00	No Ice 1/2" Ice 1" Ice 2" Ice	2.73 2.95 3.18 3.66	1.67 1.86 2.05 2.46	0.05 0.07 0.10 0.16
RRUS 32 B2	B	From Centroid-Leg	4.00 0.00 4.00	0.0000	116.00	No Ice 1/2" Ice 1" Ice 2" Ice	2.73 2.95 3.18 3.66	1.67 1.86 2.05 2.46	0.05 0.07 0.10 0.16
RRUS 32 B2	C	From Centroid-Leg	4.00 0.00 4.00	0.0000	116.00	No Ice 1/2" Ice 1" Ice 2" Ice	2.73 2.95 3.18 3.66	1.67 1.86 2.05 2.46	0.05 0.07 0.10 0.16
Platform Mount [LP 1201-1_HR-1]	C	None		0.0000	116.00	No Ice 1/2" Ice 1" Ice 2" Ice	26.39 31.40 36.20 45.40	26.39 31.40 36.20 45.40	2.36 3.06 3.86 5.76
107									
MX08FRO665-21 w/ Mount Pipe	A	From Centroid-Leg	4.00 0.00 -1.00	0.0000	107.00	No Ice 1/2" Ice 1" Ice 2" Ice	8.01 8.52 9.04 10.11	4.23 4.69 5.16 6.12	0.11 0.19 0.29 0.52
MX08FRO665-21 w/ Mount Pipe	B	From Centroid-Leg	4.00 0.00 -1.00	0.0000	107.00	No Ice 1/2" Ice 1" Ice 2" Ice	8.01 8.52 9.04 10.11	4.23 4.69 5.16 6.12	0.11 0.19 0.29 0.52
MX08FRO665-21 w/ Mount Pipe	C	From Centroid-Leg	4.00 0.00 -1.00	0.0000	107.00	No Ice 1/2" Ice 1" Ice 2" Ice	8.01 8.52 9.04 10.11	4.23 4.69 5.16 6.12	0.11 0.19 0.29 0.52
TA08025-B604	A	From Centroid-Leg	4.00 0.00 -1.00	0.0000	107.00	No Ice 1/2" Ice 1" Ice 2" Ice	1.96 2.14 2.32 2.71	0.98 1.11 1.25 1.55	0.06 0.08 0.10 0.15
TA08025-B604	B	From Centroid-Leg	4.00 0.00 -1.00	0.0000	107.00	No Ice 1/2" Ice 1" Ice 2" Ice	1.96 2.14 2.32 2.71	0.98 1.11 1.25 1.55	0.06 0.08 0.10 0.15
TA08025-B604	C	From Centroid-Leg	4.00 0.00 -1.00	0.0000	107.00	No Ice 1/2" Ice 1" Ice 2" Ice	1.96 2.14 2.32 2.71	0.98 1.11 1.25 1.55	0.06 0.08 0.10 0.15
TA08025-B605	A	From Centroid-Leg	4.00 0.00 -1.00	0.0000	107.00	No Ice 1/2" Ice 1" Ice 2" Ice	1.96 2.14 2.32 2.71	1.13 1.27 1.41 1.72	0.08 0.09 0.11 0.16

Description	Face or Leg	Offset Type	Offsets: Horz Lateral Vert ft ft ft	Azimuth Adjustment °	Placement ft		C_AA_A Front ft^2	C_AA_A Side ft^2	Weight K
TA08025-B605	B	From Centroid-Leg	4.00 0.00 -1.00	0.0000	107.00	No Ice 1/2" Ice 1" Ice 2" Ice	1.96 2.14 2.32 2.71	1.13 1.27 1.41 1.72	0.08 0.09 0.11 0.16
TA08025-B605	C	From Centroid-Leg	4.00 0.00 -1.00	0.0000	107.00	No Ice 1/2" Ice 1" Ice 2" Ice	1.96 2.14 2.32 2.71	1.13 1.27 1.41 1.72	0.08 0.09 0.11 0.16
RDIDC-9181-PF-48	A	From Centroid-Leg	4.00 0.00 -1.00	0.0000	107.00	No Ice 1/2" Ice 1" Ice 2" Ice	2.01 2.19 2.37 2.76	1.17 1.31 1.46 1.78	0.02 0.04 0.06 0.11
Commscope MC-PK8-DSH	C	None		0.0000	107.00	No Ice 1/2" Ice 1" Ice 2" Ice	34.24 62.95 91.66 149.08	34.24 62.95 91.66 149.08	1.75 2.10 2.45 3.15
(2) 2.4" Dia x 8-ft Mount Pipe	A	From Centroid-Leg	4.00 0.00 0.00	0.0000	107.00	No Ice 1/2" Ice 1" Ice 2" Ice	1.90 2.73 3.40 4.40	1.90 2.73 3.40 4.40	0.03 0.04 0.06 0.12
(2) 2.4" Dia x 8-ft Mount Pipe	B	From Centroid-Leg	4.00 0.00 0.00	0.0000	107.00	No Ice 1/2" Ice 1" Ice 2" Ice	1.90 2.73 3.40 4.40	1.90 2.73 3.40 4.40	0.03 0.04 0.06 0.12
(2) 2.4" Dia x 8-ft Mount Pipe	C	From Centroid-Leg	4.00 0.00 0.00	0.0000	107.00	No Ice 1/2" Ice 1" Ice 2" Ice	1.90 2.73 3.40 4.40	1.90 2.73 3.40 4.40	0.03 0.04 0.06 0.12
74									
KS24019-L112A	C	From Leg	3.00 0.00 1.00	0.0000	74.00	No Ice 1/2" Ice 1" Ice 2" Ice	0.08 0.13 0.19 0.35	0.08 0.13 0.19 0.35	0.01 0.01 0.01 0.02
Side Arm Mount [SO 701-1]	C	From Leg	1.50 0.00 0.00	0.0000	74.00	No Ice 1/2" Ice 1" Ice 2" Ice	0.85 1.14 1.43 2.01	1.67 2.34 3.01 4.35	0.07 0.08 0.09 0.12
***									

Load Combinations

Comb. No.	Description
1	Dead Only
2	1.2 Dead+1.0 Wind 0 deg - No Ice
3	0.9 Dead+1.0 Wind 0 deg - No Ice
4	1.2 Dead+1.0 Wind 30 deg - No Ice
5	0.9 Dead+1.0 Wind 30 deg - No Ice
6	1.2 Dead+1.0 Wind 60 deg - No Ice
7	0.9 Dead+1.0 Wind 60 deg - No Ice
8	1.2 Dead+1.0 Wind 90 deg - No Ice

Comb. No.	Description
9	0.9 Dead+1.0 Wind 90 deg - No Ice
10	1.2 Dead+1.0 Wind 120 deg - No Ice
11	0.9 Dead+1.0 Wind 120 deg - No Ice
12	1.2 Dead+1.0 Wind 150 deg - No Ice
13	0.9 Dead+1.0 Wind 150 deg - No Ice
14	1.2 Dead+1.0 Wind 180 deg - No Ice
15	0.9 Dead+1.0 Wind 180 deg - No Ice
16	1.2 Dead+1.0 Wind 210 deg - No Ice
17	0.9 Dead+1.0 Wind 210 deg - No Ice
18	1.2 Dead+1.0 Wind 240 deg - No Ice
19	0.9 Dead+1.0 Wind 240 deg - No Ice
20	1.2 Dead+1.0 Wind 270 deg - No Ice
21	0.9 Dead+1.0 Wind 270 deg - No Ice
22	1.2 Dead+1.0 Wind 300 deg - No Ice
23	0.9 Dead+1.0 Wind 300 deg - No Ice
24	1.2 Dead+1.0 Wind 330 deg - No Ice
25	0.9 Dead+1.0 Wind 330 deg - No Ice
26	1.2 Dead+1.0 Ice+1.0 Temp
27	1.2 Dead+1.0 Wind 0 deg+1.0 Ice+1.0 Temp
28	1.2 Dead+1.0 Wind 30 deg+1.0 Ice+1.0 Temp
29	1.2 Dead+1.0 Wind 60 deg+1.0 Ice+1.0 Temp
30	1.2 Dead+1.0 Wind 90 deg+1.0 Ice+1.0 Temp
31	1.2 Dead+1.0 Wind 120 deg+1.0 Ice+1.0 Temp
32	1.2 Dead+1.0 Wind 150 deg+1.0 Ice+1.0 Temp
33	1.2 Dead+1.0 Wind 180 deg+1.0 Ice+1.0 Temp
34	1.2 Dead+1.0 Wind 210 deg+1.0 Ice+1.0 Temp
35	1.2 Dead+1.0 Wind 240 deg+1.0 Ice+1.0 Temp
36	1.2 Dead+1.0 Wind 270 deg+1.0 Ice+1.0 Temp
37	1.2 Dead+1.0 Wind 300 deg+1.0 Ice+1.0 Temp
38	1.2 Dead+1.0 Wind 330 deg+1.0 Ice+1.0 Temp
39	Dead+Wind 0 deg - Service
40	Dead+Wind 30 deg - Service
41	Dead+Wind 60 deg - Service
42	Dead+Wind 90 deg - Service
43	Dead+Wind 120 deg - Service
44	Dead+Wind 150 deg - Service
45	Dead+Wind 180 deg - Service
46	Dead+Wind 210 deg - Service
47	Dead+Wind 240 deg - Service
48	Dead+Wind 270 deg - Service
49	Dead+Wind 300 deg - Service
50	Dead+Wind 330 deg - Service

Maximum Member Forces

Section No.	Elevation ft	Component Type	Condition	Gov. Load Comb.	Axial K	Major Axis Moment kip-ft	Minor Axis Moment kip-ft
L1	152 - 137.42	Pole	Max Tension	36	0.00	-0.00	-0.00
			Max. Compression	26	-11.78	0.06	0.15
			Max. Mx	20	-5.22	43.29	0.03
			Max. My	2	-5.22	0.06	43.27
			Max. Vy	20	-5.18	43.29	0.03
			Max. Vx	2	-5.18	0.06	43.27
			Max. Torque	12			0.65
L2	137.42 - 91.09	Pole	Max Tension	1	0.00	0.00	0.00
			Max. Compression	26	-60.86	0.25	1.75
			Max. Mx	20	-31.75	672.04	0.22
			Max. My	2	-31.75	-0.05	672.28

Section No.	Elevation ft	Component Type	Condition	Gov. Load Comb.	Axial K	Major Axis Moment kip-ft	Minor Axis Moment kip-ft
			Max. Vy	20	-21.98	672.04	0.22
			Max. Vx	2	-21.99	-0.05	672.28
			Max. Torque	20			-0.78
L3	91.09 - 44.79	Pole	Max Tension	1	0.00	0.00	0.00
			Max. Compression	26	-83.19	0.69	2.08
			Max. Mx	20	-49.08	1747.67	-0.22
			Max. My	2	-49.08	-0.14	1748.20
			Max. Vy	20	-26.09	1747.67	-0.22
			Max. Vx	2	-26.11	-0.14	1748.20
			Max. Torque	20			-0.91
L4	44.79 - 0	Pole	Max Tension	1	0.00	0.00	0.00
			Max. Compression	26	-118.18	0.69	2.88
			Max. Mx	20	-77.67	3256.98	-0.21
			Max. My	2	-77.67	-0.26	3258.78
			Max. Vy	20	-30.58	3256.98	-0.21
			Max. Vx	2	-30.60	-0.26	3258.78
			Max. Torque	36			-1.32

Maximum Reactions

Location	Condition	Gov. Load Comb.	Vertical K	Horizontal, X K	Horizontal, Z K
Pole	Max. Vert	26	118.18	0.00	0.00
	Max. H_x	20	77.67	30.56	-0.00
	Max. H_z	2	77.67	-0.00	30.58
	Max. M_x	2	3258.78	-0.00	30.58
	Max. M_z	8	3256.09	-30.56	0.00
	Max. Torsion	30	1.32	-9.62	-0.00
	Min. Vert	11	58.26	-26.46	-15.29
	Min. H_x	8	77.67	-30.56	0.00
	Min. H_z	14	77.67	0.00	-30.58
	Min. M_x	14	-3257.80	0.00	-30.58
	Min. M_z	20	-3256.98	30.56	-0.00
	Min. Torsion	36	-1.32	9.62	0.00

Tower Mast Reaction Summary

Load Combination	Vertical K	$Shear_x$ K	$Shear_z$ K	Overturning Moment, M_x kip-ft	Overturning Moment, M_z kip-ft	Torque kip-ft
Dead Only	64.73	0.00	0.00	-0.40	0.36	0.00
1.2 Dead+1.0 Wind 0 deg - No Ice	77.67	0.00	-30.58	-3258.78	-0.26	-0.18
0.9 Dead+1.0 Wind 0 deg - No Ice	58.26	0.00	-30.58	-3242.63	-0.37	-0.18
1.2 Dead+1.0 Wind 30 deg - No Ice	77.67	15.28	-26.49	-2822.61	-1628.43	-0.74
0.9 Dead+1.0 Wind 30 deg - No Ice	58.26	15.28	-26.49	-2808.60	-1620.53	-0.74
1.2 Dead+1.0 Wind 60 deg - No Ice	77.67	26.47	-15.29	-1630.25	-2820.15	-1.11
0.9 Dead+1.0 Wind 60 deg - No	58.26	26.47	-15.29	-1622.10	-2806.39	-1.11

Load Combination	Vertical K	$Shear_x$ K	$Shear_z$ K	Overturning Moment, M_x kip-ft	Overturning Moment, M_z kip-ft	Torque kip-ft
Ice						
1.2 Dead+1.0 Wind 90 deg - No Ice	77.67	30.56	-0.00	-1.20	-3256.09	-1.18
0.9 Dead+1.0 Wind 90 deg - No Ice	58.26	30.56	-0.00	-1.07	-3240.18	-1.18
1.2 Dead+1.0 Wind 120 deg - No Ice	77.67	26.46	15.29	1628.04	-2819.44	-0.94
0.9 Dead+1.0 Wind 120 deg - No Ice	58.26	26.46	15.29	1620.16	-2805.69	-0.94
1.2 Dead+1.0 Wind 150 deg - No Ice	77.67	15.28	26.48	2820.92	-1627.21	-0.44
0.9 Dead+1.0 Wind 150 deg - No Ice	58.26	15.28	26.48	2807.17	-1619.32	-0.44
1.2 Dead+1.0 Wind 180 deg - No Ice	77.67	-0.00	30.58	3257.80	1.15	0.18
0.9 Dead+1.0 Wind 180 deg - No Ice	58.26	-0.00	30.58	3241.90	1.03	0.18
1.2 Dead+1.0 Wind 210 deg - No Ice	77.67	-15.28	26.49	2821.62	1629.33	0.74
0.9 Dead+1.0 Wind 210 deg - No Ice	58.26	-15.28	26.49	2807.87	1621.20	0.74
1.2 Dead+1.0 Wind 240 deg - No Ice	77.67	-26.47	15.29	1629.26	2821.04	1.11
0.9 Dead+1.0 Wind 240 deg - No Ice	58.26	-26.47	15.29	1621.37	2807.05	1.11
1.2 Dead+1.0 Wind 270 deg - No Ice	77.67	-30.56	0.00	0.21	3256.98	1.18
0.9 Dead+1.0 Wind 270 deg - No Ice	58.26	-30.56	0.00	0.33	3240.85	1.18
1.2 Dead+1.0 Wind 300 deg - No Ice	77.67	-26.46	-15.29	-1629.03	2820.34	0.94
0.9 Dead+1.0 Wind 300 deg - No Ice	58.26	-26.46	-15.29	-1620.89	2806.35	0.94
1.2 Dead+1.0 Wind 330 deg - No Ice	77.67	-15.28	-26.48	-2821.90	1628.11	0.44
0.9 Dead+1.0 Wind 330 deg - No Ice	58.26	-15.28	-26.48	-2807.90	1619.99	0.44
1.2 Dead+1.0 Ice+1.0 Temp	118.18	0.00	0.00	-2.88	0.69	0.00
1.2 Dead+1.0 Wind 0 deg+1.0 Ice+1.0 Temp	118.18	-0.00	-9.62	-1008.65	0.82	-0.07
1.2 Dead+1.0 Wind 30 deg+1.0 Ice+1.0 Temp	118.18	4.81	-8.33	-873.87	-501.69	-0.72
1.2 Dead+1.0 Wind 60 deg+1.0 Ice+1.0 Temp	118.18	8.33	-4.81	-505.75	-869.58	-1.18
1.2 Dead+1.0 Wind 90 deg+1.0 Ice+1.0 Temp	118.18	9.62	0.00	-2.93	-1004.28	-1.32
1.2 Dead+1.0 Wind 120 deg+1.0 Ice+1.0 Temp	118.18	8.33	4.81	499.87	-869.68	-1.11
1.2 Dead+1.0 Wind 150 deg+1.0 Ice+1.0 Temp	118.18	4.81	8.33	867.92	-501.86	-0.60
1.2 Dead+1.0 Wind 180 deg+1.0 Ice+1.0 Temp	118.18	0.00	9.62	1002.60	0.63	0.07
1.2 Dead+1.0 Wind 210 deg+1.0 Ice+1.0 Temp	118.18	-4.81	8.33	867.82	503.14	0.72
1.2 Dead+1.0 Wind 240 deg+1.0 Ice+1.0 Temp	118.18	-8.33	4.81	499.70	871.03	1.18
1.2 Dead+1.0 Wind 270 deg+1.0 Ice+1.0 Temp	118.18	-9.62	-0.00	-3.12	1005.72	1.32
1.2 Dead+1.0 Wind 300 deg+1.0 Ice+1.0 Temp	118.18	-8.33	-4.81	-505.92	871.13	1.11
1.2 Dead+1.0 Wind 330	118.18	-4.81	-8.33	-873.97	503.31	0.60

Load Combination	Vertical K	$Shear_x$ K	$Shear_z$ K	Overturning Moment, M_x kip-ft	Overturning Moment, M_z kip-ft	Torque kip-ft
deg+1.0 Ice+1.0 Temp						
Dead+Wind 0 deg - Service	64.73	0.00	-7.33	-778.42	0.20	-0.04
Dead+Wind 30 deg - Service	64.73	3.66	-6.34	-674.27	-388.57	-0.18
Dead+Wind 60 deg - Service	64.73	6.34	-3.66	-389.56	-673.12	-0.28
Dead+Wind 90 deg - Service	64.73	7.32	-0.00	-0.58	-777.22	-0.30
Dead+Wind 120 deg - Service	64.73	6.34	3.66	388.45	-672.96	-0.23
Dead+Wind 150 deg - Service	64.73	3.66	6.34	673.28	-388.28	-0.11
Dead+Wind 180 deg - Service	64.73	-0.00	7.33	777.60	0.54	0.04
Dead+Wind 210 deg - Service	64.73	-3.66	6.34	673.45	389.31	0.18
Dead+Wind 240 deg - Service	64.73	-6.34	3.66	388.74	673.87	0.28
Dead+Wind 270 deg - Service	64.73	-7.32	0.00	-0.24	777.96	0.30
Dead+Wind 300 deg - Service	64.73	-6.34	-3.66	-389.27	673.70	0.23
Dead+Wind 330 deg - Service	64.73	-3.66	-6.34	-674.10	389.02	0.11

Solution Summary

	Sum of Applied Forces			Sum of Reactions			
Load Comb.	PX K	PY K	PZ K	PX K	PY K	PZ K	% Error
1	0.00	-64.73	0.00	0.00	64.73	0.00	0.000%
2	0.00	-77.67	-30.58	-0.00	77.67	30.58	0.000%
3	0.00	-58.26	-30.58	-0.00	58.26	30.58	0.000%
4	15.28	-77.67	-26.49	-15.28	77.67	26.49	0.000%
5	15.28	-58.26	-26.49	-15.28	58.26	26.49	0.000%
6	26.47	-77.67	-15.29	-26.47	77.67	15.29	0.000%
7	26.47	-58.26	-15.29	-26.47	58.26	15.29	0.000%
8	30.56	-77.67	-0.00	-30.56	77.67	0.00	0.000%
9	30.56	-58.26	-0.00	-30.56	58.26	0.00	0.000%
10	26.46	-77.67	15.29	-26.46	77.67	-15.29	0.000%
11	26.46	-58.26	15.29	-26.46	58.26	-15.29	0.000%
12	15.28	-77.67	26.48	-15.28	77.67	-26.48	0.000%
13	15.28	-58.26	26.48	-15.28	58.26	-26.48	0.000%
14	-0.00	-77.67	30.58	0.00	77.67	-30.58	0.000%
15	-0.00	-58.26	30.58	0.00	58.26	-30.58	0.000%
16	-15.28	-77.67	26.49	15.28	77.67	-26.49	0.000%
17	-15.28	-58.26	26.49	15.28	58.26	-26.49	0.000%
18	-26.47	-77.67	15.29	26.47	77.67	-15.29	0.000%
19	-26.47	-58.26	15.29	26.47	58.26	-15.29	0.000%
20	-30.56	-77.67	0.00	30.56	77.67	-0.00	0.000%
21	-30.56	-58.26	0.00	30.56	58.26	-0.00	0.000%
22	-26.46	-77.67	-15.29	26.46	77.67	15.29	0.000%
23	-26.46	-58.26	-15.29	26.46	58.26	15.29	0.000%
24	-15.28	-77.67	-26.48	15.28	77.67	26.48	0.000%
25	-15.28	-58.26	-26.48	15.28	58.26	26.48	0.000%
26	0.00	-118.18	0.00	0.00	118.18	0.00	0.000%
27	-0.00	-118.18	-9.62	0.00	118.18	9.62	0.000%
28	4.81	-118.18	-8.33	-4.81	118.18	8.33	0.000%
29	8.33	-118.18	-4.81	-8.33	118.18	4.81	0.000%
30	9.62	-118.18	0.00	-9.62	118.18	-0.00	0.000%
31	8.33	-118.18	4.81	-8.33	118.18	-4.81	0.000%
32	4.81	-118.18	8.33	-4.81	118.18	-8.33	0.000%
33	0.00	-118.18	9.62	-0.00	118.18	-9.62	0.000%
34	-4.81	-118.18	8.33	4.81	118.18	-8.33	0.000%
35	-8.33	-118.18	4.81	8.33	118.18	-4.81	0.000%
36	-9.62	-118.18	-0.00	9.62	118.18	0.00	0.000%
37	-8.33	-118.18	-4.81	8.33	118.18	4.81	0.000%
38	-4.81	-118.18	-8.33	4.81	118.18	8.33	0.000%
39	0.00	-64.73	-7.33	-0.00	64.73	7.33	0.000%

Load Comb.	Sum of Applied Forces PX K	PY K	PZ K	Sum of Reactions PX K	PY K	PZ K	% Error
40	3.66	-64.73	-6.34	-3.66	64.73	6.34	0.000%
41	6.34	-64.73	-3.66	-6.34	64.73	3.66	0.000%
42	7.32	-64.73	-0.00	-7.32	64.73	0.00	0.000%
43	6.34	-64.73	3.66	-6.34	64.73	-3.66	0.000%
44	3.66	-64.73	6.34	-3.66	64.73	-6.34	0.000%
45	-0.00	-64.73	7.33	0.00	64.73	-7.33	0.000%
46	-3.66	-64.73	6.34	3.66	64.73	-6.34	0.000%
47	-6.34	-64.73	3.66	6.34	64.73	-3.66	0.000%
48	-7.32	-64.73	0.00	7.32	64.73	-0.00	0.000%
49	-6.34	-64.73	-3.66	6.34	64.73	3.66	0.000%
50	-3.66	-64.73	-6.34	3.66	64.73	6.34	0.000%

Non-Linear Convergence Results

Load Combination	Converged?	Number of Cycles	Displacement Tolerance	Force Tolerance
1	Yes	4	0.00000001	0.00000001
2	Yes	4	0.00000001	0.00002691
3	Yes	4	0.00000001	0.00001427
4	Yes	4	0.00000001	0.00037489
5	Yes	4	0.00000001	0.00025604
6	Yes	4	0.00000001	0.00039967
7	Yes	4	0.00000001	0.00027361
8	Yes	4	0.00000001	0.00004621
9	Yes	4	0.00000001	0.00002989
10	Yes	4	0.00000001	0.00036733
11	Yes	4	0.00000001	0.00025082
12	Yes	4	0.00000001	0.00039199
13	Yes	4	0.00000001	0.00026826
14	Yes	4	0.00000001	0.00002688
15	Yes	4	0.00000001	0.00001425
16	Yes	4	0.00000001	0.00039206
17	Yes	4	0.00000001	0.00026823
18	Yes	4	0.00000001	0.00036869
19	Yes	4	0.00000001	0.00025169
20	Yes	4	0.00000001	0.00004585
21	Yes	4	0.00000001	0.00002962
22	Yes	4	0.00000001	0.00039996
23	Yes	4	0.00000001	0.00027377
24	Yes	4	0.00000001	0.00037387
25	Yes	4	0.00000001	0.00025527
26	Yes	4	0.00000001	0.00000001
27	Yes	4	0.00000001	0.00048709
28	Yes	4	0.00000001	0.00050410
29	Yes	4	0.00000001	0.00050415
30	Yes	4	0.00000001	0.00048469
31	Yes	4	0.00000001	0.00050043
32	Yes	4	0.00000001	0.00050047
33	Yes	4	0.00000001	0.00048267
34	Yes	4	0.00000001	0.00050117
35	Yes	4	0.00000001	0.00050142
36	Yes	4	0.00000001	0.00048573
37	Yes	4	0.00000001	0.00050508
38	Yes	4	0.00000001	0.00050472
39	Yes	4	0.00000001	0.00000501
40	Yes	4	0.00000001	0.00000816

41	Yes	4	0.00000001	0.00000906
42	Yes	4	0.00000001	0.00000543
43	Yes	4	0.00000001	0.00000803
44	Yes	4	0.00000001	0.00000873
45	Yes	4	0.00000001	0.00000500
46	Yes	4	0.00000001	0.00000872
47	Yes	4	0.00000001	0.00000806
48	Yes	4	0.00000001	0.00000543
49	Yes	4	0.00000001	0.00000909
50	Yes	4	0.00000001	0.00000816

Maximum Tower Deflections - Service Wind

Section No.	Elevation ft	Horz. Deflection in	Gov. Load Comb.	Tilt °	Twist °
L1	152 - 137.42	6.240	39	0.3329	0.0004
L2	142.59 - 91.09	5.586	39	0.3304	0.0004
L3	97.92 - 44.79	2.729	39	0.2607	0.0002
L4	53.21 - 0	0.810	39	0.1375	0.0001

Critical Deflections and Radius of Curvature - Service Wind

Elevation ft	Appurtenance	Gov. Load Comb.	Deflection in	Tilt °	Twist °	Radius of Curvature ft
151.00	DS9A09F36D-N	39	6.170	0.3327	0.0004	212265
150.00	NNVV-65B-R4 w/ Mount Pipe	39	6.101	0.3325	0.0004	212265
133.00	AIR 6419 B41_TMO w/ Mount Pipe	39	4.928	0.3234	0.0003	63209
124.00	LNX-6514DS-A1M w/ Mount Pipe	39	4.327	0.3123	0.0003	44750
116.00	7770.00 w/ Mount Pipe	39	3.810	0.2993	0.0003	35528
107.00	MX08FRO665-21 w/ Mount Pipe	39	3.255	0.2815	0.0002	28837
74.00	KS24019-L112A	39	1.549	0.1967	0.0001	19241

Maximum Tower Deflections - Design Wind

Section No.	Elevation ft	Horz. Deflection in	Gov. Load Comb.	Tilt °	Twist °
L1	152 - 137.42	26.137	2	1.3942	0.0016
L2	142.59 - 91.09	23.396	2	1.3839	0.0014
L3	97.92 - 44.79	11.432	2	1.0924	0.0008
L4	53.21 - 0	3.393	2	0.5760	0.0003

Critical Deflections and Radius of Curvature - Design Wind

Elevation ft	Appurtenance	Gov. Load Comb.	Deflection in	Tilt °	Twist °	Radius of Curvature ft
151.00	DS9A09F36D-N	2	25.845	1.3935	0.0016	50827
150.00	NNVV-65B-R4 w/ Mount Pipe	2	25.553	1.3928	0.0015	50827
133.00	AIR 6419 B41_TMO w/ Mount Pipe	2	20.642	1.3547	0.0013	15122
124.00	LNX-6514DS-A1M w/ Mount Pipe	2	18.123	1.3084	0.0012	10700
116.00	7770.00 w/ Mount Pipe	2	15.959	1.2539	0.0010	8492
107.00	MX08FRO665-21 w/ Mount Pipe	2	13.634	1.1794	0.0009	6892
74.00	KS24019-L112A	2	6.488	0.8242	0.0005	4595

Compression Checks

Pole Design Data

Section No.	Elevation ft	Size	L ft	L_u ft	Kl/r	A in^2	P_u K	ϕP_n K	Ratio $\frac{P_u}{\phi P_n}$
L1	152 - 137.42 (1)	TP37.31x33.03x0.3125	14.58	0.00	0.0	35.1916	-5.22	2058.71	0.003
L2	137.42 - 91.09 (2)	TP50.15x35.1673x0.375	51.50	0.00	0.0	56.8796	-31.75	3327.46	0.010
L3	91.09 - 44.79 (3)	TP62.86x47.413x0.4375	53.13	0.00	0.0	83.2820	-49.08	4872.00	0.010
L4	44.79 - 0 (4)	TP75x59.537x0.5	53.21	0.00	0.0	118.2310	-77.67	6916.54	0.011

Pole Bending Design Data

Section No.	Elevation ft	Size	M_{ux} kip-ft	ϕM_{nx} kip-ft	Ratio $\frac{M_{ux}}{\phi M_{nx}}$	M_{uy} kip-ft	ϕM_{ny} kip-ft	Ratio $\frac{M_{uy}}{\phi M_{ny}}$
L1	152 - 137.42 (1)	TP37.31x33.03x0.3125	43.30	1817.46	0.024	0.00	1817.46	0.000
L2	137.42 - 91.09 (2)	TP50.15x35.1673x0.375	672.34	3815.62	0.176	0.00	3815.62	0.000
L3	91.09 - 44.79 (3)	TP62.86x47.413x0.4375	1748.28	6830.52	0.256	0.00	6830.52	0.000
L4	44.79 - 0 (4)	TP75x59.537x0.5	3258.78	11650.00	0.280	0.00	11650.00	0.000

Pole Shear Design Data

Section No.	Elevation ft	Size	Actual V_u K	ϕV_n K	Ratio $\frac{V_u}{\phi V_n}$	Actual T_u kip-ft	ϕT_n kip-ft	Ratio $\frac{T_u}{\phi T_n}$
L1	152 - 137.42 (1)	TP37.31x33.03x0.3125	5.18	617.61	0.008	0.24	1919.01	0.000
L2	137.42 - 91.09 (2)	TP50.15x35.1673x0.375	22.00	998.24	0.022	0.38	4177.66	0.000

Section No.	Elevation ft	Size	Actual V_u K	ϕV_n K	Ratio $\frac{V_u}{\phi V_n}$	Actual T_u kip-ft	ϕT_n kip-ft	Ratio $\frac{T_u}{\phi T_n}$
L3	91.09 - 44.79 (3)	TP62.86x47.413x0.4375	26.11	1461.60	0.018	0.61	7676.71	0.000
L4	44.79 - 0 (4)	TP75x59.537x0.5	30.60	2074.96	0.015	0.18	13537.75	0.000

Pole Interaction Design Data

Section No.	Elevation ft	Ratio $\frac{P_u}{\phi P_n}$	Ratio $\frac{M_{ux}}{\phi M_{nx}}$	Ratio $\frac{M_{uy}}{\phi M_{ny}}$	Ratio $\frac{V_u}{\phi V_n}$	Ratio $\frac{T_u}{\phi T_n}$	Comb. Stress Ratio	Allow. Stress Ratio	Criteria
L1	152 - 137.42 (1)	0.003	0.024	0.000	0.008	0.000	0.026	1.050	4.8.2
L2	137.42 - 91.09 (2)	0.010	0.176	0.000	0.022	0.000	0.186	1.050	4.8.2
L3	91.09 - 44.79 (3)	0.010	0.256	0.000	0.018	0.000	0.266	1.050	4.8.2
L4	44.79 - 0 (4)	0.011	0.280	0.000	0.015	0.000	0.291	1.050	4.8.2

Section Capacity Table

Section No.	Elevation ft	Component Type	Size	Critical Element	P K	ϕP_{allow} K	% Capacity	Pass Fail
L1	152 - 137.42	Pole	TP37.31x33.03x0.3125	1	-5.22	2161.65	2.5	Pass
L2	137.42 - 91.09	Pole	TP50.15x35.1673x0.375	2	-31.75	3493.83	17.7	Pass
L3	91.09 - 44.79	Pole	TP62.86x47.413x0.4375	3	-49.08	5115.60	25.4	Pass
L4	44.79 - 0	Pole	TP75x59.537x0.5	4	-77.67	7262.37	27.7	Pass
							Summary	
						Pole (L4)	27.7	Pass
						RATING =	**27.7**	**Pass**

Program Version 8.1.1.0

APPENDIX B

BASE LEVEL DRAWING

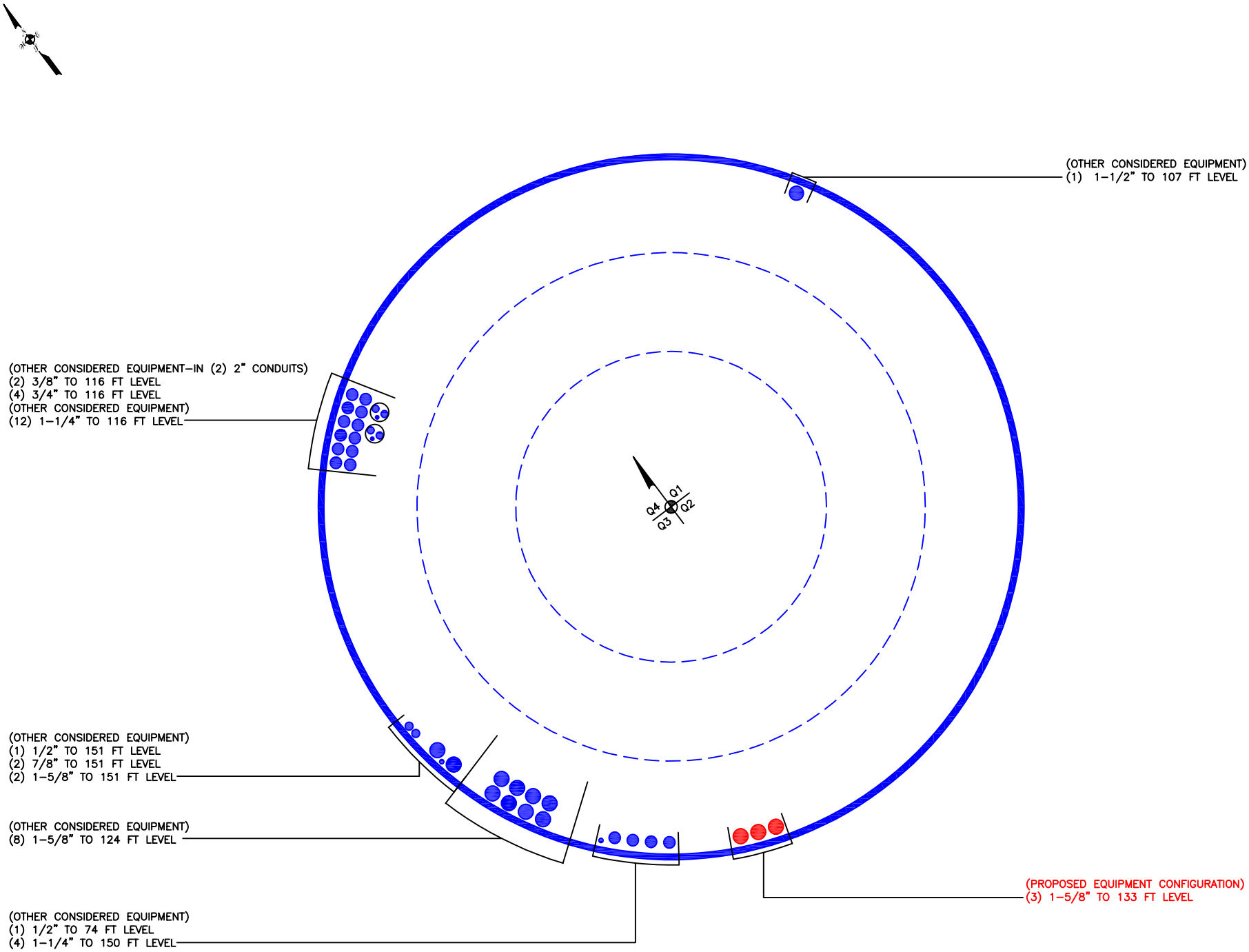
(OTHER CONSIDERED EQUIPMENT)
(1) 1-1/2" TO 107 FT LEVEL
(OTHER CONSIDERED EQUIPMENT-IN (2) 2" CONDUITS)
(2) 3/8" TO 116 FT LEVEL
(4) 3/4" TO 116 FT LEVEL
(OTHER CONSIDERED EQUIPMENT)
(12) 1-1/4" TO 116 FT LEVEL
Q1
Q2
Q3
Q4
(OTHER CONSIDERED EQUIPMENT)
(1) 1/2" TO 151 FT LEVEL
(2) 7/8" TO 151 FT LEVEL
(2) 1-5/8" TO 151 FT LEVEL
(OTHER CONSIDERED EQUIPMENT)
(8) 1-5/8" TO 124 FT LEVEL
(OTHER CONSIDERED EQUIPMENT)
(1) 1/2" TO 74 FT LEVEL
(4) 1-1/4" TO 150 FT LEVEL
(PROPOSED EQUIPMENT CONFIGURATION)
(3) 1-5/8" TO 133 FT LEVEL

APPENDIX C

ADDITIONAL CALCULATIONS

ASCE 7 Hazards Report

Address:
No Address at This Location

Standard: ASCE/SEI 7-16
Risk Category: II
Soil Class: D - Default (see Section 11.4.3)

Elevation: 707.05 ft (NAVD 88)
Latitude: 41.798947
Longitude: -72.332189

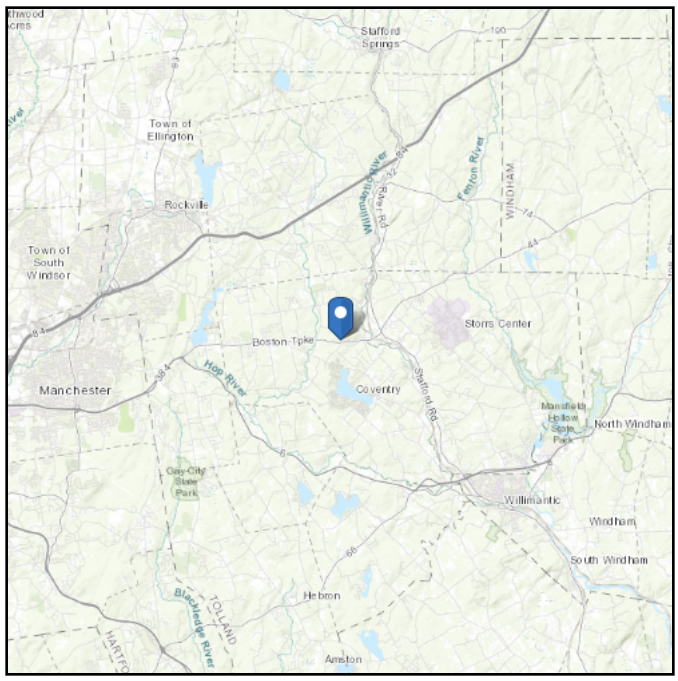

Wind

Results:

Wind Speed	119 Vmph
10-year MRI	75 Vmph
25-year MRI	84 Vmph
50-year MRI	91 Vmph
100-year MRI	98 Vmph

Data Source:	ASCE/SEI 7-16, Fig. 26.5-1B and Figs. CC.2-1–CC.2-4, and Section 26.5.2
Date Accessed:	Fri Apr 01 2022

Value provided is 3-second gust wind speeds at 33 ft above ground for Exposure C Category, based on linear interpolation between contours. Wind speeds are interpolated in accordance with the 7-16 Standard. Wind speeds correspond to approximately a 7% probability of exceedance in 50 years (annual exceedance probability = 0.00143, MRI = 700 years).

Site is in a hurricane-prone region as defined in ASCE/SEI 7-16 Section 26.2. Glazed openings need not be protected against wind-borne debris.

Seismic

Site Soil Class: D - Default (see Section 11.4.3)

Results:

S_S :	0.187	S_{D1} :	0.088
S_1 :	0.055	T_L :	6
F_a :	1.6	PGA :	0.101
F_v :	2.4	PGA_M :	0.161
S_{MS} :	0.299	F_{PGA} :	1.599
S_{M1} :	0.132	I_e :	1
S_{DS} :	0.199	C_v :	0.7

Seismic Design Category B

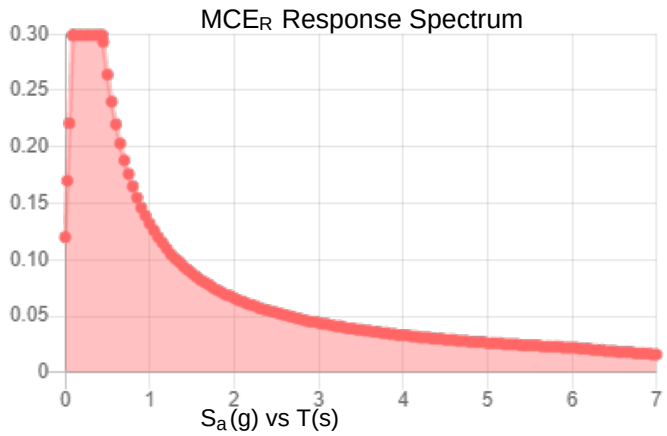

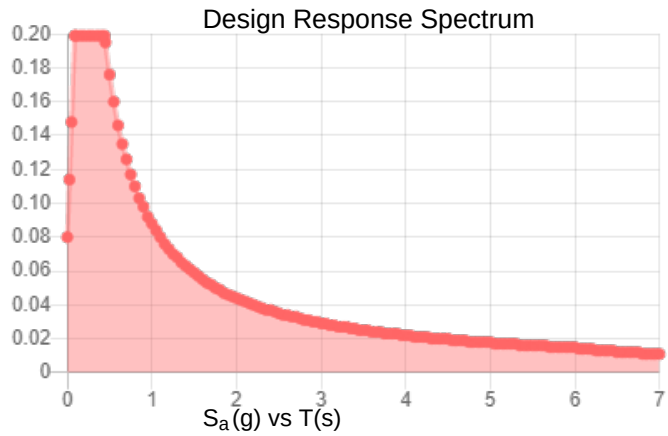

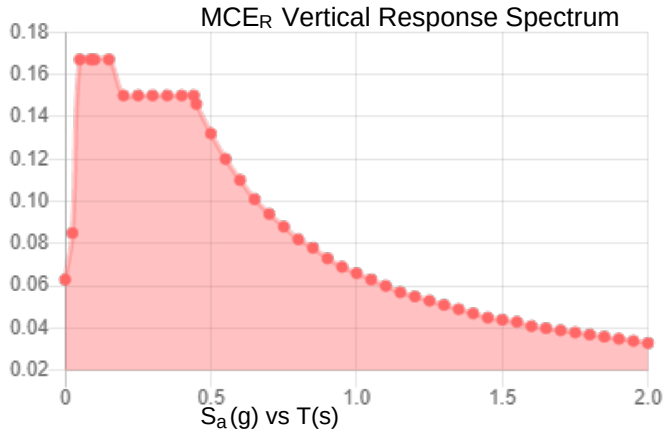

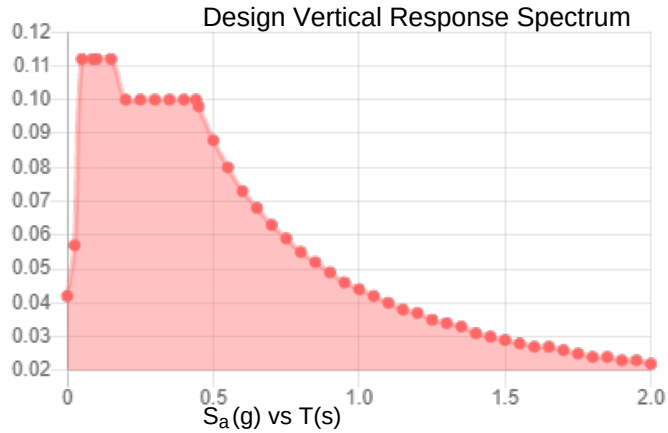

Data Accessed: **Fri Apr 01 2022**

Date Source:

USGS Seismic Design Maps based on ASCE/SEI 7-16 and ASCE/SEI 7-16 Table 1.5-2. Additional data for site-specific ground motion procedures in accordance with ASCE/SEI 7-16 Ch. 21 are available from USGS.

Ice

Results:

Ice Thickness:	1.50 in.
Concurrent Temperature:	15 F
Gust Speed	50 mph
Data Source:	Standard ASCE/SEI 7-16, Figs. 10-2 through 10-8
Date Accessed:	Fri Apr 01 2022

Ice thicknesses on structures in exposed locations at elevations higher than the surrounding terrain and in valleys and gorges may exceed the mapped values.

Values provided are equivalent radial ice thicknesses due to freezing rain with concurrent 3-second gust speeds, for a 500-year mean recurrence interval, and temperatures concurrent with ice thicknesses due to freezing rain. Thicknesses for ice accretions caused by other sources shall be obtained from local meteorological studies. Ice thicknesses in exposed locations at elevations higher than the surrounding terrain and in valleys and gorges may exceed the mapped values.

Monopole Base Plate Connection

Site Info	
BU #	876385
Site Name	N. Coventry / Wallbeo
Order #	610492 Rev. 0

Analysis Considerations	
TIA-222 Revision	H
Grout Considered:	No
l_{ar} (in)	0.875

Applied Loads	
Moment (kip-ft)	3258.78
Axial Force (kips)	77.67
Shear Force (kips)	30.60

**TIA-222-H Section 15.5 Applied*

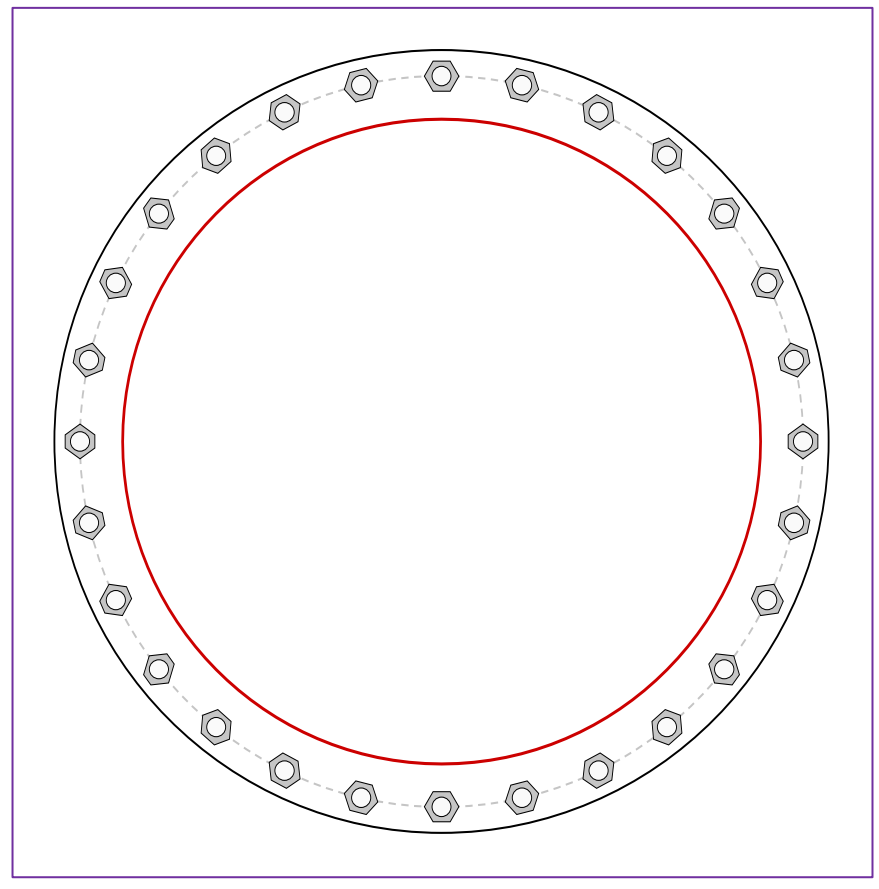

Connection Properties

Anchor Rod Data

(28) 2-1/4" ø bolts (A615-75 N; Fy=75 ksi, Fu=100 ksi) on 85" BC

Base Plate Data

91" OD x 2.25" Plate (A871 GR60; Fy=60 ksi, Fu=75 ksi)

Stiffener Data

N/A

Pole Data

75" x 0.5" 18-sided pole (A572-65; Fy=65 ksi, Fu=80 ksi)

Analysis Results

Anchor Rod Summary *(units of kips, kip-in)*

Pu_t = 62.93	ϕPn_t = 243.75	**Stress Rating**
Vu = 1.09	ϕVn = 149.1	**24.6%**
Mu = n/a	ϕMn = n/a	Pass

Base Plate Summary

Max Stress (ksi):	19.42	(Flexural)
Allowable Stress (ksi):	54	
Stress Rating:	**34.3%**	Pass

Pier and Pad Foundation

BU # :	876385
Site Name:	N. Coventry / Wallb
App. Number:	610492 Rev. 0

TIA-222 Revision:	H
Tower Type:	Monopole

Top & Bot. Pad Rein. Different?:	☑
Block Foundation?:	☐
Rectangular Pad?:	☐

Superstructure Analysis Reactions

Compression, P_{comp}:	77.67	kips
Base Shear, Vu_comp:	30.58	kips
Moment, M_u:	3258.78	ft-kips
Tower Height, **H**:	152	ft
BP Dist. Above Fdn, bp_{dist}:	3.125	in

Foundation Analysis Checks

	Capacity	Demand	Rating*	Check
Lateral (Sliding) (kips)	376.68	30.58	**7.7%**	**Pass**
Bearing Pressure (ksf)	12.00	2.51	**19.9%**	**Pass**
*Overturning (kip*ft)*	10482.56	3541.96	**33.8%**	**Pass**
*Pier Flexure (Comp.) (kip*ft)*	10516.00	3442.26	**31.2%**	**Pass**
Pier Compression (kip)	51554.88	165.15	**0.3%**	**Pass**
*Pad Flexure (kip*ft)*	7275.14	1173.98	**15.4%**	**Pass**
Pad Shear - 1-way (kips)	1033.61	168.87	**15.6%**	**Pass**
Pad Shear - 2-way (Comp) (ksi)	0.190	0.029	**14.5%**	**Pass**
*Flexural 2-way (Comp) (kip*ft)*	6624.33	2065.36	**29.7%**	**Pass**

**Rating per TIA-222-H Section 15.5*

Structural Rating*:	**31.2%**
Soil Rating*:	**33.8%**

Pier Properties

Pier Shape:	Square	
Pier Diameter, **dpier**:	9	ft
Ext. Above Grade, **E**:	1	ft
Pier Rebar Size, **Sc**:	8	
Pier Rebar Quantity, **mc**:	62	
Pier Tie/Spiral Size, **St**:	4	
Pier Tie/Spiral Quantity, **mt**:	10	
Pier Reinforcement Type:	Tie	
Pier Clear Cover, cc_{pier}:	3	in

Pad Properties

Depth, **D**:	8	ft
Pad Width, W_1:	29	ft
Pad Thickness, **T**:	3	ft
Pad Rebar Size (Top dir.2), Sp_{top2}:	9	
Pad Rebar Quantity (Top dir. 2), mp_{top2}:	25	
Pad Rebar Size (Bottom dir. 2), Sp_2:	9	
Pad Rebar Quantity (Bottom dir. 2), mp_2:	54	
Pad Clear Cover, cc_{pad}:	3	in

Material Properties

Rebar Grade, **Fy**:	60	ksi
Concrete Compressive Strength, **F'c**:	4	ksi
Dry Concrete Density, δc:	150	pcf

Soil Properties

Total Soil Unit Weight, γ:	100	pcf
Ultimate Gross Bearing, Qult:	16.000	ksf
Cohesion, **Cu**:	0.000	ksf
Friction Angle, φ:	0	degrees
SPT Blow Count, N_{blows}:	50	
Base Friction, μ:	0.55	
Neglected Depth, **N**:	4.50	ft
Foundation Bearing on Rock?	Yes	
Groundwater Depth, **gw**:	N/A	ft

<--Toggle between Gross and Net

Date: March 28, 2022

B+T Group
1717 S. Boulder, Suite 300
Tulsa, OK 74119
(918) 587-4630
towersupport@btgrp.com

Subject:	**Mount Analysis Report**	
Carrier Designation:	**T-Mobile Equipment Change-Out**	
	Carrier Site Number:	CT11516A
	Carrier Site Name:	CT516/Coventry - Sprint
Crown Castle Designation:	**BU Number:**	876385
	Site Name:	N. Coventry / Wallbeoff,
	JDE Job Number:	710878
	Order Number:	610492, Rev.0
Engineering Firm Designation:	**B+T Group Report Designation:**	100172.009.01
Site Data:	**Reilly Mtn. Rd., Coventry, CT, Tolland County, 6238**	
	Latitude 41° 47' 56.21" Longitude -72° 19' 55.88"	
Structure Information:	**Tower Height & Type:**	**152 ft. Monopole**
	Mount Elevation:	**133 ft.**
	Mount Type:	**14.25 ft. Platform Mount**

B+T Group is pleased to submit this **"Mount Analysis Report"** to determine the structural integrity of T-Mobile's antenna mounting system with the proposed appurtenance and equipment addition on the above-mentioned supporting tower structure. Analysis of the existing supporting tower structure is to be completed by others and therefore is not part of this analysis. Analysis of the antenna mounting system as a tie-off point for fall protection or rigging is not part of this document.

The purpose of the analysis is to determine acceptability of the mount's stress level. Based on our analysis we have determined the stress level to be:

Platform Mount **Sufficient**

This analysis utilizes an ultimate 3-second gust wind speed of 119 mph as required by the 2018 Connecticut State Building Code. Applicable Standard references and design criteria are listed in Section 2 - Analysis Criteria.

Mount structural analysis prepared by: Erik Perez

Respectfully submitted by: B&T Engineering, Inc.
COA: PEC.0001564 Expires: 02/1/2023

STATE OF CONNECTICUT
CHAD TUTTLE
No. 23924
LICENSED
PROFESSIONAL ENGINEER

3/28/22

Chad E. Tuttle, P.E.

TABLE OF CONTENTS

1) INTRODUCTION

This is an existing 3 - sector 14' Platform Mount, analyzed by B+T Group.

The mount has been modified per reinforcement drawings prepared by B+T Group, in December of 2019. Reinforcement consists of New Handrail Kit, SitePro1 #HRK-14 and New Crossover Plate Kit, SitePro1 #SCX2-K.

2) ANALYSIS CRITERIA

Building Code:	2018 Connecticut State Building Code
TIA-222 Revision:	TIA-222-H
Risk Category:	II
Ultimate Wind Speed:	119 mph
Exposure Category:	B
Topographic Factor at Base:	1
Topographic Factor at Mount:	1
Ice Thickness:	1.50 in
Wind Speed with Ice:	50 mph
Seismic S_s:	0.187
Seismic S_1:	0.055
Live Loading Wind Speed:	30 mph
Man Live Load at Mid/End-Points:	250 lb.
Man Live Load at Mount Pipes:	500 lb.

Table 1 – Proposed Equipment Configuration

Mount Centerline (ft.)	Antenna Centerline (ft.)	Number of Antennas	Manufacturer	Model / Type	Mount / Modification Details
133	136	3	Commscope	VV-65A-R1_TMO	14.25 ft. Platform Mount
		3	Ericsson	Air 6419 B41_TMO	
		3	RFS/Celwave	APXVAARR24_43-U-NA20	
		3	Ericsson	Radio 4449 B71 B85A_T-Mobile	
		3	Ericsson	Radio 4460 B2/B25 B66_TMO	

Table 2 – Documents Provided

Document	Remarks	Reference	Source
CCI Order	Proposed Loading	Date: 03/21/2022	Crown Castle
RFDS		Date: 3/02/2022	
Mount Modification Drawing	B+T Group	Date: 06/12/2019	On File
Modification Inspection Report		Date: 11/25/2020	

3) ANALYSIS PROCEDURE

3.1) Analysis Method

RISA-3D (Version 19.0.4), a commercially available analysis software package, was used to create a three-dimensional model of the antenna mounting system and calculate member stresses for various loading cases.

A tool internally developed by B+T Group, was used to calculate wind loading on all appurtenances, dishes, and mount members for various loading cases. Selected output from the analysis is included in Appendix B.

This analysis was performed in accordance with Crown Castle's ENG-SOW-10208 *Mount Analysis* (Revision E).

3.2) Assumptions

1. The antenna mounting system was properly fabricated, installed and maintained in good condition in accordance with its original design, TIA Standards, and/or manufacturer's specifications.
2. The configuration of antennas, mounts, and other appurtenances are as specified in Table-1.
3. All member connections are assumed to have been designed to meet or exceed the load carrying capacity of the connected members unless otherwise specified in this report.
4. Mount areas and weights are determined from field measurements, standard material properties, and/or manufacturer product data.
5. Serviceability with respect to antenna twist, tilt, roll, or lateral translation is not checked and is left to the carrier or tower owner to ensure conformance.
6. Prior structural modifications to the tower mounting system are assumed to be installed as shown per available data.
7. The analysis will be required to be revised if the existing conditions in the field differ from those shown in the above-referenced documents or assumed in this analysis. No allowance was made for any damaged, missing, or rusted members.
8. The following material grades were assumed (Unless Noted Otherwise):
   (a) Connection Bolts : ASTM A325
   (b) Steel Pipe : ASTM A53 (GR. 35)
   (c) HSS (Round) : ASTM 500 (GR. B-42)
   (d) HSS (Rectangular) : ASTM 500 (GR. B-46)
   (e) Channel : ASTM A36 (GR. 36)
   (f) Steel Solid Rod : ASTM A36 (GR. 36)
   (g) Steel Plate : ASTM A36 (GR. 36)
   (h) Steel Angle : ASTM A36 (GR. 36)
   (i) UNISTRUT : ASTM A570 (GR. 33)

This analysis may be affected if any assumptions are not valid or have been made in error. B+T Group should be notified to determine the effect on the structural integrity of the antenna mounting system.

4) ANALYSIS RESULTS

Table 3 - Mount Component Stresses vs. Capacity (Platform Mount)

Notes	Component	Centerline (ft.)	Critical Member	% Capacity	Pass / Fail
1	Mount Pipes	133	65	53.2	Pass
	Main Horizontals		21	18.9	Pass
	Support Tubes		1	40.9	Pass
	Supporting Angles		31	21.0	Pass
	Connection Plates		23	27.3	Pass
	Support Rails		83	49.9	Pass
	Connection Angles		80	34.0	Pass
2	Mount to Tower Connection		-	17.6	Pass

Structure Rating (max from all components) =	**53.2%**

Notes:
1) See additional documentation in "Appendix C - Software Analysis Output" for calculations supporting the % capacity consumed.
2) See additional documentation in "Appendix D - Additional Calculations" for calculations supporting the % capacity reported.

4.1) Recommendations

The mount has sufficient capacity to carry the proposed loading configuration. No modifications are required at this time.

APPENDIX A

WIRE FRAME AND RENDERED MODELS

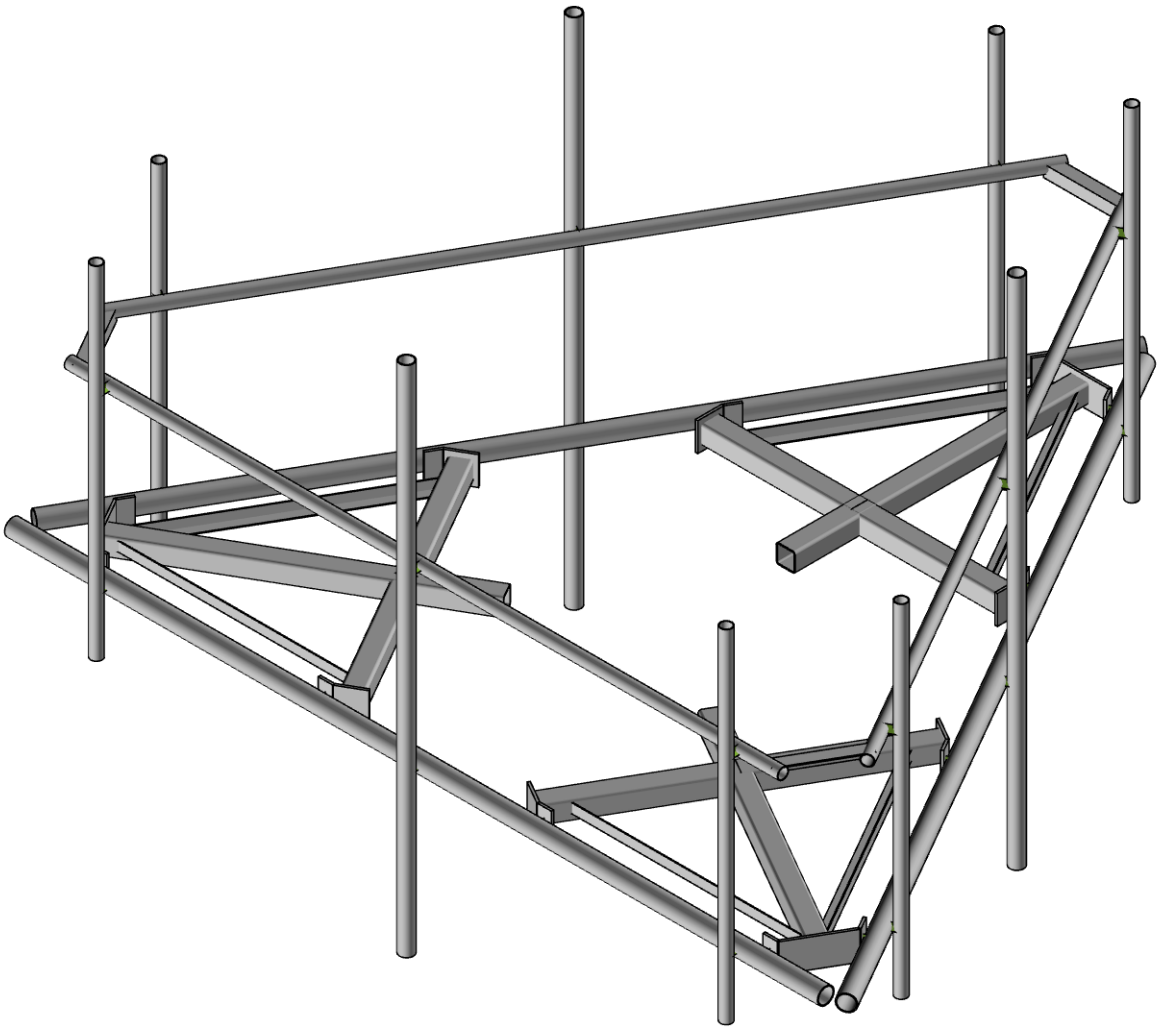

Envelope Only Solution

B+T Group	876385 - N. Coventry/Wallbeoff	SP-1
SP		Mar 28, 2022
100172.009.01		100172_009_01_N. Coventry Wall…

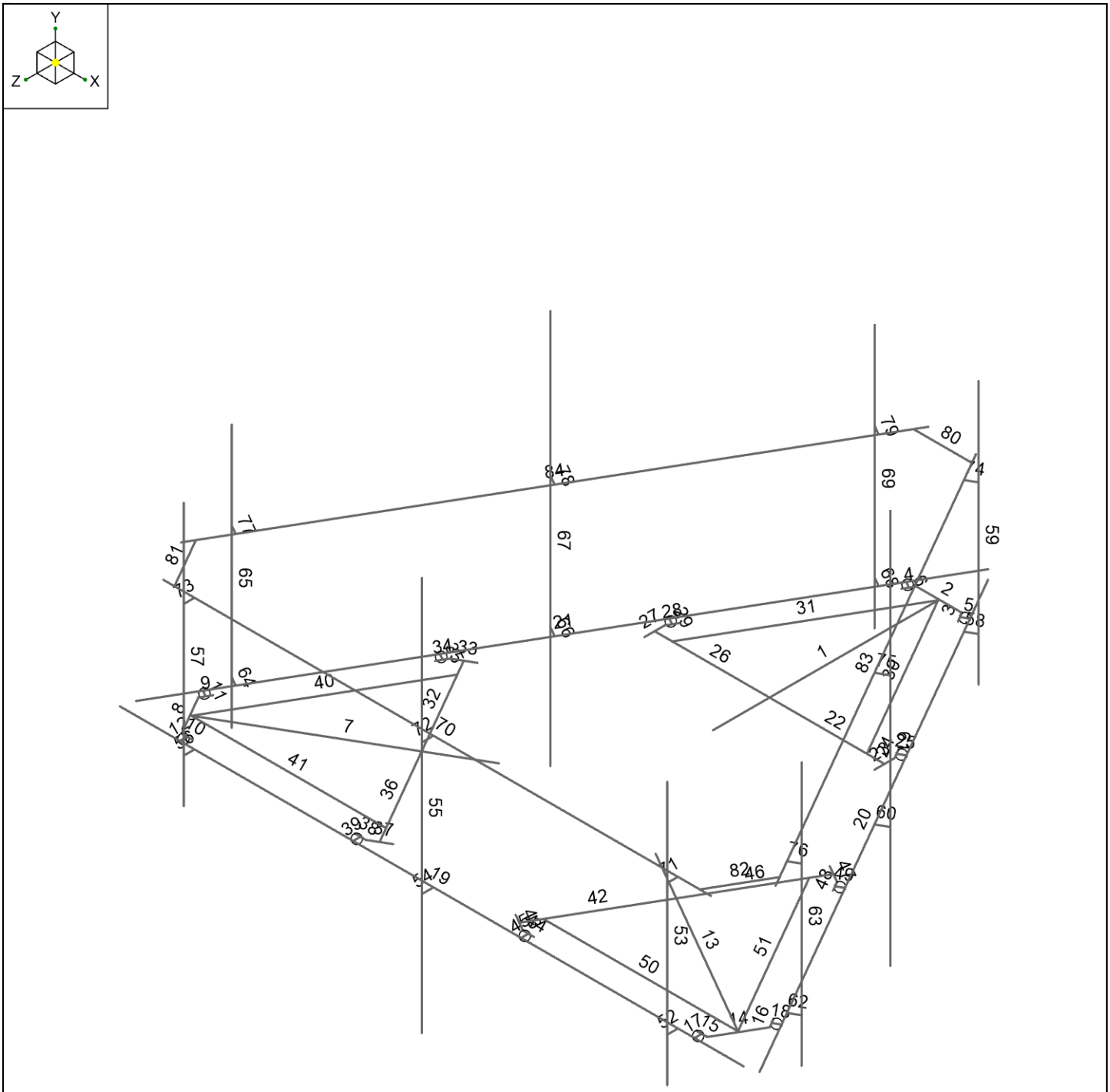

Envelope Only Solution

B+T Group	876385 - N. Coventry/Wallbeoff	SP-2
SP		Mar 28, 2022
100172.009.01		100172_009_01_N. Coventry Wall…

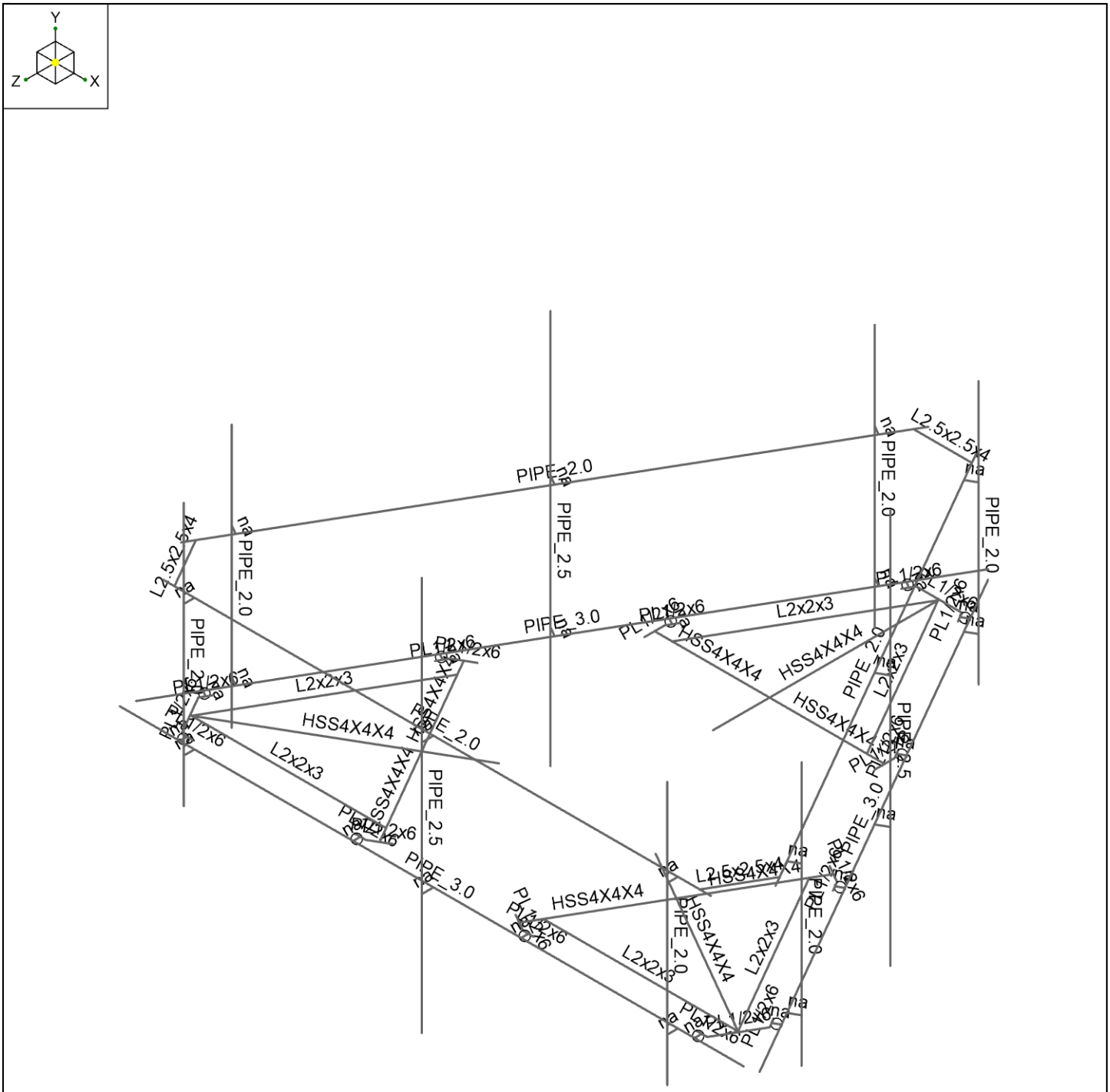

Envelope Only Solution

B+T Group	876385 - N. Coventry/Wallbeoff	SP-3
SP		Mar 28, 2022
100172.009.01		100172_009_01_N. Coventry Wall…

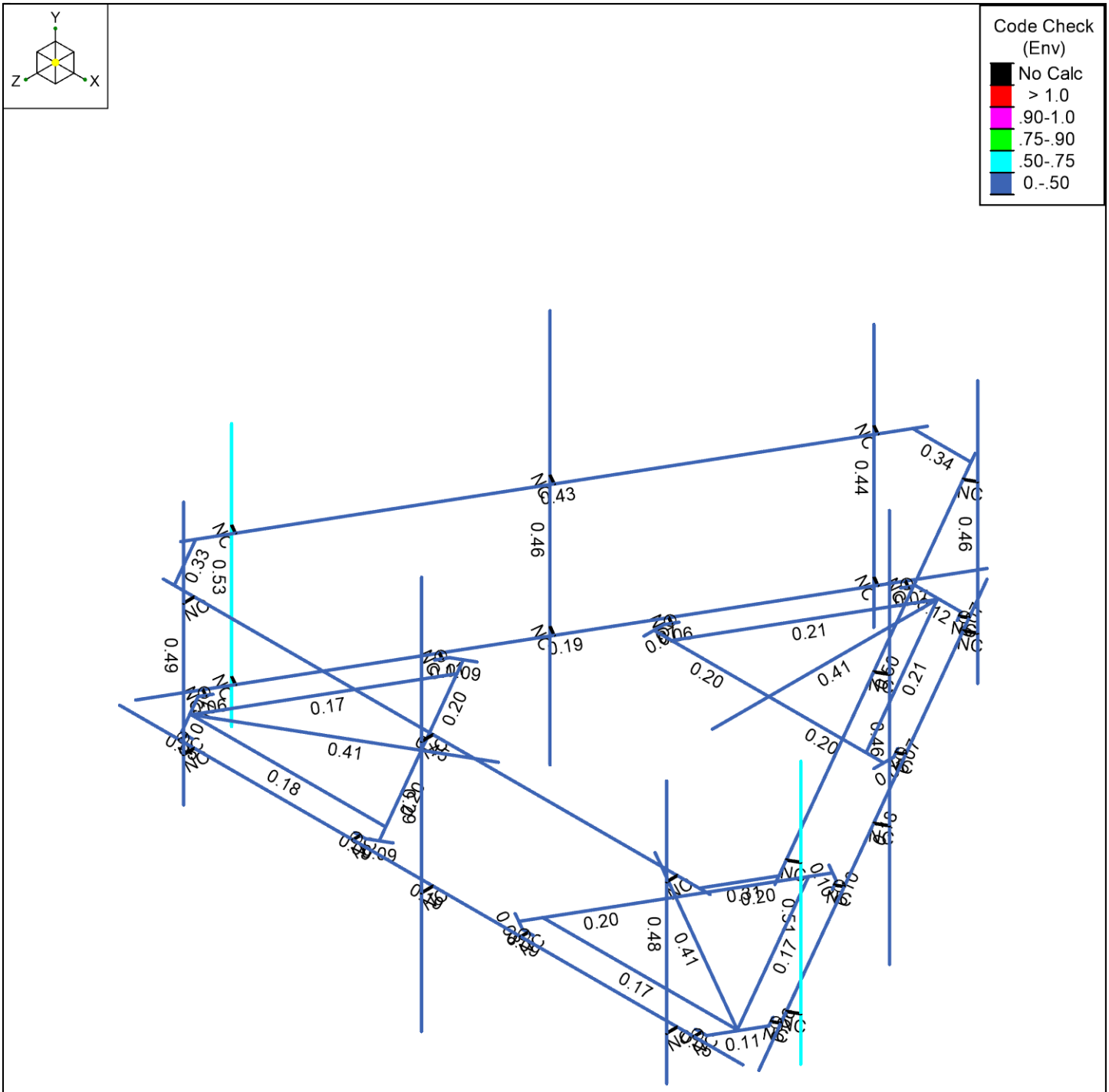

Member Code Checks Displayed (Enveloped)
Envelope Only Solution

B+T Group	876385 - N. Coventry/Wallbeoff	SP-4
SP		Mar 28, 2022
100172.009.01		100172_009_01_N. Coventry Wall…

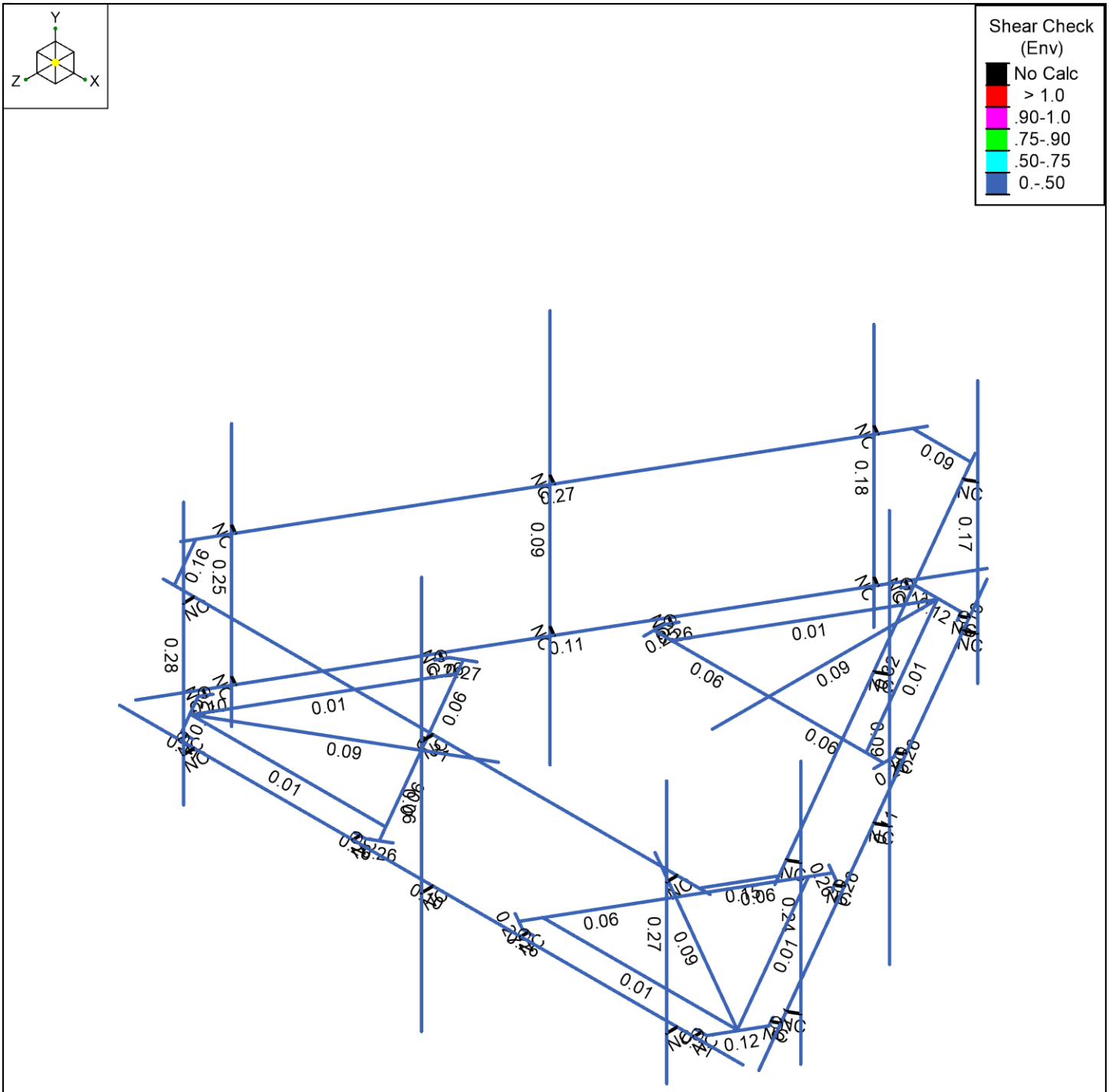

Member Shear Checks Displayed (Enveloped)
Envelope Only Solution

B+T Group	876385 - N. Coventry/Wallbeoff	SP-5
SP		Mar 28, 2022
100172.009.01		100172_009_01_N. Coventry Wall…

APPENDIX B

SOFTWARE INPUT CALCULATIONS

ASCE 7 Hazards Report

Address:
No Address at This Location

Standard: ASCE/SEI 7-16
Risk Category: II
Soil Class: D - Default (see Section 11.4.3)

Elevation: 707.05 ft (NAVD 88)
Latitude: 41.798947
Longitude: -72.332189

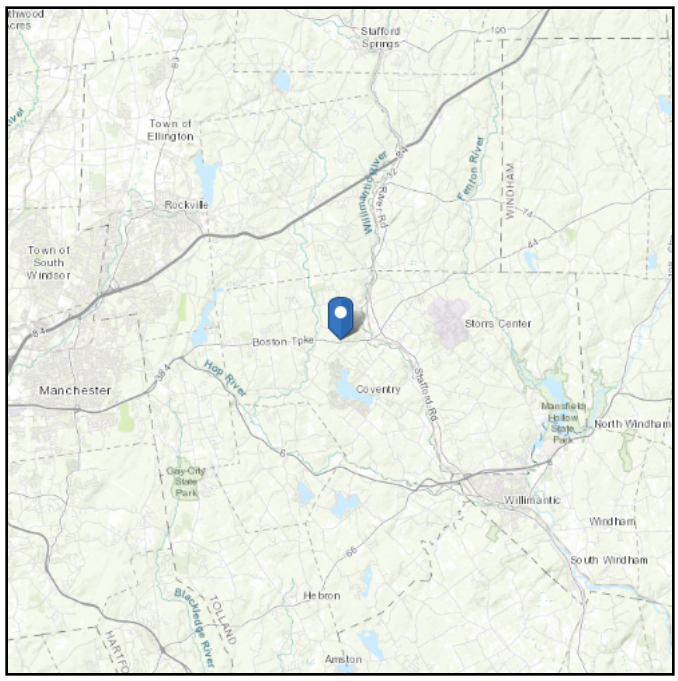

Wind

Results:

Wind Speed	119 Vmph
10-year MRI	75 Vmph
25-year MRI	84 Vmph
50-year MRI	91 Vmph
100-year MRI	98 Vmph

Data Source:	ASCE/SEI 7-16, Fig. 26.5-1B and Figs. CC.2-1–CC.2-4, and Section 26.5.2
Date Accessed:	Wed Mar 23 2022

Value provided is 3-second gust wind speeds at 33 ft above ground for Exposure C Category, based on linear interpolation between contours. Wind speeds are interpolated in accordance with the 7-16 Standard. Wind speeds correspond to approximately a 7% probability of exceedance in 50 years (annual exceedance probability = 0.00143, MRI = 700 years).

Site is in a hurricane-prone region as defined in ASCE/SEI 7-16 Section 26.2. Glazed openings need not be protected against wind-borne debris.

Seismic

Site Soil Class: D - Default (see Section 11.4.3)

Results:

S_S :	0.187	S_{D1} :	0.088
S_1 :	0.055	T_L :	6
F_a :	1.6	PGA :	0.101
F_v :	2.4	PGA_M :	0.161
S_{MS} :	0.299	F_{PGA} :	1.599
S_{M1} :	0.132	I_e :	1
S_{DS} :	0.199	C_v :	0.7

Seismic Design Category B

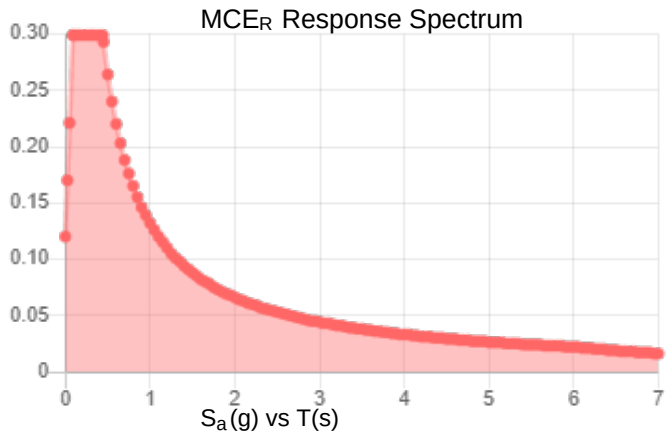

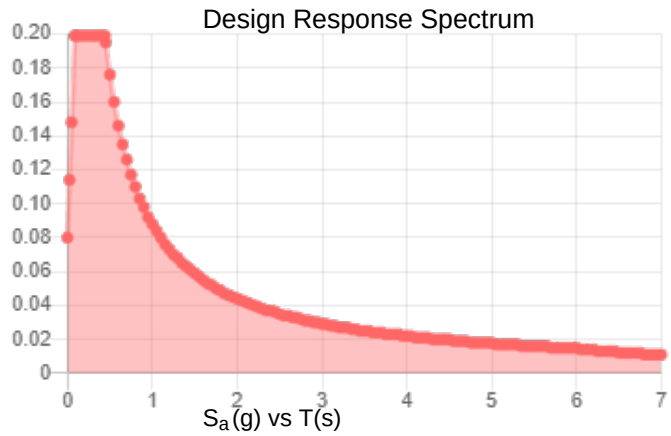

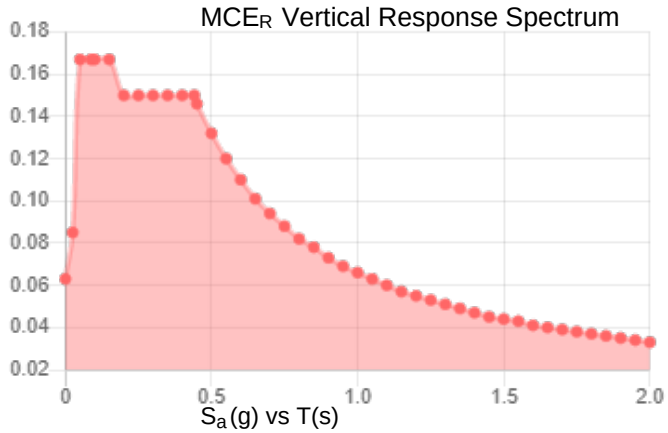

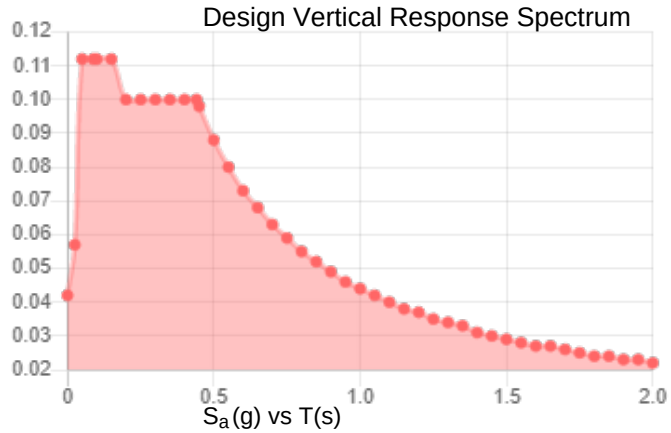

Data Accessed: **Wed Mar 23 2022**

Date Source:

USGS Seismic Design Maps based on ASCE/SEI 7-16 and ASCE/SEI 7-16 Table 1.5-2. Additional data for site-specific ground motion procedures in accordance with ASCE/SEI 7-16 Ch. 21 are available from USGS.

Ice

Results:

Ice Thickness:	1.50 in.
Concurrent Temperature:	15 F
Gust Speed	50 mph
Data Source:	Standard ASCE/SEI 7-16, Figs. 10-2 through 10-8
Date Accessed:	Wed Mar 23 2022

Ice thicknesses on structures in exposed locations at elevations higher than the surrounding terrain and in valleys and gorges may exceed the mapped values.

Values provided are equivalent radial ice thicknesses due to freezing rain with concurrent 3-second gust speeds, for a 500-year mean recurrence interval, and temperatures concurrent with ice thicknesses due to freezing rain. Thicknesses for ice accretions caused by other sources shall be obtained from local meteorological studies. Ice thicknesses in exposed locations at elevations higher than the surrounding terrain and in valleys and gorges may exceed the mapped values.

PROJECT	**100172.009.01 - N. Coventry**		**KSC**
SUBJECT	**Platform Mount Analysis**		
DATE	**03/28/22**	PAGE	OF

B+T GRP
1717 S. Boulder, Suite 300
Tulsa, OK 74119
(918) 587-4630

Tower Type		:	Monopole		
Ground Elevation	z_s	:	707	ft	[ASCE7 Hazard Tool]
Tower Height		:	152.00	ft	
Mount Elevation		:	133.00	ft	
Antenna Elevation		:	136.00	ft	
Crest Height		:	0	ft	
Risk Category		:	II		[Table 2-1]
Exposure Category		:	B		[Sec. 2.6.5.1.2]
Topography Category		:	1.00		[Sec. 2.6.6.2]
Wind Velocity	V	:	119	mph	[ASCE7 Hazard Tool]
Ice wind Velocity	V_i	:	50	mph	[ASCE7 Hazard Tool]
Service Velocity	V_s	:	30	mph	[ASCE7 Hazard Tool]
Base Ice thickness	t_i	:	1.50	in	[ASCE7 Hazard Tool]
Seismic Design Cat.		:	B		[ASCE7 Hazard Tool]
	S_S	:	0.19		
	S_1	:	0.06		
	S_{DS}	:	0.20		
	S_{D1}	:	0.09		
Gust Factor	G_h	:	1.00		[Sec. 16.6]
Pressure Coefficient	K_z	:	1.08		[Sec. 2.6.5.2]
Topography Factor	K_{zt}	:	1.00		[Sec. 2.6.6]
Elevation Factor	K_e	:	0.97		[Sec. 2.6.8]
Directionality Factor	K_d	:	0.95		[Sec. 16.6]
Shielding Factor	K_a	:	0.90		[Sec. 16.6]
Design Ice Thickness	t_{iz}	:	1.73	in	[Sec. 2.6.10]
Importance Factor	I_e	:	1		[Table 2-3]
Response Coefficient	C_s	:	0.100		[Sec. 2.7.7.1]
Amplification	A_s	:	2.5		[Sec. 16.7]
	q_z	:	35.99	psf	

PROJECT	100172.009.01 - N. Coventry		KSC
SUBJECT	Platform Mount Analysis		
DATE	03/28/22	PAGE	OF

B+T GRP
1717 S. Boulder, Suite 300
Tulsa, OK 74119
(918) 587-4630

Manufacturer	Model	Qty	Aspect Ratio	C_a flat/round	EPA_N (ft^2)	EPA_T (ft^2)	$EPA_{N\text{-}Ice}$ (ft^2)	$EPA_{T\text{-}Ice}$ (ft^2)	$F_{A\ No\ Ice\ (N)}$	$F_{A\ No\ Ice\ (T)}$	$F_{A\ Ice\ (N)}$	$F_{A\ Ice\ (T)}$
ERICSSON	AIR 6419 B41_TMO	0.5	1.73	1.20	2.63	1.14	3.36	1.72	0.10	0.04	0.02	0.01
ERICSSON	AIR 6419 B41_TMO	0.5	1.73	1.20	2.63	1.14	3.36	1.72	0.10	0.04	0.02	0.01
RFS/CELWAVE	APXVAARR24_43-U-NA20	0.5	4.00	1.27	7.33	2.66	8.51	3.69	0.27	0.10	0.05	0.02
RFS/CELWAVE	APXVAARR24_43-U-NA20	0.5	4.00	1.27	7.33	2.66	8.51	3.69	0.27	0.10	0.05	0.02
ERICSSON	Radio 4449 B71 B85A_T-Mobile	1	1.36	1.20	1.64	1.32	2.47	2.09	0.06	0.05	0.01	0.01
COMMSCOPE	VV-65A-R1_TMO	0.5	4.56	1.29	2.28	0.87	3.12	1.63	0.10	0.04	0.02	0.01
COMMSCOPE	VV-65A-R1_TMO	0.5	4.56	1.29	2.28	0.87	3.12	1.63	0.10	0.04	0.02	0.01
ERICSSON	RADIO 4460 B2/B25 B66_TMO	1	1.13	1.20	1.78	1.40	2.63	2.18	0.07	0.05	0.01	0.01
ERICSSON	AIR 6419 B41_TMO	0.5	1.73	1.20	2.63	1.14	3.36	1.72	0.10	0.04	0.02	0.01
ERICSSON	AIR 6419 B41_TMO	0.5	1.73	1.20	2.63	1.14	3.36	1.72	0.10	0.04	0.02	0.01
RFS/CELWAVE	APXVAARR24_43-U-NA20	0.5	4.00	1.27	7.33	2.66	8.51	3.69	0.27	0.10	0.05	0.02
RFS/CELWAVE	APXVAARR24_43-U-NA20	0.5	4.00	1.27	7.33	2.66	8.51	3.69	0.27	0.10	0.05	0.02
ERICSSON	Radio 4449 B71 B85A_T-Mobile	1	1.36	1.20	1.64	1.32	2.47	2.09	0.06	0.05	0.01	0.01
COMMSCOPE	VV-65A-R1_TMO	0.5	4.56	1.29	2.28	0.87	3.12	1.63	0.10	0.04	0.02	0.01
COMMSCOPE	VV-65A-R1_TMO	0.5	4.56	1.29	2.28	0.87	3.12	1.63	0.10	0.04	0.02	0.01
ERICSSON	RADIO 4460 B2/B25 B66_TMO	1	1.13	1.20	1.78	1.40	2.63	2.18	0.07	0.05	0.01	0.01

PROJECT	100172.009.01 - N. Coventry	KSC
SUBJECT	Platform Mount Analysis	
DATE	03/28/22	PAGE 3 OF

B+T GRP
1717 S. Boulder, Suite 300
Tulsa, OK 74119
(918) 587-4630

Manufacturer	Model	Qty	Aspect Ratio	C_a flat/round	EPA_N (ft^2)	EPA_T (ft^2)	$EPA_{N\text{-}Ice}$ (ft^2)	$EPA_{T\text{-}Ice}$ (ft^2)	$F_{A\ No\ Ice\ (N)}$	$F_{A\ No\ Ice\ (T)}$	$F_{A\ Ice\ (N)}$	$F_{A\ Ice\ (T)}$
ERICSSON	AIR 6419 B41_TMO	0.5	1.73	1.20	2.63	1.14	3.36	1.72	0.10	0.04	0.02	0.01
ERICSSON	AIR 6419 B41_TMO	0.5	1.73	1.20	2.63	1.14	3.36	1.72	0.10	0.04	0.02	0.01
RFS/CELWAVE	APXVAARR24_43-U-NA20	0.5	4.00	1.27	7.33	2.66	8.51	3.69	0.27	0.10	0.05	0.02
RFS/CELWAVE	APXVAARR24_43-U-NA20	0.5	4.00	1.27	7.33	2.66	8.51	3.69	0.27	0.10	0.05	0.02
ERICSSON	Radio 4449 B71 B85A_T-Mobile	1	1.36	1.20	1.64	1.32	2.47	2.09	0.06	0.05	0.01	0.01
COMMSCOPE	VV-65A-R1_TMO	0.5	4.56	1.29	2.28	0.87	3.12	1.63	0.10	0.04	0.02	0.01
COMMSCOPE	VV-65A-R1_TMO	0.5	4.56	1.29	2.28	0.87	3.12	1.63	0.10	0.04	0.02	0.01
ERICSSON	RADIO 4460 B2/B25 B66_TMO	1	1.13	1.20	1.78	1.40	2.63	2.18	0.07	0.05	0.01	0.01

APPENDIX C

SOFTWARE ANALYSIS OUTPUT

Node Coordinates

	Label	X [ft]	Y [ft]	Z [ft]	Detach From Diaphragm
1	1	0	0	0	
2	2	0	0	-2.066267	
3	3	0	0	-7.232867	
4	4	0.520835	0	-7.232867	
5	5	0.645835	0	-7.01636	
6	6	-0.520835	0	-7.232867	
7	7	-0.645835	0	-7.01636	
8	8	0.583335	0	-7.124614	
9	9	0.727673	0	-7.207947	
10	10	-0.583335	0	-7.124614	
11	11	-0.727673	0	-7.207947	
12	12	-1.78944	0	1.033133	
13	13	-6.263846	0	3.616433	
14	14	-6.524264	0	3.165377	
15	15	-6.399264	0	2.948871	
16	16	-6.003429	0	4.06749	
17	17	-5.753429	0	4.06749	
18	18	-6.461764	0	3.057124	
19	19	-6.606101	0	2.973791	
20	20	-5.878429	0	4.06749	
21	21	-5.878429	0	4.234156	
22	22	1.78944	0	1.033133	
23	23	6.263846	0	3.616433	
24	24	6.003429	0	4.06749	
25	25	5.753429	0	4.06749	
26	26	6.524264	0	3.165377	
27	27	6.399264	0	2.948871	
28	28	5.878429	0	4.06749	
29	29	5.878429	0	4.234156	
30	30	6.461764	0	3.057124	
31	31	6.606101	0	2.973791	
32	32	-7.25	0	4.234156	
33	33	7	0	4.234156	
34	34	7.291887	0	4.161606	
35	35	0.166887	0	-8.179256	
36	36	-0.041887	0	-8.395762	
37	37	-7.166887	0	3.9451	
38	38	2.625719	0	-3.357934	
39	39	2.625719	0	-3.128767	
40	40	2.625719	0	-3.5871	
41	41	2.500719	0	-3.803606	
42	42	2.563219	0	-3.695353	
43	43	2.707557	0	-3.778687	
44	44	0	0	-3.357934	
45	45	-2.625719	0	-3.357934	
46	46	-2.625719	0	-3.128767	
47	47	-2.625719	0	-3.5871	
48	48	-2.500719	0	-3.803606	
49	49	-2.563219	0	-3.695353	
50	50	-2.707557	0	-3.778687	
51	51	2.222806	0	-3.357934	
52	52	0	0	-7.207947	
53	53	-2.222806	0	-3.357934	
54	54	-4.220915	0	-0.594973	
55	55	-4.022451	0	-0.709556	

Node Coordinates (Continued)

	Label	X [ft]	Y [ft]	Z [ft]	Detach From Diaphragm
56	56	-4.419379	0	-0.48039	
57	57	-4.544379	0	-0.263883	
58	58	-4.481879	0	-0.372137	
59	59	-4.626217	0	-0.45547	
60	60	-2.908056	0	1.678967	
61	61	-1.595196	0	3.952907	
62	62	-1.396732	0	3.838323	
63	63	-1.79366	0	4.06749	
64	64	-2.04366	0	4.06749	
65	65	-1.91866	0	4.06749	
66	66	-1.91866	0	4.234156	
67	67	-4.019459	0	-0.24604	
68	68	-6.242265	0	3.603973	
69	69	-1.796653	0	3.603973	
70	70	1.595196	0	3.952907	
71	71	1.396732	0	3.838323	
72	72	1.79366	0	4.06749	
73	73	2.04366	0	4.06749	
74	74	1.91866	0	4.06749	
75	75	1.91866	0	4.234156	
76	76	2.908056	0	1.678967	
77	77	4.220915	0	-0.594973	
78	78	4.022451	0	-0.709556	
79	79	4.419379	0	-0.48039	
80	80	4.544379	0	-0.263883	
81	81	4.481879	0	-0.372137	
82	82	4.626217	0	-0.45547	
83	83	1.796653	0	3.603973	
84	84	6.242265	0	3.603973	
85	85	4.019459	0	-0.24604	
86	86	5.5	0	4.234156	
87	87	5.5	0	4.479156	
88	88	5.5	5	4.479156	
89	89	5.5	-1	4.479156	
90	90	-0.083333	0	4.234156	
91	91	-0.083333	0	4.49999	
92	92	-0.083333	6.249997	4.49999	
93	93	-0.083333	-2.749667	4.49999	
94	94	-5.541667	0	4.234156	
95	95	-5.541667	0	4.479156	
96	96	-5.541667	5	4.479156	
97	97	-5.541667	-1	4.479156	
98	98	0.916887	0	-6.880218	
99	99	1.129063	0	-7.002718	
100	100	1.129063	5	-7.002718	
101	101	1.129063	-1	-7.002718	
102	102	3.708554	0	-2.044909	
103	103	3.938772	0	-2.177826	
104	104	3.938772	6.249997	-2.177826	
105	105	3.938772	-2.749667	-2.177826	
106	106	6.43772	0	2.682146	
107	107	6.649897	0	2.559646	
108	108	6.649897	5	2.559646	
109	109	6.649897	-1	2.559646	
110	110	-6.333554	0	2.501724	

Node Coordinates (Continued)

	Label	X [ft]	Y [ft]	Z [ft]	Detach From Diaphragm
111	111	-6.54573	0	2.379224	
112	112	-6.54573	5	2.379224	
113	113	-6.54573	-1	2.379224	
114	114	-3.666887	0	-2.117079	
115	115	-3.897105	0	-2.249995	
116	116	-3.897105	6.249997	-2.249995	
117	117	-3.897105	-2.749667	-2.249995	
118	118	-0.958554	0	-6.808049	
119	119	-1.17073	0	-6.930549	
120	120	-1.17073	5	-6.930549	
121	121	-1.17073	-1	-6.930549	
122	122	-6.25	3	4.234156	
123	123	6.25	3	4.234156	
124	124	5.5	3	4.234156	
125	125	5.5	3	4.479156	
126	126	-0.083333	3	4.234156	
127	127	-0.083333	3	4.49999	
128	128	-5.541667	3	4.234156	
129	129	-5.541667	3	4.479156	
130	130	0.916887	3	-6.880218	
131	131	1.129063	3	-7.002718	
132	132	3.708554	3	-2.044909	
133	133	3.938772	3	-2.177826	
134	134	6.43772	3	2.682146	
135	135	6.649897	3	2.559646	
136	136	-6.333554	3	2.501724	
137	137	-6.54573	3	2.379224	
138	138	-3.666887	3	-2.117078	
139	139	-3.897105	3	-2.249995	
140	140	-0.958554	3	-6.808049	
141	141	-1.17073	3	-6.930549	
142	142	0.66735	3	-7.312429	
143	143	-0.66735	3	-7.312429	
144	144	-6.666424	3	3.078273	
145	145	-5.999074	3	4.234156	
146	146	5.999074	3	4.234156	
147	147	6.666424	3	3.078273	
148	148	6.791887	3	3.295581	
149	149	0.541887	3	-7.529737	
150	150	-0.541887	3	-7.529737	
151	151	-6.791887	3	3.295581	

Node Boundary Conditions

	Node Label	X [k/in]	Y [k/in]	Z [k/in]	X Rot [k-ft/rad]	Y Rot [k-ft/rad]	Z Rot [k-ft/rad]
1	12	Reaction	Reaction	Reaction	Reaction	Reaction	Reaction
2	22	Reaction	Reaction	Reaction	Reaction	Reaction	Reaction
3	2	Reaction	Reaction	Reaction	Reaction	Reaction	Reaction

Hot Rolled Steel Properties

	Label	E [ksi]	G [ksi]	Nu	Therm. Coeff. [1e^{5}°F^{-1}]	Density [k/ft^{3}]	Yield [ksi]	Ry	Fu [ksi]	Rt
1	A992	29000	11154	0.3	0.65	0.49	50	1.1	65	1.1
2	A36 Gr.36	29000	11154	0.3	0.65	0.49	36	1.5	58	1.2
3	A572 Gr.50	29000	11154	0.3	0.65	0.49	50	1.1	65	1.1

Hot Rolled Steel Properties (Continued)

	Label	E [ksi]	G [ksi]	Nu	Therm. Coeff. [1e⁵°F⁻¹]	Density [k/ft³]	Yield [ksi]	Ry	Fu [ksi]	Rt
4	A500 Gr.B RND	29000	11154	0.3	0.65	0.527	42	1.4	58	1.3
5	A500 Gr.B Rect	29000	11154	0.3	0.65	0.527	46	1.4	58	1.3
6	A53 Gr.B	29000	11154	0.3	0.65	0.49	35	1.6	60	1.2
7	A1085	29000	11154	0.3	0.65	0.49	50	1.4	65	1.3

Hot Rolled Steel Section Sets

	Label	Shape	Type	Design List	Material	Design Rule	Area [in²]	Iyy [in⁴]	Izz [in⁴]	J [in⁴]
1	MF-P1	PIPE_2.0	Column	None	A53 Gr.B	Typical	1.02	0.627	0.627	1.25
2	MF-P2	PIPE_2.5	Column	None	A53 Gr.B	Typical	1.61	1.45	1.45	2.89
3	MF-H1	PIPE_3.0	Beam	None	A53 Gr.B	Typical	2.07	2.85	2.85	5.69
4	HR	PIPE_2.0	Beam	None	A53 Gr.B	Typical	1.02	0.627	0.627	1.25
5	F1-S1	HSS4X4X4	Beam	None	A500 Gr.B Rect	Typical	3.37	7.8	7.8	12.8
6	F1-SA1	L2x2x3	Beam	Single Angle	A36 Gr.36	Typical	0.722	0.271	0.271	0.009
7	CP-1	PL1/2x6	Beam	None	A36 Gr.36	Typical	3	0.063	9	0.237
8	CA-1	L2.5x2.5x4	Beam	Single Angle	A36 Gr.36	Typical	1.19	0.692	0.692	0.026
9	MF-H2	PIPE_2.0	Column	None	A53 Gr.B	Typical	1.02	0.627	0.627	1.25
10	MF-A1	L2.5x2.5x4	Beam	Single Angle	A36 Gr.36	Typical	1.19	0.692	0.692	0.026

Member Primary Data

	Label	I Node	J Node	Rotate(deg)	Section/Shape	Type	Design List	Material	Design Rule
1	1	2	3		F1-S1	Beam	None	A500 Gr.B Rect	Typical
2	2	6	4		CP-1	Beam	None	A36 Gr.36	Typical
3	3	4	5		CP-1	Beam	None	A36 Gr.36	Typical
4	4	6	7		CP-1	Beam	None	A36 Gr.36	Typical
5	5	8	9		RIGID	None	None	RIGID	Typical
6	6	10	11		RIGID	None	None	RIGID	Typical
7	7	12	13		F1-S1	Beam	None	A500 Gr.B Rect	Typical
8	8	16	14		CP-1	Beam	None	A36 Gr.36	Typical
9	9	14	15		CP-1	Beam	None	A36 Gr.36	Typical
10	10	16	17		CP-1	Beam	None	A36 Gr.36	Typical
11	11	18	19		RIGID	None	None	RIGID	Typical
12	12	20	21		RIGID	None	None	RIGID	Typical
13	13	22	23		F1-S1	Beam	None	A500 Gr.B Rect	Typical
14	14	26	24		CP-1	Beam	None	A36 Gr.36	Typical
15	15	24	25		CP-1	Beam	None	A36 Gr.36	Typical
16	16	26	27		CP-1	Beam	None	A36 Gr.36	Typical
17	17	28	29		RIGID	None	None	RIGID	Typical
18	18	30	31		RIGID	None	None	RIGID	Typical
19	19	32	33		MF-H1	Beam	None	A53 Gr.B	Typical
20	20	34	35		MF-H1	Beam	None	A53 Gr.B	Typical
21	21	36	37		MF-H1	Beam	None	A53 Gr.B	Typical
22	22	44	38		F1-S1	Beam	None	A500 Gr.B Rect	Typical
23	23	40	39		CP-1	Beam	None	A36 Gr.36	Typical
24	24	40	41		CP-1	Beam	None	A36 Gr.36	Typical
25	25	42	43		RIGID	None	None	RIGID	Typical
26	26	44	45		F1-S1	Beam	None	A500 Gr.B Rect	Typical
27	27	47	46		CP-1	Beam	None	A36 Gr.36	Typical
28	28	47	48		CP-1	Beam	None	A36 Gr.36	Typical
29	29	49	50		RIGID	None	None	RIGID	Typical
30	30	52	51		F1-SA1	Beam	Single Angle	A36 Gr.36	Typical
31	31	52	53	270	F1-SA1	Beam	Single Angle	A36 Gr.36	Typical
32	32	60	54		F1-S1	Beam	None	A500 Gr.B Rect	Typical
33	33	56	55		CP-1	Beam	None	A36 Gr.36	Typical

Member Primary Data (Continued)

	Label	I Node	J Node	Rotate(deg)	Section/Shape	Type	Design List	Material	Design Rule
34	34	56	57		CP-1	Beam	None	A36 Gr.36	Typical
35	35	58	59		RIGID	None	None	RIGID	Typical
36	36	60	61		F1-S1	Beam	None	A500 Gr.B Rect	Typical
37	37	63	62		CP-1	Beam	None	A36 Gr.36	Typical
38	38	63	64		CP-1	Beam	None	A36 Gr.36	Typical
39	39	65	66		RIGID	None	None	RIGID	Typical
40	40	68	67		F1-SA1	Beam	Single Angle	A36 Gr.36	Typical
41	41	68	69	270	F1-SA1	Beam	Single Angle	A36 Gr.36	Typical
42	42	76	70		F1-S1	Beam	None	A500 Gr.B Rect	Typical
43	43	72	71		CP-1	Beam	None	A36 Gr.36	Typical
44	44	72	73		CP-1	Beam	None	A36 Gr.36	Typical
45	45	74	75		RIGID	None	None	RIGID	Typical
46	46	76	77		F1-S1	Beam	None	A500 Gr.B Rect	Typical
47	47	79	78		CP-1	Beam	None	A36 Gr.36	Typical
48	48	79	80		CP-1	Beam	None	A36 Gr.36	Typical
49	49	81	82		RIGID	None	None	RIGID	Typical
50	50	84	83		F1-SA1	Beam	Single Angle	A36 Gr.36	Typical
51	51	84	85	270	F1-SA1	Beam	Single Angle	A36 Gr.36	Typical
52	52	86	87		RIGID	None	None	RIGID	Typical
53	53	88	89		MF-P1	Column	None	A53 Gr.B	Typical
54	54	90	91		RIGID	None	None	RIGID	Typical
55	55	92	93		MF-P2	Column	None	A53 Gr.B	Typical
56	56	94	95		RIGID	None	None	RIGID	Typical
57	57	96	97		MF-P1	Column	None	A53 Gr.B	Typical
58	58	98	99		RIGID	None	None	RIGID	Typical
59	59	100	101		MF-P1	Column	None	A53 Gr.B	Typical
60	60	102	103		RIGID	None	None	RIGID	Typical
61	61	104	105		MF-P2	Column	None	A53 Gr.B	Typical
62	62	106	107		RIGID	None	None	RIGID	Typical
63	63	108	109		MF-P1	Column	None	A53 Gr.B	Typical
64	64	110	111		RIGID	None	None	RIGID	Typical
65	65	112	113		MF-P1	Column	None	A53 Gr.B	Typical
66	66	114	115		RIGID	None	None	RIGID	Typical
67	67	116	117		MF-P2	Column	None	A53 Gr.B	Typical
68	68	118	119		RIGID	None	None	RIGID	Typical
69	69	120	121		MF-P1	Column	None	A53 Gr.B	Typical
70	70	122	123		MF-H2	Column	None	A53 Gr.B	Typical
71	71	124	125		RIGID	None	None	RIGID	Typical
72	72	126	127		RIGID	None	None	RIGID	Typical
73	73	128	129		RIGID	None	None	RIGID	Typical
74	74	130	131		RIGID	None	None	RIGID	Typical
75	75	132	133		RIGID	None	None	RIGID	Typical
76	76	134	135		RIGID	None	None	RIGID	Typical
77	77	136	137		RIGID	None	None	RIGID	Typical
78	78	138	139		RIGID	None	None	RIGID	Typical
79	79	140	141		RIGID	None	None	RIGID	Typical
80	80	142	143	90	MF-A1	Beam	Single Angle	A36 Gr.36	Typical
81	81	144	145	90	MF-A1	Beam	Single Angle	A36 Gr.36	Typical
82	82	146	147	90	MF-A1	Beam	Single Angle	A36 Gr.36	Typical
83	83	148	149		MF-H2	Column	None	A53 Gr.B	Typical
84	84	150	151		MF-H2	Column	None	A53 Gr.B	Typical

Member Advanced Data

	Label	J Release	Physical	Deflection Ratio Options	Seismic DR
1	1		Yes	N/A	None
2	2		Yes	N/A	None
3	3		Yes	N/A	None
4	4		Yes	N/A	None
5	5	OOOOOX	Yes	** NA **	None
6	6	OOOOOX	Yes	** NA **	None
7	7		Yes	N/A	None
8	8		Yes	N/A	None
9	9		Yes	N/A	None
10	10		Yes	N/A	None
11	11	OOOOOX	Yes	** NA **	None
12	12	OOOOOX	Yes	** NA **	None
13	13		Yes	N/A	None
14	14		Yes	N/A	None
15	15		Yes	N/A	None
16	16		Yes	N/A	None
17	17	OOOOOX	Yes	** NA **	None
18	18	OOOOOX	Yes	** NA **	None
19	19		Yes	N/A	None
20	20		Yes	N/A	None
21	21		Yes	N/A	None
22	22		Yes	N/A	None
23	23		Yes	N/A	None
24	24		Yes	N/A	None
25	25	OOOOOX	Yes	** NA **	None
26	26		Yes	N/A	None
27	27		Yes	N/A	None
28	28		Yes	N/A	None
29	29	OOOOOX	Yes	** NA **	None
30	30		Yes	N/A	None
31	31		Yes	N/A	None
32	32		Yes	N/A	None
33	33		Yes	N/A	None
34	34		Yes	N/A	None
35	35	OOOOOX	Yes	** NA **	None
36	36		Yes	N/A	None
37	37		Yes	N/A	None
38	38		Yes	N/A	None
39	39	OOOOOX	Yes	** NA **	None
40	40		Yes	N/A	None
41	41		Yes	N/A	None
42	42		Yes	N/A	None
43	43		Yes	N/A	None
44	44		Yes	N/A	None
45	45	OOOOOX	Yes	** NA **	None
46	46		Yes	N/A	None
47	47		Yes	N/A	None
48	48		Yes	N/A	None
49	49	OOOOOX	Yes	** NA **	None
50	50		Yes	N/A	None
51	51		Yes	N/A	None
52	52		Yes	** NA **	None
53	53		Yes	** NA **	None
54	54		Yes	** NA **	None
55	55		Yes	** NA **	None

Member Advanced Data (Continued)

	Label	J Release	Physical	Deflection Ratio Options	Seismic DR
56	56		Yes	** NA **	None
57	57		Yes	** NA **	None
58	58		Yes	** NA **	None
59	59		Yes	** NA **	None
60	60		Yes	** NA **	None
61	61		Yes	** NA **	None
62	62		Yes	** NA **	None
63	63		Yes	** NA **	None
64	64		Yes	** NA **	None
65	65		Yes	** NA **	None
66	66		Yes	** NA **	None
67	67		Yes	** NA **	None
68	68		Yes	** NA **	None
69	69		Yes	** NA **	None
70	70		Yes	** NA **	None
71	71		Yes	** NA **	None
72	72		Yes	** NA **	None
73	73		Yes	** NA **	None
74	74		Yes	** NA **	None
75	75		Yes	** NA **	None
76	76		Yes	** NA **	None
77	77		Yes	** NA **	None
78	78		Yes	** NA **	None
79	79		Yes	** NA **	None
80	80		Yes	N/A	None
81	81		Yes	N/A	None
82	82		Yes	N/A	None
83	83		Yes	** NA **	None
84	84		Yes	** NA **	None

Hot Rolled Steel Design Parameters

	Label	Shape	Length [ft]	Lcomp top [ft]	Function
1	1	F1-S1	5.167	Lbyy	Lateral
2	2	CP-1	1.042	Lbyy	Lateral
3	3	CP-1	0.25	Lbyy	Lateral
4	4	CP-1	0.25	Lbyy	Lateral
5	7	F1-S1	5.167	Lbyy	Lateral
6	8	CP-1	1.042	Lbyy	Lateral
7	9	CP-1	0.25	Lbyy	Lateral
8	10	CP-1	0.25	Lbyy	Lateral
9	13	F1-S1	5.167	Lbyy	Lateral
10	14	CP-1	1.042	Lbyy	Lateral
11	15	CP-1	0.25	Lbyy	Lateral
12	16	CP-1	0.25	Lbyy	Lateral
13	19	MF-H1	14.25	Lbyy	Lateral
14	20	MF-H1	14.25	Lbyy	Lateral
15	21	MF-H1	14.25	Lbyy	Lateral
16	22	F1-S1	2.626	Lbyy	Lateral
17	23	CP-1	0.458	Lbyy	Lateral
18	24	CP-1	0.25	Lbyy	Lateral
19	26	F1-S1	2.626	Lbyy	Lateral
20	27	CP-1	0.458	Lbyy	Lateral
21	28	CP-1	0.25	Lbyy	Lateral
22	30	F1-SA1	4.446	Lbyy	Lateral
23	31	F1-SA1	4.446	Lbyy	Lateral

Hot Rolled Steel Design Parameters (Continued)

	Label	Shape	Length [ft]	Lcomp top [ft]	Function
24	32	F1-S1	2.626	Lbyy	Lateral
25	33	CP-1	0.458	Lbyy	Lateral
26	34	CP-1	0.25	Lbyy	Lateral
27	36	F1-S1	2.626	Lbyy	Lateral
28	37	CP-1	0.458	Lbyy	Lateral
29	38	CP-1	0.25	Lbyy	Lateral
30	40	F1-SA1	4.446	Lbyy	Lateral
31	41	F1-SA1	4.446	Lbyy	Lateral
32	42	F1-S1	2.626	Lbyy	Lateral
33	43	CP-1	0.458	Lbyy	Lateral
34	44	CP-1	0.25	Lbyy	Lateral
35	46	F1-S1	2.626	Lbyy	Lateral
36	47	CP-1	0.458	Lbyy	Lateral
37	48	CP-1	0.25	Lbyy	Lateral
38	50	F1-SA1	4.446	Lbyy	Lateral
39	51	F1-SA1	4.446	Lbyy	Lateral
40	53	MF-P1	6	Lbyy	Lateral
41	55	MF-P2	9	Lbyy	Lateral
42	57	MF-P1	6	Lbyy	Lateral
43	59	MF-P1	6	Lbyy	Lateral
44	61	MF-P2	9	Lbyy	Lateral
45	63	MF-P1	6	Lbyy	Lateral
46	65	MF-P1	6	Lbyy	Lateral
47	67	MF-P2	9	Lbyy	Lateral
48	69	MF-P1	6	Lbyy	Lateral
49	70	MF-H2	12.5	Lbyy	Lateral
50	80	MF-A1	1.335	Lbyy	Lateral
51	81	MF-A1	1.335	Lbyy	Lateral
52	82	MF-A1	1.335	Lbyy	Lateral
53	83	MF-H2	12.5	Lbyy	Lateral
54	84	MF-H2	12.5	Lbyy	Lateral

Member Point Loads (BLC 1 : Dead)

	Member Label	Direction	Magnitude [k, k-ft]	Location [(ft, %)]
1	53	Y	-0.048	%5
2	53	Y	-0.048	%55
3	53	Y	0	0
4	53	Y	0	0
5	53	Y	0	0
6	55	Y	-0.064	%5
7	55	Y	-0.064	%80
8	55	Y	-0.073	%55
9	55	Y	0	0
10	55	Y	0	0
11	57	Y	-0.017	%5
12	57	Y	-0.017	%85
13	57	Y	-0.109	%25
14	57	Y	0	0
15	57	Y	0	0
16	65	Y	-0.048	%5
17	65	Y	-0.048	%55
18	65	Y	0	0
19	65	Y	0	0
20	65	Y	0	0
21	67	Y	-0.064	%5

Member Point Loads (BLC 1 : Dead) (Continued)

	Member Label	Direction	Magnitude [k, k-ft]	Location [(ft, %)]
22	67	Y	-0.064	%80
23	67	Y	-0.073	%55
24	67	Y	0	0
25	67	Y	0	0
26	69	Y	-0.017	%5
27	69	Y	-0.017	%85
28	69	Y	-0.109	%25
29	69	Y	0	0
30	69	Y	0	0
31	59	Y	-0.048	%5
32	59	Y	-0.048	%55
33	59	Y	0	0
34	59	Y	0	0
35	59	Y	0	0
36	61	Y	-0.064	%5
37	61	Y	-0.064	%80
38	61	Y	-0.073	%55
39	61	Y	0	0
40	61	Y	0	0
41	63	Y	-0.017	%5
42	63	Y	-0.017	%85
43	63	Y	-0.109	%25
44	63	Y	0	0
45	63	Y	0	0

Member Point Loads (BLC 2 : 0 Wind - No Ice)

	Member Label	Direction	Magnitude [k, k-ft]	Location [(ft, %)]
1	53	Z	-0.103	%5
2	53	Z	-0.103	%55
3	53	Z	0	0
4	53	Z	0	0
5	53	Z	0	0
6	55	Z	-0.266	%5
7	55	Z	-0.266	%80
8	55	Z	-0.064	%55
9	55	Z	0	0
10	55	Z	0	0
11	57	Z	-0.096	%5
12	57	Z	-0.096	%85
13	57	Z	-0.07	%25
14	57	Z	0	0
15	57	Z	0	0
16	65	Z	-0.103	%5
17	65	Z	-0.103	%55
18	65	Z	0	0
19	65	Z	0	0
20	65	Z	0	0
21	67	Z	-0.266	%5
22	67	Z	-0.266	%80
23	67	Z	-0.064	%55
24	67	Z	0	0
25	67	Z	0	0
26	69	Z	-0.096	%5
27	69	Z	-0.096	%85
28	69	Z	-0.07	%25

Member Point Loads (BLC 2 : 0 Wind - No Ice) (Continued)

	Member Label	Direction	Magnitude [k, k-ft]	Location [(ft, %)]
29	69	Z	0	0
30	69	Z	0	0
31	59	Z	-0.103	%5
32	59	Z	-0.103	%55
33	59	Z	0	0
34	59	Z	0	0
35	59	Z	0	0
36	61	Z	-0.266	%5
37	61	Z	-0.266	%80
38	61	Z	-0.064	%55
39	61	Z	0	0
40	61	Z	0	0
41	63	Z	-0.096	%5
42	63	Z	-0.096	%85
43	63	Z	-0.07	%25
44	63	Z	0	0
45	63	Z	0	0

Member Point Loads (BLC 3 : 90 Wind - No Ice)

	Member Label	Direction	Magnitude [k, k-ft]	Location [(ft, %)]
1	53	X	-0.044	%5
2	53	X	-0.044	%55
3	53	X	0	0
4	53	X	0	0
5	53	X	0	0
6	55	X	-0.096	%5
7	55	X	-0.096	%80
8	55	X	-0.052	%55
9	55	X	0	0
10	55	X	0	0
11	57	X	-0.037	%5
12	57	X	-0.037	%85
13	57	X	-0.055	%25
14	57	X	0	0
15	57	X	0	0
16	65	X	-0.044	%5
17	65	X	-0.044	%55
18	65	X	0	0
19	65	X	0	0
20	65	X	0	0
21	67	X	-0.096	%5
22	67	X	-0.096	%80
23	67	X	-0.052	%55
24	67	X	0	0
25	67	X	0	0
26	69	X	-0.037	%5
27	69	X	-0.037	%85
28	69	X	-0.055	%25
29	69	X	0	0
30	69	X	0	0
31	59	X	-0.044	%5
32	59	X	-0.044	%55
33	59	X	0	0
34	59	X	0	0
35	59	X	0	0

Member Point Loads (BLC 3 : 90 Wind - No Ice) (Continued)

	Member Label	Direction	Magnitude [k, k-ft]	Location [(ft, %)]
36	61	X	-0.096	%5
37	61	X	-0.096	%80
38	61	X	-0.052	%55
39	61	X	0	0
40	61	X	0	0
41	63	X	-0.037	%5
42	63	X	-0.037	%85
43	63	X	-0.055	%25
44	63	X	0	0
45	63	X	0	0

Member Point Loads (BLC 4 : 0 Wind - Ice)

	Member Label	Direction	Magnitude [k, k-ft]	Location [(ft, %)]
1	53	Z	-0.018	%5
2	53	Z	-0.018	%55
3	53	Z	0	0
4	53	Z	0	0
5	53	Z	0	0
6	55	Z	-0.054	%5
7	55	Z	-0.054	%80
8	55	Z	-0.011	%55
9	55	Z	0	0
10	55	Z	0	0
11	57	Z	-0.017	%5
12	57	Z	-0.017	%85
13	57	Z	-0.012	%25
14	57	Z	0	0
15	57	Z	0	0
16	65	Z	-0.018	%5
17	65	Z	-0.018	%55
18	65	Z	0	0
19	65	Z	0	0
20	65	Z	0	0
21	67	Z	-0.054	%5
22	67	Z	-0.054	%80
23	67	Z	-0.011	%55
24	67	Z	0	0
25	67	Z	0	0
26	69	Z	-0.017	%5
27	69	Z	-0.017	%85
28	69	Z	-0.012	%25
29	69	Z	0	0
30	69	Z	0	0
31	59	Z	-0.018	%5
32	59	Z	-0.018	%55
33	59	Z	0	0
34	59	Z	0	0
35	59	Z	0	0
36	61	Z	-0.054	%5
37	61	Z	-0.054	%80
38	61	Z	-0.011	%55
39	61	Z	0	0
40	61	Z	0	0
41	63	Z	-0.017	%5
42	63	Z	-0.017	%85

Member Point Loads (BLC 4 : 0 Wind - Ice) (Continued)

	Member Label	Direction	Magnitude [k, k-ft]	Location [(ft, %)]
43	63	Z	-0.012	%25
44	63	Z	0	0
45	63	Z	0	0

Member Point Loads (BLC 5 : 90 Wind - Ice)

	Member Label	Direction	Magnitude [k, k-ft]	Location [(ft, %)]
1	53	X	-0.008	%5
2	53	X	-0.008	%55
3	53	X	0	0
4	53	X	0	0
5	53	X	0	0
6	55	X	-0.024	%5
7	55	X	-0.024	%80
8	55	X	-0.009	%55
9	55	X	0	0
10	55	X	0	0
11	57	X	-0.007	%5
12	57	X	-0.007	%85
13	57	X	-0.01	%25
14	57	X	0	0
15	57	X	0	0
16	65	X	-0.008	%5
17	65	X	-0.008	%55
18	65	X	0	0
19	65	X	0	0
20	65	X	0	0
21	67	X	-0.024	%5
22	67	X	-0.024	%80
23	67	X	-0.009	%55
24	67	X	0	0
25	67	X	0	0
26	69	X	-0.007	%5
27	69	X	-0.007	%85
28	69	X	-0.01	%25
29	69	X	0	0
30	69	X	0	0
31	59	X	-0.008	%5
32	59	X	-0.008	%55
33	59	X	0	0
34	59	X	0	0
35	59	X	0	0
36	61	X	-0.024	%5
37	61	X	-0.024	%80
38	61	X	-0.009	%55
39	61	X	0	0
40	61	X	0	0
41	63	X	-0.007	%5
42	63	X	-0.007	%85
43	63	X	-0.01	%25
44	63	X	0	0
45	63	X	0	0

Member Point Loads (BLC 6 : 0 Wind - Service)

	Member Label	Direction	Magnitude [k, k-ft]	Location [(ft, %)]
1	53	Z	-0.007	%5
2	53	Z	-0.007	%55
3	53	Z	0	0
4	53	Z	0	0
5	53	Z	0	0
6	55	Z	-0.017	%5
7	55	Z	-0.017	%80
8	55	Z	-0.004	%55
9	55	Z	0	0
10	55	Z	0	0
11	57	Z	-0.006	%5
12	57	Z	-0.006	%85
13	57	Z	-0.004	%25
14	57	Z	0	0
15	57	Z	0	0
16	65	Z	-0.007	%5
17	65	Z	-0.007	%55
18	65	Z	0	0
19	65	Z	0	0
20	65	Z	0	0
21	67	Z	-0.017	%5
22	67	Z	-0.017	%80
23	67	Z	-0.004	%55
24	67	Z	0	0
25	67	Z	0	0
26	69	Z	-0.006	%5
27	69	Z	-0.006	%85
28	69	Z	-0.004	%25
29	69	Z	0	0
30	69	Z	0	0
31	59	Z	-0.007	%5
32	59	Z	-0.007	%55
33	59	Z	0	0
34	59	Z	0	0
35	59	Z	0	0
36	61	Z	-0.017	%5
37	61	Z	-0.017	%80
38	61	Z	-0.004	%55
39	61	Z	0	0
40	61	Z	0	0
41	63	Z	-0.006	%5
42	63	Z	-0.006	%85
43	63	Z	-0.004	%25
44	63	Z	0	0
45	63	Z	0	0

Member Point Loads (BLC 7 : 90 Wind - Service)

	Member Label	Direction	Magnitude [k, k-ft]	Location [(ft, %)]
1	53	X	-0.003	%5
2	53	X	-0.003	%55
3	53	X	0	0
4	53	X	0	0
5	53	X	0	0
6	55	X	-0.006	%5

Member Point Loads (BLC 7 : 90 Wind - Service) (Continued)

	Member Label	Direction	Magnitude [k, k-ft]	Location [(ft, %)]
7	55	X	-0.006	%80
8	55	X	-0.003	%55
9	55	X	0	0
10	55	X	0	0
11	57	X	-0.002	%5
12	57	X	-0.002	%85
13	57	X	-0.004	%25
14	57	X	0	0
15	57	X	0	0
16	65	X	-0.003	%5
17	65	X	-0.003	%55
18	65	X	0	0
19	65	X	0	0
20	65	X	0	0
21	67	X	-0.006	%5
22	67	X	-0.006	%80
23	67	X	-0.003	%55
24	67	X	0	0
25	67	X	0	0
26	69	X	-0.002	%5
27	69	X	-0.002	%85
28	69	X	-0.004	%25
29	69	X	0	0
30	69	X	0	0
31	59	X	-0.003	%5
32	59	X	-0.003	%55
33	59	X	0	0
34	59	X	0	0
35	59	X	0	0
36	61	X	-0.006	%5
37	61	X	-0.006	%80
38	61	X	-0.003	%55
39	61	X	0	0
40	61	X	0	0
41	63	X	-0.002	%5
42	63	X	-0.002	%85
43	63	X	-0.004	%25
44	63	X	0	0
45	63	X	0	0

Member Point Loads (BLC 8 : Ice)

	Member Label	Direction	Magnitude [k, k-ft]	Location [(ft, %)]
1	53	Y	-0.078	%5
2	53	Y	-0.078	%55
3	53	Y	0	0
4	53	Y	0	0
5	53	Y	0	0
6	55	Y	-0.261	%5
7	55	Y	-0.261	%80
8	55	Y	-0.059	%55
9	55	Y	0	0
10	55	Y	0	0
11	57	Y	-0.07	%5
12	57	Y	-0.07	%85
13	57	Y	-0.063	%25

Member Point Loads (BLC 8 : Ice) (Continued)

	Member Label	Direction	Magnitude [k, k-ft]	Location [(ft, %)]
14	57	Y	0	0
15	57	Y	0	0
16	65	Y	-0.078	%5
17	65	Y	-0.078	%55
18	65	Y	0	0
19	65	Y	0	0
20	65	Y	0	0
21	67	Y	-0.261	%5
22	67	Y	-0.261	%80
23	67	Y	-0.059	%55
24	67	Y	0	0
25	67	Y	0	0
26	69	Y	-0.07	%5
27	69	Y	-0.07	%85
28	69	Y	-0.063	%25
29	69	Y	0	0
30	69	Y	0	0
31	59	Y	-0.078	%5
32	59	Y	-0.078	%55
33	59	Y	0	0
34	59	Y	0	0
35	59	Y	0	0
36	61	Y	-0.261	%5
37	61	Y	-0.261	%80
38	61	Y	-0.059	%55
39	61	Y	0	0
40	61	Y	0	0
41	63	Y	-0.07	%5
42	63	Y	-0.07	%85
43	63	Y	-0.063	%25
44	63	Y	0	0
45	63	Y	0	0

Member Point Loads (BLC 9 : 0 Seismic)

	Member Label	Direction	Magnitude [k, k-ft]	Location [(ft, %)]
1	53	Z	-0.024	%5
2	53	Z	-0.024	%55
3	53	Z	0	0
4	53	Z	0	0
5	53	Z	0	0
6	55	Z	-0.032	%5
7	55	Z	-0.032	%80
8	55	Z	-0.018	%55
9	55	Z	0	0
10	55	Z	0	0
11	57	Z	-0.008	%5
12	57	Z	-0.008	%85
13	57	Z	-0.027	%25
14	57	Z	0	0
15	57	Z	0	0
16	65	Z	-0.024	%5
17	65	Z	-0.024	%55
18	65	Z	0	0
19	65	Z	0	0
20	65	Z	0	0

Member Point Loads (BLC 9 : 0 Seismic) (Continued)

	Member Label	Direction	Magnitude [k, k-ft]	Location [(ft, %)]
21	67	Z	-0.032	%5
22	67	Z	-0.032	%80
23	67	Z	-0.018	%55
24	67	Z	0	0
25	67	Z	0	0
26	69	Z	-0.008	%5
27	69	Z	-0.008	%85
28	69	Z	-0.027	%25
29	69	Z	0	0
30	69	Z	0	0
31	59	Z	-0.024	%5
32	59	Z	-0.024	%55
33	59	Z	0	0
34	59	Z	0	0
35	59	Z	0	0
36	61	Z	-0.032	%5
37	61	Z	-0.032	%80
38	61	Z	-0.018	%55
39	61	Z	0	0
40	61	Z	0	0
41	63	Z	-0.008	%5
42	63	Z	-0.008	%85
43	63	Z	-0.027	%25
44	63	Z	0	0
45	63	Z	0	0

Member Point Loads (BLC 10 : 90 Seismic)

	Member Label	Direction	Magnitude [k, k-ft]	Location [(ft, %)]
1	53	X	-0.024	%5
2	53	X	-0.024	%55
3	53	X	0	0
4	53	X	0	0
5	53	X	0	0
6	55	X	-0.032	%5
7	55	X	-0.032	%80
8	55	X	-0.018	%55
9	55	X	0	0
10	55	X	0	0
11	57	X	-0.008	%5
12	57	X	-0.008	%85
13	57	X	-0.027	%25
14	57	X	0	0
15	57	X	0	0
16	65	X	-0.024	%5
17	65	X	-0.024	%55
18	65	X	0	0
19	65	X	0	0
20	65	X	0	0
21	67	X	-0.032	%5
22	67	X	-0.032	%80
23	67	X	-0.018	%55
24	67	X	0	0
25	67	X	0	0
26	69	X	-0.008	%5
27	69	X	-0.008	%85

Member Point Loads (BLC 10 : 90 Seismic) (Continued)

	Member Label	Direction	Magnitude [k, k-ft]	Location [(ft, %)]
28	69	X	-0.027	%25
29	69	X	0	0
30	69	X	0	0
31	59	X	-0.024	%5
32	59	X	-0.024	%55
33	59	X	0	0
34	59	X	0	0
35	59	X	0	0
36	61	X	-0.032	%5
37	61	X	-0.032	%80
38	61	X	-0.018	%55
39	61	X	0	0
40	61	X	0	0
41	63	X	-0.008	%5
42	63	X	-0.008	%85
43	63	X	-0.027	%25
44	63	X	0	0
45	63	X	0	0

Member Point Loads (BLC 15 : Maint LL 1)

	Member Label	Direction	Magnitude [k, k-ft]	Location [(ft, %)]
1	70	Y	-0.25	%5

Member Point Loads (BLC 16 : Maint LL 2)

	Member Label	Direction	Magnitude [k, k-ft]	Location [(ft, %)]
1	19	Y	-0.25	%5

Member Point Loads (BLC 17 : Maint LL 3)

	Member Label	Direction	Magnitude [k, k-ft]	Location [(ft, %)]
1	84	Y	-0.25	%5

Member Point Loads (BLC 18 : Maint LL 4)

	Member Label	Direction	Magnitude [k, k-ft]	Location [(ft, %)]
1	21	Y	-0.25	%5

Member Point Loads (BLC 19 : Maint LL 5)

	Member Label	Direction	Magnitude [k, k-ft]	Location [(ft, %)]
1	83	Y	-0.25	%5

Member Point Loads (BLC 20 : Maint LL 6)

	Member Label	Direction	Magnitude [k, k-ft]	Location [(ft, %)]
1	20	Y	-0.25	%5

Member Point Loads (BLC 21 : Maint LL 7)

	Member Label	Direction	Magnitude [k, k-ft]	Location [(ft, %)]
1	70	Y	-0.25	%95

Member Point Loads (BLC 22 : Maint LL 8)

	Member Label	Direction	Magnitude [k, k-ft]	Location [(ft, %)]
1	19	Y	-0.25	%95

Member Point Loads (BLC 23 : Maint LL 9)

	Member Label	Direction	Magnitude [k, k-ft]	Location [(ft, %)]
1	84	Y	-0.25	%95

Member Point Loads (BLC 24 : Maint LL 10)

	Member Label	Direction	Magnitude [k, k-ft]	Location [(ft, %)]
1	21	Y	-0.25	%95

Member Point Loads (BLC 25 : Maint LL 11)

	Member Label	Direction	Magnitude [k, k-ft]	Location [(ft, %)]
1	83	Y	-0.25	%95

Member Point Loads (BLC 26 : Maint LL 12)

	Member Label	Direction	Magnitude [k, k-ft]	Location [(ft, %)]
1	20	Y	-0.25	%95

Member Point Loads (BLC 27 : Maint LL 13)

	Member Label	Direction	Magnitude [k, k-ft]	Location [(ft, %)]
1	7	Y	-0.25	%95

Member Point Loads (BLC 28 : Maint LL 14)

	Member Label	Direction	Magnitude [k, k-ft]	Location [(ft, %)]
1	1	Y	-0.25	%95

Member Distributed Loads (BLC 2 : 0 Wind - No Ice)

	Member Label	Direction	Start Magnitude [k/ft, F, ksf, k-ft/ft]	End Magnitude [k/ft, F, ksf, k-ft/ft]	Start Location [(ft, %)]	End Location [(ft, %)]
1	1	Z	-0.018	-0.018	0	%100
2	2	Z	-0.02	-0.02	0	%100
3	3	Z	-0.02	-0.02	0	%100
4	4	Z	-0.02	-0.02	0	%100
5	7	Z	-0.018	-0.018	0	%100
6	8	Z	-0.02	-0.02	0	%100
7	9	Z	-0.02	-0.02	0	%100
8	10	Z	-0.02	-0.02	0	%100
9	13	Z	-0.018	-0.018	0	%100
10	14	Z	-0.02	-0.02	0	%100
11	15	Z	-0.02	-0.02	0	%100

Member Distributed Loads (BLC 2 : 0 Wind - No Ice) (Continued)

	Member Label	Direction	Start Magnitude [k/ft, F, ksf, k-ft/ft]	End Magnitude [k/ft, F, ksf, k-ft/ft]	Start Location [(ft, %)]	End Location [(ft, %)]
12	16	Z	-0.02	-0.02	0	%100
13	19	Z	-0.011	-0.011	0	%100
14	20	Z	-0.011	-0.011	0	%100
15	21	Z	-0.011	-0.011	0	%100
16	22	Z	-0.015	-0.015	0	%100
17	23	Z	-0.02	-0.02	0	%100
18	24	Z	-0.02	-0.02	0	%100
19	26	Z	-0.015	-0.015	0	%100
20	27	Z	-0.02	-0.02	0	%100
21	28	Z	-0.02	-0.02	0	%100
22	30	Z	-0.011	-0.011	0	%100
23	31	Z	-0.011	-0.011	0	%100
24	32	Z	-0.015	-0.015	0	%100
25	33	Z	-0.02	-0.02	0	%100
26	34	Z	-0.02	-0.02	0	%100
27	36	Z	-0.015	-0.015	0	%100
28	37	Z	-0.02	-0.02	0	%100
29	38	Z	-0.02	-0.02	0	%100
30	40	Z	-0.011	-0.011	0	%100
31	41	Z	-0.011	-0.011	0	%100
32	42	Z	-0.015	-0.015	0	%100
33	43	Z	-0.02	-0.02	0	%100
34	44	Z	-0.02	-0.02	0	%100
35	46	Z	-0.015	-0.015	0	%100
36	47	Z	-0.02	-0.02	0	%100
37	48	Z	-0.02	-0.02	0	%100
38	50	Z	-0.011	-0.011	0	%100
39	51	Z	-0.011	-0.011	0	%100
40	53	Z	-0.008	-0.008	0	%100
41	55	Z	-0.009	-0.009	0	%100
42	57	Z	-0.008	-0.008	0	%100
43	59	Z	-0.008	-0.008	0	%100
44	61	Z	-0.009	-0.009	0	%100
45	63	Z	-0.008	-0.008	0	%100
46	65	Z	-0.008	-0.008	0	%100
47	67	Z	-0.009	-0.009	0	%100
48	69	Z	-0.008	-0.008	0	%100
49	70	Z	-0.008	-0.008	0	%100
50	80	Z	-0.009	-0.009	0	%100
51	81	Z	-0.009	-0.009	0	%100
52	82	Z	-0.009	-0.009	0	%100
53	83	Z	-0.008	-0.008	0	%100
54	84	Z	-0.008	-0.008	0	%100

Member Distributed Loads (BLC 3 : 90 Wind - No Ice)

	Member Label	Direction	Start Magnitude [k/ft, F, ksf, k-ft/ft]	End Magnitude [k/ft, F, ksf, k-ft/ft]	Start Location [(ft, %)]	End Location [(ft, %)]
1	1	X	-0.018	-0.018	0	%100
2	2	X	-0.02	-0.02	0	%100
3	3	X	-0.02	-0.02	0	%100
4	4	X	-0.02	-0.02	0	%100
5	7	X	-0.018	-0.018	0	%100
6	8	X	-0.02	-0.02	0	%100
7	9	X	-0.02	-0.02	0	%100
8	10	X	-0.02	-0.02	0	%100
9	13	X	-0.018	-0.018	0	%100

Member Distributed Loads (BLC 3 : 90 Wind - No Ice) (Continued)

	Member Label	Direction	Start Magnitude [k/ft, F, ksf, k-ft/ft]	End Magnitude [k/ft, F, ksf, k-ft/ft]	Start Location [(ft, %)]	End Location [(ft, %)]
10	14	X	-0.02	-0.02	0	%100
11	15	X	-0.02	-0.02	0	%100
12	16	X	-0.02	-0.02	0	%100
13	19	X	-0.011	-0.011	0	%100
14	20	X	-0.011	-0.011	0	%100
15	21	X	-0.011	-0.011	0	%100
16	22	X	-0.015	-0.015	0	%100
17	23	X	-0.02	-0.02	0	%100
18	24	X	-0.02	-0.02	0	%100
19	26	X	-0.015	-0.015	0	%100
20	27	X	-0.02	-0.02	0	%100
21	28	X	-0.02	-0.02	0	%100
22	30	X	-0.011	-0.011	0	%100
23	31	X	-0.011	-0.011	0	%100
24	32	X	-0.015	-0.015	0	%100
25	33	X	-0.02	-0.02	0	%100
26	34	X	-0.02	-0.02	0	%100
27	36	X	-0.015	-0.015	0	%100
28	37	X	-0.02	-0.02	0	%100
29	38	X	-0.02	-0.02	0	%100
30	40	X	-0.011	-0.011	0	%100
31	41	X	-0.011	-0.011	0	%100
32	42	X	-0.015	-0.015	0	%100
33	43	X	-0.02	-0.02	0	%100
34	44	X	-0.02	-0.02	0	%100
35	46	X	-0.015	-0.015	0	%100
36	47	X	-0.02	-0.02	0	%100
37	48	X	-0.02	-0.02	0	%100
38	50	X	-0.011	-0.011	0	%100
39	51	X	-0.011	-0.011	0	%100
40	53	X	-0.008	-0.008	0	%100
41	55	X	-0.009	-0.009	0	%100
42	57	X	-0.008	-0.008	0	%100
43	59	X	-0.008	-0.008	0	%100
44	61	X	-0.009	-0.009	0	%100
45	63	X	-0.008	-0.008	0	%100
46	65	X	-0.008	-0.008	0	%100
47	67	X	-0.009	-0.009	0	%100
48	69	X	-0.008	-0.008	0	%100
49	70	X	-0.008	-0.008	0	%100
50	80	X	-0.009	-0.009	0	%100
51	81	X	-0.009	-0.009	0	%100
52	82	X	-0.009	-0.009	0	%100
53	83	X	-0.008	-0.008	0	%100
54	84	X	-0.008	-0.008	0	%100

Member Distributed Loads (BLC 4 : 0 Wind - Ice)

	Member Label	Direction	Start Magnitude [k/ft, F, ksf, k-ft/ft]	End Magnitude [k/ft, F, ksf, k-ft/ft]	Start Location [(ft, %)]	End Location [(ft, %)]
1	1	Z	-0.006	-0.006	0	%100
2	2	Z	-0.007	-0.007	0	%100
3	3	Z	-0.012	-0.012	0	%100
4	4	Z	-0.012	-0.012	0	%100
5	7	Z	-0.006	-0.006	0	%100
6	8	Z	-0.007	-0.007	0	%100
7	9	Z	-0.012	-0.012	0	%100

Member Distributed Loads (BLC 4 : 0 Wind - Ice) (Continued)

	Member Label	Direction	Start Magnitude [k/ft, F, ksf, k-ft/ft]	End Magnitude [k/ft, F, ksf, k-ft/ft]	Start Location [(ft, %)]	End Location [(ft, %)]
8	10	Z	-0.012	-0.012	0	%100
9	13	Z	-0.006	-0.006	0	%100
10	14	Z	-0.007	-0.007	0	%100
11	15	Z	-0.012	-0.012	0	%100
12	16	Z	-0.012	-0.012	0	%100
13	19	Z	-0.002	-0.002	0	%100
14	20	Z	-0.002	-0.002	0	%100
15	21	Z	-0.002	-0.002	0	%100
16	22	Z	-0.006	-0.006	0	%100
17	23	Z	-0.009	-0.009	0	%100
18	24	Z	-0.012	-0.012	0	%100
19	26	Z	-0.006	-0.006	0	%100
20	27	Z	-0.009	-0.009	0	%100
21	28	Z	-0.012	-0.012	0	%100
22	30	Z	-0.006	-0.006	0	%100
23	31	Z	-0.006	-0.006	0	%100
24	32	Z	-0.006	-0.006	0	%100
25	33	Z	-0.009	-0.009	0	%100
26	34	Z	-0.012	-0.012	0	%100
27	36	Z	-0.006	-0.006	0	%100
28	37	Z	-0.009	-0.009	0	%100
29	38	Z	-0.012	-0.012	0	%100
30	40	Z	-0.006	-0.006	0	%100
31	41	Z	-0.006	-0.006	0	%100
32	42	Z	-0.006	-0.006	0	%100
33	43	Z	-0.009	-0.009	0	%100
34	44	Z	-0.012	-0.012	0	%100
35	46	Z	-0.006	-0.006	0	%100
36	47	Z	-0.009	-0.009	0	%100
37	48	Z	-0.012	-0.012	0	%100
38	50	Z	-0.006	-0.006	0	%100
39	51	Z	-0.006	-0.006	0	%100
40	53	Z	-0.002	-0.002	0	%100
41	55	Z	-0.002	-0.002	0	%100
42	57	Z	-0.002	-0.002	0	%100
43	59	Z	-0.002	-0.002	0	%100
44	61	Z	-0.002	-0.002	0	%100
45	63	Z	-0.002	-0.002	0	%100
46	65	Z	-0.002	-0.002	0	%100
47	67	Z	-0.002	-0.002	0	%100
48	69	Z	-0.002	-0.002	0	%100
49	70	Z	-0.002	-0.002	0	%100
50	80	Z	-0.005	-0.005	0	%100
51	81	Z	-0.005	-0.005	0	%100
52	82	Z	-0.005	-0.005	0	%100
53	83	Z	-0.002	-0.002	0	%100
54	84	Z	-0.002	-0.002	0	%100

Member Distributed Loads (BLC 5 : 90 Wind - Ice)

	Member Label	Direction	Start Magnitude [k/ft, F, ksf, k-ft/ft]	End Magnitude [k/ft, F, ksf, k-ft/ft]	Start Location [(ft, %)]	End Location [(ft, %)]
1	1	X	-0.006	-0.006	0	%100
2	2	X	-0.007	-0.007	0	%100
3	3	X	-0.012	-0.012	0	%100
4	4	X	-0.012	-0.012	0	%100
5	7	X	-0.006	-0.006	0	%100

Member Distributed Loads (BLC 5 : 90 Wind - Ice) (Continued)

	Member Label	Direction	Start Magnitude [k/ft, F, ksf, k-ft/ft]	End Magnitude [k/ft, F, ksf, k-ft/ft]	Start Location [(ft, %)]	End Location [(ft, %)]
6	8	X	-0.007	-0.007	0	%100
7	9	X	-0.012	-0.012	0	%100
8	10	X	-0.012	-0.012	0	%100
9	13	X	-0.006	-0.006	0	%100
10	14	X	-0.007	-0.007	0	%100
11	15	X	-0.012	-0.012	0	%100
12	16	X	-0.012	-0.012	0	%100
13	19	X	-0.002	-0.002	0	%100
14	20	X	-0.002	-0.002	0	%100
15	21	X	-0.002	-0.002	0	%100
16	22	X	-0.006	-0.006	0	%100
17	23	X	-0.009	-0.009	0	%100
18	24	X	-0.012	-0.012	0	%100
19	26	X	-0.006	-0.006	0	%100
20	27	X	-0.009	-0.009	0	%100
21	28	X	-0.012	-0.012	0	%100
22	30	X	-0.006	-0.006	0	%100
23	31	X	-0.006	-0.006	0	%100
24	32	X	-0.006	-0.006	0	%100
25	33	X	-0.009	-0.009	0	%100
26	34	X	-0.012	-0.012	0	%100
27	36	X	-0.006	-0.006	0	%100
28	37	X	-0.009	-0.009	0	%100
29	38	X	-0.012	-0.012	0	%100
30	40	X	-0.006	-0.006	0	%100
31	41	X	-0.006	-0.006	0	%100
32	42	X	-0.006	-0.006	0	%100
33	43	X	-0.009	-0.009	0	%100
34	44	X	-0.012	-0.012	0	%100
35	46	X	-0.006	-0.006	0	%100
36	47	X	-0.009	-0.009	0	%100
37	48	X	-0.012	-0.012	0	%100
38	50	X	-0.006	-0.006	0	%100
39	51	X	-0.006	-0.006	0	%100
40	53	X	-0.002	-0.002	0	%100
41	55	X	-0.002	-0.002	0	%100
42	57	X	-0.002	-0.002	0	%100
43	59	X	-0.002	-0.002	0	%100
44	61	X	-0.002	-0.002	0	%100
45	63	X	-0.002	-0.002	0	%100
46	65	X	-0.002	-0.002	0	%100
47	67	X	-0.002	-0.002	0	%100
48	69	X	-0.002	-0.002	0	%100
49	70	X	-0.002	-0.002	0	%100
50	80	X	-0.005	-0.005	0	%100
51	81	X	-0.005	-0.005	0	%100
52	82	X	-0.005	-0.005	0	%100
53	83	X	-0.002	-0.002	0	%100
54	84	X	-0.002	-0.002	0	%100

Member Distributed Loads (BLC 6 : 0 Wind - Service)

	Member Label	Direction	Start Magnitude [k/ft, F, ksf, k-ft/ft]	End Magnitude [k/ft, F, ksf, k-ft/ft]	Start Location [(ft, %)]	End Location [(ft, %)]
1	1	Z	-0.001	-0.001	0	%100
2	2	Z	-0.001	-0.001	0	%100
3	3	Z	-0.001	-0.001	0	%100

Member Distributed Loads (BLC 6 : 0 Wind - Service) (Continued)

	Member Label	Direction	Start Magnitude [k/ft, F, ksf, k-ft/ft]	End Magnitude [k/ft, F, ksf, k-ft/ft]	Start Location [(ft, %)]	End Location [(ft, %)]
4	4	Z	-0.001	-0.001	0	%100
5	7	Z	-0.001	-0.001	0	%100
6	8	Z	-0.001	-0.001	0	%100
7	9	Z	-0.001	-0.001	0	%100
8	10	Z	-0.001	-0.001	0	%100
9	13	Z	-0.001	-0.001	0	%100
10	14	Z	-0.001	-0.001	0	%100
11	15	Z	-0.001	-0.001	0	%100
12	16	Z	-0.001	-0.001	0	%100
13	19	Z	-0.0004	-0.0004	0	%100
14	20	Z	-0.0004	-0.0004	0	%100
15	21	Z	-0.0004	-0.0004	0	%100
16	22	Z	-0.001	-0.001	0	%100
17	23	Z	-0.001	-0.001	0	%100
18	24	Z	-0.001	-0.001	0	%100
19	26	Z	-0.001	-0.001	0	%100
20	27	Z	-0.001	-0.001	0	%100
21	28	Z	-0.001	-0.001	0	%100
22	30	Z	-0.0007	-0.0007	0	%100
23	31	Z	-0.0007	-0.0007	0	%100
24	32	Z	-0.001	-0.001	0	%100
25	33	Z	-0.001	-0.001	0	%100
26	34	Z	-0.001	-0.001	0	%100
27	36	Z	-0.001	-0.001	0	%100
28	37	Z	-0.001	-0.001	0	%100
29	38	Z	-0.001	-0.001	0	%100
30	40	Z	-0.0007	-0.0007	0	%100
31	41	Z	-0.0007	-0.0007	0	%100
32	42	Z	-0.001	-0.001	0	%100
33	43	Z	-0.001	-0.001	0	%100
34	44	Z	-0.001	-0.001	0	%100
35	46	Z	-0.001	-0.001	0	%100
36	47	Z	-0.001	-0.001	0	%100
37	48	Z	-0.001	-0.001	0	%100
38	50	Z	-0.0007	-0.0007	0	%100
39	51	Z	-0.0007	-0.0007	0	%100
40	53	Z	-0.0002	-0.0002	0	%100
41	55	Z	-0.0003	-0.0003	0	%100
42	57	Z	-0.0002	-0.0002	0	%100
43	59	Z	-0.0002	-0.0002	0	%100
44	61	Z	-0.0003	-0.0003	0	%100
45	63	Z	-0.0002	-0.0002	0	%100
46	65	Z	-0.0002	-0.0002	0	%100
47	67	Z	-0.0003	-0.0003	0	%100
48	69	Z	-0.0002	-0.0002	0	%100
49	70	Z	-0.0002	-0.0002	0	%100
50	80	Z	-0.0006	-0.0006	0	%100
51	81	Z	-0.0006	-0.0006	0	%100
52	82	Z	-0.0006	-0.0006	0	%100
53	83	Z	-0.0002	-0.0002	0	%100
54	84	Z	-0.0002	-0.0002	0	%100

Member Distributed Loads (BLC 7 : 90 Wind - Service)

	Member Label	Direction	Start Magnitude [k/ft, F, ksf, k-ft/ft]	End Magnitude [k/ft, F, ksf, k-ft/ft]	Start Location [(ft, %)]	End Location [(ft, %)]
1	1	X	-0.001	-0.001	0	%100
2	2	X	-0.001	-0.001	0	%100
3	3	X	-0.001	-0.001	0	%100
4	4	X	-0.001	-0.001	0	%100
5	7	X	-0.001	-0.001	0	%100
6	8	X	-0.001	-0.001	0	%100
7	9	X	-0.001	-0.001	0	%100
8	10	X	-0.001	-0.001	0	%100
9	13	X	-0.001	-0.001	0	%100
10	14	X	-0.001	-0.001	0	%100
11	15	X	-0.001	-0.001	0	%100
12	16	X	-0.001	-0.001	0	%100
13	19	X	-0.0004	-0.0004	0	%100
14	20	X	-0.0004	-0.0004	0	%100
15	21	X	-0.0004	-0.0004	0	%100
16	22	X	-0.001	-0.001	0	%100
17	23	X	-0.001	-0.001	0	%100
18	24	X	-0.001	-0.001	0	%100
19	26	X	-0.001	-0.001	0	%100
20	27	X	-0.001	-0.001	0	%100
21	28	X	-0.001	-0.001	0	%100
22	30	X	-0.0007	-0.0007	0	%100
23	31	X	-0.0007	-0.0007	0	%100
24	32	X	-0.001	-0.001	0	%100
25	33	X	-0.001	-0.001	0	%100
26	34	X	-0.001	-0.001	0	%100
27	36	X	-0.001	-0.001	0	%100
28	37	X	-0.001	-0.001	0	%100
29	38	X	-0.001	-0.001	0	%100
30	40	X	-0.0007	-0.0007	0	%100
31	41	X	-0.0007	-0.0007	0	%100
32	42	X	-0.001	-0.001	0	%100
33	43	X	-0.001	-0.001	0	%100
34	44	X	-0.001	-0.001	0	%100
35	46	X	-0.001	-0.001	0	%100
36	47	X	-0.001	-0.001	0	%100
37	48	X	-0.001	-0.001	0	%100
38	50	X	-0.0007	-0.0007	0	%100
39	51	X	-0.0007	-0.0007	0	%100
40	53	X	-0.0002	-0.0002	0	%100
41	55	X	-0.0003	-0.0003	0	%100
42	57	X	-0.0002	-0.0002	0	%100
43	59	X	-0.0002	-0.0002	0	%100
44	61	X	-0.0003	-0.0003	0	%100
45	63	X	-0.0002	-0.0002	0	%100
46	65	X	-0.0002	-0.0002	0	%100
47	67	X	-0.0003	-0.0003	0	%100
48	69	X	-0.0002	-0.0002	0	%100
49	70	X	-0.0002	-0.0002	0	%100
50	80	X	-0.0006	-0.0006	0	%100
51	81	X	-0.0006	-0.0006	0	%100
52	82	X	-0.0006	-0.0006	0	%100
53	83	X	-0.0002	-0.0002	0	%100
54	84	X	-0.0002	-0.0002	0	%100

Member Distributed Loads (BLC 8 : Ice)

	Member Label	Direction	Start Magnitude [k/ft, F, ksf, k-ft/ft]	End Magnitude [k/ft, F, ksf, k-ft/ft]	Start Location [(ft, %)]	End Location [(ft, %)]
1	1	Y	-0.016	-0.016	0	%100
2	2	Y	-0.017	-0.017	0	%100
3	3	Y	-0.017	-0.017	0	%100
4	4	Y	-0.017	-0.017	0	%100
5	7	Y	-0.016	-0.016	0	%100
6	8	Y	-0.017	-0.017	0	%100
7	9	Y	-0.017	-0.017	0	%100
8	10	Y	-0.017	-0.017	0	%100
9	13	Y	-0.016	-0.016	0	%100
10	14	Y	-0.017	-0.017	0	%100
11	15	Y	-0.017	-0.017	0	%100
12	16	Y	-0.017	-0.017	0	%100
13	19	Y	-0.011	-0.011	0	%100
14	20	Y	-0.011	-0.011	0	%100
15	21	Y	-0.011	-0.011	0	%100
16	22	Y	-0.016	-0.016	0	%100
17	23	Y	-0.017	-0.017	0	%100
18	24	Y	-0.017	-0.017	0	%100
19	26	Y	-0.016	-0.016	0	%100
20	27	Y	-0.017	-0.017	0	%100
21	28	Y	-0.017	-0.017	0	%100
22	30	Y	-0.01	-0.01	0	%100
23	31	Y	-0.01	-0.01	0	%100
24	32	Y	-0.016	-0.016	0	%100
25	33	Y	-0.017	-0.017	0	%100
26	34	Y	-0.017	-0.017	0	%100
27	36	Y	-0.016	-0.016	0	%100
28	37	Y	-0.017	-0.017	0	%100
29	38	Y	-0.017	-0.017	0	%100
30	40	Y	-0.01	-0.01	0	%100
31	41	Y	-0.01	-0.01	0	%100
32	42	Y	-0.016	-0.016	0	%100
33	43	Y	-0.017	-0.017	0	%100
34	44	Y	-0.017	-0.017	0	%100
35	46	Y	-0.016	-0.016	0	%100
36	47	Y	-0.017	-0.017	0	%100
37	48	Y	-0.017	-0.017	0	%100
38	50	Y	-0.01	-0.01	0	%100
39	51	Y	-0.01	-0.01	0	%100
40	53	Y	-0.009	-0.009	0	%100
41	55	Y	-0.01	-0.01	0	%100
42	57	Y	-0.009	-0.009	0	%100
43	59	Y	-0.009	-0.009	0	%100
44	61	Y	-0.01	-0.01	0	%100
45	63	Y	-0.009	-0.009	0	%100
46	65	Y	-0.009	-0.009	0	%100
47	67	Y	-0.01	-0.01	0	%100
48	69	Y	-0.009	-0.009	0	%100
49	70	Y	-0.009	-0.009	0	%100
50	80	Y	-0.011	-0.011	0	%100
51	81	Y	-0.011	-0.011	0	%100
52	82	Y	-0.011	-0.011	0	%100
53	83	Y	-0.009	-0.009	0	%100
54	84	Y	-0.009	-0.009	0	%100

Member Distributed Loads (BLC 9 : 0 Seismic)

	Member Label	Direction	Start Magnitude [k/ft, F, ksf, k-ft/ft]	End Magnitude [k/ft, F, ksf, k-ft/ft]	Start Location [(ft, %)]	End Location [(ft, %)]
1	1	Z	-0.003	-0.003	0	%100
2	2	Z	-0.002	-0.002	0	%100
3	3	Z	-0.002	-0.002	0	%100
4	4	Z	-0.002	-0.002	0	%100
5	7	Z	-0.003	-0.003	0	%100
6	8	Z	-0.002	-0.002	0	%100
7	9	Z	-0.002	-0.002	0	%100
8	10	Z	-0.002	-0.002	0	%100
9	13	Z	-0.003	-0.003	0	%100
10	14	Z	-0.002	-0.002	0	%100
11	15	Z	-0.002	-0.002	0	%100
12	16	Z	-0.002	-0.002	0	%100
13	19	Z	-0.002	-0.002	0	%100
14	20	Z	-0.002	-0.002	0	%100
15	21	Z	-0.002	-0.002	0	%100
16	22	Z	-0.003	-0.003	0	%100
17	23	Z	-0.002	-0.002	0	%100
18	24	Z	-0.002	-0.002	0	%100
19	26	Z	-0.003	-0.003	0	%100
20	27	Z	-0.002	-0.002	0	%100
21	28	Z	-0.002	-0.002	0	%100
22	30	Z	-0.0006	-0.0006	0	%100
23	31	Z	-0.0006	-0.0006	0	%100
24	32	Z	-0.003	-0.003	0	%100
25	33	Z	-0.002	-0.002	0	%100
26	34	Z	-0.002	-0.002	0	%100
27	36	Z	-0.003	-0.003	0	%100
28	37	Z	-0.002	-0.002	0	%100
29	38	Z	-0.002	-0.002	0	%100
30	40	Z	-0.0006	-0.0006	0	%100
31	41	Z	-0.0006	-0.0006	0	%100
32	42	Z	-0.003	-0.003	0	%100
33	43	Z	-0.002	-0.002	0	%100
34	44	Z	-0.002	-0.002	0	%100
35	46	Z	-0.003	-0.003	0	%100
36	47	Z	-0.002	-0.002	0	%100
37	48	Z	-0.002	-0.002	0	%100
38	50	Z	-0.0006	-0.0006	0	%100
39	51	Z	-0.0006	-0.0006	0	%100
40	53	Z	-0.0009	-0.0009	0	%100
41	55	Z	-0.001	-0.001	0	%100
42	57	Z	-0.0009	-0.0009	0	%100
43	59	Z	-0.0009	-0.0009	0	%100
44	61	Z	-0.001	-0.001	0	%100
45	63	Z	-0.0009	-0.0009	0	%100
46	65	Z	-0.0009	-0.0009	0	%100
47	67	Z	-0.001	-0.001	0	%100
48	69	Z	-0.0009	-0.0009	0	%100
49	70	Z	-0.0009	-0.0009	0	%100
50	80	Z	-0.001	-0.001	0	%100
51	81	Z	-0.001	-0.001	0	%100
52	82	Z	-0.001	-0.001	0	%100
53	83	Z	-0.0009	-0.0009	0	%100
54	84	Z	-0.0009	-0.0009	0	%100

Member Distributed Loads (BLC 10 : 90 Seismic)

	Member Label	Direction	Start Magnitude [k/ft, F, ksf, k-ft/ft]	End Magnitude [k/ft, F, ksf, k-ft/ft]	Start Location [(ft, %)]	End Location [(ft, %)]
1	1	X	-0.003	-0.003	0	%100
2	2	X	-0.002	-0.002	0	%100
3	3	X	-0.002	-0.002	0	%100
4	4	X	-0.002	-0.002	0	%100
5	7	X	-0.003	-0.003	0	%100
6	8	X	-0.002	-0.002	0	%100
7	9	X	-0.002	-0.002	0	%100
8	10	X	-0.002	-0.002	0	%100
9	13	X	-0.003	-0.003	0	%100
10	14	X	-0.002	-0.002	0	%100
11	15	X	-0.002	-0.002	0	%100
12	16	X	-0.002	-0.002	0	%100
13	19	X	-0.002	-0.002	0	%100
14	20	X	-0.002	-0.002	0	%100
15	21	X	-0.002	-0.002	0	%100
16	22	X	-0.003	-0.003	0	%100
17	23	X	-0.002	-0.002	0	%100
18	24	X	-0.002	-0.002	0	%100
19	26	X	-0.003	-0.003	0	%100
20	27	X	-0.002	-0.002	0	%100
21	28	X	-0.002	-0.002	0	%100
22	30	X	-0.0006	-0.0006	0	%100
23	31	X	-0.0006	-0.0006	0	%100
24	32	X	-0.003	-0.003	0	%100
25	33	X	-0.002	-0.002	0	%100
26	34	X	-0.002	-0.002	0	%100
27	36	X	-0.003	-0.003	0	%100
28	37	X	-0.002	-0.002	0	%100
29	38	X	-0.002	-0.002	0	%100
30	40	X	-0.0006	-0.0006	0	%100
31	41	X	-0.0006	-0.0006	0	%100
32	42	X	-0.003	-0.003	0	%100
33	43	X	-0.002	-0.002	0	%100
34	44	X	-0.002	-0.002	0	%100
35	46	X	-0.003	-0.003	0	%100
36	47	X	-0.002	-0.002	0	%100
37	48	X	-0.002	-0.002	0	%100
38	50	X	-0.0006	-0.0006	0	%100
39	51	X	-0.0006	-0.0006	0	%100
40	53	X	-0.0009	-0.0009	0	%100
41	55	X	-0.001	-0.001	0	%100
42	57	X	-0.0009	-0.0009	0	%100
43	59	X	-0.0009	-0.0009	0	%100
44	61	X	-0.001	-0.001	0	%100
45	63	X	-0.0009	-0.0009	0	%100
46	65	X	-0.0009	-0.0009	0	%100
47	67	X	-0.001	-0.001	0	%100
48	69	X	-0.0009	-0.0009	0	%100
49	70	X	-0.0009	-0.0009	0	%100
50	80	X	-0.001	-0.001	0	%100
51	81	X	-0.001	-0.001	0	%100
52	82	X	-0.001	-0.001	0	%100
53	83	X	-0.0009	-0.0009	0	%100
54	84	X	-0.0009	-0.0009	0	%100

Member Distributed Loads (BLC 30 : BLC 1 Transient Area Loads)

	Member Label	Direction	Start Magnitude [k/ft, F, ksf, k-ft/ft]	End Magnitude [k/ft, F, ksf, k-ft/ft]	Start Location [(ft, %)]	End Location [(ft, %)]
1	30	Y	-0.001	-0.005	0	2.223
2	30	Y	-0.005	-0.009	2.223	4.446
3	31	Y	-0.001	-0.005	0	2.223
4	31	Y	-0.005	-0.009	2.223	4.446
5	13	Y	-0.012	-0.012	2.283	4.062
6	42	Y	-0.01	-0.01	0	0.989
7	46	Y	-0.01	-0.01	0	0.989
8	50	Y	-0.001	-0.005	0	2.223
9	50	Y	-0.005	-0.009	2.223	4.446
10	51	Y	-0.001	-0.005	0	2.223
11	51	Y	-0.005	-0.009	2.223	4.446
12	7	Y	-0.012	-0.012	2.283	4.062
13	32	Y	-0.01	-0.01	0	0.989
14	36	Y	-0.01	-0.01	0	0.989
15	40	Y	-0.001	-0.005	0	2.223
16	40	Y	-0.005	-0.009	2.223	4.446
17	41	Y	-0.001	-0.005	0	2.223
18	41	Y	-0.005	-0.009	2.223	4.446
19	1	Y	-0.012	-0.012	2.283	4.062
20	22	Y	-0.01	-0.01	0	0.989
21	26	Y	-0.01	-0.01	0	0.989

Member Distributed Loads (BLC 31 : BLC 8 Transient Area Loads)

	Member Label	Direction	Start Magnitude [k/ft, F, ksf, k-ft/ft]	End Magnitude [k/ft, F, ksf, k-ft/ft]	Start Location [(ft, %)]	End Location [(ft, %)]
1	51	Y	-0.004	-0.007	2.223	4.446
2	7	Y	-0.009	-0.009	2.284	4.06
3	32	Y	-0.008	-0.008	0	0.989
4	36	Y	-0.008	-0.008	0	0.989
5	40	Y	-0.001	-0.004	0	2.223
6	40	Y	-0.004	-0.007	2.223	4.446
7	41	Y	-0.001	-0.004	0	2.223
8	41	Y	-0.004	-0.007	2.223	4.446
9	1	Y	-0.009	-0.009	2.284	4.06
10	22	Y	-0.008	-0.008	0	0.989
11	26	Y	-0.008	-0.008	0	0.989
12	30	Y	-0.001	-0.004	0	2.223
13	30	Y	-0.004	-0.007	2.223	4.446
14	31	Y	-0.001	-0.004	0	2.223
15	31	Y	-0.004	-0.007	2.223	4.446
16	13	Y	-0.009	-0.009	2.283	4.062
17	42	Y	-0.008	-0.008	0	0.989
18	46	Y	-0.008	-0.008	0	0.989
19	50	Y	-0.001	-0.004	0	2.223
20	50	Y	-0.004	-0.007	2.223	4.446
21	51	Y	-0.001	-0.004	0	2.223

Member Area Loads (BLC 1 : Dead)

	Node A	Node B	Node C	Node D	Direction	Load Direction	Magnitude [ksf]
1	13	67	69	13	Y	Two Way	-0.01
2	3	51	53	3	Y	Two Way	-0.01
3	85	83	23	85	Y	Two Way	-0.01

Member Area Loads (BLC 8 : Ice)

	Node A	Node B	Node C	Direction	Load Direction	Magnitude [ksf]
1	13	67	69	Y	Two Way	-0.008
2	3	51	53	Y	Two Way	-0.008
3	85	83	23	Y	Two Way	-0.008

Node Loads and Enforced Displacements (BLC 11 : Live Load a)

	Node Label	L, D, M	Direction	Magnitude [(k, k-ft), (in, rad), (k*s²/ft, k*s²*ft)]
1	94	L	Y	-0.5
2	118	L	Y	-0.5
3	106	L	Y	-0.5

Node Loads and Enforced Displacements (BLC 12 : Live Load b)

	Node Label	L, D, M	Direction	Magnitude [(k, k-ft), (in, rad), (k*s²/ft, k*s²*ft)]
1	90	L	Y	-0.5
2	114	L	Y	-0.5
3	102	L	Y	-0.5

Node Loads and Enforced Displacements (BLC 13 : Live Load c)

	Node Label	L, D, M	Direction	Magnitude [(k, k-ft), (in, rad), (k*s²/ft, k*s²*ft)]
1	86	L	Y	-0.5
2	110	L	Y	-0.5
3	98	L	Y	-0.5

Basic Load Cases

	BLC Description	Category	Y Gravity	Nodal	Point	Distributed	Area(Member)
1	Dead	DL	-1		45		3
2	0 Wind - No Ice	WLZ			45	54	
3	90 Wind - No Ice	WLX			45	54	
4	0 Wind - Ice	WLZ			45	54	
5	90 Wind - Ice	WLX			45	54	
6	0 Wind - Service	WLZ			45	54	
7	90 Wind - Service	WLX			45	54	
8	Ice	OL1			45	54	3
9	0 Seismic	ELZ			45	54	
10	90 Seismic	ELX			45	54	
11	Live Load a	LL		3			
12	Live Load b	LL		3			
13	Live Load c	LL		3			
14	Live Load d	LL					
15	Maint LL 1	LL			1		
16	Maint LL 2	LL			1		
17	Maint LL 3	LL			1		
18	Maint LL 4	LL			1		
19	Maint LL 5	LL			1		
20	Maint LL 6	LL			1		
21	Maint LL 7	LL			1		
22	Maint LL 8	LL			1		
23	Maint LL 9	LL			1		
24	Maint LL 10	LL			1		
25	Maint LL 11	LL			1		

Basic Load Cases (Continued)

	BLC Description	Category	Y Gravity	Nodal	Point	Distributed	Area(Member)
26	Maint LL 12	LL			1		
27	Maint LL 13	LL			1		
28	Maint LL 14	LL			1		
29	Maint LL 15	LL					
30	BLC 1 Transient Area Loads	None				21	
31	BLC 8 Transient Area Loads	None				21	

Load Combinations

	Description	Solve	P-Delta	BLC	Factor	BLC	Factor	BLC	Factor	BLC	Factor
1	1.4 Dead	Yes	Y	1	1.4						
2	1.2 D + 1.0 - 0 W	Yes	Y	1	1.2	2	1				
3	1.2 D + 1.0 - 30 W	Yes	Y	1	1.2	2	0.866	3	0.5		
4	1.2 D + 1.0 - 60 W	Yes	Y	1	1.2	3	0.866	2	0.5		
5	1.2 D + 1.0 - 90 W	Yes	Y	1	1.2	3	1				
6	1.2 D + 1.0 - 120 W	Yes	Y	1	1.2	3	0.866	2	-0.5		
7	1.2 D + 1.0 - 150 W	Yes	Y	1	1.2	2	-0.866	3	0.5		
8	1.2 D + 1.0 - 180 W	Yes	Y	1	1.2	2	-1				
9	1.2 D + 1.0 - 210 W	Yes	Y	1	1.2	2	-0.866	3	-0.5		
10	1.2 D + 1.0 - 240 W	Yes	Y	1	1.2	3	-0.866	2	-0.5		
11	1.2 D + 1.0 - 270 W	Yes	Y	1	1.2	3	-1				
12	1.2 D + 1.0 - 300 W	Yes	Y	1	1.2	3	-0.866	2	0.5		
13	1.2 D + 1.0 - 330 W	Yes	Y	1	1.2	2	0.866	3	-0.5		
14	1.2 D + 1.0 - 0 W/Ice	Yes	Y	1	1.2	4	1			8	1
15	1.2 D + 1.0 - 30 W/Ice	Yes	Y	1	1.2	4	0.866	5	0.5	8	1
16	1.2 D + 1.0 - 60 W/Ice	Yes	Y	1	1.2	5	0.866	4	0.5	8	1
17	1.2 D + 1.0 - 90 W/Ice	Yes	Y	1	1.2	5	1			8	1
18	1.2 D + 1.0 - 120 W/Ice	Yes	Y	1	1.2	5	0.866	4	-0.5	8	1
19	1.2 D + 1.0 - 150 W/Ice	Yes	Y	1	1.2	4	-0.866	5	0.5	8	1
20	1.2 D + 1.0 - 180 W/Ice	Yes	Y	1	1.2	4	-1			8	1
21	1.2 D + 1.0 - 210 W/Ice	Yes	Y	1	1.2	4	-0.866	5	-0.5	8	1
22	1.2 D + 1.0 - 240 W/Ice	Yes	Y	1	1.2	5	-0.866	4	-0.5	8	1
23	1.2 D + 1.0 - 270 W/Ice	Yes	Y	1	1.2	5	-1			8	1
24	1.2 D + 1.0 - 300 W/Ice	Yes	Y	1	1.2	5	-0.866	4	0.5	8	1
25	1.2 D + 1.0 - 330 W/Ice	Yes	Y	1	1.2	4	0.866	5	-0.5	8	1
26	1.2 D + 1.0 E - 0	Yes	Y	1	1.2	9	1				
27	1.2 D + 1.0 E - 30	Yes	Y	1	1.2	9	0.866	10	0.5		
28	1.2 D + 1.0 E - 60	Yes	Y	1	1.2	10	0.866	9	0.5		
29	1.2 D + 1.0 E - 90	Yes	Y	1	1.2	10	1				
30	1.2 D + 1.0 E - 120	Yes	Y	1	1.2	10	0.866	9	-0.5		
31	1.2 D + 1.0 E - 150	Yes	Y	1	1.2	9	-0.866	10	0.5		
32	1.2 D + 1.0 E - 180	Yes	Y	1	1.2	9	-1				
33	1.2 D + 1.0 E - 210	Yes	Y	1	1.2	9	-0.866	10	-0.5		
34	1.2 D + 1.0 E - 240	Yes	Y	1	1.2	10	-0.866	9	-0.5		
35	1.2 D + 1.0 E - 270	Yes	Y	1	1.2	10	-1				
36	1.2 D + 1.0 E - 300	Yes	Y	1	1.2	10	-0.866	9	0.5		
37	1.2 D + 1.0 E - 330	Yes	Y	1	1.2	9	0.866	10	-0.5		
38	1.2 D + 1.5 LL a + Service - 0 W	Yes	Y	1	1.2	6	1			11	1.5
39	1.2 D + 1.5 LL a + Service - 30 W	Yes	Y	1	1.2	6	0.866	7	0.5	11	1.5
40	1.2 D + 1.5 LL a + Service - 60 W	Yes	Y	1	1.2	7	0.866	6	0.5	11	1.5
41	1.2 D + 1.5 LL a + Service - 90 W	Yes	Y	1	1.2	7	1			11	1.5
42	1.2 D + 1.5 LL a + Service - 120 W	Yes	Y	1	1.2	7	0.866	6	-0.5	11	1.5
43	1.2 D + 1.5 LL a + Service - 150 W	Yes	Y	1	1.2	6	-0.866	7	0.5	11	1.5
44	1.2 D + 1.5 LL a + Service - 180 W	Yes	Y	1	1.2	6	-1			11	1.5
45	1.2 D + 1.5 LL a + Service - 210 W	Yes	Y	1	1.2	6	-0.866	7	-0.5	11	1.5
46	1.2 D + 1.5 LL a + Service - 240 W	Yes	Y	1	1.2	7	-0.866	6	-0.5	11	1.5

Load Combinations (Continued)

	Description	Solve	P-Delta	BLC	Factor	BLC	Factor	BLC	Factor	BLC	Factor
47	1.2 D + 1.5 LL a + Service - 270 W	Yes	Y	1	1.2	7	-1			11	1.5
48	1.2 D + 1.5 LL a + Service - 300 W	Yes	Y	1	1.2	7	-0.866	6	0.5	11	1.5
49	1.2 D + 1.5 LL a + Service - 330 W	Yes	Y	1	1.2	6	0.866	7	-0.5	11	1.5
50	1.2 D + 1.5 LL b + Service - 0 W	Yes	Y	1	1.2	6	1			12	1.5
51	1.2 D + 1.5 LL b + Service - 30 W	Yes	Y	1	1.2	6	0.866	7	0.5	12	1.5
52	1.2 D + 1.5 LL b + Service - 60 W	Yes	Y	1	1.2	7	0.866	6	0.5	12	1.5
53	1.2 D + 1.5 LL b + Service - 90 W	Yes	Y	1	1.2	7	1			12	1.5
54	1.2 D + 1.5 LL b + Service - 120 W	Yes	Y	1	1.2	7	0.866	6	-0.5	12	1.5
55	1.2 D + 1.5 LL b + Service - 150 W	Yes	Y	1	1.2	6	-0.866	7	0.5	12	1.5
56	1.2 D + 1.5 LL b + Service - 180 W	Yes	Y	1	1.2	6	-1			12	1.5
57	1.2 D + 1.5 LL b + Service - 210 W	Yes	Y	1	1.2	6	-0.866	7	-0.5	12	1.5
58	1.2 D + 1.5 LL b + Service - 240 W	Yes	Y	1	1.2	7	-0.866	6	-0.5	12	1.5
59	1.2 D + 1.5 LL b + Service - 270 W	Yes	Y	1	1.2	7	-1			12	1.5
60	1.2 D + 1.5 LL b + Service - 300 W	Yes	Y	1	1.2	7	-0.866	6	0.5	12	1.5
61	1.2 D + 1.5 LL b + Service - 330 W	Yes	Y	1	1.2	6	0.866	7	-0.5	12	1.5
62	1.2 D + 1.5 LL c + Service - 0 W	Yes	Y	1	1.2	6	1			13	1.5
63	1.2 D + 1.5 LL c + Service - 30 W	Yes	Y	1	1.2	6	0.866	7	0.5	13	1.5
64	1.2 D + 1.5 LL c + Service - 60 W	Yes	Y	1	1.2	7	0.866	6	0.5	13	1.5
65	1.2 D + 1.5 LL c + Service - 90 W	Yes	Y	1	1.2	7	1			13	1.5
66	1.2 D + 1.5 LL c + Service - 120 W	Yes	Y	1	1.2	7	0.866	6	-0.5	13	1.5
67	1.2 D + 1.5 LL c + Service - 150 W	Yes	Y	1	1.2	6	-0.866	7	0.5	13	1.5
68	1.2 D + 1.5 LL c + Service - 180 W	Yes	Y	1	1.2	6	-1			13	1.5
69	1.2 D + 1.5 LL c + Service - 210 W	Yes	Y	1	1.2	6	-0.866	7	-0.5	13	1.5
70	1.2 D + 1.5 LL c + Service - 240 W	Yes	Y	1	1.2	7	-0.866	6	-0.5	13	1.5
71	1.2 D + 1.5 LL c + Service - 270 W	Yes	Y	1	1.2	7	-1			13	1.5
72	1.2 D + 1.5 LL c + Service - 300 W	Yes	Y	1	1.2	7	-0.866	6	0.5	13	1.5
73	1.2 D + 1.5 LL c + Service - 330 W	Yes	Y	1	1.2	6	0.866	7	-0.5	13	1.5
74	1.2 D + 1.5 LL d + Service - 0 W	Yes	Y	1	1.2	6	1			14	1.5
75	1.2 D + 1.5 LL d + Service - 30 W	Yes	Y	1	1.2	6	0.866	7	0.5	14	1.5
76	1.2 D + 1.5 LL d + Service - 60 W	Yes	Y	1	1.2	7	0.866	6	0.5	14	1.5
77	1.2 D + 1.5 LL d + Service - 90 W	Yes	Y	1	1.2	7	1			14	1.5
78	1.2 D + 1.5 LL d + Service - 120 W	Yes	Y	1	1.2	7	0.866	6	-0.5	14	1.5
79	1.2 D + 1.5 LL d + Service - 150 W	Yes	Y	1	1.2	6	-0.866	7	0.5	14	1.5
80	1.2 D + 1.5 LL d + Service - 180 W	Yes	Y	1	1.2	6	-1			14	1.5
81	1.2 D + 1.5 LL d + Service - 210 W	Yes	Y	1	1.2	6	-0.866	7	-0.5	14	1.5
82	1.2 D + 1.5 LL d + Service - 240 W	Yes	Y	1	1.2	7	-0.866	6	-0.5	14	1.5
83	1.2 D + 1.5 LL d + Service - 270 W	Yes	Y	1	1.2	7	-1			14	1.5
84	1.2 D + 1.5 LL d + Service - 300 W	Yes	Y	1	1.2	7	-0.866	6	0.5	14	1.5
85	1.2 D + 1.5 LL d + Service - 330 W	Yes	Y	1	1.2	6	0.866	7	-0.5	14	1.5
86	1.2 D + 1.5 LL Maint (1)	Yes	Y	1	1.2					15	1.5
87	1.2 D + 1.5 LL Maint (2)	Yes	Y	1	1.2					16	1.5
88	1.2 D + 1.5 LL Maint (3)	Yes	Y	1	1.2					17	1.5
89	1.2 D + 1.5 LL Maint (4)	Yes	Y	1	1.2					18	1.5
90	1.2 D + 1.5 LL Maint (5)	Yes	Y	1	1.2					19	1.5
91	1.2 D + 1.5 LL Maint (6)	Yes	Y	1	1.2					20	1.5
92	1.2 D + 1.5 LL Maint (7)	Yes	Y	1	1.2					21	1.5
93	1.2 D + 1.5 LL Maint (8)	Yes	Y	1	1.2					22	1.5
94	1.2 D + 1.5 LL Maint (9)	Yes	Y	1	1.2					23	1.5
95	1.2 D + 1.5 LL Maint (10)	Yes	Y	1	1.2					24	1.5
96	1.2 D + 1.5 LL Maint (11)	Yes	Y	1	1.2					25	1.5
97	1.2 D + 1.5 LL Maint (12)	Yes	Y	1	1.2					26	1.5
98	1.2 D + 1.5 LL Maint (13)	Yes	Y	1	1.2					27	1.5
99	1.2 D + 1.5 LL Maint (14)	Yes	Y	1	1.2					28	1.5
100	1.2 D + 1.5 LL Maint (15)	Yes	Y	1	1.2					29	1.5

Envelope Node Reactions

	Node Label		X [k]	LC	Y [k]	LC	Z [k]	LC	MX [k-ft]	LC	MY [k-ft]	LC	MZ [k-ft]	LC
1	12	max	1.516	6	3.119	18	1.556	2	0.379	13	0.923	3	0.05	12
2		min	-1.554	12	0.315	13	-1.535	8	-3.27	19	-0.921	9	-5.55	18
3	22	max	1.553	4	3.107	22	1.508	2	0.394	3	0.911	7	5.592	22
4		min	-1.515	10	0.302	3	-1.485	8	-3.236	21	-0.912	13	-0.02	4
5	2	max	0.796	5	3.166	14	2.452	2	6.586	14	0.666	11	0.241	11
6		min	-0.796	11	-0.104	8	-2.496	8	-1.362	8	-0.666	5	-0.295	5
7	Totals:	max	3.712	5	8.797	25	5.516	2						
8		min	-3.712	11	3.409	8	-5.516	8						

Envelope AISC 15TH (360-16): LRFD Member Steel Code Checks

	Member	Shape	Code Check	Loc[ft]	LC	Shear Check	Loc[ft]	Dir	LC	phi*Pnc [k]	phi*Pnt [k]	phi*Mn y-y [k-ft]	phi*Mn z-z [k-ft]	Cb	Eqn
1	1	HSS4X4X4	0.409	0	14	0.089	0	y	15	124.771	139.518	16.181	16.181	2.811	H1-1b
2	2	PL1/2x6	0.12	0.521	2	0.121	0.521	y	45	65.698	97.2	1.012	12.15	1.236	H1-1b
3	3	PL1/2x6	0.071	0	2	0.105	0	y	73	95.032	97.2	1.012	12.15	2.125	H1-1b
4	4	PL1/2x6	0.072	0	2	0.112	0	y	39	95.032	97.2	1.012	12.15	2.155	H1-1b
5	7	HSS4X4X4	0.407	0	19	0.087	0	y	20	124.771	139.518	16.181	16.181	2.845	H1-1b
6	8	PL1/2x6	0.109	0.521	7	0.119	0.521	y	39	65.698	97.2	1.012	12.15	1.448	H1-1b
7	9	PL1/2x6	0.061	0	7	0.101	0	y	64	95.032	97.2	1.012	12.15	1.362	H1-1b
8	10	PL1/2x6	0.047	0	6	0.115	0	y	44	95.032	97.2	1.012	12.15	2.107	H1-1b
9	13	HSS4X4X4	0.408	0	21	0.087	0	y	24	124.771	139.518	16.181	16.181	2.825	H1-1b
10	14	PL1/2x6	0.107	0.521	9	0.123	0.521	y	40	65.698	97.2	1.012	12.15	1.441	H1-1b
11	15	PL1/2x6	0.049	0	10	0.108	0	y	68	95.032	97.2	1.012	12.15	1.976	H1-1b
12	16	PL1/2x6	0.06	0	9	0.114	0	y	48	95.032	97.2	1.012	12.15	1.417	H1-1b
13	19	PIPE_3.0	0.188	5.344	20	0.1	5.344		7	22.019	65.205	5.749	5.749	2.832	H1-1b
14	20	PIPE_3.0	0.183	9.055	25	0.111	9.055		2	22.019	65.205	5.749	5.749	2.951	H1-1b
15	21	PIPE_3.0	0.189	5.344	15	0.112	5.344		2	22.019	65.205	5.749	5.749	2.775	H1-1b
16	22	HSS4X4X4	0.204	0	14	0.057	0	y	14	135.55	139.518	16.181	16.181	1.64	H1-1b
17	23	PL1/2x6	0.071	0.229	3	0.273	0.229	y	15	90.102	97.2	1.012	12.15	1.505	H1-1b
18	24	PL1/2x6	0.067	0.125	4	0.261	0	y	14	95.032	97.2	1.012	12.15	1.443	H1-1b
19	26	HSS4X4X4	0.205	0	14	0.06	0	y	14	135.55	139.518	16.181	16.181	1.646	H1-1b
20	27	PL1/2x6	0.071	0.229	13	0.254	0.229	y	25	90.102	97.2	1.012	12.15	1.481	H1-1b
21	28	PL1/2x6	0.064	0.125	12	0.263	0	y	14	95.032	97.2	1.012	12.15	1.477	H1-1b
22	30	L2x2x3	0.208	4.446	2	0.012	4.446	y	17	8.673	23.393	0.558	1.079	1.238	H2-1
23	31	L2x2x3	0.21	4.446	2	0.011	4.446	z	23	8.673	23.393	0.558	1.073	1.21	H2-1
24	32	HSS4X4X4	0.202	0	18	0.058	0	y	17	135.55	139.518	16.181	16.181	1.642	H1-1b
25	33	PL1/2x6	0.094	0.229	8	0.27	0.229	y	20	90.102	97.2	1.012	12.15	1.702	H1-1b
26	34	PL1/2x6	0.105	0.125	8	0.26	0	y	18	95.032	97.2	1.012	12.15	1.408	H1-1b
27	36	HSS4X4X4	0.203	0	19	0.059	0	y	19	135.55	139.518	16.181	16.181	1.646	H1-1b
28	37	PL1/2x6	0.085	0.229	9	0.256	0.229	y	16	90.102	97.2	1.012	12.15	1.426	H1-1b
29	38	PL1/2x6	0.092	0.125	3	0.258	0	y	19	95.032	97.2	1.012	12.15	1.366	H1-1b
30	40	L2x2x3	0.17	0	7	0.012	4.446	y	21	8.673	23.393	0.558	1.125	1.5	H2-1
31	41	L2x2x3	0.177	4.446	7	0.012	4.446	z	14	8.673	23.393	0.558	1.084	1.263	H2-1
32	42	HSS4X4X4	0.202	0	21	0.058	0	y	21	135.55	139.518	16.181	16.181	1.644	H1-1b
33	43	PL1/2x6	0.08	0.229	7	0.266	0.229	y	24	90.102	97.2	1.012	12.15	1.424	H1-1b
34	44	PL1/2x6	0.089	0.125	13	0.257	0	y	21	95.032	97.2	1.012	12.15	1.359	H1-1b
35	46	HSS4X4X4	0.2	0	22	0.058	0	y	22	135.55	139.518	16.181	16.181	1.645	H1-1b
36	47	PL1/2x6	0.096	0.229	8	0.256	0.229	y	20	90.102	97.2	1.012	12.15	1.598	H1-1b
37	48	PL1/2x6	0.103	0.125	8	0.257	0	y	22	95.032	97.2	1.012	12.15	1.429	H1-1b
38	50	L2x2x3	0.173	4.446	9	0.012	4.446	y	25	8.673	23.393	0.558	1.077	1.229	H2-1
39	51	L2x2x3	0.167	0	9	0.012	4.446	z	19	8.673	23.393	0.558	1.125	1.5	H2-1
40	53	PIPE_2.0	0.481	5	7	0.273	2		8	20.867	32.13	1.872	1.872	2.084	H3-6
41	55	PIPE_2.5	0.29	6.187	12	0.06	6.187		11	26.138	50.715	3.596	3.596	3	H1-1b
42	57	PIPE_2.0	0.487	5	9	0.277	2		8	20.867	32.13	1.872	1.872	2.105	H3-6
43	59	PIPE_2.0	0.456	5	9	0.169	2		12	20.867	32.13	1.872	1.872	2.187	H1-1b

Envelope AISC 15TH (360-16): LRFD Member Steel Code Checks (Continued)

	Member	Shape	Code Check	Loc[ft]	LC	Shear Check	Loc[ft]	Dir	LC	phi*Pnc [k]	phi*Pnt [k]	phi*Mn y-y [k-ft]	phi*Mn z-z [k-ft]	Cb	Eqn
44	61	PIPE_2.5	0.456	6.187	8	0.094	6.187		3	26.138	50.715	3.596	3.596	3	H1-1b
45	63	PIPE_2.0	0.509	5	2	0.241	5		13	20.867	32.13	1.872	1.872	2.456	H1-1b
46	65	PIPE_2.0	0.532	5	2	0.245	5		3	20.867	32.13	1.872	1.872	2.598	H1-1b
47	67	PIPE_2.5	0.455	6.187	8	0.093	6.187		7	26.138	50.715	3.596	3.596	3	H1-1b
48	69	PIPE_2.0	0.436	5	7	0.175	2		4	20.867	32.13	1.872	1.872	2.21	H1-1b
49	70	PIPE_2.0	0.448	0.651	9	0.314	0.26		3	6.295	32.13	1.872	1.872	3	H3-6
50	80	L2.5x2.5x4	0.34	0	3	0.093	1.335	z	5	36.379	38.556	1.114	2.537	1.447	H2-1
51	81	L2.5x2.5x4	0.33	1.335	2	0.16	0	z	3	36.379	38.556	1.114	2.537	1.5	H2-1
52	82	L2.5x2.5x4	0.307	0	8	0.15	0	z	7	36.379	38.556	1.114	2.537	1.5	H2-1
53	83	PIPE_2.0	0.499	0.651	2	0.316	0.26		7	6.295	32.13	1.872	1.872	2.515	H3-6
54	84	PIPE_2.0	0.433	6.25	2	0.267	12.24		8	6.295	32.13	1.872	1.872	1.87	H1-1b

APPENDIX D

ADDITIONAL CALCULATIONS

PROJECT	**100172.009.01 - N. Coventry / Wallbe**				**KSC**
SUBJECT	**Platform Mount Analysis**				
DATE	**03/28/22**	PAGE	1	OF	1

B+T Group
1717 S. Boulder, Suite 300
Tulsa, OK 74119
(918) 587-4630

[REF: AISC 360-05]

Reactions at Bolted Connection

Tension	:	1.556	k
Vertical Shear	:	3.119	k
Horizontal Shear	:	1.516	k
Torsion	:	0.05	k.ft
Moment from Horizontal Forces	:	0.923	k.ft
Moment from Vertical Forces	:	0.379	k.ft

Bolt Parameters

Bolt Grade	:	A325	
Bolt Diameter	:	0.625	in
Nominal Bolt Area	:	0.307	in^2
Bolt spacing, Horizontal	:	6	in
Bolt spacing, Vertical	:	6	in
Bolt edge distance, plate height	:	1.5	in
Bolt edge distance, plate width	:	1.5	in
Total Number of Bolts	:	4	bolts

Summary of Forces

Shear Resultant Force	:	3.47	k
Force from Horz. Moment	:	1.67	k
Force from Vert. Moment	:	0.69	k
Shear Load / Bolt	:	0.87	k
Tension Load / Bolt	:	0.39	k
Resultant from Moments / Bolt	:	0.90	k

Bolt Checks

Nominal Tensile Stress, F_{nt}	:	90.00	ksi	[AISC Table J3.2]
Available Tensile Stress, ΦR_{nt}	:	20.72	k/bolt	[Eq. J3-1]
Unity Check, Bolt Tension	:	**6.24%**		**OKAY**
Nominal Shear Stress, F_{nv}	:	48.00	ksi	[AISC Table J3.2]
Available Shear Stress, ΦR_{nv}	:	11.05	k/bolt	[Eq. J3-1]
Unity Check, Bolt Shear	:	**11.36%**		**OKAY**
Unity Check, Combined	:	**17.60%**		**OKAY**
Available Bearing Strength, ΦR_n	:	34.66	k/bolt	
Unity Check, Bolt Bearing	:	**2.50%**		**OKAY**

EBI Consulting

environmental | engineering | due diligence

RADIO FREQUENCY EMISSIONS ANALYSIS REPORT
EVALUATION OF HUMAN EXPOSURE POTENTIAL TO NON-IONIZING EMISSIONS

T-Mobile Existing Facility

Site ID: CT11516A

CT516/Coventry - Sprint
400 Riley Mountain Road
Coventry, Connecticut 06238

April 21, 2022

EBI Project Number: 6222002668

Site Compliance Summary	
Compliance Status:	**COMPLIANT**
Site total MPE% of FCC general population allowable limit:	**34.36%**

21 B Street, Burlington, MA 01803 · Tel: (781) 273.2500 · Fax: (781) 273.3311

April 21, 2022

T-Mobile
Attn: Jason Overbey, RF Manager
35 Griffin Road South
Bloomfield, Connecticut 06002

Emissions Analysis for Site: CT11516A - CT516/Coventry - Sprint

EBI Consulting was directed to analyze the proposed T-Mobile facility located at **400 Riley Mountain Road** in **Coventry, Connecticut** for the purpose of determining whether the emissions from the Proposed T-Mobile Antenna Installation located on this property are within specified federal limits.

All information used in this report was analyzed as a percentage of current Maximum Permissible Exposure (% MPE) as listed in the FCC OET Bulletin 65 Edition 97-01and ANSI/IEEE Std C95.1. The FCC regulates Maximum Permissible Exposure in units of microwatts per square centimeter ($\mu W/cm^2$). The number of $\mu W/cm^2$ calculated at each sample point is called the power density. The exposure limit for power density varies depending upon the frequencies being utilized. Wireless Carriers and Paging Services use different frequency bands each with different exposure limits; therefore, it is necessary to report results and limits in terms of percent MPE rather than power density.

All results were compared to the FCC (Federal Communications Commission) radio frequency exposure rules, 47 CFR 1.1307(b)(1) – (b)(3), to determine compliance with the Maximum Permissible Exposure (MPE) limits for General Population/Uncontrolled environments as defined below.

General population/uncontrolled exposure limits apply to situations in which the general population may be exposed or in which persons who are exposed as a consequence of their employment may not be made fully aware of the potential for exposure or cannot exercise control over their exposure. Therefore, members of the general population would always be considered under this category when exposure is not employment related, for example, in the case of a telecommunications tower that exposes persons in a nearby residential area.

Public exposure to radio frequencies is regulated and enforced in units of microwatts per square centimeter ($\mu W/cm^2$). The general population exposure limits for the 600 MHz and 700 MHz frequency bands are approximately 400 $\mu W/cm^2$ and 467 $\mu W/cm^2$, respectively. The general population exposure limit for the 1900 MHz (PCS), 2100 MHz (AWS) and 11 GHz frequency bands is 1000 $\mu W/cm^2$. Because each carrier will be using different frequency bands, and each frequency band has different exposure limits, it is necessary to report percent of MPE rather than power density.

Occupational/controlled exposure limits apply to situations in which persons are exposed as a consequence of their employment and in which those persons who are exposed have been made fully aware of the potential for exposure and can exercise control over their exposure. Occupational/controlled exposure limits also apply where exposure is of a transient nature as a result of incidental passage through a location where exposure levels may be above general population/uncontrolled limits (see below), as long as the exposed person has been made fully aware of the potential for exposure and can exercise control over his or her exposure by leaving the area or by some other appropriate means.

Additional details can be found in FCC OET 65.

CALCULATIONS

Calculations were done for the proposed T-Mobile Wireless antenna facility located at 400 Riley Mountain Road in Coventry, Connecticut using the equipment information listed below. All calculations were performed per the specifications under FCC OET 65. Since T-Mobile is proposing highly focused directional panel antennas, which project most of the emitted energy out toward the horizon, all calculations were performed assuming a lobe representing the maximum gain of the antenna per the antenna manufacturer's supplied specifications, minus 10 dB for directional panel antennas and 20 dB for highly focused parabolic microwave dishes, was focused at the base of the tower. For this report, the sample point is the top of a 6-foot person standing at the base of the tower.

For all calculations, all equipment was calculated using the following assumptions:

1) 2 LTE channels (600 MHz Band) were considered for each sector of the proposed installation. These Channels have a transmit power of 30 Watts per Channel.

2) 1 NR channel (600 MHz Band) was considered for each sector of the proposed installation. This Channel has a transmit power of 80 Watts.

3) 2 LTE channels (700 MHz Band) were considered for each sector of the proposed installation. These Channels have a transmit power of 30 Watts per Channel.

4) 4 GSM channels (PCS Band - 1900 MHz) were considered for each sector of the proposed installation. These Channels have a transmit power of 30 Watts per Channel.

5) 2 LTE channels (PCS Band - 1900 MHz) were considered for each sector of the proposed installation. These Channels have a transmit power of 60 Watts per Channel.

6) 2 LTE channels (AWS Band – 2100 MHz) were considered for each sector of the proposed installation. These Channels have a transmit power of 60 Watts per Channel.

7) 1 LTE Traffic channel (LTE 1C and 2C BRS Band - 2500 MHz) was considered for each sector of the proposed installation. This Channel has a transmit power of 60 Watts.

8) 1 LTE Broadcast channel (LTE 1C and 2C BRS Band - 2500 MHz) was considered for each sector of the proposed installation. This Channel has a transmit power of 20 Watts.

9) 1 NR Traffic channel (BRS Band - 2500 MHz) was considered for each sector of the proposed installation. This Channel has a transmit power of 120 Watts.

10) 1 NR Broadcast channel (BRS Band - 2500 MHz) was considered for each sector of the proposed installation. This Channel has a transmit power of 40 Watts.

11) All radios at the proposed installation were considered to be running at full power and were uncombined in their RF transmissions paths per carrier prescribed configuration. Per FCC OET Bulletin No. 65 - Edition 97-01 recommendations to achieve the maximum anticipated value at each sample point, all power levels emitting from the proposed antenna installation are increased by a factor of 2.56 to account for possible in-phase reflections from the surrounding environment. This is rarely the case, and if so, is never continuous.

12) For the following calculations, the sample point was the top of a 6-foot person standing at the base of the tower. The maximum gain of the antenna per the antenna manufacturer's supplied specifications, minus 10 dB for directional panel antennas and 20 dB for highly focused parabolic microwave dishes, was used in this direction. This value is a very conservative estimate as gain reductions for these particular antennas are typically much higher in this direction.

13) The antennas used in this modeling are the Ericsson AIR 6419 for the 2500 MHz / 2500 MHz / 2500 MHz / 2500 MHz channel(s), the RFS APXVAARR24_43-U-NA20 for the 600 MHz / 600 MHz / 700 MHz channel(s), the Commscope VV-65A-R1 for the 1900 MHz / 1900 MHz / 2100 MHz channel(s) in Sector A, the Ericsson AIR 6419 for the 2500 MHz / 2500 MHz / 2500 MHz / 2500 MHz channel(s), the RFS APXVAARR24_43-U-NA20 for the 600 MHz / 600 MHz / 700 MHz channel(s), the Commscope VV-65A-R1 for the 1900 MHz / 1900 MHz / 2100 MHz channel(s) in Sector B, the Ericsson AIR 6419 for the 2500 MHz / 2500 MHz / 2500 MHz / 2500 MHz channel(s), the RFS APXVAARR24_43-U-NA20 for the 600 MHz / 600 MHz / 700 MHz channel(s), the Commscope VV-65A-R1 for the 1900 MHz / 1900 MHz / 2100 MHz channel(s) in Sector C. This is based on feedback from the carrier with regard to anticipated antenna selection. All Antenna gain values and associated transmit power levels are shown in the Site Inventory and Power Data table below. The maximum gain of the antenna per the antenna manufacturer's supplied specifications, minus 10 dB for directional panel antennas and 20 dB for highly focused parabolic microwave dishes, was used for all

calculations. This value is a very conservative estimate as gain reductions for these particular antennas are typically much higher in this direction.

14) The antenna mounting height centerline of the proposed antennas is 136 feet above ground level (AGL).

15) Emissions values for additional carriers were taken from the Connecticut Siting Council active database. Values in this database are provided by the individual carriers themselves.

16) All calculations were done with respect to uncontrolled / general population threshold limits.

T-Mobile Site Inventory and Power Data

Sector:	A	Sector:	B	Sector:	C
Antenna #:	**1**	Antenna #:	**1**	Antenna #:	**1**
Make / Model:	Ericsson AIR 6419	Make / Model:	Ericsson AIR 6419	Make / Model:	Ericsson AIR 6419
Frequency Bands:	2500 MHz / 2500 MHz / 2500 MHz / 2500 MHz	Frequency Bands:	2500 MHz / 2500 MHz / 2500 MHz / 2500 MHz	Frequency Bands:	2500 MHz / 2500 MHz / 2500 MHz / 2500 MHz
Gain:	22.05 dBd / 15.55 dBd / 22.05 dBd / 15.55 dBd	Gain:	22.05 dBd / 15.55 dBd / 22.05 dBd / 15.55 dBd	Gain:	22.05 dBd / 15.55 dBd / 22.05 dBd / 15.55 dBd
Height (AGL):	136 feet	Height (AGL):	136 feet	Height (AGL):	136 feet
Channel Count:	4	Channel Count:	4	Channel Count:	4
Total TX Power (W):	240.00 Watts	Total TX Power (W):	240.00 Watts	Total TX Power (W):	240.00 Watts
ERP (W):	31,011.95	ERP (W):	31,011.95	ERP (W):	31,011.95
Antenna A1 MPE %:	**6.60%**	Antenna B1 MPE %:	**6.60%**	Antenna C1 MPE %:	**6.60%**
Antenna #:	**2**	Antenna #:	**2**	Antenna #:	**2**
Make / Model:	RFS APXVAARR24_43-U-NA20	Make / Model:	RFS APXVAARR24_43-U-NA20	Make / Model:	RFS APXVAARR24_43-U-NA20
Frequency Bands:	600 MHz / 600 MHz / 700 MHz	Frequency Bands:	600 MHz / 600 MHz / 700 MHz	Frequency Bands:	600 MHz / 600 MHz / 700 MHz
Gain:	12.95 dBd / 12.95 dBd / 13.35 dBd	Gain:	12.95 dBd / 12.95 dBd / 13.35 dBd	Gain:	12.95 dBd / 12.95 dBd / 13.35 dBd
Height (AGL):	136 feet	Height (AGL):	136 feet	Height (AGL):	136 feet
Channel Count:	5	Channel Count:	5	Channel Count:	5
Total TX Power (W):	200.00 Watts	Total TX Power (W):	200.00 Watts	Total TX Power (W):	200.00 Watts
ERP (W):	4,059.02	ERP (W):	4,059.02	ERP (W):	4,059.02
Antenna A2 MPE %:	**2.06%**	Antenna B2 MPE %:	**2.06%**	Antenna C2 MPE %:	**2.06%**
Antenna #:	**3**	Antenna #:	**3**	Antenna #:	**3**
Make / Model:	Commscope VV-65A-R1	Make / Model:	Commscope VV-65A-R1	Make / Model:	Commscope VV-65A-R1
Frequency Bands:	1900 MHz / 1900 MHz / 2100 MHz	Frequency Bands:	1900 MHz / 1900 MHz / 2100 MHz	Frequency Bands:	1900 MHz / 1900 MHz / 2100 MHz
Gain:	15.55 dBd / 15.55 dBd / 16.05 dBd	Gain:	15.55 dBd / 15.55 dBd / 16.05 dBd	Gain:	15.55 dBd / 15.55 dBd / 16.05 dBd
Height (AGL):	136 feet	Height (AGL):	136 feet	Height (AGL):	136 feet
Channel Count:	8	Channel Count:	8	Channel Count:	8
Total TX Power (W):	360.00 Watts	Total TX Power (W):	360.00 Watts	Total TX Power (W):	360.00 Watts
ERP (W):	13,446.73	ERP (W):	13,446.73	ERP (W):	13,446.73
Antenna A3 MPE %:	**2.86%**	Antenna B3 MPE %:	**2.86%**	Antenna C3 MPE %:	**2.86%**

Site Composite MPE %	
Carrier	MPE %
T-Mobile (Max at Sector A):	11.52%
AT&T	5.9%
Dish	1.59%
EVERSOURCE	0.42%
Sprint	2.77%
Verizon	12.16%
Site Total MPE % :	34.36%

T-Mobile MPE % Per Sector	
T-Mobile Sector A Total:	11.52%
T-Mobile Sector B Total:	11.52%
T-Mobile Sector C Total:	11.52%
Site Total MPE % :	34.36%

T-Mobile Maximum MPE Power Values (Sector A)

T-Mobile Frequency Band / Technology (Sector A)	# Channels	Watts ERP (Per Channel)	Height (feet)	Total Power Density (μW/cm²)	Frequency (MHz)	Allowable MPE (μW/cm²)	Calculated % MPE
T-Mobile 2500 MHz LTE 1C & 2C Traffic	1	9619.47	136.0	20.46	2500 MHz LTE 1C & 2C Traffic	1000	2.05%
T-Mobile 2500 MHz LTE 1C & 2C Broadcast	1	717.84	136.0	1.53	2500 MHz LTE 1C & 2C Broadcast	1000	0.15%
T-Mobile 2500 MHz NR Traffic	1	19238.94	136.0	40.93	2500 MHz NR Traffic	1000	4.09%
T-Mobile 2500 MHz NR Broadcast	1	1435.69	136.0	3.05	2500 MHz NR Broadcast	1000	0.31%
T-Mobile 600 MHz LTE	2	591.73	136.0	2.52	600 MHz LTE	400	0.63%
T-Mobile 600 MHz NR	1	1577.94	136.0	3.36	600 MHz NR	400	0.84%
T-Mobile 700 MHz LTE	2	648.82	136.0	2.76	700 MHz LTE	467	0.59%
T-Mobile 1900 MHz GSM	4	1076.77	136.0	9.16	1900 MHz GSM	1000	0.92%
T-Mobile 1900 MHz LTE	2	2153.53	136.0	9.16	1900 MHz LTE	1000	0.92%
T-Mobile 2100 MHz LTE	2	2416.30	136.0	10.28	2100 MHz LTE	1000	1.03%
						Total:	**11.52%**

• NOTE: Totals may vary by approximately 0.01% due to summation of remainders in calculations.

Summary

All calculations performed for this analysis yielded results that were **within** the allowable limits for general population exposure to RF Emissions.

The anticipated maximum composite contributions from the T-Mobile facility as well as the site composite emissions value with regards to compliance with FCC's allowable limits for general population exposure to RF Emissions are shown here:

T-Mobile Sector	Power Density Value (%)
Sector A:	11.52%
Sector B:	11.52%
Sector C:	11.52%
T-Mobile Maximum MPE % (Sector A):	11.52%
Site Total:	34.36%
Site Compliance Status:	**COMPLIANT**

The anticipated composite MPE value for this site assuming all carriers present is **34.36%** of the allowable FCC established general population limit sampled at the ground level. This is based upon values listed in the Connecticut Siting Council database for existing carrier emissions.

FCC guidelines state that if a site is found to be out of compliance (over allowable thresholds), that carriers over a 5% contribution to the composite value will require measures to bring the site into compliance. For this facility, the composite values calculated were well within the allowable 100% threshold standard per the federal government.

T-Mobile

T-MOBILE SITE NUMBER: CT11516A
T-MOBILE SITE NAME: CT516/COVENTRY - SPRINT
SITE TYPE: MONOPOLE
TOWER HEIGHT: 152'-0"

BUSINESS UNIT #: 876385
SITE ADDRESS: REILLY MTN. RD
COVENTRY, CT 06238
COUNTY: TOLLAND
JURISDICTION: CONNECTICUT SITING COUNCIL

T-MOBILE ANCHOR SITE CONFIGURATION: 67D5D998E ODE+6160

SITE INFORMATION

CROWN CASTLE USA INC. SITE NAME:	N. COVENTRY / WALLBEOFF
SITE ADDRESS:	REILLY MTN. RD COVENTRY, CT 06238
COUNTY:	TOLLAND
MAP/PARCEL #:	09013032-R05867
AREA OF CONSTRUCTION:	EXISTING
LATITUDE:	41.798947°
LONGITUDE:	-72.332189°
LAT/LONG TYPE:	NAD83
GROUND ELEVATION:	660'
CURRENT ZONING:	GENERAL RESIDENTIAL ZONE - 80
JURISDICTION:	CONNECTICUT SITING COUNCIL
OCCUPANCY CLASSIFICATION:	U
TYPE OF CONSTRUCTION:	IIB
A.D.A. COMPLIANCE:	FACILITY IS UNMANNED AND NOT FOR HUMAN HABITATION
PROPERTY OWNER:	WALLBEOFF JAMES L JR + CONCETTA M TRUSTE 4 KNOTTY PINE LN DEERFIELD, VA 24432
TOWER OWNER:	CROWN CASTLE 2000 CORPORATE DRIVE CANONSBURG, PA 15317
CARRIER/APPLICANT:	T-MOBILE 35 GRIFFIN ROAD BLOOMFIELD, CT 06002
ELECTRIC PROVIDER:	NORTHEAST UTILITIES (800) 286-5000
TELCO PROVIDER:	LIGHTOWER (855) 91-FIBER

PROJECT TEAM

A&E FIRM:	B+T GROUP 1717 S. BOULDER AVE. TULSA, OK 74119 MARVIN PHILLIPS MARVIN.PHILLIPS@BTGRP.COM
CROWN CASTLE USA INC. DISTRICT CONTACTS:	3 CORPORATE PARK DRIVE, SUITE 101 CLIFTON PARK, NY 12065 TRICIA PELON - PROJECT MANAGER TRICIA.PELON@CROWNCASTLE.COM JASON D'AMICO - CONSTRUCTION MANAGER JASON.DAMICO@CROWNCASTLE.COM

DRAWING INDEX

ALL DRAWINGS CONTAINED HEREIN ARE FORMATTED FOR FULL SIZE. CONTRACTOR SHALL VERIFY ALL PLANS AND EXISTING DIMENSIONS AND CONDITIONS ON THE JOB SITE AND SHALL IMMEDIATELY NOTIFY THE ENGINEER IN WRITING OF ANY DISCREPANCIES BEFORE PROCEEDING WITH THE WORK OR BE RESPONSIBLE FOR SAME.

PROJECT DESCRIPTION

THE PURPOSE OF THIS PROJECT IS TO ENHANCE BROADBAND CONNECTIVITY AND CAPACITY TO THE EXISTING ELIGIBLE WIRELESS FACILITY.

TOWER SCOPE OF WORK:
- REMOVE (3) ANTENNAS
- REMOVE (6) TMAs
- REMOVE (12) 1-5/8" COAX CABLES
- INSTALL (6) ANTENNAS
- INSTALL (3) RADIOS
- INSTALL (2) 6X24 HYBRID CABLES (1-5/8")

GROUND SCOPE OF WORK:
- REMOVE (6) RUS01 B2
- REMOVE (3) RADIO 4415 B66A RADIOS
- REMOVE (1) PTS CABINET
- INSTALL (1) 6160 CABINET
- INSTALL (1) B160 BATTERY CABINET
- INSTALL (2) RP 6651
- INSTALL (1) PSU 4813 VR4A
- INSTALL (1) CSR IXRE V2 (GEN2)

NOTE:
PRIOR TO ACCESSING/ENTERING THE SITE YOU MUST CONTACT THE CROWN NOC AT (800) 788-7011 & CROWN CONSTRUCTION MANAGER.

LOCATION MAP

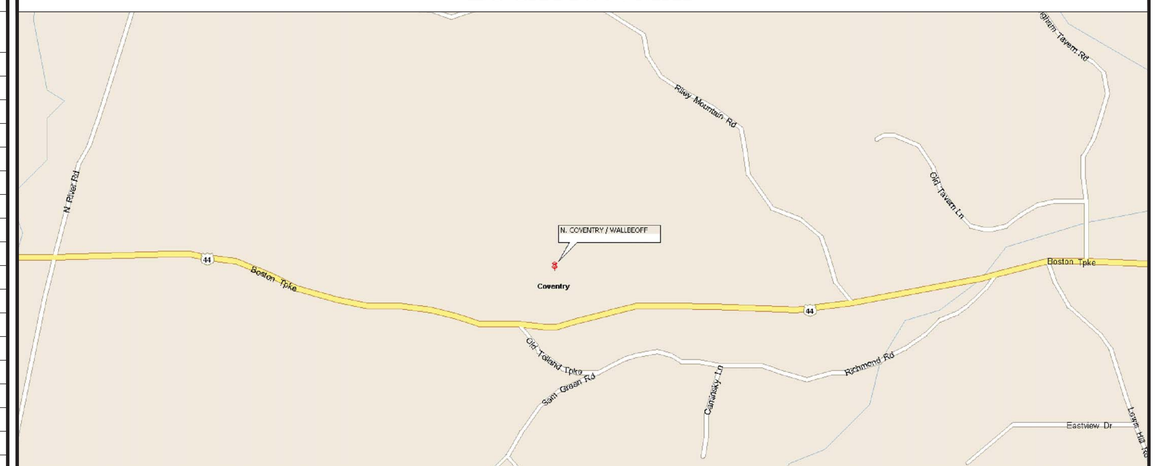

NO SCALE

APPLICABLE CODES/REFERENCE DOCUMENTS

ALL WORK SHALL BE PERFORMED AND MATERIALS INSTALLED IN ACCORDANCE WITH THE CURRENT EDITIONS OF THE FOLLOWING CODES AS ADOPTED BY THE LOCAL GOVERNING AUTHORITIES. NOTHING IN THESE PLANS IS TO BE CONSTRUED TO PERMIT WORK NOT CONFORMING TO THESE CODES:

CODE TYPE	CODE
BUILDING	2018 CONNECTICUT SBC/2015 IBC
MECHANICAL	2018 CONNECTICUT SBC/2015 IMC
ELECTRICAL	2018 CONNECTICUT SBC/2017 NEC

REFERENCE DOCUMENTS:

STRUCTURAL ANALYSIS:	TOWER ENGINEERING PROFESSIONALS
DATED:	4/1/22
MOUNT ANALYSIS:	B+T GROUP
DATED:	3/28/22
RFDS REVISION:	4
DATED:	3/2/22
ORDER ID:	610492
REVISION:	0

CALL CONNECTICUT ONE CALL
(800) 922-4455 CBYD.COM
CALL 2 WORKING DAYS
BEFORE YOU DIG!

APPROVALS

APPROVAL	SIGNATURE	DATE
PROPERTY OWNER OR REP.		
LAND USE PLANNER		
T-MOBILE		
OPERATIONS		
RF		
NETWORK		
BACKHAUL		
CONSTRUCTION MANAGER		

THE PARTIES ABOVE HEREBY APPROVE AND ACCEPT THESE DOCUMENTS AND AUTHORIZE THE CONTRACTOR TO PROCEED WITH THE CONSTRUCTION DESCRIBED HEREIN. ALL CONSTRUCTION DOCUMENTS ARE SUBJECT TO REVIEW BY THE LOCAL BUILDING DEPARTMENT AND ANY CHANGES AND MODIFICATIONS THEY MAY IMPOSE.

T-Mobile
35 GRIFFIN ROAD
BLOOMFIELD, CT 06002

CROWN CASTLE
3 CORPORATE PARK DRIVE, SUITE 101
CLIFTON PARK, NY 12065

B+T GRP
1717 S. BOULDER
SUITE 300
TULSA, OK 74119
PH: (918) 587-4630
www.btgrp.com

T-MOBILE SITE NUMBER:
CT11516A

BU #: **876385**
N. COVENTRY / WALLBEOFF

REILLY MTN. RD
COVENTRY, CT 06238

EXISTING
152'-0" MONOPOLE

ISSUED FOR:

REV	DATE	DRWN	DESCRIPTION	DES./QA
A	4/19/22	JHW	PRELIMINARY REVIEW	LR
0	5/16/22	JHW	CONSTRUCTION	LR
1	5/19/22	MEH	CONSTRUCTION	LR

STATE OF CONNECTICUT
MARVIN E. PHILLIPS
No. 23924
LICENSED
PROFESSIONAL ENGINEER
5/19/22

B&T ENGINEERING, INC.
PEC.0001564
Expires 2/10/23

SHEET NUMBER: T-1
REVISION: 1

CROWN CASTLE USA INC. SITE ACTIVITY REQUIREMENTS:

1. NOTICE TO PROCEED– NO WORK SHALL COMMENCE PRIOR TO CROWN CASTLE USA INC. WRITTEN NOTICE TO PROCEED (NTP) AND THE ISSUANCE OF A PURCHASE ORDER. PRIOR TO ACCESSING/ENTERING THE SITE YOU MUST CONTACT THE CROWN CASTLE USA INC. NOC AT 800–788–7011 & THE CROWN CASTLE USA INC. CONSTRUCTION MANAGER.
2. "LOOK UP" – CROWN CASTLE USA INC. SAFETY CLIMB REQUIREMENT:
   THE INTEGRITY OF THE SAFETY CLIMB AND ALL COMPONENTS OF THE CLIMBING FACILITY SHALL BE CONSIDERED DURING ALL STAGES OF DESIGN, INSTALLATION, AND INSPECTION. TOWER MODIFICATION, MOUNT REINFORCEMENTS, AND/OR EQUIPMENT INSTALLATIONS SHALL NOT COMPROMISE THE INTEGRITY OR FUNCTIONAL USE OF THE SAFETY CLIMB OR ANY COMPONENTS OF THE CLIMBING FACILITY ON THE STRUCTURE. THIS SHALL INCLUDE, BUT NOT BE LIMITED TO: PINCHING OF THE WIRE ROPE, BENDING OF THE WIRE ROPE FROM ITS SUPPORTS, DIRECT CONTACT OR CLOSE PROXIMITY TO THE WIRE ROPE WHICH MAY CAUSE FRICTIONAL WEAR, IMPACT TO THE ANCHORAGE POINTS IN ANY WAY, OR TO IMPEDE/BLOCK ITS INTENDED USE. ANY COMPROMISED SAFETY CLIMB, INCLUDING EXISTING CONDITIONS MUST BE TAGGED OUT AND REPORTED TO YOUR CROWN CASTLE USA INC. POC OR CALL THE NOC TO GENERATE A SAFETY CLIMB MAINTENANCE AND CONTRACTOR NOTICE TICKET.
3. PRIOR TO THE START OF CONSTRUCTION, ALL REQUIRED JURISDICTIONAL PERMITS SHALL BE OBTAINED. THIS INCLUDES, BUT IS NOT LIMITED TO, BUILDING, ELECTRICAL, MECHANICAL, FIRE, FLOOD ZONE, ENVIRONMENTAL, AND ZONING. AFTER ONSITE ACTIVITIES AND CONSTRUCTION ARE COMPLETED, ALL REQUIRED PERMITS SHALL BE SATISFIED AND CLOSED OUT ACCORDING TO LOCAL JURISDICTIONAL REQUIREMENTS.
4. ALL CONSTRUCTION MEANS AND METHODS; INCLUDING BUT NOT LIMITED TO, ERECTION PLANS, RIGGING PLANS, CLIMBING PLANS, AND RESCUE PLANS SHALL BE THE RESPONSIBILITY OF THE GENERAL CONTRACTOR RESPONSIBLE FOR THE EXECUTION OF THE WORK CONTAINED HEREIN, AND SHALL MEET ANSI/ASSE A10.48 (LATEST EDITION); FEDERAL, STATE, AND LOCAL REGULATIONS; AND ANY APPLICABLE INDUSTRY CONSENSUS STANDARDS RELATED TO THE CONSTRUCTION ACTIVITIES BEING PERFORMED. ALL RIGGING PLANS SHALL ADHERE TO ANSI/ASSE A10.48 (LATEST EDITION) AND CROWN CASTLE USA INC. STANDARD CED–STD–10253, INCLUDING THE REQUIRED INVOLVEMENT OF A QUALIFIED ENGINEER FOR CLASS IV CONSTRUCTION, TO CERTIFY THE SUPPORTING STRUCTURE(S) IN ACCORDANCE WITH ANSI/TIA–322 (LATEST EDITION).
5. ALL SITE WORK TO COMPLY WITH QAS–STD–10068 "INSTALLATION STANDARDS FOR CONSTRUCTION ACTIVITIES ON CROWN CASTLE USA INC. TOWER SITE," CED–STD–10294 "STANDARD FOR INSTALLATION OF MOUNTS AND APPURTENANCES," AND LATEST VERSION OF ANSI/TIA–1019–A–2012 "STANDARD FOR INSTALLATION, ALTERATION, AND MAINTENANCE OF ANTENNA SUPPORTING STRUCTURES AND ANTENNAS."
6. IF THE SPECIFIED EQUIPMENT CAN NOT BE INSTALLED AS SHOWN ON THESE DRAWINGS, THE CONTRACTOR SHALL PROPOSE AN ALTERNATIVE INSTALLATION FOR APPROVAL BY CROWN CASTLE USA INC. PRIOR TO PROCEEDING WITH ANY SUCH CHANGE OF INSTALLATION.
7. ALL MATERIALS FURNISHED AND INSTALLED SHALL BE IN STRICT ACCORDANCE WITH ALL APPLICABLE CODES, REGULATIONS AND ORDINANCES. CONTRACTOR SHALL ISSUE ALL APPROPRIATE NOTICES AND COMPLY WITH ALL LAWS, ORDINANCES, RULES, REGULATIONS AND LAWFUL ORDERS OF ANY PUBLIC AUTHORITY REGARDING THE PERFORMANCE OF THE WORK. ALL WORK CARRIED OUT SHALL COMPLY WITH ALL APPLICABLE MUNICIPAL AND UTILITY COMPANY SPECIFICATIONS AND LOCAL JURISDICTIONAL CODES, ORDINANCES AND APPLICABLE REGULATIONS.
8. THE CONTRACTOR SHALL INSTALL ALL EQUIPMENT AND MATERIALS IN ACCORDANCE WITH MANUFACTURER'S RECOMMENDATIONS UNLESS SPECIFICALLY STATED OTHERWISE.
9. THE CONTRACTOR SHALL CONTACT UTILITY LOCATING SERVICES PRIOR TO THE START OF CONSTRUCTION.
10. ALL EXISTING ACTIVE SEWER, WATER, GAS, ELECTRIC AND OTHER UTILITIES WHERE ENCOUNTERED IN THE WORK, SHALL BE PROTECTED AT ALL TIMES AND WHERE REQUIRED FOR THE PROPER EXECUTION OF THE WORK, SHALL BE RELOCATED AS DIRECTED BY CONTRACTOR. EXTREME CAUTION SHOULD BE USED BY THE CONTRACTOR WHEN EXCAVATING OR DRILLING PIERS AROUND OR NEAR UTILITIES. CONTRACTOR SHALL PROVIDE SAFETY TRAINING FOR THE WORKING CREW. THIS WILL INCLUDE BUT NOT BE LIMITED TO A) FALL PROTECTION B) CONFINED SPACE C) ELECTRICAL SAFETY D) TRENCHING AND EXCAVATION E) CONSTRUCTION SAFETY PROCEDURES.
11. ALL SITE WORK SHALL BE AS INDICATED ON THE STAMPED CONSTRUCTION DRAWINGS AND PROJECT SPECIFICATIONS, LATEST APPROVED REVISION.
12. CONTRACTOR SHALL KEEP THE SITE FREE FROM ACCUMULATING WASTE MATERIAL, DEBRIS, AND TRASH AT THE COMPLETION OF THE WORK. IF NECESSARY, RUBBISH, STUMPS, DEBRIS, STICKS, STONES AND OTHER REFUSE SHALL BE REMOVED FROM THE SITE AND DISPOSED OF LEGALLY.
13. ALL EXISTING INACTIVE SEWER, WATER, GAS, ELECTRIC AND OTHER UTILITIES, WHICH INTERFERE WITH THE EXECUTION OF THE WORK, SHALL BE REMOVED AND/OR CAPPED, PLUGGED OR OTHERWISE DISCONTINUED AT POINTS WHICH WILL NOT INTERFERE WITH THE EXECUTION OF THE WORK, SUBJECT TO THE APPROVAL OF CONTRACTOR, TOWER OWNER, CROWN CASTLE USA INC., AND/OR LOCAL UTILITIES.
14. THE CONTRACTOR SHALL PROVIDE SITE SIGNAGE IN ACCORDANCE WITH THE TECHNICAL SPECIFICATION FOR SITE SIGNAGE REQUIRED BY LOCAL JURISDICTION AND SIGNAGE REQUIRED ON INDIVIDUAL PIECES OF EQUIPMENT, ROOMS, AND SHELTERS.
15. THE SITE SHALL BE GRADED TO CAUSE SURFACE WATER TO FLOW AWAY FROM THE CARRIER'S EQUIPMENT AND TOWER AREAS.
16. THE SUB GRADE SHALL BE COMPACTED AND BROUGHT TO A SMOOTH UNIFORM GRADE PRIOR TO FINISHED SURFACE APPLICATION.
17. THE AREAS OF THE OWNERS PROPERTY DISTURBED BY THE WORK AND NOT COVERED BY THE TOWER, EQUIPMENT OR DRIVEWAY, SHALL BE GRADED TO A UNIFORM SLOPE, AND STABILIZED TO PREVENT EROSION AS SPECIFIED ON THE CONSTRUCTION DRAWINGS AND/OR PROJECT SPECIFICATIONS.
18. CONTRACTOR SHALL MINIMIZE DISTURBANCE TO EXISTING SITE DURING CONSTRUCTION. EROSION CONTROL MEASURES, IF REQUIRED DURING CONSTRUCTION, SHALL BE IN CONFORMANCE WITH THE LOCAL GUIDELINES FOR EROSION AND SEDIMENT CONTROL.
19. THE CONTRACTOR SHALL PROTECT EXISTING IMPROVEMENTS, PAVEMENTS, CURBS, LANDSCAPING AND STRUCTURES. ANY DAMAGED PART SHALL BE REPAIRED AT CONTRACTOR'S EXPENSE TO THE SATISFACTION OF OWNER.
20. CONTRACTOR SHALL LEGALLY AND PROPERLY DISPOSE OF ALL SCRAP MATERIALS SUCH AS COAXIAL CABLES AND OTHER ITEMS REMOVED FROM THE EXISTING FACILITY. ANTENNAS REMOVED SHALL BE RETURNED TO THE OWNER'S DESIGNATED LOCATION.
21. CONTRACTOR SHALL LEAVE PREMISES IN CLEAN CONDITION. TRASH AND DEBRIS SHOULD BE REMOVED FROM SITE ON A DAILY BASIS.
22. NO FILL OR EMBANKMENT MATERIAL SHALL BE PLACED ON FROZEN GROUND. FROZEN MATERIALS, SNOW OR ICE SHALL NOT BE PLACED IN ANY FILL OR EMBANKMENT.

GENERAL NOTES:

1. FOR THE PURPOSE OF CONSTRUCTION DRAWING, THE FOLLOWING DEFINITIONS SHALL APPLY:
   CONTRACTOR: GENERAL CONTRACTOR RESPONSIBLE FOR CONSTRUCTION
   CARRIER: T–MOBILE
   TOWER OWNER: CROWN CASTLE USA INC.
2. THESE DRAWINGS HAVE BEEN PREPARED USING STANDARDS OF PROFESSIONAL CARE AND COMPLETENESS NORMALLY EXERCISED UNDER SIMILAR CIRCUMSTANCES BY REPUTABLE ENGINEERS IN THIS OR SIMILAR LOCALITIES. IT IS ASSUMED THAT THE WORK DEPICTED WILL BE PERFORMED BY AN EXPERIENCED CONTRACTOR AND/OR WORKPEOPLE WHO HAVE A WORKING KNOWLEDGE OF THE APPLICABLE CODE STANDARDS AND REQUIREMENTS AND OF INDUSTRY ACCEPTED STANDARD GOOD PRACTICE. AS NOT EVERY CONDITION OR ELEMENT IS (OR CAN BE) EXPLICITLY SHOWN ON THESE DRAWINGS, THE CONTRACTOR SHALL USE INDUSTRY ACCEPTED STANDARD GOOD PRACTICE FOR MISCELLANEOUS WORK NOT EXPLICITLY SHOWN.
3. THESE DRAWINGS REPRESENT THE FINISHED STRUCTURE. THEY DO NOT INDICATE THE MEANS OR METHODS OF CONSTRUCTION. THE CONTRACTOR SHALL BE SOLELY RESPONSIBLE FOR THE CONSTRUCTION MEANS, METHODS, TECHNIQUES, SEQUENCES, AND PROCEDURES. THE CONTRACTOR SHALL PROVIDE ALL MEASURES NECESSARY FOR PROTECTION OF LIFE AND PROPERTY DURING CONSTRUCTION. SUCH MEASURES SHALL INCLUDE, BUT NOT BE LIMITED TO, BRACING, FORMWORK, SHORING, ETC. SITE VISITS BY THE ENGINEER OR HIS REPRESENTATIVE WILL NOT INCLUDE INSPECTION OF THESE ITEMS AND IS FOR STRUCTURAL OBSERVATION OF THE FINISHED STRUCTURE ONLY.
4. NOTES AND DETAILS IN THE CONSTRUCTION DRAWINGS SHALL TAKE PRECEDENCE OVER GENERAL NOTES AND TYPICAL DETAILS. WHERE NO DETAILS ARE SHOWN, CONSTRUCTION SHALL CONFORM TO SIMILAR WORK ON THE PROJECT, AND/OR AS PROVIDED FOR IN THE CONTRACT DOCUMENTS. WHERE DISCREPANCIES OCCUR BETWEEN PLANS, DETAILS, GENERAL NOTES, AND SPECIFICATIONS, THE GREATER, MORE STRICT REQUIREMENTS, SHALL GOVERN. IF FURTHER CLARIFICATION IS REQUIRED CONTACT THE ENGINEER OF RECORD.
5. SUBSTANTIAL EFFORT HAS BEEN MADE TO PROVIDE ACCURATE DIMENSIONS AND MEASUREMENTS ON THE DRAWINGS TO ASSIST IN THE FABRICATION AND/OR PLACEMENT OF CONSTRUCTION ELEMENTS BUT IT IS THE SOLE RESPONSIBILITY OF THE CONTRACTOR TO FIELD VERIFY THE DIMENSIONS, MEASUREMENTS, AND/OR CLEARANCES SHOWN IN THE CONSTRUCTION DRAWINGS PRIOR TO FABRICATION OR CUTTING OF ANY NEW OR EXISTING CONSTRUCTION ELEMENTS. IF IT IS DETERMINED THAT THERE ARE DISCREPANCIES AND/OR CONFLICTS WITH THE CONSTRUCTION DRAWINGS THE ENGINEER OF RECORD IS TO BE NOTIFIED AS SOON AS POSSIBLE.
6. PRIOR TO THE SUBMISSION OF BIDS, THE BIDDING CONTRACTOR SHALL VISIT THE CELL SITE TO FAMILIARIZE WITH THE EXISTING CONDITIONS AND TO CONFIRM THAT THE WORK CAN BE ACCOMPLISHED AS SHOWN ON THE CONSTRUCTION DRAWINGS. ANY DISCREPANCY FOUND SHALL BE BROUGHT TO THE ATTENTION OF CROWN CASTLE.
7. ALL MATERIALS FURNISHED AND INSTALLED SHALL BE IN STRICT ACCORDANCE WITH ALL APPLICABLE CODES, REGULATIONS AND ORDINANCES. CONTRACTOR SHALL ISSUE ALL APPROPRIATE NOTICES AND COMPLY WITH ALL LAWS, ORDINANCES, RULES, REGULATIONS AND LAWFUL ORDERS OF ANY PUBLIC AUTHORITY REGARDING THE PERFORMANCE OF THE WORK. ALL WORK CARRIED OUT SHALL COMPLY WITH ALL APPLICABLE MUNICIPAL AND UTILITY COMPANY SPECIFICATIONS AND LOCAL JURISDICTIONAL CODES, ORDINANCES AND APPLICABLE REGULATIONS.
8. UNLESS NOTED OTHERWISE, THE WORK SHALL INCLUDE FURNISHING MATERIALS, EQUIPMENT, APPURTENANCES AND LABOR NECESSARY TO COMPLETE ALL INSTALLATIONS AS INDICATED ON THE DRAWINGS.
9. THE CONTRACTOR SHALL INSTALL ALL EQUIPMENT AND MATERIALS IN ACCORDANCE WITH MANUFACTURER'S RECOMMENDATIONS UNLESS SPECIFICALLY STATED OTHERWISE.
10. IF THE SPECIFIED EQUIPMENT CAN NOT BE INSTALLED AS SHOWN ON THESE DRAWINGS, THE CONTRACTOR SHALL PROPOSE AN ALTERNATIVE INSTALLATION FOR APPROVAL BY THE CARRIER AND CROWN CASTLE PRIOR TO PROCEEDING WITH ANY SUCH CHANGE OF INSTALLATION.
11. CONTRACTOR IS TO PERFORM A SITE INVESTIGATION AND IS TO DETERMINE THE BEST ROUTING OF ALL CONDUITS FOR POWER, AND TELCO AND FOR GROUNDING CABLES AS SHOWN IN THE POWER, TELCO, AND GROUNDING PLAN DRAWINGS.
12. THE CONTRACTOR SHALL PROTECT EXISTING IMPROVEMENTS, PAVEMENTS, CURBS, LANDSCAPING AND STRUCTURES. ANY DAMAGED PART SHALL BE REPAIRED AT CONTRACTOR'S EXPENSE TO THE SATISFACTION OF CROWN CASTLE USA INC.
13. CONTRACTOR SHALL LEGALLY AND PROPERLY DISPOSE OF ALL SCRAP MATERIALS SUCH AS COAXIAL CABLES AND OTHER ITEMS REMOVED FROM THE EXISTING FACILITY. ANTENNAS REMOVED SHALL BE RETURNED TO THE OWNER'S DESIGNATED LOCATION.
14. CONTRACTOR SHALL LEAVE PREMISES IN CLEAN CONDITION. TRASH AND DEBRIS SHOULD BE REMOVED FROM SITE ON A DAILY BASIS.

CONCRETE, FOUNDATIONS, AND REINFORCING STEEL:

1. ALL CONCRETE WORK SHALL BE IN ACCORDANCE WITH THE ACI 301, ACI 318, ACI 336, ASTM A184, ASTM A185 AND THE DESIGN AND CONSTRUCTION SPECIFICATION FOR CAST–IN–PLACE CONCRETE.
2. UNLESS NOTED OTHERWISE, SOIL BEARING PRESSURE USED FOR DESIGN OF SLABS AND FOUNDATIONS IS ASSUMED TO BE 1000 psf.
3. ALL CONCRETE SHALL HAVE A MINIMUM COMPRESSIVE STRENGTH (f'c) OF 3000 psi AT 28 DAYS, UNLESS NOTED OTHERWISE. NO MORE THAN 90 MINUTES SHALL ELAPSE FROM BATCH TIME TO TIME OF PLACEMENT UNLESS APPROVED BY THE ENGINEER OF RECORD. TEMPERATURE OF CONCRETE SHALL NOT EXCEED 90°f AT TIME OF PLACEMENT.
4. CONCRETE EXPOSED TO FREEZE–THAW CYCLES SHALL CONTAIN AIR ENTRAINING ADMIXTURES. AMOUNT OF AIR ENTRAINMENT TO BE BASED ON SIZE OF AGGREGATE AND F3 CLASS EXPOSURE (VERY SEVERE). CEMENT USED TO BE TYPE II PORTLAND CEMENT WITH A MAXIMUM WATER–TO–CEMENT RATIO (W/C) OF 0.45.
5. ALL STEEL REINFORCING SHALL CONFORM TO ASTM A615. ALL WELDED WIRE FABRIC (WWF) SHALL CONFORM TO ASTM A185. ALL SPLICES SHALL BE CLASS "B" TENSION SPLICES, UNLESS NOTED OTHERWISE. ALL HOOKS SHALL BE STANDARD 90 DEGREE HOOKS, UNLESS NOTED OTHERWISE. YIELD STRENGTH (Fy) OF STANDARD DEFORMED BARS ARE AS FOLLOWS:
   #4 BARS AND SMALLER..40 ksi
   #5 BARS AND LARGER..60 ksi
6. THE FOLLOWING MINIMUM CONCRETE COVER SHALL BE PROVIDED FOR REINFORCING STEEL UNLESS SHOWN OTHERWISE ON DRAWINGS:
   CONCRETE CAST AGAINST AND PERMANENTLY EXPOSED TO EARTH....................3"
   CONCRETE EXPOSED TO EARTH OR WEATHER:
      #6 BARS AND LARGER..2"
      #5 BARS AND SMALLER..1–1/2"
   CONCRETE NOT EXPOSED TO EARTH OR WEATHER:
      SLAB AND WALLS..3/4"
      BEAMS AND COLUMNS..1–1/2"
7. A TOOLED EDGE OR A 3/4" CHAMFER SHALL BE PROVIDED AT ALL EXPOSED EDGES OF CONCRETE, UNLESS NOTED OTHERWISE, IN ACCORDANCE WITH ACI 301 SECTION 4.2.4.

GREENFIELD GROUNDING NOTES:

1. ALL GROUND ELECTRODE SYSTEMS (INCLUDING TELECOMMUNICATION, RADIO, LIGHTNING PROTECTION AND AC POWER GES'S) SHALL BE BONDED TOGETHER AT OR BELOW GRADE, BY TWO OR MORE COPPER BONDING CONDUCTORS IN ACCORDANCE WITH THE NEC.
2. THE CONTRACTOR SHALL PERFORM IEEE FALL–OF–POTENTAL RESISTANCE TO EARTH TESTING (PER IEEE 1100 AND 81) FOR GROUND ELECTRODE SYSTEMS, THE CONTRACTOR SHALL FURNISH AND INSTALL SUPPLEMENTAL GROUND ELECTRODES AS NEEDED TO ACHIEVE A TEST RESULT OF 5 OHMS OR LESS.
3. THE CONTRACTOR IS RESPONSIBLE FOR PROPERLY SEQUENCING GROUNDING AND UNDERGROUND CONDUIT INSTALLATION AS TO PREVENT ANY LOSS OF CONTINUITY IN THE GROUNDING SYSTEM OR DAMAGE TO THE CONDUIT AND PROVIDE TESTING RESULTS.
4. METAL CONDUIT AND TRAY SHALL BE GROUNDED AND MADE ELECTRICALLY CONTINUOUS WITH LISTED BONDING FITTINGS OR BY BONDING ACROSS THE DISCONTINUITY WITH #6 COPPER WIRE UL APPROVED GROUNDING TYPE CONDUIT CLAMPS.
5. METAL RACEWAY SHALL NOT BE USED AS THE NEC REQUIRED EQUIPMENT GROUND CONDUCTOR. STRANDED COPPER CONDUCTORS WITH GREEN INSULATION, SIZED IN ACCORDANCE WITH THE NEC, SHALL BE FURNISHED AND INSTALLED WITH THE POWER CIRCUITS TO BTS EQUIPMENT.
6. EACH CABINET FRAME SHALL BE DIRECTLY CONNECTED TO THE MASTER GROUND BAR WITH GREEN INSULATED SUPPLEMENTAL EQUIPMENT GROUND WIRES, #6 STRANDED COPPER OR LARGER FOR INDOOR BTS; #2 BARE SOLID TINNED COPPER FOR OUTDOOR BTS.
7. CONNECTIONS TO THE GROUND BUS SHALL NOT BE DOUBLED UP OR STACKED BACK TO BACK CONNECTIONS ON OPPOSITE SIDE OF THE GROUND BUS ARE PERMITTED.
8. ALL EXTERIOR GROUND CONDUCTORS BETWEEN EQUIPMENT/GROUND BARS AND THE GROUND RING SHALL BE #2 SOLID TINNED COPPER UNLESS OTHERWISE INDICATED.
9. ALUMINUM CONDUCTOR OR COPPER CLAD STEEL CONDUCTOR SHALL NOT BE USED FOR GROUNDING CONNECTIONS.
10. USE OF 90° BENDS IN THE PROTECTION GROUNDING CONDUCTORS SHALL BE AVOIDED WHEN 45° BENDS CAN BE ADEQUATELY SUPPORTED.
11. EXOTHERMIC WELDS SHALL BE USED FOR ALL GROUNDING CONNECTIONS BELOW GRADE.
12. ALL GROUND CONNECTIONS ABOVE GRADE (INTERIOR AND EXTERIOR) SHALL BE FORMED USING HIGH PRESS CRIMPS.
13. COMPRESSION GROUND CONNECTIONS MAY BE REPLACED BY EXOTHERMIC WELD CONNECTIONS.
14. ICE BRIDGE BONDING CONDUCTORS SHALL BE EXOTHERMICALLY BONDED OR BOLTED TO THE BRIDGE AND THE TOWER GROUND BAR.
15. APPROVED ANTIOXIDANT COATINGS (i.e. CONDUCTIVE GEL OR PASTE) SHALL BE USED ON ALL COMPRESSION AND BOLTED GROUND CONNECTIONS.
16. ALL EXTERIOR GROUND CONNECTIONS SHALL BE COATED WITH A CORROSION RESISTANT MATERIAL.
17. MISCELLANEOUS ELECTRICAL AND NON–ELECTRICAL METAL BOXES, FRAMES AND SUPPORTS SHALL BE BONDED TO THE GROUND RING, IN ACCORDANCE WITH THE NEC.
18. BOND ALL METALLIC OBJECTS WITHIN 6 ft OF MAIN GROUND RING WITH (1) #2 BARE SOLID TINNED COPPER GROUND CONDUCTOR.
19. GROUND CONDUCTORS USED FOR THE FACILITY GROUNDING AND LIGHTNING PROTECTION SYSTEMS SHALL NOT BE ROUTED THROUGH METALLIC OBJECTS THAT FORM A RING AROUND THE CONDUCTOR, SUCH AS METALLIC CONDUITS, METAL SUPPORT CLIPS OR SLEEVES THROUGH WALLS OR FLOORS. WHEN IT IS REQUIRED TO BE HOUSED IN CONDUIT TO MEET CODE REQUIREMENTS OR LOCAL CONDITIONS, NON–METALLIC MATERIAL SUCH AS PVC CONDUIT SHALL BE USED. WHERE USE OF METAL CONDUIT IS UNAVOIDABLE (i.e., NONMETALLIC CONDUIT PROHIBITED BY LOCAL CODE) THE GROUND CONDUCTOR SHALL BE BONDED TO EACH END OF THE METAL CONDUIT.
20. ALL GROUNDS THAT TRANSITION FROM BELOW GRADE TO ABOVE GRADE MUST BE #2 BARE SOLID TINNED COPPER IN 3/4" NON–METALLIC, FLEXIBLE CONDUIT FROM 24" BELOW GRADE TO WITHIN 3" TO 6" OF CAD–WELD TERMINATION POINT. THE EXPOSED END OF THE CONDUIT MUST BE SEALED WITH SILICONE CAULK. (ADD TRANSITIONING GROUND STANDARD DETAIL AS WELL).
21. BUILDINGS WHERE THE MAIN GROUNDING CONDUCTORS ARE REQUIRED TO BE ROUTED TO GRADE, THE CONTRACTOR SHALL ROUTE TWO GROUNDING CONDUCTORS FROM THE ROOFTOP, TOWERS, AND WATER TOWERS GROUNDING RING, TO THE EXISTING GROUNDING SYSTEM, THE GROUNDING CONDUCTORS SHALL NOT BE SMALLER THAN 2/0 COPPER. ROOFTOP GROUNDING RING SHALL BE BONDED TO THE EXISTING GROUNDING SYSTEM, THE BUILDING STEEL COLUMNS, LIGHTNING PROTECTION SYSTEM, AND BUILDING MAIN WATER LINE (FERROUS OR NONFERROUS METAL PIPING ONLY).

ELECTRICAL INSTALLATION NOTES:

1. ALL ELECTRICAL WORK SHALL BE PERFORMED IN ACCORDANCE WITH THE PROJECT SPECIFICATIONS, NEC AND ALL APPLICABLE FEDERAL, STATE, AND LOCAL CODES/ORDINANCES.
2. CONDUIT ROUTINGS ARE SCHEMATIC. CONTRACTOR SHALL INSTALL CONDUITS SO THAT ACCESS TO EQUIPMENT IS NOT BLOCKED AND TRIP HAZARDS ARE ELIMINATED.
3. WIRING, RACEWAY AND SUPPORT METHODS AND MATERIALS SHALL COMPLY WITH THE REQUIREMENTS OF THE NEC.
4. ALL CIRCUITS SHALL BE SEGREGATED AND MAINTAIN MINIMUM CABLE SEPARATION AS REQUIRED BY THE NEC.
   - 4.1. ALL EQUIPMENT SHALL BEAR THE UNDERWRITERS LABORATORIES LABEL OF APPROVAL, AND SHALL CONFORM TO REQUIREMENT OF THE NATIONAL ELECTRICAL CODE.
   - 4.2. ALL OVERCURRENT DEVICES SHALL HAVE AN INTERRUPTING CURRENT RATING THAT SHALL BE GREATER THAN THE SHORT CIRCUIT CURRENT TO WHICH THEY ARE SUBJECTED, 22,000 AIC MINIMUM. VERYIFY AVAILABLE SHORT CIRCUIT CURRENT DOES NOT EXCEED THE RATING OF ELECTRICAL EQUIPMENT IN ACCORDANCE WITH ARTICLE 110.24 NEC OR THE MOST CURRENT ADOPTED CODE PRE THE GOVERNING JURISDICTION.
5. EACH END OF EVERY POWER PHASE CONDUCTOR, GROUNDING CONDUCTOR, AND TELCO CONDUCTOR OR CABLE SHALL BE LABELED WITH COLOR–CODED INSULATION OR ELECTRICAL TAPE (3M BRAND, 1/2" PLASTIC ELECTRICAL TAPE WITH UV PROTECTION, OR EQUAL). THE IDENTIFICATION METHOD SHALL CONFORM WITH NEC AND OSHA.
6. ALL ELECTRICAL COMPONENTS SHALL BE CLEARLY LABELED WITH LAMICOID TAGS SHOWING THEIR RATED VOLTAGE, PHASE CONFIGURATION, WIRE CONFIGURATION, POWER OR AMPACITY RATING AND BRANCH CIRCUIT ID NUMBERS (i.e. PANEL BOARD AND CIRCUIT ID'S).
7. PANEL BOARDS (ID NUMBERS) SHALL BE CLEARLY LABELED WITH PLASTIC LABELS.
8. ALL TIE WRAPS SHALL BE CUT FLUSH WITH APPROVED CUTTING TOOL TO REMOVE SHARP EDGES.
9. ALL POWER AND EQUIPMENT GROUND WIRING IN TUBING OR CONDUIT SHALL BE SINGLE COPPER CONDUCTOR (#14 OR LARGER) WITH TYPE THHW, THWN, THWN–2, XHHW, XHHW–2, THW, THW–2, RHW, OR RHW–2 INSULATION UNLESS OTHERWISE SPECIFIED.
10. SUPPLEMENTAL EQUIPMENT GROUND WIRING LOCATED INDOORS SHALL BE SINGLE COPPER CONDUCTOR (#6 OR LARGER) WITH TYPE THHW, THWN, THWN–2, XHHW, XHHW–2, THW, THW–2, RHW, OR RHW–2 INSULATION UNLESS OTHERWISE SPECIFIED.
11. POWER AND CONTROL WIRING IN FLEXIBLE CORD SHALL BE MULTI–CONDUCTOR, TYPE SOOW CORD (#14 OR LARGER) UNLESS OTHERWISE SPECIFIED.
12. POWER AND CONTROL WIRING FOR USE IN CABLE TRAY SHALL BE MULTI–CONDUCTOR, TYPE TC CABLE (#14 OR LARGER), WITH TYPE THHW, THWN, THWN–2, XHHW, XHHW–2, THW, THW–2, RHW, OR RHW–2 INSULATION UNLESS OTHERWISE SPECIFIED.
13. ALL POWER AND GROUNDING CONNECTIONS SHALL BE CRIMP–STYLE, COMPRESSION WIRE LUGS AND WIRE NUTS BY THOMAS AND BETTS (OR EQUAL). LUGS AND WIRE NUTS SHALL BE RATED FOR OPERATION NOT LESS THAN 75° C (90° C IF AVAILABLE).
14. RACEWAY AND CABLE TRAY SHALL BE LISTED OR LABELED FOR ELECTRICAL USE IN ACCORDANCE WITH NEMA, UL, ANSI/IEEE AND NEC.
15. ELECTRICAL METALLIC TUBING (EMT), INTERMEDIATE METAL CONDUIT (IMC), OR RIGID METAL CONDUIT (RMC) SHALL BE USED FOR EXPOSED INDOOR LOCATIONS.
16. ELECTRICAL METALLIC TUBING (EMT) OR METAL–CLAD CABLE (MC) SHALL BE USED FOR CONCEALED INDOOR LOCATIONS.
17. SCHEDULE 40 PVC UNDERGROUND ON STRAIGHTS AND SCHEDULE 80 PVC FOR ALL ELBOWS/90s AND ALL APPROVED ABOVE GRADE PVC CONDUIT.
18. LIQUID–TIGHT FLEXIBLE METALLIC CONDUIT (LIQUID–TITE FLEX) SHALL BE USED INDOORS AND OUTDOORS, WHERE VIBRATION OCCURS OR FLEXIBILITY IS NEEDED.
19. CONDUIT AND TUBING FITTINGS SHALL BE THREADED OR COMPRESSION–TYPE AND APPROVED FOR THE LOCATION USED. SET SCREW FITTINGS ARE NOT ACCEPTABLE.
20. CABINETS, BOXES AND WIRE WAYS SHALL BE LABELED FOR ELECTRICAL USE IN ACCORDANCE WITH NEMA, UL, ANSI/IEEE AND THE NEC.
21. WIREWAYS SHALL BE METAL WITH AN ENAMEL FINISH AND INCLUDE A HINGED COVER, DESIGNED TO SWING OPEN DOWNWARDS (WIREMOLD SPECMATE WIREWAY).
22. SLOTTED WIRING DUCT SHALL BE PVC AND INCLUDE COVER (PANDUIT TYPE E OR EQUAL).
23. CONDUITS SHALL BE FASTENED SECURELY IN PLACE WITH APPROVED NON–PERFORATED STRAPS AND HANGERS. EXPLOSIVE DEVICES (i.e. POWDER–ACTUATED) FOR ATTACHING HANGERS TO STRUCTURE WILL NOT BE PERMITTED. CLOSELY FOLLOW THE LINES OF THE STRUCTURE, MAINTAIN CLOSE PROXIMITY TO THE STRUCTURE AND KEEP CONDUITS IN TIGHT ENVELOPES. CHANGES IN DIRECTION TO ROUTE AROUND OBSTACLES SHALL BE MADE WITH CONDUIT OUTLET BODIES. CONDUIT SHALL BE INSTALLED IN A NEAT AND WORKMANLIKE MANNER. PARALLEL AND PERPENDICULAR TO STRUCTURE WALL AND CEILING LINES. ALL CONDUIT SHALL BE FISHED TO CLEAR OBSTRUCTIONS. ENDS OF CONDUITS SHALL BE TEMPORARILY CAPPED FLUSH TO FINISH GRADE TO PREVENT CONCRETE, PLASTER OR DIRT FROM ENTERING. CONDUITS SHALL BE RIGIDLY CLAMPED TO BOXES BY GALVANIZED MALLEABLE IRON BUSHING ON INSIDE AND GALVANIZED MALLEABLE IRON LOCKNUT ON OUTSIDE AND INSIDE.
24. EQUIPMENT CABINETS, TERMINAL BOXES, JUNCTION BOXES AND PULL BOXES SHALL BE GALVANIZED OR EPOXY–COATED SHEET STEEL. SHALL MEET OR EXCEED UL 50 AND BE RATED NEMA 1 (OR BETTER) FOR INTERIOR LOCATIONS AND NEMA 3R (OR BETTER) FOR EXTERIOR LOCATIONS.
25. METAL RECEPTACLE, SWITCH AND DEVICE BOXES SHALL BE GALVANIZED, EPOXY–COATED OR NON–CORRODING; SHALL MEET OR EXCEED UL 514A AND NEMA OS 1 AND BE RATED NEMA 1 (OR BETTER) FOR INTERIOR LOCATIONS AND WEATHER PROTECTED (WP OR BETTER) FOR EXTERIOR LOCATIONS.
26. NONMETALLIC RECEPTACLE, SWITCH AND DEVICE BOXES SHALL MEET OR EXCEED NEMA OS 2 (NEWEST REVISION) AND BE RATED NEMA 1 (OR BETTER) FOR INTERIOR LOCATIONS AND WEATHER PROTECTED (WP OR BETTER) FOR EXTERIOR LOCATIONS.
27. THE CONTRACTOR SHALL NOTIFY AND OBTAIN NECESSARY AUTHORIZATION FROM THE CARRIER AND/OR CROWN CASTLE USA INC. BEFORE COMMENCING WORK ON THE AC POWER DISTRIBUTION PANELS.
28. THE CONTRACTOR SHALL PROVIDE NECESSARY TAGGING ON THE BREAKERS, CABLES AND DISTRIBUTION PANELS IN ACCORDANCE WITH THE APPLICABLE CODES AND STANDARDS TO SAFEGUARD LIFE AND PROPERTY.
29. INSTALL LAMICOID LABEL ON THE METER CENTER TO SHOW "T–MOBILE".
30. ALL EMPTY/SPARE CONDUITS THAT ARE INSTALLED ARE TO HAVE A METERED MULE TAPE PULL CORD INSTALLED.

CONDUCTOR COLOR CODE

SYSTEM	CONDUCTOR	COLOR
120/240V, 1Ø	A PHASE	BLACK
	B PHASE	RED
	NEUTRAL	WHITE
	GROUND	GREEN
120/208V, 3Ø	A PHASE	BLACK
	B PHASE	RED
	C PHASE	BLUE
	NEUTRAL	WHITE
	GROUND	GREEN
277/480V, 3Ø	A PHASE	BROWN
	B PHASE	ORANGE OR PURPLE
	C PHASE	YELLOW
	NEUTRAL	GREY
	GROUND	GREEN
DC VOLTAGE	POS (+)	RED**
	NEG (–)	BLACK**

* SEE NEC 210.5(C)(1) AND (2)
** POLARITY MARKED AT TERMINATION

APWA UNIFORM COLOR CODE:

WHITE	PROPOSED EXCAVATION
PINK	TEMPORARY SURVEY MARKINGS
RED	ELECTRIC POWER LINES, CABLES, CONDUIT, AND LIGHTING CABLES
YELLOW	GAS, OIL, STEAM, PETROLEUM, OR GASEOUS MATERIALS
ORANGE	COMMUNICATION, ALARM OR SIGNAL LINES, CABLES, OR CONDUIT AND TRAFFIC LOOPS
BLUE	POTABLE WATER
PURPLE	RECLAIMED WATER, IRRIGATION, AND SLURRY LINES
GREEN	SEWERS AND DRAIN LINES

ABBREVIATIONS:

ANT	ANTENNA
(E)	EXISTING
FIF	FACILITY INTERFACE FRAME
GEN	GENERATOR
GPS	GLOBAL POSITIONING SYSTEM
GSM	GLOBAL SYSTEM FOR MOBILE
LTE	LONG TERM EVOLUTION
MGB	MASTER GROUND BAR
MW	MICROWAVE
(N)	NEW
NEC	NATIONAL ELECTRIC CODE
(P)	PROPOSED
PP	POWER PLANT
QTY	QUANTITY
RECT	RECTIFIER
RBS	RADIO BASE STATION
RET	REMOTE ELECTRIC TILT
RFDS	RADIO FREQUENCY DATA SHEET
RRH	REMOTE RADIO HEAD
RRU	REMOTE RADIO UNIT
SIAD	SMART INTEGRATED DEVICE
TMA	TOWER MOUNTED AMPLIFIER
TYP	TYPICAL
UMTS	UNIVERSAL MOBILE TELECOMMUNICATIONS SYSTEM
W.P.	WORK POINT

T-Mobile
35 GRIFFIN ROAD
BLOOMFIELD, CT 06002

CROWN CASTLE
3 CORPORATE PARK DRIVE, SUITE 101
CLIFTON PARK, NY 12065

B+T GRP
1717 S. BOULDER
SUITE 300
TULSA, OK 74119
PH: (918) 587-4630
www.btgrp.com

T-MOBILE SITE NUMBER:
CT11516A

BU #: **876385**
N. COVENTRY /
WALLBEOFF

REILLY MTN. RD
COVENTRY, CT 06238

EXISTING
152'-0" MONOPOLE

ISSUED FOR:

REV	DATE	DRWN	DESCRIPTION	DES./QA
A	4/19/22	JHW	PRELIMINARY REVIEW	LR
0	5/16/22	JHW	CONSTRUCTION	LR
1	5/19/22	MEH	CONSTRUCTION	LR

No. 23924
5/19/22

B&T ENGINEERING, INC.
PEC.0001564
Expires 2/10/23

IT IS A VIOLATION OF LAW FOR ANY PERSON, UNLESS THEY ARE ACTING UNDER THE DIRECTION OF A LICENSED PROFESSIONAL ENGINEER, TO ALTER THIS DOCUMENT.

SHEET NUMBER: T-2
REVISION: 1

SITE PLAN DISCLAIMER:

PROPERTY LINES AND STRUCTURES HAVE BEEN DIGITIZED FROM GOOGLE MAPS. CROWN CASTLE USA INC. HAS NOT COMPLETED A SITE SURVEY AND THEREFORE MAKES NO CLAIMS AS TO THE ACCURACY OF INFORMATION DEPICTED ON THIS SHEET.

1 OVERALL SITE PLAN
SCALE: 100' 50' 0 100' 1" = 100'-0" (FULL SIZE) 1" = 200'-0" (11x17)

T-Mobile
35 GRIFFIN ROAD
BLOOMFIELD, CT 06002

CROWN CASTLE
3 CORPORATE PARK DRIVE, SUITE 101
CLIFTON PARK, NY 12065

B+T GRP
1717 S. BOULDER
SUITE 300
TULSA, OK 74119
PH: (918) 587-4630
www.btgrp.com

T-MOBILE SITE NUMBER:
CT11516A

BU #: **876385**
N. COVENTRY / WALLBEOFF

REILLY MTN. RD
COVENTRY, CT 06238

EXISTING
152'-0" MONOPOLE

ISSUED FOR:

REV	DATE	DRWN	DESCRIPTION	DES./QA
A	4/19/22	JHW	PRELIMINARY REVIEW	LR
0	5/16/22	JHW	CONSTRUCTION	LR
1	5/19/22	MEH	CONSTRUCTION	LR

STATE OF CONNECTICUT
CHRISTOPHER J. RIDER
No. 23024
LICENSED
PROFESSIONAL ENGINEER
5/19/22

B&T ENGINEERING, INC.
PEC.0001564
Expires 2/10/23

IT IS A VIOLATION OF LAW FOR ANY PERSON, UNLESS THEY ARE ACTING UNDER THE DIRECTION OF A LICENSED PROFESSIONAL ENGINEER, TO ALTER THIS DOCUMENT.

SHEET NUMBER: C-1.1
REVISION: 1

100172.010.01_876385_N. COVENTRY - WALLBEOFF.dwg - Sheet:C-1.1 - User: lisa.rider - May 19, 2022 - 11:43am

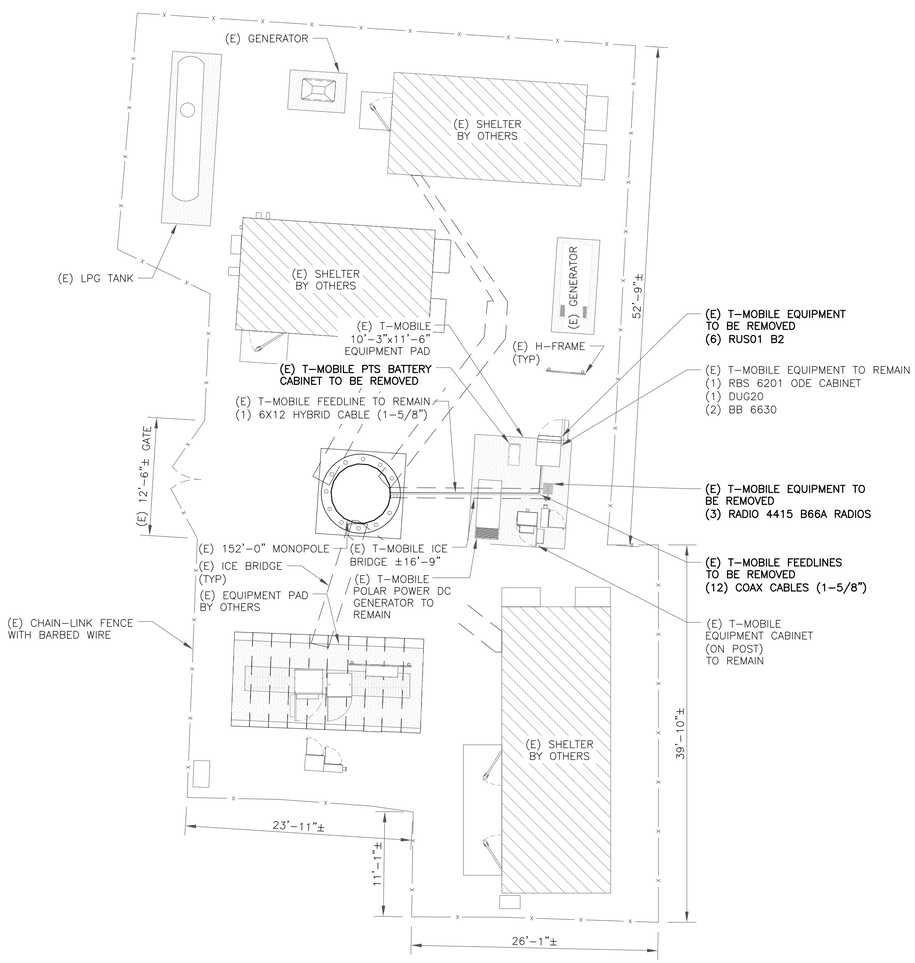

1 SITE PLAN
SCALE: 8' 6' 4' 2' 0 8'
1/8"=1'-0" (FULL SIZE)
1/16"=1'-0" (11x17)

N

NOTES:

THE POWER DESIGN FOR ANY AC ELECTRICAL POWER CHANGES IS TO BE PERFORMED BY OTHERS AND IS SHOWN HERE FOR REFERENCE PURPOSES ONLY. T-MOBILE IS SOLELY RESPONSIBLE FOR THE ELECTRICAL POWER DESIGN.

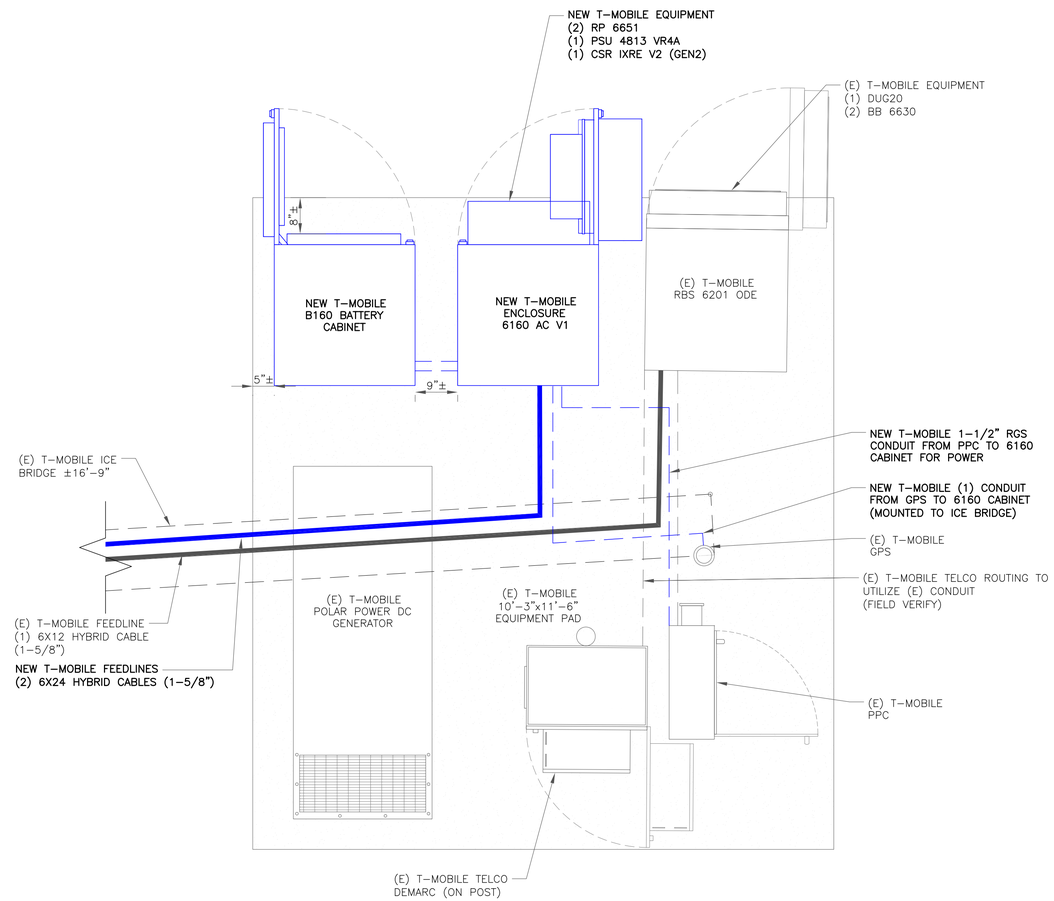

2 ENLARGED SITE PLAN
SCALE: 1' 6" 0 1'
3/4"=1'-0" (FULL SIZE)
3/8"=1'-0" (11x17)

N

T-Mobile
35 GRIFFIN ROAD
BLOOMFIELD, CT 06002

CROWN CASTLE
3 CORPORATE PARK DRIVE, SUITE 101
CLIFTON PARK, NY 12065

B+T GRP
1717 S. BOULDER
SUITE 300
TULSA, OK 74119
PH: (918) 587-4630
www.btgrp.com

T-MOBILE SITE NUMBER:
CT11516A

BU #: **876385**
N. COVENTRY / WALLBEOFF

REILLY MTN. RD
COVENTRY, CT 06238

EXISTING
152'-0" MONOPOLE

ISSUED FOR:

REV	DATE	DRWN	DESCRIPTION	DES./QA
A	4/19/22	JHW	PRELIMINARY REVIEW	LR
0	5/16/22	JHW	CONSTRUCTION	LR
1	5/19/22	MEH	CONSTRUCTION	LR

STATE OF CONNECTICUT
No. 23924
LICENSED
PROFESSIONAL ENGINEER
5/19/22

B&T ENGINEERING, INC.
PEC.0001564
Expires 2/10/23

SHEET NUMBER: C-1.2
REVISION: 1

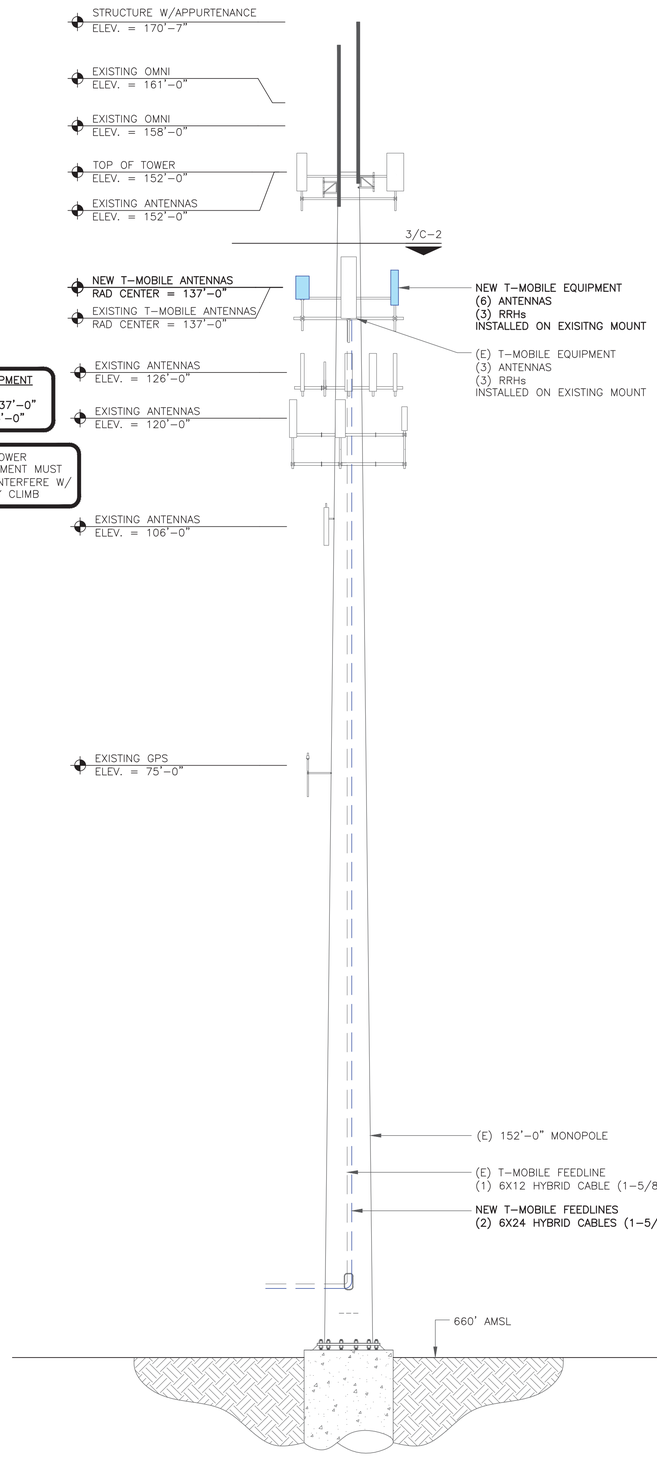

1 FINAL ELEVATION
SCALE: NOT TO SCALE

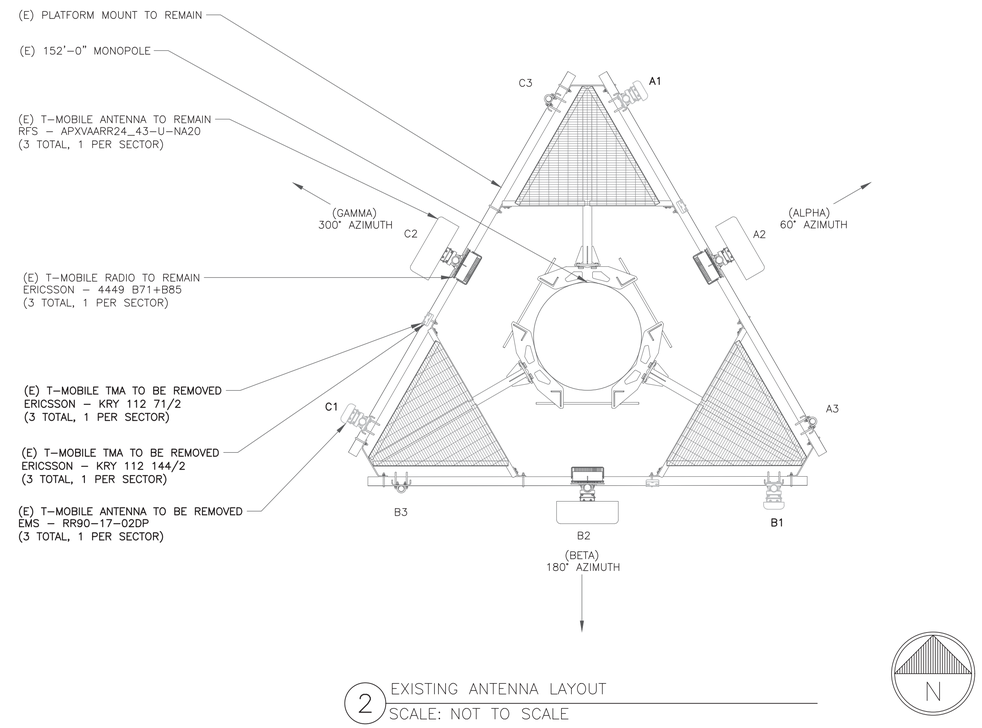

2 EXISTING ANTENNA LAYOUT
SCALE: NOT TO SCALE

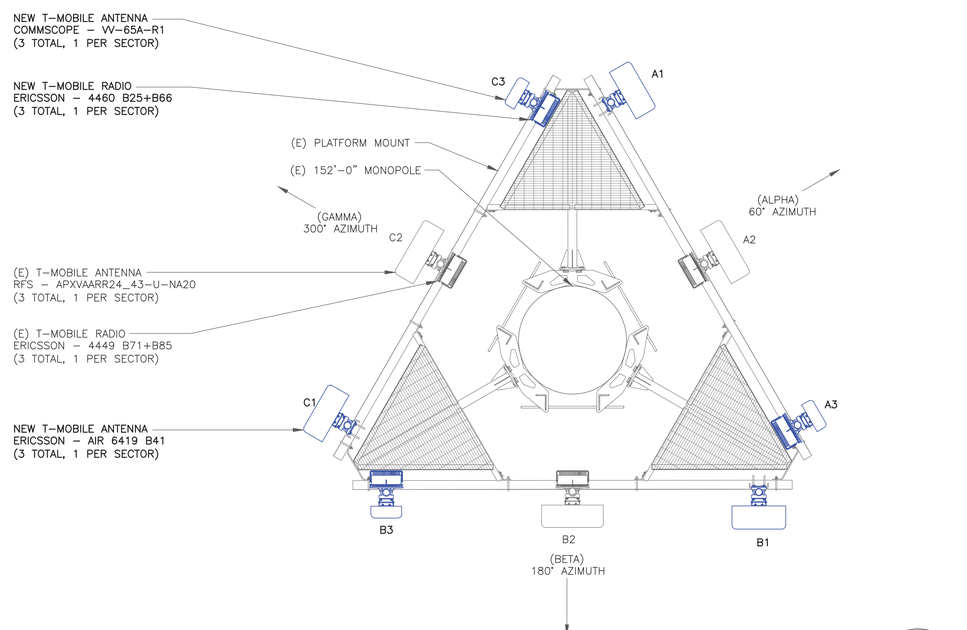

3 FINAL ANTENNA LAYOUT
SCALE: NOT TO SCALE

T-Mobile
35 GRIFFIN ROAD
BLOOMFIELD, CT 06002

CROWN CASTLE
3 CORPORATE PARK DRIVE, SUITE 101
CLIFTON PARK, NY 12065

B+T GRP
1717 S. BOULDER
SUITE 300
TULSA, OK 74119
PH: (918) 587-4630
www.btgrp.com

T-MOBILE SITE NUMBER:
CT11516A

BU #: **876385**
N. COVENTRY / WALLBEOFF

REILLY MTN. RD
COVENTRY, CT 06238

EXISTING
152'-0" MONOPOLE

ISSUED FOR:

REV	DATE	DRWN	DESCRIPTION	DES./QA
A	4/19/22	JHW	PRELIMINARY REVIEW	LR
0	5/16/22	JHW	CONSTRUCTION	LR
1	5/19/22	MEH	CONSTRUCTION	LR

B&T ENGINEERING, INC.
PEC.0001564
Expires 2/10/23

SHEET NUMBER: C-2

REVISION: 1

RF SYSTEM SCHEDULE

SECTOR	ANTENNA	TECH	MANUFACTURER	ANTENNA MODEL	AZIMUTH	M-TILT	E-TILT	RAD CENTER	TMA/RRU	FEEDLINE TYPE
ALPHA	A1	L2500/N2500	ERICSSON	AIR 6419 B41	60°	0°	2°/2°	137'-0"	–	(1) 6X12 HYBRID
	A2	L700/L600/N600	RFS	APXVAARR24_43-U-NA20	60°	0°	2°/2°	137'-0"	–	
	A3	L2100/L1900/G1900	COMMSCOPE	VV-65A-R1	60°	0°	2°/2°	137'-0"	–	
BETA	B1	L2500/N2500	ERICSSON	AIR 6419 B41	180°	0°	2°/2°	137'-0"	–	(1) 6X24 HYBRID
	B2	L700/L600/N600	RFS	APXVAARR24_43-U-NA20	180°	0°	2°/2°	137'-0"	–	
	B3	L2100/L1900/G1900	COMMSCOPE	VV-65A-R1	180°	0°	2°/2°	137'-0"	–	
GAMMA	C1	L2500/N2500	ERICSSON	AIR 6419 B41	300°	0°	2°/2°	137'-0"	–	(1) 6X24 HYBRID
	C2	L700/L600/N600	RFS	APXVAARR24_43-U-NA20	300°	0°	2°/2°	137'-0"	–	
	C3	L2100/L1900/G1900	COMMSCOPE	VV-65A-R1	300°	0°	2°/2°	137'-0"	–	

1 ANTENNA AND CABLE SCHEDULE
SCALE: NOT TO SCALE

INSTALLER NOTES:

1. COMPLY WITH MANUFACTURERS INSTRUCTIONS TO ENSURE THAT ALL RRHs RECEIVE ELECTRICAL POWER WITHIN 24 HOURS OF BEING REMOVED FROM THE MANUFACTURER'S PACKAGING.
2. DO NOT OPEN RRH PACKAGES IN THE RAIN.
3. ALL PIPES, BRACKETS, AND MISCELLANEOUS HARDWARE TO BE GALVANIZED UNLESS NOTED OTHERWISE.

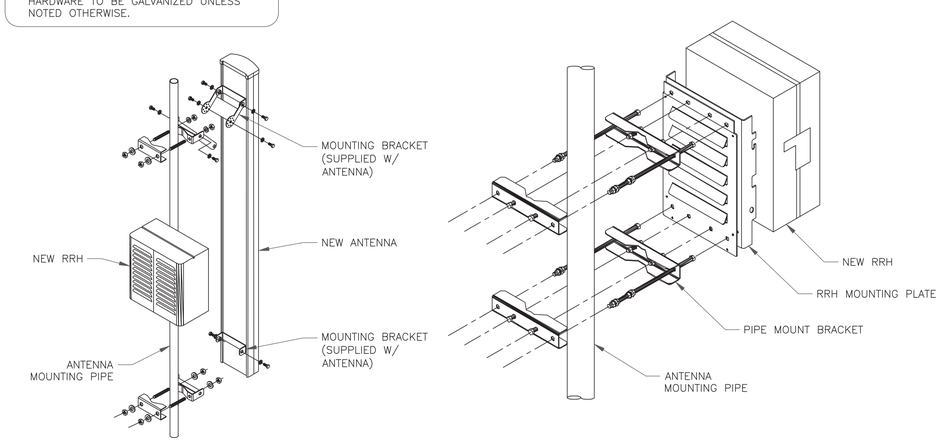

2 ANTENNA WITH RRH MOUNTING DETAIL
SCALE: NOT TO SCALE

T-Mobile

35 GRIFFIN ROAD
BLOOMFIELD, CT 06002

CROWN CASTLE

3 CORPORATE PARK DRIVE, SUITE 101
CLIFTON PARK, NY 12065

B+T GRP

1717 S. BOULDER
SUITE 300
TULSA, OK 74119
PH: (918) 587-4630
www.btgrp.com

T-MOBILE SITE NUMBER:
CT11516A

BU #: **876385**
N. COVENTRY / WALLBEOFF

REILLY MTN. RD
COVENTRY, CT 06238

EXISTING
152'-0" MONOPOLE

ISSUED FOR:

REV	DATE	DRWN	DESCRIPTION	DES./QA
A	4/19/22	JHW	PRELIMINARY REVIEW	LR
0	5/16/22	JHW	CONSTRUCTION	LR
1	5/19/22	MEH	CONSTRUCTION	LR

STEVEN C. CARLSON
No. 23924
LICENSED
PROFESSIONAL ENGINEER
5/19/22

B&T ENGINEERING, INC.
PEC.0001564
Expires 2/10/23

SHEET NUMBER: C-3

REVISION: 1

Section 3 - Proposed Template Images

67D5998E_1xAIR+1OP+1QP.JPG

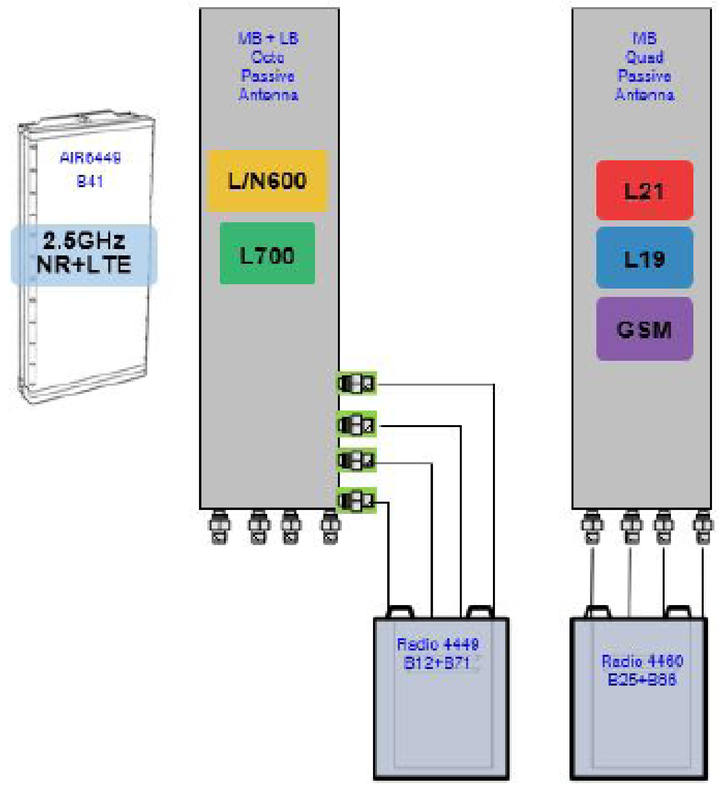

Notes:

1 PLUMBING DIAGRAM
SCALE: NOT TO SCALE

T-Mobile
35 GRIFFIN ROAD
BLOOMFIELD, CT 06002

CROWN CASTLE
3 CORPORATE PARK DRIVE, SUITE 101
CLIFTON PARK, NY 12065

B+T GRP
1717 S. BOULDER
SUITE 300
TULSA, OK 74119
PH: (918) 587-4630
www.btgrp.com

T-MOBILE SITE NUMBER:
CT11516A

BU #: **876385**
N. COVENTRY / WALLBEOFF

REILLY MTN. RD
COVENTRY, CT 06238

EXISTING
152'-0" MONOPOLE

ISSUED FOR:

REV	DATE	DRWN	DESCRIPTION	DES./QA
A	4/19/22	JHW	PRELIMINARY REVIEW	LR
0	5/16/22	JHW	CONSTRUCTION	LR
1	5/19/22	MEH	CONSTRUCTION	LR

STATE OF CONNECTICUT
LICENSED PROFESSIONAL ENGINEER
No. 23924
5/19/22

B&T ENGINEERING, INC.
PEC.0001564
Expires 2/10/23

SHEET NUMBER: C-4
REVISION: 1

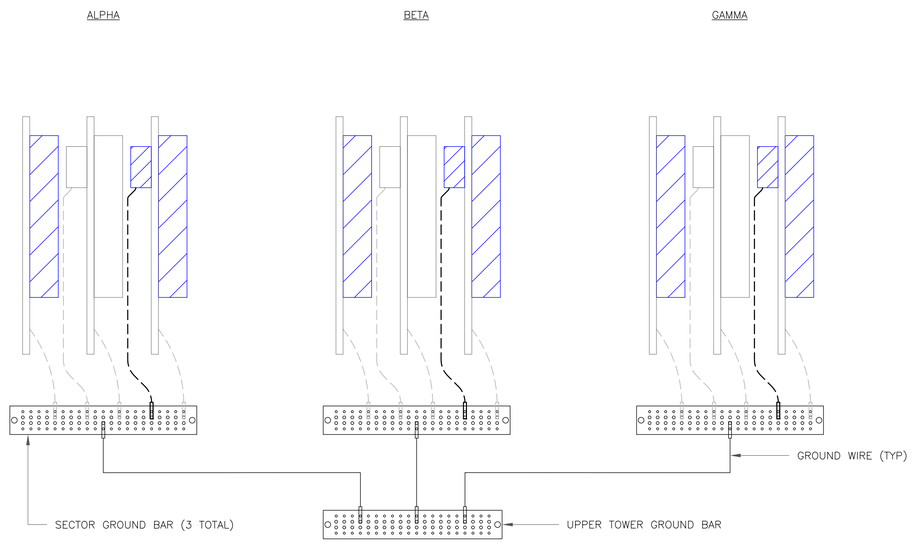

NOTE:

ALL NEW GROUNDS TO BE #6 STRANDED COPPER WITH GREEN INSULATION UNLESS NOTED OTHERWISE.

1 ANTENNA GROUNDING DIAGRAM
SCALE: NOT TO SCALE

T-Mobile
35 GRIFFIN ROAD
BLOOMFIELD, CT 06002

CROWN CASTLE
3 CORPORATE PARK DRIVE, SUITE 101
CLIFTON PARK, NY 12065

B+T GRP
1717 S. BOULDER
SUITE 300
TULSA, OK 74119
PH: (918) 587-4630
www.btgrp.com

T-MOBILE SITE NUMBER:
CT11516A

BU #: **876385**
N. COVENTRY / WALLBEOFF

REILLY MTN. RD
COVENTRY, CT 06238

EXISTING
152'-0" MONOPOLE

ISSUED FOR:

REV	DATE	DRWN	DESCRIPTION	DES./QA
A	4/19/22	JHW	PRELIMINARY REVIEW	LR
0	5/16/22	JHW	CONSTRUCTION	LR
1	5/19/22	MEH	CONSTRUCTION	LR

STATE OF CONNECTICUT
No. 23924
LICENSED
PROFESSIONAL ENGINEER
5/19/22

B&T ENGINEERING, INC.
PEC.0001564
Expires 2/10/23

SHEET NUMBER: G-1

REVISION: 1

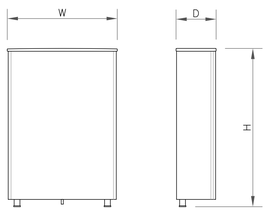

ANTENNA SPECS	
MANUFACTURER	COMMSCOPE
MODEL #	VV-65A-R1
WIDTH	12.00"
DEPTH	4.60"
HEIGHT	54.70"
WEIGHT	33.30 LBS

1 ANTENNA SPECS
SCALE: NOT TO SCALE

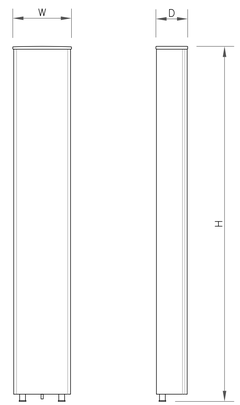

ANTENNA SPECS	
MANUFACTURER	ERICSSON
MODEL #	AIR 6419 B41
WIDTH	20.91"
DEPTH	9.02"
HEIGHT	36.25"
WEIGHT	96.50 LBS

2 ANTENNA SPECS
SCALE: NOT TO SCALE

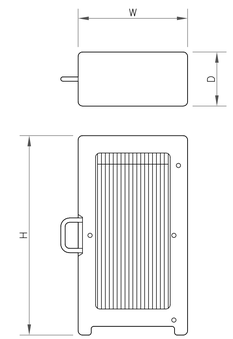

RRU SPECIFICATIONS	
MANUFACTURER	ERICSSON
MODEL #	4460 B25+B66
WIDTH	15.10"
DEPTH	11.90"
HEIGHT	17.00"
WEIGHT	109.00 LBS

3 RRU SPECS
SCALE: NOT TO SCALE

4 NOT USED
SCALE: NOT TO SCALE

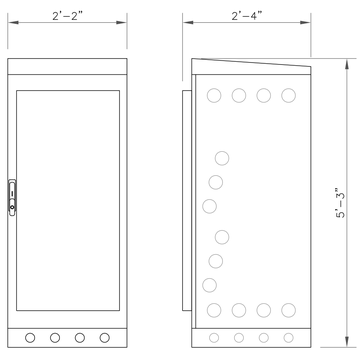

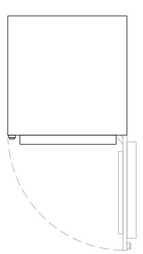

EQUIPMENT NOTES:

HEIGHTxWIDTHxDEPTH: 63.0" x 26.0" x 28.0" (1600.0mm x 660.0mm x 711.0mm)

WEIGHT (EMPTY): 295 LBS (134 kg)

WEIGHT (FULLY LOADED): 2,000 LBS (908 kg)

5 CABINET SPECS
SCALE: NOT TO SCALE

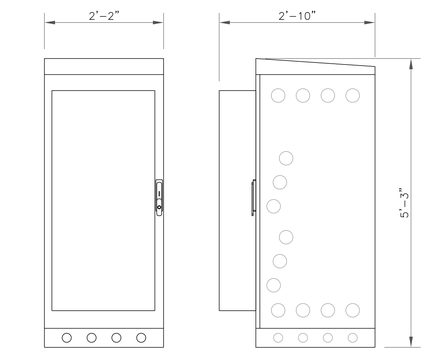

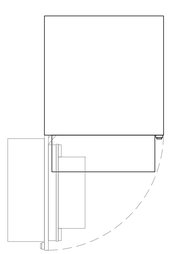

EQUIPMENT NOTES:

HEIGHTxWIDTHxDEPTH: 63.0" x 26.0" x 34.0" (1600.0mm x 660.0mm x 864.0mm)

WEIGHT (EMPTY): 320 LBS (145 kg)

WEIGHT (FULLY LOADED): 1,500 LBS (681 kg)

6 CABINET SPECS
SCALE: NOT TO SCALE

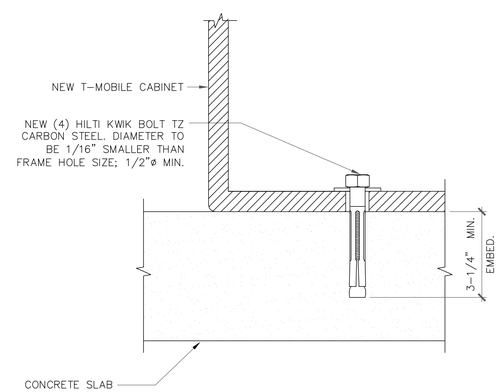

7 CABINET ANCHOR DETAIL
SCALE: NOT TO SCALE

T-Mobile
35 GRIFFIN ROAD
BLOOMFIELD, CT 06002

CROWN CASTLE
3 CORPORATE PARK DRIVE, SUITE 101
CLIFTON PARK, NY 12065

B+T GRP
1717 S. BOULDER
SUITE 300
TULSA, OK 74119
PH: (918) 587-4630
www.btgrp.com

T-MOBILE SITE NUMBER:
CT11516A

BU #: **876385**
N. COVENTRY / WALLBEOFF

REILLY MTN. RD
COVENTRY, CT 06238

EXISTING
152'-0" MONOPOLE

ISSUED FOR:

REV	DATE	DRWN	DESCRIPTION	DES./QA
A	4/19/22	JHW	PRELIMINARY REVIEW	LR
0	5/16/22	JHW	CONSTRUCTION	LR
1	5/19/22	MEH	CONSTRUCTION	LR

STATE OF CONNECTICUT
CORY R. LEE
No. 23024
LICENSED
PROFESSIONAL ENGINEER
5/19/22

B&T ENGINEERING, INC.
PEC.0001564
Expires 2/10/23

SHEET NUMBER: C-5
REVISION: 1

FINAL PANEL SCHEDULE							
LOAD	POLES	AMPS	BUS L1	BUS L2	AMPS	POLES	LOAD
ODE 6201	2	125A	1	2	60A	2	SURGE
			3	4			
			5	6	125A	2	6160 CABINET
SAFETY LIGHT	1	15A	7	8			
FIBER	1	20A	9	10	20A	1	GFCI
GFI	1	20A	11	12			

RATED VOLTAGE: ■120/240 □_____, 1 PHASE, 3 WIRE	BRANCH POLES: ■12 □24 □30 □42	APPROVED MF'RS
RATED AMPS: □100 ■200 □400 □_____,	CABINET: ■SURFACE □FLUSH	NEMA □1 ■3R □4X
□MAIN LUGS ONLY MAIN 200 AMPS ■BREAKER □FUSED SWITCH	■HINGED DOOR	■KEYED DOOR LATCH
□FUSED ■CIRCUIT BREAKER BRANCH DEVICES	□ TO BE GFCI BREAKERS	FULL NEUTRAL BUS / GROUND BAR
ALL BREAKERS MUST BE RATED TO INTERRUPT A SHORT CIRCUIT ISC OF 10,000 AMPS SYMMETRICAL		

INSTALL NEW 2P 125A BREAKER IN POSITION 6 AND 8
INSTALL NEW 1P 20A BREAKER IN POSITION 10
IF 125A BREAKER WILL NOT PROPERLY FIT IN EXISTING PANEL, REPLACE (E) PANEL WITH SQUARE D PANEL QO12040M200RB (OR APPROVED EQUAL).
UPGRADE FEEDER WIRES TO MEET AMPACITY IF NEW PANEL IS REQUIRED.
FINAL PANEL DESIGN AND CALCULATIONS FOR WIRE SIZE WERE BASED OFF OF EXISTING PHOTOS

1 AC PANEL SCHEDULE
SCALE: NOT TO SCALE

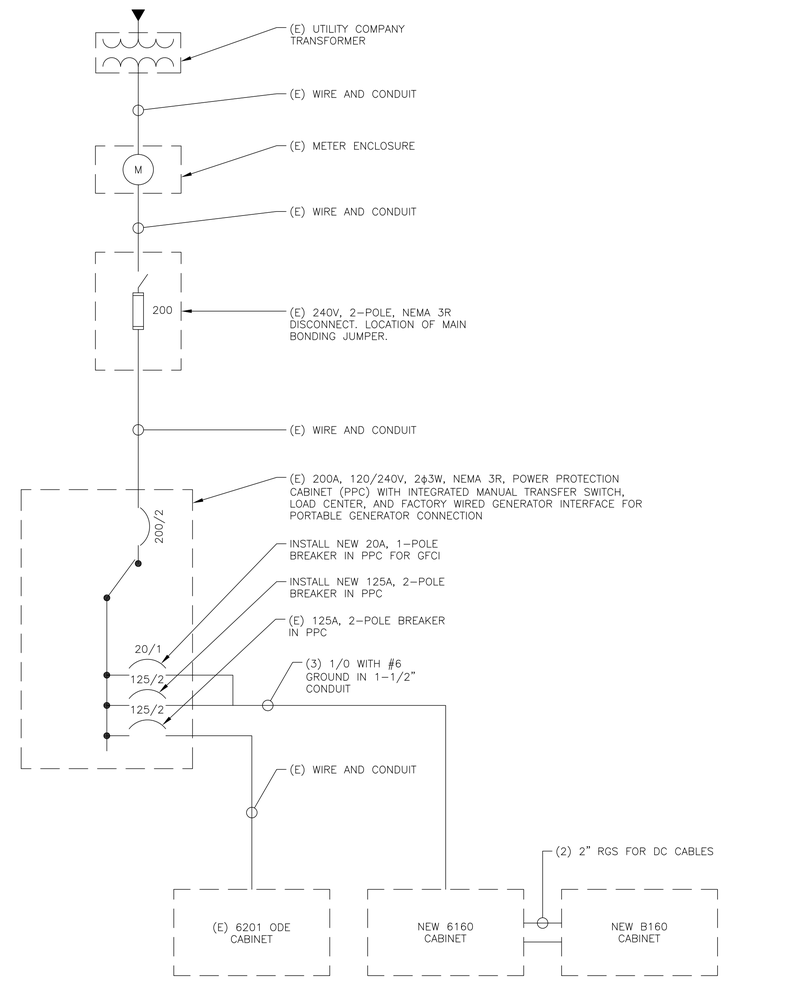

NOTES:

1. ALL NEW CONDUCTORS TO BE INSTALLED SHALL BE COPPER. ALL CONDUCTORS SHALL BE THHW, THWN, THWN-2, XHHW, XHHW-2, THW, THW-2, RHW, OR RHW-2 UNLESS NOTED OTHERWISE.
2. CONTRACTOR IS TO FIELD VERIFY ALL EXISTING ITEMS SHOWN ON THE ELECTRICAL ONE-LINE DIAGRAM AND NOTIFY THE ENGINEER OF ANY DISCREPANCIES.
3. ALL GROUNDING AND BONDING PER THE NEC.

2 ONE LINE DIAGRAM
SCALE: NOT TO SCALE

T-Mobile
35 GRIFFIN ROAD
BLOOMFIELD, CT 06002

CROWN CASTLE
3 CORPORATE PARK DRIVE, SUITE 101
CLIFTON PARK, NY 12065

B+T GRP
1717 S. BOULDER
SUITE 300
TULSA, OK 74119
PH: (918) 587-4630
www.btgrp.com

T-MOBILE SITE NUMBER:
CT11516A

BU #: **876385**
N. COVENTRY / WALLBEOFF

REILLY MTN. RD
COVENTRY, CT 06238

EXISTING
152'-0" MONOPOLE

ISSUED FOR:

REV	DATE	DRWN	DESCRIPTION	DES./QA
A	4/19/22	JHW	PRELIMINARY REVIEW	LR
0	5/16/22	JHW	CONSTRUCTION	LR
1	5/19/22	MEH	CONSTRUCTION	LR

STATE OF CONNECTICUT
CHRISTOPHER M. LEE
No. 23824
LICENSED
PROFESSIONAL ENGINEER
5/19/22

B&T ENGINEERING, INC.
PEC.0001564
Expires 2/10/23

SHEET NUMBER: E-1
REVISION: 1

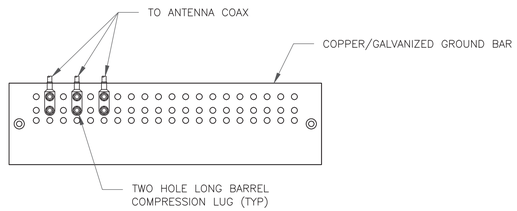

NOTES:

1. DOUBLING UP "OR STACKING" OF CONNECTIONS IS NOT PERMITTED.
2. EXTERIOR ANTIOXIDANT JOINT COMPOUND TO BE USED ON ALL EXTERIOR CONNECTIONS.
3. GROUND BAR SHALL NOT BE ISOLATED FROM TOWER. MOUNT DIRECTLY TO ANTENNA MOUNT STEEL.

1 ANTENNA SECTOR GROUND BAR DETAIL
SCALE: NOT TO SCALE

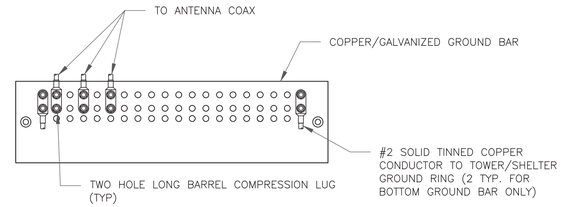

NOTES:

1. EXTERIOR ANTIOXIDANT JOINT COMPOUND TO BE USED ON ALL EXTERIOR CONNECTIONS.
2. GROUND BAR SHALL NOT BE ISOLATED FROM TOWER. MOUNT DIRECTLY TO TOWER STEEL (TOWER ONLY).
3. GROUND BAR SHALL BE ISOLATED FROM BUILDING OR SHELTER.

2 TOWER/SHELTER GROUND BAR DETAIL
SCALE: NOT TO SCALE

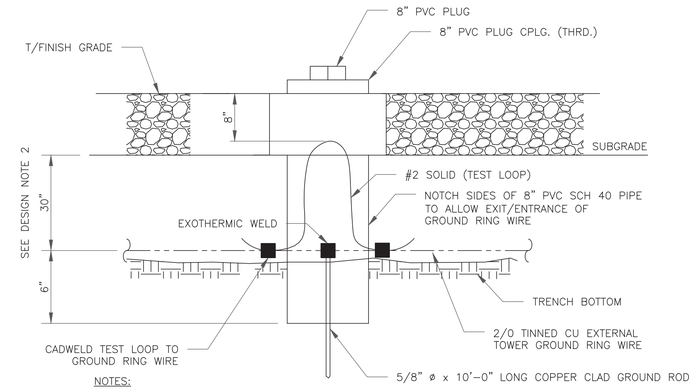

NOTES:

1. GROUND ROD SHALL BE DRIVEN VERTICALLY, NOT TO EXCEED 45 DEGREES FROM THE VERTICAL
2. GROUND WIRE SHALL BE MIN. 30" BELOW GRADE OR 6" BELOW FROST LINE. (WHICH EVER IS GREATER) AS PER N.E.C. ARTICLE 250-50(D)

3 INSPECTION WELL DETAIL
SCALE: NOT TO SCALE

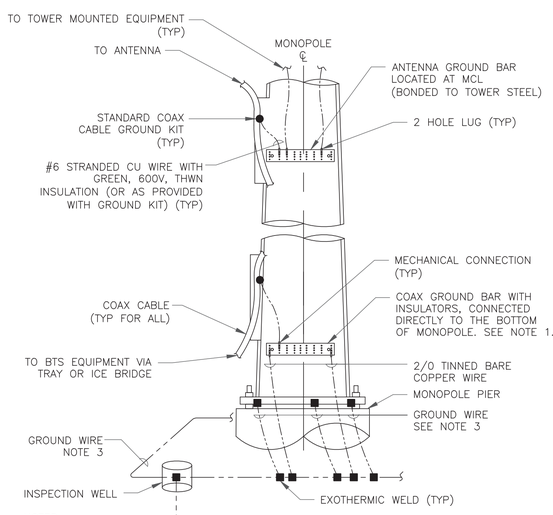

NOTES:

1. NUMBER OF GROUNDING BARS MAY VARY DEPENDING ON THE TYPE OF TOWER, ANTENNA LOCATIONS AND CONNECTION ORIENTATION. COAXIAL CABLES EXCEEDING 200 FEET ON THE TOWER SHALL HAVE GROUND KITS AT THE MIDPOINT. PROVIDE AS REQUIRED.
2. ONLY MECHANICAL CONNECTIONS ARE ALLOWED TO BE MADE TO CROWN CASTLE USA INC. TOWERS. ALL MECHANICAL CONNECTIONS SHALL BE TREATED WITH AN ANTI-OXIDANT COATING.
3. ALL TOWER GROUNDING SYSTEMS SHALL COMPLY WITH THE REQUIREMENTS OF THE RECOGNIZED EDITION OF ANSI/TIA 222 AND NFPA 780.

4 TYPICAL ANTENNA CABLE GROUNDING
SCALE: NOT TO SCALE

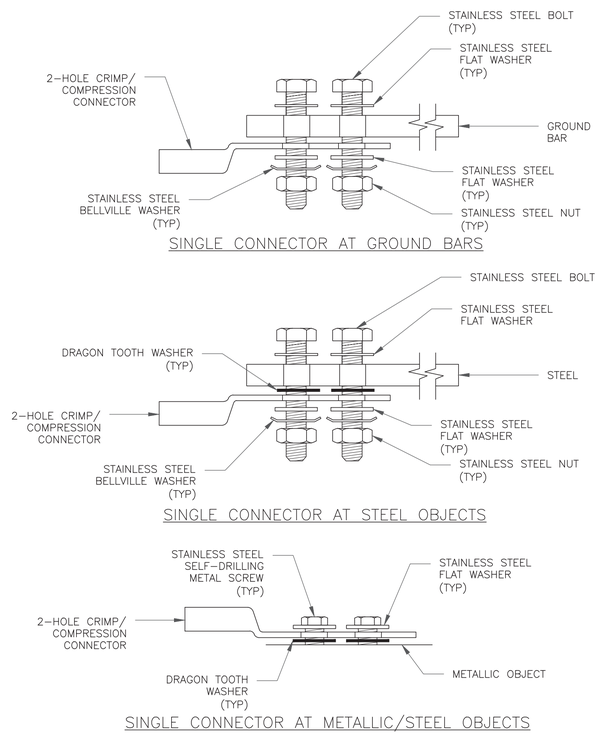

5 HARDWARE DETAIL FOR EXTERIOR CONNECTIONS
SCALE: NOT TO SCALE

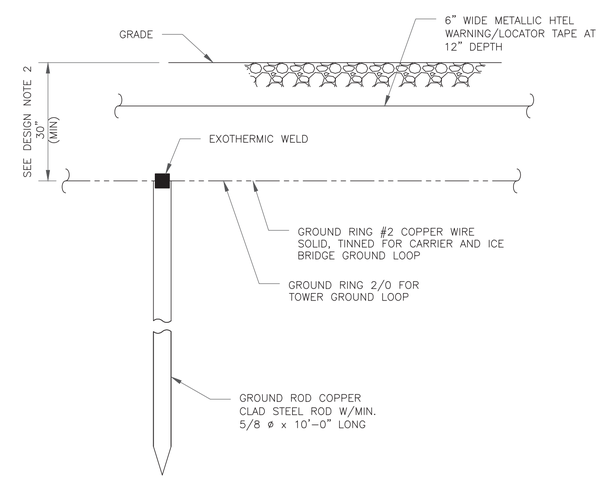

NOTES:

1. GROUND ROD SHALL BE DRIVEN VERTICALLY, NOT TO EXCEED 45 DEGREES FROM THE VERTICAL
2. GROUND WIRE SHALL BE MIN. 30" BELOW GRADE OR 6" BELOW FROST LINE. (WHICH EVER IS GREATER) AS PER N.E.C. ARTICLE 250-50(D)

6 GROUND ROD DETAIL
SCALE: NOT TO SCALE

T-Mobile
35 GRIFFIN ROAD
BLOOMFIELD, CT 06002

CROWN CASTLE
3 CORPORATE PARK DRIVE, SUITE 101
CLIFTON PARK, NY 12065

B+T GRP
1717 S. BOULDER
SUITE 300
TULSA, OK 74119
PH: (918) 587-4630
www.btgrp.com

T-MOBILE SITE NUMBER:
CT11516A

BU #: **876385**
N. COVENTRY / WALLBEOFF

REILLY MTN. RD
COVENTRY, CT 06238

EXISTING
152'-0" MONOPOLE

ISSUED FOR:

REV	DATE	DRWN	DESCRIPTION	DES./QA
A	4/19/22	JHW	PRELIMINARY REVIEW	LR
0	5/16/22	JHW	CONSTRUCTION	LR
1	5/19/22	MEH	CONSTRUCTION	LR

B&T ENGINEERING, INC.
PEC.0001564
Expires 2/10/23

SHEET NUMBER: G-2

REVISION: 1

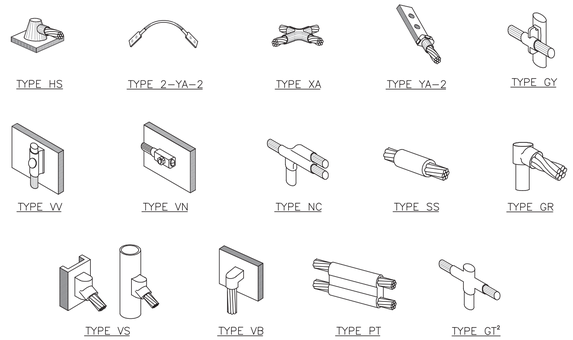

NOTE:

1. ERICO EXOTHERMIC "MOLD TYPES" SHOWN HERE ARE EXAMPLES. CONSULT WITH CONSTRUCTION MANAGER FOR SPECIFIC MOLDS TO BE USED FOR THIS PROJECT.
2. MOLD TYPE ONLY TO BE USED BELOW GRADE WHEN CONNECTING GROUND RING TO GROUND ROD.

1 CADWELD GROUNDING CONNECTIONS
SCALE: NOT TO SCALE

WIRE SIZE	BURNDY LUG	BOLT SIZE
#6 AWG GREEN INSULATED	YA6C-2TC38	3/8" - 16 NC S 2 BOLT
#2 AWG SOLID TINNED	YA3C-2TC38	3/8" - 16 NC S 2 BOLT
#2 AWG STRANDED	YA2C-2TC38	3/8" - 16 NC S 2 BOLT
#2/0 AWG STRANDED	YA26-2TC38	3/8" - 16 NC S 2 BOLT
#4/0 AWG STRANDED	YA28-2N	1/2" - 16 NC S 2 BOLT

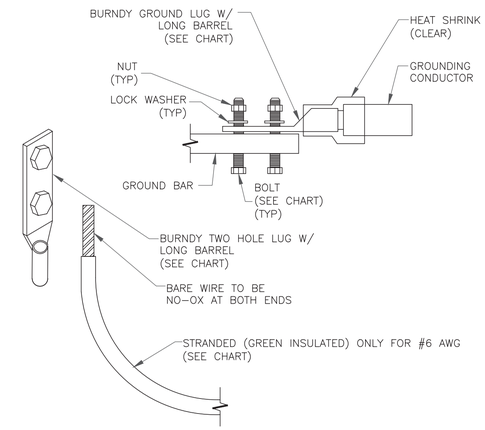

NOTES:

1. ALL GROUNDING LUGS ARE TO BE INSTALLED PER MANUFACTURER'S SPECIFICATIONS. ALL HARDWARE BOLTS, NUTS, LOCK WASHERS SHALL BE STAINLESS STEEL. ALL HARDWARE ARE TO BE AS FOLLOWS: BOLT, FLAT WASHER,GROUND BAR, GROUND LUG, FLAT WASHER AND NUT.

2 MECHANICAL LUG CONNECTION
SCALE: NOT TO SCALE

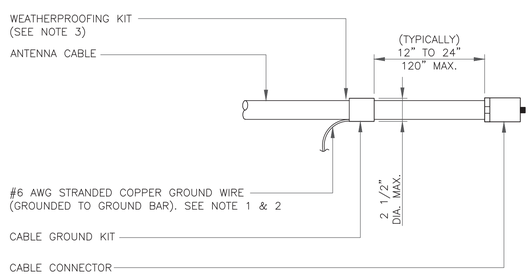

NOTES:

1. DO NOT INSTALL CABLE GROUND KIT AT A BEND AND ALWAYS DIRECT GROUND WIRE DOWN TO GROUND BAR.
2. GROUNDING KIT SHALL BE TYPE AND PART NUMBER AS SUPPLIED OR RECOMMENDED BY CABLE MANUFACTURER.
3. WEATHER PROOFING SHALL BE TWO-PART TAPE KIT, COLD SHRINK SHALL NOT BE USED.

3 CABLE GROUND KIT CONNECTION
SCALE: NOT TO SCALE

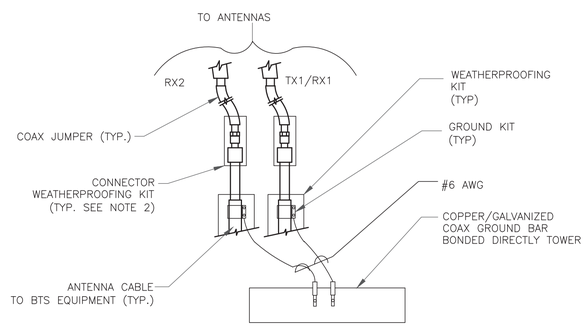

NOTES:

1. DO NOT INSTALL CABLE GROUND KIT AT A BEND AND ALWAYS DIRECT GROUND WIRE DOWN TO ANTENNA GROUND BAR.
2. WEATHER PROOFING SHALL BE TWO-PART TAPE KIT. COLD SHRINK SHALL NOT BE USED.

4 GROUND CABLE CONNECTION
SCALE: NOT TO SCALE

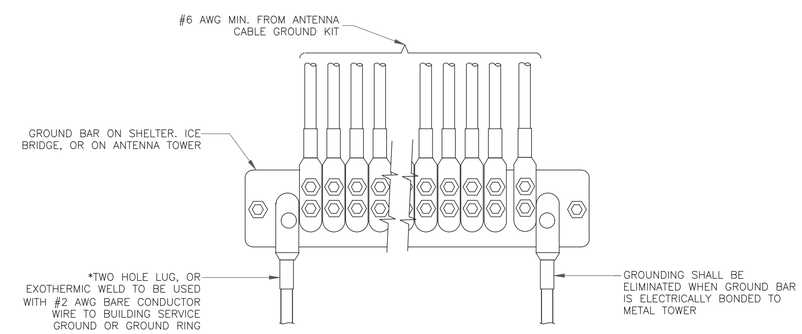

5 GROUNDWIRE INSTALLATION
SCALE: NOT TO SCALE

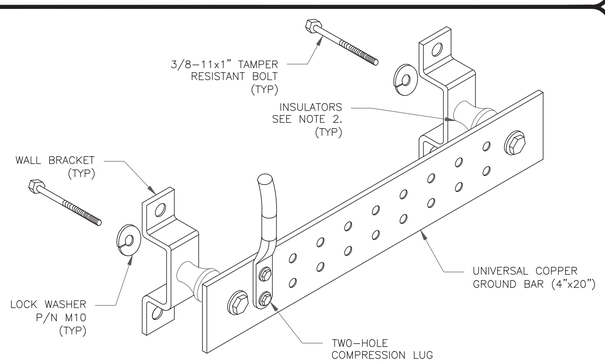

NOTES:

1. DOWN LEAD (HOME RUN) CONDUCTORS ARE NOT TO BE INSTALLED ON CROWN CASTLE USA INC. TOWER, PER THE GROUNDING DOWN CONDUCTOR POLICY QAS-STD-10091. NO MODIFICATION OR DRILLING TO TOWER STEEL IS ALLOWED IN ANY FORM OR FASHION, CAD-WELDING ON THE TOWER AND/OR IN THE AIR ARE NOT PERMITTED.
2. OMIT INSULATOR WHEN MOUNTING TO TOWER STEEL OR PLATFORM STEEL USE INSULATORS WHEN ATTACHING TO BUILDING OR SHELTERS.

6 GROUND BAR DETAIL
SCALE: NOT TO SCALE

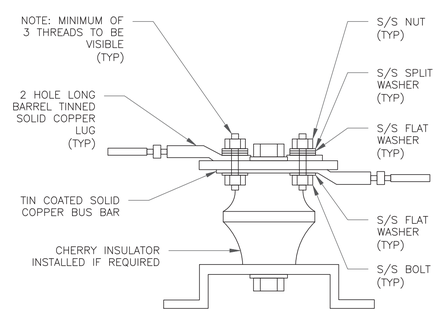

7 LUG DETAIL
SCALE: NOT TO SCALE

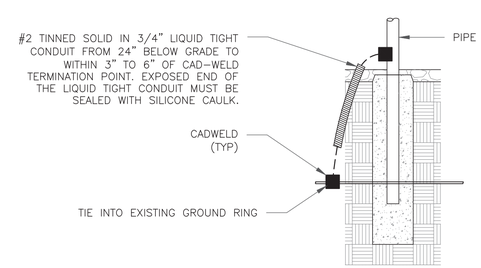

8 TRANSITIONING GROUND DETAIL
SCALE: NOT TO SCALE

T-Mobile
35 GRIFFIN ROAD
BLOOMFIELD, CT 06002

CROWN CASTLE
3 CORPORATE PARK DRIVE, SUITE 101
CLIFTON PARK, NY 12065

B+T GRP
1717 S. BOULDER
SUITE 300
TULSA, OK 74119
PH: (918) 587-4630
www.btgrp.com

T-MOBILE SITE NUMBER:
CT11516A

BU #: **876385**
N. COVENTRY / WALLBEOFF

REILLY MTN. RD
COVENTRY, CT 06238

EXISTING
152'-0" MONOPOLE

ISSUED FOR:

REV	DATE	DRWN	DESCRIPTION	DES./QA
A	4/19/22	JHW	PRELIMINARY REVIEW	LR
0	5/16/22	JHW	CONSTRUCTION	LR
1	5/19/22	MEH	CONSTRUCTION	LR

B&T ENGINEERING, INC.
PEC.0001564
Expires 2/10/23

SHEET NUMBER: G-3
REVISION: 1