NORTHEAST SITE SOLUTIONS
Turnkey Wireless Development

Northeast Site Solutions
Denise Sabo
4 Angela's Way, Burlington CT 06013
203-435-3640
denise@northeastsitesolutions.com

August 11, 2021

Members of the Siting Council
Connecticut Siting Council
Ten Franklin Square
New Britain, CT 06051

RE: Exempt Modification Application
161 Pinney Street, Colebrook CT 06021
Latitude: 41.965831
Longitude: -73.120674
T-Mobile Site#: 876377_Crown_VZW

Dear Ms. Bachman:

Verizon Wireless is requesting to file an exempt modification for an existing tower located at 161 Pinney Street, Colebrook CT 06021. Verizon Wireless currently maintains twelve (12) antennas at the 128-foot level of the existing 148-foot tower. The property is owned by Fifth State Farm LLC, and the tower is owned by Crown Castle. Verizon now intends to add three (3) antenna. The new antennas would be installed at the 128-foot level of the tower. This modification includes B2, B5 hardware that is both 4G (LTE), and **5G** capable. Antenna mount medications will be completed as per attached Maser mount analysis dated May 14, 2021.

Verizon Planned Modifications:
Remove: NONE

Remove and Replace:
(3) Nokia UHBA B13 Airscale RRH (REMOVE) – (3) Samsung B2/B66A -BRO49 – RFV01U-D1A RRU(REPLACE)
(3) Nokia UHIC B4 Airscale RRH (REMOVE) – (3) Samsung B5/B13 -BRO4C – RFV01U-D2A RRU (REPLACE)
(1) OPV (REMOVE) – (1) RFS/Celwave DBC1-12C-24AB-OZ (REPLACE)

Install New:
(3) VZS01 Sub6 Antenna
(1) 1-5/8" Hybrid

Existing to Remain:
(4) LPA 80080 / 6CF Antenna
(2) LPA 80080 / 6CF EDIN-6 Antenna
(6) SBNHH-1D65B Antenna
(6) 1-5/8" Coax Lines

NORTHEAST SITE SOLUTIONS

Turnkey Wireless Development

The facility was approved by the Town of Colebrook Planning & Zoning Commission by way of a Certificate of Special Permit on July 10, 2000, application number 00-01. Please see attached.

Please accept this letter as notification pursuant to Regulations of Connecticut State Agencies§ 16- SOj-73, for construction that constitutes an exempt modification pursuant to R.C.S.A. § 16-50j-72(b)(2). In accordance with R.C.SA. § 16-SOj-73, a copy of this letter is being sent to Thomas McKeon, First Selectman for the Town of Colebrook, Marc Melanson, Building Official, Crown Castle as the tower owner, and Fifth State Farm LLC, the property owner.

The planned modifications to the facility fall squarely within those activities explicitly provided for in R.C.S.A. § 16-50j-72(b)(2).

1. The proposed modifications will not result in an increase in the height of the existing structure.

2. The proposed modifications will not require the extension of the site boundary.

3. The proposed modifications will not increase noise levels at the facility by six decibels or more, or to levels that exceed state and local criteria.

4. The operation of the replacement antennas will not increase radio frequency emissions at the facility to a level at or above the Federal Communications Commission safety standard.

5. The proposed modifications will not cause a change or alteration in the physical or environmental characteristics of the site.

6. The existing structure and its foundation can support the proposed loading.

For the foregoing reasons, Verizon Wireless respectfully submits that the proposed modifications to the above referenced telecommunications facility constitute an exempt modification under R.C.S.A. § 16-50j-72(b)(2).

Sincerely,

Denise Sabo
Mobile: 203-435-3640
Fax: 413-521-0558
Office: 4 Angela's Way, Burlington CT 06013
Email: denise@northeastsitesolutions.com

NORTHEAST SITE SOLUTIONS
Turnkey Wireless Development

Attachments cc:
Thomas McKeon, First Selectman
Town of Colebrook
Town Hall – Board of Selectman
562 Colebrook Road Colebrook, CT 06021
860.379.3359 ext. 202

Marc Melanson, Building Official
Town of Colebrook
Town Hall – Land Use Department
562 Colebrook Road Colebrook, CT 06021
860.379.3359 ext. 209

Fifth State Farm LLC, Property Owner
70 North Old Stone Bridge Road Cos Cob, CT 06807

Crown Castle, Tower Owner

Exhibit A

Original Facility Approval

BROWN
RUDNICK
FREED &
GESMER

THOMAS J. REGAN
Direct Dial Telephone: (860) 509-6522
E-MAIL: treganr@brfg.com

(115)

Recorded Certificate (Copy)

Via FedEx

August 28, 2000

Karen J. Nielsen
Property Specialist
Sprint PCS
Crossroads Corporate Center
1 International Blvd., Suite 300
Mahwah, NJ 07495

Re: CT33XC115, 161 Pinney Street, Colebrook, CT
Property Owner: Fredsall, Ellen C.

Dear Karen:

In connection with the above-referenced matter, I enclose herewith a copy of the recorded *"Certificate of Special Permit"* which has been recorded on the Land Records of the Town of Colebrook on August 1, 2000 in Volume 63, Page 923.

If you have any questions, please do not hesitate to contact me.

Very truly yours,

BROWN, RUDNICK, FREED & GESMER

By: T J Regan
Thomas J. Regan

TJR/bh
Enclosures

#40128382 v\1 - regantj - w39@01!.doc - 80563/1813

A Partnership of
Professional Corporations

CITYPLACE I
185 ASYLUM STREET
HARTFORD, CONNECTICUT 06103-3402
860-509-6500
Fax: 860-509-6501

Boston Providence London

ClibPDF - www.fastio.com

PLANNING & ZONING COMMISSION

TOWN OF COLEBROOK

Colebrook, Connecticut 06021

CERTIFICATE OF SPECIAL PERMIT

At a meeting held on July 10, 2000, the Planning & Zoning Commission of the Town of Colebrook voted to approve the following Special Permit:

1. Application No. 00-01
2. Owner(s) of record Ellen Fredsall
3. Applicant(s) Sprint PCS
4. Description of premises Raw Land at 161 Pinney St. - Installation of wireless Telecommunication Facility & associated ground mounted Equipment.
5. The provisions of the Special Permit, including specific section(s) of the Regulations of the Planning & Zoning Commission are as follows:

See attached Letter to Sprint PCS dated July 21, 2000

By _____

Chairman, Colebrook Planning & Zoning Commission
pro tem

As per CGS 8-3d, all Special permits and/or Special Exceptions must be recorded by the applicant in the Land Records of the Town of Colebrook before they become effective.

As per Colebrook Zoning Regulations 6.14.7 all Special Exception and/or Special permits expire one year from the date of approval if no construction and/or use has commenced.

Any change in the use of this property from that stated above renders this permit null and void. A new permit is required for a change in use.

ClibPDF - www.fastio.com

Exhibit B

Property Card

qPublic.net™ Town of Colebrook, CT

Summary

Account Number	100273
Parcel ID	27
Property Address	161 PINNEY STREET
Use Class/Description	2-2 Comm Bldg.
Map/Lot/Lot Cut	02/03
Zoning	R2
Acres	93

View Map

Owner

FIFTH STATE FARM LLC
70 NORTH OLD STONE BRIDGE RD
COS COB, CT 06807

Valuation

Assessed Year	2020	2019
Appraised Building Value	$94,900.00	$0.00
Appraised XF/OB Value	$439,100.00	$473,300.00
Appraised Land Value	$305,900.00	$273,700.00
Appraised Total Value	**$839,900.00**	**$747,000.00**
Assessed Building Value	$66,400.00	$0.00
Assessed XF/OB Value	$307,400.00	$331,400.00
Assessed Land Value	$117,940.00	$85,890.00
Assessed Total Value	**$491,740.00**	**$417,290.00**

Land

Building Number	1	**Land Units**	91 AC
Land Use	6-2 - Forest	**Value**	172,900

Building Number	1	**Land Units**	2 AC
Land Use	2-2 - Comm Bldg.	**Value**	133,000

Building Information

Building #	1	**Notes**	CELL TOWER SITE 19GL 490 FOREST ATTACHED=BRN4 20X12+ FCP 20X15 V82/P185 EASEMENT CROWN CASTLE TOWERS 09 LLC 2019 CORR ACREAGE PER SURVEY 370 BRN4 32X44, IMP 14X62+8X30 CERT#6406
Style	Tower Accsry Bldg		
Occupancy			
Actual Year Built	2005		
Effective Year Built	2008		
Living Area	480		
Stories	1		
Grade	03 Average		
Condition		**Fireplaces**	
Exterior Wall	Concrete Block	**Roof Cover**	Concrete Tile
Interior Wall	Minim/Masonry	**Roof Structure**	Flat
		Floor Type	Minimum/Plywd
		Heat Type	Electr Basebrd
		Fuel Type	Electric
		AC	Heat Pump
		Bdrms/Full Bth/Hlf Bth/Ttl Rm	///1
		Basement Finished Area	
		Basement Sq. Ft.	

Code	Description	Living Area	Gross Area	Effective Area
BAS	First Floor	480	480	480
	Totals	**480**	**480**	**480**

Out Buildings\Extra Features

Description	BARN W/LFT&BSMT	**Year Built**	1900
Sub Description		**Value**	$21,100
Area	1408 S.F.		

Description	CARPORT	**Year Built**	1900
Sub Description		**Value**	$2,400
Area	300 S.F.		

Description	BARN W/LFT&BSMT	**Year Built**	1900
Sub Description		**Value**	$3,600
Area	240 S.F.		

Description	CELL TOWER	**Year Built**	2001
Sub Description		**Value**	$400,000
Area	1 UNITS		

Description	FENCE CL 8'	**Year Built**	2020
Sub Description		**Value**	$2,000
Area	240 L.F.		

Description	FOUNDATION	**Year Built**	2020
Sub Description		**Value**	$10,000
Area	1 UNITS		

Sales History

Sales Date	Instrument Type	Grantor	Grantee	Book/Page	Sale Validity	Amount
6/27/2019	Use Assessment/490	FREDSALL JANET E SUCC TRUSTEE	FIFTH STATE FARM LLC	90-253	U	$200,000.00
10/7/2014	Transfer of Convenience	FREDSALL ELLEN C TRUSTEE	FREDSALL JANET E SUCC TRUSTEE REV TRUST AGMT FBO ELLEN C FREDSALL	0086-0055	U	$0.00
1/17/2008		FREDSALL ELLEN C	FREDSALL ELLEN C TRUSTEE ELLEN C FREDSALL REVOCABLE TRUST	0077-0768	U	$0.00
3/21/1997			FREDSALL ELLEN C	0059-0804	U	$0.00

Recent Sales In Area

Sale date range:

From:

03/18/2011

To:

03/18/2021

Sales by Neighborhood

1500

Feet

Sales by Distance

Permits

Permit ID	Issue Date	Type	Description	Amount	Inspection Date	% Complete	Date Complete	Comments
21-017	03-08-2021	PO	Pool	$50,000		0		15 X 30 GUNITE POOL
21-002	01-11-2021	DK	Deck	$9,800		0		12 X 28 DECK
20-108	10-13-2020	PL	Plumbing	$1,124		100		SET 1000GAL PROPANE TANK
20-109	10-13-2020	NC	New Construct	$130,000		0		NEW 1.5 STORY HOUSE 12X24 DECK
20-106	10-08-2020	PL	Plumbing	$5,000		100		UNDERGROUND PLUMBING
20-092	09-23-2020	EL	Electric	$4,000		100		RUN 200 AMP FROM BARN TO HOUSE
20-083	09-15-2020	NC	New Construct	$15,000		100		FOUNDATION FOR NEW HOUSE
19-106	11-13-2019	EL	Electric	$20,000		100		
19-047	06-24-2019	EL	Electric	$1,500		100		200 AMP SERVICE
17-022	05-11-2017	CM	Commercial	$15,000	1/24/2020 12:00:00 AM	100		VZW REPLACE EXISTING ANTENNAS

15-179	09-01-2015	EL	Electric	$15,000	1/24/2020 12:00:00 AM	100		UPDATE ANTENNAS
13-133	04-20-2014	RE	Remodel	$5,000	1/24/2020 12:00:00 AM	100		ANTENNAE SWAP
12-146	12-11-2012	CM	Commercial	$25,000		100		3 NEW ANTENNAS
12-136	11-20-2012	CM	Commercial	$12,000		100		
09-67	07-09-2009		Existing antenna rep	$15,000		100	04-23-2010	
06-133	12-18-2006		Verizon 12x30 equip	$100,000	9/28/2007 12:00:00 AM	100	10-01-2007	
04-05	02-02-2004		equip shed and anten	$50,000	9/13/2004 12:00:00 AM	100	10-01-2006	reck 2005
00-107	09-30-2000		tower	$130,000		100	10-01-2001	

Photos

Sketches

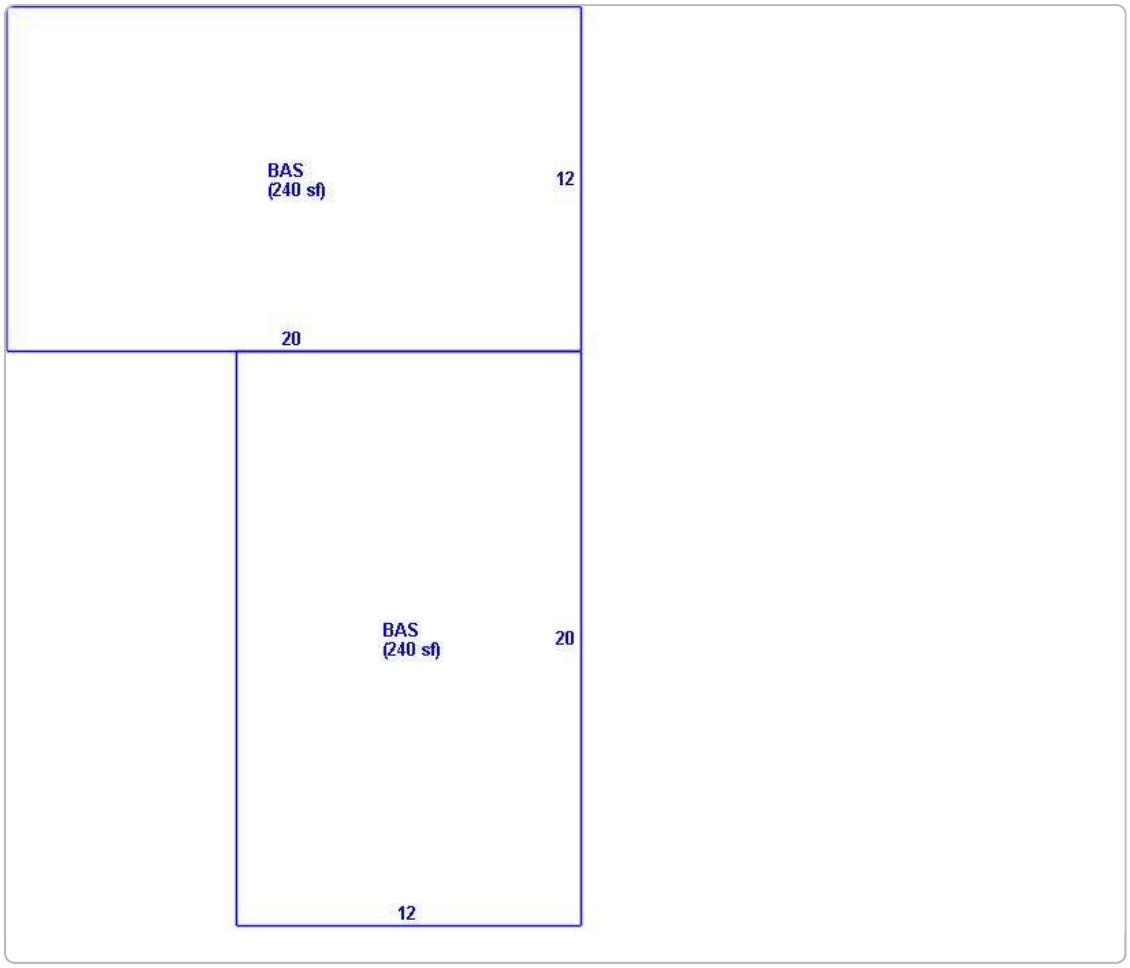

The Town of Colebrook Assessor makes every effort to produce the most accurate information possible. No warranties, expressed or implied are provided for the data herein, its use or interpretation. The assessment information is from the last certified tax roll. All other data is subject to change.
User Privacy Policy
GDPR Privacy Notice

Developed by Schneider GEOSPATIAL

Last Data Upload: 3/17/2021, 9:49:47 PM

Version 2.3.112

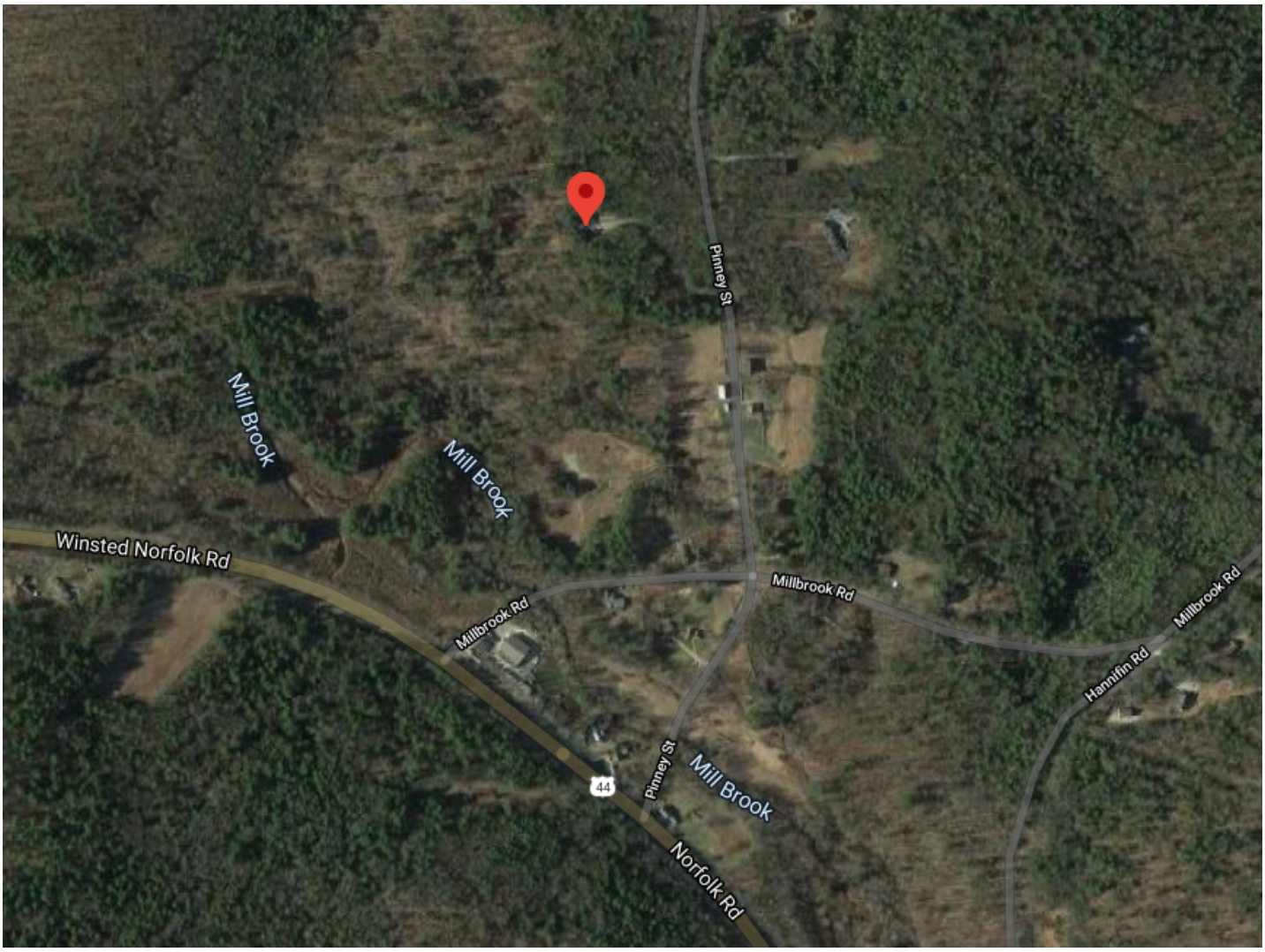

Exhibit C

Construction Drawings

verizon

VERIZON SITE NUMBER: 323614
VERIZON SITE NAME: COLEBROOK SW CT
SITE TYPE: MONOPOLE
TOWER HEIGHT: 148'-0"

BUSINESS UNIT #: 876377
SITE ADDRESS: 161 PINNEY STREET COLEBROOK, CT 06021
COUNTY: LITCHFIELD
JURISDICTION: TOWN OF COLEBROOK

VERIZON 5G L-SUB6 - CARRIER ADD / FUZE ID: 16272052

SITE INFORMATION

CROWN CASTLE USA INC. SITE NAME:	HORTON 2 / FREDSALL PROPERTY
SITE ADDRESS:	161 PINNEY STREET COLEBROOK, CT 06021
COUNTY:	LITCHFIELD
MAP/PARCEL #:	02-03-27
AREA OF CONSTRUCTION:	EXISTING
LATITUDE:	41° 57' 58.90" N
LONGITUDE:	73° 7' 18.10" W
LAT/LONG TYPE:	NAD83
GROUND ELEVATION:	----
CURRENT ZONING:	R2
ZONING JURISDICTION:	CT- CONNECTICUT SITING COUNCIL
JURISDICTION:	TOWN OF COLEBROOK
OCCUPANCY CLASSIFICATION:	----
TYPE OF CONSTRUCTION:	----
A.D.A. COMPLIANCE:	FACILITY IS UNMANNED AND NOT FOR HUMAN HABITATION
PROPERTY OWNER:	FIFTH STATE FARM LLC 70 NORTH OLD STONE BRIDGE RD COS COB, CT 06807
TOWER OWNER:	CROWN CASTLE MU LLC 2000 CORPORATE DRIVE CANONSBURG, PA 15317
CARRIER/APPLICANT:	VERIZON WIRELESS 180 WASHINGTON VALLEY ROAD BEDMINSTER, NJ 07921
ELECTRIC PROVIDER:	NORTHEAST UTILITIES (800) 286-2000
TELCO PROVIDER:	FRONTIER ----

PROJECT TEAM

A&E FIRM:	TECTONIC ENGINEERING AND SURVEYING CONSULTANTS P.C. 1279 ROUTE 300 NEWBURGH, NY 12550 PHONE: (845) 567-6656
CROWN CASTLE USA INC. DISTRICT CONTACTS:	1200 MACARTHUR BLVD, SUITE 200 MAHWAH, NJ 07430
	---- - PROJECT MANAGER ----
	---- - CONSTRUCTION MANAGER ----

DRAWING INDEX

SHEET #	SHEET DESCRIPTION
T-1	TITLE SHEET
T-2	GENERAL NOTES
C-1	SITE PLAN
C-2	TOWER ELEVATION & ANTENNA PLANS
C-3	EQUIPMENT SCHEDULES
C-4	EQUIPMENT DETAILS
C-5	EQUIPMENT DETAILS
C-6	PLUMBING DIAGRAM
G-1	GROUNDING DETAILS
G-2	GROUNDING DETAILS

ALL DRAWINGS CONTAINED HEREIN ARE FORMATTED FOR 11X17. CONTRACTOR SHALL VERIFY ALL PLANS AND EXISTING DIMENSIONS AND CONDITIONS ON THE JOB SITE AND SHALL IMMEDIATELY NOTIFY THE ENGINEER IN WRITING OF ANY DISCREPANCIES BEFORE PROCEEDING WITH THE WORK OR BE RESPONSIBLE FOR SAME.

APPROVALS

SIGNATURE	DATE

CONTRACTOR PMI REQUIREMENTS

PMI ACCESSED AT	https://pmi.vxwsmart.com
SMART TOOL VENDOR PROJECT NUMBER	----
VzW LOCATION CODE (PSLC)	467927

*** PMI AND REQUIREMENTS ALSO EMBEDDED IN MOUNT ANALYSIS REPORT

MOUNT MODIFICATION REQUIRED	Y

VzW APPROVED SMART KIT VENDORS

REFER TO MOUNT MODIFICATION DRAWINGS PAGE FOR VzW SMART KIT APPROVED VENDORS

LOCATION MAP

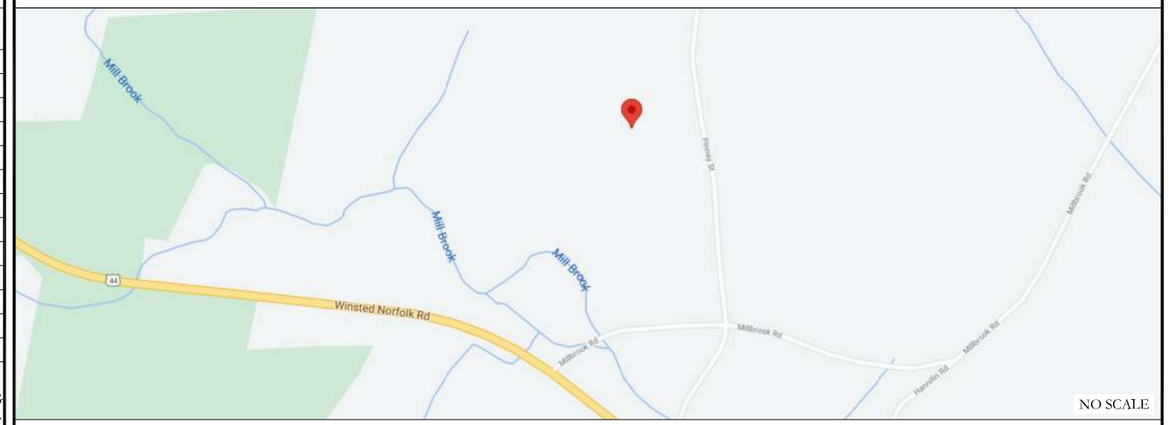

DRIVING DIRECTIONS FROM VERIZON LOCAL OFFICE (180 WASHINGTON VALLEY RD, BEDMINSTER, NJ 07921)
HEAD NORTHWEST. SLIGHT LEFT. TURN RIGHT ONTO US-202 N. TURN RIGHT ONTO SCHLEY MOUNTAIN RD. MERGE WITH I-287 N. ENTERING NEW YORK. TAKE THE I-87 EXIT TOWARD NEW YORK CITY. MERGE WITH I-287 E.USE THE RIGHT LANE TO KEEP RIGHT AT THE Y JUNCTION, CONTINUE ON I-87 S AND FOLLOW SIGNS FOR NEW YORK CITY. TAKE EXIT 8A TOWARD SAW MILL RIVER PKWY N. KEEP LEFT, FOLLOW SIGNS FOR SAW MILL RIVER PKWY AND MERGE ONTO SAW MILL RIVER PKWY N. MERGE WITH I-684 N VIA THE RAMP TO BREWSTER. MERGE WITH I-84 E TOWARD DANBURY. ENTERING CONNECTICUT. KEEP RIGHT TO STAY ON I-84 E. USE THE LEFT LANE TO TAKE EXIT 20 TO MERGE WITH CT-8 N TOWARD TORRINGTON. CONTINUE ONTO CT-8 N/US-6 E. CONTINUE ONTO CT-8 N. TURN RIGHT ONTO US-44 W/S MAIN ST. CONTINUE TO FOLLOW US-44 W. PASS BY CVS PHOTO (ON THE LEFT IN 0.3 MI). TURN RIGHT ONTO PINNEY ST.

APPLICABLE CODES/REFERENCE DOCUMENTS

ALL WORK SHALL BE PERFORMED AND MATERIALS INSTALLED IN ACCORDANCE WITH THE CURRENT EDITIONS OF THE FOLLOWING CODES AS ADOPTED BY THE LOCAL GOVERNING AUTHORITIES. NOTHING IN THESE PLANS IS TO BE CONSTRUED TO PERMIT WORK NOT CONFORMING TO THESE CODES:

CODE TYPE	CODE
BUILDING	2018 CT SBC
MECHANICAL	2018 CT SBC
ELECTRICAL	2017 NEC

REFERENCE DOCUMENTS:

STRUCTURAL ANALYSIS:	BY OTHERS
DATED:	
MOUNT ANALYSIS:	MASER CONSULTING CONNECTICUT (MOUNT MOD. REQ'D)
DATED:	05/14/2021
RFDS REVISION:	0
DATED:	01/07/2021
ORDER ID:	552632
REVISION:	0

CALL CONNECTICUT ONE CALL
(800) 922-4455 CBYD.COM
CALL 2 WORKING DAYS
BEFORE YOU DIG!
811

PROJECT DESCRIPTION

THE PURPOSE OF THIS PROJECT IS TO ENHANCE BROADBAND CONNECTIVITY AND CAPACITY TO THE EXISTING ELIGIBLE WIRELESS FACILITY.

TOWER SCOPE OF WORK:
- REMOVE (6) RRHS
- REMOVE (1) HYBRID CABLE
- REMOVE (6) COAX CABLES
- REMOVE (1) 6-CTK OVP
- INSTALL (3) ANTENNAS
- INSTALL (6) RRHS
- INSTALL (1) 12-CTK OVP
- INSTALL (1) HYBRID CABLE
- INSTALL (3) 2" EDGE TO EDGE BRACKET

GROUND SCOPE OF WORK:
- NONE

NOTE:
PRIOR TO ACCESSING/ENTERING THE SITE YOU MUST CONTACT THE CROWN NOC AT (800) 788-7011 & CROWN CONSTRUCTION MANAGER

verizon
180 WASHINGTON VALLEY ROAD
BEDMINSTER, NJ 07921

CROWN CASTLE
1200 MACARTHUR BLVD, SUITE 200
MAHWAH, NJ 07430

Tectonic
PRACTICAL SOLUTIONS. EXCEPTIONAL SERVICE.
Tectonic Engineering & Surveying Consultants P.C.
70 Pleasant Hill Road
P.O. Box 37
Mountainville, NY 10953
Phone: (845) 534-5959
(800) 829-6531
www.tectonicengineering.com
Project Contact Info
1279 Route 300
Newburgh, NY 12550
Phone: (845) 567-6656
TECTONIC WO: 10545.COLEBROOKWCT

VERIZON SITE NUMBER:
323614

BU #: **876377**
HORTON 2 / FREDSALL PROPERTY

161 PINNEY STREET
COLEBROOK, CT 06021

EXISTING 148'-0" MONOPOLE

ISSUED FOR:

REV	DATE	DRWN	DESCRIPTION	DES./QA
A	05/06/2021	TJ	PRELIMINARY	----
0	05/21/2021	JT	FOR CONSTRUCTION	----
1	06/14/2021	JT	PER COMMENTS	----
2	08/9/2021	BW	PER COMMENTS	----

STATE OF CONNECTICUT
ANTONIO A. GUALTIERI
PEN.0025406
LICENSED
PROFESSIONAL ENGINEER
08/09/2021

IT IS A VIOLATION OF LAW FOR ANY PERSON, UNLESS THEY ARE ACTING UNDER THE DIRECTION OF A LICENSED PROFESSIONAL ENGINEER, TO ALTER THIS DOCUMENT.

SHEET NUMBER:	REVISION:
T-1	0

CROWN CASTLE USA INC. SITE ACTIVITY REQUIREMENTS:

1. NOTICE TO PROCEED– NO WORK SHALL COMMENCE PRIOR TO CROWN CASTLE USA INC. WRITTEN NOTICE TO PROCEED (NTP) AND THE ISSUANCE OF A PURCHASE ORDER. PRIOR TO ACCESSING/ENTERING THE SITE YOU MUST CONTACT THE CROWN CASTLE USA INC. NOC AT 800–788–7011 & THE CROWN CASTLE USA INC. CONSTRUCTION MANAGER.
2. "LOOK UP" – CROWN CASTLE USA INC. SAFETY CLIMB REQUIREMENT:
   THE INTEGRITY OF THE SAFETY CLIMB AND ALL COMPONENTS OF THE CLIMBING FACILITY SHALL BE CONSIDERED DURING ALL STAGES OF DESIGN, INSTALLATION, AND INSPECTION. TOWER MODIFICATION, MOUNT REINFORCEMENTS, AND/OR EQUIPMENT INSTALLATIONS SHALL NOT COMPROMISE THE INTEGRITY OR FUNCTIONAL USE OF THE SAFETY CLIMB OR ANY COMPONENTS OF THE CLIMBING FACILITY ON THE STRUCTURE. THIS SHALL INCLUDE, BUT NOT BE LIMITED TO: PINCHING OF THE WIRE ROPE, BENDING OF THE WIRE ROPE FROM ITS SUPPORTS, DIRECT CONTACT OR CLOSE PROXIMITY TO THE WIRE ROPE WHICH MAY CAUSE FRICTIONAL WEAR, IMPACT TO THE ANCHORAGE POINTS IN ANY WAY, OR TO IMPEDE/BLOCK ITS INTENDED USE. ANY COMPROMISED SAFETY CLIMB, INCLUDING EXISTING CONDITIONS MUST BE TAGGED OUT AND REPORTED TO YOUR CROWN CASTLE USA INC. POC OR CALL THE NOC TO GENERATE A SAFETY CLIMB MAINTENANCE AND CONTRACTOR NOTICE TICKET.
3. PRIOR TO THE START OF CONSTRUCTION, ALL REQUIRED JURISDICTIONAL PERMITS SHALL BE OBTAINED. THIS INCLUDES, BUT IS NOT LIMITED TO, BUILDING, ELECTRICAL, MECHANICAL, FIRE, FLOOD ZONE, ENVIRONMENTAL, AND ZONING. AFTER ONSITE ACTIVITIES AND CONSTRUCTION ARE COMPLETED, ALL REQUIRED PERMITS SHALL BE SATISFIED AND CLOSED OUT ACCORDING TO LOCAL JURISDICTIONAL REQUIREMENTS.
4. ALL CONSTRUCTION MEANS AND METHODS; INCLUDING BUT NOT LIMITED TO, ERECTION PLANS, RIGGING PLANS, CLIMBING PLANS, AND RESCUE PLANS SHALL BE THE RESPONSIBILITY OF THE GENERAL CONTRACTOR RESPONSIBLE FOR THE EXECUTION OF THE WORK CONTAINED HEREIN, AND SHALL MEET ANSI/ASSE A10.48 (LATEST EDITION); FEDERAL, STATE, AND LOCAL REGULATIONS; AND ANY APPLICABLE INDUSTRY CONSENSUS STANDARDS RELATED TO THE CONSTRUCTION ACTIVITIES BEING PERFORMED. ALL RIGGING PLANS SHALL ADHERE TO ANSI/ASSE A10.48 (LATEST EDITION) AND CROWN CASTLE USA INC. STANDARD CED–STD–10253, INCLUDING THE REQUIRED INVOLVEMENT OF A QUALIFIED ENGINEER FOR CLASS IV CONSTRUCTION, TO CERTIFY THE SUPPORTING STRUCTURE(S) IN ACCORDANCE WITH ANSI/TIA–322 (LATEST EDITION).
5. ALL SITE WORK TO COMPLY WITH QAS–STD–10068 "INSTALLATION STANDARDS FOR CONSTRUCTION ACTIVITIES ON CROWN CASTLE USA INC. TOWER SITE," CED–STD–10294 "STANDARD FOR INSTALLATION OF MOUNTS AND APPURTENANCES," AND LATEST VERSION OF ANSI/TIA–1019–A–2012 "STANDARD FOR INSTALLATION, ALTERATION, AND MAINTENANCE OF ANTENNA SUPPORTING STRUCTURES AND ANTENNAS."
6. IF THE SPECIFIED EQUIPMENT CAN NOT BE INSTALLED AS SHOWN ON THESE DRAWINGS, THE CONTRACTOR SHALL PROPOSE AN ALTERNATIVE INSTALLATION FOR APPROVAL BY CROWN CASTLE USA INC. PRIOR TO PROCEEDING WITH ANY SUCH CHANGE OF INSTALLATION.
7. ALL MATERIALS FURNISHED AND INSTALLED SHALL BE IN STRICT ACCORDANCE WITH ALL APPLICABLE CODES, REGULATIONS AND ORDINANCES. CONTRACTOR SHALL ISSUE ALL APPROPRIATE NOTICES AND COMPLY WITH ALL LAWS, ORDINANCES, RULES, REGULATIONS AND LAWFUL ORDERS OF ANY PUBLIC AUTHORITY REGARDING THE PERFORMANCE OF THE WORK. ALL WORK CARRIED OUT SHALL COMPLY WITH ALL APPLICABLE MUNICIPAL AND UTILITY COMPANY SPECIFICATIONS AND LOCAL JURISDICTIONAL CODES, ORDINANCES AND APPLICABLE REGULATIONS.
8. THE CONTRACTOR SHALL INSTALL ALL EQUIPMENT AND MATERIALS IN ACCORDANCE WITH MANUFACTURER'S RECOMMENDATIONS UNLESS SPECIFICALLY STATED OTHERWISE.
9. THE CONTRACTOR SHALL CONTACT UTILITY LOCATING SERVICES PRIOR TO THE START OF CONSTRUCTION.
10. ALL EXISTING ACTIVE SEWER, WATER, GAS, ELECTRIC AND OTHER UTILITIES WHERE ENCOUNTERED IN THE WORK, SHALL BE PROTECTED AT ALL TIMES AND WHERE REQUIRED FOR THE PROPER EXECUTION OF THE WORK, SHALL BE RELOCATED AS DIRECTED BY CONTRACTOR. EXTREME CAUTION SHOULD BE USED BY THE CONTRACTOR WHEN EXCAVATING OR DRILLING PIERS AROUND OR NEAR UTILITIES. CONTRACTOR SHALL PROVIDE SAFETY TRAINING FOR THE WORKING CREW. THIS WILL INCLUDE BUT NOT BE LIMITED TO A) FALL PROTECTION B) CONFINED SPACE C) ELECTRICAL SAFETY D) TRENCHING AND EXCAVATION E) CONSTRUCTION SAFETY PROCEDURES.
11. ALL SITE WORK SHALL BE AS INDICATED ON THE STAMPED CONSTRUCTION DRAWINGS AND PROJECT SPECIFICATIONS, LATEST APPROVED REVISION.
12. CONTRACTOR SHALL KEEP THE SITE FREE FROM ACCUMULATING WASTE MATERIAL, DEBRIS, AND TRASH AT THE COMPLETION OF THE WORK. IF NECESSARY, RUBBISH, STUMPS, DEBRIS, STICKS, STONES AND OTHER REFUSE SHALL BE REMOVED FROM THE SITE AND DISPOSED OF LEGALLY.
13. ALL EXISTING INACTIVE SEWER, WATER, GAS, ELECTRIC AND OTHER UTILITIES, WHICH INTERFERE WITH THE EXECUTION OF THE WORK, SHALL BE REMOVED AND/OR CAPPED, PLUGGED OR OTHERWISE DISCONTINUED AT POINTS WHICH WILL NOT INTERFERE WITH THE EXECUTION OF THE WORK, SUBJECT TO THE APPROVAL OF CONTRACTOR, TOWER OWNER, CROWN CASTLE USA INC., AND/OR LOCAL UTILITIES.
14. THE CONTRACTOR SHALL PROVIDE SITE SIGNAGE IN ACCORDANCE WITH THE TECHNICAL SPECIFICATION FOR SITE SIGNAGE REQUIRED BY LOCAL JURISDICTION AND SIGNAGE REQUIRED ON INDIVIDUAL PIECES OF EQUIPMENT, ROOMS, AND SHELTERS.
15. THE SITE SHALL BE GRADED TO CAUSE SURFACE WATER TO FLOW AWAY FROM THE CARRIER'S EQUIPMENT AND TOWER AREAS.
16. THE SUB GRADE SHALL BE COMPACTED AND BROUGHT TO A SMOOTH UNIFORM GRADE PRIOR TO FINISHED SURFACE APPLICATION.
17. THE AREAS OF THE OWNERS PROPERTY DISTURBED BY THE WORK AND NOT COVERED BY THE TOWER, EQUIPMENT OR DRIVEWAY, SHALL BE GRADED TO A UNIFORM SLOPE, AND STABILIZED TO PREVENT EROSION AS SPECIFIED ON THE CONSTRUCTION DRAWINGS AND/OR PROJECT SPECIFICATIONS.
18. CONTRACTOR SHALL MINIMIZE DISTURBANCE TO EXISTING SITE DURING CONSTRUCTION. EROSION CONTROL MEASURES, IF REQUIRED DURING CONSTRUCTION, SHALL BE IN CONFORMANCE WITH THE LOCAL GUIDELINES FOR EROSION AND SEDIMENT CONTROL.
19. THE CONTRACTOR SHALL PROTECT EXISTING IMPROVEMENTS, PAVEMENTS, CURBS, LANDSCAPING AND STRUCTURES. ANY DAMAGED PART SHALL BE REPAIRED AT CONTRACTOR'S EXPENSE TO THE SATISFACTION OF OWNER.
20. CONTRACTOR SHALL LEGALLY AND PROPERLY DISPOSE OF ALL SCRAP MATERIALS SUCH AS COAXIAL CABLES AND OTHER ITEMS REMOVED FROM THE EXISTING FACILITY. ANTENNAS REMOVED SHALL BE RETURNED TO THE OWNER'S DESIGNATED LOCATION.
21. CONTRACTOR SHALL LEAVE PREMISES IN CLEAN CONDITION. TRASH AND DEBRIS SHOULD BE REMOVED FROM SITE ON A DAILY BASIS.
22. NO FILL OR EMBANKMENT MATERIAL SHALL BE PLACED ON FROZEN GROUND. FROZEN MATERIALS, SNOW OR ICE SHALL NOT BE PLACED IN ANY FILL OR EMBANKMENT.

GENERAL NOTES:

1. FOR THE PURPOSE OF CONSTRUCTION DRAWING, THE FOLLOWING DEFINITIONS SHALL APPLY:
   CONTRACTOR: GENERAL CONTRACTOR RESPONSIBLE FOR CONSTRUCTION
   CARRIER: VERIZON
   TOWER OWNER: CROWN CASTLE USA INC.
2. THESE DRAWINGS HAVE BEEN PREPARED USING STANDARDS OF PROFESSIONAL CARE AND COMPLETENESS NORMALLY EXERCISED UNDER SIMILAR CIRCUMSTANCES BY REPUTABLE ENGINEERS IN THIS OR SIMILAR LOCALITIES. IT IS ASSUMED THAT THE WORK DEPICTED WILL BE PERFORMED BY AN EXPERIENCED CONTRACTOR AND/OR WORKPEOPLE WHO HAVE A WORKING KNOWLEDGE OF THE APPLICABLE CODE STANDARDS AND REQUIREMENTS AND OF INDUSTRY ACCEPTED STANDARD GOOD PRACTICE. AS NOT EVERY CONDITION OR ELEMENT IS (OR CAN BE) EXPLICITLY SHOWN ON THESE DRAWINGS, THE CONTRACTOR SHALL USE INDUSTRY ACCEPTED STANDARD GOOD PRACTICE FOR MISCELLANEOUS WORK NOT EXPLICITLY SHOWN.
3. THESE DRAWINGS REPRESENT THE FINISHED STRUCTURE. THEY DO NOT INDICATE THE MEANS OR METHODS OF CONSTRUCTION. THE CONTRACTOR SHALL BE SOLELY RESPONSIBLE FOR THE CONSTRUCTION MEANS, METHODS, TECHNIQUES, SEQUENCES, AND PROCEDURES. THE CONTRACTOR SHALL PROVIDE ALL MEASURES NECESSARY FOR PROTECTION OF LIFE AND PROPERTY DURING CONSTRUCTION. SUCH MEASURES SHALL INCLUDE, BUT NOT BE LIMITED TO, BRACING, FORMWORK, SHORING, ETC. SITE VISITS BY THE ENGINEER OR HIS REPRESENTATIVE WILL NOT INCLUDE INSPECTION OF THESE ITEMS AND IS FOR STRUCTURAL OBSERVATION OF THE FINISHED STRUCTURE ONLY.
4. NOTES AND DETAILS IN THE CONSTRUCTION DRAWINGS SHALL TAKE PRECEDENCE OVER GENERAL NOTES AND TYPICAL DETAILS. WHERE NO DETAILS ARE SHOWN, CONSTRUCTION SHALL CONFORM TO SIMILAR WORK ON THE PROJECT, AND/OR AS PROVIDED FOR IN THE CONTRACT DOCUMENTS. WHERE DISCREPANCIES OCCUR BETWEEN PLANS, DETAILS, GENERAL NOTES, AND SPECIFICATIONS, THE GREATER, MORE STRICT REQUIREMENTS, SHALL GOVERN. IF FURTHER CLARIFICATION IS REQUIRED CONTACT THE ENGINEER OF RECORD.
5. SUBSTANTIAL EFFORT HAS BEEN MADE TO PROVIDE ACCURATE DIMENSIONS AND MEASUREMENTS ON THE DRAWINGS TO ASSIST IN THE FABRICATION AND/OR PLACEMENT OF CONSTRUCTION ELEMENTS BUT IT IS THE SOLE RESPONSIBILITY OF THE CONTRACTOR TO FIELD VERIFY THE DIMENSIONS, MEASUREMENTS, AND/OR CLEARANCES SHOWN IN THE CONSTRUCTION DRAWINGS PRIOR TO FABRICATION OR CUTTING OF ANY NEW OR EXISTING CONSTRUCTION ELEMENTS. IF IT IS DETERMINED THAT THERE ARE DISCREPANCIES AND/OR CONFLICTS WITH THE CONSTRUCTION DRAWINGS THE ENGINEER OF RECORD IS TO BE NOTIFIED AS SOON AS POSSIBLE.
6. PRIOR TO THE SUBMISSION OF BIDS, THE BIDDING CONTRACTOR SHALL VISIT THE CELL SITE TO FAMILIARIZE WITH THE EXISTING CONDITIONS AND TO CONFIRM THAT THE WORK CAN BE ACCOMPLISHED AS SHOWN ON THE CONSTRUCTION DRAWINGS. ANY DISCREPANCY FOUND SHALL BE BROUGHT TO THE ATTENTION OF CROWN CASTLE.
7. ALL MATERIALS FURNISHED AND INSTALLED SHALL BE IN STRICT ACCORDANCE WITH ALL APPLICABLE CODES, REGULATIONS AND ORDINANCES. CONTRACTOR SHALL ISSUE ALL APPROPRIATE NOTICES AND COMPLY WITH ALL LAWS, ORDINANCES, RULES, REGULATIONS AND LAWFUL ORDERS OF ANY PUBLIC AUTHORITY REGARDING THE PERFORMANCE OF THE WORK. ALL WORK CARRIED OUT SHALL COMPLY WITH ALL APPLICABLE MUNICIPAL AND UTILITY COMPANY SPECIFICATIONS AND LOCAL JURISDICTIONAL CODES, ORDINANCES AND APPLICABLE REGULATIONS.
8. UNLESS NOTED OTHERWISE, THE WORK SHALL INCLUDE FURNISHING MATERIALS, EQUIPMENT, APPURTENANCES AND LABOR NECESSARY TO COMPLETE ALL INSTALLATIONS AS INDICATED ON THE DRAWINGS.
9. THE CONTRACTOR SHALL INSTALL ALL EQUIPMENT AND MATERIALS IN ACCORDANCE WITH MANUFACTURER'S RECOMMENDATIONS UNLESS SPECIFICALLY STATED OTHERWISE.
10. IF THE SPECIFIED EQUIPMENT CAN NOT BE INSTALLED AS SHOWN ON THESE DRAWINGS, THE CONTRACTOR SHALL PROPOSE AN ALTERNATIVE INSTALLATION FOR APPROVAL BY THE CARRIER AND CROWN CASTLE PRIOR TO PROCEEDING WITH ANY SUCH CHANGE OF INSTALLATION.
11. CONTRACTOR IS TO PERFORM A SITE INVESTIGATION AND IS TO DETERMINE THE BEST ROUTING OF ALL CONDUITS FOR POWER, AND TELCO AND FOR GROUNDING CABLES AS SHOWN IN THE POWER, TELCO, AND GROUNDING PLAN DRAWINGS.
12. THE CONTRACTOR SHALL PROTECT EXISTING IMPROVEMENTS, PAVEMENTS, CURBS, LANDSCAPING AND STRUCTURES. ANY DAMAGED PART SHALL BE REPAIRED AT CONTRACTOR'S EXPENSE TO THE SATISFACTION OF CROWN CASTLE USA INC.
13. CONTRACTOR SHALL LEGALLY AND PROPERLY DISPOSE OF ALL SCRAP MATERIALS SUCH AS COAXIAL CABLES AND OTHER ITEMS REMOVED FROM THE EXISTING FACILITY. ANTENNAS REMOVED SHALL BE RETURNED TO THE OWNER'S DESIGNATED LOCATION.
14. CONTRACTOR SHALL LEAVE PREMISES IN CLEAN CONDITION. TRASH AND DEBRIS SHOULD BE REMOVED FROM SITE ON A DAILY BASIS.

CONCRETE, FOUNDATIONS, AND REINFORCING STEEL:

1. ALL CONCRETE WORK SHALL BE IN ACCORDANCE WITH THE ACI 301, ACI 318, ACI 336, ASTM A184, ASTM A185 AND THE DESIGN AND CONSTRUCTION SPECIFICATION FOR CAST–IN–PLACE CONCRETE.
2. UNLESS NOTED OTHERWISE, SOIL BEARING PRESSURE USED FOR DESIGN OF SLABS AND FOUNDATIONS IS ASSUMED TO BE 1000 psf.
3. ALL CONCRETE SHALL HAVE A MINIMUM COMPRESSIVE STRENGTH (f'c) OF 3000 psi AT 28 DAYS, UNLESS NOTED OTHERWISE. NO MORE THAN 90 MINUTES SHALL ELAPSE FROM BATCH TIME TO TIME OF PLACEMENT UNLESS APPROVED BY THE ENGINEER OF RECORD. TEMPERATURE OF CONCRETE SHALL NOT EXCEED 90°f AT TIME OF PLACEMENT.
4. CONCRETE EXPOSED TO FREEZE–THAW CYCLES SHALL CONTAIN AIR ENTRAINING ADMIXTURES. AMOUNT OF AIR ENTRAINMENT TO BE BASED ON SIZE OF AGGREGATE AND F3 CLASS EXPOSURE (VERY SEVERE). CEMENT USED TO BE TYPE II PORTLAND CEMENT WITH A MAXIMUM WATER–TO–CEMENT RATIO (W/C) OF 0.45.
5. ALL STEEL REINFORCING SHALL CONFORM TO ASTM A615. ALL WELDED WIRE FABRIC (WWF) SHALL CONFORM TO ASTM A185. ALL SPLICES SHALL BE CLASS "B" TENSION SPLICES, UNLESS NOTED OTHERWISE. ALL HOOKS SHALL BE STANDARD 90 DEGREE HOOKS, UNLESS NOTED OTHERWISE. YIELD STRENGTH (Fy) OF STANDARD DEFORMED BARS ARE AS FOLLOWS:
   #4 BARS AND SMALLER........40 ksi
   #5 BARS AND LARGER........60 ksi
6. THE FOLLOWING MINIMUM CONCRETE COVER SHALL BE PROVIDED FOR REINFORCING STEEL UNLESS SHOWN OTHERWISE ON DRAWINGS:
   CONCRETE CAST AGAINST AND PERMANENTLY EXPOSED TO EARTH........3"
   CONCRETE EXPOSED TO EARTH OR WEATHER:
   #6 BARS AND LARGER........2"
   #5 BARS AND SMALLER........1–1/2"
   CONCRETE NOT EXPOSED TO EARTH OR WEATHER:
   SLAB AND WALLS........3/4"
   BEAMS AND COLUMNS........1–1/2"
7. A TOOLED EDGE OR A 3/4" CHAMFER SHALL BE PROVIDED AT ALL EXPOSED EDGES OF CONCRETE, UNLESS NOTED OTHERWISE, IN ACCORDANCE WITH ACI 301 SECTION 4.2.4.

GREENFIELD GROUNDING NOTES:

1. ALL GROUND ELECTRODE SYSTEMS (INCLUDING TELECOMMUNICATION, RADIO, LIGHTNING PROTECTION AND AC POWER GES'S) SHALL BE BONDED TOGETHER AT OR BELOW GRADE, BY TWO OR MORE COPPER BONDING CONDUCTORS IN ACCORDANCE WITH THE NEC.
2. THE CONTRACTOR SHALL PERFORM IEEE FALL–OF–POTENTAL RESISTANCE TO EARTH TESTING (PER IEEE 1100 AND 81) FOR GROUND ELECTRODE SYSTEMS, THE CONTRACTOR SHALL FURNISH AND INSTALL SUPPLEMENTAL GROUND ELECTRODES AS NEEDED TO ACHIEVE A TEST RESULT OF 5 OHMS OR LESS.
3. THE CONTRACTOR IS RESPONSIBLE FOR PROPERLY SEQUENCING GROUNDING AND UNDERGROUND CONDUIT INSTALLATION AS TO PREVENT ANY LOSS OF CONTINUITY IN THE GROUNDING SYSTEM OR DAMAGE TO THE CONDUIT AND PROVIDE TESTING RESULTS.
4. METAL CONDUIT AND TRAY SHALL BE GROUNDED AND MADE ELECTRICALLY CONTINUOUS WITH LISTED BONDING FITTINGS OR BY BONDING ACROSS THE DISCONTINUITY WITH #6 COPPER WIRE UL APPROVED GROUNDING TYPE CONDUIT CLAMPS.
5. METAL RACEWAY SHALL NOT BE USED AS THE NEC REQUIRED EQUIPMENT GROUND CONDUCTOR. STRANDED COPPER CONDUCTORS WITH GREEN INSULATION, SIZED IN ACCORDANCE WITH THE NEC, SHALL BE FURNISHED AND INSTALLED WITH THE POWER CIRCUITS TO BTS EQUIPMENT.
6. EACH CABINET FRAME SHALL BE DIRECTLY CONNECTED TO THE MASTER GROUND BAR WITH GREEN INSULATED SUPPLEMENTAL EQUIPMENT GROUND WIRES, #6 STRANDED COPPER OR LARGER FOR INDOOR BTS; #2 BARE SOLID TINNED COPPER FOR OUTDOOR BTS.
7. CONNECTIONS TO THE GROUND BUS SHALL NOT BE DOUBLED UP OR STACKED BACK TO BACK CONNECTIONS ON OPPOSITE SIDE OF THE GROUND BUS ARE PERMITTED.
8. ALL EXTERIOR GROUND CONDUCTORS BETWEEN EQUIPMENT/GROUND BARS AND THE GROUND RING SHALL BE #2 SOLID TINNED COPPER UNLESS OTHERWISE INDICATED.
9. ALUMINUM CONDUCTOR OR COPPER CLAD STEEL CONDUCTOR SHALL NOT BE USED FOR GROUNDING CONNECTIONS.
10. USE OF 90° BENDS IN THE PROTECTION GROUNDING CONDUCTORS SHALL BE AVOIDED WHEN 45° BENDS CAN BE ADEQUATELY SUPPORTED.
11. EXOTHERMIC WELDS SHALL BE USED FOR ALL GROUNDING CONNECTIONS BELOW GRADE.
12. ALL GROUND CONNECTIONS ABOVE GRADE (INTERIOR AND EXTERIOR) SHALL BE FORMED USING HIGH PRESS CRIMPS.
13. COMPRESSION GROUND CONNECTIONS MAY BE REPLACED BY EXOTHERMIC WELD CONNECTIONS.
14. ICE BRIDGE BONDING CONDUCTORS SHALL BE EXOTHERMICALLY BONDED OR BOLTED TO THE BRIDGE AND THE TOWER GROUND BAR.
15. APPROVED ANTIOXIDANT COATINGS (i.e. CONDUCTIVE GEL OR PASTE) SHALL BE USED ON ALL COMPRESSION AND BOLTED GROUND CONNECTIONS.
16. ALL EXTERIOR GROUND CONNECTIONS SHALL BE COATED WITH A CORROSION RESISTANT MATERIAL.
17. MISCELLANEOUS ELECTRICAL AND NON–ELECTRICAL METAL BOXES, FRAMES AND SUPPORTS SHALL BE BONDED TO THE GROUND RING, IN ACCORDANCE WITH THE NEC.
18. BOND ALL METALLIC OBJECTS WITHIN 6 ft OF MAIN GROUND RING WITH (1) #2 BARE SOLID TINNED COPPER GROUND CONDUCTOR.
19. GROUND CONDUCTORS USED FOR THE FACILITY GROUNDING AND LIGHTNING PROTECTION SYSTEMS SHALL NOT BE ROUTED THROUGH METALLIC OBJECTS THAT FORM A RING AROUND THE CONDUCTOR, SUCH AS METALLIC CONDUITS, METAL SUPPORT CLIPS OR SLEEVES THROUGH WALLS OR FLOORS. WHEN IT IS REQUIRED TO BE HOUSED IN CONDUIT TO MEET CODE REQUIREMENTS OR LOCAL CONDITIONS, NON–METALLIC MATERIAL SUCH AS PVC CONDUIT SHALL BE USED. WHERE USE OF METAL CONDUIT IS UNAVOIDABLE (i.e., NONMETALLIC CONDUIT PROHIBITED BY LOCAL CODE) THE GROUND CONDUCTOR SHALL BE BONDED TO EACH END OF THE METAL CONDUIT.
20. ALL GROUNDS THAT TRANSITION FROM BELOW GRADE TO ABOVE GRADE MUST BE #2 BARE SOLID TINNED COPPER IN 3/4" NON–METALLIC, FLEXIBLE CONDUIT FROM 24" BELOW GRADE TO WITHIN 3" TO 6" OF CAD–WELD TERMINATION POINT. THE EXPOSED END OF THE CONDUIT MUST BE SEALED WITH SILICONE CAULK. (ADD TRANSITIONING GROUND STANDARD DETAIL AS WELL).
21. BUILDINGS WHERE THE MAIN GROUNDING CONDUCTORS ARE REQUIRED TO BE ROUTED TO GRADE, THE CONTRACTOR SHALL ROUTE TWO GROUNDING CONDUCTORS FROM THE ROOFTOP, TOWERS, AND WATER TOWERS GROUNDING RING, TO THE EXISTING GROUNDING SYSTEM, THE GROUNDING CONDUCTORS SHALL NOT BE SMALLER THAN 2/0 COPPER. ROOFTOP GROUNDING RING SHALL BE BONDED TO THE EXISTING GROUNDING SYSTEM, THE BUILDING STEEL COLUMNS, LIGHTNING PROTECTION SYSTEM, AND BUILDING MAIN WATER LINE (FERROUS OR NONFERROUS METAL PIPING ONLY).

ELECTRICAL INSTALLATION NOTES:

1. ALL ELECTRICAL WORK SHALL BE PERFORMED IN ACCORDANCE WITH THE PROJECT SPECIFICATIONS, NEC AND ALL APPLICABLE FEDERAL, STATE, AND LOCAL CODES/ORDINANCES.
2. CONDUIT ROUTINGS ARE SCHEMATIC. CONTRACTOR SHALL INSTALL CONDUITS SO THAT ACCESS TO EQUIPMENT IS NOT BLOCKED AND TRIP HAZARDS ARE ELIMINATED.
3. WIRING, RACEWAY AND SUPPORT METHODS AND MATERIALS SHALL COMPLY WITH THE REQUIREMENTS OF THE NEC.
4. ALL CIRCUITS SHALL BE SEGREGATED AND MAINTAIN MINIMUM CABLE SEPARATION AS REQUIRED BY THE NEC.
   4.1. ALL EQUIPMENT SHALL BEAR THE UNDERWRITERS LABORATORIES LABEL OF APPROVAL, AND SHALL CONFORM TO REQUIREMENT OF THE NATIONAL ELECTRICAL CODE.
   4.2. ALL OVERCURRENT DEVICES SHALL HAVE AN INTERRUPTING CURRENT RATING THAT SHALL BE GREATER THAN THE SHORT CIRCUIT CURRENT TO WHICH THEY ARE SUBJECTED, 22,000 AIC MINIMUM. VERYIFY AVAILABLE SHORT CIRCUIT CURRENT DOES NOT EXCEED THE RATING OF ELECTRICAL EQUIPMENT IN ACCORDANCE WITH ARTICLE 110.24 NEC OR THE MOST CURRENT ADOPTED CODE PRE THE GOVERNING JURISDICTION.
5. EACH END OF EVERY POWER PHASE CONDUCTOR, GROUNDING CONDUCTOR, AND TELCO CONDUCTOR OR CABLE SHALL BE LABELED WITH COLOR–CODED INSULATION OR ELECTRICAL TAPE (3M BRAND, 1/2" PLASTIC ELECTRICAL TAPE WITH UV PROTECTION, OR EQUAL). THE IDENTIFICATION METHOD SHALL CONFORM WITH NEC AND OSHA.
6. ALL ELECTRICAL COMPONENTS SHALL BE CLEARLY LABELED WITH LAMICOID TAGS SHOWING THEIR RATED VOLTAGE, PHASE CONFIGURATION, WIRE CONFIGURATION, POWER OR AMPACITY RATING AND BRANCH CIRCUIT ID NUMBERS (i.e. PANEL BOARD AND CIRCUIT ID'S).
7. PANEL BOARDS (ID NUMBERS) SHALL BE CLEARLY LABELED WITH PLASTIC LABELS.
8. ALL TIE WRAPS SHALL BE CUT FLUSH WITH APPROVED CUTTING TOOL TO REMOVE SHARP EDGES.
9. ALL POWER AND EQUIPMENT GROUND WIRING IN TUBING OR CONDUIT SHALL BE SINGLE COPPER CONDUCTOR (#14 OR LARGER) WITH TYPE THHW, THWN, THWN–2, XHHW, XHHW–2, THW, THW–2, RHW, OR RHW–2 INSULATION UNLESS OTHERWISE SPECIFIED.
10. SUPPLEMENTAL EQUIPMENT GROUND WIRING LOCATED INDOORS SHALL BE SINGLE COPPER CONDUCTOR (#6 OR LARGER) WITH TYPE THHW, THWN, THWN–2, XHHW, XHHW–2, THW, THW–2, RHW, OR RHW–2 INSULATION UNLESS OTHERWISE SPECIFIED.
11. POWER AND CONTROL WIRING IN FLEXIBLE CORD SHALL BE MULTI–CONDUCTOR, TYPE SOOW CORD (#14 OR LARGER) UNLESS OTHERWISE SPECIFIED.
12. POWER AND CONTROL WIRING FOR USE IN CABLE TRAY SHALL BE MULTI–CONDUCTOR, TYPE TC CABLE (#14 OR LARGER), WITH TYPE THHW, THWN, THWN–2, XHHW, XHHW–2, THW, THW–2, RHW, OR RHW–2 INSULATION UNLESS OTHERWISE SPECIFIED.
13. ALL POWER AND GROUNDING CONNECTIONS SHALL BE CRIMP–STYLE, COMPRESSION WIRE LUGS AND WIRE NUTS BY THOMAS AND BETTS (OR EQUAL). LUGS AND WIRE NUTS SHALL BE RATED FOR OPERATION NOT LESS THAN 75° C (90° C IF AVAILABLE).
14. RACEWAY AND CABLE TRAY SHALL BE LISTED OR LABELED FOR ELECTRICAL USE IN ACCORDANCE WITH NEMA, UL, ANSI/IEEE AND NEC.
15. ELECTRICAL METALLIC TUBING (EMT), INTERMEDIATE METAL CONDUIT (IMC), OR RIGID METAL CONDUIT (RMC) SHALL BE USED FOR EXPOSED INDOOR LOCATIONS.
16. ELECTRICAL METALLIC TUBING (EMT) OR METAL–CLAD CABLE (MC) SHALL BE USED FOR CONCEALED INDOOR LOCATIONS.
17. SCHEDULE 40 PVC UNDERGROUND ON STRAIGHTS AND SCHEDULE 80 PVC FOR ALL ELBOWS/90s AND ALL APPROVED ABOVE GRADE PVC CONDUIT.
18. LIQUID–TIGHT FLEXIBLE METALLIC CONDUIT (LIQUID–TITE FLEX) SHALL BE USED INDOORS AND OUTDOORS, WHERE VIBRATION OCCURS OR FLEXIBILITY IS NEEDED.
19. CONDUIT AND TUBING FITTINGS SHALL BE THREADED OR COMPRESSION–TYPE AND APPROVED FOR THE LOCATION USED. SET SCREW FITTINGS ARE NOT ACCEPTABLE.
20. CABINETS, BOXES AND WIRE WAYS SHALL BE LABELED FOR ELECTRICAL USE IN ACCORDANCE WITH NEMA, UL, ANSI/IEEE AND THE NEC.
21. WIREWAYS SHALL BE METAL WITH AN ENAMEL FINISH AND INCLUDE A HINGED COVER, DESIGNED TO SWING OPEN DOWNWARDS (WIREMOLD SPECMATE WIREWAY).
22. SLOTTED WIRING DUCT SHALL BE PVC AND INCLUDE COVER (PANDUIT TYPE E OR EQUAL).
23. CONDUITS SHALL BE FASTENED SECURELY IN PLACE WITH APPROVED NON–PERFORATED STRAPS AND HANGERS. EXPLOSIVE DEVICES (i.e. POWDER–ACTUATED) FOR ATTACHING HANGERS TO STRUCTURE WILL NOT BE PERMITTED. CLOSELY FOLLOW THE LINES OF THE STRUCTURE, MAINTAIN CLOSE PROXIMITY TO THE STRUCTURE AND KEEP CONDUITS IN TIGHT ENVELOPES. CHANGES IN DIRECTION TO ROUTE AROUND OBSTACLES SHALL BE MADE WITH CONDUIT OUTLET BODIES. CONDUIT SHALL BE INSTALLED IN A NEAT AND WORKMANLIKE MANNER. PARALLEL AND PERPENDICULAR TO STRUCTURE WALL AND CEILING LINES. ALL CONDUIT SHALL BE FISHED TO CLEAR OBSTRUCTIONS. ENDS OF CONDUITS SHALL BE TEMPORARILY CAPPED FLUSH TO FINISH GRADE TO PREVENT CONCRETE, PLASTER OR DIRT FROM ENTERING. CONDUITS SHALL BE RIGIDLY CLAMPED TO BOXES BY GALVANIZED MALLEABLE IRON BUSHING ON INSIDE AND GALVANIZED MALLEABLE IRON LOCKNUT ON OUTSIDE AND INSIDE.
24. EQUIPMENT CABINETS, TERMINAL BOXES, JUNCTION BOXES AND PULL BOXES SHALL BE GALVANIZED OR EPOXY–COATED SHEET STEEL. SHALL MEET OR EXCEED UL 50 AND BE RATED NEMA 1 (OR BETTER) FOR INTERIOR LOCATIONS AND NEMA 3R (OR BETTER) FOR EXTERIOR LOCATIONS.
25. METAL RECEPTACLE, SWITCH AND DEVICE BOXES SHALL BE GALVANIZED, EPOXY–COATED OR NON–CORRODING; SHALL MEET OR EXCEED UL 514A AND NEMA OS 1 AND BE RATED NEMA 1 (OR BETTER) FOR INTERIOR LOCATIONS AND WEATHER PROTECTED (WP OR BETTER) FOR EXTERIOR LOCATIONS.
26. NONMETALLIC RECEPTACLE, SWITCH AND DEVICE BOXES SHALL MEET OR EXCEED NEMA OS 2 (NEWEST REVISION) AND BE RATED NEMA 1 (OR BETTER) FOR INTERIOR LOCATIONS AND WEATHER PROTECTED (WP OR BETTER) FOR EXTERIOR LOCATIONS.
27. THE CONTRACTOR SHALL NOTIFY AND OBTAIN NECESSARY AUTHORIZATION FROM THE CARRIER AND/OR CROWN CASTLE USA INC. BEFORE COMMENCING WORK ON THE AC POWER DISTRIBUTION PANELS.
28. THE CONTRACTOR SHALL PROVIDE NECESSARY TAGGING ON THE BREAKERS, CABLES AND DISTRIBUTION PANELS IN ACCORDANCE WITH THE APPLICABLE CODES AND STANDARDS TO SAFEGUARD LIFE AND PROPERTY.
29. INSTALL LAMICOID LABEL ON THE METER CENTER TO SHOW "VERIZON".
30. ALL EMPTY/SPARE CONDUITS THAT ARE INSTALLED ARE TO HAVE A METERED MULE TAPE PULL CORD INSTALLED.

CONDUCTOR COLOR CODE		
SYSTEM	CONDUCTOR	COLOR
120/240V, 1Ø	A PHASE	BLACK
	B PHASE	RED
	NEUTRAL	WHITE
	GROUND	GREEN
120/208V, 3Ø	A PHASE	BLACK
	B PHASE	RED
	C PHASE	BLUE
	NEUTRAL	WHITE
	GROUND	GREEN
277/480V, 3Ø	A PHASE	BROWN
	B PHASE	ORANGE OR PURPLE
	C PHASE	YELLOW
	NEUTRAL	GREY
	GROUND	GREEN
DC VOLTAGE	POS (+)	RED**
	NEG (–)	BLACK**

* SEE NEC 210.5(C)(1) AND (2)
** POLARITY MARKED AT TERMINATION

APWA UNIFORM COLOR CODE:

WHITE	PROPOSED EXCAVATION
PINK	TEMPORARY SURVEY MARKINGS
RED	ELECTRIC POWER LINES, CABLES, CONDUIT, AND LIGHTING CABLES
YELLOW	GAS, OIL, STEAM, PETROLEUM, OR GASEOUS MATERIALS
ORANGE	COMMUNICATION, ALARM OR SIGNAL LINES, CABLES, OR CONDUIT AND TRAFFIC LOOPS
BLUE	POTABLE WATER
PURPLE	RECLAIMED WATER, IRRIGATION, AND SLURRY LINES
GREEN	SEWERS AND DRAIN LINES

ABBREVIATIONS:

ANT	ANTENNA
(E)	EXISTING
FIF	FACILITY INTERFACE FRAME
GEN	GENERATOR
GPS	GLOBAL POSITIONING SYSTEM
GSM	GLOBAL SYSTEM FOR MOBILE
LTE	LONG TERM EVOLUTION
MGB	MASTER GROUND BAR
MW	MICROWAVE
(N)	NEW
NEC	NATIONAL ELECTRIC CODE
(P)	PROPOSED
PP	POWER PLANT
QTY	QUANTITY
RECT	RECTIFIER
RBS	RADIO BASE STATION
RET	REMOTE ELECTRIC TILT
RFDS	RADIO FREQUENCY DATA SHEET
RRH	REMOTE RADIO HEAD
RRU	REMOTE RADIO UNIT
SIAD	SMART INTEGRATED DEVICE
TMA	TOWER MOUNTED AMPLIFIER
TYP	TYPICAL
UMTS	UNIVERSAL MOBILE TELECOMMUNICATIONS SYSTEM
W.P.	WORK POINT

verizon
180 WASHINGTON VALLEY ROAD
BEDMINSTER, NJ 07921

CROWN CASTLE
1200 MACARTHUR BLVD, SUITE 200
MAHWAH, NJ 07430

Tectonic
PRACTICAL SOLUTIONS. EXCEPTIONAL SERVICE.
Tectonic Engineering & Surveying Consultants P.C.
70 Pleasant Hill Road
P.O. Box 37
Mountainville, NY 10953
Phone: (845) 534–5959
(800) 829–6531
www.tectonicengineering.com
Project Contact Info
1279 Route 300
Newburgh, NY 12550
Phone: (845) 567–6656
TECTONIC WO: 10545.COLEBROOKWCT

VERIZON SITE NUMBER:
323614

BU #: **876377**
HORTON 2 / FREDSALL PROPERTY

161 PINNEY STREET
COLEBROOK, CT 06021

EXISTING 148'-0" MONOPOLE

ISSUED FOR:

REV	DATE	DRWN	DESCRIPTION	DES./QA
A	05/06/2021	IJ	PRELIMINARY	----
0	05/21/2021	JT	FOR CONSTRUCTION	----
1	06/14/2021	JT	PER COMMENTS	----
2	08/9/2021	BW	PER COMMENTS	----

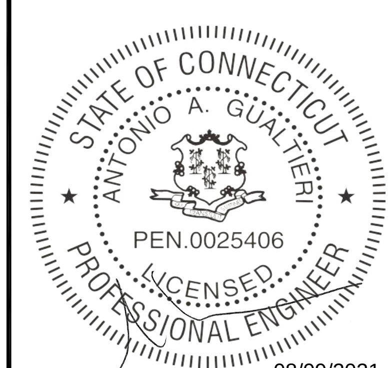

08/09/2021

IT IS A VIOLATION OF LAW FOR ANY PERSON, UNLESS THEY ARE ACTING UNDER THE DIRECTION OF A LICENSED PROFESSIONAL ENGINEER, TO ALTER THIS DOCUMENT.

SHEET NUMBER: T-2

REVISION: 0

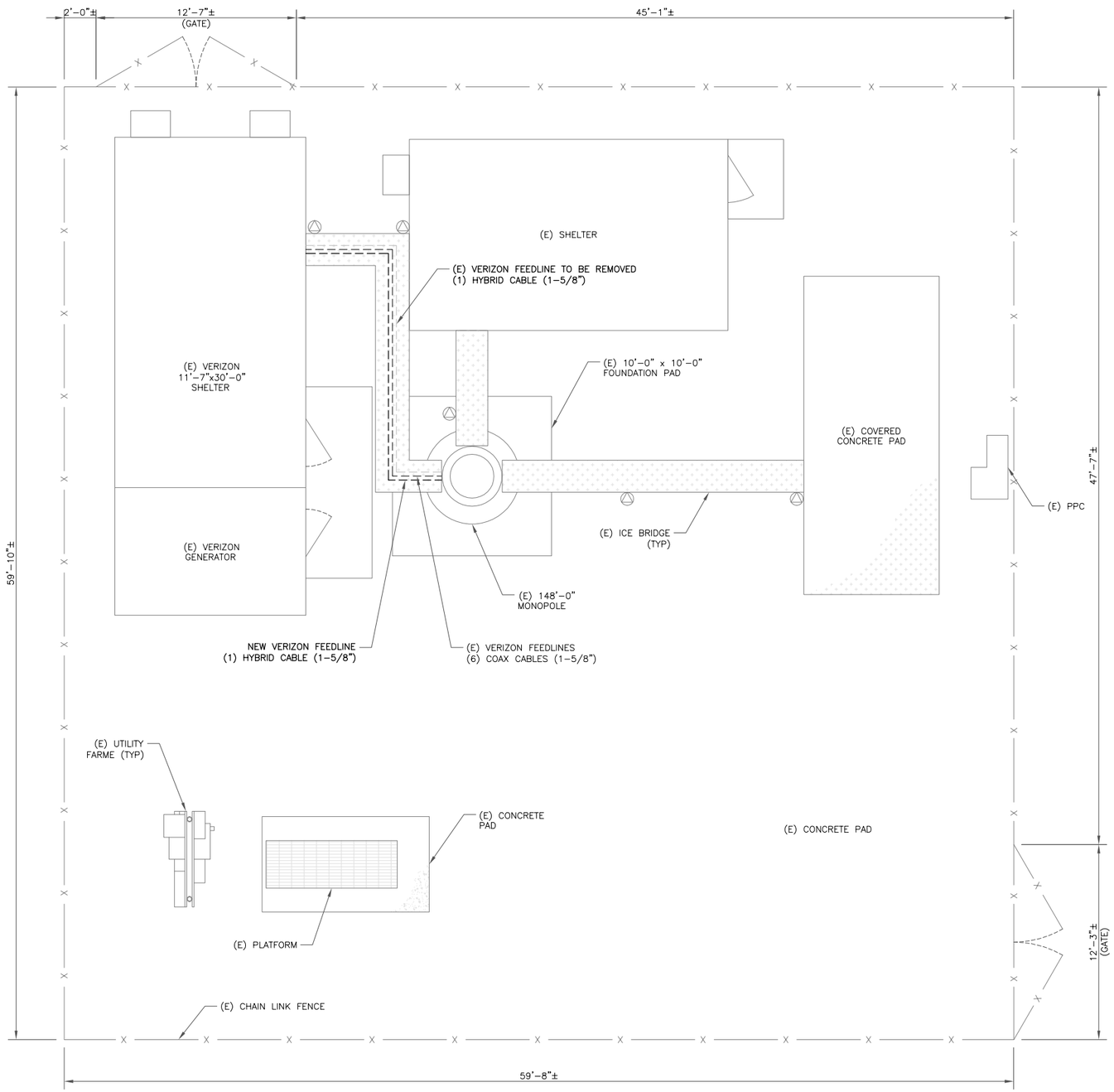

1 SITE PLAN

SCALE: 4' 3' 2' 1' 0 4' 1/4"=1'-0" (FULL SIZE) 1/8"=1'-0" (11x17)

N

verizon

180 WASHINGTON VALLEY ROAD
BEDMINSTER, NJ 07921

CROWN CASTLE

1200 MACARTHUR BLVD, SUITE 200
MAHWAH, NJ 07430

Tectonic

PRACTICAL SOLUTIONS. EXCEPTIONAL SERVICE.

Tectonic Engineering & Surveying Consultants P.C.
70 Pleasant Hill Road
P.O. Box 37
Mountainville, NY 10953
Phone: (845) 534-5959
(800) 829-6531
www.tectonicengineering.com

Project Contact Info
1279 Route 300
Newburgh, NY 12550
Phone: (845) 567-6656

TECTONIC WO: 10545.COLEBROOKWCT

VERIZON SITE NUMBER:
323614

BU #: **876377**
HORTON 2 / FREDSALL PROPERTY

161 PINNEY STREET
COLEBROOK, CT 06021

EXISTING 148'-0" MONOPOLE

ISSUED FOR:

REV	DATE	DRWN	DESCRIPTION	DES./QA
A	03/06/2021	TJ	PRELIMINARY	----
0	05/21/2021	JT	FOR CONSTRUCTION	----
1	06/14/2021	JT	PER COMMENTS	----
2	08/9/2021	BW	PER COMMENTS	----

STATE OF CONNECTICUT
ANTONIO A. GUALTIERI
PEN.0025406
LICENSED
PROFESSIONAL ENGINEER
08/09/2021

IT IS A VIOLATION OF LAW FOR ANY PERSON, UNLESS THEY ARE ACTING UNDER THE DIRECTION OF A LICENSED PROFESSIONAL ENGINEER, TO ALTER THIS DOCUMENT.

SHEET NUMBER: C-1

REVISION: 0

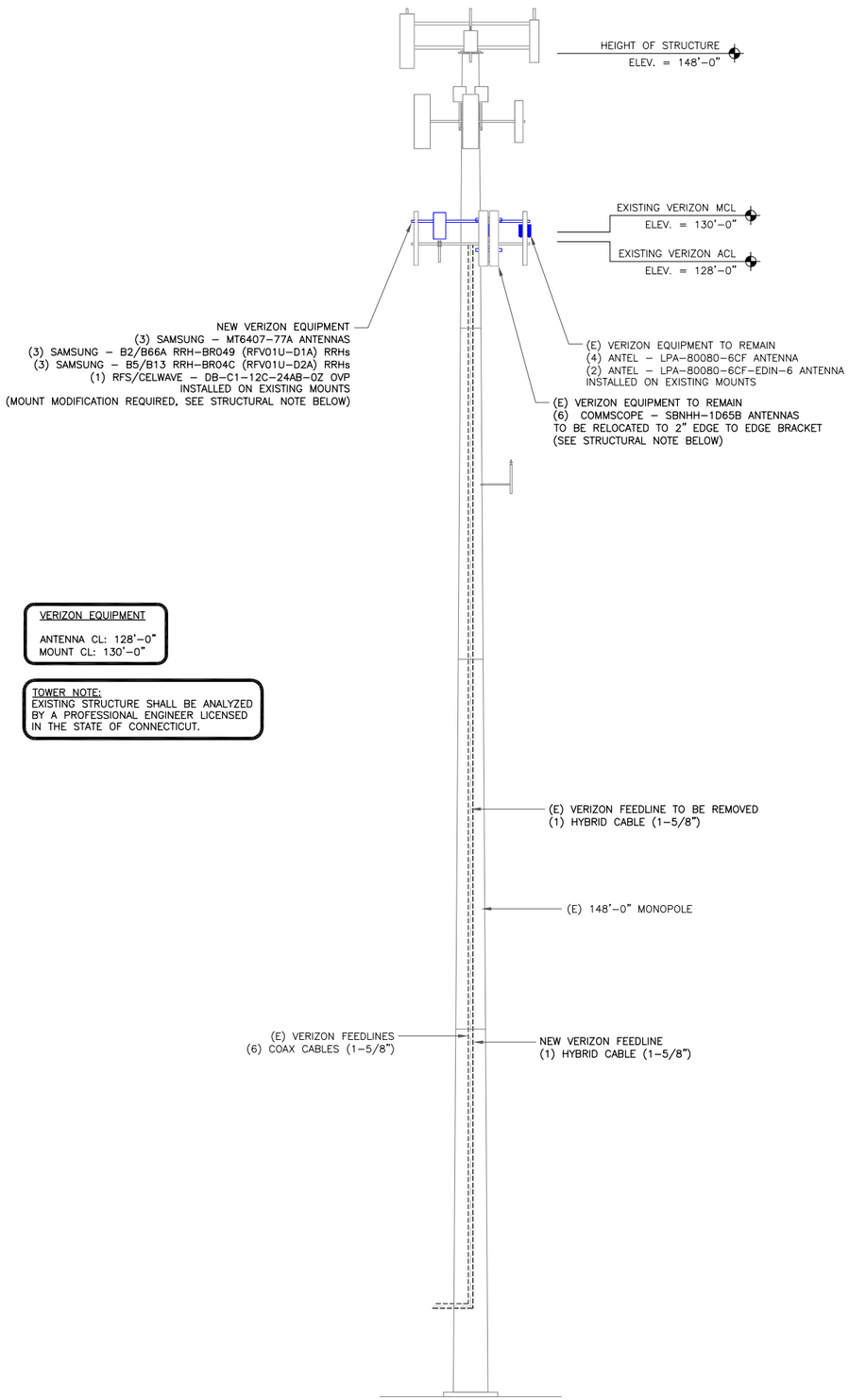

1 TOWER ELEVATION
SCALE: NOT TO SCALE

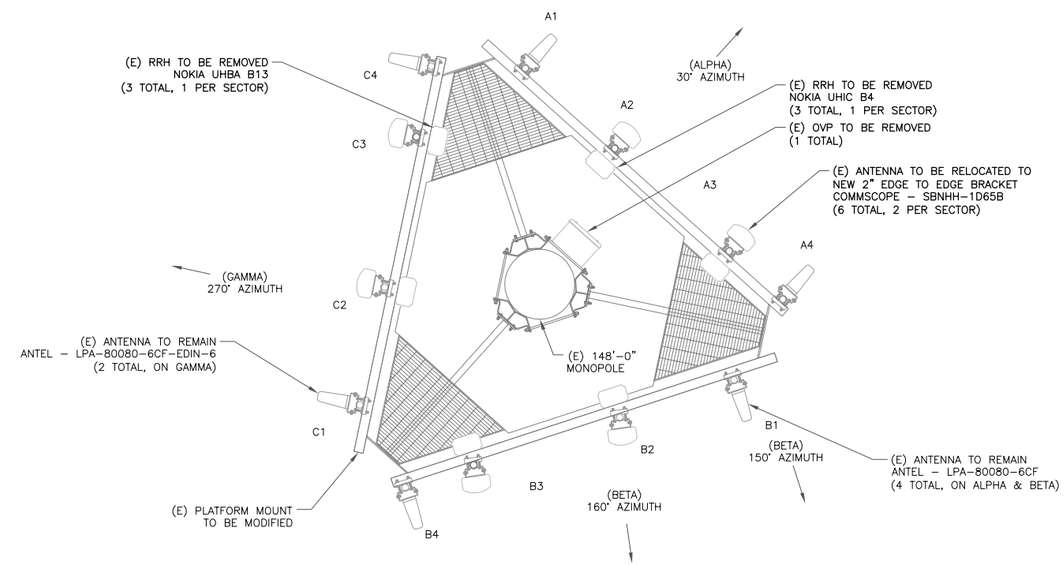

2 EXISTING ANTENNA PLAN
SCALE: NOT TO SCALE

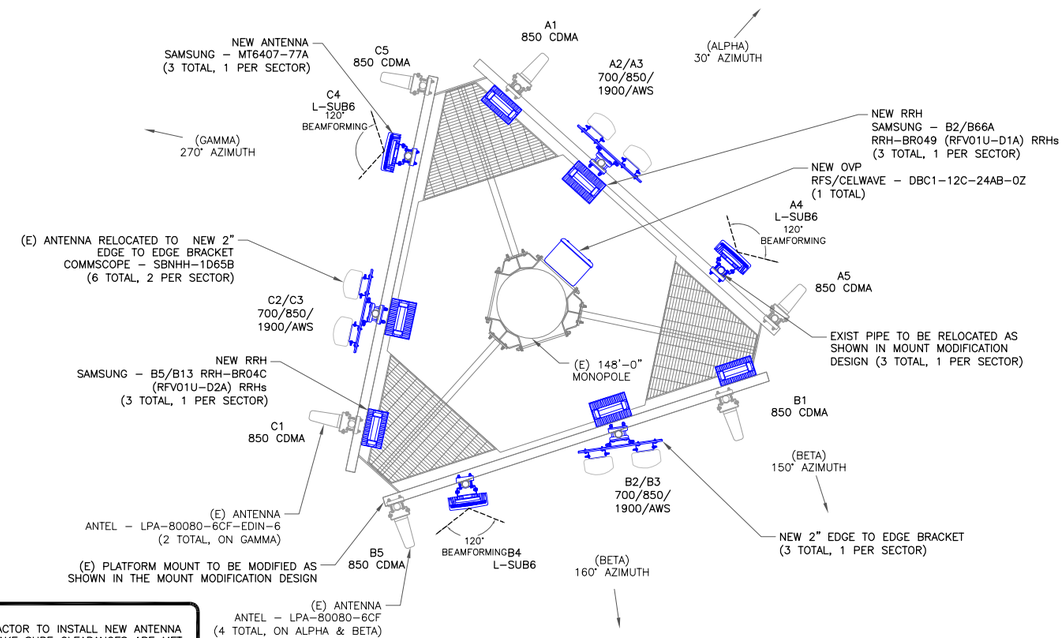

NOTE:
CONTRACTOR TO INSTALL NEW ANTENNA AND MAKE SURE CLEARANCES ARE MET PER MANUFACTURER'S RECOMMENDATION.

STRUCTURAL NOTE:
REFER TO ANTENNA POST-MOD MOUNT ANALYSIS REPORT AND PMI REQUIREMENTS & MOUNT MODIFICATIONS DRAWINGS PREPARED BY MASER CONSULTING CONNECTICUT DATED 05/14/21. MOUNT MODIFICATION DRAWINGS ARE ATTACHED TO THIS DRAWINGS SET.

3 NEW ANTENNA PLAN
SCALE: NOT TO SCALE

verizon
180 WASHINGTON VALLEY ROAD
BEDMINSTER, NJ 07921

CROWN CASTLE
1200 MACARTHUR BLVD, SUITE 200
MAHWAH, NJ 07430

Tectonic
PRACTICAL SOLUTIONS. EXCEPTIONAL SERVICE.
Tectonic Engineering & Surveying Consultants P.C.
70 Pleasant Hill Road
P.O. Box 37
Mountainville, NY 10953
Phone: (845) 534-5959
(800) 829-6531
www.tectonicengineering.com
Project Contact Info
1279 Route 300
Newburgh, NY 12550
Phone: (845) 567-6656
TECTONIC WO: 10545.COLEBROOKWCT

VERIZON SITE NUMBER:
323614

BU #: **876377**
HORTON 2 / FREDSALL PROPERTY

161 PINNEY STREET
COLEBROOK, CT 06021

EXISTING 148'-0" MONOPOLE

ISSUED FOR:

REV	DATE	DRWN	DESCRIPTION	DES./QA
A	05/06/2021	BJ	PRELIMINARY	----
0	05/21/2021	JT	FOR CONSTRUCTION	----
1	06/14/2021	JT	PER COMMENTS	----
2	08/9/2021	BW	PER COMMENTS	----

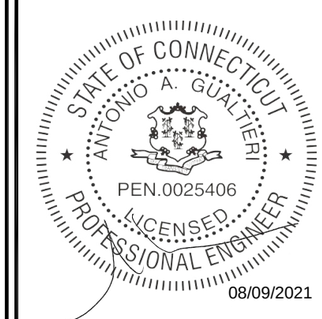

08/09/2021

IT IS A VIOLATION OF LAW FOR ANY PERSON, UNLESS THEY ARE ACTING UNDER THE DIRECTION OF A LICENSED PROFESSIONAL ENGINEER, TO ALTER THIS DOCUMENT.

SHEET NUMBER:	REVISION:
C-2	0

ANTENNA/RRH SCHEDULE

SECTOR	STATUS	ANTENNA MANUFACTURER	ANTENNA MODEL	ANTENNA CENTERLINE	AZIMUTH	MECHANICAL DOWNTILTS	ELECTRICAL DOWNTILTS	TOWER EQUIPMENT MANUFACTURER	TOWER EQUIPMENT QTY/MODEL
A1	EXISTING	ANTEL	LPA-80080-6CF	128'-0"	30°	4°	0°	RFS/CELWAVE	(1) DBC1-12C-24AB-0Z
A2	EXISTING	COMMSCOPE	SBNHH-1D65B	128'-0"	30°	0°	1°/3°	SAMSUNG SAMSUNG	(1) B5/B13 RRH-BR04C (RFV01U-D2A) (1) B2/B66A RRH-BR049 (RFV01U-D1A)
A3	EXISTING	COMMSCOPE	SBNHH-1D65B	128'-0"	30°	0°	1°/3°		
A4	NEW	SAMSUNG	MT6407-77A	128'-0"	30°	0°	6°	-	-
A5	EXISTING	ANTEL	LPA-80080-6CF	128'-0"	30°	4°	0°	-	-
B1	EXISTING	ANTEL	LPA-80080-6CF	128'-0"	160°	4°	0°	-	-
B2	EXISTING	COMMSCOPE	SBNHH-1D65B	128'-0"	160°	0°	1°/2°/4°	SAMSUNG SAMSUNG	(1) B5/B13 RRH-BR04C (RFV01U-D2A) (1) B2/B66A RRH-BR049 (RFV01U-D1A)
B3	EXISTING	COMMSCOPE	SBNHH-1D65B	128'-0"	160°	0°	1°/2°/4°		
B4	NEW	SAMSUNG	MT6407-77A	128'-0"	160°	0°	6°	-	-
B5	EXISTING	ANTEL	LPA-80080-6CF	128'-0"	160°	4°	0°	-	-
C1	EXISTING	ANTEL	LPA-80080-6CF-EDIN-6	128'-0"	270°	4°	6°	-	-
C2	EXISTING	COMMSCOPE	SBNHH-1D65B	128'-0"	270°	0°/2°	5°/2°/2°	SAMSUNG SAMSUNG	(1) B5/B13 RRH-BR04C (RFV01U-D2A) (1) B2/B66A RRH-BR049 (RFV01U-D1A)
C3	EXISTING	COMMSCOPE	SBNHH-1D65B	128'-0"	270°	0°/2°	5°/2°/2°		
C4	NEW	SAMSUNG	MT6407-77A	128'-0"	270°	0°	6°	-	-
C5	EXISTING	ANTEL	LPA-80080-6CF-EDIN-6	128'-0"	270°	4°	6°	-	-

1 VERIZON TOWER EQUIPMENT SCHEDULE
SCALE: NOT TO SCALE

CABLE SCHEDULE

STATUS	CABLE TYPE	SIZE	LENGTH	QTY
EXISTING	COAX	1-5/8"	199'-0"±	6
NEW	HYBRID	1-5/8"	199'-0"±	1
TOTAL CABLE QTY:				7

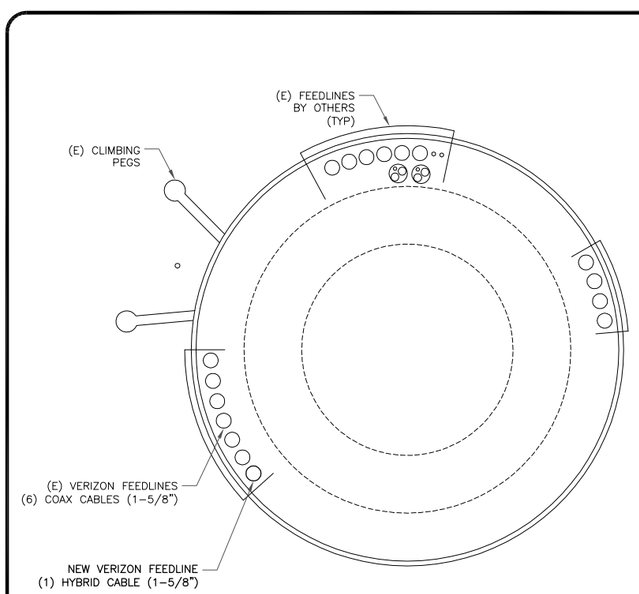

2 BASE LEVEL DETAIL
SCALE: NOT TO SCALE

N

verizon
180 WASHINGTON VALLEY ROAD
BEDMINSTER, NJ 07921

CROWN CASTLE
1200 MACARTHUR BLVD, SUITE 200
MAHWAH, NJ 07430

Tectonic
PRACTICAL SOLUTIONS. EXCEPTIONAL SERVICE.
Tectonic Engineering & Surveying Consultants P.C.
70 Pleasant Hill Road
P.O. Box 37
Mountainville, NY 10953
Phone: (845) 534-5959
(800) 829-6531
www.tectonicengineering.com
Project Contact Info
1279 Route 300
Newburgh, NY 12550
Phone: (845) 567-6656

TECTONIC WO: 10545.COLEBROOKWCT

VERIZON SITE NUMBER:
323614

BU #: **876377**
HORTON 2 / FREDSALL PROPERTY

161 PINNEY STREET
COLEBROOK, CT 06021

EXISTING 148'-0" MONOPOLE

ISSUED FOR:

REV	DATE	DRWN	DESCRIPTION	DES./QA
A	05/06/2021	DJ	PRELIMINARY	----
0	05/21/2021	JT	FOR CONSTRUCTION	----
1	06/14/2021	JT	PER COMMENTS	----
2	08/9/2021	BW	PER COMMENTS	----

STATE OF CONNECTICUT
ANTONIO A. GUALTIERI
PEN.0025406
LICENSED
PROFESSIONAL ENGINEER
08/09/2021

IT IS A VIOLATION OF LAW FOR ANY PERSON, UNLESS THEY ARE ACTING UNDER THE DIRECTION OF A LICENSED PROFESSIONAL ENGINEER, TO ALTER THIS DOCUMENT.

SHEET NUMBER: C-3
REVISION: 0

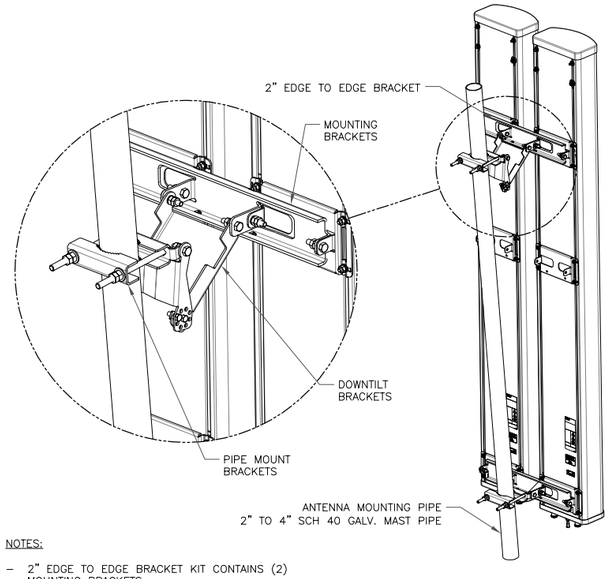

NOTES:

- 2" EDGE TO EDGE BRACKET KIT CONTAINS (2) MOUNTING BRACKETS.
- TORQUE THE M10 BOLT ASSEMBLY TO 37 N.m. PER MANUFACTURE'S RECOMMENDATIONS.

1 2" EDGE TO EDGE MOUNTING BRACKET
SCALE: NOT TO SCALE

2 NOT USED
SCALE: NOT TO SCALE

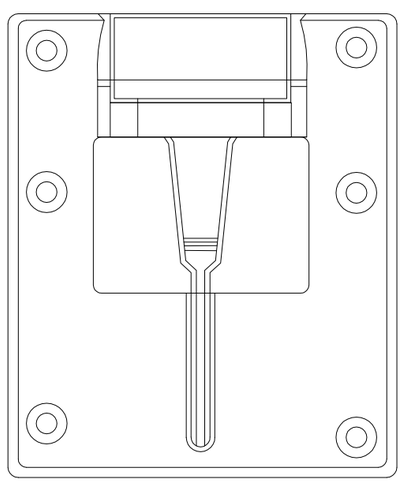

3 SAMSUNG – EP97-01585A BRACKET DETAIL
SCALE: NOT TO SCALE

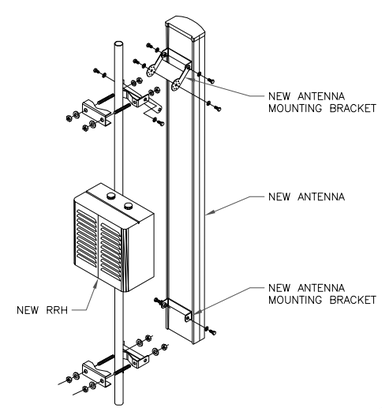

INSTALLER NOTES:

ALL PIPES BRACKETS AND MISCELLANEOUS HARDWARE TO BE GALVANIZED UNLESS NOTED OTHERWISE.

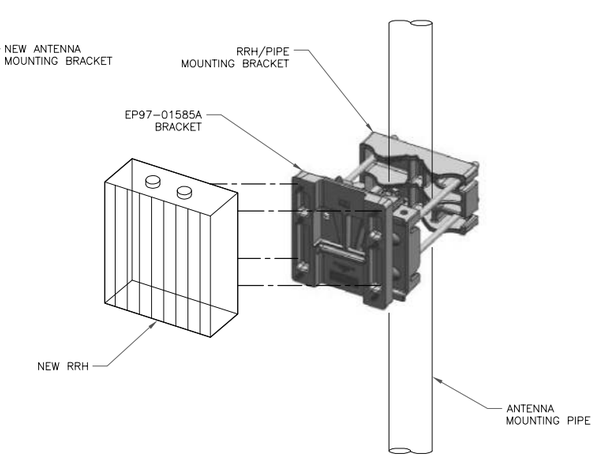

4 ANTENNA & RRH MOUNTING DETAIL
SCALE: NOT TO SCALE

verizon
180 WASHINGTON VALLEY ROAD
BEDMINSTER, NJ 07921

CROWN CASTLE
1200 MACARTHUR BLVD, SUITE 200
MAHWAH, NJ 07430

Tectonic
PRACTICAL SOLUTIONS. EXCEPTIONAL SERVICE.
Tectonic Engineering & Surveying Consultants P.C.
70 Pleasant Hill Road
P.O. Box 37
Mountainville, NY 10953
Phone: (845) 534-5959
(800) 829-6531
www.tectonicengineering.com
Project Contact Info
1279 Route 300
Newburgh, NY 12550
Phone: (845) 567-6656

TECTONIC WO: 10545.COLEBROOKWCT

VERIZON SITE NUMBER:
323614

BU #: **876377**
HORTON 2 / FREDSALL PROPERTY

161 PINNEY STREET
COLEBROOK, CT 06021

EXISTING 148'-0" MONOPOLE

ISSUED FOR:

REV	DATE	DRWN	DESCRIPTION	DES./QA
A	05/06/2021	DJ	PRELIMINARY	----
0	05/21/2021	JT	FOR CONSTRUCTION	----
1	06/14/2021	JT	PER COMMENTS	----
2	08/9/2021	BW	PER COMMENTS	----

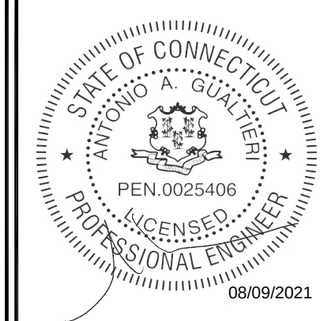

08/09/2021

IT IS A VIOLATION OF LAW FOR ANY PERSON, UNLESS THEY ARE ACTING UNDER THE DIRECTION OF A LICENSED PROFESSIONAL ENGINEER, TO ALTER THIS DOCUMENT.

SHEET NUMBER: C-4

REVISION: 0

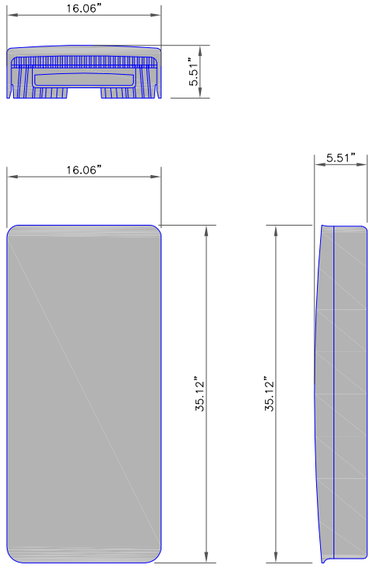

SAMSUNG – MT6407-77A ANTENNA
WEIGHT(W/O EQUIPMENT): 87.1 LBS
SIZE (HXWXD): 35.12 X 16.06 X 5.51 IN.

1 SAMSUNG – VZS01 ANTENNA
SCALE: NOT TO SCALE

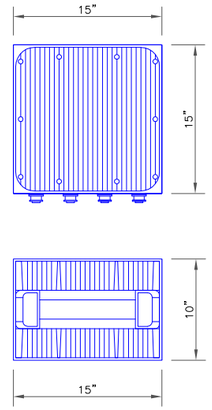

SAMSUNG – B2/B66A RRH-BR049 (RFV01U-D1A)
WEIGHT(W/O EQUIPMENT): 84.4 LBS
SIZE (HxWxD): 15x15x10 IN.

2 SAMSUNG – B2/B66A RRH-BR049 (RFV01U-D1A)
SCALE: NOT TO SCALE

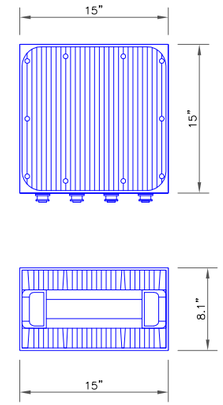

SAMSUNG – B5/B13 RRH-BR04C (RFV01U-D2A)
WEIGHT (W/O EQUIPMENT): 31.9 LBS
SIZE (HxWxD): 15x15x8.1 IN.

3 SAMSUNG – B5/B13 RRH-BR04C (RFV01U-D2A)
SCALE: NOT TO SCALE

4 NOT USED
SCALE: NOT TO SCALE

5 NOT USED
SCALE: NOT TO SCALE

6 NOT USED
SCALE: NOT TO SCALE

verizon
180 WASHINGTON VALLEY ROAD
BEDMINSTER, NJ 07921

CROWN CASTLE
1200 MACARTHUR BLVD, SUITE 200
MAHWAH, NJ 07430

Tectonic
PRACTICAL SOLUTIONS. EXCEPTIONAL SERVICE.
Tectonic Engineering & Surveying Consultants P.C.
70 Pleasant Hill Road
P.O. Box 37
Mountainville, NY 10953
Phone: (845) 534-5959
(800) 829-6531
www.tectonicengineering.com
Project Contact Info
1279 Route 300
Newburgh, NY 12550
Phone: (845) 567-6656
TECTONIC WO: 10545.COLEBROOKWCT

VERIZON SITE NUMBER:
323614

BU #: **876377**
HORTON 2 / FREDSALL PROPERTY

161 PINNEY STREET
COLEBROOK, CT 06021

EXISTING 148'-0" MONOPOLE

ISSUED FOR:

REV	DATE	DRWN	DESCRIPTION	DES./QA
A	05/06/2021	DJ	PRELIMINARY	----
0	05/21/2021	JT	FOR CONSTRUCTION	----
1	06/14/2021	JT	PER COMMENTS	----
2	08/9/2021	BW	PER COMMENTS	----

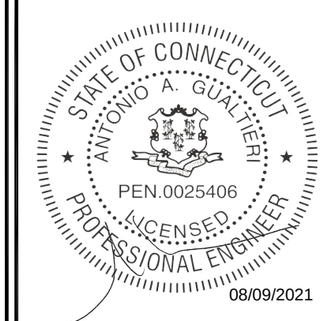

IT IS A VIOLATION OF LAW FOR ANY PERSON, UNLESS THEY ARE ACTING UNDER THE DIRECTION OF A LICENSED PROFESSIONAL ENGINEER, TO ALTER THIS DOCUMENT.

SHEET NUMBER: C-5
REVISION: 0

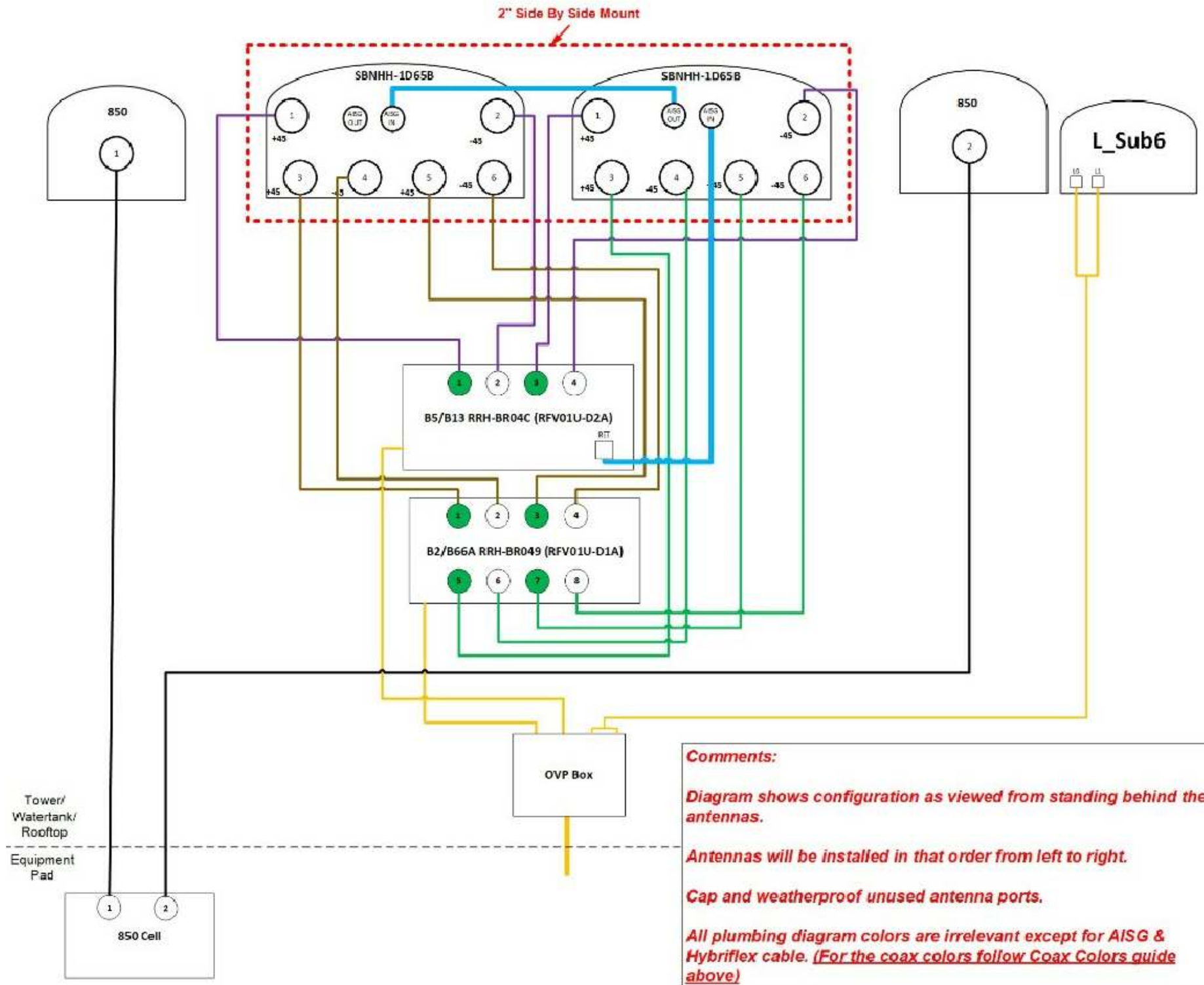

Comments:

Diagram shows configuration as viewed from standing behind the antennas.

Antennas will be installed in that order from left to right.

Cap and weatherproof unused antenna ports.

All plumbing diagram colors are irrelevant except for AISG & Hybriflex cable. (For the coax colors follow Coax Colors guide above)

1 PLUMBING DIAGRAM
SCALE: NOT TO SCALE

verizon
180 WASHINGTON VALLEY ROAD
BEDMINSTER, NJ 07921

CROWN CASTLE
1200 MACARTHUR BLVD, SUITE 200
MAHWAH, NJ 07430

Tectonic
PRACTICAL SOLUTIONS. EXCEPTIONAL SERVICE.
Tectonic Engineering & Surveying Consultants P.C.
70 Pleasant Hill Road
P.O. Box 37
Mountainville, NY 10953
Phone: (845) 534-5959
(800) 829-6531
www.tectonicengineering.com
Project Contact Info
1279 Route 300
Newburgh, NY 12550
Phone: (845) 567-6656
TECTONIC WO: 10545.COLEBROOKWCT

VERIZON SITE NUMBER:
323614

BU #: **876377**
HORTON 2 / FREDSALL PROPERTY

161 PINNEY STREET
COLEBROOK, CT 06021

EXISTING 148'-0" MONOPOLE

ISSUED FOR:

REV	DATE	DRWN	DESCRIPTION	DES./QA
A	05/06/2021	DJ	PRELIMINARY	----
0	05/21/2021	JT	FOR CONSTRUCTION	----
1	06/14/2021	JT	PER COMMENTS	----
2	08/9/2021	BW	PER COMMENTS	----

STATE OF CONNECTICUT
ANTONIO A. GUALTIERI
PEN.0025406
LICENSED
PROFESSIONAL ENGINEER
08/09/2021

IT IS A VIOLATION OF LAW FOR ANY PERSON, UNLESS THEY ARE ACTING UNDER THE DIRECTION OF A LICENSED PROFESSIONAL ENGINEER, TO ALTER THIS DOCUMENT.

SHEET NUMBER: C-6
REVISION: 0

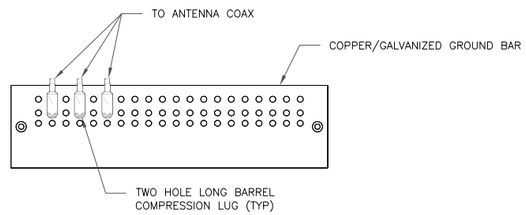

NOTES:

1. DOUBLING UP "OR STACKING" OF CONNECTIONS IS NOT PERMITTED.
2. EXTERIOR ANTIOXIDANT JOINT COMPOUND TO BE USED ON ALL EXTERIOR CONNECTIONS.
3. GROUND BAR SHALL NOT BE ISOLATED FROM TOWER. MOUNT DIRECTLY TO ANTENNA MOUNT STEEL.

1 ANTENNA SECTOR GROUND BAR DETAIL
SCALE: NOT TO SCALE

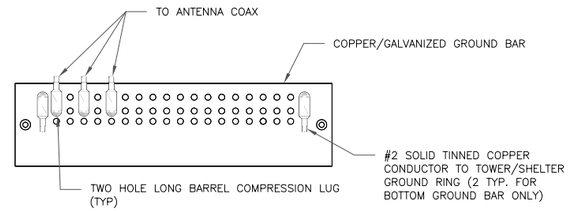

NOTES:

1. EXTERIOR ANTIOXIDANT JOINT COMPOUND TO BE USED ON ALL EXTERIOR CONNECTIONS.
2. GROUND BAR SHALL NOT BE ISOLATED FROM TOWER. MOUNT DIRECTLY TO TOWER STEEL (TOWER ONLY).
3. GROUND BAR SHALL BE ISOLATED FROM BUILDING OR SHELTER.

2 TOWER/SHELTER GROUND BAR DETAIL
SCALE: NOT TO SCALE

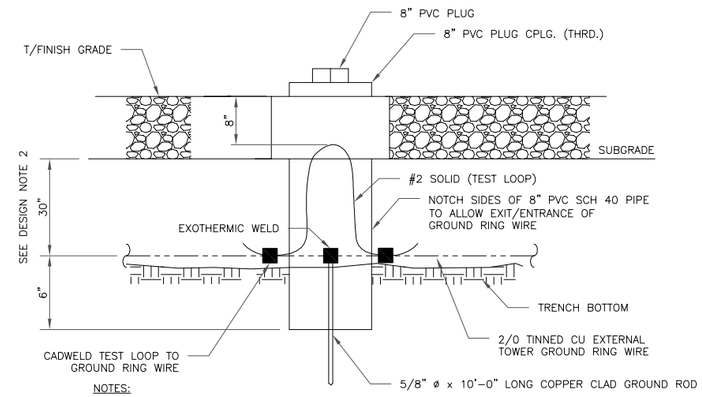

NOTES:

1. GROUND ROD SHALL BE DRIVEN VERTICALLY, NOT TO EXCEED 45 DEGREES FROM THE VERTICAL
2. GROUND WIRE SHALL BE MIN. 30" BELOW GRADE OR 6" BELOW FROST LINE. (WHICH EVER IS GREATER) AS PER N.E.C. ARTICLE 250-50(D)

3 INSPECTION WELL DETAIL
SCALE: NOT TO SCALE

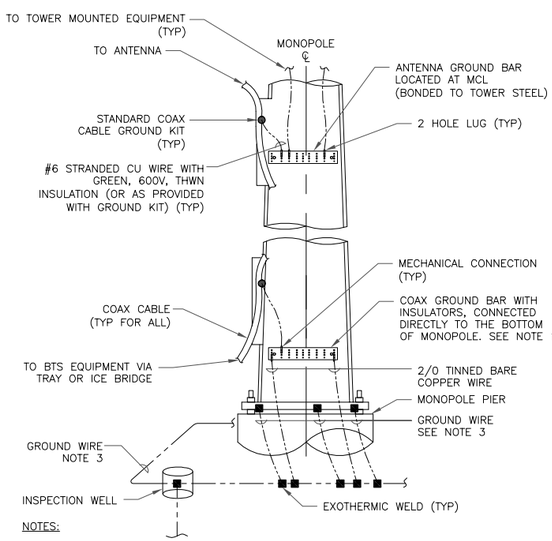

NOTES:

1. NUMBER OF GROUNDING BARS MAY VARY DEPENDING ON THE TYPE OF TOWER, ANTENNA LOCATIONS AND CONNECTION ORIENTATION. COAXIAL CABLES EXCEEDING 200 FEET ON THE TOWER SHALL HAVE GROUND KITS AT THE MIDPOINT. PROVIDE AS REQUIRED.
2. ONLY MECHANICAL CONNECTIONS ARE ALLOWED TO BE MADE TO CROWN CASTLE USA INC. TOWERS. ALL MECHANICAL CONNECTIONS SHALL BE TREATED WITH AN ANTI-OXIDANT COATING.
3. ALL TOWER GROUNDING SYSTEMS SHALL COMPLY WITH THE REQUIREMENTS OF THE RECOGNIZED EDITION OF ANSI/TIA 222 AND NFPA 780.

4 TYPICAL ANTENNA CABLE GROUNDING
SCALE: NOT TO SCALE

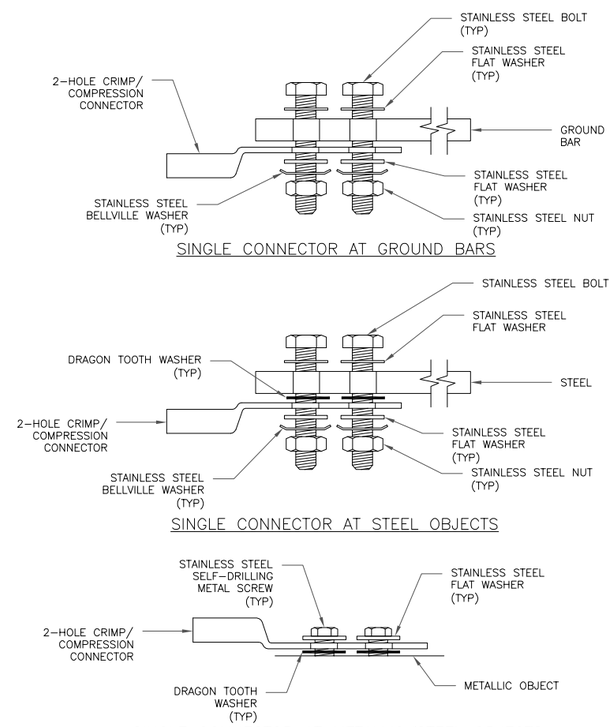

5 HARDWARE DETAIL FOR EXTERIOR CONNECTIONS
SCALE: NOT TO SCALE

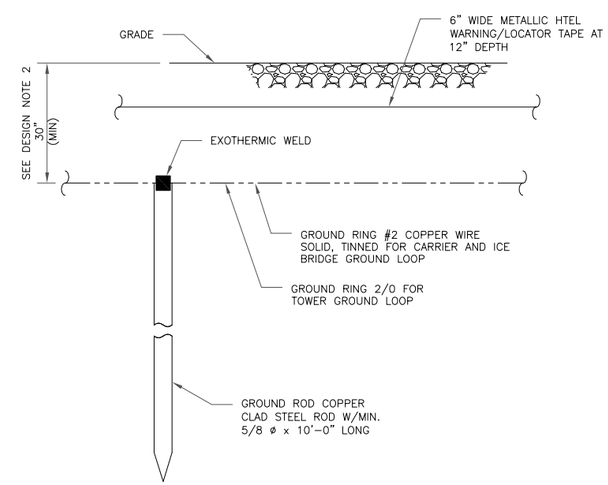

NOTES:

1. GROUND ROD SHALL BE DRIVEN VERTICALLY, NOT TO EXCEED 45 DEGREES FROM THE VERTICAL
2. GROUND WIRE SHALL BE MIN. 30" BELOW GRADE OR 6" BELOW FROST LINE. (WHICH EVER IS GREATER) AS PER N.E.C. ARTICLE 250-50(D)

6 GROUND ROD DETAIL
SCALE: NOT TO SCALE

verizon
180 WASHINGTON VALLEY ROAD
BEDMINSTER, NJ 07921

CROWN CASTLE
1200 MACARTHUR BLVD, SUITE 200
MAHWAH, NJ 07430

Tectonic
PRACTICAL SOLUTIONS. EXCEPTIONAL SERVICE.
Tectonic Engineering & Surveying Consultants P.C.
70 Pleasant Hill Road
P.O. Box 37
Mountainville, NY 10953
Phone: (845) 534-5959
(800) 829-6531
www.tectonicengineering.com
Project Contact Info
1279 Route 300
Newburgh, NY 12550
Phone: (845) 567-6656

TECTONIC WO: 10545.COLEBROOKWCT

VERIZON SITE NUMBER:
323614

BU #: **876377**
HORTON 2 / FREDSALL PROPERTY

161 PINNEY STREET
COLEBROOK, CT 06021

EXISTING 148'-0" MONOPOLE

ISSUED FOR:

REV	DATE	DRWN	DESCRIPTION	DES./QA
A	05/06/2021	JJ	PRELIMINARY	----
0	05/21/2021	JT	FOR CONSTRUCTION	----
1	06/14/2021	JT	PER COMMENTS	----
2	08/9/2021	BW	PER COMMENTS	----

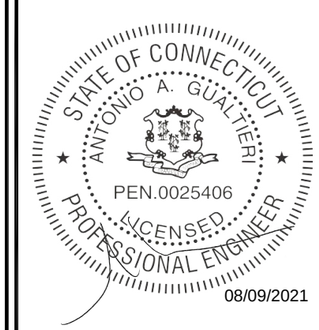

08/09/2021

IT IS A VIOLATION OF LAW FOR ANY PERSON, UNLESS THEY ARE ACTING UNDER THE DIRECTION OF A LICENSED PROFESSIONAL ENGINEER, TO ALTER THIS DOCUMENT.

SHEET NUMBER: G-1
REVISION: 0

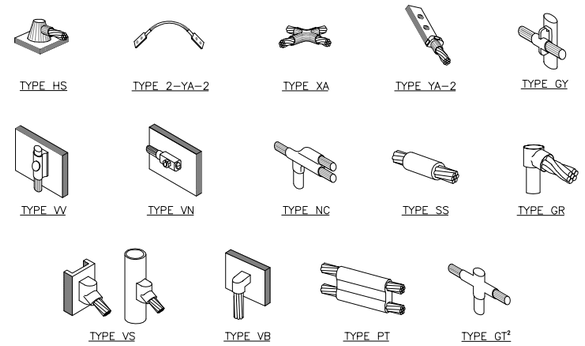

NOTE:

1. ERICO EXOTHERMIC "MOLD TYPES" SHOWN HERE ARE EXAMPLES. CONSULT WITH CONSTRUCTION MANAGER FOR SPECIFIC MOLDS TO BE USED FOR THIS PROJECT.
2. MOLD TYPE ONLY TO BE USED BELOW GRADE WHEN CONNECTING GROUND RING TO GROUND ROD.

1 CADWELD GROUNDING CONNECTIONS
SCALE: NOT TO SCALE

WIRE SIZE	BURNDY LUG	BOLT SIZE
#6 AWG GREEN INSULATED	YA6C-2TC38	3/8" - 16 NC S 2 BOLT
#2 AWG SOLID TINNED	YA3C-2TC38	3/8" - 16 NC S 2 BOLT
#2 AWG STRANDED	YA2C-2TC38	3/8" - 16 NC S 2 BOLT
#2/0 AWG STRANDED	YA26-2TC38	3/8" - 16 NC S 2 BOLT
#4/0 AWG STRANDED	YA28-2N	1/2" - 16 NC S 2 BOLT

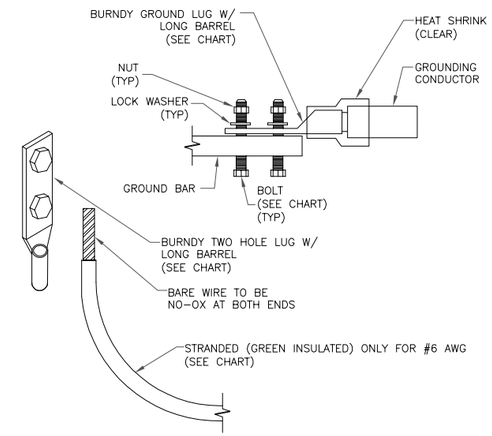

NOTES:

1. ALL GROUNDING LUGS ARE TO BE INSTALLED PER MANUFACTURER'S SPECIFICATIONS. ALL HARDWARE BOLTS, NUTS, LOCK WASHERS SHALL BE STAINLESS STEEL. ALL HARDWARE ARE TO BE AS FOLLOWS: BOLT, FLAT WASHER,GROUND BAR, GROUND LUG, FLAT WASHER AND NUT.

2 MECHANICAL LUG CONNECTION
SCALE: NOT TO SCALE

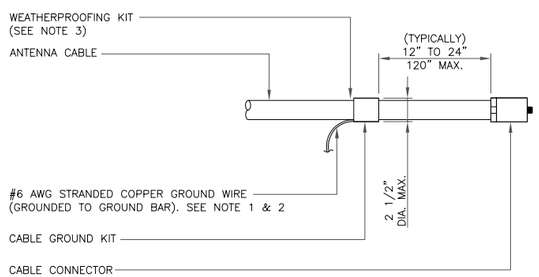

NOTES:

1. DO NOT INSTALL CABLE GROUND KIT AT A BEND AND ALWAYS DIRECT GROUND WIRE DOWN TO GROUND BAR.
2. GROUNDING KIT SHALL BE TYPE AND PART NUMBER AS SUPPLIED OR RECOMMENDED BY CABLE MANUFACTURER.
3. WEATHER PROOFING SHALL BE TWO-PART TAPE KIT, COLD SHRINK SHALL NOT BE USED.

3 CABLE GROUND KIT CONNECTION
SCALE: NOT TO SCALE

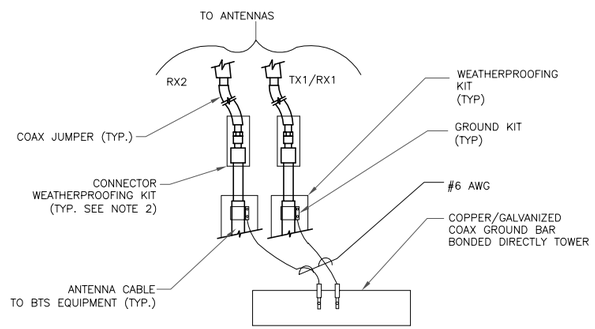

NOTES:

1. DO NOT INSTALL CABLE GROUND KIT AT A BEND AND ALWAYS DIRECT GROUND WIRE DOWN TO ANTENNA GROUND BAR.
2. WEATHER PROOFING SHALL BE TWO-PART TAPE KIT. COLD SHRINK SHALL NOT BE USED.

4 GROUND CABLE CONNECTION
SCALE: NOT TO SCALE

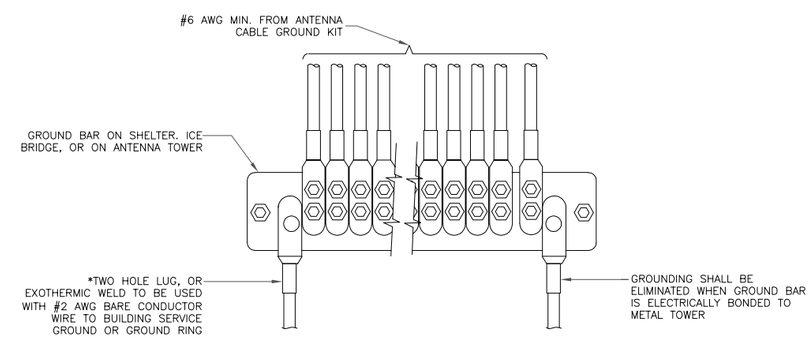

5 GROUNDWIRE INSTALLATION
SCALE: NOT TO SCALE

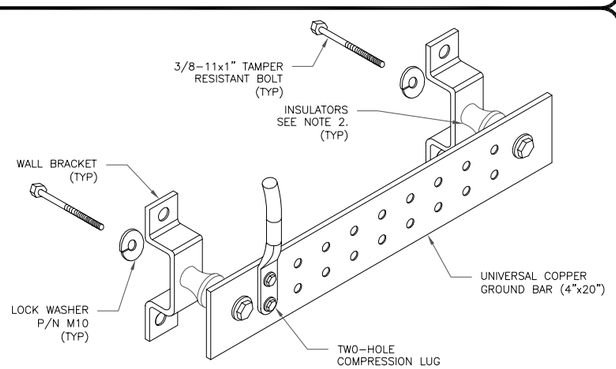

NOTES:

1. DOWN LEAD (HOME RUN) CONDUCTORS ARE NOT TO BE INSTALLED ON CROWN CASTLE USA INC. TOWER, PER THE GROUNDING DOWN CONDUCTOR POLICY QAS-STD-10091. NO MODIFICATION OR DRILLING TO TOWER STEEL IS ALLOWED IN ANY FORM OR FASHION, CAD-WELDING ON THE TOWER AND/OR IN THE AIR ARE NOT PERMITTED.
2. OMIT INSULATOR WHEN MOUNTING TO TOWER STEEL OR PLATFORM STEEL USE INSULATORS WHEN ATTACHING TO BUILDING OR SHELTERS.

6 GROUND BAR DETAIL
SCALE: NOT TO SCALE

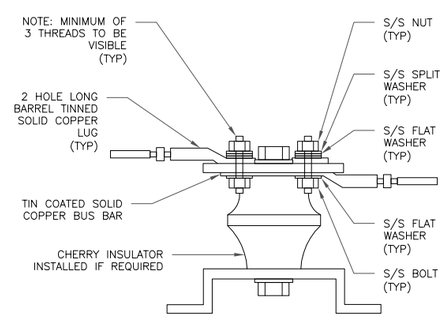

7 LUG DETAIL
SCALE: NOT TO SCALE

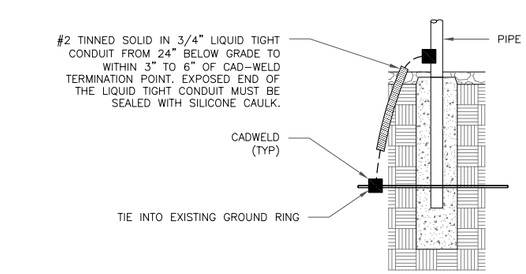

8 TRANSITIONING GROUND DETAIL
SCALE: NOT TO SCALE

verizon
180 WASHINGTON VALLEY ROAD
BEDMINSTER, NJ 07921

CROWN CASTLE
1200 MACARTHUR BLVD, SUITE 200
MAHWAH, NJ 07430

Tectonic
PRACTICAL SOLUTIONS. EXCEPTIONAL SERVICE.
Tectonic Engineering & Surveying Consultants P.C.
70 Pleasant Hill Road
P.O. Box 37
Mountainville, NY 10953
Phone: (845) 534-5959
(800) 829-6531
www.tectonicengineering.com
Project Contact Info
1279 Route 300
Newburgh, NY 12550
Phone: (845) 567-6656
TECTONIC WO: 10545.COLEBROOKWCT

VERIZON SITE NUMBER:
323614

BU #: **876377**
HORTON 2 / FREDSALL PROPERTY

161 PINNEY STREET
COLEBROOK, CT 06021

EXISTING 148'-0" MONOPOLE

ISSUED FOR:

REV	DATE	DRWN	DESCRIPTION	DES./QA
A	05/06/2021	TJ	PRELIMINARY	----
0	05/21/2021	JT	FOR CONSTRUCTION	----
1	06/14/2021	JT	PER COMMENTS	----
2	08/9/2021	BW	PER COMMENTS	----

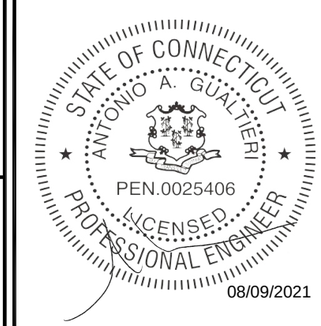

IT IS A VIOLATION OF LAW FOR ANY PERSON, UNLESS THEY ARE ACTING UNDER THE DIRECTION OF A LICENSED PROFESSIONAL ENGINEER, TO ALTER THIS DOCUMENT.

SHEET NUMBER: G-2
REVISION: 0

Exhibit D

Structural Analysis Report

Date: **May 07, 2021**

Black & Veatch Corp.
6800 W. 115th St., Suite 2292
Overland Park, KS 66211
(913) 458-6909

Subject:	**Structural Analysis Report**	
Carrier Designation:	***Verizon Wireless* Co-Locate**	
	Site Number:	467927
	Site Name:	Colebrook SW CT
Crown Castle Designation:	**BU Number:**	876377
	Site Name:	HORTON 2 / FREDSALL PROPERTY
	JDE Job Number:	644657
	Work Order Number:	1953629
	Order Number:	552632 Rev. 0
Engineering Firm Designation:	**Black & Veatch Corp. Project Number:**	406642
Site Data:	**161 Pinney Street, Colebrook, Litchfield County, CT**	
	Latitude *41° 57' 58.9"*, Longitude *-73° 7' 18.1"*	
	148 Foot - Monopole Tower	

Black & Veatch Corp. is pleased to submit this **"Structural Analysis Report"** to determine the structural integrity of the above-mentioned tower.

The purpose of the analysis is to determine acceptability of the tower stress level. Based on our analysis we have determined the tower stress level for the structure and foundation, under the following load case, to be:

LC7: Proposed Equipment Configuration **Sufficient Capacity - 71.6%**

This analysis utilizes an ultimate 3-second gust wind speed of 115 mph as required the 2018 Connecticut State Building Code. Applicable Standard references and design criteria are listed in Section 2 - Analysis Criteria.

Structural analysis prepared by: Purich Sangpairoj

Respectfully submitted by:

Ping Jiang, P.E.
Professional Engineer

STATE OF CONNECTICUT
PING JIANG
30767
LICENSED
PROFESSIONAL ENGINEER

May 10, 2021

TABLE OF CONTENTS

1) INTRODUCTION

2) ANALYSIS CRITERIA
- Table 1 - Proposed Equipment Configuration
- Table 2 - Other Considered Equipment

3) ANALYSIS PROCEDURE
- Table 3 - Documents Provided
- 3.1) Analysis Method
- 3.2) Assumptions

4) ANALYSIS RESULTS
- Table 4 - Section Capacity (Summary)
- Table 5 - Tower Component Stresses vs. Capacity
- 4.1) Recommendations

5) APPENDIX A
- tnxTower Output

6) APPENDIX B
- Base Level Drawing

7) APPENDIX C
- Additional Calculations

1) INTRODUCTION

This tower is a 148 ft Monopole tower manufactured by Summit Manufacturing, LLC.

The tower has been modified per reinforcement drawings prepared by Paul J. Ford and Company in February of 2009. Reinforcement consists of addition of channel reinforcement from 0' to 99.417', transition stiffeners and foundation modification. Refer to Post-Construction Observation Report by Paul J. Ford and Company in February of 2009. This modification has been considered effective in this analysis.

2) ANALYSIS CRITERIA

TIA-222 Revision:	TIA-222-H
Risk Category:	II
Wind Speed:	115 mph
Exposure Category:	B
Topographic Factor:	1
Ice Thickness:	1.500 in
Wind Speed with Ice:	40 mph
Service Wind Speed:	60 mph

Table 1 - Proposed Equipment Configuration

Mounting Level (ft)	Center Line Elevation (ft)	Number of Antennas	Antenna Manufacturer	Antenna Model	Number of Feed Lines	Feed Line Size (in)
130.0	130.0	1	cci tower mounts (v2.1)	Platform Mount [LP 303-1]	7	1-5/8
	128.0	2	antel	LPA-80080-6CF-EDIN-6 w/ Mount Pipe		
		4	antel	LPA-80080/6CF w/ Mount Pipe		
		6	commscope	SBNHH-1D65B w/ Mount Pipe		
		1	rfs celwave	DB-C1-12C-24AB-0Z		
		3	samsung telecommunications	RFV01U-D1A		
		3	samsung telecommunications	RFV01U-D2A		
		3	vzw	Sub6 Antenna - VZS01 w/ Mount Pipe		

Table 2 - Other Considered Equipment

Mounting Level (ft)	Center Line Elevation (ft)	Number of Antennas	Antenna Manufacturer	Antenna Model	Number of Feed Lines	Feed Line Size (in)
150.0	150.0	1	cci tower mounts (v2.1)	Platform Mount [LP 1201-1_KCKR-HR-1]	4	1-5/8
	148.0	3	ericsson	AIR6449 B41_T-MOBILE w/ Mount Pipe		
		3	ericsson	RADIO 4415 B66A		
		3	ericsson	RADIO 4424 B25_TMO		
		3	ericsson	RADIO 4449 B71 B85A_T-MOBILE		
		3	rfs celwave	APX16DWV-16DWV-S-E-A20		

Mounting Level (ft)	Center Line Elevation (ft)	Number of Antennas	Antenna Manufacturer	Antenna Model	Number of Feed Lines	Feed Line Size (in)
				w/ Mount Pipe		
		3	rfs celwave	APXVAALL24_43-U-NA20_TMO w/ Mount Pipe		
141.0	143.0	3	ericsson	RRUS 11 B12	-	-
140.0	142.0	3	ericsson	RRUS 4449 B5/B12	2 2 4 6 2	3/8 7/16 7/8 1-5/8 Conduit
		3	ericsson	RRUS 4478 B14		
		3	ericsson	RRUS 8843 B2/B66A		
		3	powerwave technologies	TT08-19DB111-001		
		2	raycap	DC6-48-60-0-8C-EV		
	140.0	2	cci antennas	OPA65R-BU4D w/ Mount Pipe		
		4	cci antennas	TPA65R-BU6D w/ Mount Pipe		
		1	cci tower mounts (v2.1)	T-Arm Mount [TA 602-3]		
		3	powerwave technologies	7770.00 w/ Mount Pipe		
		1	raycap	DC6-48-60-18-8F		

3) ANALYSIS PROCEDURE

Table 3 - Documents Provided

Document	Reference	Source
4-GEOTECHNICAL REPORTS	1532992	CCISITES
4-TOWER FOUNDATION DRAWINGS/DESIGN/SPECS	1629428	CCISITES
4-TOWER MANUFACTURER DRAWINGS	1883532	CCISITES
4-TOWER REINFORCEMENT DESIGN/DRAWINGS/DATA	2293404	CCISITES
4-POST-MODIFICATION INSPECTION	2385953	CCISITES

3.1) Analysis Method

tnxTower (version 8.0.9.0), a commercially available analysis software package, was used to create a three-dimensional model of the tower and calculate member stresses for various loading cases. Selected output from the analysis is included in Appendix A. When applicable, Crown Castle has calculated and provided the effective area for panel antennas using approved methods following the intent of the TIA-222 standard.

tnxTower was used to determine the loads on the modified structure. Additional calculations were performed to determine the stresses in the pole and in the reinforcing elements. These calculations are presented in Appendix C.

3.2) Assumptions

1) Tower and structures were maintained in accordance with the TIA-222 Standard.
2) The configuration of antennas, transmission cables, mounts and other appurtenances are as specified in Tables 1 and 2 and the referenced drawings.

This analysis may be affected if any assumptions are not valid or have been made in error. Black & Veatch Corp. should be notified to determine the effect on the structural integrity of the tower.

4) ANALYSIS RESULTS

Table 4 - Section Capacity (Summary) (Monopole Tower)

Elevation (ft)	Component Type	Size	Critical Element	% Capacity	Pass / Fail
148 - 143	Pole	TP22.85x22x0.1875	Pole	6.6%	Pass
143 - 138	Pole	TP23.7x22.85x0.1875	Pole	14.1%	Pass
138 - 133	Pole	TP24.55x23.7x0.1875	Pole	22.4%	Pass
133 - 128	Pole	TP25.4x24.55x0.1875	Pole	30.8%	Pass
128 - 123	Pole	TP26.25x25.4x0.1875	Pole	41.0%	Pass
123 - 120.75	Pole	TP27.227x26.25x0.1875	Pole	45.3%	Pass
120.75 - 115.75	Pole	TP27.107x26.257x0.25	Pole	38.3%	Pass
115.75 - 110.75	Pole	TP27.957x27.107x0.25	Pole	43.9%	Pass
110.75 - 105.75	Pole	TP28.807x27.957x0.25	Pole	49.2%	Pass
105.75 - 100.75	Pole	TP29.657x28.807x0.25	Pole	54.0%	Pass
100.75 - 97	Pole	TP30.294x29.657x0.25	Pole	57.4%	Pass
97 - 96.75	Pole + Reinf.	TP30.336x30.294x0.4625	Reinf. 1 Tension Rupture	41.5%	Pass
96.75 - 91.75	Pole + Reinf.	TP31.186x30.336x0.45	Reinf. 1 Tension Rupture	44.7%	Pass
91.75 - 86.75	Pole + Reinf.	TP32.036x31.186x0.4438	Reinf. 1 Tension Rupture	47.7%	Pass
86.75 - 85	Pole + Reinf.	TP33.056x32.036x0.4438	Reinf. 1 Tension Rupture	48.7%	Pass
85 - 80	Pole + Reinf.	TP32.684x31.834x0.4688	Reinf. 1 Tension Rupture	49.3%	Pass
80 - 75	Pole + Reinf.	TP33.533x32.684x0.4688	Reinf. 1 Tension Rupture	51.8%	Pass
75 - 70	Pole + Reinf.	TP34.383x33.533x0.4625	Reinf. 1 Tension Rupture	54.1%	Pass
70 - 65	Pole + Reinf.	TP35.233x34.383x0.4563	Reinf. 1 Tension Rupture	56.2%	Pass
65 - 60	Pole + Reinf.	TP36.083x35.233x0.4563	Reinf. 1 Tension Rupture	58.2%	Pass
60 - 55	Pole + Reinf.	TP36.933x36.083x0.4438	Reinf. 1 Tension Rupture	60.1%	Pass
55 - 50	Pole + Reinf.	TP37.783x36.933x0.4438	Reinf. 1 Tension Rupture	61.9%	Pass
50 - 45	Pole + Reinf.	TP39.483x37.783x0.4375	Reinf. 1 Tension Rupture	63.5%	Pass
45 - 39	Pole + Reinf.	TP39.09x38.071x0.4688	Reinf. 1 Tension Rupture	62.6%	Pass
39 - 34	Pole + Reinf.	TP39.94x39.09x0.4625	Reinf. 1 Tension Rupture	63.9%	Pass
34 - 29	Pole + Reinf.	TP40.79x39.94x0.4625	Reinf. 1 Tension Rupture	65.1%	Pass
29 - 24	Pole + Reinf.	TP41.64x40.79x0.4563	Reinf. 1 Tension Rupture	66.3%	Pass
24 - 19	Pole + Reinf.	TP42.49x41.64x0.45	Reinf. 1 Tension Rupture	67.3%	Pass
19 - 14	Pole + Reinf.	TP43.34x42.49x0.45	Reinf. 1 Tension Rupture	68.3%	Pass

Elevation (ft)	Component Type	Size	Critical Element	% Capacity	Pass / Fail
14 - 13.08	Pole + Reinf.	TP43.497x43.34x0.45	Reinf. 1 Tension Rupture	68.5%	Pass
13.08 - 12.83	Pole + Reinf.	TP43.539x43.497x0.45	Reinf. 1 Tension Rupture	68.5%	Pass
12.83 - 12.58	Pole + Reinf.	TP43.582x43.539x0.425	Reinf. 1 Tension Rupture	70.3%	Pass
12.58 - 7.58	Pole + Reinf.	TP44.431x43.582x0.425	Reinf. 1 Tension Rupture	71.2%	Pass
7.58 - 5.17	Pole + Reinf.	TP44.841x44.431x0.425	Reinf. 1 Tension Rupture	71.6%	Pass
5.17 - 4.92	Pole + Reinf.	TP44.884x44.841x0.45	Reinf. 1 Tension Rupture	69.9%	Pass
4.92 - 4.67	Pole + Reinf.	TP44.926x44.884x0.45	Reinf. 1 Tension Rupture	70.0%	Pass
4.67 - 0	Pole + Reinf.	TP45.72x44.926x0.4438	Reinf. 1 Tension Rupture	70.7%	Pass
				Summary	
			Pole	57.7%	Pass
			Reinforcement	71.6%	Pass
			Overall	71.6%	Pass

Table 5 - Tower Component Stresses vs. Capacity (Monopole Tower) - LC7

Notes	Component	Elevation (ft)	% Capacity	Pass / Fail
1	Anchor Rods	0	64.6	Pass
	Base Plate		52.6	Pass
1	Base Foundation (Structure)	0	64.8	Pass
	Base Foundation (Soil Interaction)		57.1	Pass

Structure Rating (max from all components) =	71.6%

Notes:
1) See additional documentation in “Appendix C – Additional Calculations” for calculations supporting the % capacity. Rating per TIA-222-H Section 15.5.

4.1) Recommendations

The tower and its foundation have sufficient capacity to carry the proposed load configuration. No modifications are required at this time.

APPENDIX A

TNXTOWER OUTPUT

Section	Length (ft)	Number of Slides	Thickness (in)	Socket Length (ft)	Top Dia (in)	Bot Dia (in)	Grade	Weight (K)
1	5.00	18	0.1875	3.50	22.0000	22.8499	A607-60	0.2
2	5.00	18	0.1875		22.8499	23.6998		0.2
3	5.00	18	0.1875		23.6998	24.5498		0.2
4	5.00	18	0.1875		24.5498	25.3997		0.3
5	5.00	18	0.1875		25.3997	26.2496		0.3
6	5.00	18	0.1875		26.2496	27.2270		0.3
7	5.00	18	0.2500		27.2270	27.1068		0.4
8	5.00	18	0.2500		27.1068	27.9568		0.4
9	5.00	18	0.2500		27.9568	28.8067		0.4
10	5.00	18	0.2500		28.8067	29.6565		0.4
11	5.00	18	0.2500		29.6565	30.3304		0.3
12	5.25	18	0.2500		30.3304	30.9042		0.0
13	5.000	18	0.4500		30.9042	31.1863		0.7
14	5.00	18	0.4437		31.1863	32.0362		0.7
15	5.00	18	0.4437	4.25	32.0362	32.8861		0.9
16	5.00	18	0.4688		32.8861	33.5335		0.8
17	5.00	18	0.4688		33.5335	34.3834		0.8
18	5.00	18	0.4625		34.3834	35.2333		0.8
19	5.00	18	0.4562		35.2333	36.0833		0.8
20	5.00	18	0.4562		36.0833	36.9332		0.8
21	5.00	18	0.4437		36.9332	37.7831		0.8
22	5.00	18	0.4437		37.7831	39.4830		0.8
23	10.00	18	0.4375	5.00	39.4830	39.9404	A607-65	1.7
24	10.00	18	0.4688		39.9404	39.9404		1.1
25	5.00	18	0.4625		39.9404	40.7904		0.9
26	5.00	18	0.4625		40.7904	41.6403		1.0
27	5.00	18	0.4562		41.6403	42.4902		1.0
28	5.00	18	0.4500		42.4902	43.3402		1.0
29	5.00	18	0.4500		43.3402	44.1901		1.0
30	5.00	18	0.4500		44.1901	44.9401		1.0
31	5.00	18	0.4500		44.9401	45.7900		1.0
32	5.00	18	0.4500		45.7900	46.6399		1.0
33	5.00	18	0.4500		46.6399	47.4899		1.1
34	5.41	18	0.4500		47.4899	48.2398		0.5
35	5.00	18	0.4500		48.2398	49.0897		1.0
36	5.00	18	0.4500		49.0897	49.9397		1.0
37	4.670	18	0.4500		49.9397	50.7896		1.0
					50.7896	51.5396		22.0

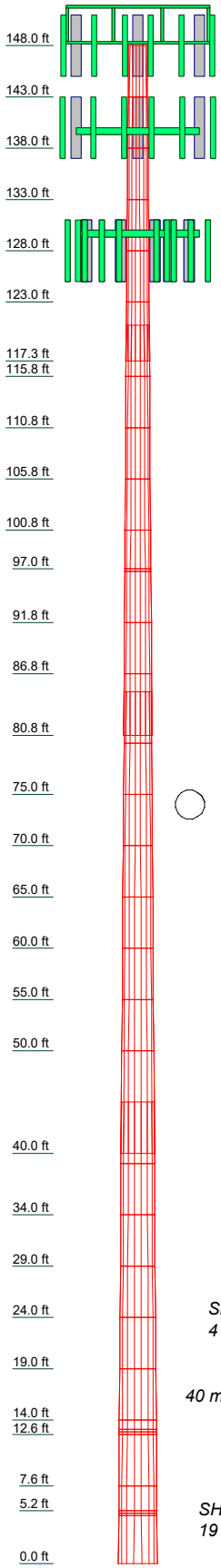

MATERIAL STRENGTH

GRADE	Fy	Fu	GRADE	Fy	Fu
A607-60	60 ksi	75 ksi	A607-65	65 ksi	80 ksi

TOWER DESIGN NOTES

1. Tower is located in Litchfield County, Connecticut.
2. Tower designed for Exposure B to the TIA-222-H Standard.
3. Tower designed for a 115 mph basic wind in accordance with the TIA-222-H Standard.
4. Tower is also designed for a 40 mph basic wind with 1.50 in ice. Ice is considered to increase in thickness with height.
5. Deflections are based upon a 60 mph wind.
6. Tower Risk Category II.
7. Topographic Category 1 with Crest Height of 0.00 ft
8. TOWER RATING: 71.6%

ALL REACTIONS ARE FACTORED

AXIAL 71 K

SHEAR 4 K — *MOMENT 429 kip-ft*

TORQUE 0 kip-ft

40 mph WIND - 1.5000 in ICE

AXIAL 43 K

SHEAR 19 K — *MOMENT 2197 kip-ft*

TORQUE 1 kip-ft

REACTIONS - 115 mph WIND

BLACK & VEATCH
Building a world of difference.

Black & Veatch Corp.
6800 W. 115th St., Suite 2292
Overland Park, KS 66211
Phone: (913) 458-6909
FAX: (913) 458-8136

Job: ***HORTON 2 / FREDSALL PROPERTY (BU# 876377***			
Project: ***406642 (876377.1953629)***			
Client: Crown Castle	Drawn by: Purich Sangpairoj	App'd:	
Code: TIA-222-H	Date: 05/07/21	Scale: NTS	
Path:		Dwg No. E-1	

Tower Input Data

The tower is a monopole.
This tower is designed using the TIA-222-H standard.
The following design criteria apply:

- Tower is located in Litchfield County, Connecticut.
- Tower base elevation above sea level: 1223.00 ft.
- Basic wind speed of 115 mph.
- Risk Category II.
- Exposure Category B.
- Simplified Topographic Factor Procedure for wind speed-up calculations is used.
- Topographic Category: 1.
- Crest Height: 0.00 ft.
- Nominal ice thickness of 1.5000 in.
- Ice thickness is considered to increase with height.
- Ice density of 56 pcf.
- A wind speed of 40 mph is used in combination with ice.
- Temperature drop of 50 °F.
- Deflections calculated using a wind speed of 60 mph.
- TOWER RATING: 71.6%.
- A non-linear (P-delta) analysis was used.
- Pressures are calculated at each section.
- Stress ratio used in pole design is 1.
- Tower analysis based on target reliabilities in accordance with Annex S.
- Load Modification Factors used: $K_{es}(F_w) = 0.95$, $K_{es}(t_i) = 0.85$.
- Maximum demand-capacity ratio is: 1.05.
- Local bending stresses due to climbing loads, feed line supports, and appurtenance mounts are not considered.

Options

Consider Moments - Legs	Distribute Leg Loads As Uniform	Use ASCE 10 X-Brace Ly Rules
Consider Moments - Horizontals	Assume Legs Pinned	Calculate Redundant Bracing Forces
Consider Moments - Diagonals	√ Assume Rigid Index Plate	Ignore Redundant Members in FEA
Use Moment Magnification	√ Use Clear Spans For Wind Area	SR Leg Bolts Resist Compression
√ Use Code Stress Ratios	Use Clear Spans For KL/r	All Leg Panels Have Same Allowable
√ Use Code Safety Factors - Guys	Retension Guys To Initial Tension	Offset Girt At Foundation
Escalate Ice	√ Bypass Mast Stability Checks	√ Consider Feed Line Torque
Always Use Max Kz	√ Use Azimuth Dish Coefficients	Include Angle Block Shear Check
Use Special Wind Profile	√ Project Wind Area of Appurt.	Use TIA-222-H Bracing Resist. Exemption
Include Bolts In Member Capacity	Autocalc Torque Arm Areas	Use TIA-222-H Tension Splice Exemption
Leg Bolts Are At Top Of Section	Add IBC .6D+W Combination	**Poles**
Secondary Horizontal Braces Leg	Sort Capacity Reports By Component	√ Include Shear-Torsion Interaction
Use Diamond Inner Bracing (4 Sided)	Triangulate Diamond Inner Bracing	Always Use Sub-Critical Flow
SR Members Have Cut Ends	Treat Feed Line Bundles As Cylinder	Use Top Mounted Sockets
SR Members Are Concentric	Ignore KL/ry For 60 Deg. Angle Legs	Pole Without Linear Attachments
		Pole With Shroud Or No Appurtenances
		Outside and Inside Corner Radii Are Known

Tapered Pole Section Geometry

Section	Elevation ft	Section Length ft	Splice Length ft	Number of Sides	Top Diameter in	Bottom Diameter in	Wall Thickness in	Bend Radius in	Pole Grade
L1	148.00-143.00	5.00	0.00	18	22.0000	22.8499	0.1875	0.7500	A607-60 (60 ksi)
L2	143.00-138.00	5.00	0.00	18	22.8499	23.6998	0.1875	0.7500	A607-60 (60 ksi)
L3	138.00-133.00	5.00	0.00	18	23.6998	24.5498	0.1875	0.7500	A607-60 (60 ksi)
L4	133.00-128.00	5.00	0.00	18	24.5498	25.3997	0.1875	0.7500	A607-60 (60 ksi)
L5	128.00-123.00	5.00	0.00	18	25.3997	26.2496	0.1875	0.7500	A607-60 (60 ksi)
L6	123.00-117.25	5.75	3.50	18	26.2496	27.2270	0.1875	0.7500	A607-60 (60 ksi)
L7	117.25-115.75	5.00	0.00	18	26.2571	27.1069	0.2500	1.0000	A607-60 (60 ksi)
L8	115.75-110.75	5.00	0.00	18	27.1069	27.9568	0.2500	1.0000	A607-60 (60 ksi)
L9	110.75-105.75	5.00	0.00	18	27.9568	28.8067	0.2500	1.0000	A607-60 (60 ksi)
L10	105.75-100.75	5.00	0.00	18	28.8067	29.6565	0.2500	1.0000	A607-60 (60 ksi)
L11	100.75-97.00	3.75	0.00	18	29.6565	30.2939	0.2500	1.0000	A607-60 (60 ksi)
L12	97.00-96.75	0.25	0.00	18	30.2939	30.3364	0.4625	1.8500	A607-60 (60 ksi)
L13	96.75-91.75	5.00	0.00	18	30.3364	31.1863	0.4500	1.8000	A607-60 (60 ksi)
L14	91.75-86.75	5.00	0.00	18	31.1863	32.0362	0.4437	1.7750	A607-60 (60 ksi)
L15	86.75-80.75	6.00	4.25	18	32.0362	33.0560	0.4437	1.7750	A607-60 (60 ksi)
L16	80.75-80.00	5.00	0.00	18	31.8336	32.6835	0.4688	1.8750	A607-65 (65 ksi)
L17	80.00-75.00	5.00	0.00	18	32.6835	33.5335	0.4688	1.8750	A607-65 (65 ksi)
L18	75.00-70.00	5.00	0.00	18	33.5335	34.3834	0.4625	1.8500	A607-65 (65 ksi)
L19	70.00-65.00	5.00	0.00	18	34.3834	35.2333	0.4562	1.8250	A607-65 (65 ksi)
L20	65.00-60.00	5.00	0.00	18	35.2333	36.0833	0.4562	1.8250	A607-65 (65 ksi)
L21	60.00-55.00	5.00	0.00	18	36.0833	36.9332	0.4437	1.7750	A607-65 (65 ksi)
L22	55.00-50.00	5.00	0.00	18	36.9332	37.7831	0.4437	1.7750	A607-65 (65 ksi)
L23	50.00-40.00	10.00	5.00	18	37.7831	39.4830	0.4375	1.7500	A607-65 (65 ksi)
L24	40.00-39.00	6.00	0.00	18	38.0706	39.0905	0.4688	1.8750	A607-65 (65 ksi)
L25	39.00-34.00	5.00	0.00	18	39.0905	39.9404	0.4625	1.8500	A607-65 (65 ksi)
L26	34.00-29.00	5.00	0.00	18	39.9404	40.7904	0.4625	1.8500	A607-65 (65 ksi)
L27	29.00-24.00	5.00	0.00	18	40.7904	41.6403	0.4562	1.8250	A607-65 (65 ksi)
L28	24.00-19.00	5.00	0.00	18	41.6403	42.4902	0.4500	1.8000	A607-65 (65 ksi)
L29	19.00-14.00	5.00	0.00	18	42.4902	43.3402	0.4500	1.8000	A607-65 (65 ksi)
L30	14.00-13.08	0.92	0.00	18	43.3402	43.4966	0.4500	1.8000	A607-65 (65 ksi)
L31	13.08-12.83	0.25	0.00	18	43.4966	43.5391	0.4500	1.8000	A607-65 (65 ksi)
L32	12.83-12.58	0.25	0.00	18	43.5391	43.5816	0.4250	1.7000	A607-65 (65 ksi)
L33	12.58-7.58	5.00	0.00	18	43.5816	44.4315	0.4250	1.7000	A607-65 (65 ksi)

Section	Elevation ft	Section Length ft	Splice Length ft	Number of Sides	Top Diameter in	Bottom Diameter in	Wall Thickness in	Bend Radius in	Pole Grade
L34	7.58-5.17	2.41	0.00	18	44.4315	44.8412	0.4250	1.7000	A607-65 (65 ksi)
L35	5.17-4.92	0.25	0.00	18	44.8412	44.8837	0.4500	1.8000	A607-65 (65 ksi)
L36	4.92-4.67	0.25	0.00	18	44.8837	44.9262	0.4500	1.8000	A607-65 (65 ksi)
L37	4.67-0.00	4.67		18	44.9262	45.7200	0.4437	1.7750	A607-65 (65 ksi)

Tapered Pole Properties

Section	Tip Dia. in	Area in^2	I in^4	r in	C in	I/C in^3	J in^4	It/Q in^2	w in	w/t
L1	22.3105	12.9812	780.3007	7.7434	11.1760	69.8193	1561.6281	6.4918	3.5420	18.891
	23.1735	13.4870	875.1136	8.0452	11.6078	75.3904	1751.3787	6.7448	3.6916	19.688
L2	23.1735	13.4870	875.1136	8.0452	11.6078	75.3904	1751.3787	6.7448	3.6916	19.688
	24.0365	13.9928	977.3116	8.3469	12.0395	81.1753	1955.9092	6.9977	3.8412	20.486
L3	24.0365	13.9928	977.3116	8.3469	12.0395	81.1753	1955.9092	6.9977	3.8412	20.486
	24.8996	14.4986	1087.1717	8.6486	12.4713	87.1741	2175.7740	7.2507	3.9908	21.284
L4	24.8996	14.4986	1087.1717	8.6486	12.4713	87.1741	2175.7740	7.2507	3.9908	21.284
	25.7626	15.0044	1204.9709	8.9503	12.9030	93.3866	2411.5274	7.5036	4.1403	22.082
L5	25.7626	15.0044	1204.9709	8.9503	12.9030	93.3866	2411.5274	7.5036	4.1403	22.082
	26.6256	15.5102	1330.9862	9.2520	13.3348	99.8130	2663.7237	7.7566	4.2899	22.88
L6	26.6256	15.5102	1330.9862	9.2520	13.3348	99.8130	2663.7237	7.7566	4.2899	22.88
	27.6181	16.0919	1486.4203	9.5990	13.8313	107.4677	2974.7964	8.0475	4.4620	23.797
L7	27.2276	20.6366	1763.4291	9.2325	13.3386	132.2051	3529.1786	10.3203	4.1812	16.725
	27.4865	21.3110	1942.0179	9.5342	13.7703	141.0293	3886.5912	10.6575	4.3308	17.323
L8	27.4865	21.3110	1942.0179	9.5342	13.7703	141.0293	3886.5912	10.6575	4.3308	17.323
	28.3495	21.9853	2132.2747	9.8359	14.2021	150.1385	4267.3550	10.9948	4.4804	17.922
L9	28.3495	21.9853	2132.2747	9.8359	14.2021	150.1385	4267.3550	10.9948	4.4804	17.922
	29.2125	22.6597	2334.5686	10.1376	14.6338	159.5328	4672.2091	11.3320	4.6300	18.52
L10	29.2125	22.6597	2334.5686	10.1376	14.6338	159.5328	4672.2091	11.3320	4.6300	18.52
	30.0755	23.3341	2549.2689	10.4393	15.0655	169.2122	5101.8923	11.6693	4.7795	19.118
L11	30.0755	23.3341	2549.2689	10.4393	15.0655	169.2122	5101.8923	11.6693	4.7795	19.118
	30.7227	23.8399	2718.6580	10.6656	15.3893	176.6588	5440.8933	11.9222	4.8917	19.567
L12	30.6899	43.7918	4923.5494	10.5902	15.3893	319.9330	9853.5773	21.9001	4.5177	9.768
	30.7331	43.8542	4944.6194	10.6052	15.4109	320.8520	9895.7451	21.9313	4.5252	9.784
L13	30.7350	42.6868	4817.0227	10.6097	15.4109	312.5724	9640.3838	21.3474	4.5472	10.105
	31.5980	43.9006	5239.7582	10.9114	15.8426	330.7378	10486.4111	21.9545	4.6968	10.437
L14	31.5989	43.2997	5170.1365	10.9136	15.8426	326.3432	10347.0759	21.6540	4.7078	10.609
	32.4619	44.4967	5610.8796	11.2153	16.2744	344.7679	11229.1421	22.2526	4.8574	10.946
L15	32.4619	44.4967	5610.8796	11.2153	16.2744	344.7679	11229.1421	22.2526	4.8574	10.946
	33.4975	45.9331	6171.9874	11.5773	16.7924	367.5454	12352.0960	22.9709	5.0369	11.351
L16	32.9860	46.6650	5799.8373	11.1345	16.1715	358.6462	11607.3061	23.3370	4.7777	10.192
	33.1154	47.9296	6284.2252	11.4363	16.6032	378.4939	12576.7193	23.9693	4.9273	10.512
L17	33.1154	47.9296	6284.2252	11.4363	16.6032	378.4939	12576.7193	23.9693	4.9273	10.512
	33.9785	49.1941	6794.8590	11.7380	17.0350	398.8762	13598.6588	24.6017	5.0769	10.831
L18	33.9794	48.5474	6708.0633	11.7402	17.0350	393.7811	13424.9533	24.2783	5.0879	11.001
	34.8425	49.7950	7238.6658	12.0419	17.4668	414.4249	14486.8564	24.9023	5.2375	11.324
L19	34.8434	49.1312	7144.7938	12.0441	17.4668	409.0506	14298.9890	24.5703	5.2485	11.504
	35.7065	50.3620	7695.3251	12.3459	17.8985	429.9416	15400.7760	25.1858	5.3981	11.831
L20	35.7065	50.3620	7695.3251	12.3459	17.8985	429.9416	15400.7760	25.1858	5.3981	11.831
	36.5695	51.5928	8273.4343	12.6476	18.3303	451.3529	16557.7549	25.8013	5.5477	12.159
L21	36.5715	50.1969	8055.2376	12.6520	18.3303	439.4493	16121.0745	25.1032	5.5697	12.551
	37.4345	51.3940	8645.3949	12.9538	18.7621	460.7912	17302.1657	25.7019	5.7192	12.888
L22	37.4345	51.3940	8645.3949	12.9538	18.7621	460.7912	17302.1657	25.7019	5.7192	12.888
	38.2975	52.5911	9263.6952	13.2555	19.1938	482.6391	18539.5798	26.3006	5.8688	13.226
L23	38.2985	51.8591	9137.8077	13.2577	19.1938	476.0804	18287.6391	25.9345	5.8798	13.44
	40.0246	54.2196	10443.2433	13.8612	20.0574	520.6688	20900.2281	27.1149	6.1790	14.123
L24	39.4486	55.9445	9993.3750	13.3486	19.3398	516.7246	19999.8995	27.9775	5.8754	12.534
	39.6212	57.4619	10828.8226	13.7107	19.8580	545.3137	21671.8940	28.7364	6.0549	12.917
L25	39.6222	56.7049	10689.6262	13.7129	19.8580	538.3041	21393.3180	28.3579	6.0659	13.116
	40.4852	57.9526	11410.8816	14.0147	20.2897	562.3967	22836.7780	28.9818	6.2155	13.439
L26	40.4852	57.9526	11410.8816	14.0147	20.2897	562.3967	22836.7780	28.9818	6.2155	13.439
	41.3483	59.2003	12163.8718	14.3164	20.7215	587.0168	24343.7492	29.6058	6.3651	13.762

Section	Tip Dia. in	Area in^2	I in^4	r in	C in	I/C in^3	J in^4	It/Q in^2	w in	w/t
L27	41.3492	58.4093	12005.0751	14.3186	20.7215	579.3534	24025.9468	29.2102	6.3761	13.975
	42.2123	59.6402	12780.1073	14.6203	21.1533	604.1669	25577.0310	29.8258	6.5257	14.303
L28	42.2133	58.8321	12610.7770	14.6226	21.1533	596.1619	25238.1475	29.4216	6.5367	14.526
	43.0763	60.0461	13407.6431	14.9243	21.5850	621.1544	26832.9283	30.0287	6.6863	14.858
L29	43.0763	60.0461	13407.6431	14.9243	21.5850	621.1544	26832.9283	30.0287	6.6863	14.858
	43.9393	61.2600	14237.3904	15.2260	22.0168	646.6600	28493.5147	30.6358	6.8359	15.191
L30	43.9393	61.2600	14237.3904	15.2260	22.0168	646.6600	28493.5147	30.6358	6.8359	15.191
	44.0981	61.4834	14393.6983	15.2815	22.0963	651.4089	28806.3361	30.7475	6.8634	15.252
L31	44.0981	61.4834	14393.6983	15.2815	22.0963	651.4089	28806.3361	30.7475	6.8634	15.252
	44.1413	61.5441	14436.3700	15.2966	22.1178	652.7024	28891.7358	30.7779	6.8709	15.269
L32	44.1452	58.1587	13658.0949	15.3055	22.1178	617.5148	27334.1615	29.0849	6.9149	16.27
	44.1883	58.2160	13698.5225	15.3206	22.1394	618.7387	27415.0698	29.1136	6.9224	16.288
L33	44.1883	58.2160	13698.5225	15.3206	22.1394	618.7387	27415.0698	29.1136	6.9224	16.288
	45.0514	59.3626	14523.9138	15.6223	22.5712	643.4711	29066.9385	29.6869	7.0719	16.64
L34	45.0514	59.3626	14523.9138	15.6223	22.5712	643.4711	29066.9385	29.6869	7.0719	16.64
	45.4673	59.9152	14933.3239	15.7677	22.7793	655.5652	29886.2974	29.9633	7.1440	16.81
L35	45.4635	63.4039	15785.0704	15.7589	22.7793	692.9564	31590.9111	31.7080	7.1000	15.778
	45.5066	63.4646	15830.4482	15.7740	22.8009	694.2905	31681.7265	31.7383	7.1075	15.794
L36	45.5066	63.4646	15830.4482	15.7740	22.8009	694.2905	31681.7265	31.7383	7.1075	15.794
	45.5498	63.5253	15875.9129	15.7890	22.8225	695.6258	31772.7157	31.7687	7.1150	15.811
L37	45.5508	62.6518	15662.0149	15.7913	22.8225	686.2536	31344.6384	31.3319	7.1260	16.059
	46.3568	63.7699	16515.5898	16.0731	23.2258	711.0893	33052.9111	31.8910	7.2657	16.373

Tower Elevation ft	Gusset Area (per face) ft^2	Gusset Thickness in	Gusset Grade	Adjust. Factor A_f	Adjust. Factor A_r	Weight Mult.	Double Angle Stitch Bolt Spacing Diagonals in	Double Angle Stitch Bolt Spacing Horizontals in	Double Angle Stitch Bolt Spacing Redundants in
L1 148.00-143.00				1	1	1			
L2 143.00-138.00				1	1	1			
L3 138.00-133.00				1	1	1			
L4 133.00-128.00				1	1	1			
L5 128.00-123.00				1	1	1			
L6 123.00-117.25				1	1	1			
L7 117.25-115.75				1	1	1			
L8 115.75-110.75				1	1	1			
L9 110.75-105.75				1	1	1			
L10 105.75-100.75				1	1	1			
L11 100.75-97.00				1	1	1			
L12 97.00-96.75				1	1	0.930908			
L13 96.75-91.75				1	1	0.945284			
L14 91.75-86.75				1	1	0.947776			
L15 86.75-80.75				1	1	0.944191			
L16 80.75-80.00				1	1	0.957149			
L17 80.00-75.00				1	1	0.947968			
L18 75.00-70.00				1	1	0.951765			
L19 70.00-65.00				1	1	0.956116			
L20 65.00-60.00				1	1	0.948012			
L21 60.00-				1	1	0.966442			

Tower Elevation ft	Gusset Area (per face) ft^2	Gusset Thickness in	Gusset Grade	Adjust. Factor A_f	Adjust. Factor A_r	Weight Mult.	Double Angle Stitch Bolt Spacing Diagonals in	Double Angle Stitch Bolt Spacing Horizontals in	Double Angle Stitch Bolt Spacing Redundants in
55.00									
L22 55.00-50.00				1	1	0.95887			
L23 50.00-40.00				1	1	0.965073			
L24 40.00-39.00				1	1	0.964352			
L25 39.00-34.00				1	1	0.970734			
L26 34.00-29.00				1	1	0.964515			
L27 29.00-24.00				1	1	0.971537			
L28 24.00-19.00				1	1	0.979009			
L29 19.00-14.00				1	1	0.97337			
L30 14.00-13.08				1	1	0.972357			
L31 13.08-12.83				1	1	0.972083			
L32 12.83-12.58				1	1	1.07682			
L33 12.58-7.58				1	1	1.07022			
L34 7.58-5.17				1	1	1.06713			
L35 5.17-4.92				1	1	0.963681			
L36 4.92-4.67				1	1	0.963424			
L37 4.67-0.00				1	1	0.972076			

Feed Line/Linear Appurtenances - Entered As Round Or Flat

Description	Sector	Exclude From Torque Calculation	Component Type	Placement ft	Total Number	Number Per Row	Start/End Position	Width or Diameter in	Perimeter in	Weight plf
***										
***										
Safety Line 3/8	A	No	Surface Ar (CaAa)	148.00 - 0.00	1	1	-0.210 -0.200	0.3750		0.22
***										
MP3-05	A	No	Surface Af (CaAa)	99.42 - 0.00	1	1	0.000 0.000	5.3300	14.8400	0.00
MP3-05	B	No	Surface Af (CaAa)	99.42 - 0.00	1	1	0.000 0.000	5.3300	14.8400	0.00
MP3-05	C	No	Surface Af (CaAa)	7.58 - 0.00	1	1	0.000 0.000	5.3300	14.8400	0.00
MP3-05	C	No	Surface Af (CaAa)	99.42 - 10.42	1	1	0.000 0.000	5.3300	14.8400	0.00
MP3-06 - Weight	C	No	Surface Af (CaAa)	5.17 - 1.50	1	1	0.000 0.000	6.8900	18.9920	0.03
MP3-06	C	No	Surface Af (CaAa)	12.83 - 5.17	1	1	0.000 0.000	6.8900	18.9920	0.00
MP3-06 - Weight	C	No	Surface Af (CaAa)	16.50 - 12.83	1	1	0.000 0.000	6.8900	18.9920	0.03
***										

Feed Line/Linear Appurtenances - Entered As Area

Description	Face or Leg	Allow Shield	Exclude From Torque Calculation	Component Type	Placement ft	Total Number		C_AA_A ft^2/ft	Weight plf
HB158-21U6S24-xxM_TMO(1-5/8)	B	No	No	Inside Pole	148.00 - 0.00	4	No Ice	0.00	2.50
							1/2" Ice	0.00	2.50
							1" Ice	0.00	2.50
							2" Ice	0.00	2.50
***									
2" Rigid Conduit	A	No	No	Inside Pole	140.00 - 0.00	2	No Ice	0.00	2.80
							1/2" Ice	0.00	2.80
							1" Ice	0.00	2.80
							2" Ice	0.00	2.80
LCF158-50A(1-5/8)	A	No	No	Inside Pole	140.00 - 0.00	6	No Ice	0.00	0.80
							1/2" Ice	0.00	0.80
							1" Ice	0.00	0.80
							2" Ice	0.00	0.80
FB-L98B-002-75000(3/8)	A	No	No	Inside Pole	140.00 - 0.00	1	No Ice	0.00	0.06
							1/2" Ice	0.00	0.06
							1" Ice	0.00	0.06
							2" Ice	0.00	0.06
WR-VG122ST-BRDA(7/16)	A	No	No	Inside Pole	140.00 - 0.00	2	No Ice	0.00	0.14
							1/2" Ice	0.00	0.14
							1" Ice	0.00	0.14
							2" Ice	0.00	0.14
FB-L98B-034-XXX(3/8)	A	No	No	Inside Pole	140.00 - 0.00	1	No Ice	0.00	0.06
							1/2" Ice	0.00	0.06
							1" Ice	0.00	0.06
							2" Ice	0.00	0.06
WR-VG66ST-BRD(7/8)	A	No	No	Inside Pole	140.00 - 0.00	4	No Ice	0.00	0.91
							1/2" Ice	0.00	0.91
							1" Ice	0.00	0.91
							2" Ice	0.00	0.91
HB158-1-13U6-S6F18(1-5/8)	C	No	No	Inside Pole	130.00 - 0.00	1	No Ice	0.00	1.90
							1/2" Ice	0.00	1.90
							1" Ice	0.00	1.90
							2" Ice	0.00	1.90
LDF7-50A(1-5/8)	C	No	No	Inside Pole	130.00 - 0.00	6	No Ice	0.00	0.82
							1/2" Ice	0.00	0.82
							1" Ice	0.00	0.82
							2" Ice	0.00	0.82
***									

Feed Line/Linear Appurtenances Section Areas

Tower Section	Tower Elevation ft	Face	A_R ft^2	A_F ft^2	C_AA_A In Face ft^2	C_AA_A Out Face ft^2	Weight K
L1	148.00-143.00	A	0.000	0.000	0.188	0.000	0.00
		B	0.000	0.000	0.000	0.000	0.05
		C	0.000	0.000	0.000	0.000	0.00
L2	143.00-138.00	A	0.000	0.000	0.188	0.000	0.03
		B	0.000	0.000	0.000	0.000	0.05
		C	0.000	0.000	0.000	0.000	0.00
L3	138.00-133.00	A	0.000	0.000	0.188	0.000	0.07
		B	0.000	0.000	0.000	0.000	0.05
		C	0.000	0.000	0.000	0.000	0.00
L4	133.00-128.00	A	0.000	0.000	0.188	0.000	0.07
		B	0.000	0.000	0.000	0.000	0.05
		C	0.000	0.000	0.000	0.000	0.01
L5	128.00-123.00	A	0.000	0.000	0.188	0.000	0.07
		B	0.000	0.000	0.000	0.000	0.05
		C	0.000	0.000	0.000	0.000	0.03
L6	123.00-117.25	A	0.000	0.000	0.216	0.000	0.08
		B	0.000	0.000	0.000	0.000	0.06
		C	0.000	0.000	0.000	0.000	0.04

Tower Section	Tower Elevation ft	Face	A_R ft^2	A_F ft^2	C_AA_A In Face ft^2	C_AA_A Out Face ft^2	Weight K
L7	117.25-115.75	A	0.000	0.000	0.056	0.000	0.02
		B	0.000	0.000	0.000	0.000	0.01
		C	0.000	0.000	0.000	0.000	0.01
L8	115.75-110.75	A	0.000	0.000	0.188	0.000	0.07
		B	0.000	0.000	0.000	0.000	0.05
		C	0.000	0.000	0.000	0.000	0.03
L9	110.75-105.75	A	0.000	0.000	0.188	0.000	0.07
		B	0.000	0.000	0.000	0.000	0.05
		C	0.000	0.000	0.000	0.000	0.03
L10	105.75-100.75	A	0.000	0.000	0.188	0.000	0.07
		B	0.000	0.000	0.000	0.000	0.05
		C	0.000	0.000	0.000	0.000	0.03
L11	100.75-97.00	A	0.000	0.000	2.288	0.000	0.05
		B	0.000	0.000	2.147	0.000	0.04
		C	0.000	0.000	2.147	0.000	0.03
L12	97.00-96.75	A	0.000	0.000	0.231	0.000	0.00
		B	0.000	0.000	0.222	0.000	0.00
		C	0.000	0.000	0.222	0.000	0.00
L13	96.75-91.75	A	0.000	0.000	4.629	0.000	0.07
		B	0.000	0.000	4.442	0.000	0.05
		C	0.000	0.000	4.442	0.000	0.03
L14	91.75-86.75	A	0.000	0.000	4.629	0.000	0.07
		B	0.000	0.000	4.442	0.000	0.05
		C	0.000	0.000	4.442	0.000	0.03
L15	86.75-80.75	A	0.000	0.000	5.555	0.000	0.09
		B	0.000	0.000	5.330	0.000	0.06
		C	0.000	0.000	5.330	0.000	0.04
L16	80.75-80.00	A	0.000	0.000	0.694	0.000	0.01
		B	0.000	0.000	0.666	0.000	0.01
		C	0.000	0.000	0.666	0.000	0.01
L17	80.00-75.00	A	0.000	0.000	4.629	0.000	0.07
		B	0.000	0.000	4.442	0.000	0.05
		C	0.000	0.000	4.442	0.000	0.03
L18	75.00-70.00	A	0.000	0.000	4.629	0.000	0.07
		B	0.000	0.000	4.442	0.000	0.05
		C	0.000	0.000	4.442	0.000	0.03
L19	70.00-65.00	A	0.000	0.000	4.629	0.000	0.07
		B	0.000	0.000	4.442	0.000	0.05
		C	0.000	0.000	4.442	0.000	0.03
L20	65.00-60.00	A	0.000	0.000	4.629	0.000	0.07
		B	0.000	0.000	4.442	0.000	0.05
		C	0.000	0.000	4.442	0.000	0.03
L21	60.00-55.00	A	0.000	0.000	4.629	0.000	0.07
		B	0.000	0.000	4.442	0.000	0.05
		C	0.000	0.000	4.442	0.000	0.03
L22	55.00-50.00	A	0.000	0.000	4.629	0.000	0.07
		B	0.000	0.000	4.442	0.000	0.05
		C	0.000	0.000	4.442	0.000	0.03
L23	50.00-40.00	A	0.000	0.000	9.258	0.000	0.15
		B	0.000	0.000	8.883	0.000	0.10
		C	0.000	0.000	8.883	0.000	0.07
L24	40.00-39.00	A	0.000	0.000	0.926	0.000	0.01
		B	0.000	0.000	0.888	0.000	0.01
		C	0.000	0.000	0.888	0.000	0.01
L25	39.00-34.00	A	0.000	0.000	4.629	0.000	0.07
		B	0.000	0.000	4.442	0.000	0.05
		C	0.000	0.000	4.442	0.000	0.03
L26	34.00-29.00	A	0.000	0.000	4.629	0.000	0.07
		B	0.000	0.000	4.442	0.000	0.05
		C	0.000	0.000	4.442	0.000	0.03
L27	29.00-24.00	A	0.000	0.000	4.629	0.000	0.07
		B	0.000	0.000	4.442	0.000	0.05
		C	0.000	0.000	4.442	0.000	0.03
L28	24.00-19.00	A	0.000	0.000	4.629	0.000	0.07
		B	0.000	0.000	4.442	0.000	0.05
		C	0.000	0.000	4.442	0.000	0.03
L29	19.00-14.00	A	0.000	0.000	4.629	0.000	0.07
		B	0.000	0.000	4.442	0.000	0.05
		C	0.000	0.000	6.386	0.000	0.03

Tower Section	Tower Elevation ft	Face	A_R ft^2	A_F ft^2	C_AA_A In Face ft^2	C_AA_A Out Face ft^2	Weight K
L30	14.00-13.08	A	0.000	0.000	0.852	0.000	0.01
		B	0.000	0.000	0.817	0.000	0.01
		C	0.000	0.000	1.533	0.000	0.01
L31	13.08-12.83	A	0.000	0.000	0.231	0.000	0.00
		B	0.000	0.000	0.222	0.000	0.00
		C	0.000	0.000	0.417	0.000	0.00
L32	12.83-12.58	A	0.000	0.000	0.231	0.000	0.00
		B	0.000	0.000	0.222	0.000	0.00
		C	0.000	0.000	0.449	0.000	0.00
L33	12.58-7.58	A	0.000	0.000	4.629	0.000	0.07
		B	0.000	0.000	4.442	0.000	0.05
		C	0.000	0.000	6.467	0.000	0.03
L34	7.58-5.17	A	0.000	0.000	2.231	0.000	0.04
		B	0.000	0.000	2.141	0.000	0.02
		C	0.000	0.000	4.006	0.000	0.02
L35	5.17-4.92	A	0.000	0.000	0.231	0.000	0.00
		B	0.000	0.000	0.222	0.000	0.00
		C	0.000	0.000	0.383	0.000	0.00
L36	4.92-4.67	A	0.000	0.000	0.231	0.000	0.00
		B	0.000	0.000	0.222	0.000	0.00
		C	0.000	0.000	0.383	0.000	0.00
L37	4.67-0.00	A	0.000	0.000	4.324	0.000	0.07
		B	0.000	0.000	4.149	0.000	0.05
		C	0.000	0.000	5.984	0.000	0.03

Feed Line/Linear Appurtenances Section Areas - With Ice

Tower Section	Tower Elevation ft	Face or Leg	Ice Thickness in	A_R ft^2	A_F ft^2	C_AA_A In Face ft^2	C_AA_A Out Face ft^2	Weight K
L1	148.00-143.00	A	1.479	0.000	0.000	1.666	0.000	0.02
		B		0.000	0.000	0.000	0.000	0.05
		C		0.000	0.000	0.000	0.000	0.00
L2	143.00-138.00	A	1.474	0.000	0.000	1.661	0.000	0.05
		B		0.000	0.000	0.000	0.000	0.05
		C		0.000	0.000	0.000	0.000	0.00
L3	138.00-133.00	A	1.468	0.000	0.000	1.656	0.000	0.09
		B		0.000	0.000	0.000	0.000	0.05
		C		0.000	0.000	0.000	0.000	0.00
L4	133.00-128.00	A	1.463	0.000	0.000	1.650	0.000	0.09
		B		0.000	0.000	0.000	0.000	0.05
		C		0.000	0.000	0.000	0.000	0.01
L5	128.00-123.00	A	1.457	0.000	0.000	1.645	0.000	0.09
		B		0.000	0.000	0.000	0.000	0.05
		C		0.000	0.000	0.000	0.000	0.03
L6	123.00-117.25	A	1.451	0.000	0.000	1.884	0.000	0.10
		B		0.000	0.000	0.000	0.000	0.06
		C		0.000	0.000	0.000	0.000	0.04
L7	117.25-115.75	A	1.446	0.000	0.000	0.491	0.000	0.03
		B		0.000	0.000	0.000	0.000	0.01
		C		0.000	0.000	0.000	0.000	0.01
L8	115.75-110.75	A	1.442	0.000	0.000	1.630	0.000	0.09
		B		0.000	0.000	0.000	0.000	0.05
		C		0.000	0.000	0.000	0.000	0.03
L9	110.75-105.75	A	1.436	0.000	0.000	1.623	0.000	0.09
		B		0.000	0.000	0.000	0.000	0.05
		C		0.000	0.000	0.000	0.000	0.03
L10	105.75-100.75	A	1.429	0.000	0.000	1.617	0.000	0.09
		B		0.000	0.000	0.000	0.000	0.05
		C		0.000	0.000	0.000	0.000	0.03
L11	100.75-97.00	A	1.423	0.000	0.000	4.043	0.000	0.09
		B		0.000	0.000	2.835	0.000	0.06
		C		0.000	0.000	2.835	0.000	0.05
L12	97.00-96.75	A	1.420	0.000	0.000	0.373	0.000	0.01
		B		0.000	0.000	0.293	0.000	0.01
		C		0.000	0.000	0.293	0.000	0.00

Tower Section	Tower Elevation ft	Face or Leg	Ice Thickness in	A_R ft^2	A_F ft^2	C_AA_A In Face ft^2	C_AA_A Out Face ft^2	Weight K
L13	96.75-91.75	A	1.416	0.000	0.000	7.461	0.000	0.14
		B		0.000	0.000	5.858	0.000	0.11
		C		0.000	0.000	5.858	0.000	0.09
L14	91.75-86.75	A	1.408	0.000	0.000	7.446	0.000	0.14
		B		0.000	0.000	5.850	0.000	0.11
		C		0.000	0.000	5.850	0.000	0.09
L15	86.75-80.75	A	1.399	0.000	0.000	8.914	0.000	0.17
		B		0.000	0.000	7.009	0.000	0.13
		C		0.000	0.000	7.009	0.000	0.11
L16	80.75-80.00	A	1.394	0.000	0.000	1.114	0.000	0.02
		B		0.000	0.000	0.876	0.000	0.02
		C		0.000	0.000	0.876	0.000	0.01
L17	80.00-75.00	A	1.389	0.000	0.000	7.406	0.000	0.14
		B		0.000	0.000	5.830	0.000	0.10
		C		0.000	0.000	5.830	0.000	0.09
L18	75.00-70.00	A	1.379	0.000	0.000	7.388	0.000	0.14
		B		0.000	0.000	5.821	0.000	0.10
		C		0.000	0.000	5.821	0.000	0.09
L19	70.00-65.00	A	1.370	0.000	0.000	7.368	0.000	0.14
		B		0.000	0.000	5.811	0.000	0.10
		C		0.000	0.000	5.811	0.000	0.09
L20	65.00-60.00	A	1.359	0.000	0.000	7.347	0.000	0.14
		B		0.000	0.000	5.801	0.000	0.10
		C		0.000	0.000	5.801	0.000	0.09
L21	60.00-55.00	A	1.348	0.000	0.000	7.325	0.000	0.14
		B		0.000	0.000	5.789	0.000	0.10
		C		0.000	0.000	5.789	0.000	0.09
L22	55.00-50.00	A	1.336	0.000	0.000	7.300	0.000	0.14
		B		0.000	0.000	5.777	0.000	0.10
		C		0.000	0.000	5.777	0.000	0.09
L23	50.00-40.00	A	1.315	0.000	0.000	14.519	0.000	0.28
		B		0.000	0.000	11.513	0.000	0.20
		C		0.000	0.000	11.513	0.000	0.17
L24	40.00-39.00	A	1.298	0.000	0.000	1.452	0.000	0.03
		B		0.000	0.000	1.151	0.000	0.02
		C		0.000	0.000	1.151	0.000	0.02
L25	39.00-34.00	A	1.288	0.000	0.000	7.205	0.000	0.14
		B		0.000	0.000	5.730	0.000	0.10
		C		0.000	0.000	5.730	0.000	0.08
L26	34.00-29.00	A	1.269	0.000	0.000	7.167	0.000	0.13
		B		0.000	0.000	5.711	0.000	0.10
		C		0.000	0.000	5.711	0.000	0.08
L27	29.00-24.00	A	1.247	0.000	0.000	7.124	0.000	0.13
		B		0.000	0.000	5.689	0.000	0.10
		C		0.000	0.000	5.689	0.000	0.08
L28	24.00-19.00	A	1.221	0.000	0.000	7.072	0.000	0.13
		B		0.000	0.000	5.663	0.000	0.10
		C		0.000	0.000	5.663	0.000	0.08
L29	19.00-14.00	A	1.190	0.000	0.000	7.008	0.000	0.13
		B		0.000	0.000	5.631	0.000	0.09
		C		0.000	0.000	7.891	0.000	0.11
L30	14.00-13.08	A	1.166	0.000	0.000	1.281	0.000	0.02
		B		0.000	0.000	1.032	0.000	0.02
		C		0.000	0.000	1.861	0.000	0.02
L31	13.08-12.83	A	1.161	0.000	0.000	0.348	0.000	0.01
		B		0.000	0.000	0.280	0.000	0.00
		C		0.000	0.000	0.505	0.000	0.01
L32	12.83-12.58	A	1.159	0.000	0.000	0.347	0.000	0.01
		B		0.000	0.000	0.280	0.000	0.00
		C		0.000	0.000	0.539	0.000	0.01
L33	12.58-7.58	A	1.132	0.000	0.000	6.894	0.000	0.13
		B		0.000	0.000	5.574	0.000	0.09
		C		0.000	0.000	7.584	0.000	0.10
L34	7.58-5.17	A	1.082	0.000	0.000	3.274	0.000	0.06
		B		0.000	0.000	2.662	0.000	0.04
		C		0.000	0.000	4.582	0.000	0.06
L35	5.17-4.92	A	1.057	0.000	0.000	0.337	0.000	0.01
		B		0.000	0.000	0.275	0.000	0.00
		C		0.000	0.000	0.440	0.000	0.01

Tower Section	Tower Elevation ft	Face or Leg	Ice Thickness in	A_R ft^2	A_F ft^2	C_AA_A In Face ft^2	C_AA_A Out Face ft^2	Weight K
L36	4.92-4.67	A	1.051	0.000	0.000	0.337	0.000	0.01
		B		0.000	0.000	0.275	0.000	0.00
		C		0.000	0.000	0.440	0.000	0.01
L37	4.67-0.00	A	0.978	0.000	0.000	6.151	0.000	0.11
		B		0.000	0.000	5.062	0.000	0.08
		C		0.000	0.000	6.818	0.000	0.09

Feed Line Center of Pressure

Section	Elevation ft	CP_X in	CP_Z in	CP_X Ice in	CP_Z Ice in
L1	148.00-143.00	-0.2995	-0.0283	-1.3029	-0.1232
L2	143.00-138.00	-0.2996	-0.0283	-1.3093	-0.1238
L3	138.00-133.00	-0.2997	-0.0283	-1.3149	-0.1243
L4	133.00-128.00	-0.2998	-0.0283	-1.3199	-0.1248
L5	128.00-123.00	-0.2999	-0.0283	-1.3241	-0.1252
L6	123.00-117.25	-0.2999	-0.0284	-1.3280	-0.1255
L7	117.25-115.75	-0.3001	-0.0284	-1.3308	-0.1258
L8	115.75-110.75	-0.3001	-0.0284	-1.3294	-0.1257
L9	110.75-105.75	-0.3002	-0.0284	-1.3317	-0.1259
L10	105.75-100.75	-0.3002	-0.0284	-1.3334	-0.1260
L11	100.75-97.00	-0.1572	-0.0149	-0.8227	-0.0778
L12	97.00-96.75	-0.1253	-0.0118	-0.6828	-0.0645
L13	96.75-91.75	-0.1264	-0.0119	-0.6870	-0.0649
L14	91.75-86.75	-0.1284	-0.0121	-0.6948	-0.0657
L15	86.75-80.75	-0.1305	-0.0123	-0.7029	-0.0664
L16	80.75-80.00	-0.1307	-0.0124	-0.7039	-0.0665
L17	80.00-75.00	-0.1318	-0.0125	-0.7056	-0.0667
L18	75.00-70.00	-0.1336	-0.0126	-0.7119	-0.0673
L19	70.00-65.00	-0.1355	-0.0128	-0.7177	-0.0678
L20	65.00-60.00	-0.1372	-0.0130	-0.7228	-0.0683
L21	60.00-55.00	-0.1390	-0.0131	-0.7274	-0.0688
L22	55.00-50.00	-0.1407	-0.0133	-0.7312	-0.0691
L23	50.00-40.00	-0.1432	-0.0135	-0.7355	-0.0695
L24	40.00-39.00	-0.1439	-0.0136	-0.7393	-0.0699
L25	39.00-34.00	-0.1449	-0.0137	-0.7328	-0.0693
L26	34.00-29.00	-0.1465	-0.0138	-0.7327	-0.0693
L27	29.00-24.00	-0.1480	-0.0140	-0.7309	-0.0691
L28	24.00-19.00	-0.1496	-0.0141	-0.7270	-0.0687
L29	19.00-14.00	-0.1408	1.5364	-0.6826	1.1242
L30	14.00-13.08	-0.1327	2.8939	-0.6435	2.2011
L31	13.08-12.83	-0.1329	2.8973	-0.6422	2.2036
L32	12.83-12.58	-0.1302	3.3182	-0.6322	2.5096
L33	12.58-7.58	-0.1423	1.6227	-0.6704	1.0257
L34	7.58-5.17	-0.1349	2.9272	-0.6245	2.0134
L35	5.17-4.92	-0.1381	2.4892	-0.6248	1.6948
L36	4.92-4.67	-0.1382	2.4903	-0.6228	1.6966
L37	4.67-0.00	-0.1448	1.5858	-0.6129	0.9857

Note: For pole sections, center of pressure calculations do not consider feed line shielding.

Shielding Factor Ka

Tower Section	Feed Line Record No.	Description	Feed Line Segment Elev.	K_a No Ice	K_a Ice
L1	18	Safety Line 3/8	143.00 - 148.00	1.0000	1.0000
L2	18	Safety Line 3/8	138.00 - 143.00	1.0000	1.0000

Tower Section	Feed Line Record No.	Description	Feed Line Segment Elev.	K_a No Ice	K_a Ice
L3	18	Safety Line 3/8	133.00 - 138.00	1.0000	1.0000
L4	18	Safety Line 3/8	128.00 - 133.00	1.0000	1.0000
L5	18	Safety Line 3/8	123.00 - 128.00	1.0000	1.0000
L6	18	Safety Line 3/8	117.25 - 123.00	1.0000	1.0000
L7	18	Safety Line 3/8	115.75 - 117.25	1.0000	1.0000
L8	18	Safety Line 3/8	110.75 - 115.75	1.0000	1.0000
L9	18	Safety Line 3/8	105.75 - 110.75	1.0000	1.0000
L10	18	Safety Line 3/8	100.75 - 105.75	1.0000	1.0000
L11	18	Safety Line 3/8	97.00 - 100.75	1.0000	1.0000
L11	20	MP3-05	97.00 - 99.42	1.0000	1.0000
L11	21	MP3-05	97.00 - 99.42	1.0000	1.0000
L11	23	MP3-05	97.00 - 99.42	1.0000	1.0000
L12	18	Safety Line 3/8	96.75 - 97.00	1.0000	1.0000
L12	20	MP3-05	96.75 - 97.00	1.0000	1.0000
L12	21	MP3-05	96.75 - 97.00	1.0000	1.0000
L12	23	MP3-05	96.75 - 97.00	1.0000	1.0000
L13	18	Safety Line 3/8	91.75 - 96.75	1.0000	1.0000
L13	20	MP3-05	91.75 - 96.75	1.0000	1.0000
L13	21	MP3-05	91.75 - 96.75	1.0000	1.0000
L13	23	MP3-05	91.75 - 96.75	1.0000	1.0000
L14	18	Safety Line 3/8	86.75 - 91.75	1.0000	1.0000
L14	20	MP3-05	86.75 - 91.75	1.0000	1.0000
L14	21	MP3-05	86.75 - 91.75	1.0000	1.0000
L14	23	MP3-05	86.75 - 91.75	1.0000	1.0000
L15	18	Safety Line 3/8	80.75 - 86.75	1.0000	1.0000
L15	20	MP3-05	80.75 - 86.75	1.0000	1.0000
L15	21	MP3-05	80.75 - 86.75	1.0000	1.0000
L15	23	MP3-05	80.75 - 86.75	1.0000	1.0000
L16	18	Safety Line 3/8	80.00 - 80.75	1.0000	1.0000
L16	20	MP3-05	80.00 - 80.75	1.0000	1.0000
L16	21	MP3-05	80.00 - 80.75	1.0000	1.0000
L16	23	MP3-05	80.00 - 80.75	1.0000	1.0000
L17	18	Safety Line 3/8	75.00 - 80.00	1.0000	1.0000
L17	20	MP3-05	75.00 - 80.00	1.0000	1.0000
L17	21	MP3-05	75.00 - 80.00	1.0000	1.0000
L17	23	MP3-05	75.00 - 80.00	1.0000	1.0000
L18	18	Safety Line 3/8	70.00 - 75.00	1.0000	1.0000
L18	20	MP3-05	70.00 - 75.00	1.0000	1.0000
L18	21	MP3-05	70.00 - 75.00	1.0000	1.0000
L18	23	MP3-05	70.00 - 75.00	1.0000	1.0000
L19	18	Safety Line 3/8	65.00 - 70.00	1.0000	1.0000
L19	20	MP3-05	65.00 - 70.00	1.0000	1.0000
L19	21	MP3-05	65.00 - 70.00	1.0000	1.0000
L19	23	MP3-05	65.00 - 70.00	1.0000	1.0000
L20	18	Safety Line 3/8	60.00 - 65.00	1.0000	1.0000
L20	20	MP3-05	60.00 - 65.00	1.0000	1.0000
L20	21	MP3-05	60.00 - 65.00	1.0000	1.0000
L20	23	MP3-05	60.00 - 65.00	1.0000	1.0000
L21	18	Safety Line 3/8	55.00 - 60.00	1.0000	1.0000
L21	20	MP3-05	55.00 - 60.00	1.0000	1.0000
L21	21	MP3-05	55.00 - 60.00	1.0000	1.0000
L21	23	MP3-05	55.00 - 60.00	1.0000	1.0000
L22	18	Safety Line 3/8	50.00 - 55.00	1.0000	1.0000
L22	20	MP3-05	50.00 - 55.00	1.0000	1.0000
L22	21	MP3-05	50.00 - 55.00	1.0000	1.0000
L22	23	MP3-05	50.00 - 55.00	1.0000	1.0000
L23	18	Safety Line 3/8	40.00 - 50.00	1.0000	1.0000
L23	20	MP3-05	40.00 - 50.00	1.0000	1.0000
L23	21	MP3-05	40.00 - 50.00	1.0000	1.0000
L23	23	MP3-05	40.00 - 50.00	1.0000	1.0000
L24	18	Safety Line 3/8	39.00 - 40.00	1.0000	1.0000
L24	20	MP3-05	39.00 - 40.00	1.0000	1.0000
L24	21	MP3-05	39.00 - 40.00	1.0000	1.0000
L24	23	MP3-05	39.00 - 40.00	1.0000	1.0000
L25	18	Safety Line 3/8	34.00 - 39.00	1.0000	1.0000
L25	20	MP3-05	34.00 - 39.00	1.0000	1.0000
L25	21	MP3-05	34.00 - 39.00	1.0000	1.0000
L25	23	MP3-05	34.00 - 39.00	1.0000	1.0000
L26	18	Safety Line 3/8	29.00 - 34.00	1.0000	1.0000
L26	20	MP3-05	29.00 - 34.00	1.0000	1.0000

Tower Section	Feed Line Record No.	Description	Feed Line Segment Elev.	K_a No Ice	K_a Ice
L26	21	MP3-05	29.00 - 34.00	1.0000	1.0000
L26	23	MP3-05	29.00 - 34.00	1.0000	1.0000
L27	18	Safety Line 3/8	24.00 - 29.00	1.0000	1.0000
L27	20	MP3-05	24.00 - 29.00	1.0000	1.0000
L27	21	MP3-05	24.00 - 29.00	1.0000	1.0000
L27	23	MP3-05	24.00 - 29.00	1.0000	1.0000
L28	18	Safety Line 3/8	19.00 - 24.00	1.0000	1.0000
L28	20	MP3-05	19.00 - 24.00	1.0000	1.0000
L28	21	MP3-05	19.00 - 24.00	1.0000	1.0000
L28	23	MP3-05	19.00 - 24.00	1.0000	1.0000
L29	18	Safety Line 3/8	14.00 - 19.00	1.0000	1.0000
L29	20	MP3-05	14.00 - 19.00	1.0000	1.0000
L29	21	MP3-05	14.00 - 19.00	1.0000	1.0000
L29	23	MP3-05	14.00 - 19.00	1.0000	1.0000
L29	26	MP3-06 - Weight	14.00 - 16.50	1.0000	1.0000
L30	18	Safety Line 3/8	13.08 - 14.00	1.0000	1.0000
L30	20	MP3-05	13.08 - 14.00	1.0000	1.0000
L30	21	MP3-05	13.08 - 14.00	1.0000	1.0000
L30	23	MP3-05	13.08 - 14.00	1.0000	1.0000
L30	26	MP3-06 - Weight	13.08 - 14.00	1.0000	1.0000
L31	18	Safety Line 3/8	12.83 - 13.08	1.0000	1.0000
L31	20	MP3-05	12.83 - 13.08	1.0000	1.0000
L31	21	MP3-05	12.83 - 13.08	1.0000	1.0000
L31	23	MP3-05	12.83 - 13.08	1.0000	1.0000
L31	26	MP3-06 - Weight	12.83 - 13.08	1.0000	1.0000
L32	18	Safety Line 3/8	12.58 - 12.83	1.0000	1.0000
L32	20	MP3-05	12.58 - 12.83	1.0000	1.0000
L32	21	MP3-05	12.58 - 12.83	1.0000	1.0000
L32	23	MP3-05	12.58 - 12.83	1.0000	1.0000
L32	25	MP3-06	12.58 - 12.83	1.0000	1.0000
L33	18	Safety Line 3/8	7.58 - 12.58	1.0000	1.0000
L33	20	MP3-05	7.58 - 12.58	1.0000	1.0000
L33	21	MP3-05	7.58 - 12.58	1.0000	1.0000
L33	22	MP3-05	7.58 - 7.58	1.0000	1.0000
L33	23	MP3-05	10.42 - 12.58	1.0000	1.0000
L33	25	MP3-06	7.58 - 12.58	1.0000	1.0000
L34	18	Safety Line 3/8	5.17 - 7.58	1.0000	1.0000
L34	20	MP3-05	5.17 - 7.58	1.0000	1.0000
L34	21	MP3-05	5.17 - 7.58	1.0000	1.0000
L34	22	MP3-05	5.17 - 7.58	1.0000	1.0000
L34	25	MP3-06	5.17 - 7.58	1.0000	1.0000
L35	18	Safety Line 3/8	4.92 - 5.17	1.0000	1.0000
L35	20	MP3-05	4.92 - 5.17	1.0000	1.0000
L35	21	MP3-05	4.92 - 5.17	1.0000	1.0000
L35	22	MP3-05	4.92 - 5.17	1.0000	1.0000
L35	24	MP3-06 - Weight	4.92 - 5.17	1.0000	1.0000
L36	18	Safety Line 3/8	4.67 - 4.92	1.0000	1.0000
L36	20	MP3-05	4.67 - 4.92	1.0000	1.0000
L36	21	MP3-05	4.67 - 4.92	1.0000	1.0000
L36	22	MP3-05	4.67 - 4.92	1.0000	1.0000
L36	24	MP3-06 - Weight	4.67 - 4.92	1.0000	1.0000
L37	18	Safety Line 3/8	0.00 - 4.67	1.0000	1.0000
L37	20	MP3-05	0.00 - 4.67	1.0000	1.0000
L37	21	MP3-05	0.00 - 4.67	1.0000	1.0000
L37	22	MP3-05	0.00 - 4.67	1.0000	1.0000
L37	24	MP3-06 - Weight	1.50 - 4.67	1.0000	1.0000

Effective Width of Flat Linear Attachments / Feed Lines

Tower Section	Attachment Record No.	Description	Attachment Segment Elev.	Ratio Calculation Method	Effective Width Ratio
L11	20	MP3-05	97.00 - 99.42	Auto	0.0890
L11	21	MP3-05	97.00 - 99.42	Auto	0.0890
L11	23	MP3-05	97.00 - 99.42	Auto	0.0890
L12	20	MP3-05	96.75 - 97.00	Auto	0.1517
L12	21	MP3-05	96.75 - 97.00	Auto	0.1517
L12	23	MP3-05	96.75 - 97.00	Auto	0.1517
L13	20	MP3-05	91.75 - 96.75	Auto	0.1328
L13	21	MP3-05	91.75 - 96.75	Auto	0.1328
L13	23	MP3-05	91.75 - 96.75	Auto	0.1328
L14	20	MP3-05	86.75 - 91.75	Auto	0.1027
L14	21	MP3-05	86.75 - 91.75	Auto	0.1027
L14	23	MP3-05	86.75 - 91.75	Auto	0.1027
L15	20	MP3-05	80.75 - 86.75	Auto	0.0718
L15	21	MP3-05	80.75 - 86.75	Auto	0.0718
L15	23	MP3-05	80.75 - 86.75	Auto	0.0718
L16	20	MP3-05	80.00 - 80.75	Auto	0.0777
L16	21	MP3-05	80.00 - 80.75	Auto	0.0777
L16	23	MP3-05	80.00 - 80.75	Auto	0.0777
L17	20	MP3-05	75.00 - 80.00	Auto	0.0615
L17	21	MP3-05	75.00 - 80.00	Auto	0.0615
L17	23	MP3-05	75.00 - 80.00	Auto	0.0615
L18	20	MP3-05	70.00 - 75.00	Auto	0.0314
L18	21	MP3-05	70.00 - 75.00	Auto	0.0314
L18	23	MP3-05	70.00 - 75.00	Auto	0.0314
L19	20	MP3-05	65.00 - 70.00	Auto	0.0042
L19	21	MP3-05	65.00 - 70.00	Auto	0.0042
L19	23	MP3-05	65.00 - 70.00	Auto	0.0042
L20	20	MP3-05	60.00 - 65.00	Auto	0.0000
L20	21	MP3-05	60.00 - 65.00	Auto	0.0000
L20	23	MP3-05	60.00 - 65.00	Auto	0.0000
L21	20	MP3-05	55.00 - 60.00	Auto	0.0000
L21	21	MP3-05	55.00 - 60.00	Auto	0.0000
L21	23	MP3-05	55.00 - 60.00	Auto	0.0000
L22	20	MP3-05	50.00 - 55.00	Auto	0.0000
L22	21	MP3-05	50.00 - 55.00	Auto	0.0000
L22	23	MP3-05	50.00 - 55.00	Auto	0.0000
L23	20	MP3-05	40.00 - 50.00	Auto	0.0000
L23	21	MP3-05	40.00 - 50.00	Auto	0.0000
L23	23	MP3-05	40.00 - 50.00	Auto	0.0000
L24	20	MP3-05	39.00 - 40.00	Auto	0.0000
L24	21	MP3-05	39.00 - 40.00	Auto	0.0000
L24	23	MP3-05	39.00 - 40.00	Auto	0.0000
L25	20	MP3-05	34.00 - 39.00	Auto	0.0000
L25	21	MP3-05	34.00 - 39.00	Auto	0.0000
L25	23	MP3-05	34.00 - 39.00	Auto	0.0000
L26	20	MP3-05	29.00 - 34.00	Auto	0.0000
L26	21	MP3-05	29.00 - 34.00	Auto	0.0000
L26	23	MP3-05	29.00 - 34.00	Auto	0.0000
L27	20	MP3-05	24.00 - 29.00	Auto	0.0000
L27	21	MP3-05	24.00 - 29.00	Auto	0.0000
L27	23	MP3-05	24.00 - 29.00	Auto	0.0000
L28	20	MP3-05	19.00 - 24.00	Auto	0.0000
L28	21	MP3-05	19.00 - 24.00	Auto	0.0000
L28	23	MP3-05	19.00 - 24.00	Auto	0.0000
L29	20	MP3-05	14.00 - 19.00	Auto	0.0000
L29	21	MP3-05	14.00 - 19.00	Auto	0.0000
L29	23	MP3-05	14.00 - 19.00	Auto	0.0000
L29	26	MP3-06 - Weight	14.00 - 16.50	Auto	0.0133
L30	20	MP3-05	13.08 - 14.00	Auto	0.0000
L30	21	MP3-05	13.08 - 14.00	Auto	0.0000
L30	23	MP3-05	13.08 - 14.00	Auto	0.0000
L30	26	MP3-06 - Weight	13.08 - 14.00	Auto	0.0059
L31	20	MP3-05	12.83 - 13.08	Auto	0.0000
L31	21	MP3-05	12.83 - 13.08	Auto	0.0000
L31	23	MP3-05	12.83 - 13.08	Auto	0.0000

Tower Section	Attachment Record No.	Description	Attachment Segment Elev.	Ratio Calculation Method	Effective Width Ratio
L31	26	MP3-06 - Weight	12.83 - 13.08	Auto	0.0033
L32	20	MP3-05	12.58 - 12.83	Auto	0.0000
L32	21	MP3-05	12.58 - 12.83	Auto	0.0000
L32	23	MP3-05	12.58 - 12.83	Auto	0.0000
L32	25	MP3-06	12.58 - 12.83	Auto	0.0000
L33	20	MP3-05	7.58 - 12.58	Auto	0.0000
L33	21	MP3-05	7.58 - 12.58	Auto	0.0000
L33	22	MP3-05	7.58 - 7.58	Auto	0.0000
L33	23	MP3-05	10.42 - 12.58	Auto	0.0000
L33	25	MP3-06	7.58 - 12.58	Auto	0.0000
L34	20	MP3-05	5.17 - 7.58	Auto	0.0000
L34	21	MP3-05	5.17 - 7.58	Auto	0.0000
L34	22	MP3-05	5.17 - 7.58	Auto	0.0000
L34	25	MP3-06	5.17 - 7.58	Auto	0.0000
L35	20	MP3-05	4.92 - 5.17	Auto	0.0000
L35	21	MP3-05	4.92 - 5.17	Auto	0.0000
L35	22	MP3-05	4.92 - 5.17	Auto	0.0000
L35	24	MP3-06 - Weight	4.92 - 5.17	Auto	0.0000
L36	20	MP3-05	4.67 - 4.92	Auto	0.0000
L36	21	MP3-05	4.67 - 4.92	Auto	0.0000
L36	22	MP3-05	4.67 - 4.92	Auto	0.0000
L36	24	MP3-06 - Weight	4.67 - 4.92	Auto	0.0000
L37	20	MP3-05	0.00 - 4.67	Auto	0.0000
L37	21	MP3-05	0.00 - 4.67	Auto	0.0000
L37	22	MP3-05	0.00 - 4.67	Auto	0.0000
L37	24	MP3-06 - Weight	1.50 - 4.67	Auto	0.0000

Discrete Tower Loads

Description	Face or Leg	Offset Type	Offsets: Horz Lateral Vert ft ft ft	Azimuth Adjustment °	Placement ft		C_AA_A Front ft^2	C_AA_A Side ft^2	Weight K
Top Hat	C	None		0.0000	149.00	No Ice	3.00	3.00	0.08
						1/2" Ice	3.48	3.48	0.11
						1" Ice	3.96	3.96	0.14
						2" Ice	4.92	4.92	0.20
6'x2" Mount Pipe	C	From Leg	0.00 0.00 3.00	0.0000	148.00	No Ice	1.43	1.43	0.02
						1/2" Ice	1.92	1.92	0.03
						1" Ice	2.29	2.29	0.05
						2" Ice	3.06	3.06	0.09
***									
Platform Mount [LP 1201-1_KCKR-HR-1]	C	None		0.0000	150.00	No Ice	37.61	37.61	2.63
						1/2" Ice	45.62	45.62	3.48
						1" Ice	53.59	53.59	4.46
						2" Ice	69.65	69.65	6.85
APX16DWV-16DWV-S-E-A20 w/ Mount Pipe	A	From Leg	4.00 -6.00 -2.00	0.0000	150.00	No Ice	6.29	2.76	0.06
						1/2" Ice	6.86	3.27	0.11
						1" Ice	7.45	3.79	0.16
						2" Ice	8.68	4.90	0.29
APX16DWV-16DWV-S-E-A20 w/ Mount Pipe	B	From Leg	4.00 -6.00 -2.00	0.0000	150.00	No Ice	6.29	2.76	0.06
						1/2" Ice	6.86	3.27	0.11
						1" Ice	7.45	3.79	0.16
							8.68	4.90	0.29

Description	Face or Leg	Offset Type	Offsets: Horz Lateral Vert ft ft ft	Azimuth Adjustment °	Placement ft		C_AA_A Front ft^2	C_AA_A Side ft^2	Weight K
						2" Ice			
APX16DWV-16DWV-S-E-A20 w/ Mount Pipe	C	From Leg	4.00 -6.00 -2.00	0.0000	150.00	No Ice 1/2" Ice 1" Ice 2" Ice	6.29 6.86 7.45 8.68	2.76 3.27 3.79 4.90	0.06 0.11 0.16 0.29
APXVAALL24_43-U-NA20_TMO w/ Mount Pipe	A	From Leg	4.00 0.00 -2.00	0.0000	150.00	No Ice 1/2" Ice 1" Ice 2" Ice	14.69 15.46 16.23 17.82	6.87 7.55 8.25 9.67	0.18 0.31 0.45 0.78
APXVAALL24_43-U-NA20_TMO w/ Mount Pipe	B	From Leg	4.00 0.00 -2.00	0.0000	150.00	No Ice 1/2" Ice 1" Ice 2" Ice	14.69 15.46 16.23 17.82	6.87 7.55 8.25 9.67	0.18 0.31 0.45 0.78
APXVAALL24_43-U-NA20_TMO w/ Mount Pipe	C	From Leg	4.00 0.00 -2.00	0.0000	150.00	No Ice 1/2" Ice 1" Ice 2" Ice	14.69 15.46 16.23 17.82	6.87 7.55 8.25 9.67	0.18 0.31 0.45 0.78
AIR6449 B41_T-MOBILE w/ Mount Pipe	A	From Leg	4.00 6.00 -2.00	0.0000	150.00	No Ice 1/2" Ice 1" Ice 2" Ice	5.19 5.59 6.02 6.90	2.71 3.04 3.38 4.12	0.13 0.17 0.23 0.35
AIR6449 B41_T-MOBILE w/ Mount Pipe	B	From Leg	4.00 6.00 -2.00	0.0000	150.00	No Ice 1/2" Ice 1" Ice 2" Ice	5.19 5.59 6.02 6.90	2.71 3.04 3.38 4.12	0.13 0.17 0.23 0.35
AIR6449 B41_T-MOBILE w/ Mount Pipe	C	From Leg	4.00 6.00 -2.00	0.0000	150.00	No Ice 1/2" Ice 1" Ice 2" Ice	5.19 5.59 6.02 6.90	2.71 3.04 3.38 4.12	0.13 0.17 0.23 0.35
RADIO 4415 B66A	A	From Leg	4.00 0.00 -2.00	0.0000	150.00	No Ice 1/2" Ice 1" Ice 2" Ice	1.86 2.03 2.20 2.58	0.87 1.00 1.13 1.43	0.05 0.06 0.08 0.12
RADIO 4415 B66A	B	From Leg	4.00 0.00 -2.00	0.0000	150.00	No Ice 1/2" Ice 1" Ice 2" Ice	1.86 2.03 2.20 2.58	0.87 1.00 1.13 1.43	0.05 0.06 0.08 0.12
RADIO 4415 B66A	C	From Leg	4.00 0.00 -2.00	0.0000	150.00	No Ice 1/2" Ice 1" Ice 2" Ice	1.86 2.03 2.20 2.58	0.87 1.00 1.13 1.43	0.05 0.06 0.08 0.12
RADIO 4449 B71 B85A_T-MOBILE	A	From Leg	4.00 0.00 -2.00	0.0000	150.00	No Ice 1/2" Ice 1" Ice 2" Ice	1.97 2.15 2.33 2.72	1.59 1.75 1.92 2.28	0.07 0.09 0.12 0.17
RADIO 4449 B71 B85A_T-MOBILE	B	From Leg	4.00 0.00 -2.00	0.0000	150.00	No Ice 1/2" Ice 1" Ice 2" Ice	1.97 2.15 2.33 2.72	1.59 1.75 1.92 2.28	0.07 0.09 0.12 0.17
RADIO 4449 B71 B85A_T-MOBILE	C	From Leg	4.00 0.00 -2.00	0.0000	150.00	No Ice 1/2" Ice 1" Ice	1.97 2.15 2.33 2.72	1.59 1.75 1.92 2.28	0.07 0.09 0.12 0.17

Description	Face or Leg	Offset Type	Offsets: Horz Lateral Vert ft ft ft	Azimuth Adjustment °	Placement ft		C_AA_A Front ft^2	C_AA_A Side ft^2	Weight K
						2" Ice			
RADIO 4424 B25_TMO	A	From Leg	4.00	0.0000	150.00	No Ice	2.05	1.61	0.09
			0.00			1/2"	2.23	1.77	0.11
			-2.00			Ice	2.42	1.94	0.13
						1" Ice	2.81	2.30	0.19
						2" Ice			
RADIO 4424 B25_TMO	B	From Leg	4.00	0.0000	150.00	No Ice	2.05	1.61	0.09
			0.00			1/2"	2.23	1.77	0.11
			-2.00			Ice	2.42	1.94	0.13
						1" Ice	2.81	2.30	0.19
						2" Ice			
RADIO 4424 B25_TMO	C	From Leg	4.00	0.0000	150.00	No Ice	2.05	1.61	0.09
			0.00			1/2"	2.23	1.77	0.11
			-2.00			Ice	2.42	1.94	0.13
						1" Ice	2.81	2.30	0.19
						2" Ice			
***									
Side Arm Mount [SO 102-3]	C	None		0.0000	141.00	No Ice	3.60	3.60	0.07
						1/2"	4.18	4.18	0.11
						Ice	4.75	4.75	0.14
						1" Ice	5.90	5.90	0.20
						2" Ice			
6'x2" Mount Pipe	A	From Leg	1.00	0.0000	141.00	No Ice	1.43	1.43	0.02
			0.00			1/2"	1.92	1.92	0.03
			1.00			Ice	2.29	2.29	0.05
						1" Ice	3.06	3.06	0.09
						2" Ice			
6'x2" Mount Pipe	B	From Leg	1.00	0.0000	141.00	No Ice	1.43	1.43	0.02
			0.00			1/2"	1.92	1.92	0.03
			1.00			Ice	2.29	2.29	0.05
						1" Ice	3.06	3.06	0.09
						2" Ice			
6'x2" Mount Pipe	C	From Leg	1.00	0.0000	141.00	No Ice	1.43	1.43	0.02
			0.00			1/2"	1.92	1.92	0.03
			1.00			Ice	2.29	2.29	0.05
						1" Ice	3.06	3.06	0.09
						2" Ice			
RRUS 11 B12	A	From Leg	1.00	0.0000	141.00	No Ice	2.83	1.18	0.05
			0.00			1/2"	3.04	1.33	0.07
			2.00			Ice	3.26	1.48	0.10
						1" Ice	3.71	1.83	0.15
						2" Ice			
RRUS 11 B12	B	From Leg	1.00	0.0000	141.00	No Ice	2.83	1.18	0.05
			0.00			1/2"	3.04	1.33	0.07
			2.00			Ice	3.26	1.48	0.10
						1" Ice	3.71	1.83	0.15
						2" Ice			
RRUS 11 B12	C	From Leg	1.00	0.0000	141.00	No Ice	2.83	1.18	0.05
			0.00			1/2"	3.04	1.33	0.07
			2.00			Ice	3.26	1.48	0.10
						1" Ice	3.71	1.83	0.15
						2" Ice			
***									
T-Arm Mount [TA 602-3]	C	None		0.0000	140.00	No Ice	13.40	13.40	0.77
						1/2"	16.44	16.44	1.00
						Ice	19.70	19.70	1.29
						1" Ice	25.86	25.86	2.05
						2" Ice			
7770.00 w/ Mount Pipe	A	From Leg	4.00	0.0000	140.00	No Ice	5.75	4.25	0.06
			-6.00			1/2"	6.18	5.01	0.10
			0.00			Ice	6.61	5.71	0.16
						1" Ice	7.49	7.16	0.29
						2" Ice			
7770.00 w/ Mount Pipe	B	From Leg	4.00	0.0000	140.00	No Ice	5.75	4.25	0.06
			-6.00			1/2"	6.18	5.01	0.10

Description	Face or Leg	Offset Type	Offsets: Horz Lateral Vert ft ft ft	Azimuth Adjustment °	Placement ft		C_AA_A Front ft^2	C_AA_A Side ft^2	Weight K
			0.00			Ice	6.61	5.71	0.16
						1" Ice	7.49	7.16	0.29
						2" Ice			
7770.00 w/ Mount Pipe	C	From Leg	4.00	0.0000	140.00	No Ice	5.75	4.25	0.06
			-6.00			1/2"	6.18	5.01	0.10
			0.00			Ice	6.61	5.71	0.16
						1" Ice	7.49	7.16	0.29
						2" Ice			
TPA65R-BU6D w/ Mount Pipe	A	From Leg	4.00	0.0000	140.00	No Ice	12.25	6.05	0.10
			0.00			1/2"	13.00	6.71	0.19
			0.00			Ice	13.76	7.39	0.28
						1" Ice	15.34	8.79	0.52
						2" Ice			
TPA65R-BU6D w/ Mount Pipe	A	From Leg	4.00	0.0000	140.00	No Ice	12.25	6.05	0.10
			6.00			1/2"	13.00	6.71	0.19
			0.00			Ice	13.76	7.39	0.28
						1" Ice	15.34	8.79	0.52
						2" Ice			
OPA65R-BU4D w/ Mount Pipe	B	From Leg	4.00	0.0000	140.00	No Ice	8.64	4.73	0.08
			0.00			1/2"	9.09	5.34	0.15
			0.00			Ice	9.54	5.97	0.22
						1" Ice	10.48	7.26	0.39
						2" Ice			
OPA65R-BU4D w/ Mount Pipe	B	From Leg	4.00	0.0000	140.00	No Ice	8.64	4.73	0.08
			6.00			1/2"	9.09	5.34	0.15
			0.00			Ice	9.54	5.97	0.22
						1" Ice	10.48	7.26	0.39
						2" Ice			
TPA65R-BU6D w/ Mount Pipe	C	From Leg	4.00	0.0000	140.00	No Ice	12.25	6.05	0.10
			0.00			1/2"	13.00	6.71	0.19
			0.00			Ice	13.76	7.39	0.28
						1" Ice	15.34	8.79	0.52
						2" Ice			
TPA65R-BU6D w/ Mount Pipe	C	From Leg	4.00	0.0000	140.00	No Ice	12.25	6.05	0.10
			6.00			1/2"	13.00	6.71	0.19
			0.00			Ice	13.76	7.39	0.28
						1" Ice	15.34	8.79	0.52
						2" Ice			
TT08-19DB111-001	A	From Leg	4.00	0.0000	140.00	No Ice	0.79	0.64	0.02
			0.00			1/2"	0.91	0.75	0.03
			2.00			Ice	1.04	0.87	0.04
						1" Ice	1.32	1.13	0.06
						2" Ice			
TT08-19DB111-001	B	From Leg	4.00	0.0000	140.00	No Ice	0.79	0.64	0.02
			0.00			1/2"	0.91	0.75	0.03
			2.00			Ice	1.04	0.87	0.04
						1" Ice	1.32	1.13	0.06
						2" Ice			
TT08-19DB111-001	C	From Leg	4.00	0.0000	140.00	No Ice	0.79	0.64	0.02
			0.00			1/2"	0.91	0.75	0.03
			2.00			Ice	1.04	0.87	0.04
						1" Ice	1.32	1.13	0.06
						2" Ice			
RRUS 4478 B14	A	From Leg	4.00	0.0000	140.00	No Ice	1.84	1.06	0.06
			0.00			1/2"	2.01	1.20	0.08
			2.00			Ice	2.19	1.34	0.09
						1" Ice	2.57	1.66	0.14
						2" Ice			
RRUS 4478 B14	B	From Leg	4.00	0.0000	140.00	No Ice	1.84	1.06	0.06
			0.00			1/2"	2.01	1.20	0.08
			2.00			Ice	2.19	1.34	0.09
						1" Ice	2.57	1.66	0.14
						2" Ice			
RRUS 4478 B14	C	From Leg	4.00	0.0000	140.00	No Ice	1.84	1.06	0.06
			0.00			1/2"	2.01	1.20	0.08

Description	Face or Leg	Offset Type	Offsets: Horz Lateral Vert ft ft ft	Azimuth Adjustment °	Placement ft		C_AA_A Front ft^2	C_AA_A Side ft^2	Weight K
			2.00			Ice	2.19	1.34	0.09
						1" Ice	2.57	1.66	0.14
						2" Ice			
RRUS 4449 B5/B12	A	From Leg	4.00	0.0000	140.00	No Ice	1.97	1.41	0.07
			0.00			1/2"	2.14	1.56	0.09
			2.00			Ice	2.33	1.73	0.11
						1" Ice	2.72	2.07	0.16
						2" Ice			
RRUS 4449 B5/B12	B	From Leg	4.00	0.0000	140.00	No Ice	1.97	1.41	0.07
			0.00			1/2"	2.14	1.56	0.09
			2.00			Ice	2.33	1.73	0.11
						1" Ice	2.72	2.07	0.16
						2" Ice			
RRUS 4449 B5/B12	C	From Leg	4.00	0.0000	140.00	No Ice	1.97	1.41	0.07
			0.00			1/2"	2.14	1.56	0.09
			2.00			Ice	2.33	1.73	0.11
						1" Ice	2.72	2.07	0.16
						2" Ice			
RRUS 8843 B2/B66A	A	From Leg	4.00	0.0000	140.00	No Ice	1.64	1.35	0.07
			0.00			1/2"	1.80	1.50	0.09
			2.00			Ice	1.97	1.65	0.11
						1" Ice	2.32	1.99	0.16
						2" Ice			
RRUS 8843 B2/B66A	B	From Leg	4.00	0.0000	140.00	No Ice	1.64	1.35	0.07
			0.00			1/2"	1.80	1.50	0.09
			2.00			Ice	1.97	1.65	0.11
						1" Ice	2.32	1.99	0.16
						2" Ice			
RRUS 8843 B2/B66A	C	From Leg	4.00	0.0000	140.00	No Ice	1.64	1.35	0.07
			0.00			1/2"	1.80	1.50	0.09
			2.00			Ice	1.97	1.65	0.11
						1" Ice	2.32	1.99	0.16
						2" Ice			
DC6-48-60-0-8C-EV	A	From Leg	1.00	0.0000	140.00	No Ice	2.74	4.78	0.03
			0.00			1/2"	2.96	5.06	0.06
			2.00			Ice	3.20	5.35	0.10
						1" Ice	3.68	5.95	0.20
						2" Ice			
DC6-48-60-0-8C-EV	B	From Leg	1.00	0.0000	140.00	No Ice	2.74	4.78	0.03
			0.00			1/2"	2.96	5.06	0.06
			2.00			Ice	3.20	5.35	0.10
						1" Ice	3.68	5.95	0.20
						2" Ice			
DC6-48-60-18-8F	C	From Leg	1.00	0.0000	140.00	No Ice	0.92	0.92	0.02
			0.00			1/2"	1.46	1.46	0.04
			0.00			Ice	1.64	1.64	0.06
						1" Ice	2.04	2.04	0.11
						2" Ice			
***									
Platform Mount [LP 303-1]	C	None		0.0000	130.00	No Ice	14.69	14.69	1.25
						1/2"	18.01	18.01	1.57
						Ice	21.34	21.34	1.94
						1" Ice	28.08	28.08	2.85
						2" Ice			
Sub6 Antenna - VZS01 w/ Mount Pipe	A	From Leg	4.00	0.0000	130.00	No Ice	5.91	3.74	0.12
			3.00			1/2"	6.72	4.79	0.17
			-2.00			Ice	7.44	5.70	0.22
						1" Ice	8.68	7.17	0.36
						2" Ice			
Sub6 Antenna - VZS01 w/ Mount Pipe	B	From Leg	4.00	0.0000	130.00	No Ice	5.91	3.74	0.12
			3.00			1/2"	6.72	4.79	0.17
			-2.00			Ice	7.44	5.70	0.22
						1" Ice	8.68	7.17	0.36
						2" Ice			
Sub6 Antenna - VZS01 w/	C	From Leg	4.00	0.0000	130.00	No Ice	5.91	3.74	0.12

Description	Face or Leg	Offset Type	Offsets: Horz Lateral Vert ft ft ft	Azimuth Adjustment °	Placement ft		C_AA_A Front ft^2	C_AA_A Side ft^2	Weight K
Mount Pipe			3.00			1/2"	6.72	4.79	0.17
			-2.00			Ice	7.44	5.70	0.22
						1" Ice	8.68	7.17	0.36
						2" Ice			
(2) LPA-80080/6CF w/ Mount Pipe	A	From Leg	4.00	0.0000	130.00	No Ice	4.56	10.26	0.05
			0.00			1/2"	5.11	11.43	0.11
			-2.00			Ice	5.61	12.31	0.19
						1" Ice	6.65	14.13	0.36
						2" Ice			
(2) LPA-80080/6CF w/ Mount Pipe	B	From Leg	4.00	0.0000	130.00	No Ice	4.56	10.26	0.05
			0.00			1/2"	5.11	11.43	0.11
			-2.00			Ice	5.61	12.31	0.19
						1" Ice	6.65	14.13	0.36
						2" Ice			
(2) LPA-80080-6CF-EDIN-6 w/ Mount Pipe	C	From Leg	4.00	0.0000	130.00	No Ice	4.56	10.26	0.05
			0.00			1/2"	5.11	11.43	0.11
			-2.00			Ice	5.61	12.31	0.19
						1" Ice	6.65	14.13	0.36
						2" Ice			
(2) SBNHH-1D65B w/ Mount Pipe	A	From Leg	4.00	0.0000	130.00	No Ice	4.09	3.30	0.07
			0.00			1/2"	4.49	3.68	0.13
			-2.00			Ice	4.89	4.07	0.20
						1" Ice	5.72	4.87	0.39
						2" Ice			
(2) SBNHH-1D65B w/ Mount Pipe	B	From Leg	4.00	0.0000	130.00	No Ice	4.09	3.30	0.07
			0.00			1/2"	4.49	3.68	0.13
			-2.00			Ice	4.89	4.07	0.20
						1" Ice	5.72	4.87	0.39
						2" Ice			
(2) SBNHH-1D65B w/ Mount Pipe	C	From Leg	4.00	0.0000	130.00	No Ice	4.09	3.30	0.07
			0.00			1/2"	4.49	3.68	0.13
			-2.00			Ice	4.89	4.07	0.20
						1" Ice	5.72	4.87	0.39
						2" Ice			
DB-C1-12C-24AB-0Z	A	From Leg	4.00	0.0000	130.00	No Ice	4.06	3.10	0.03
			0.00			1/2"	4.32	3.34	0.07
			-2.00			Ice	4.58	3.58	0.11
						1" Ice	5.14	4.09	0.20
						2" Ice			
RFV01U-D1A	A	From Leg	4.00	0.0000	130.00	No Ice	1.88	1.25	0.08
			0.00			1/2"	2.05	1.39	0.10
			-2.00			Ice	2.22	1.54	0.12
						1" Ice	2.60	1.86	0.18
						2" Ice			
RFV01U-D1A	B	From Leg	4.00	0.0000	130.00	No Ice	1.88	1.25	0.08
			0.00			1/2"	2.05	1.39	0.10
			-2.00			Ice	2.22	1.54	0.12
						1" Ice	2.60	1.86	0.18
						2" Ice			
RFV01U-D1A	C	From Leg	4.00	0.0000	130.00	No Ice	1.88	1.25	0.08
			0.00			1/2"	2.05	1.39	0.10
			-2.00			Ice	2.22	1.54	0.12
						1" Ice	2.60	1.86	0.18
						2" Ice			
RFV01U-D2A	A	From Leg	4.00	0.0000	130.00	No Ice	1.88	1.01	0.07
			0.00			1/2"	2.05	1.14	0.09
			-2.00			Ice	2.22	1.28	0.11
						1" Ice	2.60	1.59	0.15
						2" Ice			
RFV01U-D2A	B	From Leg	4.00	0.0000	130.00	No Ice	1.88	1.01	0.07
			0.00			1/2"	2.05	1.14	0.09
			-2.00			Ice	2.22	1.28	0.11
						1" Ice	2.60	1.59	0.15
						2" Ice			
RFV01U-D2A	C	From Leg	4.00	0.0000	130.00	No Ice	1.88	1.01	0.07

Description	Face or Leg	Offset Type	Offsets: Horz Lateral Vert ft ft ft	Azimuth Adjustment °	Placement ft		C_AA_A Front ft^2	C_AA_A Side ft^2	Weight K
			0.00			1/2"	2.05	1.14	0.09
			-2.00			Ice	2.22	1.28	0.11
						1" Ice	2.60	1.59	0.15
						2" Ice			
***									

Load Combinations

Comb. No.	Description
1	Dead Only
2	1.2 Dead+1.0 Wind 0 deg - No Ice
3	0.9 Dead+1.0 Wind 0 deg - No Ice
4	1.2 Dead+1.0 Wind 30 deg - No Ice
5	0.9 Dead+1.0 Wind 30 deg - No Ice
6	1.2 Dead+1.0 Wind 60 deg - No Ice
7	0.9 Dead+1.0 Wind 60 deg - No Ice
8	1.2 Dead+1.0 Wind 90 deg - No Ice
9	0.9 Dead+1.0 Wind 90 deg - No Ice
10	1.2 Dead+1.0 Wind 120 deg - No Ice
11	0.9 Dead+1.0 Wind 120 deg - No Ice
12	1.2 Dead+1.0 Wind 150 deg - No Ice
13	0.9 Dead+1.0 Wind 150 deg - No Ice
14	1.2 Dead+1.0 Wind 180 deg - No Ice
15	0.9 Dead+1.0 Wind 180 deg - No Ice
16	1.2 Dead+1.0 Wind 210 deg - No Ice
17	0.9 Dead+1.0 Wind 210 deg - No Ice
18	1.2 Dead+1.0 Wind 240 deg - No Ice
19	0.9 Dead+1.0 Wind 240 deg - No Ice
20	1.2 Dead+1.0 Wind 270 deg - No Ice
21	0.9 Dead+1.0 Wind 270 deg - No Ice
22	1.2 Dead+1.0 Wind 300 deg - No Ice
23	0.9 Dead+1.0 Wind 300 deg - No Ice
24	1.2 Dead+1.0 Wind 330 deg - No Ice
25	0.9 Dead+1.0 Wind 330 deg - No Ice
26	1.2 Dead+1.0 Ice+1.0 Temp
27	1.2 Dead+1.0 Wind 0 deg+1.0 Ice+1.0 Temp
28	1.2 Dead+1.0 Wind 30 deg+1.0 Ice+1.0 Temp
29	1.2 Dead+1.0 Wind 60 deg+1.0 Ice+1.0 Temp
30	1.2 Dead+1.0 Wind 90 deg+1.0 Ice+1.0 Temp
31	1.2 Dead+1.0 Wind 120 deg+1.0 Ice+1.0 Temp
32	1.2 Dead+1.0 Wind 150 deg+1.0 Ice+1.0 Temp
33	1.2 Dead+1.0 Wind 180 deg+1.0 Ice+1.0 Temp
34	1.2 Dead+1.0 Wind 210 deg+1.0 Ice+1.0 Temp
35	1.2 Dead+1.0 Wind 240 deg+1.0 Ice+1.0 Temp
36	1.2 Dead+1.0 Wind 270 deg+1.0 Ice+1.0 Temp
37	1.2 Dead+1.0 Wind 300 deg+1.0 Ice+1.0 Temp
38	1.2 Dead+1.0 Wind 330 deg+1.0 Ice+1.0 Temp
39	Dead+Wind 0 deg - Service
40	Dead+Wind 30 deg - Service
41	Dead+Wind 60 deg - Service
42	Dead+Wind 90 deg - Service
43	Dead+Wind 120 deg - Service
44	Dead+Wind 150 deg - Service
45	Dead+Wind 180 deg - Service
46	Dead+Wind 210 deg - Service
47	Dead+Wind 240 deg - Service
48	Dead+Wind 270 deg - Service
49	Dead+Wind 300 deg - Service

Comb. No.	Description
50	Dead+Wind 330 deg - Service

Maximum Member Forces

Section No.	Elevation ft	Component Type	Condition	Gov. Load Comb.	Axial K	Major Axis Moment kip-ft	Minor Axis Moment kip-ft
L1	148 - 143	Pole	Max Tension	39	0.00	0.00	-0.00
			Max. Compression	26	-11.88	0.08	-0.00
			Max. Mx	20	-5.31	25.17	-0.02
			Max. My	14	-5.31	0.03	-25.16
			Max. Vy	20	-4.58	25.17	-0.02
			Max. Vx	2	-4.58	0.00	25.15
			Max. Torque	24			0.05
L2	143 - 138	Pole	Max Tension	1	0.00	0.00	0.00
			Max. Compression	26	-19.91	0.54	1.11
			Max. Mx	20	-8.38	58.38	-0.08
			Max. My	2	-8.37	-0.11	58.52
			Max. Vy	20	-8.49	58.38	-0.08
			Max. Vx	2	-8.53	-0.11	58.52
			Max. Torque	8			0.81
L3	138 - 133	Pole	Max Tension	1	0.00	0.00	0.00
			Max. Compression	26	-20.60	0.57	1.15
			Max. Mx	20	-8.81	101.54	-0.50
			Max. My	2	-8.80	-0.54	101.87
			Max. Vy	20	-8.77	101.54	-0.50
			Max. Vx	2	-8.81	-0.54	101.87
			Max. Torque	8			0.81
L4	133 - 128	Pole	Max Tension	1	0.00	0.00	0.00
			Max. Compression	26	-29.41	0.60	2.00
			Max. Mx	20	-12.34	147.67	-0.77
			Max. My	2	-12.33	-0.97	148.37
			Max. Vy	20	-12.38	147.67	-0.77
			Max. Vx	2	-12.45	-0.97	148.37
			Max. Torque	8			1.25
L5	128 - 123	Pole	Max Tension	1	0.00	0.00	0.00
			Max. Compression	26	-30.17	0.63	2.05
			Max. Mx	20	-12.86	210.22	-1.20
			Max. My	2	-12.85	-1.41	211.26
			Max. Vy	20	-12.65	210.22	-1.20
			Max. Vx	2	-12.71	-1.41	211.26
			Max. Torque	8			1.25
L6	123 - 117.25	Pole	Max Tension	1	0.00	0.00	0.00
			Max. Compression	26	-30.52	0.64	2.07
			Max. Mx	20	-13.10	238.80	-1.39
			Max. My	2	-13.09	-1.60	239.99
			Max. Vy	20	-12.77	238.80	-1.39
			Max. Vx	2	-12.83	-1.60	239.99
			Max. Torque	8			1.25
L7	117.25 - 115.75	Pole	Max Tension	1	0.00	0.00	0.00
			Max. Compression	26	-31.81	0.67	2.11
			Max. Mx	20	-13.95	303.41	-1.82
			Max. My	2	-13.94	-2.04	304.93
			Max. Vy	20	-13.08	303.41	-1.82
			Max. Vx	2	-13.15	-2.04	304.93
			Max. Torque	8			1.25
L8	115.75 - 110.75	Pole	Max Tension	1	0.00	0.00	0.00
			Max. Compression	26	-32.71	0.70	2.16
			Max. Mx	20	-14.62	369.43	-2.24
			Max. My	2	-14.61	-2.48	371.28
			Max. Vy	20	-13.35	369.43	-2.24
			Max. Vx	2	-13.41	-2.48	371.28
			Max. Torque	8			1.25
L9	110.75 - 105.75	Pole	Max Tension	1	0.00	0.00	0.00

Section No.	Elevation ft	Component Type	Condition	Gov. Load Comb.	Axial K	Major Axis Moment kip-ft	Minor Axis Moment kip-ft
			Max. Compression	26	-33.64	0.73	2.19
			Max. Mx	20	-15.30	436.79	-2.67
			Max. My	2	-15.29	-2.91	438.97
			Max. Vy	20	-13.61	436.79	-2.67
			Max. Vx	2	-13.68	-2.91	438.97
			Max. Torque	8			1.25
L10	105.75 - 100.75	Pole	Max Tension	1	0.00	0.00	0.00
			Max. Compression	26	-34.58	0.76	2.23
			Max. Mx	20	-16.00	505.45	-3.10
			Max. My	2	-15.99	-3.35	507.96
			Max. Vy	20	-13.87	505.45	-3.10
			Max. Vx	2	-13.93	-3.35	507.96
			Max. Torque	8			1.25
L11	100.75 - 97	Pole	Max Tension	1	0.00	0.00	0.00
			Max. Compression	26	-35.39	0.78	2.26
			Max. Mx	20	-16.54	557.78	-3.42
			Max. My	2	-16.53	-3.67	560.54
			Max. Vy	20	-14.06	557.78	-3.42
			Max. Vx	2	-14.13	-3.67	560.54
			Max. Torque	8			1.25
L12	97 - 96.75	Pole	Max Tension	1	0.00	0.00	0.00
			Max. Compression	26	-35.46	0.78	2.26
			Max. Mx	20	-16.60	561.30	-3.44
			Max. My	2	-16.59	-3.69	564.07
			Max. Vy	20	-14.07	561.30	-3.44
			Max. Vx	2	-14.14	-3.69	564.07
			Max. Torque	8			1.25
L13	96.75 - 91.75	Pole	Max Tension	1	0.00	0.00	0.00
			Max. Compression	26	-36.95	0.81	2.29
			Max. Mx	20	-17.64	632.39	-3.87
			Max. My	2	-17.64	-4.13	635.50
			Max. Vy	20	-14.38	632.39	-3.87
			Max. Vx	2	-14.44	-4.13	635.50
			Max. Torque	8			1.25
L14	91.75 - 86.75	Pole	Max Tension	1	0.00	0.00	0.00
			Max. Compression	26	-38.45	0.84	2.32
			Max. Mx	20	-18.71	705.01	-4.30
			Max. My	2	-18.70	-4.56	708.45
			Max. Vy	20	-14.68	705.01	-4.30
			Max. Vx	2	-14.75	-4.56	708.45
			Max. Torque	8			1.25
L15	86.75 - 80.75	Pole	Max Tension	1	0.00	0.00	0.00
			Max. Compression	26	-38.99	0.84	2.33
			Max. Mx	20	-19.08	730.78	-4.45
			Max. My	2	-19.07	-4.71	734.34
			Max. Vy	20	-14.79	730.78	-4.45
			Max. Vx	2	-14.86	-4.71	734.34
			Max. Torque	8			1.25
L16	80.75 - 80	Pole	Max Tension	1	0.00	0.00	0.00
			Max. Compression	26	-41.57	0.87	2.36
			Max. Mx	20	-20.95	805.62	-4.88
			Max. My	2	-20.94	-5.14	809.50
			Max. Vy	20	-15.15	805.62	-4.88
			Max. Vx	2	-15.22	-5.14	809.50
			Max. Torque	8			1.25
L17	80 - 75	Pole	Max Tension	1	0.00	0.00	0.00
			Max. Compression	26	-43.17	0.89	2.37
			Max. Mx	20	-22.11	882.07	-5.31
			Max. My	2	-22.10	-5.58	886.28
			Max. Vy	20	-15.44	882.07	-5.31
			Max. Vx	2	-15.51	-5.58	886.28
			Max. Torque	8			1.25
L18	75 - 70	Pole	Max Tension	1	0.00	0.00	0.00
			Max. Compression	26	-44.79	0.91	2.39
			Max. Mx	20	-23.29	959.95	-5.74

Section No.	Elevation ft	Component Type	Condition	Gov. Load Comb.	Axial K	Major Axis Moment kip-ft	Minor Axis Moment kip-ft
			Max. My	2	-23.28	-6.01	964.49
			Max. Vy	20	-15.73	959.95	-5.74
			Max. Vx	2	-15.79	-6.01	964.49
			Max. Torque	8			1.25
L19	70 - 65	Pole	Max Tension	1	0.00	0.00	0.00
			Max. Compression	26	-46.43	0.93	2.40
			Max. Mx	20	-24.49	1039.23	-6.17
			Max. My	2	-24.48	-6.44	1044.10
			Max. Vy	20	-16.00	1039.23	-6.17
			Max. Vx	2	-16.07	-6.44	1044.10
			Max. Torque	8			1.25
L20	65 - 60	Pole	Max Tension	1	0.00	0.00	0.00
			Max. Compression	26	-48.09	0.95	2.41
			Max. Mx	20	-25.71	1119.87	-6.60
			Max. My	2	-25.70	-6.87	1125.07
			Max. Vy	20	-16.27	1119.87	-6.60
			Max. Vx	2	-16.34	-6.87	1125.07
			Max. Torque	8			1.25
L21	60 - 55	Pole	Max Tension	1	0.00	0.00	0.00
			Max. Compression	26	-49.77	0.97	2.42
			Max. Mx	20	-26.94	1201.83	-7.02
			Max. My	2	-26.94	-7.30	1207.36
			Max. Vy	20	-16.53	1201.83	-7.02
			Max. Vx	2	-16.60	-7.30	1207.36
			Max. Torque	8			1.25
L22	55 - 50	Pole	Max Tension	1	0.00	0.00	0.00
			Max. Compression	26	-51.46	0.99	2.43
			Max. Mx	20	-28.19	1285.06	-7.45
			Max. My	2	-28.19	-7.73	1290.92
			Max. Vy	20	-16.78	1285.06	-7.45
			Max. Vx	2	-16.85	-7.73	1290.92
			Max. Torque	8			1.25
L23	50 - 40	Pole	Max Tension	1	0.00	0.00	0.00
			Max. Compression	26	-53.17	1.02	2.45
			Max. Mx	20	-29.47	1369.50	-7.88
			Max. My	2	-29.46	-8.16	1375.69
			Max. Vy	20	-17.02	1369.50	-7.88
			Max. Vx	2	-17.08	-8.16	1375.69
			Max. Torque	8			1.25
L24	40 - 39	Pole	Max Tension	1	0.00	0.00	0.00
			Max. Compression	26	-56.71	1.04	2.46
			Max. Mx	20	-32.12	1472.68	-8.39
			Max. My	2	-32.11	-8.67	1479.26
			Max. Vy	20	-17.38	1472.68	-8.39
			Max. Vx	2	-17.44	-8.67	1479.26
			Max. Torque	8			1.25
L25	39 - 34	Pole	Max Tension	1	0.00	0.00	0.00
			Max. Compression	26	-58.52	1.06	2.47
			Max. Mx	20	-33.50	1560.05	-8.81
			Max. My	2	-33.49	-9.09	1566.95
			Max. Vy	20	-17.59	1560.05	-8.81
			Max. Vx	2	-17.66	-9.09	1566.95
			Max. Torque	8			1.25
L26	34 - 29	Pole	Max Tension	1	0.00	0.00	0.00
			Max. Compression	26	-60.34	1.08	2.48
			Max. Mx	20	-34.89	1648.44	-9.23
			Max. My	2	-34.89	-9.51	1655.66
			Max. Vy	20	-17.79	1648.44	-9.23
			Max. Vx	2	-17.85	-9.51	1655.66
			Max. Torque	8			1.25
L27	29 - 24	Pole	Max Tension	1	0.00	0.00	0.00
			Max. Compression	26	-62.19	1.10	2.50
			Max. Mx	20	-36.31	1737.80	-9.65
			Max. My	2	-36.30	-9.93	1745.34
			Max. Vy	20	-17.98	1737.80	-9.65
			Max. Vx	2	-18.04	-9.93	1745.34
			Max. Torque	8			1.25
L28	24 - 19	Pole	Max Tension	1	0.00	0.00	0.00
			Max. Compression	26	-64.04	1.12	2.51

Section No.	Elevation ft	Component Type	Condition	Gov. Load Comb.	Axial K	Major Axis Moment kip-ft	Minor Axis Moment kip-ft
			Max. Mx	20	-37.74	1828.10	-10.06
			Max. My	2	-37.74	-10.35	1835.96
			Max. Vy	20	-18.17	1828.10	-10.06
			Max. Vx	2	-18.23	-10.35	1835.96
			Max. Torque	8			1.25
L29	19 - 14	Pole	Max Tension	1	0.00	0.00	0.00
			Max. Compression	26	-65.93	1.14	2.47
			Max. Mx	20	-39.19	1919.33	-10.48
			Max. My	2	-39.19	-10.76	1927.50
			Max. Vy	20	-18.35	1919.33	-10.48
			Max. Vx	2	-18.41	-10.76	1927.50
			Max. Torque	8			1.25
L30	14 - 13.08	Pole	Max Tension	1	0.00	0.00	0.00
			Max. Compression	26	-66.28	1.15	2.45
			Max. Mx	20	-39.46	1936.21	-10.55
			Max. My	2	-39.46	-10.83	1944.44
			Max. Vy	20	-18.38	1936.21	-10.55
			Max. Vx	2	-18.45	-10.83	1944.44
			Max. Torque	8			1.25
L31	13.08 - 12.83	Pole	Max Tension	1	0.00	0.00	0.00
			Max. Compression	26	-66.38	1.15	2.45
			Max. Mx	20	-39.54	1940.81	-10.57
			Max. My	2	-39.54	-10.85	1949.05
			Max. Vy	20	-18.39	1940.81	-10.57
			Max. Vx	2	-18.45	-10.85	1949.05
			Max. Torque	8			1.25
L32	12.83 - 12.58	Pole	Max Tension	1	0.00	0.00	0.00
			Max. Compression	26	-66.48	1.15	2.44
			Max. Mx	20	-39.62	1945.40	-10.59
			Max. My	2	-39.62	-10.87	1953.67
			Max. Vy	20	-18.40	1945.40	-10.59
			Max. Vx	2	-18.46	-10.87	1953.67
			Max. Torque	8			1.25
L33	12.58 - 7.58	Pole	Max Tension	1	0.00	0.00	0.00
			Max. Compression	26	-68.43	1.17	2.40
			Max. Mx	20	-41.15	2037.79	-11.00
			Max. My	2	-41.15	-11.28	2046.36
			Max. Vy	20	-18.58	2037.79	-11.00
			Max. Vx	2	-18.64	-11.28	2046.36
			Max. Torque	8			1.25
L34	7.58 - 5.17	Pole	Max Tension	1	0.00	0.00	0.00
			Max. Compression	26	-69.38	1.17	2.36
			Max. Mx	20	-41.89	2082.63	-11.20
			Max. My	2	-41.89	-11.48	2091.34
			Max. Vy	20	-18.67	2082.63	-11.20
			Max. Vx	2	-18.72	-11.48	2091.34
			Max. Torque	8			1.25
L35	5.17 - 4.92	Pole	Max Tension	1	0.00	0.00	0.00
			Max. Compression	26	-69.48	1.18	2.35
			Max. Mx	20	-41.98	2087.29	-11.22
			Max. My	2	-41.97	-11.50	2096.02
			Max. Vy	20	-18.66	2087.29	-11.22
			Max. Vx	2	-18.72	-11.50	2096.02
			Max. Torque	8			1.25
L36	4.92 - 4.67	Pole	Max Tension	1	0.00	0.00	0.00
			Max. Compression	26	-69.57	1.18	2.35
			Max. Mx	20	-42.05	2091.96	-11.24
			Max. My	2	-42.05	-11.52	2100.70
			Max. Vy	20	-18.67	2091.96	-11.24
			Max. Vx	2	-18.73	-11.52	2100.70
			Max. Torque	8			1.25
L37	4.67 - 0	Pole	Max Tension	1	0.00	0.00	0.00
			Max. Compression	26	-71.32	1.19	2.30
			Max. Mx	20	-43.45	2179.52	-11.62
			Max. My	2	-43.45	-11.89	2188.53
			Max. Vy	20	-18.85	2179.52	-11.62
			Max. Vx	2	-18.91	-11.89	2188.53

Section No.	Elevation ft	Component Type	Condition	Gov. Load Comb.	Axial K	Major Axis Moment kip-ft	Minor Axis Moment kip-ft
			Max. Torque	8			1.25

Maximum Reactions

Location	Condition	Gov. Load Comb.	Vertical K	Horizontal, X K	Horizontal, Z K
Pole	Max. Vert	26	71.32	0.00	0.00
	Max. H_x	20	43.46	18.83	-0.08
	Max. H_z	2	43.46	-0.08	18.89
	Max. M_x	2	2188.53	-0.08	18.89
	Max. M_z	8	2179.15	-18.83	0.08
	Max. Torsion	8	1.25	-18.83	0.08
	Min. Vert	11	32.59	-16.26	-9.37
	Min. H_x	9	32.59	-18.83	0.08
	Min. H_z	14	43.46	0.08	-18.89
	Min. M_x	14	-2187.57	0.08	-18.89
	Min. M_z	20	-2179.52	18.83	-0.08
	Min. Torsion	20	-1.24	18.83	-0.08

Tower Mast Reaction Summary

Load Combination	Vertical K	$Shear_x$ K	$Shear_z$ K	Overturning Moment, M_x kip-ft	Overturning Moment, M_z kip-ft	Torque kip-ft
Dead Only	36.21	0.00	0.00	-0.36	0.14	0.00
1.2 Dead+1.0 Wind 0 deg - No Ice	43.46	0.08	-18.89	-2188.53	-11.89	0.12
0.9 Dead+1.0 Wind 0 deg - No Ice	32.59	0.08	-18.89	-2154.23	-11.74	0.13
1.2 Dead+1.0 Wind 30 deg - No Ice	43.46	9.48	-16.40	-1901.40	-1099.91	-0.51
0.9 Dead+1.0 Wind 30 deg - No Ice	32.59	9.48	-16.40	-1871.58	-1082.76	-0.51
1.2 Dead+1.0 Wind 60 deg - No Ice	43.46	16.34	-9.51	-1104.95	-1893.16	-1.01
0.9 Dead+1.0 Wind 60 deg - No Ice	32.59	16.34	-9.51	-1087.56	-1863.63	-1.01
1.2 Dead+1.0 Wind 90 deg - No Ice	43.46	18.83	-0.08	-12.54	-2179.15	-1.25
0.9 Dead+1.0 Wind 90 deg - No Ice	32.59	18.83	-0.08	-12.21	-2145.17	-1.24
1.2 Dead+1.0 Wind 120 deg - No Ice	43.46	16.26	9.37	1083.12	-1881.12	-1.14
0.9 Dead+1.0 Wind 120 deg - No Ice	32.59	16.26	9.37	1066.34	-1851.80	-1.13
1.2 Dead+1.0 Wind 150 deg - No Ice	43.46	9.34	16.32	1888.43	-1079.00	-0.72
0.9 Dead+1.0 Wind 150 deg - No Ice	32.59	9.34	16.32	1859.06	-1062.21	-0.72
1.2 Dead+1.0 Wind 180 deg - No Ice	43.46	-0.08	18.89	2187.57	12.27	-0.11
0.9 Dead+1.0 Wind 180 deg - No Ice	32.59	-0.08	18.89	2153.53	12.01	-0.12
1.2 Dead+1.0 Wind 210 deg - No Ice	43.46	-9.48	16.40	1900.45	1100.27	0.53
0.9 Dead+1.0 Wind 210 deg - No Ice	32.59	-9.48	16.40	1870.88	1083.03	0.52
1.2 Dead+1.0 Wind 240 deg - No Ice	43.46	-16.34	9.51	1104.02	1893.52	1.02
0.9 Dead+1.0 Wind 240 deg	32.59	-16.34	9.51	1086.88	1863.89	1.01

Load Combination	Vertical K	$Shear_x$ K	$Shear_z$ K	Overturning Moment, M_x kip-ft	Overturning Moment, M_z kip-ft	Torque kip-ft
- No Ice 1.2 Dead+1.0 Wind 270 deg - No Ice	43.46	-18.83	0.08	11.62	2179.52	1.24
0.9 Dead+1.0 Wind 270 deg - No Ice	32.59	-18.83	0.08	11.54	2145.44	1.23
1.2 Dead+1.0 Wind 300 deg - No Ice	43.46	-16.26	-9.37	-1084.05	1881.50	1.13
0.9 Dead+1.0 Wind 300 deg - No Ice	32.59	-16.26	-9.37	-1067.02	1852.08	1.12
1.2 Dead+1.0 Wind 330 deg - No Ice	43.46	-9.34	-16.32	-1889.37	1079.39	0.72
0.9 Dead+1.0 Wind 330 deg - No Ice	32.59	-9.34	-16.32	-1859.75	1062.50	0.72
1.2 Dead+1.0 Ice+1.0 Temp	71.32	-0.00	-0.00	-2.30	1.19	0.00
1.2 Dead+1.0 Wind 0 deg+1.0 Ice+1.0 Temp	71.32	0.01	-3.58	-428.97	-0.69	0.01
1.2 Dead+1.0 Wind 30 deg+1.0 Ice+1.0 Temp	71.32	1.79	-3.10	-372.81	-212.91	-0.10
1.2 Dead+1.0 Wind 60 deg+1.0 Ice+1.0 Temp	71.32	3.09	-1.80	-217.42	-367.74	-0.18
1.2 Dead+1.0 Wind 90 deg+1.0 Ice+1.0 Temp	71.32	3.57	-0.01	-4.44	-423.69	-0.21
1.2 Dead+1.0 Wind 120 deg+1.0 Ice+1.0 Temp	71.32	3.08	1.78	209.07	-365.77	-0.18
1.2 Dead+1.0 Wind 150 deg+1.0 Ice+1.0 Temp	71.32	1.77	3.09	365.89	-209.51	-0.11
1.2 Dead+1.0 Wind 180 deg+1.0 Ice+1.0 Temp	71.32	-0.01	3.58	424.01	3.23	-0.01
1.2 Dead+1.0 Wind 210 deg+1.0 Ice+1.0 Temp	71.32	-1.79	3.10	367.85	215.45	0.10
1.2 Dead+1.0 Wind 240 deg+1.0 Ice+1.0 Temp	71.32	-3.09	1.80	212.47	370.27	0.18
1.2 Dead+1.0 Wind 270 deg+1.0 Ice+1.0 Temp	71.32	-3.57	0.01	-0.51	426.23	0.21
1.2 Dead+1.0 Wind 300 deg+1.0 Ice+1.0 Temp	71.32	-3.08	-1.78	-214.02	368.31	0.18
1.2 Dead+1.0 Wind 330 deg+1.0 Ice+1.0 Temp	71.32	-1.77	-3.09	-370.85	212.05	0.11
Dead+Wind 0 deg - Service	36.21	0.02	-4.84	-556.30	-2.91	0.03
Dead+Wind 30 deg - Service	36.21	2.43	-4.21	-483.36	-279.35	-0.13
Dead+Wind 60 deg - Service	36.21	4.19	-2.44	-281.00	-480.89	-0.26
Dead+Wind 90 deg - Service	36.21	4.83	-0.02	-3.46	-553.54	-0.32
Dead+Wind 120 deg - Service	36.21	4.17	2.40	274.91	-477.82	-0.29
Dead+Wind 150 deg - Service	36.21	2.40	4.18	479.51	-274.04	-0.18
Dead+Wind 180 deg - Service	36.21	-0.02	4.84	555.51	3.22	-0.03
Dead+Wind 210 deg - Service	36.21	-2.43	4.21	482.58	279.65	0.13
Dead+Wind 240 deg - Service	36.21	-4.19	2.44	280.22	481.19	0.26
Dead+Wind 270 deg - Service	36.21	-4.83	0.02	2.67	553.85	0.32
Dead+Wind 300 deg - Service	36.21	-4.17	-2.40	-275.69	478.13	0.29
Dead+Wind 330 deg - Service	36.21	-2.40	-4.18	-480.29	274.34	0.18

Solution Summary

	Sum of Applied Forces			Sum of Reactions			
Load Comb.	PX K	PY K	PZ K	PX K	PY K	PZ K	% Error
1	0.00	-36.21	0.00	0.00	36.21	0.00	0.000%
2	0.08	-43.46	-18.89	-0.08	43.46	18.89	0.000%

Load Comb.	Sum of Applied Forces PX K	PY K	PZ K	Sum of Reactions PX K	PY K	PZ K	% Error
3	0.08	-32.59	-18.89	-0.08	32.59	18.89	0.000%
4	9.48	-43.46	-16.40	-9.48	43.46	16.40	0.000%
5	9.48	-32.59	-16.40	-9.48	32.59	16.40	0.000%
6	16.34	-43.46	-9.51	-16.34	43.46	9.51	0.000%
7	16.34	-32.59	-9.51	-16.34	32.59	9.51	0.000%
8	18.83	-43.46	-0.08	-18.83	43.46	0.08	0.000%
9	18.83	-32.59	-0.08	-18.83	32.59	0.08	0.000%
10	16.26	-43.46	9.37	-16.26	43.46	-9.37	0.000%
11	16.26	-32.59	9.37	-16.26	32.59	-9.37	0.000%
12	9.34	-43.46	16.32	-9.34	43.46	-16.32	0.000%
13	9.34	-32.59	16.32	-9.34	32.59	-16.32	0.000%
14	-0.08	-43.46	18.89	0.08	43.46	-18.89	0.000%
15	-0.08	-32.59	18.89	0.08	32.59	-18.89	0.000%
16	-9.48	-43.46	16.40	9.48	43.46	-16.40	0.000%
17	-9.48	-32.59	16.40	9.48	32.59	-16.40	0.000%
18	-16.34	-43.46	9.51	16.34	43.46	-9.51	0.000%
19	-16.34	-32.59	9.51	16.34	32.59	-9.51	0.000%
20	-18.83	-43.46	0.08	18.83	43.46	-0.08	0.000%
21	-18.83	-32.59	0.08	18.83	32.59	-0.08	0.000%
22	-16.26	-43.46	-9.37	16.26	43.46	9.37	0.000%
23	-16.26	-32.59	-9.37	16.26	32.59	9.37	0.000%
24	-9.34	-43.46	-16.32	9.34	43.46	16.32	0.000%
25	-9.34	-32.59	-16.32	9.34	32.59	16.32	0.000%
26	0.00	-71.32	0.00	0.00	71.32	0.00	0.000%
27	0.01	-71.32	-3.58	-0.01	71.32	3.58	0.000%
28	1.79	-71.32	-3.10	-1.79	71.32	3.10	0.000%
29	3.09	-71.32	-1.80	-3.09	71.32	1.80	0.000%
30	3.57	-71.32	-0.01	-3.57	71.32	0.01	0.000%
31	3.08	-71.32	1.78	-3.08	71.32	-1.78	0.000%
32	1.77	-71.32	3.09	-1.77	71.32	-3.09	0.000%
33	-0.01	-71.32	3.58	0.01	71.32	-3.58	0.000%
34	-1.79	-71.32	3.10	1.79	71.32	-3.10	0.000%
35	-3.09	-71.32	1.80	3.09	71.32	-1.80	0.000%
36	-3.57	-71.32	0.01	3.57	71.32	-0.01	0.000%
37	-3.08	-71.32	-1.78	3.08	71.32	1.78	0.000%
38	-1.77	-71.32	-3.09	1.77	71.32	3.09	0.000%
39	0.02	-36.21	-4.84	-0.02	36.21	4.84	0.000%
40	2.43	-36.21	-4.21	-2.43	36.21	4.21	0.000%
41	4.19	-36.21	-2.44	-4.19	36.21	2.44	0.000%
42	4.83	-36.21	-0.02	-4.83	36.21	0.02	0.000%
43	4.17	-36.21	2.40	-4.17	36.21	-2.40	0.000%
44	2.40	-36.21	4.18	-2.40	36.21	-4.18	0.000%
45	-0.02	-36.21	4.84	0.02	36.21	-4.84	0.000%
46	-2.43	-36.21	4.21	2.43	36.21	-4.21	0.000%
47	-4.19	-36.21	2.44	4.19	36.21	-2.44	0.000%
48	-4.83	-36.21	0.02	4.83	36.21	-0.02	0.000%
49	-4.17	-36.21	-2.40	4.17	36.21	2.40	0.000%
50	-2.40	-36.21	-4.18	2.40	36.21	4.18	0.000%

Non-Linear Convergence Results

Load Combination	Converged?	Number of Cycles	Displacement Tolerance	Force Tolerance
1	Yes	4	0.00000001	0.00000001
2	Yes	5	0.00000001	0.00043744
3	Yes	5	0.00000001	0.00020706
4	Yes	7	0.00000001	0.00010021
5	Yes	6	0.00000001	0.00049483
6	Yes	7	0.00000001	0.00010392
7	Yes	6	0.00000001	0.00051391
8	Yes	6	0.00000001	0.00010012
9	Yes	5	0.00000001	0.00068462
10	Yes	7	0.00000001	0.00009569
11	Yes	6	0.00000001	0.00047296
12	Yes	7	0.00000001	0.00010038

13	Yes	6	0.00000001	0.00049696
14	Yes	5	0.00000001	0.00028917
15	Yes	5	0.00000001	0.00012151
16	Yes	7	0.00000001	0.00010268
17	Yes	6	0.00000001	0.00050754
18	Yes	7	0.00000001	0.00009885
19	Yes	6	0.00000001	0.00048812
20	Yes	5	0.00000001	0.00082456
21	Yes	5	0.00000001	0.00041448
22	Yes	7	0.00000001	0.00010152
23	Yes	6	0.00000001	0.00050267
24	Yes	7	0.00000001	0.00009695
25	Yes	6	0.00000001	0.00047895
26	Yes	4	0.00000001	0.00044433
27	Yes	6	0.00000001	0.00077072
28	Yes	6	0.00000001	0.00086709
29	Yes	6	0.00000001	0.00086638
30	Yes	6	0.00000001	0.00075480
31	Yes	6	0.00000001	0.00083509
32	Yes	6	0.00000001	0.00083776
33	Yes	6	0.00000001	0.00075074
34	Yes	6	0.00000001	0.00085493
35	Yes	6	0.00000001	0.00085346
36	Yes	6	0.00000001	0.00076218
37	Yes	6	0.00000001	0.00086395
38	Yes	6	0.00000001	0.00086336
39	Yes	4	0.00000001	0.00067518
40	Yes	5	0.00000001	0.00031726
41	Yes	5	0.00000001	0.00035291
42	Yes	5	0.00000001	0.00007779
43	Yes	5	0.00000001	0.00029312
44	Yes	5	0.00000001	0.00033250
45	Yes	4	0.00000001	0.00065750
46	Yes	5	0.00000001	0.00033949
47	Yes	5	0.00000001	0.00030711
48	Yes	5	0.00000001	0.00007119
49	Yes	5	0.00000001	0.00034538
50	Yes	5	0.00000001	0.00030256

Maximum Tower Deflections - Service Wind

Section No.	Elevation ft	Horz. Deflection in	Gov. Load Comb.	Tilt °	Twist °
L1	148 - 143	22.159	40	1.3568	0.0039
L2	143 - 138	20.740	40	1.3508	0.0040
L3	138 - 133	19.333	40	1.3356	0.0038
L4	133 - 128	17.948	40	1.3076	0.0035
L5	128 - 123	16.599	40	1.2685	0.0031
L6	123 - 117.25	15.296	40	1.2172	0.0026
L7	120.75 - 115.75	14.729	40	1.1902	0.0024
L8	115.75 - 110.75	13.499	40	1.1530	0.0022
L9	110.75 - 105.75	12.323	40	1.0929	0.0019
L10	105.75 - 100.75	11.212	40	1.0272	0.0016
L11	100.75 - 97	10.173	40	0.9570	0.0014
L12	97 - 96.75	9.443	40	0.9019	0.0012
L13	96.75 - 91.75	9.396	40	0.8999	0.0012
L14	91.75 - 86.75	8.476	40	0.8567	0.0011
L15	86.75 - 80.75	7.603	40	0.8115	0.0010
L16	85 - 80	7.308	40	0.7955	0.0010
L17	80 - 75	6.487	40	0.7688	0.0009
L18	75 - 70	5.707	40	0.7218	0.0008
L19	70 - 65	4.976	40	0.6738	0.0007
L20	65 - 60	4.296	40	0.6248	0.0007
L21	60 - 55	3.668	40	0.5756	0.0006
L22	55 - 50	3.091	40	0.5250	0.0005
L23	50 - 40	2.568	40	0.4745	0.0004
L24	45 - 39	2.098	40	0.4234	0.0004

Section No.	Elevation ft	Horz. Deflection in	Gov. Load Comb.	Tilt °	Twist °
L25	39 - 34	1.585	40	0.3884	0.0003
L26	34 - 29	1.205	40	0.3385	0.0003
L27	29 - 24	0.876	40	0.2889	0.0002
L28	24 - 19	0.600	40	0.2392	0.0002
L29	19 - 14	0.375	40	0.1893	0.0002
L30	14 - 13.08	0.203	40	0.1399	0.0001
L31	13.08 - 12.83	0.177	40	0.1310	0.0001
L32	12.83 - 12.58	0.170	40	0.1285	0.0001
L33	12.58 - 7.58	0.163	40	0.1259	0.0001
L34	7.58 - 5.17	0.058	40	0.0745	0.0001
L35	5.17 - 4.92	0.027	40	0.0500	0.0000
L36	4.92 - 4.67	0.024	40	0.0476	0.0000
L37	4.67 - 0	0.022	40	0.0452	0.0000

Critical Deflections and Radius of Curvature - Service Wind

Elevation ft	Appurtenance	Gov. Load Comb.	Deflection in	Tilt °	Twist °	Radius of Curvature ft
150.00	Platform Mount [LP 1201-1_KCKR-HR-1]	40	22.159	1.3568	0.0039	27519
149.00	Top Hat	40	22.159	1.3568	0.0039	27519
148.00	6'x2" Mount Pipe	40	22.159	1.3568	0.0039	27519
141.00	Side Arm Mount [SO 102-3]	40	20.175	1.3462	0.0039	19507
140.00	T-Arm Mount [TA 602-3]	40	19.894	1.3432	0.0039	16944
130.00	Platform Mount [LP 303-1]	40	17.134	1.2854	0.0032	7173

Maximum Tower Deflections - Design Wind

Section No.	Elevation ft	Horz. Deflection in	Gov. Load Comb.	Tilt °	Twist °
L1	148 - 143	87.239	4	5.3501	0.0155
L2	143 - 138	81.660	4	5.3265	0.0155
L3	138 - 133	76.124	4	5.2663	0.0150
L4	133 - 128	70.675	4	5.1559	0.0135
L5	128 - 123	65.366	4	5.0022	0.0120
L6	123 - 117.25	60.240	4	4.7999	0.0102
L7	120.75 - 115.75	58.007	4	4.6933	0.0094
L8	115.75 - 110.75	53.166	4	4.5467	0.0086
L9	110.75 - 105.75	48.535	4	4.3096	0.0075
L10	105.75 - 100.75	44.163	4	4.0505	0.0064
L11	100.75 - 97	40.070	4	3.7735	0.0055
L12	97 - 96.75	37.195	4	3.5561	0.0048
L13	96.75 - 91.75	37.009	4	3.5480	0.0048
L14	91.75 - 86.75	33.386	4	3.3775	0.0043
L15	86.75 - 80.75	29.945	4	3.1994	0.0039
L16	85 - 80	28.785	4	3.1360	0.0038
L17	80 - 75	25.553	4	3.0308	0.0036
L18	75 - 70	22.478	4	2.8455	0.0032
L19	70 - 65	19.599	4	2.6559	0.0029
L20	65 - 60	16.921	4	2.4625	0.0026
L21	60 - 55	14.445	4	2.2684	0.0023
L22	55 - 50	12.175	4	2.0689	0.0020
L23	50 - 40	10.113	4	1.8696	0.0018
L24	45 - 39	8.261	4	1.6682	0.0015
L25	39 - 34	6.242	4	1.5301	0.0014
L26	34 - 29	4.743	4	1.3332	0.0011
L27	29 - 24	3.449	4	1.1379	0.0010
L28	24 - 19	2.361	4	0.9419	0.0008
L29	19 - 14	1.477	4	0.7453	0.0006

Section No.	Elevation ft	Horz. Deflection in	Gov. Load Comb.	Tilt °	Twist °
L30	14 - 13.08	0.799	4	0.5509	0.0004
L31	13.08 - 12.83	0.696	4	0.5156	0.0004
L32	12.83 - 12.58	0.669	4	0.5059	0.0004
L33	12.58 - 7.58	0.643	4	0.4958	0.0004
L34	7.58 - 5.17	0.230	4	0.2933	0.0002
L35	5.17 - 4.92	0.106	4	0.1967	0.0001
L36	4.92 - 4.67	0.096	4	0.1872	0.0001
L37	4.67 - 0	0.087	4	0.1778	0.0001

Critical Deflections and Radius of Curvature - Design Wind

Elevation ft	Appurtenance	Gov. Load Comb.	Deflection in	Tilt °	Twist °	Radius of Curvature ft
150.00	Platform Mount [LP 1201-1_KCKR-HR-1]	4	87.239	5.3501	0.0155	7081
149.00	Top Hat	4	87.239	5.3501	0.0155	7081
148.00	6'x2" Mount Pipe	4	87.239	5.3501	0.0155	7081
141.00	Side Arm Mount [SO 102-3]	4	79.438	5.3081	0.0154	5029
140.00	T-Arm Mount [TA 602-3]	4	78.330	5.2962	0.0153	4374
130.00	Platform Mount [LP 303-1]	4	67.470	5.0684	0.0126	1852

Compression Checks

Pole Design Data

Section No.	Elevation ft	Size	L ft	L_u ft	Kl/r	A in^2	P_u K	ϕP_n K	Ratio $\frac{P_u}{\phi P_n}$
L1	148 - 143 (1)	TP22.8499x22x0.1875	5.00	0.00	0.0	13.4870	-5.30	728.30	0.007
L2	143 - 138 (2)	TP23.6998x22.8499x0.1875	5.00	0.00	0.0	13.9928	-8.37	755.61	0.011
L3	138 - 133 (3)	TP24.5498x23.6998x0.1875	5.00	0.00	0.0	14.4986	-8.79	782.92	0.011
L4	133 - 128 (4)	TP25.3997x24.5498x0.1875	5.00	0.00	0.0	15.0044	-12.32	810.24	0.015
L5	128 - 123 (5)	TP26.2496x25.3997x0.1875	5.00	0.00	0.0	15.5102	-12.84	837.55	0.015
L6	123 - 117.25 (6)	TP27.227x26.2496x0.1875	5.75	0.00	0.0	15.7378	-13.08	849.84	0.015
L7	117.25 - 115.75 (7)	TP27.1069x26.2571x0.25	5.00	0.00	0.0	21.3110	-13.93	1150.79	0.012
L8	115.75 - 110.75 (8)	TP27.9568x27.1069x0.25	5.00	0.00	0.0	21.9853	-14.60	1187.21	0.012
L9	110.75 - 105.75 (9)	TP28.8067x27.9568x0.25	5.00	0.00	0.0	22.6597	-15.28	1223.62	0.012
L10	105.75 - 100.75 (10)	TP29.6565x28.8067x0.25	5.00	0.00	0.0	23.3341	-15.99	1260.04	0.013
L11	100.75 - 97 (11)	TP30.2939x29.6565x0.25	3.75	0.00	0.0	23.8399	-16.52	1287.35	0.013
L12	97 - 96.75 (12)	TP30.3364x30.2939x0.4625	0.25	0.00	0.0	43.8542	-16.59	2368.13	0.007
L13	96.75 - 91.75 (13)	TP31.1863x30.3364x0.45	5.00	0.00	0.0	43.9006	-17.63	2370.63	0.007
L14	91.75 - 86.75 (14)	TP32.0362x31.1863x0.4438	5.00	0.00	0.0	44.4967	-18.69	2402.82	0.008
L15	86.75 - 80.75	TP33.056x32.0362x0.443	6.00	0.00	0.0	44.915	-19.07	2425.45	0.008

Section No.	Elevation ft	Size	L ft	L_u ft	Kl/r	A in^2	P_u K	ϕP_n K	Ratio $\frac{P_u}{\phi P_n}$
	(15)	8				7			
L16	80.75 - 80 (16)	TP32.6835x31.8336x0.4688	5.00	0.00	0.0	47.9296	-20.94	2803.88	0.007
L17	80 - 75 (17)	TP33.5335x32.6835x0.4688	5.00	0.00	0.0	49.1941	-22.10	2877.86	0.008
L18	75 - 70 (18)	TP34.3834x33.5335x0.4625	5.00	0.00	0.0	49.7950	-23.28	2913.01	0.008
L19	70 - 65 (19)	TP35.2333x34.3834x0.4563	5.00	0.00	0.0	50.3620	-24.48	2946.18	0.008
L20	65 - 60 (20)	TP36.0833x35.2333x0.4563	5.00	0.00	0.0	51.5928	-25.70	3018.18	0.009
L21	60 - 55 (21)	TP36.9332x36.0833x0.4438	5.00	0.00	0.0	51.3940	-26.93	3006.55	0.009
L22	55 - 50 (22)	TP37.7831x36.9332x0.4438	5.00	0.00	0.0	52.5911	-28.19	3076.58	0.009
L23	50 - 40 (23)	TP39.483x37.7831x0.4375	10.00	0.00	0.0	53.0393	-29.46	3102.80	0.009
L24	40 - 39 (24)	TP39.0905x38.0706x0.4688	6.00	0.00	0.0	57.4619	-32.11	3361.52	0.010
L25	39 - 34 (25)	TP39.9404x39.0905x0.4625	5.00	0.00	0.0	57.9526	-33.49	3390.23	0.010
L26	34 - 29 (26)	TP40.7904x39.9404x0.4625	5.00	0.00	0.0	59.2003	-34.89	3463.22	0.010
L27	29 - 24 (27)	TP41.6403x40.7904x0.4563	5.00	0.00	0.0	59.6402	-36.30	3488.95	0.010
L28	24 - 19 (28)	TP42.4902x41.6403x0.45	5.00	0.00	0.0	60.0461	-37.74	3512.70	0.011
L29	19 - 14 (29)	TP43.3402x42.4902x0.45	5.00	0.00	0.0	61.2600	-39.19	3583.71	0.011
L30	14 - 13.08 (30)	TP43.4966x43.3402x0.45	0.92	0.00	0.0	61.4834	-39.46	3596.78	0.011
L31	13.08 - 12.83 (31)	TP43.5391x43.4966x0.45	0.25	0.00	0.0	61.5441	-39.54	3600.33	0.011
L32	12.83 - 12.58 (32)	TP43.5816x43.5391x0.425	0.25	0.00	0.0	58.2160	-39.61	3405.64	0.012
L33	12.58 - 7.58 (33)	TP44.4315x43.5816x0.425	5.00	0.00	0.0	59.3626	-41.15	3472.71	0.012
L34	7.58 - 5.17 (34)	TP44.8412x44.4315x0.425	2.41	0.00	0.0	59.9152	-41.89	3505.04	0.012
L35	5.17 - 4.92 (35)	TP44.8837x44.8412x0.45	0.25	0.00	0.0	63.4646	-41.97	3712.68	0.011
L36	4.92 - 4.67 (36)	TP44.9262x44.8837x0.45	0.25	0.00	0.0	63.5253	-42.05	3716.23	0.011
L37	4.67 - 0 (37)	TP45.72x44.9262x0.4438	4.67	0.00	0.0	63.7699	-43.45	3730.54	0.012

Pole Bending Design Data

Section No.	Elevation ft	Size	M_{ux} kip-ft	ϕM_{nx} kip-ft	Ratio $\frac{M_{ux}}{\phi M_{nx}}$	M_{uy} kip-ft	ϕM_{ny} kip-ft	Ratio $\frac{M_{uy}}{\phi M_{ny}}$
L1	148 - 143 (1)	TP22.8499x22x0.1875	25.18	407.93	0.062	0.00	407.93	0.000
L2	143 - 138 (2)	TP23.6998x22.8499x0.1875	58.63	434.17	0.135	0.00	434.17	0.000
L3	138 - 133 (3)	TP24.5498x23.6998x0.1875	102.30	460.81	0.222	0.00	460.81	0.000
L4	133 - 128 (4)	TP25.3997x24.5498x0.1875	149.10	487.82	0.306	0.00	487.82	0.000
L5	128 - 123 (5)	TP26.2496x25.3997x0.1875	212.28	515.16	0.412	0.00	515.16	0.000
L6	123 - 117.25 (6)	TP27.227x26.2496x0.1875	241.14	527.56	0.457	0.00	527.56	0.000
L7	117.25 - 115.75 (7)	TP27.1069x26.2571x0.25	306.37	789.19	0.388	0.00	789.19	0.000
L8	115.75 -	TP27.9568x27.1069x0.25	373.02	833.14	0.448	0.00	833.14	0.000

Section No.	Elevation ft	Size	M_{ux} kip-ft	ϕM_{nx} kip-ft	Ratio $\frac{M_{ux}}{\phi M_{nx}}$	M_{uy} kip-ft	ϕM_{ny} kip-ft	Ratio $\frac{M_{uy}}{\phi M_{ny}}$
	110.75 (8)							
L9	110.75 - 105.75 (9)	TP28.8067x27.9568x0.25	441.00	877.80	0.502	0.00	877.80	0.000
L10	105.75 - 100.75 (10)	TP29.6565x28.8067x0.25	510.28	923.14	0.553	0.00	923.14	0.000
L11	100.75 - 97 (11)	TP30.2939x29.6565x0.25	563.09	957.57	0.588	0.00	957.57	0.000
L12	97 - 96.75 (12)	TP30.3364x30.2939x0.4625	566.63	1833.67	0.309	0.00	1833.67	0.000
L13	96.75 - 91.75 (13)	TP31.1863x30.3364x0.45	638.35	1890.17	0.338	0.00	1890.17	0.000
L14	91.75 - 86.75 (14)	TP32.0362x31.1863x0.4438	711.59	1970.35	0.361	0.00	1970.35	0.000
L15	86.75 - 80.75 (15)	TP33.056x32.0362x0.4438	737.58	2007.88	0.367	0.00	2007.88	0.000
L16	80.75 - 80 (16)	TP32.6835x31.8336x0.4688	813.04	2343.35	0.347	0.00	2343.35	0.000
L17	80 - 75 (17)	TP33.5335x32.6835x0.4688	890.11	2469.54	0.360	0.00	2469.54	0.000
L18	75 - 70 (18)	TP34.3834x33.5335x0.4625	968.62	2565.81	0.378	0.00	2565.81	0.000
L19	70 - 65 (19)	TP35.2333x34.3834x0.4563	1048.51	2661.88	0.394	0.00	2661.88	0.000
L20	65 - 60 (20)	TP36.0833x35.2333x0.4563	1129.78	2794.44	0.404	0.00	2794.44	0.000
L21	60 - 55 (21)	TP36.9332x36.0833x0.4438	1212.35	2852.88	0.425	0.00	2852.88	0.000
L22	55 - 50 (22)	TP37.7831x36.9332x0.4438	1296.20	2988.14	0.434	0.00	2988.14	0.000
L23	50 - 40 (23)	TP39.483x37.7831x0.4375	1381.26	3084.02	0.448	0.00	3084.02	0.000
L24	40 - 39 (24)	TP39.0905x38.0706x0.4688	1485.17	3376.18	0.440	0.00	3376.18	0.000
L25	39 - 34 (25)	TP39.9404x39.0905x0.4625	1573.15	3481.94	0.452	0.00	3481.94	0.000
L26	34 - 29 (26)	TP40.7904x39.9404x0.4625	1662.15	3634.37	0.457	0.00	3634.37	0.000
L27	29 - 24 (27)	TP41.6403x40.7904x0.4563	1752.11	3740.55	0.468	0.00	3740.55	0.000
L28	24 - 19 (28)	TP42.4902x41.6403x0.45	1843.01	3845.72	0.479	0.00	3845.72	0.000
L29	19 - 14 (29)	TP43.3402x42.4902x0.45	1934.83	4001.13	0.484	0.00	4001.13	0.000
L30	14 - 13.08 (30)	TP43.4966x43.3402x0.45	1951.82	4027.00	0.485	0.00	4027.00	0.000
L31	13.08 - 12.83 (31)	TP43.5391x43.4966x0.45	1956.44	4034.03	0.485	0.00	4034.03	0.000
L32	12.83 - 12.58 (32)	TP43.5816x43.5391x0.425	1961.07	3768.49	0.520	0.00	3768.49	0.000
L33	12.58 - 7.58 (33)	TP44.4315x43.5816x0.425	2054.03	3899.15	0.527	0.00	3899.15	0.000
L34	7.58 - 5.17 (34)	TP44.8412x44.4315x0.425	2099.15	3962.63	0.530	0.00	3962.63	0.000
L35	5.17 - 4.92 (35)	TP44.8837x44.8412x0.45	2103.84	4258.87	0.494	0.00	4258.87	0.000
L36	4.92 - 4.67 (36)	TP44.9262x44.8837x0.45	2108.53	4266.03	0.494	0.00	4266.03	0.000
L37	4.67 - 0 (37)	TP45.72x44.9262x0.4438	2196.62	4325.59	0.508	0.00	4325.59	0.000

Pole Shear Design Data

Section No.	Elevation ft	Size	Actual V_u K	ϕV_n K	Ratio $\frac{V_u}{\phi V_n}$	Actual T_u kip-ft	ϕT_n kip-ft	Ratio $\frac{T_u}{\phi T_n}$
L1	148 - 143 (1)	TP22.8499x22x0.1875	4.58	218.49	0.021	0.02	433.63	0.000
L2	143 - 138 (2)	TP23.6998x22.8499x0.1875	8.60	226.68	0.038	0.30	466.76	0.001

Section No.	Elevation ft	Size	Actual V_u K	ϕV_n K	Ratio $\frac{V_u}{\phi V_n}$	Actual T_u kip-ft	ϕT_n kip-ft	Ratio $\frac{T_u}{\phi T_n}$
L3	138 - 133 (3)	TP24.5498x23.6998x0.1875	8.88	234.88	0.038	0.30	501.12	0.001
L4	133 - 128 (4)	TP25.3997x24.5498x0.1875	12.50	243.07	0.051	0.52	536.69	0.001
L5	128 - 123 (5)	TP26.2496x25.3997x0.1875	12.77	251.26	0.051	0.52	573.49	0.001
L6	123 - 117.25 (6)	TP27.227x26.2496x0.1875	12.89	254.95	0.051	0.52	590.44	0.001
L7	117.25 - 115.75 (7)	TP27.1069x26.2571x0.25	13.20	345.24	0.038	0.52	812.00	0.001
L8	115.75 - 110.75 (8)	TP27.9568x27.1069x0.25	13.47	356.16	0.038	0.51	864.20	0.001
L9	110.75 - 105.75 (9)	TP28.8067x27.9568x0.25	13.73	367.09	0.037	0.51	918.03	0.001
L10	105.75 - 100.75 (10)	TP29.6565x28.8067x0.25	13.99	378.01	0.037	0.51	973.48	0.001
L11	100.75 - 97 (11)	TP30.2939x29.6565x0.25	14.19	386.21	0.037	0.51	1016.14	0.001
L12	97 - 96.75 (12)	TP30.3364x30.2939x0.4625	14.19	710.44	0.020	0.51	1858.65	0.000
L13	96.75 - 91.75 (13)	TP31.1863x30.3364x0.45	14.50	711.19	0.020	0.51	1914.33	0.000
L14	91.75 - 86.75 (14)	TP32.0362x31.1863x0.4438	14.81	720.85	0.021	0.51	1994.37	0.000
L15	86.75 - 80.75 (15)	TP33.056x32.0362x0.4438	14.91	727.63	0.020	0.51	2032.10	0.000
L16	80.75 - 80 (16)	TP32.6835x31.8336x0.4688	15.28	841.16	0.018	0.51	2373.10	0.000
L17	80 - 75 (17)	TP33.5335x32.6835x0.4688	15.57	863.36	0.018	0.51	2499.97	0.000
L18	75 - 70 (18)	TP34.3834x33.5335x0.4625	15.85	873.90	0.018	0.51	2596.03	0.000
L19	70 - 65 (19)	TP35.2333x34.3834x0.4563	16.13	883.85	0.018	0.51	2691.87	0.000
L20	65 - 60 (20)	TP36.0833x35.2333x0.4563	16.40	905.45	0.018	0.51	2825.05	0.000
L21	60 - 55 (21)	TP36.9332x36.0833x0.4438	16.65	901.97	0.018	0.51	2882.28	0.000
L22	55 - 50 (22)	TP37.7831x36.9332x0.4438	16.90	922.97	0.018	0.51	3018.13	0.000
L23	50 - 40 (23)	TP39.483x37.7831x0.4375	17.14	930.84	0.018	0.51	3113.64	0.000
L24	40 - 39 (24)	TP39.0905x38.0706x0.4688	17.50	1008.46	0.017	0.51	3410.90	0.000
L25	39 - 34 (25)	TP39.9404x39.0905x0.4625	17.71	1017.07	0.017	0.51	3516.29	0.000
L26	34 - 29 (26)	TP40.7904x39.9404x0.4625	17.91	1038.97	0.017	0.51	3669.32	0.000
L27	29 - 24 (27)	TP41.6403x40.7904x0.4563	18.10	1046.69	0.017	0.51	3775.07	0.000
L28	24 - 19 (28)	TP42.4902x41.6403x0.45	18.28	1053.81	0.017	0.51	3879.78	0.000
L29	19 - 14 (29)	TP43.3402x42.4902x0.45	18.47	1075.11	0.017	0.51	4038.24	0.000
L30	14 - 13.08 (30)	TP43.4966x43.3402x0.45	18.50	1079.03	0.017	0.51	4067.74	0.000
L31	13.08 - 12.83 (31)	TP43.5391x43.4966x0.45	18.50	1080.10	0.017	0.51	4075.78	0.000
L32	12.83 - 12.58 (32)	TP43.5816x43.5391x0.425	18.51	1021.69	0.018	0.51	3861.42	0.000
L33	12.58 - 7.58 (33)	TP44.4315x43.5816x0.425	18.69	1041.81	0.018	0.51	4015.01	0.000
L34	7.58 - 5.17 (34)	TP44.8412x44.4315x0.425	18.78	1051.51	0.018	0.51	4090.11	0.000
L35	5.17 - 4.92 (35)	TP44.8837x44.8412x0.45	18.77	1113.80	0.017	0.51	4334.12	0.000
L36	4.92 - 4.67 (36)	TP44.9262x44.8837x0.45	18.78	1114.87	0.017	0.51	4342.42	0.000
L37	4.67 - 0 (37)	TP45.72x44.9262x0.4438	18.96	1119.16	0.017	0.51	4437.55	0.000

Pole Interaction Design Data

Section No.	Elevation ft	Ratio $\frac{P_u}{\phi P_n}$	Ratio $\frac{M_{ux}}{\phi M_{nx}}$	Ratio $\frac{M_{uy}}{\phi M_{ny}}$	Ratio $\frac{V_u}{\phi V_n}$	Ratio $\frac{T_u}{\phi T_n}$	Comb. Stress Ratio	Allow. Stress Ratio	Criteria
L1	148 - 143 (1)	0.007	0.062	0.000	0.021	0.000	0.069	1.050	4.8.2
L2	143 - 138 (2)	0.011	0.135	0.000	0.038	0.001	0.148	1.050	4.8.2
L3	138 - 133 (3)	0.011	0.222	0.000	0.038	0.001	0.235	1.050	4.8.2
L4	133 - 128 (4)	0.015	0.306	0.000	0.051	0.001	0.324	1.050	4.8.2
L5	128 - 123 (5)	0.015	0.412	0.000	0.051	0.001	0.430	1.050	4.8.2
L6	123 - 117.25 (6)	0.015	0.457	0.000	0.051	0.001	0.475	1.050	4.8.2
L7	117.25 - 115.75 (7)	0.012	0.388	0.000	0.038	0.001	0.402	1.050	4.8.2
L8	115.75 - 110.75 (8)	0.012	0.448	0.000	0.038	0.001	0.462	1.050	4.8.2
L9	110.75 - 105.75 (9)	0.012	0.502	0.000	0.037	0.001	0.516	1.050	4.8.2
L10	105.75 - 100.75 (10)	0.013	0.553	0.000	0.037	0.001	0.567	1.050	4.8.2
L11	100.75 - 97 (11)	0.013	0.588	0.000	0.037	0.001	0.602	1.050	4.8.2
L12	97 - 96.75 (12)	0.007	0.309	0.000	0.020	0.000	0.316	1.050	4.8.2
L13	96.75 - 91.75 (13)	0.007	0.338	0.000	0.020	0.000	0.346	1.050	4.8.2
L14	91.75 - 86.75 (14)	0.008	0.361	0.000	0.021	0.000	0.369	1.050	4.8.2
L15	86.75 - 80.75 (15)	0.008	0.367	0.000	0.020	0.000	0.376	1.050	4.8.2
L16	80.75 - 80 (16)	0.007	0.347	0.000	0.018	0.000	0.355	1.050	4.8.2
L17	80 - 75 (17)	0.008	0.360	0.000	0.018	0.000	0.368	1.050	4.8.2
L18	75 - 70 (18)	0.008	0.378	0.000	0.018	0.000	0.386	1.050	4.8.2
L19	70 - 65 (19)	0.008	0.394	0.000	0.018	0.000	0.403	1.050	4.8.2
L20	65 - 60 (20)	0.009	0.404	0.000	0.018	0.000	0.413	1.050	4.8.2
L21	60 - 55 (21)	0.009	0.425	0.000	0.018	0.000	0.434	1.050	4.8.2
L22	55 - 50 (22)	0.009	0.434	0.000	0.018	0.000	0.443	1.050	4.8.2
L23	50 - 40 (23)	0.009	0.448	0.000	0.018	0.000	0.458	1.050	4.8.2
L24	40 - 39 (24)	0.010	0.440	0.000	0.017	0.000	0.450	1.050	4.8.2
L25	39 - 34 (25)	0.010	0.452	0.000	0.017	0.000	0.462	1.050	4.8.2
L26	34 - 29 (26)	0.010	0.457	0.000	0.017	0.000	0.468	1.050	4.8.2
L27	29 - 24 (27)	0.010	0.468	0.000	0.017	0.000	0.479	1.050	4.8.2
L28	24 - 19 (28)	0.011	0.479	0.000	0.017	0.000	0.490	1.050	4.8.2
L29	19 - 14 (29)	0.011	0.484	0.000	0.017	0.000	0.495	1.050	4.8.2
L30	14 - 13.08 (30)	0.011	0.485	0.000	0.017	0.000	0.496	1.050	4.8.2
L31	13.08 - 12.83 (31)	0.011	0.485	0.000	0.017	0.000	0.496	1.050	4.8.2
L32	12.83 - 12.58 (32)	0.012	0.520	0.000	0.018	0.000	0.532	1.050	4.8.2
L33	12.58 - 7.58 (33)	0.012	0.527	0.000	0.018	0.000	0.539	1.050	4.8.2
L34	7.58 - 5.17 (34)	0.012	0.530	0.000	0.018	0.000	0.542	1.050	4.8.2
L35	5.17 - 4.92 (35)	0.011	0.494	0.000	0.017	0.000	0.506	1.050	4.8.2
L36	4.92 - 4.67 (36)	0.011	0.494	0.000	0.017	0.000	0.506	1.050	4.8.2
L37	4.67 - 0 (37)	0.012	0.508	0.000	0.017	0.000	0.520	1.050	4.8.2

Section Capacity Table

Section No.	Elevation ft	Component Type	Size	Critical Element	P K	$øP_{allow}$ K	% Capacity	Pass Fail
L1	148 - 143	Pole	TP22.8499x22x0.1875	1	-5.30	764.71	6.6	Pass
L2	143 - 138	Pole	TP23.6998x22.8499x0.1875	2	-8.37	793.39	14.1	Pass
L3	138 - 133	Pole	TP24.5498x23.6998x0.1875	3	-8.79	822.07	22.4	Pass
L4	133 - 128	Pole	TP25.3997x24.5498x0.1875	4	-12.32	850.75	30.8	Pass
L5	128 - 123	Pole	TP26.2496x25.3997x0.1875	5	-12.84	879.43	41.0	Pass
L6	123 - 117.25	Pole	TP27.227x26.2496x0.1875	6	-13.08	892.33	45.3	Pass
L7	117.25 - 115.75	Pole	TP27.1069x26.2571x0.25	7	-13.93	1208.33	38.3	Pass
L8	115.75 - 110.75	Pole	TP27.9568x27.1069x0.25	8	-14.60	1246.57	44.0	Pass
L9	110.75 - 105.75	Pole	TP28.8067x27.9568x0.25	9	-15.28	1284.80	49.2	Pass
L10	105.75 - 100.75	Pole	TP29.6565x28.8067x0.25	10	-15.99	1323.04	54.0	Pass
L11	100.75 - 97	Pole	TP30.2939x29.6565x0.25	11	-16.52	1351.72	57.4	Pass
L12	97 - 96.75	Pole	TP30.3364x30.2939x0.4625	12	-16.59	2486.54	30.1	Pass
L13	96.75 - 91.75	Pole	TP31.1863x30.3364x0.45	13	-17.63	2489.16	32.9	Pass
L14	91.75 - 86.75	Pole	TP32.0362x31.1863x0.4438	14	-18.69	2522.96	35.2	Pass
L15	86.75 - 80.75	Pole	TP33.056x32.0362x0.4438	15	-19.07	2546.72	35.8	Pass
L16	80.75 - 80	Pole	TP32.6835x31.8336x0.4688	16	-20.94	2944.07	33.8	Pass
L17	80 - 75	Pole	TP33.5335x32.6835x0.4688	17	-22.10	3021.75	35.1	Pass
L18	75 - 70	Pole	TP34.3834x33.5335x0.4625	18	-23.28	3058.66	36.7	Pass
L19	70 - 65	Pole	TP35.2333x34.3834x0.4563	19	-24.48	3093.49	38.3	Pass
L20	65 - 60	Pole	TP36.0833x35.2333x0.4563	20	-25.70	3169.09	39.3	Pass
L21	60 - 55	Pole	TP36.9332x36.0833x0.4438	21	-26.93	3156.88	41.4	Pass
L22	55 - 50	Pole	TP37.7831x36.9332x0.4438	22	-28.19	3230.41	42.2	Pass
L23	50 - 40	Pole	TP39.483x37.7831x0.4375	23	-29.46	3257.94	43.6	Pass
L24	40 - 39	Pole	TP39.0905x38.0706x0.4688	24	-32.11	3529.60	42.8	Pass
L25	39 - 34	Pole	TP39.9404x39.0905x0.4625	25	-33.49	3559.74	44.0	Pass
L26	34 - 29	Pole	TP40.7904x39.9404x0.4625	26	-34.89	3636.38	44.5	Pass
L27	29 - 24	Pole	TP41.6403x40.7904x0.4563	27	-36.30	3663.40	45.6	Pass
L28	24 - 19	Pole	TP42.4902x41.6403x0.45	28	-37.74	3688.33	46.7	Pass
L29	19 - 14	Pole	TP43.3402x42.4902x0.45	29	-39.19	3762.90	47.1	Pass
L30	14 - 13.08	Pole	TP43.4966x43.3402x0.45	30	-39.46	3776.62	47.2	Pass
L31	13.08 - 12.83	Pole	TP43.5391x43.4966x0.45	31	-39.54	3780.35	47.3	Pass
L32	12.83 - 12.58	Pole	TP43.5816x43.5391x0.425	32	-39.61	3575.92	50.7	Pass
L33	12.58 - 7.58	Pole	TP44.4315x43.5816x0.425	33	-41.15	3646.35	51.3	Pass
L34	7.58 - 5.17	Pole	TP44.8412x44.4315x0.425	34	-41.89	3680.29	51.6	Pass
L35	5.17 - 4.92	Pole	TP44.8837x44.8412x0.45	35	-41.97	3898.31	48.2	Pass
L36	4.92 - 4.67	Pole	TP44.9262x44.8837x0.45	36	-42.05	3902.04	48.2	Pass
L37	4.67 - 0	Pole	TP45.72x44.9262x0.4438	37	-43.45	3917.07	49.5	Pass
							Summary	
						Pole (L11)	57.4	Pass
						RATING =	**57.4**	**Pass**

***NOTE: Above stress ratios for reinforced sections are approximate. More exact calculations are presented in Appendix C**

APPENDIX B

BASE LEVEL DRAWING

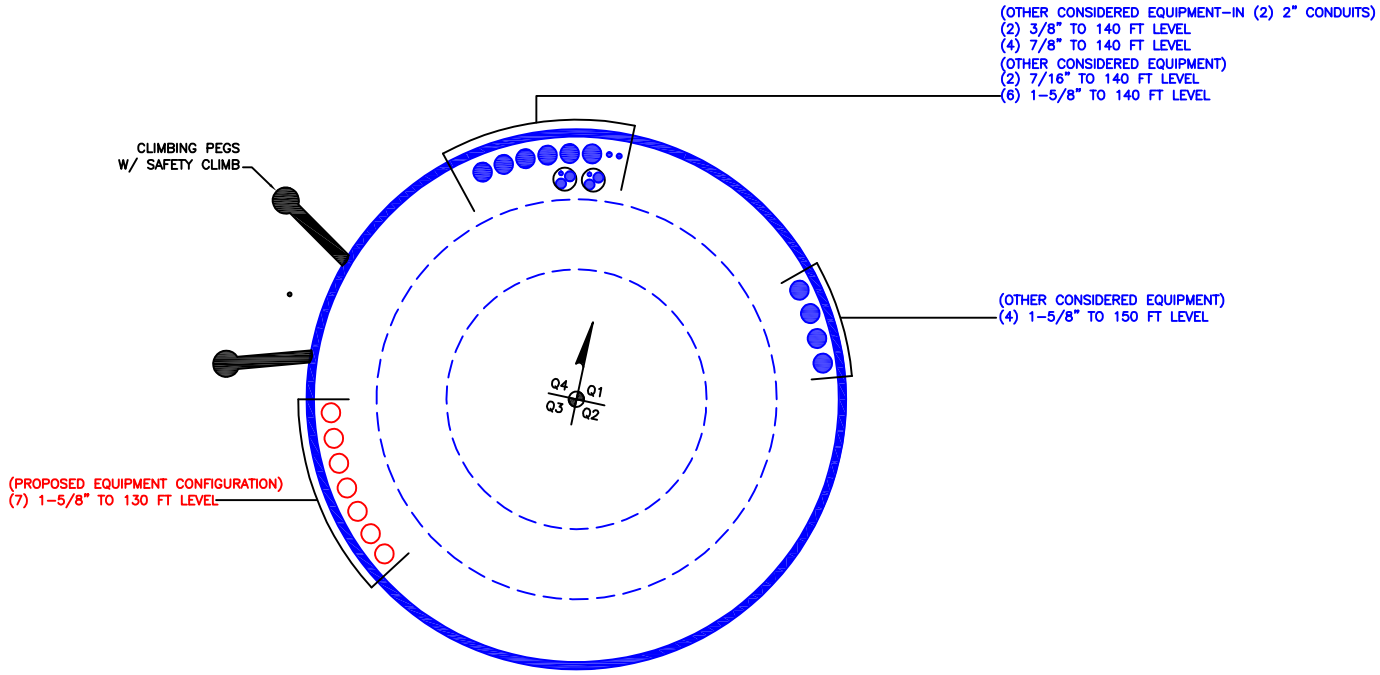

BUSINESS UNIT: 876377 TOWER ID: C_BASELEVEL

APPENDIX C

ADDITIONAL CALCULATIONS

CCIpole

per TIA-222- H

Site BU: 876377

Work Order: 1953629

Copyright © 2019 Crown Castle

Pole Geometry

	Pole Height Above Base (ft)	Section Length (ft)	Lap Splice Length (ft)	Number of Sides	Top Diameter (in)	Bottom Diameter (in)	Wall Thickness (in)	Bend Radius (in)	Pole Material
1	148	30.75	3.5	18	22	27.227	0.1875	Auto	A607-60
2	120.75	40	4.25	18	26.26	33.056	0.25	Auto	A607-60
3	85	45	5	18	31.83	39.483	0.28125	Auto	A607-65
4	45	45	0	18	38.07	45.72	0.3125	Auto	A607-65

Reinforcement Configuration

	Bottom Effective Elevation (ft)	Top Effective Elevation (ft)	Type	Model	Number	1	2	3	4	5	6	7	8	9	10	11	12	13	14	15	16	17	18
1	0	97	channel	MP3-05 (1.1875in)	2			E						E									
2	12.83	97	channel	MP3-05 (1.1875in)	1															E			
3	4.92	13.08	channel	MP3-06 (1.1875in)	1														E				
4	0	5.17	channel	MP3-05 (1.1875in)	1															E			
5																							
6																							
7																							
8																							
9																							
10																							

Reinforcement Details

	B (in)	H (in)	Gross Area (in^2)	Pole Face to Centroid (in)	Bottom Termination Type	Bottom Termination Length (in)	Top Termination Type	Top Termination Length (in)	Lu (in)	Net Area (in2)	Bolt Hole Size (in)	Reinforcement Material
1	5.33	2.09	5.65	0.79	PC 8.8 - M20 (100)	29	PC 8.8 - M20 (100)	29.000	18.000	5.025	1.1875	A572-65
2	5.33	2.09	5.65	0.79	PC 8.8 - M20 (100)	29	PC 8.8 - M20 (100)	29.000	18.000	5.025	1.1875	A572-65
3	6.89	2.61	8.47	0.93	PC 8.8 - M20 (100)	41	PC 8.8 - M20 (100)	41.000	24.000	7.670	1.1875	A572-65
4	5.33	2.09	5.65	0.79	PC 8.8 - M20 (100)	29	PC 8.8 - M20 (100)	29.000	18.000	5.025	1.1875	A572-65

TNX Geometry Input

Increment (ft): 5 Export to TNX

	Section Height (ft)	Section Length (ft)	Lap Splice Length (ft)	Number of Sides	Top Diameter (in)	Bottom Diameter (in)	Wall Thickness (in)	Tapered Pole Grade	Weight Multiplier
1	148 - 143	5		18	22.000	22.850	0.1875	A607-60	1.000
2	143 - 138	5		18	22.850	23.700	0.1875	A607-60	1.000
3	138 - 133	5		18	23.700	24.550	0.1875	A607-60	1.000
4	133 - 128	5		18	24.550	25.400	0.1875	A607-60	1.000
5	128 - 123	5		18	25.400	26.250	0.1875	A607-60	1.000
6	123 - 120.75	5.75	3.5	18	26.250	27.227	0.1875	A607-60	1.000
7	120.75 - 115.75	5		18	26.257	27.107	0.25	A607-60	1.000
8	115.75 - 110.75	5		18	27.107	27.957	0.25	A607-60	1.000
9	110.75 - 105.75	5		18	27.957	28.807	0.25	A607-60	1.000
10	105.75 - 100.75	5		18	28.807	29.657	0.25	A607-60	1.000
11	100.75 - 97	3.75		18	29.657	30.294	0.25	A607-60	1.000
12	97 - 96.75	0.25		18	30.294	30.336	0.4625	A607-60	0.931
13	96.75 - 91.75	5		18	30.336	31.186	0.45	A607-60	0.945
14	91.75 - 86.75	5		18	31.186	32.036	0.44375	A607-60	0.948
15	86.75 - 85	6	4.25	18	32.036	33.056	0.44375	A607-60	0.944
16	85 - 80	5		18	31.834	32.684	0.46875	A607-65	0.957
17	80 - 75	5		18	32.684	33.533	0.46875	A607-65	0.948
18	75 - 70	5		18	33.533	34.383	0.4625	A607-65	0.952
19	70 - 65	5		18	34.383	35.233	0.45625	A607-65	0.956
20	65 - 60	5		18	35.233	36.083	0.45625	A607-65	0.948
21	60 - 55	5		18	36.083	36.933	0.44375	A607-65	0.966
22	55 - 50	5		18	36.933	37.783	0.44375	A607-65	0.959
23	50 - 45	10	5	18	37.783	39.483	0.4375	A607-65	0.965
24	45 - 39	6		18	38.071	39.090	0.46875	A607-65	0.964
25	39 - 34	5		18	39.090	39.940	0.4625	A607-65	0.971
26	34 - 29	5		18	39.940	40.790	0.4625	A607-65	0.965
27	29 - 24	5		18	40.790	41.640	0.45625	A607-65	0.972
28	24 - 19	5		18	41.640	42.490	0.45	A607-65	0.979
29	19 - 14	5		18	42.490	43.340	0.45	A607-65	0.973
30	14 - 13.08	0.92		18	43.340	43.497	0.45	A607-65	0.972
31	13.08 - 12.83	0.25		18	43.497	43.539	0.45	A607-65	0.972
32	12.83 - 12.58	0.25		18	43.539	43.582	0.425	A607-65	1.077
33	12.58 - 7.58	5		18	43.582	44.431	0.425	A607-65	1.070
34	7.58 - 5.17	2.41		18	44.431	44.841	0.425	A607-65	1.067
35	5.17 - 4.92	0.25		18	44.841	44.884	0.45	A607-65	0.964
36	4.92 - 4.67	0.25		18	44.884	44.926	0.45	A607-65	0.963
37	4.67 - 0	4.67		18	44.926	45.720	0.44375	A607-65	0.972

TNX Section Forces

Increment (ft): 5

	Section Height (ft)	TNX Output P_u (K)	M_{ux} (kip-ft)	V_u (K)
1	148 - 143	5.30	25.18	4.58
2	143 - 138	8.37	58.63	8.60
3	138 - 133	8.79	102.30	8.88
4	133 - 128	12.32	149.10	12.50
5	128 - 123	12.84	212.28	12.77
6	123 - 120.75	13.08	241.14	12.89
7	120.75 - 115.75	13.93	306.37	13.20
8	115.75 - 110.75	14.60	373.02	13.47
9	110.75 - 105.75	15.28	441.00	13.73
10	105.75 - 100.75	15.99	510.28	13.99
11	100.75 - 97	16.52	563.08	14.19
12	97 - 96.75	16.59	566.63	14.19
13	96.75 - 91.75	17.63	638.35	14.50
14	91.75 - 86.75	18.69	711.59	14.81
15	86.75 - 85	19.07	737.58	14.91
16	85 - 80	20.94	813.04	15.28
17	80 - 75	22.10	890.11	15.57
18	75 - 70	23.28	968.61	15.85
19	70 - 65	24.48	1048.51	16.13
20	65 - 60	25.70	1129.77	16.39
21	60 - 55	26.93	1212.35	16.65
22	55 - 50	28.19	1296.20	16.90
23	50 - 45	29.46	1381.26	17.14
24	45 - 39	32.11	1485.17	17.50
25	39 - 34	33.49	1573.15	17.71
26	34 - 29	34.89	1662.15	17.91
27	29 - 24	36.30	1752.11	18.10
28	24 - 19	37.74	1843.01	18.28
29	19 - 14	39.19	1934.83	18.47
30	14 - 13.08	39.46	1951.82	18.50
31	13.08 - 12.83	39.54	1956.44	18.50
32	12.83 - 12.58	39.61	1961.07	18.51
33	12.58 - 7.58	41.15	2054.03	18.69
34	7.58 - 5.17	41.89	2099.15	18.78
35	5.17 - 4.92	41.97	2103.84	18.77
36	4.92 - 4.67	42.05	2108.54	18.78
37	4.67 - 0	43.45	2196.62	18.96

Analysis Results

Elevation (ft)	Component Type	Size	Critical Element	% Capacity	Pass / Fail
148 - 143	Pole	TP22.85x22x0.1875	Pole	6.6%	Pass
143 - 138	Pole	TP23.7x22.85x0.1875	Pole	14.1%	Pass
138 - 133	Pole	TP24.55x23.7x0.1875	Pole	22.4%	Pass
133 - 128	Pole	TP25.4x24.55x0.1875	Pole	30.8%	Pass
128 - 123	Pole	TP26.25x25.4x0.1875	Pole	41.0%	Pass
123 - 120.75	Pole	TP27.227x26.25x0.1875	Pole	45.3%	Pass
120.75 - 115.75	Pole	TP27.107x26.257x0.25	Pole	38.3%	Pass
115.75 - 110.75	Pole	TP27.957x27.107x0.25	Pole	43.9%	Pass
110.75 - 105.75	Pole	TP28.807x27.957x0.25	Pole	49.2%	Pass
105.75 - 100.75	Pole	TP29.657x28.807x0.25	Pole	54.0%	Pass
100.75 - 97	Pole	TP30.294x29.657x0.25	Pole	57.4%	Pass
97 - 96.75	Pole + Reinf.	TP30.336x30.294x0.4625	Reinf. 1 Tension Rupture	41.5%	Pass
96.75 - 91.75	Pole + Reinf.	TP31.186x30.336x0.45	Reinf. 1 Tension Rupture	44.7%	Pass
91.75 - 86.75	Pole + Reinf.	TP32.036x31.186x0.4438	Reinf. 1 Tension Rupture	47.7%	Pass
86.75 - 85	Pole + Reinf.	TP33.056x32.036x0.4438	Reinf. 1 Tension Rupture	48.7%	Pass
85 - 80	Pole + Reinf.	TP32.684x31.834x0.4688	Reinf. 1 Tension Rupture	49.3%	Pass
80 - 75	Pole + Reinf.	TP33.533x32.684x0.4688	Reinf. 1 Tension Rupture	51.8%	Pass
75 - 70	Pole + Reinf.	TP34.383x33.533x0.4625	Reinf. 1 Tension Rupture	54.1%	Pass
70 - 65	Pole + Reinf.	TP35.233x34.383x0.4563	Reinf. 1 Tension Rupture	56.2%	Pass
65 - 60	Pole + Reinf.	TP36.083x35.233x0.4563	Reinf. 1 Tension Rupture	58.2%	Pass
60 - 55	Pole + Reinf.	TP36.933x36.083x0.4438	Reinf. 1 Tension Rupture	60.1%	Pass
55 - 50	Pole + Reinf.	TP37.783x36.933x0.4438	Reinf. 1 Tension Rupture	61.9%	Pass
50 - 45	Pole + Reinf.	TP39.483x37.783x0.4375	Reinf. 1 Tension Rupture	63.5%	Pass
45 - 39	Pole + Reinf.	TP39.09x38.071x0.4688	Reinf. 1 Tension Rupture	62.6%	Pass
39 - 34	Pole + Reinf.	TP39.94x39.09x0.4625	Reinf. 1 Tension Rupture	63.9%	Pass
34 - 29	Pole + Reinf.	TP40.79x39.94x0.4625	Reinf. 1 Tension Rupture	65.1%	Pass
29 - 24	Pole + Reinf.	TP41.64x40.79x0.4563	Reinf. 1 Tension Rupture	66.3%	Pass
24 - 19	Pole + Reinf.	TP42.49x41.64x0.45	Reinf. 1 Tension Rupture	67.3%	Pass
19 - 14	Pole + Reinf.	TP43.34x42.49x0.45	Reinf. 1 Tension Rupture	68.3%	Pass
14 - 13.08	Pole + Reinf.	TP43.497x43.34x0.45	Reinf. 1 Tension Rupture	68.5%	Pass
13.08 - 12.83	Pole + Reinf.	TP43.539x43.497x0.45	Reinf. 1 Tension Rupture	68.5%	Pass
12.83 - 12.58	Pole + Reinf.	TP43.582x43.539x0.425	Reinf. 1 Tension Rupture	70.3%	Pass
12.58 - 7.58	Pole + Reinf.	TP44.431x43.582x0.425	Reinf. 1 Tension Rupture	71.2%	Pass
7.58 - 5.17	Pole + Reinf.	TP44.841x44.431x0.425	Reinf. 1 Tension Rupture	71.6%	Pass
5.17 - 4.92	Pole + Reinf.	TP44.884x44.841x0.45	Reinf. 1 Tension Rupture	69.9%	Pass
4.92 - 4.67	Pole + Reinf.	TP44.926x44.884x0.45	Reinf. 1 Tension Rupture	70.0%	Pass
4.67 - 0	Pole + Reinf.	TP45.72x44.926x0.4438	Reinf. 1 Tension Rupture	70.7%	Pass
				Summary	
			Pole	57.7%	Pass
			Reinforcement	71.6%	Pass
			Overall	71.6%	Pass

Additional Calculations

Section Elevation (ft)	Moment of Inertia (in^4)			Area (in^2)			% Capacity*				
	Pole	Reinf.	Total	Pole	Reinf.	Total	Pole	R1	R2	R3	R4
148 - 143	875	n/a	875	13.49	n/a	13.49	6.6%				
143 - 138	977	n/a	977	13.99	n/a	13.99	14.1%				
138 - 133	1087	n/a	1087	14.50	n/a	14.50	22.4%				
133 - 128	1205	n/a	1205	15.00	n/a	15.00	30.8%				
128 - 123	1331	n/a	1331	15.51	n/a	15.51	41.0%				
123 - 120.75	1390	n/a	1390	15.74	n/a	15.74	45.3%				
120.75 - 115.75	1941	n/a	1941	21.31	n/a	21.31	38.3%				
115.75 - 110.75	2132	n/a	2132	21.98	n/a	21.98	43.9%				
110.75 - 105.75	2334	n/a	2334	22.66	n/a	22.66	49.2%				
105.75 - 100.75	2548	n/a	2548	23.33	n/a	23.33	54.0%				
100.75 - 97	2718	n/a	2718	23.84	n/a	23.84	57.4%				
97 - 96.75	2729	2169	4898	23.87	16.95	40.82	31.6%	41.5%	41.5%		
96.75 - 91.75	2967	2286	5253	24.55	16.95	41.50	34.4%	44.7%	44.7%		
91.75 - 86.75	3218	2405	5623	25.22	16.95	42.17	37.1%	47.7%	47.7%		
86.75 - 85	3310	2448	5757	25.46	16.95	42.41	38.0%	48.7%	48.7%		
85 - 80	3835	2498	6334	28.92	16.95	45.87	34.8%	49.3%	49.3%		
80 - 75	4145	2623	6768	29.68	16.95	46.63	36.8%	51.8%	51.8%		
75 - 70	4471	2751	7222	30.44	16.95	47.39	38.8%	54.1%	54.1%		
70 - 65	4814	2882	7696	31.20	16.95	48.15	40.7%	56.2%	56.2%		
65 - 60	5174	3016	8190	31.96	16.95	48.91	42.6%	58.2%	58.2%		
60 - 55	5551	3153	8704	32.72	16.95	49.67	44.4%	60.1%	60.1%		
55 - 50	5946	3294	9240	33.48	16.95	50.43	46.1%	61.9%	61.9%		
50 - 45	6360	3437	9797	34.23	16.95	51.18	47.8%	63.5%	63.5%		
45 - 39	7305	3515	10820	38.46	16.95	55.41	45.5%	62.6%	62.6%		
39 - 34	7795	3663	11459	39.30	16.95	56.25	46.9%	63.9%	63.9%		
34 - 29	8308	3814	12122	40.15	16.95	57.10	48.2%	65.1%	65.1%		
29 - 24	8842	3969	12811	40.99	16.95	57.94	49.4%	66.3%	66.3%		
24 - 19	9399	4126	13525	41.83	16.95	58.78	50.6%	67.3%	67.3%		
19 - 14	9979	4286	14265	42.68	16.95	59.63	51.8%	68.3%	68.3%		
14 - 13.08	10088	4316	14404	42.83	16.95	59.78	52.0%	68.5%	68.5%		
13.08 - 12.83	10118	4324	14442	42.87	16.95	59.82	52.0%	68.5%	68.5%		
12.83 - 12.58	10154	3672	13826	42.92	19.77	62.69	56.0%	70.3%		58.0%	
12.58 - 7.58	10764	3811	14574	43.76	19.77	63.53	57.1%	71.2%		58.8%	
7.58 - 5.17	11066	3879	14945	44.17	19.77	63.94	57.7%	71.6%		59.2%	
5.17 - 4.92	11092	4585	15677	44.21	16.95	61.16	53.8%	69.9%			69.9%
4.92 - 4.67	11123	4593	15717	44.25	16.95	61.20	53.9%	70.0%			70.0%
4.67 - 0	11728	4751	16479	45.04	16.95	61.99	54.9%	70.7%			70.7%

Note: Section capacity checked using 5 degree increments.
Rating per TIA-222-H Section 15.5.

Monopole Base Plate Connection

Site Info	
BU #	876377
Site Name	ON 2 / FREDSALL PRO
Order #	552632 Rev.0

Analysis Considerations	
TIA-222 Revision	H
Grout Considered:	No
l_{ar} (in)	1.3125

Applied Loads	
Moment (kip-ft)	2196.62
Axial Force (kips)	43.45
Shear Force (kips)	18.96

**TIA-222-H Section 15.5 Applied*

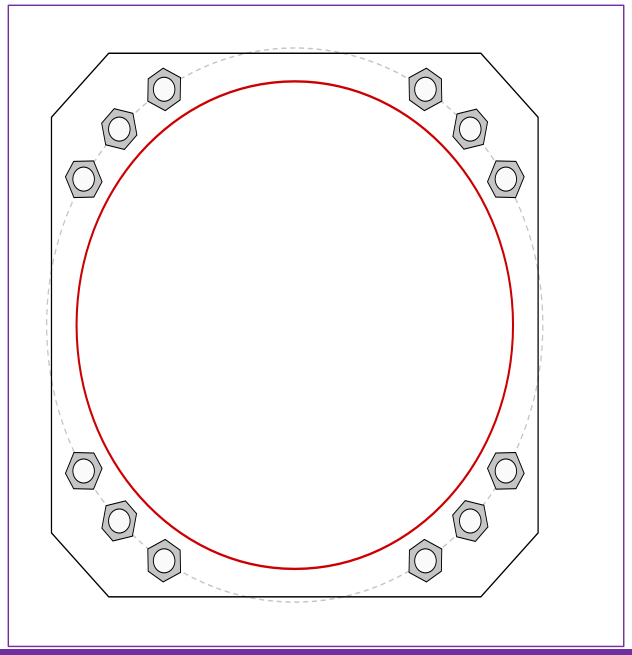

Connection Properties

Anchor Rod Data

(12) 2-1/4" ø bolts (A615-75 N; Fy=75 ksi, Fu=100 ksi) on 52" BC

Anchor Spacing: 6 in

Base Plate Data

51" W x 2.75" Plate (A572-55; Fy=55 ksi, Fu=70 ksi); Clip: 6 in

Stiffener Data

N/A

Pole Data

45.72" x 0.3125" 18-sided pole (A607-65; Fy=65 ksi, Fu=80 ksi)

Analysis Results

Anchor Rod Summary *(units of kips, kip-in)*

Pu_t = 165.22	ϕPn_t = 243.75	**Stress Rating**
Vu = 1.58	ϕVn = 149.1	**64.6%**
Mu = n/a	ϕMn = n/a	**Pass**

Base Plate Summary

Max Stress (ksi):	27.32	(Flexural)
Allowable Stress (ksi):	49.5	
Stress Rating:	**52.6%**	**Pass**

Drilled Pier Foundation

BU # :	876377
Site Name:	HORTON 2 / FREDSA
Order Number:	552632 Rev.0

TIA-222 Revison:	H
Tower Type:	Monopole

Applied Loads	Comp.	Uplift
Moment (kip-ft)	2196.62	
Axial Force (kips)	43.46	
Shear Force (kips)	18.94	

Material Properties		
Concrete Strength, f'c:	3	ksi
Rebar Strength, Fy:	60	ksi
Tie Yield Strength, Fyt:	40	ksi

Pier Design Data		
Depth	18.5	ft
Ext. Above Grade	0.5	ft
Pier Section 1		
From 0.5' above grade to 18.5' below grade		
Pier Diameter	6	ft
Rebar Quantity	16	
Rebar Size	11	
Clear Cover to Ties	3	in
Tie Size	5	
Tie Spacing	18	in

Rebar & Pier Options

Embedded Pole Inputs

Belled Pier Inputs

Analysis Results		
Soil Lateral Check	*Compression*	*Uplift*
$D_{v=0}$ (ft from TOC)	4.95	-
Soil Safety Factor	2.22	-
Max Moment (kip-ft)	2315.30	-
Rating*	*57.1%*	-
Soil Vertical Check	*Compression*	*Uplift*
Skin Friction (kips)	305.47	-
End Bearing (kips)	254.47	-
Weight of Concrete (kips)	80.81	-
Total Capacity (kips)	559.94	-
Axial (kips)	124.27	-
Rating*	*21.1%*	-
Reinforced Concrete Flexure	*Compression*	*Uplift*
Critical Depth (ft from TOC)	4.92	-
Critical Moment (kip-ft)	2315.29	-
Critical Moment Capacity	3402.28	-
Rating*	*64.8%*	-
Reinforced Concrete Shear	*Compression*	*Uplift*
Critical Depth (ft from TOC)	14.90	-
Critical Shear (kip)	300.32	-
Critical Shear Capacity	463.15	-
Rating*	*61.8%*	-

Shear-Friciton Methodology is Applied

Soil Interaction Rating*	**57.1%**
Structural Foundation Rating*	**64.8%**

*Rating per TIA-222-H Section 15.5

Check Limitation	
Apply TIA-222-H Section 15.5:	☑
N/A	☐
Shear Design Options	
Check Shear along Depth of Pier:	☑
Utilize Shear-Friction Methodology:	☑
Override Critical Depth:	☐

Go to Soil Calculations

Soil Profile

Groundwater Depth	11	# of Layers	4

Layer	Top (ft)	Bottom (ft)	Thickness (ft)	γ_{soil} (pcf)	$\gamma_{concrete}$ (pcf)	Cohesion (ksf)	Angle of Friction (degrees)	Calculated Ultimate Skin Friction Comp (ksf)	Calculated Ultimate Skin Friction Uplift (ksf)	Ultimate Skin Friction Comp Override (ksf)	Ultimate Skin Friction Uplift Override (ksf)	Ult. Gross Bearing Capacity (ksf)	SPT Blow Count	Soil Type
1	0	3.33	3.33	125	150	0	0	0.000	0.000	0.00	0.00			Cohesionless
2	3.33	11	7.67	140	150	0	38	1.085	1.085				19	Cohesionless
3	11	14	3	77.6	87.6	0	38	1.643	1.643				19	Cohesionless
4	14	18.5	4.5	97.6	87.6	0	40	1.857	1.857			12	28	Cohesionless

ASCE 7 Hazards Report

Address:
No Address at This Location

Standard: ASCE/SEI 7-10
Risk Category: II
Soil Class: D - Stiff Soil

Elevation: 1223.1 ft (NAVD 88)
Latitude: 41.966361
Longitude: -73.121694

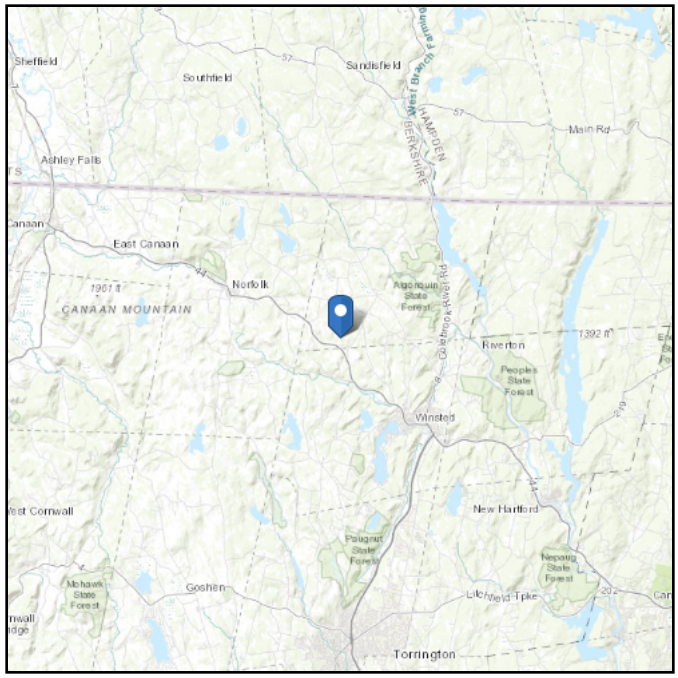

Wind

Results:

Wind Speed:	115 Vmph
10-year MRI	76 Vmph
25-year MRI	84 Vmph
50-year MRI	90 Vmph
100-year MRI	96 Vmph

Data Source: ASCE/SEI 7-10, Fig. 26.5-1A and Figs. CC-1–CC-4, and Section 26.5.2, incorporating errata of March 12, 2014

Date Accessed: Thu May 06 2021

Value provided is 3-second gust wind speeds at 33 ft above ground for Exposure C Category, based on linear interpolation between contours. Wind speeds are interpolated in accordance with the 7-10 Standard. Wind speeds correspond to approximately a 7% probability of exceedance in 50 years (annual exceedance probability = 0.00143, MRI = 700 years).

Site is not in a hurricane-prone region as defined in ASCE/SEI 7-10 Section 26.2.

Seismic

Site Soil Class: D - Stiff Soil

Results:

S_S :	0.176	S_{DS} :	0.187
S_1 :	0.065	S_{D1} :	0.104
F_a :	1.6	T_L :	6
F_v :	2.4	PGA :	0.086
S_{MS} :	0.281	PGA_M :	0.138
S_{M1} :	0.156	F_{PGA} :	1.6
		I_e :	1

Seismic Design Category B

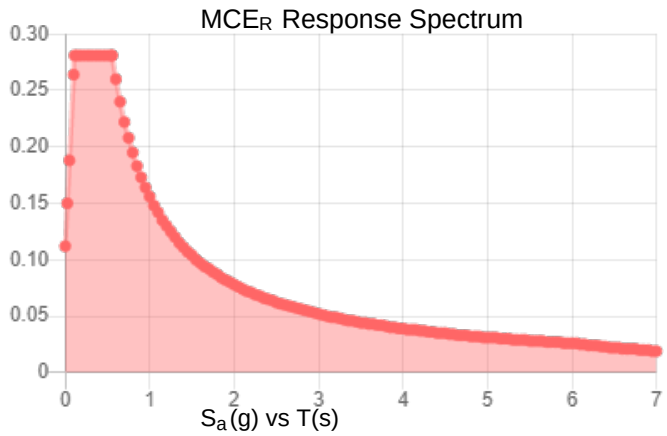

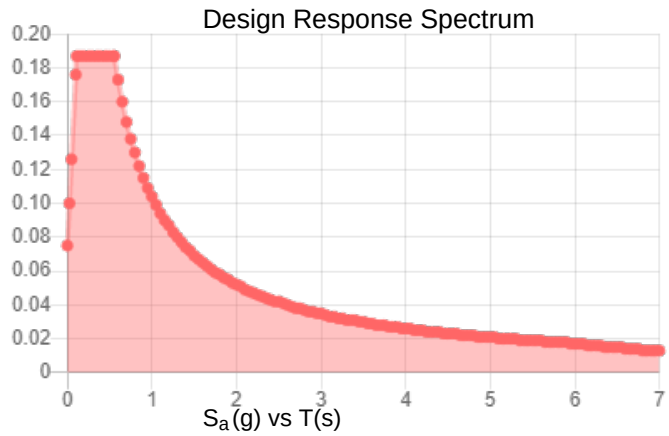

Data Accessed: Thu May 06 2021

Date Source: USGS Seismic Design Maps based on ASCE/SEI 7-10, incorporating Supplement 1 and errata of March 31, 2013, and ASCE/SEI 7-10 Table 1.5-2. Additional data for site-specific ground motion procedures in accordance with ASCE/SEI 7-10 Ch. 21 are available from USGS.

Ice

Results:

Ice Thickness:	0.75 in.
Concurrent Temperature:	5 F
Gust Speed:	40 mph
Data Source:	Standard ASCE/SEI 7-10, Figs. 10-2 through 10-8
Date Accessed:	Thu May 06 2021

Ice thicknesses on structures in exposed locations at elevations higher than the surrounding terrain and in valleys and gorges may exceed the mapped values.

Values provided are equivalent radial ice thicknesses due to freezing rain with concurrent 3-second gust speeds, for a 50-year mean recurrence interval, and temperatures concurrent with ice thicknesses due to freezing rain. Thicknesses for ice accretions caused by other sources shall be obtained from local meteorological studies. Ice thicknesses in exposed locations at elevations higher than the surrounding terrain and in valleys and gorges may exceed the mapped values.

The ASCE 7 Hazard Tool is provided for your convenience, for informational purposes only, and is provided “as is” and without warranties of any kind. The location data included herein has been obtained from information developed, produced, and maintained by third party providers; or has been extrapolated from maps incorporated in the ASCE 7 standard. While ASCE has made every effort to use data obtained from reliable sources or methodologies, ASCE does not make any representations or warranties as to the accuracy, completeness, reliability, currency, or quality of any data provided herein. Any third-party links provided by this Tool should not be construed as an endorsement, affiliation, relationship, or sponsorship of such third-party content by or from ASCE.

ASCE does not intend, nor should anyone interpret, the results provided by this Tool to replace the sound judgment of a competent professional, having knowledge and experience in the appropriate field(s) of practice, nor to substitute for the standard of care required of such professionals in interpreting and applying the contents of this Tool or the ASCE 7 standard.

In using this Tool, you expressly assume all risks associated with your use. Under no circumstances shall ASCE or its officers, directors, employees, members, affiliates, or agents be liable to you or any other person for any direct, indirect, special, incidental, or consequential damages arising from or related to your use of, or reliance on, the Tool or any information obtained therein. To the fullest extent permitted by law, you agree to release and hold harmless ASCE from any and all liability of any nature arising out of or resulting from any use of data provided by the ASCE 7 Hazard Tool.

Exhibit E

Mount Analysis

Maser Consulting Connecticut
2000 Midlantic Drive, Suite 100
Mt. Laurel, NJ 08054
(856) 797-0412
peter.albano@colliersengineering.com

Post-Mod Antenna Mount Analysis Report and PMI Requirements

Mount Fix

SMART Tool Project #: 10067782
Maser Consulting Connecticut Project #: 21777228A

May 14, 2021

Site Information	*Site ID:*	*467927-VZW / COLEBROOK SW CT*
	Site Name:	*COLEBROOK SW CT*
	Carrier Name:	*Verizon Wireless*
	Address:	*161 Pinney St*
		Colebrook, Connecticut 06021
		Litchfield County
	Latitude:	*41.965831°*
	Longitude:	*-73.120674°*
Structure Information	*Tower Type:*	*Monopole*
	Mount Type:	*12.67-Ft Platform*

FUZE ID # 16272052

Analysis Results

Platform: **62.0% Pass**

******Contractor PMI Requirements*:**
Included at the end of this MA report
Available & Submitted via portal at https://pmi.vzwsmart.com
Contractor - Please Review Specific Site PMI Requirements Upon Award
Requirements also Noted on Mount Modification Drawings
Requirements may also be Noted on A & E drawings

Report Prepared By: Selene Chen

STATE OF CONNECTICUT
DEJIAN XU
No. 33733
LICENSED
PROFESSIONAL ENGINEER

05/14/2021

Executive Summary:

The objective of this report is to summarize the analysis results of the antenna support mount including the proposed modifications at the subject facility for the final wireless telecommunications configuration, per the applicable codes and standards.

This analysis is inclusive of the mount structure only and does not address the structural capacity of the supporting structure. This mounting frame was not analyzed as an anchor attachment point for fall protection. All climbing activities are required to have a fall protection plan completed by a competent person.

Sources of Information:

Document Type	Remarks
Radio Frequency Data Sheet (RFDS)	*Verizon RFDS, Site ID: 323614, dated January 7, 2021*
Mount Mapping Report	*Roaming Networks Inc., Site ID: 467927, dated March 31, 2021*
Mont Analysis Report	*Maser Consulting Connecticut, Project #: 21777228A, dated April 27, 2021*
Mount Modification Drawings	*Maser Consulting Connecticut, Project #: 21777228A, dated May 14, 2021*

Analysis Criteria:

Codes and Standards:	ANSI/TIA-222-H	
Wind Parameters:	Basic Wind Speed (Ultimate 3-sec. Gust), V_{ULT}:	114 mph
	Ice Wind Speed (3-sec. Gust):	40 mph
	Design Ice Thickness:	1.00 in
	Risk Category:	II
	Exposure Category:	B
	Topographic Category:	1
	Topographic Feature Considered:	N/A
	Topographic Method:	N/A
	Ground Elevation Factor, K_e:	0.957
Seismic Parameters:	S_S:	0.166
	S_1:	0.054
Maintenance Parameters:	Wind Speed (3-sec. Gust):	30 mph
	Maintenance Live Load, Lv:	250 lbs.
	Maintenance Live Load, Lm:	500 lbs.
Analysis Software:	RISA-3D (V17)	

Final Loading Configuration:

The following equipment has been considered for the analysis of the mount:

Mount Elevation (ft)	Equipment Elevation (ft)	Quantity	Manufacturer	Model	Status
127.00	127.50	3	Samsung	MT6407-77A	Added
		1	RFS	DB-C1-12C-24AB-0Z	
		3	Samsung	B2/B66A RRH-BR049	
		3	Samsung	B5/B13 RRH-BR04C	
		2	Amphenol Antel	LPA-80080-6CF-EDIN-6	Retained
		6	Andrew	SBNHH-1D65B	
		4	Antel	LPA-80080/6CF	

Standard Conditions:

1. All engineering services are performed on the basis that the information provided to Maser Consulting Connecticut and used in this analysis is current and correct. The existing equipment loading has been applied at locations determined from the supplied documentation. Any deviation from the loading locations specified in this report shall be communicated to Maser Consulting Connecticut to verify deviation will not adversely impact the analysis.

2. Mounts are assumed to have been properly fabricated, installed and maintained in good condition, twist free and plumb in accordance with its original design and manufacturer's specifications.

   Obvious safety and structural issues/deficiencies noticed at the time of the mount mapping and reported in the Mount Mapping Report are assumed to be corrected and documented as part of the PMI process and are not considered in the mount analysis.

   The mount analysis and the mount mapping are not a condition assessment of the mount. Proper maintenance and condition assessments are still required post analysis.

3. For mount analyses completed from other data sources (including new replacement mounts) and not specifically mapped by Maser Consulting Connecticut, the mounts are assumed to have been properly fabricated, installed and maintained in good condition, twist free and plumb in accordance with its original design and manufacturer's specifications.

4. All member connections are assumed to have been designed to meet or exceed the load carrying capacity of the connected member unless otherwise specified in this report.

5. The mount was checked up to, and including, the bolts that fasten it to the mount collar/attachment and threaded rod connections in collar members if applicable. Local deformation and interaction between the mount collar/attachment and the supporting tower structure are outside the scope of this analysis.

6. All services are performed, results obtained, and recommendations made in accordance with generally accepted engineering principles and practices. Maser Consulting Connecticut is not responsible for the conclusion, opinions, and recommendations made by others based on the information supplied.

7. Structural Steel Grades have been assumed as follows, if applicable, unless otherwise noted in this analysis:
   - Channel, Solid Round, Angle, Plate — ASTM A36 (Gr. 36)
   - HSS (Rectangular) — ASTM 500 (Gr. B-46)
   - Pipe — ASTM A53 (Gr. B-35)
   - Threaded Rod — F1554 (Gr. 36)
   - Bolts — ASTM A325

8. Any mount modifications listed under Sources of Information are assumed to have been installed per the design specifications.

Discrepancies between in-field conditions and the assumptions listed above may render this analysis invalid unless explicitly approved by Maser Consulting Connecticut.

Analysis Results:

Component	Utilization %	Pass/Fail
Connection	62.0%	Pass
Standoff Horizontal	28.5%	Pass
Crossmember	15.2%	Pass
Corner Plate	11.4%	Pass
Grating Angle	14.3%	Pass
Face Horizontal	14.8%	Pass
Mount Pipe	26.2%	Pass
Support Rail	13.9%	Pass
Support Rail Corner	15.4%	Pass

Structure Rating – *(Controlling Utilization of all Components)*	**62.0%**

Recommendation:

The existing mount will be **SUFFICIENT** for the final loading after the proposed modifications are successfully completed.

ANSI/ASSP rigging plan review services compliant with the requirements of ANSI/TIA 322 are available for a Construction Class IV site or other, if required. Separate review fees will apply.

Attachments:

1. Mount Photos
2. Mount Mapping Report (for reference only)
3. Analysis Calculations
4. **Contractor Required PMI Report Deliverables**
5. Antenna Placement Diagrams
6. TIA Adoption and Wind Speed Usage Letter

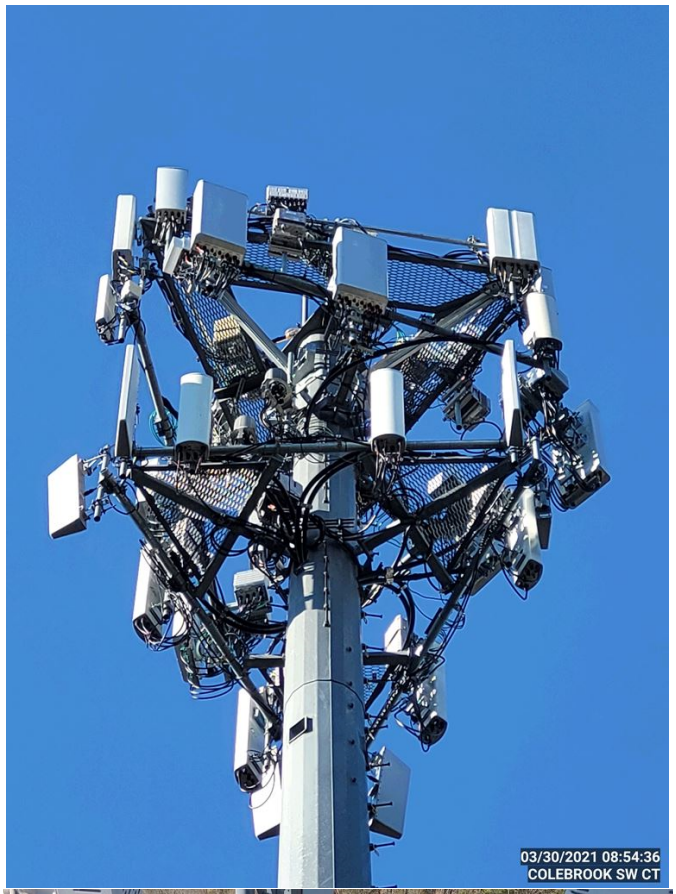
03/30/2021 08:54:36
COLEBROOK SW CT

03/30/2021 11:21:21
-73.03966799999999, 41.992111972222226
COLEBROOK SW CT

V3.0 Updated on 8-31-2020

PAUL J. FORD & COMPANY

Antenna Mount Mapping Form (PATENT PENDING)

FCC #
N/A

Tower Owner:	Other	**Mapping Date:**	03.31.2021.
Site Name:	COLEBROOK SW CT	**Tower Type:**	Self Support
Site Number or ID:	467927	**Tower Height (Ft.):**	N/A
Mapping Contractor:	Roaming Networks inc.	**Mount Elevation (Ft.):**	128.96

This antenna mapping form is the property of TES and under **PATENT PENDING**. The formation contained herein is considered confidential in nature and is to be used only for the specific customer it was intended for. Reproduction, transmission, publication, modification or disclosure by any method is prohibited except by express written permission of TES. All means and methods are the responsibility of the contractor and the work shall be compliant with ANSI/ASSE A 10.48, OSHA, FCC, FAA and other safety requirements that may apply. TES is not warrantying the usability of the safety climb as it must be assessed prior to each use in compliance with OSHA requirements.

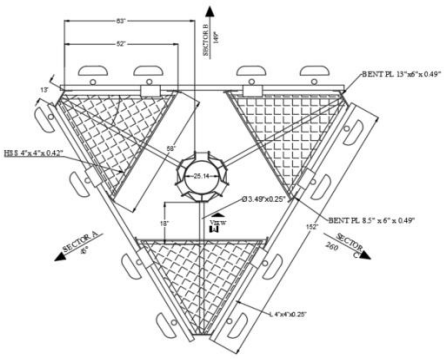

ANTENNA PLAN VIEW

Mount Pipe Configuration and Geometries [Unit = Inches]

Sector / Position	Mount Pipe Size & Length	Vertical Offset Dimension "u"	Horizontal Offset "C1, C2, C3, etc."	Sector / Position	Mount Pipe Size & Length	Vertical Offset Dimension "u"	Horizontal Offset "C1, C2, C3, etc."
A1	PIPE Ø 2.61" x0.22"x72"	40.00	4.50	C1	PIPE Ø 2.61" x0.22"x72"	40.00	4.50
A2	PIPE Ø 2.61" x0.22"x72"	40.00	51.00	C2	PIPE Ø 2.61" x0.22"x72"	40.00	51.00
A3	PIPE Ø 2.61" x0.22"x72"	40.00	147.00	C3	PIPE Ø 2.61" x0.22"x72"	40.00	147.00
A4	PIPE Ø 2.61" x0.22"x72"	40.00	152.00	C4	PIPE Ø 2.61" x0.22"x72"	40.00	152.00
A5				C5			
A6				C6			
B1	PIPE Ø 2.61" x0.22"x72"	40.00	4.50	D1			
B2	PIPE Ø 2.61" x0.22"x72"	40.00	51.00	D2			
B3	PIPE Ø 2.61" x0.22"x72"	40.00	147.00	D3			
B4	PIPE Ø 2.61" x0.22"x72"	40.00	152.00	D4			
B5				D5			
B6				D6			

Distance between bottom rail and mount CL elevation (dim d). Unit is inches. See 'Mount Elev Ref' tab for details. :	
Distance from top of bottom support rail to lowest tip of ant./eqpt. of Carrier above. (N/A if > 10 ft.) :	6.66
Distance from top of bottom support rail to highest tip of ant./eqpt. of Carrier below. (N/A if > 10 ft.) :	

Please enter additional infomation or comments below.

Tower Face Width at Mount Elev. (ft.):		Tower Leg Size or Pole Shaft Diameter at Mount Elev. (in.):	65

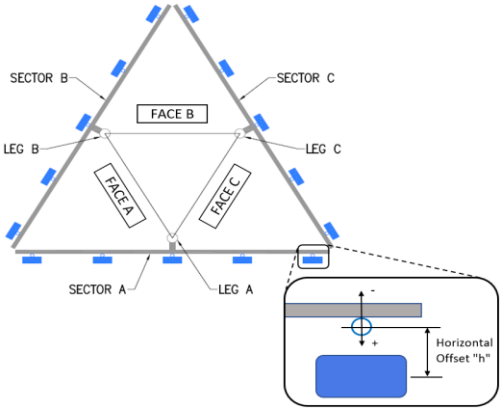

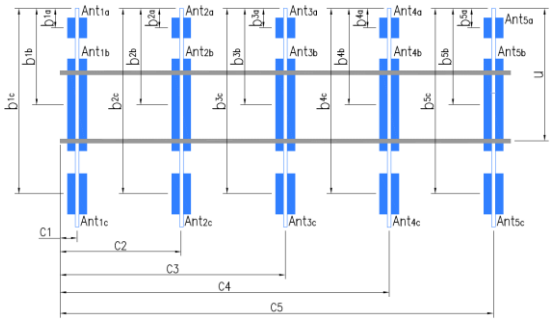

Antenna Layout (Looking Out From Tower)

Ants. Items	Enter antenna model. If not labeled, enter "Unknown".						Mounting Locations [Units are inches and degrees]			Photos of antennas
	Antenna Models if Known	Width (in.)	Depth (in.)	Height (in.)	Coax Size and Qty	Antenna Center-line (Ft.)	Vertical Distances"b_{1a}, b_{2a}, b_{3a}, b_{1b}...." (Inches)	Horiz. Offset "h" (Use "-" if Ant. is behind)	Antenna Azimuth (Degrees)	Photo Numbers
Sector A										
Ant_{1a}	UNKNOWN	13.50	6.00	70.00		129.418	34.50	14.00	45.00	166
Ant_{1b}										
Ant_{1c}										
Ant_{2a}	SBNHH-1D658	11.85	7.087	72.87		129.293	36.00	8.00	45.00	166
Ant_{2b}										
Ant_{2c}										
Ant_{3a}	B13RRH4x30	12	7.5	72.50		129.46	34.00	5.50	45.00	167
Ant_{3b}										
Ant_{3c}										
Ant_{4a}	UNKNOWN	13	6	72.50		129.71	31.00	16.00	45.00	167
Ant_{4b}										
Ant_{4c}										
Ant_{5a}										
Ant_{5b}										
Ant_{5c}										
Ant on Standoff										
Ant on Standoff										
Ant on Tower										
Ant on Tower										

Mount Azimuth (Degree) for Each Sector			Tower Leg Azimuth (Degree) for Each Sector	
Sector A:	45.00	Deg	Leg A:	Deg
Sector B:	149.00	Deg	Leg B:	Deg
Sector C:	260.00	Deg	Leg C:	Deg
Sector D:		Deg	Leg D:	Deg

Climbing Facility Information			
Location:	85.00	Deg	On Leg C
Climbing Facility	Corrosion Type:		Good condition.
	Access:		Climbing path was unobstructed.
	Condition:		Good condition.

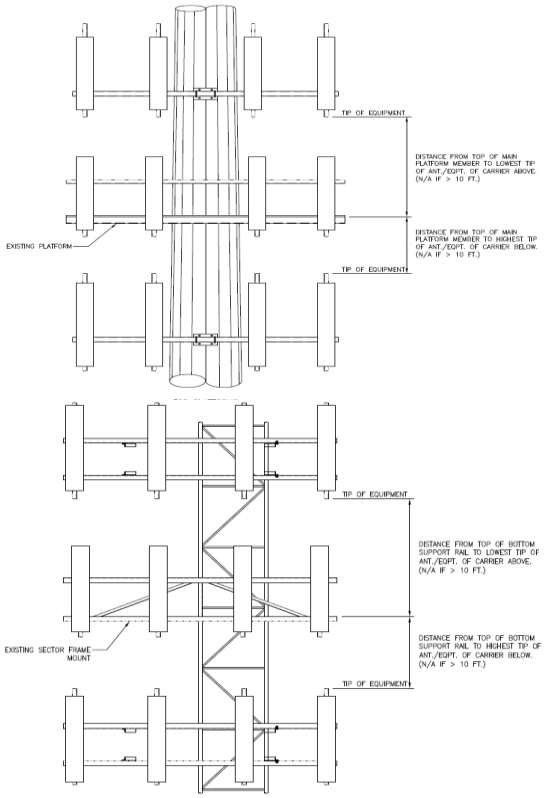

Sector B										
Ant_{1a}	UNKNOWN	13.50	6.00	70.00		129.418	34.50	14.00	149.00	175
Ant_{1b}										
Ant_{1c}										
Ant_{2a}	SBNHH-1D658	11.85	7.087	72.87		129.293	36.00	8.00	149.00	175
Ant_{2b}										
Ant_{2c}										
Ant_{3a}	B13RRH4x30	12	7.5	72.50		129.46	34.00	5.50	149.00	174
Ant_{3b}										
Ant_{3c}										
Ant_{4a}	UNKNOWN	13	6	72.50		129.71	31.00	16.00	149.00	174
Ant_{4b}										
Ant_{4c}										
Ant_{5a}										
Ant_{5b}										
Ant_{5c}										
Ant on Standoff										
Ant on Standoff										
Ant on Tower										
Ant on Tower										
Sector C										
Ant_{1a}	UNKNOWN	13.50	6.00	70.00		129.418	34.50	14.00	260.00	187
Ant_{1b}										
Ant_{1c}										
Ant_{2a}	SBNHH-1D658	11.85	7.087	72.87		129.293	36.00	8.00	260.00	187
Ant_{2b}										
Ant_{2c}										
Ant_{3a}	B13RRH4x30	12	7.5	72.50		129.46	34.00	5.50	260.00	186
Ant_{3b}										
Ant_{3c}										
Ant_{4a}	UNKNOWN	13	6	72.50		129.71	31.00	16.00	260.00	186
Ant_{4b}										
Ant_{4c}										
Ant_{5a}										
Ant_{5b}										
Ant_{5c}										
Ant on Standoff										
Ant on Standoff										
Ant on Tower										
Ant on Tower										
Sector D										
Ant_{1a}										
Ant_{1b}										
Ant_{1c}										
Ant_{2a}										
Ant_{2b}										
Ant_{2c}										
Ant_{3a}										
Ant_{3b}										
Ant_{3c}										
Ant_{4a}										
Ant_{4b}										
Ant_{4c}										
Ant_{5a}										
Ant_{5b}										
Ant_{5c}										
Ant on Standoff										
Ant on Standoff										
Ant on Tower										
Ant on Tower										

Observed Safety and Structural Issues During the Mount Mapping		
Issue #	Description of Issue	Photo #

1		
2		
3		
4		
5		
6		
7		
8		

Mapping Notes
1. Please report any visible structural or safety issues observed on the antenna mounts (Damaged members, loose connections, tilting mounts, safety climb issues, etc.) 2. If the thickness of the existing pipes or tubing can't be obtained from a general tool (such as Caliper), please use an ultrasonic measurement tool (thickness gauge) to measure the thickness. 3. Please create all required detail sketches of the mounts and insert them into the "Sketches" tab. 4. Please measure and enter the bolt sizes and types under the Members Box in the spreadsheet of the mount type. 5. Take and label the photos of the tower, mounts, connections, antennas and all measurements. Minimum 50 photos are required. 6. Please measure and report the size and length of all existing antenna mounting pipes. 7. Please measure and report the antenna information for all sectors. 8. Don't delete or rearrange any sheet or contents of any sheet from this mapping form.

Standard Conditions
1. Obvious safety and structural issues/deficiencies noticed at the time of the mount mapping are to be reported in this mapping. However, this mount mapping is not a condition assessment of the mount.

Antenna Mount Mapping Form (PATENT PENDING)

FCC #
N/A

Tower Owner:	Other	**Mapping Date:**	03.31.2021.
Site Name:	COLEBROOK SW CT	**Tower Type:**	Self Support
Site Number or ID:	467927	**Tower Height (Ft.):**	N/A
Mapping Contractor:	Roaming Networks inc.	**Mount Elevation (Ft.):**	128.96

This antenna mapping form is the property of TES and under **PATENT PENDING**. The formation contained herein is considered confidential in nature and is to be used only for the specific customer it was intended for. Reproduction, transmission, publication, modification or disclosure by any method is prohibited except by express written permission of TES. All means and methods are the responsibility of the contractor and the work shall be compliant with ANSI/ASSE A 10.48, OSHA, FCC, FAA and other safety requirements that may apply. TES is not warrantying the usability of the safety climb as it must be assessed prior to each use in compliance with OSHA requirements.

Please Insert Sketches of the Antenna Mount

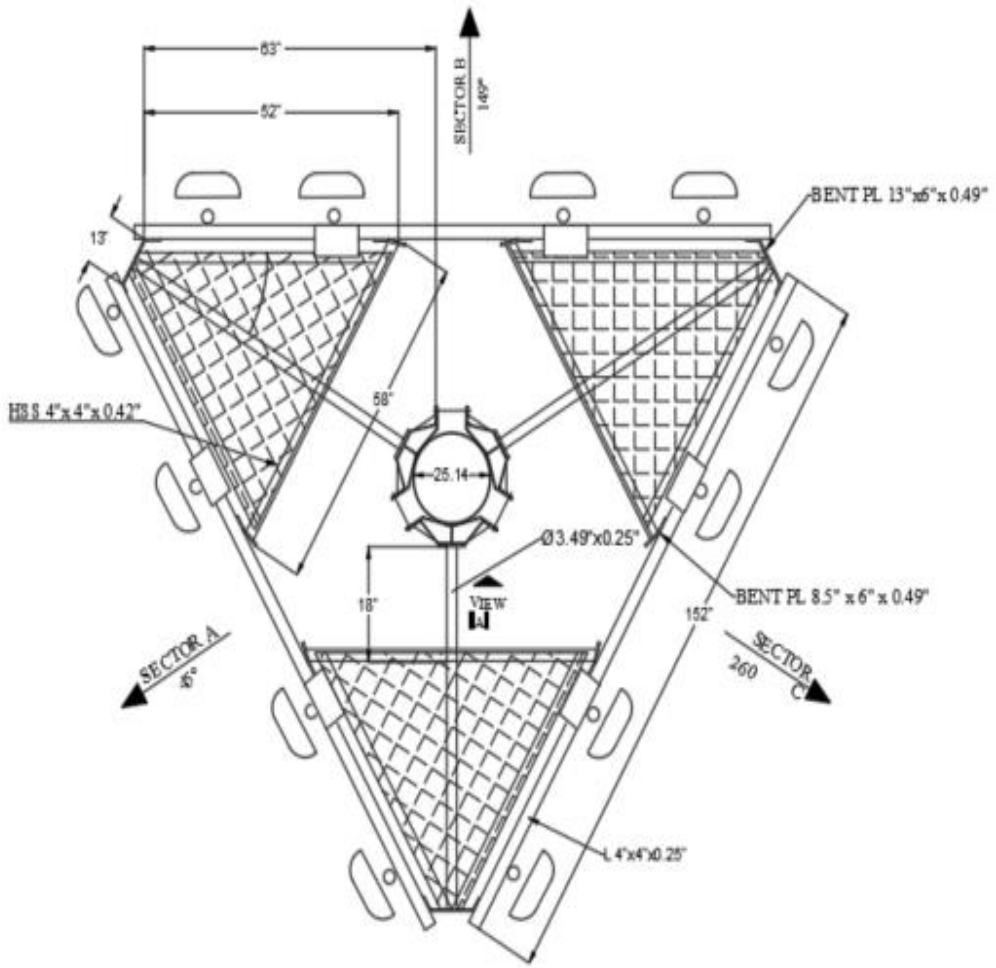

ANTENNA
PLAN VIEW

Please Insert Sketches of the Antenna Mount, cont'd

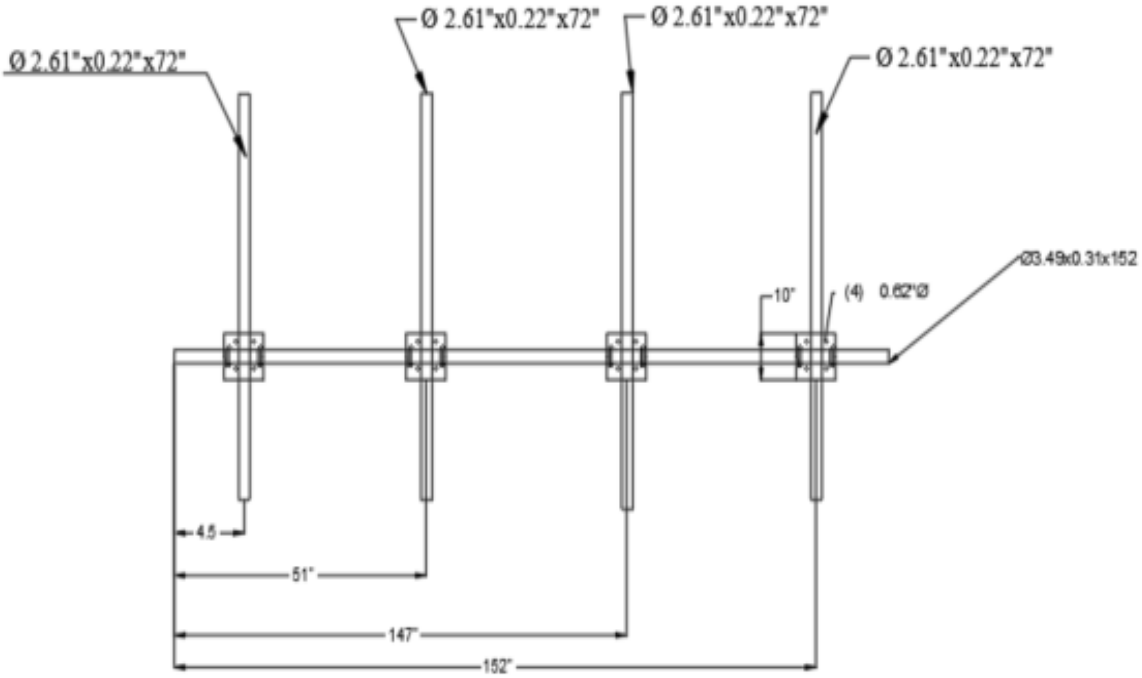

SECTOR A,B,C

Please Insert Sketches of the Antenna Mount, cont'd

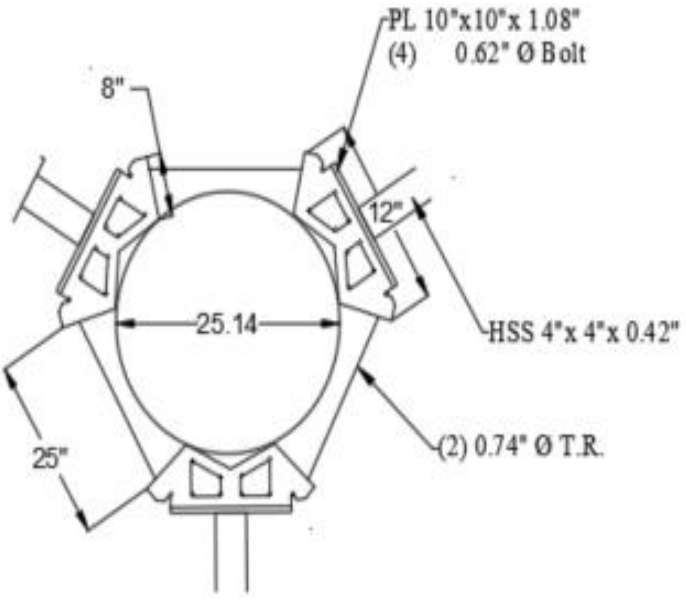

RRU PLAN VIEW

Please Insert Sketches of the Antenna Mount, cont'd

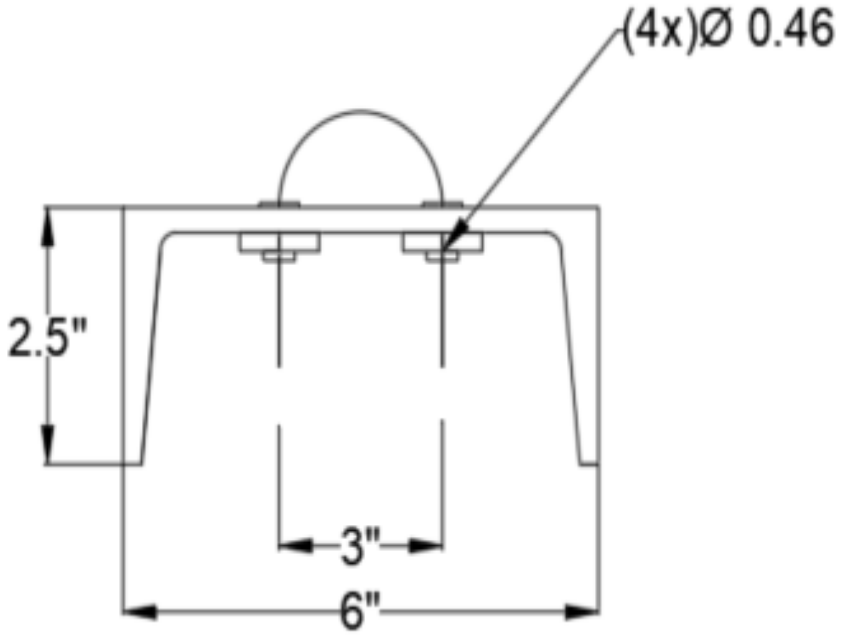

CONN. 1

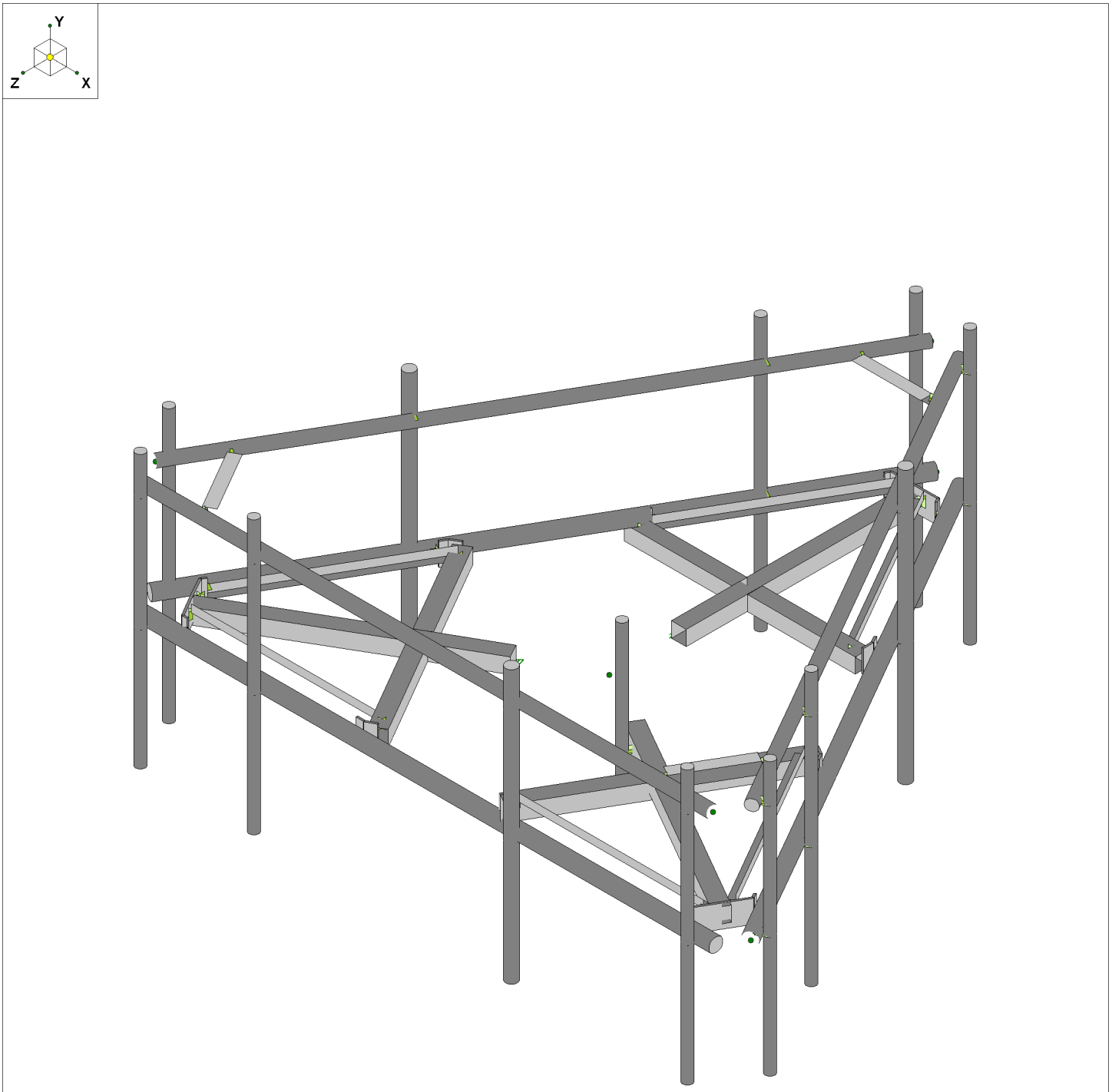

Envelope Only Solution

Maser Consulting	467927-VZW_MT_LO_H	SK - 1
AJH		May 13, 2021 at 3:40 PM
Project No. 10044574		MOD_467927-VZW_MT_LO_H.r3d

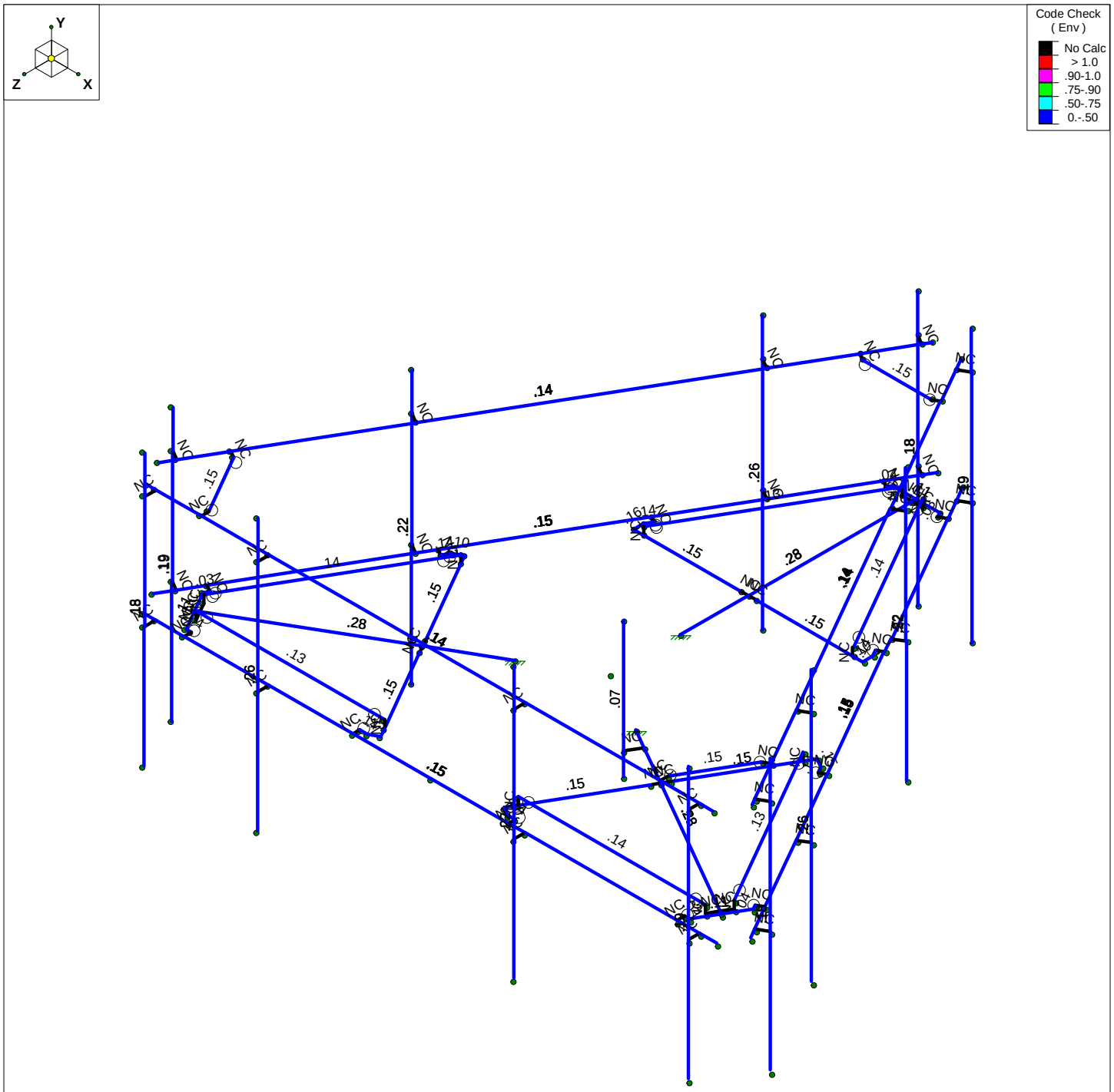

Member Code Checks Displayed (Enveloped)
Envelope Only Solution

Maser Consulting	467927-VZW_MT_LO_H	SK - 2
AJH		May 13, 2021 at 3:41 PM
Project No. 10044574		MOD_467927-VZW_MT_LO_H.r3d

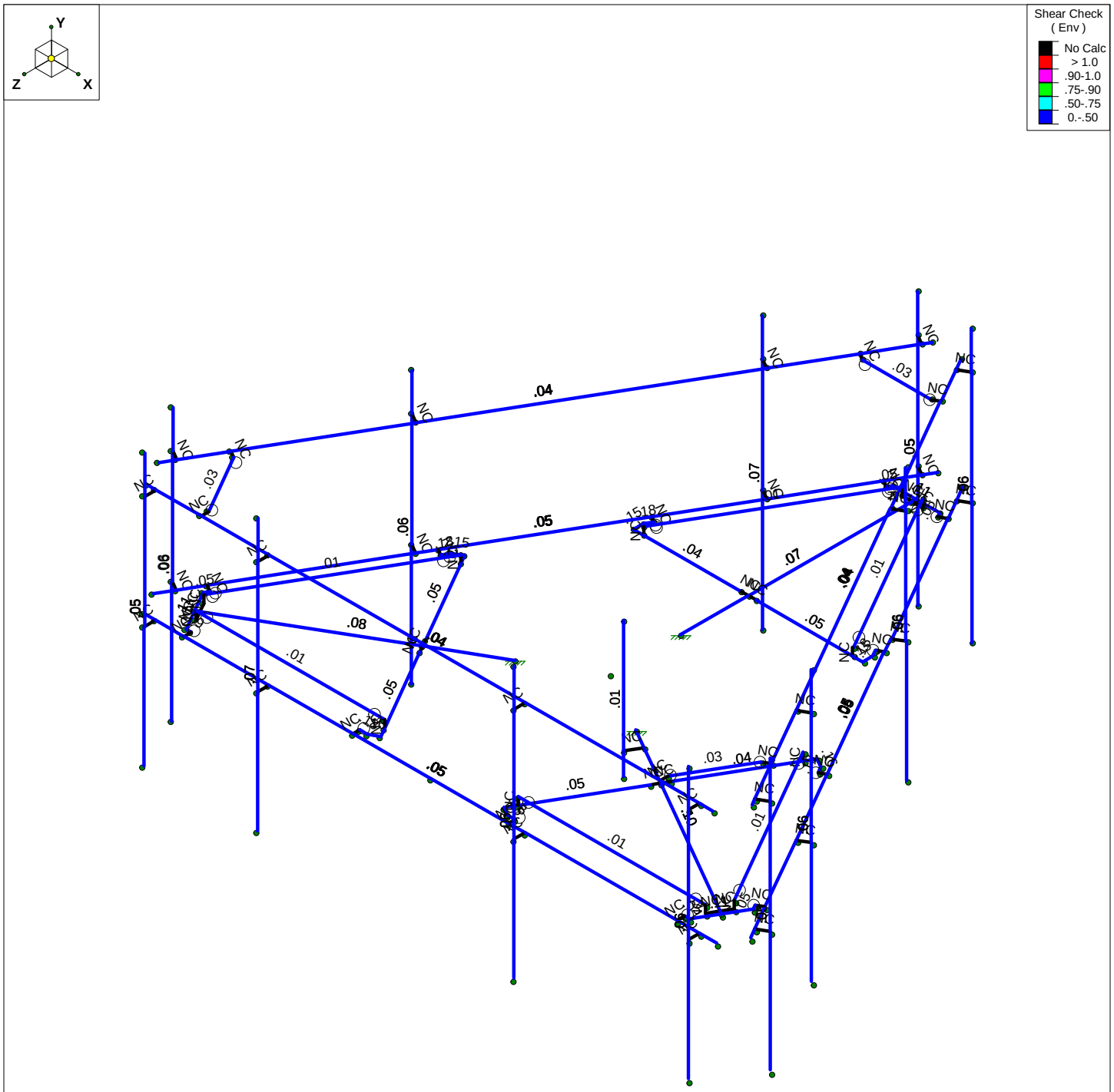

Member Shear Checks Displayed (Enveloped)
Envelope Only Solution

Maser Consulting	467927-VZW_MT_LO_H	SK - 3
AJH		May 13, 2021 at 3:41 PM
Project No. 10044574		MOD_467927-VZW_MT_LO_H.r3d

Basic Load Cases

	BLC Description	Category	X Gravity	Y Gravity	Z Gravity	Joint	Point	Distributed	Area(Me...	Surface(P...
1	Antenna D	None					111			
2	Antenna Di	None					111			
3	Antenna Wo (0 Deg)	None					111			
4	Antenna Wo (30 Deg)	None					111			
5	Antenna Wo (60 Deg)	None					111			
6	Antenna Wo (90 Deg)	None					111			
7	Antenna Wo (120 Deg)	None					111			
8	Antenna Wo (150 Deg)	None					111			
9	Antenna Wo (180 Deg)	None					111			
10	Antenna Wo (210 Deg)	None					111			
11	Antenna Wo (240 Deg)	None					111			
12	Antenna Wo (270 Deg)	None					111			
13	Antenna Wo (300 Deg)	None					111			
14	Antenna Wo (330 Deg)	None					111			
15	Antenna Wi (0 Deg)	None					111			
16	Antenna Wi (30 Deg)	None					111			
17	Antenna Wi (60 Deg)	None					111			
18	Antenna Wi (90 Deg)	None					111			
19	Antenna Wi (120 Deg)	None					111			
20	Antenna Wi (150 Deg)	None					111			
21	Antenna Wi (180 Deg)	None					111			
22	Antenna Wi (210 Deg)	None					111			
23	Antenna Wi (240 Deg)	None					111			
24	Antenna Wi (270 Deg)	None					111			
25	Antenna Wi (300 Deg)	None					111			
26	Antenna Wi (330 Deg)	None					111			
27	Antenna Wm (0 Deg)	None					111			
28	Antenna Wm (30 Deg)	None					111			
29	Antenna Wm (60 Deg)	None					111			
30	Antenna Wm (90 Deg)	None					111			
31	Antenna Wm (120 De...	None					111			
32	Antenna Wm (150 De...	None					111			
33	Antenna Wm (180 De...	None					111			
34	Antenna Wm (210 De...	None					111			
35	Antenna Wm (240 De...	None					111			
36	Antenna Wm (270 De...	None					111			
37	Antenna Wm (300 De...	None					111			
38	Antenna Wm (330 De...	None					111			
39	Structure D	None		-1					3	
40	Structure Di	None						58	3	
41	Structure Wo (0 Deg)	None						116		
42	Structure Wo (30 Deg)	None						116		
43	Structure Wo (60 Deg)	None						116		
44	Structure Wo (90 Deg)	None						116		
45	Structure Wo (120 D...	None						116		
46	Structure Wo (150 D...	None						116		
47	Structure Wo (180 D...	None						116		
48	Structure Wo (210 D...	None						116		
49	Structure Wo (240 D...	None						116		
50	Structure Wo (270 D...	None						116		
51	Structure Wo (300 D...	None						116		

Basic Load Cases (Continued)

	BLC Description	Category	X Gravity	Y Gravity	Z Gravity	Joint	Point	Distributed	Area(Me...	Surface(P...
52	Structure Wo (330 D...	None						116		
53	Structure Wi (0 Deg)	None						116		
54	Structure Wi (30 Deg)	None						116		
55	Structure Wi (60 Deg)	None						116		
56	Structure Wi (90 Deg)	None						116		
57	Structure Wi (120 De...	None						116		
58	Structure Wi (150 De...	None						116		
59	Structure Wi (180 De...	None						116		
60	Structure Wi (210 De...	None						116		
61	Structure Wi (240 De...	None						116		
62	Structure Wi (270 De...	None						116		
63	Structure Wi (300 De...	None						116		
64	Structure Wi (330 De...	None						116		
65	Structure Wm (0 Deg)	None						116		
66	Structure Wm (30 D...	None						116		
67	Structure Wm (60 D...	None						116		
68	Structure Wm (90 D...	None						116		
69	Structure Wm (120 ...	None						116		
70	Structure Wm (150 ...	None						116		
71	Structure Wm (180 ...	None						116		
72	Structure Wm (210 ...	None						116		
73	Structure Wm (240 ...	None						116		
74	Structure Wm (270 ...	None						116		
75	Structure Wm (300 ...	None						116		
76	Structure Wm (330 ...	None						116		
77	Lm1	None					1			
78	Lm2	None					1			
79	Lv1	None					1			
80	Lv2	None					1			
81	BLC 39 Transient Are...	None						30		
82	BLC 40 Transient Are...	None						30		

Load Combinations

	Description	Solve	PDelta	S...	BLC	Fac...	BLC	Fac...	BLC	Fac...	BLC	Fac...	BLC	Fac...	BLC	Fac...	BLC	Fac...	BLC	Fac...	BLC	Fac...	BLC	Fac...
1	1.2D+1.0Wo (0...	Yes	Y		1	1.2	39	1.2	3	1	41	1												
2	1.2D+1.0Wo (3...	Yes	Y		1	1.2	39	1.2	4	1	42	1												
3	1.2D+1.0Wo (6...	Yes	Y		1	1.2	39	1.2	5	1	43	1												
4	1.2D+1.0Wo (9...	Yes	Y		1	1.2	39	1.2	6	1	44	1												
5	1.2D+1.0Wo (1...	Yes	Y		1	1.2	39	1.2	7	1	45	1												
6	1.2D+1.0Wo (1...	Yes	Y		1	1.2	39	1.2	8	1	46	1												
7	1.2D+1.0Wo (1...	Yes	Y		1	1.2	39	1.2	9	1	47	1												
8	1.2D+1.0Wo (2...	Yes	Y		1	1.2	39	1.2	10	1	48	1												
9	1.2D+1.0Wo (2...	Yes	Y		1	1.2	39	1.2	11	1	49	1												
10	1.2D+1.0Wo (2...	Yes	Y		1	1.2	39	1.2	12	1	50	1												
11	1.2D+1.0Wo (3...	Yes	Y		1	1.2	39	1.2	13	1	51	1												
12	1.2D+1.0Wo (3...	Yes	Y		1	1.2	39	1.2	14	1	52	1												
13	1.2D + 1.0Di + ...	Yes	Y		1	1.2	39	1.2	2	1	40	1	15	1	53	1								
14	1.2D + 1.0Di + ...	Yes	Y		1	1.2	39	1.2	2	1	40	1	16	1	54	1								
15	1.2D + 1.0Di + ...	Yes	Y		1	1.2	39	1.2	2	1	40	1	17	1	55	1								
16	1.2D + 1.0Di + ...	Yes	Y		1	1.2	39	1.2	2	1	40	1	18	1	56	1								

Load Combinations (Continued)

	Description	Solve	PDelta	S...	BLC	Fac...	BLC	Fac...	BLC	Fac...	BLC	Fac...	BLC	Fac...	BLC	Fac...	BLC	Fac...	BLC	Fac...	BLC	Fac...	BLC	Fac...
17	1.2D + 1.0Di + ...	Yes	Y		1	1.2	39	1.2	2	1	40	1	19	1	57	1								
18	1.2D + 1.0Di + ...	Yes	Y		1	1.2	39	1.2	2	1	40	1	20	1	58	1								
19	1.2D + 1.0Di + ...	Yes	Y		1	1.2	39	1.2	2	1	40	1	21	1	59	1								
20	1.2D + 1.0Di + ...	Yes	Y		1	1.2	39	1.2	2	1	40	1	22	1	60	1								
21	1.2D + 1.0Di + ...	Yes	Y		1	1.2	39	1.2	2	1	40	1	23	1	61	1								
22	1.2D + 1.0Di + ...	Yes	Y		1	1.2	39	1.2	2	1	40	1	24	1	62	1								
23	1.2D + 1.0Di + ...	Yes	Y		1	1.2	39	1.2	2	1	40	1	25	1	63	1								
24	1.2D + 1.0Di + ...	Yes	Y		1	1.2	39	1.2	2	1	40	1	26	1	64	1								
25	1.2D + 1.5Lm1 ...	Yes	Y		1	1.2	39	1.2	77	1.5	27	1	65	1										
26	1.2D + 1.5Lm1 ...	Yes	Y		1	1.2	39	1.2	77	1.5	28	1	66	1										
27	1.2D + 1.5Lm1 ...	Yes	Y		1	1.2	39	1.2	77	1.5	29	1	67	1										
28	1.2D + 1.5Lm1 ...	Yes	Y		1	1.2	39	1.2	77	1.5	30	1	68	1										
29	1.2D + 1.5Lm1 ...	Yes	Y		1	1.2	39	1.2	77	1.5	31	1	69	1										
30	1.2D + 1.5Lm1 ...	Yes	Y		1	1.2	39	1.2	77	1.5	32	1	70	1										
31	1.2D + 1.5Lm1 ...	Yes	Y		1	1.2	39	1.2	77	1.5	33	1	71	1										
32	1.2D + 1.5Lm1 ...	Yes	Y		1	1.2	39	1.2	77	1.5	34	1	72	1										
33	1.2D + 1.5Lm1 ...	Yes	Y		1	1.2	39	1.2	77	1.5	35	1	73	1										
34	1.2D + 1.5Lm1 ...	Yes	Y		1	1.2	39	1.2	77	1.5	36	1	74	1										
35	1.2D + 1.5Lm1 ...	Yes	Y		1	1.2	39	1.2	77	1.5	37	1	75	1										
36	1.2D + 1.5Lm1 ...	Yes	Y		1	1.2	39	1.2	77	1.5	38	1	76	1										
37	1.2D + 1.5Lm2 ...	Yes	Y		1	1.2	39	1.2	78	1.5	27	1	65	1										
38	1.2D + 1.5Lm2 ...	Yes	Y		1	1.2	39	1.2	78	1.5	28	1	66	1										
39	1.2D + 1.5Lm2 ...	Yes	Y		1	1.2	39	1.2	78	1.5	29	1	67	1										
40	1.2D + 1.5Lm2 ...	Yes	Y		1	1.2	39	1.2	78	1.5	30	1	68	1										
41	1.2D + 1.5Lm2 ...	Yes	Y		1	1.2	39	1.2	78	1.5	31	1	69	1										
42	1.2D + 1.5Lm2 ...	Yes	Y		1	1.2	39	1.2	78	1.5	32	1	70	1										
43	1.2D + 1.5Lm2 ...	Yes	Y		1	1.2	39	1.2	78	1.5	33	1	71	1										
44	1.2D + 1.5Lm2 ...	Yes	Y		1	1.2	39	1.2	78	1.5	34	1	72	1										
45	1.2D + 1.5Lm2 ...	Yes	Y		1	1.2	39	1.2	78	1.5	35	1	73	1										
46	1.2D + 1.5Lm2 ...	Yes	Y		1	1.2	39	1.2	78	1.5	36	1	74	1										
47	1.2D + 1.5Lm2 ...	Yes	Y		1	1.2	39	1.2	78	1.5	37	1	75	1										
48	1.2D + 1.5Lm2 ...	Yes	Y		1	1.2	39	1.2	78	1.5	38	1	76	1										
49	1.2D + 1.5Lv1	Yes	Y		1	1.2	39	1.2	79	1.5														
50	1.2D + 1.5Lv2	Yes	Y		1	1.2	39	1.2	80	1.5														
51	1.4D	Yes	Y		1	1.4	39	1.4																
52	Seismic Mass		Y		1	1	39	1																
53	1.2D + 1.0Ev + ...		Y		1	1.2	39	1.2	SX		SY	1	SZ	-1										
54	1.2D + 1.0Ev + ...		Y		1	1.2	39	1.2	SX	.5	SY	1	SZ	-.866										
55	1.2D + 1.0Ev + ...		Y		1	1.2	39	1.2	SX	.866	SY	1	SZ	-.5										
56	1.2D + 1.0Ev + ...		Y		1	1.2	39	1.2	SX	1	SY	1	SZ											
57	1.2D + 1.0Ev + ...		Y		1	1.2	39	1.2	SX	.866	SY	1	SZ	.5										
58	1.2D + 1.0Ev + ...		Y		1	1.2	39	1.2	SX	.5	SY	1	SZ	.866										
59	1.2D + 1.0Ev + ...		Y		1	1.2	39	1.2	SX		SY	1	SZ	1										
60	1.2D + 1.0Ev + ...		Y		1	1.2	39	1.2	SX	-.5	SY	1	SZ	.866										
61	1.2D + 1.0Ev + ...		Y		1	1.2	39	1.2	SX	-.866	SY	1	SZ	.5										
62	1.2D + 1.0Ev + ...		Y		1	1.2	39	1.2	SX	-1	SY	1	SZ											
63	1.2D + 1.0Ev + ...		Y		1	1.2	39	1.2	SX	-.866	SY	1	SZ	-.5										
64	1.2D + 1.0Ev + ...		Y		1	1.2	39	1.2	SX	-.5	SY	1	SZ	-.866										

Joint Coordinates and Temperatures

	Label	X [in]	Y [in]	Z [in]	Temp [F]	Detach From Diap...
1	N3	-0.	0	-18.5	0	
2	N5	-30.5	0	-36.5	0	
3	N6	27.78125	2.	-36.5	0	
4	N7	-27.78125	2.	-36.5	0	
5	N24	-0.	0	-36.5	0	
6	N27	-0.	0	-80.75	0	
7	CP	0	0	0	0	
8	N29	27.78125	0	-36.5	0	
9	N30	-27.78125	0	-36.5	0	
10	N101	30.5	0	-36.5	0	
11	N102	-2.	0	-36.5	0	
12	N103A	2.	0	-36.5	0	
13	N104A	-30.5	0	-39.125	0	
14	N105	30.5	0	-39.125	0	
15	N131	29.5	0	-40.857051	0	
16	N135	6.859375	0	-79.586278	0	
17	N144	-29.5	0	-40.857051	0	
18	N148	-6.859375	0	-79.586278	0	
19	N86A	31.015548	0	-41.732053	0	
20	N86B	-31.015548	0	-41.732053	0	
21	N86C	-6.1875	0	-80.75	0	
22	N87A	6.1875	0	-80.75	0	
23	N86D	8.585144	0	-80.582652	0	
24	N86E	-8.585144	0	-80.582652	0	
25	N88A	-0.	0	-79.75	0	
26	N87C	2.810851	2.	-79.75	0	
27	N86G	2.810851	0	-79.75	0	
28	N87B	-2.810851	2.	-79.75	0	
29	N88C	-2.810851	0	-79.75	0	
30	N174A	-16.02147	0	9.25	0	
31	N175A	-16.359927	0	44.663775	0	
32	N176A	-45.500552	2.	-5.809268	0	
33	N177A	-17.719302	2.	42.309268	0	
34	N178A	-31.609927	0	18.25	0	
35	N179A	-69.931551	0	40.375	0	
36	N181A	-45.500552	0	-5.809268	0	
37	N182A	-17.719302	0	42.309268	0	
38	N183A	-46.859927	0	-8.163775	0	
39	N184A	-30.609927	0	19.982051	0	
40	N185A	-32.609927	0	16.517949	0	
41	N186A	-18.633244	0	45.976275	0	
42	N187A	-49.133244	0	-6.851275	0	
43	N188A	-50.133244	0	-5.119224	0	
44	N189A	-72.353426	0	33.852746	0	
45	N190A	-20.633244	0	45.976275	0	
46	N191A	-65.494051	0	45.733532	0	
47	N192A	-51.648792	0	-5.994226	0	
48	N193A	-20.633244	0	47.726279	0	
49	N194A	-66.837801	0	45.733532	0	
50	N195A	-73.025301	0	35.016468	0	
51	N196A	-74.079196	0	32.856373	0	

Joint Coordinates and Temperatures (Continued)

	Label	X [in]	Y [in]	Z [in]	Temp [F]	Detach From Diap...
52	N197A	-65.494051	0	47.726279	0	
53	N198A	-69.065526	0	39.875	0	
54	N199A	-70.470951	2.	37.440732	0	
55	N200A	-70.470951	0	37.440732	0	
56	N201A	-67.660101	2.	42.309268	0	
57	N202A	-67.660101	0	42.309268	0	
58	N203A	16.02147	0	9.25	0	
59	N204A	46.859927	0	-8.163775	0	
60	N205A	17.719302	2.	42.309268	0	
61	N206A	45.500552	2.	-5.809268	0	
62	N207A	31.609927	0	18.25	0	
63	N208A	69.931551	0	40.375	0	
64	N210A	17.719302	0	42.309268	0	
65	N211A	45.500552	0	-5.809268	0	
66	N212A	16.359927	0	44.663775	0	
67	N213A	32.609927	0	16.517949	0	
68	N214A	30.609927	0	19.982051	0	
69	N215A	49.133244	0	-6.851275	0	
70	N216A	18.633244	0	45.976275	0	
71	N217A	20.633244	0	45.976275	0	
72	N218A	65.494051	0	45.733532	0	
73	N219A	50.133244	0	-5.119224	0	
74	N220A	72.353426	0	33.852746	0	
75	N221A	20.633244	0	47.726279	0	
76	N222A	51.648792	0	-5.994226	0	
77	N223A	73.025301	0	35.016468	0	
78	N224A	66.837801	0	45.733532	0	
79	N225A	65.494051	0	47.726279	0	
80	N226A	74.079196	0	32.856373	0	
81	N227A	69.065526	0	39.875	0	
82	N228A	67.660101	2.	42.309268	0	
83	N229A	67.660101	0	42.309268	0	
84	N230A	70.470951	2.	37.440732	0	
85	N231A	70.470951	0	37.440732	0	
86	N230B	0.	0	47.726279	0	
87	N232A	76.	0	47.726279	0	
88	N233A	-76.	0	47.726279	0	
89	N234A	71.5	0	47.726279	0	
90	N235A	71.5	0	50.726279	0	
91	N236A	71.5	40.	50.726279	0	
92	N237A	71.5	-32.	50.726279	0	
93	N238A	25.	0	47.726279	0	
94	N239A	25.	0	50.726279	0	
95	N240A	25.	40.	50.726279	0	
96	N241A	25.	-32.	50.726279	0	
97	N242A	-43.	0	47.726279	0	
98	N243A	-43.	0	50.726279	0	
99	N244A	-43.	40.	50.726279	0	
100	N245A	-43.	-32.	50.726279	0	
101	N246A	-73.	0	47.726279	0	
102	N247A	-73.	0	50.726279	0	
103	N248A	-73.	40.	50.726279	0	

Joint Coordinates and Temperatures (Continued)

	Label	X [in]	Y [in]	Z [in]	Temp [F]	Detach From Diap...
104	N249A	-73.	-32.	50.726279	0	
105	N251A	3.33217	0	-89.68107	0	
106	N252A	79.33217	0	41.954791	0	
107	N253A	5.58217	0	-85.783956	0	
108	N254A	8.180246	0	-87.283956	0	
109	N255A	8.180246	40.	-87.283956	0	
110	N256A	8.180246	-32.	-87.283956	0	
111	N257A	28.83217	0	-45.513775	0	
112	N258A	31.430246	0	-47.013775	0	
113	N259A	31.430246	40.	-47.013775	0	
114	N260A	31.430246	-32.	-47.013775	0	
115	N261A	62.83217	0	13.375953	0	
116	N262A	65.430246	0	11.875953	0	
117	N263A	65.430246	40.	11.875953	0	
118	N264A	65.430246	-32.	11.875953	0	
119	N265A	77.83217	0	39.356715	0	
120	N266A	80.430246	0	37.856715	0	
121	N267A	80.430246	40.	37.856715	0	
122	N268A	80.430246	-32.	37.856715	0	
123	N271A	-79.33217	0	41.954791	0	
124	N272A	-3.33217	0	-89.68107	0	
125	N273A	-77.08217	0	38.057677	0	
126	N274A	-79.680246	0	36.557677	0	
127	N275A	-79.680246	40.	36.557677	0	
128	N276A	-79.680246	-32.	36.557677	0	
129	N277A	-53.83217	0	-2.212504	0	
130	N278A	-56.430246	0	-3.712504	0	
131	N279A	-56.430246	40.	-3.712504	0	
132	N280A	-56.430246	-32.	-3.712504	0	
133	N281A	-19.83217	0	-61.102232	0	
134	N282A	-22.430246	0	-62.602232	0	
135	N283A	-22.430246	40.	-62.602232	0	
136	N284A	-22.430246	-32.	-62.602232	0	
137	N285A	-4.83217	0	-87.082994	0	
138	N286A	-7.430246	0	-88.582994	0	
139	N287A	-7.430246	40.	-88.582994	0	
140	N288A	-7.430246	-32.	-88.582994	0	
141	N141	21.217622	0	12.25	0	
142	N142	19.217622	0	15.714102	0	
143	N143	19.217622	-6	15.714102	0	
144	N144A	19.217622	30	15.714102	0	
145	N145	75.	30	47.726279	0	
146	N146	-75.	30	47.726279	0	
147	N147	71.5	30	47.726279	0	
148	N148A	71.5	30	50.726279	0	
149	N149	25.	30	47.726279	0	
150	N150	25.	30	50.726279	0	
151	N151	-43.	30	47.726279	0	
152	N152	-43.	30	50.726279	0	
153	N153	-73.	30	47.726279	0	
154	N154	-73.	30	50.726279	0	
155	N157	5.58217	30	-85.783956	0	

Joint Coordinates and Temperatures (Continued)

	Label	X [in]	Y [in]	Z [in]	Temp [F]	Detach From Diap...
156	N158	8.180246	30	-87.283956	0	
157	N159	28.83217	30	-45.513775	0	
158	N160	31.430246	30	-47.013775	0	
159	N161	62.83217	30	13.375953	0	
160	N162	65.430246	30	11.875953	0	
161	N163	77.83217	30	39.356715	0	
162	N164	80.430246	30	37.856715	0	
163	N167	-77.08217	30	38.057677	0	
164	N168	-79.680246	30	36.557677	0	
165	N169	-53.83217	30	-2.212504	0	
166	N170	-56.430246	30	-3.712504	0	
167	N171	-19.83217	30	-61.102232	0	
168	N172	-22.430246	30	-62.602232	0	
169	N173	-4.83217	30	-87.082994	0	
170	N174	-7.430246	30	-88.582994	0	
171	N171A	3.83217	30	-88.815045	0	
172	N172A	78.83217	30	41.088766	0	
173	N173A	-78.83217	30	41.088766	0	
174	N174B	-3.83217	30	-88.815045	0	
175	N175	-61.	30	47.726279	0	
176	N176	-61.	30	45.726279	0	
177	N177	61.	30	47.726279	0	
178	N178	61.	30	45.726279	0	
179	N179	71.83217	30	28.96441	0	
180	N180	70.100119	30	29.96441	0	
181	N181	10.83217	30	-76.690689	0	
182	N182	9.100119	30	-75.690689	0	
183	N183	-10.83217	30	-76.690689	0	
184	N184	-9.100119	30	-75.690689	0	
185	N185	-71.83217	30	28.96441	0	
186	N186	-70.100119	30	29.96441	0	

Hot Rolled Steel Section Sets

	Label	Shape	Type	Design List	Material	Design Rul...	A [in2]	Iyy [in4]	Izz [in4]	J [in4]
1	Face Horizontal	PIPE 3.0	Beam	Pipe	A53 Gr.B	Typical	2.07	2.85	2.85	5.69
2	Standoff Horizontal	HSS4X4X4	Beam	Tube	A500 Gr.B ...	Typical	3.37	7.8	7.8	12.8
3	Corner Plate	PL1/2X6	Beam	RECT	A36 Gr.36	Typical	3	.063	9	.237
4	Platform Crossmem...	HSS4X4X4	Beam	Tube	A500 Gr.B ...	Typical	3.37	7.8	7.8	12.8
5	Grating Support	L2x2x3	Beam	Single Angle	A36 Gr.36	Typical	.722	.271	.271	.009
6	Mount Pipe	PIPE 2.0	Column	Pipe	A53 Gr.B	Typical	1.02	.627	.627	1.25
7	Cross Arm Plate	PL1/2X6	Column	RECT	A36 Gr.36	Typical	3	.063	9	.237
8	Handrail	PIPE 2.0	Beam	Pipe	A53 Gr.B	Typical	1.02	.627	.627	1.25
9	Corner Angle	L2.5x2.5x4	Beam	RECT	A36 Gr.36	Typical	1.19	.692	.692	.026
10	Dual Antenna Mount...	PIPE 2.5	Column	Pipe	A53 Gr.B	Typical	1.61	1.45	1.45	2.89
11	Support Rail	PIPE 2.5	Beam	Pipe	A53 Gr.B	Typical	1.61	1.45	1.45	2.89
12	Support Rail Corner	L3X3X4	Beam	Single Angle	A36 Gr.36	Typical	1.44	1.23	1.23	.031

Hot Rolled Steel Properties

	Label	E [ksi]	G [ksi]	Nu	Therm (/1E...	Density[k/ft...	Yield[ksi]	Ry	Fu[ksi]	Rt
1	A992	29000	11154	.3	.65	.49	50	1.1	65	1.1
2	A36 Gr.36	29000	11154	.3	.65	.49	36	1.5	58	1.2
3	A572 Gr.50	29000	11154	.3	.65	.49	50	1.1	65	1.1
4	A500 Gr.B RND	29000	11154	.3	.65	.527	42	1.4	58	1.3
5	A500 Gr.B Rect	29000	11154	.3	.65	.527	46	1.4	58	1.3
6	A53 Gr.B	29000	11154	.3	.65	.49	35	1.6	60	1.2
7	A1085	29000	11154	.3	.65	.49	50	1.4	65	1.3
8	Q235	29000	11154	.3	.65	.49	35	1.5	58	1.2

Member Primary Data

	Label	I Joint	J Joint	K Joint	Rotate(deg)	Section/Shape	Type	Design List	Material	Design Rules
1	M4	N3	N27			Standoff Horiz...	Beam	Tube	A500 Gr.B...	Typical
2	M10	N101	N103A			Platform Cross...	Beam	Tube	A500 Gr.B...	Typical
3	M43	N102	N5			Platform Cross...	Beam	Tube	A500 Gr.B...	Typical
4	M46	N86C	N87A			Corner Plate	Beam	RECT	A36 Gr.36	Typical
5	M35A	N7	N30			RIGID	None	None	RIGID	Typical
6	M36A	N6	N29			RIGID	None	None	RIGID	Typical
7	M51B	N87C	N6			Grating Support	Beam	Single Angle	A36 Gr.36	Typical
8	M52B	N7	N87B			Grating Support	Beam	Single Angle	A36 Gr.36	Typical
9	M52	N87B	N88C			RIGID	None	None	RIGID	Typical
10	M58	N102	N24			RIGID	None	None	RIGID	Typical
11	M59	N24	N103A			RIGID	None	None	RIGID	Typical
12	M76	N101	N105			Cross Arm Plate	Column	RECT	A36 Gr.36	Typical
13	M77	N105	N131			Cross Arm Plate	Column	RECT	A36 Gr.36	Typical
14	M79	N131	N86A			RIGID	None	None	RIGID	Typical
15	M80	N87A	N135			Corner Plate	Beam	RECT	A36 Gr.36	Typical
16	M83	N135	N86D			RIGID	None	None	RIGID	Typical
17	M84	N5	N104A			Cross Arm Plate	Column	RECT	A36 Gr.36	Typical
18	M85	N104A	N144			Cross Arm Plate	Column	RECT	A36 Gr.36	Typical
19	M88	N144	N86B			RIGID	None	None	RIGID	Typical
20	M91	N86C	N148			Corner Plate	Beam	RECT	A36 Gr.36	Typical
21	M92	N148	N86E			RIGID	None	None	RIGID	Typical
22	M50	N88C	N88A			RIGID	None	None	RIGID	Typical
23	M51	N88A	N86G			RIGID	None	None	RIGID	Typical
24	M51A	N87C	N86G			RIGID	None	None	RIGID	Typical
25	M126A	N174A	N179A			Standoff Horiz...	Beam	Tube	A500 Gr.B...	Typical
26	M127A	N183A	N185A			Platform Cross...	Beam	Tube	A500 Gr.B...	Typical
27	M128A	N184A	N175A			Platform Cross...	Beam	Tube	A500 Gr.B...	Typical
28	M129A	N194A	N195A			Corner Plate	Beam	RECT	A36 Gr.36	Typical
29	M130A	N177A	N182A			RIGID	None	None	RIGID	Typical
30	M131A	N176A	N181A			RIGID	None	None	RIGID	Typical
31	M132A	N199A	N176A			Grating Support	Beam	Single Angle	A36 Gr.36	Typical
32	M133A	N177A	N201A			Grating Support	Beam	Single Angle	A36 Gr.36	Typical
33	M134A	N201A	N202A			RIGID	None	None	RIGID	Typical
34	M135A	N184A	N178A			RIGID	None	None	RIGID	Typical
35	M136A	N178A	N185A			RIGID	None	None	RIGID	Typical
36	M137A	N183A	N187A			Cross Arm Plate	Column	RECT	A36 Gr.36	Typical
37	M138A	N187A	N188A			Cross Arm Plate	Column	RECT	A36 Gr.36	Typical
38	M139A	N188A	N192A			RIGID	None	None	RIGID	Typical

Member Primary Data (Continued)

	Label	I Joint	J Joint	K Joint	Rotate(deg)	Section/Shape	Type	Design List	Material	Design Rules
39	M140A	N195A	N189A			Corner Plate	Beam	RECT	A36 Gr.36	Typical
40	M141A	N189A	N196A			RIGID	None	None	RIGID	Typical
41	M142A	N175A	N186A			Cross Arm Plate	Column	RECT	A36 Gr.36	Typical
42	M143A	N186A	N190A			Cross Arm Plate	Column	RECT	A36 Gr.36	Typical
43	M144A	N190A	N193A			RIGID	None	None	RIGID	Typical
44	M145A	N194A	N191A			Corner Plate	Beam	RECT	A36 Gr.36	Typical
45	M146A	N191A	N197A			RIGID	None	None	RIGID	Typical
46	M147A	N202A	N198A			RIGID	None	None	RIGID	Typical
47	M148A	N198A	N200A			RIGID	None	None	RIGID	Typical
48	M149A	N199A	N200A			RIGID	None	None	RIGID	Typical
49	M150A	N203A	N208A			Standoff Horiz...	Beam	Tube	A500 Gr.B...	Typical
50	M151A	N212A	N214A			Platform Cross...	Beam	Tube	A500 Gr.B...	Typical
51	M152A	N213A	N204A			Platform Cross...	Beam	Tube	A500 Gr.B...	Typical
52	M153A	N223A	N224A			Corner Plate	Beam	RECT	A36 Gr.36	Typical
53	M154A	N206A	N211A			RIGID	None	None	RIGID	Typical
54	M155A	N205A	N210A			RIGID	None	None	RIGID	Typical
55	M156A	N228A	N205A			Grating Support	Beam	Single Angle	A36 Gr.36	Typical
56	M157A	N206A	N230A			Grating Support	Beam	Single Angle	A36 Gr.36	Typical
57	M158A	N230A	N231A			RIGID	None	None	RIGID	Typical
58	M159A	N213A	N207A			RIGID	None	None	RIGID	Typical
59	M160A	N207A	N214A			RIGID	None	None	RIGID	Typical
60	M161A	N212A	N216A			Cross Arm Plate	Column	RECT	A36 Gr.36	Typical
61	M162A	N216A	N217A			Cross Arm Plate	Column	RECT	A36 Gr.36	Typical
62	M163A	N217A	N221A			RIGID	None	None	RIGID	Typical
63	M164A	N224A	N218A			Corner Plate	Beam	RECT	A36 Gr.36	Typical
64	M165A	N218A	N225A			RIGID	None	None	RIGID	Typical
65	M166A	N204A	N215A			Cross Arm Plate	Column	RECT	A36 Gr.36	Typical
66	M167A	N215A	N219A			Cross Arm Plate	Column	RECT	A36 Gr.36	Typical
67	M168A	N219A	N222A			RIGID	None	None	RIGID	Typical
68	M169A	N223A	N220A			Corner Plate	Beam	RECT	A36 Gr.36	Typical
69	M170A	N220A	N226A			RIGID	None	None	RIGID	Typical
70	M171A	N231A	N227A			RIGID	None	None	RIGID	Typical
71	M172A	N227A	N229A			RIGID	None	None	RIGID	Typical
72	M173A	N228A	N229A			RIGID	None	None	RIGID	Typical
73	M174A	N232A	N233A			Face Horizontal	Beam	Pipe	A53 Gr.B	Typical
74	M175A	N234A	N235A			RIGID	None	None	RIGID	Typical
75	MP1A	N236A	N237A			Mount Pipe	Column	Pipe	A53 Gr.B	Typical
76	M177A	N238A	N239A			RIGID	None	None	RIGID	Typical
77	MP2A	N240A	N241A			Dual Antenna ...	Column	Pipe	A53 Gr.B	Typical
78	M179A	N242A	N243A			RIGID	None	None	RIGID	Typical
79	MP3A	N244A	N245A			Mount Pipe	Column	Pipe	A53 Gr.B	Typical
80	M181A	N246A	N247A			RIGID	None	None	RIGID	Typical
81	MP4A	N248A	N249A			Mount Pipe	Column	Pipe	A53 Gr.B	Typical
82	M183A	N251A	N252A			Face Horizontal	Beam	Pipe	A53 Gr.B	Typical
83	M184A	N253A	N254A			RIGID	None	None	RIGID	Typical
84	MP1C	N255A	N256A			Mount Pipe	Column	Pipe	A53 Gr.B	Typical
85	M186A	N257A	N258A			RIGID	None	None	RIGID	Typical
86	MP2C	N259A	N260A			Dual Antenna ...	Column	Pipe	A53 Gr.B	Typical
87	M188A	N261A	N262A			RIGID	None	None	RIGID	Typical
88	MP3C	N263A	N264A			Mount Pipe	Column	Pipe	A53 Gr.B	Typical
89	M190A	N265A	N266A			RIGID	None	None	RIGID	Typical
90	MP4C	N267A	N268A			Mount Pipe	Column	Pipe	A53 Gr.B	Typical

Member Primary Data (Continued)

	Label	I Joint	J Joint	K Joint	Rotate(deg)	Section/Shape	Type	Design List	Material	Design Rules
91	M192A	N271A	N272A			Face Horizontal	Beam	Pipe	A53 Gr.B	Typical
92	M193A	N273A	N274A			RIGID	None	None	RIGID	Typical
93	MP1B	N275A	N276A			Mount Pipe	Column	Pipe	A53 Gr.B	Typical
94	M195A	N277A	N278A			RIGID	None	None	RIGID	Typical
95	MP2B	N279A	N280A			Dual Antenna ...	Column	Pipe	A53 Gr.B	Typical
96	M197A	N281A	N282A			RIGID	None	None	RIGID	Typical
97	MP3B	N283A	N284A			Mount Pipe	Column	Pipe	A53 Gr.B	Typical
98	M199A	N285A	N286A			RIGID	None	None	RIGID	Typical
99	MP4B	N287A	N288A			Mount Pipe	Column	Pipe	A53 Gr.B	Typical
100	M100	N141	N142			RIGID	None	None	RIGID	Typical
101	M101	N144A	N143			Mount Pipe	Column	Pipe	A53 Gr.B	Typical
102	M102	N145	N146			Support Rail	Beam	Pipe	A53 Gr.B	Typical
103	M103	N147	N148A			RIGID	None	None	RIGID	Typical
104	M104	N149	N150			RIGID	None	None	RIGID	Typical
105	M105	N151	N152			RIGID	None	None	RIGID	Typical
106	M106	N153	N154			RIGID	None	None	RIGID	Typical
107	M108	N157	N158			RIGID	None	None	RIGID	Typical
108	M109	N159	N160			RIGID	None	None	RIGID	Typical
109	M110	N161	N162			RIGID	None	None	RIGID	Typical
110	M111	N163	N164			RIGID	None	None	RIGID	Typical
111	M113	N167	N168			RIGID	None	None	RIGID	Typical
112	M114	N169	N170			RIGID	None	None	RIGID	Typical
113	M115	N171	N172			RIGID	None	None	RIGID	Typical
114	M116	N173	N174			RIGID	None	None	RIGID	Typical
115	M115A	N171A	N172A			Support Rail	Beam	Pipe	A53 Gr.B	Typical
116	M116A	N173A	N174B			Support Rail	Beam	Pipe	A53 Gr.B	Typical
117	M117	N175	N176			RIGID	None	None	RIGID	Typical
118	M118	N177	N178			RIGID	None	None	RIGID	Typical
119	M119	N179	N180			RIGID	None	None	RIGID	Typical
120	M120	N181	N182			RIGID	None	None	RIGID	Typical
121	M121	N183	N184			RIGID	None	None	RIGID	Typical
122	M122	N185	N186			RIGID	None	None	RIGID	Typical
123	M123	N176	N186		90	Support Rail C...	Beam	Single Angle	A36 Gr.36	Typical
124	M124	N184	N182		90	Support Rail C...	Beam	Single Angle	A36 Gr.36	Typical
125	M125	N180	N178		90	Support Rail C...	Beam	Single Angle	A36 Gr.36	Typical

Member Advanced Data

	Label	I Release	J Release	I Offset[in]	J Offset[in]	T/C Only	Physical	Defl Rat...	Analysis ...	Inactive	Seismic...
1	M4						Yes				None
2	M10						Yes	Default			None
3	M43						Yes	Default			None
4	M46						Yes	Default			None
5	M35A						Yes	** NA **			None
6	M36A						Yes	** NA **			None
7	M51B	OOOOOX	OOOOOX				Yes	Default			None
8	M52B	OOOOOX	OOOOOX				Yes	Default			None
9	M52						Yes	** NA **			None
10	M58						Yes	** NA **			None
11	M59						Yes	** NA **			None
12	M76						Yes	** NA **			None

Member Advanced Data (Continued)

	Label	I Release	J Release	I Offset[in]	J Offset[in]	T/C Only	Physical	Defl Rat...	Analysis ...	Inactive	Seismic...
13	M77						Yes	** NA **			None
14	M79		BenPIN				Yes	** NA **			None
15	M80						Yes				None
16	M83		BenPIN				Yes	** NA **			None
17	M84						Yes	** NA **			None
18	M85						Yes	** NA **			None
19	M88		BenPIN				Yes	** NA **			None
20	M91						Yes				None
21	M92		BenPIN				Yes	** NA **			None
22	M50						Yes	** NA **			None
23	M51						Yes	** NA **			None
24	M51A						Yes	** NA **			None
25	M126A						Yes				None
26	M127A						Yes	Default			None
27	M128A						Yes	Default			None
28	M129A						Yes	Default			None
29	M130A						Yes	** NA **			None
30	M131A						Yes	** NA **			None
31	M132A	OOOOOX	OOOOOX				Yes	Default			None
32	M133A	OOOOOX	OOOOOX				Yes	Default			None
33	M134A						Yes	** NA **			None
34	M135A						Yes	** NA **			None
35	M136A						Yes	** NA **			None
36	M137A						Yes	** NA **			None
37	M138A						Yes	** NA **			None
38	M139A		BenPIN				Yes	** NA **			None
39	M140A						Yes				None
40	M141A		BenPIN				Yes	** NA **			None
41	M142A						Yes	** NA **			None
42	M143A						Yes	** NA **			None
43	M144A		BenPIN				Yes	** NA **			None
44	M145A						Yes				None
45	M146A		BenPIN				Yes	** NA **			None
46	M147A						Yes	** NA **			None
47	M148A						Yes	** NA **			None
48	M149A						Yes	** NA **			None
49	M150A						Yes				None
50	M151A						Yes	Default			None
51	M152A						Yes	Default			None
52	M153A						Yes	Default			None
53	M154A						Yes	** NA **			None
54	M155A						Yes	** NA **			None
55	M156A	OOOOOX	OOOOOX				Yes	Default			None
56	M157A	OOOOOX	OOOOOX				Yes	Default			None
57	M158A						Yes	** NA **			None
58	M159A						Yes	** NA **			None
59	M160A						Yes	** NA **			None
60	M161A						Yes	** NA **			None
61	M162A						Yes	** NA **			None
62	M163A		BenPIN				Yes	** NA **			None
63	M164A						Yes				None
64	M165A		BenPIN				Yes	** NA **			None

Member Advanced Data (Continued)

	Label	I Release	J Release	I Offset[in]	J Offset[in]	T/C Only	Physical	Defl Rat...	Analysis ...	Inactive	Seismic...
65	M166A						Yes	** NA **			None
66	M167A						Yes	** NA **			None
67	M168A		BenPIN				Yes	** NA **			None
68	M169A						Yes				None
69	M170A		BenPIN				Yes	** NA **			None
70	M171A						Yes	** NA **			None
71	M172A						Yes	** NA **			None
72	M173A						Yes	** NA **			None
73	M174A						Yes	Default			None
74	M175A						Yes	** NA **			None
75	MP1A						Yes	** NA **			None
76	M177A						Yes	** NA **			None
77	MP2A						Yes	** NA **			None
78	M179A						Yes	** NA **			None
79	MP3A						Yes	** NA **			None
80	M181A						Yes	** NA **			None
81	MP4A						Yes	** NA **			None
82	M183A						Yes	Default			None
83	M184A						Yes	** NA **			None
84	MP1C						Yes	** NA **			None
85	M186A						Yes	** NA **			None
86	MP2C						Yes	** NA **			None
87	M188A						Yes	** NA **			None
88	MP3C						Yes	** NA **			None
89	M190A						Yes	** NA **			None
90	MP4C						Yes	** NA **			None
91	M192A						Yes	Default			None
92	M193A						Yes	** NA **			None
93	MP1B						Yes	** NA **			None
94	M195A						Yes	** NA **			None
95	MP2B						Yes	** NA **			None
96	M197A						Yes	** NA **			None
97	MP3B						Yes	** NA **			None
98	M199A						Yes	** NA **			None
99	MP4B						Yes	** NA **			None
100	M100						Yes	** NA **			None
101	M101						Yes	** NA **			None
102	M102						Yes	Default			None
103	M103						Yes	** NA **			None
104	M104						Yes	** NA **			None
105	M105						Yes	** NA **			None
106	M106						Yes	** NA **			None
107	M108						Yes	** NA **			None
108	M109						Yes	** NA **			None
109	M110						Yes	** NA **			None
110	M111						Yes	** NA **			None
111	M113						Yes	** NA **			None
112	M114						Yes	** NA **			None
113	M115						Yes	** NA **			None
114	M116						Yes	** NA **			None
115	M115A						Yes	Default			None
116	M116A						Yes	Default			None

Member Advanced Data (Continued)

	Label	I Release	J Release	I Offset[in]	J Offset[in]	T/C Only	Physical	Defl Rat...	Analysis ...	Inactive	Seismic...
117	M117	OOOOOX					Yes	** NA **			None
118	M118	OOOOOX					Yes	** NA **			None
119	M119	OOOOOX					Yes	** NA **			None
120	M120	OOOOOX					Yes	** NA **			None
121	M121	OOOOOX					Yes	** NA **			None
122	M122	OOOOOX					Yes	** NA **			None
123	M123						Yes				None
124	M124						Yes				None
125	M125						Yes				None

Member Point Loads (BLC 1 : Antenna D)

	Member Label	Direction	Magnitude[lb,k-ft]	Location[in,%]
1	MP3A	Y	-43.55	21
2	MP3A	My	-.022	21
3	MP3A	Mz	0	21
4	MP3A	Y	-43.55	45
5	MP3A	My	-.022	45
6	MP3A	Mz	0	45
7	MP3B	Y	-43.55	21
8	MP3B	My	.014	21
9	MP3B	Mz	-.017	21
10	MP3B	Y	-43.55	45
11	MP3B	My	.014	45
12	MP3B	Mz	-.017	45
13	MP3C	Y	-43.55	21
14	MP3C	My	.011	21
15	MP3C	Mz	.019	21
16	MP3C	Y	-43.55	45
17	MP3C	My	.011	45
18	MP3C	Mz	.019	45
19	M101	Y	-32	18
20	M101	My	0	18
21	M101	Mz	0	18
22	MP2A	Y	-84.4	24
23	MP2A	My	.042	24
24	MP2A	Mz	0	24
25	MP2B	Y	-84.4	24
26	MP2B	My	-.027	24
27	MP2B	Mz	.032	24
28	MP2C	Y	-84.4	24
29	MP2C	My	-.021	24
30	MP2C	Mz	-.037	24
31	MP1A	Y	-70.3	24
32	MP1A	My	.035	24
33	MP1A	Mz	0	24
34	MP1B	Y	-70.3	24
35	MP1B	My	-.023	24
36	MP1B	Mz	.027	24
37	MP1C	Y	-70.3	24
38	MP1C	My	-.018	24

Member Point Loads (BLC 1 : Antenna D) (Continued)

	Member Label	Direction	Magnitude[lb,k-ft]	Location[in,%]
39	MP1C	Mz	-.03	24
40	MP1C	Y	-10.5	3
41	MP1C	My	.003	3
42	MP1C	Mz	.005	3
43	MP1C	Y	-10.5	63
44	MP1C	My	.003	63
45	MP1C	Mz	.005	63
46	MP4C	Y	-10.5	3
47	MP4C	My	.003	3
48	MP4C	Mz	.005	3
49	MP4C	Y	-10.5	63
50	MP4C	My	.003	63
51	MP4C	Mz	.005	63
52	MP2A	Y	-20	9
53	MP2A	My	-.01	9
54	MP2A	Mz	.012	9
55	MP2A	Y	-20	57
56	MP2A	My	-.01	57
57	MP2A	Mz	.012	57
58	MP2B	Y	-20	9
59	MP2B	My	-.003	9
60	MP2B	Mz	-.015	9
61	MP2B	Y	-20	57
62	MP2B	My	-.003	57
63	MP2B	Mz	-.015	57
64	MP2C	Y	-20	9
65	MP2C	My	.015	9
66	MP2C	Mz	.003	9
67	MP2C	Y	-20	57
68	MP2C	My	.015	57
69	MP2C	Mz	.003	57
70	MP2A	Y	-20	9
71	MP2A	My	-.01	9
72	MP2A	Mz	-.012	9
73	MP2A	Y	-20	57
74	MP2A	My	-.01	57
75	MP2A	Mz	-.012	57
76	MP2B	Y	-20	9
77	MP2B	My	.015	9
78	MP2B	Mz	-.000161	9
79	MP2B	Y	-20	57
80	MP2B	My	.015	57
81	MP2B	Mz	-.000161	57
82	MP2C	Y	-20	9
83	MP2C	My	-.005	9
84	MP2C	Mz	.014	9
85	MP2C	Y	-20	57
86	MP2C	My	-.005	57
87	MP2C	Mz	.014	57
88	MP1A	Y	-10.5	3
89	MP1A	My	-.005	3
90	MP1A	Mz	0	3

Member Point Loads (BLC 1 : Antenna D) (Continued)

	Member Label	Direction	Magnitude[lb,k-ft]	Location[in,%]
91	MP1A	Y	-10.5	63
92	MP1A	My	-.005	63
93	MP1A	Mz	0	63
94	MP1B	Y	-10.5	3
95	MP1B	My	.003	3
96	MP1B	Mz	-.005	3
97	MP1B	Y	-10.5	63
98	MP1B	My	.003	63
99	MP1B	Mz	-.005	63
100	MP4A	Y	-10.5	3
101	MP4A	My	-.005	3
102	MP4A	Mz	0	3
103	MP4A	Y	-10.5	63
104	MP4A	My	-.005	63
105	MP4A	Mz	0	63
106	MP4B	Y	-10.5	3
107	MP4B	My	.003	3
108	MP4B	Mz	-.005	3
109	MP4B	Y	-10.5	63
110	MP4B	My	.003	63
111	MP4B	Mz	-.005	63

Member Point Loads (BLC 2 : Antenna Di)

	Member Label	Direction	Magnitude[lb,k-ft]	Location[in,%]
1	MP3A	Y	-35.279	21
2	MP3A	My	-.018	21
3	MP3A	Mz	0	21
4	MP3A	Y	-35.279	45
5	MP3A	My	-.018	45
6	MP3A	Mz	0	45
7	MP3B	Y	-35.279	21
8	MP3B	My	.011	21
9	MP3B	Mz	-.014	21
10	MP3B	Y	-35.279	45
11	MP3B	My	.011	45
12	MP3B	Mz	-.014	45
13	MP3C	Y	-35.279	21
14	MP3C	My	.009	21
15	MP3C	Mz	.015	21
16	MP3C	Y	-35.279	45
17	MP3C	My	.009	45
18	MP3C	Mz	.015	45
19	M101	Y	-87.102	18
20	M101	My	0	18
21	M101	Mz	0	18
22	MP2A	Y	-44.473	24
23	MP2A	My	.022	24
24	MP2A	Mz	0	24
25	MP2B	Y	-44.473	24
26	MP2B	My	-.014	24
27	MP2B	Mz	.017	24

Member Point Loads (BLC 2 : Antenna Di) (Continued)

	Member Label	Direction	Magnitude[lb,k-ft]	Location[in,%]
28	MP2C	Y	-44.473	24
29	MP2C	My	-.011	24
30	MP2C	Mz	-.019	24
31	MP1A	Y	-39.992	24
32	MP1A	My	.02	24
33	MP1A	Mz	0	24
34	MP1B	Y	-39.992	24
35	MP1B	My	-.013	24
36	MP1B	Mz	.015	24
37	MP1C	Y	-39.992	24
38	MP1C	My	-.01	24
39	MP1C	Mz	-.017	24
40	MP1C	Y	-57.932	3
41	MP1C	My	.014	3
42	MP1C	Mz	.025	3
43	MP1C	Y	-57.932	63
44	MP1C	My	.014	63
45	MP1C	Mz	.025	63
46	MP4C	Y	-57.932	3
47	MP4C	My	.014	3
48	MP4C	Mz	.025	3
49	MP4C	Y	-57.932	63
50	MP4C	My	.014	63
51	MP4C	Mz	.025	63
52	MP2A	Y	-60.492	9
53	MP2A	My	-.03	9
54	MP2A	Mz	.035	9
55	MP2A	Y	-60.492	57
56	MP2A	My	-.03	57
57	MP2A	Mz	.035	57
58	MP2B	Y	-60.492	9
59	MP2B	My	-.008	9
60	MP2B	Mz	-.046	9
61	MP2B	Y	-60.492	57
62	MP2B	My	-.008	57
63	MP2B	Mz	-.046	57
64	MP2C	Y	-60.492	9
65	MP2C	My	.046	9
66	MP2C	Mz	.009	9
67	MP2C	Y	-60.492	57
68	MP2C	My	.046	57
69	MP2C	Mz	.009	57
70	MP2A	Y	-60.492	9
71	MP2A	My	-.03	9
72	MP2A	Mz	-.035	9
73	MP2A	Y	-60.492	57
74	MP2A	My	-.03	57
75	MP2A	Mz	-.035	57
76	MP2B	Y	-60.492	9
77	MP2B	My	.046	9
78	MP2B	Mz	-.000488	9
79	MP2B	Y	-60.492	57

Member Point Loads (BLC 2 : Antenna Di) (Continued)

	Member Label	Direction	Magnitude[lb,k-ft]	Location[in,%]
80	MP2B	My	.046	57
81	MP2B	Mz	-.000488	57
82	MP2C	Y	-60.492	9
83	MP2C	My	-.015	9
84	MP2C	Mz	.044	9
85	MP2C	Y	-60.492	57
86	MP2C	My	-.015	57
87	MP2C	Mz	.044	57
88	MP1A	Y	-57.932	3
89	MP1A	My	-.029	3
90	MP1A	Mz	0	3
91	MP1A	Y	-57.932	63
92	MP1A	My	-.029	63
93	MP1A	Mz	0	63
94	MP1B	Y	-57.932	3
95	MP1B	My	.014	3
96	MP1B	Mz	-.025	3
97	MP1B	Y	-57.932	63
98	MP1B	My	.014	63
99	MP1B	Mz	-.025	63
100	MP4A	Y	-57.932	3
101	MP4A	My	-.029	3
102	MP4A	Mz	0	3
103	MP4A	Y	-57.932	63
104	MP4A	My	-.029	63
105	MP4A	Mz	0	63
106	MP4B	Y	-57.932	3
107	MP4B	My	.014	3
108	MP4B	Mz	-.025	3
109	MP4B	Y	-57.932	63
110	MP4B	My	.014	63
111	MP4B	Mz	-.025	63

Member Point Loads (BLC 3 : Antenna Wo (0 Deg))

	Member Label	Direction	Magnitude[lb,k-ft]	Location[in,%]
1	MP3A	X	0	21
2	MP3A	Z	-67.654	21
3	MP3A	Mx	0	21
4	MP3A	X	0	45
5	MP3A	Z	-67.654	45
6	MP3A	Mx	0	45
7	MP3B	X	0	21
8	MP3B	Z	-43.496	21
9	MP3B	Mx	.017	21
10	MP3B	X	0	45
11	MP3B	Z	-43.496	45
12	MP3B	Mx	.017	45
13	MP3C	X	0	21
14	MP3C	Z	-36.778	21
15	MP3C	Mx	-.016	21
16	MP3C	X	0	45

Member Point Loads (BLC 3 : Antenna Wo (0 Deg)) (Continued)

	Member Label	Direction	Magnitude[lb,k-ft]	Location[in,%]
17	MP3C	Z	-36.778	45
18	MP3C	Mx	-.016	45
19	M101	X	0	18
20	M101	Z	-109.956	18
21	M101	Mx	0	18
22	MP2A	X	0	24
23	MP2A	Z	-53.835	24
24	MP2A	Mx	0	24
25	MP2B	X	0	24
26	MP2B	Z	-43.361	24
27	MP2B	Mx	-.017	24
28	MP2C	X	0	24
29	MP2C	Z	-40.449	24
30	MP2C	Mx	.018	24
31	MP1A	X	0	24
32	MP1A	Z	-53.835	24
33	MP1A	Mx	0	24
34	MP1B	X	0	24
35	MP1B	Z	-39.349	24
36	MP1B	Mx	-.015	24
37	MP1C	X	0	24
38	MP1C	Z	-35.321	24
39	MP1C	Mx	.015	24
40	MP1C	X	0	3
41	MP1C	Z	-108.733	3
42	MP1C	Mx	-.047	3
43	MP1C	X	0	63
44	MP1C	Z	-108.733	63
45	MP1C	Mx	-.047	63
46	MP4C	X	0	3
47	MP4C	Z	-108.733	3
48	MP4C	Mx	-.047	3
49	MP4C	X	0	63
50	MP4C	Z	-108.733	63
51	MP4C	Mx	-.047	63
52	MP2A	X	0	9
53	MP2A	Z	-117.459	9
54	MP2A	Mx	-.069	9
55	MP2A	X	0	57
56	MP2A	Z	-117.459	57
57	MP2A	Mx	-.069	57
58	MP2B	X	0	9
59	MP2B	Z	-94.114	9
60	MP2B	Mx	.071	9
61	MP2B	X	0	57
62	MP2B	Z	-94.114	57
63	MP2B	Mx	.071	57
64	MP2C	X	0	9
65	MP2C	Z	-87.622	9
66	MP2C	Mx	-.012	9
67	MP2C	X	0	57
68	MP2C	Z	-87.622	57

Member Point Loads (BLC 3 : Antenna Wo (0 Deg)) (Continued)

	Member Label	Direction	Magnitude[lb,k-ft]	Location[in,%]
69	MP2C	Mx	-.012	57
70	MP2A	X	0	9
71	MP2A	Z	-117.459	9
72	MP2A	Mx	.069	9
73	MP2A	X	0	57
74	MP2A	Z	-117.459	57
75	MP2A	Mx	.069	57
76	MP2B	X	0	9
77	MP2B	Z	-94.114	9
78	MP2B	Mx	.000759	9
79	MP2B	X	0	57
80	MP2B	Z	-94.114	57
81	MP2B	Mx	.000759	57
82	MP2C	X	0	9
83	MP2C	Z	-87.622	9
84	MP2C	Mx	-.063	9
85	MP2C	X	0	57
86	MP2C	Z	-87.622	57
87	MP2C	Mx	-.063	57
88	MP1A	X	0	3
89	MP1A	Z	-62.328	3
90	MP1A	Mx	0	3
91	MP1A	X	0	63
92	MP1A	Z	-62.328	63
93	MP1A	Mx	0	63
94	MP1B	X	0	3
95	MP1B	Z	-108.733	3
96	MP1B	Mx	.047	3
97	MP1B	X	0	63
98	MP1B	Z	-108.733	63
99	MP1B	Mx	.047	63
100	MP4A	X	0	3
101	MP4A	Z	-62.328	3
102	MP4A	Mx	0	3
103	MP4A	X	0	63
104	MP4A	Z	-62.328	63
105	MP4A	Mx	0	63
106	MP4B	X	0	3
107	MP4B	Z	-108.733	3
108	MP4B	Mx	.047	3
109	MP4B	X	0	63
110	MP4B	Z	-108.733	63
111	MP4B	Mx	.047	63

Member Point Loads (BLC 4 : Antenna Wo (30 Deg))

	Member Label	Direction	Magnitude[lb,k-ft]	Location[in,%]
1	MP3A	X	28.681	21
2	MP3A	Z	-49.677	21
3	MP3A	Mx	-.014	21
4	MP3A	X	28.681	45
5	MP3A	Z	-49.677	45

Member Point Loads (BLC 4 : Antenna Wo (30 Deg)) (Continued)

	Member Label	Direction	Magnitude[lb,k-ft]	Location[in,%]
6	MP3A	Mx	-.014	45
7	MP3B	X	13.864	21
8	MP3B	Z	-24.013	21
9	MP3B	Mx	.014	21
10	MP3B	X	13.864	45
11	MP3B	Z	-24.013	45
12	MP3B	Mx	.014	45
13	MP3C	X	28.681	21
14	MP3C	Z	-49.677	21
15	MP3C	Mx	-.014	21
16	MP3C	X	28.681	45
17	MP3C	Z	-49.677	45
18	MP3C	Mx	-.014	45
19	M101	X	48.051	18
20	M101	Z	-83.226	18
21	M101	Mx	0	18
22	MP2A	X	24.687	24
23	MP2A	Z	-42.758	24
24	MP2A	Mx	.012	24
25	MP2B	X	18.262	24
26	MP2B	Z	-31.631	24
27	MP2B	Mx	-.018	24
28	MP2C	X	24.687	24
29	MP2C	Z	-42.758	24
30	MP2C	Mx	.012	24
31	MP1A	X	23.832	24
32	MP1A	Z	-41.278	24
33	MP1A	Mx	.012	24
34	MP1B	X	14.947	24
35	MP1B	Z	-25.888	24
36	MP1B	Mx	-.015	24
37	MP1C	X	23.832	24
38	MP1C	Z	-41.278	24
39	MP1C	Mx	.012	24
40	MP1C	X	38.898	3
41	MP1C	Z	-67.374	3
42	MP1C	Mx	-.019	3
43	MP1C	X	38.898	63
44	MP1C	Z	-67.374	63
45	MP1C	Mx	-.019	63
46	MP4C	X	38.898	3
47	MP4C	Z	-67.374	3
48	MP4C	Mx	-.019	3
49	MP4C	X	38.898	63
50	MP4C	Z	-67.374	63
51	MP4C	Mx	-.019	63
52	MP2A	X	53.757	9
53	MP2A	Z	-93.109	9
54	MP2A	Mx	-.081	9
55	MP2A	X	53.757	57
56	MP2A	Z	-93.109	57
57	MP2A	Mx	-.081	57

Member Point Loads (BLC 4 : Antenna Wo (30 Deg)) (Continued)

	Member Label	Direction	Magnitude[lb,k-ft]	Location[in,%]
58	MP2B	X	39.438	9
59	MP2B	Z	-68.309	9
60	MP2B	Mx	.047	9
61	MP2B	X	39.438	57
62	MP2B	Z	-68.309	57
63	MP2B	Mx	.047	57
64	MP2C	X	53.757	9
65	MP2C	Z	-93.109	9
66	MP2C	Mx	.027	9
67	MP2C	X	53.757	57
68	MP2C	Z	-93.109	57
69	MP2C	Mx	.027	57
70	MP2A	X	53.757	9
71	MP2A	Z	-93.109	9
72	MP2A	Mx	.027	9
73	MP2A	X	53.757	57
74	MP2A	Z	-93.109	57
75	MP2A	Mx	.027	57
76	MP2B	X	39.438	9
77	MP2B	Z	-68.309	9
78	MP2B	Mx	.031	9
79	MP2B	X	39.438	57
80	MP2B	Z	-68.309	57
81	MP2B	Mx	.031	57
82	MP2C	X	53.757	9
83	MP2C	Z	-93.109	9
84	MP2C	Mx	-.081	9
85	MP2C	X	53.757	57
86	MP2C	Z	-93.109	57
87	MP2C	Mx	-.081	57
88	MP1A	X	38.898	3
89	MP1A	Z	-67.374	3
90	MP1A	Mx	-.019	3
91	MP1A	X	38.898	63
92	MP1A	Z	-67.374	63
93	MP1A	Mx	-.019	63
94	MP1B	X	62.1	3
95	MP1B	Z	-107.561	3
96	MP1B	Mx	.062	3
97	MP1B	X	62.1	63
98	MP1B	Z	-107.561	63
99	MP1B	Mx	.062	63
100	MP4A	X	38.898	3
101	MP4A	Z	-67.374	3
102	MP4A	Mx	-.019	3
103	MP4A	X	38.898	63
104	MP4A	Z	-67.374	63
105	MP4A	Mx	-.019	63
106	MP4B	X	62.1	3
107	MP4B	Z	-107.561	3
108	MP4B	Mx	.062	3
109	MP4B	X	62.1	63

Member Point Loads (BLC 4 : Antenna Wo (30 Deg)) (Continued)

	Member Label	Direction	Magnitude[lb,k-ft]	Location[in,%]
110	MP4B	Z	-107.561	63
111	MP4B	Mx	.062	63

Member Point Loads (BLC 5 : Antenna Wo (60 Deg))

	Member Label	Direction	Magnitude[lb,k-ft]	Location[in,%]
1	MP3A	X	31.851	21
2	MP3A	Z	-18.389	21
3	MP3A	Mx	-.016	21
4	MP3A	X	31.851	45
5	MP3A	Z	-18.389	45
6	MP3A	Mx	-.016	45
7	MP3B	X	27.109	21
8	MP3B	Z	-15.651	21
9	MP3B	Mx	.015	21
10	MP3B	X	27.109	45
11	MP3B	Z	-15.651	45
12	MP3B	Mx	.015	45
13	MP3C	X	58.59	21
14	MP3C	Z	-33.827	21
15	MP3C	Mx	0	21
16	MP3C	X	58.59	45
17	MP3C	Z	-33.827	45
18	MP3C	Mx	0	45
19	M101	X	77.227	18
20	M101	Z	-44.587	18
21	M101	Mx	0	18
22	MP2A	X	35.029	24
23	MP2A	Z	-20.224	24
24	MP2A	Mx	.018	24
25	MP2B	X	32.973	24
26	MP2B	Z	-19.037	24
27	MP2B	Mx	-.018	24
28	MP2C	X	46.623	24
29	MP2C	Z	-26.918	24
30	MP2C	Mx	0	24
31	MP1A	X	30.588	24
32	MP1A	Z	-17.66	24
33	MP1A	Mx	.015	24
34	MP1B	X	27.745	24
35	MP1B	Z	-16.018	24
36	MP1B	Mx	-.015	24
37	MP1C	X	46.623	24
38	MP1C	Z	-26.918	24
39	MP1C	Mx	0	24
40	MP1C	X	53.978	3
41	MP1C	Z	-31.164	3
42	MP1C	Mx	0	3
43	MP1C	X	53.978	63
44	MP1C	Z	-31.164	63
45	MP1C	Mx	0	63
46	MP4C	X	53.978	3

Member Point Loads (BLC 5 : Antenna Wo (60 Deg)) (Continued)

	Member Label	Direction	Magnitude[lb,k-ft]	Location[in,%]
47	MP4C	Z	-31.164	3
48	MP4C	Mx	0	3
49	MP4C	X	53.978	63
50	MP4C	Z	-31.164	63
51	MP4C	Mx	0	63
52	MP2A	X	75.883	9
53	MP2A	Z	-43.811	9
54	MP2A	Mx	-.063	9
55	MP2A	X	75.883	57
56	MP2A	Z	-43.811	57
57	MP2A	Mx	-.063	57
58	MP2B	X	71.3	9
59	MP2B	Z	-41.165	9
60	MP2B	Mx	.022	9
61	MP2B	X	71.3	57
62	MP2B	Z	-41.165	57
63	MP2B	Mx	.022	57
64	MP2C	X	101.723	9
65	MP2C	Z	-58.73	9
66	MP2C	Mx	.069	9
67	MP2C	X	101.723	57
68	MP2C	Z	-58.73	57
69	MP2C	Mx	.069	57
70	MP2A	X	75.883	9
71	MP2A	Z	-43.811	9
72	MP2A	Mx	-.012	9
73	MP2A	X	75.883	57
74	MP2A	Z	-43.811	57
75	MP2A	Mx	-.012	57
76	MP2B	X	71.3	9
77	MP2B	Z	-41.165	9
78	MP2B	Mx	.055	9
79	MP2B	X	71.3	57
80	MP2B	Z	-41.165	57
81	MP2B	Mx	.055	57
82	MP2C	X	101.723	9
83	MP2C	Z	-58.73	9
84	MP2C	Mx	-.069	9
85	MP2C	X	101.723	57
86	MP2C	Z	-58.73	57
87	MP2C	Mx	-.069	57
88	MP1A	X	94.165	3
89	MP1A	Z	-54.366	3
90	MP1A	Mx	-.047	3
91	MP1A	X	94.165	63
92	MP1A	Z	-54.366	63
93	MP1A	Mx	-.047	63
94	MP1B	X	94.165	3
95	MP1B	Z	-54.366	3
96	MP1B	Mx	.047	3
97	MP1B	X	94.165	63
98	MP1B	Z	-54.366	63

Member Point Loads (BLC 5 : Antenna Wo (60 Deg)) (Continued)

	Member Label	Direction	Magnitude[lb,k-ft]	Location[in,%]
99	MP1B	Mx	.047	63
100	MP4A	X	94.165	3
101	MP4A	Z	-54.366	3
102	MP4A	Mx	-.047	3
103	MP4A	X	94.165	63
104	MP4A	Z	-54.366	63
105	MP4A	Mx	-.047	63
106	MP4B	X	94.165	3
107	MP4B	Z	-54.366	3
108	MP4B	Mx	.047	3
109	MP4B	X	94.165	63
110	MP4B	Z	-54.366	63
111	MP4B	Mx	.047	63

Member Point Loads (BLC 6 : Antenna Wo (90 Deg))

	Member Label	Direction	Magnitude[lb,k-ft]	Location[in,%]
1	MP3A	X	26.486	21
2	MP3A	Z	0	21
3	MP3A	Mx	-.013	21
4	MP3A	X	26.486	45
5	MP3A	Z	0	45
6	MP3A	Mx	-.013	45
7	MP3B	X	50.645	21
8	MP3B	Z	0	21
9	MP3B	Mx	.016	21
10	MP3B	X	50.645	45
11	MP3B	Z	0	45
12	MP3B	Mx	.016	45
13	MP3C	X	57.362	21
14	MP3C	Z	0	21
15	MP3C	Mx	.014	21
16	MP3C	X	57.362	45
17	MP3C	Z	0	45
18	MP3C	Mx	.014	45
19	M101	X	96.101	18
20	M101	Z	0	18
21	M101	Mx	0	18
22	MP2A	X	35.986	24
23	MP2A	Z	0	24
24	MP2A	Mx	.018	24
25	MP2B	X	46.461	24
26	MP2B	Z	0	24
27	MP2B	Mx	-.015	24
28	MP2C	X	49.373	24
29	MP2C	Z	0	24
30	MP2C	Mx	-.012	24
31	MP1A	X	29.149	24
32	MP1A	Z	0	24
33	MP1A	Mx	.015	24
34	MP1B	X	43.636	24
35	MP1B	Z	0	24

Member Point Loads (BLC 6 : Antenna Wo (90 Deg)) (Continued)

	Member Label	Direction	Magnitude[lb,k-ft]	Location[in,%]
36	MP1B	Mx	-.014	24
37	MP1C	X	47.664	24
38	MP1C	Z	0	24
39	MP1C	Mx	-.012	24
40	MP1C	X	77.796	3
41	MP1C	Z	0	3
42	MP1C	Mx	.019	3
43	MP1C	X	77.796	63
44	MP1C	Z	0	63
45	MP1C	Mx	.019	63
46	MP4C	X	77.796	3
47	MP4C	Z	0	3
48	MP4C	Mx	.019	3
49	MP4C	X	77.796	63
50	MP4C	Z	0	63
51	MP4C	Mx	.019	63
52	MP2A	X	77.677	9
53	MP2A	Z	0	9
54	MP2A	Mx	-.039	9
55	MP2A	X	77.677	57
56	MP2A	Z	0	57
57	MP2A	Mx	-.039	57
58	MP2B	X	101.022	9
59	MP2B	Z	0	9
60	MP2B	Mx	-.013	9
61	MP2B	X	101.022	57
62	MP2B	Z	0	57
63	MP2B	Mx	-.013	57
64	MP2C	X	107.514	9
65	MP2C	Z	0	9
66	MP2C	Mx	.081	9
67	MP2C	X	107.514	57
68	MP2C	Z	0	57
69	MP2C	Mx	.081	57
70	MP2A	X	77.677	9
71	MP2A	Z	0	9
72	MP2A	Mx	-.039	9
73	MP2A	X	77.677	57
74	MP2A	Z	0	57
75	MP2A	Mx	-.039	57
76	MP2B	X	101.022	9
77	MP2B	Z	0	9
78	MP2B	Mx	.078	9
79	MP2B	X	101.022	57
80	MP2B	Z	0	57
81	MP2B	Mx	.078	57
82	MP2C	X	107.514	9
83	MP2C	Z	0	9
84	MP2C	Mx	-.027	9
85	MP2C	X	107.514	57
86	MP2C	Z	0	57
87	MP2C	Mx	-.027	57

Member Point Loads (BLC 6 : Antenna Wo (90 Deg)) (Continued)

	Member Label	Direction	Magnitude[lb,k-ft]	Location[in,%]
88	MP1A	X	124.201	3
89	MP1A	Z	0	3
90	MP1A	Mx	-.062	3
91	MP1A	X	124.201	63
92	MP1A	Z	0	63
93	MP1A	Mx	-.062	63
94	MP1B	X	77.796	3
95	MP1B	Z	0	3
96	MP1B	Mx	.019	3
97	MP1B	X	77.796	63
98	MP1B	Z	0	63
99	MP1B	Mx	.019	63
100	MP4A	X	124.201	3
101	MP4A	Z	0	3
102	MP4A	Mx	-.062	3
103	MP4A	X	124.201	63
104	MP4A	Z	0	63
105	MP4A	Mx	-.062	63
106	MP4B	X	77.796	3
107	MP4B	Z	0	3
108	MP4B	Mx	.019	3
109	MP4B	X	77.796	63
110	MP4B	Z	0	63
111	MP4B	Mx	.019	63

Member Point Loads (BLC 7 : Antenna Wo (120 Deg))

	Member Label	Direction	Magnitude[lb,k-ft]	Location[in,%]
1	MP3A	X	31.851	21
2	MP3A	Z	18.389	21
3	MP3A	Mx	-.016	21
4	MP3A	X	31.851	45
5	MP3A	Z	18.389	45
6	MP3A	Mx	-.016	45
7	MP3B	X	57.515	21
8	MP3B	Z	33.206	21
9	MP3B	Mx	.006	21
10	MP3B	X	57.515	45
11	MP3B	Z	33.206	45
12	MP3B	Mx	.006	45
13	MP3C	X	31.851	21
14	MP3C	Z	18.389	21
15	MP3C	Mx	.016	21
16	MP3C	X	31.851	45
17	MP3C	Z	18.389	45
18	MP3C	Mx	.016	45
19	M101	X	95.225	18
20	M101	Z	54.978	18
21	M101	Mx	0	18
22	MP2A	X	35.029	24
23	MP2A	Z	20.224	24
24	MP2A	Mx	.018	24

Member Point Loads (BLC 7 : Antenna Wo (120 Deg)) (Continued)

	Member Label	Direction	Magnitude[lb,k-ft]	Location[in,%]
25	MP2B	X	46.157	24
26	MP2B	Z	26.649	24
27	MP2B	Mx	-.005	24
28	MP2C	X	35.029	24
29	MP2C	Z	20.224	24
30	MP2C	Mx	-.018	24
31	MP1A	X	30.588	24
32	MP1A	Z	17.66	24
33	MP1A	Mx	.015	24
34	MP1B	X	45.978	24
35	MP1B	Z	26.546	24
36	MP1B	Mx	-.005	24
37	MP1C	X	30.588	24
38	MP1C	Z	17.66	24
39	MP1C	Mx	-.015	24
40	MP1C	X	94.165	3
41	MP1C	Z	54.366	3
42	MP1C	Mx	.047	3
43	MP1C	X	94.165	63
44	MP1C	Z	54.366	63
45	MP1C	Mx	.047	63
46	MP4C	X	94.165	3
47	MP4C	Z	54.366	3
48	MP4C	Mx	.047	3
49	MP4C	X	94.165	63
50	MP4C	Z	54.366	63
51	MP4C	Mx	.047	63
52	MP2A	X	75.883	9
53	MP2A	Z	43.811	9
54	MP2A	Mx	-.012	9
55	MP2A	X	75.883	57
56	MP2A	Z	43.811	57
57	MP2A	Mx	-.012	57
58	MP2B	X	100.684	9
59	MP2B	Z	58.13	9
60	MP2B	Mx	-.057	9
61	MP2B	X	100.684	57
62	MP2B	Z	58.13	57
63	MP2B	Mx	-.057	57
64	MP2C	X	75.883	9
65	MP2C	Z	43.811	9
66	MP2C	Mx	.063	9
67	MP2C	X	75.883	57
68	MP2C	Z	43.811	57
69	MP2C	Mx	.063	57
70	MP2A	X	75.883	9
71	MP2A	Z	43.811	9
72	MP2A	Mx	-.063	9
73	MP2A	X	75.883	57
74	MP2A	Z	43.811	57
75	MP2A	Mx	-.063	57
76	MP2B	X	100.684	9

Member Point Loads (BLC 7 : Antenna Wo (120 Deg)) (Continued)

	Member Label	Direction	Magnitude[lb,k-ft]	Location[in,%]
77	MP2B	Z	58.13	9
78	MP2B	Mx	.077	9
79	MP2B	X	100.684	57
80	MP2B	Z	58.13	57
81	MP2B	Mx	.077	57
82	MP2C	X	75.883	9
83	MP2C	Z	43.811	9
84	MP2C	Mx	.012	9
85	MP2C	X	75.883	57
86	MP2C	Z	43.811	57
87	MP2C	Mx	.012	57
88	MP1A	X	94.165	3
89	MP1A	Z	54.366	3
90	MP1A	Mx	-.047	3
91	MP1A	X	94.165	63
92	MP1A	Z	54.366	63
93	MP1A	Mx	-.047	63
94	MP1B	X	53.978	3
95	MP1B	Z	31.164	3
96	MP1B	Mx	0	3
97	MP1B	X	53.978	63
98	MP1B	Z	31.164	63
99	MP1B	Mx	0	63
100	MP4A	X	94.165	3
101	MP4A	Z	54.366	3
102	MP4A	Mx	-.047	3
103	MP4A	X	94.165	63
104	MP4A	Z	54.366	63
105	MP4A	Mx	-.047	63
106	MP4B	X	53.978	3
107	MP4B	Z	31.164	3
108	MP4B	Mx	0	3
109	MP4B	X	53.978	63
110	MP4B	Z	31.164	63
111	MP4B	Mx	0	63

Member Point Loads (BLC 8 : Antenna Wo (150 Deg))

	Member Label	Direction	Magnitude[lb,k-ft]	Location[in,%]
1	MP3A	X	28.681	21
2	MP3A	Z	49.677	21
3	MP3A	Mx	-.014	21
4	MP3A	X	28.681	45
5	MP3A	Z	49.677	45
6	MP3A	Mx	-.014	45
7	MP3B	X	31.419	21
8	MP3B	Z	54.42	21
9	MP3B	Mx	-.011	21
10	MP3B	X	31.419	45
11	MP3B	Z	54.42	45
12	MP3B	Mx	-.011	45
13	MP3C	X	13.243	21

Member Point Loads (BLC 8 : Antenna Wo (150 Deg)) (Continued)

	Member Label	Direction	Magnitude[lb,k-ft]	Location[in,%]
14	MP3C	Z	22.938	21
15	MP3C	Mx	.013	21
16	MP3C	X	13.243	45
17	MP3C	Z	22.938	45
18	MP3C	Mx	.013	45
19	M101	X	58.442	18
20	M101	Z	101.224	18
21	M101	Mx	0	18
22	MP2A	X	24.687	24
23	MP2A	Z	42.758	24
24	MP2A	Mx	.012	24
25	MP2B	X	25.874	24
26	MP2B	Z	44.815	24
27	MP2B	Mx	.009	24
28	MP2C	X	17.993	24
29	MP2C	Z	31.165	24
30	MP2C	Mx	-.018	24
31	MP1A	X	23.832	24
32	MP1A	Z	41.278	24
33	MP1A	Mx	.012	24
34	MP1B	X	25.474	24
35	MP1B	Z	44.122	24
36	MP1B	Mx	.009	24
37	MP1C	X	14.574	24
38	MP1C	Z	25.244	24
39	MP1C	Mx	-.015	24
40	MP1C	X	62.1	3
41	MP1C	Z	107.561	3
42	MP1C	Mx	.062	3
43	MP1C	X	62.1	63
44	MP1C	Z	107.561	63
45	MP1C	Mx	.062	63
46	MP4C	X	62.1	3
47	MP4C	Z	107.561	3
48	MP4C	Mx	.062	3
49	MP4C	X	62.1	63
50	MP4C	Z	107.561	63
51	MP4C	Mx	.062	63
52	MP2A	X	53.757	9
53	MP2A	Z	93.109	9
54	MP2A	Mx	.027	9
55	MP2A	X	53.757	57
56	MP2A	Z	93.109	57
57	MP2A	Mx	.027	57
58	MP2B	X	56.403	9
59	MP2B	Z	97.692	9
60	MP2B	Mx	-.081	9
61	MP2B	X	56.403	57
62	MP2B	Z	97.692	57
63	MP2B	Mx	-.081	57
64	MP2C	X	38.838	9
65	MP2C	Z	67.27	9

Member Point Loads (BLC 8 : Antenna Wo (150 Deg)) (Continued)

	Member Label	Direction	Magnitude[lb,k-ft]	Location[in,%]
66	MP2C	Mx	.039	9
67	MP2C	X	38.838	57
68	MP2C	Z	67.27	57
69	MP2C	Mx	.039	57
70	MP2A	X	53.757	9
71	MP2A	Z	93.109	9
72	MP2A	Mx	-.081	9
73	MP2A	X	53.757	57
74	MP2A	Z	93.109	57
75	MP2A	Mx	-.081	57
76	MP2B	X	56.403	9
77	MP2B	Z	97.692	9
78	MP2B	Mx	.043	9
79	MP2B	X	56.403	57
80	MP2B	Z	97.692	57
81	MP2B	Mx	.043	57
82	MP2C	X	38.838	9
83	MP2C	Z	67.27	9
84	MP2C	Mx	.039	9
85	MP2C	X	38.838	57
86	MP2C	Z	67.27	57
87	MP2C	Mx	.039	57
88	MP1A	X	38.898	3
89	MP1A	Z	67.374	3
90	MP1A	Mx	-.019	3
91	MP1A	X	38.898	63
92	MP1A	Z	67.374	63
93	MP1A	Mx	-.019	63
94	MP1B	X	38.898	3
95	MP1B	Z	67.374	3
96	MP1B	Mx	-.019	3
97	MP1B	X	38.898	63
98	MP1B	Z	67.374	63
99	MP1B	Mx	-.019	63
100	MP4A	X	38.898	3
101	MP4A	Z	67.374	3
102	MP4A	Mx	-.019	3
103	MP4A	X	38.898	63
104	MP4A	Z	67.374	63
105	MP4A	Mx	-.019	63
106	MP4B	X	38.898	3
107	MP4B	Z	67.374	3
108	MP4B	Mx	-.019	3
109	MP4B	X	38.898	63
110	MP4B	Z	67.374	63
111	MP4B	Mx	-.019	63

Member Point Loads (BLC 9 : Antenna Wo (180 Deg))

	Member Label	Direction	Magnitude[lb,k-ft]	Location[in,%]
1	MP3A	X	0	21
2	MP3A	Z	67.654	21

Member Point Loads (BLC 9 : Antenna Wo (180 Deg)) (Continued)

	Member Label	Direction	Magnitude[lb,k-ft]	Location[in,%]
3	MP3A	Mx	0	21
4	MP3A	X	0	45
5	MP3A	Z	67.654	45
6	MP3A	Mx	0	45
7	MP3B	X	0	21
8	MP3B	Z	43.496	21
9	MP3B	Mx	-.017	21
10	MP3B	X	0	45
11	MP3B	Z	43.496	45
12	MP3B	Mx	-.017	45
13	MP3C	X	0	21
14	MP3C	Z	36.778	21
15	MP3C	Mx	.016	21
16	MP3C	X	0	45
17	MP3C	Z	36.778	45
18	MP3C	Mx	.016	45
19	M101	X	0	18
20	M101	Z	109.956	18
21	M101	Mx	0	18
22	MP2A	X	0	24
23	MP2A	Z	53.835	24
24	MP2A	Mx	0	24
25	MP2B	X	0	24
26	MP2B	Z	43.361	24
27	MP2B	Mx	.017	24
28	MP2C	X	0	24
29	MP2C	Z	40.449	24
30	MP2C	Mx	-.018	24
31	MP1A	X	0	24
32	MP1A	Z	53.835	24
33	MP1A	Mx	0	24
34	MP1B	X	0	24
35	MP1B	Z	39.349	24
36	MP1B	Mx	.015	24
37	MP1C	X	0	24
38	MP1C	Z	35.321	24
39	MP1C	Mx	-.015	24
40	MP1C	X	0	3
41	MP1C	Z	108.733	3
42	MP1C	Mx	.047	3
43	MP1C	X	0	63
44	MP1C	Z	108.733	63
45	MP1C	Mx	.047	63
46	MP4C	X	0	3
47	MP4C	Z	108.733	3
48	MP4C	Mx	.047	3
49	MP4C	X	0	63
50	MP4C	Z	108.733	63
51	MP4C	Mx	.047	63
52	MP2A	X	0	9
53	MP2A	Z	117.459	9
54	MP2A	Mx	.069	9

Member Point Loads (BLC 9 : Antenna Wo (180 Deg)) (Continued)

	Member Label	Direction	Magnitude[lb,k-ft]	Location[in,%]
55	MP2A	X	0	57
56	MP2A	Z	117.459	57
57	MP2A	Mx	.069	57
58	MP2B	X	0	9
59	MP2B	Z	94.114	9
60	MP2B	Mx	-.071	9
61	MP2B	X	0	57
62	MP2B	Z	94.114	57
63	MP2B	Mx	-.071	57
64	MP2C	X	0	9
65	MP2C	Z	87.622	9
66	MP2C	Mx	.012	9
67	MP2C	X	0	57
68	MP2C	Z	87.622	57
69	MP2C	Mx	.012	57
70	MP2A	X	0	9
71	MP2A	Z	117.459	9
72	MP2A	Mx	-.069	9
73	MP2A	X	0	57
74	MP2A	Z	117.459	57
75	MP2A	Mx	-.069	57
76	MP2B	X	0	9
77	MP2B	Z	94.114	9
78	MP2B	Mx	-.000759	9
79	MP2B	X	0	57
80	MP2B	Z	94.114	57
81	MP2B	Mx	-.000759	57
82	MP2C	X	0	9
83	MP2C	Z	87.622	9
84	MP2C	Mx	.063	9
85	MP2C	X	0	57
86	MP2C	Z	87.622	57
87	MP2C	Mx	.063	57
88	MP1A	X	0	3
89	MP1A	Z	62.328	3
90	MP1A	Mx	0	3
91	MP1A	X	0	63
92	MP1A	Z	62.328	63
93	MP1A	Mx	0	63
94	MP1B	X	0	3
95	MP1B	Z	108.733	3
96	MP1B	Mx	-.047	3
97	MP1B	X	0	63
98	MP1B	Z	108.733	63
99	MP1B	Mx	-.047	63
100	MP4A	X	0	3
101	MP4A	Z	62.328	3
102	MP4A	Mx	0	3
103	MP4A	X	0	63
104	MP4A	Z	62.328	63
105	MP4A	Mx	0	63
106	MP4B	X	0	3

Member Point Loads (BLC 9 : Antenna Wo (180 Deg)) (Continued)

	Member Label	Direction	Magnitude[lb,k-ft]	Location[in,%]
107	MP4B	Z	108.733	3
108	MP4B	Mx	-.047	3
109	MP4B	X	0	63
110	MP4B	Z	108.733	63
111	MP4B	Mx	-.047	63

Member Point Loads (BLC 10 : Antenna Wo (210 Deg))

	Member Label	Direction	Magnitude[lb,k-ft]	Location[in,%]
1	MP3A	X	-28.681	21
2	MP3A	Z	49.677	21
3	MP3A	Mx	.014	21
4	MP3A	X	-28.681	45
5	MP3A	Z	49.677	45
6	MP3A	Mx	.014	45
7	MP3B	X	-13.864	21
8	MP3B	Z	24.013	21
9	MP3B	Mx	-.014	21
10	MP3B	X	-13.864	45
11	MP3B	Z	24.013	45
12	MP3B	Mx	-.014	45
13	MP3C	X	-28.681	21
14	MP3C	Z	49.677	21
15	MP3C	Mx	.014	21
16	MP3C	X	-28.681	45
17	MP3C	Z	49.677	45
18	MP3C	Mx	.014	45
19	M101	X	-48.051	18
20	M101	Z	83.226	18
21	M101	Mx	0	18
22	MP2A	X	-24.687	24
23	MP2A	Z	42.758	24
24	MP2A	Mx	-.012	24
25	MP2B	X	-18.262	24
26	MP2B	Z	31.631	24
27	MP2B	Mx	.018	24
28	MP2C	X	-24.687	24
29	MP2C	Z	42.758	24
30	MP2C	Mx	-.012	24
31	MP1A	X	-23.832	24
32	MP1A	Z	41.278	24
33	MP1A	Mx	-.012	24
34	MP1B	X	-14.947	24
35	MP1B	Z	25.888	24
36	MP1B	Mx	.015	24
37	MP1C	X	-23.832	24
38	MP1C	Z	41.278	24
39	MP1C	Mx	-.012	24
40	MP1C	X	-38.898	3
41	MP1C	Z	67.374	3
42	MP1C	Mx	.019	3
43	MP1C	X	-38.898	63

Member Point Loads (BLC 10 : Antenna Wo (210 Deg)) (Continued)

	Member Label	Direction	Magnitude[lb,k-ft]	Location[in,%]
44	MP1C	Z	67.374	63
45	MP1C	Mx	.019	63
46	MP4C	X	-38.898	3
47	MP4C	Z	67.374	3
48	MP4C	Mx	.019	3
49	MP4C	X	-38.898	63
50	MP4C	Z	67.374	63
51	MP4C	Mx	.019	63
52	MP2A	X	-53.757	9
53	MP2A	Z	93.109	9
54	MP2A	Mx	.081	9
55	MP2A	X	-53.757	57
56	MP2A	Z	93.109	57
57	MP2A	Mx	.081	57
58	MP2B	X	-39.438	9
59	MP2B	Z	68.309	9
60	MP2B	Mx	-.047	9
61	MP2B	X	-39.438	57
62	MP2B	Z	68.309	57
63	MP2B	Mx	-.047	57
64	MP2C	X	-53.757	9
65	MP2C	Z	93.109	9
66	MP2C	Mx	-.027	9
67	MP2C	X	-53.757	57
68	MP2C	Z	93.109	57
69	MP2C	Mx	-.027	57
70	MP2A	X	-53.757	9
71	MP2A	Z	93.109	9
72	MP2A	Mx	-.027	9
73	MP2A	X	-53.757	57
74	MP2A	Z	93.109	57
75	MP2A	Mx	-.027	57
76	MP2B	X	-39.438	9
77	MP2B	Z	68.309	9
78	MP2B	Mx	-.031	9
79	MP2B	X	-39.438	57
80	MP2B	Z	68.309	57
81	MP2B	Mx	-.031	57
82	MP2C	X	-53.757	9
83	MP2C	Z	93.109	9
84	MP2C	Mx	.081	9
85	MP2C	X	-53.757	57
86	MP2C	Z	93.109	57
87	MP2C	Mx	.081	57
88	MP1A	X	-38.898	3
89	MP1A	Z	67.374	3
90	MP1A	Mx	.019	3
91	MP1A	X	-38.898	63
92	MP1A	Z	67.374	63
93	MP1A	Mx	.019	63
94	MP1B	X	-62.1	3
95	MP1B	Z	107.561	3

Member Point Loads (BLC 10 : Antenna Wo (210 Deg)) (Continued)

	Member Label	Direction	Magnitude[lb,k-ft]	Location[in,%]
96	MP1B	Mx	-.062	3
97	MP1B	X	-62.1	63
98	MP1B	Z	107.561	63
99	MP1B	Mx	-.062	63
100	MP4A	X	-38.898	3
101	MP4A	Z	67.374	3
102	MP4A	Mx	.019	3
103	MP4A	X	-38.898	63
104	MP4A	Z	67.374	63
105	MP4A	Mx	.019	63
106	MP4B	X	-62.1	3
107	MP4B	Z	107.561	3
108	MP4B	Mx	-.062	3
109	MP4B	X	-62.1	63
110	MP4B	Z	107.561	63
111	MP4B	Mx	-.062	63

Member Point Loads (BLC 11 : Antenna Wo (240 Deg))

	Member Label	Direction	Magnitude[lb,k-ft]	Location[in,%]
1	MP3A	X	-31.851	21
2	MP3A	Z	18.389	21
3	MP3A	Mx	.016	21
4	MP3A	X	-31.851	45
5	MP3A	Z	18.389	45
6	MP3A	Mx	.016	45
7	MP3B	X	-27.109	21
8	MP3B	Z	15.651	21
9	MP3B	Mx	-.015	21
10	MP3B	X	-27.109	45
11	MP3B	Z	15.651	45
12	MP3B	Mx	-.015	45
13	MP3C	X	-58.59	21
14	MP3C	Z	33.827	21
15	MP3C	Mx	0	21
16	MP3C	X	-58.59	45
17	MP3C	Z	33.827	45
18	MP3C	Mx	0	45
19	M101	X	-77.227	18
20	M101	Z	44.587	18
21	M101	Mx	0	18
22	MP2A	X	-35.029	24
23	MP2A	Z	20.224	24
24	MP2A	Mx	-.018	24
25	MP2B	X	-32.973	24
26	MP2B	Z	19.037	24
27	MP2B	Mx	.018	24
28	MP2C	X	-46.623	24
29	MP2C	Z	26.918	24
30	MP2C	Mx	0	24
31	MP1A	X	-30.588	24
32	MP1A	Z	17.66	24

Member Point Loads (BLC 11 : Antenna Wo (240 Deg)) (Continued)

	Member Label	Direction	Magnitude[lb,k-ft]	Location[in,%]
33	MP1A	Mx	-.015	24
34	MP1B	X	-27.745	24
35	MP1B	Z	16.018	24
36	MP1B	Mx	.015	24
37	MP1C	X	-46.623	24
38	MP1C	Z	26.918	24
39	MP1C	Mx	0	24
40	MP1C	X	-53.978	3
41	MP1C	Z	31.164	3
42	MP1C	Mx	0	3
43	MP1C	X	-53.978	63
44	MP1C	Z	31.164	63
45	MP1C	Mx	0	63
46	MP4C	X	-53.978	3
47	MP4C	Z	31.164	3
48	MP4C	Mx	0	3
49	MP4C	X	-53.978	63
50	MP4C	Z	31.164	63
51	MP4C	Mx	0	63
52	MP2A	X	-75.883	9
53	MP2A	Z	43.811	9
54	MP2A	Mx	.063	9
55	MP2A	X	-75.883	57
56	MP2A	Z	43.811	57
57	MP2A	Mx	.063	57
58	MP2B	X	-71.3	9
59	MP2B	Z	41.165	9
60	MP2B	Mx	-.022	9
61	MP2B	X	-71.3	57
62	MP2B	Z	41.165	57
63	MP2B	Mx	-.022	57
64	MP2C	X	-101.723	9
65	MP2C	Z	58.73	9
66	MP2C	Mx	-.069	9
67	MP2C	X	-101.723	57
68	MP2C	Z	58.73	57
69	MP2C	Mx	-.069	57
70	MP2A	X	-75.883	9
71	MP2A	Z	43.811	9
72	MP2A	Mx	.012	9
73	MP2A	X	-75.883	57
74	MP2A	Z	43.811	57
75	MP2A	Mx	.012	57
76	MP2B	X	-71.3	9
77	MP2B	Z	41.165	9
78	MP2B	Mx	-.055	9
79	MP2B	X	-71.3	57
80	MP2B	Z	41.165	57
81	MP2B	Mx	-.055	57
82	MP2C	X	-101.723	9
83	MP2C	Z	58.73	9
84	MP2C	Mx	.069	9

Member Point Loads (BLC 11 : Antenna Wo (240 Deg)) (Continued)

	Member Label	Direction	Magnitude[lb,k-ft]	Location[in,%]
85	MP2C	X	-101.723	57
86	MP2C	Z	58.73	57
87	MP2C	Mx	.069	57
88	MP1A	X	-94.165	3
89	MP1A	Z	54.366	3
90	MP1A	Mx	.047	3
91	MP1A	X	-94.165	63
92	MP1A	Z	54.366	63
93	MP1A	Mx	.047	63
94	MP1B	X	-94.165	3
95	MP1B	Z	54.366	3
96	MP1B	Mx	-.047	3
97	MP1B	X	-94.165	63
98	MP1B	Z	54.366	63
99	MP1B	Mx	-.047	63
100	MP4A	X	-94.165	3
101	MP4A	Z	54.366	3
102	MP4A	Mx	.047	3
103	MP4A	X	-94.165	63
104	MP4A	Z	54.366	63
105	MP4A	Mx	.047	63
106	MP4B	X	-94.165	3
107	MP4B	Z	54.366	3
108	MP4B	Mx	-.047	3
109	MP4B	X	-94.165	63
110	MP4B	Z	54.366	63
111	MP4B	Mx	-.047	63

Member Point Loads (BLC 12 : Antenna Wo (270 Deg))

	Member Label	Direction	Magnitude[lb,k-ft]	Location[in,%]
1	MP3A	X	-26.486	21
2	MP3A	Z	0	21
3	MP3A	Mx	.013	21
4	MP3A	X	-26.486	45
5	MP3A	Z	0	45
6	MP3A	Mx	.013	45
7	MP3B	X	-50.645	21
8	MP3B	Z	0	21
9	MP3B	Mx	-.016	21
10	MP3B	X	-50.645	45
11	MP3B	Z	0	45
12	MP3B	Mx	-.016	45
13	MP3C	X	-57.362	21
14	MP3C	Z	0	21
15	MP3C	Mx	-.014	21
16	MP3C	X	-57.362	45
17	MP3C	Z	0	45
18	MP3C	Mx	-.014	45
19	M101	X	-96.101	18
20	M101	Z	0	18
21	M101	Mx	0	18

Member Point Loads (BLC 12 : Antenna Wo (270 Deg)) (Continued)

	Member Label	Direction	Magnitude[lb,k-ft]	Location[in,%]
22	MP2A	X	-35.986	24
23	MP2A	Z	0	24
24	MP2A	Mx	-.018	24
25	MP2B	X	-46.461	24
26	MP2B	Z	0	24
27	MP2B	Mx	.015	24
28	MP2C	X	-49.373	24
29	MP2C	Z	0	24
30	MP2C	Mx	.012	24
31	MP1A	X	-29.149	24
32	MP1A	Z	0	24
33	MP1A	Mx	-.015	24
34	MP1B	X	-43.636	24
35	MP1B	Z	0	24
36	MP1B	Mx	.014	24
37	MP1C	X	-47.664	24
38	MP1C	Z	0	24
39	MP1C	Mx	.012	24
40	MP1C	X	-77.796	3
41	MP1C	Z	0	3
42	MP1C	Mx	-.019	3
43	MP1C	X	-77.796	63
44	MP1C	Z	0	63
45	MP1C	Mx	-.019	63
46	MP4C	X	-77.796	3
47	MP4C	Z	0	3
48	MP4C	Mx	-.019	3
49	MP4C	X	-77.796	63
50	MP4C	Z	0	63
51	MP4C	Mx	-.019	63
52	MP2A	X	-77.677	9
53	MP2A	Z	0	9
54	MP2A	Mx	.039	9
55	MP2A	X	-77.677	57
56	MP2A	Z	0	57
57	MP2A	Mx	.039	57
58	MP2B	X	-101.022	9
59	MP2B	Z	0	9
60	MP2B	Mx	.013	9
61	MP2B	X	-101.022	57
62	MP2B	Z	0	57
63	MP2B	Mx	.013	57
64	MP2C	X	-107.514	9
65	MP2C	Z	0	9
66	MP2C	Mx	-.081	9
67	MP2C	X	-107.514	57
68	MP2C	Z	0	57
69	MP2C	Mx	-.081	57
70	MP2A	X	-77.677	9
71	MP2A	Z	0	9
72	MP2A	Mx	.039	9
73	MP2A	X	-77.677	57

Member Point Loads (BLC 12 : Antenna Wo (270 Deg)) (Continued)

	Member Label	Direction	Magnitude[lb,k-ft]	Location[in,%]
74	MP2A	Z	0	57
75	MP2A	Mx	.039	57
76	MP2B	X	-101.022	9
77	MP2B	Z	0	9
78	MP2B	Mx	-.078	9
79	MP2B	X	-101.022	57
80	MP2B	Z	0	57
81	MP2B	Mx	-.078	57
82	MP2C	X	-107.514	9
83	MP2C	Z	0	9
84	MP2C	Mx	.027	9
85	MP2C	X	-107.514	57
86	MP2C	Z	0	57
87	MP2C	Mx	.027	57
88	MP1A	X	-124.201	3
89	MP1A	Z	0	3
90	MP1A	Mx	.062	3
91	MP1A	X	-124.201	63
92	MP1A	Z	0	63
93	MP1A	Mx	.062	63
94	MP1B	X	-77.796	3
95	MP1B	Z	0	3
96	MP1B	Mx	-.019	3
97	MP1B	X	-77.796	63
98	MP1B	Z	0	63
99	MP1B	Mx	-.019	63
100	MP4A	X	-124.201	3
101	MP4A	Z	0	3
102	MP4A	Mx	.062	3
103	MP4A	X	-124.201	63
104	MP4A	Z	0	63
105	MP4A	Mx	.062	63
106	MP4B	X	-77.796	3
107	MP4B	Z	0	3
108	MP4B	Mx	-.019	3
109	MP4B	X	-77.796	63
110	MP4B	Z	0	63
111	MP4B	Mx	-.019	63

Member Point Loads (BLC 13 : Antenna Wo (300 Deg))

	Member Label	Direction	Magnitude[lb,k-ft]	Location[in,%]
1	MP3A	X	-31.851	21
2	MP3A	Z	-18.389	21
3	MP3A	Mx	.016	21
4	MP3A	X	-31.851	45
5	MP3A	Z	-18.389	45
6	MP3A	Mx	.016	45
7	MP3B	X	-57.515	21
8	MP3B	Z	-33.206	21
9	MP3B	Mx	-.006	21
10	MP3B	X	-57.515	45

Member Point Loads (BLC 13 : Antenna Wo (300 Deg)) (Continued)

	Member Label	Direction	Magnitude[lb,k-ft]	Location[in,%]
11	MP3B	Z	-33.206	45
12	MP3B	Mx	-.006	45
13	MP3C	X	-31.851	21
14	MP3C	Z	-18.389	21
15	MP3C	Mx	-.016	21
16	MP3C	X	-31.851	45
17	MP3C	Z	-18.389	45
18	MP3C	Mx	-.016	45
19	M101	X	-95.225	18
20	M101	Z	-54.978	18
21	M101	Mx	0	18
22	MP2A	X	-35.029	24
23	MP2A	Z	-20.224	24
24	MP2A	Mx	-.018	24
25	MP2B	X	-46.157	24
26	MP2B	Z	-26.649	24
27	MP2B	Mx	.005	24
28	MP2C	X	-35.029	24
29	MP2C	Z	-20.224	24
30	MP2C	Mx	.018	24
31	MP1A	X	-30.588	24
32	MP1A	Z	-17.66	24
33	MP1A	Mx	-.015	24
34	MP1B	X	-45.978	24
35	MP1B	Z	-26.546	24
36	MP1B	Mx	.005	24
37	MP1C	X	-30.588	24
38	MP1C	Z	-17.66	24
39	MP1C	Mx	.015	24
40	MP1C	X	-94.165	3
41	MP1C	Z	-54.366	3
42	MP1C	Mx	-.047	3
43	MP1C	X	-94.165	63
44	MP1C	Z	-54.366	63
45	MP1C	Mx	-.047	63
46	MP4C	X	-94.165	3
47	MP4C	Z	-54.366	3
48	MP4C	Mx	-.047	3
49	MP4C	X	-94.165	63
50	MP4C	Z	-54.366	63
51	MP4C	Mx	-.047	63
52	MP2A	X	-75.883	9
53	MP2A	Z	-43.811	9
54	MP2A	Mx	.012	9
55	MP2A	X	-75.883	57
56	MP2A	Z	-43.811	57
57	MP2A	Mx	.012	57
58	MP2B	X	-100.684	9
59	MP2B	Z	-58.13	9
60	MP2B	Mx	.057	9
61	MP2B	X	-100.684	57
62	MP2B	Z	-58.13	57

Member Point Loads (BLC 13 : Antenna Wo (300 Deg)) (Continued)

	Member Label	Direction	Magnitude[lb,k-ft]	Location[in,%]
63	MP2B	Mx	.057	57
64	MP2C	X	-75.883	9
65	MP2C	Z	-43.811	9
66	MP2C	Mx	-.063	9
67	MP2C	X	-75.883	57
68	MP2C	Z	-43.811	57
69	MP2C	Mx	-.063	57
70	MP2A	X	-75.883	9
71	MP2A	Z	-43.811	9
72	MP2A	Mx	.063	9
73	MP2A	X	-75.883	57
74	MP2A	Z	-43.811	57
75	MP2A	Mx	.063	57
76	MP2B	X	-100.684	9
77	MP2B	Z	-58.13	9
78	MP2B	Mx	-.077	9
79	MP2B	X	-100.684	57
80	MP2B	Z	-58.13	57
81	MP2B	Mx	-.077	57
82	MP2C	X	-75.883	9
83	MP2C	Z	-43.811	9
84	MP2C	Mx	-.012	9
85	MP2C	X	-75.883	57
86	MP2C	Z	-43.811	57
87	MP2C	Mx	-.012	57
88	MP1A	X	-94.165	3
89	MP1A	Z	-54.366	3
90	MP1A	Mx	.047	3
91	MP1A	X	-94.165	63
92	MP1A	Z	-54.366	63
93	MP1A	Mx	.047	63
94	MP1B	X	-53.978	3
95	MP1B	Z	-31.164	3
96	MP1B	Mx	0	3
97	MP1B	X	-53.978	63
98	MP1B	Z	-31.164	63
99	MP1B	Mx	0	63
100	MP4A	X	-94.165	3
101	MP4A	Z	-54.366	3
102	MP4A	Mx	.047	3
103	MP4A	X	-94.165	63
104	MP4A	Z	-54.366	63
105	MP4A	Mx	.047	63
106	MP4B	X	-53.978	3
107	MP4B	Z	-31.164	3
108	MP4B	Mx	0	3
109	MP4B	X	-53.978	63
110	MP4B	Z	-31.164	63
111	MP4B	Mx	0	63

Member Point Loads (BLC 14 : Antenna Wo (330 Deg))

Member Label	Direction	Magnitude[lb,k-ft]	Location[in,%]

Member Point Loads (BLC 14 : Antenna Wo (330 Deg)) (Continued)

	Member Label	Direction	Magnitude[lb,k-ft]	Location[in,%]
1	MP3A	X	-28.681	21
2	MP3A	Z	-49.677	21
3	MP3A	Mx	.014	21
4	MP3A	X	-28.681	45
5	MP3A	Z	-49.677	45
6	MP3A	Mx	.014	45
7	MP3B	X	-31.419	21
8	MP3B	Z	-54.42	21
9	MP3B	Mx	.011	21
10	MP3B	X	-31.419	45
11	MP3B	Z	-54.42	45
12	MP3B	Mx	.011	45
13	MP3C	X	-13.243	21
14	MP3C	Z	-22.938	21
15	MP3C	Mx	-.013	21
16	MP3C	X	-13.243	45
17	MP3C	Z	-22.938	45
18	MP3C	Mx	-.013	45
19	M101	X	-58.442	18
20	M101	Z	-101.224	18
21	M101	Mx	0	18
22	MP2A	X	-24.687	24
23	MP2A	Z	-42.758	24
24	MP2A	Mx	-.012	24
25	MP2B	X	-25.874	24
26	MP2B	Z	-44.815	24
27	MP2B	Mx	-.009	24
28	MP2C	X	-17.993	24
29	MP2C	Z	-31.165	24
30	MP2C	Mx	.018	24
31	MP1A	X	-23.832	24
32	MP1A	Z	-41.278	24
33	MP1A	Mx	-.012	24
34	MP1B	X	-25.474	24
35	MP1B	Z	-44.122	24
36	MP1B	Mx	-.009	24
37	MP1C	X	-14.574	24
38	MP1C	Z	-25.244	24
39	MP1C	Mx	.015	24
40	MP1C	X	-62.1	3
41	MP1C	Z	-107.561	3
42	MP1C	Mx	-.062	3
43	MP1C	X	-62.1	63
44	MP1C	Z	-107.561	63
45	MP1C	Mx	-.062	63
46	MP4C	X	-62.1	3
47	MP4C	Z	-107.561	3
48	MP4C	Mx	-.062	3
49	MP4C	X	-62.1	63
50	MP4C	Z	-107.561	63
51	MP4C	Mx	-.062	63
52	MP2A	X	-53.757	9

Member Point Loads (BLC 14 : Antenna Wo (330 Deg)) (Continued)

	Member Label	Direction	Magnitude[lb,k-ft]	Location[in,%]
53	MP2A	Z	-93.109	9
54	MP2A	Mx	-.027	9
55	MP2A	X	-53.757	57
56	MP2A	Z	-93.109	57
57	MP2A	Mx	-.027	57
58	MP2B	X	-56.403	9
59	MP2B	Z	-97.692	9
60	MP2B	Mx	.081	9
61	MP2B	X	-56.403	57
62	MP2B	Z	-97.692	57
63	MP2B	Mx	.081	57
64	MP2C	X	-38.838	9
65	MP2C	Z	-67.27	9
66	MP2C	Mx	-.039	9
67	MP2C	X	-38.838	57
68	MP2C	Z	-67.27	57
69	MP2C	Mx	-.039	57
70	MP2A	X	-53.757	9
71	MP2A	Z	-93.109	9
72	MP2A	Mx	.081	9
73	MP2A	X	-53.757	57
74	MP2A	Z	-93.109	57
75	MP2A	Mx	.081	57
76	MP2B	X	-56.403	9
77	MP2B	Z	-97.692	9
78	MP2B	Mx	-.043	9
79	MP2B	X	-56.403	57
80	MP2B	Z	-97.692	57
81	MP2B	Mx	-.043	57
82	MP2C	X	-38.838	9
83	MP2C	Z	-67.27	9
84	MP2C	Mx	-.039	9
85	MP2C	X	-38.838	57
86	MP2C	Z	-67.27	57
87	MP2C	Mx	-.039	57
88	MP1A	X	-38.898	3
89	MP1A	Z	-67.374	3
90	MP1A	Mx	.019	3
91	MP1A	X	-38.898	63
92	MP1A	Z	-67.374	63
93	MP1A	Mx	.019	63
94	MP1B	X	-38.898	3
95	MP1B	Z	-67.374	3
96	MP1B	Mx	.019	3
97	MP1B	X	-38.898	63
98	MP1B	Z	-67.374	63
99	MP1B	Mx	.019	63
100	MP4A	X	-38.898	3
101	MP4A	Z	-67.374	3
102	MP4A	Mx	.019	3
103	MP4A	X	-38.898	63
104	MP4A	Z	-67.374	63

Member Point Loads (BLC 14 : Antenna Wo (330 Deg)) (Continued)

	Member Label	Direction	Magnitude[lb,k-ft]	Location[in,%]
105	MP4A	Mx	.019	63
106	MP4B	X	-38.898	3
107	MP4B	Z	-67.374	3
108	MP4B	Mx	.019	3
109	MP4B	X	-38.898	63
110	MP4B	Z	-67.374	63
111	MP4B	Mx	.019	63

Member Point Loads (BLC 15 : Antenna Wi (0 Deg))

	Member Label	Direction	Magnitude[lb,k-ft]	Location[in,%]
1	MP3A	X	0	21
2	MP3A	Z	-9.4	21
3	MP3A	Mx	0	21
4	MP3A	X	0	45
5	MP3A	Z	-9.4	45
6	MP3A	Mx	0	45
7	MP3B	X	0	21
8	MP3B	Z	-6.232	21
9	MP3B	Mx	.002	21
10	MP3B	X	0	45
11	MP3B	Z	-6.232	45
12	MP3B	Mx	.002	45
13	MP3C	X	0	21
14	MP3C	Z	-5.351	21
15	MP3C	Mx	-.002	21
16	MP3C	X	0	45
17	MP3C	Z	-5.351	45
18	MP3C	Mx	-.002	45
19	M101	X	0	18
20	M101	Z	-15.393	18
21	M101	Mx	0	18
22	MP2A	X	0	24
23	MP2A	Z	-7.919	24
24	MP2A	Mx	0	24
25	MP2B	X	0	24
26	MP2B	Z	-6.503	24
27	MP2B	Mx	-.002	24
28	MP2C	X	0	24
29	MP2C	Z	-6.11	24
30	MP2C	Mx	.003	24
31	MP1A	X	0	24
32	MP1A	Z	-7.919	24
33	MP1A	Mx	0	24
34	MP1B	X	0	24
35	MP1B	Z	-5.965	24
36	MP1B	Mx	-.002	24
37	MP1C	X	0	24
38	MP1C	Z	-5.422	24
39	MP1C	Mx	.002	24
40	MP1C	X	0	3
41	MP1C	Z	-14.836	3

Member Point Loads (BLC 15 : Antenna Wi (0 Deg)) (Continued)

	Member Label	Direction	Magnitude[lb,k-ft]	Location[in,%]
42	MP1C	Mx	-.006	3
43	MP1C	X	0	63
44	MP1C	Z	-14.836	63
45	MP1C	Mx	-.006	63
46	MP4C	X	0	3
47	MP4C	Z	-14.836	3
48	MP4C	Mx	-.006	3
49	MP4C	X	0	63
50	MP4C	Z	-14.836	63
51	MP4C	Mx	-.006	63
52	MP2A	X	0	9
53	MP2A	Z	-15.934	9
54	MP2A	Mx	-.009	9
55	MP2A	X	0	57
56	MP2A	Z	-15.934	57
57	MP2A	Mx	-.009	57
58	MP2B	X	0	9
59	MP2B	Z	-13.03	9
60	MP2B	Mx	.01	9
61	MP2B	X	0	57
62	MP2B	Z	-13.03	57
63	MP2B	Mx	.01	57
64	MP2C	X	0	9
65	MP2C	Z	-12.222	9
66	MP2C	Mx	-.002	9
67	MP2C	X	0	57
68	MP2C	Z	-12.222	57
69	MP2C	Mx	-.002	57
70	MP2A	X	0	9
71	MP2A	Z	-15.934	9
72	MP2A	Mx	.009	9
73	MP2A	X	0	57
74	MP2A	Z	-15.934	57
75	MP2A	Mx	.009	57
76	MP2B	X	0	9
77	MP2B	Z	-13.03	9
78	MP2B	Mx	.000105	9
79	MP2B	X	0	57
80	MP2B	Z	-13.03	57
81	MP2B	Mx	.000105	57
82	MP2C	X	0	9
83	MP2C	Z	-12.222	9
84	MP2C	Mx	-.009	9
85	MP2C	X	0	57
86	MP2C	Z	-12.222	57
87	MP2C	Mx	-.009	57
88	MP1A	X	0	3
89	MP1A	Z	-8.993	3
90	MP1A	Mx	0	3
91	MP1A	X	0	63
92	MP1A	Z	-8.993	63
93	MP1A	Mx	0	63

Member Point Loads (BLC 15 : Antenna Wi (0 Deg)) (Continued)

	Member Label	Direction	Magnitude[lb,k-ft]	Location[in,%]
94	MP1B	X	0	3
95	MP1B	Z	-14.836	3
96	MP1B	Mx	.006	3
97	MP1B	X	0	63
98	MP1B	Z	-14.836	63
99	MP1B	Mx	.006	63
100	MP4A	X	0	3
101	MP4A	Z	-8.993	3
102	MP4A	Mx	0	3
103	MP4A	X	0	63
104	MP4A	Z	-8.993	63
105	MP4A	Mx	0	63
106	MP4B	X	0	3
107	MP4B	Z	-14.836	3
108	MP4B	Mx	.006	3
109	MP4B	X	0	63
110	MP4B	Z	-14.836	63
111	MP4B	Mx	.006	63

Member Point Loads (BLC 16 : Antenna Wi (30 Deg))

	Member Label	Direction	Magnitude[lb,k-ft]	Location[in,%]
1	MP3A	X	4.025	21
2	MP3A	Z	-6.972	21
3	MP3A	Mx	-.002	21
4	MP3A	X	4.025	45
5	MP3A	Z	-6.972	45
6	MP3A	Mx	-.002	45
7	MP3B	X	2.082	21
8	MP3B	Z	-3.606	21
9	MP3B	Mx	.002	21
10	MP3B	X	2.082	45
11	MP3B	Z	-3.606	45
12	MP3B	Mx	.002	45
13	MP3C	X	4.025	21
14	MP3C	Z	-6.972	21
15	MP3C	Mx	-.002	21
16	MP3C	X	4.025	45
17	MP3C	Z	-6.972	45
18	MP3C	Mx	-.002	45
19	M101	X	6.808	18
20	M101	Z	-11.793	18
21	M101	Mx	0	18
22	MP2A	X	3.658	24
23	MP2A	Z	-6.336	24
24	MP2A	Mx	.002	24
25	MP2B	X	2.79	24
26	MP2B	Z	-4.832	24
27	MP2B	Mx	-.003	24
28	MP2C	X	3.658	24
29	MP2C	Z	-6.336	24
30	MP2C	Mx	.002	24

Member Point Loads (BLC 16 : Antenna Wi (30 Deg)) (Continued)

	Member Label	Direction	Magnitude[lb,k-ft]	Location[in,%]
31	MP1A	X	3.543	24
32	MP1A	Z	-6.137	24
33	MP1A	Mx	.002	24
34	MP1B	X	2.345	24
35	MP1B	Z	-4.062	24
36	MP1B	Mx	-.002	24
37	MP1C	X	3.543	24
38	MP1C	Z	-6.137	24
39	MP1C	Mx	.002	24
40	MP1C	X	5.47	3
41	MP1C	Z	-9.475	3
42	MP1C	Mx	-.003	3
43	MP1C	X	5.47	63
44	MP1C	Z	-9.475	63
45	MP1C	Mx	-.003	63
46	MP4C	X	5.47	3
47	MP4C	Z	-9.475	3
48	MP4C	Mx	-.003	3
49	MP4C	X	5.47	63
50	MP4C	Z	-9.475	63
51	MP4C	Mx	-.003	63
52	MP2A	X	7.348	9
53	MP2A	Z	-12.727	9
54	MP2A	Mx	-.011	9
55	MP2A	X	7.348	57
56	MP2A	Z	-12.727	57
57	MP2A	Mx	-.011	57
58	MP2B	X	5.567	9
59	MP2B	Z	-9.643	9
60	MP2B	Mx	.007	9
61	MP2B	X	5.567	57
62	MP2B	Z	-9.643	57
63	MP2B	Mx	.007	57
64	MP2C	X	7.348	9
65	MP2C	Z	-12.727	9
66	MP2C	Mx	.004	9
67	MP2C	X	7.348	57
68	MP2C	Z	-12.727	57
69	MP2C	Mx	.004	57
70	MP2A	X	7.348	9
71	MP2A	Z	-12.727	9
72	MP2A	Mx	.004	9
73	MP2A	X	7.348	57
74	MP2A	Z	-12.727	57
75	MP2A	Mx	.004	57
76	MP2B	X	5.567	9
77	MP2B	Z	-9.643	9
78	MP2B	Mx	.004	9
79	MP2B	X	5.567	57
80	MP2B	Z	-9.643	57
81	MP2B	Mx	.004	57
82	MP2C	X	7.348	9

Member Point Loads (BLC 16 : Antenna Wi (30 Deg)) (Continued)

	Member Label	Direction	Magnitude[lb,k-ft]	Location[in,%]
83	MP2C	Z	-12.727	9
84	MP2C	Mx	-.011	9
85	MP2C	X	7.348	57
86	MP2C	Z	-12.727	57
87	MP2C	Mx	-.011	57
88	MP1A	X	5.47	3
89	MP1A	Z	-9.475	3
90	MP1A	Mx	-.003	3
91	MP1A	X	5.47	63
92	MP1A	Z	-9.475	63
93	MP1A	Mx	-.003	63
94	MP1B	X	8.392	3
95	MP1B	Z	-14.535	3
96	MP1B	Mx	.008	3
97	MP1B	X	8.392	63
98	MP1B	Z	-14.535	63
99	MP1B	Mx	.008	63
100	MP4A	X	5.47	3
101	MP4A	Z	-9.475	3
102	MP4A	Mx	-.003	3
103	MP4A	X	5.47	63
104	MP4A	Z	-9.475	63
105	MP4A	Mx	-.003	63
106	MP4B	X	8.392	3
107	MP4B	Z	-14.535	3
108	MP4B	Mx	.008	3
109	MP4B	X	8.392	63
110	MP4B	Z	-14.535	63
111	MP4B	Mx	.008	63

Member Point Loads (BLC 17 : Antenna Wi (60 Deg))

	Member Label	Direction	Magnitude[lb,k-ft]	Location[in,%]
1	MP3A	X	4.634	21
2	MP3A	Z	-2.675	21
3	MP3A	Mx	-.002	21
4	MP3A	X	4.634	45
5	MP3A	Z	-2.675	45
6	MP3A	Mx	-.002	45
7	MP3B	X	4.012	21
8	MP3B	Z	-2.316	21
9	MP3B	Mx	.002	21
10	MP3B	X	4.012	45
11	MP3B	Z	-2.316	45
12	MP3B	Mx	.002	45
13	MP3C	X	8.141	21
14	MP3C	Z	-4.7	21
15	MP3C	Mx	0	21
16	MP3C	X	8.141	45
17	MP3C	Z	-4.7	45
18	MP3C	Mx	0	45
19	M101	X	11.024	18

Member Point Loads (BLC 17 : Antenna Wi (60 Deg)) (Continued)

	Member Label	Direction	Magnitude[lb,k-ft]	Location[in,%]
20	M101	Z	-6.364	18
21	M101	Mx	0	18
22	MP2A	X	5.291	24
23	MP2A	Z	-3.055	24
24	MP2A	Mx	.003	24
25	MP2B	X	5.013	24
26	MP2B	Z	-2.894	24
27	MP2B	Mx	-.003	24
28	MP2C	X	6.858	24
29	MP2C	Z	-3.959	24
30	MP2C	Mx	0	24
31	MP1A	X	4.696	24
32	MP1A	Z	-2.711	24
33	MP1A	Mx	.002	24
34	MP1B	X	4.312	24
35	MP1B	Z	-2.49	24
36	MP1B	Mx	-.002	24
37	MP1C	X	6.858	24
38	MP1C	Z	-3.959	24
39	MP1C	Mx	0	24
40	MP1C	X	7.788	3
41	MP1C	Z	-4.497	3
42	MP1C	Mx	0	3
43	MP1C	X	7.788	63
44	MP1C	Z	-4.497	63
45	MP1C	Mx	0	63
46	MP4C	X	7.788	3
47	MP4C	Z	-4.497	3
48	MP4C	Mx	0	3
49	MP4C	X	7.788	63
50	MP4C	Z	-4.497	63
51	MP4C	Mx	0	63
52	MP2A	X	10.585	9
53	MP2A	Z	-6.111	9
54	MP2A	Mx	-.009	9
55	MP2A	X	10.585	57
56	MP2A	Z	-6.111	57
57	MP2A	Mx	-.009	57
58	MP2B	X	10.015	9
59	MP2B	Z	-5.782	9
60	MP2B	Mx	.003	9
61	MP2B	X	10.015	57
62	MP2B	Z	-5.782	57
63	MP2B	Mx	.003	57
64	MP2C	X	13.799	9
65	MP2C	Z	-7.967	9
66	MP2C	Mx	.009	9
67	MP2C	X	13.799	57
68	MP2C	Z	-7.967	57
69	MP2C	Mx	.009	57
70	MP2A	X	10.585	9
71	MP2A	Z	-6.111	9

Member Point Loads (BLC 17 : Antenna Wi (60 Deg)) (Continued)

	Member Label	Direction	Magnitude[lb,k-ft]	Location[in,%]
72	MP2A	Mx	-.002	9
73	MP2A	X	10.585	57
74	MP2A	Z	-6.111	57
75	MP2A	Mx	-.002	57
76	MP2B	X	10.015	9
77	MP2B	Z	-5.782	9
78	MP2B	Mx	.008	9
79	MP2B	X	10.015	57
80	MP2B	Z	-5.782	57
81	MP2B	Mx	.008	57
82	MP2C	X	13.799	9
83	MP2C	Z	-7.967	9
84	MP2C	Mx	-.009	9
85	MP2C	X	13.799	57
86	MP2C	Z	-7.967	57
87	MP2C	Mx	-.009	57
88	MP1A	X	12.848	3
89	MP1A	Z	-7.418	3
90	MP1A	Mx	-.006	3
91	MP1A	X	12.848	63
92	MP1A	Z	-7.418	63
93	MP1A	Mx	-.006	63
94	MP1B	X	12.848	3
95	MP1B	Z	-7.418	3
96	MP1B	Mx	.006	3
97	MP1B	X	12.848	63
98	MP1B	Z	-7.418	63
99	MP1B	Mx	.006	63
100	MP4A	X	12.848	3
101	MP4A	Z	-7.418	3
102	MP4A	Mx	-.006	3
103	MP4A	X	12.848	63
104	MP4A	Z	-7.418	63
105	MP4A	Mx	-.006	63
106	MP4B	X	12.848	3
107	MP4B	Z	-7.418	3
108	MP4B	Mx	.006	3
109	MP4B	X	12.848	63
110	MP4B	Z	-7.418	63
111	MP4B	Mx	.006	63

Member Point Loads (BLC 18 : Antenna Wi (90 Deg))

	Member Label	Direction	Magnitude[lb,k-ft]	Location[in,%]
1	MP3A	X	4.001	21
2	MP3A	Z	0	21
3	MP3A	Mx	-.002	21
4	MP3A	X	4.001	45
5	MP3A	Z	0	45
6	MP3A	Mx	-.002	45
7	MP3B	X	7.169	21
8	MP3B	Z	0	21

Member Point Loads (BLC 18 : Antenna Wi (90 Deg)) (Continued)

	Member Label	Direction	Magnitude[lb,k-ft]	Location[in,%]
9	MP3B	Mx	.002	21
10	MP3B	X	7.169	45
11	MP3B	Z	0	45
12	MP3B	Mx	.002	45
13	MP3C	X	8.05	21
14	MP3C	Z	0	21
15	MP3C	Mx	.002	21
16	MP3C	X	8.05	45
17	MP3C	Z	0	45
18	MP3C	Mx	.002	45
19	M101	X	13.617	18
20	M101	Z	0	18
21	M101	Mx	0	18
22	MP2A	X	5.506	24
23	MP2A	Z	0	24
24	MP2A	Mx	.003	24
25	MP2B	X	6.922	24
26	MP2B	Z	0	24
27	MP2B	Mx	-.002	24
28	MP2C	X	7.316	24
29	MP2C	Z	0	24
30	MP2C	Mx	-.002	24
31	MP1A	X	4.59	24
32	MP1A	Z	0	24
33	MP1A	Mx	.002	24
34	MP1B	X	6.543	24
35	MP1B	Z	0	24
36	MP1B	Mx	-.002	24
37	MP1C	X	7.087	24
38	MP1C	Z	0	24
39	MP1C	Mx	-.002	24
40	MP1C	X	10.941	3
41	MP1C	Z	0	3
42	MP1C	Mx	.003	3
43	MP1C	X	10.941	63
44	MP1C	Z	0	63
45	MP1C	Mx	.003	63
46	MP4C	X	10.941	3
47	MP4C	Z	0	3
48	MP4C	Mx	.003	3
49	MP4C	X	10.941	63
50	MP4C	Z	0	63
51	MP4C	Mx	.003	63
52	MP2A	X	10.985	9
53	MP2A	Z	0	9
54	MP2A	Mx	-.005	9
55	MP2A	X	10.985	57
56	MP2A	Z	0	57
57	MP2A	Mx	-.005	57
58	MP2B	X	13.889	9
59	MP2B	Z	0	9
60	MP2B	Mx	-.002	9

Member Point Loads (BLC 18 : Antenna Wi (90 Deg)) (Continued)

	Member Label	Direction	Magnitude[lb,k-ft]	Location[in,%]
61	MP2B	X	13.889	57
62	MP2B	Z	0	57
63	MP2B	Mx	-.002	57
64	MP2C	X	14.696	9
65	MP2C	Z	0	9
66	MP2C	Mx	.011	9
67	MP2C	X	14.696	57
68	MP2C	Z	0	57
69	MP2C	Mx	.011	57
70	MP2A	X	10.985	9
71	MP2A	Z	0	9
72	MP2A	Mx	-.005	9
73	MP2A	X	10.985	57
74	MP2A	Z	0	57
75	MP2A	Mx	-.005	57
76	MP2B	X	13.889	9
77	MP2B	Z	0	9
78	MP2B	Mx	.011	9
79	MP2B	X	13.889	57
80	MP2B	Z	0	57
81	MP2B	Mx	.011	57
82	MP2C	X	14.696	9
83	MP2C	Z	0	9
84	MP2C	Mx	-.004	9
85	MP2C	X	14.696	57
86	MP2C	Z	0	57
87	MP2C	Mx	-.004	57
88	MP1A	X	16.784	3
89	MP1A	Z	0	3
90	MP1A	Mx	-.008	3
91	MP1A	X	16.784	63
92	MP1A	Z	0	63
93	MP1A	Mx	-.008	63
94	MP1B	X	10.941	3
95	MP1B	Z	0	3
96	MP1B	Mx	.003	3
97	MP1B	X	10.941	63
98	MP1B	Z	0	63
99	MP1B	Mx	.003	63
100	MP4A	X	16.784	3
101	MP4A	Z	0	3
102	MP4A	Mx	-.008	3
103	MP4A	X	16.784	63
104	MP4A	Z	0	63
105	MP4A	Mx	-.008	63
106	MP4B	X	10.941	3
107	MP4B	Z	0	3
108	MP4B	Mx	.003	3
109	MP4B	X	10.941	63
110	MP4B	Z	0	63
111	MP4B	Mx	.003	63

Member Point Loads (BLC 19 : Antenna Wi (120 Deg))

	Member Label	Direction	Magnitude[lb,k-ft]	Location[in,%]
1	MP3A	X	4.634	21
2	MP3A	Z	2.675	21
3	MP3A	Mx	-.002	21
4	MP3A	X	4.634	45
5	MP3A	Z	2.675	45
6	MP3A	Mx	-.002	45
7	MP3B	X	8	21
8	MP3B	Z	4.619	21
9	MP3B	Mx	.000802	21
10	MP3B	X	8	45
11	MP3B	Z	4.619	45
12	MP3B	Mx	.000802	45
13	MP3C	X	4.634	21
14	MP3C	Z	2.675	21
15	MP3C	Mx	.002	21
16	MP3C	X	4.634	45
17	MP3C	Z	2.675	45
18	MP3C	Mx	.002	45
19	M101	X	13.331	18
20	M101	Z	7.696	18
21	M101	Mx	0	18
22	MP2A	X	5.291	24
23	MP2A	Z	3.055	24
24	MP2A	Mx	.003	24
25	MP2B	X	6.795	24
26	MP2B	Z	3.923	24
27	MP2B	Mx	-.000681	24
28	MP2C	X	5.291	24
29	MP2C	Z	3.055	24
30	MP2C	Mx	-.003	24
31	MP1A	X	4.696	24
32	MP1A	Z	2.711	24
33	MP1A	Mx	.002	24
34	MP1B	X	6.771	24
35	MP1B	Z	3.909	24
36	MP1B	Mx	-.000679	24
37	MP1C	X	4.696	24
38	MP1C	Z	2.711	24
39	MP1C	Mx	-.002	24
40	MP1C	X	12.848	3
41	MP1C	Z	7.418	3
42	MP1C	Mx	.006	3
43	MP1C	X	12.848	63
44	MP1C	Z	7.418	63
45	MP1C	Mx	.006	63
46	MP4C	X	12.848	3
47	MP4C	Z	7.418	3
48	MP4C	Mx	.006	3
49	MP4C	X	12.848	63
50	MP4C	Z	7.418	63
51	MP4C	Mx	.006	63
52	MP2A	X	10.585	9

Member Point Loads (BLC 19 : Antenna Wi (120 Deg)) (Continued)

	Member Label	Direction	Magnitude[lb,k-ft]	Location[in,%]
53	MP2A	Z	6.111	9
54	MP2A	Mx	-.002	9
55	MP2A	X	10.585	57
56	MP2A	Z	6.111	57
57	MP2A	Mx	-.002	57
58	MP2B	X	13.67	9
59	MP2B	Z	7.892	9
60	MP2B	Mx	-.008	9
61	MP2B	X	13.67	57
62	MP2B	Z	7.892	57
63	MP2B	Mx	-.008	57
64	MP2C	X	10.585	9
65	MP2C	Z	6.111	9
66	MP2C	Mx	.009	9
67	MP2C	X	10.585	57
68	MP2C	Z	6.111	57
69	MP2C	Mx	.009	57
70	MP2A	X	10.585	9
71	MP2A	Z	6.111	9
72	MP2A	Mx	-.009	9
73	MP2A	X	10.585	57
74	MP2A	Z	6.111	57
75	MP2A	Mx	-.009	57
76	MP2B	X	13.67	9
77	MP2B	Z	7.892	9
78	MP2B	Mx	.01	9
79	MP2B	X	13.67	57
80	MP2B	Z	7.892	57
81	MP2B	Mx	.01	57
82	MP2C	X	10.585	9
83	MP2C	Z	6.111	9
84	MP2C	Mx	.002	9
85	MP2C	X	10.585	57
86	MP2C	Z	6.111	57
87	MP2C	Mx	.002	57
88	MP1A	X	12.848	3
89	MP1A	Z	7.418	3
90	MP1A	Mx	-.006	3
91	MP1A	X	12.848	63
92	MP1A	Z	7.418	63
93	MP1A	Mx	-.006	63
94	MP1B	X	7.788	3
95	MP1B	Z	4.497	3
96	MP1B	Mx	0	3
97	MP1B	X	7.788	63
98	MP1B	Z	4.497	63
99	MP1B	Mx	0	63
100	MP4A	X	12.848	3
101	MP4A	Z	7.418	3
102	MP4A	Mx	-.006	3
103	MP4A	X	12.848	63
104	MP4A	Z	7.418	63

Member Point Loads (BLC 19 : Antenna Wi (120 Deg)) (Continued)

	Member Label	Direction	Magnitude[lb,k-ft]	Location[in,%]
105	MP4A	Mx	-.006	63
106	MP4B	X	7.788	3
107	MP4B	Z	4.497	3
108	MP4B	Mx	0	3
109	MP4B	X	7.788	63
110	MP4B	Z	4.497	63
111	MP4B	Mx	0	63

Member Point Loads (BLC 20 : Antenna Wi (150 Deg))

	Member Label	Direction	Magnitude[lb,k-ft]	Location[in,%]
1	MP3A	X	4.025	21
2	MP3A	Z	6.972	21
3	MP3A	Mx	-.002	21
4	MP3A	X	4.025	45
5	MP3A	Z	6.972	45
6	MP3A	Mx	-.002	45
7	MP3B	X	4.384	21
8	MP3B	Z	7.594	21
9	MP3B	Mx	-.002	21
10	MP3B	X	4.384	45
11	MP3B	Z	7.594	45
12	MP3B	Mx	-.002	45
13	MP3C	X	2.001	21
14	MP3C	Z	3.465	21
15	MP3C	Mx	.002	21
16	MP3C	X	2.001	45
17	MP3C	Z	3.465	45
18	MP3C	Mx	.002	45
19	M101	X	8.14	18
20	M101	Z	14.1	18
21	M101	Mx	0	18
22	MP2A	X	3.658	24
23	MP2A	Z	6.336	24
24	MP2A	Mx	.002	24
25	MP2B	X	3.818	24
26	MP2B	Z	6.614	24
27	MP2B	Mx	.001	24
28	MP2C	X	2.753	24
29	MP2C	Z	4.769	24
30	MP2C	Mx	-.003	24
31	MP1A	X	3.543	24
32	MP1A	Z	6.137	24
33	MP1A	Mx	.002	24
34	MP1B	X	3.765	24
35	MP1B	Z	6.521	24
36	MP1B	Mx	.001	24
37	MP1C	X	2.295	24
38	MP1C	Z	3.975	24
39	MP1C	Mx	-.002	24
40	MP1C	X	8.392	3
41	MP1C	Z	14.535	3

Member Point Loads (BLC 20 : Antenna Wi (150 Deg)) (Continued)

	Member Label	Direction	Magnitude[lb,k-ft]	Location[in,%]
42	MP1C	Mx	.008	3
43	MP1C	X	8.392	63
44	MP1C	Z	14.535	63
45	MP1C	Mx	.008	63
46	MP4C	X	8.392	3
47	MP4C	Z	14.535	3
48	MP4C	Mx	.008	3
49	MP4C	X	8.392	63
50	MP4C	Z	14.535	63
51	MP4C	Mx	.008	63
52	MP2A	X	7.348	9
53	MP2A	Z	12.727	9
54	MP2A	Mx	.004	9
55	MP2A	X	7.348	57
56	MP2A	Z	12.727	57
57	MP2A	Mx	.004	57
58	MP2B	X	7.677	9
59	MP2B	Z	13.298	9
60	MP2B	Mx	-.011	9
61	MP2B	X	7.677	57
62	MP2B	Z	13.298	57
63	MP2B	Mx	-.011	57
64	MP2C	X	5.493	9
65	MP2C	Z	9.513	9
66	MP2C	Mx	.005	9
67	MP2C	X	5.493	57
68	MP2C	Z	9.513	57
69	MP2C	Mx	.005	57
70	MP2A	X	7.348	9
71	MP2A	Z	12.727	9
72	MP2A	Mx	-.011	9
73	MP2A	X	7.348	57
74	MP2A	Z	12.727	57
75	MP2A	Mx	-.011	57
76	MP2B	X	7.677	9
77	MP2B	Z	13.298	9
78	MP2B	Mx	.006	9
79	MP2B	X	7.677	57
80	MP2B	Z	13.298	57
81	MP2B	Mx	.006	57
82	MP2C	X	5.493	9
83	MP2C	Z	9.513	9
84	MP2C	Mx	.005	9
85	MP2C	X	5.493	57
86	MP2C	Z	9.513	57
87	MP2C	Mx	.005	57
88	MP1A	X	5.47	3
89	MP1A	Z	9.475	3
90	MP1A	Mx	-.003	3
91	MP1A	X	5.47	63
92	MP1A	Z	9.475	63
93	MP1A	Mx	-.003	63

Member Point Loads (BLC 20 : Antenna Wi (150 Deg)) (Continued)

	Member Label	Direction	Magnitude[lb,k-ft]	Location[in,%]
94	MP1B	X	5.47	3
95	MP1B	Z	9.475	3
96	MP1B	Mx	-.003	3
97	MP1B	X	5.47	63
98	MP1B	Z	9.475	63
99	MP1B	Mx	-.003	63
100	MP4A	X	5.47	3
101	MP4A	Z	9.475	3
102	MP4A	Mx	-.003	3
103	MP4A	X	5.47	63
104	MP4A	Z	9.475	63
105	MP4A	Mx	-.003	63
106	MP4B	X	5.47	3
107	MP4B	Z	9.475	3
108	MP4B	Mx	-.003	3
109	MP4B	X	5.47	63
110	MP4B	Z	9.475	63
111	MP4B	Mx	-.003	63

Member Point Loads (BLC 21 : Antenna Wi (180 Deg))

	Member Label	Direction	Magnitude[lb,k-ft]	Location[in,%]
1	MP3A	X	0	21
2	MP3A	Z	9.4	21
3	MP3A	Mx	0	21
4	MP3A	X	0	45
5	MP3A	Z	9.4	45
6	MP3A	Mx	0	45
7	MP3B	X	0	21
8	MP3B	Z	6.232	21
9	MP3B	Mx	-.002	21
10	MP3B	X	0	45
11	MP3B	Z	6.232	45
12	MP3B	Mx	-.002	45
13	MP3C	X	0	21
14	MP3C	Z	5.351	21
15	MP3C	Mx	.002	21
16	MP3C	X	0	45
17	MP3C	Z	5.351	45
18	MP3C	Mx	.002	45
19	M101	X	0	18
20	M101	Z	15.393	18
21	M101	Mx	0	18
22	MP2A	X	0	24
23	MP2A	Z	7.919	24
24	MP2A	Mx	0	24
25	MP2B	X	0	24
26	MP2B	Z	6.503	24
27	MP2B	Mx	.002	24
28	MP2C	X	0	24
29	MP2C	Z	6.11	24
30	MP2C	Mx	-.003	24

Member Point Loads (BLC 21 : Antenna Wi (180 Deg)) (Continued)

	Member Label	Direction	Magnitude[lb,k-ft]	Location[in,%]
31	MP1A	X	0	24
32	MP1A	Z	7.919	24
33	MP1A	Mx	0	24
34	MP1B	X	0	24
35	MP1B	Z	5.965	24
36	MP1B	Mx	.002	24
37	MP1C	X	0	24
38	MP1C	Z	5.422	24
39	MP1C	Mx	-.002	24
40	MP1C	X	0	3
41	MP1C	Z	14.836	3
42	MP1C	Mx	.006	3
43	MP1C	X	0	63
44	MP1C	Z	14.836	63
45	MP1C	Mx	.006	63
46	MP4C	X	0	3
47	MP4C	Z	14.836	3
48	MP4C	Mx	.006	3
49	MP4C	X	0	63
50	MP4C	Z	14.836	63
51	MP4C	Mx	.006	63
52	MP2A	X	0	9
53	MP2A	Z	15.934	9
54	MP2A	Mx	.009	9
55	MP2A	X	0	57
56	MP2A	Z	15.934	57
57	MP2A	Mx	.009	57
58	MP2B	X	0	9
59	MP2B	Z	13.03	9
60	MP2B	Mx	-.01	9
61	MP2B	X	0	57
62	MP2B	Z	13.03	57
63	MP2B	Mx	-.01	57
64	MP2C	X	0	9
65	MP2C	Z	12.222	9
66	MP2C	Mx	.002	9
67	MP2C	X	0	57
68	MP2C	Z	12.222	57
69	MP2C	Mx	.002	57
70	MP2A	X	0	9
71	MP2A	Z	15.934	9
72	MP2A	Mx	-.009	9
73	MP2A	X	0	57
74	MP2A	Z	15.934	57
75	MP2A	Mx	-.009	57
76	MP2B	X	0	9
77	MP2B	Z	13.03	9
78	MP2B	Mx	-.000105	9
79	MP2B	X	0	57
80	MP2B	Z	13.03	57
81	MP2B	Mx	-.000105	57
82	MP2C	X	0	9

Member Point Loads (BLC 21 : Antenna Wi (180 Deg)) (Continued)

	Member Label	Direction	Magnitude[lb,k-ft]	Location[in,%]
83	MP2C	Z	12.222	9
84	MP2C	Mx	.009	9
85	MP2C	X	0	57
86	MP2C	Z	12.222	57
87	MP2C	Mx	.009	57
88	MP1A	X	0	3
89	MP1A	Z	8.993	3
90	MP1A	Mx	0	3
91	MP1A	X	0	63
92	MP1A	Z	8.993	63
93	MP1A	Mx	0	63
94	MP1B	X	0	3
95	MP1B	Z	14.836	3
96	MP1B	Mx	-.006	3
97	MP1B	X	0	63
98	MP1B	Z	14.836	63
99	MP1B	Mx	-.006	63
100	MP4A	X	0	3
101	MP4A	Z	8.993	3
102	MP4A	Mx	0	3
103	MP4A	X	0	63
104	MP4A	Z	8.993	63
105	MP4A	Mx	0	63
106	MP4B	X	0	3
107	MP4B	Z	14.836	3
108	MP4B	Mx	-.006	3
109	MP4B	X	0	63
110	MP4B	Z	14.836	63
111	MP4B	Mx	-.006	63

Member Point Loads (BLC 22 : Antenna Wi (210 Deg))

	Member Label	Direction	Magnitude[lb,k-ft]	Location[in,%]
1	MP3A	X	-4.025	21
2	MP3A	Z	6.972	21
3	MP3A	Mx	.002	21
4	MP3A	X	-4.025	45
5	MP3A	Z	6.972	45
6	MP3A	Mx	.002	45
7	MP3B	X	-2.082	21
8	MP3B	Z	3.606	21
9	MP3B	Mx	-.002	21
10	MP3B	X	-2.082	45
11	MP3B	Z	3.606	45
12	MP3B	Mx	-.002	45
13	MP3C	X	-4.025	21
14	MP3C	Z	6.972	21
15	MP3C	Mx	.002	21
16	MP3C	X	-4.025	45
17	MP3C	Z	6.972	45
18	MP3C	Mx	.002	45
19	M101	X	-6.808	18

Member Point Loads (BLC 22 : Antenna Wi (210 Deg)) (Continued)

	Member Label	Direction	Magnitude[lb,k-ft]	Location[in,%]
20	M101	Z	11.793	18
21	M101	Mx	0	18
22	MP2A	X	-3.658	24
23	MP2A	Z	6.336	24
24	MP2A	Mx	-.002	24
25	MP2B	X	-2.79	24
26	MP2B	Z	4.832	24
27	MP2B	Mx	.003	24
28	MP2C	X	-3.658	24
29	MP2C	Z	6.336	24
30	MP2C	Mx	-.002	24
31	MP1A	X	-3.543	24
32	MP1A	Z	6.137	24
33	MP1A	Mx	-.002	24
34	MP1B	X	-2.345	24
35	MP1B	Z	4.062	24
36	MP1B	Mx	.002	24
37	MP1C	X	-3.543	24
38	MP1C	Z	6.137	24
39	MP1C	Mx	-.002	24
40	MP1C	X	-5.47	3
41	MP1C	Z	9.475	3
42	MP1C	Mx	.003	3
43	MP1C	X	-5.47	63
44	MP1C	Z	9.475	63
45	MP1C	Mx	.003	63
46	MP4C	X	-5.47	3
47	MP4C	Z	9.475	3
48	MP4C	Mx	.003	3
49	MP4C	X	-5.47	63
50	MP4C	Z	9.475	63
51	MP4C	Mx	.003	63
52	MP2A	X	-7.348	9
53	MP2A	Z	12.727	9
54	MP2A	Mx	.011	9
55	MP2A	X	-7.348	57
56	MP2A	Z	12.727	57
57	MP2A	Mx	.011	57
58	MP2B	X	-5.567	9
59	MP2B	Z	9.643	9
60	MP2B	Mx	-.007	9
61	MP2B	X	-5.567	57
62	MP2B	Z	9.643	57
63	MP2B	Mx	-.007	57
64	MP2C	X	-7.348	9
65	MP2C	Z	12.727	9
66	MP2C	Mx	-.004	9
67	MP2C	X	-7.348	57
68	MP2C	Z	12.727	57
69	MP2C	Mx	-.004	57
70	MP2A	X	-7.348	9
71	MP2A	Z	12.727	9

Member Point Loads (BLC 22 : Antenna Wi (210 Deg)) (Continued)

	Member Label	Direction	Magnitude[lb,k-ft]	Location[in,%]
72	MP2A	Mx	-.004	9
73	MP2A	X	-7.348	57
74	MP2A	Z	12.727	57
75	MP2A	Mx	-.004	57
76	MP2B	X	-5.567	9
77	MP2B	Z	9.643	9
78	MP2B	Mx	-.004	9
79	MP2B	X	-5.567	57
80	MP2B	Z	9.643	57
81	MP2B	Mx	-.004	57
82	MP2C	X	-7.348	9
83	MP2C	Z	12.727	9
84	MP2C	Mx	.011	9
85	MP2C	X	-7.348	57
86	MP2C	Z	12.727	57
87	MP2C	Mx	.011	57
88	MP1A	X	-5.47	3
89	MP1A	Z	9.475	3
90	MP1A	Mx	.003	3
91	MP1A	X	-5.47	63
92	MP1A	Z	9.475	63
93	MP1A	Mx	.003	63
94	MP1B	X	-8.392	3
95	MP1B	Z	14.535	3
96	MP1B	Mx	-.008	3
97	MP1B	X	-8.392	63
98	MP1B	Z	14.535	63
99	MP1B	Mx	-.008	63
100	MP4A	X	-5.47	3
101	MP4A	Z	9.475	3
102	MP4A	Mx	.003	3
103	MP4A	X	-5.47	63
104	MP4A	Z	9.475	63
105	MP4A	Mx	.003	63
106	MP4B	X	-8.392	3
107	MP4B	Z	14.535	3
108	MP4B	Mx	-.008	3
109	MP4B	X	-8.392	63
110	MP4B	Z	14.535	63
111	MP4B	Mx	-.008	63

Member Point Loads (BLC 23 : Antenna Wi (240 Deg))

	Member Label	Direction	Magnitude[lb,k-ft]	Location[in,%]
1	MP3A	X	-4.634	21
2	MP3A	Z	2.675	21
3	MP3A	Mx	.002	21
4	MP3A	X	-4.634	45
5	MP3A	Z	2.675	45
6	MP3A	Mx	.002	45
7	MP3B	X	-4.012	21
8	MP3B	Z	2.316	21

Member Point Loads (BLC 23 : Antenna Wi (240 Deg)) (Continued)

	Member Label	Direction	Magnitude[lb,k-ft]	Location[in,%]
9	MP3B	Mx	-.002	21
10	MP3B	X	-4.012	45
11	MP3B	Z	2.316	45
12	MP3B	Mx	-.002	45
13	MP3C	X	-8.141	21
14	MP3C	Z	4.7	21
15	MP3C	Mx	0	21
16	MP3C	X	-8.141	45
17	MP3C	Z	4.7	45
18	MP3C	Mx	0	45
19	M101	X	-11.024	18
20	M101	Z	6.364	18
21	M101	Mx	0	18
22	MP2A	X	-5.291	24
23	MP2A	Z	3.055	24
24	MP2A	Mx	-.003	24
25	MP2B	X	-5.013	24
26	MP2B	Z	2.894	24
27	MP2B	Mx	.003	24
28	MP2C	X	-6.858	24
29	MP2C	Z	3.959	24
30	MP2C	Mx	0	24
31	MP1A	X	-4.696	24
32	MP1A	Z	2.711	24
33	MP1A	Mx	-.002	24
34	MP1B	X	-4.312	24
35	MP1B	Z	2.49	24
36	MP1B	Mx	.002	24
37	MP1C	X	-6.858	24
38	MP1C	Z	3.959	24
39	MP1C	Mx	0	24
40	MP1C	X	-7.788	3
41	MP1C	Z	4.497	3
42	MP1C	Mx	0	3
43	MP1C	X	-7.788	63
44	MP1C	Z	4.497	63
45	MP1C	Mx	0	63
46	MP4C	X	-7.788	3
47	MP4C	Z	4.497	3
48	MP4C	Mx	0	3
49	MP4C	X	-7.788	63
50	MP4C	Z	4.497	63
51	MP4C	Mx	0	63
52	MP2A	X	-10.585	9
53	MP2A	Z	6.111	9
54	MP2A	Mx	.009	9
55	MP2A	X	-10.585	57
56	MP2A	Z	6.111	57
57	MP2A	Mx	.009	57
58	MP2B	X	-10.015	9
59	MP2B	Z	5.782	9
60	MP2B	Mx	-.003	9

Member Point Loads (BLC 23 : Antenna Wi (240 Deg)) (Continued)

	Member Label	Direction	Magnitude[lb,k-ft]	Location[in,%]
61	MP2B	X	-10.015	57
62	MP2B	Z	5.782	57
63	MP2B	Mx	-.003	57
64	MP2C	X	-13.799	9
65	MP2C	Z	7.967	9
66	MP2C	Mx	-.009	9
67	MP2C	X	-13.799	57
68	MP2C	Z	7.967	57
69	MP2C	Mx	-.009	57
70	MP2A	X	-10.585	9
71	MP2A	Z	6.111	9
72	MP2A	Mx	.002	9
73	MP2A	X	-10.585	57
74	MP2A	Z	6.111	57
75	MP2A	Mx	.002	57
76	MP2B	X	-10.015	9
77	MP2B	Z	5.782	9
78	MP2B	Mx	-.008	9
79	MP2B	X	-10.015	57
80	MP2B	Z	5.782	57
81	MP2B	Mx	-.008	57
82	MP2C	X	-13.799	9
83	MP2C	Z	7.967	9
84	MP2C	Mx	.009	9
85	MP2C	X	-13.799	57
86	MP2C	Z	7.967	57
87	MP2C	Mx	.009	57
88	MP1A	X	-12.848	3
89	MP1A	Z	7.418	3
90	MP1A	Mx	.006	3
91	MP1A	X	-12.848	63
92	MP1A	Z	7.418	63
93	MP1A	Mx	.006	63
94	MP1B	X	-12.848	3
95	MP1B	Z	7.418	3
96	MP1B	Mx	-.006	3
97	MP1B	X	-12.848	63
98	MP1B	Z	7.418	63
99	MP1B	Mx	-.006	63
100	MP4A	X	-12.848	3
101	MP4A	Z	7.418	3
102	MP4A	Mx	.006	3
103	MP4A	X	-12.848	63
104	MP4A	Z	7.418	63
105	MP4A	Mx	.006	63
106	MP4B	X	-12.848	3
107	MP4B	Z	7.418	3
108	MP4B	Mx	-.006	3
109	MP4B	X	-12.848	63
110	MP4B	Z	7.418	63
111	MP4B	Mx	-.006	63

Member Point Loads (BLC 24 : Antenna Wi (270 Deg))

	Member Label	Direction	Magnitude[lb,k-ft]	Location[in,%]
1	MP3A	X	-4.001	21
2	MP3A	Z	0	21
3	MP3A	Mx	.002	21
4	MP3A	X	-4.001	45
5	MP3A	Z	0	45
6	MP3A	Mx	.002	45
7	MP3B	X	-7.169	21
8	MP3B	Z	0	21
9	MP3B	Mx	-.002	21
10	MP3B	X	-7.169	45
11	MP3B	Z	0	45
12	MP3B	Mx	-.002	45
13	MP3C	X	-8.05	21
14	MP3C	Z	0	21
15	MP3C	Mx	-.002	21
16	MP3C	X	-8.05	45
17	MP3C	Z	0	45
18	MP3C	Mx	-.002	45
19	M101	X	-13.617	18
20	M101	Z	0	18
21	M101	Mx	0	18
22	MP2A	X	-5.506	24
23	MP2A	Z	0	24
24	MP2A	Mx	-.003	24
25	MP2B	X	-6.922	24
26	MP2B	Z	0	24
27	MP2B	Mx	.002	24
28	MP2C	X	-7.316	24
29	MP2C	Z	0	24
30	MP2C	Mx	.002	24
31	MP1A	X	-4.59	24
32	MP1A	Z	0	24
33	MP1A	Mx	-.002	24
34	MP1B	X	-6.543	24
35	MP1B	Z	0	24
36	MP1B	Mx	.002	24
37	MP1C	X	-7.087	24
38	MP1C	Z	0	24
39	MP1C	Mx	.002	24
40	MP1C	X	-10.941	3
41	MP1C	Z	0	3
42	MP1C	Mx	-.003	3
43	MP1C	X	-10.941	63
44	MP1C	Z	0	63
45	MP1C	Mx	-.003	63
46	MP4C	X	-10.941	3
47	MP4C	Z	0	3
48	MP4C	Mx	-.003	3
49	MP4C	X	-10.941	63
50	MP4C	Z	0	63
51	MP4C	Mx	-.003	63
52	MP2A	X	-10.985	9

Member Point Loads (BLC 24 : Antenna Wi (270 Deg)) (Continued)

	Member Label	Direction	Magnitude[lb,k-ft]	Location[in,%]
53	MP2A	Z	0	9
54	MP2A	Mx	.005	9
55	MP2A	X	-10.985	57
56	MP2A	Z	0	57
57	MP2A	Mx	.005	57
58	MP2B	X	-13.889	9
59	MP2B	Z	0	9
60	MP2B	Mx	.002	9
61	MP2B	X	-13.889	57
62	MP2B	Z	0	57
63	MP2B	Mx	.002	57
64	MP2C	X	-14.696	9
65	MP2C	Z	0	9
66	MP2C	Mx	-.011	9
67	MP2C	X	-14.696	57
68	MP2C	Z	0	57
69	MP2C	Mx	-.011	57
70	MP2A	X	-10.985	9
71	MP2A	Z	0	9
72	MP2A	Mx	.005	9
73	MP2A	X	-10.985	57
74	MP2A	Z	0	57
75	MP2A	Mx	.005	57
76	MP2B	X	-13.889	9
77	MP2B	Z	0	9
78	MP2B	Mx	-.011	9
79	MP2B	X	-13.889	57
80	MP2B	Z	0	57
81	MP2B	Mx	-.011	57
82	MP2C	X	-14.696	9
83	MP2C	Z	0	9
84	MP2C	Mx	.004	9
85	MP2C	X	-14.696	57
86	MP2C	Z	0	57
87	MP2C	Mx	.004	57
88	MP1A	X	-16.784	3
89	MP1A	Z	0	3
90	MP1A	Mx	.008	3
91	MP1A	X	-16.784	63
92	MP1A	Z	0	63
93	MP1A	Mx	.008	63
94	MP1B	X	-10.941	3
95	MP1B	Z	0	3
96	MP1B	Mx	-.003	3
97	MP1B	X	-10.941	63
98	MP1B	Z	0	63
99	MP1B	Mx	-.003	63
100	MP4A	X	-16.784	3
101	MP4A	Z	0	3
102	MP4A	Mx	.008	3
103	MP4A	X	-16.784	63
104	MP4A	Z	0	63

Member Point Loads (BLC 24 : Antenna Wi (270 Deg)) (Continued)

	Member Label	Direction	Magnitude[lb,k-ft]	Location[in,%]
105	MP4A	Mx	.008	63
106	MP4B	X	-10.941	3
107	MP4B	Z	0	3
108	MP4B	Mx	-.003	3
109	MP4B	X	-10.941	63
110	MP4B	Z	0	63
111	MP4B	Mx	-.003	63

Member Point Loads (BLC 25 : Antenna Wi (300 Deg))

	Member Label	Direction	Magnitude[lb,k-ft]	Location[in,%]
1	MP3A	X	-4.634	21
2	MP3A	Z	-2.675	21
3	MP3A	Mx	.002	21
4	MP3A	X	-4.634	45
5	MP3A	Z	-2.675	45
6	MP3A	Mx	.002	45
7	MP3B	X	-8	21
8	MP3B	Z	-4.619	21
9	MP3B	Mx	-.000802	21
10	MP3B	X	-8	45
11	MP3B	Z	-4.619	45
12	MP3B	Mx	-.000802	45
13	MP3C	X	-4.634	21
14	MP3C	Z	-2.675	21
15	MP3C	Mx	-.002	21
16	MP3C	X	-4.634	45
17	MP3C	Z	-2.675	45
18	MP3C	Mx	-.002	45
19	M101	X	-13.331	18
20	M101	Z	-7.696	18
21	M101	Mx	0	18
22	MP2A	X	-5.291	24
23	MP2A	Z	-3.055	24
24	MP2A	Mx	-.003	24
25	MP2B	X	-6.795	24
26	MP2B	Z	-3.923	24
27	MP2B	Mx	.000681	24
28	MP2C	X	-5.291	24
29	MP2C	Z	-3.055	24
30	MP2C	Mx	.003	24
31	MP1A	X	-4.696	24
32	MP1A	Z	-2.711	24
33	MP1A	Mx	-.002	24
34	MP1B	X	-6.771	24
35	MP1B	Z	-3.909	24
36	MP1B	Mx	.000679	24
37	MP1C	X	-4.696	24
38	MP1C	Z	-2.711	24
39	MP1C	Mx	.002	24
40	MP1C	X	-12.848	3
41	MP1C	Z	-7.418	3

Member Point Loads (BLC 25 : Antenna Wi (300 Deg)) (Continued)

	Member Label	Direction	Magnitude[lb,k-ft]	Location[in,%]
42	MP1C	Mx	-.006	3
43	MP1C	X	-12.848	63
44	MP1C	Z	-7.418	63
45	MP1C	Mx	-.006	63
46	MP4C	X	-12.848	3
47	MP4C	Z	-7.418	3
48	MP4C	Mx	-.006	3
49	MP4C	X	-12.848	63
50	MP4C	Z	-7.418	63
51	MP4C	Mx	-.006	63
52	MP2A	X	-10.585	9
53	MP2A	Z	-6.111	9
54	MP2A	Mx	.002	9
55	MP2A	X	-10.585	57
56	MP2A	Z	-6.111	57
57	MP2A	Mx	.002	57
58	MP2B	X	-13.67	9
59	MP2B	Z	-7.892	9
60	MP2B	Mx	.008	9
61	MP2B	X	-13.67	57
62	MP2B	Z	-7.892	57
63	MP2B	Mx	.008	57
64	MP2C	X	-10.585	9
65	MP2C	Z	-6.111	9
66	MP2C	Mx	-.009	9
67	MP2C	X	-10.585	57
68	MP2C	Z	-6.111	57
69	MP2C	Mx	-.009	57
70	MP2A	X	-10.585	9
71	MP2A	Z	-6.111	9
72	MP2A	Mx	.009	9
73	MP2A	X	-10.585	57
74	MP2A	Z	-6.111	57
75	MP2A	Mx	.009	57
76	MP2B	X	-13.67	9
77	MP2B	Z	-7.892	9
78	MP2B	Mx	-.01	9
79	MP2B	X	-13.67	57
80	MP2B	Z	-7.892	57
81	MP2B	Mx	-.01	57
82	MP2C	X	-10.585	9
83	MP2C	Z	-6.111	9
84	MP2C	Mx	-.002	9
85	MP2C	X	-10.585	57
86	MP2C	Z	-6.111	57
87	MP2C	Mx	-.002	57
88	MP1A	X	-12.848	3
89	MP1A	Z	-7.418	3
90	MP1A	Mx	.006	3
91	MP1A	X	-12.848	63
92	MP1A	Z	-7.418	63
93	MP1A	Mx	.006	63

Member Point Loads (BLC 25 : Antenna Wi (300 Deg)) (Continued)

	Member Label	Direction	Magnitude[lb,k-ft]	Location[in,%]
94	MP1B	X	-7.788	3
95	MP1B	Z	-4.497	3
96	MP1B	Mx	0	3
97	MP1B	X	-7.788	63
98	MP1B	Z	-4.497	63
99	MP1B	Mx	0	63
100	MP4A	X	-12.848	3
101	MP4A	Z	-7.418	3
102	MP4A	Mx	.006	3
103	MP4A	X	-12.848	63
104	MP4A	Z	-7.418	63
105	MP4A	Mx	.006	63
106	MP4B	X	-7.788	3
107	MP4B	Z	-4.497	3
108	MP4B	Mx	0	3
109	MP4B	X	-7.788	63
110	MP4B	Z	-4.497	63
111	MP4B	Mx	0	63

Member Point Loads (BLC 26 : Antenna Wi (330 Deg))

	Member Label	Direction	Magnitude[lb,k-ft]	Location[in,%]
1	MP3A	X	-4.025	21
2	MP3A	Z	-6.972	21
3	MP3A	Mx	.002	21
4	MP3A	X	-4.025	45
5	MP3A	Z	-6.972	45
6	MP3A	Mx	.002	45
7	MP3B	X	-4.384	21
8	MP3B	Z	-7.594	21
9	MP3B	Mx	.002	21
10	MP3B	X	-4.384	45
11	MP3B	Z	-7.594	45
12	MP3B	Mx	.002	45
13	MP3C	X	-2.001	21
14	MP3C	Z	-3.465	21
15	MP3C	Mx	-.002	21
16	MP3C	X	-2.001	45
17	MP3C	Z	-3.465	45
18	MP3C	Mx	-.002	45
19	M101	X	-8.14	18
20	M101	Z	-14.1	18
21	M101	Mx	0	18
22	MP2A	X	-3.658	24
23	MP2A	Z	-6.336	24
24	MP2A	Mx	-.002	24
25	MP2B	X	-3.818	24
26	MP2B	Z	-6.614	24
27	MP2B	Mx	-.001	24
28	MP2C	X	-2.753	24
29	MP2C	Z	-4.769	24
30	MP2C	Mx	.003	24

Member Point Loads (BLC 26 : Antenna Wi (330 Deg)) (Continued)

	Member Label	Direction	Magnitude[lb,k-ft]	Location[in,%]
31	MP1A	X	-3.543	24
32	MP1A	Z	-6.137	24
33	MP1A	Mx	-.002	24
34	MP1B	X	-3.765	24
35	MP1B	Z	-6.521	24
36	MP1B	Mx	-.001	24
37	MP1C	X	-2.295	24
38	MP1C	Z	-3.975	24
39	MP1C	Mx	.002	24
40	MP1C	X	-8.392	3
41	MP1C	Z	-14.535	3
42	MP1C	Mx	-.008	3
43	MP1C	X	-8.392	63
44	MP1C	Z	-14.535	63
45	MP1C	Mx	-.008	63
46	MP4C	X	-8.392	3
47	MP4C	Z	-14.535	3
48	MP4C	Mx	-.008	3
49	MP4C	X	-8.392	63
50	MP4C	Z	-14.535	63
51	MP4C	Mx	-.008	63
52	MP2A	X	-7.348	9
53	MP2A	Z	-12.727	9
54	MP2A	Mx	-.004	9
55	MP2A	X	-7.348	57
56	MP2A	Z	-12.727	57
57	MP2A	Mx	-.004	57
58	MP2B	X	-7.677	9
59	MP2B	Z	-13.298	9
60	MP2B	Mx	.011	9
61	MP2B	X	-7.677	57
62	MP2B	Z	-13.298	57
63	MP2B	Mx	.011	57
64	MP2C	X	-5.493	9
65	MP2C	Z	-9.513	9
66	MP2C	Mx	-.005	9
67	MP2C	X	-5.493	57
68	MP2C	Z	-9.513	57
69	MP2C	Mx	-.005	57
70	MP2A	X	-7.348	9
71	MP2A	Z	-12.727	9
72	MP2A	Mx	.011	9
73	MP2A	X	-7.348	57
74	MP2A	Z	-12.727	57
75	MP2A	Mx	.011	57
76	MP2B	X	-7.677	9
77	MP2B	Z	-13.298	9
78	MP2B	Mx	-.006	9
79	MP2B	X	-7.677	57
80	MP2B	Z	-13.298	57
81	MP2B	Mx	-.006	57
82	MP2C	X	-5.493	9

Member Point Loads (BLC 26 : Antenna Wi (330 Deg)) (Continued)

	Member Label	Direction	Magnitude[lb,k-ft]	Location[in,%]
83	MP2C	Z	-9.513	9
84	MP2C	Mx	-.005	9
85	MP2C	X	-5.493	57
86	MP2C	Z	-9.513	57
87	MP2C	Mx	-.005	57
88	MP1A	X	-5.47	3
89	MP1A	Z	-9.475	3
90	MP1A	Mx	.003	3
91	MP1A	X	-5.47	63
92	MP1A	Z	-9.475	63
93	MP1A	Mx	.003	63
94	MP1B	X	-5.47	3
95	MP1B	Z	-9.475	3
96	MP1B	Mx	.003	3
97	MP1B	X	-5.47	63
98	MP1B	Z	-9.475	63
99	MP1B	Mx	.003	63
100	MP4A	X	-5.47	3
101	MP4A	Z	-9.475	3
102	MP4A	Mx	.003	3
103	MP4A	X	-5.47	63
104	MP4A	Z	-9.475	63
105	MP4A	Mx	.003	63
106	MP4B	X	-5.47	3
107	MP4B	Z	-9.475	3
108	MP4B	Mx	.003	3
109	MP4B	X	-5.47	63
110	MP4B	Z	-9.475	63
111	MP4B	Mx	.003	63

Member Point Loads (BLC 27 : Antenna Wm (0 Deg))

	Member Label	Direction	Magnitude[lb,k-ft]	Location[in,%]
1	MP3A	X	0	21
2	MP3A	Z	-4.685	21
3	MP3A	Mx	0	21
4	MP3A	X	0	45
5	MP3A	Z	-4.685	45
6	MP3A	Mx	0	45
7	MP3B	X	0	21
8	MP3B	Z	-3.012	21
9	MP3B	Mx	.001	21
10	MP3B	X	0	45
11	MP3B	Z	-3.012	45
12	MP3B	Mx	.001	45
13	MP3C	X	0	21
14	MP3C	Z	-2.547	21
15	MP3C	Mx	-.001	21
16	MP3C	X	0	45
17	MP3C	Z	-2.547	45
18	MP3C	Mx	-.001	45
19	M101	X	0	18

Member Point Loads (BLC 27 : Antenna Wm (0 Deg)) (Continued)

	Member Label	Direction	Magnitude[lb,k-ft]	Location[in,%]
20	M101	Z	-7.615	18
21	M101	Mx	0	18
22	MP2A	X	0	24
23	MP2A	Z	-3.728	24
24	MP2A	Mx	0	24
25	MP2B	X	0	24
26	MP2B	Z	-3.003	24
27	MP2B	Mx	-.001	24
28	MP2C	X	0	24
29	MP2C	Z	-2.801	24
30	MP2C	Mx	.001	24
31	MP1A	X	0	24
32	MP1A	Z	-3.728	24
33	MP1A	Mx	0	24
34	MP1B	X	0	24
35	MP1B	Z	-2.725	24
36	MP1B	Mx	-.001	24
37	MP1C	X	0	24
38	MP1C	Z	-2.446	24
39	MP1C	Mx	.001	24
40	MP1C	X	0	3
41	MP1C	Z	-7.53	3
42	MP1C	Mx	-.003	3
43	MP1C	X	0	63
44	MP1C	Z	-7.53	63
45	MP1C	Mx	-.003	63
46	MP4C	X	0	3
47	MP4C	Z	-7.53	3
48	MP4C	Mx	-.003	3
49	MP4C	X	0	63
50	MP4C	Z	-7.53	63
51	MP4C	Mx	-.003	63
52	MP2A	X	0	9
53	MP2A	Z	-8.134	9
54	MP2A	Mx	-.005	9
55	MP2A	X	0	57
56	MP2A	Z	-8.134	57
57	MP2A	Mx	-.005	57
58	MP2B	X	0	9
59	MP2B	Z	-6.518	9
60	MP2B	Mx	.005	9
61	MP2B	X	0	57
62	MP2B	Z	-6.518	57
63	MP2B	Mx	.005	57
64	MP2C	X	0	9
65	MP2C	Z	-6.068	9
66	MP2C	Mx	-.000858	9
67	MP2C	X	0	57
68	MP2C	Z	-6.068	57
69	MP2C	Mx	-.000858	57
70	MP2A	X	0	9
71	MP2A	Z	-8.134	9

Member Point Loads (BLC 27 : Antenna Wm (0 Deg)) (Continued)

	Member Label	Direction	Magnitude[lb,k-ft]	Location[in,%]
72	MP2A	Mx	.005	9
73	MP2A	X	0	57
74	MP2A	Z	-8.134	57
75	MP2A	Mx	.005	57
76	MP2B	X	0	9
77	MP2B	Z	-6.518	9
78	MP2B	Mx	5.3e-5	9
79	MP2B	X	0	57
80	MP2B	Z	-6.518	57
81	MP2B	Mx	5.3e-5	57
82	MP2C	X	0	9
83	MP2C	Z	-6.068	9
84	MP2C	Mx	-.004	9
85	MP2C	X	0	57
86	MP2C	Z	-6.068	57
87	MP2C	Mx	-.004	57
88	MP1A	X	0	3
89	MP1A	Z	-4.316	3
90	MP1A	Mx	0	3
91	MP1A	X	0	63
92	MP1A	Z	-4.316	63
93	MP1A	Mx	0	63
94	MP1B	X	0	3
95	MP1B	Z	-7.53	3
96	MP1B	Mx	.003	3
97	MP1B	X	0	63
98	MP1B	Z	-7.53	63
99	MP1B	Mx	.003	63
100	MP4A	X	0	3
101	MP4A	Z	-4.316	3
102	MP4A	Mx	0	3
103	MP4A	X	0	63
104	MP4A	Z	-4.316	63
105	MP4A	Mx	0	63
106	MP4B	X	0	3
107	MP4B	Z	-7.53	3
108	MP4B	Mx	.003	3
109	MP4B	X	0	63
110	MP4B	Z	-7.53	63
111	MP4B	Mx	.003	63

Member Point Loads (BLC 28 : Antenna Wm (30 Deg))

	Member Label	Direction	Magnitude[lb,k-ft]	Location[in,%]
1	MP3A	X	1.986	21
2	MP3A	Z	-3.44	21
3	MP3A	Mx	-.000993	21
4	MP3A	X	1.986	45
5	MP3A	Z	-3.44	45
6	MP3A	Mx	-.000993	45
7	MP3B	X	.96	21
8	MP3B	Z	-1.663	21

Member Point Loads (BLC 28 : Antenna Wm (30 Deg)) (Continued)

	Member Label	Direction	Magnitude[lb,k-ft]	Location[in,%]
9	MP3B	Mx	.000946	21
10	MP3B	X	.96	45
11	MP3B	Z	-1.663	45
12	MP3B	Mx	.000946	45
13	MP3C	X	1.986	21
14	MP3C	Z	-3.44	21
15	MP3C	Mx	-.000993	21
16	MP3C	X	1.986	45
17	MP3C	Z	-3.44	45
18	MP3C	Mx	-.000993	45
19	M101	X	3.328	18
20	M101	Z	-5.764	18
21	M101	Mx	0	18
22	MP2A	X	1.71	24
23	MP2A	Z	-2.961	24
24	MP2A	Mx	.000855	24
25	MP2B	X	1.265	24
26	MP2B	Z	-2.191	24
27	MP2B	Mx	-.001	24
28	MP2C	X	1.71	24
29	MP2C	Z	-2.961	24
30	MP2C	Mx	.000855	24
31	MP1A	X	1.65	24
32	MP1A	Z	-2.859	24
33	MP1A	Mx	.000825	24
34	MP1B	X	1.035	24
35	MP1B	Z	-1.793	24
36	MP1B	Mx	-.001	24
37	MP1C	X	1.65	24
38	MP1C	Z	-2.859	24
39	MP1C	Mx	.000825	24
40	MP1C	X	2.694	3
41	MP1C	Z	-4.666	3
42	MP1C	Mx	-.001	3
43	MP1C	X	2.694	63
44	MP1C	Z	-4.666	63
45	MP1C	Mx	-.001	63
46	MP4C	X	2.694	3
47	MP4C	Z	-4.666	3
48	MP4C	Mx	-.001	3
49	MP4C	X	2.694	63
50	MP4C	Z	-4.666	63
51	MP4C	Mx	-.001	63
52	MP2A	X	3.723	9
53	MP2A	Z	-6.448	9
54	MP2A	Mx	-.006	9
55	MP2A	X	3.723	57
56	MP2A	Z	-6.448	57
57	MP2A	Mx	-.006	57
58	MP2B	X	2.731	9
59	MP2B	Z	-4.731	9
60	MP2B	Mx	.003	9

Member Point Loads (BLC 28 : Antenna Wm (30 Deg)) (Continued)

	Member Label	Direction	Magnitude[lb,k-ft]	Location[in,%]
61	MP2B	X	2.731	57
62	MP2B	Z	-4.731	57
63	MP2B	Mx	.003	57
64	MP2C	X	3.723	9
65	MP2C	Z	-6.448	9
66	MP2C	Mx	.002	9
67	MP2C	X	3.723	57
68	MP2C	Z	-6.448	57
69	MP2C	Mx	.002	57
70	MP2A	X	3.723	9
71	MP2A	Z	-6.448	9
72	MP2A	Mx	.002	9
73	MP2A	X	3.723	57
74	MP2A	Z	-6.448	57
75	MP2A	Mx	.002	57
76	MP2B	X	2.731	9
77	MP2B	Z	-4.731	9
78	MP2B	Mx	.002	9
79	MP2B	X	2.731	57
80	MP2B	Z	-4.731	57
81	MP2B	Mx	.002	57
82	MP2C	X	3.723	9
83	MP2C	Z	-6.448	9
84	MP2C	Mx	-.006	9
85	MP2C	X	3.723	57
86	MP2C	Z	-6.448	57
87	MP2C	Mx	-.006	57
88	MP1A	X	2.694	3
89	MP1A	Z	-4.666	3
90	MP1A	Mx	-.001	3
91	MP1A	X	2.694	63
92	MP1A	Z	-4.666	63
93	MP1A	Mx	-.001	63
94	MP1B	X	4.301	3
95	MP1B	Z	-7.449	3
96	MP1B	Mx	.004	3
97	MP1B	X	4.301	63
98	MP1B	Z	-7.449	63
99	MP1B	Mx	.004	63
100	MP4A	X	2.694	3
101	MP4A	Z	-4.666	3
102	MP4A	Mx	-.001	3
103	MP4A	X	2.694	63
104	MP4A	Z	-4.666	63
105	MP4A	Mx	-.001	63
106	MP4B	X	4.301	3
107	MP4B	Z	-7.449	3
108	MP4B	Mx	.004	3
109	MP4B	X	4.301	63
110	MP4B	Z	-7.449	63
111	MP4B	Mx	.004	63

Member Point Loads (BLC 29 : Antenna Wm (60 Deg))

	Member Label	Direction	Magnitude[lb,k-ft]	Location[in,%]
1	MP3A	X	2.206	21
2	MP3A	Z	-1.273	21
3	MP3A	Mx	-.001	21
4	MP3A	X	2.206	45
5	MP3A	Z	-1.273	45
6	MP3A	Mx	-.001	45
7	MP3B	X	1.877	21
8	MP3B	Z	-1.084	21
9	MP3B	Mx	.001	21
10	MP3B	X	1.877	45
11	MP3B	Z	-1.084	45
12	MP3B	Mx	.001	45
13	MP3C	X	4.057	21
14	MP3C	Z	-2.343	21
15	MP3C	Mx	0	21
16	MP3C	X	4.057	45
17	MP3C	Z	-2.343	45
18	MP3C	Mx	0	45
19	M101	X	5.348	18
20	M101	Z	-3.088	18
21	M101	Mx	0	18
22	MP2A	X	2.426	24
23	MP2A	Z	-1.401	24
24	MP2A	Mx	.001	24
25	MP2B	X	2.283	24
26	MP2B	Z	-1.318	24
27	MP2B	Mx	-.001	24
28	MP2C	X	3.229	24
29	MP2C	Z	-1.864	24
30	MP2C	Mx	0	24
31	MP1A	X	2.118	24
32	MP1A	Z	-1.223	24
33	MP1A	Mx	.001	24
34	MP1B	X	1.921	24
35	MP1B	Z	-1.109	24
36	MP1B	Mx	-.001	24
37	MP1C	X	3.229	24
38	MP1C	Z	-1.864	24
39	MP1C	Mx	0	24
40	MP1C	X	3.738	3
41	MP1C	Z	-2.158	3
42	MP1C	Mx	0	3
43	MP1C	X	3.738	63
44	MP1C	Z	-2.158	63
45	MP1C	Mx	0	63
46	MP4C	X	3.738	3
47	MP4C	Z	-2.158	3
48	MP4C	Mx	0	3
49	MP4C	X	3.738	63
50	MP4C	Z	-2.158	63
51	MP4C	Mx	0	63
52	MP2A	X	5.255	9

Member Point Loads (BLC 29 : Antenna Wm (60 Deg)) (Continued)

	Member Label	Direction	Magnitude[lb,k-ft]	Location[in,%]
53	MP2A	Z	-3.034	9
54	MP2A	Mx	-.004	9
55	MP2A	X	5.255	57
56	MP2A	Z	-3.034	57
57	MP2A	Mx	-.004	57
58	MP2B	X	4.938	9
59	MP2B	Z	-2.851	9
60	MP2B	Mx	.002	9
61	MP2B	X	4.938	57
62	MP2B	Z	-2.851	57
63	MP2B	Mx	.002	57
64	MP2C	X	7.045	9
65	MP2C	Z	-4.067	9
66	MP2C	Mx	.005	9
67	MP2C	X	7.045	57
68	MP2C	Z	-4.067	57
69	MP2C	Mx	.005	57
70	MP2A	X	5.255	9
71	MP2A	Z	-3.034	9
72	MP2A	Mx	-.000858	9
73	MP2A	X	5.255	57
74	MP2A	Z	-3.034	57
75	MP2A	Mx	-.000858	57
76	MP2B	X	4.938	9
77	MP2B	Z	-2.851	9
78	MP2B	Mx	.004	9
79	MP2B	X	4.938	57
80	MP2B	Z	-2.851	57
81	MP2B	Mx	.004	57
82	MP2C	X	7.045	9
83	MP2C	Z	-4.067	9
84	MP2C	Mx	-.005	9
85	MP2C	X	7.045	57
86	MP2C	Z	-4.067	57
87	MP2C	Mx	-.005	57
88	MP1A	X	6.521	3
89	MP1A	Z	-3.765	3
90	MP1A	Mx	-.003	3
91	MP1A	X	6.521	63
92	MP1A	Z	-3.765	63
93	MP1A	Mx	-.003	63
94	MP1B	X	6.521	3
95	MP1B	Z	-3.765	3
96	MP1B	Mx	.003	3
97	MP1B	X	6.521	63
98	MP1B	Z	-3.765	63
99	MP1B	Mx	.003	63
100	MP4A	X	6.521	3
101	MP4A	Z	-3.765	3
102	MP4A	Mx	-.003	3
103	MP4A	X	6.521	63
104	MP4A	Z	-3.765	63

Member Point Loads (BLC 29 : Antenna Wm (60 Deg)) (Continued)

	Member Label	Direction	Magnitude[lb,k-ft]	Location[in,%]
105	MP4A	Mx	-.003	63
106	MP4B	X	6.521	3
107	MP4B	Z	-3.765	3
108	MP4B	Mx	.003	3
109	MP4B	X	6.521	63
110	MP4B	Z	-3.765	63
111	MP4B	Mx	.003	63

Member Point Loads (BLC 30 : Antenna Wm (90 Deg))

	Member Label	Direction	Magnitude[lb,k-ft]	Location[in,%]
1	MP3A	X	1.834	21
2	MP3A	Z	0	21
3	MP3A	Mx	-.000917	21
4	MP3A	X	1.834	45
5	MP3A	Z	0	45
6	MP3A	Mx	-.000917	45
7	MP3B	X	3.507	21
8	MP3B	Z	0	21
9	MP3B	Mx	.001	21
10	MP3B	X	3.507	45
11	MP3B	Z	0	45
12	MP3B	Mx	.001	45
13	MP3C	X	3.972	21
14	MP3C	Z	0	21
15	MP3C	Mx	.000993	21
16	MP3C	X	3.972	45
17	MP3C	Z	0	45
18	MP3C	Mx	.000993	45
19	M101	X	6.655	18
20	M101	Z	0	18
21	M101	Mx	0	18
22	MP2A	X	2.492	24
23	MP2A	Z	0	24
24	MP2A	Mx	.001	24
25	MP2B	X	3.217	24
26	MP2B	Z	0	24
27	MP2B	Mx	-.001	24
28	MP2C	X	3.419	24
29	MP2C	Z	0	24
30	MP2C	Mx	-.000855	24
31	MP1A	X	2.019	24
32	MP1A	Z	0	24
33	MP1A	Mx	.001	24
34	MP1B	X	3.022	24
35	MP1B	Z	0	24
36	MP1B	Mx	-.000971	24
37	MP1C	X	3.301	24
38	MP1C	Z	0	24
39	MP1C	Mx	-.000825	24
40	MP1C	X	5.388	3
41	MP1C	Z	0	3

Member Point Loads (BLC 30 : Antenna Wm (90 Deg)) (Continued)

	Member Label	Direction	Magnitude[lb,k-ft]	Location[in,%]
42	MP1C	Mx	.001	3
43	MP1C	X	5.388	63
44	MP1C	Z	0	63
45	MP1C	Mx	.001	63
46	MP4C	X	5.388	3
47	MP4C	Z	0	3
48	MP4C	Mx	.001	3
49	MP4C	X	5.388	63
50	MP4C	Z	0	63
51	MP4C	Mx	.001	63
52	MP2A	X	5.379	9
53	MP2A	Z	0	9
54	MP2A	Mx	-.003	9
55	MP2A	X	5.379	57
56	MP2A	Z	0	57
57	MP2A	Mx	-.003	57
58	MP2B	X	6.996	9
59	MP2B	Z	0	9
60	MP2B	Mx	-.000878	9
61	MP2B	X	6.996	57
62	MP2B	Z	0	57
63	MP2B	Mx	-.000878	57
64	MP2C	X	7.446	9
65	MP2C	Z	0	9
66	MP2C	Mx	.006	9
67	MP2C	X	7.446	57
68	MP2C	Z	0	57
69	MP2C	Mx	.006	57
70	MP2A	X	5.379	9
71	MP2A	Z	0	9
72	MP2A	Mx	-.003	9
73	MP2A	X	5.379	57
74	MP2A	Z	0	57
75	MP2A	Mx	-.003	57
76	MP2B	X	6.996	9
77	MP2B	Z	0	9
78	MP2B	Mx	.005	9
79	MP2B	X	6.996	57
80	MP2B	Z	0	57
81	MP2B	Mx	.005	57
82	MP2C	X	7.446	9
83	MP2C	Z	0	9
84	MP2C	Mx	-.002	9
85	MP2C	X	7.446	57
86	MP2C	Z	0	57
87	MP2C	Mx	-.002	57
88	MP1A	X	8.601	3
89	MP1A	Z	0	3
90	MP1A	Mx	-.004	3
91	MP1A	X	8.601	63
92	MP1A	Z	0	63
93	MP1A	Mx	-.004	63

Member Point Loads (BLC 30 : Antenna Wm (90 Deg)) (Continued)

	Member Label	Direction	Magnitude[lb,k-ft]	Location[in,%]
94	MP1B	X	5.388	3
95	MP1B	Z	0	3
96	MP1B	Mx	.001	3
97	MP1B	X	5.388	63
98	MP1B	Z	0	63
99	MP1B	Mx	.001	63
100	MP4A	X	8.601	3
101	MP4A	Z	0	3
102	MP4A	Mx	-.004	3
103	MP4A	X	8.601	63
104	MP4A	Z	0	63
105	MP4A	Mx	-.004	63
106	MP4B	X	5.388	3
107	MP4B	Z	0	3
108	MP4B	Mx	.001	3
109	MP4B	X	5.388	63
110	MP4B	Z	0	63
111	MP4B	Mx	.001	63

Member Point Loads (BLC 31 : Antenna Wm (120 Deg))

	Member Label	Direction	Magnitude[lb,k-ft]	Location[in,%]
1	MP3A	X	2.206	21
2	MP3A	Z	1.273	21
3	MP3A	Mx	-.001	21
4	MP3A	X	2.206	45
5	MP3A	Z	1.273	45
6	MP3A	Mx	-.001	45
7	MP3B	X	3.983	21
8	MP3B	Z	2.3	21
9	MP3B	Mx	.000399	21
10	MP3B	X	3.983	45
11	MP3B	Z	2.3	45
12	MP3B	Mx	.000399	45
13	MP3C	X	2.206	21
14	MP3C	Z	1.273	21
15	MP3C	Mx	.001	21
16	MP3C	X	2.206	45
17	MP3C	Z	1.273	45
18	MP3C	Mx	.001	45
19	M101	X	6.595	18
20	M101	Z	3.807	18
21	M101	Mx	0	18
22	MP2A	X	2.426	24
23	MP2A	Z	1.401	24
24	MP2A	Mx	.001	24
25	MP2B	X	3.196	24
26	MP2B	Z	1.845	24
27	MP2B	Mx	-.00032	24
28	MP2C	X	2.426	24
29	MP2C	Z	1.401	24
30	MP2C	Mx	-.001	24

Member Point Loads (BLC 31 : Antenna Wm (120 Deg)) (Continued)

	Member Label	Direction	Magnitude[lb,k-ft]	Location[in,%]
31	MP1A	X	2.118	24
32	MP1A	Z	1.223	24
33	MP1A	Mx	.001	24
34	MP1B	X	3.184	24
35	MP1B	Z	1.838	24
36	MP1B	Mx	-.000319	24
37	MP1C	X	2.118	24
38	MP1C	Z	1.223	24
39	MP1C	Mx	-.001	24
40	MP1C	X	6.521	3
41	MP1C	Z	3.765	3
42	MP1C	Mx	.003	3
43	MP1C	X	6.521	63
44	MP1C	Z	3.765	63
45	MP1C	Mx	.003	63
46	MP4C	X	6.521	3
47	MP4C	Z	3.765	3
48	MP4C	Mx	.003	3
49	MP4C	X	6.521	63
50	MP4C	Z	3.765	63
51	MP4C	Mx	.003	63
52	MP2A	X	5.255	9
53	MP2A	Z	3.034	9
54	MP2A	Mx	-.000858	9
55	MP2A	X	5.255	57
56	MP2A	Z	3.034	57
57	MP2A	Mx	-.000858	57
58	MP2B	X	6.973	9
59	MP2B	Z	4.026	9
60	MP2B	Mx	-.004	9
61	MP2B	X	6.973	57
62	MP2B	Z	4.026	57
63	MP2B	Mx	-.004	57
64	MP2C	X	5.255	9
65	MP2C	Z	3.034	9
66	MP2C	Mx	.004	9
67	MP2C	X	5.255	57
68	MP2C	Z	3.034	57
69	MP2C	Mx	.004	57
70	MP2A	X	5.255	9
71	MP2A	Z	3.034	9
72	MP2A	Mx	-.004	9
73	MP2A	X	5.255	57
74	MP2A	Z	3.034	57
75	MP2A	Mx	-.004	57
76	MP2B	X	6.973	9
77	MP2B	Z	4.026	9
78	MP2B	Mx	.005	9
79	MP2B	X	6.973	57
80	MP2B	Z	4.026	57
81	MP2B	Mx	.005	57
82	MP2C	X	5.255	9

Member Point Loads (BLC 31 : Antenna Wm (120 Deg)) (Continued)

	Member Label	Direction	Magnitude[lb,k-ft]	Location[in,%]
83	MP2C	Z	3.034	9
84	MP2C	Mx	.000858	9
85	MP2C	X	5.255	57
86	MP2C	Z	3.034	57
87	MP2C	Mx	.000858	57
88	MP1A	X	6.521	3
89	MP1A	Z	3.765	3
90	MP1A	Mx	-.003	3
91	MP1A	X	6.521	63
92	MP1A	Z	3.765	63
93	MP1A	Mx	-.003	63
94	MP1B	X	3.738	3
95	MP1B	Z	2.158	3
96	MP1B	Mx	0	3
97	MP1B	X	3.738	63
98	MP1B	Z	2.158	63
99	MP1B	Mx	0	63
100	MP4A	X	6.521	3
101	MP4A	Z	3.765	3
102	MP4A	Mx	-.003	3
103	MP4A	X	6.521	63
104	MP4A	Z	3.765	63
105	MP4A	Mx	-.003	63
106	MP4B	X	3.738	3
107	MP4B	Z	2.158	3
108	MP4B	Mx	0	3
109	MP4B	X	3.738	63
110	MP4B	Z	2.158	63
111	MP4B	Mx	0	63

Member Point Loads (BLC 32 : Antenna Wm (150 Deg))

	Member Label	Direction	Magnitude[lb,k-ft]	Location[in,%]
1	MP3A	X	1.986	21
2	MP3A	Z	3.44	21
3	MP3A	Mx	-.000993	21
4	MP3A	X	1.986	45
5	MP3A	Z	3.44	45
6	MP3A	Mx	-.000993	45
7	MP3B	X	2.176	21
8	MP3B	Z	3.769	21
9	MP3B	Mx	-.000744	21
10	MP3B	X	2.176	45
11	MP3B	Z	3.769	45
12	MP3B	Mx	-.000744	45
13	MP3C	X	.917	21
14	MP3C	Z	1.589	21
15	MP3C	Mx	.000917	21
16	MP3C	X	.917	45
17	MP3C	Z	1.589	45
18	MP3C	Mx	.000917	45
19	M101	X	4.047	18

Member Point Loads (BLC 32 : Antenna Wm (150 Deg)) (Continued)

	Member Label	Direction	Magnitude[lb,k-ft]	Location[in,%]
20	M101	Z	7.01	18
21	M101	Mx	0	18
22	MP2A	X	1.71	24
23	MP2A	Z	2.961	24
24	MP2A	Mx	.000855	24
25	MP2B	X	1.792	24
26	MP2B	Z	3.104	24
27	MP2B	Mx	.000613	24
28	MP2C	X	1.246	24
29	MP2C	Z	2.158	24
30	MP2C	Mx	-.001	24
31	MP1A	X	1.65	24
32	MP1A	Z	2.859	24
33	MP1A	Mx	.000825	24
34	MP1B	X	1.764	24
35	MP1B	Z	3.056	24
36	MP1B	Mx	.000604	24
37	MP1C	X	1.009	24
38	MP1C	Z	1.748	24
39	MP1C	Mx	-.001	24
40	MP1C	X	4.301	3
41	MP1C	Z	7.449	3
42	MP1C	Mx	.004	3
43	MP1C	X	4.301	63
44	MP1C	Z	7.449	63
45	MP1C	Mx	.004	63
46	MP4C	X	4.301	3
47	MP4C	Z	7.449	3
48	MP4C	Mx	.004	3
49	MP4C	X	4.301	63
50	MP4C	Z	7.449	63
51	MP4C	Mx	.004	63
52	MP2A	X	3.723	9
53	MP2A	Z	6.448	9
54	MP2A	Mx	.002	9
55	MP2A	X	3.723	57
56	MP2A	Z	6.448	57
57	MP2A	Mx	.002	57
58	MP2B	X	3.906	9
59	MP2B	Z	6.765	9
60	MP2B	Mx	-.006	9
61	MP2B	X	3.906	57
62	MP2B	Z	6.765	57
63	MP2B	Mx	-.006	57
64	MP2C	X	2.69	9
65	MP2C	Z	4.659	9
66	MP2C	Mx	.003	9
67	MP2C	X	2.69	57
68	MP2C	Z	4.659	57
69	MP2C	Mx	.003	57
70	MP2A	X	3.723	9
71	MP2A	Z	6.448	9

Member Point Loads (BLC 32 : Antenna Wm (150 Deg)) (Continued)

	Member Label	Direction	Magnitude[lb,k-ft]	Location[in,%]
72	MP2A	Mx	-.006	9
73	MP2A	X	3.723	57
74	MP2A	Z	6.448	57
75	MP2A	Mx	-.006	57
76	MP2B	X	3.906	9
77	MP2B	Z	6.765	9
78	MP2B	Mx	.003	9
79	MP2B	X	3.906	57
80	MP2B	Z	6.765	57
81	MP2B	Mx	.003	57
82	MP2C	X	2.69	9
83	MP2C	Z	4.659	9
84	MP2C	Mx	.003	9
85	MP2C	X	2.69	57
86	MP2C	Z	4.659	57
87	MP2C	Mx	.003	57
88	MP1A	X	2.694	3
89	MP1A	Z	4.666	3
90	MP1A	Mx	-.001	3
91	MP1A	X	2.694	63
92	MP1A	Z	4.666	63
93	MP1A	Mx	-.001	63
94	MP1B	X	2.694	3
95	MP1B	Z	4.666	3
96	MP1B	Mx	-.001	3
97	MP1B	X	2.694	63
98	MP1B	Z	4.666	63
99	MP1B	Mx	-.001	63
100	MP4A	X	2.694	3
101	MP4A	Z	4.666	3
102	MP4A	Mx	-.001	3
103	MP4A	X	2.694	63
104	MP4A	Z	4.666	63
105	MP4A	Mx	-.001	63
106	MP4B	X	2.694	3
107	MP4B	Z	4.666	3
108	MP4B	Mx	-.001	3
109	MP4B	X	2.694	63
110	MP4B	Z	4.666	63
111	MP4B	Mx	-.001	63

Member Point Loads (BLC 33 : Antenna Wm (180 Deg))

	Member Label	Direction	Magnitude[lb,k-ft]	Location[in,%]
1	MP3A	X	0	21
2	MP3A	Z	4.685	21
3	MP3A	Mx	0	21
4	MP3A	X	0	45
5	MP3A	Z	4.685	45
6	MP3A	Mx	0	45
7	MP3B	X	0	21
8	MP3B	Z	3.012	21

Member Point Loads (BLC 33 : Antenna Wm (180 Deg)) (Continued)

	Member Label	Direction	Magnitude[lb,k-ft]	Location[in,%]
9	MP3B	Mx	-.001	21
10	MP3B	X	0	45
11	MP3B	Z	3.012	45
12	MP3B	Mx	-.001	45
13	MP3C	X	0	21
14	MP3C	Z	2.547	21
15	MP3C	Mx	.001	21
16	MP3C	X	0	45
17	MP3C	Z	2.547	45
18	MP3C	Mx	.001	45
19	M101	X	0	18
20	M101	Z	7.615	18
21	M101	Mx	0	18
22	MP2A	X	0	24
23	MP2A	Z	3.728	24
24	MP2A	Mx	0	24
25	MP2B	X	0	24
26	MP2B	Z	3.003	24
27	MP2B	Mx	.001	24
28	MP2C	X	0	24
29	MP2C	Z	2.801	24
30	MP2C	Mx	-.001	24
31	MP1A	X	0	24
32	MP1A	Z	3.728	24
33	MP1A	Mx	0	24
34	MP1B	X	0	24
35	MP1B	Z	2.725	24
36	MP1B	Mx	.001	24
37	MP1C	X	0	24
38	MP1C	Z	2.446	24
39	MP1C	Mx	-.001	24
40	MP1C	X	0	3
41	MP1C	Z	7.53	3
42	MP1C	Mx	.003	3
43	MP1C	X	0	63
44	MP1C	Z	7.53	63
45	MP1C	Mx	.003	63
46	MP4C	X	0	3
47	MP4C	Z	7.53	3
48	MP4C	Mx	.003	3
49	MP4C	X	0	63
50	MP4C	Z	7.53	63
51	MP4C	Mx	.003	63
52	MP2A	X	0	9
53	MP2A	Z	8.134	9
54	MP2A	Mx	.005	9
55	MP2A	X	0	57
56	MP2A	Z	8.134	57
57	MP2A	Mx	.005	57
58	MP2B	X	0	9
59	MP2B	Z	6.518	9
60	MP2B	Mx	-.005	9

Member Point Loads (BLC 33 : Antenna Wm (180 Deg)) (Continued)

	Member Label	Direction	Magnitude[lb,k-ft]	Location[in,%]
61	MP2B	X	0	57
62	MP2B	Z	6.518	57
63	MP2B	Mx	-.005	57
64	MP2C	X	0	9
65	MP2C	Z	6.068	9
66	MP2C	Mx	.000858	9
67	MP2C	X	0	57
68	MP2C	Z	6.068	57
69	MP2C	Mx	.000858	57
70	MP2A	X	0	9
71	MP2A	Z	8.134	9
72	MP2A	Mx	-.005	9
73	MP2A	X	0	57
74	MP2A	Z	8.134	57
75	MP2A	Mx	-.005	57
76	MP2B	X	0	9
77	MP2B	Z	6.518	9
78	MP2B	Mx	-5.3e-5	9
79	MP2B	X	0	57
80	MP2B	Z	6.518	57
81	MP2B	Mx	-5.3e-5	57
82	MP2C	X	0	9
83	MP2C	Z	6.068	9
84	MP2C	Mx	.004	9
85	MP2C	X	0	57
86	MP2C	Z	6.068	57
87	MP2C	Mx	.004	57
88	MP1A	X	0	3
89	MP1A	Z	4.316	3
90	MP1A	Mx	0	3
91	MP1A	X	0	63
92	MP1A	Z	4.316	63
93	MP1A	Mx	0	63
94	MP1B	X	0	3
95	MP1B	Z	7.53	3
96	MP1B	Mx	-.003	3
97	MP1B	X	0	63
98	MP1B	Z	7.53	63
99	MP1B	Mx	-.003	63
100	MP4A	X	0	3
101	MP4A	Z	4.316	3
102	MP4A	Mx	0	3
103	MP4A	X	0	63
104	MP4A	Z	4.316	63
105	MP4A	Mx	0	63
106	MP4B	X	0	3
107	MP4B	Z	7.53	3
108	MP4B	Mx	-.003	3
109	MP4B	X	0	63
110	MP4B	Z	7.53	63
111	MP4B	Mx	-.003	63

Member Point Loads (BLC 34 : Antenna Wm (210 Deg))

	Member Label	Direction	Magnitude[lb,k-ft]	Location[in,%]
1	MP3A	X	-1.986	21
2	MP3A	Z	3.44	21
3	MP3A	Mx	.000993	21
4	MP3A	X	-1.986	45
5	MP3A	Z	3.44	45
6	MP3A	Mx	.000993	45
7	MP3B	X	-.96	21
8	MP3B	Z	1.663	21
9	MP3B	Mx	-.000946	21
10	MP3B	X	-.96	45
11	MP3B	Z	1.663	45
12	MP3B	Mx	-.000946	45
13	MP3C	X	-1.986	21
14	MP3C	Z	3.44	21
15	MP3C	Mx	.000993	21
16	MP3C	X	-1.986	45
17	MP3C	Z	3.44	45
18	MP3C	Mx	.000993	45
19	M101	X	-3.328	18
20	M101	Z	5.764	18
21	M101	Mx	0	18
22	MP2A	X	-1.71	24
23	MP2A	Z	2.961	24
24	MP2A	Mx	-.000855	24
25	MP2B	X	-1.265	24
26	MP2B	Z	2.191	24
27	MP2B	Mx	.001	24
28	MP2C	X	-1.71	24
29	MP2C	Z	2.961	24
30	MP2C	Mx	-.000855	24
31	MP1A	X	-1.65	24
32	MP1A	Z	2.859	24
33	MP1A	Mx	-.000825	24
34	MP1B	X	-1.035	24
35	MP1B	Z	1.793	24
36	MP1B	Mx	.001	24
37	MP1C	X	-1.65	24
38	MP1C	Z	2.859	24
39	MP1C	Mx	-.000825	24
40	MP1C	X	-2.694	3
41	MP1C	Z	4.666	3
42	MP1C	Mx	.001	3
43	MP1C	X	-2.694	63
44	MP1C	Z	4.666	63
45	MP1C	Mx	.001	63
46	MP4C	X	-2.694	3
47	MP4C	Z	4.666	3
48	MP4C	Mx	.001	3
49	MP4C	X	-2.694	63
50	MP4C	Z	4.666	63
51	MP4C	Mx	.001	63
52	MP2A	X	-3.723	9

Member Point Loads (BLC 34 : Antenna Wm (210 Deg)) (Continued)

	Member Label	Direction	Magnitude[lb,k-ft]	Location[in,%]
53	MP2A	Z	6.448	9
54	MP2A	Mx	.006	9
55	MP2A	X	-3.723	57
56	MP2A	Z	6.448	57
57	MP2A	Mx	.006	57
58	MP2B	X	-2.731	9
59	MP2B	Z	4.731	9
60	MP2B	Mx	-.003	9
61	MP2B	X	-2.731	57
62	MP2B	Z	4.731	57
63	MP2B	Mx	-.003	57
64	MP2C	X	-3.723	9
65	MP2C	Z	6.448	9
66	MP2C	Mx	-.002	9
67	MP2C	X	-3.723	57
68	MP2C	Z	6.448	57
69	MP2C	Mx	-.002	57
70	MP2A	X	-3.723	9
71	MP2A	Z	6.448	9
72	MP2A	Mx	-.002	9
73	MP2A	X	-3.723	57
74	MP2A	Z	6.448	57
75	MP2A	Mx	-.002	57
76	MP2B	X	-2.731	9
77	MP2B	Z	4.731	9
78	MP2B	Mx	-.002	9
79	MP2B	X	-2.731	57
80	MP2B	Z	4.731	57
81	MP2B	Mx	-.002	57
82	MP2C	X	-3.723	9
83	MP2C	Z	6.448	9
84	MP2C	Mx	.006	9
85	MP2C	X	-3.723	57
86	MP2C	Z	6.448	57
87	MP2C	Mx	.006	57
88	MP1A	X	-2.694	3
89	MP1A	Z	4.666	3
90	MP1A	Mx	.001	3
91	MP1A	X	-2.694	63
92	MP1A	Z	4.666	63
93	MP1A	Mx	.001	63
94	MP1B	X	-4.301	3
95	MP1B	Z	7.449	3
96	MP1B	Mx	-.004	3
97	MP1B	X	-4.301	63
98	MP1B	Z	7.449	63
99	MP1B	Mx	-.004	63
100	MP4A	X	-2.694	3
101	MP4A	Z	4.666	3
102	MP4A	Mx	.001	3
103	MP4A	X	-2.694	63
104	MP4A	Z	4.666	63

Member Point Loads (BLC 34 : Antenna Wm (210 Deg)) (Continued)

	Member Label	Direction	Magnitude[lb,k-ft]	Location[in,%]
105	MP4A	Mx	.001	63
106	MP4B	X	-4.301	3
107	MP4B	Z	7.449	3
108	MP4B	Mx	-.004	3
109	MP4B	X	-4.301	63
110	MP4B	Z	7.449	63
111	MP4B	Mx	-.004	63

Member Point Loads (BLC 35 : Antenna Wm (240 Deg))

	Member Label	Direction	Magnitude[lb,k-ft]	Location[in,%]
1	MP3A	X	-2.206	21
2	MP3A	Z	1.273	21
3	MP3A	Mx	.001	21
4	MP3A	X	-2.206	45
5	MP3A	Z	1.273	45
6	MP3A	Mx	.001	45
7	MP3B	X	-1.877	21
8	MP3B	Z	1.084	21
9	MP3B	Mx	-.001	21
10	MP3B	X	-1.877	45
11	MP3B	Z	1.084	45
12	MP3B	Mx	-.001	45
13	MP3C	X	-4.057	21
14	MP3C	Z	2.343	21
15	MP3C	Mx	0	21
16	MP3C	X	-4.057	45
17	MP3C	Z	2.343	45
18	MP3C	Mx	0	45
19	M101	X	-5.348	18
20	M101	Z	3.088	18
21	M101	Mx	0	18
22	MP2A	X	-2.426	24
23	MP2A	Z	1.401	24
24	MP2A	Mx	-.001	24
25	MP2B	X	-2.283	24
26	MP2B	Z	1.318	24
27	MP2B	Mx	.001	24
28	MP2C	X	-3.229	24
29	MP2C	Z	1.864	24
30	MP2C	Mx	0	24
31	MP1A	X	-2.118	24
32	MP1A	Z	1.223	24
33	MP1A	Mx	-.001	24
34	MP1B	X	-1.921	24
35	MP1B	Z	1.109	24
36	MP1B	Mx	.001	24
37	MP1C	X	-3.229	24
38	MP1C	Z	1.864	24
39	MP1C	Mx	0	24
40	MP1C	X	-3.738	3
41	MP1C	Z	2.158	3

Member Point Loads (BLC 35 : Antenna Wm (240 Deg)) (Continued)

	Member Label	Direction	Magnitude[lb,k-ft]	Location[in,%]
42	MP1C	Mx	0	3
43	MP1C	X	-3.738	63
44	MP1C	Z	2.158	63
45	MP1C	Mx	0	63
46	MP4C	X	-3.738	3
47	MP4C	Z	2.158	3
48	MP4C	Mx	0	3
49	MP4C	X	-3.738	63
50	MP4C	Z	2.158	63
51	MP4C	Mx	0	63
52	MP2A	X	-5.255	9
53	MP2A	Z	3.034	9
54	MP2A	Mx	.004	9
55	MP2A	X	-5.255	57
56	MP2A	Z	3.034	57
57	MP2A	Mx	.004	57
58	MP2B	X	-4.938	9
59	MP2B	Z	2.851	9
60	MP2B	Mx	-.002	9
61	MP2B	X	-4.938	57
62	MP2B	Z	2.851	57
63	MP2B	Mx	-.002	57
64	MP2C	X	-7.045	9
65	MP2C	Z	4.067	9
66	MP2C	Mx	-.005	9
67	MP2C	X	-7.045	57
68	MP2C	Z	4.067	57
69	MP2C	Mx	-.005	57
70	MP2A	X	-5.255	9
71	MP2A	Z	3.034	9
72	MP2A	Mx	.000858	9
73	MP2A	X	-5.255	57
74	MP2A	Z	3.034	57
75	MP2A	Mx	.000858	57
76	MP2B	X	-4.938	9
77	MP2B	Z	2.851	9
78	MP2B	Mx	-.004	9
79	MP2B	X	-4.938	57
80	MP2B	Z	2.851	57
81	MP2B	Mx	-.004	57
82	MP2C	X	-7.045	9
83	MP2C	Z	4.067	9
84	MP2C	Mx	.005	9
85	MP2C	X	-7.045	57
86	MP2C	Z	4.067	57
87	MP2C	Mx	.005	57
88	MP1A	X	-6.521	3
89	MP1A	Z	3.765	3
90	MP1A	Mx	.003	3
91	MP1A	X	-6.521	63
92	MP1A	Z	3.765	63
93	MP1A	Mx	.003	63

Member Point Loads (BLC 35 : Antenna Wm (240 Deg)) (Continued)

	Member Label	Direction	Magnitude[lb,k-ft]	Location[in,%]
94	MP1B	X	-6.521	3
95	MP1B	Z	3.765	3
96	MP1B	Mx	-.003	3
97	MP1B	X	-6.521	63
98	MP1B	Z	3.765	63
99	MP1B	Mx	-.003	63
100	MP4A	X	-6.521	3
101	MP4A	Z	3.765	3
102	MP4A	Mx	.003	3
103	MP4A	X	-6.521	63
104	MP4A	Z	3.765	63
105	MP4A	Mx	.003	63
106	MP4B	X	-6.521	3
107	MP4B	Z	3.765	3
108	MP4B	Mx	-.003	3
109	MP4B	X	-6.521	63
110	MP4B	Z	3.765	63
111	MP4B	Mx	-.003	63

Member Point Loads (BLC 36 : Antenna Wm (270 Deg))

	Member Label	Direction	Magnitude[lb,k-ft]	Location[in,%]
1	MP3A	X	-1.834	21
2	MP3A	Z	0	21
3	MP3A	Mx	.000917	21
4	MP3A	X	-1.834	45
5	MP3A	Z	0	45
6	MP3A	Mx	.000917	45
7	MP3B	X	-3.507	21
8	MP3B	Z	0	21
9	MP3B	Mx	-.001	21
10	MP3B	X	-3.507	45
11	MP3B	Z	0	45
12	MP3B	Mx	-.001	45
13	MP3C	X	-3.972	21
14	MP3C	Z	0	21
15	MP3C	Mx	-.000993	21
16	MP3C	X	-3.972	45
17	MP3C	Z	0	45
18	MP3C	Mx	-.000993	45
19	M101	X	-6.655	18
20	M101	Z	0	18
21	M101	Mx	0	18
22	MP2A	X	-2.492	24
23	MP2A	Z	0	24
24	MP2A	Mx	-.001	24
25	MP2B	X	-3.217	24
26	MP2B	Z	0	24
27	MP2B	Mx	.001	24
28	MP2C	X	-3.419	24
29	MP2C	Z	0	24
30	MP2C	Mx	.000855	24

Member Point Loads (BLC 36 : Antenna Wm (270 Deg)) (Continued)

	Member Label	Direction	Magnitude[lb,k-ft]	Location[in,%]
31	MP1A	X	-2.019	24
32	MP1A	Z	0	24
33	MP1A	Mx	-.001	24
34	MP1B	X	-3.022	24
35	MP1B	Z	0	24
36	MP1B	Mx	.000971	24
37	MP1C	X	-3.301	24
38	MP1C	Z	0	24
39	MP1C	Mx	.000825	24
40	MP1C	X	-5.388	3
41	MP1C	Z	0	3
42	MP1C	Mx	-.001	3
43	MP1C	X	-5.388	63
44	MP1C	Z	0	63
45	MP1C	Mx	-.001	63
46	MP4C	X	-5.388	3
47	MP4C	Z	0	3
48	MP4C	Mx	-.001	3
49	MP4C	X	-5.388	63
50	MP4C	Z	0	63
51	MP4C	Mx	-.001	63
52	MP2A	X	-5.379	9
53	MP2A	Z	0	9
54	MP2A	Mx	.003	9
55	MP2A	X	-5.379	57
56	MP2A	Z	0	57
57	MP2A	Mx	.003	57
58	MP2B	X	-6.996	9
59	MP2B	Z	0	9
60	MP2B	Mx	.000878	9
61	MP2B	X	-6.996	57
62	MP2B	Z	0	57
63	MP2B	Mx	.000878	57
64	MP2C	X	-7.446	9
65	MP2C	Z	0	9
66	MP2C	Mx	-.006	9
67	MP2C	X	-7.446	57
68	MP2C	Z	0	57
69	MP2C	Mx	-.006	57
70	MP2A	X	-5.379	9
71	MP2A	Z	0	9
72	MP2A	Mx	.003	9
73	MP2A	X	-5.379	57
74	MP2A	Z	0	57
75	MP2A	Mx	.003	57
76	MP2B	X	-6.996	9
77	MP2B	Z	0	9
78	MP2B	Mx	-.005	9
79	MP2B	X	-6.996	57
80	MP2B	Z	0	57
81	MP2B	Mx	-.005	57
82	MP2C	X	-7.446	9

Member Point Loads (BLC 36 : Antenna Wm (270 Deg)) (Continued)

	Member Label	Direction	Magnitude[lb,k-ft]	Location[in,%]
83	MP2C	Z	0	9
84	MP2C	Mx	.002	9
85	MP2C	X	-7.446	57
86	MP2C	Z	0	57
87	MP2C	Mx	.002	57
88	MP1A	X	-8.601	3
89	MP1A	Z	0	3
90	MP1A	Mx	.004	3
91	MP1A	X	-8.601	63
92	MP1A	Z	0	63
93	MP1A	Mx	.004	63
94	MP1B	X	-5.388	3
95	MP1B	Z	0	3
96	MP1B	Mx	-.001	3
97	MP1B	X	-5.388	63
98	MP1B	Z	0	63
99	MP1B	Mx	-.001	63
100	MP4A	X	-8.601	3
101	MP4A	Z	0	3
102	MP4A	Mx	.004	3
103	MP4A	X	-8.601	63
104	MP4A	Z	0	63
105	MP4A	Mx	.004	63
106	MP4B	X	-5.388	3
107	MP4B	Z	0	3
108	MP4B	Mx	-.001	3
109	MP4B	X	-5.388	63
110	MP4B	Z	0	63
111	MP4B	Mx	-.001	63

Member Point Loads (BLC 37 : Antenna Wm (300 Deg))

	Member Label	Direction	Magnitude[lb,k-ft]	Location[in,%]
1	MP3A	X	-2.206	21
2	MP3A	Z	-1.273	21
3	MP3A	Mx	.001	21
4	MP3A	X	-2.206	45
5	MP3A	Z	-1.273	45
6	MP3A	Mx	.001	45
7	MP3B	X	-3.983	21
8	MP3B	Z	-2.3	21
9	MP3B	Mx	-.000399	21
10	MP3B	X	-3.983	45
11	MP3B	Z	-2.3	45
12	MP3B	Mx	-.000399	45
13	MP3C	X	-2.206	21
14	MP3C	Z	-1.273	21
15	MP3C	Mx	-.001	21
16	MP3C	X	-2.206	45
17	MP3C	Z	-1.273	45
18	MP3C	Mx	-.001	45
19	M101	X	-6.595	18

Member Point Loads (BLC 37 : Antenna Wm (300 Deg)) (Continued)

	Member Label	Direction	Magnitude[lb,k-ft]	Location[in,%]
20	M101	Z	-3.807	18
21	M101	Mx	0	18
22	MP2A	X	-2.426	24
23	MP2A	Z	-1.401	24
24	MP2A	Mx	-.001	24
25	MP2B	X	-3.196	24
26	MP2B	Z	-1.845	24
27	MP2B	Mx	.00032	24
28	MP2C	X	-2.426	24
29	MP2C	Z	-1.401	24
30	MP2C	Mx	.001	24
31	MP1A	X	-2.118	24
32	MP1A	Z	-1.223	24
33	MP1A	Mx	-.001	24
34	MP1B	X	-3.184	24
35	MP1B	Z	-1.838	24
36	MP1B	Mx	.000319	24
37	MP1C	X	-2.118	24
38	MP1C	Z	-1.223	24
39	MP1C	Mx	.001	24
40	MP1C	X	-6.521	3
41	MP1C	Z	-3.765	3
42	MP1C	Mx	-.003	3
43	MP1C	X	-6.521	63
44	MP1C	Z	-3.765	63
45	MP1C	Mx	-.003	63
46	MP4C	X	-6.521	3
47	MP4C	Z	-3.765	3
48	MP4C	Mx	-.003	3
49	MP4C	X	-6.521	63
50	MP4C	Z	-3.765	63
51	MP4C	Mx	-.003	63
52	MP2A	X	-5.255	9
53	MP2A	Z	-3.034	9
54	MP2A	Mx	.000858	9
55	MP2A	X	-5.255	57
56	MP2A	Z	-3.034	57
57	MP2A	Mx	.000858	57
58	MP2B	X	-6.973	9
59	MP2B	Z	-4.026	9
60	MP2B	Mx	.004	9
61	MP2B	X	-6.973	57
62	MP2B	Z	-4.026	57
63	MP2B	Mx	.004	57
64	MP2C	X	-5.255	9
65	MP2C	Z	-3.034	9
66	MP2C	Mx	-.004	9
67	MP2C	X	-5.255	57
68	MP2C	Z	-3.034	57
69	MP2C	Mx	-.004	57
70	MP2A	X	-5.255	9
71	MP2A	Z	-3.034	9

Member Point Loads (BLC 37 : Antenna Wm (300 Deg)) (Continued)

	Member Label	Direction	Magnitude[lb,k-ft]	Location[in,%]
72	MP2A	Mx	.004	9
73	MP2A	X	-5.255	57
74	MP2A	Z	-3.034	57
75	MP2A	Mx	.004	57
76	MP2B	X	-6.973	9
77	MP2B	Z	-4.026	9
78	MP2B	Mx	-.005	9
79	MP2B	X	-6.973	57
80	MP2B	Z	-4.026	57
81	MP2B	Mx	-.005	57
82	MP2C	X	-5.255	9
83	MP2C	Z	-3.034	9
84	MP2C	Mx	-.000858	9
85	MP2C	X	-5.255	57
86	MP2C	Z	-3.034	57
87	MP2C	Mx	-.000858	57
88	MP1A	X	-6.521	3
89	MP1A	Z	-3.765	3
90	MP1A	Mx	.003	3
91	MP1A	X	-6.521	63
92	MP1A	Z	-3.765	63
93	MP1A	Mx	.003	63
94	MP1B	X	-3.738	3
95	MP1B	Z	-2.158	3
96	MP1B	Mx	0	3
97	MP1B	X	-3.738	63
98	MP1B	Z	-2.158	63
99	MP1B	Mx	0	63
100	MP4A	X	-6.521	3
101	MP4A	Z	-3.765	3
102	MP4A	Mx	.003	3
103	MP4A	X	-6.521	63
104	MP4A	Z	-3.765	63
105	MP4A	Mx	.003	63
106	MP4B	X	-3.738	3
107	MP4B	Z	-2.158	3
108	MP4B	Mx	0	3
109	MP4B	X	-3.738	63
110	MP4B	Z	-2.158	63
111	MP4B	Mx	0	63

Member Point Loads (BLC 38 : Antenna Wm (330 Deg))

	Member Label	Direction	Magnitude[lb,k-ft]	Location[in,%]
1	MP3A	X	-1.986	21
2	MP3A	Z	-3.44	21
3	MP3A	Mx	.000993	21
4	MP3A	X	-1.986	45
5	MP3A	Z	-3.44	45
6	MP3A	Mx	.000993	45
7	MP3B	X	-2.176	21
8	MP3B	Z	-3.769	21

Member Point Loads (BLC 38 : Antenna Wm (330 Deg)) (Continued)

	Member Label	Direction	Magnitude[lb,k-ft]	Location[in,%]
9	MP3B	Mx	.000744	21
10	MP3B	X	-2.176	45
11	MP3B	Z	-3.769	45
12	MP3B	Mx	.000744	45
13	MP3C	X	-.917	21
14	MP3C	Z	-1.589	21
15	MP3C	Mx	-.000917	21
16	MP3C	X	-.917	45
17	MP3C	Z	-1.589	45
18	MP3C	Mx	-.000917	45
19	M101	X	-4.047	18
20	M101	Z	-7.01	18
21	M101	Mx	0	18
22	MP2A	X	-1.71	24
23	MP2A	Z	-2.961	24
24	MP2A	Mx	-.000855	24
25	MP2B	X	-1.792	24
26	MP2B	Z	-3.104	24
27	MP2B	Mx	-.000613	24
28	MP2C	X	-1.246	24
29	MP2C	Z	-2.158	24
30	MP2C	Mx	.001	24
31	MP1A	X	-1.65	24
32	MP1A	Z	-2.859	24
33	MP1A	Mx	-.000825	24
34	MP1B	X	-1.764	24
35	MP1B	Z	-3.056	24
36	MP1B	Mx	-.000604	24
37	MP1C	X	-1.009	24
38	MP1C	Z	-1.748	24
39	MP1C	Mx	.001	24
40	MP1C	X	-4.301	3
41	MP1C	Z	-7.449	3
42	MP1C	Mx	-.004	3
43	MP1C	X	-4.301	63
44	MP1C	Z	-7.449	63
45	MP1C	Mx	-.004	63
46	MP4C	X	-4.301	3
47	MP4C	Z	-7.449	3
48	MP4C	Mx	-.004	3
49	MP4C	X	-4.301	63
50	MP4C	Z	-7.449	63
51	MP4C	Mx	-.004	63
52	MP2A	X	-3.723	9
53	MP2A	Z	-6.448	9
54	MP2A	Mx	-.002	9
55	MP2A	X	-3.723	57
56	MP2A	Z	-6.448	57
57	MP2A	Mx	-.002	57
58	MP2B	X	-3.906	9
59	MP2B	Z	-6.765	9
60	MP2B	Mx	.006	9

Member Point Loads (BLC 38 : Antenna Wm (330 Deg)) (Continued)

	Member Label	Direction	Magnitude[lb,k-ft]	Location[in,%]
61	MP2B	X	-3.906	57
62	MP2B	Z	-6.765	57
63	MP2B	Mx	.006	57
64	MP2C	X	-2.69	9
65	MP2C	Z	-4.659	9
66	MP2C	Mx	-.003	9
67	MP2C	X	-2.69	57
68	MP2C	Z	-4.659	57
69	MP2C	Mx	-.003	57
70	MP2A	X	-3.723	9
71	MP2A	Z	-6.448	9
72	MP2A	Mx	.006	9
73	MP2A	X	-3.723	57
74	MP2A	Z	-6.448	57
75	MP2A	Mx	.006	57
76	MP2B	X	-3.906	9
77	MP2B	Z	-6.765	9
78	MP2B	Mx	-.003	9
79	MP2B	X	-3.906	57
80	MP2B	Z	-6.765	57
81	MP2B	Mx	-.003	57
82	MP2C	X	-2.69	9
83	MP2C	Z	-4.659	9
84	MP2C	Mx	-.003	9
85	MP2C	X	-2.69	57
86	MP2C	Z	-4.659	57
87	MP2C	Mx	-.003	57
88	MP1A	X	-2.694	3
89	MP1A	Z	-4.666	3
90	MP1A	Mx	.001	3
91	MP1A	X	-2.694	63
92	MP1A	Z	-4.666	63
93	MP1A	Mx	.001	63
94	MP1B	X	-2.694	3
95	MP1B	Z	-4.666	3
96	MP1B	Mx	.001	3
97	MP1B	X	-2.694	63
98	MP1B	Z	-4.666	63
99	MP1B	Mx	.001	63
100	MP4A	X	-2.694	3
101	MP4A	Z	-4.666	3
102	MP4A	Mx	.001	3
103	MP4A	X	-2.694	63
104	MP4A	Z	-4.666	63
105	MP4A	Mx	.001	63
106	MP4B	X	-2.694	3
107	MP4B	Z	-4.666	3
108	MP4B	Mx	.001	3
109	MP4B	X	-2.694	63
110	MP4B	Z	-4.666	63
111	MP4B	Mx	.001	63

Member Point Loads (BLC 77 : Lm1)

	Member Label	Direction	Magnitude[lb,k-ft]	Location[in,%]
1	M174A	Y	-500	%34

Member Point Loads (BLC 78 : Lm2)

	Member Label	Direction	Magnitude[lb,k-ft]	Location[in,%]
1	M174A	Y	-500	%86

Member Point Loads (BLC 79 : Lv1)

	Member Label	Direction	Magnitude[lb,k-ft]	Location[in,%]
1	M174A	Y	-250	%50

Member Point Loads (BLC 80 : Lv2)

	Member Label	Direction	Magnitude[lb,k-ft]	Location[in,%]
1	M174A	Y	-250	%100

Member Distributed Loads (BLC 40 : Structure Di)

	Member Label	Direction	Start Magnitude[lb/ft,...	End Magnitude[lb/ft,F...	Start Location[in,%]	End Location[in,%]
1	M4	Y	-9.508	-9.508	0	%100
2	M10	Y	-9.508	-9.508	0	%100
3	M43	Y	-9.508	-9.508	0	%100
4	M46	Y	-10.017	-10.017	0	%100
5	M51B	Y	-5.554	-5.554	0	%100
6	M52B	Y	-5.554	-5.554	0	%100
7	M76	Y	-10.017	-10.017	0	%100
8	M77	Y	-10.017	-10.017	0	%100
9	M80	Y	-10.017	-10.017	0	%100
10	M84	Y	-10.017	-10.017	0	%100
11	M85	Y	-10.017	-10.017	0	%100
12	M91	Y	-10.017	-10.017	0	%100
13	M126A	Y	-9.508	-9.508	0	%100
14	M127A	Y	-9.508	-9.508	0	%100
15	M128A	Y	-9.508	-9.508	0	%100
16	M129A	Y	-10.017	-10.017	0	%100
17	M132A	Y	-5.554	-5.554	0	%100
18	M133A	Y	-5.554	-5.554	0	%100
19	M137A	Y	-10.017	-10.017	0	%100
20	M138A	Y	-10.017	-10.017	0	%100
21	M140A	Y	-10.017	-10.017	0	%100
22	M142A	Y	-10.017	-10.017	0	%100
23	M143A	Y	-10.017	-10.017	0	%100
24	M145A	Y	-10.017	-10.017	0	%100
25	M150A	Y	-9.508	-9.508	0	%100
26	M151A	Y	-9.508	-9.508	0	%100
27	M152A	Y	-9.508	-9.508	0	%100
28	M153A	Y	-10.017	-10.017	0	%100
29	M156A	Y	-5.554	-5.554	0	%100
30	M157A	Y	-5.554	-5.554	0	%100
31	M161A	Y	-10.017	-10.017	0	%100
32	M162A	Y	-10.017	-10.017	0	%100
33	M164A	Y	-10.017	-10.017	0	%100

Member Distributed Loads (BLC 40 : Structure Di) (Continued)

	Member Label	Direction	Start Magnitude[lb/ft,...	End Magnitude[lb/ft,F...	Start Location[in,%]	End Location[in,%]
34	M166A	Y	-10.017	-10.017	0	%100
35	M167A	Y	-10.017	-10.017	0	%100
36	M169A	Y	-10.017	-10.017	0	%100
37	M174A	Y	-6.493	-6.493	0	%100
38	MP1A	Y	-4.92	-4.92	0	%100
39	MP2A	Y	-5.619	-5.619	0	%100
40	MP3A	Y	-4.92	-4.92	0	%100
41	MP4A	Y	-4.92	-4.92	0	%100
42	M183A	Y	-6.493	-6.493	0	%100
43	MP1C	Y	-4.92	-4.92	0	%100
44	MP2C	Y	-5.619	-5.619	0	%100
45	MP3C	Y	-4.92	-4.92	0	%100
46	MP4C	Y	-4.92	-4.92	0	%100
47	M192A	Y	-6.493	-6.493	0	%100
48	MP1B	Y	-4.92	-4.92	0	%100
49	MP2B	Y	-5.619	-5.619	0	%100
50	MP3B	Y	-4.92	-4.92	0	%100
51	MP4B	Y	-4.92	-4.92	0	%100
52	M101	Y	-4.92	-4.92	0	%100
53	M102	Y	-5.619	-5.619	0	%100
54	M115A	Y	-5.619	-5.619	0	%100
55	M116A	Y	-5.619	-5.619	0	%100
56	M123	Y	-7.531	-7.531	0	%100
57	M124	Y	-7.531	-7.531	0	%100
58	M125	Y	-7.531	-7.531	0	%100

Member Distributed Loads (BLC 41 : Structure Wo (0 Deg))

	Member Label	Direction	Start Magnitude[lb/ft,...	End Magnitude[lb/ft,F...	Start Location[in,%]	End Location[in,%]
1	M4	X	0	0	0	%100
2	M4	Z	0	0	0	%100
3	M10	X	0	0	0	%100
4	M10	Z	-8.66	-8.66	0	%100
5	M43	X	0	0	0	%100
6	M43	Z	-8.66	-8.66	0	%100
7	M46	X	0	0	0	%100
8	M46	Z	-17.273	-17.273	0	%100
9	M51B	X	0	0	0	%100
10	M51B	Z	-2.398	-2.398	0	%100
11	M52B	X	0	0	0	%100
12	M52B	Z	-2.398	-2.398	0	%100
13	M76	X	0	0	0	%100
14	M76	Z	0	0	0	%100
15	M77	X	0	0	0	%100
16	M77	Z	-4.398	-4.398	0	%100
17	M80	X	0	0	0	%100
18	M80	Z	-4.633	-4.633	0	%100
19	M84	X	0	0	0	%100
20	M84	Z	0	0	0	%100
21	M85	X	0	0	0	%100
22	M85	Z	-4.398	-4.398	0	%100
23	M91	X	0	0	0	%100

Member Distributed Loads (BLC 41 : Structure Wo (0 Deg)) (Continued)

	Member Label	Direction	Start Magnitude[lb/ft,...	End Magnitude[lb/ft,F...	Start Location[in,%]	End Location[in,%]
24	M91	Z	-4.633	-4.633	0	%100
25	M126A	X	0	0	0	%100
26	M126A	Z	-7.676	-7.676	0	%100
27	M127A	X	0	0	0	%100
28	M127A	Z	-2.165	-2.165	0	%100
29	M128A	X	0	0	0	%100
30	M128A	Z	-2.165	-2.165	0	%100
31	M129A	X	0	0	0	%100
32	M129A	Z	-4.318	-4.318	0	%100
33	M132A	X	0	0	0	%100
34	M132A	Z	-2.398	-2.398	0	%100
35	M133A	X	0	0	0	%100
36	M133A	Z	-9.592	-9.592	0	%100
37	M137A	X	0	0	0	%100
38	M137A	Z	-12.955	-12.955	0	%100
39	M138A	X	0	0	0	%100
40	M138A	Z	-4.398	-4.398	0	%100
41	M140A	X	0	0	0	%100
42	M140A	Z	-4.633	-4.633	0	%100
43	M142A	X	0	0	0	%100
44	M142A	Z	-12.955	-12.955	0	%100
45	M143A	X	0	0	0	%100
46	M143A	Z	-17.593	-17.593	0	%100
47	M145A	X	0	0	0	%100
48	M145A	Z	-18.531	-18.531	0	%100
49	M150A	X	0	0	0	%100
50	M150A	Z	-7.676	-7.676	0	%100
51	M151A	X	0	0	0	%100
52	M151A	Z	-2.165	-2.165	0	%100
53	M152A	X	0	0	0	%100
54	M152A	Z	-2.165	-2.165	0	%100
55	M153A	X	0	0	0	%100
56	M153A	Z	-4.318	-4.318	0	%100
57	M156A	X	0	0	0	%100
58	M156A	Z	-9.592	-9.592	0	%100
59	M157A	X	0	0	0	%100
60	M157A	Z	-2.398	-2.398	0	%100
61	M161A	X	0	0	0	%100
62	M161A	Z	-12.955	-12.955	0	%100
63	M162A	X	0	0	0	%100
64	M162A	Z	-17.593	-17.593	0	%100
65	M164A	X	0	0	0	%100
66	M164A	Z	-18.531	-18.531	0	%100
67	M166A	X	0	0	0	%100
68	M166A	Z	-12.955	-12.955	0	%100
69	M167A	X	0	0	0	%100
70	M167A	Z	-4.398	-4.398	0	%100
71	M169A	X	0	0	0	%100
72	M169A	Z	-4.633	-4.633	0	%100
73	M174A	X	0	0	0	%100
74	M174A	Z	-10.076	-10.076	0	%100
75	MP1A	X	0	0	0	%100

Member Distributed Loads (BLC 41 : Structure Wo (0 Deg)) (Continued)

	Member Label	Direction	Start Magnitude[lb/ft,...	End Magnitude[lb/ft,F...	Start Location[in,%]	End Location[in,%]
76	MP1A	Z	-6.837	-6.837	0	%100
77	MP2A	X	0	0	0	%100
78	MP2A	Z	-8.277	-8.277	0	%100
79	MP3A	X	0	0	0	%100
80	MP3A	Z	-6.837	-6.837	0	%100
81	MP4A	X	0	0	0	%100
82	MP4A	Z	-6.837	-6.837	0	%100
83	M183A	X	0	0	0	%100
84	M183A	Z	-2.519	-2.519	0	%100
85	MP1C	X	0	0	0	%100
86	MP1C	Z	-6.837	-6.837	0	%100
87	MP2C	X	0	0	0	%100
88	MP2C	Z	-8.277	-8.277	0	%100
89	MP3C	X	0	0	0	%100
90	MP3C	Z	-6.837	-6.837	0	%100
91	MP4C	X	0	0	0	%100
92	MP4C	Z	-6.837	-6.837	0	%100
93	M192A	X	0	0	0	%100
94	M192A	Z	-2.519	-2.519	0	%100
95	MP1B	X	0	0	0	%100
96	MP1B	Z	-6.837	-6.837	0	%100
97	MP2B	X	0	0	0	%100
98	MP2B	Z	-8.277	-8.277	0	%100
99	MP3B	X	0	0	0	%100
100	MP3B	Z	-6.837	-6.837	0	%100
101	MP4B	X	0	0	0	%100
102	MP4B	Z	-6.837	-6.837	0	%100
103	M101	X	0	0	0	%100
104	M101	Z	-5.591	-5.591	0	%100
105	M102	X	0	0	0	%100
106	M102	Z	-8.277	-8.277	0	%100
107	M115A	X	0	0	0	%100
108	M115A	Z	-2.069	-2.069	0	%100
109	M116A	X	0	0	0	%100
110	M116A	Z	-2.069	-2.069	0	%100
111	M123	X	0	0	0	%100
112	M123	Z	-2.444	-2.444	0	%100
113	M124	X	0	0	0	%100
114	M124	Z	-9.778	-9.778	0	%100
115	M125	X	0	0	0	%100
116	M125	Z	-2.444	-2.444	0	%100

Member Distributed Loads (BLC 42 : Structure Wo (30 Deg))

	Member Label	Direction	Start Magnitude[lb/ft,...	End Magnitude[lb/ft,F...	Start Location[in,%]	End Location[in,%]
1	M4	X	1.279	1.279	0	%100
2	M4	Z	-2.216	-2.216	0	%100
3	M10	X	3.248	3.248	0	%100
4	M10	Z	-5.625	-5.625	0	%100
5	M43	X	3.248	3.248	0	%100
6	M43	Z	-5.625	-5.625	0	%100
7	M46	X	6.478	6.478	0	%100

Member Distributed Loads (BLC 42 : Structure Wo (30 Deg)) (Continued)

	Member Label	Direction	Start Magnitude[lb/ft,...	End Magnitude[lb/ft,F...	Start Location[in,%]	End Location[in,%]
8	M46	Z	-11.219	-11.219	0	%100
9	M51B	X	3.597	3.597	0	%100
10	M51B	Z	-6.23	-6.23	0	%100
11	M52B	X	0	0	0	%100
12	M52B	Z	0	0	0	%100
13	M76	X	2.159	2.159	0	%100
14	M76	Z	-3.74	-3.74	0	%100
15	M77	X	6.597	6.597	0	%100
16	M77	Z	-11.427	-11.427	0	%100
17	M80	X	6.949	6.949	0	%100
18	M80	Z	-12.036	-12.036	0	%100
19	M84	X	2.159	2.159	0	%100
20	M84	Z	-3.74	-3.74	0	%100
21	M85	X	0	0	0	%100
22	M85	Z	0	0	0	%100
23	M91	X	0	0	0	%100
24	M91	Z	0	0	0	%100
25	M126A	X	1.279	1.279	0	%100
26	M126A	Z	-2.216	-2.216	0	%100
27	M127A	X	3.248	3.248	0	%100
28	M127A	Z	-5.625	-5.625	0	%100
29	M128A	X	3.248	3.248	0	%100
30	M128A	Z	-5.625	-5.625	0	%100
31	M129A	X	6.478	6.478	0	%100
32	M129A	Z	-11.219	-11.219	0	%100
33	M132A	X	0	0	0	%100
34	M132A	Z	0	0	0	%100
35	M133A	X	3.597	3.597	0	%100
36	M133A	Z	-6.23	-6.23	0	%100
37	M137A	X	2.159	2.159	0	%100
38	M137A	Z	-3.74	-3.74	0	%100
39	M138A	X	0	0	0	%100
40	M138A	Z	0	0	0	%100
41	M140A	X	0	0	0	%100
42	M140A	Z	0	0	0	%100
43	M142A	X	2.159	2.159	0	%100
44	M142A	Z	-3.74	-3.74	0	%100
45	M143A	X	6.597	6.597	0	%100
46	M143A	Z	-11.427	-11.427	0	%100
47	M145A	X	6.949	6.949	0	%100
48	M145A	Z	-12.036	-12.036	0	%100
49	M150A	X	5.117	5.117	0	%100
50	M150A	Z	-8.863	-8.863	0	%100
51	M151A	X	0	0	0	%100
52	M151A	Z	0	0	0	%100
53	M152A	X	0	0	0	%100
54	M152A	Z	0	0	0	%100
55	M153A	X	0	0	0	%100
56	M153A	Z	0	0	0	%100
57	M156A	X	3.597	3.597	0	%100
58	M156A	Z	-6.23	-6.23	0	%100
59	M157A	X	3.597	3.597	0	%100

Member Distributed Loads (BLC 42 : Structure Wo (30 Deg)) (Continued)

	Member Label	Direction	Start Magnitude[lb/ft,...	End Magnitude[lb/ft,F...	Start Location[in,%]	End Location[in,%]
60	M157A	Z	-6.23	-6.23	0	%100
61	M161A	X	8.637	8.637	0	%100
62	M161A	Z	-14.959	-14.959	0	%100
63	M162A	X	6.597	6.597	0	%100
64	M162A	Z	-11.427	-11.427	0	%100
65	M164A	X	6.949	6.949	0	%100
66	M164A	Z	-12.036	-12.036	0	%100
67	M166A	X	8.637	8.637	0	%100
68	M166A	Z	-14.959	-14.959	0	%100
69	M167A	X	6.597	6.597	0	%100
70	M167A	Z	-11.427	-11.427	0	%100
71	M169A	X	6.949	6.949	0	%100
72	M169A	Z	-12.036	-12.036	0	%100
73	M174A	X	3.779	3.779	0	%100
74	M174A	Z	-6.545	-6.545	0	%100
75	MP1A	X	3.419	3.419	0	%100
76	MP1A	Z	-5.921	-5.921	0	%100
77	MP2A	X	4.138	4.138	0	%100
78	MP2A	Z	-7.168	-7.168	0	%100
79	MP3A	X	3.419	3.419	0	%100
80	MP3A	Z	-5.921	-5.921	0	%100
81	MP4A	X	3.419	3.419	0	%100
82	MP4A	Z	-5.921	-5.921	0	%100
83	M183A	X	3.779	3.779	0	%100
84	M183A	Z	-6.545	-6.545	0	%100
85	MP1C	X	3.419	3.419	0	%100
86	MP1C	Z	-5.921	-5.921	0	%100
87	MP2C	X	4.138	4.138	0	%100
88	MP2C	Z	-7.168	-7.168	0	%100
89	MP3C	X	3.419	3.419	0	%100
90	MP3C	Z	-5.921	-5.921	0	%100
91	MP4C	X	3.419	3.419	0	%100
92	MP4C	Z	-5.921	-5.921	0	%100
93	M192A	X	0	0	0	%100
94	M192A	Z	0	0	0	%100
95	MP1B	X	3.419	3.419	0	%100
96	MP1B	Z	-5.921	-5.921	0	%100
97	MP2B	X	4.138	4.138	0	%100
98	MP2B	Z	-7.168	-7.168	0	%100
99	MP3B	X	3.419	3.419	0	%100
100	MP3B	Z	-5.921	-5.921	0	%100
101	MP4B	X	3.419	3.419	0	%100
102	MP4B	Z	-5.921	-5.921	0	%100
103	M101	X	2.796	2.796	0	%100
104	M101	Z	-4.842	-4.842	0	%100
105	M102	X	3.104	3.104	0	%100
106	M102	Z	-5.376	-5.376	0	%100
107	M115A	X	3.104	3.104	0	%100
108	M115A	Z	-5.376	-5.376	0	%100
109	M116A	X	0	0	0	%100
110	M116A	Z	0	0	0	%100
111	M123	X	3.667	3.667	0	%100

Member Distributed Loads (BLC 42 : Structure Wo (30 Deg)) (Continued)

	Member Label	Direction	Start Magnitude[lb/ft,...	End Magnitude[lb/ft,F...	Start Location[in,%]	End Location[in,%]
112	M123	Z	-6.351	-6.351	0	%100
113	M124	X	3.667	3.667	0	%100
114	M124	Z	-6.351	-6.351	0	%100
115	M125	X	0	0	0	%100
116	M125	Z	0	0	0	%100

Member Distributed Loads (BLC 43 : Structure Wo (60 Deg))

	Member Label	Direction	Start Magnitude[lb/ft,...	End Magnitude[lb/ft,F...	Start Location[in,%]	End Location[in,%]
1	M4	X	6.647	6.647	0	%100
2	M4	Z	-3.838	-3.838	0	%100
3	M10	X	1.875	1.875	0	%100
4	M10	Z	-1.083	-1.083	0	%100
5	M43	X	1.875	1.875	0	%100
6	M43	Z	-1.083	-1.083	0	%100
7	M46	X	3.74	3.74	0	%100
8	M46	Z	-2.159	-2.159	0	%100
9	M51B	X	8.307	8.307	0	%100
10	M51B	Z	-4.796	-4.796	0	%100
11	M52B	X	2.077	2.077	0	%100
12	M52B	Z	-1.199	-1.199	0	%100
13	M76	X	11.219	11.219	0	%100
14	M76	Z	-6.478	-6.478	0	%100
15	M77	X	15.236	15.236	0	%100
16	M77	Z	-8.797	-8.797	0	%100
17	M80	X	16.048	16.048	0	%100
18	M80	Z	-9.265	-9.265	0	%100
19	M84	X	11.219	11.219	0	%100
20	M84	Z	-6.478	-6.478	0	%100
21	M85	X	3.809	3.809	0	%100
22	M85	Z	-2.199	-2.199	0	%100
23	M91	X	4.012	4.012	0	%100
24	M91	Z	-2.316	-2.316	0	%100
25	M126A	X	0	0	0	%100
26	M126A	Z	0	0	0	%100
27	M127A	X	7.5	7.5	0	%100
28	M127A	Z	-4.33	-4.33	0	%100
29	M128A	X	7.5	7.5	0	%100
30	M128A	Z	-4.33	-4.33	0	%100
31	M129A	X	14.959	14.959	0	%100
32	M129A	Z	-8.637	-8.637	0	%100
33	M132A	X	2.077	2.077	0	%100
34	M132A	Z	-1.199	-1.199	0	%100
35	M133A	X	2.077	2.077	0	%100
36	M133A	Z	-1.199	-1.199	0	%100
37	M137A	X	0	0	0	%100
38	M137A	Z	0	0	0	%100
39	M138A	X	3.809	3.809	0	%100
40	M138A	Z	-2.199	-2.199	0	%100
41	M140A	X	4.012	4.012	0	%100
42	M140A	Z	-2.316	-2.316	0	%100
43	M142A	X	0	0	0	%100

Member Distributed Loads (BLC 43 : Structure Wo (60 Deg)) (Continued)

	Member Label	Direction	Start Magnitude[lb/ft,...	End Magnitude[lb/ft,F...	Start Location[in,%]	End Location[in,%]
44	M142A	Z	0	0	0	%100
45	M143A	X	3.809	3.809	0	%100
46	M143A	Z	-2.199	-2.199	0	%100
47	M145A	X	4.012	4.012	0	%100
48	M145A	Z	-2.316	-2.316	0	%100
49	M150A	X	6.647	6.647	0	%100
50	M150A	Z	-3.838	-3.838	0	%100
51	M151A	X	1.875	1.875	0	%100
52	M151A	Z	-1.083	-1.083	0	%100
53	M152A	X	1.875	1.875	0	%100
54	M152A	Z	-1.083	-1.083	0	%100
55	M153A	X	3.74	3.74	0	%100
56	M153A	Z	-2.159	-2.159	0	%100
57	M156A	X	2.077	2.077	0	%100
58	M156A	Z	-1.199	-1.199	0	%100
59	M157A	X	8.307	8.307	0	%100
60	M157A	Z	-4.796	-4.796	0	%100
61	M161A	X	11.219	11.219	0	%100
62	M161A	Z	-6.478	-6.478	0	%100
63	M162A	X	3.809	3.809	0	%100
64	M162A	Z	-2.199	-2.199	0	%100
65	M164A	X	4.012	4.012	0	%100
66	M164A	Z	-2.316	-2.316	0	%100
67	M166A	X	11.219	11.219	0	%100
68	M166A	Z	-6.478	-6.478	0	%100
69	M167A	X	15.236	15.236	0	%100
70	M167A	Z	-8.797	-8.797	0	%100
71	M169A	X	16.048	16.048	0	%100
72	M169A	Z	-9.265	-9.265	0	%100
73	M174A	X	2.182	2.182	0	%100
74	M174A	Z	-1.26	-1.26	0	%100
75	MP1A	X	5.921	5.921	0	%100
76	MP1A	Z	-3.419	-3.419	0	%100
77	MP2A	X	7.168	7.168	0	%100
78	MP2A	Z	-4.138	-4.138	0	%100
79	MP3A	X	5.921	5.921	0	%100
80	MP3A	Z	-3.419	-3.419	0	%100
81	MP4A	X	5.921	5.921	0	%100
82	MP4A	Z	-3.419	-3.419	0	%100
83	M183A	X	8.726	8.726	0	%100
84	M183A	Z	-5.038	-5.038	0	%100
85	MP1C	X	5.921	5.921	0	%100
86	MP1C	Z	-3.419	-3.419	0	%100
87	MP2C	X	7.168	7.168	0	%100
88	MP2C	Z	-4.138	-4.138	0	%100
89	MP3C	X	5.921	5.921	0	%100
90	MP3C	Z	-3.419	-3.419	0	%100
91	MP4C	X	5.921	5.921	0	%100
92	MP4C	Z	-3.419	-3.419	0	%100
93	M192A	X	2.182	2.182	0	%100
94	M192A	Z	-1.26	-1.26	0	%100
95	MP1B	X	5.921	5.921	0	%100

Member Distributed Loads (BLC 43 : Structure Wo (60 Deg)) (Continued)

	Member Label	Direction	Start Magnitude[lb/ft,...	End Magnitude[lb/ft,F...	Start Location[in,%]	End Location[in,%]
96	MP1B	Z	-3.419	-3.419	0	%100
97	MP2B	X	7.168	7.168	0	%100
98	MP2B	Z	-4.138	-4.138	0	%100
99	MP3B	X	5.921	5.921	0	%100
100	MP3B	Z	-3.419	-3.419	0	%100
101	MP4B	X	5.921	5.921	0	%100
102	MP4B	Z	-3.419	-3.419	0	%100
103	M101	X	4.842	4.842	0	%100
104	M101	Z	-2.796	-2.796	0	%100
105	M102	X	1.792	1.792	0	%100
106	M102	Z	-1.035	-1.035	0	%100
107	M115A	X	7.168	7.168	0	%100
108	M115A	Z	-4.138	-4.138	0	%100
109	M116A	X	1.792	1.792	0	%100
110	M116A	Z	-1.035	-1.035	0	%100
111	M123	X	8.468	8.468	0	%100
112	M123	Z	-4.889	-4.889	0	%100
113	M124	X	2.117	2.117	0	%100
114	M124	Z	-1.222	-1.222	0	%100
115	M125	X	2.117	2.117	0	%100
116	M125	Z	-1.222	-1.222	0	%100

Member Distributed Loads (BLC 44 : Structure Wo (90 Deg))

	Member Label	Direction	Start Magnitude[lb/ft,...	End Magnitude[lb/ft,F...	Start Location[in,%]	End Location[in,%]
1	M4	X	10.234	10.234	0	%100
2	M4	Z	0	0	0	%100
3	M10	X	0	0	0	%100
4	M10	Z	0	0	0	%100
5	M43	X	0	0	0	%100
6	M43	Z	0	0	0	%100
7	M46	X	0	0	0	%100
8	M46	Z	0	0	0	%100
9	M51B	X	7.194	7.194	0	%100
10	M51B	Z	0	0	0	%100
11	M52B	X	7.194	7.194	0	%100
12	M52B	Z	0	0	0	%100
13	M76	X	17.273	17.273	0	%100
14	M76	Z	0	0	0	%100
15	M77	X	13.195	13.195	0	%100
16	M77	Z	0	0	0	%100
17	M80	X	13.898	13.898	0	%100
18	M80	Z	0	0	0	%100
19	M84	X	17.273	17.273	0	%100
20	M84	Z	0	0	0	%100
21	M85	X	13.195	13.195	0	%100
22	M85	Z	0	0	0	%100
23	M91	X	13.898	13.898	0	%100
24	M91	Z	0	0	0	%100
25	M126A	X	2.559	2.559	0	%100
26	M126A	Z	0	0	0	%100
27	M127A	X	6.495	6.495	0	%100

Member Distributed Loads (BLC 44 : Structure Wo (90 Deg)) (Continued)

	Member Label	Direction	Start Magnitude[lb/ft,...	End Magnitude[lb/ft,F...	Start Location[in,%]	End Location[in,%]
28	M127A	Z	0	0	0	%100
29	M128A	X	6.495	6.495	0	%100
30	M128A	Z	0	0	0	%100
31	M129A	X	12.955	12.955	0	%100
32	M129A	Z	0	0	0	%100
33	M132A	X	7.194	7.194	0	%100
34	M132A	Z	0	0	0	%100
35	M133A	X	0	0	0	%100
36	M133A	Z	0	0	0	%100
37	M137A	X	4.318	4.318	0	%100
38	M137A	Z	0	0	0	%100
39	M138A	X	13.195	13.195	0	%100
40	M138A	Z	0	0	0	%100
41	M140A	X	13.898	13.898	0	%100
42	M140A	Z	0	0	0	%100
43	M142A	X	4.318	4.318	0	%100
44	M142A	Z	0	0	0	%100
45	M143A	X	0	0	0	%100
46	M143A	Z	0	0	0	%100
47	M145A	X	0	0	0	%100
48	M145A	Z	0	0	0	%100
49	M150A	X	2.559	2.559	0	%100
50	M150A	Z	0	0	0	%100
51	M151A	X	6.495	6.495	0	%100
52	M151A	Z	0	0	0	%100
53	M152A	X	6.495	6.495	0	%100
54	M152A	Z	0	0	0	%100
55	M153A	X	12.955	12.955	0	%100
56	M153A	Z	0	0	0	%100
57	M156A	X	0	0	0	%100
58	M156A	Z	0	0	0	%100
59	M157A	X	7.194	7.194	0	%100
60	M157A	Z	0	0	0	%100
61	M161A	X	4.318	4.318	0	%100
62	M161A	Z	0	0	0	%100
63	M162A	X	0	0	0	%100
64	M162A	Z	0	0	0	%100
65	M164A	X	0	0	0	%100
66	M164A	Z	0	0	0	%100
67	M166A	X	4.318	4.318	0	%100
68	M166A	Z	0	0	0	%100
69	M167A	X	13.195	13.195	0	%100
70	M167A	Z	0	0	0	%100
71	M169A	X	13.898	13.898	0	%100
72	M169A	Z	0	0	0	%100
73	M174A	X	0	0	0	%100
74	M174A	Z	0	0	0	%100
75	MP1A	X	6.837	6.837	0	%100
76	MP1A	Z	0	0	0	%100
77	MP2A	X	8.277	8.277	0	%100
78	MP2A	Z	0	0	0	%100
79	MP3A	X	6.837	6.837	0	%100

Member Distributed Loads (BLC 44 : Structure Wo (90 Deg)) (Continued)

	Member Label	Direction	Start Magnitude[lb/ft,...	End Magnitude[lb/ft,F...	Start Location[in,%]	End Location[in,%]
80	MP3A	Z	0	0	0	%100
81	MP4A	X	6.837	6.837	0	%100
82	MP4A	Z	0	0	0	%100
83	M183A	X	7.557	7.557	0	%100
84	M183A	Z	0	0	0	%100
85	MP1C	X	6.837	6.837	0	%100
86	MP1C	Z	0	0	0	%100
87	MP2C	X	8.277	8.277	0	%100
88	MP2C	Z	0	0	0	%100
89	MP3C	X	6.837	6.837	0	%100
90	MP3C	Z	0	0	0	%100
91	MP4C	X	6.837	6.837	0	%100
92	MP4C	Z	0	0	0	%100
93	M192A	X	7.557	7.557	0	%100
94	M192A	Z	0	0	0	%100
95	MP1B	X	6.837	6.837	0	%100
96	MP1B	Z	0	0	0	%100
97	MP2B	X	8.277	8.277	0	%100
98	MP2B	Z	0	0	0	%100
99	MP3B	X	6.837	6.837	0	%100
100	MP3B	Z	0	0	0	%100
101	MP4B	X	6.837	6.837	0	%100
102	MP4B	Z	0	0	0	%100
103	M101	X	5.591	5.591	0	%100
104	M101	Z	0	0	0	%100
105	M102	X	0	0	0	%100
106	M102	Z	0	0	0	%100
107	M115A	X	6.208	6.208	0	%100
108	M115A	Z	0	0	0	%100
109	M116A	X	6.208	6.208	0	%100
110	M116A	Z	0	0	0	%100
111	M123	X	7.333	7.333	0	%100
112	M123	Z	0	0	0	%100
113	M124	X	0	0	0	%100
114	M124	Z	0	0	0	%100
115	M125	X	7.333	7.333	0	%100
116	M125	Z	0	0	0	%100

Member Distributed Loads (BLC 45 : Structure Wo (120 Deg))

	Member Label	Direction	Start Magnitude[lb/ft,...	End Magnitude[lb/ft,F...	Start Location[in,%]	End Location[in,%]
1	M4	X	6.647	6.647	0	%100
2	M4	Z	3.838	3.838	0	%100
3	M10	X	1.875	1.875	0	%100
4	M10	Z	1.083	1.083	0	%100
5	M43	X	1.875	1.875	0	%100
6	M43	Z	1.083	1.083	0	%100
7	M46	X	3.74	3.74	0	%100
8	M46	Z	2.159	2.159	0	%100
9	M51B	X	2.077	2.077	0	%100
10	M51B	Z	1.199	1.199	0	%100
11	M52B	X	8.307	8.307	0	%100

Member Distributed Loads (BLC 45 : Structure Wo (120 Deg)) (Continued)

	Member Label	Direction	Start Magnitude[lb/ft,...	End Magnitude[lb/ft,F...	Start Location[in,%]	End Location[in,%]
12	M52B	Z	4.796	4.796	0	%100
13	M76	X	11.219	11.219	0	%100
14	M76	Z	6.478	6.478	0	%100
15	M77	X	3.809	3.809	0	%100
16	M77	Z	2.199	2.199	0	%100
17	M80	X	4.012	4.012	0	%100
18	M80	Z	2.316	2.316	0	%100
19	M84	X	11.219	11.219	0	%100
20	M84	Z	6.478	6.478	0	%100
21	M85	X	15.236	15.236	0	%100
22	M85	Z	8.797	8.797	0	%100
23	M91	X	16.048	16.048	0	%100
24	M91	Z	9.265	9.265	0	%100
25	M126A	X	6.647	6.647	0	%100
26	M126A	Z	3.838	3.838	0	%100
27	M127A	X	1.875	1.875	0	%100
28	M127A	Z	1.083	1.083	0	%100
29	M128A	X	1.875	1.875	0	%100
30	M128A	Z	1.083	1.083	0	%100
31	M129A	X	3.74	3.74	0	%100
32	M129A	Z	2.159	2.159	0	%100
33	M132A	X	8.307	8.307	0	%100
34	M132A	Z	4.796	4.796	0	%100
35	M133A	X	2.077	2.077	0	%100
36	M133A	Z	1.199	1.199	0	%100
37	M137A	X	11.219	11.219	0	%100
38	M137A	Z	6.478	6.478	0	%100
39	M138A	X	15.236	15.236	0	%100
40	M138A	Z	8.797	8.797	0	%100
41	M140A	X	16.048	16.048	0	%100
42	M140A	Z	9.265	9.265	0	%100
43	M142A	X	11.219	11.219	0	%100
44	M142A	Z	6.478	6.478	0	%100
45	M143A	X	3.809	3.809	0	%100
46	M143A	Z	2.199	2.199	0	%100
47	M145A	X	4.012	4.012	0	%100
48	M145A	Z	2.316	2.316	0	%100
49	M150A	X	0	0	0	%100
50	M150A	Z	0	0	0	%100
51	M151A	X	7.5	7.5	0	%100
52	M151A	Z	4.33	4.33	0	%100
53	M152A	X	7.5	7.5	0	%100
54	M152A	Z	4.33	4.33	0	%100
55	M153A	X	14.959	14.959	0	%100
56	M153A	Z	8.637	8.637	0	%100
57	M156A	X	2.077	2.077	0	%100
58	M156A	Z	1.199	1.199	0	%100
59	M157A	X	2.077	2.077	0	%100
60	M157A	Z	1.199	1.199	0	%100
61	M161A	X	0	0	0	%100
62	M161A	Z	0	0	0	%100
63	M162A	X	3.809	3.809	0	%100

Member Distributed Loads (BLC 45 : Structure Wo (120 Deg)) (Continued)

	Member Label	Direction	Start Magnitude[lb/ft,...	End Magnitude[lb/ft,F...	Start Location[in,%]	End Location[in,%]
64	M162A	Z	2.199	2.199	0	%100
65	M164A	X	4.012	4.012	0	%100
66	M164A	Z	2.316	2.316	0	%100
67	M166A	X	0	0	0	%100
68	M166A	Z	0	0	0	%100
69	M167A	X	3.809	3.809	0	%100
70	M167A	Z	2.199	2.199	0	%100
71	M169A	X	4.012	4.012	0	%100
72	M169A	Z	2.316	2.316	0	%100
73	M174A	X	2.182	2.182	0	%100
74	M174A	Z	1.26	1.26	0	%100
75	MP1A	X	5.921	5.921	0	%100
76	MP1A	Z	3.419	3.419	0	%100
77	MP2A	X	7.168	7.168	0	%100
78	MP2A	Z	4.138	4.138	0	%100
79	MP3A	X	5.921	5.921	0	%100
80	MP3A	Z	3.419	3.419	0	%100
81	MP4A	X	5.921	5.921	0	%100
82	MP4A	Z	3.419	3.419	0	%100
83	M183A	X	2.182	2.182	0	%100
84	M183A	Z	1.26	1.26	0	%100
85	MP1C	X	5.921	5.921	0	%100
86	MP1C	Z	3.419	3.419	0	%100
87	MP2C	X	7.168	7.168	0	%100
88	MP2C	Z	4.138	4.138	0	%100
89	MP3C	X	5.921	5.921	0	%100
90	MP3C	Z	3.419	3.419	0	%100
91	MP4C	X	5.921	5.921	0	%100
92	MP4C	Z	3.419	3.419	0	%100
93	M192A	X	8.726	8.726	0	%100
94	M192A	Z	5.038	5.038	0	%100
95	MP1B	X	5.921	5.921	0	%100
96	MP1B	Z	3.419	3.419	0	%100
97	MP2B	X	7.168	7.168	0	%100
98	MP2B	Z	4.138	4.138	0	%100
99	MP3B	X	5.921	5.921	0	%100
100	MP3B	Z	3.419	3.419	0	%100
101	MP4B	X	5.921	5.921	0	%100
102	MP4B	Z	3.419	3.419	0	%100
103	M101	X	4.842	4.842	0	%100
104	M101	Z	2.796	2.796	0	%100
105	M102	X	1.792	1.792	0	%100
106	M102	Z	1.035	1.035	0	%100
107	M115A	X	1.792	1.792	0	%100
108	M115A	Z	1.035	1.035	0	%100
109	M116A	X	7.168	7.168	0	%100
110	M116A	Z	4.138	4.138	0	%100
111	M123	X	2.117	2.117	0	%100
112	M123	Z	1.222	1.222	0	%100
113	M124	X	2.117	2.117	0	%100
114	M124	Z	1.222	1.222	0	%100
115	M125	X	8.468	8.468	0	%100

Member Distributed Loads (BLC 45 : Structure Wo (120 Deg)) (Continued)

	Member Label	Direction	Start Magnitude[lb/ft,...	End Magnitude[lb/ft,F...	Start Location[in,%]	End Location[in,%]
116	M125	Z	4.889	4.889	0	%100

Member Distributed Loads (BLC 46 : Structure Wo (150 Deg))

	Member Label	Direction	Start Magnitude[lb/ft,...	End Magnitude[lb/ft,F...	Start Location[in,%]	End Location[in,%]
1	M4	X	1.279	1.279	0	%100
2	M4	Z	2.216	2.216	0	%100
3	M10	X	3.248	3.248	0	%100
4	M10	Z	5.625	5.625	0	%100
5	M43	X	3.248	3.248	0	%100
6	M43	Z	5.625	5.625	0	%100
7	M46	X	6.478	6.478	0	%100
8	M46	Z	11.219	11.219	0	%100
9	M51B	X	0	0	0	%100
10	M51B	Z	0	0	0	%100
11	M52B	X	3.597	3.597	0	%100
12	M52B	Z	6.23	6.23	0	%100
13	M76	X	2.159	2.159	0	%100
14	M76	Z	3.74	3.74	0	%100
15	M77	X	0	0	0	%100
16	M77	Z	0	0	0	%100
17	M80	X	0	0	0	%100
18	M80	Z	0	0	0	%100
19	M84	X	2.159	2.159	0	%100
20	M84	Z	3.74	3.74	0	%100
21	M85	X	6.597	6.597	0	%100
22	M85	Z	11.427	11.427	0	%100
23	M91	X	6.949	6.949	0	%100
24	M91	Z	12.036	12.036	0	%100
25	M126A	X	5.117	5.117	0	%100
26	M126A	Z	8.863	8.863	0	%100
27	M127A	X	0	0	0	%100
28	M127A	Z	0	0	0	%100
29	M128A	X	0	0	0	%100
30	M128A	Z	0	0	0	%100
31	M129A	X	0	0	0	%100
32	M129A	Z	0	0	0	%100
33	M132A	X	3.597	3.597	0	%100
34	M132A	Z	6.23	6.23	0	%100
35	M133A	X	3.597	3.597	0	%100
36	M133A	Z	6.23	6.23	0	%100
37	M137A	X	8.637	8.637	0	%100
38	M137A	Z	14.959	14.959	0	%100
39	M138A	X	6.597	6.597	0	%100
40	M138A	Z	11.427	11.427	0	%100
41	M140A	X	6.949	6.949	0	%100
42	M140A	Z	12.036	12.036	0	%100
43	M142A	X	8.637	8.637	0	%100
44	M142A	Z	14.959	14.959	0	%100
45	M143A	X	6.597	6.597	0	%100
46	M143A	Z	11.427	11.427	0	%100
47	M145A	X	6.949	6.949	0	%100

Member Distributed Loads (BLC 46 : Structure Wo (150 Deg)) (Continued)

	Member Label	Direction	Start Magnitude[lb/ft,...	End Magnitude[lb/ft,F...	Start Location[in,%]	End Location[in,%]
48	M145A	Z	12.036	12.036	0	%100
49	M150A	X	1.279	1.279	0	%100
50	M150A	Z	2.216	2.216	0	%100
51	M151A	X	3.248	3.248	0	%100
52	M151A	Z	5.625	5.625	0	%100
53	M152A	X	3.248	3.248	0	%100
54	M152A	Z	5.625	5.625	0	%100
55	M153A	X	6.478	6.478	0	%100
56	M153A	Z	11.219	11.219	0	%100
57	M156A	X	3.597	3.597	0	%100
58	M156A	Z	6.23	6.23	0	%100
59	M157A	X	0	0	0	%100
60	M157A	Z	0	0	0	%100
61	M161A	X	2.159	2.159	0	%100
62	M161A	Z	3.74	3.74	0	%100
63	M162A	X	6.597	6.597	0	%100
64	M162A	Z	11.427	11.427	0	%100
65	M164A	X	6.949	6.949	0	%100
66	M164A	Z	12.036	12.036	0	%100
67	M166A	X	2.159	2.159	0	%100
68	M166A	Z	3.74	3.74	0	%100
69	M167A	X	0	0	0	%100
70	M167A	Z	0	0	0	%100
71	M169A	X	0	0	0	%100
72	M169A	Z	0	0	0	%100
73	M174A	X	3.779	3.779	0	%100
74	M174A	Z	6.545	6.545	0	%100
75	MP1A	X	3.419	3.419	0	%100
76	MP1A	Z	5.921	5.921	0	%100
77	MP2A	X	4.138	4.138	0	%100
78	MP2A	Z	7.168	7.168	0	%100
79	MP3A	X	3.419	3.419	0	%100
80	MP3A	Z	5.921	5.921	0	%100
81	MP4A	X	3.419	3.419	0	%100
82	MP4A	Z	5.921	5.921	0	%100
83	M183A	X	0	0	0	%100
84	M183A	Z	0	0	0	%100
85	MP1C	X	3.419	3.419	0	%100
86	MP1C	Z	5.921	5.921	0	%100
87	MP2C	X	4.138	4.138	0	%100
88	MP2C	Z	7.168	7.168	0	%100
89	MP3C	X	3.419	3.419	0	%100
90	MP3C	Z	5.921	5.921	0	%100
91	MP4C	X	3.419	3.419	0	%100
92	MP4C	Z	5.921	5.921	0	%100
93	M192A	X	3.779	3.779	0	%100
94	M192A	Z	6.545	6.545	0	%100
95	MP1B	X	3.419	3.419	0	%100
96	MP1B	Z	5.921	5.921	0	%100
97	MP2B	X	4.138	4.138	0	%100
98	MP2B	Z	7.168	7.168	0	%100
99	MP3B	X	3.419	3.419	0	%100

Member Distributed Loads (BLC 46 : Structure Wo (150 Deg)) (Continued)

	Member Label	Direction	Start Magnitude[lb/ft,...	End Magnitude[lb/ft,F...	Start Location[in,%]	End Location[in,%]
100	MP3B	Z	5.921	5.921	0	%100
101	MP4B	X	3.419	3.419	0	%100
102	MP4B	Z	5.921	5.921	0	%100
103	M101	X	2.796	2.796	0	%100
104	M101	Z	4.842	4.842	0	%100
105	M102	X	3.104	3.104	0	%100
106	M102	Z	5.376	5.376	0	%100
107	M115A	X	0	0	0	%100
108	M115A	Z	0	0	0	%100
109	M116A	X	3.104	3.104	0	%100
110	M116A	Z	5.376	5.376	0	%100
111	M123	X	0	0	0	%100
112	M123	Z	0	0	0	%100
113	M124	X	3.667	3.667	0	%100
114	M124	Z	6.351	6.351	0	%100
115	M125	X	3.667	3.667	0	%100
116	M125	Z	6.351	6.351	0	%100

Member Distributed Loads (BLC 47 : Structure Wo (180 Deg))

	Member Label	Direction	Start Magnitude[lb/ft,...	End Magnitude[lb/ft,F...	Start Location[in,%]	End Location[in,%]
1	M4	X	0	0	0	%100
2	M4	Z	0	0	0	%100
3	M10	X	0	0	0	%100
4	M10	Z	8.66	8.66	0	%100
5	M43	X	0	0	0	%100
6	M43	Z	8.66	8.66	0	%100
7	M46	X	0	0	0	%100
8	M46	Z	17.273	17.273	0	%100
9	M51B	X	0	0	0	%100
10	M51B	Z	2.398	2.398	0	%100
11	M52B	X	0	0	0	%100
12	M52B	Z	2.398	2.398	0	%100
13	M76	X	0	0	0	%100
14	M76	Z	0	0	0	%100
15	M77	X	0	0	0	%100
16	M77	Z	4.398	4.398	0	%100
17	M80	X	0	0	0	%100
18	M80	Z	4.633	4.633	0	%100
19	M84	X	0	0	0	%100
20	M84	Z	0	0	0	%100
21	M85	X	0	0	0	%100
22	M85	Z	4.398	4.398	0	%100
23	M91	X	0	0	0	%100
24	M91	Z	4.633	4.633	0	%100
25	M126A	X	0	0	0	%100
26	M126A	Z	7.676	7.676	0	%100
27	M127A	X	0	0	0	%100
28	M127A	Z	2.165	2.165	0	%100
29	M128A	X	0	0	0	%100
30	M128A	Z	2.165	2.165	0	%100
31	M129A	X	0	0	0	%100

Member Distributed Loads (BLC 47 : Structure Wo (180 Deg)) (Continued)

	Member Label	Direction	Start Magnitude[lb/ft,...	End Magnitude[lb/ft,F...	Start Location[in,%]	End Location[in,%]
32	M129A	Z	4.318	4.318	0	%100
33	M132A	X	0	0	0	%100
34	M132A	Z	2.398	2.398	0	%100
35	M133A	X	0	0	0	%100
36	M133A	Z	9.592	9.592	0	%100
37	M137A	X	0	0	0	%100
38	M137A	Z	12.955	12.955	0	%100
39	M138A	X	0	0	0	%100
40	M138A	Z	4.398	4.398	0	%100
41	M140A	X	0	0	0	%100
42	M140A	Z	4.633	4.633	0	%100
43	M142A	X	0	0	0	%100
44	M142A	Z	12.955	12.955	0	%100
45	M143A	X	0	0	0	%100
46	M143A	Z	17.593	17.593	0	%100
47	M145A	X	0	0	0	%100
48	M145A	Z	18.531	18.531	0	%100
49	M150A	X	0	0	0	%100
50	M150A	Z	7.676	7.676	0	%100
51	M151A	X	0	0	0	%100
52	M151A	Z	2.165	2.165	0	%100
53	M152A	X	0	0	0	%100
54	M152A	Z	2.165	2.165	0	%100
55	M153A	X	0	0	0	%100
56	M153A	Z	4.318	4.318	0	%100
57	M156A	X	0	0	0	%100
58	M156A	Z	9.592	9.592	0	%100
59	M157A	X	0	0	0	%100
60	M157A	Z	2.398	2.398	0	%100
61	M161A	X	0	0	0	%100
62	M161A	Z	12.955	12.955	0	%100
63	M162A	X	0	0	0	%100
64	M162A	Z	17.593	17.593	0	%100
65	M164A	X	0	0	0	%100
66	M164A	Z	18.531	18.531	0	%100
67	M166A	X	0	0	0	%100
68	M166A	Z	12.955	12.955	0	%100
69	M167A	X	0	0	0	%100
70	M167A	Z	4.398	4.398	0	%100
71	M169A	X	0	0	0	%100
72	M169A	Z	4.633	4.633	0	%100
73	M174A	X	0	0	0	%100
74	M174A	Z	10.076	10.076	0	%100
75	MP1A	X	0	0	0	%100
76	MP1A	Z	6.837	6.837	0	%100
77	MP2A	X	0	0	0	%100
78	MP2A	Z	8.277	8.277	0	%100
79	MP3A	X	0	0	0	%100
80	MP3A	Z	6.837	6.837	0	%100
81	MP4A	X	0	0	0	%100
82	MP4A	Z	6.837	6.837	0	%100
83	M183A	X	0	0	0	%100

Member Distributed Loads (BLC 47 : Structure Wo (180 Deg)) (Continued)

	Member Label	Direction	Start Magnitude[lb/ft,...	End Magnitude[lb/ft,F...	Start Location[in,%]	End Location[in,%]
84	M183A	Z	2.519	2.519	0	%100
85	MP1C	X	0	0	0	%100
86	MP1C	Z	6.837	6.837	0	%100
87	MP2C	X	0	0	0	%100
88	MP2C	Z	8.277	8.277	0	%100
89	MP3C	X	0	0	0	%100
90	MP3C	Z	6.837	6.837	0	%100
91	MP4C	X	0	0	0	%100
92	MP4C	Z	6.837	6.837	0	%100
93	M192A	X	0	0	0	%100
94	M192A	Z	2.519	2.519	0	%100
95	MP1B	X	0	0	0	%100
96	MP1B	Z	6.837	6.837	0	%100
97	MP2B	X	0	0	0	%100
98	MP2B	Z	8.277	8.277	0	%100
99	MP3B	X	0	0	0	%100
100	MP3B	Z	6.837	6.837	0	%100
101	MP4B	X	0	0	0	%100
102	MP4B	Z	6.837	6.837	0	%100
103	M101	X	0	0	0	%100
104	M101	Z	5.591	5.591	0	%100
105	M102	X	0	0	0	%100
106	M102	Z	8.277	8.277	0	%100
107	M115A	X	0	0	0	%100
108	M115A	Z	2.069	2.069	0	%100
109	M116A	X	0	0	0	%100
110	M116A	Z	2.069	2.069	0	%100
111	M123	X	0	0	0	%100
112	M123	Z	2.444	2.444	0	%100
113	M124	X	0	0	0	%100
114	M124	Z	9.778	9.778	0	%100
115	M125	X	0	0	0	%100
116	M125	Z	2.444	2.444	0	%100

Member Distributed Loads (BLC 48 : Structure Wo (210 Deg))

	Member Label	Direction	Start Magnitude[lb/ft,...	End Magnitude[lb/ft,F...	Start Location[in,%]	End Location[in,%]
1	M4	X	-1.279	-1.279	0	%100
2	M4	Z	2.216	2.216	0	%100
3	M10	X	-3.248	-3.248	0	%100
4	M10	Z	5.625	5.625	0	%100
5	M43	X	-3.248	-3.248	0	%100
6	M43	Z	5.625	5.625	0	%100
7	M46	X	-6.478	-6.478	0	%100
8	M46	Z	11.219	11.219	0	%100
9	M51B	X	-3.597	-3.597	0	%100
10	M51B	Z	6.23	6.23	0	%100
11	M52B	X	0	0	0	%100
12	M52B	Z	0	0	0	%100
13	M76	X	-2.159	-2.159	0	%100
14	M76	Z	3.74	3.74	0	%100
15	M77	X	-6.597	-6.597	0	%100

Member Distributed Loads (BLC 48 : Structure Wo (210 Deg)) (Continued)

	Member Label	Direction	Start Magnitude[lb/ft,...	End Magnitude[lb/ft,F...	Start Location[in,%]	End Location[in,%]
16	M77	Z	11.427	11.427	0	%100
17	M80	X	-6.949	-6.949	0	%100
18	M80	Z	12.036	12.036	0	%100
19	M84	X	-2.159	-2.159	0	%100
20	M84	Z	3.74	3.74	0	%100
21	M85	X	0	0	0	%100
22	M85	Z	0	0	0	%100
23	M91	X	0	0	0	%100
24	M91	Z	0	0	0	%100
25	M126A	X	-1.279	-1.279	0	%100
26	M126A	Z	2.216	2.216	0	%100
27	M127A	X	-3.248	-3.248	0	%100
28	M127A	Z	5.625	5.625	0	%100
29	M128A	X	-3.248	-3.248	0	%100
30	M128A	Z	5.625	5.625	0	%100
31	M129A	X	-6.478	-6.478	0	%100
32	M129A	Z	11.219	11.219	0	%100
33	M132A	X	0	0	0	%100
34	M132A	Z	0	0	0	%100
35	M133A	X	-3.597	-3.597	0	%100
36	M133A	Z	6.23	6.23	0	%100
37	M137A	X	-2.159	-2.159	0	%100
38	M137A	Z	3.74	3.74	0	%100
39	M138A	X	0	0	0	%100
40	M138A	Z	0	0	0	%100
41	M140A	X	0	0	0	%100
42	M140A	Z	0	0	0	%100
43	M142A	X	-2.159	-2.159	0	%100
44	M142A	Z	3.74	3.74	0	%100
45	M143A	X	-6.597	-6.597	0	%100
46	M143A	Z	11.427	11.427	0	%100
47	M145A	X	-6.949	-6.949	0	%100
48	M145A	Z	12.036	12.036	0	%100
49	M150A	X	-5.117	-5.117	0	%100
50	M150A	Z	8.863	8.863	0	%100
51	M151A	X	0	0	0	%100
52	M151A	Z	0	0	0	%100
53	M152A	X	0	0	0	%100
54	M152A	Z	0	0	0	%100
55	M153A	X	0	0	0	%100
56	M153A	Z	0	0	0	%100
57	M156A	X	-3.597	-3.597	0	%100
58	M156A	Z	6.23	6.23	0	%100
59	M157A	X	-3.597	-3.597	0	%100
60	M157A	Z	6.23	6.23	0	%100
61	M161A	X	-8.637	-8.637	0	%100
62	M161A	Z	14.959	14.959	0	%100
63	M162A	X	-6.597	-6.597	0	%100
64	M162A	Z	11.427	11.427	0	%100
65	M164A	X	-6.949	-6.949	0	%100
66	M164A	Z	12.036	12.036	0	%100
67	M166A	X	-8.637	-8.637	0	%100

Member Distributed Loads (BLC 48 : Structure Wo (210 Deg)) (Continued)

	Member Label	Direction	Start Magnitude[lb/ft,...	End Magnitude[lb/ft,F...	Start Location[in,%]	End Location[in,%]
68	M166A	Z	14.959	14.959	0	%100
69	M167A	X	-6.597	-6.597	0	%100
70	M167A	Z	11.427	11.427	0	%100
71	M169A	X	-6.949	-6.949	0	%100
72	M169A	Z	12.036	12.036	0	%100
73	M174A	X	-3.779	-3.779	0	%100
74	M174A	Z	6.545	6.545	0	%100
75	MP1A	X	-3.419	-3.419	0	%100
76	MP1A	Z	5.921	5.921	0	%100
77	MP2A	X	-4.138	-4.138	0	%100
78	MP2A	Z	7.168	7.168	0	%100
79	MP3A	X	-3.419	-3.419	0	%100
80	MP3A	Z	5.921	5.921	0	%100
81	MP4A	X	-3.419	-3.419	0	%100
82	MP4A	Z	5.921	5.921	0	%100
83	M183A	X	-3.779	-3.779	0	%100
84	M183A	Z	6.545	6.545	0	%100
85	MP1C	X	-3.419	-3.419	0	%100
86	MP1C	Z	5.921	5.921	0	%100
87	MP2C	X	-4.138	-4.138	0	%100
88	MP2C	Z	7.168	7.168	0	%100
89	MP3C	X	-3.419	-3.419	0	%100
90	MP3C	Z	5.921	5.921	0	%100
91	MP4C	X	-3.419	-3.419	0	%100
92	MP4C	Z	5.921	5.921	0	%100
93	M192A	X	0	0	0	%100
94	M192A	Z	0	0	0	%100
95	MP1B	X	-3.419	-3.419	0	%100
96	MP1B	Z	5.921	5.921	0	%100
97	MP2B	X	-4.138	-4.138	0	%100
98	MP2B	Z	7.168	7.168	0	%100
99	MP3B	X	-3.419	-3.419	0	%100
100	MP3B	Z	5.921	5.921	0	%100
101	MP4B	X	-3.419	-3.419	0	%100
102	MP4B	Z	5.921	5.921	0	%100
103	M101	X	-2.796	-2.796	0	%100
104	M101	Z	4.842	4.842	0	%100
105	M102	X	-3.104	-3.104	0	%100
106	M102	Z	5.376	5.376	0	%100
107	M115A	X	-3.104	-3.104	0	%100
108	M115A	Z	5.376	5.376	0	%100
109	M116A	X	0	0	0	%100
110	M116A	Z	0	0	0	%100
111	M123	X	-3.667	-3.667	0	%100
112	M123	Z	6.351	6.351	0	%100
113	M124	X	-3.667	-3.667	0	%100
114	M124	Z	6.351	6.351	0	%100
115	M125	X	0	0	0	%100
116	M125	Z	0	0	0	%100

Member Distributed Loads (BLC 49 : Structure Wo (240 Deg))

	Member Label	Direction	Start Magnitude[lb/ft,...	End Magnitude[lb/ft,F...	Start Location[in,%]	End Location[in,%]

Member Distributed Loads (BLC 49 : Structure Wo (240 Deg)) (Continued)

	Member Label	Direction	Start Magnitude[lb/ft,...	End Magnitude[lb/ft,F...	Start Location[in,%]	End Location[in,%]
1	M4	X	-6.647	-6.647	0	%100
2	M4	Z	3.838	3.838	0	%100
3	M10	X	-1.875	-1.875	0	%100
4	M10	Z	1.083	1.083	0	%100
5	M43	X	-1.875	-1.875	0	%100
6	M43	Z	1.083	1.083	0	%100
7	M46	X	-3.74	-3.74	0	%100
8	M46	Z	2.159	2.159	0	%100
9	M51B	X	-8.307	-8.307	0	%100
10	M51B	Z	4.796	4.796	0	%100
11	M52B	X	-2.077	-2.077	0	%100
12	M52B	Z	1.199	1.199	0	%100
13	M76	X	-11.219	-11.219	0	%100
14	M76	Z	6.478	6.478	0	%100
15	M77	X	-15.236	-15.236	0	%100
16	M77	Z	8.797	8.797	0	%100
17	M80	X	-16.048	-16.048	0	%100
18	M80	Z	9.265	9.265	0	%100
19	M84	X	-11.219	-11.219	0	%100
20	M84	Z	6.478	6.478	0	%100
21	M85	X	-3.809	-3.809	0	%100
22	M85	Z	2.199	2.199	0	%100
23	M91	X	-4.012	-4.012	0	%100
24	M91	Z	2.316	2.316	0	%100
25	M126A	X	0	0	0	%100
26	M126A	Z	0	0	0	%100
27	M127A	X	-7.5	-7.5	0	%100
28	M127A	Z	4.33	4.33	0	%100
29	M128A	X	-7.5	-7.5	0	%100
30	M128A	Z	4.33	4.33	0	%100
31	M129A	X	-14.959	-14.959	0	%100
32	M129A	Z	8.637	8.637	0	%100
33	M132A	X	-2.077	-2.077	0	%100
34	M132A	Z	1.199	1.199	0	%100
35	M133A	X	-2.077	-2.077	0	%100
36	M133A	Z	1.199	1.199	0	%100
37	M137A	X	0	0	0	%100
38	M137A	Z	0	0	0	%100
39	M138A	X	-3.809	-3.809	0	%100
40	M138A	Z	2.199	2.199	0	%100
41	M140A	X	-4.012	-4.012	0	%100
42	M140A	Z	2.316	2.316	0	%100
43	M142A	X	0	0	0	%100
44	M142A	Z	0	0	0	%100
45	M143A	X	-3.809	-3.809	0	%100
46	M143A	Z	2.199	2.199	0	%100
47	M145A	X	-4.012	-4.012	0	%100
48	M145A	Z	2.316	2.316	0	%100
49	M150A	X	-6.647	-6.647	0	%100
50	M150A	Z	3.838	3.838	0	%100
51	M151A	X	-1.875	-1.875	0	%100
52	M151A	Z	1.083	1.083	0	%100

Member Distributed Loads (BLC 49 : Structure Wo (240 Deg)) (Continued)

	Member Label	Direction	Start Magnitude[lb/ft,...	End Magnitude[lb/ft,F...	Start Location[in,%]	End Location[in,%]
53	M152A	X	-1.875	-1.875	0	%100
54	M152A	Z	1.083	1.083	0	%100
55	M153A	X	-3.74	-3.74	0	%100
56	M153A	Z	2.159	2.159	0	%100
57	M156A	X	-2.077	-2.077	0	%100
58	M156A	Z	1.199	1.199	0	%100
59	M157A	X	-8.307	-8.307	0	%100
60	M157A	Z	4.796	4.796	0	%100
61	M161A	X	-11.219	-11.219	0	%100
62	M161A	Z	6.478	6.478	0	%100
63	M162A	X	-3.809	-3.809	0	%100
64	M162A	Z	2.199	2.199	0	%100
65	M164A	X	-4.012	-4.012	0	%100
66	M164A	Z	2.316	2.316	0	%100
67	M166A	X	-11.219	-11.219	0	%100
68	M166A	Z	6.478	6.478	0	%100
69	M167A	X	-15.236	-15.236	0	%100
70	M167A	Z	8.797	8.797	0	%100
71	M169A	X	-16.048	-16.048	0	%100
72	M169A	Z	9.265	9.265	0	%100
73	M174A	X	-2.182	-2.182	0	%100
74	M174A	Z	1.26	1.26	0	%100
75	MP1A	X	-5.921	-5.921	0	%100
76	MP1A	Z	3.419	3.419	0	%100
77	MP2A	X	-7.168	-7.168	0	%100
78	MP2A	Z	4.138	4.138	0	%100
79	MP3A	X	-5.921	-5.921	0	%100
80	MP3A	Z	3.419	3.419	0	%100
81	MP4A	X	-5.921	-5.921	0	%100
82	MP4A	Z	3.419	3.419	0	%100
83	M183A	X	-8.726	-8.726	0	%100
84	M183A	Z	5.038	5.038	0	%100
85	MP1C	X	-5.921	-5.921	0	%100
86	MP1C	Z	3.419	3.419	0	%100
87	MP2C	X	-7.168	-7.168	0	%100
88	MP2C	Z	4.138	4.138	0	%100
89	MP3C	X	-5.921	-5.921	0	%100
90	MP3C	Z	3.419	3.419	0	%100
91	MP4C	X	-5.921	-5.921	0	%100
92	MP4C	Z	3.419	3.419	0	%100
93	M192A	X	-2.182	-2.182	0	%100
94	M192A	Z	1.26	1.26	0	%100
95	MP1B	X	-5.921	-5.921	0	%100
96	MP1B	Z	3.419	3.419	0	%100
97	MP2B	X	-7.168	-7.168	0	%100
98	MP2B	Z	4.138	4.138	0	%100
99	MP3B	X	-5.921	-5.921	0	%100
100	MP3B	Z	3.419	3.419	0	%100
101	MP4B	X	-5.921	-5.921	0	%100
102	MP4B	Z	3.419	3.419	0	%100
103	M101	X	-4.842	-4.842	0	%100
104	M101	Z	2.796	2.796	0	%100

Member Distributed Loads (BLC 49 : Structure Wo (240 Deg)) (Continued)

	Member Label	Direction	Start Magnitude[lb/ft,...	End Magnitude[lb/ft,F...	Start Location[in,%]	End Location[in,%]
105	M102	X	-1.792	-1.792	0	%100
106	M102	Z	1.035	1.035	0	%100
107	M115A	X	-7.168	-7.168	0	%100
108	M115A	Z	4.138	4.138	0	%100
109	M116A	X	-1.792	-1.792	0	%100
110	M116A	Z	1.035	1.035	0	%100
111	M123	X	-8.468	-8.468	0	%100
112	M123	Z	4.889	4.889	0	%100
113	M124	X	-2.117	-2.117	0	%100
114	M124	Z	1.222	1.222	0	%100
115	M125	X	-2.117	-2.117	0	%100
116	M125	Z	1.222	1.222	0	%100

Member Distributed Loads (BLC 50 : Structure Wo (270 Deg))

	Member Label	Direction	Start Magnitude[lb/ft,...	End Magnitude[lb/ft,F...	Start Location[in,%]	End Location[in,%]
1	M4	X	-10.234	-10.234	0	%100
2	M4	Z	0	0	0	%100
3	M10	X	0	0	0	%100
4	M10	Z	0	0	0	%100
5	M43	X	0	0	0	%100
6	M43	Z	0	0	0	%100
7	M46	X	0	0	0	%100
8	M46	Z	0	0	0	%100
9	M51B	X	-7.194	-7.194	0	%100
10	M51B	Z	0	0	0	%100
11	M52B	X	-7.194	-7.194	0	%100
12	M52B	Z	0	0	0	%100
13	M76	X	-17.273	-17.273	0	%100
14	M76	Z	0	0	0	%100
15	M77	X	-13.195	-13.195	0	%100
16	M77	Z	0	0	0	%100
17	M80	X	-13.898	-13.898	0	%100
18	M80	Z	0	0	0	%100
19	M84	X	-17.273	-17.273	0	%100
20	M84	Z	0	0	0	%100
21	M85	X	-13.195	-13.195	0	%100
22	M85	Z	0	0	0	%100
23	M91	X	-13.898	-13.898	0	%100
24	M91	Z	0	0	0	%100
25	M126A	X	-2.559	-2.559	0	%100
26	M126A	Z	0	0	0	%100
27	M127A	X	-6.495	-6.495	0	%100
28	M127A	Z	0	0	0	%100
29	M128A	X	-6.495	-6.495	0	%100
30	M128A	Z	0	0	0	%100
31	M129A	X	-12.955	-12.955	0	%100
32	M129A	Z	0	0	0	%100
33	M132A	X	-7.194	-7.194	0	%100
34	M132A	Z	0	0	0	%100
35	M133A	X	0	0	0	%100
36	M133A	Z	0	0	0	%100

Member Distributed Loads (BLC 50 : Structure Wo (270 Deg)) (Continued)

	Member Label	Direction	Start Magnitude[lb/ft,...	End Magnitude[lb/ft,F...	Start Location[in,%]	End Location[in,%]
37	M137A	X	-4.318	-4.318	0	%100
38	M137A	Z	0	0	0	%100
39	M138A	X	-13.195	-13.195	0	%100
40	M138A	Z	0	0	0	%100
41	M140A	X	-13.898	-13.898	0	%100
42	M140A	Z	0	0	0	%100
43	M142A	X	-4.318	-4.318	0	%100
44	M142A	Z	0	0	0	%100
45	M143A	X	0	0	0	%100
46	M143A	Z	0	0	0	%100
47	M145A	X	0	0	0	%100
48	M145A	Z	0	0	0	%100
49	M150A	X	-2.559	-2.559	0	%100
50	M150A	Z	0	0	0	%100
51	M151A	X	-6.495	-6.495	0	%100
52	M151A	Z	0	0	0	%100
53	M152A	X	-6.495	-6.495	0	%100
54	M152A	Z	0	0	0	%100
55	M153A	X	-12.955	-12.955	0	%100
56	M153A	Z	0	0	0	%100
57	M156A	X	0	0	0	%100
58	M156A	Z	0	0	0	%100
59	M157A	X	-7.194	-7.194	0	%100
60	M157A	Z	0	0	0	%100
61	M161A	X	-4.318	-4.318	0	%100
62	M161A	Z	0	0	0	%100
63	M162A	X	0	0	0	%100
64	M162A	Z	0	0	0	%100
65	M164A	X	0	0	0	%100
66	M164A	Z	0	0	0	%100
67	M166A	X	-4.318	-4.318	0	%100
68	M166A	Z	0	0	0	%100
69	M167A	X	-13.195	-13.195	0	%100
70	M167A	Z	0	0	0	%100
71	M169A	X	-13.898	-13.898	0	%100
72	M169A	Z	0	0	0	%100
73	M174A	X	0	0	0	%100
74	M174A	Z	0	0	0	%100
75	MP1A	X	-6.837	-6.837	0	%100
76	MP1A	Z	0	0	0	%100
77	MP2A	X	-8.277	-8.277	0	%100
78	MP2A	Z	0	0	0	%100
79	MP3A	X	-6.837	-6.837	0	%100
80	MP3A	Z	0	0	0	%100
81	MP4A	X	-6.837	-6.837	0	%100
82	MP4A	Z	0	0	0	%100
83	M183A	X	-7.557	-7.557	0	%100
84	M183A	Z	0	0	0	%100
85	MP1C	X	-6.837	-6.837	0	%100
86	MP1C	Z	0	0	0	%100
87	MP2C	X	-8.277	-8.277	0	%100
88	MP2C	Z	0	0	0	%100

Member Distributed Loads (BLC 50 : Structure Wo (270 Deg)) (Continued)

	Member Label	Direction	Start Magnitude[lb/ft,...	End Magnitude[lb/ft,F...	Start Location[in,%]	End Location[in,%]
89	MP3C	X	-6.837	-6.837	0	%100
90	MP3C	Z	0	0	0	%100
91	MP4C	X	-6.837	-6.837	0	%100
92	MP4C	Z	0	0	0	%100
93	M192A	X	-7.557	-7.557	0	%100
94	M192A	Z	0	0	0	%100
95	MP1B	X	-6.837	-6.837	0	%100
96	MP1B	Z	0	0	0	%100
97	MP2B	X	-8.277	-8.277	0	%100
98	MP2B	Z	0	0	0	%100
99	MP3B	X	-6.837	-6.837	0	%100
100	MP3B	Z	0	0	0	%100
101	MP4B	X	-6.837	-6.837	0	%100
102	MP4B	Z	0	0	0	%100
103	M101	X	-5.591	-5.591	0	%100
104	M101	Z	0	0	0	%100
105	M102	X	0	0	0	%100
106	M102	Z	0	0	0	%100
107	M115A	X	-6.208	-6.208	0	%100
108	M115A	Z	0	0	0	%100
109	M116A	X	-6.208	-6.208	0	%100
110	M116A	Z	0	0	0	%100
111	M123	X	-7.333	-7.333	0	%100
112	M123	Z	0	0	0	%100
113	M124	X	0	0	0	%100
114	M124	Z	0	0	0	%100
115	M125	X	-7.333	-7.333	0	%100
116	M125	Z	0	0	0	%100

Member Distributed Loads (BLC 51 : Structure Wo (300 Deg))

	Member Label	Direction	Start Magnitude[lb/ft,...	End Magnitude[lb/ft,F...	Start Location[in,%]	End Location[in,%]
1	M4	X	-6.647	-6.647	0	%100
2	M4	Z	-3.838	-3.838	0	%100
3	M10	X	-1.875	-1.875	0	%100
4	M10	Z	-1.083	-1.083	0	%100
5	M43	X	-1.875	-1.875	0	%100
6	M43	Z	-1.083	-1.083	0	%100
7	M46	X	-3.74	-3.74	0	%100
8	M46	Z	-2.159	-2.159	0	%100
9	M51B	X	-2.077	-2.077	0	%100
10	M51B	Z	-1.199	-1.199	0	%100
11	M52B	X	-8.307	-8.307	0	%100
12	M52B	Z	-4.796	-4.796	0	%100
13	M76	X	-11.219	-11.219	0	%100
14	M76	Z	-6.478	-6.478	0	%100
15	M77	X	-3.809	-3.809	0	%100
16	M77	Z	-2.199	-2.199	0	%100
17	M80	X	-4.012	-4.012	0	%100
18	M80	Z	-2.316	-2.316	0	%100
19	M84	X	-11.219	-11.219	0	%100
20	M84	Z	-6.478	-6.478	0	%100

Member Distributed Loads (BLC 51 : Structure Wo (300 Deg)) (Continued)

	Member Label	Direction	Start Magnitude[lb/ft,...	End Magnitude[lb/ft,F...	Start Location[in,%]	End Location[in,%]
21	M85	X	-15.236	-15.236	0	%100
22	M85	Z	-8.797	-8.797	0	%100
23	M91	X	-16.048	-16.048	0	%100
24	M91	Z	-9.265	-9.265	0	%100
25	M126A	X	-6.647	-6.647	0	%100
26	M126A	Z	-3.838	-3.838	0	%100
27	M127A	X	-1.875	-1.875	0	%100
28	M127A	Z	-1.083	-1.083	0	%100
29	M128A	X	-1.875	-1.875	0	%100
30	M128A	Z	-1.083	-1.083	0	%100
31	M129A	X	-3.74	-3.74	0	%100
32	M129A	Z	-2.159	-2.159	0	%100
33	M132A	X	-8.307	-8.307	0	%100
34	M132A	Z	-4.796	-4.796	0	%100
35	M133A	X	-2.077	-2.077	0	%100
36	M133A	Z	-1.199	-1.199	0	%100
37	M137A	X	-11.219	-11.219	0	%100
38	M137A	Z	-6.478	-6.478	0	%100
39	M138A	X	-15.236	-15.236	0	%100
40	M138A	Z	-8.797	-8.797	0	%100
41	M140A	X	-16.048	-16.048	0	%100
42	M140A	Z	-9.265	-9.265	0	%100
43	M142A	X	-11.219	-11.219	0	%100
44	M142A	Z	-6.478	-6.478	0	%100
45	M143A	X	-3.809	-3.809	0	%100
46	M143A	Z	-2.199	-2.199	0	%100
47	M145A	X	-4.012	-4.012	0	%100
48	M145A	Z	-2.316	-2.316	0	%100
49	M150A	X	0	0	0	%100
50	M150A	Z	0	0	0	%100
51	M151A	X	-7.5	-7.5	0	%100
52	M151A	Z	-4.33	-4.33	0	%100
53	M152A	X	-7.5	-7.5	0	%100
54	M152A	Z	-4.33	-4.33	0	%100
55	M153A	X	-14.959	-14.959	0	%100
56	M153A	Z	-8.637	-8.637	0	%100
57	M156A	X	-2.077	-2.077	0	%100
58	M156A	Z	-1.199	-1.199	0	%100
59	M157A	X	-2.077	-2.077	0	%100
60	M157A	Z	-1.199	-1.199	0	%100
61	M161A	X	0	0	0	%100
62	M161A	Z	0	0	0	%100
63	M162A	X	-3.809	-3.809	0	%100
64	M162A	Z	-2.199	-2.199	0	%100
65	M164A	X	-4.012	-4.012	0	%100
66	M164A	Z	-2.316	-2.316	0	%100
67	M166A	X	0	0	0	%100
68	M166A	Z	0	0	0	%100
69	M167A	X	-3.809	-3.809	0	%100
70	M167A	Z	-2.199	-2.199	0	%100
71	M169A	X	-4.012	-4.012	0	%100
72	M169A	Z	-2.316	-2.316	0	%100

Member Distributed Loads (BLC 51 : Structure Wo (300 Deg)) (Continued)

	Member Label	Direction	Start Magnitude[lb/ft,...	End Magnitude[lb/ft,F...	Start Location[in,%]	End Location[in,%]
73	M174A	X	-2.182	-2.182	0	%100
74	M174A	Z	-1.26	-1.26	0	%100
75	MP1A	X	-5.921	-5.921	0	%100
76	MP1A	Z	-3.419	-3.419	0	%100
77	MP2A	X	-7.168	-7.168	0	%100
78	MP2A	Z	-4.138	-4.138	0	%100
79	MP3A	X	-5.921	-5.921	0	%100
80	MP3A	Z	-3.419	-3.419	0	%100
81	MP4A	X	-5.921	-5.921	0	%100
82	MP4A	Z	-3.419	-3.419	0	%100
83	M183A	X	-2.182	-2.182	0	%100
84	M183A	Z	-1.26	-1.26	0	%100
85	MP1C	X	-5.921	-5.921	0	%100
86	MP1C	Z	-3.419	-3.419	0	%100
87	MP2C	X	-7.168	-7.168	0	%100
88	MP2C	Z	-4.138	-4.138	0	%100
89	MP3C	X	-5.921	-5.921	0	%100
90	MP3C	Z	-3.419	-3.419	0	%100
91	MP4C	X	-5.921	-5.921	0	%100
92	MP4C	Z	-3.419	-3.419	0	%100
93	M192A	X	-8.726	-8.726	0	%100
94	M192A	Z	-5.038	-5.038	0	%100
95	MP1B	X	-5.921	-5.921	0	%100
96	MP1B	Z	-3.419	-3.419	0	%100
97	MP2B	X	-7.168	-7.168	0	%100
98	MP2B	Z	-4.138	-4.138	0	%100
99	MP3B	X	-5.921	-5.921	0	%100
100	MP3B	Z	-3.419	-3.419	0	%100
101	MP4B	X	-5.921	-5.921	0	%100
102	MP4B	Z	-3.419	-3.419	0	%100
103	M101	X	-4.842	-4.842	0	%100
104	M101	Z	-2.796	-2.796	0	%100
105	M102	X	-1.792	-1.792	0	%100
106	M102	Z	-1.035	-1.035	0	%100
107	M115A	X	-1.792	-1.792	0	%100
108	M115A	Z	-1.035	-1.035	0	%100
109	M116A	X	-7.168	-7.168	0	%100
110	M116A	Z	-4.138	-4.138	0	%100
111	M123	X	-2.117	-2.117	0	%100
112	M123	Z	-1.222	-1.222	0	%100
113	M124	X	-2.117	-2.117	0	%100
114	M124	Z	-1.222	-1.222	0	%100
115	M125	X	-8.468	-8.468	0	%100
116	M125	Z	-4.889	-4.889	0	%100

Member Distributed Loads (BLC 52 : Structure Wo (330 Deg))

	Member Label	Direction	Start Magnitude[lb/ft,...	End Magnitude[lb/ft,F...	Start Location[in,%]	End Location[in,%]
1	M4	X	-1.279	-1.279	0	%100
2	M4	Z	-2.216	-2.216	0	%100
3	M10	X	-3.248	-3.248	0	%100
4	M10	Z	-5.625	-5.625	0	%100

Member Distributed Loads (BLC 52 : Structure Wo (330 Deg)) (Continued)

	Member Label	Direction	Start Magnitude[lb/ft,...	End Magnitude[lb/ft,F...	Start Location[in,%]	End Location[in,%]
5	M43	X	-3.248	-3.248	0	%100
6	M43	Z	-5.625	-5.625	0	%100
7	M46	X	-6.478	-6.478	0	%100
8	M46	Z	-11.219	-11.219	0	%100
9	M51B	X	0	0	0	%100
10	M51B	Z	0	0	0	%100
11	M52B	X	-3.597	-3.597	0	%100
12	M52B	Z	-6.23	-6.23	0	%100
13	M76	X	-2.159	-2.159	0	%100
14	M76	Z	-3.74	-3.74	0	%100
15	M77	X	0	0	0	%100
16	M77	Z	0	0	0	%100
17	M80	X	0	0	0	%100
18	M80	Z	0	0	0	%100
19	M84	X	-2.159	-2.159	0	%100
20	M84	Z	-3.74	-3.74	0	%100
21	M85	X	-6.597	-6.597	0	%100
22	M85	Z	-11.427	-11.427	0	%100
23	M91	X	-6.949	-6.949	0	%100
24	M91	Z	-12.036	-12.036	0	%100
25	M126A	X	-5.117	-5.117	0	%100
26	M126A	Z	-8.863	-8.863	0	%100
27	M127A	X	0	0	0	%100
28	M127A	Z	0	0	0	%100
29	M128A	X	0	0	0	%100
30	M128A	Z	0	0	0	%100
31	M129A	X	0	0	0	%100
32	M129A	Z	0	0	0	%100
33	M132A	X	-3.597	-3.597	0	%100
34	M132A	Z	-6.23	-6.23	0	%100
35	M133A	X	-3.597	-3.597	0	%100
36	M133A	Z	-6.23	-6.23	0	%100
37	M137A	X	-8.637	-8.637	0	%100
38	M137A	Z	-14.959	-14.959	0	%100
39	M138A	X	-6.597	-6.597	0	%100
40	M138A	Z	-11.427	-11.427	0	%100
41	M140A	X	-6.949	-6.949	0	%100
42	M140A	Z	-12.036	-12.036	0	%100
43	M142A	X	-8.637	-8.637	0	%100
44	M142A	Z	-14.959	-14.959	0	%100
45	M143A	X	-6.597	-6.597	0	%100
46	M143A	Z	-11.427	-11.427	0	%100
47	M145A	X	-6.949	-6.949	0	%100
48	M145A	Z	-12.036	-12.036	0	%100
49	M150A	X	-1.279	-1.279	0	%100
50	M150A	Z	-2.216	-2.216	0	%100
51	M151A	X	-3.248	-3.248	0	%100
52	M151A	Z	-5.625	-5.625	0	%100
53	M152A	X	-3.248	-3.248	0	%100
54	M152A	Z	-5.625	-5.625	0	%100
55	M153A	X	-6.478	-6.478	0	%100
56	M153A	Z	-11.219	-11.219	0	%100

Member Distributed Loads (BLC 52 : Structure Wo (330 Deg)) (Continued)

	Member Label	Direction	Start Magnitude[lb/ft,...	End Magnitude[lb/ft,F...	Start Location[in,%]	End Location[in,%]
57	M156A	X	-3.597	-3.597	0	%100
58	M156A	Z	-6.23	-6.23	0	%100
59	M157A	X	0	0	0	%100
60	M157A	Z	0	0	0	%100
61	M161A	X	-2.159	-2.159	0	%100
62	M161A	Z	-3.74	-3.74	0	%100
63	M162A	X	-6.597	-6.597	0	%100
64	M162A	Z	-11.427	-11.427	0	%100
65	M164A	X	-6.949	-6.949	0	%100
66	M164A	Z	-12.036	-12.036	0	%100
67	M166A	X	-2.159	-2.159	0	%100
68	M166A	Z	-3.74	-3.74	0	%100
69	M167A	X	0	0	0	%100
70	M167A	Z	0	0	0	%100
71	M169A	X	0	0	0	%100
72	M169A	Z	0	0	0	%100
73	M174A	X	-3.779	-3.779	0	%100
74	M174A	Z	-6.545	-6.545	0	%100
75	MP1A	X	-3.419	-3.419	0	%100
76	MP1A	Z	-5.921	-5.921	0	%100
77	MP2A	X	-4.138	-4.138	0	%100
78	MP2A	Z	-7.168	-7.168	0	%100
79	MP3A	X	-3.419	-3.419	0	%100
80	MP3A	Z	-5.921	-5.921	0	%100
81	MP4A	X	-3.419	-3.419	0	%100
82	MP4A	Z	-5.921	-5.921	0	%100
83	M183A	X	0	0	0	%100
84	M183A	Z	0	0	0	%100
85	MP1C	X	-3.419	-3.419	0	%100
86	MP1C	Z	-5.921	-5.921	0	%100
87	MP2C	X	-4.138	-4.138	0	%100
88	MP2C	Z	-7.168	-7.168	0	%100
89	MP3C	X	-3.419	-3.419	0	%100
90	MP3C	Z	-5.921	-5.921	0	%100
91	MP4C	X	-3.419	-3.419	0	%100
92	MP4C	Z	-5.921	-5.921	0	%100
93	M192A	X	-3.779	-3.779	0	%100
94	M192A	Z	-6.545	-6.545	0	%100
95	MP1B	X	-3.419	-3.419	0	%100
96	MP1B	Z	-5.921	-5.921	0	%100
97	MP2B	X	-4.138	-4.138	0	%100
98	MP2B	Z	-7.168	-7.168	0	%100
99	MP3B	X	-3.419	-3.419	0	%100
100	MP3B	Z	-5.921	-5.921	0	%100
101	MP4B	X	-3.419	-3.419	0	%100
102	MP4B	Z	-5.921	-5.921	0	%100
103	M101	X	-2.796	-2.796	0	%100
104	M101	Z	-4.842	-4.842	0	%100
105	M102	X	-3.104	-3.104	0	%100
106	M102	Z	-5.376	-5.376	0	%100
107	M115A	X	0	0	0	%100
108	M115A	Z	0	0	0	%100

Member Distributed Loads (BLC 52 : Structure Wo (330 Deg)) (Continued)

	Member Label	Direction	Start Magnitude[lb/ft,...	End Magnitude[lb/ft,F...	Start Location[in,%]	End Location[in,%]
109	M116A	X	-3.104	-3.104	0	%100
110	M116A	Z	-5.376	-5.376	0	%100
111	M123	X	0	0	0	%100
112	M123	Z	0	0	0	%100
113	M124	X	-3.667	-3.667	0	%100
114	M124	Z	-6.351	-6.351	0	%100
115	M125	X	-3.667	-3.667	0	%100
116	M125	Z	-6.351	-6.351	0	%100

Member Distributed Loads (BLC 53 : Structure Wi (0 Deg))

	Member Label	Direction	Start Magnitude[lb/ft,...	End Magnitude[lb/ft,F...	Start Location[in,%]	End Location[in,%]
1	M4	X	0	0	0	%100
2	M4	Z	0	0	0	%100
3	M10	X	0	0	0	%100
4	M10	Z	-1.689	-1.689	0	%100
5	M43	X	0	0	0	%100
6	M43	Z	-1.689	-1.689	0	%100
7	M46	X	0	0	0	%100
8	M46	Z	-2.643	-2.643	0	%100
9	M51B	X	0	0	0	%100
10	M51B	Z	-.486	-.486	0	%100
11	M52B	X	0	0	0	%100
12	M52B	Z	-.486	-.486	0	%100
13	M76	X	0	0	0	%100
14	M76	Z	0	0	0	%100
15	M77	X	0	0	0	%100
16	M77	Z	-.66	-.66	0	%100
17	M80	X	0	0	0	%100
18	M80	Z	-.689	-.689	0	%100
19	M84	X	0	0	0	%100
20	M84	Z	0	0	0	%100
21	M85	X	0	0	0	%100
22	M85	Z	-.66	-.66	0	%100
23	M91	X	0	0	0	%100
24	M91	Z	-.689	-.689	0	%100
25	M126A	X	0	0	0	%100
26	M126A	Z	-1.553	-1.553	0	%100
27	M127A	X	0	0	0	%100
28	M127A	Z	-.422	-.422	0	%100
29	M128A	X	0	0	0	%100
30	M128A	Z	-.422	-.422	0	%100
31	M129A	X	0	0	0	%100
32	M129A	Z	-.661	-.661	0	%100
33	M132A	X	0	0	0	%100
34	M132A	Z	-.486	-.486	0	%100
35	M133A	X	0	0	0	%100
36	M133A	Z	-1.944	-1.944	0	%100
37	M137A	X	0	0	0	%100
38	M137A	Z	-1.95	-1.95	0	%100
39	M138A	X	0	0	0	%100
40	M138A	Z	-.66	-.66	0	%100

Member Distributed Loads (BLC 53 : Structure Wi (0 Deg)) (Continued)

	Member Label	Direction	Start Magnitude[lb/ft,...	End Magnitude[lb/ft,F...	Start Location[in,%]	End Location[in,%]
41	M140A	X	0	0	0	%100
42	M140A	Z	-.689	-.689	0	%100
43	M142A	X	0	0	0	%100
44	M142A	Z	-1.95	-1.95	0	%100
45	M143A	X	0	0	0	%100
46	M143A	Z	-2.639	-2.639	0	%100
47	M145A	X	0	0	0	%100
48	M145A	Z	-2.755	-2.755	0	%100
49	M150A	X	0	0	0	%100
50	M150A	Z	-1.553	-1.553	0	%100
51	M151A	X	0	0	0	%100
52	M151A	Z	-.422	-.422	0	%100
53	M152A	X	0	0	0	%100
54	M152A	Z	-.422	-.422	0	%100
55	M153A	X	0	0	0	%100
56	M153A	Z	-.661	-.661	0	%100
57	M156A	X	0	0	0	%100
58	M156A	Z	-1.944	-1.944	0	%100
59	M157A	X	0	0	0	%100
60	M157A	Z	-.486	-.486	0	%100
61	M161A	X	0	0	0	%100
62	M161A	Z	-1.95	-1.95	0	%100
63	M162A	X	0	0	0	%100
64	M162A	Z	-2.639	-2.639	0	%100
65	M164A	X	0	0	0	%100
66	M164A	Z	-2.755	-2.755	0	%100
67	M166A	X	0	0	0	%100
68	M166A	Z	-1.95	-1.95	0	%100
69	M167A	X	0	0	0	%100
70	M167A	Z	-.66	-.66	0	%100
71	M169A	X	0	0	0	%100
72	M169A	Z	-.689	-.689	0	%100
73	M174A	X	0	0	0	%100
74	M174A	Z	-2.052	-2.052	0	%100
75	MP1A	X	0	0	0	%100
76	MP1A	Z	-1.653	-1.653	0	%100
77	MP2A	X	0	0	0	%100
78	MP2A	Z	-1.83	-1.83	0	%100
79	MP3A	X	0	0	0	%100
80	MP3A	Z	-1.653	-1.653	0	%100
81	MP4A	X	0	0	0	%100
82	MP4A	Z	-1.653	-1.653	0	%100
83	M183A	X	0	0	0	%100
84	M183A	Z	-.513	-.513	0	%100
85	MP1C	X	0	0	0	%100
86	MP1C	Z	-1.653	-1.653	0	%100
87	MP2C	X	0	0	0	%100
88	MP2C	Z	-1.83	-1.83	0	%100
89	MP3C	X	0	0	0	%100
90	MP3C	Z	-1.653	-1.653	0	%100
91	MP4C	X	0	0	0	%100
92	MP4C	Z	-1.653	-1.653	0	%100

Member Distributed Loads (BLC 53 : Structure Wi (0 Deg)) (Continued)

	Member Label	Direction	Start Magnitude[lb/ft,...	End Magnitude[lb/ft,F...	Start Location[in,%]	End Location[in,%]
93	M192A	X	0	0	0	%100
94	M192A	Z	-.513	-.513	0	%100
95	MP1B	X	0	0	0	%100
96	MP1B	Z	-1.653	-1.653	0	%100
97	MP2B	X	0	0	0	%100
98	MP2B	Z	-1.83	-1.83	0	%100
99	MP3B	X	0	0	0	%100
100	MP3B	Z	-1.653	-1.653	0	%100
101	MP4B	X	0	0	0	%100
102	MP4B	Z	-1.653	-1.653	0	%100
103	M101	X	0	0	0	%100
104	M101	Z	-1.36	-1.36	0	%100
105	M102	X	0	0	0	%100
106	M102	Z	-1.83	-1.83	0	%100
107	M115A	X	0	0	0	%100
108	M115A	Z	-.458	-.458	0	%100
109	M116A	X	0	0	0	%100
110	M116A	Z	-.458	-.458	0	%100
111	M123	X	0	0	0	%100
112	M123	Z	-.44	-.44	0	%100
113	M124	X	0	0	0	%100
114	M124	Z	-1.759	-1.759	0	%100
115	M125	X	0	0	0	%100
116	M125	Z	-.44	-.44	0	%100

Member Distributed Loads (BLC 54 : Structure Wi (30 Deg))

	Member Label	Direction	Start Magnitude[lb/ft,...	End Magnitude[lb/ft,F...	Start Location[in,%]	End Location[in,%]
1	M4	X	.259	.259	0	%100
2	M4	Z	-.448	-.448	0	%100
3	M10	X	.633	.633	0	%100
4	M10	Z	-1.097	-1.097	0	%100
5	M43	X	.633	.633	0	%100
6	M43	Z	-1.097	-1.097	0	%100
7	M46	X	.991	.991	0	%100
8	M46	Z	-1.717	-1.717	0	%100
9	M51B	X	.729	.729	0	%100
10	M51B	Z	-1.263	-1.263	0	%100
11	M52B	X	0	0	0	%100
12	M52B	Z	0	0	0	%100
13	M76	X	.325	.325	0	%100
14	M76	Z	-.563	-.563	0	%100
15	M77	X	.99	.99	0	%100
16	M77	Z	-1.714	-1.714	0	%100
17	M80	X	1.033	1.033	0	%100
18	M80	Z	-1.789	-1.789	0	%100
19	M84	X	.325	.325	0	%100
20	M84	Z	-.563	-.563	0	%100
21	M85	X	0	0	0	%100
22	M85	Z	0	0	0	%100
23	M91	X	0	0	0	%100
24	M91	Z	0	0	0	%100

Member Distributed Loads (BLC 54 : Structure Wi (30 Deg)) (Continued)

	Member Label	Direction	Start Magnitude[lb/ft,...	End Magnitude[lb/ft,F...	Start Location[in,%]	End Location[in,%]
25	M126A	X	.259	.259	0	%100
26	M126A	Z	-.448	-.448	0	%100
27	M127A	X	.633	.633	0	%100
28	M127A	Z	-1.097	-1.097	0	%100
29	M128A	X	.633	.633	0	%100
30	M128A	Z	-1.097	-1.097	0	%100
31	M129A	X	.991	.991	0	%100
32	M129A	Z	-1.717	-1.717	0	%100
33	M132A	X	0	0	0	%100
34	M132A	Z	0	0	0	%100
35	M133A	X	.729	.729	0	%100
36	M133A	Z	-1.263	-1.263	0	%100
37	M137A	X	.325	.325	0	%100
38	M137A	Z	-.563	-.563	0	%100
39	M138A	X	0	0	0	%100
40	M138A	Z	0	0	0	%100
41	M140A	X	0	0	0	%100
42	M140A	Z	0	0	0	%100
43	M142A	X	.325	.325	0	%100
44	M142A	Z	-.563	-.563	0	%100
45	M143A	X	.99	.99	0	%100
46	M143A	Z	-1.714	-1.714	0	%100
47	M145A	X	1.033	1.033	0	%100
48	M145A	Z	-1.789	-1.789	0	%100
49	M150A	X	1.036	1.036	0	%100
50	M150A	Z	-1.794	-1.794	0	%100
51	M151A	X	0	0	0	%100
52	M151A	Z	0	0	0	%100
53	M152A	X	0	0	0	%100
54	M152A	Z	0	0	0	%100
55	M153A	X	0	0	0	%100
56	M153A	Z	0	0	0	%100
57	M156A	X	.729	.729	0	%100
58	M156A	Z	-1.263	-1.263	0	%100
59	M157A	X	.729	.729	0	%100
60	M157A	Z	-1.263	-1.263	0	%100
61	M161A	X	1.3	1.3	0	%100
62	M161A	Z	-2.251	-2.251	0	%100
63	M162A	X	.99	.99	0	%100
64	M162A	Z	-1.714	-1.714	0	%100
65	M164A	X	1.033	1.033	0	%100
66	M164A	Z	-1.789	-1.789	0	%100
67	M166A	X	1.3	1.3	0	%100
68	M166A	Z	-2.251	-2.251	0	%100
69	M167A	X	.99	.99	0	%100
70	M167A	Z	-1.714	-1.714	0	%100
71	M169A	X	1.033	1.033	0	%100
72	M169A	Z	-1.789	-1.789	0	%100
73	M174A	X	.769	.769	0	%100
74	M174A	Z	-1.333	-1.333	0	%100
75	MP1A	X	.826	.826	0	%100
76	MP1A	Z	-1.431	-1.431	0	%100

Member Distributed Loads (BLC 54 : Structure Wi (30 Deg)) (Continued)

	Member Label	Direction	Start Magnitude[lb/ft,...	End Magnitude[lb/ft,F...	Start Location[in,%]	End Location[in,%]
77	MP2A	X	.915	.915	0	%100
78	MP2A	Z	-1.585	-1.585	0	%100
79	MP3A	X	.826	.826	0	%100
80	MP3A	Z	-1.431	-1.431	0	%100
81	MP4A	X	.826	.826	0	%100
82	MP4A	Z	-1.431	-1.431	0	%100
83	M183A	X	.769	.769	0	%100
84	M183A	Z	-1.333	-1.333	0	%100
85	MP1C	X	.826	.826	0	%100
86	MP1C	Z	-1.431	-1.431	0	%100
87	MP2C	X	.915	.915	0	%100
88	MP2C	Z	-1.585	-1.585	0	%100
89	MP3C	X	.826	.826	0	%100
90	MP3C	Z	-1.431	-1.431	0	%100
91	MP4C	X	.826	.826	0	%100
92	MP4C	Z	-1.431	-1.431	0	%100
93	M192A	X	0	0	0	%100
94	M192A	Z	0	0	0	%100
95	MP1B	X	.826	.826	0	%100
96	MP1B	Z	-1.431	-1.431	0	%100
97	MP2B	X	.915	.915	0	%100
98	MP2B	Z	-1.585	-1.585	0	%100
99	MP3B	X	.826	.826	0	%100
100	MP3B	Z	-1.431	-1.431	0	%100
101	MP4B	X	.826	.826	0	%100
102	MP4B	Z	-1.431	-1.431	0	%100
103	M101	X	.68	.68	0	%100
104	M101	Z	-1.178	-1.178	0	%100
105	M102	X	.686	.686	0	%100
106	M102	Z	-1.189	-1.189	0	%100
107	M115A	X	.686	.686	0	%100
108	M115A	Z	-1.189	-1.189	0	%100
109	M116A	X	0	0	0	%100
110	M116A	Z	0	0	0	%100
111	M123	X	.66	.66	0	%100
112	M123	Z	-1.142	-1.142	0	%100
113	M124	X	.66	.66	0	%100
114	M124	Z	-1.142	-1.142	0	%100
115	M125	X	0	0	0	%100
116	M125	Z	0	0	0	%100

Member Distributed Loads (BLC 55 : Structure Wi (60 Deg))

	Member Label	Direction	Start Magnitude[lb/ft,...	End Magnitude[lb/ft,F...	Start Location[in,%]	End Location[in,%]
1	M4	X	1.345	1.345	0	%100
2	M4	Z	-.777	-.777	0	%100
3	M10	X	.366	.366	0	%100
4	M10	Z	-.211	-.211	0	%100
5	M43	X	.366	.366	0	%100
6	M43	Z	-.211	-.211	0	%100
7	M46	X	.572	.572	0	%100
8	M46	Z	-.33	-.33	0	%100

Member Distributed Loads (BLC 55 : Structure Wi (60 Deg)) (Continued)

	Member Label	Direction	Start Magnitude[lb/ft,...	End Magnitude[lb/ft,F...	Start Location[in,%]	End Location[in,%]
9	M51B	X	1.684	1.684	0	%100
10	M51B	Z	-.972	-.972	0	%100
11	M52B	X	.421	.421	0	%100
12	M52B	Z	-.243	-.243	0	%100
13	M76	X	1.689	1.689	0	%100
14	M76	Z	-.975	-.975	0	%100
15	M77	X	2.286	2.286	0	%100
16	M77	Z	-1.32	-1.32	0	%100
17	M80	X	2.386	2.386	0	%100
18	M80	Z	-1.377	-1.377	0	%100
19	M84	X	1.689	1.689	0	%100
20	M84	Z	-.975	-.975	0	%100
21	M85	X	.571	.571	0	%100
22	M85	Z	-.33	-.33	0	%100
23	M91	X	.596	.596	0	%100
24	M91	Z	-.344	-.344	0	%100
25	M126A	X	0	0	0	%100
26	M126A	Z	0	0	0	%100
27	M127A	X	1.463	1.463	0	%100
28	M127A	Z	-.844	-.844	0	%100
29	M128A	X	1.463	1.463	0	%100
30	M128A	Z	-.844	-.844	0	%100
31	M129A	X	2.289	2.289	0	%100
32	M129A	Z	-1.322	-1.322	0	%100
33	M132A	X	.421	.421	0	%100
34	M132A	Z	-.243	-.243	0	%100
35	M133A	X	.421	.421	0	%100
36	M133A	Z	-.243	-.243	0	%100
37	M137A	X	0	0	0	%100
38	M137A	Z	0	0	0	%100
39	M138A	X	.571	.571	0	%100
40	M138A	Z	-.33	-.33	0	%100
41	M140A	X	.596	.596	0	%100
42	M140A	Z	-.344	-.344	0	%100
43	M142A	X	0	0	0	%100
44	M142A	Z	0	0	0	%100
45	M143A	X	.571	.571	0	%100
46	M143A	Z	-.33	-.33	0	%100
47	M145A	X	.596	.596	0	%100
48	M145A	Z	-.344	-.344	0	%100
49	M150A	X	1.345	1.345	0	%100
50	M150A	Z	-.777	-.777	0	%100
51	M151A	X	.366	.366	0	%100
52	M151A	Z	-.211	-.211	0	%100
53	M152A	X	.366	.366	0	%100
54	M152A	Z	-.211	-.211	0	%100
55	M153A	X	.572	.572	0	%100
56	M153A	Z	-.33	-.33	0	%100
57	M156A	X	.421	.421	0	%100
58	M156A	Z	-.243	-.243	0	%100
59	M157A	X	1.684	1.684	0	%100
60	M157A	Z	-.972	-.972	0	%100

Member Distributed Loads (BLC 55 : Structure Wi (60 Deg)) (Continued)

	Member Label	Direction	Start Magnitude[lb/ft,...	End Magnitude[lb/ft,F...	Start Location[in,%]	End Location[in,%]
61	M161A	X	1.689	1.689	0	%100
62	M161A	Z	-.975	-.975	0	%100
63	M162A	X	.571	.571	0	%100
64	M162A	Z	-.33	-.33	0	%100
65	M164A	X	.596	.596	0	%100
66	M164A	Z	-.344	-.344	0	%100
67	M166A	X	1.689	1.689	0	%100
68	M166A	Z	-.975	-.975	0	%100
69	M167A	X	2.286	2.286	0	%100
70	M167A	Z	-1.32	-1.32	0	%100
71	M169A	X	2.386	2.386	0	%100
72	M169A	Z	-1.377	-1.377	0	%100
73	M174A	X	.444	.444	0	%100
74	M174A	Z	-.256	-.256	0	%100
75	MP1A	X	1.431	1.431	0	%100
76	MP1A	Z	-.826	-.826	0	%100
77	MP2A	X	1.585	1.585	0	%100
78	MP2A	Z	-.915	-.915	0	%100
79	MP3A	X	1.431	1.431	0	%100
80	MP3A	Z	-.826	-.826	0	%100
81	MP4A	X	1.431	1.431	0	%100
82	MP4A	Z	-.826	-.826	0	%100
83	M183A	X	1.777	1.777	0	%100
84	M183A	Z	-1.026	-1.026	0	%100
85	MP1C	X	1.431	1.431	0	%100
86	MP1C	Z	-.826	-.826	0	%100
87	MP2C	X	1.585	1.585	0	%100
88	MP2C	Z	-.915	-.915	0	%100
89	MP3C	X	1.431	1.431	0	%100
90	MP3C	Z	-.826	-.826	0	%100
91	MP4C	X	1.431	1.431	0	%100
92	MP4C	Z	-.826	-.826	0	%100
93	M192A	X	.444	.444	0	%100
94	M192A	Z	-.256	-.256	0	%100
95	MP1B	X	1.431	1.431	0	%100
96	MP1B	Z	-.826	-.826	0	%100
97	MP2B	X	1.585	1.585	0	%100
98	MP2B	Z	-.915	-.915	0	%100
99	MP3B	X	1.431	1.431	0	%100
100	MP3B	Z	-.826	-.826	0	%100
101	MP4B	X	1.431	1.431	0	%100
102	MP4B	Z	-.826	-.826	0	%100
103	M101	X	1.178	1.178	0	%100
104	M101	Z	-.68	-.68	0	%100
105	M102	X	.396	.396	0	%100
106	M102	Z	-.229	-.229	0	%100
107	M115A	X	1.585	1.585	0	%100
108	M115A	Z	-.915	-.915	0	%100
109	M116A	X	.396	.396	0	%100
110	M116A	Z	-.229	-.229	0	%100
111	M123	X	1.523	1.523	0	%100
112	M123	Z	-.879	-.879	0	%100

Member Distributed Loads (BLC 55 : Structure Wi (60 Deg)) (Continued)

	Member Label	Direction	Start Magnitude[lb/ft,...	End Magnitude[lb/ft,F...	Start Location[in,%]	End Location[in,%]
113	M124	X	.381	.381	0	%100
114	M124	Z	-.22	-.22	0	%100
115	M125	X	.381	.381	0	%100
116	M125	Z	-.22	-.22	0	%100

Member Distributed Loads (BLC 56 : Structure Wi (90 Deg))

	Member Label	Direction	Start Magnitude[lb/ft,...	End Magnitude[lb/ft,F...	Start Location[in,%]	End Location[in,%]
1	M4	X	2.071	2.071	0	%100
2	M4	Z	0	0	0	%100
3	M10	X	0	0	0	%100
4	M10	Z	0	0	0	%100
5	M43	X	0	0	0	%100
6	M43	Z	0	0	0	%100
7	M46	X	0	0	0	%100
8	M46	Z	0	0	0	%100
9	M51B	X	1.458	1.458	0	%100
10	M51B	Z	0	0	0	%100
11	M52B	X	1.458	1.458	0	%100
12	M52B	Z	0	0	0	%100
13	M76	X	2.6	2.6	0	%100
14	M76	Z	0	0	0	%100
15	M77	X	1.979	1.979	0	%100
16	M77	Z	0	0	0	%100
17	M80	X	2.066	2.066	0	%100
18	M80	Z	0	0	0	%100
19	M84	X	2.6	2.6	0	%100
20	M84	Z	0	0	0	%100
21	M85	X	1.979	1.979	0	%100
22	M85	Z	0	0	0	%100
23	M91	X	2.066	2.066	0	%100
24	M91	Z	0	0	0	%100
25	M126A	X	.518	.518	0	%100
26	M126A	Z	0	0	0	%100
27	M127A	X	1.267	1.267	0	%100
28	M127A	Z	0	0	0	%100
29	M128A	X	1.267	1.267	0	%100
30	M128A	Z	0	0	0	%100
31	M129A	X	1.983	1.983	0	%100
32	M129A	Z	0	0	0	%100
33	M132A	X	1.458	1.458	0	%100
34	M132A	Z	0	0	0	%100
35	M133A	X	0	0	0	%100
36	M133A	Z	0	0	0	%100
37	M137A	X	.65	.65	0	%100
38	M137A	Z	0	0	0	%100
39	M138A	X	1.979	1.979	0	%100
40	M138A	Z	0	0	0	%100
41	M140A	X	2.066	2.066	0	%100
42	M140A	Z	0	0	0	%100
43	M142A	X	.65	.65	0	%100
44	M142A	Z	0	0	0	%100

Member Distributed Loads (BLC 56 : Structure Wi (90 Deg)) (Continued)

	Member Label	Direction	Start Magnitude[lb/ft,...	End Magnitude[lb/ft,F...	Start Location[in,%]	End Location[in,%]
45	M143A	X	0	0	0	%100
46	M143A	Z	0	0	0	%100
47	M145A	X	0	0	0	%100
48	M145A	Z	0	0	0	%100
49	M150A	X	.518	.518	0	%100
50	M150A	Z	0	0	0	%100
51	M151A	X	1.267	1.267	0	%100
52	M151A	Z	0	0	0	%100
53	M152A	X	1.267	1.267	0	%100
54	M152A	Z	0	0	0	%100
55	M153A	X	1.983	1.983	0	%100
56	M153A	Z	0	0	0	%100
57	M156A	X	0	0	0	%100
58	M156A	Z	0	0	0	%100
59	M157A	X	1.458	1.458	0	%100
60	M157A	Z	0	0	0	%100
61	M161A	X	.65	.65	0	%100
62	M161A	Z	0	0	0	%100
63	M162A	X	0	0	0	%100
64	M162A	Z	0	0	0	%100
65	M164A	X	0	0	0	%100
66	M164A	Z	0	0	0	%100
67	M166A	X	.65	.65	0	%100
68	M166A	Z	0	0	0	%100
69	M167A	X	1.979	1.979	0	%100
70	M167A	Z	0	0	0	%100
71	M169A	X	2.066	2.066	0	%100
72	M169A	Z	0	0	0	%100
73	M174A	X	0	0	0	%100
74	M174A	Z	0	0	0	%100
75	MP1A	X	1.653	1.653	0	%100
76	MP1A	Z	0	0	0	%100
77	MP2A	X	1.83	1.83	0	%100
78	MP2A	Z	0	0	0	%100
79	MP3A	X	1.653	1.653	0	%100
80	MP3A	Z	0	0	0	%100
81	MP4A	X	1.653	1.653	0	%100
82	MP4A	Z	0	0	0	%100
83	M183A	X	1.539	1.539	0	%100
84	M183A	Z	0	0	0	%100
85	MP1C	X	1.653	1.653	0	%100
86	MP1C	Z	0	0	0	%100
87	MP2C	X	1.83	1.83	0	%100
88	MP2C	Z	0	0	0	%100
89	MP3C	X	1.653	1.653	0	%100
90	MP3C	Z	0	0	0	%100
91	MP4C	X	1.653	1.653	0	%100
92	MP4C	Z	0	0	0	%100
93	M192A	X	1.539	1.539	0	%100
94	M192A	Z	0	0	0	%100
95	MP1B	X	1.653	1.653	0	%100
96	MP1B	Z	0	0	0	%100

Member Distributed Loads (BLC 56 : Structure Wi (90 Deg)) (Continued)

	Member Label	Direction	Start Magnitude[lb/ft,...	End Magnitude[lb/ft,F...	Start Location[in,%]	End Location[in,%]
97	MP2B	X	1.83	1.83	0	%100
98	MP2B	Z	0	0	0	%100
99	MP3B	X	1.653	1.653	0	%100
100	MP3B	Z	0	0	0	%100
101	MP4B	X	1.653	1.653	0	%100
102	MP4B	Z	0	0	0	%100
103	M101	X	1.36	1.36	0	%100
104	M101	Z	0	0	0	%100
105	M102	X	0	0	0	%100
106	M102	Z	0	0	0	%100
107	M115A	X	1.373	1.373	0	%100
108	M115A	Z	0	0	0	%100
109	M116A	X	1.373	1.373	0	%100
110	M116A	Z	0	0	0	%100
111	M123	X	1.319	1.319	0	%100
112	M123	Z	0	0	0	%100
113	M124	X	0	0	0	%100
114	M124	Z	0	0	0	%100
115	M125	X	1.319	1.319	0	%100
116	M125	Z	0	0	0	%100

Member Distributed Loads (BLC 57 : Structure Wi (120 Deg))

	Member Label	Direction	Start Magnitude[lb/ft,...	End Magnitude[lb/ft,F...	Start Location[in,%]	End Location[in,%]
1	M4	X	1.345	1.345	0	%100
2	M4	Z	.777	.777	0	%100
3	M10	X	.366	.366	0	%100
4	M10	Z	.211	.211	0	%100
5	M43	X	.366	.366	0	%100
6	M43	Z	.211	.211	0	%100
7	M46	X	.572	.572	0	%100
8	M46	Z	.33	.33	0	%100
9	M51B	X	.421	.421	0	%100
10	M51B	Z	.243	.243	0	%100
11	M52B	X	1.684	1.684	0	%100
12	M52B	Z	.972	.972	0	%100
13	M76	X	1.689	1.689	0	%100
14	M76	Z	.975	.975	0	%100
15	M77	X	.571	.571	0	%100
16	M77	Z	.33	.33	0	%100
17	M80	X	.596	.596	0	%100
18	M80	Z	.344	.344	0	%100
19	M84	X	1.689	1.689	0	%100
20	M84	Z	.975	.975	0	%100
21	M85	X	2.286	2.286	0	%100
22	M85	Z	1.32	1.32	0	%100
23	M91	X	2.386	2.386	0	%100
24	M91	Z	1.377	1.377	0	%100
25	M126A	X	1.345	1.345	0	%100
26	M126A	Z	.777	.777	0	%100
27	M127A	X	.366	.366	0	%100
28	M127A	Z	.211	.211	0	%100

Member Distributed Loads (BLC 57 : Structure Wi (120 Deg)) (Continued)

	Member Label	Direction	Start Magnitude[lb/ft,...	End Magnitude[lb/ft,F...	Start Location[in,%]	End Location[in,%]
29	M128A	X	.366	.366	0	%100
30	M128A	Z	.211	.211	0	%100
31	M129A	X	.572	.572	0	%100
32	M129A	Z	.33	.33	0	%100
33	M132A	X	1.684	1.684	0	%100
34	M132A	Z	.972	.972	0	%100
35	M133A	X	.421	.421	0	%100
36	M133A	Z	.243	.243	0	%100
37	M137A	X	1.689	1.689	0	%100
38	M137A	Z	.975	.975	0	%100
39	M138A	X	2.286	2.286	0	%100
40	M138A	Z	1.32	1.32	0	%100
41	M140A	X	2.386	2.386	0	%100
42	M140A	Z	1.377	1.377	0	%100
43	M142A	X	1.689	1.689	0	%100
44	M142A	Z	.975	.975	0	%100
45	M143A	X	.571	.571	0	%100
46	M143A	Z	.33	.33	0	%100
47	M145A	X	.596	.596	0	%100
48	M145A	Z	.344	.344	0	%100
49	M150A	X	0	0	0	%100
50	M150A	Z	0	0	0	%100
51	M151A	X	1.463	1.463	0	%100
52	M151A	Z	.844	.844	0	%100
53	M152A	X	1.463	1.463	0	%100
54	M152A	Z	.844	.844	0	%100
55	M153A	X	2.289	2.289	0	%100
56	M153A	Z	1.322	1.322	0	%100
57	M156A	X	.421	.421	0	%100
58	M156A	Z	.243	.243	0	%100
59	M157A	X	.421	.421	0	%100
60	M157A	Z	.243	.243	0	%100
61	M161A	X	0	0	0	%100
62	M161A	Z	0	0	0	%100
63	M162A	X	.571	.571	0	%100
64	M162A	Z	.33	.33	0	%100
65	M164A	X	.596	.596	0	%100
66	M164A	Z	.344	.344	0	%100
67	M166A	X	0	0	0	%100
68	M166A	Z	0	0	0	%100
69	M167A	X	.571	.571	0	%100
70	M167A	Z	.33	.33	0	%100
71	M169A	X	.596	.596	0	%100
72	M169A	Z	.344	.344	0	%100
73	M174A	X	.444	.444	0	%100
74	M174A	Z	.256	.256	0	%100
75	MP1A	X	1.431	1.431	0	%100
76	MP1A	Z	.826	.826	0	%100
77	MP2A	X	1.585	1.585	0	%100
78	MP2A	Z	.915	.915	0	%100
79	MP3A	X	1.431	1.431	0	%100
80	MP3A	Z	.826	.826	0	%100

Member Distributed Loads (BLC 57 : Structure Wi (120 Deg)) (Continued)

	Member Label	Direction	Start Magnitude[lb/ft,...	End Magnitude[lb/ft,F...	Start Location[in,%]	End Location[in,%]
81	MP4A	X	1.431	1.431	0	%100
82	MP4A	Z	.826	.826	0	%100
83	M183A	X	.444	.444	0	%100
84	M183A	Z	.256	.256	0	%100
85	MP1C	X	1.431	1.431	0	%100
86	MP1C	Z	.826	.826	0	%100
87	MP2C	X	1.585	1.585	0	%100
88	MP2C	Z	.915	.915	0	%100
89	MP3C	X	1.431	1.431	0	%100
90	MP3C	Z	.826	.826	0	%100
91	MP4C	X	1.431	1.431	0	%100
92	MP4C	Z	.826	.826	0	%100
93	M192A	X	1.777	1.777	0	%100
94	M192A	Z	1.026	1.026	0	%100
95	MP1B	X	1.431	1.431	0	%100
96	MP1B	Z	.826	.826	0	%100
97	MP2B	X	1.585	1.585	0	%100
98	MP2B	Z	.915	.915	0	%100
99	MP3B	X	1.431	1.431	0	%100
100	MP3B	Z	.826	.826	0	%100
101	MP4B	X	1.431	1.431	0	%100
102	MP4B	Z	.826	.826	0	%100
103	M101	X	1.178	1.178	0	%100
104	M101	Z	.68	.68	0	%100
105	M102	X	.396	.396	0	%100
106	M102	Z	.229	.229	0	%100
107	M115A	X	.396	.396	0	%100
108	M115A	Z	.229	.229	0	%100
109	M116A	X	1.585	1.585	0	%100
110	M116A	Z	.915	.915	0	%100
111	M123	X	.381	.381	0	%100
112	M123	Z	.22	.22	0	%100
113	M124	X	.381	.381	0	%100
114	M124	Z	.22	.22	0	%100
115	M125	X	1.523	1.523	0	%100
116	M125	Z	.879	.879	0	%100

Member Distributed Loads (BLC 58 : Structure Wi (150 Deg))

	Member Label	Direction	Start Magnitude[lb/ft,...	End Magnitude[lb/ft,F...	Start Location[in,%]	End Location[in,%]
1	M4	X	.259	.259	0	%100
2	M4	Z	.448	.448	0	%100
3	M10	X	.633	.633	0	%100
4	M10	Z	1.097	1.097	0	%100
5	M43	X	.633	.633	0	%100
6	M43	Z	1.097	1.097	0	%100
7	M46	X	.991	.991	0	%100
8	M46	Z	1.717	1.717	0	%100
9	M51B	X	0	0	0	%100
10	M51B	Z	0	0	0	%100
11	M52B	X	.729	.729	0	%100
12	M52B	Z	1.263	1.263	0	%100

Member Distributed Loads (BLC 58 : Structure Wi (150 Deg)) (Continued)

	Member Label	Direction	Start Magnitude[lb/ft,...	End Magnitude[lb/ft,F...	Start Location[in,%]	End Location[in,%]
13	M76	X	.325	.325	0	%100
14	M76	Z	.563	.563	0	%100
15	M77	X	0	0	0	%100
16	M77	Z	0	0	0	%100
17	M80	X	0	0	0	%100
18	M80	Z	0	0	0	%100
19	M84	X	.325	.325	0	%100
20	M84	Z	.563	.563	0	%100
21	M85	X	.99	.99	0	%100
22	M85	Z	1.714	1.714	0	%100
23	M91	X	1.033	1.033	0	%100
24	M91	Z	1.789	1.789	0	%100
25	M126A	X	1.036	1.036	0	%100
26	M126A	Z	1.794	1.794	0	%100
27	M127A	X	0	0	0	%100
28	M127A	Z	0	0	0	%100
29	M128A	X	0	0	0	%100
30	M128A	Z	0	0	0	%100
31	M129A	X	0	0	0	%100
32	M129A	Z	0	0	0	%100
33	M132A	X	.729	.729	0	%100
34	M132A	Z	1.263	1.263	0	%100
35	M133A	X	.729	.729	0	%100
36	M133A	Z	1.263	1.263	0	%100
37	M137A	X	1.3	1.3	0	%100
38	M137A	Z	2.251	2.251	0	%100
39	M138A	X	.99	.99	0	%100
40	M138A	Z	1.714	1.714	0	%100
41	M140A	X	1.033	1.033	0	%100
42	M140A	Z	1.789	1.789	0	%100
43	M142A	X	1.3	1.3	0	%100
44	M142A	Z	2.251	2.251	0	%100
45	M143A	X	.99	.99	0	%100
46	M143A	Z	1.714	1.714	0	%100
47	M145A	X	1.033	1.033	0	%100
48	M145A	Z	1.789	1.789	0	%100
49	M150A	X	.259	.259	0	%100
50	M150A	Z	.448	.448	0	%100
51	M151A	X	.633	.633	0	%100
52	M151A	Z	1.097	1.097	0	%100
53	M152A	X	.633	.633	0	%100
54	M152A	Z	1.097	1.097	0	%100
55	M153A	X	.991	.991	0	%100
56	M153A	Z	1.717	1.717	0	%100
57	M156A	X	.729	.729	0	%100
58	M156A	Z	1.263	1.263	0	%100
59	M157A	X	0	0	0	%100
60	M157A	Z	0	0	0	%100
61	M161A	X	.325	.325	0	%100
62	M161A	Z	.563	.563	0	%100
63	M162A	X	.99	.99	0	%100
64	M162A	Z	1.714	1.714	0	%100

Member Distributed Loads (BLC 58 : Structure Wi (150 Deg)) (Continued)

	Member Label	Direction	Start Magnitude[lb/ft,...	End Magnitude[lb/ft,F...	Start Location[in,%]	End Location[in,%]
65	M164A	X	1.033	1.033	0	%100
66	M164A	Z	1.789	1.789	0	%100
67	M166A	X	.325	.325	0	%100
68	M166A	Z	.563	.563	0	%100
69	M167A	X	0	0	0	%100
70	M167A	Z	0	0	0	%100
71	M169A	X	0	0	0	%100
72	M169A	Z	0	0	0	%100
73	M174A	X	.769	.769	0	%100
74	M174A	Z	1.333	1.333	0	%100
75	MP1A	X	.826	.826	0	%100
76	MP1A	Z	1.431	1.431	0	%100
77	MP2A	X	.915	.915	0	%100
78	MP2A	Z	1.585	1.585	0	%100
79	MP3A	X	.826	.826	0	%100
80	MP3A	Z	1.431	1.431	0	%100
81	MP4A	X	.826	.826	0	%100
82	MP4A	Z	1.431	1.431	0	%100
83	M183A	X	0	0	0	%100
84	M183A	Z	0	0	0	%100
85	MP1C	X	.826	.826	0	%100
86	MP1C	Z	1.431	1.431	0	%100
87	MP2C	X	.915	.915	0	%100
88	MP2C	Z	1.585	1.585	0	%100
89	MP3C	X	.826	.826	0	%100
90	MP3C	Z	1.431	1.431	0	%100
91	MP4C	X	.826	.826	0	%100
92	MP4C	Z	1.431	1.431	0	%100
93	M192A	X	.769	.769	0	%100
94	M192A	Z	1.333	1.333	0	%100
95	MP1B	X	.826	.826	0	%100
96	MP1B	Z	1.431	1.431	0	%100
97	MP2B	X	.915	.915	0	%100
98	MP2B	Z	1.585	1.585	0	%100
99	MP3B	X	.826	.826	0	%100
100	MP3B	Z	1.431	1.431	0	%100
101	MP4B	X	.826	.826	0	%100
102	MP4B	Z	1.431	1.431	0	%100
103	M101	X	.68	.68	0	%100
104	M101	Z	1.178	1.178	0	%100
105	M102	X	.686	.686	0	%100
106	M102	Z	1.189	1.189	0	%100
107	M115A	X	0	0	0	%100
108	M115A	Z	0	0	0	%100
109	M116A	X	.686	.686	0	%100
110	M116A	Z	1.189	1.189	0	%100
111	M123	X	0	0	0	%100
112	M123	Z	0	0	0	%100
113	M124	X	.66	.66	0	%100
114	M124	Z	1.142	1.142	0	%100
115	M125	X	.66	.66	0	%100
116	M125	Z	1.142	1.142	0	%100

Member Distributed Loads (BLC 59 : Structure Wi (180 Deg))

	Member Label	Direction	Start Magnitude[lb/ft,...	End Magnitude[lb/ft,F...	Start Location[in,%]	End Location[in,%]
1	M4	X	0	0	0	%100
2	M4	Z	0	0	0	%100
3	M10	X	0	0	0	%100
4	M10	Z	1.689	1.689	0	%100
5	M43	X	0	0	0	%100
6	M43	Z	1.689	1.689	0	%100
7	M46	X	0	0	0	%100
8	M46	Z	2.643	2.643	0	%100
9	M51B	X	0	0	0	%100
10	M51B	Z	.486	.486	0	%100
11	M52B	X	0	0	0	%100
12	M52B	Z	.486	.486	0	%100
13	M76	X	0	0	0	%100
14	M76	Z	0	0	0	%100
15	M77	X	0	0	0	%100
16	M77	Z	.66	.66	0	%100
17	M80	X	0	0	0	%100
18	M80	Z	.689	.689	0	%100
19	M84	X	0	0	0	%100
20	M84	Z	0	0	0	%100
21	M85	X	0	0	0	%100
22	M85	Z	.66	.66	0	%100
23	M91	X	0	0	0	%100
24	M91	Z	.689	.689	0	%100
25	M126A	X	0	0	0	%100
26	M126A	Z	1.553	1.553	0	%100
27	M127A	X	0	0	0	%100
28	M127A	Z	.422	.422	0	%100
29	M128A	X	0	0	0	%100
30	M128A	Z	.422	.422	0	%100
31	M129A	X	0	0	0	%100
32	M129A	Z	.661	.661	0	%100
33	M132A	X	0	0	0	%100
34	M132A	Z	.486	.486	0	%100
35	M133A	X	0	0	0	%100
36	M133A	Z	1.944	1.944	0	%100
37	M137A	X	0	0	0	%100
38	M137A	Z	1.95	1.95	0	%100
39	M138A	X	0	0	0	%100
40	M138A	Z	.66	.66	0	%100
41	M140A	X	0	0	0	%100
42	M140A	Z	.689	.689	0	%100
43	M142A	X	0	0	0	%100
44	M142A	Z	1.95	1.95	0	%100
45	M143A	X	0	0	0	%100
46	M143A	Z	2.639	2.639	0	%100
47	M145A	X	0	0	0	%100
48	M145A	Z	2.755	2.755	0	%100
49	M150A	X	0	0	0	%100
50	M150A	Z	1.553	1.553	0	%100
51	M151A	X	0	0	0	%100
52	M151A	Z	.422	.422	0	%100

Member Distributed Loads (BLC 59 : Structure Wi (180 Deg)) (Continued)

	Member Label	Direction	Start Magnitude[lb/ft,...	End Magnitude[lb/ft,F...	Start Location[in,%]	End Location[in,%]
53	M152A	X	0	0	0	%100
54	M152A	Z	.422	.422	0	%100
55	M153A	X	0	0	0	%100
56	M153A	Z	.661	.661	0	%100
57	M156A	X	0	0	0	%100
58	M156A	Z	1.944	1.944	0	%100
59	M157A	X	0	0	0	%100
60	M157A	Z	.486	.486	0	%100
61	M161A	X	0	0	0	%100
62	M161A	Z	1.95	1.95	0	%100
63	M162A	X	0	0	0	%100
64	M162A	Z	2.639	2.639	0	%100
65	M164A	X	0	0	0	%100
66	M164A	Z	2.755	2.755	0	%100
67	M166A	X	0	0	0	%100
68	M166A	Z	1.95	1.95	0	%100
69	M167A	X	0	0	0	%100
70	M167A	Z	.66	.66	0	%100
71	M169A	X	0	0	0	%100
72	M169A	Z	.689	.689	0	%100
73	M174A	X	0	0	0	%100
74	M174A	Z	2.052	2.052	0	%100
75	MP1A	X	0	0	0	%100
76	MP1A	Z	1.653	1.653	0	%100
77	MP2A	X	0	0	0	%100
78	MP2A	Z	1.83	1.83	0	%100
79	MP3A	X	0	0	0	%100
80	MP3A	Z	1.653	1.653	0	%100
81	MP4A	X	0	0	0	%100
82	MP4A	Z	1.653	1.653	0	%100
83	M183A	X	0	0	0	%100
84	M183A	Z	.513	.513	0	%100
85	MP1C	X	0	0	0	%100
86	MP1C	Z	1.653	1.653	0	%100
87	MP2C	X	0	0	0	%100
88	MP2C	Z	1.83	1.83	0	%100
89	MP3C	X	0	0	0	%100
90	MP3C	Z	1.653	1.653	0	%100
91	MP4C	X	0	0	0	%100
92	MP4C	Z	1.653	1.653	0	%100
93	M192A	X	0	0	0	%100
94	M192A	Z	.513	.513	0	%100
95	MP1B	X	0	0	0	%100
96	MP1B	Z	1.653	1.653	0	%100
97	MP2B	X	0	0	0	%100
98	MP2B	Z	1.83	1.83	0	%100
99	MP3B	X	0	0	0	%100
100	MP3B	Z	1.653	1.653	0	%100
101	MP4B	X	0	0	0	%100
102	MP4B	Z	1.653	1.653	0	%100
103	M101	X	0	0	0	%100
104	M101	Z	1.36	1.36	0	%100

Member Distributed Loads (BLC 59 : Structure Wi (180 Deg)) (Continued)

	Member Label	Direction	Start Magnitude[lb/ft,...	End Magnitude[lb/ft,F...	Start Location[in,%]	End Location[in,%]
105	M102	X	0	0	0	%100
106	M102	Z	1.83	1.83	0	%100
107	M115A	X	0	0	0	%100
108	M115A	Z	.458	.458	0	%100
109	M116A	X	0	0	0	%100
110	M116A	Z	.458	.458	0	%100
111	M123	X	0	0	0	%100
112	M123	Z	.44	.44	0	%100
113	M124	X	0	0	0	%100
114	M124	Z	1.759	1.759	0	%100
115	M125	X	0	0	0	%100
116	M125	Z	.44	.44	0	%100

Member Distributed Loads (BLC 60 : Structure Wi (210 Deg))

	Member Label	Direction	Start Magnitude[lb/ft,...	End Magnitude[lb/ft,F...	Start Location[in,%]	End Location[in,%]
1	M4	X	-.259	-.259	0	%100
2	M4	Z	.448	.448	0	%100
3	M10	X	-.633	-.633	0	%100
4	M10	Z	1.097	1.097	0	%100
5	M43	X	-.633	-.633	0	%100
6	M43	Z	1.097	1.097	0	%100
7	M46	X	-.991	-.991	0	%100
8	M46	Z	1.717	1.717	0	%100
9	M51B	X	-.729	-.729	0	%100
10	M51B	Z	1.263	1.263	0	%100
11	M52B	X	0	0	0	%100
12	M52B	Z	0	0	0	%100
13	M76	X	-.325	-.325	0	%100
14	M76	Z	.563	.563	0	%100
15	M77	X	-.99	-.99	0	%100
16	M77	Z	1.714	1.714	0	%100
17	M80	X	-1.033	-1.033	0	%100
18	M80	Z	1.789	1.789	0	%100
19	M84	X	-.325	-.325	0	%100
20	M84	Z	.563	.563	0	%100
21	M85	X	0	0	0	%100
22	M85	Z	0	0	0	%100
23	M91	X	0	0	0	%100
24	M91	Z	0	0	0	%100
25	M126A	X	-.259	-.259	0	%100
26	M126A	Z	.448	.448	0	%100
27	M127A	X	-.633	-.633	0	%100
28	M127A	Z	1.097	1.097	0	%100
29	M128A	X	-.633	-.633	0	%100
30	M128A	Z	1.097	1.097	0	%100
31	M129A	X	-.991	-.991	0	%100
32	M129A	Z	1.717	1.717	0	%100
33	M132A	X	0	0	0	%100
34	M132A	Z	0	0	0	%100
35	M133A	X	-.729	-.729	0	%100
36	M133A	Z	1.263	1.263	0	%100

Member Distributed Loads (BLC 60 : Structure Wi (210 Deg)) (Continued)

	Member Label	Direction	Start Magnitude[lb/ft,...	End Magnitude[lb/ft,F...	Start Location[in,%]	End Location[in,%]
37	M137A	X	-.325	-.325	0	%100
38	M137A	Z	.563	.563	0	%100
39	M138A	X	0	0	0	%100
40	M138A	Z	0	0	0	%100
41	M140A	X	0	0	0	%100
42	M140A	Z	0	0	0	%100
43	M142A	X	-.325	-.325	0	%100
44	M142A	Z	.563	.563	0	%100
45	M143A	X	-.99	-.99	0	%100
46	M143A	Z	1.714	1.714	0	%100
47	M145A	X	-1.033	-1.033	0	%100
48	M145A	Z	1.789	1.789	0	%100
49	M150A	X	-1.036	-1.036	0	%100
50	M150A	Z	1.794	1.794	0	%100
51	M151A	X	0	0	0	%100
52	M151A	Z	0	0	0	%100
53	M152A	X	0	0	0	%100
54	M152A	Z	0	0	0	%100
55	M153A	X	0	0	0	%100
56	M153A	Z	0	0	0	%100
57	M156A	X	-.729	-.729	0	%100
58	M156A	Z	1.263	1.263	0	%100
59	M157A	X	-.729	-.729	0	%100
60	M157A	Z	1.263	1.263	0	%100
61	M161A	X	-1.3	-1.3	0	%100
62	M161A	Z	2.251	2.251	0	%100
63	M162A	X	-.99	-.99	0	%100
64	M162A	Z	1.714	1.714	0	%100
65	M164A	X	-1.033	-1.033	0	%100
66	M164A	Z	1.789	1.789	0	%100
67	M166A	X	-1.3	-1.3	0	%100
68	M166A	Z	2.251	2.251	0	%100
69	M167A	X	-.99	-.99	0	%100
70	M167A	Z	1.714	1.714	0	%100
71	M169A	X	-1.033	-1.033	0	%100
72	M169A	Z	1.789	1.789	0	%100
73	M174A	X	-.769	-.769	0	%100
74	M174A	Z	1.333	1.333	0	%100
75	MP1A	X	-.826	-.826	0	%100
76	MP1A	Z	1.431	1.431	0	%100
77	MP2A	X	-.915	-.915	0	%100
78	MP2A	Z	1.585	1.585	0	%100
79	MP3A	X	-.826	-.826	0	%100
80	MP3A	Z	1.431	1.431	0	%100
81	MP4A	X	-.826	-.826	0	%100
82	MP4A	Z	1.431	1.431	0	%100
83	M183A	X	-.769	-.769	0	%100
84	M183A	Z	1.333	1.333	0	%100
85	MP1C	X	-.826	-.826	0	%100
86	MP1C	Z	1.431	1.431	0	%100
87	MP2C	X	-.915	-.915	0	%100
88	MP2C	Z	1.585	1.585	0	%100

Member Distributed Loads (BLC 60 : Structure Wi (210 Deg)) (Continued)

	Member Label	Direction	Start Magnitude[lb/ft,...	End Magnitude[lb/ft,F...	Start Location[in,%]	End Location[in,%]
89	MP3C	X	-.826	-.826	0	%100
90	MP3C	Z	1.431	1.431	0	%100
91	MP4C	X	-.826	-.826	0	%100
92	MP4C	Z	1.431	1.431	0	%100
93	M192A	X	0	0	0	%100
94	M192A	Z	0	0	0	%100
95	MP1B	X	-.826	-.826	0	%100
96	MP1B	Z	1.431	1.431	0	%100
97	MP2B	X	-.915	-.915	0	%100
98	MP2B	Z	1.585	1.585	0	%100
99	MP3B	X	-.826	-.826	0	%100
100	MP3B	Z	1.431	1.431	0	%100
101	MP4B	X	-.826	-.826	0	%100
102	MP4B	Z	1.431	1.431	0	%100
103	M101	X	-.68	-.68	0	%100
104	M101	Z	1.178	1.178	0	%100
105	M102	X	-.686	-.686	0	%100
106	M102	Z	1.189	1.189	0	%100
107	M115A	X	-.686	-.686	0	%100
108	M115A	Z	1.189	1.189	0	%100
109	M116A	X	0	0	0	%100
110	M116A	Z	0	0	0	%100
111	M123	X	-.66	-.66	0	%100
112	M123	Z	1.142	1.142	0	%100
113	M124	X	-.66	-.66	0	%100
114	M124	Z	1.142	1.142	0	%100
115	M125	X	0	0	0	%100
116	M125	Z	0	0	0	%100

Member Distributed Loads (BLC 61 : Structure Wi (240 Deg))

	Member Label	Direction	Start Magnitude[lb/ft,...	End Magnitude[lb/ft,F...	Start Location[in,%]	End Location[in,%]
1	M4	X	-1.345	-1.345	0	%100
2	M4	Z	.777	.777	0	%100
3	M10	X	-.366	-.366	0	%100
4	M10	Z	.211	.211	0	%100
5	M43	X	-.366	-.366	0	%100
6	M43	Z	.211	.211	0	%100
7	M46	X	-.572	-.572	0	%100
8	M46	Z	.33	.33	0	%100
9	M51B	X	-1.684	-1.684	0	%100
10	M51B	Z	.972	.972	0	%100
11	M52B	X	-.421	-.421	0	%100
12	M52B	Z	.243	.243	0	%100
13	M76	X	-1.689	-1.689	0	%100
14	M76	Z	.975	.975	0	%100
15	M77	X	-2.286	-2.286	0	%100
16	M77	Z	1.32	1.32	0	%100
17	M80	X	-2.386	-2.386	0	%100
18	M80	Z	1.377	1.377	0	%100
19	M84	X	-1.689	-1.689	0	%100
20	M84	Z	.975	.975	0	%100

Member Distributed Loads (BLC 61 : Structure Wi (240 Deg)) (Continued)

	Member Label	Direction	Start Magnitude[lb/ft,...	End Magnitude[lb/ft,F...	Start Location[in,%]	End Location[in,%]
21	M85	X	-.571	-.571	0	%100
22	M85	Z	.33	.33	0	%100
23	M91	X	-.596	-.596	0	%100
24	M91	Z	.344	.344	0	%100
25	M126A	X	0	0	0	%100
26	M126A	Z	0	0	0	%100
27	M127A	X	-1.463	-1.463	0	%100
28	M127A	Z	.844	.844	0	%100
29	M128A	X	-1.463	-1.463	0	%100
30	M128A	Z	.844	.844	0	%100
31	M129A	X	-2.289	-2.289	0	%100
32	M129A	Z	1.322	1.322	0	%100
33	M132A	X	-.421	-.421	0	%100
34	M132A	Z	.243	.243	0	%100
35	M133A	X	-.421	-.421	0	%100
36	M133A	Z	.243	.243	0	%100
37	M137A	X	0	0	0	%100
38	M137A	Z	0	0	0	%100
39	M138A	X	-.571	-.571	0	%100
40	M138A	Z	.33	.33	0	%100
41	M140A	X	-.596	-.596	0	%100
42	M140A	Z	.344	.344	0	%100
43	M142A	X	0	0	0	%100
44	M142A	Z	0	0	0	%100
45	M143A	X	-.571	-.571	0	%100
46	M143A	Z	.33	.33	0	%100
47	M145A	X	-.596	-.596	0	%100
48	M145A	Z	.344	.344	0	%100
49	M150A	X	-1.345	-1.345	0	%100
50	M150A	Z	.777	.777	0	%100
51	M151A	X	-.366	-.366	0	%100
52	M151A	Z	.211	.211	0	%100
53	M152A	X	-.366	-.366	0	%100
54	M152A	Z	.211	.211	0	%100
55	M153A	X	-.572	-.572	0	%100
56	M153A	Z	.33	.33	0	%100
57	M156A	X	-.421	-.421	0	%100
58	M156A	Z	.243	.243	0	%100
59	M157A	X	-1.684	-1.684	0	%100
60	M157A	Z	.972	.972	0	%100
61	M161A	X	-1.689	-1.689	0	%100
62	M161A	Z	.975	.975	0	%100
63	M162A	X	-.571	-.571	0	%100
64	M162A	Z	.33	.33	0	%100
65	M164A	X	-.596	-.596	0	%100
66	M164A	Z	.344	.344	0	%100
67	M166A	X	-1.689	-1.689	0	%100
68	M166A	Z	.975	.975	0	%100
69	M167A	X	-2.286	-2.286	0	%100
70	M167A	Z	1.32	1.32	0	%100
71	M169A	X	-2.386	-2.386	0	%100
72	M169A	Z	1.377	1.377	0	%100

Member Distributed Loads (BLC 61 : Structure Wi (240 Deg)) (Continued)

	Member Label	Direction	Start Magnitude[lb/ft,...	End Magnitude[lb/ft,F...	Start Location[in,%]	End Location[in,%]
73	M174A	X	-.444	-.444	0	%100
74	M174A	Z	.256	.256	0	%100
75	MP1A	X	-1.431	-1.431	0	%100
76	MP1A	Z	.826	.826	0	%100
77	MP2A	X	-1.585	-1.585	0	%100
78	MP2A	Z	.915	.915	0	%100
79	MP3A	X	-1.431	-1.431	0	%100
80	MP3A	Z	.826	.826	0	%100
81	MP4A	X	-1.431	-1.431	0	%100
82	MP4A	Z	.826	.826	0	%100
83	M183A	X	-1.777	-1.777	0	%100
84	M183A	Z	1.026	1.026	0	%100
85	MP1C	X	-1.431	-1.431	0	%100
86	MP1C	Z	.826	.826	0	%100
87	MP2C	X	-1.585	-1.585	0	%100
88	MP2C	Z	.915	.915	0	%100
89	MP3C	X	-1.431	-1.431	0	%100
90	MP3C	Z	.826	.826	0	%100
91	MP4C	X	-1.431	-1.431	0	%100
92	MP4C	Z	.826	.826	0	%100
93	M192A	X	-.444	-.444	0	%100
94	M192A	Z	.256	.256	0	%100
95	MP1B	X	-1.431	-1.431	0	%100
96	MP1B	Z	.826	.826	0	%100
97	MP2B	X	-1.585	-1.585	0	%100
98	MP2B	Z	.915	.915	0	%100
99	MP3B	X	-1.431	-1.431	0	%100
100	MP3B	Z	.826	.826	0	%100
101	MP4B	X	-1.431	-1.431	0	%100
102	MP4B	Z	.826	.826	0	%100
103	M101	X	-1.178	-1.178	0	%100
104	M101	Z	.68	.68	0	%100
105	M102	X	-.396	-.396	0	%100
106	M102	Z	.229	.229	0	%100
107	M115A	X	-1.585	-1.585	0	%100
108	M115A	Z	.915	.915	0	%100
109	M116A	X	-.396	-.396	0	%100
110	M116A	Z	.229	.229	0	%100
111	M123	X	-1.523	-1.523	0	%100
112	M123	Z	.879	.879	0	%100
113	M124	X	-.381	-.381	0	%100
114	M124	Z	.22	.22	0	%100
115	M125	X	-.381	-.381	0	%100
116	M125	Z	.22	.22	0	%100

Member Distributed Loads (BLC 62 : Structure Wi (270 Deg))

	Member Label	Direction	Start Magnitude[lb/ft,...	End Magnitude[lb/ft,F...	Start Location[in,%]	End Location[in,%]
1	M4	X	-2.071	-2.071	0	%100
2	M4	Z	0	0	0	%100
3	M10	X	0	0	0	%100
4	M10	Z	0	0	0	%100

Member Distributed Loads (BLC 62 : Structure Wi (270 Deg)) (Continued)

	Member Label	Direction	Start Magnitude[lb/ft,...	End Magnitude[lb/ft,F...	Start Location[in,%]	End Location[in,%]
5	M43	X	0	0	0	%100
6	M43	Z	0	0	0	%100
7	M46	X	0	0	0	%100
8	M46	Z	0	0	0	%100
9	M51B	X	-1.458	-1.458	0	%100
10	M51B	Z	0	0	0	%100
11	M52B	X	-1.458	-1.458	0	%100
12	M52B	Z	0	0	0	%100
13	M76	X	-2.6	-2.6	0	%100
14	M76	Z	0	0	0	%100
15	M77	X	-1.979	-1.979	0	%100
16	M77	Z	0	0	0	%100
17	M80	X	-2.066	-2.066	0	%100
18	M80	Z	0	0	0	%100
19	M84	X	-2.6	-2.6	0	%100
20	M84	Z	0	0	0	%100
21	M85	X	-1.979	-1.979	0	%100
22	M85	Z	0	0	0	%100
23	M91	X	-2.066	-2.066	0	%100
24	M91	Z	0	0	0	%100
25	M126A	X	-.518	-.518	0	%100
26	M126A	Z	0	0	0	%100
27	M127A	X	-1.267	-1.267	0	%100
28	M127A	Z	0	0	0	%100
29	M128A	X	-1.267	-1.267	0	%100
30	M128A	Z	0	0	0	%100
31	M129A	X	-1.983	-1.983	0	%100
32	M129A	Z	0	0	0	%100
33	M132A	X	-1.458	-1.458	0	%100
34	M132A	Z	0	0	0	%100
35	M133A	X	0	0	0	%100
36	M133A	Z	0	0	0	%100
37	M137A	X	-.65	-.65	0	%100
38	M137A	Z	0	0	0	%100
39	M138A	X	-1.979	-1.979	0	%100
40	M138A	Z	0	0	0	%100
41	M140A	X	-2.066	-2.066	0	%100
42	M140A	Z	0	0	0	%100
43	M142A	X	-.65	-.65	0	%100
44	M142A	Z	0	0	0	%100
45	M143A	X	0	0	0	%100
46	M143A	Z	0	0	0	%100
47	M145A	X	0	0	0	%100
48	M145A	Z	0	0	0	%100
49	M150A	X	-.518	-.518	0	%100
50	M150A	Z	0	0	0	%100
51	M151A	X	-1.267	-1.267	0	%100
52	M151A	Z	0	0	0	%100
53	M152A	X	-1.267	-1.267	0	%100
54	M152A	Z	0	0	0	%100
55	M153A	X	-1.983	-1.983	0	%100
56	M153A	Z	0	0	0	%100

Member Distributed Loads (BLC 62 : Structure Wi (270 Deg)) (Continued)

	Member Label	Direction	Start Magnitude[lb/ft,...	End Magnitude[lb/ft,F...	Start Location[in,%]	End Location[in,%]
57	M156A	X	0	0	0	%100
58	M156A	Z	0	0	0	%100
59	M157A	X	-1.458	-1.458	0	%100
60	M157A	Z	0	0	0	%100
61	M161A	X	-.65	-.65	0	%100
62	M161A	Z	0	0	0	%100
63	M162A	X	0	0	0	%100
64	M162A	Z	0	0	0	%100
65	M164A	X	0	0	0	%100
66	M164A	Z	0	0	0	%100
67	M166A	X	-.65	-.65	0	%100
68	M166A	Z	0	0	0	%100
69	M167A	X	-1.979	-1.979	0	%100
70	M167A	Z	0	0	0	%100
71	M169A	X	-2.066	-2.066	0	%100
72	M169A	Z	0	0	0	%100
73	M174A	X	0	0	0	%100
74	M174A	Z	0	0	0	%100
75	MP1A	X	-1.653	-1.653	0	%100
76	MP1A	Z	0	0	0	%100
77	MP2A	X	-1.83	-1.83	0	%100
78	MP2A	Z	0	0	0	%100
79	MP3A	X	-1.653	-1.653	0	%100
80	MP3A	Z	0	0	0	%100
81	MP4A	X	-1.653	-1.653	0	%100
82	MP4A	Z	0	0	0	%100
83	M183A	X	-1.539	-1.539	0	%100
84	M183A	Z	0	0	0	%100
85	MP1C	X	-1.653	-1.653	0	%100
86	MP1C	Z	0	0	0	%100
87	MP2C	X	-1.83	-1.83	0	%100
88	MP2C	Z	0	0	0	%100
89	MP3C	X	-1.653	-1.653	0	%100
90	MP3C	Z	0	0	0	%100
91	MP4C	X	-1.653	-1.653	0	%100
92	MP4C	Z	0	0	0	%100
93	M192A	X	-1.539	-1.539	0	%100
94	M192A	Z	0	0	0	%100
95	MP1B	X	-1.653	-1.653	0	%100
96	MP1B	Z	0	0	0	%100
97	MP2B	X	-1.83	-1.83	0	%100
98	MP2B	Z	0	0	0	%100
99	MP3B	X	-1.653	-1.653	0	%100
100	MP3B	Z	0	0	0	%100
101	MP4B	X	-1.653	-1.653	0	%100
102	MP4B	Z	0	0	0	%100
103	M101	X	-1.36	-1.36	0	%100
104	M101	Z	0	0	0	%100
105	M102	X	0	0	0	%100
106	M102	Z	0	0	0	%100
107	M115A	X	-1.373	-1.373	0	%100
108	M115A	Z	0	0	0	%100

Member Distributed Loads (BLC 62 : Structure Wi (270 Deg)) (Continued)

	Member Label	Direction	Start Magnitude[lb/ft,...	End Magnitude[lb/ft,F...	Start Location[in,%]	End Location[in,%]
109	M116A	X	-1.373	-1.373	0	%100
110	M116A	Z	0	0	0	%100
111	M123	X	-1.319	-1.319	0	%100
112	M123	Z	0	0	0	%100
113	M124	X	0	0	0	%100
114	M124	Z	0	0	0	%100
115	M125	X	-1.319	-1.319	0	%100
116	M125	Z	0	0	0	%100

Member Distributed Loads (BLC 63 : Structure Wi (300 Deg))

	Member Label	Direction	Start Magnitude[lb/ft,...	End Magnitude[lb/ft,F...	Start Location[in,%]	End Location[in,%]
1	M4	X	-1.345	-1.345	0	%100
2	M4	Z	-.777	-.777	0	%100
3	M10	X	-.366	-.366	0	%100
4	M10	Z	-.211	-.211	0	%100
5	M43	X	-.366	-.366	0	%100
6	M43	Z	-.211	-.211	0	%100
7	M46	X	-.572	-.572	0	%100
8	M46	Z	-.33	-.33	0	%100
9	M51B	X	-.421	-.421	0	%100
10	M51B	Z	-.243	-.243	0	%100
11	M52B	X	-1.684	-1.684	0	%100
12	M52B	Z	-.972	-.972	0	%100
13	M76	X	-1.689	-1.689	0	%100
14	M76	Z	-.975	-.975	0	%100
15	M77	X	-.571	-.571	0	%100
16	M77	Z	-.33	-.33	0	%100
17	M80	X	-.596	-.596	0	%100
18	M80	Z	-.344	-.344	0	%100
19	M84	X	-1.689	-1.689	0	%100
20	M84	Z	-.975	-.975	0	%100
21	M85	X	-2.286	-2.286	0	%100
22	M85	Z	-1.32	-1.32	0	%100
23	M91	X	-2.386	-2.386	0	%100
24	M91	Z	-1.377	-1.377	0	%100
25	M126A	X	-1.345	-1.345	0	%100
26	M126A	Z	-.777	-.777	0	%100
27	M127A	X	-.366	-.366	0	%100
28	M127A	Z	-.211	-.211	0	%100
29	M128A	X	-.366	-.366	0	%100
30	M128A	Z	-.211	-.211	0	%100
31	M129A	X	-.572	-.572	0	%100
32	M129A	Z	-.33	-.33	0	%100
33	M132A	X	-1.684	-1.684	0	%100
34	M132A	Z	-.972	-.972	0	%100
35	M133A	X	-.421	-.421	0	%100
36	M133A	Z	-.243	-.243	0	%100
37	M137A	X	-1.689	-1.689	0	%100
38	M137A	Z	-.975	-.975	0	%100
39	M138A	X	-2.286	-2.286	0	%100
40	M138A	Z	-1.32	-1.32	0	%100

Member Distributed Loads (BLC 63 : Structure Wi (300 Deg)) (Continued)

	Member Label	Direction	Start Magnitude[lb/ft,...	End Magnitude[lb/ft,F...	Start Location[in,%]	End Location[in,%]
41	M140A	X	-2.386	-2.386	0	%100
42	M140A	Z	-1.377	-1.377	0	%100
43	M142A	X	-1.689	-1.689	0	%100
44	M142A	Z	-.975	-.975	0	%100
45	M143A	X	-.571	-.571	0	%100
46	M143A	Z	-.33	-.33	0	%100
47	M145A	X	-.596	-.596	0	%100
48	M145A	Z	-.344	-.344	0	%100
49	M150A	X	0	0	0	%100
50	M150A	Z	0	0	0	%100
51	M151A	X	-1.463	-1.463	0	%100
52	M151A	Z	-.844	-.844	0	%100
53	M152A	X	-1.463	-1.463	0	%100
54	M152A	Z	-.844	-.844	0	%100
55	M153A	X	-2.289	-2.289	0	%100
56	M153A	Z	-1.322	-1.322	0	%100
57	M156A	X	-.421	-.421	0	%100
58	M156A	Z	-.243	-.243	0	%100
59	M157A	X	-.421	-.421	0	%100
60	M157A	Z	-.243	-.243	0	%100
61	M161A	X	0	0	0	%100
62	M161A	Z	0	0	0	%100
63	M162A	X	-.571	-.571	0	%100
64	M162A	Z	-.33	-.33	0	%100
65	M164A	X	-.596	-.596	0	%100
66	M164A	Z	-.344	-.344	0	%100
67	M166A	X	0	0	0	%100
68	M166A	Z	0	0	0	%100
69	M167A	X	-.571	-.571	0	%100
70	M167A	Z	-.33	-.33	0	%100
71	M169A	X	-.596	-.596	0	%100
72	M169A	Z	-.344	-.344	0	%100
73	M174A	X	-.444	-.444	0	%100
74	M174A	Z	-.256	-.256	0	%100
75	MP1A	X	-1.431	-1.431	0	%100
76	MP1A	Z	-.826	-.826	0	%100
77	MP2A	X	-1.585	-1.585	0	%100
78	MP2A	Z	-.915	-.915	0	%100
79	MP3A	X	-1.431	-1.431	0	%100
80	MP3A	Z	-.826	-.826	0	%100
81	MP4A	X	-1.431	-1.431	0	%100
82	MP4A	Z	-.826	-.826	0	%100
83	M183A	X	-.444	-.444	0	%100
84	M183A	Z	-.256	-.256	0	%100
85	MP1C	X	-1.431	-1.431	0	%100
86	MP1C	Z	-.826	-.826	0	%100
87	MP2C	X	-1.585	-1.585	0	%100
88	MP2C	Z	-.915	-.915	0	%100
89	MP3C	X	-1.431	-1.431	0	%100
90	MP3C	Z	-.826	-.826	0	%100
91	MP4C	X	-1.431	-1.431	0	%100
92	MP4C	Z	-.826	-.826	0	%100

Member Distributed Loads (BLC 63 : Structure Wi (300 Deg)) (Continued)

	Member Label	Direction	Start Magnitude[lb/ft,...	End Magnitude[lb/ft,F...	Start Location[in,%]	End Location[in,%]
93	M192A	X	-1.777	-1.777	0	%100
94	M192A	Z	-1.026	-1.026	0	%100
95	MP1B	X	-1.431	-1.431	0	%100
96	MP1B	Z	-.826	-.826	0	%100
97	MP2B	X	-1.585	-1.585	0	%100
98	MP2B	Z	-.915	-.915	0	%100
99	MP3B	X	-1.431	-1.431	0	%100
100	MP3B	Z	-.826	-.826	0	%100
101	MP4B	X	-1.431	-1.431	0	%100
102	MP4B	Z	-.826	-.826	0	%100
103	M101	X	-1.178	-1.178	0	%100
104	M101	Z	-.68	-.68	0	%100
105	M102	X	-.396	-.396	0	%100
106	M102	Z	-.229	-.229	0	%100
107	M115A	X	-.396	-.396	0	%100
108	M115A	Z	-.229	-.229	0	%100
109	M116A	X	-1.585	-1.585	0	%100
110	M116A	Z	-.915	-.915	0	%100
111	M123	X	-.381	-.381	0	%100
112	M123	Z	-.22	-.22	0	%100
113	M124	X	-.381	-.381	0	%100
114	M124	Z	-.22	-.22	0	%100
115	M125	X	-1.523	-1.523	0	%100
116	M125	Z	-.879	-.879	0	%100

Member Distributed Loads (BLC 64 : Structure Wi (330 Deg))

	Member Label	Direction	Start Magnitude[lb/ft,...	End Magnitude[lb/ft,F...	Start Location[in,%]	End Location[in,%]
1	M4	X	-.259	-.259	0	%100
2	M4	Z	-.448	-.448	0	%100
3	M10	X	-.633	-.633	0	%100
4	M10	Z	-1.097	-1.097	0	%100
5	M43	X	-.633	-.633	0	%100
6	M43	Z	-1.097	-1.097	0	%100
7	M46	X	-.991	-.991	0	%100
8	M46	Z	-1.717	-1.717	0	%100
9	M51B	X	0	0	0	%100
10	M51B	Z	0	0	0	%100
11	M52B	X	-.729	-.729	0	%100
12	M52B	Z	-1.263	-1.263	0	%100
13	M76	X	-.325	-.325	0	%100
14	M76	Z	-.563	-.563	0	%100
15	M77	X	0	0	0	%100
16	M77	Z	0	0	0	%100
17	M80	X	0	0	0	%100
18	M80	Z	0	0	0	%100
19	M84	X	-.325	-.325	0	%100
20	M84	Z	-.563	-.563	0	%100
21	M85	X	-.99	-.99	0	%100
22	M85	Z	-1.714	-1.714	0	%100
23	M91	X	-1.033	-1.033	0	%100
24	M91	Z	-1.789	-1.789	0	%100

Member Distributed Loads (BLC 64 : Structure Wi (330 Deg)) (Continued)

	Member Label	Direction	Start Magnitude[lb/ft,...	End Magnitude[lb/ft,F...	Start Location[in,%]	End Location[in,%]
25	M126A	X	-1.036	-1.036	0	%100
26	M126A	Z	-1.794	-1.794	0	%100
27	M127A	X	0	0	0	%100
28	M127A	Z	0	0	0	%100
29	M128A	X	0	0	0	%100
30	M128A	Z	0	0	0	%100
31	M129A	X	0	0	0	%100
32	M129A	Z	0	0	0	%100
33	M132A	X	-.729	-.729	0	%100
34	M132A	Z	-1.263	-1.263	0	%100
35	M133A	X	-.729	-.729	0	%100
36	M133A	Z	-1.263	-1.263	0	%100
37	M137A	X	-1.3	-1.3	0	%100
38	M137A	Z	-2.251	-2.251	0	%100
39	M138A	X	-.99	-.99	0	%100
40	M138A	Z	-1.714	-1.714	0	%100
41	M140A	X	-1.033	-1.033	0	%100
42	M140A	Z	-1.789	-1.789	0	%100
43	M142A	X	-1.3	-1.3	0	%100
44	M142A	Z	-2.251	-2.251	0	%100
45	M143A	X	-.99	-.99	0	%100
46	M143A	Z	-1.714	-1.714	0	%100
47	M145A	X	-1.033	-1.033	0	%100
48	M145A	Z	-1.789	-1.789	0	%100
49	M150A	X	-.259	-.259	0	%100
50	M150A	Z	-.448	-.448	0	%100
51	M151A	X	-.633	-.633	0	%100
52	M151A	Z	-1.097	-1.097	0	%100
53	M152A	X	-.633	-.633	0	%100
54	M152A	Z	-1.097	-1.097	0	%100
55	M153A	X	-.991	-.991	0	%100
56	M153A	Z	-1.717	-1.717	0	%100
57	M156A	X	-.729	-.729	0	%100
58	M156A	Z	-1.263	-1.263	0	%100
59	M157A	X	0	0	0	%100
60	M157A	Z	0	0	0	%100
61	M161A	X	-.325	-.325	0	%100
62	M161A	Z	-.563	-.563	0	%100
63	M162A	X	-.99	-.99	0	%100
64	M162A	Z	-1.714	-1.714	0	%100
65	M164A	X	-1.033	-1.033	0	%100
66	M164A	Z	-1.789	-1.789	0	%100
67	M166A	X	-.325	-.325	0	%100
68	M166A	Z	-.563	-.563	0	%100
69	M167A	X	0	0	0	%100
70	M167A	Z	0	0	0	%100
71	M169A	X	0	0	0	%100
72	M169A	Z	0	0	0	%100
73	M174A	X	-.769	-.769	0	%100
74	M174A	Z	-1.333	-1.333	0	%100
75	MP1A	X	-.826	-.826	0	%100
76	MP1A	Z	-1.431	-1.431	0	%100

Member Distributed Loads (BLC 64 : Structure Wi (330 Deg)) (Continued)

	Member Label	Direction	Start Magnitude[lb/ft,...	End Magnitude[lb/ft,F...	Start Location[in,%]	End Location[in,%]
77	MP2A	X	-.915	-.915	0	%100
78	MP2A	Z	-1.585	-1.585	0	%100
79	MP3A	X	-.826	-.826	0	%100
80	MP3A	Z	-1.431	-1.431	0	%100
81	MP4A	X	-.826	-.826	0	%100
82	MP4A	Z	-1.431	-1.431	0	%100
83	M183A	X	0	0	0	%100
84	M183A	Z	0	0	0	%100
85	MP1C	X	-.826	-.826	0	%100
86	MP1C	Z	-1.431	-1.431	0	%100
87	MP2C	X	-.915	-.915	0	%100
88	MP2C	Z	-1.585	-1.585	0	%100
89	MP3C	X	-.826	-.826	0	%100
90	MP3C	Z	-1.431	-1.431	0	%100
91	MP4C	X	-.826	-.826	0	%100
92	MP4C	Z	-1.431	-1.431	0	%100
93	M192A	X	-.769	-.769	0	%100
94	M192A	Z	-1.333	-1.333	0	%100
95	MP1B	X	-.826	-.826	0	%100
96	MP1B	Z	-1.431	-1.431	0	%100
97	MP2B	X	-.915	-.915	0	%100
98	MP2B	Z	-1.585	-1.585	0	%100
99	MP3B	X	-.826	-.826	0	%100
100	MP3B	Z	-1.431	-1.431	0	%100
101	MP4B	X	-.826	-.826	0	%100
102	MP4B	Z	-1.431	-1.431	0	%100
103	M101	X	-.68	-.68	0	%100
104	M101	Z	-1.178	-1.178	0	%100
105	M102	X	-.686	-.686	0	%100
106	M102	Z	-1.189	-1.189	0	%100
107	M115A	X	0	0	0	%100
108	M115A	Z	0	0	0	%100
109	M116A	X	-.686	-.686	0	%100
110	M116A	Z	-1.189	-1.189	0	%100
111	M123	X	0	0	0	%100
112	M123	Z	0	0	0	%100
113	M124	X	-.66	-.66	0	%100
114	M124	Z	-1.142	-1.142	0	%100
115	M125	X	-.66	-.66	0	%100
116	M125	Z	-1.142	-1.142	0	%100

Member Distributed Loads (BLC 65 : Structure Wm (0 Deg))

	Member Label	Direction	Start Magnitude[lb/ft,...	End Magnitude[lb/ft,F...	Start Location[in,%]	End Location[in,%]
1	M4	X	0	0	0	%100
2	M4	Z	0	0	0	%100
3	M10	X	0	0	0	%100
4	M10	Z	-.6	-.6	0	%100
5	M43	X	0	0	0	%100
6	M43	Z	-.6	-.6	0	%100
7	M46	X	0	0	0	%100
8	M46	Z	-1.196	-1.196	0	%100

Member Distributed Loads (BLC 65 : Structure Wm (0 Deg)) (Continued)

	Member Label	Direction	Start Magnitude[lb/ft,...	End Magnitude[lb/ft,F...	Start Location[in,%]	End Location[in,%]
9	M51B	X	0	0	0	%100
10	M51B	Z	-.166	-.166	0	%100
11	M52B	X	0	0	0	%100
12	M52B	Z	-.166	-.166	0	%100
13	M76	X	0	0	0	%100
14	M76	Z	0	0	0	%100
15	M77	X	0	0	0	%100
16	M77	Z	-.305	-.305	0	%100
17	M80	X	0	0	0	%100
18	M80	Z	-.321	-.321	0	%100
19	M84	X	0	0	0	%100
20	M84	Z	0	0	0	%100
21	M85	X	0	0	0	%100
22	M85	Z	-.305	-.305	0	%100
23	M91	X	0	0	0	%100
24	M91	Z	-.321	-.321	0	%100
25	M126A	X	0	0	0	%100
26	M126A	Z	-.532	-.532	0	%100
27	M127A	X	0	0	0	%100
28	M127A	Z	-.15	-.15	0	%100
29	M128A	X	0	0	0	%100
30	M128A	Z	-.15	-.15	0	%100
31	M129A	X	0	0	0	%100
32	M129A	Z	-.299	-.299	0	%100
33	M132A	X	0	0	0	%100
34	M132A	Z	-.166	-.166	0	%100
35	M133A	X	0	0	0	%100
36	M133A	Z	-.664	-.664	0	%100
37	M137A	X	0	0	0	%100
38	M137A	Z	-.897	-.897	0	%100
39	M138A	X	0	0	0	%100
40	M138A	Z	-.305	-.305	0	%100
41	M140A	X	0	0	0	%100
42	M140A	Z	-.321	-.321	0	%100
43	M142A	X	0	0	0	%100
44	M142A	Z	-.897	-.897	0	%100
45	M143A	X	0	0	0	%100
46	M143A	Z	-1.218	-1.218	0	%100
47	M145A	X	0	0	0	%100
48	M145A	Z	-1.283	-1.283	0	%100
49	M150A	X	0	0	0	%100
50	M150A	Z	-.532	-.532	0	%100
51	M151A	X	0	0	0	%100
52	M151A	Z	-.15	-.15	0	%100
53	M152A	X	0	0	0	%100
54	M152A	Z	-.15	-.15	0	%100
55	M153A	X	0	0	0	%100
56	M153A	Z	-.299	-.299	0	%100
57	M156A	X	0	0	0	%100
58	M156A	Z	-.664	-.664	0	%100
59	M157A	X	0	0	0	%100
60	M157A	Z	-.166	-.166	0	%100

Member Distributed Loads (BLC 65 : Structure Wm (0 Deg)) (Continued)

	Member Label	Direction	Start Magnitude[lb/ft,...	End Magnitude[lb/ft,F...	Start Location[in,%]	End Location[in,%]
61	M161A	X	0	0	0	%100
62	M161A	Z	-.897	-.897	0	%100
63	M162A	X	0	0	0	%100
64	M162A	Z	-1.218	-1.218	0	%100
65	M164A	X	0	0	0	%100
66	M164A	Z	-1.283	-1.283	0	%100
67	M166A	X	0	0	0	%100
68	M166A	Z	-.897	-.897	0	%100
69	M167A	X	0	0	0	%100
70	M167A	Z	-.305	-.305	0	%100
71	M169A	X	0	0	0	%100
72	M169A	Z	-.321	-.321	0	%100
73	M174A	X	0	0	0	%100
74	M174A	Z	-.698	-.698	0	%100
75	MP1A	X	0	0	0	%100
76	MP1A	Z	-.474	-.474	0	%100
77	MP2A	X	0	0	0	%100
78	MP2A	Z	-.573	-.573	0	%100
79	MP3A	X	0	0	0	%100
80	MP3A	Z	-.474	-.474	0	%100
81	MP4A	X	0	0	0	%100
82	MP4A	Z	-.474	-.474	0	%100
83	M183A	X	0	0	0	%100
84	M183A	Z	-.174	-.174	0	%100
85	MP1C	X	0	0	0	%100
86	MP1C	Z	-.474	-.474	0	%100
87	MP2C	X	0	0	0	%100
88	MP2C	Z	-.573	-.573	0	%100
89	MP3C	X	0	0	0	%100
90	MP3C	Z	-.474	-.474	0	%100
91	MP4C	X	0	0	0	%100
92	MP4C	Z	-.474	-.474	0	%100
93	M192A	X	0	0	0	%100
94	M192A	Z	-.174	-.174	0	%100
95	MP1B	X	0	0	0	%100
96	MP1B	Z	-.474	-.474	0	%100
97	MP2B	X	0	0	0	%100
98	MP2B	Z	-.573	-.573	0	%100
99	MP3B	X	0	0	0	%100
100	MP3B	Z	-.474	-.474	0	%100
101	MP4B	X	0	0	0	%100
102	MP4B	Z	-.474	-.474	0	%100
103	M101	X	0	0	0	%100
104	M101	Z	-.387	-.387	0	%100
105	M102	X	0	0	0	%100
106	M102	Z	-.573	-.573	0	%100
107	M115A	X	0	0	0	%100
108	M115A	Z	-.143	-.143	0	%100
109	M116A	X	0	0	0	%100
110	M116A	Z	-.143	-.143	0	%100
111	M123	X	0	0	0	%100
112	M123	Z	-.169	-.169	0	%100

Member Distributed Loads (BLC 65 : Structure Wm (0 Deg)) (Continued)

	Member Label	Direction	Start Magnitude[lb/ft,...	End Magnitude[lb/ft,F...	Start Location[in,%]	End Location[in,%]
113	M124	X	0	0	0	%100
114	M124	Z	-.677	-.677	0	%100
115	M125	X	0	0	0	%100
116	M125	Z	-.169	-.169	0	%100

Member Distributed Loads (BLC 66 : Structure Wm (30 Deg))

	Member Label	Direction	Start Magnitude[lb/ft,...	End Magnitude[lb/ft,F...	Start Location[in,%]	End Location[in,%]
1	M4	X	.089	.089	0	%100
2	M4	Z	-.153	-.153	0	%100
3	M10	X	.225	.225	0	%100
4	M10	Z	-.39	-.39	0	%100
5	M43	X	.225	.225	0	%100
6	M43	Z	-.39	-.39	0	%100
7	M46	X	.449	.449	0	%100
8	M46	Z	-.777	-.777	0	%100
9	M51B	X	.249	.249	0	%100
10	M51B	Z	-.431	-.431	0	%100
11	M52B	X	0	0	0	%100
12	M52B	Z	0	0	0	%100
13	M76	X	.15	.15	0	%100
14	M76	Z	-.259	-.259	0	%100
15	M77	X	.457	.457	0	%100
16	M77	Z	-.791	-.791	0	%100
17	M80	X	.481	.481	0	%100
18	M80	Z	-.834	-.834	0	%100
19	M84	X	.15	.15	0	%100
20	M84	Z	-.259	-.259	0	%100
21	M85	X	0	0	0	%100
22	M85	Z	0	0	0	%100
23	M91	X	0	0	0	%100
24	M91	Z	0	0	0	%100
25	M126A	X	.089	.089	0	%100
26	M126A	Z	-.153	-.153	0	%100
27	M127A	X	.225	.225	0	%100
28	M127A	Z	-.39	-.39	0	%100
29	M128A	X	.225	.225	0	%100
30	M128A	Z	-.39	-.39	0	%100
31	M129A	X	.449	.449	0	%100
32	M129A	Z	-.777	-.777	0	%100
33	M132A	X	0	0	0	%100
34	M132A	Z	0	0	0	%100
35	M133A	X	.249	.249	0	%100
36	M133A	Z	-.431	-.431	0	%100
37	M137A	X	.15	.15	0	%100
38	M137A	Z	-.259	-.259	0	%100
39	M138A	X	0	0	0	%100
40	M138A	Z	0	0	0	%100
41	M140A	X	0	0	0	%100
42	M140A	Z	0	0	0	%100
43	M142A	X	.15	.15	0	%100
44	M142A	Z	-.259	-.259	0	%100

Member Distributed Loads (BLC 66 : Structure Wm (30 Deg)) (Continued)

	Member Label	Direction	Start Magnitude[lb/ft,...	End Magnitude[lb/ft,F...	Start Location[in,%]	End Location[in,%]
45	M143A	X	.457	.457	0	%100
46	M143A	Z	-.791	-.791	0	%100
47	M145A	X	.481	.481	0	%100
48	M145A	Z	-.834	-.834	0	%100
49	M150A	X	.354	.354	0	%100
50	M150A	Z	-.614	-.614	0	%100
51	M151A	X	0	0	0	%100
52	M151A	Z	0	0	0	%100
53	M152A	X	0	0	0	%100
54	M152A	Z	0	0	0	%100
55	M153A	X	0	0	0	%100
56	M153A	Z	0	0	0	%100
57	M156A	X	.249	.249	0	%100
58	M156A	Z	-.431	-.431	0	%100
59	M157A	X	.249	.249	0	%100
60	M157A	Z	-.431	-.431	0	%100
61	M161A	X	.598	.598	0	%100
62	M161A	Z	-1.036	-1.036	0	%100
63	M162A	X	.457	.457	0	%100
64	M162A	Z	-.791	-.791	0	%100
65	M164A	X	.481	.481	0	%100
66	M164A	Z	-.834	-.834	0	%100
67	M166A	X	.598	.598	0	%100
68	M166A	Z	-1.036	-1.036	0	%100
69	M167A	X	.457	.457	0	%100
70	M167A	Z	-.791	-.791	0	%100
71	M169A	X	.481	.481	0	%100
72	M169A	Z	-.834	-.834	0	%100
73	M174A	X	.262	.262	0	%100
74	M174A	Z	-.453	-.453	0	%100
75	MP1A	X	.237	.237	0	%100
76	MP1A	Z	-.41	-.41	0	%100
77	MP2A	X	.287	.287	0	%100
78	MP2A	Z	-.496	-.496	0	%100
79	MP3A	X	.237	.237	0	%100
80	MP3A	Z	-.41	-.41	0	%100
81	MP4A	X	.237	.237	0	%100
82	MP4A	Z	-.41	-.41	0	%100
83	M183A	X	.262	.262	0	%100
84	M183A	Z	-.453	-.453	0	%100
85	MP1C	X	.237	.237	0	%100
86	MP1C	Z	-.41	-.41	0	%100
87	MP2C	X	.287	.287	0	%100
88	MP2C	Z	-.496	-.496	0	%100
89	MP3C	X	.237	.237	0	%100
90	MP3C	Z	-.41	-.41	0	%100
91	MP4C	X	.237	.237	0	%100
92	MP4C	Z	-.41	-.41	0	%100
93	M192A	X	0	0	0	%100
94	M192A	Z	0	0	0	%100
95	MP1B	X	.237	.237	0	%100
96	MP1B	Z	-.41	-.41	0	%100

Member Distributed Loads (BLC 66 : Structure Wm (30 Deg)) (Continued)

	Member Label	Direction	Start Magnitude[lb/ft,...	End Magnitude[lb/ft,F...	Start Location[in,%]	End Location[in,%]
97	MP2B	X	.287	.287	0	%100
98	MP2B	Z	-.496	-.496	0	%100
99	MP3B	X	.237	.237	0	%100
100	MP3B	Z	-.41	-.41	0	%100
101	MP4B	X	.237	.237	0	%100
102	MP4B	Z	-.41	-.41	0	%100
103	M101	X	.194	.194	0	%100
104	M101	Z	-.335	-.335	0	%100
105	M102	X	.215	.215	0	%100
106	M102	Z	-.372	-.372	0	%100
107	M115A	X	.215	.215	0	%100
108	M115A	Z	-.372	-.372	0	%100
109	M116A	X	0	0	0	%100
110	M116A	Z	0	0	0	%100
111	M123	X	.254	.254	0	%100
112	M123	Z	-.44	-.44	0	%100
113	M124	X	.254	.254	0	%100
114	M124	Z	-.44	-.44	0	%100
115	M125	X	0	0	0	%100
116	M125	Z	0	0	0	%100

Member Distributed Loads (BLC 67 : Structure Wm (60 Deg))

	Member Label	Direction	Start Magnitude[lb/ft,...	End Magnitude[lb/ft,F...	Start Location[in,%]	End Location[in,%]
1	M4	X	.46	.46	0	%100
2	M4	Z	-.266	-.266	0	%100
3	M10	X	.13	.13	0	%100
4	M10	Z	-.075	-.075	0	%100
5	M43	X	.13	.13	0	%100
6	M43	Z	-.075	-.075	0	%100
7	M46	X	.259	.259	0	%100
8	M46	Z	-.15	-.15	0	%100
9	M51B	X	.575	.575	0	%100
10	M51B	Z	-.332	-.332	0	%100
11	M52B	X	.144	.144	0	%100
12	M52B	Z	-.083	-.083	0	%100
13	M76	X	.777	.777	0	%100
14	M76	Z	-.449	-.449	0	%100
15	M77	X	1.055	1.055	0	%100
16	M77	Z	-.609	-.609	0	%100
17	M80	X	1.111	1.111	0	%100
18	M80	Z	-.642	-.642	0	%100
19	M84	X	.777	.777	0	%100
20	M84	Z	-.449	-.449	0	%100
21	M85	X	.264	.264	0	%100
22	M85	Z	-.152	-.152	0	%100
23	M91	X	.278	.278	0	%100
24	M91	Z	-.16	-.16	0	%100
25	M126A	X	0	0	0	%100
26	M126A	Z	0	0	0	%100
27	M127A	X	.519	.519	0	%100
28	M127A	Z	-.3	-.3	0	%100

Member Distributed Loads (BLC 67 : Structure Wm (60 Deg)) (Continued)

	Member Label	Direction	Start Magnitude[lb/ft,...	End Magnitude[lb/ft,F...	Start Location[in,%]	End Location[in,%]
29	M128A	X	.519	.519	0	%100
30	M128A	Z	-.3	-.3	0	%100
31	M129A	X	1.036	1.036	0	%100
32	M129A	Z	-.598	-.598	0	%100
33	M132A	X	.144	.144	0	%100
34	M132A	Z	-.083	-.083	0	%100
35	M133A	X	.144	.144	0	%100
36	M133A	Z	-.083	-.083	0	%100
37	M137A	X	0	0	0	%100
38	M137A	Z	0	0	0	%100
39	M138A	X	.264	.264	0	%100
40	M138A	Z	-.152	-.152	0	%100
41	M140A	X	.278	.278	0	%100
42	M140A	Z	-.16	-.16	0	%100
43	M142A	X	0	0	0	%100
44	M142A	Z	0	0	0	%100
45	M143A	X	.264	.264	0	%100
46	M143A	Z	-.152	-.152	0	%100
47	M145A	X	.278	.278	0	%100
48	M145A	Z	-.16	-.16	0	%100
49	M150A	X	.46	.46	0	%100
50	M150A	Z	-.266	-.266	0	%100
51	M151A	X	.13	.13	0	%100
52	M151A	Z	-.075	-.075	0	%100
53	M152A	X	.13	.13	0	%100
54	M152A	Z	-.075	-.075	0	%100
55	M153A	X	.259	.259	0	%100
56	M153A	Z	-.15	-.15	0	%100
57	M156A	X	.144	.144	0	%100
58	M156A	Z	-.083	-.083	0	%100
59	M157A	X	.575	.575	0	%100
60	M157A	Z	-.332	-.332	0	%100
61	M161A	X	.777	.777	0	%100
62	M161A	Z	-.449	-.449	0	%100
63	M162A	X	.264	.264	0	%100
64	M162A	Z	-.152	-.152	0	%100
65	M164A	X	.278	.278	0	%100
66	M164A	Z	-.16	-.16	0	%100
67	M166A	X	.777	.777	0	%100
68	M166A	Z	-.449	-.449	0	%100
69	M167A	X	1.055	1.055	0	%100
70	M167A	Z	-.609	-.609	0	%100
71	M169A	X	1.111	1.111	0	%100
72	M169A	Z	-.642	-.642	0	%100
73	M174A	X	.151	.151	0	%100
74	M174A	Z	-.087	-.087	0	%100
75	MP1A	X	.41	.41	0	%100
76	MP1A	Z	-.237	-.237	0	%100
77	MP2A	X	.496	.496	0	%100
78	MP2A	Z	-.287	-.287	0	%100
79	MP3A	X	.41	.41	0	%100
80	MP3A	Z	-.237	-.237	0	%100

Member Distributed Loads (BLC 67 : Structure Wm (60 Deg)) (Continued)

	Member Label	Direction	Start Magnitude[lb/ft,...	End Magnitude[lb/ft,F...	Start Location[in,%]	End Location[in,%]
81	MP4A	X	.41	.41	0	%100
82	MP4A	Z	-.237	-.237	0	%100
83	M183A	X	.604	.604	0	%100
84	M183A	Z	-.349	-.349	0	%100
85	MP1C	X	.41	.41	0	%100
86	MP1C	Z	-.237	-.237	0	%100
87	MP2C	X	.496	.496	0	%100
88	MP2C	Z	-.287	-.287	0	%100
89	MP3C	X	.41	.41	0	%100
90	MP3C	Z	-.237	-.237	0	%100
91	MP4C	X	.41	.41	0	%100
92	MP4C	Z	-.237	-.237	0	%100
93	M192A	X	.151	.151	0	%100
94	M192A	Z	-.087	-.087	0	%100
95	MP1B	X	.41	.41	0	%100
96	MP1B	Z	-.237	-.237	0	%100
97	MP2B	X	.496	.496	0	%100
98	MP2B	Z	-.287	-.287	0	%100
99	MP3B	X	.41	.41	0	%100
100	MP3B	Z	-.237	-.237	0	%100
101	MP4B	X	.41	.41	0	%100
102	MP4B	Z	-.237	-.237	0	%100
103	M101	X	.335	.335	0	%100
104	M101	Z	-.194	-.194	0	%100
105	M102	X	.124	.124	0	%100
106	M102	Z	-.072	-.072	0	%100
107	M115A	X	.496	.496	0	%100
108	M115A	Z	-.287	-.287	0	%100
109	M116A	X	.124	.124	0	%100
110	M116A	Z	-.072	-.072	0	%100
111	M123	X	.586	.586	0	%100
112	M123	Z	-.339	-.339	0	%100
113	M124	X	.147	.147	0	%100
114	M124	Z	-.085	-.085	0	%100
115	M125	X	.147	.147	0	%100
116	M125	Z	-.085	-.085	0	%100

Member Distributed Loads (BLC 68 : Structure Wm (90 Deg))

	Member Label	Direction	Start Magnitude[lb/ft,...	End Magnitude[lb/ft,F...	Start Location[in,%]	End Location[in,%]
1	M4	X	.709	.709	0	%100
2	M4	Z	0	0	0	%100
3	M10	X	0	0	0	%100
4	M10	Z	0	0	0	%100
5	M43	X	0	0	0	%100
6	M43	Z	0	0	0	%100
7	M46	X	0	0	0	%100
8	M46	Z	0	0	0	%100
9	M51B	X	.498	.498	0	%100
10	M51B	Z	0	0	0	%100
11	M52B	X	.498	.498	0	%100
12	M52B	Z	0	0	0	%100

Member Distributed Loads (BLC 68 : Structure Wm (90 Deg)) (Continued)

	Member Label	Direction	Start Magnitude[lb/ft,...	End Magnitude[lb/ft,F...	Start Location[in,%]	End Location[in,%]
13	M76	X	1.196	1.196	0	%100
14	M76	Z	0	0	0	%100
15	M77	X	.914	.914	0	%100
16	M77	Z	0	0	0	%100
17	M80	X	.962	.962	0	%100
18	M80	Z	0	0	0	%100
19	M84	X	1.196	1.196	0	%100
20	M84	Z	0	0	0	%100
21	M85	X	.914	.914	0	%100
22	M85	Z	0	0	0	%100
23	M91	X	.962	.962	0	%100
24	M91	Z	0	0	0	%100
25	M126A	X	.177	.177	0	%100
26	M126A	Z	0	0	0	%100
27	M127A	X	.45	.45	0	%100
28	M127A	Z	0	0	0	%100
29	M128A	X	.45	.45	0	%100
30	M128A	Z	0	0	0	%100
31	M129A	X	.897	.897	0	%100
32	M129A	Z	0	0	0	%100
33	M132A	X	.498	.498	0	%100
34	M132A	Z	0	0	0	%100
35	M133A	X	0	0	0	%100
36	M133A	Z	0	0	0	%100
37	M137A	X	.299	.299	0	%100
38	M137A	Z	0	0	0	%100
39	M138A	X	.914	.914	0	%100
40	M138A	Z	0	0	0	%100
41	M140A	X	.962	.962	0	%100
42	M140A	Z	0	0	0	%100
43	M142A	X	.299	.299	0	%100
44	M142A	Z	0	0	0	%100
45	M143A	X	0	0	0	%100
46	M143A	Z	0	0	0	%100
47	M145A	X	0	0	0	%100
48	M145A	Z	0	0	0	%100
49	M150A	X	.177	.177	0	%100
50	M150A	Z	0	0	0	%100
51	M151A	X	.45	.45	0	%100
52	M151A	Z	0	0	0	%100
53	M152A	X	.45	.45	0	%100
54	M152A	Z	0	0	0	%100
55	M153A	X	.897	.897	0	%100
56	M153A	Z	0	0	0	%100
57	M156A	X	0	0	0	%100
58	M156A	Z	0	0	0	%100
59	M157A	X	.498	.498	0	%100
60	M157A	Z	0	0	0	%100
61	M161A	X	.299	.299	0	%100
62	M161A	Z	0	0	0	%100
63	M162A	X	0	0	0	%100
64	M162A	Z	0	0	0	%100

Member Distributed Loads (BLC 68 : Structure Wm (90 Deg)) (Continued)

	Member Label	Direction	Start Magnitude[lb/ft,...	End Magnitude[lb/ft,F...	Start Location[in,%]	End Location[in,%]
65	M164A	X	0	0	0	%100
66	M164A	Z	0	0	0	%100
67	M166A	X	.299	.299	0	%100
68	M166A	Z	0	0	0	%100
69	M167A	X	.914	.914	0	%100
70	M167A	Z	0	0	0	%100
71	M169A	X	.962	.962	0	%100
72	M169A	Z	0	0	0	%100
73	M174A	X	0	0	0	%100
74	M174A	Z	0	0	0	%100
75	MP1A	X	.474	.474	0	%100
76	MP1A	Z	0	0	0	%100
77	MP2A	X	.573	.573	0	%100
78	MP2A	Z	0	0	0	%100
79	MP3A	X	.474	.474	0	%100
80	MP3A	Z	0	0	0	%100
81	MP4A	X	.474	.474	0	%100
82	MP4A	Z	0	0	0	%100
83	M183A	X	.523	.523	0	%100
84	M183A	Z	0	0	0	%100
85	MP1C	X	.474	.474	0	%100
86	MP1C	Z	0	0	0	%100
87	MP2C	X	.573	.573	0	%100
88	MP2C	Z	0	0	0	%100
89	MP3C	X	.474	.474	0	%100
90	MP3C	Z	0	0	0	%100
91	MP4C	X	.474	.474	0	%100
92	MP4C	Z	0	0	0	%100
93	M192A	X	.523	.523	0	%100
94	M192A	Z	0	0	0	%100
95	MP1B	X	.474	.474	0	%100
96	MP1B	Z	0	0	0	%100
97	MP2B	X	.573	.573	0	%100
98	MP2B	Z	0	0	0	%100
99	MP3B	X	.474	.474	0	%100
100	MP3B	Z	0	0	0	%100
101	MP4B	X	.474	.474	0	%100
102	MP4B	Z	0	0	0	%100
103	M101	X	.387	.387	0	%100
104	M101	Z	0	0	0	%100
105	M102	X	0	0	0	%100
106	M102	Z	0	0	0	%100
107	M115A	X	.43	.43	0	%100
108	M115A	Z	0	0	0	%100
109	M116A	X	.43	.43	0	%100
110	M116A	Z	0	0	0	%100
111	M123	X	.508	.508	0	%100
112	M123	Z	0	0	0	%100
113	M124	X	0	0	0	%100
114	M124	Z	0	0	0	%100
115	M125	X	.508	.508	0	%100
116	M125	Z	0	0	0	%100

Member Distributed Loads (BLC 69 : Structure Wm (120 Deg))

	Member Label	Direction	Start Magnitude[lb/ft,...	End Magnitude[lb/ft,F...	Start Location[in,%]	End Location[in,%]
1	M4	X	.46	.46	0	%100
2	M4	Z	.266	.266	0	%100
3	M10	X	.13	.13	0	%100
4	M10	Z	.075	.075	0	%100
5	M43	X	.13	.13	0	%100
6	M43	Z	.075	.075	0	%100
7	M46	X	.259	.259	0	%100
8	M46	Z	.15	.15	0	%100
9	M51B	X	.144	.144	0	%100
10	M51B	Z	.083	.083	0	%100
11	M52B	X	.575	.575	0	%100
12	M52B	Z	.332	.332	0	%100
13	M76	X	.777	.777	0	%100
14	M76	Z	.449	.449	0	%100
15	M77	X	.264	.264	0	%100
16	M77	Z	.152	.152	0	%100
17	M80	X	.278	.278	0	%100
18	M80	Z	.16	.16	0	%100
19	M84	X	.777	.777	0	%100
20	M84	Z	.449	.449	0	%100
21	M85	X	1.055	1.055	0	%100
22	M85	Z	.609	.609	0	%100
23	M91	X	1.111	1.111	0	%100
24	M91	Z	.642	.642	0	%100
25	M126A	X	.46	.46	0	%100
26	M126A	Z	.266	.266	0	%100
27	M127A	X	.13	.13	0	%100
28	M127A	Z	.075	.075	0	%100
29	M128A	X	.13	.13	0	%100
30	M128A	Z	.075	.075	0	%100
31	M129A	X	.259	.259	0	%100
32	M129A	Z	.15	.15	0	%100
33	M132A	X	.575	.575	0	%100
34	M132A	Z	.332	.332	0	%100
35	M133A	X	.144	.144	0	%100
36	M133A	Z	.083	.083	0	%100
37	M137A	X	.777	.777	0	%100
38	M137A	Z	.449	.449	0	%100
39	M138A	X	1.055	1.055	0	%100
40	M138A	Z	.609	.609	0	%100
41	M140A	X	1.111	1.111	0	%100
42	M140A	Z	.642	.642	0	%100
43	M142A	X	.777	.777	0	%100
44	M142A	Z	.449	.449	0	%100
45	M143A	X	.264	.264	0	%100
46	M143A	Z	.152	.152	0	%100
47	M145A	X	.278	.278	0	%100
48	M145A	Z	.16	.16	0	%100
49	M150A	X	0	0	0	%100
50	M150A	Z	0	0	0	%100
51	M151A	X	.519	.519	0	%100
52	M151A	Z	.3	.3	0	%100

Member Distributed Loads (BLC 69 : Structure Wm (120 Deg)) (Continued)

	Member Label	Direction	Start Magnitude[lb/ft,...	End Magnitude[lb/ft,F...	Start Location[in,%]	End Location[in,%]
53	M152A	X	.519	.519	0	%100
54	M152A	Z	.3	.3	0	%100
55	M153A	X	1.036	1.036	0	%100
56	M153A	Z	.598	.598	0	%100
57	M156A	X	.144	.144	0	%100
58	M156A	Z	.083	.083	0	%100
59	M157A	X	.144	.144	0	%100
60	M157A	Z	.083	.083	0	%100
61	M161A	X	0	0	0	%100
62	M161A	Z	0	0	0	%100
63	M162A	X	.264	.264	0	%100
64	M162A	Z	.152	.152	0	%100
65	M164A	X	.278	.278	0	%100
66	M164A	Z	.16	.16	0	%100
67	M166A	X	0	0	0	%100
68	M166A	Z	0	0	0	%100
69	M167A	X	.264	.264	0	%100
70	M167A	Z	.152	.152	0	%100
71	M169A	X	.278	.278	0	%100
72	M169A	Z	.16	.16	0	%100
73	M174A	X	.151	.151	0	%100
74	M174A	Z	.087	.087	0	%100
75	MP1A	X	.41	.41	0	%100
76	MP1A	Z	.237	.237	0	%100
77	MP2A	X	.496	.496	0	%100
78	MP2A	Z	.287	.287	0	%100
79	MP3A	X	.41	.41	0	%100
80	MP3A	Z	.237	.237	0	%100
81	MP4A	X	.41	.41	0	%100
82	MP4A	Z	.237	.237	0	%100
83	M183A	X	.151	.151	0	%100
84	M183A	Z	.087	.087	0	%100
85	MP1C	X	.41	.41	0	%100
86	MP1C	Z	.237	.237	0	%100
87	MP2C	X	.496	.496	0	%100
88	MP2C	Z	.287	.287	0	%100
89	MP3C	X	.41	.41	0	%100
90	MP3C	Z	.237	.237	0	%100
91	MP4C	X	.41	.41	0	%100
92	MP4C	Z	.237	.237	0	%100
93	M192A	X	.604	.604	0	%100
94	M192A	Z	.349	.349	0	%100
95	MP1B	X	.41	.41	0	%100
96	MP1B	Z	.237	.237	0	%100
97	MP2B	X	.496	.496	0	%100
98	MP2B	Z	.287	.287	0	%100
99	MP3B	X	.41	.41	0	%100
100	MP3B	Z	.237	.237	0	%100
101	MP4B	X	.41	.41	0	%100
102	MP4B	Z	.237	.237	0	%100
103	M101	X	.335	.335	0	%100
104	M101	Z	.194	.194	0	%100

Member Distributed Loads (BLC 69 : Structure Wm (120 Deg)) (Continued)

	Member Label	Direction	Start Magnitude[lb/ft,...	End Magnitude[lb/ft,F...	Start Location[in,%]	End Location[in,%]
105	M102	X	.124	.124	0	%100
106	M102	Z	.072	.072	0	%100
107	M115A	X	.124	.124	0	%100
108	M115A	Z	.072	.072	0	%100
109	M116A	X	.496	.496	0	%100
110	M116A	Z	.287	.287	0	%100
111	M123	X	.147	.147	0	%100
112	M123	Z	.085	.085	0	%100
113	M124	X	.147	.147	0	%100
114	M124	Z	.085	.085	0	%100
115	M125	X	.586	.586	0	%100
116	M125	Z	.339	.339	0	%100

Member Distributed Loads (BLC 70 : Structure Wm (150 Deg))

	Member Label	Direction	Start Magnitude[lb/ft,...	End Magnitude[lb/ft,F...	Start Location[in,%]	End Location[in,%]
1	M4	X	.089	.089	0	%100
2	M4	Z	.153	.153	0	%100
3	M10	X	.225	.225	0	%100
4	M10	Z	.39	.39	0	%100
5	M43	X	.225	.225	0	%100
6	M43	Z	.39	.39	0	%100
7	M46	X	.449	.449	0	%100
8	M46	Z	.777	.777	0	%100
9	M51B	X	0	0	0	%100
10	M51B	Z	0	0	0	%100
11	M52B	X	.249	.249	0	%100
12	M52B	Z	.431	.431	0	%100
13	M76	X	.15	.15	0	%100
14	M76	Z	.259	.259	0	%100
15	M77	X	0	0	0	%100
16	M77	Z	0	0	0	%100
17	M80	X	0	0	0	%100
18	M80	Z	0	0	0	%100
19	M84	X	.15	.15	0	%100
20	M84	Z	.259	.259	0	%100
21	M85	X	.457	.457	0	%100
22	M85	Z	.791	.791	0	%100
23	M91	X	.481	.481	0	%100
24	M91	Z	.834	.834	0	%100
25	M126A	X	.354	.354	0	%100
26	M126A	Z	.614	.614	0	%100
27	M127A	X	0	0	0	%100
28	M127A	Z	0	0	0	%100
29	M128A	X	0	0	0	%100
30	M128A	Z	0	0	0	%100
31	M129A	X	0	0	0	%100
32	M129A	Z	0	0	0	%100
33	M132A	X	.249	.249	0	%100
34	M132A	Z	.431	.431	0	%100
35	M133A	X	.249	.249	0	%100
36	M133A	Z	.431	.431	0	%100

Member Distributed Loads (BLC 70 : Structure Wm (150 Deg)) (Continued)

	Member Label	Direction	Start Magnitude[lb/ft,...	End Magnitude[lb/ft,F...	Start Location[in,%]	End Location[in,%]
37	M137A	X	.598	.598	0	%100
38	M137A	Z	1.036	1.036	0	%100
39	M138A	X	.457	.457	0	%100
40	M138A	Z	.791	.791	0	%100
41	M140A	X	.481	.481	0	%100
42	M140A	Z	.834	.834	0	%100
43	M142A	X	.598	.598	0	%100
44	M142A	Z	1.036	1.036	0	%100
45	M143A	X	.457	.457	0	%100
46	M143A	Z	.791	.791	0	%100
47	M145A	X	.481	.481	0	%100
48	M145A	Z	.834	.834	0	%100
49	M150A	X	.089	.089	0	%100
50	M150A	Z	.153	.153	0	%100
51	M151A	X	.225	.225	0	%100
52	M151A	Z	.39	.39	0	%100
53	M152A	X	.225	.225	0	%100
54	M152A	Z	.39	.39	0	%100
55	M153A	X	.449	.449	0	%100
56	M153A	Z	.777	.777	0	%100
57	M156A	X	.249	.249	0	%100
58	M156A	Z	.431	.431	0	%100
59	M157A	X	0	0	0	%100
60	M157A	Z	0	0	0	%100
61	M161A	X	.15	.15	0	%100
62	M161A	Z	.259	.259	0	%100
63	M162A	X	.457	.457	0	%100
64	M162A	Z	.791	.791	0	%100
65	M164A	X	.481	.481	0	%100
66	M164A	Z	.834	.834	0	%100
67	M166A	X	.15	.15	0	%100
68	M166A	Z	.259	.259	0	%100
69	M167A	X	0	0	0	%100
70	M167A	Z	0	0	0	%100
71	M169A	X	0	0	0	%100
72	M169A	Z	0	0	0	%100
73	M174A	X	.262	.262	0	%100
74	M174A	Z	.453	.453	0	%100
75	MP1A	X	.237	.237	0	%100
76	MP1A	Z	.41	.41	0	%100
77	MP2A	X	.287	.287	0	%100
78	MP2A	Z	.496	.496	0	%100
79	MP3A	X	.237	.237	0	%100
80	MP3A	Z	.41	.41	0	%100
81	MP4A	X	.237	.237	0	%100
82	MP4A	Z	.41	.41	0	%100
83	M183A	X	0	0	0	%100
84	M183A	Z	0	0	0	%100
85	MP1C	X	.237	.237	0	%100
86	MP1C	Z	.41	.41	0	%100
87	MP2C	X	.287	.287	0	%100
88	MP2C	Z	.496	.496	0	%100

Member Distributed Loads (BLC 70 : Structure Wm (150 Deg)) (Continued)

	Member Label	Direction	Start Magnitude[lb/ft,...	End Magnitude[lb/ft,F...	Start Location[in,%]	End Location[in,%]
89	MP3C	X	.237	.237	0	%100
90	MP3C	Z	.41	.41	0	%100
91	MP4C	X	.237	.237	0	%100
92	MP4C	Z	.41	.41	0	%100
93	M192A	X	.262	.262	0	%100
94	M192A	Z	.453	.453	0	%100
95	MP1B	X	.237	.237	0	%100
96	MP1B	Z	.41	.41	0	%100
97	MP2B	X	.287	.287	0	%100
98	MP2B	Z	.496	.496	0	%100
99	MP3B	X	.237	.237	0	%100
100	MP3B	Z	.41	.41	0	%100
101	MP4B	X	.237	.237	0	%100
102	MP4B	Z	.41	.41	0	%100
103	M101	X	.194	.194	0	%100
104	M101	Z	.335	.335	0	%100
105	M102	X	.215	.215	0	%100
106	M102	Z	.372	.372	0	%100
107	M115A	X	0	0	0	%100
108	M115A	Z	0	0	0	%100
109	M116A	X	.215	.215	0	%100
110	M116A	Z	.372	.372	0	%100
111	M123	X	0	0	0	%100
112	M123	Z	0	0	0	%100
113	M124	X	.254	.254	0	%100
114	M124	Z	.44	.44	0	%100
115	M125	X	.254	.254	0	%100
116	M125	Z	.44	.44	0	%100

Member Distributed Loads (BLC 71 : Structure Wm (180 Deg))

	Member Label	Direction	Start Magnitude[lb/ft,...	End Magnitude[lb/ft,F...	Start Location[in,%]	End Location[in,%]
1	M4	X	0	0	0	%100
2	M4	Z	0	0	0	%100
3	M10	X	0	0	0	%100
4	M10	Z	.6	.6	0	%100
5	M43	X	0	0	0	%100
6	M43	Z	.6	.6	0	%100
7	M46	X	0	0	0	%100
8	M46	Z	1.196	1.196	0	%100
9	M51B	X	0	0	0	%100
10	M51B	Z	.166	.166	0	%100
11	M52B	X	0	0	0	%100
12	M52B	Z	.166	.166	0	%100
13	M76	X	0	0	0	%100
14	M76	Z	0	0	0	%100
15	M77	X	0	0	0	%100
16	M77	Z	.305	.305	0	%100
17	M80	X	0	0	0	%100
18	M80	Z	.321	.321	0	%100
19	M84	X	0	0	0	%100
20	M84	Z	0	0	0	%100

Member Distributed Loads (BLC 71 : Structure Wm (180 Deg)) (Continued)

	Member Label	Direction	Start Magnitude[lb/ft,...	End Magnitude[lb/ft,F...	Start Location[in,%]	End Location[in,%]
21	M85	X	0	0	0	%100
22	M85	Z	.305	.305	0	%100
23	M91	X	0	0	0	%100
24	M91	Z	.321	.321	0	%100
25	M126A	X	0	0	0	%100
26	M126A	Z	.532	.532	0	%100
27	M127A	X	0	0	0	%100
28	M127A	Z	.15	.15	0	%100
29	M128A	X	0	0	0	%100
30	M128A	Z	.15	.15	0	%100
31	M129A	X	0	0	0	%100
32	M129A	Z	.299	.299	0	%100
33	M132A	X	0	0	0	%100
34	M132A	Z	.166	.166	0	%100
35	M133A	X	0	0	0	%100
36	M133A	Z	.664	.664	0	%100
37	M137A	X	0	0	0	%100
38	M137A	Z	.897	.897	0	%100
39	M138A	X	0	0	0	%100
40	M138A	Z	.305	.305	0	%100
41	M140A	X	0	0	0	%100
42	M140A	Z	.321	.321	0	%100
43	M142A	X	0	0	0	%100
44	M142A	Z	.897	.897	0	%100
45	M143A	X	0	0	0	%100
46	M143A	Z	1.218	1.218	0	%100
47	M145A	X	0	0	0	%100
48	M145A	Z	1.283	1.283	0	%100
49	M150A	X	0	0	0	%100
50	M150A	Z	.532	.532	0	%100
51	M151A	X	0	0	0	%100
52	M151A	Z	.15	.15	0	%100
53	M152A	X	0	0	0	%100
54	M152A	Z	.15	.15	0	%100
55	M153A	X	0	0	0	%100
56	M153A	Z	.299	.299	0	%100
57	M156A	X	0	0	0	%100
58	M156A	Z	.664	.664	0	%100
59	M157A	X	0	0	0	%100
60	M157A	Z	.166	.166	0	%100
61	M161A	X	0	0	0	%100
62	M161A	Z	.897	.897	0	%100
63	M162A	X	0	0	0	%100
64	M162A	Z	1.218	1.218	0	%100
65	M164A	X	0	0	0	%100
66	M164A	Z	1.283	1.283	0	%100
67	M166A	X	0	0	0	%100
68	M166A	Z	.897	.897	0	%100
69	M167A	X	0	0	0	%100
70	M167A	Z	.305	.305	0	%100
71	M169A	X	0	0	0	%100
72	M169A	Z	.321	.321	0	%100

Member Distributed Loads (BLC 71 : Structure Wm (180 Deg)) (Continued)

	Member Label	Direction	Start Magnitude[lb/ft,...	End Magnitude[lb/ft,F...	Start Location[in,%]	End Location[in,%]
73	M174A	X	0	0	0	%100
74	M174A	Z	.698	.698	0	%100
75	MP1A	X	0	0	0	%100
76	MP1A	Z	.474	.474	0	%100
77	MP2A	X	0	0	0	%100
78	MP2A	Z	.573	.573	0	%100
79	MP3A	X	0	0	0	%100
80	MP3A	Z	.474	.474	0	%100
81	MP4A	X	0	0	0	%100
82	MP4A	Z	.474	.474	0	%100
83	M183A	X	0	0	0	%100
84	M183A	Z	.174	.174	0	%100
85	MP1C	X	0	0	0	%100
86	MP1C	Z	.474	.474	0	%100
87	MP2C	X	0	0	0	%100
88	MP2C	Z	.573	.573	0	%100
89	MP3C	X	0	0	0	%100
90	MP3C	Z	.474	.474	0	%100
91	MP4C	X	0	0	0	%100
92	MP4C	Z	.474	.474	0	%100
93	M192A	X	0	0	0	%100
94	M192A	Z	.174	.174	0	%100
95	MP1B	X	0	0	0	%100
96	MP1B	Z	.474	.474	0	%100
97	MP2B	X	0	0	0	%100
98	MP2B	Z	.573	.573	0	%100
99	MP3B	X	0	0	0	%100
100	MP3B	Z	.474	.474	0	%100
101	MP4B	X	0	0	0	%100
102	MP4B	Z	.474	.474	0	%100
103	M101	X	0	0	0	%100
104	M101	Z	.387	.387	0	%100
105	M102	X	0	0	0	%100
106	M102	Z	.573	.573	0	%100
107	M115A	X	0	0	0	%100
108	M115A	Z	.143	.143	0	%100
109	M116A	X	0	0	0	%100
110	M116A	Z	.143	.143	0	%100
111	M123	X	0	0	0	%100
112	M123	Z	.169	.169	0	%100
113	M124	X	0	0	0	%100
114	M124	Z	.677	.677	0	%100
115	M125	X	0	0	0	%100
116	M125	Z	.169	.169	0	%100

Member Distributed Loads (BLC 72 : Structure Wm (210 Deg))

	Member Label	Direction	Start Magnitude[lb/ft,...	End Magnitude[lb/ft,F...	Start Location[in,%]	End Location[in,%]
1	M4	X	-.089	-.089	0	%100
2	M4	Z	.153	.153	0	%100
3	M10	X	-.225	-.225	0	%100
4	M10	Z	.39	.39	0	%100

Member Distributed Loads (BLC 72 : Structure Wm (210 Deg)) (Continued)

	Member Label	Direction	Start Magnitude[lb/ft,...	End Magnitude[lb/ft,F...	Start Location[in,%]	End Location[in,%]
5	M43	X	-.225	-.225	0	%100
6	M43	Z	.39	.39	0	%100
7	M46	X	-.449	-.449	0	%100
8	M46	Z	.777	.777	0	%100
9	M51B	X	-.249	-.249	0	%100
10	M51B	Z	.431	.431	0	%100
11	M52B	X	0	0	0	%100
12	M52B	Z	0	0	0	%100
13	M76	X	-.15	-.15	0	%100
14	M76	Z	.259	.259	0	%100
15	M77	X	-.457	-.457	0	%100
16	M77	Z	.791	.791	0	%100
17	M80	X	-.481	-.481	0	%100
18	M80	Z	.834	.834	0	%100
19	M84	X	-.15	-.15	0	%100
20	M84	Z	.259	.259	0	%100
21	M85	X	0	0	0	%100
22	M85	Z	0	0	0	%100
23	M91	X	0	0	0	%100
24	M91	Z	0	0	0	%100
25	M126A	X	-.089	-.089	0	%100
26	M126A	Z	.153	.153	0	%100
27	M127A	X	-.225	-.225	0	%100
28	M127A	Z	.39	.39	0	%100
29	M128A	X	-.225	-.225	0	%100
30	M128A	Z	.39	.39	0	%100
31	M129A	X	-.449	-.449	0	%100
32	M129A	Z	.777	.777	0	%100
33	M132A	X	0	0	0	%100
34	M132A	Z	0	0	0	%100
35	M133A	X	-.249	-.249	0	%100
36	M133A	Z	.431	.431	0	%100
37	M137A	X	-.15	-.15	0	%100
38	M137A	Z	.259	.259	0	%100
39	M138A	X	0	0	0	%100
40	M138A	Z	0	0	0	%100
41	M140A	X	0	0	0	%100
42	M140A	Z	0	0	0	%100
43	M142A	X	-.15	-.15	0	%100
44	M142A	Z	.259	.259	0	%100
45	M143A	X	-.457	-.457	0	%100
46	M143A	Z	.791	.791	0	%100
47	M145A	X	-.481	-.481	0	%100
48	M145A	Z	.834	.834	0	%100
49	M150A	X	-.354	-.354	0	%100
50	M150A	Z	.614	.614	0	%100
51	M151A	X	0	0	0	%100
52	M151A	Z	0	0	0	%100
53	M152A	X	0	0	0	%100
54	M152A	Z	0	0	0	%100
55	M153A	X	0	0	0	%100
56	M153A	Z	0	0	0	%100

Member Distributed Loads (BLC 72 : Structure Wm (210 Deg)) (Continued)

	Member Label	Direction	Start Magnitude[lb/ft,...	End Magnitude[lb/ft,F...	Start Location[in,%]	End Location[in,%]
57	M156A	X	-.249	-.249	0	%100
58	M156A	Z	.431	.431	0	%100
59	M157A	X	-.249	-.249	0	%100
60	M157A	Z	.431	.431	0	%100
61	M161A	X	-.598	-.598	0	%100
62	M161A	Z	1.036	1.036	0	%100
63	M162A	X	-.457	-.457	0	%100
64	M162A	Z	.791	.791	0	%100
65	M164A	X	-.481	-.481	0	%100
66	M164A	Z	.834	.834	0	%100
67	M166A	X	-.598	-.598	0	%100
68	M166A	Z	1.036	1.036	0	%100
69	M167A	X	-.457	-.457	0	%100
70	M167A	Z	.791	.791	0	%100
71	M169A	X	-.481	-.481	0	%100
72	M169A	Z	.834	.834	0	%100
73	M174A	X	-.262	-.262	0	%100
74	M174A	Z	.453	.453	0	%100
75	MP1A	X	-.237	-.237	0	%100
76	MP1A	Z	.41	.41	0	%100
77	MP2A	X	-.287	-.287	0	%100
78	MP2A	Z	.496	.496	0	%100
79	MP3A	X	-.237	-.237	0	%100
80	MP3A	Z	.41	.41	0	%100
81	MP4A	X	-.237	-.237	0	%100
82	MP4A	Z	.41	.41	0	%100
83	M183A	X	-.262	-.262	0	%100
84	M183A	Z	.453	.453	0	%100
85	MP1C	X	-.237	-.237	0	%100
86	MP1C	Z	.41	.41	0	%100
87	MP2C	X	-.287	-.287	0	%100
88	MP2C	Z	.496	.496	0	%100
89	MP3C	X	-.237	-.237	0	%100
90	MP3C	Z	.41	.41	0	%100
91	MP4C	X	-.237	-.237	0	%100
92	MP4C	Z	.41	.41	0	%100
93	M192A	X	0	0	0	%100
94	M192A	Z	0	0	0	%100
95	MP1B	X	-.237	-.237	0	%100
96	MP1B	Z	.41	.41	0	%100
97	MP2B	X	-.287	-.287	0	%100
98	MP2B	Z	.496	.496	0	%100
99	MP3B	X	-.237	-.237	0	%100
100	MP3B	Z	.41	.41	0	%100
101	MP4B	X	-.237	-.237	0	%100
102	MP4B	Z	.41	.41	0	%100
103	M101	X	-.194	-.194	0	%100
104	M101	Z	.335	.335	0	%100
105	M102	X	-.215	-.215	0	%100
106	M102	Z	.372	.372	0	%100
107	M115A	X	-.215	-.215	0	%100
108	M115A	Z	.372	.372	0	%100

Member Distributed Loads (BLC 72 : Structure Wm (210 Deg)) (Continued)

	Member Label	Direction	Start Magnitude[lb/ft,...	End Magnitude[lb/ft,F...	Start Location[in,%]	End Location[in,%]
109	M116A	X	0	0	0	%100
110	M116A	Z	0	0	0	%100
111	M123	X	-.254	-.254	0	%100
112	M123	Z	.44	.44	0	%100
113	M124	X	-.254	-.254	0	%100
114	M124	Z	.44	.44	0	%100
115	M125	X	0	0	0	%100
116	M125	Z	0	0	0	%100

Member Distributed Loads (BLC 73 : Structure Wm (240 Deg))

	Member Label	Direction	Start Magnitude[lb/ft,...	End Magnitude[lb/ft,F...	Start Location[in,%]	End Location[in,%]
1	M4	X	-.46	-.46	0	%100
2	M4	Z	.266	.266	0	%100
3	M10	X	-.13	-.13	0	%100
4	M10	Z	.075	.075	0	%100
5	M43	X	-.13	-.13	0	%100
6	M43	Z	.075	.075	0	%100
7	M46	X	-.259	-.259	0	%100
8	M46	Z	.15	.15	0	%100
9	M51B	X	-.575	-.575	0	%100
10	M51B	Z	.332	.332	0	%100
11	M52B	X	-.144	-.144	0	%100
12	M52B	Z	.083	.083	0	%100
13	M76	X	-.777	-.777	0	%100
14	M76	Z	.449	.449	0	%100
15	M77	X	-1.055	-1.055	0	%100
16	M77	Z	.609	.609	0	%100
17	M80	X	-1.111	-1.111	0	%100
18	M80	Z	.642	.642	0	%100
19	M84	X	-.777	-.777	0	%100
20	M84	Z	.449	.449	0	%100
21	M85	X	-.264	-.264	0	%100
22	M85	Z	.152	.152	0	%100
23	M91	X	-.278	-.278	0	%100
24	M91	Z	.16	.16	0	%100
25	M126A	X	0	0	0	%100
26	M126A	Z	0	0	0	%100
27	M127A	X	-.519	-.519	0	%100
28	M127A	Z	.3	.3	0	%100
29	M128A	X	-.519	-.519	0	%100
30	M128A	Z	.3	.3	0	%100
31	M129A	X	-1.036	-1.036	0	%100
32	M129A	Z	.598	.598	0	%100
33	M132A	X	-.144	-.144	0	%100
34	M132A	Z	.083	.083	0	%100
35	M133A	X	-.144	-.144	0	%100
36	M133A	Z	.083	.083	0	%100
37	M137A	X	0	0	0	%100
38	M137A	Z	0	0	0	%100
39	M138A	X	-.264	-.264	0	%100
40	M138A	Z	.152	.152	0	%100

Member Distributed Loads (BLC 73 : Structure Wm (240 Deg)) (Continued)

	Member Label	Direction	Start Magnitude[lb/ft,...	End Magnitude[lb/ft,F...	Start Location[in,%]	End Location[in,%]
41	M140A	X	-.278	-.278	0	%100
42	M140A	Z	.16	.16	0	%100
43	M142A	X	0	0	0	%100
44	M142A	Z	0	0	0	%100
45	M143A	X	-.264	-.264	0	%100
46	M143A	Z	.152	.152	0	%100
47	M145A	X	-.278	-.278	0	%100
48	M145A	Z	.16	.16	0	%100
49	M150A	X	-.46	-.46	0	%100
50	M150A	Z	.266	.266	0	%100
51	M151A	X	-.13	-.13	0	%100
52	M151A	Z	.075	.075	0	%100
53	M152A	X	-.13	-.13	0	%100
54	M152A	Z	.075	.075	0	%100
55	M153A	X	-.259	-.259	0	%100
56	M153A	Z	.15	.15	0	%100
57	M156A	X	-.144	-.144	0	%100
58	M156A	Z	.083	.083	0	%100
59	M157A	X	-.575	-.575	0	%100
60	M157A	Z	.332	.332	0	%100
61	M161A	X	-.777	-.777	0	%100
62	M161A	Z	.449	.449	0	%100
63	M162A	X	-.264	-.264	0	%100
64	M162A	Z	.152	.152	0	%100
65	M164A	X	-.278	-.278	0	%100
66	M164A	Z	.16	.16	0	%100
67	M166A	X	-.777	-.777	0	%100
68	M166A	Z	.449	.449	0	%100
69	M167A	X	-1.055	-1.055	0	%100
70	M167A	Z	.609	.609	0	%100
71	M169A	X	-1.111	-1.111	0	%100
72	M169A	Z	.642	.642	0	%100
73	M174A	X	-.151	-.151	0	%100
74	M174A	Z	.087	.087	0	%100
75	MP1A	X	-.41	-.41	0	%100
76	MP1A	Z	.237	.237	0	%100
77	MP2A	X	-.496	-.496	0	%100
78	MP2A	Z	.287	.287	0	%100
79	MP3A	X	-.41	-.41	0	%100
80	MP3A	Z	.237	.237	0	%100
81	MP4A	X	-.41	-.41	0	%100
82	MP4A	Z	.237	.237	0	%100
83	M183A	X	-.604	-.604	0	%100
84	M183A	Z	.349	.349	0	%100
85	MP1C	X	-.41	-.41	0	%100
86	MP1C	Z	.237	.237	0	%100
87	MP2C	X	-.496	-.496	0	%100
88	MP2C	Z	.287	.287	0	%100
89	MP3C	X	-.41	-.41	0	%100
90	MP3C	Z	.237	.237	0	%100
91	MP4C	X	-.41	-.41	0	%100
92	MP4C	Z	.237	.237	0	%100

Member Distributed Loads (BLC 73 : Structure Wm (240 Deg)) (Continued)

	Member Label	Direction	Start Magnitude[lb/ft,...	End Magnitude[lb/ft,F...	Start Location[in,%]	End Location[in,%]
93	M192A	X	-.151	-.151	0	%100
94	M192A	Z	.087	.087	0	%100
95	MP1B	X	-.41	-.41	0	%100
96	MP1B	Z	.237	.237	0	%100
97	MP2B	X	-.496	-.496	0	%100
98	MP2B	Z	.287	.287	0	%100
99	MP3B	X	-.41	-.41	0	%100
100	MP3B	Z	.237	.237	0	%100
101	MP4B	X	-.41	-.41	0	%100
102	MP4B	Z	.237	.237	0	%100
103	M101	X	-.335	-.335	0	%100
104	M101	Z	.194	.194	0	%100
105	M102	X	-.124	-.124	0	%100
106	M102	Z	.072	.072	0	%100
107	M115A	X	-.496	-.496	0	%100
108	M115A	Z	.287	.287	0	%100
109	M116A	X	-.124	-.124	0	%100
110	M116A	Z	.072	.072	0	%100
111	M123	X	-.586	-.586	0	%100
112	M123	Z	.339	.339	0	%100
113	M124	X	-.147	-.147	0	%100
114	M124	Z	.085	.085	0	%100
115	M125	X	-.147	-.147	0	%100
116	M125	Z	.085	.085	0	%100

Member Distributed Loads (BLC 74 : Structure Wm (270 Deg))

	Member Label	Direction	Start Magnitude[lb/ft,...	End Magnitude[lb/ft,F...	Start Location[in,%]	End Location[in,%]
1	M4	X	-.709	-.709	0	%100
2	M4	Z	0	0	0	%100
3	M10	X	0	0	0	%100
4	M10	Z	0	0	0	%100
5	M43	X	0	0	0	%100
6	M43	Z	0	0	0	%100
7	M46	X	0	0	0	%100
8	M46	Z	0	0	0	%100
9	M51B	X	-.498	-.498	0	%100
10	M51B	Z	0	0	0	%100
11	M52B	X	-.498	-.498	0	%100
12	M52B	Z	0	0	0	%100
13	M76	X	-1.196	-1.196	0	%100
14	M76	Z	0	0	0	%100
15	M77	X	-.914	-.914	0	%100
16	M77	Z	0	0	0	%100
17	M80	X	-.962	-.962	0	%100
18	M80	Z	0	0	0	%100
19	M84	X	-1.196	-1.196	0	%100
20	M84	Z	0	0	0	%100
21	M85	X	-.914	-.914	0	%100
22	M85	Z	0	0	0	%100
23	M91	X	-.962	-.962	0	%100
24	M91	Z	0	0	0	%100

Member Distributed Loads (BLC 74 : Structure Wm (270 Deg)) (Continued)

	Member Label	Direction	Start Magnitude[lb/ft,...	End Magnitude[lb/ft,F...	Start Location[in,%]	End Location[in,%]
25	M126A	X	-.177	-.177	0	%100
26	M126A	Z	0	0	0	%100
27	M127A	X	-.45	-.45	0	%100
28	M127A	Z	0	0	0	%100
29	M128A	X	-.45	-.45	0	%100
30	M128A	Z	0	0	0	%100
31	M129A	X	-.897	-.897	0	%100
32	M129A	Z	0	0	0	%100
33	M132A	X	-.498	-.498	0	%100
34	M132A	Z	0	0	0	%100
35	M133A	X	0	0	0	%100
36	M133A	Z	0	0	0	%100
37	M137A	X	-.299	-.299	0	%100
38	M137A	Z	0	0	0	%100
39	M138A	X	-.914	-.914	0	%100
40	M138A	Z	0	0	0	%100
41	M140A	X	-.962	-.962	0	%100
42	M140A	Z	0	0	0	%100
43	M142A	X	-.299	-.299	0	%100
44	M142A	Z	0	0	0	%100
45	M143A	X	0	0	0	%100
46	M143A	Z	0	0	0	%100
47	M145A	X	0	0	0	%100
48	M145A	Z	0	0	0	%100
49	M150A	X	-.177	-.177	0	%100
50	M150A	Z	0	0	0	%100
51	M151A	X	-.45	-.45	0	%100
52	M151A	Z	0	0	0	%100
53	M152A	X	-.45	-.45	0	%100
54	M152A	Z	0	0	0	%100
55	M153A	X	-.897	-.897	0	%100
56	M153A	Z	0	0	0	%100
57	M156A	X	0	0	0	%100
58	M156A	Z	0	0	0	%100
59	M157A	X	-.498	-.498	0	%100
60	M157A	Z	0	0	0	%100
61	M161A	X	-.299	-.299	0	%100
62	M161A	Z	0	0	0	%100
63	M162A	X	0	0	0	%100
64	M162A	Z	0	0	0	%100
65	M164A	X	0	0	0	%100
66	M164A	Z	0	0	0	%100
67	M166A	X	-.299	-.299	0	%100
68	M166A	Z	0	0	0	%100
69	M167A	X	-.914	-.914	0	%100
70	M167A	Z	0	0	0	%100
71	M169A	X	-.962	-.962	0	%100
72	M169A	Z	0	0	0	%100
73	M174A	X	0	0	0	%100
74	M174A	Z	0	0	0	%100
75	MP1A	X	-.474	-.474	0	%100
76	MP1A	Z	0	0	0	%100

Member Distributed Loads (BLC 74 : Structure Wm (270 Deg)) (Continued)

	Member Label	Direction	Start Magnitude[lb/ft,...	End Magnitude[lb/ft,F...	Start Location[in,%]	End Location[in,%]
77	MP2A	X	-.573	-.573	0	%100
78	MP2A	Z	0	0	0	%100
79	MP3A	X	-.474	-.474	0	%100
80	MP3A	Z	0	0	0	%100
81	MP4A	X	-.474	-.474	0	%100
82	MP4A	Z	0	0	0	%100
83	M183A	X	-.523	-.523	0	%100
84	M183A	Z	0	0	0	%100
85	MP1C	X	-.474	-.474	0	%100
86	MP1C	Z	0	0	0	%100
87	MP2C	X	-.573	-.573	0	%100
88	MP2C	Z	0	0	0	%100
89	MP3C	X	-.474	-.474	0	%100
90	MP3C	Z	0	0	0	%100
91	MP4C	X	-.474	-.474	0	%100
92	MP4C	Z	0	0	0	%100
93	M192A	X	-.523	-.523	0	%100
94	M192A	Z	0	0	0	%100
95	MP1B	X	-.474	-.474	0	%100
96	MP1B	Z	0	0	0	%100
97	MP2B	X	-.573	-.573	0	%100
98	MP2B	Z	0	0	0	%100
99	MP3B	X	-.474	-.474	0	%100
100	MP3B	Z	0	0	0	%100
101	MP4B	X	-.474	-.474	0	%100
102	MP4B	Z	0	0	0	%100
103	M101	X	-.387	-.387	0	%100
104	M101	Z	0	0	0	%100
105	M102	X	0	0	0	%100
106	M102	Z	0	0	0	%100
107	M115A	X	-.43	-.43	0	%100
108	M115A	Z	0	0	0	%100
109	M116A	X	-.43	-.43	0	%100
110	M116A	Z	0	0	0	%100
111	M123	X	-.508	-.508	0	%100
112	M123	Z	0	0	0	%100
113	M124	X	0	0	0	%100
114	M124	Z	0	0	0	%100
115	M125	X	-.508	-.508	0	%100
116	M125	Z	0	0	0	%100

Member Distributed Loads (BLC 75 : Structure Wm (300 Deg))

	Member Label	Direction	Start Magnitude[lb/ft,...	End Magnitude[lb/ft,F...	Start Location[in,%]	End Location[in,%]
1	M4	X	-.46	-.46	0	%100
2	M4	Z	-.266	-.266	0	%100
3	M10	X	-.13	-.13	0	%100
4	M10	Z	-.075	-.075	0	%100
5	M43	X	-.13	-.13	0	%100
6	M43	Z	-.075	-.075	0	%100
7	M46	X	-.259	-.259	0	%100
8	M46	Z	-.15	-.15	0	%100

Member Distributed Loads (BLC 75 : Structure Wm (300 Deg)) (Continued)

	Member Label	Direction	Start Magnitude[lb/ft,...	End Magnitude[lb/ft,F...	Start Location[in,%]	End Location[in,%]
9	M51B	X	-.144	-.144	0	%100
10	M51B	Z	-.083	-.083	0	%100
11	M52B	X	-.575	-.575	0	%100
12	M52B	Z	-.332	-.332	0	%100
13	M76	X	-.777	-.777	0	%100
14	M76	Z	-.449	-.449	0	%100
15	M77	X	-.264	-.264	0	%100
16	M77	Z	-.152	-.152	0	%100
17	M80	X	-.278	-.278	0	%100
18	M80	Z	-.16	-.16	0	%100
19	M84	X	-.777	-.777	0	%100
20	M84	Z	-.449	-.449	0	%100
21	M85	X	-1.055	-1.055	0	%100
22	M85	Z	-.609	-.609	0	%100
23	M91	X	-1.111	-1.111	0	%100
24	M91	Z	-.642	-.642	0	%100
25	M126A	X	-.46	-.46	0	%100
26	M126A	Z	-.266	-.266	0	%100
27	M127A	X	-.13	-.13	0	%100
28	M127A	Z	-.075	-.075	0	%100
29	M128A	X	-.13	-.13	0	%100
30	M128A	Z	-.075	-.075	0	%100
31	M129A	X	-.259	-.259	0	%100
32	M129A	Z	-.15	-.15	0	%100
33	M132A	X	-.575	-.575	0	%100
34	M132A	Z	-.332	-.332	0	%100
35	M133A	X	-.144	-.144	0	%100
36	M133A	Z	-.083	-.083	0	%100
37	M137A	X	-.777	-.777	0	%100
38	M137A	Z	-.449	-.449	0	%100
39	M138A	X	-1.055	-1.055	0	%100
40	M138A	Z	-.609	-.609	0	%100
41	M140A	X	-1.111	-1.111	0	%100
42	M140A	Z	-.642	-.642	0	%100
43	M142A	X	-.777	-.777	0	%100
44	M142A	Z	-.449	-.449	0	%100
45	M143A	X	-.264	-.264	0	%100
46	M143A	Z	-.152	-.152	0	%100
47	M145A	X	-.278	-.278	0	%100
48	M145A	Z	-.16	-.16	0	%100
49	M150A	X	0	0	0	%100
50	M150A	Z	0	0	0	%100
51	M151A	X	-.519	-.519	0	%100
52	M151A	Z	-.3	-.3	0	%100
53	M152A	X	-.519	-.519	0	%100
54	M152A	Z	-.3	-.3	0	%100
55	M153A	X	-1.036	-1.036	0	%100
56	M153A	Z	-.598	-.598	0	%100
57	M156A	X	-.144	-.144	0	%100
58	M156A	Z	-.083	-.083	0	%100
59	M157A	X	-.144	-.144	0	%100
60	M157A	Z	-.083	-.083	0	%100

Member Distributed Loads (BLC 75 : Structure Wm (300 Deg)) (Continued)

	Member Label	Direction	Start Magnitude[lb/ft,...	End Magnitude[lb/ft,F...	Start Location[in,%]	End Location[in,%]
61	M161A	X	0	0	0	%100
62	M161A	Z	0	0	0	%100
63	M162A	X	-.264	-.264	0	%100
64	M162A	Z	-.152	-.152	0	%100
65	M164A	X	-.278	-.278	0	%100
66	M164A	Z	-.16	-.16	0	%100
67	M166A	X	0	0	0	%100
68	M166A	Z	0	0	0	%100
69	M167A	X	-.264	-.264	0	%100
70	M167A	Z	-.152	-.152	0	%100
71	M169A	X	-.278	-.278	0	%100
72	M169A	Z	-.16	-.16	0	%100
73	M174A	X	-.151	-.151	0	%100
74	M174A	Z	-.087	-.087	0	%100
75	MP1A	X	-.41	-.41	0	%100
76	MP1A	Z	-.237	-.237	0	%100
77	MP2A	X	-.496	-.496	0	%100
78	MP2A	Z	-.287	-.287	0	%100
79	MP3A	X	-.41	-.41	0	%100
80	MP3A	Z	-.237	-.237	0	%100
81	MP4A	X	-.41	-.41	0	%100
82	MP4A	Z	-.237	-.237	0	%100
83	M183A	X	-.151	-.151	0	%100
84	M183A	Z	-.087	-.087	0	%100
85	MP1C	X	-.41	-.41	0	%100
86	MP1C	Z	-.237	-.237	0	%100
87	MP2C	X	-.496	-.496	0	%100
88	MP2C	Z	-.287	-.287	0	%100
89	MP3C	X	-.41	-.41	0	%100
90	MP3C	Z	-.237	-.237	0	%100
91	MP4C	X	-.41	-.41	0	%100
92	MP4C	Z	-.237	-.237	0	%100
93	M192A	X	-.604	-.604	0	%100
94	M192A	Z	-.349	-.349	0	%100
95	MP1B	X	-.41	-.41	0	%100
96	MP1B	Z	-.237	-.237	0	%100
97	MP2B	X	-.496	-.496	0	%100
98	MP2B	Z	-.287	-.287	0	%100
99	MP3B	X	-.41	-.41	0	%100
100	MP3B	Z	-.237	-.237	0	%100
101	MP4B	X	-.41	-.41	0	%100
102	MP4B	Z	-.237	-.237	0	%100
103	M101	X	-.335	-.335	0	%100
104	M101	Z	-.194	-.194	0	%100
105	M102	X	-.124	-.124	0	%100
106	M102	Z	-.072	-.072	0	%100
107	M115A	X	-.124	-.124	0	%100
108	M115A	Z	-.072	-.072	0	%100
109	M116A	X	-.496	-.496	0	%100
110	M116A	Z	-.287	-.287	0	%100
111	M123	X	-.147	-.147	0	%100
112	M123	Z	-.085	-.085	0	%100

Member Distributed Loads (BLC 75 : Structure Wm (300 Deg)) (Continued)

	Member Label	Direction	Start Magnitude[lb/ft,...	End Magnitude[lb/ft,F...	Start Location[in,%]	End Location[in,%]
113	M124	X	-.147	-.147	0	%100
114	M124	Z	-.085	-.085	0	%100
115	M125	X	-.586	-.586	0	%100
116	M125	Z	-.339	-.339	0	%100

Member Distributed Loads (BLC 76 : Structure Wm (330 Deg))

	Member Label	Direction	Start Magnitude[lb/ft,...	End Magnitude[lb/ft,F...	Start Location[in,%]	End Location[in,%]
1	M4	X	-.089	-.089	0	%100
2	M4	Z	-.153	-.153	0	%100
3	M10	X	-.225	-.225	0	%100
4	M10	Z	-.39	-.39	0	%100
5	M43	X	-.225	-.225	0	%100
6	M43	Z	-.39	-.39	0	%100
7	M46	X	-.449	-.449	0	%100
8	M46	Z	-.777	-.777	0	%100
9	M51B	X	0	0	0	%100
10	M51B	Z	0	0	0	%100
11	M52B	X	-.249	-.249	0	%100
12	M52B	Z	-.431	-.431	0	%100
13	M76	X	-.15	-.15	0	%100
14	M76	Z	-.259	-.259	0	%100
15	M77	X	0	0	0	%100
16	M77	Z	0	0	0	%100
17	M80	X	0	0	0	%100
18	M80	Z	0	0	0	%100
19	M84	X	-.15	-.15	0	%100
20	M84	Z	-.259	-.259	0	%100
21	M85	X	-.457	-.457	0	%100
22	M85	Z	-.791	-.791	0	%100
23	M91	X	-.481	-.481	0	%100
24	M91	Z	-.834	-.834	0	%100
25	M126A	X	-.354	-.354	0	%100
26	M126A	Z	-.614	-.614	0	%100
27	M127A	X	0	0	0	%100
28	M127A	Z	0	0	0	%100
29	M128A	X	0	0	0	%100
30	M128A	Z	0	0	0	%100
31	M129A	X	0	0	0	%100
32	M129A	Z	0	0	0	%100
33	M132A	X	-.249	-.249	0	%100
34	M132A	Z	-.431	-.431	0	%100
35	M133A	X	-.249	-.249	0	%100
36	M133A	Z	-.431	-.431	0	%100
37	M137A	X	-.598	-.598	0	%100
38	M137A	Z	-1.036	-1.036	0	%100
39	M138A	X	-.457	-.457	0	%100
40	M138A	Z	-.791	-.791	0	%100
41	M140A	X	-.481	-.481	0	%100
42	M140A	Z	-.834	-.834	0	%100
43	M142A	X	-.598	-.598	0	%100
44	M142A	Z	-1.036	-1.036	0	%100

Member Distributed Loads (BLC 76 : Structure Wm (330 Deg)) (Continued)

	Member Label	Direction	Start Magnitude[lb/ft,...	End Magnitude[lb/ft,F...	Start Location[in,%]	End Location[in,%]
45	M143A	X	-.457	-.457	0	%100
46	M143A	Z	-.791	-.791	0	%100
47	M145A	X	-.481	-.481	0	%100
48	M145A	Z	-.834	-.834	0	%100
49	M150A	X	-.089	-.089	0	%100
50	M150A	Z	-.153	-.153	0	%100
51	M151A	X	-.225	-.225	0	%100
52	M151A	Z	-.39	-.39	0	%100
53	M152A	X	-.225	-.225	0	%100
54	M152A	Z	-.39	-.39	0	%100
55	M153A	X	-.449	-.449	0	%100
56	M153A	Z	-.777	-.777	0	%100
57	M156A	X	-.249	-.249	0	%100
58	M156A	Z	-.431	-.431	0	%100
59	M157A	X	0	0	0	%100
60	M157A	Z	0	0	0	%100
61	M161A	X	-.15	-.15	0	%100
62	M161A	Z	-.259	-.259	0	%100
63	M162A	X	-.457	-.457	0	%100
64	M162A	Z	-.791	-.791	0	%100
65	M164A	X	-.481	-.481	0	%100
66	M164A	Z	-.834	-.834	0	%100
67	M166A	X	-.15	-.15	0	%100
68	M166A	Z	-.259	-.259	0	%100
69	M167A	X	0	0	0	%100
70	M167A	Z	0	0	0	%100
71	M169A	X	0	0	0	%100
72	M169A	Z	0	0	0	%100
73	M174A	X	-.262	-.262	0	%100
74	M174A	Z	-.453	-.453	0	%100
75	MP1A	X	-.237	-.237	0	%100
76	MP1A	Z	-.41	-.41	0	%100
77	MP2A	X	-.287	-.287	0	%100
78	MP2A	Z	-.496	-.496	0	%100
79	MP3A	X	-.237	-.237	0	%100
80	MP3A	Z	-.41	-.41	0	%100
81	MP4A	X	-.237	-.237	0	%100
82	MP4A	Z	-.41	-.41	0	%100
83	M183A	X	0	0	0	%100
84	M183A	Z	0	0	0	%100
85	MP1C	X	-.237	-.237	0	%100
86	MP1C	Z	-.41	-.41	0	%100
87	MP2C	X	-.287	-.287	0	%100
88	MP2C	Z	-.496	-.496	0	%100
89	MP3C	X	-.237	-.237	0	%100
90	MP3C	Z	-.41	-.41	0	%100
91	MP4C	X	-.237	-.237	0	%100
92	MP4C	Z	-.41	-.41	0	%100
93	M192A	X	-.262	-.262	0	%100
94	M192A	Z	-.453	-.453	0	%100
95	MP1B	X	-.237	-.237	0	%100
96	MP1B	Z	-.41	-.41	0	%100

Member Distributed Loads (BLC 76 : Structure Wm (330 Deg)) (Continued)

	Member Label	Direction	Start Magnitude[lb/ft,...	End Magnitude[lb/ft,F...	Start Location[in,%]	End Location[in,%]
97	MP2B	X	-.287	-.287	0	%100
98	MP2B	Z	-.496	-.496	0	%100
99	MP3B	X	-.237	-.237	0	%100
100	MP3B	Z	-.41	-.41	0	%100
101	MP4B	X	-.237	-.237	0	%100
102	MP4B	Z	-.41	-.41	0	%100
103	M101	X	-.194	-.194	0	%100
104	M101	Z	-.335	-.335	0	%100
105	M102	X	-.215	-.215	0	%100
106	M102	Z	-.372	-.372	0	%100
107	M115A	X	0	0	0	%100
108	M115A	Z	0	0	0	%100
109	M116A	X	-.215	-.215	0	%100
110	M116A	Z	-.372	-.372	0	%100
111	M123	X	0	0	0	%100
112	M123	Z	0	0	0	%100
113	M124	X	-.254	-.254	0	%100
114	M124	Z	-.44	-.44	0	%100
115	M125	X	-.254	-.254	0	%100
116	M125	Z	-.44	-.44	0	%100

Member Distributed Loads (BLC 81 : BLC 39 Transient Area Loads)

	Member Label	Direction	Start Magnitude[lb/ft,...	End Magnitude[lb/ft,F...	Start Location[in,%]	End Location[in,%]
1	M51B	Y	-1.665	-4.226	0	9.988
2	M51B	Y	-4.226	-6.901	9.988	19.976
3	M51B	Y	-6.901	-8.189	19.976	29.964
4	M51B	Y	-8.189	-6.544	29.964	39.953
5	M51B	Y	-6.544	-3.463	39.953	49.941
6	M52B	Y	-3.469	-6.578	0	9.988
7	M52B	Y	-6.578	-8.256	9.988	19.976
8	M52B	Y	-8.256	-7.041	19.976	29.964
9	M52B	Y	-7.041	-4.429	29.964	39.953
10	M52B	Y	-4.429	-1.881	39.953	49.941
11	M132A	Y	-1.665	-4.226	0	9.988
12	M132A	Y	-4.226	-6.901	9.988	19.976
13	M132A	Y	-6.901	-8.189	19.976	29.964
14	M132A	Y	-8.189	-6.544	29.964	39.953
15	M132A	Y	-6.544	-3.463	39.953	49.941
16	M133A	Y	-3.469	-6.578	0	9.988
17	M133A	Y	-6.578	-8.256	9.988	19.976
18	M133A	Y	-8.256	-7.041	19.976	29.964
19	M133A	Y	-7.041	-4.429	29.964	39.953
20	M133A	Y	-4.429	-1.881	39.953	49.941
21	M156A	Y	-1.884	-4.426	0	9.988
22	M156A	Y	-4.426	-7.044	9.988	19.976
23	M156A	Y	-7.044	-8.26	19.976	29.964
24	M156A	Y	-8.26	-6.573	29.964	39.953
25	M156A	Y	-6.573	-3.462	39.953	49.941
26	M157A	Y	-3.463	-6.545	0	9.988
27	M157A	Y	-6.545	-8.189	9.988	19.976
28	M157A	Y	-8.189	-6.902	19.976	29.964

Member Distributed Loads (BLC 81 : BLC 39 Transient Area Loads) (Continued)

	Member Label	Direction	Start Magnitude[lb/ft,...	End Magnitude[lb/ft,F...	Start Location[in,%]	End Location[in,%]
29	M157A	Y	-6.902	-4.228	29.964	39.953
30	M157A	Y	-4.228	-1.661	39.953	49.941

Member Distributed Loads (BLC 82 : BLC 40 Transient Area Loads)

	Member Label	Direction	Start Magnitude[lb/ft,...	End Magnitude[lb/ft,F...	Start Location[in,%]	End Location[in,%]
1	M51B	Y	-3.205	-8.133	0	9.988
2	M51B	Y	-8.133	-13.28	9.988	19.976
3	M51B	Y	-13.28	-15.76	19.976	29.964
4	M51B	Y	-15.76	-12.593	29.964	39.953
5	M51B	Y	-12.593	-6.664	39.953	49.941
6	M52B	Y	-6.676	-12.658	0	9.988
7	M52B	Y	-12.658	-15.887	9.988	19.976
8	M52B	Y	-15.887	-13.551	19.976	29.964
9	M52B	Y	-13.551	-8.524	29.964	39.953
10	M52B	Y	-8.524	-3.62	39.953	49.941
11	M132A	Y	-3.205	-8.133	0	9.988
12	M132A	Y	-8.133	-13.28	9.988	19.976
13	M132A	Y	-13.28	-15.76	19.976	29.964
14	M132A	Y	-15.76	-12.593	29.964	39.953
15	M132A	Y	-12.593	-6.664	39.953	49.941
16	M133A	Y	-6.676	-12.658	0	9.988
17	M133A	Y	-12.658	-15.887	9.988	19.976
18	M133A	Y	-15.887	-13.551	19.976	29.964
19	M133A	Y	-13.551	-8.524	29.964	39.953
20	M133A	Y	-8.524	-3.62	39.953	49.941
21	M156A	Y	-3.627	-8.518	0	9.988
22	M156A	Y	-8.518	-13.556	9.988	19.976
23	M156A	Y	-13.556	-15.897	19.976	29.964
24	M156A	Y	-15.897	-12.65	29.964	39.953
25	M156A	Y	-12.65	-6.662	39.953	49.941
26	M157A	Y	-6.665	-12.594	0	9.988
27	M157A	Y	-12.594	-15.758	9.988	19.976
28	M157A	Y	-15.758	-13.282	19.976	29.964
29	M157A	Y	-13.282	-8.137	29.964	39.953
30	M157A	Y	-8.137	-3.197	39.953	49.941

Member Area Loads (BLC 39 : Structure D)

	Joint A	Joint B	Joint C	Joint D	Direction	Distribution	Magnitude[ksf]
1	N87C	N87B	N7	N6	Y	Two Way	-.005
2	N199A	N201A	N177A	N176A	Y	Two Way	-.005
3	N228A	N230A	N206A	N205A	Y	Two Way	-.005

Member Area Loads (BLC 40 : Structure Di)

	Joint A	Joint B	Joint C	Joint D	Direction	Distribution	Magnitude[ksf]
1	N87C	N87B	N7	N6	Y	Two Way	-.01
2	N199A	N201A	N177A	N176A	Y	Two Way	-.01
3	N228A	N230A	N206A	N205A	Y	Two Way	-.01

Envelope Joint Reactions

	Joint		X [lb]	LC	Y [lb]	LC	Z [lb]	LC	MX [k-ft]	LC	MY [k-ft]	LC	MZ [k-ft]	LC
1	N3	max	708.108	10	2222.975	13	1882.794	1	4.492	13	.936	4	.153	4
2		min	-715.688	4	682.586	7	-2091.468	7	.862	7	-.947	10	-.048	10
3	N174A	max	1653.058	10	2220.684	21	1015.887	2	-.378	3	.985	12	-.807	3
4		min	-1830.614	4	691.124	3	-904.156	8	-2.524	45	-.996	6	-3.942	21
5	N203A	max	1834.417	11	2373.836	17	1392.772	12	-.466	12	1.003	8	3.881	17
6		min	-1649.946	5	741.591	11	-1293.922	6	-2.438	18	-1.013	2	.642	11
7	Totals:	max	4099.405	10	6664.866	23	4205.908	1						
8		min	-4099.407	4	3059.528	5	-4205.906	7						

Envelope AISC 15th(360-16): LRFD Steel Code Checks

	Member	Shape	Code C...	Loc[in]	LC	Shear ...	Loc[in]	Dir	LC	phi*Pnc [lb]	phi*Pnt [lb]	phi*Mn y-...	phi*Mn z-...	Cb	Eqn
1	M4	HSS4X4X4	.279	0	15	.068	0	y	15	124657.7...	139518	16.181	16.181	3....	H1-1b
2	M10	HSS4X4X4	.153	28.5	14	.048	28.5	y	24	136263.03	139518	16.181	16.181	1....	H1-1b
3	M43	HSS4X4X4	.151	0	24	.045	0	y	13	136263.03	139518	16.181	16.181	1....	H1-1b
4	M46	PL1/2X6	.114	6.188	12	.112	6.188	y	23	66009.234	97200	1.012	12.15	1....	H1-1b
5	M51B	L2x2x3	.143	49.941	2	.011	49.941	y	17	9823.122	23392.8	.558	1.082	1....	H2-1
6	M52B	L2x2x3	.134	49.941	12	.012	0	y	21	9823.122	23392.8	.558	1.082	1....	H2-1
7	M76	PL1/2X6	.103	0	1	.147	0	y	18	95522.189	97200	1.012	12.15	1....	H1-1b
8	M77	PL1/2X6	.144	2	8	.185	0	y	14	96222.477	97200	1.012	12.15	1....	H1-1b
9	M80	PL1/2X6	.034	1.344	12	.046	0	y	11	96757.507	97200	1.012	12.15	1....	H1-1b
10	M84	PL1/2X6	.156	0	7	.154	0	y	19	95522.189	97200	1.012	12.15	2....	H1-1b
11	M85	PL1/2X6	.144	2	6	.181	0	y	24	96222.477	97200	1.012	12.15	1....	H1-1b
12	M91	PL1/2X6	.036	1.344	2	.046	1.344	y	9	96757.507	97200	1.012	12.15	1....	H1-1b
13	M126A	HSS4X4X4	.279	0	23	.076	0	y	44	124657.7...	139518	16.181	16.181	3....	H1-1b
14	M127A	HSS4X4X4	.152	28.5	22	.048	28.5	y	20	136263.03	139518	16.181	16.181	1....	H1-1b
15	M128A	HSS4X4X4	.151	0	20	.050	0	y	45	136263.03	139518	16.181	16.181	1....	H1-1b
16	M129A	PL1/2X6	.113	6.188	8	.112	6.188	y	19	66009.234	97200	1.012	12.15	1....	H1-1b
17	M132A	L2x2x3	.140	49.941	10	.011	49.941	y	13	9823.122	23392.8	.558	1.082	1....	H2-1
18	M133A	L2x2x3	.133	49.941	8	.012	0	y	17	9823.122	23392.8	.558	1.082	1....	H2-1
19	M137A	PL1/2X6	.101	0	9	.147	0	y	14	95522.189	97200	1.012	12.15	1....	H1-1b
20	M138A	PL1/2X6	.141	2	4	.185	0	y	22	96222.477	97200	1.012	12.15	1....	H1-1b
21	M140A	PL1/2X6	.034	1.344	8	.046	0	y	7	96757.507	97200	1.012	12.15	1....	H1-1b
22	M142A	PL1/2X6	.153	0	3	.155	0	y	15	95522.189	97200	1.012	12.15	2....	H1-1b
23	M143A	PL1/2X6	.143	2	2	.181	0	y	20	96222.477	97200	1.012	12.15	1....	H1-1b
24	M145A	PL1/2X6	.036	1.344	10	.089	0	y	47	96757.507	97200	1.012	12.15	1....	H1-1b
25	M150A	HSS4X4X4	.285	0	19	.098	0	y	31	124657.7...	139518	16.181	16.181	3....	H1-1b
26	M151A	HSS4X4X4	.152	28.5	18	.053	28.5	y	28	136263.03	139518	16.181	16.181	1....	H1-1b
27	M152A	HSS4X4X4	.151	0	16	.045	0	y	17	136263.03	139518	16.181	16.181	1....	H1-1b
28	M153A	PL1/2X6	.112	6.188	4	.113	6.188	y	15	66009.234	97200	1.012	12.15	1....	H1-1b
29	M156A	L2x2x3	.143	49.941	6	.011	49.941	y	21	9823.122	23392.8	.558	1.082	1....	H2-1
30	M157A	L2x2x3	.133	49.941	4	.012	0	y	13	9823.122	23392.8	.558	1.082	1....	H2-1
31	M161A	PL1/2X6	.102	0	5	.145	0	y	22	95522.189	97200	1.012	12.15	1....	H1-1b
32	M162A	PL1/2X6	.144	2	12	.184	0	y	18	96222.477	97200	1.012	12.15	1....	H1-1b
33	M164A	PL1/2X6	.034	1.344	4	.048	0	y	27	96757.507	97200	1.012	12.15	1....	H1-1b
34	M166A	PL1/2X6	.153	0	11	.155	0	y	23	95522.189	97200	1.012	12.15	2....	H1-1b
35	M167A	PL1/2X6	.142	2	10	.181	0	y	16	96222.477	97200	1.012	12.15	1....	H1-1b
36	M169A	PL1/2X6	.036	1.344	6	.046	1.344	y	1	96757.507	97200	1.012	12.15	1....	H1-1b
37	M174A	PIPE_3.0	.148	96.583	20	.055	53.833		26	27623.304	65205	5.749	5.749	2....	H1-1b
38	MP1A	PIPE_2.0	.191	39.75	22	.058	39.75		8	20866.733	32130	1.872	1.872	1....	H1-1b

Envelope AISC 15th(360-16): LRFD Steel Code Checks (Continued)

	Member	Shape	Code C...	Loc[in]	LC	Shear ...	Loc[in]	Dir	LC	phi*Pnc [lb]	phi*Pnt [lb]	phi*Mn y-...	phi*Mn z-...	Cb	Eqn
39	MP2A	PIPE_2.5	.221	39.75	10	.057	39.75		7	37773.818	50715	3.596	3.596	1....	H1-1b
40	MP3A	PIPE_2.0	.261	39.75	16	.065	20.25		6	20866.733	32130	1.872	1.872	1....	H1-1b
41	MP4A	PIPE_2.0	.178	39.75	16	.052	40.5		10	20866.733	32130	1.872	1.872	1....	H1-1b
42	M183A	PIPE_3.0	.148	96.583	16	.053	53.833		16	27623.304	65205	5.749	5.749	2....	H1-1b
43	MP1C	PIPE_2.0	.192	39.75	18	.058	39.75		4	20866.733	32130	1.872	1.872	2....	H1-1b
44	MP2C	PIPE_2.5	.225	39.75	6	.057	39.75		3	37773.818	50715	3.596	3.596	1....	H1-1b
45	MP3C	PIPE_2.0	.262	39.75	24	.065	20.25		2	20866.733	32130	1.872	1.872	2....	H1-1b
46	MP4C	PIPE_2.0	.179	39.75	24	.052	40.5		6	20866.733	32130	1.872	1.872	1....	H1-1b
47	M192A	PIPE_3.0	.148	96.583	24	.053	53.833		24	27623.304	65205	5.749	5.749	2....	H1-1b
48	MP1B	PIPE_2.0	.191	39.75	14	.058	39.75		12	20866.733	32130	1.872	1.872	1....	H1-1b
49	MP2B	PIPE_2.5	.223	39.75	2	.057	39.75		12	37773.818	50715	3.596	3.596	1....	H1-1b
50	MP3B	PIPE_2.0	.262	39.75	20	.065	20.25		10	20866.733	32130	1.872	1.872	1....	H1-1b
51	MP4B	PIPE_2.0	.178	39.75	20	.052	40.5		2	20866.733	32130	1.872	1.872	1....	H1-1b
52	M101	PIPE_2.0	.073	30	6	.014	30		6	28843.414	32130	1.872	1.872	2....	H1-1b
53	M102	PIPE_2.5	.138	50	21	.045	12.5		7	14558.792	50715	3.596	3.596	2....	H1-1b
54	M115A	PIPE_2.5	.139	50	17	.044	12.5		3	14558.792	50715	3.596	3.596	2....	H1-1b
55	M116A	PIPE_2.5	.139	50	13	.044	12.5		11	14558.792	50715	3.596	3.596	2....	H1-1b
56	M123	L3X3X4	.152	0	11	.031	0	y	6	44338.155	46656	1.688	3.756	2....	H2-1
57	M124	L3X3X4	.154	0	3	.030	.569	y	10	44338.155	46656	1.688	3.756	2....	H2-1
58	M125	L3X3X4	.155	0	7	.030	0	y	2	44338.155	46656	1.688	3.756	2....	H2-1

Client:	Verizon	Date:	5/14/2021
Site Name:	Colebrook SW CT		
Project No.	21777228A		
Title:	Mount Fix	Page:	1

Version 3.1

I. Mount-to-Tower Connection Check

RISA Model Data

Nodes *(labeled per RISA)*	Orientation *(per graphic of typical platform)*
N174A	30
N3	270
N203A	150

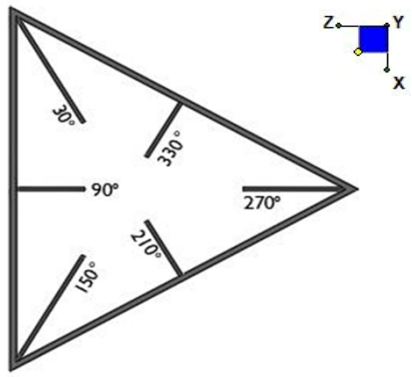

TYPICAL PLATFORM

Tower Connection Bolt Checks

Any moment resistance?:	yes
Bolt Quantity per Reaction:	4
d_x (in) *(Delta X of typ. bolt config. sketch)* :	8
d_y (in) *(Delta Y of typ. bolt config. sketch)* :	8
Bolt Type:	A325N
Bolt Diameter (in):	0.625
Required Tensile Strength (kips):	13.8
Required Shear Strength (kips):	3.9
Tensile Strength / bolt (kips):	20.7
Shear Strength / bolt (kips):	12.4
Tensile Capacity Overall:	**16.7%***
Shear Capacity Overall:	**7.8%**

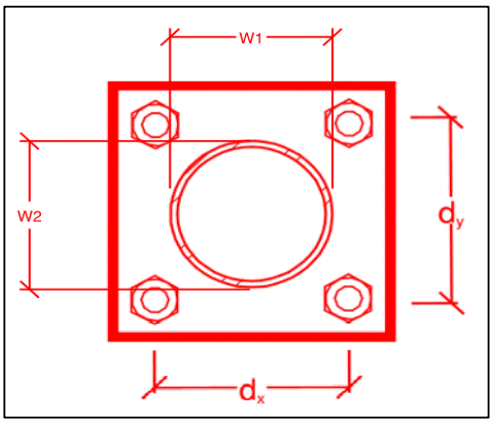

**Note: Tension reduction not required if tension or shear capacity < 30%*

Tower Connection Plate and Weld Check

Connecting Standoff Member Shape:	Rect
Plate Width (in):	10
Plate Height (in):	10
W1 (in):	4
W2 (in):	4
Fy (ksi, plate):	36
t_{Plate} (in):	0.625
Weld Size (1/16 in):	3
Phi*Rn (kip/in):	4.18
Required Weld Strength (kip/in):	2.59
Plate Bending Capacity:	**44.2%**
Weld Capacity:	**62.0%**

Max Plate Bending Strengths

Mu_{xx} *(kip-in)* :	13.5
$Phi*Mn_{xx}$ *(kip-in)* :	31.6
Mu_{yy} *(kip-in)* :	0.5
$Phi*Mn_{yy}$ *(kip-in)* :	31.6

Mount Desktop – Post Modification Inspection (PMI) Report Requirements

Documents & Photos Required from Contractor – Mount Modification

Purpose – to provide Maser Consulting Connecticut the proper documentation in order to complete the required Mount Desktop review of the Post Modification Inspection Report.

- Contractor is responsible for making certain the photos provided as noted below provide confirmation that the modification was completed in accordance with the modification drawings.
- Contractor shall relay any data that can impact the performance of the mount or the mount modification, this includes safety issues.

Base Requirements:

- Any special photos outside of the standard requirements will be indicated on the drawings
- Provide "as built drawings" showing contractor's name, preparer's signature, and date. Any deviations from the drawings (proposed modification) must be shown.
- Notation that all hardware was properly installed, and the existing hardware was inspected for any issues.
- Verification that loading is as communicated in the modification drawings. NOTE If loading is different than what is conveyed in the modification drawing contact Maser Consulting Connecticut immediately.
- Each photo should be time and date stamped
- Photos should be high resolution and submitted in a Zip File and should be organized in the file structure as depicted in Schedule A attached.
- Contractor shall ensure that the safety climb wire rope is supported and not adversely impacted by the install of the modification components. This may involve the install of wire rope guides, or other items to protect the wire rope.
- The photos in the file structure should be uploaded **to** **https://pmi.vzwsmart.com** as depicted on the drawings

Photo Requirements:

- *Base and "During Installation Photos"*
  - Base pictures include
    - Photo of Gate Signs showing the tower owner, site name, and number
    - Photo of carrier shelter showing the carrier site name and number if available
    - Photos of the galvanizing compound and/or paint used (if applicable), clearly showing the label and name
  - "During Installation Photos if provided - must be placed only in this folder
- *Photos taken at ground level*
  - Overall tower structure before and after installation of the modifications
  - Photos of the appropriate mount before and after installation of the modifications; if the mounts are at different rad elevations, pictures must be provided for all elevations that the modifications were installed

- *Photos taken at Mount Elevation*
    - Photos showing each individual sector before and also after installation of modifications. Each entire sector must be in one photo to show in the inter-connection of members.
        - These photos should also certify that the placement and geometry of the equipment on the mount is as depicted on the sketch and table in the mount analysis
    - Close-up photos of each installed modification per the modification drawings; pictures should also include connection hardware (U-bolts, bolts, nuts, all-threaded rods, etc.)
    - Photos showing the measurements of the installed modification member sizes (i.e. lengths, widths, depths, diameters, thicknesses)
    - Photos showing the elevation or distances of the installed modifications from the appropriate reference locations shown in the modification drawings
    - Photos showing the installed modifications onto the tower with tape drop measurements (if applicable) (i.e. ring/collar mounts, tie-backs, V-bracing kits, etc.); if the existing mount elevation needs to be changed according to the modification drawings, a tape drop measurement shall be provided before the elevation change
    - Photos showing the safety climb wire rope above and below the mount prior to modification.
    - Photos showing the climbing facility and safety climb if present.

Material Certification:

- Materials utilized must be as per specification on the drawings or the equivalent as validated by Maser Consulting Connecticut.
    - If the drawings are as specified on the drawings
        - The contractor should provide the packing list or the materials utilized to perform the mount modification
    - If an equivalent is utilized
        - It is required that the Maser Consulting Connecticut certification of such is included in the contractor submission package. There may be an additional charge for this certification if the equivalent submission doesn't meet specifications as prescribed in the drawings.
- The contractor must certify that the materials meet these specifications by one of these methods.

☐ The Material utilized was as specified on the Maser Consulting Connecticut Mount Modification Drawings and included
in the Material certification folder is a packing list or invoice for these materials

☐ The material utilized was an "equivalent" and included as part of the contractor submission is the Maser Consulting Connecticut certification, invoices, or specifications validating accepted status

Certifying Individual: Company _____

Name _____

Signature _____

Antenna & equipment placement and Geometry Confirmation:

- The contractor must certify that the antenna & equipment placement and geometry is in accordance with the antenna placement diagrams as included in this mount analysis.

☐ The contractor certifies that the photos support and the equipment on the mount is as depicted on the antenna placement diagrams as included in this mount analysis.

☐ The contractor notes that the equipment on the mount is not in accordance with the antenna placement diagrams and has accordingly marked up the diagrams or provided a diagram outlining the differences.

Certifying Individual: Company _____

Name _____

Signature _____

Special Instructions / Validation as required from the MA or Mod Drawings:

Issue:

Install new 36" long P2.0 STD pipe on the existing standoff horizontal member between Alpha & Gamma sector for new OVP - connect to standoff using crossover plates (Site Pro 1 Part #: SQCX4-K or EOR approved equivalent)

Response:

Schedule A – Photo & Document File Structure

- VzW Site Number / Name
  - Base & “During Installation” Photos
  - Pre-Installation Photos
    - Alpha
    - Beta
    - Gamma
    - Ground Level
    - Tape Drop
  - Post-Installation Photos
    - Alpha
    - Beta
    - Gamma
    - Ground Level
    - Tape Drop
    - Photos of climbing facility and safety climb – If Present
  - Certifications – Submission of this document including certifications
  - Specific Required Additional Photos

Structure: 467927-VZW - COLEBROOK SW CT

Sector: **A** 5/13/2021

Structure Type: Monopole

Mount Elev: 127.00 Page: 1

Plan View

Front View
Looking at Structure

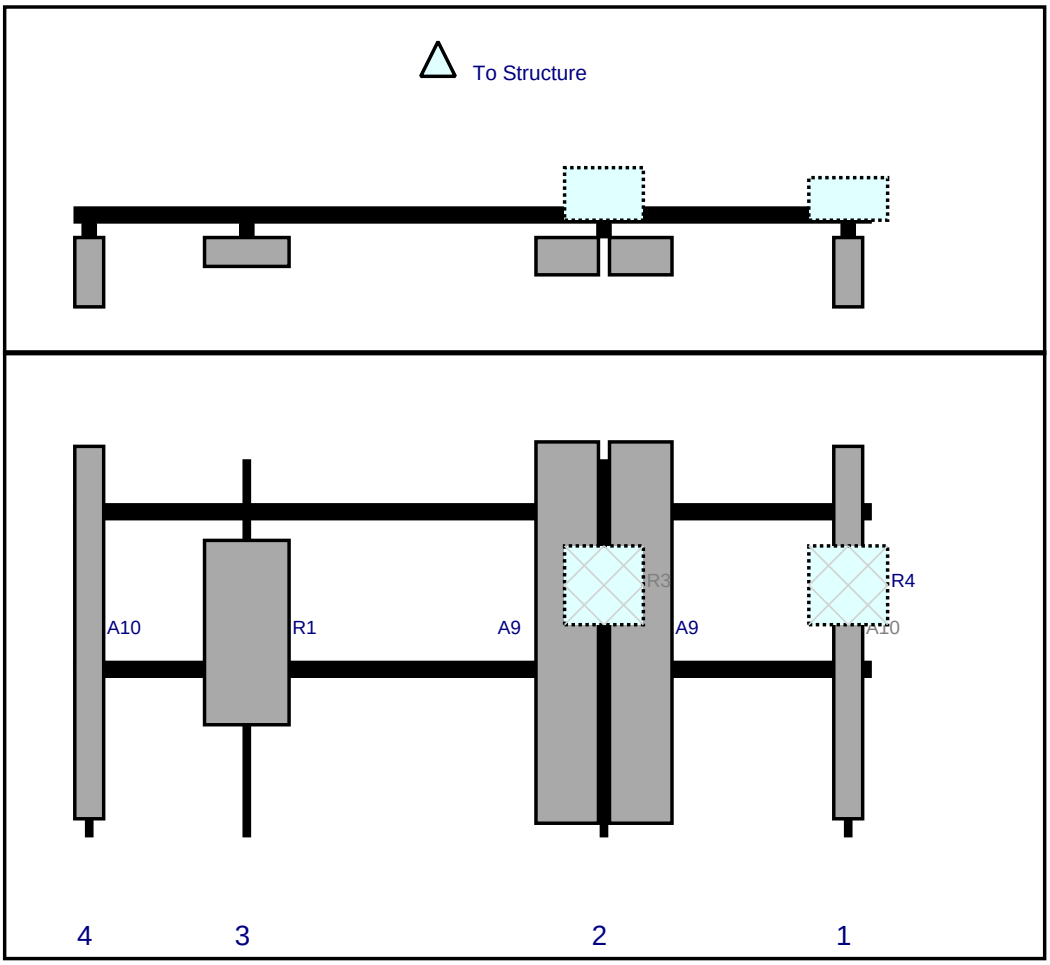

Ref#	Model	Height (in)	Width (in)	H Dist Frm L.	Pipe #	Pipe Pos V	Ant Pos	C. Ant Frm T.	Ant H Off	Status	Validation
A10	LPA-80080/6CF	70.9	5.5	147.5	1	a	Front	33	0	Retained	03/31/2021
R4	B5/B13 RRH-BR04C	15	15	147.5	1	a	Behind	24	0	Added	
A9	SBNHH-1D65B	72.6	11.9	101	2	a	Front	33	7	Retained	03/31/2021
A9	SBNHH-1D65B	72.6	11.9	101	2	b	Front	33	-7	Retained	03/31/2021
R3	B2/B66A RRH-BR049	15	15	101	2	a	Behind	24	0	Added	
R1	MT6407-77A	35.1	16.1	33	3	a	Front	33	0	Added	
A10	LPA-80080/6CF	70.9	5.5	3	4	a	Front	33	0	Retained	03/31/2021

Copyright 2019 by Tower Engineering Solutions, LLC. All Rights Reserved

Sector: **B** 5/13/2021

Structure Type: Monopole

Mount Elev: 127.00 Page: 2

Plan View

Front View
Looking at Structure

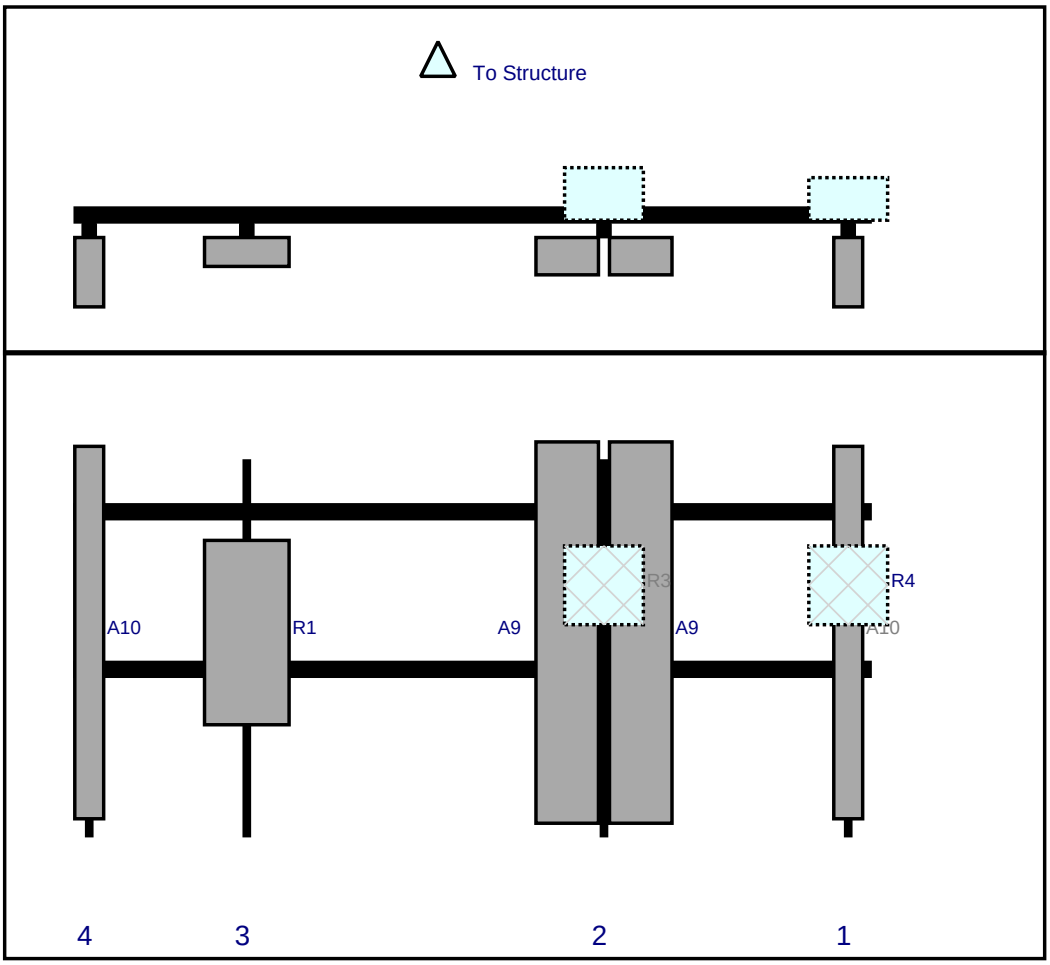

Ref#	Model	Height (in)	Width (in)	H Dist Frm L.	Pipe #	Pipe Pos V	Ant Pos	C. Ant Frm T.	Ant H Off	Status	Validation
A10	LPA-80080/6CF	70.9	5.5	147.5	1	a	Front	33	0	Retained	03/31/2021
R4	B5/B13 RRH-BR04C	15	15	147.5	1	a	Behind	24	0	Added	
A9	SBNHH-1D65B	72.6	11.9	101	2	a	Front	33	7	Retained	03/31/2021
A9	SBNHH-1D65B	72.6	11.9	101	2	b	Front	33	-7	Retained	03/31/2021
R3	B2/B66A RRH-BR049	15	15	101	2	a	Behind	24	0	Added	
R1	MT6407-77A	35.1	16.1	33	3	a	Front	33	0	Added	
A10	LPA-80080/6CF	70.9	5.5	3	4	a	Front	33	0	Retained	03/31/2021

Copyright 2019 by Tower Engineering Solutions, LLC. All Rights Reserved

Sector: **C** 5/13/2021

Structure Type: Monopole

Mount Elev: 127.00 Page: 3

Plan View

Front View
Looking at Structure

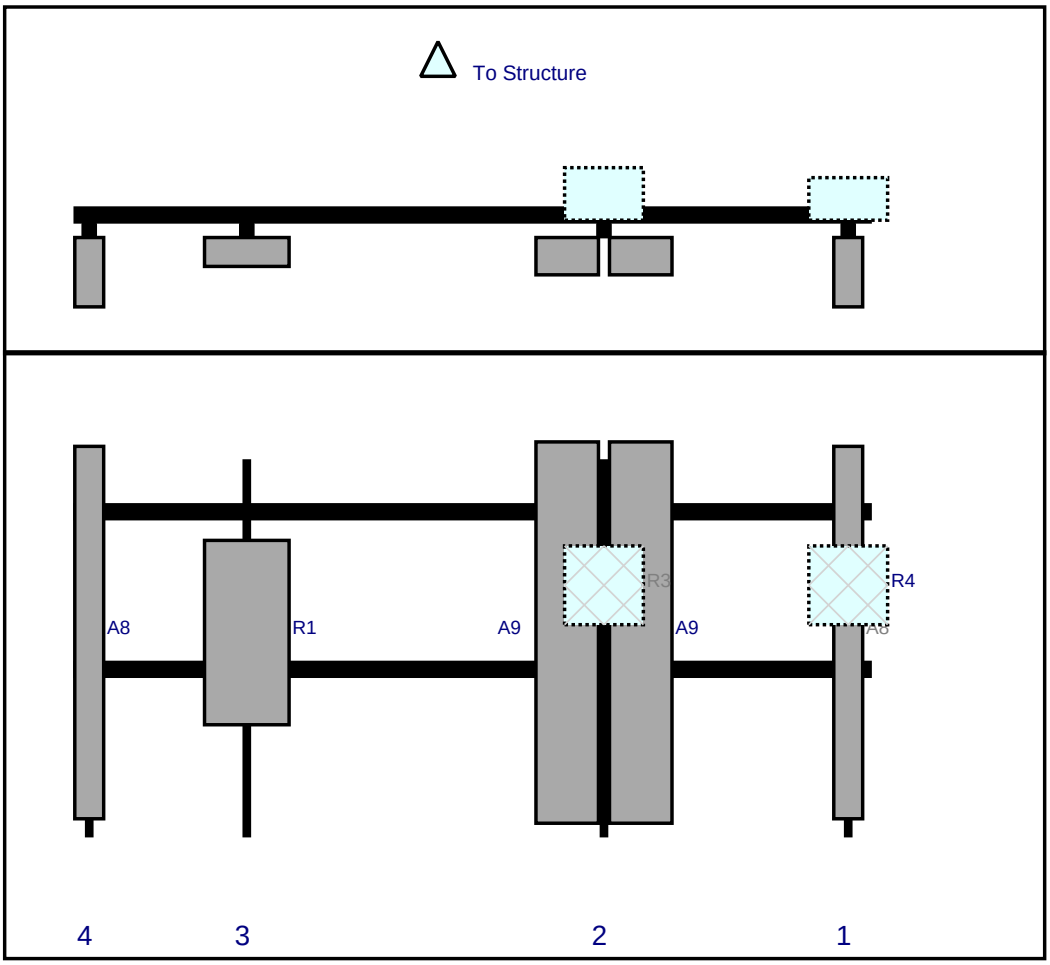

Ref#	Model	Height (in)	Width (in)	H Dist Frm L.	Pipe #	Pipe Pos V	Ant Pos	C. Ant Frm T.	Ant H Off	Status	Validation
A8	LPA-80080-6CF-EDIN-6	70.9	5.5	147.5	1	a	Front	33	0	Retained	03/31/2021
R4	B5/B13 RRH-BR04C	15	15	147.5	1	a	Behind	24	0	Added	
A9	SBNHH-1D65B	72.6	11.9	101	2	a	Front	33	7	Retained	03/31/2021
A9	SBNHH-1D65B	72.6	11.9	101	2	b	Front	33	-7	Retained	03/31/2021
R3	B2/B66A RRH-BR049	15	15	101	2	a	Behind	24	0	Added	
R1	MT6407-77A	35.1	16.1	33	3	a	Front	33	0	Added	
A8	LPA-80080-6CF-EDIN-6	70.9	5.5	3	4	a	Front	33	0	Retained	03/31/2021

Copyright 2019 by Tower Engineering Solutions, LLC. All Rights Reserved

Maser Consulting Connecticut

Subject	TIA-222-H Usage	
Site Information	Site ID:	467927-VZW / COLEBROOK SW CT
	Site Name:	COLEBROOK SW CT
	Carrier Name:	Verizon Wireless
	Address:	161 Pinney St Colebrook, Connecticut 06021 Litchfield County
	Latitude:	41.965831°
	Longitude:	-73.120674°
Structure Information	Tower Type:	Monopole
	Mount Type:	12.67-Ft Platform

To Whom It May Concern,

We respectfully submit the above referenced Antenna Mount Structural Analysis report in conformance with ANSI/TIA-222-H, Structural Standard for Antenna Supporting Structures and Antennas and Small Wind Turbine Support Structures.

The 2015 International Building Code states that, in Section 3108, telecommunication towers shall be designed and constructed in accordance with the provisions of TIA-222. TIA-222-H is the latest revision of the TIA-222 Standard, effective as of January 01, 2018.

As with all ANSI standards and engineering best practice is to apply the most current revision of the standard. This ensures the engineer is applying all updates. As an example, the TIA-222-H Standard includes updates to bring it in line with the latest AISC and ACI standards and it also incorporates the latest wind speed maps by ASCE 7 based on updated studies of the wind data.

The TIA-222-H standard clarifies these specific requirements for the antenna mount analysis such as modeling methods, seismic analysis, 30-degree increment wind directions and maintenance loading. Therefore, it is our opinion that TIA-222-H is the most appropriate standard for antenna mount structural analysis and is acceptable for use at this site to ensure the engineer is taking into account the most current engineering standard available.

Sincerely,

Dejian Xu

Dejian Xu, PE
Technical Specialist

Exhibit F

Power Density/RF Emissions Report

Site Name: ***COLEBROOK SW CT***
Cumulative Power Density

Operator	Operating Frequency	Number of Trans.	ERP Per Trans.	Total ERP	Distance to Target	Calculated Power Density
	(MHz)		(watts)	(watts)	(feet)	(mW/cm^2)
VZW 700	751	4	697	2788	127.5	0.0062
VZW CDMA	878.49	2	493	986	127.5	0.0022
VZW Cellular	874	4	822	3290	127.5	0.0073
VZW PCS	1975	4	968	3872	127.5	0.0086
VZW AWS	2120	4	2092	8367	127.5	0.0185
VZW CBAND	3730.08	4	6531	26125	127.5	0.0578

Total Percentage of Maximum Permissible Exposure

*Guidelines adopted by the FCC on August 1, 1996, 47 CFR Part 1 based on NCRP Report 86, 1986 and generally on ANSI
**Calculation includes a -10 dB Off Beam Antenna Pattern Adjustment pursuant to Attachments B and C of the Siting Counci

MHz = Megahertz
mW/cm^2 = milliwatts per square centimeter
ERP = Effective Radiated Power

Absolute worst case maximum values used.

Maximum Permissible Exposure*	Fraction of MPE
(mW/cm^2)	(%)
0.5007	1.23%
0.5857	0.37%
0.5827	1.25%
1.0000	0.86%
1.0000	1.85%
1.0000	5.78%
	11.34%

/IEEE C95.1-1992
il's November 10, 2015 Memorandum for Exempt Modification filings

Exhibit G

Recipient Mailings

UNITED STATES POSTAL SERVICE®

Click-N-Ship®

9405 5036 9930 0471 4928 60 0219 0000 0010 6051

usps.com
$21.90
US POSTAGE
LG Flat Rate Box

U.S. POSTAGE PAID
Click-N-Ship®

08/13/2021 Mailed from 01566

P

PRIORITY MAIL 2-DAY™

DEBORAH CHASE
NORTHEAST SITE SOLUTIONS
420 MAIN ST
STE 1
STURBRIDGE MA 01566-1359

Expected Delivery Date: 08/16/21
Ref#: CR-876377
0004

C006

SHIP
TO: LISA A MATTHEWS
CT SITING COUNCIL
10 FRANKLIN SQ
NEW BRITAIN CT 06051-2655

USPS TRACKING #

9405 5036 9930 0471 4928 60

Electronic Rate Approved #038555749

Cut on dotted line.

Instructions

1. **Each Click-N-Ship® label is unique. Labels are to be used as printed and used only once. DO NOT PHOTO COPY OR ALTER LABEL.**
2. **Place your label so it does not wrap around the edge of the package.**
3. **Adhere your label to the package. A self-adhesive label is recommended. If tape or glue is used, DO NOT TAPE OVER BARCODE. Be sure all edges are secure.**
4. **To mail your package with PC Postage®, you may schedule a Package Pickup online, hand to your letter carrier, take to a Post Office™, or drop in a USPS collection box.**
5. **Mail your package on the "Ship Date" you selected when creating this label.**

Click-N-Ship® Label Record

USPS TRACKING # :
9405 5036 9930 0471 4928 60

Trans. #:	540602328	Priority Mail® Postage:	**$21.90**
Print Date:	08/11/2021	Total:	**$21.90**
Ship Date:	08/13/2021		
Expected Delivery Date:	08/16/2021		

From: DEBORAH CHASE
NORTHEAST SITE SOLUTIONS
420 MAIN ST
STE 1
STURBRIDGE MA 01566-1359

Ref#: CR-876377

To: LISA A MATTHEWS
CT SITING COUNCIL
10 FRANKLIN SQ
NEW BRITAIN CT 06051-2655

* Retail Pricing Priority Mail rates apply. There is no fee for USPS Tracking® service on Priority Mail service with use of this electronic rate shipping label. Refunds for unused postage paid labels can be requested online 30 days from the print date.

UNITED STATES POSTAL SERVICE® *Thank you for shipping with the United States Postal Service!*
Check the status of your shipment on the USPS Tracking® page at usps.com

UNITED STATES POSTAL SERVICE®

Click-N-Ship®

9405 5036 9930 0471 4928 77 0079 5000 0010 1581

usps.com
$7.95
US POSTAGE
Flat Rate Env

U.S. POSTAGE PAID
Click-N-Ship®

08/13/2021 Mailed from 01566

P

PRIORITY MAIL 1-DAY™

DEBORAH CHASE
NORTHEAST SITE SOLUTIONS
420 MAIN ST
STE 1
STURBRIDGE MA 01566-1359

Expected Delivery Date: 08/14/21
Ref#: CR-876377
0006

C006

SHIP TO:
SARAH SNELL
1800 W PARK DR
WESTBOROUGH MA 01581-3926

USPS TRACKING #

9405 5036 9930 0471 4928 77

Electronic Rate Approved #038555749

Cut on dotted line.

Instructions

1. **Each Click-N-Ship® label is unique. Labels are to be used as printed and used only once. DO NOT PHOTO COPY OR ALTER LABEL.**
2. **Place your label so it does not wrap around the edge of the package.**
3. **Adhere your label to the package. A self-adhesive label is recommended. If tape or glue is used, DO NOT TAPE OVER BARCODE. Be sure all edges are secure.**
4. **To mail your package with PC Postage®, you may schedule a Package Pickup online, hand to your letter carrier, take to a Post Office™, or drop in a USPS collection box.**
5. **Mail your package on the "Ship Date" you selected when creating this label.**

Click-N-Ship® Label Record

USPS TRACKING # :
9405 5036 9930 0471 4928 77

Trans. #:	540602328	Priority Mail® Postage:	**$7.95**
Print Date:	08/11/2021	Total:	**$7.95**
Ship Date:	08/13/2021		
Expected Delivery Date:	08/14/2021		

From: DEBORAH CHASE
NORTHEAST SITE SOLUTIONS
420 MAIN ST
STE 1
STURBRIDGE MA 01566-1359

Ref#: CR-876377

To: SARAH SNELL
1800 W PARK DR
WESTBOROUGH MA 01581-3926

* Retail Pricing Priority Mail rates apply. There is no fee for USPS Tracking® service on Priority Mail service with use of this electronic rate shipping label. Refunds for unused postage paid labels can be requested online 30 days from the print date.

UNITED STATES POSTAL SERVICE® *Thank you for shipping with the United States Postal Service!*
Check the status of your shipment on the USPS Tracking® page at usps.com

UNITED STATES POSTAL SERVICE®

Click-N-Ship®

usps.com
$15.50
US POSTAGE
MD Flat Rate Box

9405 5036 9930 0471 4928 84 0155 0000 0010 6021

U.S. POSTAGE PAID
Click-N-Ship®

08/13/2021

Mailed from 01566

P

PRIORITY MAIL 2-DAY™

DEBORAH CHASE
NORTHEAST SITE SOLUTIONS
420 MAIN ST
STE 1
STURBRIDGE MA 01566-1359

Expected Delivery Date: 08/16/21
Ref#: CR-876377

0004

H001

SHIP
TO: THOMAS MCKEON
FIRST SELECTMAN
562 COLEBROOK RD
COLEBROOK CT 06021-1010

USPS TRACKING #

9405 5036 9930 0471 4928 84

Electronic Rate Approved #038555749

Cut on dotted line.

Instructions

1. **Each Click-N-Ship® label is unique. Labels are to be used as printed and used only once. DO NOT PHOTO COPY OR ALTER LABEL.**
2. **Place your label so it does not wrap around the edge of the package.**
3. **Adhere your label to the package. A self-adhesive label is recommended. If tape or glue is used, DO NOT TAPE OVER BARCODE. Be sure all edges are secure.**
4. **To mail your package with PC Postage®, you may schedule a Package Pickup online, hand to your letter carrier, take to a Post Office™, or drop in a USPS collection box.**
5. **Mail your package on the "Ship Date" you selected when creating this label.**

Click-N-Ship® Label Record

USPS TRACKING # :
9405 5036 9930 0471 4928 84

Trans. #:	540602328	Priority Mail® Postage:	**$15.50**
Print Date:	08/11/2021	Total:	**$15.50**
Ship Date:	08/13/2021		
Expected Delivery Date:	08/16/2021		

From: DEBORAH CHASE
NORTHEAST SITE SOLUTIONS
420 MAIN ST
STE 1
STURBRIDGE MA 01566-1359

Ref#: CR-876377

To: THOMAS MCKEON
FIRST SELECTMAN
562 COLEBROOK RD
COLEBROOK CT 06021-1010

* Retail Pricing Priority Mail rates apply. There is no fee for USPS Tracking® service on Priority Mail service with use of this electronic rate shipping label. Refunds for unused postage paid labels can be requested online 30 days from the print date.

UNITED STATES POSTAL SERVICE® *Thank you for shipping with the United States Postal Service!*
Check the status of your shipment on the USPS Tracking® page at usps.com

UNITED STATES POSTAL SERVICE®

Click-N-Ship®

9405 5036 9930 0471 4928 91 0155 0000 0010 6021

usps.com
$15.50
US POSTAGE
MD Flat Rate Box

U.S. POSTAGE PAID
Click-N-Ship®

08/12/2021 Mailed from 01566

P

PRIORITY MAIL 2-DAY™

DEBORAH CHASE
NORTHEAST SITE SOLUTIONS
420 MAIN ST
STE 1
STURBRIDGE MA 01566-1359

Expected Delivery Date: 08/16/21
Ref#: CR-876377
0004

H001

SHIP
TO: MARC MELANSON
BUILDING OFFICAL
562 COLEBROOK RD
COLEBROOK CT 06021-1010

USPS TRACKING #

9405 5036 9930 0471 4928 91

Electronic Rate Approved #038555749

Cut on dotted line.

Instructions

1. **Each Click-N-Ship® label is unique. Labels are to be used as printed and used only once. DO NOT PHOTO COPY OR ALTER LABEL.**
2. **Place your label so it does not wrap around the edge of the package.**
3. **Adhere your label to the package. A self-adhesive label is recommended. If tape or glue is used, DO NOT TAPE OVER BARCODE. Be sure all edges are secure.**
4. **To mail your package with PC Postage®, you may schedule a Package Pickup online, hand to your letter carrier, take to a Post Office™, or drop in a USPS collection box.**
5. **Mail your package on the "Ship Date" you selected when creating this label.**

Click-N-Ship® Label Record

USPS TRACKING # :
9405 5036 9930 0471 4928 91

Trans. #:	540602328	Priority Mail® Postage:	**$15.50**
Print Date:	08/11/2021	Total:	**$15.50**
Ship Date:	08/12/2021		
Expected Delivery Date:	08/16/2021		

From: DEBORAH CHASE
NORTHEAST SITE SOLUTIONS
420 MAIN ST
STE 1
STURBRIDGE MA 01566-1359

Ref#: CR-876377

To: MARC MELANSON
BUILDING OFFICAL
562 COLEBROOK RD
COLEBROOK CT 06021-1010

* Retail Pricing Priority Mail rates apply. There is no fee for USPS Tracking® service on Priority Mail service with use of this electronic rate shipping label. Refunds for unused postage paid labels can be requested online 30 days from the print date.

UNITED STATES POSTAL SERVICE® *Thank you for shipping with the United States Postal Service!*
Check the status of your shipment on the USPS Tracking® page at usps.com

UNITED STATES POSTAL SERVICE®

Click-N-Ship®

usps.com
$15.50
US POSTAGE
MD Flat Rate Box

9405 5036 9930 0471 4929 07 0155 0000 0020 6807

P

08/12/2021

Mailed from 01566

U.S. POSTAGE PAID
Click-N-Ship®

PRIORITY MAIL 3-DAY™

DEBORAH CHASE
NORTHEAST SITE SOLUTIONS
420 MAIN ST
STE 1
STURBRIDGE MA 01566-1359

Expected Delivery Date: 08/16/21
Ref#: CR-876377

0004

C003

SHIP
TO:

FIFTH STATE FARM, LLC
70 OLD STONE BRIDGE RD
COS COB CT 06807-1510

USPS TRACKING #

9405 5036 9930 0471 4929 07

Electronic Rate Approved #038555749

Cut on dotted line.

Instructions

1. **Each Click-N-Ship® label is unique. Labels are to be used as printed and used only once. DO NOT PHOTO COPY OR ALTER LABEL.**
2. **Place your label so it does not wrap around the edge of the package.**
3. **Adhere your label to the package. A self-adhesive label is recommended. If tape or glue is used, DO NOT TAPE OVER BARCODE. Be sure all edges are secure.**
4. **To mail your package with PC Postage®, you may schedule a Package Pickup online, hand to your letter carrier, take to a Post Office™, or drop in a USPS collection box.**
5. **Mail your package on the "Ship Date" you selected when creating this label.**

Click-N-Ship® Label Record

USPS TRACKING # :
9405 5036 9930 0471 4929 07

Trans. #:	540602328	Priority Mail® Postage:	**$15.50**
Print Date:	08/11/2021	Total:	**$15.50**
Ship Date:	08/12/2021		
Expected Delivery Date:	08/16/2021		

From: DEBORAH CHASE
NORTHEAST SITE SOLUTIONS
420 MAIN ST
STE 1
STURBRIDGE MA 01566-1359

Ref#: CR-876377

To: FIFTH STATE FARM, LLC
70 OLD STONE BRIDGE RD
COS COB CT 06807-1510

* Retail Pricing Priority Mail rates apply. There is no fee for USPS Tracking® service on Priority Mail service with use of this electronic rate shipping label. Refunds for unused postage paid labels can be requested online 30 days from the print date.

UNITED STATES POSTAL SERVICE® *Thank you for shipping with the United States Postal Service!*
Check the status of your shipment on the USPS Tracking® page at usps.com

UNITED STATES POSTAL SERVICE®

Click-N-Ship®

P

usps.com
$15.50
US POSTAGE
MD Flat Rate Box

9405 5036 9930 0471 4928 84 0155 0000 0010 6021

U.S. POSTAGE PAID
Click-N-Ship®

STURBRIDGE MA 01566
AUG 12 2021
USPS

08/13/2021

Mailed from 01566

PRIORITY MAIL 2-DAY™

DEBORAH CHASE
NORTHEAST SITE SOLUTIONS
420 MAIN ST
STE 1
STURBRIDGE MA 01566-1359

Expected Delivery Date: 08/16/21
Ref#: CR-876377
0004

H001

SHIP
TO: THOMAS MCKEON
FIRST SELECTMAN
562 COLEBROOK RD
COLEBROOK CT 06021-1010

USPS TRACKING #

9405 5036 9930 0471 4928 84

Electronic Rate Approved #038555749

UNITED STATES POSTAL SERVICE®

Click-N-Ship®

P

usps.com
$15.50
US POSTAGE
MD Flat Rate Box

9405 5036 9930 0471 4928 91 0155 0000 0010 6021

U.S. POSTAGE PAID
Click-N-Ship®

STURBRIDGE MA 01566
AUG 12 2021
USPS

08/12/2021

Mailed from 01566

PRIORITY MAIL 2-DAY™

DEBORAH CHASE
NORTHEAST SITE SOLUTIONS
420 MAIN ST
STE 1
STURBRIDGE MA 01566-1359

Expected Delivery Date: 08/16/21
Ref#: CR-876377
0004

H001

SHIP
TO: MARC MELANSON
BUILDING OFFICAL
562 COLEBROOK RD
COLEBROOK CT 06021-1010

USPS TRACKING #

9405 5036 9930 0471 4928 91

Electronic Rate Approved #038555749

UNITED STATES POSTAL SERVICE®

Click-N-Ship®

P

USPS.COM/PI
$15.50
US POSTAGE
MD Flat Rate Box

9405 5036 9930 0471 4929 07 9155 0000 9020 6807

U.S. POSTAGE PAID
Click-N-Ship®

STURBRIDGE MA 01566
AUG 12 2021
USPS

08/12/2021

Mailed from 01566

PRIORITY MAIL 3-DAY™

DEBORAH CHASE
NORTHEAST SITE SOLUTIONS
420 MAIN ST
STE 1
STURBRIDGE MA 01566-1359

Expected Delivery Date: 08/16/21
Ref#: CR-876377
0004

C003

SHIP
TO:

FIFTH STATE FARM, LLC
70 OLD STONE BRIDGE RD
COS COB CT 06807-1510

USPS TRACKING #

9405 5036 9930 0471 4929 07

D SEAL

FLAT RATE
POSTAGE REQUIRED

UNITED STATES POSTAL SERVICE®

Click-N-Ship®

P

usps.com
$7.95
US POSTAGE
Flat Rate Env

9405 5036 9930 0471 4928 77 0079 5000 0010 1581

U.S. POSTAGE PAID
Click-N-Ship®

08/13/2021

Mailed from 01566

AUG 12 2021
USPS

PRIORITY MAIL 1-DAY™

DEBORAH CHASE
NORTHEAST SITE SOLUTIONS
420 MAIN ST
STE 1
STURBRIDGE MA 01566-1359

Expected Delivery Date: 08/14/21
Refl#: CR-876377
0006

C006

SHIP
TO:

SARAH SNELL
1800 W PARK DR
WESTBOROUGH MA 01581-3926

USPS TRACKING

9405 5036 9930 0471 4928 77

Electronic Rate Approved #038555749

This packaging is the property of the U.S. Postal Service® and is provided solely for use in sending Priority Mail® shipments.
Misuse may be a violation of federal law. This packaging is not for resale. EP14F © U.S. Postal Service; July 2020; All rights reserved.

JSPS
PLIES

UNITED STATES POSTAL SERVICE® **Click-N-Ship®**

P

usps.com
$21.90
US POSTAGE
LG Flat Rate Box

9405 5036 9930 0471 4928 60 0219 0000 0010 6051

U.S. POSTAGE PAID
Click-N-Ship®

STURBRIDGE, MA 01566
AUG 12 2021
USPS

08/13/2021

Mailed from 01566

PRIORITY MAIL 2-DAY™

DEBORAH CHASE
NORTHEAST SITE SOLUTIONS
420 MAIN ST
STE 1
STURBRIDGE MA 01566-1359

Expected Delivery Date: 08/16/21
Refl#: CR-876377
0004

C006

SHIP
TO: LISA A MATTHEWS
CT SITING COUNCIL
10 FRANKLIN SQ
NEW BRITAIN CT 06051-2655

USPS TRACKING

9405 5036 9930 0471 4928 60