PROJECT INFORMATION

SCOPE OF WORK:	TOWER: ADD (3) 8-PORT ANTENNAS, INSTALLED IN POSITION 3 ON EACH SECTOR. ADD (3) RRUS-32 WCS AND (3) RRUS-4478 B14. BETA & GAMMA ANTENNAS TO BE RELOCATED & MOUNTED ON NEW STANDOFF SECTOR FRAMES. SHELTER: UPGRADE DUS TO 5216.
SITE ADDRESS:	751 HIGGINS ROAD CHESHIRE, CT 06410
LATITUDE:	41° 29' 14.78" N (NAD 83)*
LONGITUDE:	72° 55' 45.55" W (NAD 83)* *PER EXISTING AT&T PLANS
CURRENT USE:	TELECOMMUNICATIONS FACILITY
PROPOSED USE:	TELECOMMUNICATIONS FACILITY
NAME OF APPLICANT:	AT&T MOBILITY 500 ENTERPRISE DRIVE SUITE 3A ROCKY HILL, CT 06067

SITE NAME: CHESHIRE 3C/4C
SITE NUMBER: CT2036
PACE NO.: MRCTB025501 (3C) / MRCTB026664 (4C)
FA LOCATION CODE: 10034996

DRAWING INDEX

		REV
T01	TITLE SHEET	0
G01	GENERAL NOTES	0
C01	PROPOSED SITE PLAN & SHELTER PLAN	0
C02	PROPOSED ELEVATION & EQUIPMENT CONFIGURATION	0
C03	EXISTING & PROPOSED ANTENNA ORIENTATION PLAN	0
C04	EQUIPMENT PLUMBING DIAGRAM	0
S01	BETA SECTOR MODIFICATION DETAILS	0
S02	GAMMA SECTOR MODIFICATION DETAILS	0
E01	GROUNDING DETAILS	0

THIS DOCUMENT WAS DEVELOPED TO REFLECT A SPECIFIC SITE & ITS SITE CONDITIONS & IS NOT TO BE USED FOR ANOTHER SITE OR WHEN OTHER CONDITIONS PERTAIN. REUSE OF THIS DOCUMENT IS AT THE SOLE RISK OF THE USER.

CONTACT INFORMATION

CONTACT	CONTACT	COMPANY	PHONE NO.
ENGINEERING:	BENJAMIN REVETTE, P.E.	DEWBERRY ENGINEERS INC.	(617) 531-0800
SAC:	MEREDITH PAYNTER	CENTERLINE COMMUNICATIONS	(508) 673-9116

VICINITY MAP

DIRECTIONS: GET ON I-90 W/MASSACHUSETTS TURNPIKE. TAKE EXIT 9 FOR I-84 S. TAKE EXIST 26 FOR CT-70. TURN LEFT ON CT-70. TURN RIGHT ONTO MOUNTAIN RD. TURN LEFT ONTO HIGGINS RD. THE SITE WILL BE ON THE RIGHT.

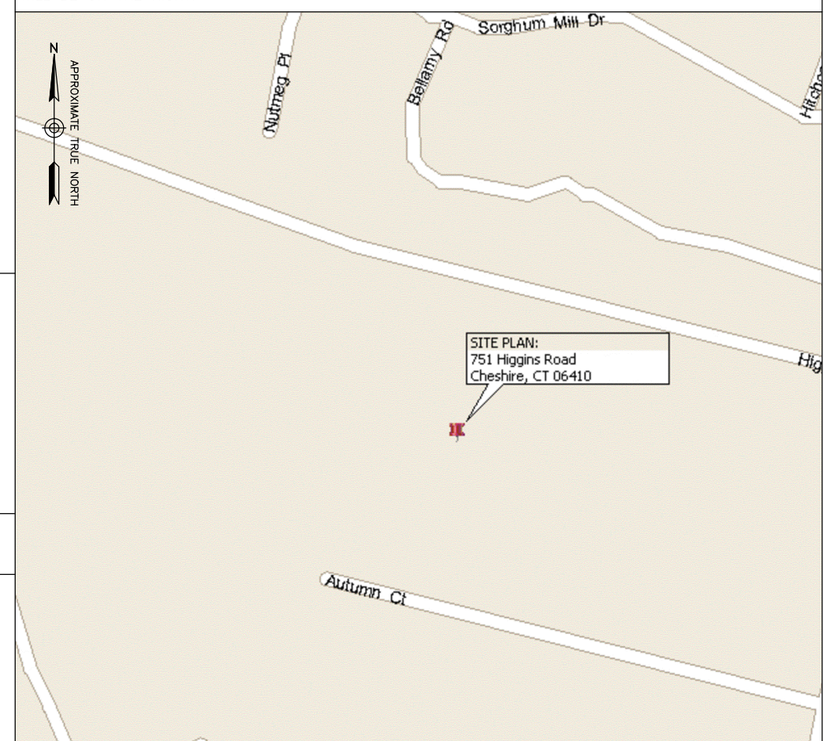

APPLICABLE BUILDING CODES & STANDARDS

CONTRACTOR'S WORK SHALL COMPLY WITH PROJECT STANDARD NOTES, SYMBOLS & DETAILS (SEE DRAWING INDEX FOR STANDARD NOTES & DETAILS INCLUDED WITH TYPICAL DRAWING PACKAGE). CONTRACTOR WORK SHALL COMPLY WITH ALL APPLICABLE NATIONAL, STATE, & LOCAL CODES AS ADOPTED BY THE LOCAL AUTHORITY HAVING JURISDICTION (AHJ) FOR THE LOCATION. THE EDITION OF THE AHJ ADOPTED CODES & STANDARDS IN EFFECT ON THE DATE OF CONTRACT AWARD SHALL GOVERN THE DESIGN.

BUILDING CODE:
INTERNATIONAL BUILDING CODE (IBC)

ELECTRICAL CODE:
NATIONAL ELECTRICAL CODE (NEC)

CONTRACTOR'S WORK SHALL COMPLY WITH THE LATEST EDITION OF THE FOLLOWING STANDARDS.
AMERICAN CONCRETE INSTITUTE (ACI) 318, BUILDING CODE REQUIREMENTS FOR STRUCTURAL CONCRETE
AMERICAN INSTITUTE OF STEEL CONSTRUCTION (AISC), MANUAL OF STEEL CONSTRUCTION, ASD, NINTH EDITION
TELECOMMUNICATIONS INDUSTRY ASSOCIATION (TIA) 222-G, STRUCTURAL STANDARDS FOR STEEL ANTENNA TOWER & ANTENNA SUPPORTING STRUCTURES:
TIA 607, COMMERCIAL BUILDING GROUNDING & BONDING REQUIREMENTS FOR TELECOMMUNICATIONS

INSTITUTE FOR ELECTRICAL & ELECTRONICS ENGINEERS (IEEE) 81, GUIDE FOR MEASURING EARTH RESISTIVITY, GROUND IMPEDANCE, & EARTH SURFACE POTENTIALS OF A GROUND SYSTEM
IEEE 1100 (1999) RECOMMENDED PRACTICE FOR POWERING & GROUNDING OF ELECTRONIC EQUIPMENT

IEEE C62.41, RECOMMENDED PRACTICES ON SURGE VOLTAGES IN LOW VOLTAGE AC POWER CIRCUITS (FOR LOCATION CATEGORY "C3" & "HIGH SYSTEM EXPOSURE")

TELCORDIA GR-1503, COAXIAL CABLE CONNECTIONS

ANSI T1.311, FOR TELECOM – DC POWER SYSTEMS – TELECOM, ENVIRONMENTAL PROTECTION

FOR ANY CONFLICTS BETWEEN SECTIONS OF LISTED CODES & STANDARDS REGARDING MATERIAL, METHODS OF CONSTRUCTION, OR OTHER REQUIREMENTS, THE MOST RESTRICTIVE REQUIREMENT SHALL GOVERN. WHERE THERE IS CONFLICT BETWEEN A GENERAL REQUIREMENT & A SPECIFIC REQUIREMENT, THE SPECIFIC REQUIREMENT SHALL GOVERN.

Dewberry®
Dewberry Engineers Inc.
99 SUMMER STREET
SUITE 700
BOSTON, MA 02110
PHONE: 617.695.3400
FAX: 617.695.3310

CENTERLINE COMMUNICATIONS
750 W. CENTER ST. SUITE #301
WEST BRIDGEWATER, MA 02379

at&t Mobility
500 ENTERPRISE DRIVE
SUITE 3A
ROCKY HILL, CT 06067

CHESHIRE 3C/4C
SITE NO. CT2036

751 HIGGINS ROAD
CHESHIRE, CT 06410

NO.	DATE	REVISIONS	BY	CHK	APP'D
0	06/11/20	ISSUED FOR CONSTRUCTION	JG	CDH	DAS
A	05/05/20	ISSUED FOR REVIEW	JG	CDH	DAS

SCALE: AS SHOWN | DESIGNED BY: CDH | DRAWN BY: JG

STATE OF CONNECTICUT · BENJAMIN REVETTE · 28971 · LICENSED · PROFESSIONAL ENGINEER

AT&T MOBILITY
FRAMINGHAM, MA 01701

TITLE SHEET

DEWBERRY NO.	DRAWING NUMBER	REV
50123198/50123202	T01	0

GENERAL NOTES:

1. FOR THE PURPOSE OF CONSTRUCTION DRAWING, THE FOLLOWING DEFINITIONS SHALL APPLY:
   PROJECT MANAGEMENT – CENTERLINE COMMUNICATIONS
   CONTRACTOR – GENERAL CONTRACTOR (CONSTRUCTION)
   OWNER – AT&T MOBILITY
   OEM – ORIGINAL EQUIPMENT MANUFACTURER
2. PRIOR TO THE SUBMISSION OF BIDS, THE BIDDING CONTRACTOR SHALL VISIT THE CELL SITE TO FAMILIARIZE WITH THE EXISTING CONDITIONS & TO CONFIRM THAT THE WORK CAN BE ACCOMPLISHED AS SHOWN ON THE CONSTRUCTION DRAWINGS. ANY DISCREPANCY FOUND SHALL BE BROUGHT TO THE ATTENTION OF PROJECT MANAGEMENT.
3. ALL MATERIALS FURNISHED & INSTALLED SHALL BE IN STRICT ACCORDANCE WITH ALL APPLICABLE CODES, REGULATIONS, & ORDINANCES. CONTRACTOR SHALL ISSUE ALL APPROPRIATE NOTICES & COMPLY WITH ALL LAWS, ORDINANCES, RULES, REGULATIONS, & LAWFUL ORDERS OF ANY PUBLIC AUTHORITY REGARDING THE PERFORMANCE OF THE WORK.
4. ALL WORK CARRIED OUT SHALL COMPLY WITH ALL APPLICABLE MUNICIPAL & UTILITY COMPANY SPECIFICATIONS & LOCAL JURISDICTIONAL CODES, ORDINANCES & APPLICABLE REGULATIONS.
5. DRAWINGS PROVIDED HERE ARE NOT TO SCALE UNLESS OTHERWISE NOTED & ARE INTENDED TO SHOW OUTLINE ONLY.
6. UNLESS NOTED OTHERWISE, THE WORK SHALL INCLUDE FURNISHING MATERIALS, EQUIPMENT, APPURTENANCES, & LABOR NECESSARY TO COMPLETE ALL INSTALLATIONS AS INDICATED ON THE DRAWINGS.
7. THE CONTRACTOR SHALL INSTALL ALL EQUIPMENT & MATERIALS IN ACCORDANCE WITH MANUFACTURER'S RECOMMENDATIONS UNLESS SPECIFICALLY STATED OTHERWISE.
8. IF THE SPECIFIED EQUIPMENT CANNOT BE INSTALLED AS SHOWN ON THESE DRAWINGS, THE CONTRACTOR SHALL PROPOSE AN ALTERNATIVE INSTALLATION FOR APPROVAL BY PROJECT MANAGEMENT.
9. CONTRACTOR SHALL DETERMINE ACTUAL ROUTING OF CONDUIT, POWER & T1 CABLES, GROUNDING CABLES AS SHOWN ON THE POWER, GROUNDING & TELCO PLAN DRAWING. CONTRACTOR SHALL UTILIZE EXISTING TRAYS AND/OR SHALL ADD NEW TRAYS AS NECESSARY. CONTRACTOR SHALL CONFIRM THE ACTUAL ROUTING WITH PROJECT MANAGEMENT.
10. THE CONTRACTOR SHALL PROTECT EXISTING & PROPOSED IMPROVEMENTS, PAVEMENTS, CURBS, LANDSCAPING & STRUCTURES. ANY DAMAGED PART SHALL BE REPAIRED AT CONTRACTOR'S EXPENSE TO THE SATISFACTION OF THE OWNER.
11. CONTRACTOR SHALL LEGALLY & PROPERLY DISPOSE OF ALL SCRAP MATERIALS SUCH AS COAXIAL CABLES & OTHER ITEMS REMOVED FROM THE EXISTING FACILITY. ANTENNAS REMOVED SHALL BE RETURNED TO THE OWNER'S DESIGNATED LOCATION.
12. CONTRACTOR SHALL LEAVE PREMISES IN CLEAN CONDITION.
13. THE CONTRACTOR SHALL SUPERVISE & DIRECT THE PROJECT DESCRIBED HEREIN. THE CONTRACTOR SHALL BE SOLELY RESPONSIBLE FOR ALL CONSTRUCTION MEANS, METHODS, TECHNIQUES, SEQUENCES, & PROCEDURES & FOR COORDINATING ALL PORTIONS OF THE WORK UNDER THE CONTRACT.
14. CONTRACTOR SHALL NOTIFY DEWBERRY 48 HOURS IN ADVANCE OF POURING CONCRETE, OR BACKFILLING TRENCHES, SEALING ROOF & WALL PENETRATIONS & POST DOWNS, FINISHING NEW WALLS OR FINAL ELECTRICAL CONNECTIONS FOR ENGINEER REVIEW.
15. CONTRACTOR SHALL VERIFY ALL EXISTING DIMENSIONS & CONDITIONS PRIOR TO COMMENCING ANY WORK. ALL DIMENSIONS OF EXISTING CONSTRUCTION SHOWN ON THE DRAWINGS MUST BE VERIFIED. CONTRACTOR SHALL NOTIFY PROJECT MANAGEMENT OF ANY DISCREPANCIES PRIOR TO ORDERING MATERIAL OR PROCEEDING WITH CONSTRUCTION.
16. THE EXISTING CELL SITE IS IN FULL COMMERCIAL OPERATION. ANY CONSTRUCTION WORK BY CONTRACTOR SHALL NOT DISRUPT THE EXISTING NORMAL OPERATION. ANY WORK ON EXISTING EQUIPMENT MUST BE COORDINATED WITH CONTRACTOR. ALSO, WORK SHOULD BE SCHEDULED FOR AN APPROPRIATE MAINTENANCE WINDOW USUALLY IN LOW TRAFFIC PERIODS AFTER MIDNIGHT.
17. SINCE THE CELL SITE IS ACTIVE, ALL SAFETY PRECAUTIONS MUST BE TAKEN WHEN WORKING AROUND HIGH LEVELS OF ELECTROMAGNETIC RADIATION. EQUIPMENT SHOULD BE SHUTDOWN PRIOR TO PERFORMING ANY WORK THAT COULD EXPOSE THE WORKERS TO DANGER. PERSONAL RF EXPOSURE MONITORS ARE ADVISED TO BE WORN TO ALERT OF ANY DANGEROUS EXPOSURE LEVELS.
18. CONTRACTOR SHALL BE RESPONSIBLE FOR SITE SAFETY INCLUDING COMPLIANCE WITH ALL APPLICABLE OSHA STANDARDS & RECOMMENDATIONS & SHALL PROVIDE ALL NECESSARY SAFETY DEVICES INCLUDING PPE & PPM & CONSTRUCTION DEVICES SUCH AS WELDING & FIRE PREVENTION, TEMPORARY SHORING, SCAFFOLDING, TRENCH BOXES/SLOPING, BARRIERS, ETC.

SITE WORK GENERAL NOTES:

1. THE CONTRACTOR SHALL CONTACT UTILITY LOCATING SERVICES PRIOR TO THE START OF CONSTRUCTION.
2. ALL EXISTING ACTIVE SEWER, WATER, GAS, ELECTRIC, & OTHER UTILITIES WHERE ENCOUNTERED IN THE WORK, SHALL BE PROTECTED AT ALL TIMES, & WHERE REQUIRED FOR THE PROPER EXECUTION OF THE WORK, SHALL BE RELOCATED AS DIRECTED BY CONTRACTOR. EXTREME CAUTION SHOULD BE USED BY THE CONTRACTOR WHEN EXCAVATING OR DRILLING PIERS AROUND OR NEAR UTILITIES. CONTRACTOR SHALL PROVIDE SAFETY TRAINING FOR THE WORKING CREW. THIS WILL INCLUDE BUT NOT BE LIMITED TO:
   A) FALL PROTECTION
   B) CONFINED SPACE
   C) ELECTRICAL SAFETY
   D) TRENCHING & EXCAVATION.
3. ALL SITE WORK SHALL BE AS INDICATED ON THE DRAWINGS & PROJECT SPECIFICATIONS.
4. IF NECESSARY, RUBBISH, STUMPS, DEBRIS, STICKS, STONES, TOP SOIL & OTHER REFUSE SHALL BE REMOVED FROM THE SITE & DISPOSED OF LEGALLY.
5. ALL EXISTING INACTIVE SEWER, WATER, GAS, ELECTRIC & OTHER UTILITIES, WHICH INTERFERE WITH THE EXECUTION OF THE WORK, SHALL BE REMOVED AND/OR CAPPED, PLUGGED OR OTHERWISE DISCONTINUED AT POINTS WHICH WILL NOT INTERFERE WITH THE EXECUTION OF THE WORK, SUBJECT TO THE APPROVAL OF CONTRACTOR, OWNER AND/OR LOCAL UTILITIES.
6. CONTRACTOR SHALL MINIMIZE DISTURBANCE TO EXISTING SITE DURING CONSTRUCTION.
7. THE CONTRACTOR SHALL PROVIDE SITE SIGNAGE IN ACCORDANCE WITH THE AT&T SPECIFICATION FOR SITE SIGNAGE.
8. THE SITE SHALL BE GRADED TO CAUSE SURFACE WATER TO FLOW AWAY FROM THE TRANSMISSION EQUIPMENT & TOWER AREAS.
9. NO FILL OR EMBANKMENT MATERIAL SHALL BE PLACED ON FROZEN GROUND. FROZEN MATERIALS, SNOW OR ICE SHALL NOT BE PLACED IN ANY FILL OR EMBANKMENT.
10. THE SUB GRADE SHALL BE COMPACTED & BROUGHT TO A SMOOTH UNIFORM GRADE PRIOR TO FINISHED SURFACE APPLICATION, SEE SOIL COMPACTION NOTES.
11. THE AREAS OF THE OWNER'S PROPERTY DISTURBED BY THE WORK & NOT COVERED BY THE TOWER, EQUIPMENT OR DRIVEWAY, SHALL BE GRADED TO A UNIFORM SLOPE, & STABILIZED TO PREVENT EROSION.
12. EROSION CONTROL MEASURES, IF REQUIRED DURING CONSTRUCTION, SHALL BE IN CONFORMANCE WITH THE LOCAL JURISDICTION'S GUIDELINES FOR EROSION & SEDIMENT CONTROL.

CONCRETE & REINFORCING STEEL NOTES:

1. ALL CONCRETE WORK SHALL BE IN ACCORDANCE WITH THE ACI 301, ACI 318, ACI 336, ASTM A184, ASTM A185 & THE DESIGN & CONSTRUCTION SPECIFICATION FOR CAST–IN–PLACE CONCRETE.
2. ALL CONCRETE SHALL HAVE A MINIMUM COMPRESSIVE STRENGTH OF 4000 PSI AT 28 DAYS, UNLESS NOTED OTHERWISE. A HIGHER STRENGTH (4000 PSI) MAY BE USED. ALL CONCRETING WORK SHALL BE DONE IN ACCORDANCE WITH ACI 318 CODE REQUIREMENTS.
3. REINFORCING STEEL SHALL CONFORM TO ASTM A 615, GRADE 60, DEFORMED UNLESS NOTED OTHERWISE. WELDED WIRE FABRIC SHALL CONFORM TO ASTM A 185 WELDED STEEL WIRE FABRIC UNLESS NOTED OTHERWISE (UNO). SPLICES SHALL BE CLASS "B" & ALL HOOKS SHALL BE STANDARD, UNO.
4. THE FOLLOWING MINIMUM CONCRETE COVER SHALL BE PROVIDED FOR REINFORCING STEEL UNLESS SHOWN OTHERWISE ON DRAWINGS:
   CONCRETE CAST AGAINST EARTH.....3 IN.
   CONCRETE EXPOSED TO EARTH OR WEATHER:
   #6 & LARGER .....2 IN.
   #5 & SMALLER & WWF .....1 1/2 IN.
   CONCRETE NOT EXPOSED TO EARTH OR WEATHER OR NOT CAST AGAINST THE GROUND:
   SLAB & WALL .....3/4 IN.
   BEAMS & COLUMNS .....1 1/2 IN.
5. A CHAMFER 3/4" SHALL BE PROVIDED AT ALL EXPOSED EDGES OF CONCRETE, UNO, IN ACCORDANCE WITH ACI 301 SECTION 4.2.4.
6. INSTALLATION OF CONCRETE EXPANSION/WEDGE ANCHOR, SHALL BE PER MANUFACTURER'S WRITTEN RECOMMENDED PROCEDURE. THE ANCHOR BOLT, DOWEL OR ROD SHALL CONFORM TO MANUFACTURER'S RECOMMENDATION FOR EMBEDMENT DEPTH OR AS SHOWN ON THE DRAWINGS. NO REBAR SHALL BE CUT WITHOUT PRIOR CONTRACTOR APPROVAL WHEN DRILLING HOLES IN CONCRETE. SPECIAL INSPECTIONS, REQUIRED BY GOVERNING CODES, SHALL BE PERFORMED IN ORDER TO MAINTAIN MANUFACTURER'S MAXIMUM ALLOWABLE LOADS. ALL EXPANSION/WEDGE ANCHORS SHALL BE STAINLESS STEEL OR HOT DIPPED GALVANIZED. EXPANSION BOLTS SHALL BE PROVIDED BY RAMSET/REDHEAD OR APPROVED EQUAL.
7. CONCRETE CYLINDER TEST IS NOT REQUIRED FOR SLAB ON GRADE WHEN CONCRETE IS LESS THAN 50 CUBIC YARDS (IBC 1905.6.2.3) IN THAT EVENT THE FOLLOWING RECORDS SHALL BE PROVIDED BY THE CONCRETE SUPPLIER;
   (A) RESULTS OF CONCRETE CYLINDER TESTS PERFORMED AT THE SUPPLIER'S PLANT,
   (B) CERTIFICATION OF MINIMUM COMPRESSIVE STRENGTH FOR THE CONCRETE GRADE SUPPLIED.
   FOR GREATER THAN 50 CUBIC YARDS THE GC SHALL PERFORM THE CONCRETE CYLINDER TEST.
8. AS AN ALTERNATIVE TO ITEM 7, TEST CYLINDERS SHALL BE TAKEN INITIALLY & THEREAFTER FOR EVERY 50 YARDS OF CONCRETE FROM EACH DIFFERENT BATCH PLANT.
9. EQUIPMENT SHALL NOT BE PLACED ON NEW PADS FOR SEVEN DAYS AFTER PAD IS POURED, UNLESS IT IS VERIFIED BY CYLINDER TESTS THAT COMPRESSIVE STRENGTH HAS BEEN ATTAINED.

STRUCTURAL STEEL NOTES:

1. ALL STEEL WORK SHALL BE PAINTED OR GALVANIZED IN ACCORDANCE WITH THE DRAWINGS UNLESS NOTED OTHERWISE. STRUCTURAL STEEL SHALL BE ASTM–A–36 UNLESS OTHERWISE NOTED ON THE SITE SPECIFIC DRAWINGS. STEEL DESIGN, INSTALLATION & BOLTING SHALL BE PERFORMED IN ACCORDANCE WITH THE AMERICAN INSTITUTE OF STEEL CONSTRUCTION (AISC) "MANUAL OF STEEL CONSTRUCTION".
2. ALL WELDING SHALL BE PERFORMED USING E70XX ELECTRODES & WELDING SHALL CONFORM TO AISC. WHERE FILLET WELD SIZES ARE NOT SHOWN, PROVIDE THE MINIMUM SIZE PER TABLE J2.4 IN THE AISC "MANUAL OF STEEL CONSTRUCTION". PAINTED SURFACES SHALL BE TOUCHED UP.
3. BOLTED CONNECTIONS SHALL BE ASTM A325 BEARING TYPE 3/4"Ø CONNECTIONS & SHALL HAVE MINIMUM OF TWO BOLTS UNLESS NOTED OTHERWISE.
4. NON–STRUCTURAL CONNECTIONS FOR STEEL GRATING MAY USE 5/8" DIA. ASTM A 307 BOLTS UNLESS NOTED OTHERWISE.
5. INSTALLATION OF CONCRETE EXPANSION/WEDGE ANCHOR, SHALL BE PER MANUFACTURER'S WRITTEN RECOMMENDED PROCEDURE. THE ANCHOR BOLT, DOWEL OR ROD SHALL CONFORM TO MANUFACTURER'S RECOMMENDATION FOR EMBEDMENT DEPTH OR AS SHOWN ON THE DRAWINGS. NO REBAR SHALL BE CUT WITHOUT PRIOR CONTRACTOR APPROVAL WHEN DRILLING HOLES IN CONCRETE. SPECIAL INSPECTIONS, REQUIRED BY GOVERNING CODES, SHALL BE PERFORMED IN ORDER TO MAINTAIN MANUFACTURER'S MAXIMUM ALLOWABLE LOADS. ALL EXPANSION/WEDGE ANCHORS SHALL BE STAINLESS STEEL OR HOT DIPPED GALVANIZED. EXPANSION BOLTS SHALL BE PROVIDED BY RAMSET/REDHEAD OR APPROVED EQUAL.
6. CONTRACTOR SHALL SUBMIT SHOP DRAWINGS FOR ENGINEER REVIEW & APPROVAL ON PROJECTS REQUIRING STRUCTURAL STEEL.
7. ALL STRUCTURAL STEEL WORK SHALL BE DONE IN ACCORDANCE WITH AISC SPECIFICATIONS.

SOIL COMPACTION NOTES FOR SLAB ON GRADE:

1. EXCAVATE AS REQUIRED TO REMOVE VEGETATION & TOPSOIL EXPOSE UNDISTURBED NATURAL SUBGRADE & PLACE CRUSHED STONE AS REQUIRED.
2. COMPACTION CERTIFICATION: AN INSPECTION & WRITTEN CERTIFICATION BY A QUALIFIED GEOTECHNICAL TECHNICIAN OR ENGINEER IS ACCEPTABLE.
3. AS AN ALTERNATIVE TO INSPECTION & WRITTEN CERTIFICATION, THE "UNDISTURBED SOIL" BASE SHALL BE COMPACTED WITH "COMPACTION EQUIPMENT", LISTED BELOW, TO AT LEAST 90% MODIFIED PROCTOR MAXIMUM DENSITY PER ASTM D 1557 METHOD C.
4. COMPACTED SUBBASE SHALL BE UNIFORM & LEVELED. PROVIDE 6" MINIMUM CRUSHED STONE OR GRAVEL COMPACTED IN 3" LIFTS ABOVE COMPACTED SOIL. GRAVEL SHALL BE NATURAL OR CRUSHED WITH 100% PASSING 1" SIEVE.
5. AS AN ALTERNATIVE TO ITEMS 2 & 3 PROOFROLL THE SUBGRADE SOILS WITH 5 PASSES OF A MEDIUM SIZED VIBRATORY PLATE COMPACTOR (SUCH AS BOMAG BPR 30/38) OR HAND–OPERATED SINGLE DRUM VIBRATORY ROLLER (SUCH AS BOMAG BW 55E). ANY SOFT AREAS THAT ARE ENCOUNTERED SHOULD BE REMOVED & REPLACED WITH A WELL–GRADED GRANULAR FILL, & COMPACTED AS STATED ABOVE.

COMPACTION EQUIPMENT:

1. HAND OPERATED DOUBLE DRUM, VIBRATORY ROLLER, VIBRATORY PLATE COMPACTOR OR JUMPING JACK COMPACTOR.

CONSTRUCTION NOTES:

1. FIELD VERIFICATION:
   CONTRACTOR SHALL FIELD VERIFY SCOPE OF WORK, AT&T ANTENNA PLATFORM LOCATION & ANTENNAS TO BE REPLACED.
2. COORDINATION OF WORK:
   CONTRACTOR SHALL COORDINATE RF WORK & PROCEDURES WITH PROJECT MANAGEMENT.
3. CABLE LADDER RACK:
   CONTRACTOR SHALL FURNISH & INSTALL CABLE LADDER RACK, CABLE TRAY, & CONDUIT AS REQUIRED TO SUPPORT CABLES TO ANY NEW BTS LOCATION.

ELECTRICAL INSTALLATION NOTES:

1. ALL ELECTRICAL WORK SHALL BE PERFORMED IN ACCORDANCE WITH THE PROJECT SPECIFICATIONS, NEC & ALL APPLICABLE LOCAL CODES.
2. CONTRACTOR SHALL MODIFY EXISTING CABLE TRAY SYSTEM AS REQUIRED TO SUPPORT RF & TRANSPORT CABLING TO NEW BTS EQUIPMENT. CONTRACTOR SHALL SUBMIT MODIFICATIONS TO PROJECT MANAGEMENT FOR APPROVAL.
3. CONDUIT ROUTINGS ARE SCHEMATIC. CONTRACTOR SHALL INSTALL CONDUITS SO THAT ACCESS TO EQUIPMENT IS NOT BLOCKED.
4. WIRING, RACEWAY & SUPPORT METHODS & MATERIALS SHALL COMPLY WITH THE REQUIREMENTS OF THE NEC & TELCORDIA.
5. ALL CIRCUITS SHALL BE SEGREGATED & MAINTAIN MINIMUM CABLE SEPARATION AS REQUIRED BY THE NEC & TELCORDIA.
6. CABLES SHALL NOT BE ROUTED THROUGH LADDER–STYLE CABLE TRAY RUNGS.
7. EACH END OF EVERY POWER, POWER PHASE CONDUCTOR (I.E., HOTS), GROUNDING, & T1 CONDUCTOR & CABLE SHALL BE LABELED WITH COLOR–CODED INSULATION OR ELECTRICAL TAPE (3M BRAND, 1/2 INCH PLASTIC ELECTRICAL TAPE WITH UV PROTECTION, OR EQUAL). THE IDENTIFICATION METHOD SHALL CONFORM WITH NEC & OSHA, & MATCH EXISTING INSTALLATION REQUIREMENTS.
8. ALL ELECTRICAL COMPONENTS SHALL BE CLEARLY LABELED WITH ENGRAVED LAMACOID PLASTIC LABELS. ALL EQUIPMENT SHALL BE LABELED WITH THEIR VOLTAGE RATING, PHASE CONFIGURATION, WIRE CONFIGURATION, POWER OR AMPACITY RATING, & BRANCH CIRCUIT ID NUMBERS (I.E., PANELBOARD & CIRCUIT ID'S).
9. PANELBOARDS (ID NUMBERS) & INTERNAL CIRCUIT BREAKERS (CIRCUIT ID NUMBERS) SHALL BE CLEARLY LABELED WITH ENGRAVED LAMACOID PLASTIC LABELS.
10. ALL TIE WRAPS SHALL BE CUT FLUSH WITH APPROVED CUTTING TOOL TO REMOVE SHARP EDGES.
11. POWER, CONTROL, & EQUIPMENT GROUND WIRING IN TUBING OR CONDUIT SHALL BE SINGLE CONDUCTOR (SIZE 14 AWG OR LARGER), 600V, OIL RESISTANT THHN OR THWN–2, CLASS B STRANDED COPPER CABLE RATED FOR 90 °C (WET & DRY) OPERATION; LISTED OR LABELED FOR THE LOCATION & RACEWAY SYSTEM USED, UNLESS OTHERWISE SPECIFIED.
12. POWER PHASE CONDUCTORS (I.E., HOTS) SHALL BE LABELED WITH COLOR–CODED INSULATION OR ELECTRICAL TAPE (3M BRAND, 1/2 INCH PLASTIC ELECTRICAL TAPE WITH UV PROTECTION, OR EQUAL.) PHASE CONDUCTOR COLOR CODES SHALL CONFORM WITH THE NEC & OSHA & MATCH EXISTING INSTALLATION REQUIREMENTS.
13. SUPPLEMENTAL EQUIPMENT GROUND WIRING LOCATED INDOORS SHALL BE SINGLE CONDUCTOR (SIZE 6 AWG OR LARGER), 600V, OIL RESISTANT THHN OR THWN–2 GREEN INSULATION, CLASS B STRANDED COPPER CABLE RATED FOR 90°C (WET & DRY) OPERATION; LISTED OR LABELED FOR THE LOCATION & RACEWAY SYSTEM USED, UNLESS OTHERWISE SPECIFIED.
14. SUPPLEMENTAL EQUIPMENT GROUND WIRING LOCATED OUTDOORS, OR BELOW GRADE, SHALL BE SINGLE CONDUCTOR #2 AWG SOLID TINNED COPPER CABLE, UNLESS OTHERWISE SPECIFIED.
15. POWER & CONTROL WIRING, NOT IN TUBING OR CONDUIT, SHALL BE MULTI–CONDUCTOR, TYPE TC CABLE (SIZE 14 AWG OR LARGER), 600V, OIL RESISTANT THHN OR THWN–2, CLASS B STRANDED COPPER CABLE RATED FOR 90°C (WET & DRY) OPERATION; WITH OUTER JACKET; LISTED OR LABELED FOR THE LOCATION USED, UNLESS OTHERWISE SPECIFIED.
16. ALL POWER & POWER GROUNDING CONNECTIONS SHALL BE CRIMP–STYLE, COMPRESSION WIRE LUGS & WIRENUTS BY THOMAS & BETTS (OR EQUAL). LUGS & WIRENUTS SHALL BE RATED FOR OPERATION AT NO LESS THAN 75°C (90°C IF AVAILABLE).
17. RACEWAY & CABLE TRAY SHALL BE LISTED OR LABELED FOR ELECTRICAL USE IN ACCORDANCE WITH NEMA, UL, ANSI/IEEE, & NEC.
18. NEW RACEWAY OR CABLE TRAY WILL MATCH THE EXISTING INSTALLATION WHERE POSSIBLE.
19. ELECTRICAL METALLIC TUBING (EMT) OR RIGID NONMETALLIC CONDUIT (I.E., RIGID PVC SCHEDULE 40, OR RIGID PVC SCHEDULE 80 FOR LOCATIONS SUBJECT TO PHYSICAL DAMAGE) SHALL BE USED FOR EXPOSED INDOOR LOCATIONS.
20. ELECTRICAL METALLIC TUBING (EMT), ELECTRICAL NONMETALLIC TUBING (ENT), OR RIGID NONMETALLIC CONDUIT (RIGID PVC, SCHEDULE 40) SHALL BE USED FOR CONCEALED INDOOR LOCATIONS.
21. GALVANIZED STEEL INTERMEDIATE METALLIC CONDUIT (IMC) SHALL BE USED FOR OUTDOOR LOCATIONS ABOVE GRADE.
22. RIGID NONMETALLIC CONDUIT (I.E., RIGID PVC SCHEDULE 40 OR RIGID PVC SCHEDULE 80) SHALL BE USED UNDERGROUND; DIRECT BURIED, IN AREAS OF OCCASIONAL LIGHT VEHICLE TRAFFIC OR ENCASED IN REINFORCED CONCRETE IN AREAS OF HEAVY VEHICLE TRAFFIC.
23. LIQUID–TIGHT FLEXIBLE METALLIC CONDUIT (LIQUID–TITE FLEX) SHALL BE USED INDOORS & OUTDOORS, WHERE VIBRATION OCCURS OR FLEXIBILITY IS NEEDED.
24. CONDUIT & TUBING FITTINGS SHALL BE THREADED OR COMPRESSION–TYPE & APPROVED FOR THE LOCATION USED. SETSCREW FITTINGS ARE NOT ACCEPTABLE.
25. CABINETS, BOXES, & WIREWAYS SHALL BE LISTED OR LABELED FOR ELECTRICAL USE IN ACCORDANCE WITH NEMA, UL, ANSI/IEEE, & NEC.
26. CABINETS, BOXES, & WIREWAYS TO MATCH THE EXISTING INSTALLATION WHERE POSSIBLE.
27. WIREWAYS SHALL BE EPOXY–COATED (GRAY) & INCLUDE A HINGED COVER, DESIGNED TO SWING OPEN DOWNWARD; SHALL BE PANDUIT TYPE E (OR EQUAL); & RATED NEMA 1 (OR BETTER) INDOORS, OR NEMA 3R (OR BETTER) OUTDOORS.
28. EQUIPMENT CABINETS, TERMINAL BOXES, JUNCTION BOXES, & PULL BOXES SHALL BE GALVANIZED OR EPOXY–COATED SHEET STEEL, SHALL MEET OR EXCEED UL 50, & RATED NEMA 1 (OR BETTER) INDOORS, OR NEMA 3R (OR BETTER) OUTDOORS.
29. METAL RECEPTACLE, SWITCH, & DEVICE BOXES SHALL BE GALVANIZED, EPOXY–COATED, OR NON–CORRODING; SHALL MEET OR EXCEED UL 514A & NEMA OS 1; & RATED NEMA 1 (OR BETTER) INDOORS, OR WEATHER PROTECTED (WP OR BETTER) OUTDOORS.
30. NONMETALLIC RECEPTACLE, SWITCH, & DEVICE BOXES SHALL MEET OR EXCEED NEMA OS 2; & RATED NEMA 1 (OR BETTER) INDOORS, OR WEATHER PROTECTED (WP OR BETTER) OUTDOORS.
31. THE CONTRACTOR SHALL NOTIFY & OBTAIN NECESSARY AUTHORIZATION FROM PROJECT MANAGEMENT BEFORE COMMENCING WORK ON THE AC POWER DISTRIBUTION PANELS.
32. THE CONTRACTOR SHALL PROVIDE NECESSARY TAGGING ON THE BREAKERS, CABLES & DISTRIBUTION PANELS IN ACCORDANCE WITH THE APPLICABLE CODES & STANDARDS TO SAFEGUARD AGAINST LIFE & PROPERTY.

Dewberry®
Dewberry Engineers Inc.
99 SUMMER STREET
SUITE 700
BOSTON, MA 02110
PHONE: 617.695.3400
FAX: 617.695.3310

CENTERLINE COMMUNICATIONS
750 W. CENTER ST. SUITE #301
WEST BRIDGEWATER, MA 02379

at&t Mobility
500 ENTERPRISE DRIVE
SUITE 3A
ROCKY HILL, CT 06067

CHESHIRE 3C/4C
SITE NO. CT2036

751 HIGGINS ROAD
CHESHIRE, CT 06410

NO.	DATE	REVISIONS	BY	CHK	APP'D
0	06/11/20	ISSUED FOR CONSTRUCTION	JG	CDH	DAS
A	05/05/20	ISSUED FOR REVIEW	JG	CDH	DAS

SCALE: AS SHOWN | DESIGNED BY: CDH | DRAWN BY: JG

STATE OF CONNECTICUT · BENJAMIN D. STRATE · 28971 · LICENSED · PROFESSIONAL ENGINEER

AT&T MOBILITY
FRAMINGHAM, MA 01701

GENERAL NOTES

DEWBERRY NO.	DRAWING NUMBER	REV
50123198/50123202	G01	0

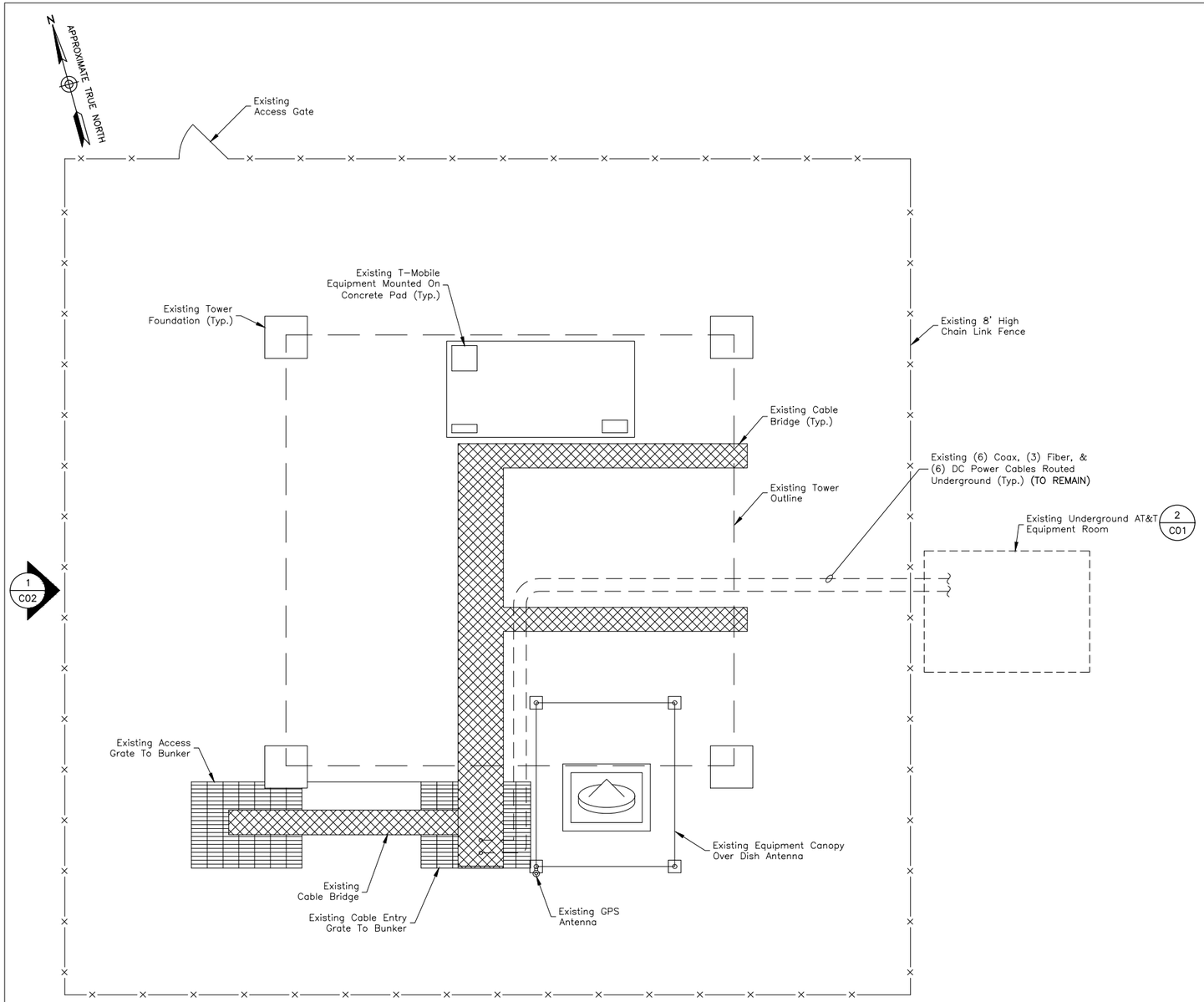

PROPOSED SITE PLAN

1

SCALE: 1"=10' FOR 11"x17"
1"=5' FOR 22"x34"

0' 5' 10'

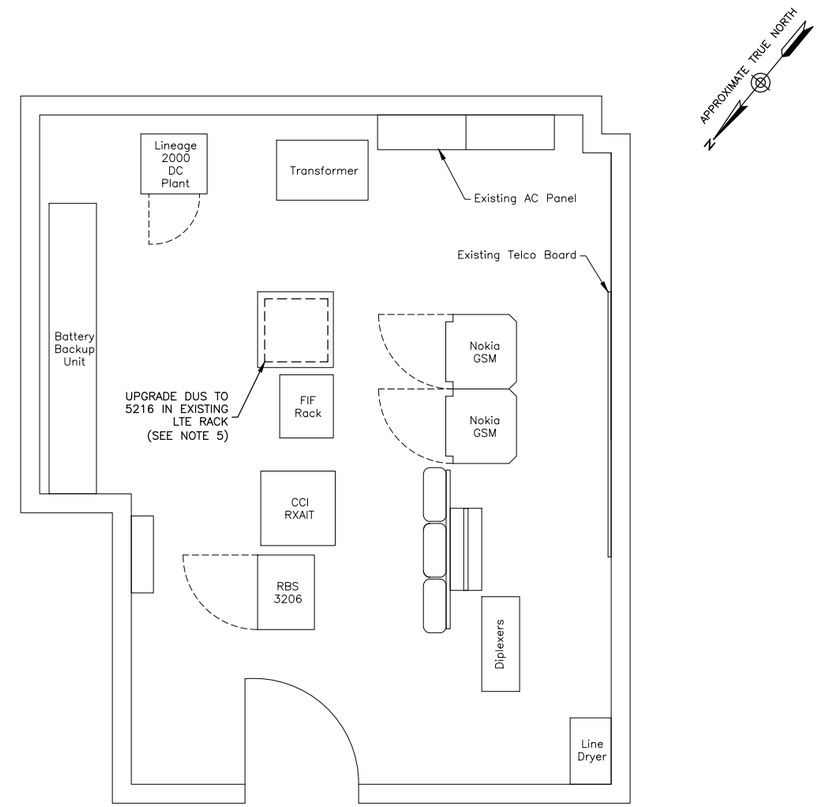

PROPOSED SHELTER PLAN

2

SCALE: 1"=4' FOR 11"x17"
1"=2' FOR 22"x34"

0' 2' 4'

NOTES:

1. NORTH ARROW SHOWN AS APPROXIMATE.
2. ALL PROPOSED EQUIPMENT INCLUDING ANTENNAS, COAX, SURGE ARRESTORS, RRU'S, ETC. SHALL BE MOUNTED IN ACCORDANCE WITH THE MOUNT ANALYSIS REPORT BY DEWBERRY ENGINEERS INC. DATED 04/28/20.
3. DEWBERRY WAS NOT PROVIDED WITH OR CONTRACTED TO PERFORM A TOWER STRUCTURAL ANALYSIS. A PASSING STRUCTURAL ANALYSIS SHALL BE COMPLETED PRIOR TO THE INSTALLATION OF ANY PROPOSED EQUIPMENT. SEE STRUCTURAL NOTE ON SHEET T01.
4. NOT ALL EXISTING/PROPOSED INFORMATION SHOWN FOR CLARITY.
5. EQUIPMENT MODIFICATION SCOPE:

   TOWER: TOWER: ADD (3) 8-PORT ANTENNAS, INSTALLED IN POSITION 3 ON EACH SECTOR. ADD (3) RRUS-32 WCS AND (3) RRUS-4478 B14. BETA & GAMMA ANTENNAS TO BE RELOCATED & MOUNTED ON NEW STANDOFF SECTOR FRAMES.

   SHELTER: UPGRADE DUS TO 5216.
6. CONTRACTOR SHALL VERIFY ANTENNA SPACING IN FIELD & RELOCATE PIPE MASTS AS REQUIRED TO MEET ANTENNA SPACING REQUIREMENTS. THE ANTENNA SPACING REQUIREMENTS ARE AS FOLLOWS:
   - 3'-0" MINIMUM SEPARATION BETWEEN ALL LTE ANTENNAS
7. ALL PROPOSED CHANGES AND EQUIPMENT INSTALLATIONS RELATED TO VERIZON WIRELESS EQUIPOMENT AND ANTENNAS ARE NOT INCLUDED IN THE CURRENT SCOPE OF WORK AND SHALL BE COMPLETED BY VERIZON WIRELESS.

Dewberry®
Dewberry Engineers Inc.
99 SUMMER STREET
SUITE 700
BOSTON, MA 02110
PHONE: 617.695.3400
FAX: 617.695.3310

CENTERLINE COMMUNICATIONS
750 W. CENTER ST. SUITE #301
WEST BRIDGEWATER, MA 02379

at&t Mobility
500 ENTERPRISE DRIVE
SUITE 3A
ROCKY HILL, CT 06067

CHESHIRE 3C/4C
SITE NO. CT2036

751 HIGGINS ROAD
CHESHIRE, CT 06410

NO.	DATE	REVISIONS	BY	CHK	APP'D
0	06/11/20	ISSUED FOR CONSTRUCTION	JG	CDH	DAS
A	05/05/20	ISSUED FOR REVIEW	JG	CDH	DAS

SCALE: AS SHOWN | DESIGNED BY: CDH | DRAWN BY: JG

STATE OF CONNECTICUT
BENJAMIN D. SMITH
28971
LICENSED
PROFESSIONAL ENGINEER

AT&T MOBILITY
FRAMINGHAM, MA 01701

PROPOSED SITE PLAN & SHELTER PLAN

DEWBERRY NO.	DRAWING NUMBER	REV
50123198/50123202	C01	0

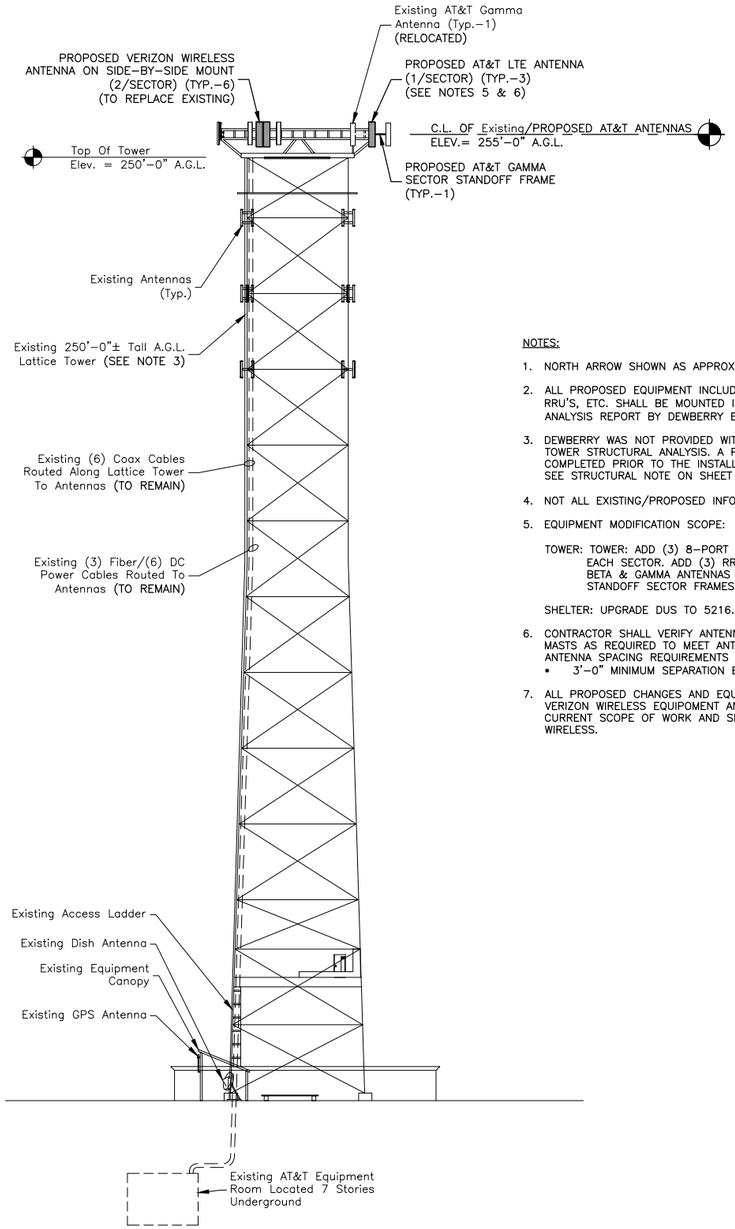

TOWER ELEVATION (1)

SCALE: 1"=40' FOR 11"x17"
1"=20' FOR 22"x34"

0' 20' 40'

NOTES:

1. NORTH ARROW SHOWN AS APPROXIMATE.
2. ALL PROPOSED EQUIPMENT INCLUDING ANTENNAS, COAX, SURGE ARRESTORS, RRU'S, ETC. SHALL BE MOUNTED IN ACCORDANCE WITH THE MOUNT ANALYSIS REPORT BY DEWBERRY ENGINEERS INC. DATED 04/28/20.
3. DEWBERRY WAS NOT PROVIDED WITH OR CONTRACTED TO PERFORM A TOWER STRUCTURAL ANALYSIS. A PASSING STRUCTURAL ANALYSIS SHALL BE COMPLETED PRIOR TO THE INSTALLATION OF ANY PROPOSED EQUIPMENT. SEE STRUCTURAL NOTE ON SHEET T01.
4. NOT ALL EXISTING/PROPOSED INFORMATION SHOWN FOR CLARITY.
5. EQUIPMENT MODIFICATION SCOPE:

   TOWER: TOWER: ADD (3) 8–PORT ANTENNAS, INSTALLED IN POSITION 3 ON EACH SECTOR. ADD (3) RRUS–32 WCS AND (3) RRUS–4478 B14. BETA & GAMMA ANTENNAS TO BE RELOCATED & MOUNTED ON NEW STANDOFF SECTOR FRAMES.

   SHELTER: UPGRADE DUS TO 5216.
6. CONTRACTOR SHALL VERIFY ANTENNA SPACING IN FIELD & RELOCATE PIPE MASTS AS REQUIRED TO MEET ANTENNA SPACING REQUIREMENTS. THE ANTENNA SPACING REQUIREMENTS ARE AS FOLLOWS:
   - 3'–0" MINIMUM SEPARATION BETWEEN ALL LTE ANTENNAS
7. ALL PROPOSED CHANGES AND EQUIPMENT INSTALLATIONS RELATED TO VERIZON WIRELESS EQUIPOMENT AND ANTENNAS ARE NOT INCLUDED IN THE CURRENT SCOPE OF WORK AND SHALL BE COMPLETED BY VERIZON WIRELESS.

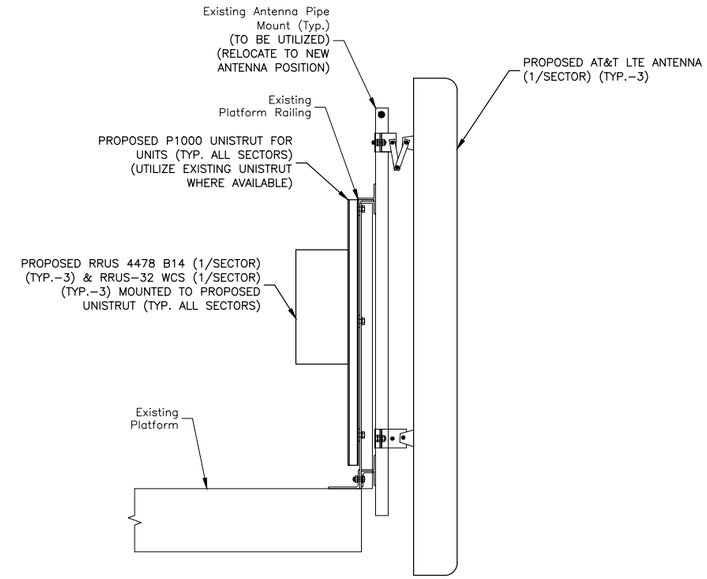

ALPHA SECTOR MOUNTING DETAIL (2)

SCALE: 1/2"=1' FOR 11"x17"
1"=1' FOR 22"x34"

0' 1' 2'

FINAL EQUIPMENT CONFIGURATION

SECTOR	BAND	ANTENNA	SIZE (INCHES) (LxWxD)	RAD. CENTER	AZIMUTH	TMA	RRU	SIZE (INCHES) (LxWxD)	COAX JUMPERS	FIBER JUMPERS
ALPHA	UMTS 850	(E) AM–X–CD–16–65–00T–RET	72.0 x 11.8 x 5.9	255'±	154°	(E) DTMABP7819VG12A TWIN PCS W/ 700–850BP	–	–	(E) 2	–
	–	–	–	–	–	–	–	–	–	–
	LTE B14/WCS	(P) 800–10966	96.0 x 20.0 x 6.9	255'±	15°	–	(P) RRUS 4478 B14 (P) RRUS 32 WCS	15.0 x 13.2 x 7.4 27.2 x 12.1 x 7.0	–	(E) 2
	LTE 700/PCS	(E) HPA–65R–BUU–H8	92.4 x 14.8 x 7.4	255'±	15°	–	(E) RRUS–11 700 (E) RRUS–32 B2 1900	19.7 x 17.0 x 7.2 27.2 x 12.1 x 7.0	–	(E) 2
BETA	UMTS 850	(E) AM–X–CD–16–65–00T–RET	72.0 x 11.8 x 5.9	255'±	270°	(E) DTMABP7819VG12A TWIN PCS W/ 700–850BP	–	–	(E) 2	–
	–	–	–	–	–	–	–	–	–	–
	LTE B14/WCS	(P) 800–10965	78.7 x 20.0 x 6.9	255'±	154°	–	(P) RRUS 4478 B14 (P) RRUS 32 WCS	15.0 x 13.2 x 7.4 27.2 x 12.1 x 7.0	–	(E) 2
	LTE 700/PCS	(E) HPA–65R–BUU–H6	72.0 x 14.8 x 7.4	255'±	154°	–	(E) RRUS–11 700 (E) RRUS–32 B2 1900	19.7 x 17.0 x 7.2 27.2 x 12.1 x 7.0	–	(E) 2
GAMMA	UMTS 850	(E) SBNH–1D6565C	96.4 x 11.9 x 7.1	255'±	15°	(E) DTMABP7819VG12A TWIN PCS W/ 700–850BP	–	–	(E) 2	–
	–	–	–	–	–	–	–	–	–	–
	LTE B14/WCS	(P) 800–10965	78.7 x 20.0 x 6.9	255'±	270°	–	(P) RRUS 4478 B14 (P) RRUS 32 WCS	15.0 x 13.2 x 7.4 27.2 x 12.1 x 7.0	–	(E) 2
	LTE 700/PCS	(E) HPA–65R–BUU–H6	72.0 x 14.8 x 7.4	255'±	270°	–	(E) RRUS–11 700 (E) RRUS–32 B2 1900	19.7 x 17.0 x 7.2 27.2 x 12.1 x 7.0	–	(E) 2

FINAL EQUIPMENT CONFIGURATION (3)

SCALE: N.T.S.

Dewberry®
Dewberry Engineers Inc.
99 SUMMER STREET
SUITE 700
BOSTON, MA 02110
PHONE: 617.695.3400
FAX: 617.695.3310

CENTERLINE COMMUNICATIONS
750 W. CENTER ST. SUITE #301
WEST BRIDGEWATER, MA 02379

at&t Mobility
500 ENTERPRISE DRIVE
SUITE 3A
ROCKY HILL, CT 06067

CHESHIRE 3C/4C
SITE NO. CT2036

751 HIGGINS ROAD
CHESHIRE, CT 06410

NO.	DATE	REVISIONS	BY	CHK	APP'D
0	06/11/20	ISSUED FOR CONSTRUCTION	JG	CDH	DAS
A	05/05/20	ISSUED FOR REVIEW	JG	CDH	DAS

SCALE: AS SHOWN | DESIGNED BY: CDH | DRAWN BY: JG

STATE OF CONNECTICUT BENJAMIN D. ALLEN 28971 LICENSED PROFESSIONAL ENGINEER

AT&T MOBILITY
FRAMINGHAM, MA 01701

PROPOSED ELEVATION & EQUIPMENT CONFIGURATION

DEWBERRY NO.	DRAWING NUMBER	REV
50123198/50123202	C02	0

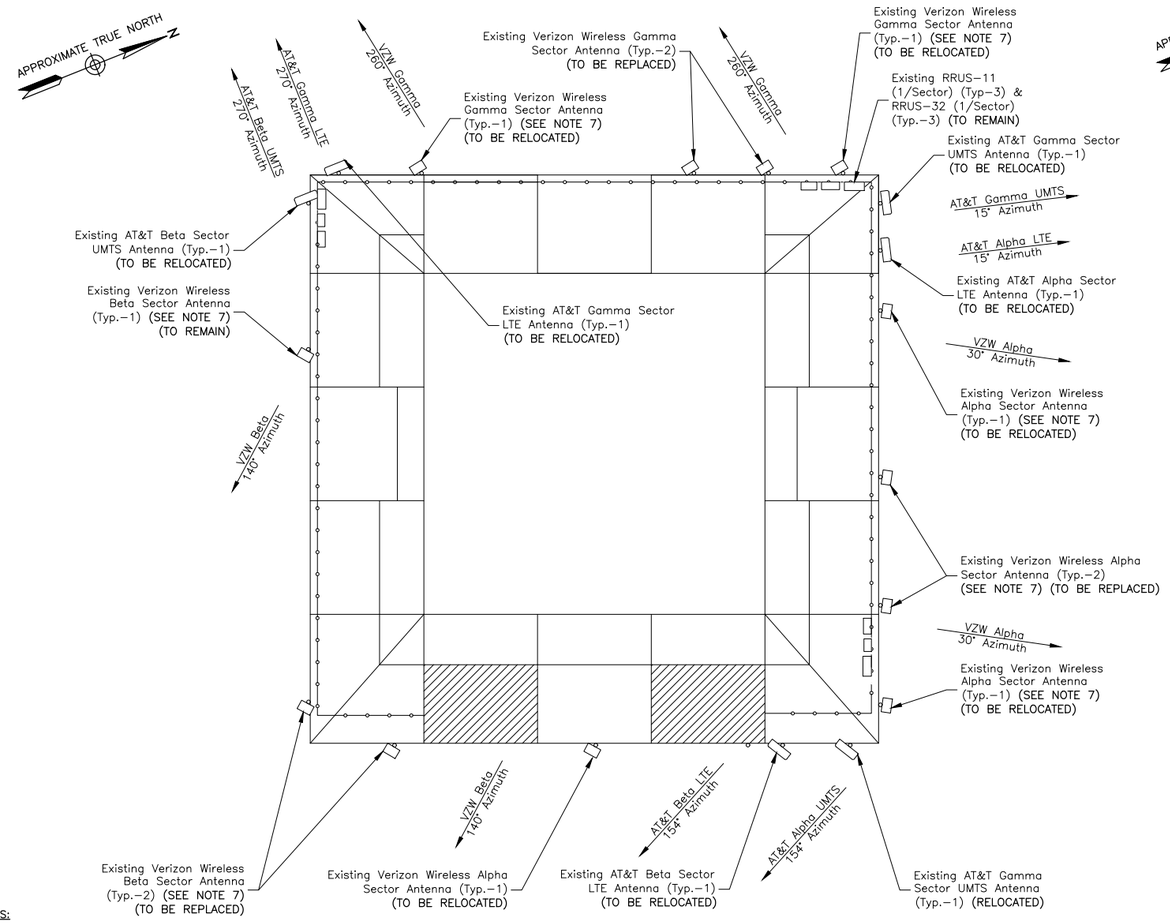

EXISTING ANTENNA ORIENTATION PLAN (1)

SCALE: 3/32"=1' FOR 11"x17"
3/16"=1' FOR 22"x34"

0' 4' 8' 12'

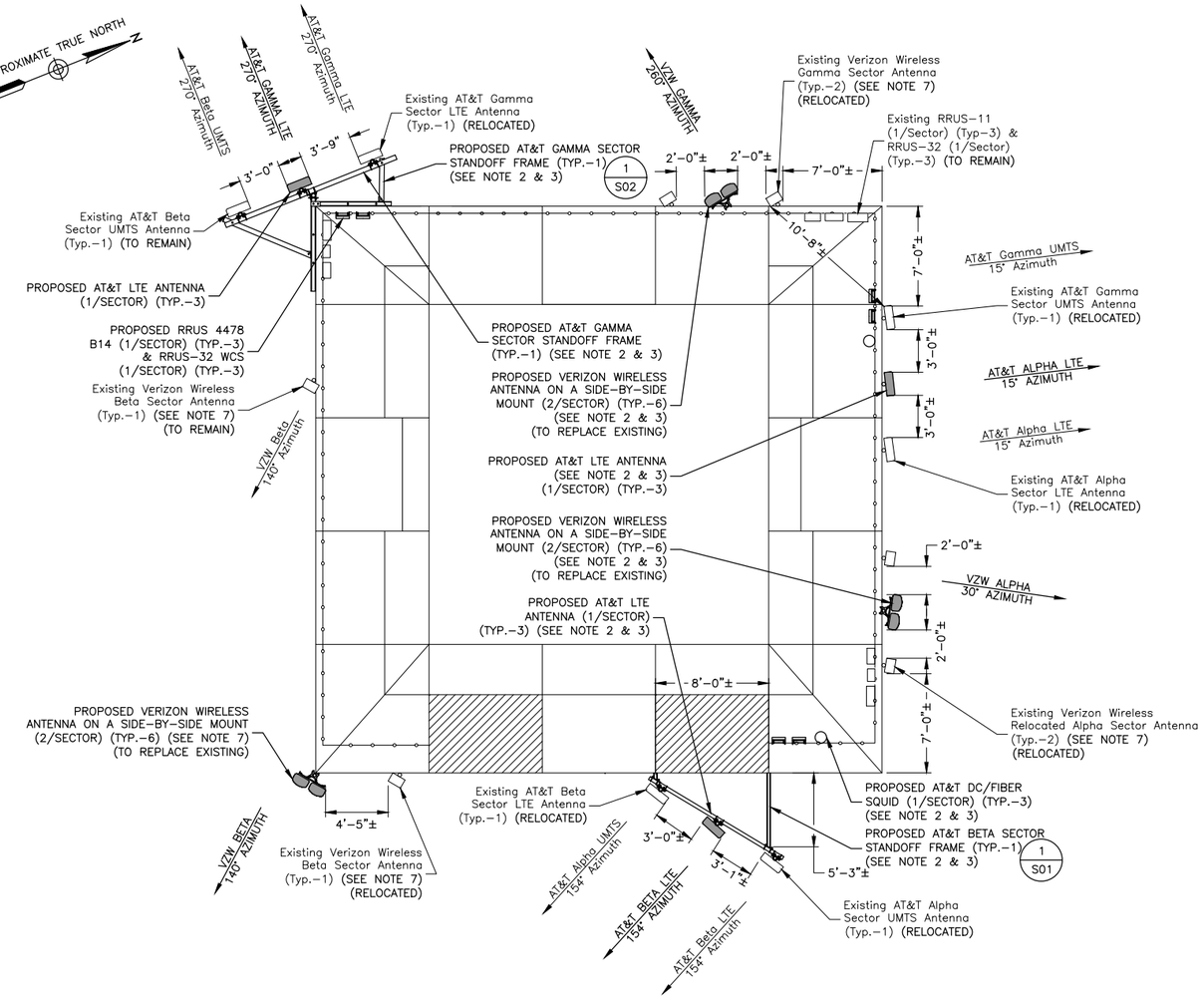

PROPOSED ANTENNA ORIENTATION PLAN (2)

SCALE: 1/8"=1' FOR 11"x17"
1/4"=1' FOR 22"x34"

0' 2' 4' 8'

NOTES:

1. NORTH ARROW SHOWN AS APPROXIMATE.
2. ALL PROPOSED EQUIPMENT INCLUDING ANTENNAS, COAX, SURGE ARRESTORS, RRU'S, ETC. SHALL BE MOUNTED IN ACCORDANCE WITH THE MOUNT ANALYSIS REPORT BY DEWBERRY ENGINEERS INC. DATED 04/28/20.
3. DEWBERRY WAS NOT PROVIDED WITH OR CONTRACTED TO PERFORM A TOWER STRUCTURAL ANALYSIS. A PASSING STRUCTURAL ANALYSIS SHALL BE COMPLETED PRIOR TO THE INSTALLATION OF ANY PROPOSED EQUIPMENT. SEE STRUCTURAL NOTE ON SHEET T01.
4. NOT ALL EXISTING/PROPOSED INFORMATION SHOWN FOR CLARITY.
5. EQUIPMENT MODIFICATION SCOPE:

   TOWER: TOWER: ADD (3) 8-PORT ANTENNAS, INSTALLED IN POSITION 3 ON EACH SECTOR. ADD (3) RRUS-32 WCS AND (3) RRUS-4478 B14. BETA & GAMMA ANTENNAS TO BE RELOCATED & MOUNTED ON NEW STANDOFF SECTOR FRAMES.

   SHELTER: UPGRADE DUS TO 5216.
6. CONTRACTOR SHALL VERIFY ANTENNA SPACING IN FIELD & RELOCATE PIPE MASTS AS REQUIRED TO MEET ANTENNA SPACING REQUIREMENTS. THE ANTENNA SPACING REQUIREMENTS ARE AS FOLLOWS:
   - 3'-0" MINIMUM SEPARATION BETWEEN ALL LTE ANTENNAS
7. ALL PROPOSED CHANGES AND EQUIPMENT INSTALLATIONS RELATED TO VERIZON WIRELESS EQUIPOMENT AND ANTENNAS ARE NOT INCLUDED IN THE CURRENT SCOPE OF WORK AND SHALL BE COMPLETED BY VERIZON WIRELESS.

Dewberry®
Dewberry Engineers Inc.
99 SUMMER STREET
SUITE 700
BOSTON, MA 02110
PHONE: 617.695.3400
FAX: 617.695.3310

CENTERLINE COMMUNICATIONS
750 W. CENTER ST. SUITE #301
WEST BRIDGEWATER, MA 02379

at&t Mobility
500 ENTERPRISE DRIVE
SUITE 3A
ROCKY HILL, CT 06067

CHESHIRE 3C/4C
SITE NO. CT2036

751 HIGGINS ROAD
CHESHIRE, CT 06410

NO.	DATE	REVISIONS	BY	CHK	APP'D
0	06/11/20	ISSUED FOR CONSTRUCTION	JG	CDH	DAS
A	05/05/20	ISSUED FOR REVIEW	JG	CDH	DAS

SCALE: AS SHOWN | DESIGNED BY: CDH | DRAWN BY: JG

STATE OF CONNECTICUT BENJAMIN D. GRIFFITH 28971 LICENSED PROFESSIONAL ENGINEER

AT&T MOBILITY
FRAMINGHAM, MA 01701

EXISTING & PROPOSED ANTENNA ORIENTATION PLAN

DEWBERRY NO.	DRAWING NUMBER	REV
50123198/50123202	C03	0

Diagram - Sector	A	Diagram File Name - CT2036_A_B_C_3C_4C_Rev3.vsd					
Atoll Site Name -	CTV2036	Location Name -	CHESHIRE SW	Market -	CONNECTICUT	Market Cluster -	NEW ENGLAND

Comments: Important Note: For detailed radio to antenna wiring refer to the latest 4T4R Antenna/ radio Port connections Field Notice (RF-HW-2016-265)

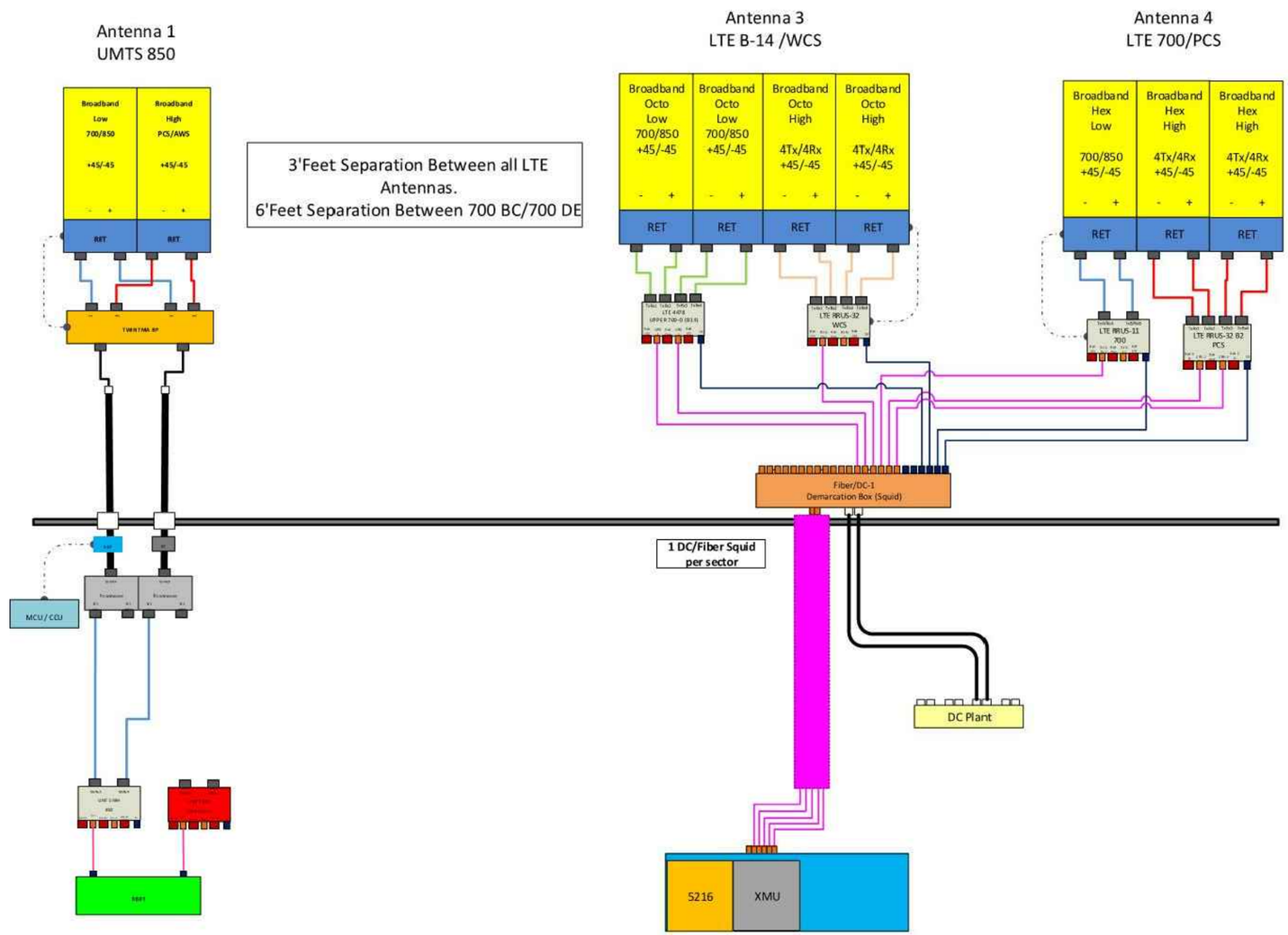

EQUIPMENT PLUMBING DIAGRAM

SCALE: N.T.S.

1

NOTES:

1. EQUIPMENT PLUMBING DIAGRAM PER RFDS VERSION 3 DATED 05/30/20.
2. CONTRACTOR TO VERIFY FINAL EQUIPMENT CONFIGURATION & SEPARATIONS WITH AT&T PRIOR TO CONSTRUCTION.

Dewberry®
Dewberry Engineers Inc.
99 SUMMER STREET
SUITE 700
BOSTON, MA 02110
PHONE: 617.695.3400
FAX: 617.695.3310

CENTERLINE COMMUNICATIONS
750 W. CENTER ST. SUITE #301
WEST BRIDGEWATER, MA 02379

at&t Mobility
500 ENTERPRISE DRIVE
SUITE 3A
ROCKY HILL, CT 06067

CHESHIRE 3C/4C
SITE NO. CT2036

751 HIGGINS ROAD
CHESHIRE, CT 06410

NO.	DATE	REVISIONS	BY	CHK	APP'D
0	06/11/20	ISSUED FOR CONSTRUCTION	JG	CDH	DAS
A	05/05/20	ISSUED FOR REVIEW	JG	CDH	DAS

SCALE: AS SHOWN | DESIGNED BY: CDH | DRAWN BY: JG

STATE OF CONNECTICUT
BENJAMIN D. WHITE
28971
LICENSED
PROFESSIONAL ENGINEER

AT&T MOBILITY
FRAMINGHAM, MA 01701

EQUIPMENT PLUMBING DIAGRAM

DEWBERRY NO.	DRAWING NUMBER	REV
50123198/50123202	C04	0

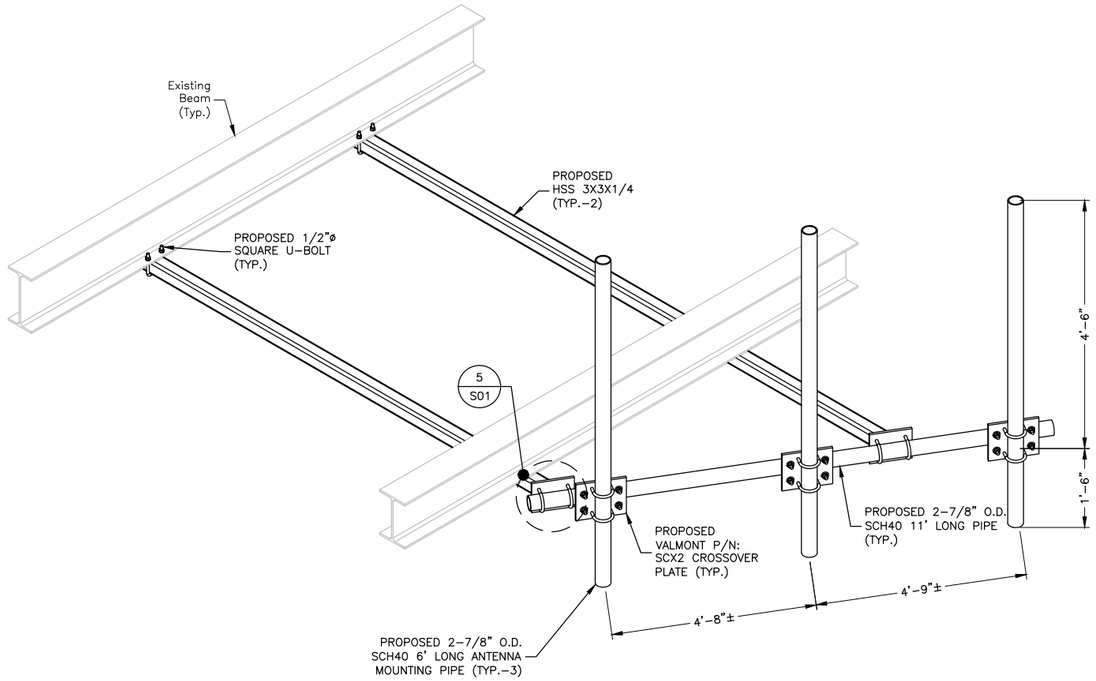

BETA SECTOR ISOMETRIC (1)

SCALE: N.T.S.

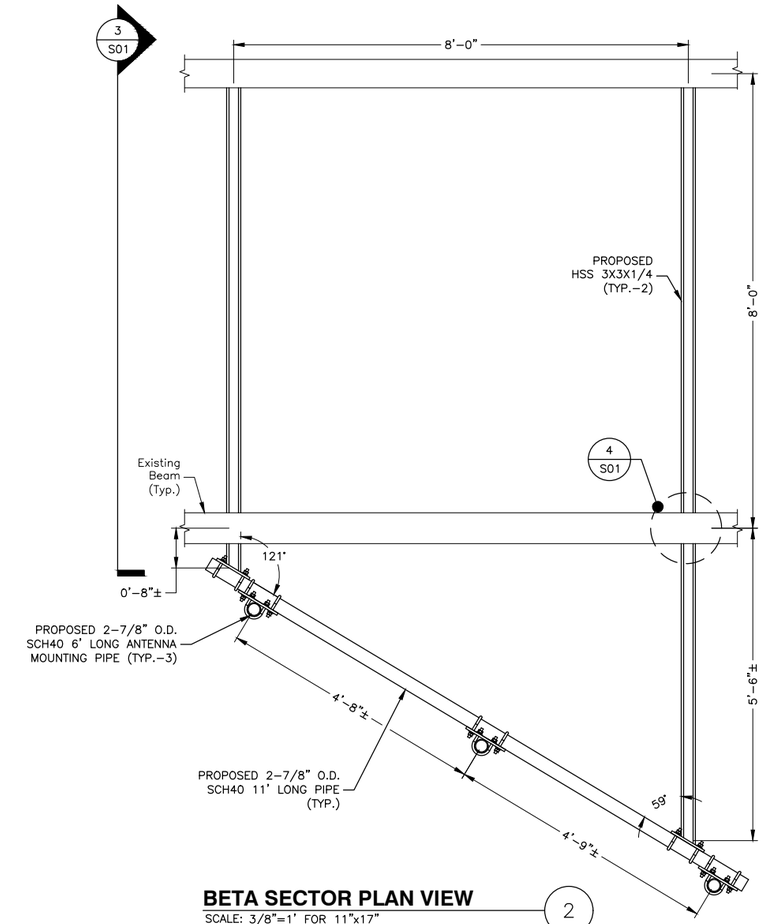

BETA SECTOR PLAN VIEW (2)

SCALE: 3/8"=1' FOR 11"x17"
3/4"=1' FOR 22"x34"

0' 1' 2' 3'

NOTES:

1. NORTH ARROW SHOWN AS APPROXIMATE.
2. ALL PROPOSED EQUIPMENT INCLUDING ANTENNAS, COAX, SURGE ARRESTORS, RRU'S, ETC. SHALL BE MOUNTED IN ACCORDANCE WITH THE MOUNT ANALYSIS REPORT BY DEWBERRY ENGINEERS INC. DATED 04/28/20.
3. DEWBERRY WAS NOT PROVIDED WITH OR CONTRACTED TO PERFORM A TOWER STRUCTURAL ANALYSIS. A PASSING STRUCTURAL ANALYSIS SHALL BE COMPLETED PRIOR TO THE INSTALLATION OF ANY PROPOSED EQUIPMENT. SEE STRUCTURAL NOTE ON SHEET T01.
4. NOT ALL EXISTING/PROPOSED INFORMATION SHOWN FOR CLARITY.
5. EQUIPMENT MODIFICATION SCOPE:

   TOWER: TOWER: ADD (3) 8–PORT ANTENNAS, INSTALLED IN POSITION 3 ON EACH SECTOR. ADD (3) RRUS–32 WCS AND (3) RRUS–4478 B14. BETA & GAMMA ANTENNAS TO BE RELOCATED & MOUNTED ON NEW STANDOFF SECTOR FRAMES.

   SHELTER: UPGRADE DUS TO 5216.
6. CONTRACTOR SHALL VERIFY ANTENNA SPACING IN FIELD & RELOCATE PIPE MASTS AS REQUIRED TO MEET ANTENNA SPACING REQUIREMENTS. THE ANTENNA SPACING REQUIREMENTS ARE AS FOLLOWS:
   - 3'–0" MINIMUM SEPARATION BETWEEN ALL LTE ANTENNAS
7. ALL PROPOSED CHANGES AND EQUIPMENT INSTALLATIONS RELATED TO VERIZON WIRELESS EQUIPOMENT AND ANTENNAS ARE NOT INCLUDED IN THE CURRENT SCOPE OF WORK AND SHALL BE COMPLETED BY VERIZON WIRELESS.

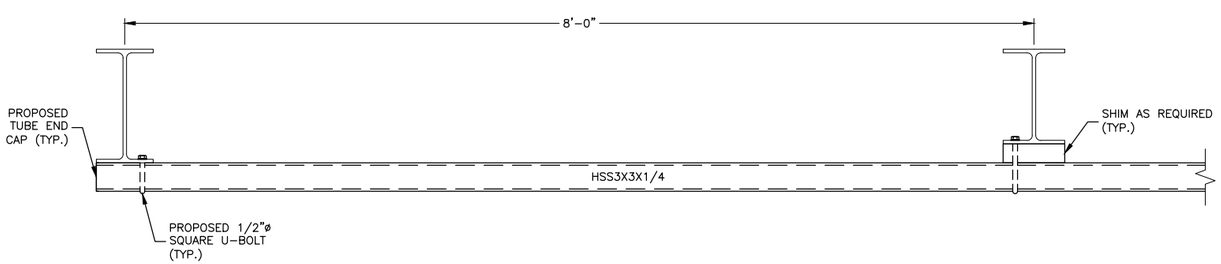

HSS CONNECTION TO W DETAIL (3)

SCALE: 3/4"=1' FOR 11"x17"
1 1/2"=1' FOR 22"x34"

0' 1/2' 1' 1 1/2'

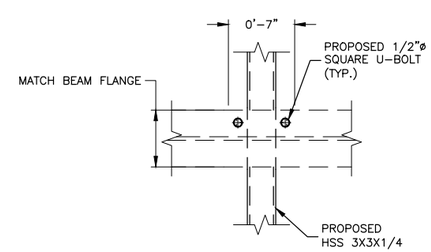

BASE PLATE DETAIL (4)

SCALE: 3/4"=1' FOR 11"x17"
1 1/2"=1' FOR 22"x34"

0' 1/2' 1' 1 1/2'

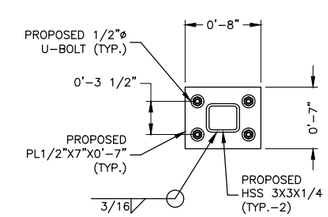

HSS TO PIPE CONNECTION DETAIL (5)

SCALE: 3/4"=1' FOR 11"x17"
1 1/2"=1' FOR 22"x34"

0' 1/2' 1' 1 1/2'

Dewberry®
Dewberry Engineers Inc.
99 SUMMER STREET
SUITE 700
BOSTON, MA 02110
PHONE: 617.695.3400
FAX: 617.695.3310

CENTERLINE COMMUNICATIONS
750 W. CENTER ST. SUITE #301
WEST BRIDGEWATER, MA 02379

at&t Mobility
500 ENTERPRISE DRIVE
SUITE 3A
ROCKY HILL, CT 06067

CHESHIRE 3C/4C
SITE NO. CT2036

751 HIGGINS ROAD
CHESHIRE, CT 06410

NO.	DATE	REVISIONS	BY	CHK	APP'D
0	06/11/20	ISSUED FOR CONSTRUCTION	JG	CDH	DAS
A	05/05/20	ISSUED FOR REVIEW	JG	CDH	DAS

SCALE: AS SHOWN | DESIGNED BY: CDH | DRAWN BY: JG

STATE OF CONNECTICUT · BENJAMIN D. HUNTE · 28971 · LICENSED · PROFESSIONAL ENGINEER

AT&T MOBILITY
FRAMINGHAM, MA 01701

BETA SECTOR MODIFICATION DETAILS

DEWBERRY NO.	DRAWING NUMBER	REV
50123198/50123202	S01	0

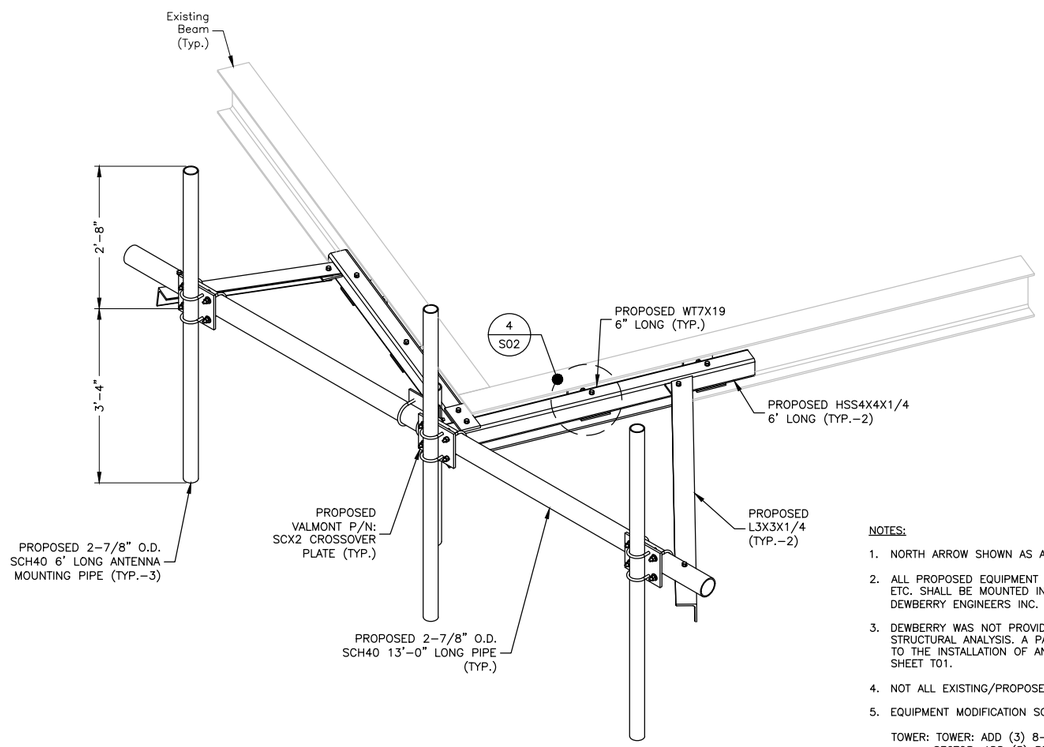

GAMMA SECTOR ISOMETRIC

SCALE: N.T.S.

1

NOTES:

1. NORTH ARROW SHOWN AS APPROXIMATE.
2. ALL PROPOSED EQUIPMENT INCLUDING ANTENNAS, COAX, SURGE ARRESTORS, RRU'S, ETC. SHALL BE MOUNTED IN ACCORDANCE WITH THE MOUNT ANALYSIS REPORT BY DEWBERRY ENGINEERS INC. DATED 04/28/20.
3. DEWBERRY WAS NOT PROVIDED WITH OR CONTRACTED TO PERFORM A TOWER STRUCTURAL ANALYSIS. A PASSING STRUCTURAL ANALYSIS SHALL BE COMPLETED PRIOR TO THE INSTALLATION OF ANY PROPOSED EQUIPMENT. SEE STRUCTURAL NOTE ON SHEET T01.
4. NOT ALL EXISTING/PROPOSED INFORMATION SHOWN FOR CLARITY.
5. EQUIPMENT MODIFICATION SCOPE:

   TOWER: TOWER: ADD (3) 8-PORT ANTENNAS, INSTALLED IN POSITION 3 ON EACH SECTOR. ADD (3) RRUS-32 WCS AND (3) RRUS-4478 B14. BETA & GAMMA ANTENNAS TO BE RELOCATED & MOUNTED ON NEW STANDOFF SECTOR FRAMES.

   SHELTER: UPGRADE DUS TO 5216.
6. CONTRACTOR SHALL VERIFY ANTENNA SPACING IN FIELD & RELOCATE PIPE MASTS AS REQUIRED TO MEET ANTENNA SPACING REQUIREMENTS. THE ANTENNA SPACING REQUIREMENTS ARE AS FOLLOWS:
   - 3'-0" MINIMUM SEPARATION BETWEEN ALL LTE ANTENNAS
7. ALL PROPOSED CHANGES AND EQUIPMENT INSTALLATIONS RELATED TO VERIZON WIRELESS EQUIPOMENT AND ANTENNAS ARE NOT INCLUDED IN THE CURRENT SCOPE OF WORK AND SHALL BE COMPLETED BY VERIZON WIRELESS.

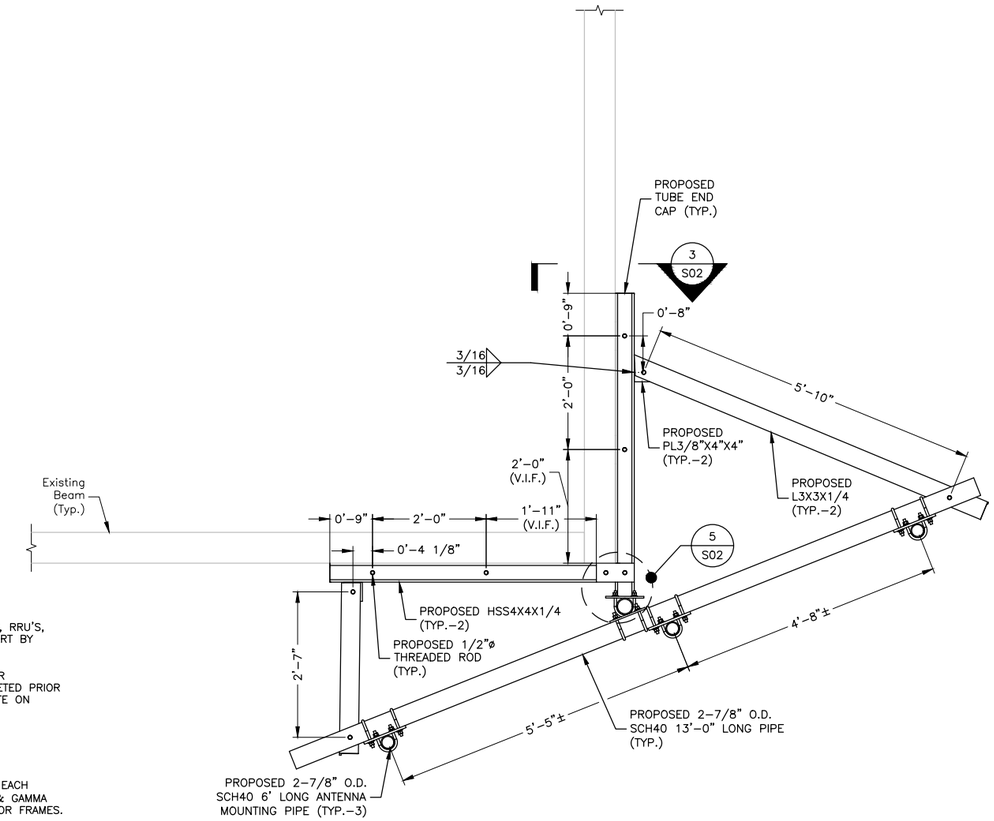

GAMMA SECTOR PLAN VIEW

SCALE: 3/8"=1' FOR 11"x17"
3/4"=1' FOR 22"x34"

2

0' 1' 2' 3'

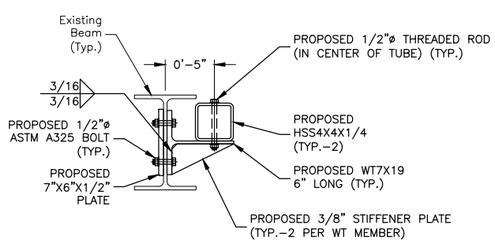

HSS CONNECTION TO WT DETAIL

SCALE: 3/4"=1' FOR 11"x17"
1 1/2"=1' FOR 22"x34"

3

0' 1/2' 1' 1 1/2'

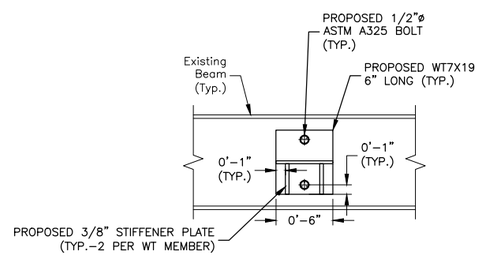

WT CONNECTION TO W DETAIL

SCALE: 3/4"=1' FOR 11"x17"
1 1/2"=1' FOR 22"x34"

4

0' 1/2' 1' 1 1/2'

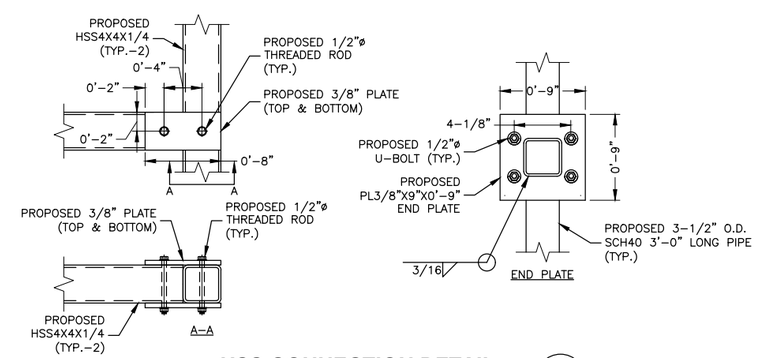

HSS CONNECTION DETAIL

SCALE: 3/4"=1' FOR 11"x17"
1 1/2"=1' FOR 22"x34"

5

0' 1/2' 1' 1 1/2'

Dewberry®
Dewberry Engineers Inc.
99 SUMMER STREET
SUITE 700
BOSTON, MA 02110
PHONE: 617.695.3400
FAX: 617.695.3310

CENTERLINE COMMUNICATIONS
750 W. CENTER ST. SUITE #301
WEST BRIDGEWATER, MA 02379

at&t Mobility
500 ENTERPRISE DRIVE
SUITE 3A
ROCKY HILL, CT 06067

CHESHIRE 3C/4C
SITE NO. CT2036

751 HIGGINS ROAD
CHESHIRE, CT 06410

NO.	DATE	REVISIONS	BY	CHK	APP'D
0	06/11/20	ISSUED FOR CONSTRUCTION	JG	CDH	DAS
A	05/05/20	ISSUED FOR REVIEW	JG	CDH	DAS

SCALE: AS SHOWN | DESIGNED BY: CDH | DRAWN BY: JG

STATE OF CONNECTICUT · BENJAMIN A. STATE · 28971 · LICENSED · PROFESSIONAL ENGINEER

AT&T MOBILITY
FRAMINGHAM, MA 01701

GAMMA SECTOR MODIFICATION DETAILS

DEWBERRY NO.	DRAWING NUMBER	REV
50123198/50123202	S02	0

GROUNDING NOTES:

1. THE CONTRACTOR SHALL REVIEW & INSPECT THE EXISTING FACILITY GROUNDING SYSTEM & LIGHTNING PROTECTION SYSTEM (AS DESIGNED & INSTALLED) FOR STRICT COMPLIANCE WITH THE NEC (AS ADOPTED BY THE AHJ). THE SITE-SPECIFIC (UL, LPI, OR NFPA) LIGHTING PROTECTION CODE, & GENERAL COMPLIANCE WITH TELCORDIA & TIA GROUNDING STANDARDS. THE CONTRACTOR SHALL REPORT ANY VIOLATIONS OR ADVERSE FINDINGS TO THE CONTRACTOR FOR RESOLUTION.
2. ALL GROUND ELECTRODE SYSTEMS (INCLUDING TELECOMMUNICATION, RADIO, LIGHTNING PROTECTION, & AC POWER GES'S) SHALL BE BONDED TOGETHER, AT OR BELOW GRADE, BY TWO OR MORE COPPER BONDING CONDUCTORS. ALL AVAILABLE GROUNDING ELECTRODES SHALL BE CONNECTED TOGETHER IN ACCORDANCE WITH THE NEC.
3. THE CONTRACTOR SHALL PERFORM IEEE FALL-OF-POTENTIAL RESISTANCE TO EARTH TESTING (PER IEEE 1100 & 81) FOR GROUND ELECTRODE SYSTEMS. USE OF OTHER METHODS MUST BE PRE-APPROVED BY CONTRACTOR IN WRITING.
4. THE CONTRACTOR SHALL FURNISH & INSTALL SUPPLEMENTAL GROUND ELECTRODES AS NEEDED TO ACHIEVE A TEST RESULT OF 5 OHMS OR LESS ON TOWER SITES & 10 OHMS OR LESS ON ROOFTOP SITES. WHEN ADDING ELECTRODES, CONTRACTOR SHALL MAINTAIN A MINIMUM DISTANCE BETWEEN THE ADDED ELECTRODE & ANY OTHER EXISTING ELECTRODE EQUAL TO THE BURIED LENGTH OF THE ROD. IDEALLY, CONTRACTOR SHALL STRIVE TO KEEP THE SEPARATION DISTANCE EQUAL TO TWICE THE BURIED LENGTH OF THE RODS.
5. THE CONTRACTOR IS RESPONSIBLE FOR PROPERLY SEQUENCING GROUNDING & UNDERGROUND CONDUIT INSTALLATION AS TO PREVENT ANY LOSS OF CONTINUITY IN THE GROUNDING SYSTEM OR DAMAGE TO THE CONDUIT.
6. METAL CONDUIT & TRAY SHALL BE GROUNDED & MADE ELECTRICALLY CONTINUOUS WITH LISTED BONDING FITTINGS OR BY BONDING ACROSS THE DISCONTINUITY WITH 6 AWG COPPER WIRE & UL APPROVED GROUNDING TYPE CONDUIT CLAMPS.
7. METAL RACEWAY SHALL NOT BE USED AS THE NEC REQUIRED EQUIPMENT GROUND CONDUCTOR. STRANDED COPPER CONDUCTORS WITH GREEN INSULATION, SIZED IN ACCORDANCE WITH THE NEC, SHALL BE FURNISHED & INSTALLED WITH THE POWER CIRCUITS TO TRANSMISSION EQUIPMENT.
8. CONNECTIONS TO THE GROUND BUS SHALL NOT BE DOUBLED UP OR STACKED. BACK-TO-BACK CONNECTIONS ON OPPOSITE SIDES OF THE GROUND BUS ARE PERMITTED.
9. ALUMINUM CONDUCTOR OR COPPER CLAD STEEL CONDUCTOR SHALL NOT BE USED FOR GROUNDING CONNECTIONS.
10. USE OF 90° BENDS IN THE PROTECTION GROUNDING CONDUCTORS SHALL BE AVOIDED WHEN 45° BENDS CAN BE ADEQUATELY SUPPORTED. IN ALL CASES, BENDS SHALL BE MADE WITH A MINIMUM BEND RADIUS OF 8 INCHES.
11. EACH INTERIOR TRANSMISSION CABINET FRAME/PLINTH SHALL BE DIRECTLY CONNECTED TO THE MASTER GROUND BAR WITH 6 AWG STRANDED, GREEN INSULATED SUPPLEMENTAL EQUIPMENT GROUND WIRE UNLESS NOTED OTHERWISE IN THE DETAILS. EACH OUTDOOR CABINET FRAME/PLINTH SHALL BE DIRECTLY CONNECTED TO THE BURIED GROUND RING WITH 2 AWG SOLID TIN-PLATED COPPER WIRE UNLESS NOTED OTHERWISE IN THE DETAILS.
12. ALL EXTERIOR GROUND CONDUCTORS BETWEEN EQUIPMENT/GROUND BARS & THE GROUND RING, SHALL BE 2 AWG SOLID TIN-PLATED COPPER UNLESS OTHERWISE INDICATED.
13. EXOTHERMIC WELDS SHALL BE USED FOR ALL GROUNDING CONNECTIONS BELOW GRADE. CONNECTIONS TO ABOVE GRADE UNITS SHALL BE MADE WITH EXOTHERMIC WELDS WHERE PRACTICAL OR WITH 2 HOLE MECHANICAL TYPE BRASS CONNECTORS WITH STAINLESS STEEL HARDWARE, INCLUDING SET SCREWS. HIGH PRESSURE CRIMP CONNECTORS MAY ONLY BE USED WITH WRITTEN PERMISSION FROM CENTERLINE COMMUNICATIONS COMMUNICATIONS MARKET REPRESENTATIVE.
14. EXOTHERMIC WELDS SHALL BE PERMITTED ON TOWERS ONLY WITH THE EXPRESS APPROVAL OF THE TOWER MANUFACTURER OR THE CONTRACTORS STRUCTURAL ENGINEER.
15. ALL WIRE TO WIRE GROUND CONNECTIONS TO THE INTERIOR GROUND RING SHALL BE FORMED USING HIGH PRESS CRIMPS OR SPLIT BOLT CONNECTORS WHERE INDICATED IN THE DETAILS.
16. ON ROOFTOP SITES WHERE EXOTHERMIC WELDS ARE A FIRE HAZARD COPPER COMPRESSION CAP CONNECTORS MAY BE USED FOR WIRE TO WIRE CONNECTORS. 2 HOLE MECHANICAL TYPE BRASS CONNECTORS WITH STAINLESS STEEL HARDWARE, INCLUDING SET SCREWS SHALL BE USED FOR CONNECTION TO ALL ROOFTOP TRANSMISSION EQUIPMENT & STRUCTURAL STEEL.
17. COAX BRIDGE BONDING CONDUCTORS SHALL BE EXOTHERMICALLY BONDED OR BOLTED TO THE BRIDGE & THE TOWER GROUND BAR USING TWO-HOLE MECHANICAL TYPE BRASS CONNECTORS & STAINLESS STEEL HARDWARE.
18. APPROVED ANTIOXIDANT COATINGS (I.E., CONDUCTIVE GEL OR PASTE) SHALL BE USED ON ALL COMPRESSION & BOLTED GROUND CONNECTIONS.
19. ALL EXTERIOR GROUND CONNECTIONS SHALL BE COATED WITH A CORROSION RESISTANT MATERIAL.
20. MISCELLANEOUS ELECTRICAL & NON-ELECTRICAL METAL BOXES, FRAMES & SUPPORTS SHALL BE BONDED TO THE GROUND RING, IN ACCORDANCE WITH THE NEC.
21. BOND ALL METALLIC OBJECTS WITHIN 6 FT OF THE BURIED GROUND RING WITH 2 AWG SOLID TIN-PLATED COPPER GROUND CONDUCTOR. DURING EXCAVATION FOR NEW GROUND CONDUCTORS, IF EXISTING GROUND CONDUCTORS ARE ENCOUNTERED, BOND EXISTING GROUND CONDUCTORS TO NEW CONDUCTORS.
22. GROUND CONDUCTORS USED IN THE FACILITY GROUND & LIGHTNING PROTECTION SYSTEMS SHALL NOT BE ROUTED THROUGH METALLIC OBJECTS THAT FORM A RING AROUND THE CONDUCTOR, SUCH AS METALLIC CONDUITS, METAL SUPPORT CLIPS OR SLEEVES THROUGH WALLS OR FLOORS. WHEN IT IS REQUIRED TO BE HOUSED IN CONDUIT TO MEET CODE REQUIREMENTS OR LOCAL CONDITIONS, NON-METALLIC MATERIAL SUCH AS PVC PLASTIC CONDUIT SHALL BE USED. WHERE USE OF METAL CONDUIT IS UNAVOIDABLE (E.G., NON-METALLIC CONDUIT PROHIBITED BY LOCAL CODE) THE GROUND CONDUCTOR SHALL BE BONDED TO EACH END OF THE METAL CONDUIT WITH LISTED BONDING FITTINGS.

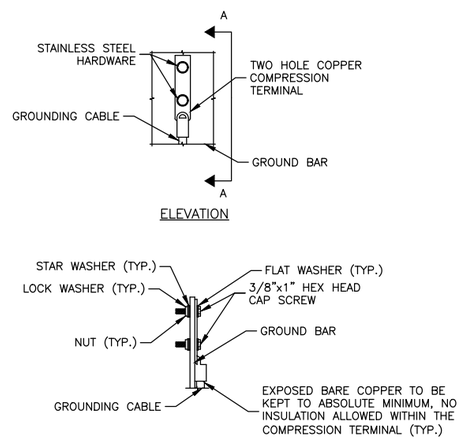

NOTES:

1. DOUBLING UP OR STACKING OF CONNECTIONS IS NOT PERMITTED.
2. OXIDE INHIBITING COMPOUND TO BE USED AT ALL LOCATIONS.

TYPICAL GROUND BAR MECHANICAL CONNECTION DETAIL (1)

SCALE: N.T.S.

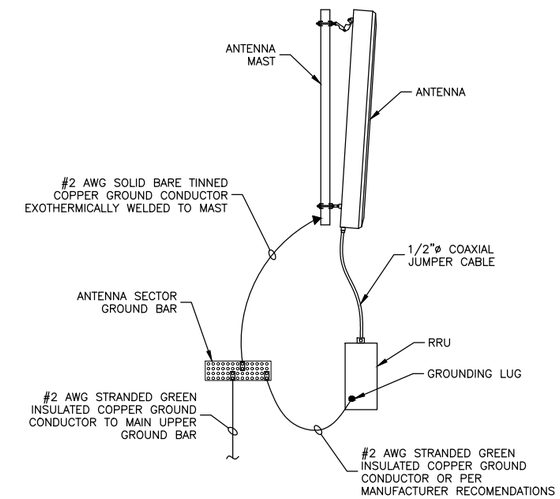

NOTES:

1. VERIFY EXISTING GROUNDING SYSTEM IS INSTALLED PER AT&T STANDARDS.
2. BOND NEW EQUIPMENT INTO EXISTING GROUND SYSTEM IN ACCORDANCE WITH AT&T STANDARDS & MANUFACTURER RECOMMENDATIONS.

TYPICAL ANTENNA/RRU GROUNDING DETAIL (2)

SCALE: N.T.S

Dewberry®
Dewberry Engineers Inc.
99 SUMMER STREET
SUITE 700
BOSTON, MA 02110
PHONE: 617.695.3400
FAX: 617.695.3310

CENTERLINE COMMUNICATIONS
750 W. CENTER ST. SUITE #301
WEST BRIDGEWATER, MA 02379

at&t Mobility
500 ENTERPRISE DRIVE
SUITE 3A
ROCKY HILL, CT 06067

CHESHIRE 3C/4C
SITE NO. CT2036

751 HIGGINS ROAD
CHESHIRE, CT 06410

NO.	DATE	REVISIONS	BY	CHK	APP'D
0	06/11/20	ISSUED FOR CONSTRUCTION	JG	CDH	DAS
A	05/05/20	ISSUED FOR REVIEW	JG	CDH	DAS

SCALE: AS SHOWN | DESIGNED BY: CDH | DRAWN BY: JG

STATE OF CONNECTICUT · BENJAMIN EARL DAVIS · 28971 · LICENSED · PROFESSIONAL ENGINEER

AT&T MOBILITY
FRAMINGHAM, MA 01701

GROUNDING DETAILS

DEWBERRY NO.	DRAWING NUMBER	REV
50123198/50123202	E01	0