STATE OF CONNECTICUT
CONNECTICUT SITING COUNCIL
Ten Franklin Square, New Britain, CT 06051
Phone: (860) 827-2935 Fax: (860) 827-2950
E-Mail: siting.council@ct.gov
Web Site: portal.ct.gov/csc

VIA ELECTRONIC MAIL

December 21, 2021

John Coleman
Project Manager
Centerline Communications LLC
750 W. Center Street, Suite 301
West Bridgewater, MA 02379
jcoleman@clinellc.com

RE: **EM-VER-023A-210929** – Cellco Partnership d/b/a Verizon Wireless notice of intent to modify an existing telecommunications facility located at 14 Canton Springs Road, Canton, Connecticut.

Dear Mr. Coleman:

The Connecticut Siting Council (Council) is in receipt of your correspondence of December 14, 2021 submitted in response to the Council's November 16, 2021 notification of an incomplete request for exempt modification with regard to the above-referenced matter.

The submission renders the request for exempt modification complete and the Council will process the request in accordance with the Federal Communications Commission 60-day timeframe.

Thank you for your attention and cooperation.

Sincerely,

Melanie A. Bachman
Executive Director

MAB/CMW/emr

John Coleman, Project Manager
c/o Cellco Partnership d/b/a Verizon Wireless
Centerline Communications, LLC
750 West Center Street, Floor 3
West Bridgewater, MA 02379
Mobile: (240) 615 -7389
JColeman@clinellc.com

December 14, 2021

Melanie A. Bachman
Acting Executive Director
Connecticut Siting Council
10 Franklin Square
New Britain, CT 06051

RE: EM-VER-023A-210992 – Cellco Partnership d/b/a Verizon Wireless notice of intent to modify an existing telecommunications facility located at 14 Canton Springs Road, Canton, CT.

Dear Ms. Bachman,

In response to the Council's Incomplete Letter to modify an existing telecommunications facility dated November 16, 2021 for the afore mentioned site, please see the following comments and attachments as outlined below per Councils request:

EM-VER-23A-210929 lacked proof that each entire request for exempt modification was physically mailed to the Chief Elected Official. Furthermore, this submission lacks documentation of the original facility approval.

- Pertaining to the Original Facility Approval – A request was submitted to the Planning and Building Department for the Town of Canton to obtain a copy of the Original Approval. Per the attached e-mail from Jerry Waters the Building Official from the Town of Canton the Original Approval could not be found; only upgrades throughout the years. If further documentation of this exchange is needed, please let me know. CSC Website does not contain this information either.

1. Proof of mailing and delivery confirmation to Chief Elected Official: Robert Bessel.
    a. UPS Label: 1Z9Y45030317641236
    b. Delivery Confirmation.

2. Proof of mailing and delivery confirmation to Zoning Official: Neil Pade.
    a. UPS Label: 1Z9Y45030317641236 (Same Address)
    b. Delivery Confirmation.

3. Proof of mailing and delivery confirmation to Property Owner: Perry Lansford W.
    a. UPS Label: 1Z9Y45030326507374
    b. Delivery Confirmation.

4. The Original Filing sent to the CSC on 9/29/2021 – Notice of Exempt Modification // Site: CANTON CT (ATC: 411256) Cellco Partnership d/b/a/ Verizon Wireless.

This list completes the items listed in the afore mentioned Letter of Incompleteness. I appreciate your time and consideration.

Sincerely,

John Coleman

John Coleman, Project Manager
c/o Cellco Partnership d/b/a Verizon Wireless
Centerline Communications, LLC
750 West Center Street, Floor 3
West Bridgewater, MA 02379
Mobile: (240) 615 -7389
JColeman@clinellc.com

From:	Waters, Jerry
To:	John Coleman
Cc:	Deltenre, Renee
Subject:	RE: CSC FILING REQUIREMENTS / 14 CANTON SPRINGS ROAD, CANTON, CT
Date:	Monday, December 13, 2021 9:05:53 AM

John, we went through the street folder for this address but can find no approval for the original tower, just upgrades throughout the years.

Jerry Waters

From: John Coleman [mailto:jcoleman@clinellc.com]
Sent: Thursday, December 9, 2021 3:45 PM
To: Waters, Jerry
Subject: CSC FILING REQUIREMENTS / 14 CANTON SPRINGS ROAD, CANTON, CT

CAUTION: This email came from outside the organization. Do not click links or open attachments if you are unsure the message is safe.

Mr. Waters,

Centerline Communications working on behalf of Verizon Wireless has filed with the CSC to obtain their approval on a modification to an existing site located at 14 Canton Springs Road in Canton, CT. You have already received a copy of this submission but I have attached a copy of the drawings for reference. As part of this filing the CSC now requires that we submit a copy of the original tower approval. I have accessed the CSC website and the original tower approval filing for this site is not available.

Per CSC requirements for filing I need to either obtain a copy of the original tower approval from your department or obtain a reply to this e-mail that the City of Andover no longer has a copy of this approval.

I would greatly appreciate a copy of the original approval if you have one or a response to this e-mail so that we can submit this correction. If you have any questions, please feel free to reach out to me at any time.

Thank you and have a nice day.

John

John Coleman | Project Manager
750 W Center St, Suite 301 | West Bridgewater, MA 02379
Mobile: 240.615.7389
jcoleman@clinellc.com |
https://link.edgepilot.com/s/03340818/ORQFhD_m_kiweNDnUkPmhQ?u=http://www.centerlinecommunications.com/

Links contained in this email have been replaced. If you click on a link in the email above, the link will be analyzed for known threats. If a known threat is found, you will not be able to proceed to the destination. If suspicious content is detected, you will see a warning.

UPS CampusShip: View/Print Label

1. **Ensure there are no other shipping or tracking labels attached to your package.** Select the Print button on the print dialog box that appears. Note: If your browser does not support this function select Print from the File menu to print the label.

2. **Fold the printed label at the solid line below.** Place the label in a UPS Shipping Pouch. If you do not have a pouch, affix the folded label using clear plastic shipping tape over the entire label.

3. **GETTING YOUR SHIPMENT TO UPS**
   Customers with a Daily Pickup
   Your driver will pickup your shipment(s) as usual.

   Customers without a Daily Pickup
   Take your package to any location of The UPS Store®, UPS Access Point(TM) location, UPS Drop Box, UPS Customer Center, Staples® or Authorized Shipping Outlet near you. Items sent via UPS Return Services(SM) (including via Ground) are also accepted at Drop Boxes. To find the location nearest you, please visit the Resources area of CampusShip and select UPS Locations.
   Schedule a same day or future day Pickup to have a UPS driver pickup all your CampusShip packages.
   Hand the package to any UPS driver in your area.

UPS Access Point™
CVS STORE # 972
555 WASHINGTON ST
SOUTH EASTON ,MA 02375

UPS Access Point™
CVS STORE # 7232
689 DEPOT ST
NORTH EASTON ,MA 02356

UPS Access Point™
TOWN LINE GENERAL STORE
450 E CENTER ST
WEST BRIDGEWATER ,MA 02379

FOLD HERE

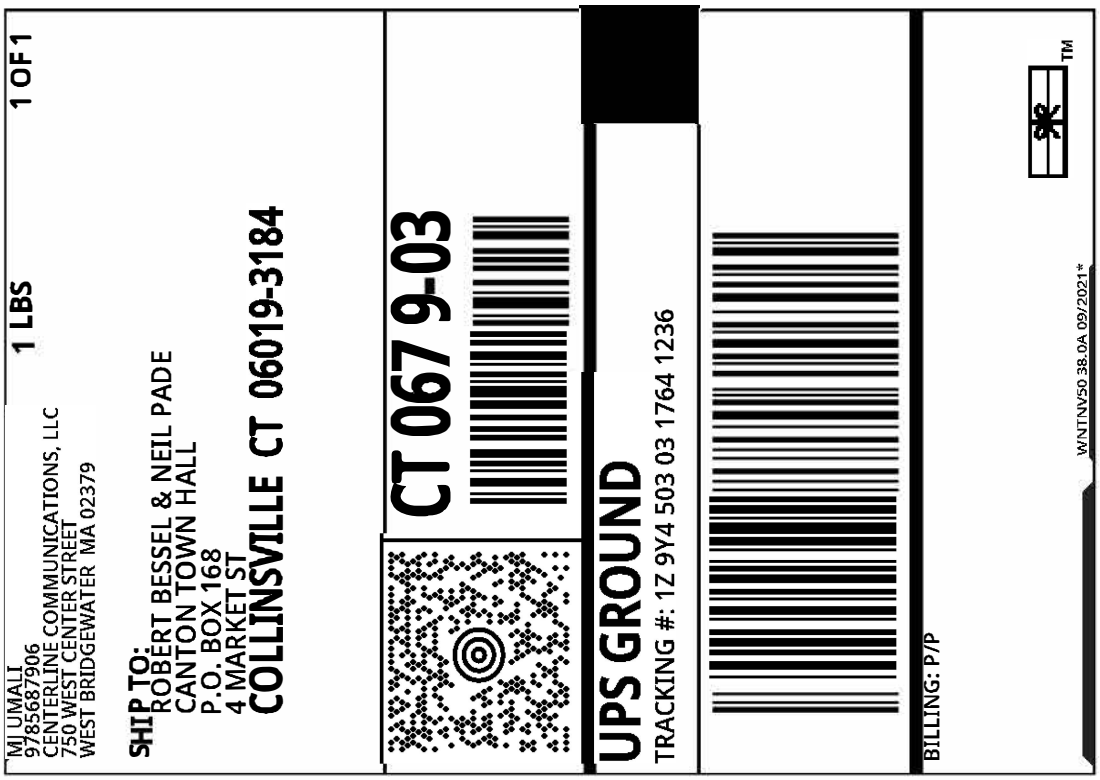

Proof of Delivery

Dear Customer,

This notice serves as proof of delivery for the shipment listed below.

Tracking Number
1Z9Y45030317641236

Weight
0.50 LBS

Service

UPS Ground

Shipped / Billed On
09/21/2021

Delivered On

09/27/2021 12:52 P.M.

Delivered To
CANTON, CT, US

Received By

CD SMITH

Left At
Receiver

Thank you for giving us this opportunity to serve you. Details are only available for shipments delivered within the last 120 days. Please print for your records if you require this information after 120 days.

Sincerely,

UPS

Tracking results provided by UPS: 09/27/2021 4:39 P.M. EST

UPS CampusShip: View/Print Label

1. **Ensure there are no other shipping or tracking labels attached to your package.** Select the Print button on the print dialog box that appears. Note: If your browser does not support this function select Print from the File menu to print the label.

2. **Fold the printed label at the solid line below.** Place the label in a UPS Shipping Pouch. If you do not have a pouch, affix the folded label using clear plastic shipping tape over the entire label.

3. **GETTING YOUR SHIPMENT TO UPS**
   Customers with a Daily Pickup
   Your driver will pickup your shipment(s) as usual.

   Customers without a Daily Pickup
   Take your package to any location of The UPS Store®, UPS Access Point(TM) location, UPS Drop Box, UPS Customer Center, Staples® or Authorized Shipping Outlet near you. Items sent via UPS Return Services(SM) (including via Ground) are also accepted at Drop Boxes. To find the location nearest you, please visit the Resources area of CampusShip and select UPS Locations.
   Schedule a same day or future day Pickup to have a UPS driver pickup all your CampusShip packages.
   Hand the package to any UPS driver in your area.

UPS Access Point™
CVS STORE # 972
555 WASHINGTON ST
SOUTH EASTON ,MA 02375

UPS Access Point™
CVS STORE # 7232
689 DEPOT ST
NORTH EASTON ,MA 02356

UPS Access Point™
TOWN LINE GENERAL STORE
450 E CENTER ST
WEST BRIDGEWATER ,MA 02379

FOLD HERE

MI UMALI
9785687906
CENTERLINE COMMUNICATIONS, LLC
750 WEST CENTER STREET
WEST BRIDGEWATER MA 02379

5 LBS 1 OF 1

SHIP TO:
CANTON VOLUNTEER FIRE COMPANY INC
P.O. BOX 104
14 CANTON SPRINGS ROAD
CANTON CT 06019-2411

CT 067 9-03

UPS GROUND
TRACKING #: 1Z 9Y4 503 03 2650 7374

BILLING: P/P

Reference # 1: 411256
Reference # 2: CANTON CT
CS 22.0.18. WNTNV50 38.0A 09/2021*

Proof of Delivery

Dear Customer,

This notice serves as proof of delivery for the shipment listed below.

Tracking Number
1Z9Y45030326507374

Weight
5.00 LBS

Service

UPS Ground

Shipped / Billed On
09/22/2021

Delivered On

09/24/2021 12:13 P.M.

Delivered To
CANTON, CT, US

Received By

FIRE DEPT

Left At
Receiver

Thank you for giving us this opportunity to serve you. Details are only available for shipments delivered within the last 120 days. Please print for your records if you require this information after 120 days.

Sincerely,

UPS

Tracking results provided by UPS: 09/27/2021 9:22 A.M. EST

MJ Umali, Site Acquisition Consultant
c/o Cellco Partnership d/b/a Verizon Wireless
Centerline Communications, LLC
750 West Center Street, Floor 3
West Bridgewater, MA 02379
Mobile: (978) 568-7906
MUmali@centerlinecommunications.com

September 21, 2021

Melanie A. Bachman
Acting Executive Director
Connecticut Siting Council
10 Franklin Square
New Britain, CT 06051

RE: Notice of Exempt Modification // Site: CANTON CT (ATC: 411256)
14 Canton Springs Road Canton, CT, 06019
N 41.8228 // W 72.8951

Dear Ms. Bachman,

Cellco Partnership d/b/a Verizon Wireless currently maintains 12 antennas at the 120-ft level on the existing 140ft Monopole tower, located at 14 Canton Springs Road, Canton, CT. The tower is owned by American Tower. The property is also owned by Canton Volunteer Fire Company Inc. The Council approved Verizon Wireless use of the existing tower in 1999. Verizon Wireless now intends to remove 6 antennas and install 9 new ones for the LTE (3700 MHz) replacements for its 5G upgrade. Additionally, Verizon Wireless intends to install new 3 Remote Radio Heads (RRHs; altogether updating leased equipment rights, as reflected by the final configuration outlined in the structural analysis and proposed hereby.

Please accept this letter as notification pursuant to Regulations of Connecticut State Agencies §16-50j-73, for construction that constitutes an exempt modification pursuant to R.C.S.A. § 16-50j-72(b)(2). In accordance with R.C.S.A. § 16-50j-73, a copy of this letter is being sent to Robert Bessel, First Selectman, its Director of Planning and Community Development, Neil Pade, American Tower, the tower owner, and the property owner, Canton Volunteer Fire Company, Inc.

The planned modifications to the facility fall squarely within those activities explicitly provided for in R.C.S.A. § 16-50j-72(b)(2). Enclosed to accommodate this filing are construction drawings dated August 19, 2021, by Colliers Engineering & Design, a structural analysis dated July 20, 2021, by CLS Engineering PLLC., and a structural mount analysis by Maser Consulting Connecticut date July 1, 2021, and radio frequency (RF) analysis table showing worst-case RF emission calculation by Verizon Wireless RF Design Engineering.

1. The proposed modifications will not result in an increase in the height of the existing structure.

2. The proposed modifications will not require the extension of the site boundary.

3. The proposed modifications will not increase noise levels at the facility by six decibels or more, or to levels that exceed state and local criteria.

4. The operation of the new antennas will not increase radio frequency emissions at the facility to a level at or above the Federal Communications Commission safety standard.

5. The proposed modifications will not cause a change or alteration in the physical or environmental characteristics of the site.

6. The existing structure and its foundation can support the proposed loading, as shown in the attached structural analysis by CLS Engineering PLLC., dated July 20gust 5, 2021, and a structural mount analysis by Maser Consulting Connecticut, dated July 1, 2021, pursuant to certain conditions defined therein. Design and engineering is fully illustrated within final construction drawings, signed and stamped dated August 19, 2021.

For the foregoing reasons, Verizon Wireless respectfully submits that the proposed modifications to the above referenced telecommunications facility constitute an exempt modification under R.C.S.A. § 16-50j-72(b)(2).

Sincerely,

MJ Umali

_____

MJ Umali, Site Acquisition Consultant
c/o Cellco Partnership d/b/a Verizon Wireless
Centerline Communications, LLC
750 West Center Street, Floor 3
West Bridgewater, MA 02379
Mobile: (978) 568-7906
MUmali@centerlinecommunications.com

Attachments
cc: Robert Bessel, First Selectman – Chief Elected Official
Neil Pade, AICP, Director of Planning and Community Development- as P&Z official
American Tower Corporation - as tower owner
Canton Volunteer Fire Company, Inc – as ground owner

Proof of Delivery

Dear Customer,

This notice serves as proof of delivery for the shipment listed below.

Tracking Number
1Z9Y45030317641236

Weight
0.50 LBS

Service

UPS Ground

Shipped / Billed On
09/21/2021

Delivered On

09/27/2021 12:52 P.M.

Delivered To
CANTON, CT, US

Received By

CD SMITH

Left At
Receiver

Thank you for giving us this opportunity to serve you. Details are only available for shipments delivered within the last 120 days. Please print for your records if you require this information after 120 days.

Sincerely,

UPS

Tracking results provided by UPS: 09/27/2021 4:39 P.M. EST

UPS CampusShip: View/Print Label

1. **Ensure there are no other shipping or tracking labels attached to your package.** Select the Print button on the print dialog box that appears. Note: If your browser does not support this function select Print from the File menu to print the label.

2. **Fold the printed label at the solid line below.** Place the label in a UPS Shipping Pouch. If you do not have a pouch, affix the folded label using clear plastic shipping tape over the entire label.

3. **GETTING YOUR SHIPMENT TO UPS**
   Customers with a Daily Pickup
   Your driver will pickup your shipment(s) as usual.

   Customers without a Daily Pickup
   Take your package to any location of The UPS Store®, UPS Access Point(TM) location, UPS Drop Box, UPS Customer Center, Staples® or Authorized Shipping Outlet near you. Items sent via UPS Return Services(SM) (including via Ground) are also accepted at Drop Boxes. To find the location nearest you, please visit the Resources area of CampusShip and select UPS Locations.
   Schedule a same day or future day Pickup to have a UPS driver pickup all your CampusShip packages.
   Hand the package to any UPS driver in your area.

UPS Access Point™
CVS STORE # 972
555 WASHINGTON ST
SOUTH EASTON ,MA 02375

UPS Access Point™
CVS STORE # 7232
689 DEPOT ST
NORTH EASTON ,MA 02356

UPS Access Point™
TOWN LINE GENERAL STORE
450 E CENTER ST
WEST BRIDGEWATER ,MA 02379

FOLD HERE

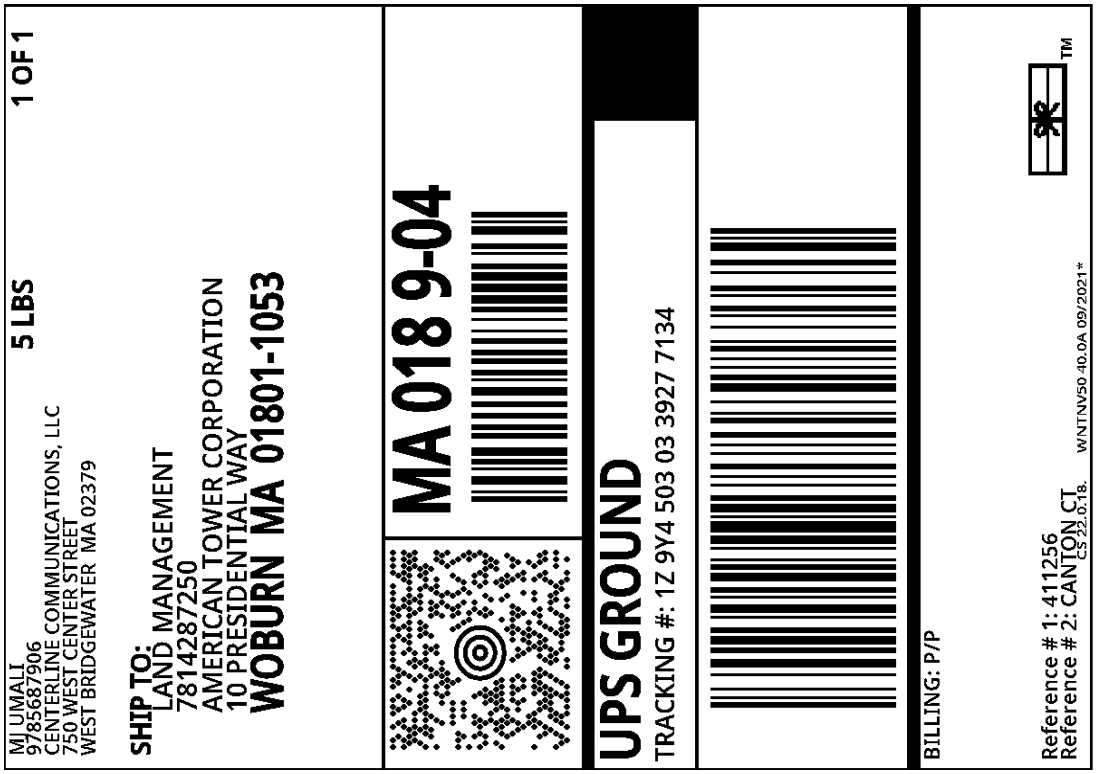

UPS CampusShip: View/Print Label

1. **Ensure there are no other shipping or tracking labels attached to your package.** Select the Print button on the print dialog box that appears. Note: If your browser does not support this function select Print from the File menu to print the label.

2. **Fold the printed label at the solid line below.** Place the label in a UPS Shipping Pouch. If you do not have a pouch, affix the folded label using clear plastic shipping tape over the entire label.

3. **GETTING YOUR SHIPMENT TO UPS**
   Customers with a Daily Pickup
   Your driver will pickup your shipment(s) as usual.

   Customers without a Daily Pickup
   Take your package to any location of The UPS Store®, UPS Access Point(TM) location, UPS Drop Box, UPS Customer Center, Staples® or Authorized Shipping Outlet near you. Items sent via UPS Return Services(SM) (including via Ground) are also accepted at Drop Boxes. To find the location nearest you, please visit the Resources area of CampusShip and select UPS Locations.
   Schedule a same day or future day Pickup to have a UPS driver pickup all your CampusShip packages.
   Hand the package to any UPS driver in your area.

UPS Access Point™
CVS STORE # 972
555 WASHINGTON ST
SOUTH EASTON ,MA 02375

UPS Access Point™
CVS STORE # 7232
689 DEPOT ST
NORTH EASTON ,MA 02356

UPS Access Point™
TOWN LINE GENERAL STORE
450 E CENTER ST
WEST BRIDGEWATER ,MA 02379

FOLD HERE

MI UMALI
9785687906
CENTERLINE COMMUNICATIONS, LLC
750 WEST CENTER STREET
WEST BRIDGEWATER MA 02379

5 LBS 1 OF 1

SHIP TO:
CANTON VOLUNTEER FIRE COMPANY INC
P.O. BOX 104
14 CANTON SPRINGS ROAD
CANTON CT 06019-2411

CT 067 9-03

UPS GROUND
TRACKING #: 1Z 9Y4 503 03 2650 7374

BILLING: P/P

Reference # 1: 411256
Reference # 2: CANTON CT
CS 22.0.18. WNTNV50 38.0A 09/2021*

Proof of Delivery

Dear Customer,

This notice serves as proof of delivery for the shipment listed below.

Tracking Number
1Z9Y45030326507374

Weight
5.00 LBS

Service

UPS Ground

Shipped / Billed On
09/22/2021

Delivered On

09/24/2021 12:13 P.M.

Delivered To
CANTON, CT, US

Received By

FIRE DEPT

Left At
Receiver

Thank you for giving us this opportunity to serve you. Details are only available for shipments delivered within the last 120 days. Please print for your records if you require this information after 120 days.

Sincerely,

UPS

Tracking results provided by UPS: 09/27/2021 9:22 A.M. EST

STATE OF CONNECTICUT

CONNECTICUT SITING COUNCIL

Ten Franklin Square
New Britain, Connecticut 06051
Phone: (860) 827-2935
Fax: (860) 827-2950

October 12, 1999

Sandy M. Carter
Manager - Regulatory
Bell Atlantic Mobile
20 Alexander Drive
Wallingford, CT 06492

Peter W. van Wilgen
Director – Real Estate Operations
Springwich Cellular Limited Partnership
500 Enterprise Drive
Rocky Hill, CT 06067-3900

RE: EM-BAM/SCLP-023-990917 - Cellco Partnership d/b/a Bell Atlantic Mobile and Springwich Cellular Limited Partnership notice of intent to modify an existing telecommunications tower located at 14 Canton Springs Road in Canton, Connecticut.

Dear Ms. Carter and Mr. van Wilgen:

At a public meeting held on October 8, 1999, the Connecticut Siting Council (Council) ruled that the proposed use of this existing tower would not cause a significant change or alteration in the physical and environmental characteristics of the site, and pursuant to Section 16-50j-72 (c) would constitute a regulatory exemption.

The proposed modifications are to be implemented as specified here, in your notice dated September 17, 1999, and in additional information dated September 22, 1999. The modifications are in compliance with the exception criteria in Section 16-50j-72 (c) of the Regulations of Connecticut State Agencies as changes to an existing non-facility tower that have received all municipal zoning approvals and building permits and that would not increase tower height, extend the boundaries of the tower site, increase noise levels at the tower site boundary by six decibels or more, and increase the total radio frequency electromagnetic radiation power density measured at the tower site boundary to or above the standard adopted by the State Department of Environmental Protection pursuant to General Statutes § 22a-162. This facility has been carefully modeled to ensure that radio frequency emissions are conservatively below State and federal standards applicable to the frequency now used on this tower. Any additional change to this facility will require explicit notice to this agency pursuant to Regulations of Connecticut State Agencies Section 16-50j-73. Such notice shall include all relevant information regarding the proposed change with cumulative worst-case modeling of radio frequency exposure at the closest point of uncontrolled access to the tower base, consistent with Federal Communications Commission, Office of Engineering and Technology, Bulletin No. 65. Any deviation from this format may result in the Council implementing enforcement proceedings pursuant to General Statutes § 16-50u including, without limitation, imposition of expenses resulting from such failure and of civil penalties in an amount not less than one thousand dollars per day for each day of construction or operation in material violation.

Thank you for your attention and cooperation.

Very truly yours,

Mortimer A. Gelston
Chairman

MAG/SLL/sll

cc: Honorable Kathleen C. Corkum, First Selectman, Town of Canton
Eric Barz, Town Planner, Town of Canton

I:\siting\em\bam\canton\dc100899.doc

Canton
14 Canton Springs Rd
EM-bam/sclp-023-990917
September 28, 1999

September 22, 1999

RECEIVED
SEP 23 1999
CONNECTICUT
SITING COUNCIL

To: Mr. Steve Levine, Siting Analyst
Connecticut Siting Council

Re: Request for Information
Canton Cell Site

As per your phone inquiry on September 21, 1999 in reference to the filing by Springwich Cellular Limited Partnership and Bell Atlantic Mobile to co-locate on an existing tower located in Canton, Connecticut, I am submitting the following information and answers:

1. Is the tower designed for the number of carriers and will it require extra strengthening?

Answer:

The tower is designed for five carriers in addition to the Town's equipment and will not require additional strengthening. I have a copy of the structure design and I am submitting it for your information and file.

2. What are the abutting land uses to the facility?

Answer:

The property of the Volunteer Fire Company is located in Canton's B-1 (Business) Zone District. The surrounding land uses in the area include: a cemetery use to the north; vacant land zoned Special Business to the east and west and partially developed Light Industrial zoned land to the southwest. The Plan of Development's land use plan for the area surrounding the Project Site includes: commercial uses to the north and northeast; industrial uses to the south, southeast and southwest and private institution open-space reserves directly to the north (cemetery). The Fire Company property is designated a community facility use.

3. Clarify the position on the tower of the carriers and the power density calculation.

Answer:

The correct position of the carriers is shown on page 2 of the submitted site plan. The platform on which Springwich Cellular Limited Partnership will mount their antennas is at the 130' level of the tower. Bell Atlantic Mobile will mount its platform for its antennas at the 120' level of the platform. The center of radiation for SCLP is 130' and the center of radiation for BAM is 120'. These two heights were transposed in the original application and should be corrected.

The power density calculation was done correctly placing SCLP at the 130' level of the tower and BAM at the 120' level of the tower.

Please contact me if you require further information or have any questions.

Sandy Carter

Sandy Carter, Regulatory Manager
Bell Atlantic Mobile

cc: Peter van Wilgen

AMERICAN TOWER®
CORPORATION

This report was prepared for American Tower Corporation by

CLS ENGINEERING PLLC

Structural Analysis Report

Structure	:	**140 ft Monopole**
ATC Site Name	:	**CANTON CT, CT**
ATC Asset Number	:	**411256**
Engineering Number	:	**13701299_C3_02**
Proposed Carrier	:	**VERIZON WIRELESS**
Carrier Site Name	:	**CANTON CT**
Carrier Site Number	:	**467476**
Site Location	:	**14 CANTON SPRINGS ROAD** **Canton, CT 06019-2401** **41.822876,-72.895164**
County	:	**Hartford**
Date	:	**July 20, 2021**
Max Usage	:	**49%**
Result	:	**Pass**

Prepared By:
Josh Stone
CLS

Reviewed By:

STATE OF CONNECTICUT
TYLER M BARKER
No. 32402
LICENSED
PROFESSIONAL ENGINEER

Tyler M. Barker
CLS Engineering PLLC
PE # 32402 Exp. 1/31/2021
COA # PEC.001833 Exp. 8/14/2022
07/21/2021

Table of Contents

Introduction 1

Supporting Documents 1

Analysis 1

Conclusion 1

Existing and Reserved Equipment 2

Equipment to be Removed 2

Proposed Equipment 3

Structure Usages 4

Foundations 4

Deflection and Sway 4

Standard Conditions 5

Calculations ..... Attached

Introduction

The purpose of this report is to summarize results of a structural analysis performed on the 140 ft monopole to reflect the change in loading by VERIZON WIRELESS.

Supporting Documents

Tower Drawings	EEI Project Drawing #GS51426, dated May 20, 1999
Foundation Drawing	EEI Project Drawing #F4960-140, dated May 21, 1999
Geotechnical Report	Clarence Welti Project #Banm Tower Site, dated November 23, 1998

Analysis

The tower was analyzed using American Tower Corporation's tower analysis software. This program considers an elastic three-dimensional model and second-order effects per ANSI/TIA-222.

Basic Wind Speed:	116 mph (3-Second Gust)
Basic Wind Speed w/ Ice:	50 mph (3-Second Gust) w/ 1.5"radial ice concurrent
Code:	ANSI/TIA-222-H / 2015 IBC / 2018 Connecticut State Building Code
Exposure Category:	B
Risk Category:	II
Topographic Factor Procedure:	Method 1
Topographic Category:	1
Crest Height (H):	0 ft
Spectral Response:	Ss = 0.18, S_1 = 0.05
Site Class:	D - Stiff Soil

Conclusion

Based on the analysis results, the structure meets the requirements per the applicable codes listed above. The tower and foundation can support the equipment as described in this report.

If you have any questions or require additional information, please contact American Tower via email at Engineering@americantower.com. Please include the American Tower site name, site number, and engineering number in the subject line for any questions.

Existing and Reserved Equipment

Elev.[1] (ft)	Qty	Equipment	Mount Type	Lines	Carrier
148.0	1	Generic 18' Omni	Stand-Off	(2) 7/8" Coax	TOWN OF CANTON
130.0	3	Raycap DC6-48-60-0-8F	Triangular Platform with Handrails	(2) 0.39" (10mm) Fiber Trunk (6) 0.78" (19.7mm) 8 AWG 6 (2) 3" conduit (12) 7/8" Coax	AT&T MOBILITY
	6	CCI DTMABP7819VG12A			
	3	Kathrein Scala 840370799			
	2	CCI HPA-65R-BUU-H8			
	3	Kathrein Scala 800-10121			
	3	Ericsson RRUS 32 (50.8 lbs)			
	3	Ericsson RRUS 8843 B2, B66A			
	1	Andrew SBNHH-1D65A (33.5 lbs)			
	3	Ericsson RRUS 4449 B5, B12			
120.0	1	Generic GPS	Triangular Platform with Handrails	(6) 1 5/8" Coax (1) 1/2" Coax	VERIZON WIRELESS
	6	Commscope SBNHH-1D65B			
	3	Samsung B5/B13 RRH-BR04C			
	3	Samsung B2/B66A RRH-BR049			
	1	VZW Unused Reserve (17219.10 sqin)			
100.0	3	Andrew LNX-6515DS-A1M	Triangular Low Profile Platform	(12) 1 5/8" Coax	T-MOBILE
	3	RFS APXV18-209014-C-A20			
	3	RFS ATMA4P4DBP-1A20			
	3	Commscope ATSBT-TOP-MF-4G			
90.0	3	Generic 12" x 12" Junction Box	Triangular Platform with Handrails	(4) 1 1/4" Hybriflex Cable (1) 1/2" Coax	SPRINT NEXTEL
	3	Alcatel-Lucent RRH2x50-08			
	3	Alcatel-Lucent 800 MHz RRH			
	3	Alcatel-Lucent 1900 MHz 4X45 RRH			
	3	Alcatel-Lucent TD-RRH8x20-25 w/ Solar Shield			
	1	PCTEL GPS-TMG-HR-26N			
	3	RFS APXVSPP18-C-A20			
80.0	3	Fujitsu TA08025-B605	Triangular Platform with Handrails	(1) 1.60" (40.6mm) Hybrid	DISH WIRELESS L.L.C.
	3	Fujitsu TA08025-B604			
	3	JMA Wireless MX08FRO665-21			
	1	Commscope RDIDC-9181-PF-48			

Equipment to be Removed

Elev.[1] (ft)	Qty	Equipment	Mount Type	Lines	Carrier
120.0	1	RFS DB-T1-6Z-8AB-0Z	-	(1) 1 5/8" (1.63"-41.3mm) Fiber	VERIZON WIRELESS
	2	Antel LPA-80063/4CF ___			
	4	Antel LPA-80080/4CF ___			

Proposed Equipment

Elev.[1] (ft)	Qty	Equipment	Mount Type	Lines	Carrier
122.0	3	Samsung MT6407-77A	Triangular Platform with Handrails	(2) 1 5/8" Hybriflex	VERIZON WIRELESS
120.0	3	Samsung RT4401-48A			
	3	Samsung B5/B13 RRH-BR04C			
	1	Raycap RCMDC-6627-PF-48			
	3	Andrew LNX-6514DS-A1M			
118.0	3	Samsung Outdoor CBRS 20W RRH –Clip-on Antenna			

[1] Contracted elevations are shown for appurtenances within contracted installation tolerances. Appurtenances outside of contract limits are shown at installed elevations.

Install proposed lines outside the pole shaft. Stacking lines is not allowed.

Structure Usages

Structural Component	Controlling Usage	Pass/Fail
Anchor Bolts	45%	Pass
Shaft	43%	Pass
Base Plate	36%	Pass

Foundations

Reaction Component	Original Design Reactions	Factored Design Reactions*	Analysis Reactions	% of Design
Moment (Kips-Ft)	3,921.8	5,294.4	2,557.3	48%
Shear (Kips)	38.7	52.2	25.5	49%
* The design reactions are factored by 1.35 per ANSI/TIA-222-H, Sec. 15.6.2				

The structure base reactions resulting from this analysis are acceptable when compared to those shown on the original structure drawings, therefore no modification or reinforcement of the foundation will be required.

Deflection and Sway*

Antenna Elevation (ft)	Antenna	Carrier	Deflection (ft)	Sway (Rotation) (°)
120.0	Samsung Outdoor CBRS 20W RRH –Clip-on Antenna	VERIZON WIRELESS	0.945	0.902
	Samsung RT4401-48A			
	Samsung B5/B13 RRH-BR04C			
	Raycap RCMDC-6627-PF-48			
	Samsung MT6407-77A			
	Andrew LNX-6514DS-A1M			

***Deflection and Sway was evaluated considering a design wind speed of 60 mph (3-Second Gust) per ANSI/TIA-222-H**

AMERICAN TOWER®
CORPORATION

Standard Conditions

All engineering services performed by A.T. Engineering Service, PLLC are prepared on the basis that the information used is current and correct. This information may consist of, but is not limited to the following:

- Information supplied by the client regarding antenna, mounts and feed line loading
- Information from drawings, design and analysis documents, and field notes in the possession of A.T. Engineering Service, PLLC

It is the responsibility of the client to ensure that the information provided to A.T. Engineering Service, PLLC and used in the performance of our engineering services is correct and complete.

All assets of American Tower Corporation, its affiliates and subsidiaries (collectively "American Tower") are inspected at regular intervals. Based upon these inspections and in the absence of information to the contrary, American Tower assumes that all structures were constructed in accordance with the drawings and specifications.

Unless explicitly agreed by both the client and A.T. Engineering Service, PLLC, all services will be performed in accordance with the current revision of ANSI/TIA-222.

All services are performed, results obtained, and recommendations made in accordance with generally accepted engineering principles and practices. A.T. Engineering Service, PLLC is not responsible for the conclusions, opinions and recommendations made by others based on the information supplied herein.

© 2007 - 2021 by ATC IP LLC. All rights reserved.

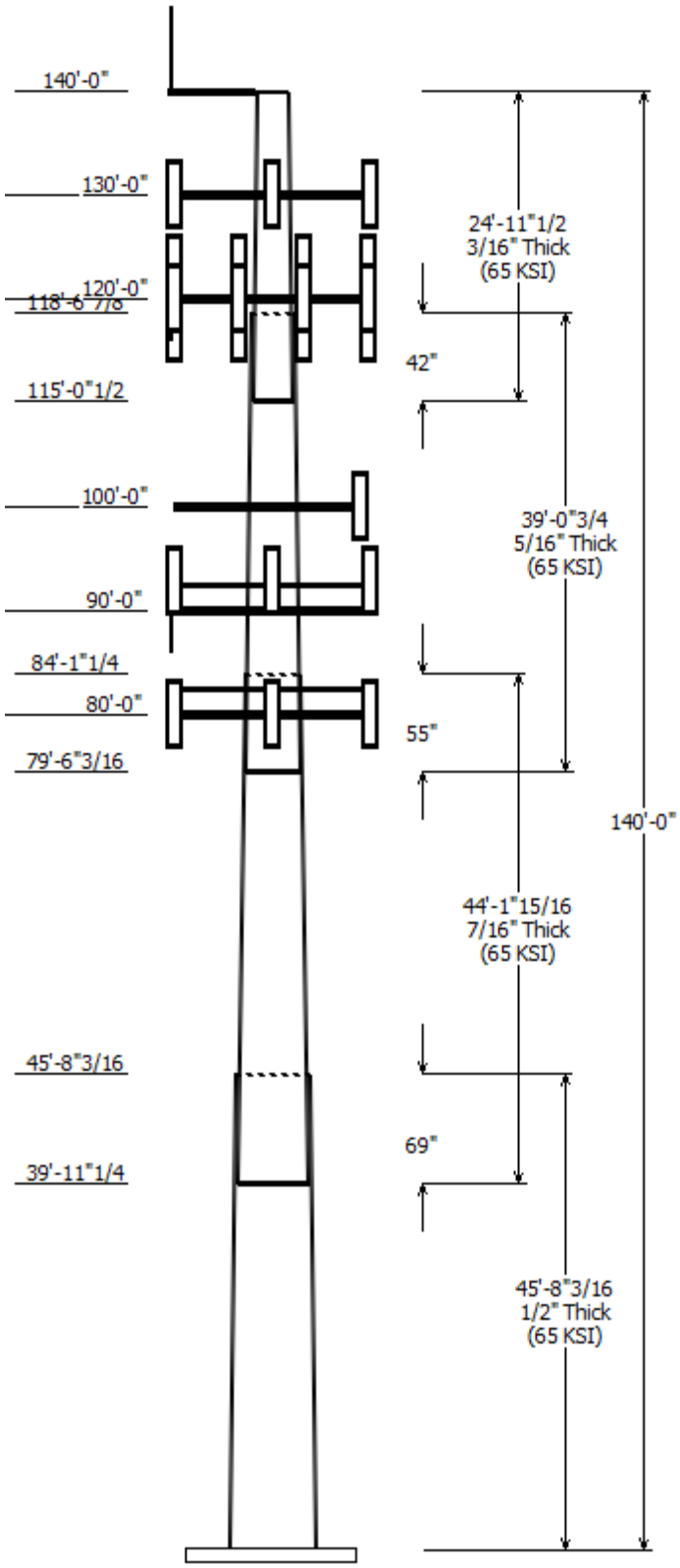

Job Information

Client :	VERIZON WIRELESS		
Pole :	411256	Code:	ANSI/TIA-222-H
Location :	CANTON CT, CT		
Description :	140 ft Monopole	Risk Category :	II
Shape :	18 Sides	Exposure :	B
Height :	140.00 (ft)	Topo Method :	Method 1
Base Elev (ft):	0.00	Topographic Category :	1
Taper:	0.249107 (in/ft)		

Sections Properties

Shaft Section	Length (ft)	Diameter (in) Accross Flats Top	Bottom	Thick (in)	Joint Type	Overlap Length (in)	Shape	Steel Grade (ksi)
1	45.682	39.62	51.00	0.500		0.000	18 Sides	65
2	44.164	30.92	41.92	0.438	Slip Joint	68.906	18 Sides	65
3	39.060	22.96	32.69	0.313	Slip Joint	55.063	18 Sides	65
4	24.956	18.00	24.21	0.188	Slip Joint	42.375	18 Sides	65

Discrete Appurtenance

Attach Elev (ft)	Force Elev (ft)	Qty	Description
140.000	148.000	1	Generic 18' Omni
140.000	140.000	1	Stand-Off
130.000	130.000	1	Flat Platform w/ Handrails
130.000	130.000	3	Kathrein Scala 840370799
130.000	130.000	2	CCI HPA-65R-BUU-H8
130.000	130.000	3	Kathrein Scala 800-10121
130.000	130.000	3	Ericsson RRUS 32 (50.8 lbs)
130.000	130.000	3	Ericsson RRUS 4449 B5, B12
130.000	130.000	1	Andrew SBNHH-1D65A (33.5
130.000	130.000	3	Ericsson RRUS 8843 B2, B66A
130.000	130.000	3	Raycap DC6-48-60-0-8F
130.000	130.000	6	CCI DTMABP7819VG12A
120.000	122.000	3	Samsung MT6407-77A
120.000	118.000	3	Samsung Outdoor CBRS 20W
120.000	120.000	1	VZW Unused Reserve
120.000	120.000	1	Flat Platform w/ Handrails
120.000	120.000	3	Andrew LNX-6514DS-A1M
120.000	120.000	6	Commscope SBNHH-1D65B
120.000	120.000	1	Raycap RCMDC-6627-PF-48
120.000	120.000	3	Samsung B5/B13 RRH-BR04C
120.000	120.000	3	Samsung B5/B13 RRH-BR04C
120.000	120.000	3	Samsung B2/B66A RRH-BR049
120.000	120.000	3	Samsung RT4401-48A
120.000	120.000	1	Generic GPS
100.000	100.000	1	Flat Low Profile Platform
100.000	100.000	3	Andrew LNX-6515DS-A1M
100.000	100.000	3	RFS APXV18-209014-C-A20
100.000	100.000	3	RFS ATMA4P4DBP-1A20
100.000	100.000	3	Commscope ATSBT-TOP-MF-
90.000	90.000	1	Generic Round Platform with
90.000	94.000	3	RFS APXVSPP18-C-A20
90.000	94.000	3	Alcatel-Lucent TD-RRH8x20-25
90.000	94.000	3	Alcatel-Lucent 1900 MHz 4X45
90.000	94.000	3	Alcatel-Lucent 800 MHz RRH
90.000	94.000	3	Alcatel-Lucent RRH2x50-08
90.000	90.000	3	Generic 12" x 12" Junction Box
90.000	90.000	1	PCTEL GPS-TMG-HR-26N
80.000	80.000	1	Generic Flat Platform with Han
80.000	80.000	3	JMA Wireless MX08FRO665-21
80.000	80.000	3	Fujitsu TA08025-B604
80.000	80.000	3	Fujitsu TA08025-B605
80.000	80.000	1	Commscope RDIDC-9181-PF-48

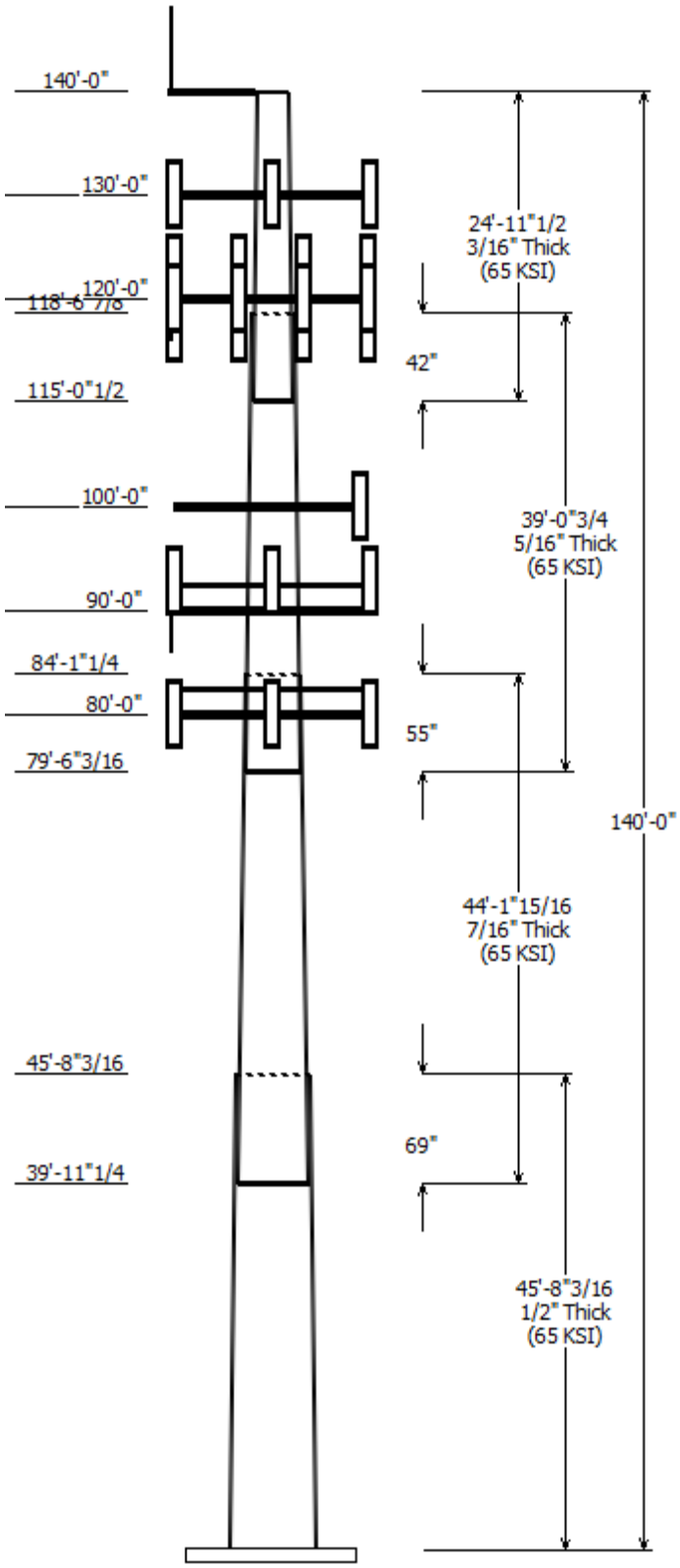

Linear Appurtenance

Elev (ft) From	To	Description	Exposed To Wind
0.000	80.000	1.60" (40.6mm)	No
0.000	90.000	1 1/4" Hybriflex	No
0.000	90.000	1/2" Coax	No
0.000	100.0	1 5/8" Coax	No
0.000	120.0	1 5/8" Coax	Yes
0.000	120.0	1 5/8" Hybriflex	Yes
0.000	120.0	1/2" Coax	No
0.000	130.0	0.39" (10mm)	No
0.000	130.0	0.78" (19.7mm) 8	No
0.000	130.0	3" conduit	No
0.000	130.0	7/8" Coax	No
0.000	148.0	7/8" Coax	No

Load Cases

1.2D + 1.0W	116 mph with No Ice
0.9D + 1.0W	116 mph with No Ice (Reduced DL)
1.2D + 1.0Di + 1.0Wi	50 mph with 1.50 in Radial Ice
1.2D + 1.0Ev + 1.0Eh	Seismic
0.9D - 1.0Ev + 1.0Eh	Seismic (Reduced DL)
1.0D + 1.0W	Serviceability 60 mph

Reactions

Load Case	Moment (kip-ft)	Shear (kip)	Axial (kip)
1.2D + 1.0W	2557.27	25.53	53.53
0.9D + 1.0W	2531.16	25.51	40.14
1.2D + 1.0Di + 1.0Wi	772.48	7.62	79.84
1.2D + 1.0Ev + 1.0Eh	141.49	1.34	53.29
0.9D - 1.0Ev + 1.0Eh	139.77	1.34	37.12
1.0D + 1.0W	608.30	6.11	44.63

Dish Deflections

Load Case	Attach Elev (ft)	Deflection (in)	Rotation (deg)
	0.00	0.000	0.000

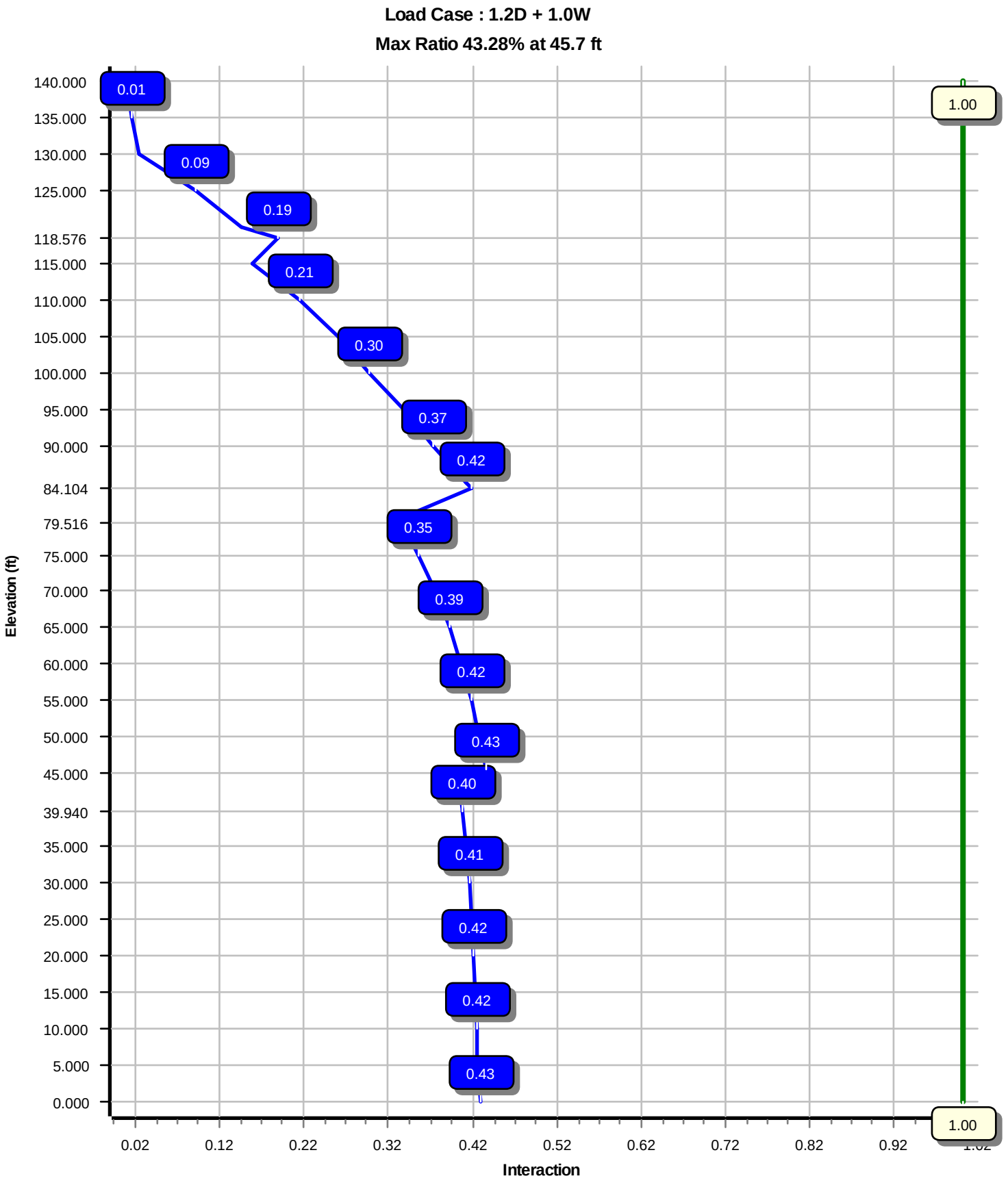
Load Case : 1.2D + 1.0W
Max Ratio 43.28% at 45.7 ft
Elevation (ft)
Interaction
140.000
135.000
130.000
125.000
118.576
115.000
110.000
105.000
100.000
95.000
90.000
84.104
79.516
75.000
70.000
65.000
60.000
55.000
50.000
45.000
39.940
35.000
30.000
25.000
20.000
15.000
10.000
5.000
0.000
0.02
0.12
0.22
0.32
0.42
0.52
0.62
0.72
0.82
0.92
0.01
0.09
0.19
0.21
0.30
0.37
0.42
0.35
0.39
0.42
0.43
0.40
0.41
0.42
0.42
0.43
1.00
1.00

Site Number: 411256	Code: ANSI/TIA-222-H	© 2007 - 2021 by ATC IP LLC. All rights reserved.	
Site Name: CANTON CT, CT	Engineering Number:13701299_C3_02	7/20/2021 5:16:52 PM	
Customer: VERIZON WIRELESS			

Analysis Parameters

Location :	Hartford County, CT	Height (ft) :	140
Code :	ANSI/TIA-222-H	Base Diameter (in) :	51.00
Shape :	18 Sides	Top Diameter (in) :	18.00
Pole Type :	Taper	Taper (in/ft) :	0.249
Pole Manfacturer :	EEI	Rotation (deg) :	0.00
Kd (non-service) :	0.95	Ke :	0.99

Ice & Wind Parameters

Exposure Category:	B	Design Wind Speed Without Ice:	116 mph
Risk Category:	II	Design Wind Speed With Ice:	50 mph
Topographic Factor Procedure:	Method 1	Operational Wind Speed:	60 mph
Topographic Category:	1	Design Ice Thickness:	1.50 in
Crest Height:	0 ft	HMSL:	339.00 ft

Seismic Parameters

Analysis Method:	Equivalent Lateral Force Method
Site Class:	D - Stiff Soil
Period Based on Rayleigh Method (sec):	2.05

T_L (sec):	6	p:	1	C_s:	0.030
S_s:	0.177	S_1:	0.054	C_s Max:	0.030
F_a:	1.600	F_v:	2.400	C_s Min:	0.030
S_{ds}:	0.189	S_{d1}:	0.086		

Load Cases

1.2D + 1.0W	116 mph with No Ice
0.9D + 1.0W	116 mph with No Ice (Reduced DL)
1.2D + 1.0Di + 1.0Wi	50 mph with 1.50 in Radial Ice
1.2D + 1.0Ev + 1.0Eh	Seismic
0.9D - 1.0Ev + 1.0Eh	Seismic (Reduced DL)
1.0D + 1.0W	Serviceability 60 mph

© 2007 - 2021 by ATC IP LLC. All rights reserved.

Shaft Section Properties

Sect Info	Length (ft)	Thick (in)	Fy (ksi)	Joint Type	Slip Joint Len (in)	Weight (lb)	Bottom Dia (in)	Bottom Elev (ft)	Bottom Area (in 2)	Bottom Ix (in4)	Bottom W/t Ratio	Bottom D/t Ratio	Top Dia (in)	Top Elev (ft)	Top Area (in2)	Top Ix (in4)	Top W/t Ratio	Top D/t Ratio	Taper (in/ft)
1-18	45.682	0.5000	65		0.00	11,054	51.00	0.00	80.14	25821.9	16.57	102.00	39.62	45.68	62.08	12003.8	12.56	79.24	0.249107
2-18	44.164	0.4375	65	Slip	68.91	7,510	41.92	39.94	57.61	12528.4	15.49	95.83	30.92	84.10	42.33	4971.0	11.05	70.68	0.249107
3-18	39.060	0.3125	65	Slip	55.06	3,627	32.69	79.52	32.12	4254.1	17.04	104.61	22.96	118.58	22.46	1456.0	11.55	73.48	0.249107
4-18	24.956	0.1875	65	Slip	42.38	1,057	24.21	115.04	14.30	1043.2	21.36	129.16	18.00	140.00	10.60	424.9	15.52	96.00	0.249107
				Shaft Weight		23,248													

Discrete Appurtenance Properties

Attach Elev (ft)	Description	Qty	Ka	Vert Ecc (ft)	No Ice Weight (lb)	No Ice EPAa (sf)	No Ice Orientation Factor	Ice Weight (lb)	Ice EPAa (sf)	Ice Orientation Factor
140.00	Stand-Off	1	1.00	0.000	100.00	3.000	1.00	148.44	4.557	1.00
140.00	Generic 18' Omni	1	1.00	8.000	55.00	5.400	1.00	189.59	11.745	1.00
130.00	CCI DTMABP7819VG12A	6	0.75	0.000	19.20	0.972	0.50	44.31	1.618	0.50
130.00	Raycap DC6-48-60-0-8F	3	0.75	0.000	32.80	1.360	1.00	90.11	2.014	1.00
130.00	Ericsson RRUS 8843 B2, B66A	3	0.75	0.000	72.00	1.639	0.50	132.43	2.472	0.50
130.00	Ericsson RRUS 4449 B5, B12	3	0.75	0.000	71.00	1.969	0.50	134.54	2.889	0.50
130.00	Ericsson RRUS 32 (50.8 lbs)	3	0.75	0.000	50.80	2.692	0.67	121.31	3.831	0.67
130.00	Kathrein Scala 800-10121	3	0.75	0.000	44.10	5.162	0.68	157.11	7.240	0.68
130.00	Andrew SBNHH-1D65A (33.5 lbs)	1	0.75	0.000	33.50	5.883	1.00	166.95	7.980	1.00
130.00	CCI HPA-65R-BUU-H8	2	0.75	0.000	68.00	12.976	0.75	321.33	16.505	0.75
130.00	Kathrein Scala 840370799	3	0.75	0.000	105.80	13.661	0.65	358.39	17.330	0.65
130.00	Flat Platform w/ Handrails	1	1.00	0.000	2,000.00	42.400	1.00	3,401.14	63.076	1.00
120.00	Samsung Outdoor CBRS 20W	3	0.75	-2.000	4.40	0.892	0.50	22.03	1.518	0.50
120.00	Generic GPS	1	1.00	0.000	10.00	0.900	1.00	38.66	1.526	1.00
120.00	Samsung RT4401-48A	3	0.75	0.000	18.60	0.996	0.50	45.05	1.666	0.50
120.00	Samsung B2/B66A RRH-BR049	3	0.75	0.000	84.40	1.875	0.50	146.88	2.759	0.50
120.00	Samsung B5/B13 RRH-BR04C	3	0.75	0.000	70.30	1.875	0.50	126.32	2.759	0.50
120.00	Samsung B5/B13 RRH-BR04C	3	0.75	0.000	70.30	1.875	0.50	126.32	2.759	0.50
120.00	Raycap RCMDC-6627-PF-48	1	0.75	0.000	32.00	4.056	1.00	156.47	5.393	1.00
120.00	Samsung MT6407-77A	3	0.75	2.000	81.60	4.709	0.61	181.42	6.197	0.61
120.00	Commscope SBNHH-1D65B	6	0.75	0.000	50.70	8.173	0.69	222.58	10.944	0.69
120.00	Andrew LNX-6514DS-A1M	3	0.75	0.000	38.80	8.173	0.69	211.11	10.933	0.69
120.00	Flat Platform w/ Handrails	1	1.00	0.000	2,000.00	42.400	1.00	3,391.84	62.939	1.00
120.00	VZW Unused Reserve (17219.10	1	0.75	0.000	1,048.60	119.577	0.90	1,764.03	201.161	0.90
100.00	Commscope ATSBT-TOP-MF-4G	3	0.80	0.000	1.80	0.173	0.50	7.39	0.461	0.50
100.00	RFS ATMA4P4DBP-1A20	3	0.80	0.000	15.90	0.747	0.50	38.59	1.310	0.50
100.00	RFS APXV18-209014-C-A20	3	0.80	0.000	18.70	3.530	0.67	84.58	5.258	0.67
100.00	Andrew LNX-6515DS-A1M	3	0.80	0.000	49.80	11.410	0.70	269.67	14.523	0.70
100.00	Flat Low Profile Platform	1	1.00	0.000	1,500.00	26.100	1.00	2,121.85	44.424	1.00
90.00	PCTEL GPS-TMG-HR-26N	1	1.00	0.000	0.60	0.090	1.00	5.20	0.261	1.00
90.00	Generic 12" x 12" Junction Box	3	0.75	0.000	10.00	1.200	0.50	49.55	1.889	0.50
90.00	Alcatel-Lucent RRH2x50-08	3	0.75	4.000	52.90	1.701	0.50	109.17	2.520	0.50
90.00	Alcatel-Lucent 800 MHz RRH	3	0.75	4.000	53.00	2.134	0.50	123.08	3.063	0.50
90.00	Alcatel-Lucent 1900 MHz 4X45	3	0.75	4.000	60.00	2.322	0.50	136.52	3.348	0.50
90.00	Alcatel-Lucent TD-RRH8x20-25	3	0.75	4.000	70.00	4.046	0.50	159.73	5.307	0.50
90.00	RFS APXVSPP18-C-A20	3	0.75	4.000	57.00	8.024	0.69	220.78	10.672	0.69
90.00	Generic Round Platform with	1	1.00	0.000	2,000.00	27.200	1.00	3,230.31	50.409	1.00
80.00	Commscope RDIDC-9181-PF-48	1	0.75	0.000	21.90	1.867	1.00	75.43	2.714	1.00
80.00	Fujitsu TA08025-B605	3	0.75	0.000	75.00	1.962	0.50	133.93	2.827	0.50
80.00	Fujitsu TA08025-B604	3	0.75	0.000	63.90	1.962	0.50	118.76	2.827	0.50
80.00	JMA Wireless MX08FRO665-21	3	0.75	0.000	64.50	12.489	0.64	306.29	15.133	0.64
80.00	Generic Flat Platform with	1	1.00	0.000	2,500.00	42.400	1.00	4,171.16	62.129	1.00
Totals	Num Loadings:42	105			15,869.20			31,938.28		

© 2007 - 2021 by ATC IP LLC. All rights reserved.

Linear Appurtenance Properties

Load Case Azimuth (deg) : 160

Elev From (ft)	Elev To (ft)	Qty	Description	Coax Dia (in)	Coax Wt (lb/ft)	Flat	Max Coax / Row	Dist Between Rows (in)	Dist Between Cols (in)	Azimuth (deg)	Dist From Face (in)	Exposed To Wind	Carrier
0.00	148.00	2	7/8" Coax	1.09	0.33	N	0	0.00	0.00	0	0.00	N	TOWN OF CANTON
0.00	130.00	2	0.39" (10mm) Fiber	0.39	0.06	N	0	0.00	0.00	0	0.00	N	AT&T MOBILITY
0.00	130.00	6	0.78" (19.7mm) 8 AWG	0.78	0.59	N	0	0.00	0.00	0	0.00	N	AT&T MOBILITY
0.00	130.00	2	3" conduit	3.50	7.58	N	0	0.00	0.00	0	0.00	N	AT&T MOBILITY
0.00	130.00	12	7/8" Coax	1.09	0.33	N	0	0.00	0.00	0	0.00	N	AT&T MOBILITY
0.00	120.00	6	1 5/8" Coax	1.98	0.82	N	6	0.50	0.50	90	0.50	Y	VERIZON WIRELESS
0.00	120.00	2	1 5/8" Hybriflex	1.98	1.30	N	2	0.50	0.50	110	0.50	Y	VERIZON WIRELESS
0.00	120.00	1	1/2" Coax	0.63	0.15	N	0	0.00	0.00	0	0.00	N	VERIZON WIRELESS
0.00	100.00	12	1 5/8" Coax	1.98	0.82	N	0	0.00	0.00	0	0.00	N	T-MOBILE
0.00	90.00	4	1 1/4" Hybriflex Cable	1.54	1.00	N	0	0.00	0.00	0	0.00	N	SPRINT NEXTEL
0.00	90.00	1	1/2" Coax	0.63	0.15	N	0	0.00	0.00	0	0.00	N	SPRINT NEXTEL
0.00	80.00	1	1.60" (40.6mm) Hybrid	1.60	2.34	N	0	0.00	0.00	0	0.00	N	DISH WIRELESS

© 2007 - 2021 by ATC IP LLC. All rights reserved.

Segment Properties (Max Len : 5. ft)

Seg Top Elev (ft)	Description	Thick (in)	Flat Dia (in)	Area (in^2)	Ix (in^4)	W/t Ratio	D/t Ratio	F'y (ksi)	S (in^3)	Z (in^3)	Weight (lb)
0.00		0.5000	51.000	80.141	25,821.9	16.57	102.00	81.9	997.2	0.0	0.0
5.00		0.5000	49.754	78.164	23,958.0	16.14	99.51	82.4	948.4	0.0	1,346.7
10.00		0.5000	48.509	76.187	22,186.1	15.70	97.02	82.6	900.8	0.0	1,313.1
15.00		0.5000	47.263	74.211	20,503.7	15.26	94.53	82.6	854.5	0.0	1,279.4
20.00		0.5000	46.018	72.234	18,908.6	14.82	92.04	82.6	809.3	0.0	1,245.8
25.00		0.5000	44.772	70.258	17,398.5	14.38	89.54	82.6	765.4	0.0	1,212.2
30.00		0.5000	43.527	68.281	15,971.0	13.94	87.05	82.6	722.7	0.0	1,178.5
35.00		0.5000	42.281	66.304	14,623.7	13.50	84.56	82.6	681.2	0.0	1,144.9
39.94	Bot - Section 2	0.5000	41.051	64.352	13,369.3	13.07	82.10	82.6	641.5	0.0	1,098.2
40.00		0.5000	41.036	64.328	13,354.5	13.06	82.07	82.6	641.0	0.0	24.9
45.00		0.5000	39.790	62.351	12,160.9	12.62	79.58	82.6	602.0	0.0	2,042.7
45.68	Top - Section 1	0.4375	40.495	55.623	11,276.7	14.91	92.56	82.6	548.5	0.0	273.9
50.00		0.4375	39.420	54.130	10,392.5	14.48	90.10	82.6	519.3	0.0	806.3
55.00		0.4375	38.174	52.400	9,427.8	13.97	87.26	82.6	486.4	0.0	906.2
60.00		0.4375	36.929	50.671	8,524.8	13.47	84.41	82.6	454.7	0.0	876.8
65.00		0.4375	35.683	48.941	7,681.3	12.97	81.56	82.6	424.0	0.0	847.4
70.00		0.4375	34.438	47.212	6,895.4	12.47	78.71	82.6	394.4	0.0	818.0
75.00		0.4375	33.192	45.482	6,165.0	11.97	75.87	82.6	365.8	0.0	788.5
79.52	Bot - Section 3	0.4375	32.067	43.920	5,551.4	11.51	73.30	82.6	341.0	0.0	686.9
80.00		0.4375	31.946	43.753	5,488.1	11.46	73.02	82.6	338.4	0.0	125.1
84.10	Top - Section 2	0.3125	31.549	30.982	3,819.3	16.39	100.96	82.1	238.4	0.0	1,040.9
85.00		0.3125	31.326	30.760	3,738.0	16.26	100.24	82.3	235.0	0.0	94.1
90.00		0.3125	30.080	29.525	3,305.5	15.56	96.26	82.6	216.4	0.0	512.8
95.00		0.3125	28.835	28.290	2,907.7	14.86	92.27	82.6	198.6	0.0	491.8
100.0		0.3125	27.589	27.054	2,543.2	14.16	88.29	82.6	181.6	0.0	470.8
105.0		0.3125	26.344	25.819	2,210.4	13.45	84.30	82.6	165.3	0.0	449.8
110.0		0.3125	25.098	24.583	1,908.1	12.75	80.31	82.6	149.7	0.0	428.8
115.0		0.3125	23.853	23.348	1,634.6	12.05	76.33	82.6	135.0	0.0	407.8
115.0	Bot - Section 4	0.3125	23.842	23.337	1,632.4	12.04	76.29	82.6	134.9	0.0	3.5
118.5	Top - Section 3	0.1875	23.337	13.776	932.8	20.54	124.46	77.2	78.7	0.0	443.9
120.0		0.1875	22.982	13.565	890.5	20.20	122.57	77.6	76.3	0.0	66.3
125.0		0.1875	21.737	12.824	752.4	19.03	115.93	79.0	68.2	0.0	224.5
130.0		0.1875	20.491	12.083	629.3	17.86	109.29	80.4	60.5	0.0	211.9
135.0		0.1875	19.246	11.342	520.5	16.69	102.64	81.8	53.3	0.0	199.3
140.0		0.1875	18.000	10.600	424.9	15.52	96.00	82.6	46.5	0.0	186.7
											23,248.1

© 2007 - 2021 by ATC IP LLC. All rights reserved.

Load Case: 1.2D + 1.0W 116 mph with No Ice 22 Iterations

Gust Response Factor :1.10
Dead Load Factor :1.20
Wind Load Factor :1.00

Applied Segment Forces Summary

Seg Elev (ft)	Description	Shaft Forces Wind FX (lb)	Shaft Forces Dead Load (lb)	Discrete Forces Wind FX (lb)	Discrete Forces Torsion MY (lb-ft)	Discrete Forces Moment MZ (lb-ft)	Discrete Forces Dead Load (lb)	Linear Forces Wind FX (lb)	Linear Forces Dead Load (lb)	Sum of Forces Wind FX (lb)	Sum of Forces Dead Load (lb)	Sum of Forces Torsion MY (lb-ft)	Sum of Forces Moment MZ (lb)
0.00		193.6	0.0					0.0	0.0	193.6	0.0	0.0	0.0
5.00		382.5	1,616.0					0.0	284.6	382.5	1,900.7	0.0	0.0
10.00		372.9	1,575.7					0.0	284.6	372.9	1,860.3	0.0	0.0
15.00		363.4	1,535.3					0.0	284.6	363.4	1,820.0	0.0	0.0
20.00		353.8	1,495.0					0.0	284.6	353.8	1,779.6	0.0	0.0
25.00		344.2	1,454.6					0.0	284.6	344.2	1,739.2	0.0	0.0
30.00		338.6	1,414.2					0.0	284.6	338.6	1,698.9	0.0	0.0
35.00		337.6	1,373.9					0.0	284.6	337.6	1,658.5	0.0	0.0
39.94	Bot - Section 2	170.9	1,317.8					0.0	281.2	170.9	1,599.0	0.0	0.0
40.00		177.6	29.8					0.0	3.4	177.6	33.2	0.0	0.0
45.00		199.4	2,451.3					0.0	284.6	199.4	2,735.9	0.0	0.0
45.68	Top - Section 1	175.7	328.6					0.0	38.8	175.7	367.5	0.0	0.0
50.00		326.8	967.5					0.0	245.8	326.8	1,213.3	0.0	0.0
55.00		349.1	1,087.5					0.0	284.6	349.1	1,372.1	0.0	0.0
60.00		346.2	1,052.2					0.0	284.6	346.2	1,336.8	0.0	0.0
65.00		342.3	1,016.9					0.0	284.6	342.3	1,301.5	0.0	0.0
70.00		337.4	981.6					0.0	284.6	337.4	1,266.2	0.0	0.0
75.00		315.9	946.2					0.0	284.6	315.9	1,230.9	0.0	0.0
79.52	Bot - Section 3	164.6	824.2					0.0	257.1	164.6	1,081.3	0.0	0.0
80.00	Appurtenance(s)	151.0	150.1	2,182.5	0.0	0.0	3,758.5	0.0	27.6	2,333.6	3,936.2	0.0	0.0
84.10	Top - Section 2	164.1	1,249.0					0.0	222.1	164.1	1,471.2	0.0	0.0
85.00		189.5	112.9					0.0	48.5	189.5	161.4	0.0	0.0
90.00	Appurtenance(s)	316.7	615.4	1,802.9	0.0	3,305.4	3,491.2	0.0	270.6	2,119.6	4,377.2	0.0	0.0
95.00		308.3	590.2					0.0	245.7	308.3	835.9	0.0	0.0
100.00	Appurtenance(s)	299.4	565.0	1,829.0	0.0	0.0	2,110.3	0.0	245.7	2,128.4	2,921.0	0.0	0.0
105.00		289.9	539.7					0.0	186.7	289.9	726.4	0.0	0.0
110.00		279.9	514.5					0.0	186.7	279.9	701.2	0.0	0.0
115.00		138.6	489.3					0.0	186.7	138.6	676.0	0.0	0.0
115.04	Bot - Section 4	98.2	4.2					0.0	1.7	98.2	5.9	0.0	0.0
118.58	Top - Section 3	135.6	532.6					0.0	131.8	135.6	664.5	0.0	0.0
120.00	Appurtenance(s)	167.2	79.5	6,665.8	0.0	406.8	5,400.0	0.0	53.2	6,832.9	5,532.7	0.0	0.0
125.00		251.4	269.4					0.0	140.6	251.4	410.0	0.0	0.0
130.00	Appurtenance(s)	239.7	254.3	3,888.0	0.0	0.0	4,097.0	0.0	140.6	4,127.6	4,491.9	0.0	0.0
135.00		227.5	239.1					0.0	4.0	227.5	243.1	0.0	0.0
140.00	Appurtenance(s)	110.7	224.0	328.3	0.0	1,698.0	186.0	0.0	4.0	439.0	413.9	0.0	0.0
									Totals:	25,656.6	53,563.4	0.00	0.00

© 2007 - 2021 by ATC IP LLC. All rights reserved.

Load Case: 1.2D + 1.0W 116 mph with No Ice 22 Iterations

Gust Response Factor :1.10
Dead Load Factor :1.20
Wind Load Factor :1.00

Calculated Forces

Seg Elev (ft)	Pu FY (-) (kips)	Vu FX (-) (kips)	Tu MY (ft-kips)	Mu MZ (ft-kips)	Mu MX (ft-kips)	Resultant Moment (ft-kips)	phi Pn (kips)	phi Vn (kips)	phi Tn (ft-kips)	phi Mn (ft-kips)	Total Deflect (in)	Rotation (deg)	Ratio
0.00	-53.53	-25.53	0.00	-2,557.27	0.00	2,557.27	5,907.57	1,406.47	6,415.71	6,125.97	0.00	0.00	0.427
5.00	-51.57	-25.27	0.00	-2,429.63	0.00	2,429.63	5,798.21	1,371.78	6,103.18	5,862.82	0.07	-0.14	0.424
10.00	-49.65	-25.01	0.00	-2,303.29	0.00	2,303.29	5,660.34	1,337.09	5,798.46	5,577.23	0.29	-0.28	0.422
15.00	-47.77	-24.76	0.00	-2,178.23	0.00	2,178.23	5,513.49	1,302.40	5,501.54	5,290.14	0.66	-0.42	0.421
20.00	-45.93	-24.51	0.00	-2,054.44	0.00	2,054.44	5,366.64	1,267.71	5,212.42	5,010.64	1.18	-0.57	0.419
25.00	-44.13	-24.26	0.00	-1,931.90	0.00	1,931.90	5,219.79	1,233.02	4,931.11	4,738.72	1.86	-0.72	0.417
30.00	-42.37	-24.01	0.00	-1,810.59	0.00	1,810.59	5,072.94	1,198.33	4,657.60	4,474.39	2.69	-0.87	0.413
35.00	-40.65	-23.76	0.00	-1,690.52	0.00	1,690.52	4,926.09	1,163.64	4,391.89	4,217.65	3.69	-1.03	0.409
39.94	-39.03	-23.61	0.00	-1,573.15	0.00	1,573.15	4,781.00	1,129.37	4,137.04	3,971.43	4.84	-1.18	0.405
40.00	-38.96	-23.49	0.00	-1,571.73	0.00	1,571.73	4,779.24	1,128.95	4,133.99	3,968.49	4.85	-1.19	0.405
45.00	-36.20	-23.29	0.00	-1,454.29	0.00	1,454.29	4,632.39	1,094.26	3,883.89	3,726.92	6.18	-1.35	0.398
45.68	-35.80	-23.16	0.00	-1,438.40	0.00	1,438.40	4,132.52	976.19	3,532.28	3,395.76	6.37	-1.37	0.433
50.00	-34.53	-22.89	0.00	-1,338.42	0.00	1,338.42	4,021.56	949.97	3,345.17	3,214.89	7.68	-1.51	0.425
55.00	-33.10	-22.61	0.00	-1,223.96	0.00	1,223.96	3,893.07	919.62	3,134.86	3,011.63	9.36	-1.69	0.416
60.00	-31.71	-22.32	0.00	-1,110.92	0.00	1,110.92	3,764.57	889.27	2,931.37	2,815.01	11.22	-1.86	0.404
65.00	-30.35	-22.03	0.00	-999.32	0.00	999.32	3,636.08	858.92	2,734.71	2,625.02	13.27	-2.04	0.390
70.00	-29.03	-21.73	0.00	-889.20	0.00	889.20	3,507.58	828.56	2,544.88	2,441.67	15.50	-2.21	0.373
75.00	-27.75	-21.44	0.00	-780.56	0.00	780.56	3,379.09	798.21	2,361.87	2,264.96	17.91	-2.39	0.354
79.52	-26.65	-21.27	0.00	-683.73	0.00	683.73	3,263.04	770.80	2,202.46	2,111.07	20.24	-2.54	0.333
80.00	-22.79	-18.79	0.00	-673.43	0.00	673.43	3,250.59	767.86	2,185.70	2,094.89	20.50	-2.56	0.329
84.10	-21.31	-18.59	0.00	-596.30	0.00	596.30	2,289.85	543.73	1,534.16	1,468.59	22.76	-2.69	0.417
85.00	-21.12	-18.44	0.00	-579.64	0.00	579.64	2,277.59	539.84	1,512.32	1,450.19	23.27	-2.72	0.410
90.00	-16.79	-16.17	0.00	-484.13	0.00	484.13	2,193.55	518.16	1,393.30	1,340.03	26.23	-2.92	0.370
95.00	-15.92	-15.87	0.00	-403.31	0.00	403.31	2,101.77	496.48	1,279.16	1,229.68	29.39	-3.12	0.337
100.00	-13.09	-13.62	0.00	-323.98	0.00	323.98	2,009.99	474.80	1,169.90	1,124.07	32.75	-3.29	0.296
105.00	-12.34	-13.32	0.00	-255.91	0.00	255.91	1,918.21	453.12	1,065.52	1,023.20	36.29	-3.46	0.257
110.00	-11.63	-13.02	0.00	-189.33	0.00	189.33	1,826.43	431.44	966.01	927.08	39.99	-3.60	0.211
115.00	-10.95	-12.85	0.00	-124.23	0.00	124.23	1,734.65	409.76	871.38	835.69	43.82	-3.72	0.156
115.04	-10.94	-12.76	0.00	-123.66	0.00	123.66	1,733.83	409.57	870.56	834.90	43.86	-3.72	0.155
118.58	-10.28	-12.59	0.00	-78.61	0.00	78.61	957.76	241.77	505.54	456.09	46.63	-3.78	0.186
120.00	-5.21	-5.41	0.00	-60.27	0.00	60.27	947.87	238.07	490.16	444.40	47.76	-3.80	0.142
125.00	-4.81	-5.13	0.00	-33.24	0.00	33.24	911.98	225.06	438.06	404.02	51.78	-3.87	0.088
130.00	-0.61	-0.71	0.00	-7.58	0.00	7.58	874.25	212.05	388.89	364.73	55.86	-3.91	0.021
135.00	-0.38	-0.47	0.00	-4.03	0.00	4.03	834.68	199.04	342.65	326.66	59.96	-3.92	0.013
140.00	0.00	-0.44	0.00	-1.70	0.00	1.70	787.55	186.03	299.33	287.88	64.07	-3.93	0.006

© 2007 - 2021 by ATC IP LLC. All rights reserved.

Load Case: 0.9D + 1.0W 116 mph with No Ice (Reduced DL) 22 Iterations

Gust Response Factor :1.10
Dead Load Factor :0.90
Wind Load Factor :1.00

Applied Segment Forces Summary

Seg Elev (ft)	Description	Shaft Forces Wind FX (lb)	Shaft Forces Dead Load (lb)	Discrete Forces Wind FX (lb)	Discrete Forces Torsion MY (lb-ft)	Discrete Forces Moment MZ (lb-ft)	Discrete Forces Dead Load (lb)	Linear Forces Wind FX (lb)	Linear Forces Dead Load (lb)	Sum of Forces Wind FX (lb)	Sum of Forces Dead Load (lb)	Sum of Forces Torsion MY (lb-ft)	Sum of Forces Moment MZ (lb)
0.00		193.6	0.0					0.0	0.0	193.6	0.0	0.0	0.0
5.00		382.5	1,212.0					0.0	213.5	382.5	1,425.5	0.0	0.0
10.00		372.9	1,181.8					0.0	213.5	372.9	1,395.2	0.0	0.0
15.00		363.4	1,151.5					0.0	213.5	363.4	1,365.0	0.0	0.0
20.00		353.8	1,121.2					0.0	213.5	353.8	1,334.7	0.0	0.0
25.00		344.2	1,091.0					0.0	213.5	344.2	1,304.4	0.0	0.0
30.00		338.6	1,060.7					0.0	213.5	338.6	1,274.2	0.0	0.0
35.00		337.6	1,030.4					0.0	213.5	337.6	1,243.9	0.0	0.0
39.94	Bot - Section 2	170.9	988.4					0.0	210.9	170.9	1,199.3	0.0	0.0
40.00		177.6	22.4					0.0	2.6	177.6	24.9	0.0	0.0
45.00		199.4	1,838.5					0.0	213.5	199.4	2,052.0	0.0	0.0
45.68	Top - Section 1	175.7	246.5					0.0	29.1	175.7	275.6	0.0	0.0
50.00		326.8	725.6					0.0	184.3	326.8	910.0	0.0	0.0
55.00		349.1	815.6					0.0	213.5	349.1	1,029.1	0.0	0.0
60.00		346.2	789.1					0.0	213.5	346.2	1,002.6	0.0	0.0
65.00		342.3	762.7					0.0	213.5	342.3	976.1	0.0	0.0
70.00		337.4	736.2					0.0	213.5	337.4	949.6	0.0	0.0
75.00		315.9	709.7					0.0	213.5	315.9	923.2	0.0	0.0
79.52	Bot - Section 3	164.6	618.2					0.0	192.8	164.6	811.0	0.0	0.0
80.00	Appurtenance(s)	151.0	112.6	2,182.5	0.0	0.0	2,818.9	0.0	20.7	2,333.6	2,952.2	0.0	0.0
84.10	Top - Section 2	164.1	936.8					0.0	166.6	164.1	1,103.4	0.0	0.0
85.00		189.5	84.7					0.0	36.4	189.5	121.1	0.0	0.0
90.00	Appurtenance(s)	316.7	461.6	1,802.9	0.0	3,305.4	2,618.4	0.0	202.9	2,119.6	3,282.9	0.0	0.0
95.00		308.3	442.6					0.0	184.3	308.3	626.9	0.0	0.0
100.00	Appurtenance(s)	299.4	423.7	1,829.0	0.0	0.0	1,582.7	0.0	184.3	2,128.4	2,190.7	0.0	0.0
105.00		289.9	404.8					0.0	140.0	289.9	544.8	0.0	0.0
110.00		279.9	385.9					0.0	140.0	279.9	525.9	0.0	0.0
115.00		138.6	367.0					0.0	140.0	138.6	507.0	0.0	0.0
115.04	Bot - Section 4	98.2	3.2					0.0	1.2	98.2	4.4	0.0	0.0
118.58	Top - Section 3	135.6	399.5					0.0	98.9	135.6	498.3	0.0	0.0
120.00	Appurtenance(s)	167.2	59.6	6,665.8	0.0	406.8	4,050.0	0.0	39.9	6,832.9	4,149.5	0.0	0.0
125.00		251.4	202.0					0.0	105.5	251.4	307.5	0.0	0.0
130.00	Appurtenance(s)	239.7	190.7	3,888.0	0.0	0.0	3,072.8	0.0	105.5	4,127.6	3,369.0	0.0	0.0
135.00		227.5	179.3					0.0	3.0	227.5	182.3	0.0	0.0
140.00	Appurtenance(s)	110.7	168.0	328.3	0.0	1,698.0	139.5	0.0	3.0	439.0	310.5	0.0	0.0
									Totals:	25,656.6	40,172.5	0.00	0.00

© 2007 - 2021 by ATC IP LLC. All rights reserved.

Load Case: 0.9D + 1.0W 116 mph with No Ice (Reduced DL) 22 Iterations

Gust Response Factor :1.10
Dead Load Factor :0.90
Wind Load Factor :1.00

Calculated Forces

Seg Elev (ft)	Pu FY (-) (kips)	Vu FX (-) (kips)	Tu MY (ft-kips)	Mu MZ (ft-kips)	Mu MX (ft-kips)	Resultant Moment (ft-kips)	phi Pn (kips)	phi Vn (kips)	phi Tn (ft-kips)	phi Mn (ft-kips)	Total Deflect (in)	Rotation (deg)	Ratio
0.00	-40.14	-25.51	0.00	-2,531.16	0.00	2,531.16	5,907.57	1,406.47	6,415.71	6,125.97	0.00	0.00	0.420
5.00	-38.66	-25.22	0.00	-2,403.61	0.00	2,403.61	5,798.21	1,371.78	6,103.18	5,862.82	0.07	-0.14	0.417
10.00	-37.20	-24.93	0.00	-2,277.51	0.00	2,277.51	5,660.34	1,337.09	5,798.46	5,577.23	0.29	-0.27	0.415
15.00	-35.78	-24.65	0.00	-2,152.84	0.00	2,152.84	5,513.49	1,302.40	5,501.54	5,290.14	0.65	-0.42	0.414
20.00	-34.38	-24.37	0.00	-2,029.59	0.00	2,029.59	5,366.64	1,267.71	5,212.42	5,010.64	1.17	-0.56	0.412
25.00	-33.02	-24.10	0.00	-1,907.72	0.00	1,907.72	5,219.79	1,233.02	4,931.11	4,738.72	1.84	-0.71	0.409
30.00	-31.69	-23.83	0.00	-1,787.21	0.00	1,787.21	5,072.94	1,198.33	4,657.60	4,474.39	2.66	-0.86	0.406
35.00	-30.39	-23.55	0.00	-1,668.06	0.00	1,668.06	4,926.09	1,163.64	4,391.89	4,217.65	3.65	-1.02	0.402
39.94	-29.16	-23.40	0.00	-1,551.70	0.00	1,551.70	4,781.00	1,129.37	4,137.04	3,971.43	4.78	-1.17	0.397
40.00	-29.10	-23.26	0.00	-1,550.30	0.00	1,550.30	4,779.24	1,128.95	4,133.99	3,968.49	4.79	-1.17	0.397
45.00	-27.02	-23.06	0.00	-1,433.98	0.00	1,433.98	4,632.39	1,094.26	3,883.89	3,726.92	6.11	-1.33	0.391
45.68	-26.72	-22.92	0.00	-1,418.25	0.00	1,418.25	4,132.52	976.19	3,532.28	3,395.76	6.30	-1.35	0.425
50.00	-25.75	-22.64	0.00	-1,319.30	0.00	1,319.30	4,021.56	949.97	3,345.17	3,214.89	7.59	-1.49	0.417
55.00	-24.67	-22.34	0.00	-1,206.10	0.00	1,206.10	3,893.07	919.62	3,134.86	3,011.63	9.25	-1.67	0.407
60.00	-23.61	-22.03	0.00	-1,094.42	0.00	1,094.42	3,764.57	889.27	2,931.37	2,815.01	11.08	-1.84	0.396
65.00	-22.58	-21.72	0.00	-984.27	0.00	984.27	3,636.08	858.92	2,734.71	2,625.02	13.10	-2.01	0.382
70.00	-21.58	-21.42	0.00	-875.65	0.00	875.65	3,507.58	828.56	2,544.88	2,441.67	15.31	-2.19	0.365
75.00	-20.61	-21.12	0.00	-768.56	0.00	768.56	3,379.09	798.21	2,361.87	2,264.96	17.69	-2.36	0.346
79.52	-19.78	-20.95	0.00	-673.18	0.00	673.18	3,263.04	770.80	2,202.46	2,111.07	19.99	-2.51	0.326
80.00	-16.90	-18.51	0.00	-663.03	0.00	663.03	3,250.59	767.86	2,185.70	2,094.89	20.24	-2.52	0.322
84.10	-15.78	-18.32	0.00	-587.05	0.00	587.05	2,289.85	543.73	1,534.16	1,468.59	22.47	-2.65	0.408
85.00	-15.63	-18.16	0.00	-570.64	0.00	570.64	2,277.59	539.84	1,512.32	1,450.19	22.97	-2.68	0.401
90.00	-12.40	-15.92	0.00	-476.54	0.00	476.54	2,193.55	518.16	1,393.30	1,340.03	25.89	-2.88	0.362
95.00	-11.75	-15.62	0.00	-396.92	0.00	396.92	2,101.77	496.48	1,279.16	1,229.68	29.01	-3.07	0.329
100.00	-9.64	-13.40	0.00	-318.82	0.00	318.82	2,009.99	474.80	1,169.90	1,124.07	32.33	-3.25	0.289
105.00	-9.07	-13.11	0.00	-251.81	0.00	251.81	1,918.21	453.12	1,065.52	1,023.20	35.82	-3.41	0.252
110.00	-8.54	-12.81	0.00	-186.28	0.00	186.28	1,826.43	431.44	966.01	927.08	39.46	-3.55	0.206
115.00	-8.03	-12.65	0.00	-122.21	0.00	122.21	1,734.65	409.76	871.38	835.69	43.24	-3.66	0.152
115.04	-8.02	-12.56	0.00	-121.65	0.00	121.65	1,733.83	409.57	870.56	834.90	43.27	-3.66	0.151
118.58	-7.53	-12.40	0.00	-77.30	0.00	77.30	957.76	241.77	505.54	456.09	46.01	-3.73	0.180
120.00	-3.83	-5.31	0.00	-59.24	0.00	59.24	947.87	238.07	490.16	444.40	47.12	-3.74	0.138
125.00	-3.53	-5.04	0.00	-32.69	0.00	32.69	911.98	225.06	438.06	404.02	51.08	-3.82	0.085
130.00	-0.45	-0.70	0.00	-7.48	0.00	7.48	874.25	212.05	388.89	364.73	55.10	-3.86	0.021
135.00	-0.28	-0.46	0.00	-3.99	0.00	3.99	834.68	199.04	342.65	326.66	59.15	-3.87	0.013
140.00	0.00	-0.44	0.00	-1.70	0.00	1.70	787.55	186.03	299.33	287.88	63.20	-3.88	0.006

© 2007 - 2021 by ATC IP LLC. All rights reserved.

Load Case: 1.2D + 1.0Di + 1.0Wi 50 mph with 1.50 in Radial Ice 21 Iterations

Gust Response Factor :1.10 Ice Dead Load Factor :1.00
Dead Load Factor :1.20 Ice Importance Factor :1.00
Wind Load Factor :1.00

Applied Segment Forces Summary

		Shaft Forces		Discrete Forces				Linear Forces		Sum of Forces			
Seg Elev (ft)	Description	Wind FX (lb)	Dead Load (lb)	Wind FX (lb)	Torsion MY (lb-ft)	Moment MZ (lb-ft)	Dead Load (lb)	Wind FX (lb)	Dead Load (lb)	Wind FX (lb)	Dead Load (lb)	Torsion MY (lb-ft)	Moment MZ (lb)
0.00		61.8	0.0					0.0	0.0	61.8	0.0	0.0	0.0
5.00		122.5	1,985.6					0.0	380.0	122.5	2,365.7	0.0	0.0
10.00		120.0	1,979.2					0.0	389.6	120.0	2,368.8	0.0	0.0
15.00		117.4	1,949.9					0.0	394.5	117.4	2,344.4	0.0	0.0
20.00		114.6	1,913.2					0.0	397.9	114.6	2,311.1	0.0	0.0
25.00		111.9	1,872.5					0.0	400.6	111.9	2,273.1	0.0	0.0
30.00		110.4	1,829.4					0.0	402.8	110.4	2,232.2	0.0	0.0
35.00		110.4	1,784.6					0.0	404.7	110.4	2,189.2	0.0	0.0
39.94	Bot - Section 2	55.9	1,718.0					0.0	401.4	55.9	2,119.4	0.0	0.0
40.00		58.2	34.8					0.0	4.9	58.2	39.7	0.0	0.0
45.00		65.4	2,857.9					0.0	407.7	65.4	3,265.7	0.0	0.0
45.68	Top - Section 1	57.8	384.3					0.0	55.7	57.8	440.0	0.0	0.0
50.00		107.6	1,312.5					0.0	353.3	107.6	1,665.8	0.0	0.0
55.00		115.3	1,478.6					0.0	410.2	115.3	1,888.9	0.0	0.0
60.00		114.7	1,434.6					0.0	411.3	114.7	1,846.0	0.0	0.0
65.00		113.8	1,390.2					0.0	412.4	113.8	1,802.5	0.0	0.0
70.00		112.6	1,345.3					0.0	413.3	112.6	1,758.6	0.0	0.0
75.00		105.8	1,300.1					0.0	414.2	105.8	1,714.3	0.0	0.0
79.52	Bot - Section 3	55.2	1,135.5					0.0	374.8	55.2	1,510.3	0.0	0.0
80.00	Appurtenance(s)	50.8	184.1	565.5	0.0	0.0	6,124.0	0.0	40.2	616.3	6,348.4	0.0	0.0
84.10	Top - Section 2	55.2	1,529.4					0.0	329.8	55.2	1,859.1	0.0	0.0
85.00		64.0	173.9					0.0	72.0	64.0	245.9	0.0	0.0
90.00	Appurtenance(s)	107.2	944.0	543.5	0.0	836.1	5,802.2	0.0	402.6	650.7	7,148.8	0.0	0.0
95.00		104.9	907.7					0.0	378.4	104.9	1,286.1	0.0	0.0
100.00	Appurtenance(s)	102.4	871.2	518.4	0.0	0.0	3,440.4	0.0	379.1	620.8	4,690.7	0.0	0.0
105.00		99.7	834.5					0.0	320.7	99.7	1,155.2	0.0	0.0
110.00		96.8	797.6					0.0	321.3	96.8	1,118.9	0.0	0.0
115.00		48.1	760.5					0.0	321.9	48.1	1,082.4	0.0	0.0
115.04	Bot - Section 4	33.6	6.6					0.0	2.9	33.6	9.5	0.0	0.0
118.58	Top - Section 3	46.4	721.1					0.0	227.7	46.4	948.8	0.0	0.0
120.00	Appurtenance(s)	58.4	154.6	1,902.9	0.0	94.2	9,465.7	0.0	91.9	1,961.3	9,712.2	0.0	0.0
125.00		88.7	520.4					0.0	140.6	88.7	661.0	0.0	0.0
130.00	Appurtenance(s)	85.3	492.9	1,013.5	0.0	0.0	7,552.3	0.0	140.6	1,098.8	8,185.9	0.0	0.0
135.00		81.8	465.3					0.0	4.0	81.8	469.3	0.0	0.0
140.00	Appurtenance(s)	40.0	437.6	118.5	0.0	686.2	342.6	0.0	4.0	158.5	784.2	0.0	0.0
									Totals:	7,656.80	79,841.9	0.00	0.00

© 2007 - 2021 by ATC IP LLC. All rights reserved.

Load Case: 1.2D + 1.0Di + 1.0Wi 50 mph with 1.50 in Radial Ice 21 Iterations

Gust Response Factor :1.10 Ice Dead Load Factor 1.00
Dead Load Factor :1.20 Ice Importance Factor :1.00
Wind Load Factor :1.00

Calculated Forces

Seg Elev (ft)	Pu FY (-) (kips)	Vu FX (-) (kips)	Tu MY (ft-kips)	Mu MZ (ft-kips)	Mu MX (ft-kips)	Resultant Moment (ft-kips)	phi Pn (kips)	phi Vn (kips)	phi Tn (ft-kips)	phi Mn (ft-kips)	Total Deflect (in)	Rotation (deg)	Ratio
0.00	-79.84	-7.62	0.00	-772.48	0.00	772.48	5,907.57	1,406.47	6,415.71	6,125.97	0.00	0.00	0.140
5.00	-77.47	-7.56	0.00	-734.36	0.00	734.36	5,798.21	1,371.78	6,103.18	5,862.82	0.02	-0.04	0.139
10.00	-75.09	-7.49	0.00	-696.58	0.00	696.58	5,660.34	1,337.09	5,798.46	5,577.23	0.09	-0.08	0.138
15.00	-72.74	-7.43	0.00	-659.12	0.00	659.12	5,513.49	1,302.40	5,501.54	5,290.14	0.20	-0.13	0.138
20.00	-70.43	-7.36	0.00	-622.00	0.00	622.00	5,366.64	1,267.71	5,212.42	5,010.64	0.36	-0.17	0.137
25.00	-68.15	-7.29	0.00	-585.20	0.00	585.20	5,219.79	1,233.02	4,931.11	4,738.72	0.56	-0.22	0.137
30.00	-65.91	-7.23	0.00	-548.73	0.00	548.73	5,072.94	1,198.33	4,657.60	4,474.39	0.81	-0.26	0.136
35.00	-63.72	-7.16	0.00	-512.58	0.00	512.58	4,926.09	1,163.64	4,391.89	4,217.65	1.12	-0.31	0.135
39.94	-61.59	-7.12	0.00	-477.21	0.00	477.21	4,781.00	1,129.37	4,137.04	3,971.43	1.46	-0.36	0.133
40.00	-61.55	-7.09	0.00	-476.79	0.00	476.79	4,779.24	1,128.95	4,133.99	3,968.49	1.47	-0.36	0.133
45.00	-58.28	-7.03	0.00	-441.36	0.00	441.36	4,632.39	1,094.26	3,883.89	3,726.92	1.87	-0.41	0.131
45.68	-57.84	-6.99	0.00	-436.56	0.00	436.56	4,132.52	976.19	3,532.28	3,395.76	1.93	-0.41	0.143
50.00	-56.17	-6.92	0.00	-406.38	0.00	406.38	4,021.56	949.97	3,345.17	3,214.89	2.32	-0.46	0.140
55.00	-54.28	-6.84	0.00	-371.79	0.00	371.79	3,893.07	919.62	3,134.86	3,011.63	2.83	-0.51	0.137
60.00	-52.42	-6.75	0.00	-337.60	0.00	337.60	3,764.57	889.27	2,931.37	2,815.01	3.40	-0.56	0.134
65.00	-50.62	-6.67	0.00	-303.83	0.00	303.83	3,636.08	858.92	2,734.71	2,625.02	4.02	-0.62	0.130
70.00	-48.85	-6.58	0.00	-270.48	0.00	270.48	3,507.58	828.56	2,544.88	2,441.67	4.69	-0.67	0.125
75.00	-47.14	-6.50	0.00	-237.57	0.00	237.57	3,379.09	798.21	2,361.87	2,264.96	5.43	-0.72	0.119
79.52	-45.62	-6.44	0.00	-208.24	0.00	208.24	3,263.04	770.80	2,202.46	2,111.07	6.13	-0.77	0.113
80.00	-39.28	-5.76	0.00	-205.12	0.00	205.12	3,250.59	767.86	2,185.70	2,094.89	6.21	-0.78	0.110
84.10	-37.42	-5.69	0.00	-181.49	0.00	181.49	2,289.85	543.73	1,534.16	1,468.59	6.90	-0.82	0.140
85.00	-37.17	-5.65	0.00	-176.40	0.00	176.40	2,277.59	539.84	1,512.32	1,450.19	7.05	-0.83	0.138
90.00	-30.03	-4.92	0.00	-147.33	0.00	147.33	2,193.55	518.16	1,393.30	1,340.03	7.95	-0.89	0.124
95.00	-28.74	-4.82	0.00	-122.72	0.00	122.72	2,101.77	496.48	1,279.16	1,229.68	8.91	-0.95	0.114
100.00	-24.06	-4.14	0.00	-98.61	0.00	98.61	2,009.99	474.80	1,169.90	1,124.07	9.93	-1.00	0.100
105.00	-22.90	-4.04	0.00	-77.89	0.00	77.89	1,918.21	453.12	1,065.52	1,023.20	11.01	-1.05	0.088
110.00	-21.78	-3.94	0.00	-57.67	0.00	57.67	1,826.43	431.44	966.01	927.08	12.13	-1.09	0.074
115.00	-20.70	-3.88	0.00	-37.97	0.00	37.97	1,734.65	409.76	871.38	835.69	13.29	-1.13	0.057
115.04	-20.69	-3.85	0.00	-37.80	0.00	37.80	1,733.83	409.57	870.56	834.90	13.31	-1.13	0.057
118.58	-19.74	-3.79	0.00	-24.21	0.00	24.21	957.76	241.77	505.54	456.09	14.15	-1.15	0.074
120.00	-10.07	-1.63	0.00	-18.73	0.00	18.73	947.87	238.07	490.16	444.40	14.49	-1.15	0.053
125.00	-9.41	-1.53	0.00	-10.56	0.00	10.56	911.98	225.06	438.06	404.02	15.71	-1.18	0.037
130.00	-1.25	-0.27	0.00	-2.89	0.00	2.89	874.25	212.05	388.89	364.73	16.96	-1.19	0.009
135.00	-0.78	-0.17	0.00	-1.56	0.00	1.56	834.68	199.04	342.65	326.66	18.20	-1.20	0.006
140.00	0.00	-0.16	0.00	-0.69	0.00	0.69	787.55	186.03	299.33	287.88	19.46	-1.20	0.002

© 2007 - 2021 by ATC IP LLC. All rights reserved.

Load Case: 1.0D + 1.0W Serviceability 60 mph 21 Iterations

Gust Response Factor :1.10
Dead Load Factor :1.00
Wind Load Factor :1.00

Applied Segment Forces Summary

Seg Elev (ft)	Description	Shaft Forces Wind FX (lb)	Shaft Forces Dead Load (lb)	Discrete Forces Wind FX (lb)	Discrete Forces Torsion MY (lb-ft)	Discrete Forces Moment MZ (lb-ft)	Discrete Forces Dead Load (lb)	Linear Forces Wind FX (lb)	Linear Forces Dead Load (lb)	Sum of Forces Wind FX (lb)	Sum of Forces Dead Load (lb)	Sum of Forces Torsion MY (lb-ft)	Sum of Forces Moment MZ (lb)
0.00		46.4	0.0					0.0	0.0	46.4	0.0	0.0	0.0
5.00		91.6	1,346.7					0.0	237.2	91.6	1,583.9	0.0	0.0
10.00		89.3	1,313.1					0.0	237.2	89.3	1,550.3	0.0	0.0
15.00		87.0	1,279.4					0.0	237.2	87.0	1,516.6	0.0	0.0
20.00		84.7	1,245.8					0.0	237.2	84.7	1,483.0	0.0	0.0
25.00		82.4	1,212.2					0.0	237.2	82.4	1,449.4	0.0	0.0
30.00		81.0	1,178.5					0.0	237.2	81.0	1,415.7	0.0	0.0
35.00		80.8	1,144.9					0.0	237.2	80.8	1,382.1	0.0	0.0
39.94	Bot - Section 2	40.9	1,098.2					0.0	234.4	40.9	1,332.5	0.0	0.0
40.00		42.5	24.9					0.0	2.8	42.5	27.7	0.0	0.0
45.00		47.7	2,042.7					0.0	237.2	47.7	2,279.9	0.0	0.0
45.68	Top - Section 1	42.0	273.9					0.0	32.4	42.0	306.2	0.0	0.0
50.00		78.2	806.3					0.0	204.8	78.2	1,011.1	0.0	0.0
55.00		83.6	906.2					0.0	237.2	83.6	1,143.4	0.0	0.0
60.00		82.9	876.8					0.0	237.2	82.9	1,114.0	0.0	0.0
65.00		81.9	847.4					0.0	237.2	81.9	1,084.6	0.0	0.0
70.00		80.8	818.0					0.0	237.2	80.8	1,055.2	0.0	0.0
75.00		75.6	788.5					0.0	237.2	75.6	1,025.7	0.0	0.0
79.52	Bot - Section 3	39.4	686.9					0.0	214.2	39.4	901.1	0.0	0.0
80.00	Appurtenance(s)	36.2	125.1	522.5	0.0	0.0	3,132.1	0.0	23.0	558.6	3,280.2	0.0	0.0
84.10	Top - Section 2	39.3	1,040.9					0.0	185.1	39.3	1,226.0	0.0	0.0
85.00		45.4	94.1					0.0	40.4	45.4	134.5	0.0	0.0
90.00	Appurtenance(s)	75.8	512.8	431.6	0.0	791.2	2,909.3	0.0	225.5	507.4	3,647.6	0.0	0.0
95.00		73.8	491.8					0.0	204.8	73.8	696.6	0.0	0.0
100.00	Appurtenance(s)	71.7	470.8	437.8	0.0	0.0	1,758.6	0.0	204.8	509.5	2,434.2	0.0	0.0
105.00		69.4	449.8					0.0	155.6	69.4	605.3	0.0	0.0
110.00		67.0	428.8					0.0	155.6	67.0	584.3	0.0	0.0
115.00		33.2	407.8					0.0	155.6	33.2	563.3	0.0	0.0
115.04	Bot - Section 4	23.5	3.5					0.0	1.4	23.5	4.9	0.0	0.0
118.58	Top - Section 3	32.4	443.9					0.0	109.9	32.4	553.7	0.0	0.0
120.00	Appurtenance(s)	40.0	66.3	1,595.6	0.0	97.4	4,500.0	0.0	44.3	1,635.6	4,610.6	0.0	0.0
125.00		60.2	224.5					0.0	117.2	60.2	341.7	0.0	0.0
130.00	Appurtenance(s)	57.4	211.9	930.7	0.0	0.0	3,414.2	0.0	117.2	988.1	3,743.3	0.0	0.0
135.00		54.5	199.3					0.0	3.3	54.5	202.6	0.0	0.0
140.00	Appurtenance(s)	26.5	186.7	78.6	0.0	406.5	155.0	0.0	3.3	105.1	345.0	0.0	0.0
									Totals:	6,141.59	44,636.1	0.00	0.00

© 2007 - 2021 by ATC IP LLC. All rights reserved.

Load Case: 1.0D + 1.0W Serviceability 60 mph 21 Iterations

Gust Response Factor :1.10
Dead Load Factor :1.00
Wind Load Factor :1.00

Calculated Forces

Seg Elev (ft)	Pu FY (-) (kips)	Vu FX (-) (kips)	Tu MY (ft-kips)	Mu MZ (ft-kips)	Mu MX (ft-kips)	Resultant Moment (ft-kips)	phi Pn (kips)	phi Vn (kips)	phi Tn (ft-kips)	phi Mn (ft-kips)	Total Deflect (in)	Rotation (deg)	Ratio
0.00	-44.63	-6.11	0.00	-608.30	0.00	608.30	5,907.57	1,406.47	6,415.71	6,125.97	0.00	0.00	0.107
5.00	-43.05	-6.04	0.00	-577.76	0.00	577.76	5,798.21	1,371.78	6,103.18	5,862.82	0.02	-0.03	0.106
10.00	-41.49	-5.97	0.00	-547.56	0.00	547.56	5,660.34	1,337.09	5,798.46	5,577.23	0.07	-0.07	0.106
15.00	-39.97	-5.91	0.00	-517.69	0.00	517.69	5,513.49	1,302.40	5,501.54	5,290.14	0.16	-0.10	0.105
20.00	-38.49	-5.85	0.00	-488.14	0.00	488.14	5,366.64	1,267.71	5,212.42	5,010.64	0.28	-0.14	0.105
25.00	-37.03	-5.78	0.00	-458.92	0.00	458.92	5,219.79	1,233.02	4,931.11	4,738.72	0.44	-0.17	0.104
30.00	-35.62	-5.72	0.00	-430.00	0.00	430.00	5,072.94	1,198.33	4,657.60	4,474.39	0.64	-0.21	0.103
35.00	-34.23	-5.66	0.00	-401.41	0.00	401.41	4,926.09	1,163.64	4,391.89	4,217.65	0.88	-0.24	0.102
39.94	-32.90	-5.62	0.00	-373.47	0.00	373.47	4,781.00	1,129.37	4,137.04	3,971.43	1.15	-0.28	0.101
40.00	-32.87	-5.59	0.00	-373.13	0.00	373.13	4,779.24	1,128.95	4,133.99	3,968.49	1.15	-0.28	0.101
45.00	-30.58	-5.54	0.00	-345.19	0.00	345.19	4,632.39	1,094.26	3,883.89	3,726.92	1.47	-0.32	0.099
45.68	-30.28	-5.51	0.00	-341.42	0.00	341.42	4,132.52	976.19	3,532.28	3,395.76	1.51	-0.33	0.108
50.00	-29.26	-5.44	0.00	-317.64	0.00	317.64	4,021.56	949.97	3,345.17	3,214.89	1.82	-0.36	0.106
55.00	-28.12	-5.37	0.00	-290.44	0.00	290.44	3,893.07	919.62	3,134.86	3,011.63	2.22	-0.40	0.104
60.00	-27.00	-5.30	0.00	-263.58	0.00	263.58	3,764.57	889.27	2,931.37	2,815.01	2.67	-0.44	0.101
65.00	-25.91	-5.23	0.00	-237.09	0.00	237.09	3,636.08	858.92	2,734.71	2,625.02	3.15	-0.48	0.097
70.00	-24.85	-5.16	0.00	-210.95	0.00	210.95	3,507.58	828.56	2,544.88	2,441.67	3.68	-0.53	0.094
75.00	-23.82	-5.09	0.00	-185.18	0.00	185.18	3,379.09	798.21	2,361.87	2,264.96	4.26	-0.57	0.089
79.52	-22.92	-5.05	0.00	-162.21	0.00	162.21	3,263.04	770.80	2,202.46	2,111.07	4.81	-0.60	0.084
80.00	-19.65	-4.46	0.00	-159.77	0.00	159.77	3,250.59	767.86	2,185.70	2,094.89	4.87	-0.61	0.082
84.10	-18.42	-4.41	0.00	-141.47	0.00	141.47	2,289.85	543.73	1,534.16	1,468.59	5.41	-0.64	0.104
85.00	-18.28	-4.37	0.00	-137.52	0.00	137.52	2,277.59	539.84	1,512.32	1,450.19	5.53	-0.65	0.103
90.00	-14.64	-3.84	0.00	-114.86	0.00	114.86	2,193.55	518.16	1,393.30	1,340.03	6.23	-0.69	0.092
95.00	-13.94	-3.76	0.00	-95.68	0.00	95.68	2,101.77	496.48	1,279.16	1,229.68	6.98	-0.74	0.085
100.00	-11.51	-3.23	0.00	-76.86	0.00	76.86	2,009.99	474.80	1,169.90	1,124.07	7.78	-0.78	0.074
105.00	-10.90	-3.16	0.00	-60.71	0.00	60.71	1,918.21	453.12	1,065.52	1,023.20	8.62	-0.82	0.065
110.00	-10.32	-3.09	0.00	-44.92	0.00	44.92	1,826.43	431.44	966.01	927.08	9.50	-0.85	0.054
115.00	-9.76	-3.05	0.00	-29.47	0.00	29.47	1,734.65	409.76	871.38	835.69	10.41	-0.88	0.041
115.04	-9.75	-3.03	0.00	-29.34	0.00	29.34	1,733.83	409.57	870.56	834.90	10.42	-0.88	0.041
118.58	-9.20	-2.99	0.00	-18.64	0.00	18.64	957.76	241.77	505.54	456.09	11.08	-0.90	0.051
120.00	-4.61	-1.28	0.00	-14.29	0.00	14.29	947.87	238.07	490.16	444.40	11.35	-0.90	0.037
125.00	-4.27	-1.22	0.00	-7.88	0.00	7.88	911.98	225.06	438.06	404.02	12.30	-0.92	0.024
130.00	-0.54	-0.17	0.00	-1.80	0.00	1.80	874.25	212.05	388.89	364.73	13.27	-0.93	0.006
135.00	-0.34	-0.11	0.00	-0.96	0.00	0.96	834.68	199.04	342.65	326.66	14.24	-0.93	0.003
140.00	0.00	-0.11	0.00	-0.41	0.00	0.41	787.55	186.03	299.33	287.88	15.22	-0.93	0.001

© 2007 - 2021 by ATC IP LLC. All rights reserved.

Equivalent Lateral Forces Method Analysis

Spectral Response Acceleration for Short Period (S_s):	0.18	
Spectral Response Acceleration at 1.0 Second Period (S_1):	0.05	
Long-Period Transition Period (T_L):	6	
Importance Factor (I_E):	1.00	
Site Coefficient F_a:	1.60	
Site Coeffiecient F_v:	2.40	
Response Modification Coefficient (R):	1.50	
Design Spectral Response Acceleration at Short Period (S_{ds}):	0.19	
Design Spectral Response Acceleration at 1.0 Second Period (S_{d1}):	0.09	
Seismic Response Coefficient (C_s):	0.03	
Upper Limit C_s	0.03	
Lower Limit C_s	0.03	
Period based on Rayleigh Method (sec):	2.05	
Redundancy Factor (p):	1.00	
Seismic Force Distribution Exponent (k):	1.77	
Total Unfactored Dead Load:	44.64	k
Seismic Base Shear (E):	1.34	k

Load Case 1.2D + 1.0Ev + 1.0Eh Seismic

Segment	Height Above Base (ft)	Weight (lb)	W_z (lb-ft)	C_{vx}	Horizontal Force (lb)	Vertical Force (lb)
34	137.50	190	1,182	0.011	15	235
33	132.50	203	1,180	0.011	15	251
32	127.50	329	1,790	0.017	22	407
31	122.50	342	1,732	0.016	22	423
30	119.29	111	535	0.005	7	137
29	116.81	554	2,579	0.024	32	685
28	115.02	5	22	0.000	0	6
27	112.50	563	2,454	0.023	31	697
26	107.50	584	2,349	0.022	29	723
25	102.50	605	2,236	0.021	28	749
24	97.50	676	2,284	0.021	29	836
23	92.50	697	2,145	0.020	27	862
22	87.50	738	2,060	0.019	26	914
21	84.55	135	353	0.003	4	166
20	82.05	1,226	3,051	0.029	38	1,517
19	79.76	148	350	0.003	4	183
18	77.26	901	2,016	0.019	25	1,115
17	72.50	1,026	2,050	0.019	26	1,270
16	67.50	1,055	1,857	0.017	23	1,306
15	62.50	1,085	1,666	0.016	21	1,342
14	57.50	1,114	1,476	0.014	18	1,379
13	52.50	1,143	1,289	0.012	16	1,415
12	47.84	1,011	966	0.009	12	1,251
11	45.34	306	266	0.002	3	379
10	42.50	2,280	1,766	0.017	22	2,822

 © 2007 - 2021 by ATC IP LLC. All rights reserved.

9	39.97	28	19	0.000	0	34
8	37.47	1,333	826	0.008	10	1,649
7	32.50	1,382	665	0.006	8	1,711
6	27.50	1,416	507	0.005	6	1,752
5	22.50	1,449	363	0.003	5	1,794
4	17.50	1,483	238	0.002	3	1,836
3	12.50	1,517	134	0.001	2	1,877
2	7.50	1,550	55	0.001	1	1,919
1	2.50	1,584	8	0.000	0	1,960
Stand-Off	140.00	100	642	0.006	8	124
Generic 18' Omni	140.00	55	353	0.003	4	68
CCI DTMABP7819VG12A	130.00	115	649	0.006	8	143
Raycap DC6-48-60-0-8	130.00	98	554	0.005	7	122
Ericsson RRUS 8843 B	130.00	216	1,216	0.011	15	267
Ericsson RRUS 4449 B	130.00	213	1,199	0.011	15	264
Ericsson RRUS 32 (50	130.00	152	858	0.008	11	189
Kathrein Scala 800-1	130.00	132	745	0.007	9	164
Andrew SBNHH-1D65A (	130.00	34	189	0.002	2	41
CCI HPA-65R-BUU-H8	130.00	136	766	0.007	10	168
Kathrein Scala 84037	130.00	317	1,787	0.017	22	393
Flat Platform w/ Han	130.00	2,000	11,263	0.105	141	2,476
Samsung Outdoor CBRS	120.00	13	64	0.001	1	16
Generic GPS	120.00	10	49	0.000	1	12
Samsung RT4401-48A	120.00	56	273	0.003	3	69
Samsung B2/B66A RRH-	120.00	253	1,237	0.012	15	313
Samsung B5/B13 RRH-B	120.00	211	1,030	0.010	13	261
Samsung B5/B13 RRH-B	120.00	211	1,030	0.010	13	261
Raycap RCMDC-6627-PF	120.00	32	156	0.001	2	40
Samsung MT6407-77A	120.00	245	1,196	0.011	15	303
Commscope SBNHH-1D65	120.00	304	1,486	0.014	19	377
Andrew LNX-6514DS-A1	120.00	116	569	0.005	7	144
Flat Platform w/ Han	120.00	2,000	9,772	0.091	122	2,476
VZW Unused Reserve (	120.00	1,049	5,123	0.048	64	1,298
Commscope ATSBT-TOP-	100.00	5	19	0.000	0	7
RFS ATMA4P4DBP-1A20	100.00	48	169	0.002	2	59
RFS APXV18-209014-C-	100.00	56	198	0.002	2	69
Andrew LNX-6515DS-A1	100.00	149	528	0.005	7	185
Flat Low Profile Pla	100.00	1,500	5,303	0.050	66	1,857
PCTEL GPS-TMG-HR-26N	90.00	1	2	0.000	0	1
Generic 12" x 12" Ju	90.00	30	88	0.001	1	37
Alcatel-Lucent RRH2x	90.00	159	465	0.004	6	196
Alcatel-Lucent 800 M	90.00	159	466	0.004	6	197
Alcatel-Lucent 1900	90.00	180	528	0.005	7	223
Alcatel-Lucent TD-RR	90.00	210	616	0.006	8	260
RFS APXVSPP18-C-A20	90.00	171	501	0.005	6	212
Generic Round Platfo	90.00	2,000	5,865	0.055	73	2,476
Commscope RDIDC-9181	80.00	22	52	0.000	1	27
Fujitsu TA08025-B605	80.00	225	535	0.005	7	278
Fujitsu TA08025-B604	80.00	192	456	0.004	6	237
JMA Wireless MX08FRO	80.00	193	460	0.004	6	240
Generic Flat Platfor	80.00	2,500	5,949	0.056	75	3,094
		44,636	106,879	1.000	1,339	55,249

Load Case 0.9D - 1.0Ev + 1.0Eh Seismic (Reduced DL)

Segment	Height Above Base (ft)	Weight (lb)	W_z (lb-ft)	C_{vx}	Horizontal Force (lb)	Vertical Force (lb)
34	137.50	190	1,182	0.011	15	164
33	132.50	203	1,180	0.011	15	175
32	127.50	329	1,790	0.017	22	284
31	122.50	342	1,732	0.016	22	295

© 2007 - 2021 by ATC IP LLC. All rights reserved.

30	119.29	111	535	0.005	7	95
29	116.81	554	2,579	0.024	32	477
28	115.02	5	22	0.000	0	4
27	112.50	563	2,454	0.023	31	486
26	107.50	584	2,349	0.022	29	504
25	102.50	605	2,236	0.021	28	522
24	97.50	676	2,284	0.021	29	582
23	92.50	697	2,145	0.020	27	601
22	87.50	738	2,060	0.019	26	637
21	84.55	135	353	0.003	4	116
20	82.05	1,226	3,051	0.029	38	1,057
19	79.76	148	350	0.003	4	128
18	77.26	901	2,016	0.019	25	777
17	72.50	1,026	2,050	0.019	26	884
16	67.50	1,055	1,857	0.017	23	910
15	62.50	1,085	1,666	0.016	21	935
14	57.50	1,114	1,476	0.014	18	961
13	52.50	1,143	1,289	0.012	16	986
12	47.84	1,011	966	0.009	12	872
11	45.34	306	266	0.002	3	264
10	42.50	2,280	1,766	0.017	22	1,966
9	39.97	28	19	0.000	0	24
8	37.47	1,333	826	0.008	10	1,149
7	32.50	1,382	665	0.006	8	1,192
6	27.50	1,416	507	0.005	6	1,221
5	22.50	1,449	363	0.003	5	1,250
4	17.50	1,483	238	0.002	3	1,279
3	12.50	1,517	134	0.001	2	1,308
2	7.50	1,550	55	0.001	1	1,337
1	2.50	1,584	8	0.000	0	1,366
Stand-Off	140.00	100	642	0.006	8	86
Generic 18' Omni	140.00	55	353	0.003	4	47
CCI DTMABP7819VG12A	130.00	115	649	0.006	8	99
Raycap DC6-48-60-0-8	130.00	98	554	0.005	7	85
Ericsson RRUS 8843 B	130.00	216	1,216	0.011	15	186
Ericsson RRUS 4449 B	130.00	213	1,199	0.011	15	184
Ericsson RRUS 32 (50	130.00	152	858	0.008	11	131
Kathrein Scala 800-1	130.00	132	745	0.007	9	114
Andrew SBNHH-1D65A (	130.00	34	189	0.002	2	29
CCI HPA-65R-BUU-H8	130.00	136	766	0.007	10	117
Kathrein Scala 84037	130.00	317	1,787	0.017	22	274
Flat Platform w/ Han	130.00	2,000	11,263	0.105	141	1,724
Samsung Outdoor CBRS	120.00	13	64	0.001	1	11
Generic GPS	120.00	10	49	0.000	1	9
Samsung RT4401-48A	120.00	56	273	0.003	3	48
Samsung B2/B66A RRH-	120.00	253	1,237	0.012	15	218
Samsung B5/B13 RRH-B	120.00	211	1,030	0.010	13	182
Samsung B5/B13 RRH-B	120.00	211	1,030	0.010	13	182
Raycap RCMDC-6627-PF	120.00	32	156	0.001	2	28
Samsung MT6407-77A	120.00	245	1,196	0.011	15	211
Commscope SBNHH-1D65	120.00	304	1,486	0.014	19	262
Andrew LNX-6514DS-A1	120.00	116	569	0.005	7	100
Flat Platform w/ Han	120.00	2,000	9,772	0.091	122	1,724
VZW Unused Reserve (	120.00	1,049	5,123	0.048	64	904
Commscope ATSBT-TOP-	100.00	5	19	0.000	0	5
RFS ATMA4P4DBP-1A20	100.00	48	169	0.002	2	41
RFS APXV18-209014-C-	100.00	56	198	0.002	2	48
Andrew LNX-6515DS-A1	100.00	149	528	0.005	7	129
Flat Low Profile Pla	100.00	1,500	5,303	0.050	66	1,293
PCTEL GPS-TMG-HR-26N	90.00	1	2	0.000	0	1
Generic 12" x 12" Ju	90.00	30	88	0.001	1	26
Alcatel-Lucent RRH2x	90.00	159	465	0.004	6	137
Alcatel-Lucent 800 M	90.00	159	466	0.004	6	137
Alcatel-Lucent 1900	90.00	180	528	0.005	7	155

© 2007 - 2021 by ATC IP LLC. All rights reserved.

Alcatel-Lucent TD-RR	90.00	210	616	0.006	8	181
RFS APXVSPP18-C-A20	90.00	171	501	0.005	6	147
Generic Round Platfo	90.00	2,000	5,865	0.055	73	1,724
Commscope RDIDC-9181	80.00	22	52	0.000	1	19
Fujitsu TA08025-B605	80.00	225	535	0.005	7	194
Fujitsu TA08025-B604	80.00	192	456	0.004	6	165
JMA Wireless MX08FRO	80.00	193	460	0.004	6	167
Generic Flat Platfor	80.00	2,500	5,949	0.056	75	2,156
		44,636	106,879	1.000	1,339	38,487

© 2007 - 2021 by ATC IP LLC. All rights reserved.

Load Case 1.2D + 1.0Ev + 1.0Eh Seismic

Calculated Forces

Seg Elev (ft)	Pu FY (-) (kips)	Vu FX (-) (kips)	Tu MY (ft-kips)	Mu MZ (ft-kips)	Mu MX (ft-kips)	Resultant Moment (ft-kips)	phi Pn (kips)	phi Vn (kips)	phi Tn (ft-kips)	phi Mn (ft-kips)	Total Deflect (in)	Rotation (deg)	Ratio
0.00	-53.29	-1.34	0.00	-141.49	0.00	141.49	5,907.57	1,406.47	6,415.71	6,125.97	0.00	0.00	0.032
5.00	-51.37	-1.35	0.00	-134.78	0.00	134.78	5,798.21	1,371.78	6,103.18	5,862.82	0.00	-0.01	0.032
10.00	-49.49	-1.35	0.00	-128.04	0.00	128.04	5,660.34	1,337.09	5,798.46	5,577.23	0.02	-0.02	0.032
15.00	-47.66	-1.36	0.00	-121.28	0.00	121.28	5,513.49	1,302.40	5,501.54	5,290.14	0.04	-0.02	0.032
20.00	-45.86	-1.36	0.00	-114.50	0.00	114.50	5,366.64	1,267.71	5,212.42	5,010.64	0.07	-0.03	0.031
25.00	-44.11	-1.36	0.00	-107.71	0.00	107.71	5,219.79	1,233.02	4,931.11	4,738.72	0.10	-0.04	0.031
30.00	-42.40	-1.35	0.00	-100.93	0.00	100.93	5,072.94	1,198.33	4,657.60	4,474.39	0.15	-0.05	0.031
35.00	-40.75	-1.35	0.00	-94.16	0.00	94.16	4,926.09	1,163.64	4,391.89	4,217.65	0.21	-0.06	0.031
39.94	-40.71	-1.35	0.00	-87.50	0.00	87.50	4,781.00	1,129.37	4,137.04	3,971.43	0.27	-0.07	0.031
40.00	-37.89	-1.33	0.00	-87.42	0.00	87.42	4,779.24	1,128.95	4,133.99	3,968.49	0.27	-0.07	0.030
45.00	-37.51	-1.33	0.00	-80.78	0.00	80.78	4,632.39	1,094.26	3,883.89	3,726.92	0.34	-0.07	0.030
45.68	-36.26	-1.32	0.00	-79.88	0.00	79.88	4,132.52	976.19	3,532.28	3,395.76	0.35	-0.08	0.032
50.00	-34.85	-1.30	0.00	-74.19	0.00	74.19	4,021.56	949.97	3,345.17	3,214.89	0.43	-0.08	0.032
55.00	-33.47	-1.29	0.00	-67.67	0.00	67.67	3,893.07	919.62	3,134.86	3,011.63	0.52	-0.09	0.031
60.00	-32.12	-1.27	0.00	-61.23	0.00	61.23	3,764.57	889.27	2,931.37	2,815.01	0.62	-0.10	0.030
65.00	-30.82	-1.25	0.00	-54.87	0.00	54.87	3,636.08	858.92	2,734.71	2,625.02	0.74	-0.11	0.029
70.00	-29.55	-1.23	0.00	-48.62	0.00	48.62	3,507.58	828.56	2,544.88	2,441.67	0.86	-0.12	0.028
75.00	-28.43	-1.20	0.00	-42.48	0.00	42.48	3,379.09	798.21	2,361.87	2,264.96	1.00	-0.13	0.027
79.52	-28.25	-1.20	0.00	-37.05	0.00	37.05	3,263.04	770.80	2,202.46	2,111.07	1.12	-0.14	0.026
80.00	-22.86	-1.06	0.00	-36.47	0.00	36.47	3,250.59	767.86	2,185.70	2,094.89	1.14	-0.14	0.024
84.10	-22.69	-1.06	0.00	-32.12	0.00	32.12	2,289.85	543.73	1,534.16	1,468.59	1.26	-0.15	0.032
85.00	-21.78	-1.03	0.00	-31.18	0.00	31.18	2,277.59	539.84	1,512.32	1,450.19	1.29	-0.15	0.031
90.00	-17.31	-0.89	0.00	-26.03	0.00	26.03	2,193.55	518.16	1,393.30	1,340.03	1.46	-0.16	0.027
95.00	-16.48	-0.86	0.00	-21.60	0.00	21.60	2,101.77	496.48	1,279.16	1,229.68	1.63	-0.17	0.025
100.00	-13.55	-0.75	0.00	-17.31	0.00	17.31	2,009.99	474.80	1,169.90	1,124.07	1.81	-0.18	0.022
105.00	-12.83	-0.72	0.00	-13.58	0.00	13.58	1,918.21	453.12	1,065.52	1,023.20	2.01	-0.19	0.020
110.00	-12.13	-0.68	0.00	-10.00	0.00	10.00	1,826.43	431.44	966.01	927.08	2.21	-0.20	0.017
115.00	-12.12	-0.68	0.00	-6.58	0.00	6.58	1,734.65	409.76	871.38	835.69	2.42	-0.20	0.015
115.04	-11.44	-0.65	0.00	-6.55	0.00	6.55	1,733.83	409.57	870.56	834.90	2.42	-0.20	0.014
118.58	-11.30	-0.64	0.00	-4.26	0.00	4.26	957.76	241.77	505.54	456.09	2.58	-0.21	0.021
120.00	-5.31	-0.32	0.00	-3.34	0.00	3.34	947.87	238.07	490.16	444.40	2.64	-0.21	0.013
125.00	-4.90	-0.30	0.00	-1.72	0.00	1.72	911.98	225.06	438.06	404.02	2.86	-0.21	0.010
130.00	-0.43	-0.03	0.00	-0.21	0.00	0.21	874.25	212.05	388.89	364.73	3.08	-0.21	0.001
135.00	-0.19	-0.01	0.00	-0.07	0.00	0.07	834.68	199.04	342.65	326.66	3.30	-0.21	0.000
140.00	0.00	-0.01	0.00	0.00	0.00	0.00	787.55	186.03	299.33	287.88	3.53	-0.21	0.000

© 2007 - 2021 by ATC IP LLC. All rights reserved.

Load Case 0.9D - 1.0Ev + 1.0Eh Seismic (Reduced DL)

Calculated Forces

Seg Elev (ft)	Pu FY (-) (kips)	Vu FX (-) (kips)	Tu MY (ft-kips)	Mu MZ (ft-kips)	Mu MX (ft-kips)	Resultant Moment (ft-kips)	phi Pn (kips)	phi Vn (kips)	phi Tn (ft-kips)	phi Mn (ft-kips)	Total Deflect (in)	Rotation (deg)	Ratio
0.00	-37.12	-1.34	0.00	-139.77	0.00	139.77	5,907.57	1,406.47	6,415.71	6,125.97	0.00	0.00	0.029
5.00	-35.78	-1.35	0.00	-133.07	0.00	133.07	5,798.21	1,371.78	6,103.18	5,862.82	0.00	-0.01	0.029
10.00	-34.48	-1.35	0.00	-126.34	0.00	126.34	5,660.34	1,337.09	5,798.46	5,577.23	0.02	-0.02	0.029
15.00	-33.20	-1.35	0.00	-119.61	0.00	119.61	5,513.49	1,302.40	5,501.54	5,290.14	0.04	-0.02	0.029
20.00	-31.95	-1.35	0.00	-112.86	0.00	112.86	5,366.64	1,267.71	5,212.42	5,010.64	0.06	-0.03	0.028
25.00	-30.73	-1.35	0.00	-106.12	0.00	106.12	5,219.79	1,233.02	4,931.11	4,738.72	0.10	-0.04	0.028
30.00	-29.53	-1.34	0.00	-99.39	0.00	99.39	5,072.94	1,198.33	4,657.60	4,474.39	0.15	-0.05	0.028
35.00	-28.39	-1.33	0.00	-92.69	0.00	92.69	4,926.09	1,163.64	4,391.89	4,217.65	0.20	-0.06	0.028
39.94	-28.36	-1.34	0.00	-86.10	0.00	86.10	4,781.00	1,129.37	4,137.04	3,971.43	0.27	-0.06	0.028
40.00	-26.40	-1.31	0.00	-86.02	0.00	86.02	4,779.24	1,128.95	4,133.99	3,968.49	0.27	-0.07	0.027
45.00	-26.13	-1.31	0.00	-79.45	0.00	79.45	4,632.39	1,094.26	3,883.89	3,726.92	0.34	-0.07	0.027
45.68	-25.26	-1.30	0.00	-78.55	0.00	78.55	4,132.52	976.19	3,532.28	3,395.76	0.35	-0.08	0.029
50.00	-24.27	-1.29	0.00	-72.94	0.00	72.94	4,021.56	949.97	3,345.17	3,214.89	0.42	-0.08	0.029
55.00	-23.31	-1.27	0.00	-66.50	0.00	66.50	3,893.07	919.62	3,134.86	3,011.63	0.51	-0.09	0.028
60.00	-22.38	-1.25	0.00	-60.15	0.00	60.15	3,764.57	889.27	2,931.37	2,815.01	0.62	-0.10	0.027
65.00	-21.47	-1.23	0.00	-53.89	0.00	53.89	3,636.08	858.92	2,734.71	2,625.02	0.73	-0.11	0.026
70.00	-20.58	-1.21	0.00	-47.74	0.00	47.74	3,507.58	828.56	2,544.88	2,441.67	0.85	-0.12	0.025
75.00	-19.81	-1.18	0.00	-41.70	0.00	41.70	3,379.09	798.21	2,361.87	2,264.96	0.98	-0.13	0.024
79.52	-19.68	-1.18	0.00	-36.36	0.00	36.36	3,263.04	770.80	2,202.46	2,111.07	1.11	-0.14	0.023
80.00	-15.92	-1.04	0.00	-35.79	0.00	35.79	3,250.59	767.86	2,185.70	2,094.89	1.12	-0.14	0.022
84.10	-15.80	-1.04	0.00	-31.52	0.00	31.52	2,289.85	543.73	1,534.16	1,468.59	1.24	-0.15	0.028
85.00	-15.17	-1.01	0.00	-30.59	0.00	30.59	2,277.59	539.84	1,512.32	1,450.19	1.27	-0.15	0.028
90.00	-12.06	-0.87	0.00	-25.54	0.00	25.54	2,193.55	518.16	1,393.30	1,340.03	1.43	-0.16	0.025
95.00	-11.48	-0.84	0.00	-21.19	0.00	21.19	2,101.77	496.48	1,279.16	1,229.68	1.60	-0.17	0.023
100.00	-9.44	-0.73	0.00	-16.98	0.00	16.98	2,009.99	474.80	1,169.90	1,124.07	1.79	-0.18	0.020
105.00	-8.93	-0.70	0.00	-13.32	0.00	13.32	1,918.21	453.12	1,065.52	1,023.20	1.98	-0.19	0.018
110.00	-8.45	-0.67	0.00	-9.81	0.00	9.81	1,826.43	431.44	966.01	927.08	2.18	-0.19	0.015
115.00	-8.44	-0.67	0.00	-6.45	0.00	6.45	1,734.65	409.76	871.38	835.69	2.38	-0.20	0.013
115.04	-7.97	-0.64	0.00	-6.42	0.00	6.42	1,733.83	409.57	870.56	834.90	2.39	-0.20	0.012
118.58	-7.87	-0.63	0.00	-4.17	0.00	4.17	957.76	241.77	505.54	456.09	2.53	-0.20	0.017
120.00	-3.70	-0.32	0.00	-3.28	0.00	3.28	947.87	238.07	490.16	444.40	2.60	-0.20	0.011
125.00	-3.41	-0.30	0.00	-1.68	0.00	1.68	911.98	225.06	438.06	404.02	2.81	-0.21	0.008
130.00	-0.30	-0.03	0.00	-0.21	0.00	0.21	874.25	212.05	388.89	364.73	3.03	-0.21	0.001
135.00	-0.13	-0.01	0.00	-0.06	0.00	0.06	834.68	199.04	342.65	326.66	3.25	-0.21	0.000
140.00	0.00	-0.01	0.00	0.00	0.00	0.00	787.55	186.03	299.33	287.88	3.47	-0.21	0.000

© 2007 - 2021 by ATC IP LLC. All rights reserved.

Analysis Summary

Load Case	Reactions Shear FX (kips)	Shear FZ (kips)	Axial FY (kips)	Moment MX (ft-kips)	Moment MY (ft-kips)	Moment MZ (ft-kips)	Max Usage Elev (ft)	Interaction Ratio
1.2D + 1.0W	25.53	0.00	53.53	0.00	0.00	2557.27	45.68	0.43
0.9D + 1.0W	25.51	0.00	40.14	0.00	0.00	2531.16	45.68	0.42
1.2D + 1.0Di + 1.0Wi	7.62	0.00	79.84	0.00	0.00	772.48	45.68	0.14
1.2D + 1.0Ev + 1.0Eh	1.34	0.00	53.29	0.00	0.00	141.49	45.68	0.03
0.9D - 1.0Ev + 1.0Eh	1.34	0.00	37.12	0.00	0.00	139.77	45.68	0.03
1.0D + 1.0W	6.11	0.00	44.63	0.00	0.00	608.30	45.68	0.11

Base Plate & Anchor Rod Analysis

Pole Dimensions		
Number of Sides	18	-
Diameter	51	in
Thickness	1/2	in
Orientation Offset	0	°

Base Reactions		
Moment, Mu	2,557.3	k-ft
Axial, Pu	53.5	k
Shear, Vu	25.5	k
Neutral Axis	270	°

Report Capacities		
Component	Capacity	Result
Base Plate	36%	Pass
Anchor Rods	45%	Pass
Dwyidag	-	-

Base Plate		
Shape	Round	-
Diameter, ø	66	in
Thickness	2 1/4	in
Grade	A871-60	
Yield Strength, Fy	60	ksi
Tensile Strength, Fu	75	ksi
Clip	N/A	in
Orientation Offset	0	°
Anchor Rod Detail	d	η=0.5
Clear Distance	3 1/2	in
Applied Moment, Mu	737.0	k
Bending Stress, ϕMn	2023.5	k

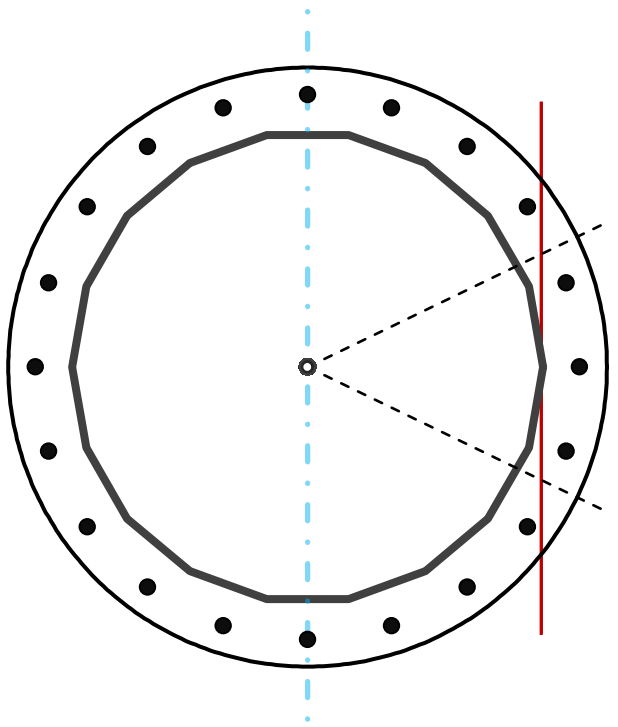

Original Anchor Rods		
Arrangement	Radial	-
Quantity	20	-
Diameter, ø	2 1/4	in
Bolt Circle	60	in
Grade	A615-75	
Yield Strength, Fy	75	ksi
Tensile Strength, Fu	100	ksi
Spacing	9.4	in
Orientation Offset	0	°
Applied Force, Pu	109.1	k
Anchor Rods, ϕPn	243.6	k

Calculations for Monopole Base Plate & Anchor Rod Analysis

Reaction Distribution

Reaction	Shear Vu	Moment Mu	Factor
-	k	k-ft	-
Base Forces	25.5	2557.3	1.00
Anchor Rod Forces	25.5	2557.3	1.00
Additional Bolt (Grp1) Forces	0.0	0.0	0.00
Additional Bolt (Grp2) Forces	0.0	0.0	0.00
Dywidag Forces	0.0	0.0	0.00
Stiffener Forces	0.0	0.0	0.00

Geometric Properties

Section	Gross Area	Net Area	Individual Inertia	Threads per Inch	Moment of Inertia
-	in^2	in^2	in^4	#	in^4
Pole	78.9231	4.3846	0.3672		25165.81
Bolt	3.9761	3.2477	0.8393	4.5	26977.81
Bolt1	0.0000	0.0000	0.0000	0	0.00
Bolt2	0.0000	0.0000	0.0000	0	0.00
Dywidag	0.0000	0.0000	0.0000		0.00
Stiffener	0.0000	0.0000	0.0000		0.00

Base Plate		
Shape	Round	-
Diameter, D	66	in
Thickness, t	2.25	in
Yield Strength, Fy	60	ksi
Tensile Strength, Fu	75	ksi
Base Plate Chord	41.893	in
Detail Type	d	-
Detail Factor	0.50	-
Clear Distance	3.5	-

Anchor Rods		
Anchor Rod Quantity, N	20	-
Rod Diameter, d	2.25	in
Bolt Circle, BC	60	in
Yield Strength, Fy	75	ksi
Tensile Strength, Fu	100	ksi
Applied Axial, Pu	109.1	k
Applied Shear, Vu	0.6	k
Compressive Capacity, ϕPn	243.6	k
Tensile Capacity, ϕRnt	0.448	OK
Interaction Capacity	0.453	OK

External Base Plate		
Chord Length AA	35.951	in
Additional AA	4.500	in
Section Modulus, Z	51.196	in^3
Applied Moment, Mu	737.0	k-ft
Bending Capacity, ϕMn	2764.6	k-ft
Capacity, Mu/ϕMn	0.267	OK
Chord Length AB	34.803	in
Additional AB	4.500	in
Section Modulus, Z	49.742	in^3
Applied Moment, Mu	612.0	k-ft
Bending Capacity, ϕMn	2686.1	k-ft
Capacity, Mu/ϕMn	0.228	OK
Bend Line Length	29.607	in
Additional Bend Line	0.000	in
Section Modulus, Z	37.472	in^3
Applied Moment, Mu	737.0	k-ft
Bending Capacity, ϕMn	2023.5	k-ft
Capacity, Mu/ϕMn	0.364	OK

Internal Base Plate		
Arc Length	0.000	in
Section Modulus, Z	0.000	in^3
Moment Arm	0.000	in
Applied Moment, Mu	0.0	k-ft
Bending Capacity, ϕMn	0.0	k-ft
Capacity, Mu/ϕMn		

Maser Consulting Connecticut
2000 Midlantic Drive, Suite 100
Mt. Laurel, NJ 08054
(856) 797-0412
peter.albano@colliersengineering.com

Antenna Mount Analysis Report and PMI Requirements

Mount Analysis

SMART Tool Project #: 10050595
Maser Consulting Connecticut Project #: 21777544A

July 1, 2021

Site Information	*Site ID:*	*467476-VZW / CANTON CT*
	Site Name:	*CANTON CT*
	Carrier Name:	*Verizon Wireless*
	Address:	*14 Canton Springs Road* *Canton, Connecticut 06019* *Hartford County*
	Latitude:	*41.822876°*
	Longitude:	*-72.895101°*
Structure Information	*Tower Type:*	*Monopole*
	Mount Type:	*12.00-Ft Platform*

FUZE ID # 16244106

Analysis Results

Platform: **79.4% Pass**

******Contractor PMI Requirements*:**
Included at the end of this MA report
Available & Submitted via portal at https://pmi.vzwsmart.com
Contractor - Please Review Specific Site PMI Requirements Upon Award
Requirements also Noted on Mount Modification Drawings
Requirements may also be Noted on A & E drawings

Report Prepared By: Calvin Gould

STATE OF CONNECTICUT
DEJIAN XU
No. 33733
LICENSED
PROFESSIONAL ENGINEER

07/02/2021

Executive Summary:

The objective of this report is to determine the capacity of the antenna support mount at the subject facility for the final wireless telecommunications configuration, per the applicable codes and standards. Any modification listed under Sources of Information was assumed completed and was included in this analysis.

This analysis is inclusive of the mount structure only and does not address the structural capacity of the supporting structure. This mounting frame was not analyzed as an anchor attachment point for fall protection. All climbing activities are required to have a fall protection plan completed by a competent person.

Sources of Information:

Document Type	Remarks
Radio Frequency Data Sheet (RFDS)	*Verizon RFDS, Site ID: 323565, dated May 26, 2021*
Mount Mapping Report	*RKS Design & Engineering LLC, Site #: ATC: CT 411256, VZW:467476, dated April 14, 2021*

Analysis Criteria:

Codes and Standards:	ANSI/TIA-222-H	
Wind Parameters:	Basic Wind Speed (Ultimate 3-sec. Gust), V_{ULT}:	116 mph
	Ice Wind Speed (3-sec. Gust):	50 mph
	Design Ice Thickness:	1.50 in
	Risk Category:	II
	Exposure Category:	C
	Topographic Category:	1
	Topographic Feature Considered:	N/A
	Topographic Method:	N/A
	Ground Elevation Factor, K_e:	0.988
Seismic Parameters:	S_S:	0.177
	S_1:	0.054
Maintenance Parameters:	Wind Speed (3-sec. Gust):	30 mph
	Maintenance Live Load, Lv:	250 lbs.
	Maintenance Live Load, Lm:	500 lbs.
Analysis Software:	RISA-3D (V17)	

Final Loading Configuration:

The following equipment has been considered for the analysis of the mount:

Mount Elevation (ft)	Equipment Elevation (ft)	Quantity	Manufacturer	Model	Status
118.00	118.50	3	Samsung	XXDWMM-12.5-65-8T	Added
	122.00	3	Samsung	MT6407-77A	
	120.00	3	Andrew	LNX-6514DS-A1M	
		6	Andrew	SBNHH-1D65B	Retained
		3	Samsung	B2/B66A RRH-BR049	
		3	Samsung	B5/B13 RRH-BR04C	
		1	Raycap	RRFDC-3315-PF-48	

The recent mount mapping reported existing OVP units. It is acceptable to install up to any three (3) of the OVP model numbers listed below as required at any location other than the mount face without affecting the structural capacity of the mount. If OVP units are installed on the mount face, a mount re-analysis may be required unless replacing an existing OVP.

Model Number	Ports	AKA
DB-B1-6C-12AB-0Z	6	OVP-6
RVZDC-6627-PF-48	12	OVP-12

Standard Conditions:

1. All engineering services are performed on the basis that the information provided to Maser Consulting Connecticut and used in this analysis is current and correct. The existing equipment loading has been applied at locations determined from the supplied documentation. Any deviation from the loading locations specified in this report shall be communicated to Maser Consulting Connecticut to verify deviation will not adversely impact the analysis.

2. Mounts are assumed to have been properly fabricated, installed and maintained in good condition, twist free and plumb in accordance with its original design and manufacturer's specifications.

   Obvious safety and structural issues/deficiencies noticed at the time of the mount mapping and reported in the Mount Mapping Report are assumed to be corrected and documented as part of the PMI process and are not considered in the mount analysis.

   The mount analysis and the mount mapping are not a condition assessment of the mount. Proper maintenance and condition assessments are still required post analysis.

3. For mount analyses completed from other data sources (including new replacement mounts) and not specifically mapped by Maser Consulting Connecticut, the mounts are assumed to have been properly fabricated, installed and maintained in good condition, twist free and plumb in accordance with its original design and manufacturer's specifications.

4. All member connections are assumed to have been designed to meet or exceed the load carrying capacity of the connected member unless otherwise specified in this report.

5. The mount was checked up to, and including, the bolts that fasten it to the mount collar/attachment and threaded rod connections in collar members if applicable. Local deformation and interaction between the mount collar/attachment and the supporting tower structure are outside the scope of this analysis.

6. All services are performed, results obtained, and recommendations made in accordance with generally accepted engineering principles and practices. Maser Consulting Connecticut is not responsible for the conclusion, opinions, and recommendations made by others based on the information supplied.

7. Structural Steel Grades have been assumed as follows, if applicable, unless otherwise noted in this analysis:
   - Channel, Solid Round, Angle, Plate — ASTM A36 (Gr. 36)
   - HSS (Rectangular) — ASTM 500 (Gr. B-46)
   - Pipe — ASTM A53 (Gr. B-35)
   - Threaded Rod — F1554 (Gr. 36)
   - Bolts — ASTM A325

Discrepancies between in-field conditions and the assumptions listed above may render this analysis invalid unless explicitly approved by Maser Consulting Connecticut.

Analysis Results:

Component	Utilization %	Pass/Fail
Face Horizontal	32.8 %	Pass
Mount Pipe	26.8 %	Pass
Connection Plate	41.2 %	Pass
Cross Brace	60.0 %	Pass
Corner Plate	7.4 %	Pass
Ladder Rail	27.6 %	Pass
Ladder Rung	12.2 %	Pass
Standoff Horizontal	39.5 %	Pass
Face Vertical	10.4 %	Pass
Face Bracing	27.4 %	Pass
Support Rail	44.4 %	Pass
Support Rail Bracing	5.0 %	Pass
Mount Connection	79.4 %	Pass

Structure Rating – *(Controlling Utilization of all Components)*	**79.4%**

Recommendation:

The existing mount is **SUFFICIENT** for the final loading configuration and does not require modifications.

ANSI/ASSP rigging plan review services compliant with the requirements of ANSI/TIA 322 are available for a Construction Class IV site or other, if required. Separate review fees will apply.

Attachments:

1. Mount Photos
2. Mount Mapping Report (for reference only)
3. Analysis Calculations
4. **Contractor Required Post Installation Inspection (PMI) Report Deliverables**
5. Antenna Placement Diagrams
6. TIA Adoption and Wind Speed Usage Letter

2021. 4. 14

4/14/2021

V4.0 Updated on 3-31-2021

PAUL J. FORD & COMPANY

Antenna Mount Mapping Form (PATENT PENDING)

FCC #
UNKNOWN

Tower Owner:	ATC	**Mapping Date:**	4/14/2021
Site Name:	ATC: CANTON CT, VZW:CANTON CT	**Tower Type:**	Monopole
Site Number or ID:	ATC: CT 411256, VZW:467476	**Tower Height (Ft.):**	UNKNOWN
Mapping Contractor:	RKS Design & Engineering, LLC	**Mount Elevation (Ft.):**	118.66

This antenna mapping form is the property of TES and under PATENT PENDING. The formation contained herein is considered confidential in nature and is to be used only for the specific customer it was intended for. Reproduction, transmission, publication, modification or disclosure by any method is prohibited except by express written permission of TES. All means and methods are the responsibility of the contractor and the work shall be compliant with ANSI/ASSE A 10.48, OSHA, FCC, FAA and other safety requirements that may apply. TES is not warrantying the usability of the safety climb as it must be assessed prior to each use in compliance with OSHA requirements.

Please insert the sketches of the antenna mount from the "Sketches" tab with dimensions and members here.

Mount Pipe Configuration and Geometries [Unit = Inches]

Sector / Position	Mount Pipe Size & Length	Vertical Offset Dimension "u"	Horizontal Offset "C1, C2, C3, etc."	Sector / Position	Mount Pipe Size & Length	Vertical Offset Dimension "u"	Horizontal Offset "C1, C2, C3, etc."
A1	PIPE 2.375" Ø X 0.15" X 80" LONG	58.50	11.50	C1	PIPE 2.375" Ø X 0.15" X 80" LONG	58.50	11.50
A2	PIPE 2.375" Ø X 0.15" X 80" LONG	58.50	29.00	C2	PIPE 2.375" Ø X 0.15" X 80" LONG	58.50	29.00
A3	PIPE 2.375" Ø X 0.15" X 96.5" LON	72.00	72.50	C3	PIPE 2.375" Ø X 0.15" X 96.5" LONG	72.00	72.50
A4	PIPE 2.375" Ø X 0.15" X 80" LONG	58.50	118.00	C4	PIPE 2.375" Ø X 0.15" X 80" LONG	58.50	118.00
A5	PIPE 2.375" Ø X 0.15" X 80" LONG	58.50	135.50	C5	PIPE 2.375" Ø X 0.15" X 80" LONG	58.50	135.50
A6				C6			
B1	PIPE 2.375" Ø X 0.15" X 80" LONG	58.50	11.50	D1			
B2	PIPE 2.375" Ø X 0.15" X 80" LONG	58.50	29.00	D2			
B3	PIPE 2.375" Ø X 0.15" X 80" LONG	72.00	72.50	D3			
B4	PIPE 2.375" Ø X 0.15" X 80" LONG	58.50	118.00	D4			
B5	PIPE 2.375" Ø X 0.15" X 80" LONG	58.50	135.50	D5			
B6				D6			

Distance between bottom rail and mount CL elevation (dim d). Unit is inches. See 'Mount Elev Ref' tab for details. :	
Distance from top of bottom support rail to lowest tip of ant./eqpt. of Carrier above. (N/A if > 10 ft.) :	6
Distance from top of bottom support rail to highest tip of ant./eqpt. of Carrier below. (N/A if > 10 ft.) :	

Please enter additional infomation or comments below.

Tower Face Width at Mount Elev. (ft.):		Tower Leg Size or Pole Shaft Diameter at Mount Elev. (in.):	23
For T-Arms/Platforms on monopoles, report the weld size from the main standoff to the plate bolting into the collar mount.			

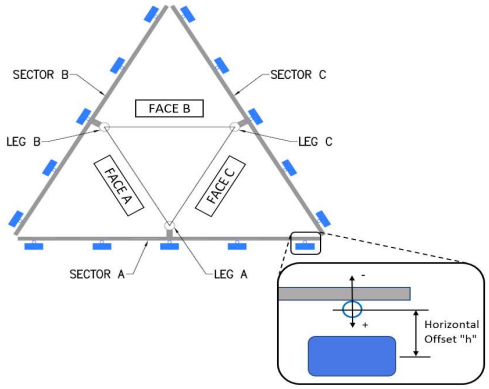

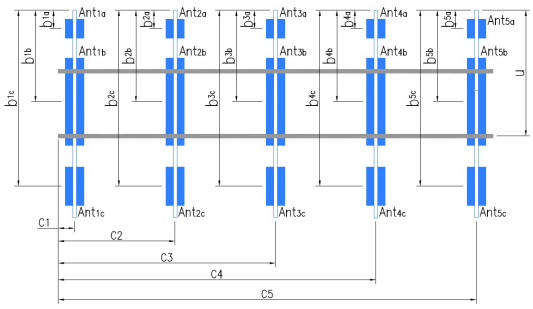

Antenna Layout (Looking Out From Tower)

Ants. Items	Antenna Models if Known	Width (in.)	Depth (in.)	Height (in.)	Coax Size and Qty	Antenna Center-line (Ft.)	Vertical Distances"b_{1a}, b_{2a}, b_{3a}, b_{1b}...." (Inches)	Horiz. Offset "h" (Use "-" if Ant. is behind)	Antenna Azimuth (Degrees)	Photo Numbers
	Enter antenna model. If not labeled, enter "Unknown".						Mounting Locations [Units are inches and degrees]			Photos of antennas
Sector A										
Ant_{1a}										
Ant_{1b}	LPA 80080/4CF E-DIN	5.50	13.20	47.20		121.118	29.00	13.50	10.00	30, 385
Ant_{1c}										
Ant_{2a}										
Ant_{2b}										
Ant_{2c}										
Ant_{3a}	RFV01U-D2A	15.00	8.10	15.00		123.285	16.50	-8.50		388, 623
Ant_{3b}	(2)SBNHH-1D65B	11.90	7.10	72.00		120.743	47.00	10.00	10.00	30, 389
Ant_{3c}	RFV01U-D1A	15.00	10.00	15.00		120.785	46.50	-9.50		387, 621
Ant_{4a}										
Ant_{4b}										
Ant_{4c}										
Ant_{5a}										
Ant_{5b}	LPA 80080/4CF E-DIN	5.50	13.20	47.20		121.118	29.00	13.50	10.00	30, 393
Ant_{5c}										
Ant on Standoff	RRFDC-3315-PF-48	15.75	10.20	18.50			43.75	8.50		630
Ant on Standoff										
Ant on Tower										
Ant on Tower										

Mount Azimuth (Degree) for Each Sector			Tower Leg Azimuth (Degree) for Each Sector		
Sector A:	5.00	Deg	Leg A:		Deg
Sector B:	100.00	Deg	Leg B:		Deg
Sector C:	230.00	Deg	Leg C:		Deg
Sector D:		Deg	Leg D:		Deg

Climbing Facility Information			
Location:	270.00	Deg	N/A
Climbing Facility	Corrosion Type:		Good condition.
	Access:		Climbing path was unobstructed.
	Condition:		Good condition.

Please insert a photo of the mount centerline measurement here.

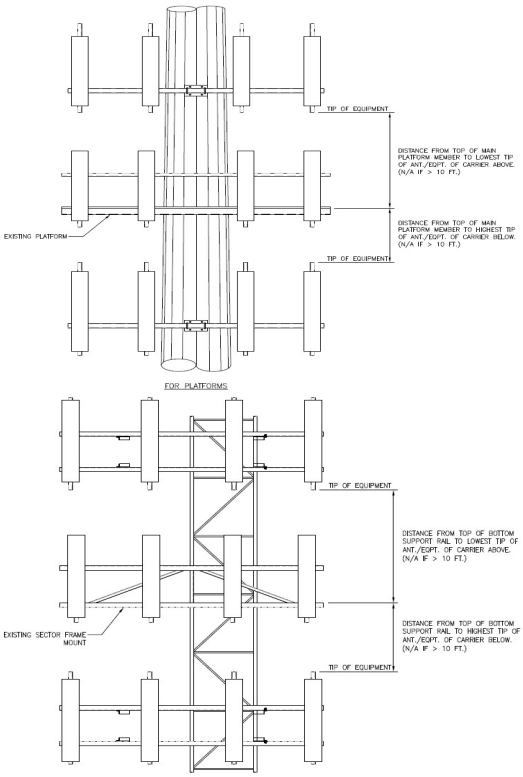

For T-Arms/Platforms on monopoles, record the weld size from the main standoff member to the plate bolting into the collar. See below for reference.

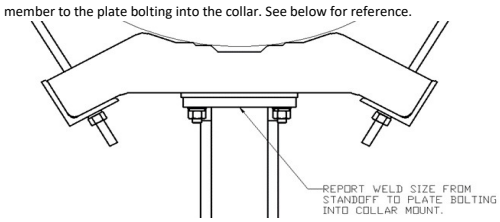

Sector B										
Ant_{1a}										
Ant_{1b}	LPA 80080/4CF E-DIN	5.50	13.20	47.20		121.118	29.00	13.50	110.00	39, 397
Ant_{1c}										
Ant_{2a}										
Ant_{2b}										
Ant_{2c}										
Ant_{3a}	RFV01U-D2A	15.00	8.10	15.00		123.285	16.50	-8.50		405, 511
Ant_{3b}	(2)SBNHH-1D65B	11.90	7.10	72.00		120.743	47.00	10.00	110.00	39, 401
Ant_{3c}	RFV01U-D1A	15.00	10.00	15.00		120.785	46.50	-9.50		404, 516
Ant_{4a}										
Ant_{4b}										
Ant_{4c}										
Ant_{5a}										
Ant_{5b}	LPA 80080/4CF E-DIN	5.50	13.20	47.20		121.118	29.00	13.50	110.00	39, 405
Ant_{5c}										
Ant on Standoff										
Ant on Standoff										
Ant on Tower										
Ant on Tower										
Sector C										
Ant_{1a}										
Ant_{1b}	LPA-80063-4CF-EDIN	15.20	13.10	47.40		121.118	29.00	13.50	230.00	47, 409
Ant_{1c}										
Ant_{2a}										
Ant_{2b}										
Ant_{2c}										
Ant_{3a}	RFV01U-D2A	15.00	8.10	15.00		123.285	16.50	-8.50		413, 584
Ant_{3b}	(2)SBNHH-1D65B	11.90	7.10	72.00		120.743	47.00	10.00	230.00	47, 411
Ant_{3c}	RFV01U-D1A	15.00	10.00	15.00		120.785	46.50	-9.50		411, 582
Ant_{4a}	GPS	4.00	4.00	8.00		125.285	-21.00			595
Ant_{4b}										
Ant_{4c}										
Ant_{5a}										
Ant_{5b}	LPA-80063-4CF-EDIN	15.20	13.10	47.40		121.118	29.00	13.50	230.00	47, 417
Ant_{5c}										
Ant on Standoff										
Ant on Standoff										
Ant on Tower										
Ant on Tower										
Sector D										
Ant_{1a}										
Ant_{1b}										
Ant_{1c}										
Ant_{2a}										
Ant_{2b}										
Ant_{2c}										
Ant_{3a}										
Ant_{3b}										
Ant_{3c}										
Ant_{4a}										
Ant_{4b}										
Ant_{4c}										
Ant_{5a}										
Ant_{5b}										
Ant_{5c}										
Ant on Standoff										
Ant on Standoff										
Ant on Tower										
Ant on Tower										

Observed Safety and Structural Issues During the Mount Mapping		
Issue #	Description of Issue	Photo #
1	COAX TOTAL(7): (6) FH 1-5/8, (1) 1.52" Ø HYBRID	56
2		
3		
4		
5		
6		
7		
8		

Observed Obstructions to Tower Lighting System				
If the tower lighting system is being obstructed by the carrier's equipment (for example: a light nested by the antennas), please provide photos and fill in the information below.				Photo #
Description of Obstruction:				
Type of Light:		Photo #		Additional Comments:
Lighting Technology:		Photo #		
Elevation (AGL) at base of light (Ft.):		Photo #		
Is a service loop available?		Photo #		
Is beacon installed on an extension?		Photo #		

Mapping Notes
1. Please report any visible structural or safety issues observed on the antenna mounts (Damaged members, loose connections, tilting mounts, safety climb issues, etc.)
2. If the thickness of the existing pipes or tubing can't be obtained from a general tool (such as Caliper), please use an ultrasonic measurement tool (thickness gauge) to measure the thickness.
3. Please create all required detail sketches of the mounts and insert them into the "Sketches" tab.
4. Please measure and enter the bolt sizes and types under the Members Box in the spreadsheet of the mount type.
5. Take and label the photos of the tower, mounts, connections, antennas and all measurements. Minimum 50 photos are required.
6. Please measure and report the size and length of all existing antenna mounting pipes.
7. Please measure and report the antenna information for all sectors.
8. Don't delete or rearrange any sheet or contents of any sheet from this mapping form.

Standard Conditions
1. Obvious safety and structural issues/deficiencies noticed at the time of the mount mapping are to be reported in this mapping. However, this mount mapping is not a condition assessment of the mount.

V4.0 Updated on 3-31-2021

PAUL J. FORD & COMPANY

Antenna Mount Mapping Form (PATENT PENDING)

FCC #
UNKNOWN

Tower Owner:	ATC	**Mapping Date:**	4/14/2021
Site Name:	ATC: CANTON CT, VZW:CANTON CT	**Tower Type:**	Monopole
Site Number or ID:	ATC: CT 411256, VZW:467476	**Tower Height (Ft.):**	UNKNOWN
Mapping Contractor:	RKS Design & Engineering, LLC	**Mount Elevation (Ft.):**	118.66

This antenna mapping form is the property of TES and under PATENT PENDING. The formation contained herein is considered confidential in nature and is to be used only for the specific customer it was intended for. Reproduction, transmission, publication, modification or disclosure by any method is prohibited except by express written permission of TES. All means and methods are the responsibility of the contractor and the work shall be compliant with ANSI/ASSE A 10.48, OSHA, FCC, FAA and other safety requirements that may apply. TES is not warrantying the usability of the safety climb as it must be assessed prior to each use in compliance with OSHA requirements.

Please Insert Sketches of the Antenna Mount

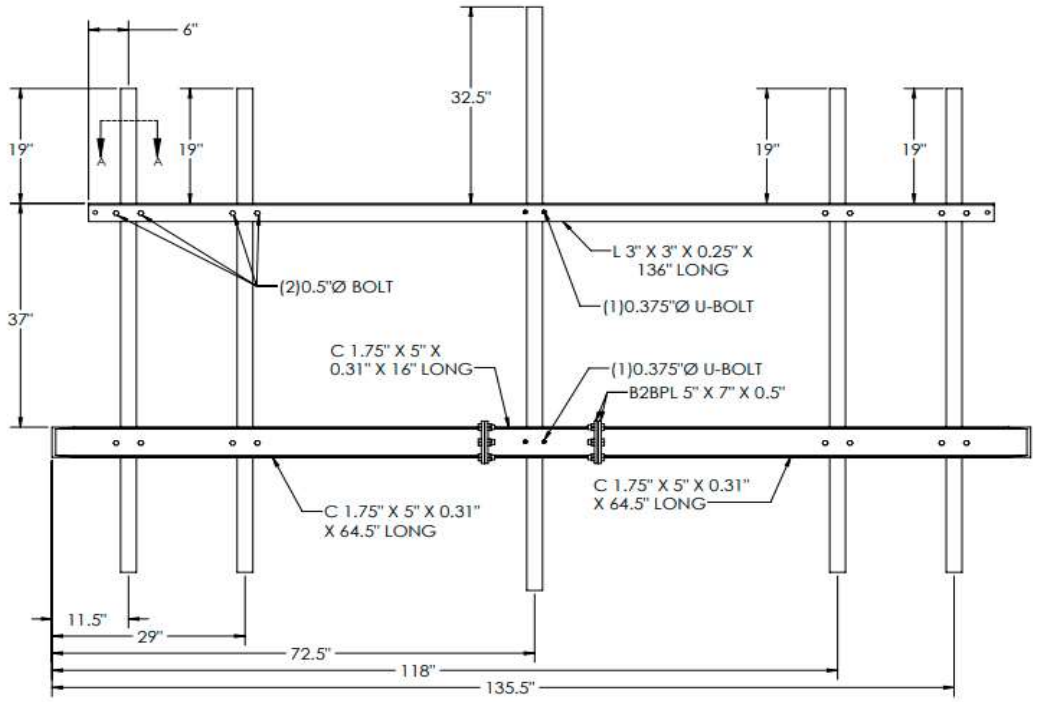

SECTOR:A&B

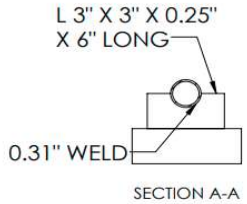

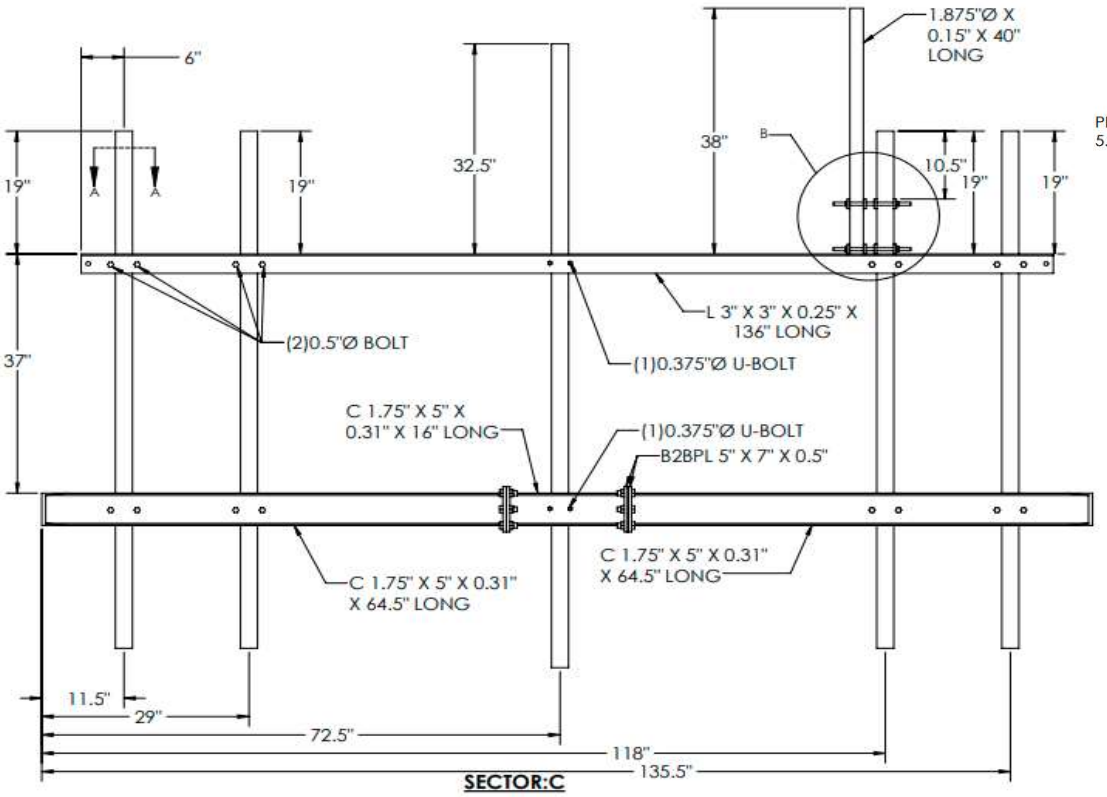

SECTOR:C

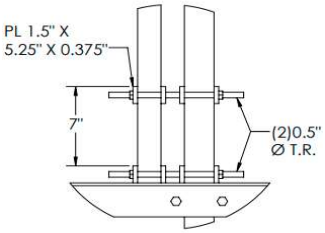

DETAIL B

Please Insert Sketches of the Antenna Mount, cont'd

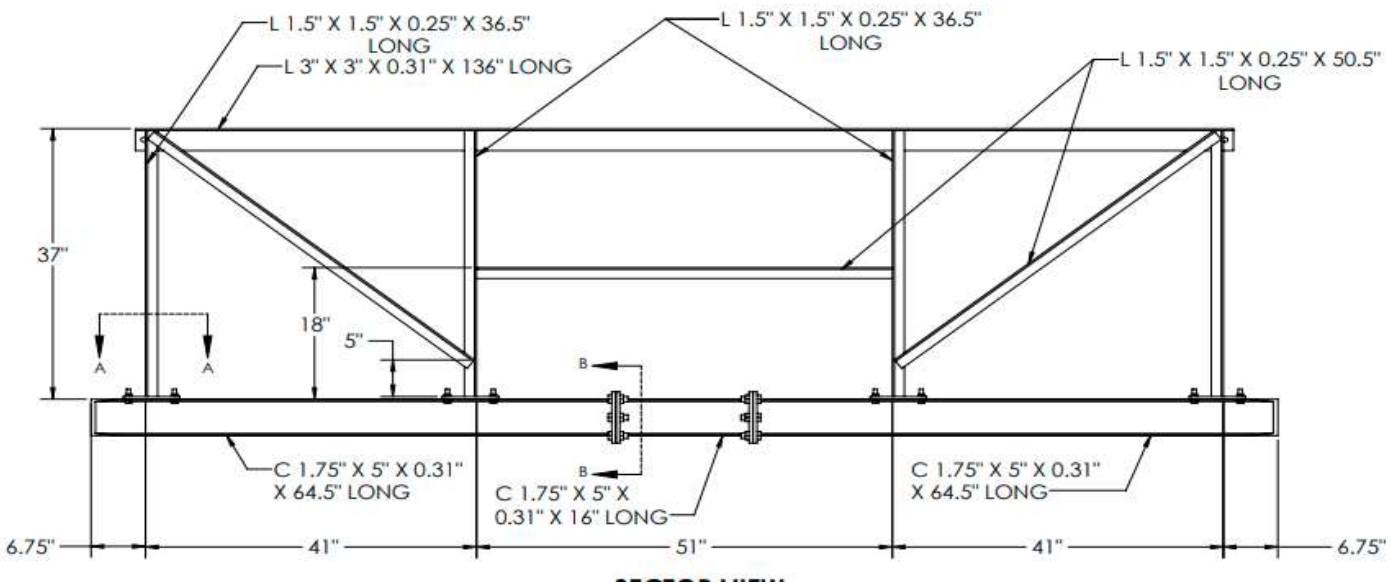

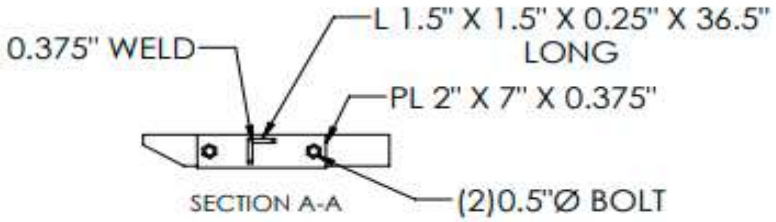

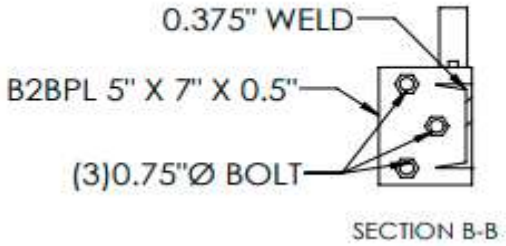

Please Insert Sketches of the Antenna Mount, cont'd

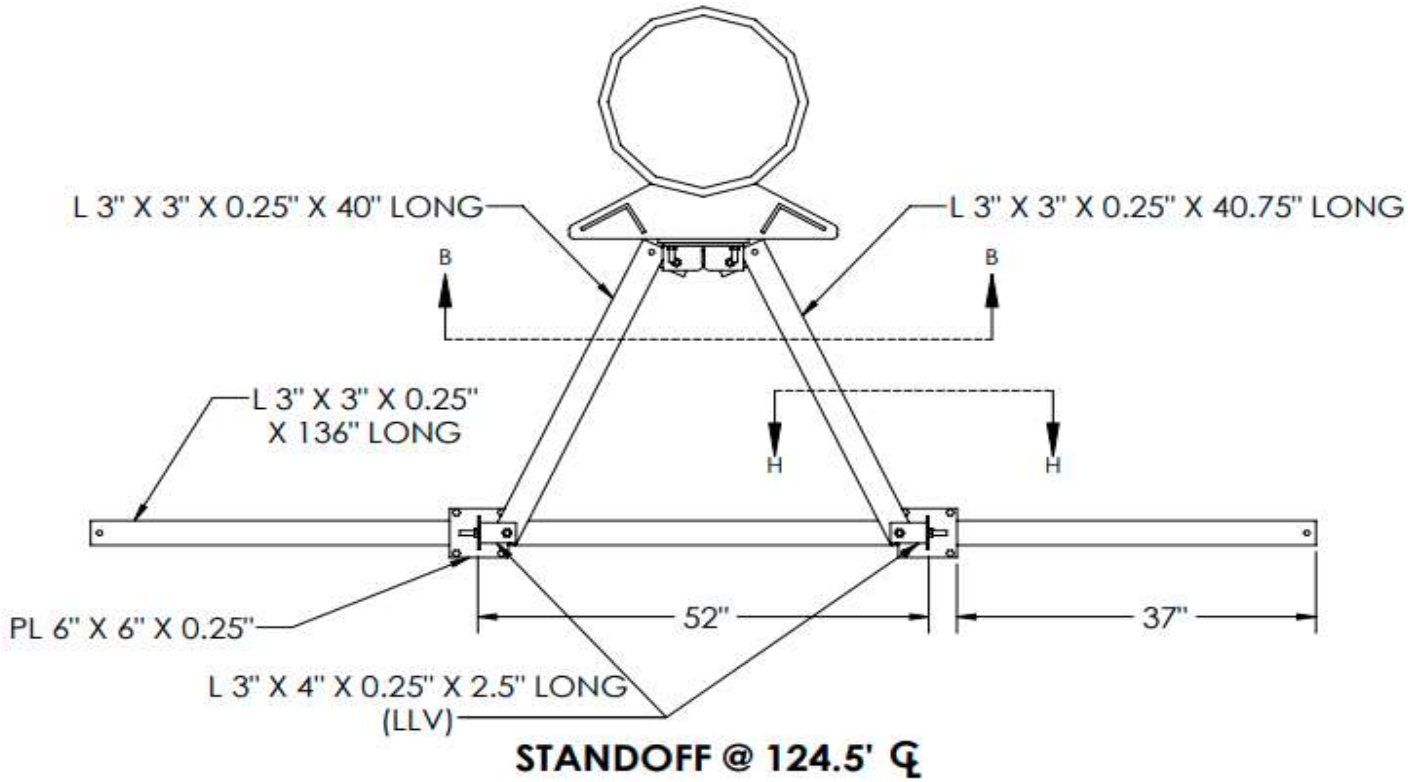

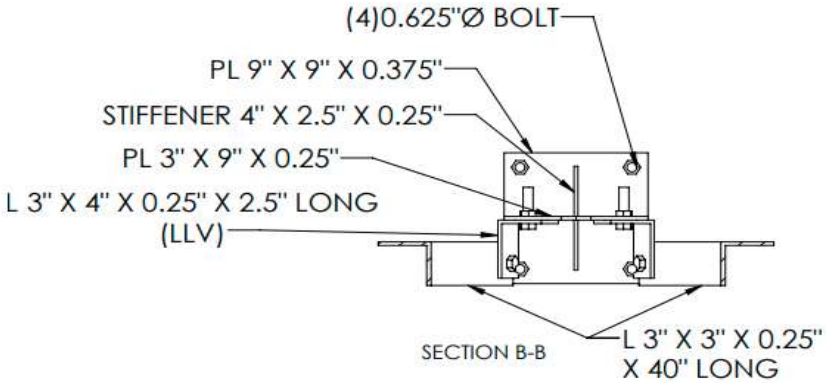

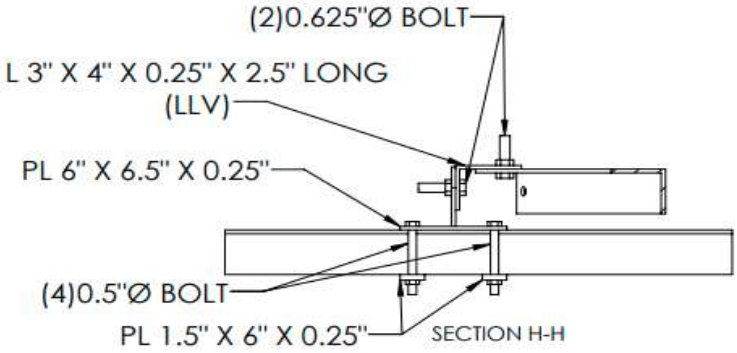

Please Insert Sketches of the Antenna Mount, cont'd

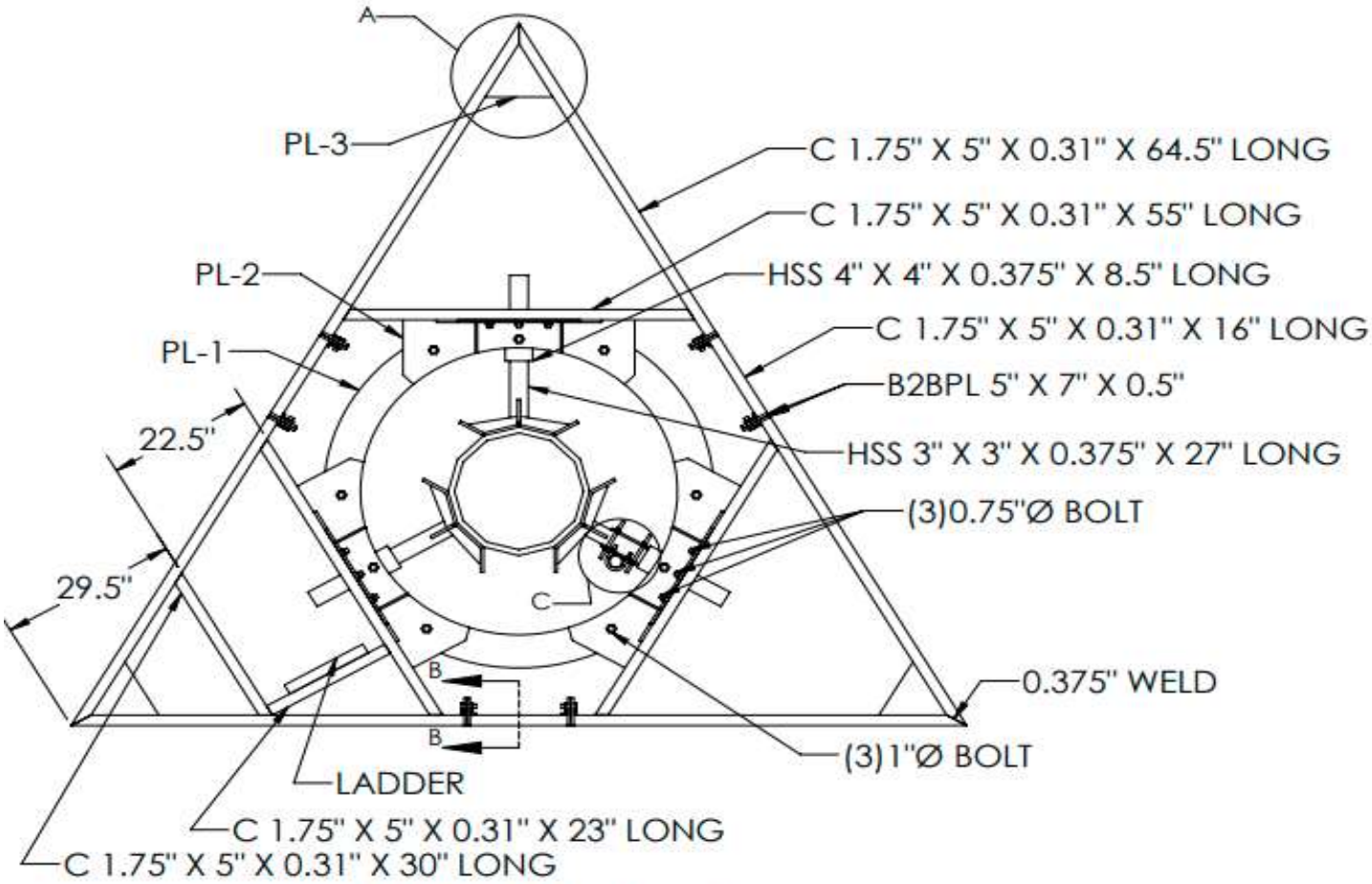

MOUNT PLAN VIEW

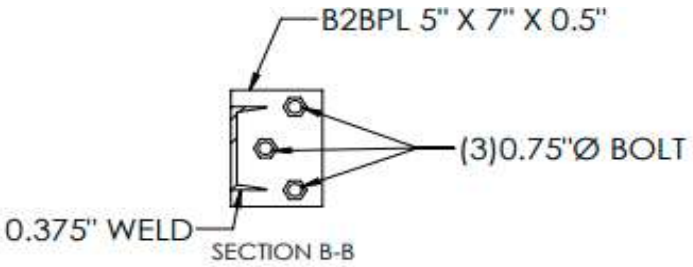

SECTION B-B

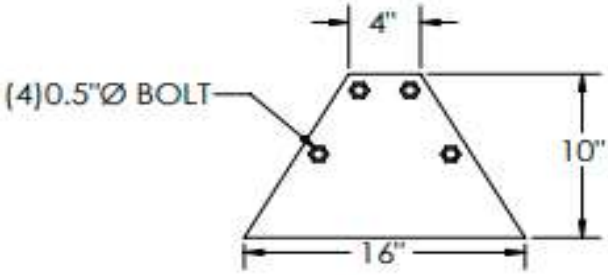

DETAIL A
PL-3 WITH 0.375" THK.

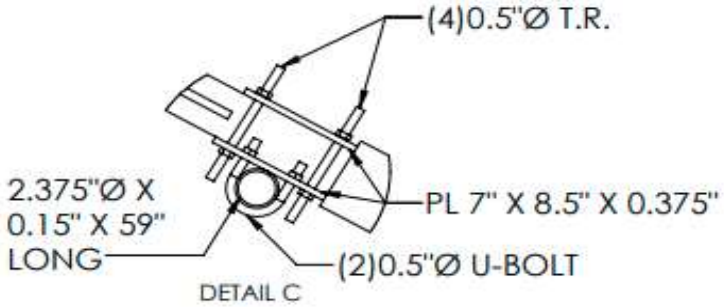

DETAIL C

Please Insert Sketches of the Antenna Mount, cont'd

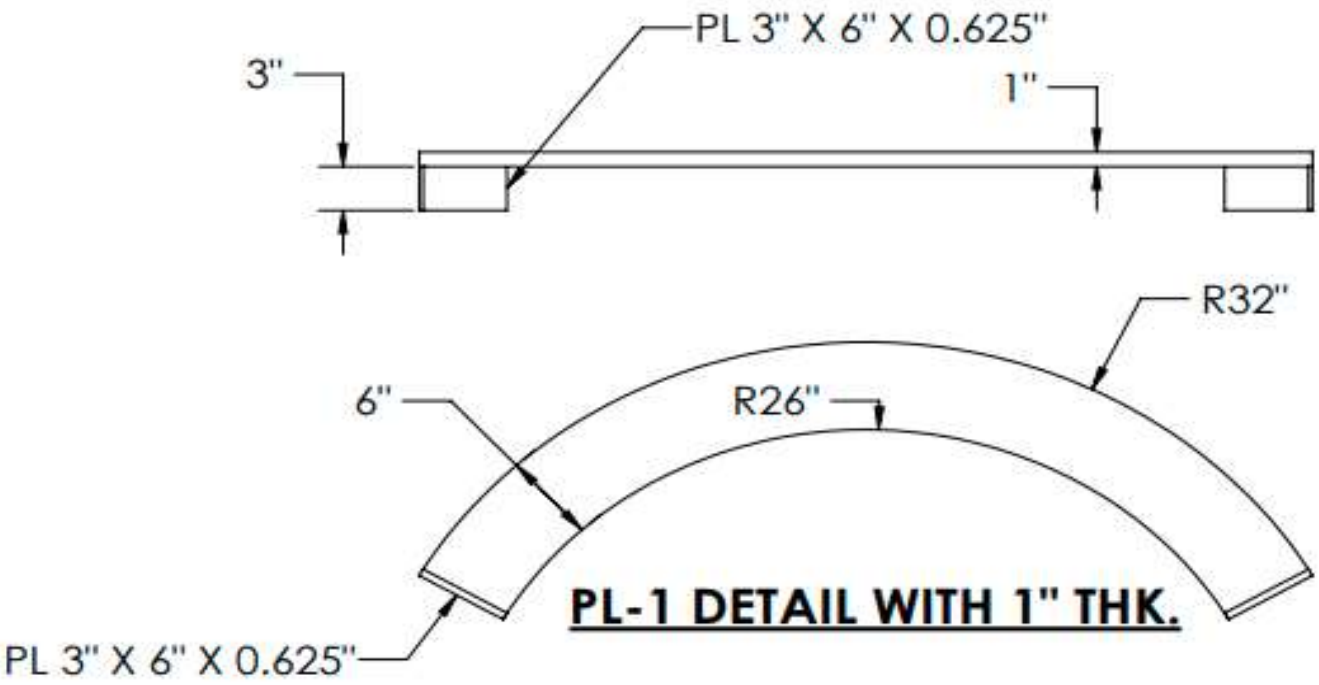

PL-1 DETAIL WITH 1" THK.

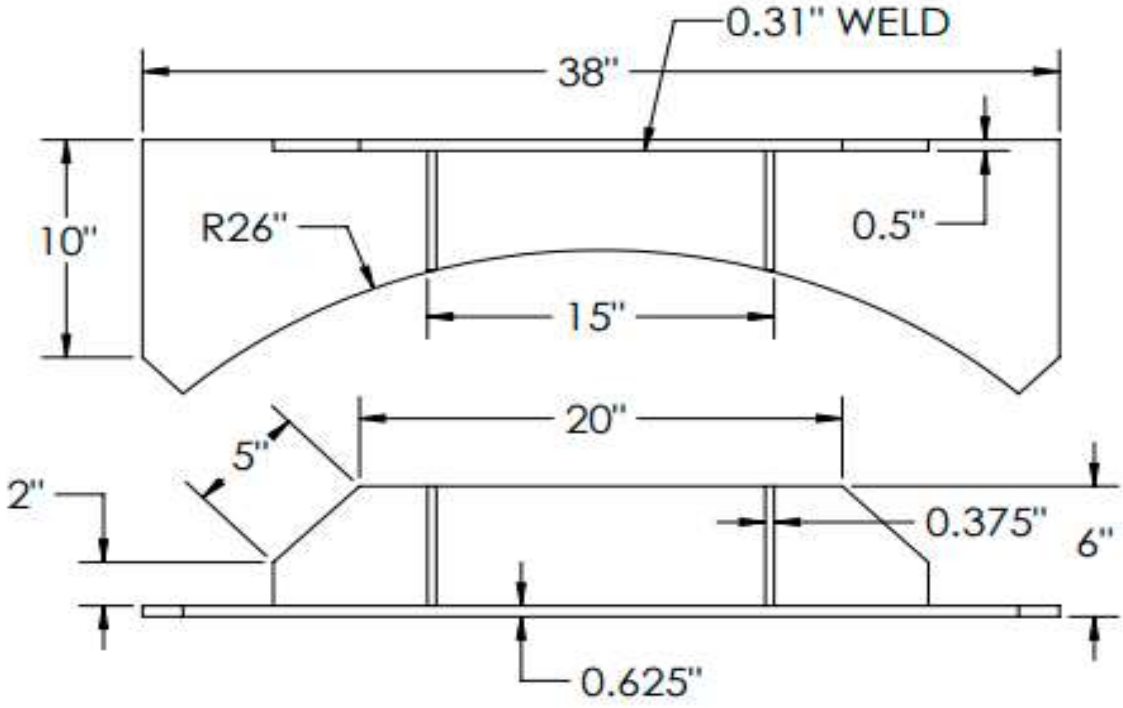

PL-2 DETAIL

V4.0 Updated on 3-31-2021

PAUL J. FORD & COMPANY

Antenna Mount Mapping Form (PATENT PENDING)

FCC #
UNKNOWN

Tower Owner:	ATC	**Mapping Date:**	4/14/2021
Site Name:	ATC: CANTON CT, VZW:CANTON CT	**Tower Type:**	Monopole
Site Number or ID:	ATC: CT 411256, VZW:467476	**Tower Height (Ft.):**	UNKNOWN
Mapping Contractor:	RKS Design & Engineering, LLC	**Mount Elevation (Ft.):**	118.66

This antenna mapping form is the property of TES and under **PATENT PENDING**. The formation contained herein is considered confidential in nature and is to be used only for the specific customer it was intended for. Reproduction, transmission, publication, modification or disclosure by any method is prohibited except by express written permission of TES. All means and methods are the responsibility of the contractor and the work shall be compliant with ANSI/ASSE A 10.48, OSHA, FCC, FAA and other safety requirements that may apply. TES is not warrantying the usability of the safety climb as it must be assessed prior to each use in compliance with OSHA requirements.

Please Insert Sketches of the Antenna Mount

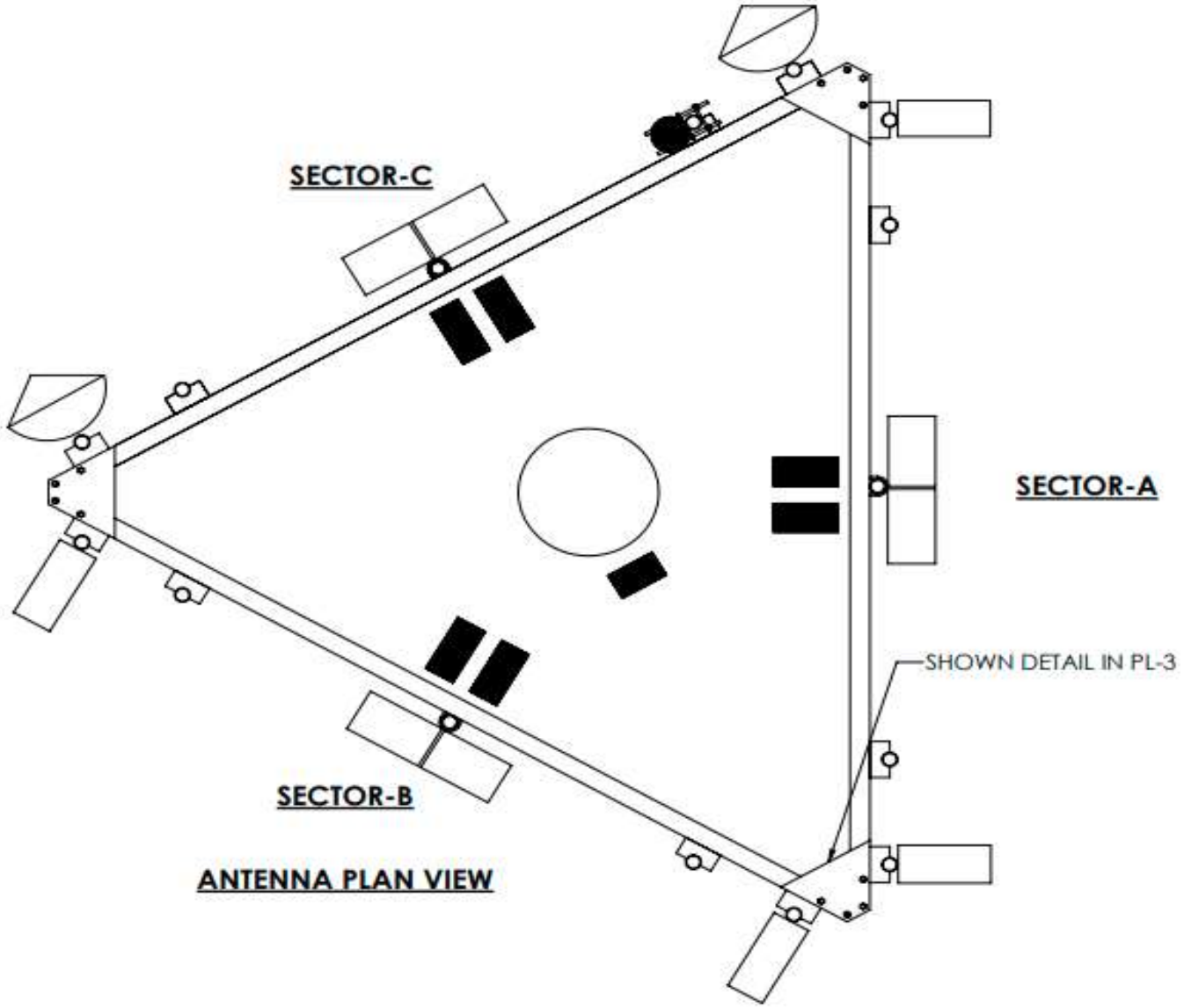

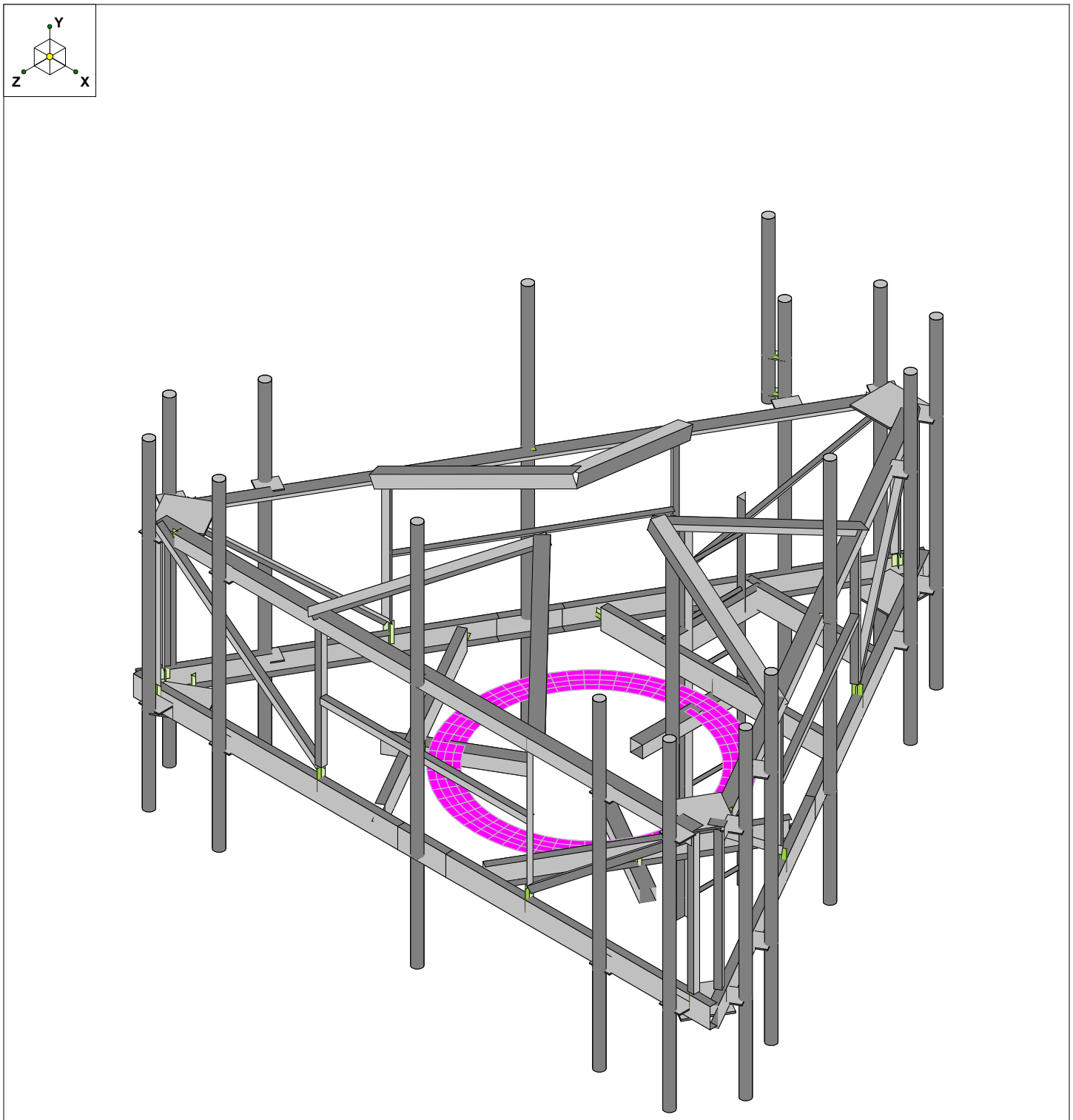

Envelope Only Solution

Maser Consulting	467476-VZW_MT_LO_H	SK - 1
CJG		July 1, 2021 at 3:22 PM
		467476-VZW_MT_LO_H.r3d

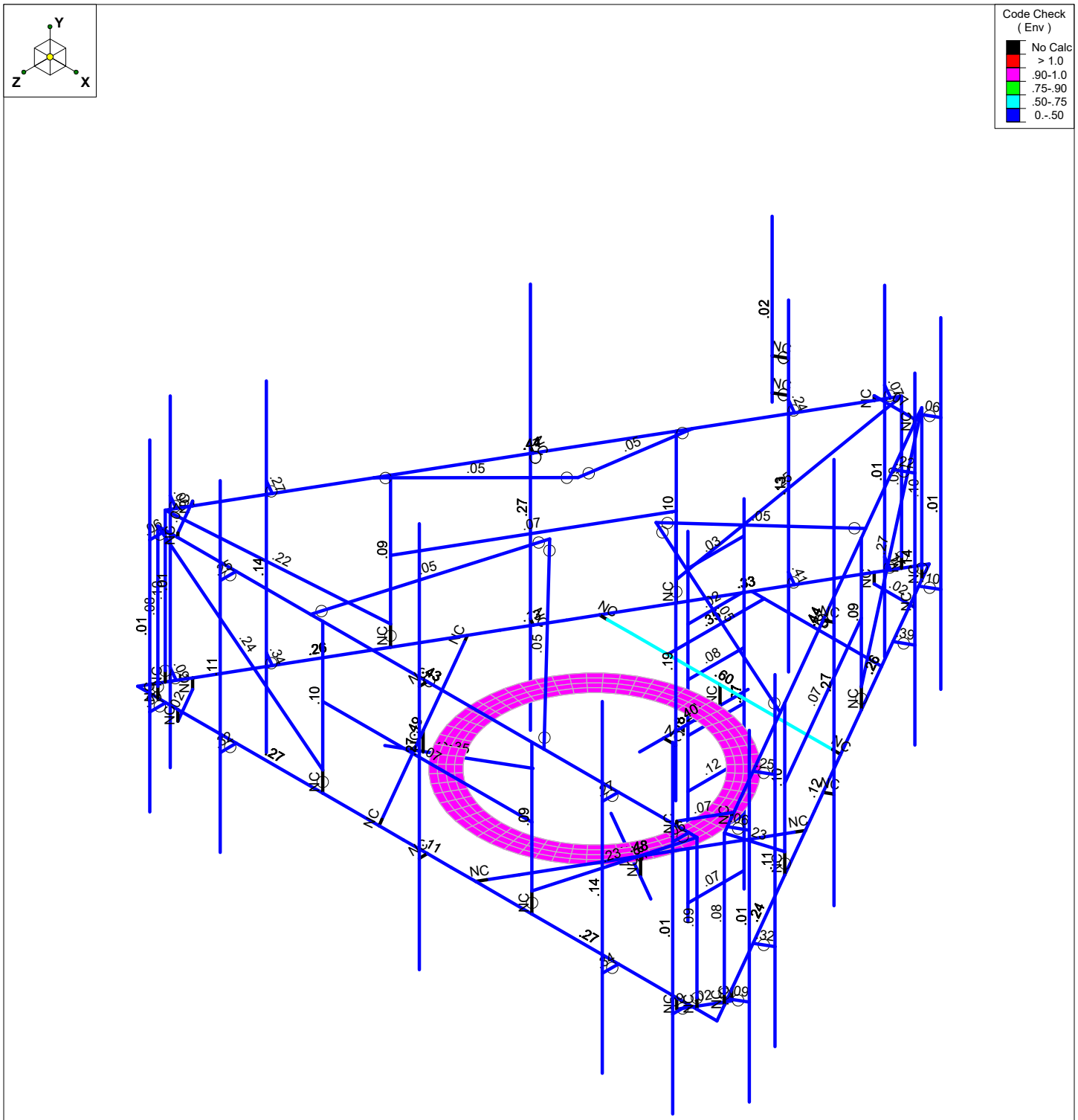

Member Code Checks Displayed (Enveloped)
Envelope Only Solution

Maser Consulting	467476-VZW_MT_LO_H	SK - 2
CJG		July 1, 2021 at 3:22 PM
		467476-VZW_MT_LO_H.r3d

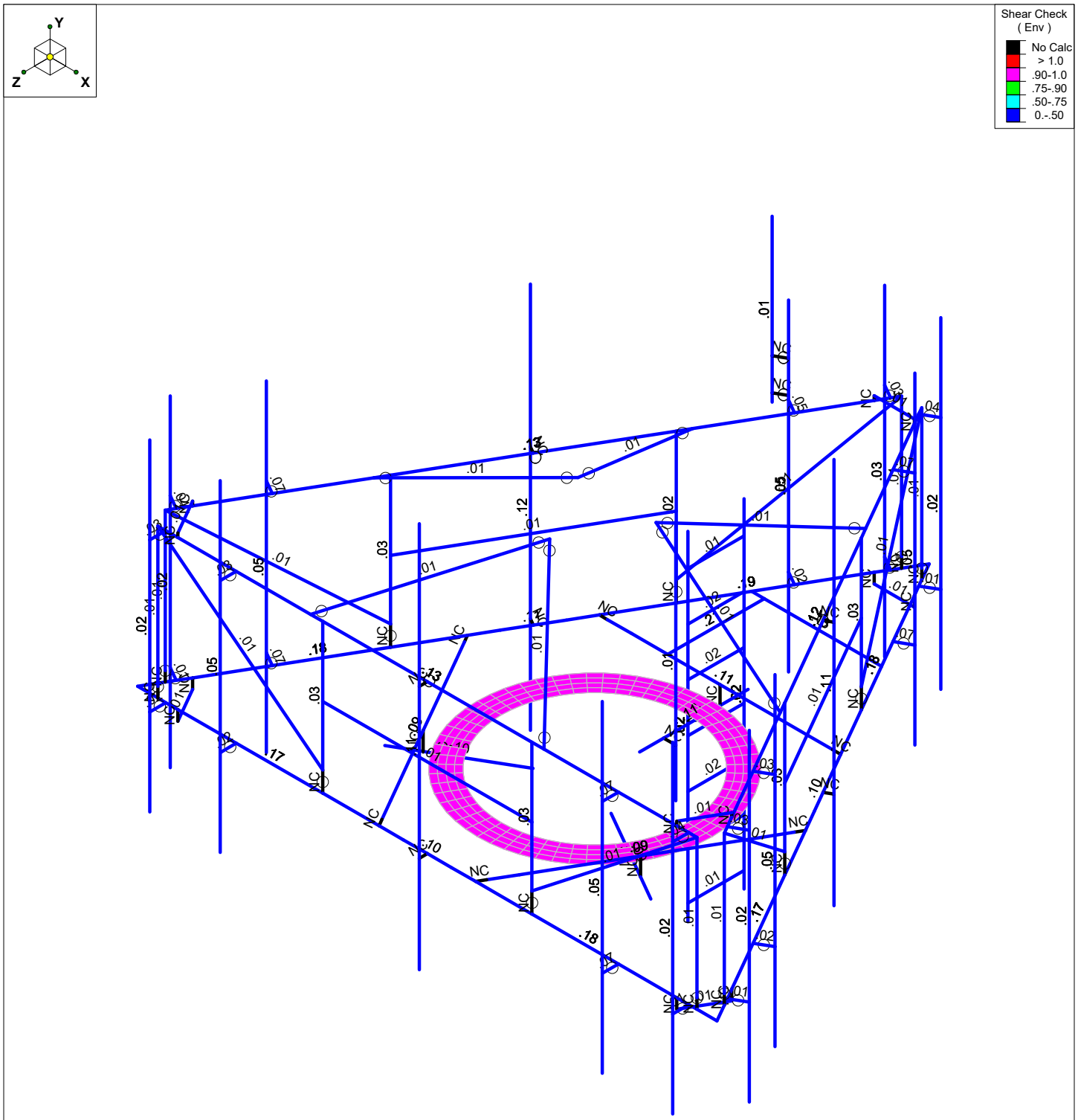

Member Shear Checks Displayed (Enveloped)
Envelope Only Solution

Maser Consulting	467476-VZW_MT_LO_H	SK - 3
CJG		July 1, 2021 at 3:23 PM
		467476-VZW_MT_LO_H.r3d

Basic Load Cases

	BLC Description	Category	X Gravity	Y Gravity	Z Gravity	Joint	Point	Distributed	Area(Me...	Surface(P...
1	Antenna D	None					102			
2	Antenna Di	None					102			
3	Antenna Wo (0 Deg)	None					102			
4	Antenna Wo (30 Deg)	None					102			
5	Antenna Wo (60 Deg)	None					102			
6	Antenna Wo (90 Deg)	None					102			
7	Antenna Wo (120 Deg)	None					102			
8	Antenna Wo (150 Deg)	None					102			
9	Antenna Wo (180 Deg)	None					102			
10	Antenna Wo (210 Deg)	None					102			
11	Antenna Wo (240 Deg)	None					102			
12	Antenna Wo (270 Deg)	None					102			
13	Antenna Wo (300 Deg)	None					102			
14	Antenna Wo (330 Deg)	None					102			
15	Antenna Wi (0 Deg)	None					102			
16	Antenna Wi (30 Deg)	None					102			
17	Antenna Wi (60 Deg)	None					102			
18	Antenna Wi (90 Deg)	None					102			
19	Antenna Wi (120 Deg)	None					102			
20	Antenna Wi (150 Deg)	None					102			
21	Antenna Wi (180 Deg)	None					102			
22	Antenna Wi (210 Deg)	None					102			
23	Antenna Wi (240 Deg)	None					102			
24	Antenna Wi (270 Deg)	None					102			
25	Antenna Wi (300 Deg)	None					102			
26	Antenna Wi (330 Deg)	None					102			
27	Antenna Wm (0 Deg)	None					102			
28	Antenna Wm (30 Deg)	None					102			
29	Antenna Wm (60 Deg)	None					102			
30	Antenna Wm (90 Deg)	None					102			
31	Antenna Wm (120 De...	None					102			
32	Antenna Wm (150 De...	None					102			
33	Antenna Wm (180 De...	None					102			
34	Antenna Wm (210 De...	None					102			
35	Antenna Wm (240 De...	None					102			
36	Antenna Wm (270 De...	None					102			
37	Antenna Wm (300 De...	None					102			
38	Antenna Wm (330 De...	None					102			
39	Structure D	None		-1					6	
40	Structure Di	None						103	6	
41	Structure Wo (0 Deg)	None						206		
42	Structure Wo (30 Deg)	None						206		
43	Structure Wo (60 Deg)	None						206		
44	Structure Wo (90 Deg)	None						206		
45	Structure Wo (120 D...	None						206		
46	Structure Wo (150 D...	None						206		
47	Structure Wo (180 D...	None						206		
48	Structure Wo (210 D...	None						206		
49	Structure Wo (240 D...	None						206		
50	Structure Wo (270 D...	None						206		
51	Structure Wo (300 D...	None						206		

Basic Load Cases (Continued)

	BLC Description	Category	X Gravity	Y Gravity	Z Gravity	Joint	Point	Distributed	Area(Me...	Surface(P...
52	Structure Wo (330 D...	None						206		
53	Structure Wi (0 Deg)	None						206		
54	Structure Wi (30 Deg)	None						206		
55	Structure Wi (60 Deg)	None						206		
56	Structure Wi (90 Deg)	None						206		
57	Structure Wi (120 De...	None						206		
58	Structure Wi (150 De...	None						206		
59	Structure Wi (180 De...	None						206		
60	Structure Wi (210 De...	None						206		
61	Structure Wi (240 De...	None						206		
62	Structure Wi (270 De...	None						206		
63	Structure Wi (300 De...	None						206		
64	Structure Wi (330 De...	None						206		
65	Structure Wm (0 Deg)	None						206		
66	Structure Wm (30 D...	None						206		
67	Structure Wm (60 D...	None						206		
68	Structure Wm (90 D...	None						206		
69	Structure Wm (120 ...	None						206		
70	Structure Wm (150 ...	None						206		
71	Structure Wm (180 ...	None						206		
72	Structure Wm (210 ...	None						206		
73	Structure Wm (240 ...	None						206		
74	Structure Wm (270 ...	None						206		
75	Structure Wm (300 ...	None						206		
76	Structure Wm (330 ...	None						206		
77	Lm1	None					1			
78	Lm2	None					1			
79	Lv1	None					1			
80	Lv2	None					1			
81	BLC 39 Transient Are...	None						83		
82	BLC 40 Transient Are...	None						83		

Load Combinations

	Description	Solve	PDelta	S...	BLC	Fac...	BLC	Fac...	BLC	Fac...	BLC	Fac...	BLC	Fac...	BLC	Fac...	BLC	Fac...	BLC	Fac...	BLC	Fac...	BLC	Fac...
1	1.2D+1.0...	Yes	Y		1	1.2	39	1.2	3	1	41	1												
2	1.2D+1.0...	Yes	Y		1	1.2	39	1.2	4	1	42	1												
3	1.2D+1.0...	Yes	Y		1	1.2	39	1.2	5	1	43	1												
4	1.2D+1.0...	Yes	Y		1	1.2	39	1.2	6	1	44	1												
5	1.2D+1.0...	Yes	Y		1	1.2	39	1.2	7	1	45	1												
6	1.2D+1.0...	Yes	Y		1	1.2	39	1.2	8	1	46	1												
7	1.2D+1.0...	Yes	Y		1	1.2	39	1.2	9	1	47	1												
8	1.2D+1.0...	Yes	Y		1	1.2	39	1.2	10	1	48	1												
9	1.2D+1.0...	Yes	Y		1	1.2	39	1.2	11	1	49	1												
10	1.2D+1.0...	Yes	Y		1	1.2	39	1.2	12	1	50	1												
11	1.2D+1.0...	Yes	Y		1	1.2	39	1.2	13	1	51	1												
12	1.2D+1.0...	Yes	Y		1	1.2	39	1.2	14	1	52	1												
13	1.2D + 1....	Yes	Y		1	1.2	39	1.2	2	1	40	1	15	1	53	1								
14	1.2D + 1....	Yes	Y		1	1.2	39	1.2	2	1	40	1	16	1	54	1								
15	1.2D + 1....	Yes	Y		1	1.2	39	1.2	2	1	40	1	17	1	55	1								
16	1.2D + 1....	Yes	Y		1	1.2	39	1.2	2	1	40	1	18	1	56	1								

Load Combinations (Continued)

	Description	Solve	PDelta	S...	BLC	Fac...	BLC	Fac...	BLC	Fac...	BLC	Fac...	BLC	Fac...	BLC	Fac...	BLC	Fac...	BLC	Fac...	BLC	Fac...	BLC	Fac...
17	1.2D + 1....	Yes	Y		1	1.2	39	1.2	2	1	40	1	19	1	57	1								
18	1.2D + 1....	Yes	Y		1	1.2	39	1.2	2	1	40	1	20	1	58	1								
19	1.2D + 1....	Yes	Y		1	1.2	39	1.2	2	1	40	1	21	1	59	1								
20	1.2D + 1....	Yes	Y		1	1.2	39	1.2	2	1	40	1	22	1	60	1								
21	1.2D + 1....	Yes	Y		1	1.2	39	1.2	2	1	40	1	23	1	61	1								
22	1.2D + 1....	Yes	Y		1	1.2	39	1.2	2	1	40	1	24	1	62	1								
23	1.2D + 1....	Yes	Y		1	1.2	39	1.2	2	1	40	1	25	1	63	1								
24	1.2D + 1....	Yes	Y		1	1.2	39	1.2	2	1	40	1	26	1	64	1								
25	1.2D + 1....	Yes	Y		1	1.2	39	1.2	77	1.5	27	1	65	1										
26	1.2D + 1....	Yes	Y		1	1.2	39	1.2	77	1.5	28	1	66	1										
27	1.2D + 1....	Yes	Y		1	1.2	39	1.2	77	1.5	29	1	67	1										
28	1.2D + 1....	Yes	Y		1	1.2	39	1.2	77	1.5	30	1	68	1										
29	1.2D + 1....	Yes	Y		1	1.2	39	1.2	77	1.5	31	1	69	1										
30	1.2D + 1....	Yes	Y		1	1.2	39	1.2	77	1.5	32	1	70	1										
31	1.2D + 1....	Yes	Y		1	1.2	39	1.2	77	1.5	33	1	71	1										
32	1.2D + 1....	Yes	Y		1	1.2	39	1.2	77	1.5	34	1	72	1										
33	1.2D + 1....	Yes	Y		1	1.2	39	1.2	77	1.5	35	1	73	1										
34	1.2D + 1....	Yes	Y		1	1.2	39	1.2	77	1.5	36	1	74	1										
35	1.2D + 1....	Yes	Y		1	1.2	39	1.2	77	1.5	37	1	75	1										
36	1.2D + 1....	Yes	Y		1	1.2	39	1.2	77	1.5	38	1	76	1										
37	1.2D + 1....	Yes	Y		1	1.2	39	1.2	78	1.5	27	1	65	1										
38	1.2D + 1....	Yes	Y		1	1.2	39	1.2	78	1.5	28	1	66	1										
39	1.2D + 1....	Yes	Y		1	1.2	39	1.2	78	1.5	29	1	67	1										
40	1.2D + 1....	Yes	Y		1	1.2	39	1.2	78	1.5	30	1	68	1										
41	1.2D + 1....	Yes	Y		1	1.2	39	1.2	78	1.5	31	1	69	1										
42	1.2D + 1....	Yes	Y		1	1.2	39	1.2	78	1.5	32	1	70	1										
43	1.2D + 1....	Yes	Y		1	1.2	39	1.2	78	1.5	33	1	71	1										
44	1.2D + 1....	Yes	Y		1	1.2	39	1.2	78	1.5	34	1	72	1										
45	1.2D + 1....	Yes	Y		1	1.2	39	1.2	78	1.5	35	1	73	1										
46	1.2D + 1....	Yes	Y		1	1.2	39	1.2	78	1.5	36	1	74	1										
47	1.2D + 1....	Yes	Y		1	1.2	39	1.2	78	1.5	37	1	75	1										
48	1.2D + 1....	Yes	Y		1	1.2	39	1.2	78	1.5	38	1	76	1										
49	1.2D + 1....	Yes	Y		1	1.2	39	1.2	79	1.5														
50	1.2D + 1....	Yes	Y		1	1.2	39	1.2	80	1.5														
51	1.4D	Yes	Y		1	1.4	39	1.4																
52	Seismic ...		Y		1	1	39	1																
53	1.2D + 1....		Y		1	1.2	39	1.2	SX		SY	1	SZ	-1										
54	1.2D + 1....		Y		1	1.2	39	1.2	SX	.5	SY	1	SZ	-.866										
55	1.2D + 1....		Y		1	1.2	39	1.2	SX	.866	SY	1	SZ	-.5										
56	1.2D + 1....		Y		1	1.2	39	1.2	SX	1	SY	1	SZ											
57	1.2D + 1....		Y		1	1.2	39	1.2	SX	.866	SY	1	SZ	.5										
58	1.2D + 1....		Y		1	1.2	39	1.2	SX	.5	SY	1	SZ	.866										
59	1.2D + 1....		Y		1	1.2	39	1.2	SX		SY	1	SZ	1										
60	1.2D + 1....		Y		1	1.2	39	1.2	SX	-.5	SY	1	SZ	.866										
61	1.2D + 1....		Y		1	1.2	39	1.2	SX	-.866	SY	1	SZ	.5										
62	1.2D + 1....		Y		1	1.2	39	1.2	SX	-1	SY	1	SZ											
63	1.2D + 1....		Y		1	1.2	39	1.2	SX	-.866	SY	1	SZ	-.5										
64	1.2D + 1....		Y		1	1.2	39	1.2	SX	-.5	SY	1	SZ	-.866										
65			Y		1	1.2	39	1.2	SX	-.5	SY	1	SZ	-.866										

Joint Coordinates and Temperatures

	Label	X [ft]	Y [ft]	Z [ft]	Temp [F]	Detach From Diap...
1	N1	0	0	0	0	
2	N2	6	0	3.464102	0	
3	N3	-6	0	3.464102	0	
4	N4	1	0	3.464102	0	
5	N5	-1	0	3.464102	0	
6	N14	0	0	3.464102	0	
7	N15	0	0	3.630768	0	
8	N16	0	6	3.630768	0	
9	N17	0	-2	3.630768	0	
10	N18	5.416667	0	3.464102	0	
11	N19	5.416667	0	3.797435	0	
12	N20	5.416667	4.875	3.797435	0	
13	N21	5.416667	-1.791667	3.797435	0	
14	N22	0.	0	-6.928203	0	
15	N24	2.5	0	-2.598076	0	
16	N25	3.5	0	-0.866025	0	
17	N44	-3.5	0	-0.866025	0	
18	N45	-2.5	0	-2.598076	0	
19	N59A	-2.333333	0	-2.598076	0	
20	N60A	2.333333	0	-2.598076	0	
21	N63	-1.083333	0	3.319764	0	
22	N64	-3.416667	0	-0.721688	0	
23	N67	3.416667	0	-0.721688	0	
24	N68	1.083333	0	3.319764	0	
25	N67A	0.416667	0	-6.206515	0	
26	N68B	-0.416667	0	-6.206515	0	
27	N69A	0.416667	-0.208333	-6.206515	0	
28	N70	-0.416667	-0.208333	-6.206515	0	
29	N73	-5.583333	0	2.742414	0	
30	N74	-5.166667	0	3.464102	0	
31	N75	-5.583333	-0.208333	2.742414	0	
32	N76	-5.166667	-0.208333	3.464102	0	
33	N79	5.166667	0	3.464102	0	
34	N80	5.583333	0	2.742414	0	
35	N81	5.166667	-0.208333	3.464102	0	
36	N82	5.583333	-0.208333	2.742414	0	
37	N83	-1.083333	0	-2.598076	0	
38	N84	-1.083333	0	-4.598076	0	
39	N85	1.345299	0	-4.598076	0	
40	N86	-1.345299	0	-4.598076	0	
41	N87	-1.083333	2	-3.014743	0	
42	N88	-1.083333	-5	-3.014743	0	
43	N89	-1.083333	2	-4.18141	0	
44	N90	-1.083333	-5	-4.18141	0	
45	N91	-1.083333	0	-3.014743	0	
46	N92	-1.083333	0	-4.18141	0	
47	N93	-1.083333	1.333333	-3.014743	0	
48	N94	-1.083333	1.333333	-4.18141	0	
49	N95	-1.083333	-3.666667	-3.014743	0	
50	N96	-1.083333	-3.666667	-4.18141	0	
51	N97	-1.083333	-2.666667	-3.014743	0	

Joint Coordinates and Temperatures (Continued)

	Label	X [ft]	Y [ft]	Z [ft]	Temp [F]	Detach From Diap...
52	N98	-1.083333	-2.666667	-4.18141	0	
53	N99	-1.083333	-1.666667	-3.014743	0	
54	N100	-1.083333	-1.666667	-4.18141	0	
55	N101	-1.083333	-0.666667	-3.014743	0	
56	N102	-1.083333	-0.666667	-4.18141	0	
57	N103	-1.083333	0.333333	-3.014743	0	
58	N104	-1.083333	0.333333	-4.18141	0	
59	N105	-1.083333	-4.666667	-3.014743	0	
60	N106	-1.083333	-4.666667	-4.18141	0	
61	N108	-0.	0	-2.598076	0	
62	N109	-0.	-.375	-0.931416	0	
63	N110	-0.	-.375	-3.181416	0	
64	N111	-0.	-.375	-2.598076	0	
65	N112	-0.	-.375	-2.18141	0	
66	N112A	-2.25	0	1.299038	0	
67	N115	-2.25	-.375	1.299038	0	
68	N116	2.25	0	1.299038	0	
69	N119	2.25	-.375	1.299038	0	
70	N120	-1.889156	-.375	1.090705	0	
71	N121	1.889156	-.375	1.090705	0	
72	N122	-0.	-0.208333	-2.18141	0	
73	N123	-1.889156	-0.208333	1.090705	0	
74	N124	1.889156	-0.208333	1.090705	0	
75	N125	0	-0.208333	1.931417	0	
76	N126	0.201888	-0.208333	1.920836	0	
77	N127	0.401564	-0.208333	1.889211	0	
78	N128	0.596841	-0.208333	1.836886	0	
79	N129	0.785578	-0.208333	1.764437	0	
80	N130	0.965708	-0.208333	1.672656	0	
81	N131	1.135258	-0.208333	1.562549	0	
82	N132	1.29237	-0.208333	1.435322	0	
83	N133	1.435322	-0.208333	1.29237	0	
84	N134	1.562549	-0.208333	1.135258	0	
85	N135	1.672656	-0.208333	0.965708	0	
86	N136	1.764437	-0.208333	0.785578	0	
87	N137	1.836886	-0.208333	0.596841	0	
88	N138	1.889211	-0.208333	0.401564	0	
89	N139	1.920836	-0.208333	0.201888	0	
90	N140	1.931417	-0.208333	0	0	
91	N141	1.920836	-0.208333	-0.201888	0	
92	N142	1.889211	-0.208333	-0.401564	0	
93	N143	1.836886	-0.208333	-0.596841	0	
94	N144	1.764437	-0.208333	-0.785578	0	
95	N145	1.672656	-0.208333	-0.965708	0	
96	N146	1.562549	-0.208333	-1.135258	0	
97	N147	1.435322	-0.208333	-1.29237	0	
98	N148	1.29237	-0.208333	-1.435322	0	
99	N149	1.135258	-0.208333	-1.562549	0	
100	N150	0.965708	-0.208333	-1.672656	0	
101	N151	0.785578	-0.208333	-1.764437	0	
102	N152	0.596841	-0.208333	-1.836886	0	
103	N153	0.401564	-0.208333	-1.889211	0	

Joint Coordinates and Temperatures (Continued)

	Label	X [ft]	Y [ft]	Z [ft]	Temp [F]	Detach From Diap...
104	N154	0.201888	-0.208333	-1.920836	0	
105	N155	0	-0.208333	-1.931417	0	
106	N156	-0.201888	-0.208333	-1.920836	0	
107	N157	-0.401564	-0.208333	-1.889211	0	
108	N158	-0.596841	-0.208333	-1.836886	0	
109	N159	-0.785578	-0.208333	-1.764437	0	
110	N160	-0.965708	-0.208333	-1.672656	0	
111	N161	-1.135258	-0.208333	-1.562549	0	
112	N162	-1.29237	-0.208333	-1.435322	0	
113	N163	-1.435322	-0.208333	-1.29237	0	
114	N164	-1.562549	-0.208333	-1.135258	0	
115	N165	-1.672656	-0.208333	-0.965708	0	
116	N166	-1.764437	-0.208333	-0.785578	0	
117	N167	-1.836886	-0.208333	-0.596841	0	
118	N168	-1.889211	-0.208333	-0.401564	0	
119	N169	-1.920836	-0.208333	-0.201888	0	
120	N170	-1.931417	-0.208333	0	0	
121	N171	-1.920836	-0.208333	0.201888	0	
122	N172	-1.889211	-0.208333	0.401564	0	
123	N173	-1.836886	-0.208333	0.596841	0	
124	N174	-1.764437	-0.208333	0.785578	0	
125	N175	-1.672656	-0.208333	0.965708	0	
126	N176	-1.562549	-0.208333	1.135258	0	
127	N177	-1.435322	-0.208333	1.29237	0	
128	N178	-1.29237	-0.208333	1.435322	0	
129	N179	-1.135258	-0.208333	1.562549	0	
130	N180	-0.965708	-0.208333	1.672656	0	
131	N181	-0.785578	-0.208333	1.764437	0	
132	N182	-0.596841	-0.208333	1.836886	0	
133	N183	-0.401564	-0.208333	1.889211	0	
134	N184	-0.201888	-0.208333	1.920836	0	
135	N186	0	-0.208333	2.056417	0	
136	N187	0.214954	-0.208333	2.045151	0	
137	N188	0.427553	-0.208333	2.011479	0	
138	N189	0.635468	-0.208333	1.955768	0	
139	N190	0.83642	-0.208333	1.87863	0	
140	N191	1.028208	-0.208333	1.780909	0	
141	N192	1.208731	-0.208333	1.663676	0	
142	N193	1.376011	-0.208333	1.528215	0	
143	N194	1.528215	-0.208333	1.376011	0	
144	N195	1.663676	-0.208333	1.208731	0	
145	N196	1.780909	-0.208333	1.028208	0	
146	N197	1.87863	-0.208333	0.83642	0	
147	N198	1.955768	-0.208333	0.635468	0	
148	N199	2.011479	-0.208333	0.427553	0	
149	N200	2.045151	-0.208333	0.214954	0	
150	N201	2.056417	-0.208333	0	0	
151	N202	2.045151	-0.208333	-0.214954	0	
152	N203	2.011479	-0.208333	-0.427553	0	
153	N204	1.955768	-0.208333	-0.635468	0	
154	N205	1.87863	-0.208333	-0.83642	0	
155	N206	1.780909	-0.208333	-1.028208	0	

Joint Coordinates and Temperatures (Continued)

	Label	X [ft]	Y [ft]	Z [ft]	Temp [F]	Detach From Diap...
156	N207	1.663676	-0.208333	-1.208731	0	
157	N208	1.528215	-0.208333	-1.376011	0	
158	N209	1.376011	-0.208333	-1.528215	0	
159	N210	1.208731	-0.208333	-1.663676	0	
160	N211	1.028208	-0.208333	-1.780909	0	
161	N212	0.83642	-0.208333	-1.87863	0	
162	N213	0.635468	-0.208333	-1.955768	0	
163	N214	0.427553	-0.208333	-2.011479	0	
164	N215	0.214954	-0.208333	-2.045151	0	
165	N216	0	-0.208333	-2.056417	0	
166	N217	-0.214954	-0.208333	-2.045151	0	
167	N218	-0.427553	-0.208333	-2.011479	0	
168	N219	-0.635468	-0.208333	-1.955768	0	
169	N220	-0.83642	-0.208333	-1.87863	0	
170	N221	-1.028208	-0.208333	-1.780909	0	
171	N222	-1.208731	-0.208333	-1.663676	0	
172	N223	-1.376011	-0.208333	-1.528215	0	
173	N224	-1.528215	-0.208333	-1.376011	0	
174	N225	-1.663676	-0.208333	-1.208731	0	
175	N226	-1.780909	-0.208333	-1.028208	0	
176	N227	-1.87863	-0.208333	-0.83642	0	
177	N228	-1.955768	-0.208333	-0.635468	0	
178	N229	-2.011479	-0.208333	-0.427553	0	
179	N230	-2.045151	-0.208333	-0.214954	0	
180	N231	-2.056417	-0.208333	0	0	
181	N232	-2.045151	-0.208333	0.214954	0	
182	N233	-2.011479	-0.208333	0.427553	0	
183	N234	-1.955768	-0.208333	0.635468	0	
184	N235	-1.87863	-0.208333	0.83642	0	
185	N236	-1.780909	-0.208333	1.028208	0	
186	N237	-1.663676	-0.208333	1.208731	0	
187	N238	-1.528215	-0.208333	1.376011	0	
188	N239	-1.376011	-0.208333	1.528215	0	
189	N240	-1.208731	-0.208333	1.663676	0	
190	N241	-1.028208	-0.208333	1.780909	0	
191	N242	-0.83642	-0.208333	1.87863	0	
192	N243	-0.635468	-0.208333	1.955768	0	
193	N244	-0.427553	-0.208333	2.011479	0	
194	N245	-0.214954	-0.208333	2.045151	0	
195	N247	0	-0.208333	2.181417	0	
196	N248	0.22802	-0.208333	2.169467	0	
197	N249	0.453542	-0.208333	2.133747	0	
198	N250	0.674095	-0.208333	2.074651	0	
199	N251	0.887262	-0.208333	1.992823	0	
200	N252	1.090708	-0.208333	1.889162	0	
201	N253	1.282205	-0.208333	1.764803	0	
202	N254	1.459653	-0.208333	1.621109	0	
203	N255	1.621109	-0.208333	1.459653	0	
204	N256	1.764803	-0.208333	1.282205	0	
205	N258	1.992823	-0.208333	0.887262	0	
206	N259	2.074651	-0.208333	0.674095	0	
207	N260	2.133747	-0.208333	0.453542	0	

Joint Coordinates and Temperatures (Continued)

	Label	X [ft]	Y [ft]	Z [ft]	Temp [F]	Detach From Diap...
208	N261	2.169467	-0.208333	0.22802	0	
209	N262	2.181417	-0.208333	0	0	
210	N263	2.169467	-0.208333	-0.22802	0	
211	N264	2.133747	-0.208333	-0.453542	0	
212	N265	2.074651	-0.208333	-0.674095	0	
213	N266	1.992823	-0.208333	-0.887262	0	
214	N267	1.889162	-0.208333	-1.090708	0	
215	N268	1.764803	-0.208333	-1.282205	0	
216	N269	1.621109	-0.208333	-1.459653	0	
217	N270	1.459653	-0.208333	-1.621109	0	
218	N271	1.282205	-0.208333	-1.764803	0	
219	N272	1.090708	-0.208333	-1.889162	0	
220	N273	0.887262	-0.208333	-1.992823	0	
221	N274	0.674095	-0.208333	-2.074651	0	
222	N275	0.453542	-0.208333	-2.133747	0	
223	N276	0.22802	-0.208333	-2.169467	0	
224	N278	-0.22802	-0.208333	-2.169467	0	
225	N279	-0.453542	-0.208333	-2.133747	0	
226	N280	-0.674095	-0.208333	-2.074651	0	
227	N281	-0.887262	-0.208333	-1.992823	0	
228	N282	-1.090708	-0.208333	-1.889162	0	
229	N283	-1.282205	-0.208333	-1.764803	0	
230	N284	-1.459653	-0.208333	-1.621109	0	
231	N285	-1.621109	-0.208333	-1.459653	0	
232	N286	-1.764803	-0.208333	-1.282205	0	
233	N287	-1.889162	-0.208333	-1.090708	0	
234	N288	-1.992823	-0.208333	-0.887262	0	
235	N289	-2.074651	-0.208333	-0.674095	0	
236	N290	-2.133747	-0.208333	-0.453542	0	
237	N291	-2.169467	-0.208333	-0.22802	0	
238	N292	-2.181417	-0.208333	0	0	
239	N293	-2.169467	-0.208333	0.22802	0	
240	N294	-2.133747	-0.208333	0.453542	0	
241	N295	-2.074651	-0.208333	0.674095	0	
242	N296	-1.992823	-0.208333	0.887262	0	
243	N298	-1.764803	-0.208333	1.282205	0	
244	N299	-1.621109	-0.208333	1.459653	0	
245	N300	-1.459653	-0.208333	1.621109	0	
246	N301	-1.282205	-0.208333	1.764803	0	
247	N302	-1.090708	-0.208333	1.889162	0	
248	N303	-0.887262	-0.208333	1.992823	0	
249	N304	-0.674095	-0.208333	2.074651	0	
250	N305	-0.453542	-0.208333	2.133747	0	
251	N306	-0.22802	-0.208333	2.169467	0	
252	N308	0	-0.208333	2.306417	0	
253	N309	0.241086	-0.208333	2.293782	0	
254	N310	0.479531	-0.208333	2.256016	0	
255	N311	0.712722	-0.208333	2.193533	0	
256	N312	0.938104	-0.208333	2.107016	0	
257	N313	1.153208	-0.208333	1.997415	0	
258	N314	1.355678	-0.208333	1.86593	0	
259	N315	1.543294	-0.208333	1.714002	0	

Joint Coordinates and Temperatures (Continued)

	Label	X [ft]	Y [ft]	Z [ft]	Temp [F]	Detach From Diap...
260	N316	1.714002	-0.208333	1.543294	0	
261	N317	1.86593	-0.208333	1.355678	0	
262	N318	1.997415	-0.208333	1.153208	0	
263	N319	2.107016	-0.208333	0.938104	0	
264	N320	2.193533	-0.208333	0.712722	0	
265	N321	2.256016	-0.208333	0.479531	0	
266	N322	2.293782	-0.208333	0.241086	0	
267	N323	2.306417	-0.208333	0	0	
268	N324	2.293782	-0.208333	-0.241086	0	
269	N325	2.256016	-0.208333	-0.479531	0	
270	N326	2.193533	-0.208333	-0.712722	0	
271	N327	2.107016	-0.208333	-0.938104	0	
272	N328	1.997415	-0.208333	-1.153208	0	
273	N329	1.86593	-0.208333	-1.355678	0	
274	N330	1.714002	-0.208333	-1.543294	0	
275	N331	1.543294	-0.208333	-1.714002	0	
276	N332	1.355678	-0.208333	-1.86593	0	
277	N333	1.153208	-0.208333	-1.997415	0	
278	N334	0.938104	-0.208333	-2.107016	0	
279	N335	0.712722	-0.208333	-2.193533	0	
280	N336	0.479531	-0.208333	-2.256016	0	
281	N337	0.241086	-0.208333	-2.293782	0	
282	N338	0	-0.208333	-2.306417	0	
283	N339	-0.241086	-0.208333	-2.293782	0	
284	N340	-0.479531	-0.208333	-2.256016	0	
285	N341	-0.712722	-0.208333	-2.193533	0	
286	N342	-0.938104	-0.208333	-2.107016	0	
287	N343	-1.153208	-0.208333	-1.997415	0	
288	N344	-1.355678	-0.208333	-1.86593	0	
289	N345	-1.543294	-0.208333	-1.714002	0	
290	N346	-1.714002	-0.208333	-1.543294	0	
291	N347	-1.86593	-0.208333	-1.355678	0	
292	N348	-1.997415	-0.208333	-1.153208	0	
293	N349	-2.107016	-0.208333	-0.938104	0	
294	N350	-2.193533	-0.208333	-0.712722	0	
295	N351	-2.256016	-0.208333	-0.479531	0	
296	N352	-2.293782	-0.208333	-0.241086	0	
297	N353	-2.306417	-0.208333	0	0	
298	N354	-2.293782	-0.208333	0.241086	0	
299	N355	-2.256016	-0.208333	0.479531	0	
300	N356	-2.193533	-0.208333	0.712722	0	
301	N357	-2.107016	-0.208333	0.938104	0	
302	N358	-1.997415	-0.208333	1.153208	0	
303	N359	-1.86593	-0.208333	1.355678	0	
304	N360	-1.714002	-0.208333	1.543294	0	
305	N361	-1.543294	-0.208333	1.714002	0	
306	N362	-1.355678	-0.208333	1.86593	0	
307	N363	-1.153208	-0.208333	1.997415	0	
308	N364	-0.938104	-0.208333	2.107016	0	
309	N365	-0.712722	-0.208333	2.193533	0	
310	N366	-0.479531	-0.208333	2.256016	0	
311	N367	-0.241086	-0.208333	2.293782	0	

Joint Coordinates and Temperatures (Continued)

	Label	X [ft]	Y [ft]	Z [ft]	Temp [F]	Detach From Diap...
312	N369	0	-0.208333	2.431417	0	
313	N370	0.254152	-0.208333	2.418097	0	
314	N371	0.50552	-0.208333	2.378284	0	
315	N372	0.751349	-0.208333	2.312415	0	
316	N373	0.988946	-0.208333	2.22121	0	
317	N374	1.215708	-0.208333	2.105669	0	
318	N375	1.429151	-0.208333	1.967057	0	
319	N376	1.626935	-0.208333	1.806895	0	
320	N377	1.806895	-0.208333	1.626935	0	
321	N378	1.967057	-0.208333	1.429151	0	
322	N379	2.105669	-0.208333	1.215708	0	
323	N380	2.22121	-0.208333	0.988946	0	
324	N381	2.312415	-0.208333	0.751349	0	
325	N382	2.378284	-0.208333	0.50552	0	
326	N383	2.418097	-0.208333	0.254152	0	
327	N384	2.431417	-0.208333	0	0	
328	N385	2.418097	-0.208333	-0.254152	0	
329	N386	2.378284	-0.208333	-0.50552	0	
330	N387	2.312415	-0.208333	-0.751349	0	
331	N388	2.22121	-0.208333	-0.988946	0	
332	N389	2.105669	-0.208333	-1.215708	0	
333	N390	1.967057	-0.208333	-1.429151	0	
334	N391	1.806895	-0.208333	-1.626935	0	
335	N392	1.626935	-0.208333	-1.806895	0	
336	N393	1.429151	-0.208333	-1.967057	0	
337	N394	1.215708	-0.208333	-2.105669	0	
338	N395	0.988946	-0.208333	-2.22121	0	
339	N396	0.751349	-0.208333	-2.312415	0	
340	N397	0.50552	-0.208333	-2.378284	0	
341	N398	0.254152	-0.208333	-2.418097	0	
342	N399	0	-0.208333	-2.431417	0	
343	N400	-0.254152	-0.208333	-2.418097	0	
344	N401	-0.50552	-0.208333	-2.378284	0	
345	N402	-0.751349	-0.208333	-2.312415	0	
346	N403	-0.988946	-0.208333	-2.22121	0	
347	N404	-1.215708	-0.208333	-2.105669	0	
348	N405	-1.429151	-0.208333	-1.967057	0	
349	N406	-1.626935	-0.208333	-1.806895	0	
350	N407	-1.806895	-0.208333	-1.626935	0	
351	N408	-1.967057	-0.208333	-1.429151	0	
352	N409	-2.105669	-0.208333	-1.215708	0	
353	N410	-2.22121	-0.208333	-0.988946	0	
354	N411	-2.312415	-0.208333	-0.751349	0	
355	N412	-2.378284	-0.208333	-0.50552	0	
356	N413	-2.418097	-0.208333	-0.254152	0	
357	N414	-2.431417	-0.208333	0	0	
358	N415	-2.418097	-0.208333	0.254152	0	
359	N416	-2.378284	-0.208333	0.50552	0	
360	N417	-2.312415	-0.208333	0.751349	0	
361	N418	-2.22121	-0.208333	0.988946	0	
362	N419	-2.105669	-0.208333	1.215708	0	
363	N420	-1.967057	-0.208333	1.429151	0	

Joint Coordinates and Temperatures (Continued)

	Label	X [ft]	Y [ft]	Z [ft]	Temp [F]	Detach From Diap...
364	N421	-1.806895	-0.208333	1.626935	0	
365	N422	-1.626935	-0.208333	1.806895	0	
366	N423	-1.429151	-0.208333	1.967057	0	
367	N424	-1.215708	-0.208333	2.105669	0	
368	N425	-0.988946	-0.208333	2.22121	0	
369	N426	-0.751349	-0.208333	2.312415	0	
370	N427	-0.50552	-0.208333	2.378284	0	
371	N428	-0.254152	-0.208333	2.418097	0	
372	N425A	-.5	0	3.464102	0	
373	N426A	3.25	0	-1.299038	0	
374	N427A	-2.75	0	-2.165064	0	
375	N428A	.5	0	3.464102	0	
376	N429	2.75	0	-2.165064	0	
377	N430	-3.25	0	-1.299038	0	
378	N431	-1.833333	0	-2.598076	0	
379	N429A	1.833333	0	-2.598076	0	
380	N430A	-1.333333	0	2.886751	0	
381	N431A	-3.166667	0	-0.288675	0	
382	N432	3.166667	0	-0.288675	0	
383	N433	1.333333	0	2.886751	0	
384	N434	-5.583333	0	3.464102	0	
385	N435	5.583333	0	3.464102	0	
386	N436	-5.583333	0.208333	3.464102	0	
387	N437	5.583333	0.208333	3.464102	0	
388	N438	-2.166667	0	3.464102	0	
389	N439	-2.166667	0.416667	3.464102	0	
390	N440	2.166667	0	3.464102	0	
391	N441	2.166667	0.416667	3.464102	0	
392	N442	-5.583333	3.083333	3.464102	0	
393	N443	5.583333	3.083333	3.464102	0	
394	N444	-2.166667	3.083333	3.464102	0	
395	N445	2.166667	3.083333	3.464102	0	
396	N446	-2.166667	1.645833	3.464102	0	
397	N447	2.166667	1.645833	3.464102	0	
398	N452	0	3.083333	3.464102	0	
399	N453	0	3.083333	3.630768	0	
400	N454	5.416667	3.083333	3.464102	0	
401	N455	5.416667	3.083333	3.797435	0	
402	N518	5.791667	0	3.103258	0	
403	N519	0.208333	0	-6.567359	0	
404	N520	5.791667	0.208333	3.103258	0	
405	N521	0.208333	0.208333	-6.567359	0	
406	N522	4.083333	0	0.144338	0	
407	N523	4.083333	0.416667	0.144338	0	
408	N524	1.916667	0	-3.608439	0	
409	N525	1.916667	0.416667	-3.608439	0	
410	N526	5.791667	3.083333	3.103258	0	
411	N527	0.208333	3.083333	-6.567359	0	
412	N528	4.083333	3.083333	0.144338	0	
413	N529	1.916667	3.083333	-3.608439	0	
414	N530	4.083333	1.645833	0.144338	0	
415	N531	1.916667	1.645833	-3.608439	0	

Joint Coordinates and Temperatures (Continued)

	Label	X [ft]	Y [ft]	Z [ft]	Temp [F]	Detach From Diap...
416	N546	-0.208333	0	-6.567359	0	
417	N547	-5.791667	0	3.103258	0	
418	N548	-0.208333	0.208333	-6.567359	0	
419	N549	-5.791667	0.208333	3.103258	0	
420	N550	-1.916667	0	-3.608439	0	
421	N551	-1.916667	0.416667	-3.608439	0	
422	N552	-4.083333	0	0.144338	0	
423	N553	-4.083333	0.416667	0.144338	0	
424	N554	-0.208333	3.083333	-6.567359	0	
425	N555	-5.791667	3.083333	3.103258	0	
426	N556	-1.916667	3.083333	-3.608439	0	
427	N557	-4.083333	3.083333	0.144338	0	
428	N558	-1.916667	1.645833	-3.608439	0	
429	N559	-4.083333	1.645833	0.144338	0	
430	N522A	-5.583333	3.083333	2.742414	0	
431	N523A	-5.166667	3.083333	3.464102	0	
432	N524A	-5.583333	3.166667	2.742414	0	
433	N525A	-5.166667	3.166667	3.464102	0	
434	N526A	5.166667	3.083333	3.464102	0	
435	N527A	5.583333	3.083333	2.742414	0	
436	N528A	5.166667	3.166667	3.464102	0	
437	N529A	5.583333	3.166667	2.742414	0	
438	N530A	0.416667	3.083333	-6.206515	0	
439	N531A	-0.416667	3.083333	-6.206515	0	
440	N532	0.416667	3.166667	-6.206515	0	
441	N533	-0.416667	3.166667	-6.206515	0	
442	N542A	-0.80663	-.375	0.465708	0	
443	N544	0.80663	-.375	0.465708	0	
444	N508	-2.755187	-.375	1.590708	0	
445	N510	2.755187	-.375	1.590708	0	
446	N449	3.958333	0	3.464102	0	
447	N450	3.958333	0	3.797435	0	
448	N451	3.958333	4.875	3.797435	0	
449	N452A	3.958333	-1.791667	3.797435	0	
450	N453A	3.958333	3.083333	3.464102	0	
451	N454A	3.958333	3.083333	3.797435	0	
452	N455A	-5.416667	0	3.464102	0	
453	N456	-5.416667	0	3.797435	0	
454	N457	-5.416667	4.875	3.797435	0	
455	N458	-5.416667	-1.791667	3.797435	0	
456	N459	-5.416667	3.083333	3.464102	0	
457	N460	-5.416667	3.083333	3.797435	0	
458	N461	-3.958333	0	3.464102	0	
459	N462	-3.958333	0	3.797435	0	
460	N463	-3.958333	4.875	3.797435	0	
461	N464	-3.958333	-1.791667	3.797435	0	
462	N465	-3.958333	3.083333	3.464102	0	
463	N466	-3.958333	3.083333	3.797435	0	
464	N467	3.	0	-1.732051	0	
465	N468	3.144338	0	-1.815384	0	
466	N469	3.144338	6	-1.815384	0	
467	N470	3.144338	-2	-1.815384	0	

Joint Coordinates and Temperatures (Continued)

	Label	X [ft]	Y [ft]	Z [ft]	Temp [F]	Detach From Diap...
468	N471	0.291667	0	-6.423022	0	
469	N472	0.580342	0	-6.589688	0	
470	N473	0.580342	4.875	-6.589688	0	
471	N474	0.580342	-1.791667	-6.589688	0	
472	N475	3.	3.083333	-1.732051	0	
473	N476	3.144338	3.083333	-1.815384	0	
474	N477	0.291667	3.083333	-6.423022	0	
475	N478	0.580342	3.083333	-6.589688	0	
476	N479	1.020833	0	-5.160068	0	
477	N480	1.309508	0	-5.326735	0	
478	N481	1.309508	4.875	-5.326735	0	
479	N482	1.309508	-1.791667	-5.326735	0	
480	N483	1.020833	3.083333	-5.160068	0	
481	N484	1.309508	3.083333	-5.326735	0	
482	N485	5.708333	0	2.95892	0	
483	N486	5.997008	0	2.792253	0	
484	N487	5.997008	4.875	2.792253	0	
485	N488	5.997008	-1.791667	2.792253	0	
486	N489	5.708333	3.083333	2.95892	0	
487	N490	5.997008	3.083333	2.792253	0	
488	N491	4.979167	0	1.695966	0	
489	N492	5.267842	0	1.5293	0	
490	N493	5.267842	4.875	1.5293	0	
491	N494	5.267842	-1.791667	1.5293	0	
492	N495	4.979167	3.083333	1.695966	0	
493	N496	5.267842	3.083333	1.5293	0	
494	N497	-3.	0	-1.732051	0	
495	N498	-3.144338	0	-1.815384	0	
496	N499	-3.144338	6	-1.815384	0	
497	N500	-3.144338	-2	-1.815384	0	
498	N501	-5.708333	0	2.95892	0	
499	N502	-5.997008	0	2.792253	0	
500	N503	-5.997008	4.875	2.792253	0	
501	N504	-5.997008	-1.791667	2.792253	0	
502	N505	-3.	3.083333	-1.732051	0	
503	N506	-3.144338	3.083333	-1.815384	0	
504	N507	-5.708333	3.083333	2.95892	0	
505	N508A	-5.997008	3.083333	2.792253	0	
506	N509	-4.979167	0	1.695966	0	
507	N510A	-5.267842	0	1.5293	0	
508	N511	-5.267842	4.875	1.5293	0	
509	N512	-5.267842	-1.791667	1.5293	0	
510	N513	-4.979167	3.083333	1.695966	0	
511	N514	-5.267842	3.083333	1.5293	0	
512	N515	-0.291667	0	-6.423022	0	
513	N516	-0.580342	0	-6.589688	0	
514	N517	-0.580342	4.875	-6.589688	0	
515	N518A	-0.580342	-1.791667	-6.589688	0	
516	N519A	-0.291667	3.083333	-6.423022	0	
517	N520A	-0.580342	3.083333	-6.589688	0	
518	N521A	-1.020833	0	-5.160068	0	
519	N522B	-1.309508	0	-5.326735	0	

Joint Coordinates and Temperatures (Continued)

	Label	X [ft]	Y [ft]	Z [ft]	Temp [F]	Detach From Diap...
520	N523B	-1.309508	4.875	-5.326735	0	
521	N524B	-1.309508	-1.791667	-5.326735	0	
522	N525B	-1.020833	3.083333	-5.160068	0	
523	N526B	-1.309508	3.083333	-5.326735	0	
524	N528B	0.	4.375	0.931416	0	
525	N527C	-1.309508	3.166667	-5.326735	0	
526	N528C	-1.309508	3.833333	-5.326735	0	
527	N529C	-1.526015	3.166667	-5.201735	0	
528	N530B	-1.526015	3.833333	-5.201735	0	
529	N531B	-1.526015	3	-5.201735	0	
530	N532A	-1.526015	6.333333	-5.201735	0	
531	N533A	-0.	-.375	-1.431416	0	
532	N534	0.25	-.375	-1.431416	0	
533	N535	0.25	-1.375	-1.431416	0	
534	N536	0.25	3.625	-1.431416	0	
535	N535A	2.416667	3.083333	3.464102	0	
536	N536A	-2.416667	3.083333	3.464102	0	
537	N539	0.80663	4.375	-0.465708	0	
538	N540	1.791667	3.083333	-3.824946	0	
539	N541	4.208333	3.083333	0.360844	0	
540	N544A	-0.80663	4.375	-0.465708	0	
541	N545	-4.208333	3.083333	0.360844	0	
542	N546A	-1.791667	3.083333	-3.824946	0	

Hot Rolled Steel Section Sets

	Label	Shape	Type	Design List	Material	Design ...	A [in2]	Iyy [in4]	Izz [in4]	J [in4]
1	Face Horizontal	C5X6.7	Beam	Channel	A36 Gr.36	Typical	1.97	.47	7.48	.055
2	Cross Brace	C5X6.7	Beam	Channel	A36 Gr.36	Typical	1.97	.47	7.48	.055
3	Standoff Horizontal	HSS3X3X6	Beam	SquareTube	A500 Gr. B 46	Typical	3.39	3.78	3.78	6.64
4	Corner Plate	PL3/8x10	Beam	RECT	A36 Gr.36	Typical	3.75	.044	31.25	.172
5	Mount Pipe	PIPE_2.0	Column	Pipe	A53 Gr. B	Typical	1.02	.627	.627	1.25
6	Ladder Rail	L2x2x3	Beam	Single Angle	A36 Gr.36	Typical	.722	.271	.271	.009
7	Face Vertical	L1.5x1.5x4	Beam	Single Angle	A36 Gr.36	Typical	.688	.139	.139	.013
8	TES Face Vertical	L2x2x4	Beam	Single Angle	A36 Gr.36	Typical	.944	.346	.346	.021
9	Face Bracing	L1.5x1.5x4	Beam	Single Angle	A36 Gr.36	Typical	.688	.139	.139	.013
10	TES Face Bracing	L2x2x4	Beam	Single Angle	A36 Gr.36	Typical	.944	.346	.346	.021
11	Support Rail	L3X3X4	Beam	Single Angle	A36 Gr.36	Typical	1.44	1.23	1.23	.031
12	Support Rail Bracing	L3X3X3	Beam	Single Angle	A36 Gr.36	Typical	1.09	.948	.948	.014
13	Ladder Rung	SR_0.75	Beam	BAR	A36 Gr.36	Typical	.442	.016	.016	.031
14	Connection Plate	PL1/4x5	Beam	RECT	A36 Gr.36	Typical	1.25	.007	2.604	.025

Hot Rolled Steel Properties

	Label	E [ksi]	G [ksi]	Nu	Therm (\1E...	Density[k/ft...	Yield[ksi]	Ry	Fu[ksi]	Rt
1	A36 Gr.36	29000	11154	.3	.65	.49	36	1.5	58	1.2
2	A53 Gr. B	29000	11154	.3	.65	.49	35	1.5	60	1.2
3	A572 Gr.50	29000	11154	.3	.65	.49	50	1.1	65	1.1
4	A992	29000	11154	.3	.65	.49	50	1.1	65	1.1
5	A500 Gr. B 42	29000	11154	.3	.65	.49	42	1.4	58	1.3
6	A500 Gr. B 46	29000	11154	.3	.65	.49	46	1.4	58	1.3

Member Primary Data

	Label	I Joint	J Joint	K Joint	Rotate(deg)	Section/Shape	Type	Design List	Material	Design Rules
1	M1	N3	N425A		180	Face Horizontal	Beam	Channel	A36 Gr.36	Typical
2	MP3A	N16	N17			Mount Pipe	Column	Pipe	A53 Gr. B	Typical
3	LIVE2	N15	N14			RIGID	None	None	RIGID	Typical
4	MP1A	N20	N21			Mount Pipe	Column	Pipe	A53 Gr. B	Typical
5	M9	N19	N18		90	Connection Pla...	Beam	RECT	A36 Gr.36	Typical
6	M10	N2	N426A		180	Face Horizontal	Beam	Channel	A36 Gr.36	Typical
7	M19	N22	N427A		180	Face Horizontal	Beam	Channel	A36 Gr.36	Typical
8	M28	N59A	N60A		180	Cross Brace	Beam	Channel	A36 Gr.36	Typical
9	M29	N45	N59A			RIGID	None	None	RIGID	Typical
10	M30	N24	N60A			RIGID	None	None	RIGID	Typical
11	M31	N63	N64		180	Cross Brace	Beam	Channel	A36 Gr.36	Typical
12	M32	N5	N63			RIGID	None	None	RIGID	Typical
13	M33	N44	N64			RIGID	None	None	RIGID	Typical
14	M34	N67	N68		180	Cross Brace	Beam	Channel	A36 Gr.36	Typical
15	M35	N25	N67			RIGID	None	None	RIGID	Typical
16	M36	N4	N68			RIGID	None	None	RIGID	Typical
17	M40	N70	N69A		90	Corner Plate	Beam	RECT	A36 Gr.36	Typical
18	M41	N70	N68B			RIGID	None	None	RIGID	Typical
19	M42	N69A	N67A			RIGID	None	None	RIGID	Typical
20	M46	N76	N75		90	Corner Plate	Beam	RECT	A36 Gr.36	Typical
21	M47	N76	N74			RIGID	None	None	RIGID	Typical
22	M48	N75	N73			RIGID	None	None	RIGID	Typical
23	M52	N82	N81		90	Corner Plate	Beam	RECT	A36 Gr.36	Typical
24	M53	N82	N80			RIGID	None	None	RIGID	Typical
25	M54	N81	N79			RIGID	None	None	RIGID	Typical
26	M55	N86	N85		180	Cross Brace	Beam	Channel	A36 Gr.36	Typical
27	M56	N84	N83			Cross Brace	Beam	Channel	A36 Gr.36	Typical
28	M57	N87	N88		180	Ladder Rail	Beam	Single Angle	A36 Gr.36	Typical
29	M58	N89	N90		90	Ladder Rail	Beam	Single Angle	A36 Gr.36	Typical
30	M59	N93	N94			Ladder Rung	Beam	BAR	A36 Gr.36	Typical
31	M60	N95	N96			Ladder Rung	Beam	BAR	A36 Gr.36	Typical
32	M61	N97	N98			Ladder Rung	Beam	BAR	A36 Gr.36	Typical
33	M62	N99	N100			Ladder Rung	Beam	BAR	A36 Gr.36	Typical
34	M63	N101	N102			Ladder Rung	Beam	BAR	A36 Gr.36	Typical
35	M64	N103	N104			Ladder Rung	Beam	BAR	A36 Gr.36	Typical
36	M65	N105	N106			Ladder Rung	Beam	BAR	A36 Gr.36	Typical
37	M66	N110	N109			Standoff Horiz...	Beam	SquareTube	A500 Gr. ...	Typical
38	M67	N108	N111			RIGID	None	None	RIGID	Typical
39	M69	N112A	N115			RIGID	None	None	RIGID	Typical
40	M71	N116	N119			RIGID	None	None	RIGID	Typical
41	M72	N122	N112			RIGID	None	None	RIGID	Typical
42	M73	N124	N121			RIGID	None	None	RIGID	Typical
43	M74	N123	N120			RIGID	None	None	RIGID	Typical
44	FACE1	N425A	N428A		180	Face Horizontal	Beam	Channel	A36 Gr.36	Typical
45	M76	N426A	N429		180	Face Horizontal	Beam	Channel	A36 Gr.36	Typical
46	M77	N427A	N430		180	Face Horizontal	Beam	Channel	A36 Gr.36	Typical
47	FACE2	N428A	N2		180	Face Horizontal	Beam	Channel	A36 Gr.36	Typical
48	M79	N429	N22		180	Face Horizontal	Beam	Channel	A36 Gr.36	Typical
49	M80	N430	N3		180	Face Horizontal	Beam	Channel	A36 Gr.36	Typical
50	M81	N434	N436			RIGID	None	None	RIGID	Typical
51	M82	N435	N437			RIGID	None	None	RIGID	Typical

Member Primary Data (Continued)

	Label	I Joint	J Joint	K Joint	Rotate(deg)	Section/Shape	Type	Design List	Material	Design Rules
52	M83	N438	N439			RIGID	None	None	RIGID	Typical
53	M84	N440	N441			RIGID	None	None	RIGID	Typical
54	M85	N436	N442		180	Face Vertical	Beam	Single Angle	A36 Gr.36	Typical
55	M86	N439	N444		270	Face Vertical	Beam	Single Angle	A36 Gr.36	Typical
56	TMAA	N441	N445		180	Face Vertical	Beam	Single Angle	A36 Gr.36	Typical
57	M89	N442	N439		180	Face Bracing	Beam	Single Angle	A36 Gr.36	Typical
58	M91	N446	N447		180	Face Bracing	Beam	Single Angle	A36 Gr.36	Typical
59	M92	N442	N443		180	Support Rail	Beam	Single Angle	A36 Gr.36	Typical
60	M95	N453	N452			RIGID	None	None	RIGID	Typical
61	M96	N455	N454		90	Connection Pla...	Beam	RECT	A36 Gr.36	Typical
62	M149	N526	N527		180	Support Rail	Beam	Single Angle	A36 Gr.36	Typical
63	M160	N549	N555		150	Face Vertical	Beam	Single Angle	A36 Gr.36	Typical
64	M164	N554	N555		180	Support Rail	Beam	Single Angle	A36 Gr.36	Typical
65	M146A	N525A	N524A		90	Corner Plate	Beam	RECT	A36 Gr.36	Typical
66	M147A	N525A	N523A			RIGID	None	None	RIGID	Typical
67	M148A	N524A	N522A			RIGID	None	None	RIGID	Typical
68	M149A	N529A	N528A		90	Corner Plate	Beam	RECT	A36 Gr.36	Typical
69	M150	N529A	N527A			RIGID	None	None	RIGID	Typical
70	M151	N528A	N526A			RIGID	None	None	RIGID	Typical
71	M152	N533	N532		90	Corner Plate	Beam	RECT	A36 Gr.36	Typical
72	M153A	N533	N531A			RIGID	None	None	RIGID	Typical
73	M154A	N532	N530A			RIGID	None	None	RIGID	Typical
74	M157	N520	N526		300	Face Vertical	Beam	Single Angle	A36 Gr.36	Typical
75	M158B	N437	N443		270	Face Vertical	Beam	Single Angle	A36 Gr.36	Typical
76	M159B	N548	N554		60	Face Vertical	Beam	Single Angle	A36 Gr.36	Typical
77	M160B	N521	N527		30	Face Vertical	Beam	Single Angle	A36 Gr.36	Typical
78	M157B	N523	N528		30	Face Vertical	Beam	Single Angle	A36 Gr.36	Typical
79	TMAC	N525	N529		300	Face Vertical	Beam	Single Angle	A36 Gr.36	Typical
80	M159	N551	N556		150	Face Vertical	Beam	Single Angle	A36 Gr.36	Typical
81	TMAB	N553	N557		60	Face Vertical	Beam	Single Angle	A36 Gr.36	Typical
82	M159C	N530	N531		180	Face Bracing	Beam	Single Angle	A36 Gr.36	Typical
83	M160D	N558	N559		180	Face Bracing	Beam	Single Angle	A36 Gr.36	Typical
84	M156B	N443	N441		90	Face Bracing	Beam	Single Angle	A36 Gr.36	Typical
85	M157C	N526	N523		180	Face Bracing	Beam	Single Angle	A36 Gr.36	Typical
86	M158C	N527	N525		90	Face Bracing	Beam	Single Angle	A36 Gr.36	Typical
87	M159D	N554	N551		180	Face Bracing	Beam	Single Angle	A36 Gr.36	Typical
88	M160E	N555	N553		90	Face Bracing	Beam	Single Angle	A36 Gr.36	Typical
89	M189B	N518	N520		120	RIGID	None	None	RIGID	Typical
90	M190	N519	N521		120	RIGID	None	None	RIGID	Typical
91	M191	N522	N523		120	RIGID	None	None	RIGID	Typical
92	M192	N524	N525		120	RIGID	None	None	RIGID	Typical
93	M193A	N546	N548		240	RIGID	None	None	RIGID	Typical
94	M194B	N547	N549		240	RIGID	None	None	RIGID	Typical
95	M195B	N550	N551		240	RIGID	None	None	RIGID	Typical
96	M196B	N552	N553		240	RIGID	None	None	RIGID	Typical
97	M127	N508	N542A			Standoff Horiz...	Beam	SquareTube	A500 Gr. ...	Typical
98	M128	N510	N544			Standoff Horiz...	Beam	SquareTube	A500 Gr. ...	Typical
99	MP2A	N451	N452A			Mount Pipe	Column	Pipe	A53 Gr. B	Typical
100	M100	N450	N449		90	Connection Pla...	Beam	RECT	A36 Gr.36	Typical
101	M101	N454A	N453A		90	Connection Pla...	Beam	RECT	A36 Gr.36	Typical
102	MP5A	N457	N458			Mount Pipe	Column	Pipe	A53 Gr. B	Typical
103	M103	N456	N455A		90	Connection Pla...	Beam	RECT	A36 Gr.36	Typical

Member Primary Data (Continued)

	Label	I Joint	J Joint	K Joint	Rotate(deg)	Section/Shape	Type	Design List	Material	Design Rules
104	M104	N460	N459		90	Connection Pla...	Beam	RECT	A36 Gr.36	Typical
105	MP4A	N463	N464			Mount Pipe	Column	Pipe	A53 Gr. B	Typical
106	LIVE1	N462	N461		90	Connection Pla...	Beam	RECT	A36 Gr.36	Typical
107	M107	N466	N465		90	Connection Pla...	Beam	RECT	A36 Gr.36	Typical
108	MP3C	N469	N470			Mount Pipe	Column	Pipe	A53 Gr. B	Typical
109	M109	N468	N467			RIGID	None	None	RIGID	Typical
110	MP1C	N473	N474			Mount Pipe	Column	Pipe	A53 Gr. B	Typical
111	M111	N472	N471		90	Connection Pla...	Beam	RECT	A36 Gr.36	Typical
112	M112	N476	N475			RIGID	None	None	RIGID	Typical
113	M113	N478	N477		90	Connection Pla...	Beam	RECT	A36 Gr.36	Typical
114	MP2C	N481	N482			Mount Pipe	Column	Pipe	A53 Gr. B	Typical
115	M115	N480	N479		90	Connection Pla...	Beam	RECT	A36 Gr.36	Typical
116	M116	N484	N483		90	Connection Pla...	Beam	RECT	A36 Gr.36	Typical
117	MP5C	N487	N488			Mount Pipe	Column	Pipe	A53 Gr. B	Typical
118	M118	N486	N485		90	Connection Pla...	Beam	RECT	A36 Gr.36	Typical
119	M119	N490	N489		90	Connection Pla...	Beam	RECT	A36 Gr.36	Typical
120	MP4C	N493	N494			Mount Pipe	Column	Pipe	A53 Gr. B	Typical
121	M121	N492	N491		90	Connection Pla...	Beam	RECT	A36 Gr.36	Typical
122	M122	N496	N495		90	Connection Pla...	Beam	RECT	A36 Gr.36	Typical
123	MP3B	N499	N500			Mount Pipe	Column	Pipe	A53 Gr. B	Typical
124	M124	N498	N497			RIGID	None	None	RIGID	Typical
125	MP1B	N503	N504			Mount Pipe	Column	Pipe	A53 Gr. B	Typical
126	M126	N502	N501		90	Connection Pla...	Beam	RECT	A36 Gr.36	Typical
127	M127A	N506	N505			RIGID	None	None	RIGID	Typical
128	M128A	N508A	N507		90	Connection Pla...	Beam	RECT	A36 Gr.36	Typical
129	MP2B	N511	N512			Mount Pipe	Column	Pipe	A53 Gr. B	Typical
130	M130	N510A	N509		90	Connection Pla...	Beam	RECT	A36 Gr.36	Typical
131	M131	N514	N513		90	Connection Pla...	Beam	RECT	A36 Gr.36	Typical
132	MP5B	N517	N518A			Mount Pipe	Column	Pipe	A53 Gr. B	Typical
133	M133	N516	N515		90	Connection Pla...	Beam	RECT	A36 Gr.36	Typical
134	M134	N520A	N519A		90	Connection Pla...	Beam	RECT	A36 Gr.36	Typical
135	MP4B	N523B	N524B			Mount Pipe	Column	Pipe	A53 Gr. B	Typical
136	M136	N522B	N521A		90	Connection Pla...	Beam	RECT	A36 Gr.36	Typical
137	M137	N526B	N525B		90	Connection Pla...	Beam	RECT	A36 Gr.36	Typical
138	M138	N536A	N528B		90	Support Rail B...	Beam	Single Angle	A36 Gr.36	Typical
139	M139	N535A	N528B		180	Support Rail B...	Beam	Single Angle	A36 Gr.36	Typical
140	M144	N528C	N530B			RIGID	None	None	RIGID	Typical
141	M145	N527C	N529C			RIGID	None	None	RIGID	Typical
142	M146	N532A	N531B			Mount Pipe	Column	Pipe	A53 Gr. B	Typical
143	M147	N533A	N534			RIGID	None	None	RIGID	Typical
144	OVP	N536	N535			Mount Pipe	Column	Pipe	A53 Gr. B	Typical
145	M145A	N541	N539		90	Support Rail B...	Beam	Single Angle	A36 Gr.36	Typical
146	M146B	N540	N539		180	Support Rail B...	Beam	Single Angle	A36 Gr.36	Typical
147	M147B	N546A	N544A		90	Support Rail B...	Beam	Single Angle	A36 Gr.36	Typical
148	M148	N545	N544A		180	Support Rail B...	Beam	Single Angle	A36 Gr.36	Typical

Member Advanced Data

	Label	I Release	J Release	I Offset[in]	J Offset[in]	T/C Only	Physical	Defl Rat...	Analysis ...	Inactive	Seismic...
1	M1						Yes				None
2	MP3A						Yes	** NA **			None

Member Advanced Data (Continued)

	Label	I Release	J Release	I Offset[in]	J Offset[in]	T/C Only	Physical	Defl Rat...	Analysis ...	Inactive	Seismic...
3	LIVE2						Yes	** NA **			None
4	MP1A						Yes	** NA **			None
5	M9	OOOOXO					Yes				None
6	M10						Yes				None
7	M19						Yes				None
8	M28						Yes				None
9	M29						Yes	** NA **			None
10	M30						Yes	** NA **			None
11	M31						Yes				None
12	M32						Yes	** NA **			None
13	M33						Yes	** NA **			None
14	M34						Yes				None
15	M35						Yes	** NA **			None
16	M36						Yes	** NA **			None
17	M40						Yes				None
18	M41						Yes	** NA **			None
19	M42						Yes	** NA **			None
20	M46						Yes				None
21	M47						Yes	** NA **			None
22	M48						Yes	** NA **			None
23	M52						Yes				None
24	M53						Yes	** NA **			None
25	M54						Yes	** NA **			None
26	M55						Yes				None
27	M56						Yes				None
28	M57						Yes				None
29	M58						Yes				None
30	M59						Yes				None
31	M60						Yes				None
32	M61						Yes				None
33	M62						Yes				None
34	M63						Yes				None
35	M64						Yes				None
36	M65						Yes				None
37	M66						Yes				None
38	M67						Yes	** NA **			None
39	M69						Yes	** NA **			None
40	M71						Yes	** NA **			None
41	M72						Yes	** NA **			None
42	M73						Yes	** NA **			None
43	M74						Yes	** NA **			None
44	FACE1						Yes				None
45	M76						Yes				None
46	M77						Yes				None
47	FACE2						Yes				None
48	M79						Yes				None
49	M80						Yes				None
50	M81	OOOOXO					Yes	** NA **			None
51	M82	OOOOXO					Yes	** NA **			None
52	M83	OOOOXO					Yes	** NA **			None
53	M84	OOOOXO					Yes	** NA **			None
54	M85						Yes				None

Member Advanced Data (Continued)

	Label	I Release	J Release	I Offset[in]	J Offset[in]	T/C Only	Physical	Defl Rat...	Analysis ...	Inactive	Seismic...
55	M86						Yes				None
56	TMAA						Yes				None
57	M89						Yes				None
58	M91						Yes				None
59	M92						Yes				None
60	M95	OOOXOX					Yes	** NA **			None
61	M96	OOOOXO					Yes				None
62	M149						Yes				None
63	M160						Yes				None
64	M164						Yes				None
65	M146A						Yes				None
66	M147A						Yes	** NA **			None
67	M148A						Yes	** NA **			None
68	M149A						Yes				None
69	M150						Yes	** NA **			None
70	M151						Yes	** NA **			None
71	M152						Yes				None
72	M153A						Yes	** NA **			None
73	M154A						Yes	** NA **			None
74	M157						Yes				None
75	M158B						Yes				None
76	M159B						Yes				None
77	M160B						Yes				None
78	M157B						Yes				None
79	TMAC						Yes				None
80	M159						Yes				None
81	TMAB						Yes				None
82	M159C						Yes				None
83	M160D						Yes				None
84	M156B						Yes				None
85	M157C						Yes				None
86	M158C						Yes				None
87	M159D						Yes				None
88	M160E						Yes				None
89	M189B	OOOOXO					Yes	** NA **			None
90	M190	OOOOXO					Yes	** NA **			None
91	M191	OOOOXO					Yes	** NA **			None
92	M192	OOOOXO					Yes	** NA **			None
93	M193A	OOOOXO					Yes	** NA **			None
94	M194B	OOOOXO					Yes	** NA **			None
95	M195B	OOOOXO					Yes	** NA **			None
96	M196B	OOOOXO					Yes	** NA **			None
97	M127						Yes				None
98	M128						Yes				None
99	MP2A						Yes	** NA **			None
100	M100	OOOOXO					Yes				None
101	M101	OOOOXO					Yes				None
102	MP5A						Yes	** NA **			None
103	M103	OOOOXO					Yes				None
104	M104	OOOOXO					Yes				None
105	MP4A						Yes	** NA **			None
106	LIVE1	OOOOXO					Yes				None

Member Advanced Data (Continued)

	Label	I Release	J Release	I Offset[in]	J Offset[in]	T/C Only	Physical	Defl Rat...	Analysis ...	Inactive	Seismic...
107	M107	OOOOXO					Yes				None
108	MP3C						Yes	** NA **			None
109	M109						Yes	** NA **			None
110	MP1C						Yes	** NA **			None
111	M111	OOOOXO					Yes				None
112	M112	OOOXOX					Yes	** NA **			None
113	M113	OOOOXO					Yes				None
114	MP2C						Yes	** NA **			None
115	M115	OOOOXO					Yes				None
116	M116	OOOOXO					Yes				None
117	MP5C						Yes	** NA **			None
118	M118	OOOOXO					Yes				None
119	M119	OOOOXO					Yes				None
120	MP4C						Yes	** NA **			None
121	M121	OOOOXO					Yes				None
122	M122	OOOOXO					Yes				None
123	MP3B						Yes	** NA **			None
124	M124						Yes	** NA **			None
125	MP1B						Yes	** NA **			None
126	M126	OOOOXO					Yes				None
127	M127A	OOOXOX					Yes	** NA **			None
128	M128A	OOOOXO					Yes				None
129	MP2B						Yes	** NA **			None
130	M130	OOOOXO					Yes				None
131	M131	OOOOXO					Yes				None
132	MP5B						Yes	** NA **			None
133	M133	OOOOXO					Yes				None
134	M134	OOOOXO					Yes				None
135	MP4B						Yes	** NA **			None
136	M136	OOOOXO					Yes				None
137	M137	OOOOXO					Yes				None
138	M138	BenPIN	BenPIN				Yes				None
139	M139	BenPIN	BenPIN				Yes				None
140	M144		OOOXOO				Yes	** NA **			None
141	M145		OOOXOO				Yes	** NA **			None
142	M146						Yes	** NA **			None
143	M147						Yes	** NA **			None
144	OVP						Yes	** NA **			None
145	M145A	BenPIN	BenPIN				Yes				None
146	M146B	BenPIN	BenPIN				Yes				None
147	M147B	BenPIN	BenPIN				Yes				None
148	M148	BenPIN	BenPIN				Yes				None

Member Point Loads (BLC 1 : Antenna D)

	Member Label	Direction	Magnitude[lb,k-ft]	Location[ft,%]
1	MP2A	Y	-22.95	.5
2	MP2A	My	-.011	.5
3	MP2A	Mz	0	.5
4	MP2A	Y	-22.95	5.5
5	MP2A	My	-.011	5.5

Member Point Loads (BLC 1 : Antenna D) (Continued)

	Member Label	Direction	Magnitude[lb,k-ft]	Location[ft,%]
6	MP2A	Mz	0	5.5
7	MP2B	Y	-22.95	.5
8	MP2B	My	.006	.5
9	MP2B	Mz	-.01	.5
10	MP2B	Y	-22.95	5.5
11	MP2B	My	.006	5.5
12	MP2B	Mz	-.01	5.5
13	MP2C	Y	-22.95	.5
14	MP2C	My	.006	.5
15	MP2C	Mz	.01	.5
16	MP2C	Y	-22.95	5.5
17	MP2C	My	.006	5.5
18	MP2C	Mz	.01	5.5
19	MP4A	Y	-43.55	.38
20	MP4A	My	-.022	.38
21	MP4A	Mz	0	.38
22	MP4A	Y	-43.55	1.63
23	MP4A	My	-.022	1.63
24	MP4A	Mz	0	1.63
25	MP4B	Y	-43.55	.38
26	MP4B	My	.011	.38
27	MP4B	Mz	-.019	.38
28	MP4B	Y	-43.55	1.63
29	MP4B	My	.011	1.63
30	MP4B	Mz	-.019	1.63
31	MP4C	Y	-43.55	.38
32	MP4C	My	.011	.38
33	MP4C	Mz	.019	.38
34	MP4C	Y	-43.55	1.63
35	MP4C	My	.011	1.63
36	MP4C	Mz	.019	1.63
37	MP4A	Y	-4.4	4.5
38	MP4A	My	-.002	4.5
39	MP4A	Mz	0	4.5
40	MP4B	Y	-4.4	4.5
41	MP4B	My	.001	4.5
42	MP4B	Mz	-.002	4.5
43	MP4C	Y	-4.4	4.5
44	MP4C	My	.001	4.5
45	MP4C	Mz	.002	4.5
46	MP3A	Y	-20	2
47	MP3A	My	-.01	2
48	MP3A	Mz	.012	2
49	MP3A	Y	-20	6
50	MP3A	My	-.01	6
51	MP3A	Mz	.012	6
52	MP3B	Y	-20	2
53	MP3B	My	-.005	2
54	MP3B	Mz	-.014	2
55	MP3B	Y	-20	6
56	MP3B	My	-.005	6
57	MP3B	Mz	-.014	6

Member Point Loads (BLC 1 : Antenna D) (Continued)

	Member Label	Direction	Magnitude[lb,k-ft]	Location[ft,%]
58	MP3C	Y	-20	2
59	MP3C	My	.015	2
60	MP3C	Mz	.003	2
61	MP3C	Y	-20	6
62	MP3C	My	.015	6
63	MP3C	Mz	.003	6
64	MP3A	Y	-20	2
65	MP3A	My	-.01	2
66	MP3A	Mz	-.012	2
67	MP3A	Y	-20	6
68	MP3A	My	-.01	6
69	MP3A	Mz	-.012	6
70	MP3B	Y	-20	2
71	MP3B	My	.015	2
72	MP3B	Mz	-.003	2
73	MP3B	Y	-20	6
74	MP3B	My	.015	6
75	MP3B	Mz	-.003	6
76	MP3C	Y	-20	2
77	MP3C	My	-.005	2
78	MP3C	Mz	.014	2
79	MP3C	Y	-20	6
80	MP3C	My	-.005	6
81	MP3C	Mz	.014	6
82	MP3A	Y	-84.4	4
83	MP3A	My	.042	4
84	MP3A	Mz	0	4
85	MP3B	Y	-84.4	4
86	MP3B	My	-.021	4
87	MP3B	Mz	.037	4
88	MP3C	Y	-84.4	4
89	MP3C	My	-.021	4
90	MP3C	Mz	-.037	4
91	MP3A	Y	-70.3	1.5
92	MP3A	My	-.035	1.5
93	MP3A	Mz	0	1.5
94	MP3B	Y	-70.3	1.5
95	MP3B	My	.018	1.5
96	MP3B	Mz	-.03	1.5
97	MP3C	Y	-70.3	1.5
98	MP3C	My	.018	1.5
99	MP3C	Mz	.03	1.5
100	OVP	Y	-26.9	1
101	OVP	My	0	1
102	OVP	Mz	0	1

Member Point Loads (BLC 2 : Antenna Di)

	Member Label	Direction	Magnitude[lb,k-ft]	Location[ft,%]
1	MP2A	Y	-104.279	.5
2	MP2A	My	-.052	.5
3	MP2A	Mz	0	.5

Member Point Loads (BLC 2 : Antenna Di) (Continued)

	Member Label	Direction	Magnitude[lb,k-ft]	Location[ft,%]
4	MP2A	Y	-104.279	5.5
5	MP2A	My	-.052	5.5
6	MP2A	Mz	0	5.5
7	MP2B	Y	-104.279	.5
8	MP2B	My	.026	.5
9	MP2B	Mz	-.045	.5
10	MP2B	Y	-104.279	5.5
11	MP2B	My	.026	5.5
12	MP2B	Mz	-.045	5.5
13	MP2C	Y	-104.279	.5
14	MP2C	My	.026	.5
15	MP2C	Mz	.045	.5
16	MP2C	Y	-104.279	5.5
17	MP2C	My	.026	5.5
18	MP2C	Mz	.045	5.5
19	MP4A	Y	-55.468	.38
20	MP4A	My	-.028	.38
21	MP4A	Mz	0	.38
22	MP4A	Y	-55.468	1.63
23	MP4A	My	-.028	1.63
24	MP4A	Mz	0	1.63
25	MP4B	Y	-55.468	.38
26	MP4B	My	.014	.38
27	MP4B	Mz	-.024	.38
28	MP4B	Y	-55.468	1.63
29	MP4B	My	.014	1.63
30	MP4B	Mz	-.024	1.63
31	MP4C	Y	-55.468	.38
32	MP4C	My	.014	.38
33	MP4C	Mz	.024	.38
34	MP4C	Y	-55.468	1.63
35	MP4C	My	.014	1.63
36	MP4C	Mz	.024	1.63
37	MP4A	Y	-22.356	4.5
38	MP4A	My	-.011	4.5
39	MP4A	Mz	0	4.5
40	MP4B	Y	-22.356	4.5
41	MP4B	My	.006	4.5
42	MP4B	Mz	-.01	4.5
43	MP4C	Y	-22.356	4.5
44	MP4C	My	.006	4.5
45	MP4C	Mz	.01	4.5
46	MP3A	Y	-94.704	2
47	MP3A	My	-.047	2
48	MP3A	Mz	.055	2
49	MP3A	Y	-94.704	6
50	MP3A	My	-.047	6
51	MP3A	Mz	.055	6
52	MP3B	Y	-94.704	2
53	MP3B	My	-.024	2
54	MP3B	Mz	-.069	2
55	MP3B	Y	-94.704	6

Member Point Loads (BLC 2 : Antenna Di) (Continued)

	Member Label	Direction	Magnitude[lb,k-ft]	Location[ft,%]
56	MP3B	My	-.024	6
57	MP3B	Mz	-.069	6
58	MP3C	Y	-94.704	2
59	MP3C	My	.072	2
60	MP3C	Mz	.013	2
61	MP3C	Y	-94.704	6
62	MP3C	My	.072	6
63	MP3C	Mz	.013	6
64	MP3A	Y	-94.704	2
65	MP3A	My	-.047	2
66	MP3A	Mz	-.055	2
67	MP3A	Y	-94.704	6
68	MP3A	My	-.047	6
69	MP3A	Mz	-.055	6
70	MP3B	Y	-94.704	2
71	MP3B	My	.072	2
72	MP3B	Mz	-.013	2
73	MP3B	Y	-94.704	6
74	MP3B	My	.072	6
75	MP3B	Mz	-.013	6
76	MP3C	Y	-94.704	2
77	MP3C	My	-.024	2
78	MP3C	Mz	.069	2
79	MP3C	Y	-94.704	6
80	MP3C	My	-.024	6
81	MP3C	Mz	.069	6
82	MP3A	Y	-70.472	4
83	MP3A	My	.035	4
84	MP3A	Mz	0	4
85	MP3B	Y	-70.472	4
86	MP3B	My	-.018	4
87	MP3B	Mz	.031	4
88	MP3C	Y	-70.472	4
89	MP3C	My	-.018	4
90	MP3C	Mz	-.031	4
91	MP3A	Y	-63.615	1.5
92	MP3A	My	-.032	1.5
93	MP3A	Mz	0	1.5
94	MP3B	Y	-63.615	1.5
95	MP3B	My	.016	1.5
96	MP3B	Mz	-.028	1.5
97	MP3C	Y	-63.615	1.5
98	MP3C	My	.016	1.5
99	MP3C	Mz	.028	1.5
100	OVP	Y	-86.287	1
101	OVP	My	0	1
102	OVP	Mz	0	1

Member Point Loads (BLC 3 : Antenna Wo (0 Deg))

	Member Label	Direction	Magnitude[lb,k-ft]	Location[ft,%]
1	MP2A	X	0	.5

Member Point Loads (BLC 3 : Antenna Wo (0 Deg)) (Continued)

	Member Label	Direction	Magnitude[lb,k-ft]	Location[ft,%]
2	MP2A	Z	-175.952	.5
3	MP2A	Mx	0	.5
4	MP2A	X	0	5.5
5	MP2A	Z	-175.952	5.5
6	MP2A	Mx	0	5.5
7	MP2B	X	0	.5
8	MP2B	Z	-131.776	.5
9	MP2B	Mx	.057	.5
10	MP2B	X	0	5.5
11	MP2B	Z	-131.776	5.5
12	MP2B	Mx	.057	5.5
13	MP2C	X	0	.5
14	MP2C	Z	-131.776	.5
15	MP2C	Mx	-.057	.5
16	MP2C	X	0	5.5
17	MP2C	Z	-131.776	5.5
18	MP2C	Mx	-.057	5.5
19	MP4A	X	0	.38
20	MP4A	Z	-89.596	.38
21	MP4A	Mx	0	.38
22	MP4A	X	0	1.63
23	MP4A	Z	-89.596	1.63
24	MP4A	Mx	0	1.63
25	MP4B	X	0	.38
26	MP4B	Z	-48.707	.38
27	MP4B	Mx	.021	.38
28	MP4B	X	0	1.63
29	MP4B	Z	-48.707	1.63
30	MP4B	Mx	.021	1.63
31	MP4C	X	0	.38
32	MP4C	Z	-48.707	.38
33	MP4C	Mx	-.021	.38
34	MP4C	X	0	1.63
35	MP4C	Z	-48.707	1.63
36	MP4C	Mx	-.021	1.63
37	MP4A	X	0	4.5
38	MP4A	Z	-33.932	4.5
39	MP4A	Mx	0	4.5
40	MP4B	X	0	4.5
41	MP4B	Z	-13.474	4.5
42	MP4B	Mx	.006	4.5
43	MP4C	X	0	4.5
44	MP4C	Z	-13.474	4.5
45	MP4C	Mx	-.006	4.5
46	MP3A	X	0	2
47	MP3A	Z	-155.555	2
48	MP3A	Mx	-.091	2
49	MP3A	X	0	6
50	MP3A	Z	-155.555	6
51	MP3A	Mx	-.091	6
52	MP3B	X	0	2
53	MP3B	Z	-116.041	2

Member Point Loads (BLC 3 : Antenna Wo (0 Deg)) (Continued)

	Member Label	Direction	Magnitude[lb,k-ft]	Location[ft,%]
54	MP3B	Mx	.084	2
55	MP3B	X	0	6
56	MP3B	Z	-116.041	6
57	MP3B	Mx	.084	6
58	MP3C	X	0	2
59	MP3C	Z	-116.041	2
60	MP3C	Mx	-.016	2
61	MP3C	X	0	6
62	MP3C	Z	-116.041	6
63	MP3C	Mx	-.016	6
64	MP3A	X	0	2
65	MP3A	Z	-155.555	2
66	MP3A	Mx	.091	2
67	MP3A	X	0	6
68	MP3A	Z	-155.555	6
69	MP3A	Mx	.091	6
70	MP3B	X	0	2
71	MP3B	Z	-116.041	2
72	MP3B	Mx	.016	2
73	MP3B	X	0	6
74	MP3B	Z	-116.041	6
75	MP3B	Mx	.016	6
76	MP3C	X	0	2
77	MP3C	Z	-116.041	2
78	MP3C	Mx	-.084	2
79	MP3C	X	0	6
80	MP3C	Z	-116.041	6
81	MP3C	Mx	-.084	6
82	MP3A	X	0	4
83	MP3A	Z	-71.296	4
84	MP3A	Mx	0	4
85	MP3B	X	0	4
86	MP3B	Z	-53.567	4
87	MP3B	Mx	-.023	4
88	MP3C	X	0	4
89	MP3C	Z	-53.567	4
90	MP3C	Mx	.023	4
91	MP3A	X	0	1.5
92	MP3A	Z	-71.296	1.5
93	MP3A	Mx	0	1.5
94	MP3B	X	0	1.5
95	MP3B	Z	-46.776	1.5
96	MP3B	Mx	.02	1.5
97	MP3C	X	0	1.5
98	MP3C	Z	-46.776	1.5
99	MP3C	Mx	-.02	1.5
100	OVP	X	0	1
101	OVP	Z	-91.406	1
102	OVP	Mx	0	1

Member Point Loads (BLC 4 : Antenna Wo (30 Deg))

	Member Label	Direction	Magnitude[lb,k-ft]	Location[ft,%]

Member Point Loads (BLC 4 : Antenna Wo (30 Deg)) (Continued)

	Member Label	Direction	Magnitude[lb,k-ft]	Location[ft,%]
1	MP2A	X	80.613	.5
2	MP2A	Z	-139.626	.5
3	MP2A	Mx	-.04	.5
4	MP2A	X	80.613	5.5
5	MP2A	Z	-139.626	5.5
6	MP2A	Mx	-.04	5.5
7	MP2B	X	58.525	.5
8	MP2B	Z	-101.368	.5
9	MP2B	Mx	.059	.5
10	MP2B	X	58.525	5.5
11	MP2B	Z	-101.368	5.5
12	MP2B	Mx	.059	5.5
13	MP2C	X	80.613	.5
14	MP2C	Z	-139.626	.5
15	MP2C	Mx	-.04	.5
16	MP2C	X	80.613	5.5
17	MP2C	Z	-139.626	5.5
18	MP2C	Mx	-.04	5.5
19	MP4A	X	37.983	.38
20	MP4A	Z	-65.789	.38
21	MP4A	Mx	-.019	.38
22	MP4A	X	37.983	1.63
23	MP4A	Z	-65.789	1.63
24	MP4A	Mx	-.019	1.63
25	MP4B	X	17.538	.38
26	MP4B	Z	-30.377	.38
27	MP4B	Mx	.018	.38
28	MP4B	X	17.538	1.63
29	MP4B	Z	-30.377	1.63
30	MP4B	Mx	.018	1.63
31	MP4C	X	37.983	.38
32	MP4C	Z	-65.789	.38
33	MP4C	Mx	-.019	.38
34	MP4C	X	37.983	1.63
35	MP4C	Z	-65.789	1.63
36	MP4C	Mx	-.019	1.63
37	MP4A	X	13.556	4.5
38	MP4A	Z	-23.48	4.5
39	MP4A	Mx	-.007	4.5
40	MP4B	X	3.327	4.5
41	MP4B	Z	-5.763	4.5
42	MP4B	Mx	.003	4.5
43	MP4C	X	13.556	4.5
44	MP4C	Z	-23.48	4.5
45	MP4C	Mx	-.007	4.5
46	MP3A	X	71.192	2
47	MP3A	Z	-123.308	2
48	MP3A	Mx	-.108	2
49	MP3A	X	71.192	6
50	MP3A	Z	-123.308	6
51	MP3A	Mx	-.108	6
52	MP3B	X	51.435	2

Member Point Loads (BLC 4 : Antenna Wo (30 Deg)) (Continued)

	Member Label	Direction	Magnitude[lb,k-ft]	Location[ft,%]
53	MP3B	Z	-89.088	2
54	MP3B	Mx	.051	2
55	MP3B	X	51.435	6
56	MP3B	Z	-89.088	6
57	MP3B	Mx	.051	6
58	MP3C	X	71.192	2
59	MP3C	Z	-123.308	2
60	MP3C	Mx	.036	2
61	MP3C	X	71.192	6
62	MP3C	Z	-123.308	6
63	MP3C	Mx	.036	6
64	MP3A	X	71.192	2
65	MP3A	Z	-123.308	2
66	MP3A	Mx	.036	2
67	MP3A	X	71.192	6
68	MP3A	Z	-123.308	6
69	MP3A	Mx	.036	6
70	MP3B	X	51.435	2
71	MP3B	Z	-89.088	2
72	MP3B	Mx	.051	2
73	MP3B	X	51.435	6
74	MP3B	Z	-89.088	6
75	MP3B	Mx	.051	6
76	MP3C	X	71.192	2
77	MP3C	Z	-123.308	2
78	MP3C	Mx	-.108	2
79	MP3C	X	71.192	6
80	MP3C	Z	-123.308	6
81	MP3C	Mx	-.108	6
82	MP3A	X	32.693	4
83	MP3A	Z	-56.626	4
84	MP3A	Mx	.016	4
85	MP3B	X	23.829	4
86	MP3B	Z	-41.273	4
87	MP3B	Mx	-.024	4
88	MP3C	X	32.693	4
89	MP3C	Z	-56.626	4
90	MP3C	Mx	.016	4
91	MP3A	X	31.561	1.5
92	MP3A	Z	-54.666	1.5
93	MP3A	Mx	-.016	1.5
94	MP3B	X	19.301	1.5
95	MP3B	Z	-33.431	1.5
96	MP3B	Mx	.019	1.5
97	MP3C	X	31.561	1.5
98	MP3C	Z	-54.666	1.5
99	MP3C	Mx	-.016	1.5
100	OVP	X	47.154	1
101	OVP	Z	-81.673	1
102	OVP	Mx	0	1

Member Point Loads (BLC 5 : Antenna Wo (60 Deg))

	Member Label	Direction	Magnitude[lb,k-ft]	Location[ft,%]
1	MP2A	X	114.121	.5
2	MP2A	Z	-65.888	.5
3	MP2A	Mx	-.057	.5
4	MP2A	X	114.121	5.5
5	MP2A	Z	-65.888	5.5
6	MP2A	Mx	-.057	5.5
7	MP2B	X	114.121	.5
8	MP2B	Z	-65.888	.5
9	MP2B	Mx	.057	.5
10	MP2B	X	114.121	5.5
11	MP2B	Z	-65.888	5.5
12	MP2B	Mx	.057	5.5
13	MP2C	X	152.379	.5
14	MP2C	Z	-87.976	.5
15	MP2C	Mx	0	.5
16	MP2C	X	152.379	5.5
17	MP2C	Z	-87.976	5.5
18	MP2C	Mx	0	5.5
19	MP4A	X	42.181	.38
20	MP4A	Z	-24.353	.38
21	MP4A	Mx	-.021	.38
22	MP4A	X	42.181	1.63
23	MP4A	Z	-24.353	1.63
24	MP4A	Mx	-.021	1.63
25	MP4B	X	42.181	.38
26	MP4B	Z	-24.353	.38
27	MP4B	Mx	.021	.38
28	MP4B	X	42.181	1.63
29	MP4B	Z	-24.353	1.63
30	MP4B	Mx	.021	1.63
31	MP4C	X	77.593	.38
32	MP4C	Z	-44.798	.38
33	MP4C	Mx	0	.38
34	MP4C	X	77.593	1.63
35	MP4C	Z	-44.798	1.63
36	MP4C	Mx	0	1.63
37	MP4A	X	11.669	4.5
38	MP4A	Z	-6.737	4.5
39	MP4A	Mx	-.006	4.5
40	MP4B	X	11.669	4.5
41	MP4B	Z	-6.737	4.5
42	MP4B	Mx	.006	4.5
43	MP4C	X	29.386	4.5
44	MP4C	Z	-16.966	4.5
45	MP4C	Mx	0	4.5
46	MP3A	X	100.494	2
47	MP3A	Z	-58.02	2
48	MP3A	Mx	-.084	2
49	MP3A	X	100.494	6
50	MP3A	Z	-58.02	6
51	MP3A	Mx	-.084	6
52	MP3B	X	100.494	2

Member Point Loads (BLC 5 : Antenna Wo (60 Deg)) (Continued)

	Member Label	Direction	Magnitude[lb,k-ft]	Location[ft,%]
53	MP3B	Z	-58.02	2
54	MP3B	Mx	.016	2
55	MP3B	X	100.494	6
56	MP3B	Z	-58.02	6
57	MP3B	Mx	.016	6
58	MP3C	X	134.714	2
59	MP3C	Z	-77.777	2
60	MP3C	Mx	.091	2
61	MP3C	X	134.714	6
62	MP3C	Z	-77.777	6
63	MP3C	Mx	.091	6
64	MP3A	X	100.494	2
65	MP3A	Z	-58.02	2
66	MP3A	Mx	-.016	2
67	MP3A	X	100.494	6
68	MP3A	Z	-58.02	6
69	MP3A	Mx	-.016	6
70	MP3B	X	100.494	2
71	MP3B	Z	-58.02	2
72	MP3B	Mx	.084	2
73	MP3B	X	100.494	6
74	MP3B	Z	-58.02	6
75	MP3B	Mx	.084	6
76	MP3C	X	134.714	2
77	MP3C	Z	-77.777	2
78	MP3C	Mx	-.091	2
79	MP3C	X	134.714	6
80	MP3C	Z	-77.777	6
81	MP3C	Mx	-.091	6
82	MP3A	X	46.391	4
83	MP3A	Z	-26.784	4
84	MP3A	Mx	.023	4
85	MP3B	X	46.391	4
86	MP3B	Z	-26.784	4
87	MP3B	Mx	-.023	4
88	MP3C	X	61.744	4
89	MP3C	Z	-35.648	4
90	MP3C	Mx	0	4
91	MP3A	X	40.509	1.5
92	MP3A	Z	-23.388	1.5
93	MP3A	Mx	-.02	1.5
94	MP3B	X	40.509	1.5
95	MP3B	Z	-23.388	1.5
96	MP3B	Mx	.02	1.5
97	MP3C	X	61.744	1.5
98	MP3C	Z	-35.648	1.5
99	MP3C	Mx	0	1.5
100	OVP	X	70.588	1
101	OVP	Z	-40.754	1
102	OVP	Mx	0	1

Member Point Loads (BLC 6 : Antenna Wo (90 Deg))

	Member Label	Direction	Magnitude[lb,k-ft]	Location[ft,%]
1	MP2A	X	117.05	.5
2	MP2A	Z	0	.5
3	MP2A	Mx	-.059	.5
4	MP2A	X	117.05	5.5
5	MP2A	Z	0	5.5
6	MP2A	Mx	-.059	5.5
7	MP2B	X	161.227	.5
8	MP2B	Z	0	.5
9	MP2B	Mx	.04	.5
10	MP2B	X	161.227	5.5
11	MP2B	Z	0	5.5
12	MP2B	Mx	.04	5.5
13	MP2C	X	161.227	.5
14	MP2C	Z	0	.5
15	MP2C	Mx	.04	.5
16	MP2C	X	161.227	5.5
17	MP2C	Z	0	5.5
18	MP2C	Mx	.04	5.5
19	MP4A	X	35.077	.38
20	MP4A	Z	0	.38
21	MP4A	Mx	-.018	.38
22	MP4A	X	35.077	1.63
23	MP4A	Z	0	1.63
24	MP4A	Mx	-.018	1.63
25	MP4B	X	75.967	.38
26	MP4B	Z	0	.38
27	MP4B	Mx	.019	.38
28	MP4B	X	75.967	1.63
29	MP4B	Z	0	1.63
30	MP4B	Mx	.019	1.63
31	MP4C	X	75.967	.38
32	MP4C	Z	0	.38
33	MP4C	Mx	.019	.38
34	MP4C	X	75.967	1.63
35	MP4C	Z	0	1.63
36	MP4C	Mx	.019	1.63
37	MP4A	X	6.654	4.5
38	MP4A	Z	0	4.5
39	MP4A	Mx	-.003	4.5
40	MP4B	X	27.113	4.5
41	MP4B	Z	0	4.5
42	MP4B	Mx	.007	4.5
43	MP4C	X	27.113	4.5
44	MP4C	Z	0	4.5
45	MP4C	Mx	.007	4.5
46	MP3A	X	102.869	2
47	MP3A	Z	0	2
48	MP3A	Mx	-.051	2
49	MP3A	X	102.869	6
50	MP3A	Z	0	6
51	MP3A	Mx	-.051	6
52	MP3B	X	142.383	2

Member Point Loads (BLC 6 : Antenna Wo (90 Deg)) (Continued)

	Member Label	Direction	Magnitude[lb,k-ft]	Location[ft,%]
53	MP3B	Z	0	2
54	MP3B	Mx	-.036	2
55	MP3B	X	142.383	6
56	MP3B	Z	0	6
57	MP3B	Mx	-.036	6
58	MP3C	X	142.383	2
59	MP3C	Z	0	2
60	MP3C	Mx	.108	2
61	MP3C	X	142.383	6
62	MP3C	Z	0	6
63	MP3C	Mx	.108	6
64	MP3A	X	102.869	2
65	MP3A	Z	0	2
66	MP3A	Mx	-.051	2
67	MP3A	X	102.869	6
68	MP3A	Z	0	6
69	MP3A	Mx	-.051	6
70	MP3B	X	142.383	2
71	MP3B	Z	0	2
72	MP3B	Mx	.108	2
73	MP3B	X	142.383	6
74	MP3B	Z	0	6
75	MP3B	Mx	.108	6
76	MP3C	X	142.383	2
77	MP3C	Z	0	2
78	MP3C	Mx	-.036	2
79	MP3C	X	142.383	6
80	MP3C	Z	0	6
81	MP3C	Mx	-.036	6
82	MP3A	X	47.658	4
83	MP3A	Z	0	4
84	MP3A	Mx	.024	4
85	MP3B	X	65.386	4
86	MP3B	Z	0	4
87	MP3B	Mx	-.016	4
88	MP3C	X	65.386	4
89	MP3C	Z	0	4
90	MP3C	Mx	-.016	4
91	MP3A	X	38.603	1.5
92	MP3A	Z	0	1.5
93	MP3A	Mx	-.019	1.5
94	MP3B	X	63.123	1.5
95	MP3B	Z	0	1.5
96	MP3B	Mx	.016	1.5
97	MP3C	X	63.123	1.5
98	MP3C	Z	0	1.5
99	MP3C	Mx	.016	1.5
100	OVP	X	65.807	1
101	OVP	Z	0	1
102	OVP	Mx	0	1

Member Point Loads (BLC 7 : Antenna Wo (120 Deg))

	Member Label	Direction	Magnitude[lb,k-ft]	Location[ft,%]
1	MP2A	X	114.121	.5
2	MP2A	Z	65.888	.5
3	MP2A	Mx	-.057	.5
4	MP2A	X	114.121	5.5
5	MP2A	Z	65.888	5.5
6	MP2A	Mx	-.057	5.5
7	MP2B	X	152.379	.5
8	MP2B	Z	87.976	.5
9	MP2B	Mx	0	.5
10	MP2B	X	152.379	5.5
11	MP2B	Z	87.976	5.5
12	MP2B	Mx	0	5.5
13	MP2C	X	114.121	.5
14	MP2C	Z	65.888	.5
15	MP2C	Mx	.057	.5
16	MP2C	X	114.121	5.5
17	MP2C	Z	65.888	5.5
18	MP2C	Mx	.057	5.5
19	MP4A	X	42.181	.38
20	MP4A	Z	24.353	.38
21	MP4A	Mx	-.021	.38
22	MP4A	X	42.181	1.63
23	MP4A	Z	24.353	1.63
24	MP4A	Mx	-.021	1.63
25	MP4B	X	77.593	.38
26	MP4B	Z	44.798	.38
27	MP4B	Mx	0	.38
28	MP4B	X	77.593	1.63
29	MP4B	Z	44.798	1.63
30	MP4B	Mx	0	1.63
31	MP4C	X	42.181	.38
32	MP4C	Z	24.353	.38
33	MP4C	Mx	.021	.38
34	MP4C	X	42.181	1.63
35	MP4C	Z	24.353	1.63
36	MP4C	Mx	.021	1.63
37	MP4A	X	11.669	4.5
38	MP4A	Z	6.737	4.5
39	MP4A	Mx	-.006	4.5
40	MP4B	X	29.386	4.5
41	MP4B	Z	16.966	4.5
42	MP4B	Mx	0	4.5
43	MP4C	X	11.669	4.5
44	MP4C	Z	6.737	4.5
45	MP4C	Mx	.006	4.5
46	MP3A	X	100.494	2
47	MP3A	Z	58.02	2
48	MP3A	Mx	-.016	2
49	MP3A	X	100.494	6
50	MP3A	Z	58.02	6
51	MP3A	Mx	-.016	6
52	MP3B	X	134.714	2

Member Point Loads (BLC 7 : Antenna Wo (120 Deg)) (Continued)

	Member Label	Direction	Magnitude[lb,k-ft]	Location[ft,%]
53	MP3B	Z	77.777	2
54	MP3B	Mx	-.091	2
55	MP3B	X	134.714	6
56	MP3B	Z	77.777	6
57	MP3B	Mx	-.091	6
58	MP3C	X	100.494	2
59	MP3C	Z	58.02	2
60	MP3C	Mx	.084	2
61	MP3C	X	100.494	6
62	MP3C	Z	58.02	6
63	MP3C	Mx	.084	6
64	MP3A	X	100.494	2
65	MP3A	Z	58.02	2
66	MP3A	Mx	-.084	2
67	MP3A	X	100.494	6
68	MP3A	Z	58.02	6
69	MP3A	Mx	-.084	6
70	MP3B	X	134.714	2
71	MP3B	Z	77.777	2
72	MP3B	Mx	.091	2
73	MP3B	X	134.714	6
74	MP3B	Z	77.777	6
75	MP3B	Mx	.091	6
76	MP3C	X	100.494	2
77	MP3C	Z	58.02	2
78	MP3C	Mx	.016	2
79	MP3C	X	100.494	6
80	MP3C	Z	58.02	6
81	MP3C	Mx	.016	6
82	MP3A	X	46.391	4
83	MP3A	Z	26.784	4
84	MP3A	Mx	.023	4
85	MP3B	X	61.744	4
86	MP3B	Z	35.648	4
87	MP3B	Mx	0	4
88	MP3C	X	46.391	4
89	MP3C	Z	26.784	4
90	MP3C	Mx	-.023	4
91	MP3A	X	40.509	1.5
92	MP3A	Z	23.388	1.5
93	MP3A	Mx	-.02	1.5
94	MP3B	X	61.744	1.5
95	MP3B	Z	35.648	1.5
96	MP3B	Mx	0	1.5
97	MP3C	X	40.509	1.5
98	MP3C	Z	23.388	1.5
99	MP3C	Mx	.02	1.5
100	OVP	X	54.478	1
101	OVP	Z	31.453	1
102	OVP	Mx	0	1

Member Point Loads (BLC 8 : Antenna Wo (150 Deg))

	Member Label	Direction	Magnitude[lb,k-ft]	Location[ft,%]
1	MP2A	X	80.613	.5
2	MP2A	Z	139.626	.5
3	MP2A	Mx	-.04	.5
4	MP2A	X	80.613	5.5
5	MP2A	Z	139.626	5.5
6	MP2A	Mx	-.04	5.5
7	MP2B	X	80.613	.5
8	MP2B	Z	139.626	.5
9	MP2B	Mx	-.04	.5
10	MP2B	X	80.613	5.5
11	MP2B	Z	139.626	5.5
12	MP2B	Mx	-.04	5.5
13	MP2C	X	58.525	.5
14	MP2C	Z	101.368	.5
15	MP2C	Mx	.059	.5
16	MP2C	X	58.525	5.5
17	MP2C	Z	101.368	5.5
18	MP2C	Mx	.059	5.5
19	MP4A	X	37.983	.38
20	MP4A	Z	65.789	.38
21	MP4A	Mx	-.019	.38
22	MP4A	X	37.983	1.63
23	MP4A	Z	65.789	1.63
24	MP4A	Mx	-.019	1.63
25	MP4B	X	37.983	.38
26	MP4B	Z	65.789	.38
27	MP4B	Mx	-.019	.38
28	MP4B	X	37.983	1.63
29	MP4B	Z	65.789	1.63
30	MP4B	Mx	-.019	1.63
31	MP4C	X	17.538	.38
32	MP4C	Z	30.377	.38
33	MP4C	Mx	.018	.38
34	MP4C	X	17.538	1.63
35	MP4C	Z	30.377	1.63
36	MP4C	Mx	.018	1.63
37	MP4A	X	13.556	4.5
38	MP4A	Z	23.48	4.5
39	MP4A	Mx	-.007	4.5
40	MP4B	X	13.556	4.5
41	MP4B	Z	23.48	4.5
42	MP4B	Mx	-.007	4.5
43	MP4C	X	3.327	4.5
44	MP4C	Z	5.763	4.5
45	MP4C	Mx	.003	4.5
46	MP3A	X	71.192	2
47	MP3A	Z	123.308	2
48	MP3A	Mx	.036	2
49	MP3A	X	71.192	6
50	MP3A	Z	123.308	6
51	MP3A	Mx	.036	6
52	MP3B	X	71.192	2

Member Point Loads (BLC 8 : Antenna Wo (150 Deg)) (Continued)

	Member Label	Direction	Magnitude[lb,k-ft]	Location[ft,%]
53	MP3B	Z	123.308	2
54	MP3B	Mx	-.108	2
55	MP3B	X	71.192	6
56	MP3B	Z	123.308	6
57	MP3B	Mx	-.108	6
58	MP3C	X	51.435	2
59	MP3C	Z	89.088	2
60	MP3C	Mx	.051	2
61	MP3C	X	51.435	6
62	MP3C	Z	89.088	6
63	MP3C	Mx	.051	6
64	MP3A	X	71.192	2
65	MP3A	Z	123.308	2
66	MP3A	Mx	-.108	2
67	MP3A	X	71.192	6
68	MP3A	Z	123.308	6
69	MP3A	Mx	-.108	6
70	MP3B	X	71.192	2
71	MP3B	Z	123.308	2
72	MP3B	Mx	.036	2
73	MP3B	X	71.192	6
74	MP3B	Z	123.308	6
75	MP3B	Mx	.036	6
76	MP3C	X	51.435	2
77	MP3C	Z	89.088	2
78	MP3C	Mx	.051	2
79	MP3C	X	51.435	6
80	MP3C	Z	89.088	6
81	MP3C	Mx	.051	6
82	MP3A	X	32.693	4
83	MP3A	Z	56.626	4
84	MP3A	Mx	.016	4
85	MP3B	X	32.693	4
86	MP3B	Z	56.626	4
87	MP3B	Mx	.016	4
88	MP3C	X	23.829	4
89	MP3C	Z	41.273	4
90	MP3C	Mx	-.024	4
91	MP3A	X	31.561	1.5
92	MP3A	Z	54.666	1.5
93	MP3A	Mx	-.016	1.5
94	MP3B	X	31.561	1.5
95	MP3B	Z	54.666	1.5
96	MP3B	Mx	-.016	1.5
97	MP3C	X	19.301	1.5
98	MP3C	Z	33.431	1.5
99	MP3C	Mx	.019	1.5
100	OVP	X	37.853	1
101	OVP	Z	65.563	1
102	OVP	Mx	0	1

Member Point Loads (BLC 9 : Antenna Wo (180 Deg))

	Member Label	Direction	Magnitude[lb,k-ft]	Location[ft,%]
1	MP2A	X	0	.5
2	MP2A	Z	175.952	.5
3	MP2A	Mx	0	.5
4	MP2A	X	0	5.5
5	MP2A	Z	175.952	5.5
6	MP2A	Mx	0	5.5
7	MP2B	X	0	.5
8	MP2B	Z	131.776	.5
9	MP2B	Mx	-.057	.5
10	MP2B	X	0	5.5
11	MP2B	Z	131.776	5.5
12	MP2B	Mx	-.057	5.5
13	MP2C	X	0	.5
14	MP2C	Z	131.776	.5
15	MP2C	Mx	.057	.5
16	MP2C	X	0	5.5
17	MP2C	Z	131.776	5.5
18	MP2C	Mx	.057	5.5
19	MP4A	X	0	.38
20	MP4A	Z	89.596	.38
21	MP4A	Mx	0	.38
22	MP4A	X	0	1.63
23	MP4A	Z	89.596	1.63
24	MP4A	Mx	0	1.63
25	MP4B	X	0	.38
26	MP4B	Z	48.707	.38
27	MP4B	Mx	-.021	.38
28	MP4B	X	0	1.63
29	MP4B	Z	48.707	1.63
30	MP4B	Mx	-.021	1.63
31	MP4C	X	0	.38
32	MP4C	Z	48.707	.38
33	MP4C	Mx	.021	.38
34	MP4C	X	0	1.63
35	MP4C	Z	48.707	1.63
36	MP4C	Mx	.021	1.63
37	MP4A	X	0	4.5
38	MP4A	Z	33.932	4.5
39	MP4A	Mx	0	4.5
40	MP4B	X	0	4.5
41	MP4B	Z	13.474	4.5
42	MP4B	Mx	-.006	4.5
43	MP4C	X	0	4.5
44	MP4C	Z	13.474	4.5
45	MP4C	Mx	.006	4.5
46	MP3A	X	0	2
47	MP3A	Z	155.555	2
48	MP3A	Mx	.091	2
49	MP3A	X	0	6
50	MP3A	Z	155.555	6
51	MP3A	Mx	.091	6
52	MP3B	X	0	2

Member Point Loads (BLC 9 : Antenna Wo (180 Deg)) (Continued)

	Member Label	Direction	Magnitude[lb,k-ft]	Location[ft,%]
53	MP3B	Z	116.041	2
54	MP3B	Mx	-.084	2
55	MP3B	X	0	6
56	MP3B	Z	116.041	6
57	MP3B	Mx	-.084	6
58	MP3C	X	0	2
59	MP3C	Z	116.041	2
60	MP3C	Mx	.016	2
61	MP3C	X	0	6
62	MP3C	Z	116.041	6
63	MP3C	Mx	.016	6
64	MP3A	X	0	2
65	MP3A	Z	155.555	2
66	MP3A	Mx	-.091	2
67	MP3A	X	0	6
68	MP3A	Z	155.555	6
69	MP3A	Mx	-.091	6
70	MP3B	X	0	2
71	MP3B	Z	116.041	2
72	MP3B	Mx	-.016	2
73	MP3B	X	0	6
74	MP3B	Z	116.041	6
75	MP3B	Mx	-.016	6
76	MP3C	X	0	2
77	MP3C	Z	116.041	2
78	MP3C	Mx	.084	2
79	MP3C	X	0	6
80	MP3C	Z	116.041	6
81	MP3C	Mx	.084	6
82	MP3A	X	0	4
83	MP3A	Z	71.296	4
84	MP3A	Mx	0	4
85	MP3B	X	0	4
86	MP3B	Z	53.567	4
87	MP3B	Mx	.023	4
88	MP3C	X	0	4
89	MP3C	Z	53.567	4
90	MP3C	Mx	-.023	4
91	MP3A	X	0	1.5
92	MP3A	Z	71.296	1.5
93	MP3A	Mx	0	1.5
94	MP3B	X	0	1.5
95	MP3B	Z	46.776	1.5
96	MP3B	Mx	-.02	1.5
97	MP3C	X	0	1.5
98	MP3C	Z	46.776	1.5
99	MP3C	Mx	.02	1.5
100	OVP	X	0	1
101	OVP	Z	91.406	1
102	OVP	Mx	0	1

Member Point Loads (BLC 10 : Antenna Wo (210 Deg))

	Member Label	Direction	Magnitude[lb,k-ft]	Location[ft,%]
1	MP2A	X	-80.613	.5
2	MP2A	Z	139.626	.5
3	MP2A	Mx	.04	.5
4	MP2A	X	-80.613	5.5
5	MP2A	Z	139.626	5.5
6	MP2A	Mx	.04	5.5
7	MP2B	X	-58.525	.5
8	MP2B	Z	101.368	.5
9	MP2B	Mx	-.059	.5
10	MP2B	X	-58.525	5.5
11	MP2B	Z	101.368	5.5
12	MP2B	Mx	-.059	5.5
13	MP2C	X	-80.613	.5
14	MP2C	Z	139.626	.5
15	MP2C	Mx	.04	.5
16	MP2C	X	-80.613	5.5
17	MP2C	Z	139.626	5.5
18	MP2C	Mx	.04	5.5
19	MP4A	X	-37.983	.38
20	MP4A	Z	65.789	.38
21	MP4A	Mx	.019	.38
22	MP4A	X	-37.983	1.63
23	MP4A	Z	65.789	1.63
24	MP4A	Mx	.019	1.63
25	MP4B	X	-17.538	.38
26	MP4B	Z	30.377	.38
27	MP4B	Mx	-.018	.38
28	MP4B	X	-17.538	1.63
29	MP4B	Z	30.377	1.63
30	MP4B	Mx	-.018	1.63
31	MP4C	X	-37.983	.38
32	MP4C	Z	65.789	.38
33	MP4C	Mx	.019	.38
34	MP4C	X	-37.983	1.63
35	MP4C	Z	65.789	1.63
36	MP4C	Mx	.019	1.63
37	MP4A	X	-13.556	4.5
38	MP4A	Z	23.48	4.5
39	MP4A	Mx	.007	4.5
40	MP4B	X	-3.327	4.5
41	MP4B	Z	5.763	4.5
42	MP4B	Mx	-.003	4.5
43	MP4C	X	-13.556	4.5
44	MP4C	Z	23.48	4.5
45	MP4C	Mx	.007	4.5
46	MP3A	X	-71.192	2
47	MP3A	Z	123.308	2
48	MP3A	Mx	.108	2
49	MP3A	X	-71.192	6
50	MP3A	Z	123.308	6
51	MP3A	Mx	.108	6
52	MP3B	X	-51.435	2

Member Point Loads (BLC 10 : Antenna Wo (210 Deg)) (Continued)

	Member Label	Direction	Magnitude[lb,k-ft]	Location[ft,%]
53	MP3B	Z	89.088	2
54	MP3B	Mx	-.051	2
55	MP3B	X	-51.435	6
56	MP3B	Z	89.088	6
57	MP3B	Mx	-.051	6
58	MP3C	X	-71.192	2
59	MP3C	Z	123.308	2
60	MP3C	Mx	-.036	2
61	MP3C	X	-71.192	6
62	MP3C	Z	123.308	6
63	MP3C	Mx	-.036	6
64	MP3A	X	-71.192	2
65	MP3A	Z	123.308	2
66	MP3A	Mx	-.036	2
67	MP3A	X	-71.192	6
68	MP3A	Z	123.308	6
69	MP3A	Mx	-.036	6
70	MP3B	X	-51.435	2
71	MP3B	Z	89.088	2
72	MP3B	Mx	-.051	2
73	MP3B	X	-51.435	6
74	MP3B	Z	89.088	6
75	MP3B	Mx	-.051	6
76	MP3C	X	-71.192	2
77	MP3C	Z	123.308	2
78	MP3C	Mx	.108	2
79	MP3C	X	-71.192	6
80	MP3C	Z	123.308	6
81	MP3C	Mx	.108	6
82	MP3A	X	-32.693	4
83	MP3A	Z	56.626	4
84	MP3A	Mx	-.016	4
85	MP3B	X	-23.829	4
86	MP3B	Z	41.273	4
87	MP3B	Mx	.024	4
88	MP3C	X	-32.693	4
89	MP3C	Z	56.626	4
90	MP3C	Mx	-.016	4
91	MP3A	X	-31.561	1.5
92	MP3A	Z	54.666	1.5
93	MP3A	Mx	.016	1.5
94	MP3B	X	-19.301	1.5
95	MP3B	Z	33.431	1.5
96	MP3B	Mx	-.019	1.5
97	MP3C	X	-31.561	1.5
98	MP3C	Z	54.666	1.5
99	MP3C	Mx	.016	1.5
100	OVP	X	-47.154	1
101	OVP	Z	81.673	1
102	OVP	Mx	0	1

Member Point Loads (BLC 11 : Antenna Wo (240 Deg))

	Member Label	Direction	Magnitude[lb,k-ft]	Location[ft,%]
1	MP2A	X	-114.121	.5
2	MP2A	Z	65.888	.5
3	MP2A	Mx	.057	.5
4	MP2A	X	-114.121	5.5
5	MP2A	Z	65.888	5.5
6	MP2A	Mx	.057	5.5
7	MP2B	X	-114.121	.5
8	MP2B	Z	65.888	.5
9	MP2B	Mx	-.057	.5
10	MP2B	X	-114.121	5.5
11	MP2B	Z	65.888	5.5
12	MP2B	Mx	-.057	5.5
13	MP2C	X	-152.379	.5
14	MP2C	Z	87.976	.5
15	MP2C	Mx	0	.5
16	MP2C	X	-152.379	5.5
17	MP2C	Z	87.976	5.5
18	MP2C	Mx	0	5.5
19	MP4A	X	-42.181	.38
20	MP4A	Z	24.353	.38
21	MP4A	Mx	.021	.38
22	MP4A	X	-42.181	1.63
23	MP4A	Z	24.353	1.63
24	MP4A	Mx	.021	1.63
25	MP4B	X	-42.181	.38
26	MP4B	Z	24.353	.38
27	MP4B	Mx	-.021	.38
28	MP4B	X	-42.181	1.63
29	MP4B	Z	24.353	1.63
30	MP4B	Mx	-.021	1.63
31	MP4C	X	-77.593	.38
32	MP4C	Z	44.798	.38
33	MP4C	Mx	0	.38
34	MP4C	X	-77.593	1.63
35	MP4C	Z	44.798	1.63
36	MP4C	Mx	0	1.63
37	MP4A	X	-11.669	4.5
38	MP4A	Z	6.737	4.5
39	MP4A	Mx	.006	4.5
40	MP4B	X	-11.669	4.5
41	MP4B	Z	6.737	4.5
42	MP4B	Mx	-.006	4.5
43	MP4C	X	-29.386	4.5
44	MP4C	Z	16.966	4.5
45	MP4C	Mx	0	4.5
46	MP3A	X	-100.494	2
47	MP3A	Z	58.02	2
48	MP3A	Mx	.084	2
49	MP3A	X	-100.494	6
50	MP3A	Z	58.02	6
51	MP3A	Mx	.084	6
52	MP3B	X	-100.494	2

Member Point Loads (BLC 11 : Antenna Wo (240 Deg)) (Continued)

	Member Label	Direction	Magnitude[lb,k-ft]	Location[ft,%]
53	MP3B	Z	58.02	2
54	MP3B	Mx	-.016	2
55	MP3B	X	-100.494	6
56	MP3B	Z	58.02	6
57	MP3B	Mx	-.016	6
58	MP3C	X	-134.714	2
59	MP3C	Z	77.777	2
60	MP3C	Mx	-.091	2
61	MP3C	X	-134.714	6
62	MP3C	Z	77.777	6
63	MP3C	Mx	-.091	6
64	MP3A	X	-100.494	2
65	MP3A	Z	58.02	2
66	MP3A	Mx	.016	2
67	MP3A	X	-100.494	6
68	MP3A	Z	58.02	6
69	MP3A	Mx	.016	6
70	MP3B	X	-100.494	2
71	MP3B	Z	58.02	2
72	MP3B	Mx	-.084	2
73	MP3B	X	-100.494	6
74	MP3B	Z	58.02	6
75	MP3B	Mx	-.084	6
76	MP3C	X	-134.714	2
77	MP3C	Z	77.777	2
78	MP3C	Mx	.091	2
79	MP3C	X	-134.714	6
80	MP3C	Z	77.777	6
81	MP3C	Mx	.091	6
82	MP3A	X	-46.391	4
83	MP3A	Z	26.784	4
84	MP3A	Mx	-.023	4
85	MP3B	X	-46.391	4
86	MP3B	Z	26.784	4
87	MP3B	Mx	.023	4
88	MP3C	X	-61.744	4
89	MP3C	Z	35.648	4
90	MP3C	Mx	0	4
91	MP3A	X	-40.509	1.5
92	MP3A	Z	23.388	1.5
93	MP3A	Mx	.02	1.5
94	MP3B	X	-40.509	1.5
95	MP3B	Z	23.388	1.5
96	MP3B	Mx	-.02	1.5
97	MP3C	X	-61.744	1.5
98	MP3C	Z	35.648	1.5
99	MP3C	Mx	0	1.5
100	OVP	X	-70.588	1
101	OVP	Z	40.754	1
102	OVP	Mx	0	1

Member Point Loads (BLC 12 : Antenna Wo (270 Deg))

	Member Label	Direction	Magnitude[lb,k-ft]	Location[ft,%]
1	MP2A	X	-117.05	.5
2	MP2A	Z	0	.5
3	MP2A	Mx	.059	.5
4	MP2A	X	-117.05	5.5
5	MP2A	Z	0	5.5
6	MP2A	Mx	.059	5.5
7	MP2B	X	-161.227	.5
8	MP2B	Z	0	.5
9	MP2B	Mx	-.04	.5
10	MP2B	X	-161.227	5.5
11	MP2B	Z	0	5.5
12	MP2B	Mx	-.04	5.5
13	MP2C	X	-161.227	.5
14	MP2C	Z	0	.5
15	MP2C	Mx	-.04	.5
16	MP2C	X	-161.227	5.5
17	MP2C	Z	0	5.5
18	MP2C	Mx	-.04	5.5
19	MP4A	X	-35.077	.38
20	MP4A	Z	0	.38
21	MP4A	Mx	.018	.38
22	MP4A	X	-35.077	1.63
23	MP4A	Z	0	1.63
24	MP4A	Mx	.018	1.63
25	MP4B	X	-75.967	.38
26	MP4B	Z	0	.38
27	MP4B	Mx	-.019	.38
28	MP4B	X	-75.967	1.63
29	MP4B	Z	0	1.63
30	MP4B	Mx	-.019	1.63
31	MP4C	X	-75.967	.38
32	MP4C	Z	0	.38
33	MP4C	Mx	-.019	.38
34	MP4C	X	-75.967	1.63
35	MP4C	Z	0	1.63
36	MP4C	Mx	-.019	1.63
37	MP4A	X	-6.654	4.5
38	MP4A	Z	0	4.5
39	MP4A	Mx	.003	4.5
40	MP4B	X	-27.113	4.5
41	MP4B	Z	0	4.5
42	MP4B	Mx	-.007	4.5
43	MP4C	X	-27.113	4.5
44	MP4C	Z	0	4.5
45	MP4C	Mx	-.007	4.5
46	MP3A	X	-102.869	2
47	MP3A	Z	0	2
48	MP3A	Mx	.051	2
49	MP3A	X	-102.869	6
50	MP3A	Z	0	6
51	MP3A	Mx	.051	6
52	MP3B	X	-142.383	2

Member Point Loads (BLC 12 : Antenna Wo (270 Deg)) (Continued)

	Member Label	Direction	Magnitude[lb,k-ft]	Location[ft,%]
53	MP3B	Z	0	2
54	MP3B	Mx	.036	2
55	MP3B	X	-142.383	6
56	MP3B	Z	0	6
57	MP3B	Mx	.036	6
58	MP3C	X	-142.383	2
59	MP3C	Z	0	2
60	MP3C	Mx	-.108	2
61	MP3C	X	-142.383	6
62	MP3C	Z	0	6
63	MP3C	Mx	-.108	6
64	MP3A	X	-102.869	2
65	MP3A	Z	0	2
66	MP3A	Mx	.051	2
67	MP3A	X	-102.869	6
68	MP3A	Z	0	6
69	MP3A	Mx	.051	6
70	MP3B	X	-142.383	2
71	MP3B	Z	0	2
72	MP3B	Mx	-.108	2
73	MP3B	X	-142.383	6
74	MP3B	Z	0	6
75	MP3B	Mx	-.108	6
76	MP3C	X	-142.383	2
77	MP3C	Z	0	2
78	MP3C	Mx	.036	2
79	MP3C	X	-142.383	6
80	MP3C	Z	0	6
81	MP3C	Mx	.036	6
82	MP3A	X	-47.658	4
83	MP3A	Z	0	4
84	MP3A	Mx	-.024	4
85	MP3B	X	-65.386	4
86	MP3B	Z	0	4
87	MP3B	Mx	.016	4
88	MP3C	X	-65.386	4
89	MP3C	Z	0	4
90	MP3C	Mx	.016	4
91	MP3A	X	-38.603	1.5
92	MP3A	Z	0	1.5
93	MP3A	Mx	.019	1.5
94	MP3B	X	-63.123	1.5
95	MP3B	Z	0	1.5
96	MP3B	Mx	-.016	1.5
97	MP3C	X	-63.123	1.5
98	MP3C	Z	0	1.5
99	MP3C	Mx	-.016	1.5
100	OVP	X	-65.807	1
101	OVP	Z	0	1
102	OVP	Mx	0	1

Member Point Loads (BLC 13 : Antenna Wo (300 Deg))

	Member Label	Direction	Magnitude[lb,k-ft]	Location[ft,%]
1	MP2A	X	-114.121	.5
2	MP2A	Z	-65.888	.5
3	MP2A	Mx	.057	.5
4	MP2A	X	-114.121	5.5
5	MP2A	Z	-65.888	5.5
6	MP2A	Mx	.057	5.5
7	MP2B	X	-152.379	.5
8	MP2B	Z	-87.976	.5
9	MP2B	Mx	0	.5
10	MP2B	X	-152.379	5.5
11	MP2B	Z	-87.976	5.5
12	MP2B	Mx	0	5.5
13	MP2C	X	-114.121	.5
14	MP2C	Z	-65.888	.5
15	MP2C	Mx	-.057	.5
16	MP2C	X	-114.121	5.5
17	MP2C	Z	-65.888	5.5
18	MP2C	Mx	-.057	5.5
19	MP4A	X	-42.181	.38
20	MP4A	Z	-24.353	.38
21	MP4A	Mx	.021	.38
22	MP4A	X	-42.181	1.63
23	MP4A	Z	-24.353	1.63
24	MP4A	Mx	.021	1.63
25	MP4B	X	-77.593	.38
26	MP4B	Z	-44.798	.38
27	MP4B	Mx	0	.38
28	MP4B	X	-77.593	1.63
29	MP4B	Z	-44.798	1.63
30	MP4B	Mx	0	1.63
31	MP4C	X	-42.181	.38
32	MP4C	Z	-24.353	.38
33	MP4C	Mx	-.021	.38
34	MP4C	X	-42.181	1.63
35	MP4C	Z	-24.353	1.63
36	MP4C	Mx	-.021	1.63
37	MP4A	X	-11.669	4.5
38	MP4A	Z	-6.737	4.5
39	MP4A	Mx	.006	4.5
40	MP4B	X	-29.386	4.5
41	MP4B	Z	-16.966	4.5
42	MP4B	Mx	0	4.5
43	MP4C	X	-11.669	4.5
44	MP4C	Z	-6.737	4.5
45	MP4C	Mx	-.006	4.5
46	MP3A	X	-100.494	2
47	MP3A	Z	-58.02	2
48	MP3A	Mx	.016	2
49	MP3A	X	-100.494	6
50	MP3A	Z	-58.02	6
51	MP3A	Mx	.016	6
52	MP3B	X	-134.714	2

Member Point Loads (BLC 13 : Antenna Wo (300 Deg)) (Continued)

	Member Label	Direction	Magnitude[lb,k-ft]	Location[ft,%]
53	MP3B	Z	-77.777	2
54	MP3B	Mx	.091	2
55	MP3B	X	-134.714	6
56	MP3B	Z	-77.777	6
57	MP3B	Mx	.091	6
58	MP3C	X	-100.494	2
59	MP3C	Z	-58.02	2
60	MP3C	Mx	-.084	2
61	MP3C	X	-100.494	6
62	MP3C	Z	-58.02	6
63	MP3C	Mx	-.084	6
64	MP3A	X	-100.494	2
65	MP3A	Z	-58.02	2
66	MP3A	Mx	.084	2
67	MP3A	X	-100.494	6
68	MP3A	Z	-58.02	6
69	MP3A	Mx	.084	6
70	MP3B	X	-134.714	2
71	MP3B	Z	-77.777	2
72	MP3B	Mx	-.091	2
73	MP3B	X	-134.714	6
74	MP3B	Z	-77.777	6
75	MP3B	Mx	-.091	6
76	MP3C	X	-100.494	2
77	MP3C	Z	-58.02	2
78	MP3C	Mx	-.016	2
79	MP3C	X	-100.494	6
80	MP3C	Z	-58.02	6
81	MP3C	Mx	-.016	6
82	MP3A	X	-46.391	4
83	MP3A	Z	-26.784	4
84	MP3A	Mx	-.023	4
85	MP3B	X	-61.744	4
86	MP3B	Z	-35.648	4
87	MP3B	Mx	0	4
88	MP3C	X	-46.391	4
89	MP3C	Z	-26.784	4
90	MP3C	Mx	.023	4
91	MP3A	X	-40.509	1.5
92	MP3A	Z	-23.388	1.5
93	MP3A	Mx	.02	1.5
94	MP3B	X	-61.744	1.5
95	MP3B	Z	-35.648	1.5
96	MP3B	Mx	0	1.5
97	MP3C	X	-40.509	1.5
98	MP3C	Z	-23.388	1.5
99	MP3C	Mx	-.02	1.5
100	OVP	X	-54.478	1
101	OVP	Z	-31.453	1
102	OVP	Mx	0	1

Member Point Loads (BLC 14 : Antenna Wo (330 Deg))

	Member Label	Direction	Magnitude[lb,k-ft]	Location[ft,%]
1	MP2A	X	-80.613	.5
2	MP2A	Z	-139.626	.5
3	MP2A	Mx	.04	.5
4	MP2A	X	-80.613	5.5
5	MP2A	Z	-139.626	5.5
6	MP2A	Mx	.04	5.5
7	MP2B	X	-80.613	.5
8	MP2B	Z	-139.626	.5
9	MP2B	Mx	.04	.5
10	MP2B	X	-80.613	5.5
11	MP2B	Z	-139.626	5.5
12	MP2B	Mx	.04	5.5
13	MP2C	X	-58.525	.5
14	MP2C	Z	-101.368	.5
15	MP2C	Mx	-.059	.5
16	MP2C	X	-58.525	5.5
17	MP2C	Z	-101.368	5.5
18	MP2C	Mx	-.059	5.5
19	MP4A	X	-37.983	.38
20	MP4A	Z	-65.789	.38
21	MP4A	Mx	.019	.38
22	MP4A	X	-37.983	1.63
23	MP4A	Z	-65.789	1.63
24	MP4A	Mx	.019	1.63
25	MP4B	X	-37.983	.38
26	MP4B	Z	-65.789	.38
27	MP4B	Mx	.019	.38
28	MP4B	X	-37.983	1.63
29	MP4B	Z	-65.789	1.63
30	MP4B	Mx	.019	1.63
31	MP4C	X	-17.538	.38
32	MP4C	Z	-30.377	.38
33	MP4C	Mx	-.018	.38
34	MP4C	X	-17.538	1.63
35	MP4C	Z	-30.377	1.63
36	MP4C	Mx	-.018	1.63
37	MP4A	X	-13.556	4.5
38	MP4A	Z	-23.48	4.5
39	MP4A	Mx	.007	4.5
40	MP4B	X	-13.556	4.5
41	MP4B	Z	-23.48	4.5
42	MP4B	Mx	.007	4.5
43	MP4C	X	-3.327	4.5
44	MP4C	Z	-5.763	4.5
45	MP4C	Mx	-.003	4.5
46	MP3A	X	-71.192	2
47	MP3A	Z	-123.308	2
48	MP3A	Mx	-.036	2
49	MP3A	X	-71.192	6
50	MP3A	Z	-123.308	6
51	MP3A	Mx	-.036	6
52	MP3B	X	-71.192	2

Member Point Loads (BLC 14 : Antenna Wo (330 Deg)) (Continued)

	Member Label	Direction	Magnitude[lb,k-ft]	Location[ft,%]
53	MP3B	Z	-123.308	2
54	MP3B	Mx	.108	2
55	MP3B	X	-71.192	6
56	MP3B	Z	-123.308	6
57	MP3B	Mx	.108	6
58	MP3C	X	-51.435	2
59	MP3C	Z	-89.088	2
60	MP3C	Mx	-.051	2
61	MP3C	X	-51.435	6
62	MP3C	Z	-89.088	6
63	MP3C	Mx	-.051	6
64	MP3A	X	-71.192	2
65	MP3A	Z	-123.308	2
66	MP3A	Mx	.108	2
67	MP3A	X	-71.192	6
68	MP3A	Z	-123.308	6
69	MP3A	Mx	.108	6
70	MP3B	X	-71.192	2
71	MP3B	Z	-123.308	2
72	MP3B	Mx	-.036	2
73	MP3B	X	-71.192	6
74	MP3B	Z	-123.308	6
75	MP3B	Mx	-.036	6
76	MP3C	X	-51.435	2
77	MP3C	Z	-89.088	2
78	MP3C	Mx	-.051	2
79	MP3C	X	-51.435	6
80	MP3C	Z	-89.088	6
81	MP3C	Mx	-.051	6
82	MP3A	X	-32.693	4
83	MP3A	Z	-56.626	4
84	MP3A	Mx	-.016	4
85	MP3B	X	-32.693	4
86	MP3B	Z	-56.626	4
87	MP3B	Mx	-.016	4
88	MP3C	X	-23.829	4
89	MP3C	Z	-41.273	4
90	MP3C	Mx	.024	4
91	MP3A	X	-31.561	1.5
92	MP3A	Z	-54.666	1.5
93	MP3A	Mx	.016	1.5
94	MP3B	X	-31.561	1.5
95	MP3B	Z	-54.666	1.5
96	MP3B	Mx	.016	1.5
97	MP3C	X	-19.301	1.5
98	MP3C	Z	-33.431	1.5
99	MP3C	Mx	-.019	1.5
100	OVP	X	-37.853	1
101	OVP	Z	-65.563	1
102	OVP	Mx	0	1

Member Point Loads (BLC 15 : Antenna Wi (0 Deg))

	Member Label	Direction	Magnitude[lb,k-ft]	Location[ft,%]
1	MP2A	X	0	.5
2	MP2A	Z	-37.602	.5
3	MP2A	Mx	0	.5
4	MP2A	X	0	5.5
5	MP2A	Z	-37.602	5.5
6	MP2A	Mx	0	5.5
7	MP2B	X	0	.5
8	MP2B	Z	-29.238	.5
9	MP2B	Mx	.013	.5
10	MP2B	X	0	5.5
11	MP2B	Z	-29.238	5.5
12	MP2B	Mx	.013	5.5
13	MP2C	X	0	.5
14	MP2C	Z	-29.238	.5
15	MP2C	Mx	-.013	.5
16	MP2C	X	0	5.5
17	MP2C	Z	-29.238	5.5
18	MP2C	Mx	-.013	5.5
19	MP4A	X	0	.38
20	MP4A	Z	-19.883	.38
21	MP4A	Mx	0	.38
22	MP4A	X	0	1.63
23	MP4A	Z	-19.883	1.63
24	MP4A	Mx	0	1.63
25	MP4B	X	0	.38
26	MP4B	Z	-11.581	.38
27	MP4B	Mx	.005	.38
28	MP4B	X	0	1.63
29	MP4B	Z	-11.581	1.63
30	MP4B	Mx	.005	1.63
31	MP4C	X	0	.38
32	MP4C	Z	-11.581	.38
33	MP4C	Mx	-.005	.38
34	MP4C	X	0	1.63
35	MP4C	Z	-11.581	1.63
36	MP4C	Mx	-.005	1.63
37	MP4A	X	0	4.5
38	MP4A	Z	-9.181	4.5
39	MP4A	Mx	0	4.5
40	MP4B	X	0	4.5
41	MP4B	Z	-4.621	4.5
42	MP4B	Mx	.002	4.5
43	MP4C	X	0	4.5
44	MP4C	Z	-4.621	4.5
45	MP4C	Mx	-.002	4.5
46	MP3A	X	0	2
47	MP3A	Z	-33.388	2
48	MP3A	Mx	-.019	2
49	MP3A	X	0	6
50	MP3A	Z	-33.388	6
51	MP3A	Mx	-.019	6
52	MP3B	X	0	2

Member Point Loads (BLC 15 : Antenna Wi (0 Deg)) (Continued)

	Member Label	Direction	Magnitude[lb,k-ft]	Location[ft,%]
53	MP3B	Z	-25.939	2
54	MP3B	Mx	.019	2
55	MP3B	X	0	6
56	MP3B	Z	-25.939	6
57	MP3B	Mx	.019	6
58	MP3C	X	0	2
59	MP3C	Z	-25.939	2
60	MP3C	Mx	-.004	2
61	MP3C	X	0	6
62	MP3C	Z	-25.939	6
63	MP3C	Mx	-.004	6
64	MP3A	X	0	2
65	MP3A	Z	-33.388	2
66	MP3A	Mx	.019	2
67	MP3A	X	0	6
68	MP3A	Z	-33.388	6
69	MP3A	Mx	.019	6
70	MP3B	X	0	2
71	MP3B	Z	-25.939	2
72	MP3B	Mx	.004	2
73	MP3B	X	0	6
74	MP3B	Z	-25.939	6
75	MP3B	Mx	.004	6
76	MP3C	X	0	2
77	MP3C	Z	-25.939	2
78	MP3C	Mx	-.019	2
79	MP3C	X	0	6
80	MP3C	Z	-25.939	6
81	MP3C	Mx	-.019	6
82	MP3A	X	0	4
83	MP3A	Z	-17.202	4
84	MP3A	Mx	0	4
85	MP3B	X	0	4
86	MP3B	Z	-13.441	4
87	MP3B	Mx	-.006	4
88	MP3C	X	0	4
89	MP3C	Z	-13.441	4
90	MP3C	Mx	.006	4
91	MP3A	X	0	1.5
92	MP3A	Z	-17.202	1.5
93	MP3A	Mx	0	1.5
94	MP3B	X	0	1.5
95	MP3B	Z	-12.012	1.5
96	MP3B	Mx	.005	1.5
97	MP3C	X	0	1.5
98	MP3C	Z	-12.012	1.5
99	MP3C	Mx	-.005	1.5
100	OVP	X	0	1
101	OVP	Z	-21.383	1
102	OVP	Mx	0	1

Member Point Loads (BLC 16 : Antenna Wi (30 Deg))

	Member Label	Direction	Magnitude[lb,k-ft]	Location[ft,%]
1	MP2A	X	17.407	.5
2	MP2A	Z	-30.15	.5
3	MP2A	Mx	-.009	.5
4	MP2A	X	17.407	5.5
5	MP2A	Z	-30.15	5.5
6	MP2A	Mx	-.009	5.5
7	MP2B	X	13.225	.5
8	MP2B	Z	-22.906	.5
9	MP2B	Mx	.013	.5
10	MP2B	X	13.225	5.5
11	MP2B	Z	-22.906	5.5
12	MP2B	Mx	.013	5.5
13	MP2C	X	17.407	.5
14	MP2C	Z	-30.15	.5
15	MP2C	Mx	-.009	.5
16	MP2C	X	17.407	5.5
17	MP2C	Z	-30.15	5.5
18	MP2C	Mx	-.009	5.5
19	MP4A	X	8.558	.38
20	MP4A	Z	-14.822	.38
21	MP4A	Mx	-.004	.38
22	MP4A	X	8.558	1.63
23	MP4A	Z	-14.822	1.63
24	MP4A	Mx	-.004	1.63
25	MP4B	X	4.407	.38
26	MP4B	Z	-7.633	.38
27	MP4B	Mx	.004	.38
28	MP4B	X	4.407	1.63
29	MP4B	Z	-7.633	1.63
30	MP4B	Mx	.004	1.63
31	MP4C	X	8.558	.38
32	MP4C	Z	-14.822	.38
33	MP4C	Mx	-.004	.38
34	MP4C	X	8.558	1.63
35	MP4C	Z	-14.822	1.63
36	MP4C	Mx	-.004	1.63
37	MP4A	X	3.83	4.5
38	MP4A	Z	-6.635	4.5
39	MP4A	Mx	-.002	4.5
40	MP4B	X	1.551	4.5
41	MP4B	Z	-2.686	4.5
42	MP4B	Mx	.002	4.5
43	MP4C	X	3.83	4.5
44	MP4C	Z	-6.635	4.5
45	MP4C	Mx	-.002	4.5
46	MP3A	X	15.453	2
47	MP3A	Z	-26.765	2
48	MP3A	Mx	-.023	2
49	MP3A	X	15.453	6
50	MP3A	Z	-26.765	6
51	MP3A	Mx	-.023	6
52	MP3B	X	11.728	2

Member Point Loads (BLC 16 : Antenna Wi (30 Deg)) (Continued)

	Member Label	Direction	Magnitude[lb,k-ft]	Location[ft,%]
53	MP3B	Z	-20.314	2
54	MP3B	Mx	.012	2
55	MP3B	X	11.728	6
56	MP3B	Z	-20.314	6
57	MP3B	Mx	.012	6
58	MP3C	X	15.453	2
59	MP3C	Z	-26.765	2
60	MP3C	Mx	.008	2
61	MP3C	X	15.453	6
62	MP3C	Z	-26.765	6
63	MP3C	Mx	.008	6
64	MP3A	X	15.453	2
65	MP3A	Z	-26.765	2
66	MP3A	Mx	.008	2
67	MP3A	X	15.453	6
68	MP3A	Z	-26.765	6
69	MP3A	Mx	.008	6
70	MP3B	X	11.728	2
71	MP3B	Z	-20.314	2
72	MP3B	Mx	.012	2
73	MP3B	X	11.728	6
74	MP3B	Z	-20.314	6
75	MP3B	Mx	.012	6
76	MP3C	X	15.453	2
77	MP3C	Z	-26.765	2
78	MP3C	Mx	-.023	2
79	MP3C	X	15.453	6
80	MP3C	Z	-26.765	6
81	MP3C	Mx	-.023	6
82	MP3A	X	7.974	4
83	MP3A	Z	-13.811	4
84	MP3A	Mx	.004	4
85	MP3B	X	6.094	4
86	MP3B	Z	-10.555	4
87	MP3B	Mx	-.006	4
88	MP3C	X	7.974	4
89	MP3C	Z	-13.811	4
90	MP3C	Mx	.004	4
91	MP3A	X	7.736	1.5
92	MP3A	Z	-13.399	1.5
93	MP3A	Mx	-.004	1.5
94	MP3B	X	5.141	1.5
95	MP3B	Z	-8.905	1.5
96	MP3B	Mx	.005	1.5
97	MP3C	X	7.736	1.5
98	MP3C	Z	-13.399	1.5
99	MP3C	Mx	-.004	1.5
100	OVP	X	10.989	1
101	OVP	Z	-19.033	1
102	OVP	Mx	0	1

Member Point Loads (BLC 17 : Antenna Wi (60 Deg))

	Member Label	Direction	Magnitude[lb,k-ft]	Location[ft,%]
1	MP2A	X	25.32	.5
2	MP2A	Z	-14.619	.5
3	MP2A	Mx	-.013	.5
4	MP2A	X	25.32	5.5
5	MP2A	Z	-14.619	5.5
6	MP2A	Mx	-.013	5.5
7	MP2B	X	25.32	.5
8	MP2B	Z	-14.619	.5
9	MP2B	Mx	.013	.5
10	MP2B	X	25.32	5.5
11	MP2B	Z	-14.619	5.5
12	MP2B	Mx	.013	5.5
13	MP2C	X	32.564	.5
14	MP2C	Z	-18.801	.5
15	MP2C	Mx	0	.5
16	MP2C	X	32.564	5.5
17	MP2C	Z	-18.801	5.5
18	MP2C	Mx	0	5.5
19	MP4A	X	10.029	.38
20	MP4A	Z	-5.791	.38
21	MP4A	Mx	-.005	.38
22	MP4A	X	10.029	1.63
23	MP4A	Z	-5.791	1.63
24	MP4A	Mx	-.005	1.63
25	MP4B	X	10.029	.38
26	MP4B	Z	-5.791	.38
27	MP4B	Mx	.005	.38
28	MP4B	X	10.029	1.63
29	MP4B	Z	-5.791	1.63
30	MP4B	Mx	.005	1.63
31	MP4C	X	17.219	.38
32	MP4C	Z	-9.941	.38
33	MP4C	Mx	0	.38
34	MP4C	X	17.219	1.63
35	MP4C	Z	-9.941	1.63
36	MP4C	Mx	0	1.63
37	MP4A	X	4.002	4.5
38	MP4A	Z	-2.311	4.5
39	MP4A	Mx	-.002	4.5
40	MP4B	X	4.002	4.5
41	MP4B	Z	-2.311	4.5
42	MP4B	Mx	.002	4.5
43	MP4C	X	7.951	4.5
44	MP4C	Z	-4.59	4.5
45	MP4C	Mx	0	4.5
46	MP3A	X	22.464	2
47	MP3A	Z	-12.97	2
48	MP3A	Mx	-.019	2
49	MP3A	X	22.464	6
50	MP3A	Z	-12.97	6
51	MP3A	Mx	-.019	6
52	MP3B	X	22.464	2

Member Point Loads (BLC 17 : Antenna Wi (60 Deg)) (Continued)

	Member Label	Direction	Magnitude[lb,k-ft]	Location[ft,%]
53	MP3B	Z	-12.97	2
54	MP3B	Mx	.004	2
55	MP3B	X	22.464	6
56	MP3B	Z	-12.97	6
57	MP3B	Mx	.004	6
58	MP3C	X	28.915	2
59	MP3C	Z	-16.694	2
60	MP3C	Mx	.019	2
61	MP3C	X	28.915	6
62	MP3C	Z	-16.694	6
63	MP3C	Mx	.019	6
64	MP3A	X	22.464	2
65	MP3A	Z	-12.97	2
66	MP3A	Mx	-.004	2
67	MP3A	X	22.464	6
68	MP3A	Z	-12.97	6
69	MP3A	Mx	-.004	6
70	MP3B	X	22.464	2
71	MP3B	Z	-12.97	2
72	MP3B	Mx	.019	2
73	MP3B	X	22.464	6
74	MP3B	Z	-12.97	6
75	MP3B	Mx	.019	6
76	MP3C	X	28.915	2
77	MP3C	Z	-16.694	2
78	MP3C	Mx	-.019	2
79	MP3C	X	28.915	6
80	MP3C	Z	-16.694	6
81	MP3C	Mx	-.019	6
82	MP3A	X	11.64	4
83	MP3A	Z	-6.721	4
84	MP3A	Mx	.006	4
85	MP3B	X	11.64	4
86	MP3B	Z	-6.721	4
87	MP3B	Mx	-.006	4
88	MP3C	X	14.897	4
89	MP3C	Z	-8.601	4
90	MP3C	Mx	0	4
91	MP3A	X	10.403	1.5
92	MP3A	Z	-6.006	1.5
93	MP3A	Mx	-.005	1.5
94	MP3B	X	10.403	1.5
95	MP3B	Z	-6.006	1.5
96	MP3B	Mx	.005	1.5
97	MP3C	X	14.897	1.5
98	MP3C	Z	-8.601	1.5
99	MP3C	Mx	0	1.5
100	OVP	X	16.762	1
101	OVP	Z	-9.678	1
102	OVP	Mx	0	1

Member Point Loads (BLC 18 : Antenna Wi (90 Deg))

	Member Label	Direction	Magnitude[lb,k-ft]	Location[ft,%]
1	MP2A	X	26.449	.5
2	MP2A	Z	0	.5
3	MP2A	Mx	-.013	.5
4	MP2A	X	26.449	5.5
5	MP2A	Z	0	5.5
6	MP2A	Mx	-.013	5.5
7	MP2B	X	34.814	.5
8	MP2B	Z	0	.5
9	MP2B	Mx	.009	.5
10	MP2B	X	34.814	5.5
11	MP2B	Z	0	5.5
12	MP2B	Mx	.009	5.5
13	MP2C	X	34.814	.5
14	MP2C	Z	0	.5
15	MP2C	Mx	.009	.5
16	MP2C	X	34.814	5.5
17	MP2C	Z	0	5.5
18	MP2C	Mx	.009	5.5
19	MP4A	X	8.814	.38
20	MP4A	Z	0	.38
21	MP4A	Mx	-.004	.38
22	MP4A	X	8.814	1.63
23	MP4A	Z	0	1.63
24	MP4A	Mx	-.004	1.63
25	MP4B	X	17.116	.38
26	MP4B	Z	0	.38
27	MP4B	Mx	.004	.38
28	MP4B	X	17.116	1.63
29	MP4B	Z	0	1.63
30	MP4B	Mx	.004	1.63
31	MP4C	X	17.116	.38
32	MP4C	Z	0	.38
33	MP4C	Mx	.004	.38
34	MP4C	X	17.116	1.63
35	MP4C	Z	0	1.63
36	MP4C	Mx	.004	1.63
37	MP4A	X	3.102	4.5
38	MP4A	Z	0	4.5
39	MP4A	Mx	-.002	4.5
40	MP4B	X	7.661	4.5
41	MP4B	Z	0	4.5
42	MP4B	Mx	.002	4.5
43	MP4C	X	7.661	4.5
44	MP4C	Z	0	4.5
45	MP4C	Mx	.002	4.5
46	MP3A	X	23.456	2
47	MP3A	Z	0	2
48	MP3A	Mx	-.012	2
49	MP3A	X	23.456	6
50	MP3A	Z	0	6
51	MP3A	Mx	-.012	6
52	MP3B	X	30.905	2

Member Point Loads (BLC 18 : Antenna Wi (90 Deg)) (Continued)

	Member Label	Direction	Magnitude[lb,k-ft]	Location[ft,%]
53	MP3B	Z	0	2
54	MP3B	Mx	-.008	2
55	MP3B	X	30.905	6
56	MP3B	Z	0	6
57	MP3B	Mx	-.008	6
58	MP3C	X	30.905	2
59	MP3C	Z	0	2
60	MP3C	Mx	.023	2
61	MP3C	X	30.905	6
62	MP3C	Z	0	6
63	MP3C	Mx	.023	6
64	MP3A	X	23.456	2
65	MP3A	Z	0	2
66	MP3A	Mx	-.012	2
67	MP3A	X	23.456	6
68	MP3A	Z	0	6
69	MP3A	Mx	-.012	6
70	MP3B	X	30.905	2
71	MP3B	Z	0	2
72	MP3B	Mx	.023	2
73	MP3B	X	30.905	6
74	MP3B	Z	0	6
75	MP3B	Mx	.023	6
76	MP3C	X	30.905	2
77	MP3C	Z	0	2
78	MP3C	Mx	-.008	2
79	MP3C	X	30.905	6
80	MP3C	Z	0	6
81	MP3C	Mx	-.008	6
82	MP3A	X	12.188	4
83	MP3A	Z	0	4
84	MP3A	Mx	.006	4
85	MP3B	X	15.948	4
86	MP3B	Z	0	4
87	MP3B	Mx	-.004	4
88	MP3C	X	15.948	4
89	MP3C	Z	0	4
90	MP3C	Mx	-.004	4
91	MP3A	X	10.282	1.5
92	MP3A	Z	0	1.5
93	MP3A	Mx	-.005	1.5
94	MP3B	X	15.472	1.5
95	MP3B	Z	0	1.5
96	MP3B	Mx	.004	1.5
97	MP3C	X	15.472	1.5
98	MP3C	Z	0	1.5
99	MP3C	Mx	.004	1.5
100	OVP	X	16.139	1
101	OVP	Z	0	1
102	OVP	Mx	0	1

Member Point Loads (BLC 19 : Antenna Wi (120 Deg))

	Member Label	Direction	Magnitude[lb,k-ft]	Location[ft,%]
1	MP2A	X	25.32	.5
2	MP2A	Z	14.619	.5
3	MP2A	Mx	-.013	.5
4	MP2A	X	25.32	5.5
5	MP2A	Z	14.619	5.5
6	MP2A	Mx	-.013	5.5
7	MP2B	X	32.564	.5
8	MP2B	Z	18.801	.5
9	MP2B	Mx	0	.5
10	MP2B	X	32.564	5.5
11	MP2B	Z	18.801	5.5
12	MP2B	Mx	0	5.5
13	MP2C	X	25.32	.5
14	MP2C	Z	14.619	.5
15	MP2C	Mx	.013	.5
16	MP2C	X	25.32	5.5
17	MP2C	Z	14.619	5.5
18	MP2C	Mx	.013	5.5
19	MP4A	X	10.029	.38
20	MP4A	Z	5.791	.38
21	MP4A	Mx	-.005	.38
22	MP4A	X	10.029	1.63
23	MP4A	Z	5.791	1.63
24	MP4A	Mx	-.005	1.63
25	MP4B	X	17.219	.38
26	MP4B	Z	9.941	.38
27	MP4B	Mx	0	.38
28	MP4B	X	17.219	1.63
29	MP4B	Z	9.941	1.63
30	MP4B	Mx	0	1.63
31	MP4C	X	10.029	.38
32	MP4C	Z	5.791	.38
33	MP4C	Mx	.005	.38
34	MP4C	X	10.029	1.63
35	MP4C	Z	5.791	1.63
36	MP4C	Mx	.005	1.63
37	MP4A	X	4.002	4.5
38	MP4A	Z	2.311	4.5
39	MP4A	Mx	-.002	4.5
40	MP4B	X	7.951	4.5
41	MP4B	Z	4.59	4.5
42	MP4B	Mx	0	4.5
43	MP4C	X	4.002	4.5
44	MP4C	Z	2.311	4.5
45	MP4C	Mx	.002	4.5
46	MP3A	X	22.464	2
47	MP3A	Z	12.97	2
48	MP3A	Mx	-.004	2
49	MP3A	X	22.464	6
50	MP3A	Z	12.97	6
51	MP3A	Mx	-.004	6
52	MP3B	X	28.915	2

Member Point Loads (BLC 19 : Antenna Wi (120 Deg)) (Continued)

	Member Label	Direction	Magnitude[lb,k-ft]	Location[ft,%]
53	MP3B	Z	16.694	2
54	MP3B	Mx	-.019	2
55	MP3B	X	28.915	6
56	MP3B	Z	16.694	6
57	MP3B	Mx	-.019	6
58	MP3C	X	22.464	2
59	MP3C	Z	12.97	2
60	MP3C	Mx	.019	2
61	MP3C	X	22.464	6
62	MP3C	Z	12.97	6
63	MP3C	Mx	.019	6
64	MP3A	X	22.464	2
65	MP3A	Z	12.97	2
66	MP3A	Mx	-.019	2
67	MP3A	X	22.464	6
68	MP3A	Z	12.97	6
69	MP3A	Mx	-.019	6
70	MP3B	X	28.915	2
71	MP3B	Z	16.694	2
72	MP3B	Mx	.019	2
73	MP3B	X	28.915	6
74	MP3B	Z	16.694	6
75	MP3B	Mx	.019	6
76	MP3C	X	22.464	2
77	MP3C	Z	12.97	2
78	MP3C	Mx	.004	2
79	MP3C	X	22.464	6
80	MP3C	Z	12.97	6
81	MP3C	Mx	.004	6
82	MP3A	X	11.64	4
83	MP3A	Z	6.721	4
84	MP3A	Mx	.006	4
85	MP3B	X	14.897	4
86	MP3B	Z	8.601	4
87	MP3B	Mx	0	4
88	MP3C	X	11.64	4
89	MP3C	Z	6.721	4
90	MP3C	Mx	-.006	4
91	MP3A	X	10.403	1.5
92	MP3A	Z	6.006	1.5
93	MP3A	Mx	-.005	1.5
94	MP3B	X	14.897	1.5
95	MP3B	Z	8.601	1.5
96	MP3B	Mx	0	1.5
97	MP3C	X	10.403	1.5
98	MP3C	Z	6.006	1.5
99	MP3C	Mx	.005	1.5
100	OVP	X	13.462	1
101	OVP	Z	7.772	1
102	OVP	Mx	0	1

Member Point Loads (BLC 20 : Antenna Wi (150 Deg))

	Member Label	Direction	Magnitude[lb,k-ft]	Location[ft,%]
1	MP2A	X	17.407	.5
2	MP2A	Z	30.15	.5
3	MP2A	Mx	-.009	.5
4	MP2A	X	17.407	5.5
5	MP2A	Z	30.15	5.5
6	MP2A	Mx	-.009	5.5
7	MP2B	X	17.407	.5
8	MP2B	Z	30.15	.5
9	MP2B	Mx	-.009	.5
10	MP2B	X	17.407	5.5
11	MP2B	Z	30.15	5.5
12	MP2B	Mx	-.009	5.5
13	MP2C	X	13.225	.5
14	MP2C	Z	22.906	.5
15	MP2C	Mx	.013	.5
16	MP2C	X	13.225	5.5
17	MP2C	Z	22.906	5.5
18	MP2C	Mx	.013	5.5
19	MP4A	X	8.558	.38
20	MP4A	Z	14.822	.38
21	MP4A	Mx	-.004	.38
22	MP4A	X	8.558	1.63
23	MP4A	Z	14.822	1.63
24	MP4A	Mx	-.004	1.63
25	MP4B	X	8.558	.38
26	MP4B	Z	14.822	.38
27	MP4B	Mx	-.004	.38
28	MP4B	X	8.558	1.63
29	MP4B	Z	14.822	1.63
30	MP4B	Mx	-.004	1.63
31	MP4C	X	4.407	.38
32	MP4C	Z	7.633	.38
33	MP4C	Mx	.004	.38
34	MP4C	X	4.407	1.63
35	MP4C	Z	7.633	1.63
36	MP4C	Mx	.004	1.63
37	MP4A	X	3.83	4.5
38	MP4A	Z	6.635	4.5
39	MP4A	Mx	-.002	4.5
40	MP4B	X	3.83	4.5
41	MP4B	Z	6.635	4.5
42	MP4B	Mx	-.002	4.5
43	MP4C	X	1.551	4.5
44	MP4C	Z	2.686	4.5
45	MP4C	Mx	.002	4.5
46	MP3A	X	15.453	2
47	MP3A	Z	26.765	2
48	MP3A	Mx	.008	2
49	MP3A	X	15.453	6
50	MP3A	Z	26.765	6
51	MP3A	Mx	.008	6
52	MP3B	X	15.453	2

Member Point Loads (BLC 20 : Antenna Wi (150 Deg)) (Continued)

	Member Label	Direction	Magnitude[lb,k-ft]	Location[ft,%]
53	MP3B	Z	26.765	2
54	MP3B	Mx	-.023	2
55	MP3B	X	15.453	6
56	MP3B	Z	26.765	6
57	MP3B	Mx	-.023	6
58	MP3C	X	11.728	2
59	MP3C	Z	20.314	2
60	MP3C	Mx	.012	2
61	MP3C	X	11.728	6
62	MP3C	Z	20.314	6
63	MP3C	Mx	.012	6
64	MP3A	X	15.453	2
65	MP3A	Z	26.765	2
66	MP3A	Mx	-.023	2
67	MP3A	X	15.453	6
68	MP3A	Z	26.765	6
69	MP3A	Mx	-.023	6
70	MP3B	X	15.453	2
71	MP3B	Z	26.765	2
72	MP3B	Mx	.008	2
73	MP3B	X	15.453	6
74	MP3B	Z	26.765	6
75	MP3B	Mx	.008	6
76	MP3C	X	11.728	2
77	MP3C	Z	20.314	2
78	MP3C	Mx	.012	2
79	MP3C	X	11.728	6
80	MP3C	Z	20.314	6
81	MP3C	Mx	.012	6
82	MP3A	X	7.974	4
83	MP3A	Z	13.811	4
84	MP3A	Mx	.004	4
85	MP3B	X	7.974	4
86	MP3B	Z	13.811	4
87	MP3B	Mx	.004	4
88	MP3C	X	6.094	4
89	MP3C	Z	10.555	4
90	MP3C	Mx	-.006	4
91	MP3A	X	7.736	1.5
92	MP3A	Z	13.399	1.5
93	MP3A	Mx	-.004	1.5
94	MP3B	X	7.736	1.5
95	MP3B	Z	13.399	1.5
96	MP3B	Mx	-.004	1.5
97	MP3C	X	5.141	1.5
98	MP3C	Z	8.905	1.5
99	MP3C	Mx	.005	1.5
100	OVP	X	9.083	1
101	OVP	Z	15.733	1
102	OVP	Mx	0	1

Member Point Loads (BLC 21 : Antenna Wi (180 Deg))

	Member Label	Direction	Magnitude[lb,k-ft]	Location[ft,%]
1	MP2A	X	0	.5
2	MP2A	Z	37.602	.5
3	MP2A	Mx	0	.5
4	MP2A	X	0	5.5
5	MP2A	Z	37.602	5.5
6	MP2A	Mx	0	5.5
7	MP2B	X	0	.5
8	MP2B	Z	29.238	.5
9	MP2B	Mx	-.013	.5
10	MP2B	X	0	5.5
11	MP2B	Z	29.238	5.5
12	MP2B	Mx	-.013	5.5
13	MP2C	X	0	.5
14	MP2C	Z	29.238	.5
15	MP2C	Mx	.013	.5
16	MP2C	X	0	5.5
17	MP2C	Z	29.238	5.5
18	MP2C	Mx	.013	5.5
19	MP4A	X	0	.38
20	MP4A	Z	19.883	.38
21	MP4A	Mx	0	.38
22	MP4A	X	0	1.63
23	MP4A	Z	19.883	1.63
24	MP4A	Mx	0	1.63
25	MP4B	X	0	.38
26	MP4B	Z	11.581	.38
27	MP4B	Mx	-.005	.38
28	MP4B	X	0	1.63
29	MP4B	Z	11.581	1.63
30	MP4B	Mx	-.005	1.63
31	MP4C	X	0	.38
32	MP4C	Z	11.581	.38
33	MP4C	Mx	.005	.38
34	MP4C	X	0	1.63
35	MP4C	Z	11.581	1.63
36	MP4C	Mx	.005	1.63
37	MP4A	X	0	4.5
38	MP4A	Z	9.181	4.5
39	MP4A	Mx	0	4.5
40	MP4B	X	0	4.5
41	MP4B	Z	4.621	4.5
42	MP4B	Mx	-.002	4.5
43	MP4C	X	0	4.5
44	MP4C	Z	4.621	4.5
45	MP4C	Mx	.002	4.5
46	MP3A	X	0	2
47	MP3A	Z	33.388	2
48	MP3A	Mx	.019	2
49	MP3A	X	0	6
50	MP3A	Z	33.388	6
51	MP3A	Mx	.019	6
52	MP3B	X	0	2

Member Point Loads (BLC 21 : Antenna Wi (180 Deg)) (Continued)

	Member Label	Direction	Magnitude[lb,k-ft]	Location[ft,%]
53	MP3B	Z	25.939	2
54	MP3B	Mx	-.019	2
55	MP3B	X	0	6
56	MP3B	Z	25.939	6
57	MP3B	Mx	-.019	6
58	MP3C	X	0	2
59	MP3C	Z	25.939	2
60	MP3C	Mx	.004	2
61	MP3C	X	0	6
62	MP3C	Z	25.939	6
63	MP3C	Mx	.004	6
64	MP3A	X	0	2
65	MP3A	Z	33.388	2
66	MP3A	Mx	-.019	2
67	MP3A	X	0	6
68	MP3A	Z	33.388	6
69	MP3A	Mx	-.019	6
70	MP3B	X	0	2
71	MP3B	Z	25.939	2
72	MP3B	Mx	-.004	2
73	MP3B	X	0	6
74	MP3B	Z	25.939	6
75	MP3B	Mx	-.004	6
76	MP3C	X	0	2
77	MP3C	Z	25.939	2
78	MP3C	Mx	.019	2
79	MP3C	X	0	6
80	MP3C	Z	25.939	6
81	MP3C	Mx	.019	6
82	MP3A	X	0	4
83	MP3A	Z	17.202	4
84	MP3A	Mx	0	4
85	MP3B	X	0	4
86	MP3B	Z	13.441	4
87	MP3B	Mx	.006	4
88	MP3C	X	0	4
89	MP3C	Z	13.441	4
90	MP3C	Mx	-.006	4
91	MP3A	X	0	1.5
92	MP3A	Z	17.202	1.5
93	MP3A	Mx	0	1.5
94	MP3B	X	0	1.5
95	MP3B	Z	12.012	1.5
96	MP3B	Mx	-.005	1.5
97	MP3C	X	0	1.5
98	MP3C	Z	12.012	1.5
99	MP3C	Mx	.005	1.5
100	OVP	X	0	1
101	OVP	Z	21.383	1
102	OVP	Mx	0	1

Member Point Loads (BLC 22 : Antenna Wi (210 Deg))

	Member Label	Direction	Magnitude[lb,k-ft]	Location[ft,%]
1	MP2A	X	-17.407	.5
2	MP2A	Z	30.15	.5
3	MP2A	Mx	.009	.5
4	MP2A	X	-17.407	5.5
5	MP2A	Z	30.15	5.5
6	MP2A	Mx	.009	5.5
7	MP2B	X	-13.225	.5
8	MP2B	Z	22.906	.5
9	MP2B	Mx	-.013	.5
10	MP2B	X	-13.225	5.5
11	MP2B	Z	22.906	5.5
12	MP2B	Mx	-.013	5.5
13	MP2C	X	-17.407	.5
14	MP2C	Z	30.15	.5
15	MP2C	Mx	.009	.5
16	MP2C	X	-17.407	5.5
17	MP2C	Z	30.15	5.5
18	MP2C	Mx	.009	5.5
19	MP4A	X	-8.558	.38
20	MP4A	Z	14.822	.38
21	MP4A	Mx	.004	.38
22	MP4A	X	-8.558	1.63
23	MP4A	Z	14.822	1.63
24	MP4A	Mx	.004	1.63
25	MP4B	X	-4.407	.38
26	MP4B	Z	7.633	.38
27	MP4B	Mx	-.004	.38
28	MP4B	X	-4.407	1.63
29	MP4B	Z	7.633	1.63
30	MP4B	Mx	-.004	1.63
31	MP4C	X	-8.558	.38
32	MP4C	Z	14.822	.38
33	MP4C	Mx	.004	.38
34	MP4C	X	-8.558	1.63
35	MP4C	Z	14.822	1.63
36	MP4C	Mx	.004	1.63
37	MP4A	X	-3.83	4.5
38	MP4A	Z	6.635	4.5
39	MP4A	Mx	.002	4.5
40	MP4B	X	-1.551	4.5
41	MP4B	Z	2.686	4.5
42	MP4B	Mx	-.002	4.5
43	MP4C	X	-3.83	4.5
44	MP4C	Z	6.635	4.5
45	MP4C	Mx	.002	4.5
46	MP3A	X	-15.453	2
47	MP3A	Z	26.765	2
48	MP3A	Mx	.023	2
49	MP3A	X	-15.453	6
50	MP3A	Z	26.765	6
51	MP3A	Mx	.023	6
52	MP3B	X	-11.728	2

Member Point Loads (BLC 22 : Antenna Wi (210 Deg)) (Continued)

	Member Label	Direction	Magnitude[lb,k-ft]	Location[ft,%]
53	MP3B	Z	20.314	2
54	MP3B	Mx	-.012	2
55	MP3B	X	-11.728	6
56	MP3B	Z	20.314	6
57	MP3B	Mx	-.012	6
58	MP3C	X	-15.453	2
59	MP3C	Z	26.765	2
60	MP3C	Mx	-.008	2
61	MP3C	X	-15.453	6
62	MP3C	Z	26.765	6
63	MP3C	Mx	-.008	6
64	MP3A	X	-15.453	2
65	MP3A	Z	26.765	2
66	MP3A	Mx	-.008	2
67	MP3A	X	-15.453	6
68	MP3A	Z	26.765	6
69	MP3A	Mx	-.008	6
70	MP3B	X	-11.728	2
71	MP3B	Z	20.314	2
72	MP3B	Mx	-.012	2
73	MP3B	X	-11.728	6
74	MP3B	Z	20.314	6
75	MP3B	Mx	-.012	6
76	MP3C	X	-15.453	2
77	MP3C	Z	26.765	2
78	MP3C	Mx	.023	2
79	MP3C	X	-15.453	6
80	MP3C	Z	26.765	6
81	MP3C	Mx	.023	6
82	MP3A	X	-7.974	4
83	MP3A	Z	13.811	4
84	MP3A	Mx	-.004	4
85	MP3B	X	-6.094	4
86	MP3B	Z	10.555	4
87	MP3B	Mx	.006	4
88	MP3C	X	-7.974	4
89	MP3C	Z	13.811	4
90	MP3C	Mx	-.004	4
91	MP3A	X	-7.736	1.5
92	MP3A	Z	13.399	1.5
93	MP3A	Mx	.004	1.5
94	MP3B	X	-5.141	1.5
95	MP3B	Z	8.905	1.5
96	MP3B	Mx	-.005	1.5
97	MP3C	X	-7.736	1.5
98	MP3C	Z	13.399	1.5
99	MP3C	Mx	.004	1.5
100	OVP	X	-10.989	1
101	OVP	Z	19.033	1
102	OVP	Mx	0	1

Member Point Loads (BLC 23 : Antenna Wi (240 Deg))

	Member Label	Direction	Magnitude[lb,k-ft]	Location[ft,%]
1	MP2A	X	-25.32	.5
2	MP2A	Z	14.619	.5
3	MP2A	Mx	.013	.5
4	MP2A	X	-25.32	5.5
5	MP2A	Z	14.619	5.5
6	MP2A	Mx	.013	5.5
7	MP2B	X	-25.32	.5
8	MP2B	Z	14.619	.5
9	MP2B	Mx	-.013	.5
10	MP2B	X	-25.32	5.5
11	MP2B	Z	14.619	5.5
12	MP2B	Mx	-.013	5.5
13	MP2C	X	-32.564	.5
14	MP2C	Z	18.801	.5
15	MP2C	Mx	0	.5
16	MP2C	X	-32.564	5.5
17	MP2C	Z	18.801	5.5
18	MP2C	Mx	0	5.5
19	MP4A	X	-10.029	.38
20	MP4A	Z	5.791	.38
21	MP4A	Mx	.005	.38
22	MP4A	X	-10.029	1.63
23	MP4A	Z	5.791	1.63
24	MP4A	Mx	.005	1.63
25	MP4B	X	-10.029	.38
26	MP4B	Z	5.791	.38
27	MP4B	Mx	-.005	.38
28	MP4B	X	-10.029	1.63
29	MP4B	Z	5.791	1.63
30	MP4B	Mx	-.005	1.63
31	MP4C	X	-17.219	.38
32	MP4C	Z	9.941	.38
33	MP4C	Mx	0	.38
34	MP4C	X	-17.219	1.63
35	MP4C	Z	9.941	1.63
36	MP4C	Mx	0	1.63
37	MP4A	X	-4.002	4.5
38	MP4A	Z	2.311	4.5
39	MP4A	Mx	.002	4.5
40	MP4B	X	-4.002	4.5
41	MP4B	Z	2.311	4.5
42	MP4B	Mx	-.002	4.5
43	MP4C	X	-7.951	4.5
44	MP4C	Z	4.59	4.5
45	MP4C	Mx	0	4.5
46	MP3A	X	-22.464	2
47	MP3A	Z	12.97	2
48	MP3A	Mx	.019	2
49	MP3A	X	-22.464	6
50	MP3A	Z	12.97	6
51	MP3A	Mx	.019	6
52	MP3B	X	-22.464	2

Member Point Loads (BLC 23 : Antenna Wi (240 Deg)) (Continued)

	Member Label	Direction	Magnitude[lb,k-ft]	Location[ft,%]
53	MP3B	Z	12.97	2
54	MP3B	Mx	-.004	2
55	MP3B	X	-22.464	6
56	MP3B	Z	12.97	6
57	MP3B	Mx	-.004	6
58	MP3C	X	-28.915	2
59	MP3C	Z	16.694	2
60	MP3C	Mx	-.019	2
61	MP3C	X	-28.915	6
62	MP3C	Z	16.694	6
63	MP3C	Mx	-.019	6
64	MP3A	X	-22.464	2
65	MP3A	Z	12.97	2
66	MP3A	Mx	.004	2
67	MP3A	X	-22.464	6
68	MP3A	Z	12.97	6
69	MP3A	Mx	.004	6
70	MP3B	X	-22.464	2
71	MP3B	Z	12.97	2
72	MP3B	Mx	-.019	2
73	MP3B	X	-22.464	6
74	MP3B	Z	12.97	6
75	MP3B	Mx	-.019	6
76	MP3C	X	-28.915	2
77	MP3C	Z	16.694	2
78	MP3C	Mx	.019	2
79	MP3C	X	-28.915	6
80	MP3C	Z	16.694	6
81	MP3C	Mx	.019	6
82	MP3A	X	-11.64	4
83	MP3A	Z	6.721	4
84	MP3A	Mx	-.006	4
85	MP3B	X	-11.64	4
86	MP3B	Z	6.721	4
87	MP3B	Mx	.006	4
88	MP3C	X	-14.897	4
89	MP3C	Z	8.601	4
90	MP3C	Mx	0	4
91	MP3A	X	-10.403	1.5
92	MP3A	Z	6.006	1.5
93	MP3A	Mx	.005	1.5
94	MP3B	X	-10.403	1.5
95	MP3B	Z	6.006	1.5
96	MP3B	Mx	-.005	1.5
97	MP3C	X	-14.897	1.5
98	MP3C	Z	8.601	1.5
99	MP3C	Mx	0	1.5
100	OVP	X	-16.762	1
101	OVP	Z	9.678	1
102	OVP	Mx	0	1

Member Point Loads (BLC 24 : Antenna Wi (270 Deg))

	Member Label	Direction	Magnitude[lb,k-ft]	Location[ft,%]
1	MP2A	X	-26.449	.5
2	MP2A	Z	0	.5
3	MP2A	Mx	.013	.5
4	MP2A	X	-26.449	5.5
5	MP2A	Z	0	5.5
6	MP2A	Mx	.013	5.5
7	MP2B	X	-34.814	.5
8	MP2B	Z	0	.5
9	MP2B	Mx	-.009	.5
10	MP2B	X	-34.814	5.5
11	MP2B	Z	0	5.5
12	MP2B	Mx	-.009	5.5
13	MP2C	X	-34.814	.5
14	MP2C	Z	0	.5
15	MP2C	Mx	-.009	.5
16	MP2C	X	-34.814	5.5
17	MP2C	Z	0	5.5
18	MP2C	Mx	-.009	5.5
19	MP4A	X	-8.814	.38
20	MP4A	Z	0	.38
21	MP4A	Mx	.004	.38
22	MP4A	X	-8.814	1.63
23	MP4A	Z	0	1.63
24	MP4A	Mx	.004	1.63
25	MP4B	X	-17.116	.38
26	MP4B	Z	0	.38
27	MP4B	Mx	-.004	.38
28	MP4B	X	-17.116	1.63
29	MP4B	Z	0	1.63
30	MP4B	Mx	-.004	1.63
31	MP4C	X	-17.116	.38
32	MP4C	Z	0	.38
33	MP4C	Mx	-.004	.38
34	MP4C	X	-17.116	1.63
35	MP4C	Z	0	1.63
36	MP4C	Mx	-.004	1.63
37	MP4A	X	-3.102	4.5
38	MP4A	Z	0	4.5
39	MP4A	Mx	.002	4.5
40	MP4B	X	-7.661	4.5
41	MP4B	Z	0	4.5
42	MP4B	Mx	-.002	4.5
43	MP4C	X	-7.661	4.5
44	MP4C	Z	0	4.5
45	MP4C	Mx	-.002	4.5
46	MP3A	X	-23.456	2
47	MP3A	Z	0	2
48	MP3A	Mx	.012	2
49	MP3A	X	-23.456	6
50	MP3A	Z	0	6
51	MP3A	Mx	.012	6
52	MP3B	X	-30.905	2

Member Point Loads (BLC 24 : Antenna Wi (270 Deg)) (Continued)

	Member Label	Direction	Magnitude[lb,k-ft]	Location[ft,%]
53	MP3B	Z	0	2
54	MP3B	Mx	.008	2
55	MP3B	X	-30.905	6
56	MP3B	Z	0	6
57	MP3B	Mx	.008	6
58	MP3C	X	-30.905	2
59	MP3C	Z	0	2
60	MP3C	Mx	-.023	2
61	MP3C	X	-30.905	6
62	MP3C	Z	0	6
63	MP3C	Mx	-.023	6
64	MP3A	X	-23.456	2
65	MP3A	Z	0	2
66	MP3A	Mx	.012	2
67	MP3A	X	-23.456	6
68	MP3A	Z	0	6
69	MP3A	Mx	.012	6
70	MP3B	X	-30.905	2
71	MP3B	Z	0	2
72	MP3B	Mx	-.023	2
73	MP3B	X	-30.905	6
74	MP3B	Z	0	6
75	MP3B	Mx	-.023	6
76	MP3C	X	-30.905	2
77	MP3C	Z	0	2
78	MP3C	Mx	.008	2
79	MP3C	X	-30.905	6
80	MP3C	Z	0	6
81	MP3C	Mx	.008	6
82	MP3A	X	-12.188	4
83	MP3A	Z	0	4
84	MP3A	Mx	-.006	4
85	MP3B	X	-15.948	4
86	MP3B	Z	0	4
87	MP3B	Mx	.004	4
88	MP3C	X	-15.948	4
89	MP3C	Z	0	4
90	MP3C	Mx	.004	4
91	MP3A	X	-10.282	1.5
92	MP3A	Z	0	1.5
93	MP3A	Mx	.005	1.5
94	MP3B	X	-15.472	1.5
95	MP3B	Z	0	1.5
96	MP3B	Mx	-.004	1.5
97	MP3C	X	-15.472	1.5
98	MP3C	Z	0	1.5
99	MP3C	Mx	-.004	1.5
100	OVP	X	-16.139	1
101	OVP	Z	0	1
102	OVP	Mx	0	1

Member Point Loads (BLC 25 : Antenna Wi (300 Deg))

	Member Label	Direction	Magnitude[lb,k-ft]	Location[ft,%]
1	MP2A	X	-25.32	.5
2	MP2A	Z	-14.619	.5
3	MP2A	Mx	.013	.5
4	MP2A	X	-25.32	5.5
5	MP2A	Z	-14.619	5.5
6	MP2A	Mx	.013	5.5
7	MP2B	X	-32.564	.5
8	MP2B	Z	-18.801	.5
9	MP2B	Mx	0	.5
10	MP2B	X	-32.564	5.5
11	MP2B	Z	-18.801	5.5
12	MP2B	Mx	0	5.5
13	MP2C	X	-25.32	.5
14	MP2C	Z	-14.619	.5
15	MP2C	Mx	-.013	.5
16	MP2C	X	-25.32	5.5
17	MP2C	Z	-14.619	5.5
18	MP2C	Mx	-.013	5.5
19	MP4A	X	-10.029	.38
20	MP4A	Z	-5.791	.38
21	MP4A	Mx	.005	.38
22	MP4A	X	-10.029	1.63
23	MP4A	Z	-5.791	1.63
24	MP4A	Mx	.005	1.63
25	MP4B	X	-17.219	.38
26	MP4B	Z	-9.941	.38
27	MP4B	Mx	0	.38
28	MP4B	X	-17.219	1.63
29	MP4B	Z	-9.941	1.63
30	MP4B	Mx	0	1.63
31	MP4C	X	-10.029	.38
32	MP4C	Z	-5.791	.38
33	MP4C	Mx	-.005	.38
34	MP4C	X	-10.029	1.63
35	MP4C	Z	-5.791	1.63
36	MP4C	Mx	-.005	1.63
37	MP4A	X	-4.002	4.5
38	MP4A	Z	-2.311	4.5
39	MP4A	Mx	.002	4.5
40	MP4B	X	-7.951	4.5
41	MP4B	Z	-4.59	4.5
42	MP4B	Mx	0	4.5
43	MP4C	X	-4.002	4.5
44	MP4C	Z	-2.311	4.5
45	MP4C	Mx	-.002	4.5
46	MP3A	X	-22.464	2
47	MP3A	Z	-12.97	2
48	MP3A	Mx	.004	2
49	MP3A	X	-22.464	6
50	MP3A	Z	-12.97	6
51	MP3A	Mx	.004	6
52	MP3B	X	-28.915	2

Member Point Loads (BLC 25 : Antenna Wi (300 Deg)) (Continued)

	Member Label	Direction	Magnitude[lb,k-ft]	Location[ft,%]
53	MP3B	Z	-16.694	2
54	MP3B	Mx	.019	2
55	MP3B	X	-28.915	6
56	MP3B	Z	-16.694	6
57	MP3B	Mx	.019	6
58	MP3C	X	-22.464	2
59	MP3C	Z	-12.97	2
60	MP3C	Mx	-.019	2
61	MP3C	X	-22.464	6
62	MP3C	Z	-12.97	6
63	MP3C	Mx	-.019	6
64	MP3A	X	-22.464	2
65	MP3A	Z	-12.97	2
66	MP3A	Mx	.019	2
67	MP3A	X	-22.464	6
68	MP3A	Z	-12.97	6
69	MP3A	Mx	.019	6
70	MP3B	X	-28.915	2
71	MP3B	Z	-16.694	2
72	MP3B	Mx	-.019	2
73	MP3B	X	-28.915	6
74	MP3B	Z	-16.694	6
75	MP3B	Mx	-.019	6
76	MP3C	X	-22.464	2
77	MP3C	Z	-12.97	2
78	MP3C	Mx	-.004	2
79	MP3C	X	-22.464	6
80	MP3C	Z	-12.97	6
81	MP3C	Mx	-.004	6
82	MP3A	X	-11.64	4
83	MP3A	Z	-6.721	4
84	MP3A	Mx	-.006	4
85	MP3B	X	-14.897	4
86	MP3B	Z	-8.601	4
87	MP3B	Mx	0	4
88	MP3C	X	-11.64	4
89	MP3C	Z	-6.721	4
90	MP3C	Mx	.006	4
91	MP3A	X	-10.403	1.5
92	MP3A	Z	-6.006	1.5
93	MP3A	Mx	.005	1.5
94	MP3B	X	-14.897	1.5
95	MP3B	Z	-8.601	1.5
96	MP3B	Mx	0	1.5
97	MP3C	X	-10.403	1.5
98	MP3C	Z	-6.006	1.5
99	MP3C	Mx	-.005	1.5
100	OVP	X	-13.462	1
101	OVP	Z	-7.772	1
102	OVP	Mx	0	1

Member Point Loads (BLC 26 : Antenna Wi (330 Deg))

	Member Label	Direction	Magnitude[lb,k-ft]	Location[ft,%]
1	MP2A	X	-17.407	.5
2	MP2A	Z	-30.15	.5
3	MP2A	Mx	.009	.5
4	MP2A	X	-17.407	5.5
5	MP2A	Z	-30.15	5.5
6	MP2A	Mx	.009	5.5
7	MP2B	X	-17.407	.5
8	MP2B	Z	-30.15	.5
9	MP2B	Mx	.009	.5
10	MP2B	X	-17.407	5.5
11	MP2B	Z	-30.15	5.5
12	MP2B	Mx	.009	5.5
13	MP2C	X	-13.225	.5
14	MP2C	Z	-22.906	.5
15	MP2C	Mx	-.013	.5
16	MP2C	X	-13.225	5.5
17	MP2C	Z	-22.906	5.5
18	MP2C	Mx	-.013	5.5
19	MP4A	X	-8.558	.38
20	MP4A	Z	-14.822	.38
21	MP4A	Mx	.004	.38
22	MP4A	X	-8.558	1.63
23	MP4A	Z	-14.822	1.63
24	MP4A	Mx	.004	1.63
25	MP4B	X	-8.558	.38
26	MP4B	Z	-14.822	.38
27	MP4B	Mx	.004	.38
28	MP4B	X	-8.558	1.63
29	MP4B	Z	-14.822	1.63
30	MP4B	Mx	.004	1.63
31	MP4C	X	-4.407	.38
32	MP4C	Z	-7.633	.38
33	MP4C	Mx	-.004	.38
34	MP4C	X	-4.407	1.63
35	MP4C	Z	-7.633	1.63
36	MP4C	Mx	-.004	1.63
37	MP4A	X	-3.83	4.5
38	MP4A	Z	-6.635	4.5
39	MP4A	Mx	.002	4.5
40	MP4B	X	-3.83	4.5
41	MP4B	Z	-6.635	4.5
42	MP4B	Mx	.002	4.5
43	MP4C	X	-1.551	4.5
44	MP4C	Z	-2.686	4.5
45	MP4C	Mx	-.002	4.5
46	MP3A	X	-15.453	2
47	MP3A	Z	-26.765	2
48	MP3A	Mx	-.008	2
49	MP3A	X	-15.453	6
50	MP3A	Z	-26.765	6
51	MP3A	Mx	-.008	6
52	MP3B	X	-15.453	2

Member Point Loads (BLC 26 : Antenna Wi (330 Deg)) (Continued)

	Member Label	Direction	Magnitude[lb,k-ft]	Location[ft,%]
53	MP3B	Z	-26.765	2
54	MP3B	Mx	.023	2
55	MP3B	X	-15.453	6
56	MP3B	Z	-26.765	6
57	MP3B	Mx	.023	6
58	MP3C	X	-11.728	2
59	MP3C	Z	-20.314	2
60	MP3C	Mx	-.012	2
61	MP3C	X	-11.728	6
62	MP3C	Z	-20.314	6
63	MP3C	Mx	-.012	6
64	MP3A	X	-15.453	2
65	MP3A	Z	-26.765	2
66	MP3A	Mx	.023	2
67	MP3A	X	-15.453	6
68	MP3A	Z	-26.765	6
69	MP3A	Mx	.023	6
70	MP3B	X	-15.453	2
71	MP3B	Z	-26.765	2
72	MP3B	Mx	-.008	2
73	MP3B	X	-15.453	6
74	MP3B	Z	-26.765	6
75	MP3B	Mx	-.008	6
76	MP3C	X	-11.728	2
77	MP3C	Z	-20.314	2
78	MP3C	Mx	-.012	2
79	MP3C	X	-11.728	6
80	MP3C	Z	-20.314	6
81	MP3C	Mx	-.012	6
82	MP3A	X	-7.974	4
83	MP3A	Z	-13.811	4
84	MP3A	Mx	-.004	4
85	MP3B	X	-7.974	4
86	MP3B	Z	-13.811	4
87	MP3B	Mx	-.004	4
88	MP3C	X	-6.094	4
89	MP3C	Z	-10.555	4
90	MP3C	Mx	.006	4
91	MP3A	X	-7.736	1.5
92	MP3A	Z	-13.399	1.5
93	MP3A	Mx	.004	1.5
94	MP3B	X	-7.736	1.5
95	MP3B	Z	-13.399	1.5
96	MP3B	Mx	.004	1.5
97	MP3C	X	-5.141	1.5
98	MP3C	Z	-8.905	1.5
99	MP3C	Mx	-.005	1.5
100	OVP	X	-9.083	1
101	OVP	Z	-15.733	1
102	OVP	Mx	0	1

Member Point Loads (BLC 27 : Antenna Wm (0 Deg))

	Member Label	Direction	Magnitude[lb,k-ft]	Location[ft,%]
1	MP2A	X	0	.5
2	MP2A	Z	-11.769	.5
3	MP2A	Mx	0	.5
4	MP2A	X	0	5.5
5	MP2A	Z	-11.769	5.5
6	MP2A	Mx	0	5.5
7	MP2B	X	0	.5
8	MP2B	Z	-8.814	.5
9	MP2B	Mx	.004	.5
10	MP2B	X	0	5.5
11	MP2B	Z	-8.814	5.5
12	MP2B	Mx	.004	5.5
13	MP2C	X	0	.5
14	MP2C	Z	-8.814	.5
15	MP2C	Mx	-.004	.5
16	MP2C	X	0	5.5
17	MP2C	Z	-8.814	5.5
18	MP2C	Mx	-.004	5.5
19	MP4A	X	0	.38
20	MP4A	Z	-5.993	.38
21	MP4A	Mx	0	.38
22	MP4A	X	0	1.63
23	MP4A	Z	-5.993	1.63
24	MP4A	Mx	0	1.63
25	MP4B	X	0	.38
26	MP4B	Z	-3.258	.38
27	MP4B	Mx	.001	.38
28	MP4B	X	0	1.63
29	MP4B	Z	-3.258	1.63
30	MP4B	Mx	.001	1.63
31	MP4C	X	0	.38
32	MP4C	Z	-3.258	.38
33	MP4C	Mx	-.001	.38
34	MP4C	X	0	1.63
35	MP4C	Z	-3.258	1.63
36	MP4C	Mx	-.001	1.63
37	MP4A	X	0	4.5
38	MP4A	Z	-2.27	4.5
39	MP4A	Mx	0	4.5
40	MP4B	X	0	4.5
41	MP4B	Z	-.901	4.5
42	MP4B	Mx	.00039	4.5
43	MP4C	X	0	4.5
44	MP4C	Z	-.901	4.5
45	MP4C	Mx	-.00039	4.5
46	MP3A	X	0	2
47	MP3A	Z	-10.404	2
48	MP3A	Mx	-.006	2
49	MP3A	X	0	6
50	MP3A	Z	-10.404	6
51	MP3A	Mx	-.006	6
52	MP3B	X	0	2

Member Point Loads (BLC 27 : Antenna Wm (0 Deg)) (Continued)

	Member Label	Direction	Magnitude[lb,k-ft]	Location[ft,%]
53	MP3B	Z	-7.761	2
54	MP3B	Mx	.006	2
55	MP3B	X	0	6
56	MP3B	Z	-7.761	6
57	MP3B	Mx	.006	6
58	MP3C	X	0	2
59	MP3C	Z	-7.761	2
60	MP3C	Mx	-.001	2
61	MP3C	X	0	6
62	MP3C	Z	-7.761	6
63	MP3C	Mx	-.001	6
64	MP3A	X	0	2
65	MP3A	Z	-10.404	2
66	MP3A	Mx	.006	2
67	MP3A	X	0	6
68	MP3A	Z	-10.404	6
69	MP3A	Mx	.006	6
70	MP3B	X	0	2
71	MP3B	Z	-7.761	2
72	MP3B	Mx	.001	2
73	MP3B	X	0	6
74	MP3B	Z	-7.761	6
75	MP3B	Mx	.001	6
76	MP3C	X	0	2
77	MP3C	Z	-7.761	2
78	MP3C	Mx	-.006	2
79	MP3C	X	0	6
80	MP3C	Z	-7.761	6
81	MP3C	Mx	-.006	6
82	MP3A	X	0	4
83	MP3A	Z	-4.769	4
84	MP3A	Mx	0	4
85	MP3B	X	0	4
86	MP3B	Z	-3.583	4
87	MP3B	Mx	-.002	4
88	MP3C	X	0	4
89	MP3C	Z	-3.583	4
90	MP3C	Mx	.002	4
91	MP3A	X	0	1.5
92	MP3A	Z	-4.769	1.5
93	MP3A	Mx	0	1.5
94	MP3B	X	0	1.5
95	MP3B	Z	-3.129	1.5
96	MP3B	Mx	.001	1.5
97	MP3C	X	0	1.5
98	MP3C	Z	-3.129	1.5
99	MP3C	Mx	-.001	1.5
100	OVP	X	0	1
101	OVP	Z	-6.114	1
102	OVP	Mx	0	1

Member Point Loads (BLC 28 : Antenna Wm (30 Deg))

	Member Label	Direction	Magnitude[lb,k-ft]	Location[ft,%]
1	MP2A	X	5.392	.5
2	MP2A	Z	-9.339	.5
3	MP2A	Mx	-.003	.5
4	MP2A	X	5.392	5.5
5	MP2A	Z	-9.339	5.5
6	MP2A	Mx	-.003	5.5
7	MP2B	X	3.914	.5
8	MP2B	Z	-6.78	.5
9	MP2B	Mx	.004	.5
10	MP2B	X	3.914	5.5
11	MP2B	Z	-6.78	5.5
12	MP2B	Mx	.004	5.5
13	MP2C	X	5.392	.5
14	MP2C	Z	-9.339	.5
15	MP2C	Mx	-.003	.5
16	MP2C	X	5.392	5.5
17	MP2C	Z	-9.339	5.5
18	MP2C	Mx	-.003	5.5
19	MP4A	X	2.54	.38
20	MP4A	Z	-4.4	.38
21	MP4A	Mx	-.001	.38
22	MP4A	X	2.54	1.63
23	MP4A	Z	-4.4	1.63
24	MP4A	Mx	-.001	1.63
25	MP4B	X	1.173	.38
26	MP4B	Z	-2.032	.38
27	MP4B	Mx	.001	.38
28	MP4B	X	1.173	1.63
29	MP4B	Z	-2.032	1.63
30	MP4B	Mx	.001	1.63
31	MP4C	X	2.54	.38
32	MP4C	Z	-4.4	.38
33	MP4C	Mx	-.001	.38
34	MP4C	X	2.54	1.63
35	MP4C	Z	-4.4	1.63
36	MP4C	Mx	-.001	1.63
37	MP4A	X	.907	4.5
38	MP4A	Z	-1.57	4.5
39	MP4A	Mx	-.000454	4.5
40	MP4B	X	.223	4.5
41	MP4B	Z	-.385	4.5
42	MP4B	Mx	.000222	4.5
43	MP4C	X	.907	4.5
44	MP4C	Z	-1.57	4.5
45	MP4C	Mx	-.000453	4.5
46	MP3A	X	4.762	2
47	MP3A	Z	-8.247	2
48	MP3A	Mx	-.007	2
49	MP3A	X	4.762	6
50	MP3A	Z	-8.247	6
51	MP3A	Mx	-.007	6
52	MP3B	X	3.44	2

Member Point Loads (BLC 28 : Antenna Wm (30 Deg)) (Continued)

	Member Label	Direction	Magnitude[lb,k-ft]	Location[ft,%]
53	MP3B	Z	-5.959	2
54	MP3B	Mx	.003	2
55	MP3B	X	3.44	6
56	MP3B	Z	-5.959	6
57	MP3B	Mx	.003	6
58	MP3C	X	4.762	2
59	MP3C	Z	-8.247	2
60	MP3C	Mx	.002	2
61	MP3C	X	4.762	6
62	MP3C	Z	-8.247	6
63	MP3C	Mx	.002	6
64	MP3A	X	4.762	2
65	MP3A	Z	-8.247	2
66	MP3A	Mx	.002	2
67	MP3A	X	4.762	6
68	MP3A	Z	-8.247	6
69	MP3A	Mx	.002	6
70	MP3B	X	3.44	2
71	MP3B	Z	-5.959	2
72	MP3B	Mx	.003	2
73	MP3B	X	3.44	6
74	MP3B	Z	-5.959	6
75	MP3B	Mx	.003	6
76	MP3C	X	4.762	2
77	MP3C	Z	-8.247	2
78	MP3C	Mx	-.007	2
79	MP3C	X	4.762	6
80	MP3C	Z	-8.247	6
81	MP3C	Mx	-.007	6
82	MP3A	X	2.187	4
83	MP3A	Z	-3.787	4
84	MP3A	Mx	.001	4
85	MP3B	X	1.594	4
86	MP3B	Z	-2.761	4
87	MP3B	Mx	-.002	4
88	MP3C	X	2.187	4
89	MP3C	Z	-3.787	4
90	MP3C	Mx	.001	4
91	MP3A	X	2.111	1.5
92	MP3A	Z	-3.656	1.5
93	MP3A	Mx	-.001	1.5
94	MP3B	X	1.291	1.5
95	MP3B	Z	-2.236	1.5
96	MP3B	Mx	.001	1.5
97	MP3C	X	2.111	1.5
98	MP3C	Z	-3.656	1.5
99	MP3C	Mx	-.001	1.5
100	OVP	X	3.154	1
101	OVP	Z	-5.463	1
102	OVP	Mx	0	1

Member Point Loads (BLC 29 : Antenna Wm (60 Deg))

	Member Label	Direction	Magnitude[lb,k-ft]	Location[ft,%]
1	MP2A	X	7.633	.5
2	MP2A	Z	-4.407	.5
3	MP2A	Mx	-.004	.5
4	MP2A	X	7.633	5.5
5	MP2A	Z	-4.407	5.5
6	MP2A	Mx	-.004	5.5
7	MP2B	X	7.633	.5
8	MP2B	Z	-4.407	.5
9	MP2B	Mx	.004	.5
10	MP2B	X	7.633	5.5
11	MP2B	Z	-4.407	5.5
12	MP2B	Mx	.004	5.5
13	MP2C	X	10.192	.5
14	MP2C	Z	-5.884	.5
15	MP2C	Mx	0	.5
16	MP2C	X	10.192	5.5
17	MP2C	Z	-5.884	5.5
18	MP2C	Mx	0	5.5
19	MP4A	X	2.821	.38
20	MP4A	Z	-1.629	.38
21	MP4A	Mx	-.001	.38
22	MP4A	X	2.821	1.63
23	MP4A	Z	-1.629	1.63
24	MP4A	Mx	-.001	1.63
25	MP4B	X	2.821	.38
26	MP4B	Z	-1.629	.38
27	MP4B	Mx	.001	.38
28	MP4B	X	2.821	1.63
29	MP4B	Z	-1.629	1.63
30	MP4B	Mx	.001	1.63
31	MP4C	X	5.19	.38
32	MP4C	Z	-2.996	.38
33	MP4C	Mx	0	.38
34	MP4C	X	5.19	1.63
35	MP4C	Z	-2.996	1.63
36	MP4C	Mx	0	1.63
37	MP4A	X	.78	4.5
38	MP4A	Z	-.451	4.5
39	MP4A	Mx	-.00039	4.5
40	MP4B	X	.78	4.5
41	MP4B	Z	-.451	4.5
42	MP4B	Mx	.00039	4.5
43	MP4C	X	1.965	4.5
44	MP4C	Z	-1.135	4.5
45	MP4C	Mx	0	4.5
46	MP3A	X	6.722	2
47	MP3A	Z	-3.881	2
48	MP3A	Mx	-.006	2
49	MP3A	X	6.722	6
50	MP3A	Z	-3.881	6
51	MP3A	Mx	-.006	6
52	MP3B	X	6.722	2

Member Point Loads (BLC 29 : Antenna Wm (60 Deg)) (Continued)

	Member Label	Direction	Magnitude[lb,k-ft]	Location[ft,%]
53	MP3B	Z	-3.881	2
54	MP3B	Mx	.001	2
55	MP3B	X	6.722	6
56	MP3B	Z	-3.881	6
57	MP3B	Mx	.001	6
58	MP3C	X	9.01	2
59	MP3C	Z	-5.202	2
60	MP3C	Mx	.006	2
61	MP3C	X	9.01	6
62	MP3C	Z	-5.202	6
63	MP3C	Mx	.006	6
64	MP3A	X	6.722	2
65	MP3A	Z	-3.881	2
66	MP3A	Mx	-.001	2
67	MP3A	X	6.722	6
68	MP3A	Z	-3.881	6
69	MP3A	Mx	-.001	6
70	MP3B	X	6.722	2
71	MP3B	Z	-3.881	2
72	MP3B	Mx	.006	2
73	MP3B	X	6.722	6
74	MP3B	Z	-3.881	6
75	MP3B	Mx	.006	6
76	MP3C	X	9.01	2
77	MP3C	Z	-5.202	2
78	MP3C	Mx	-.006	2
79	MP3C	X	9.01	6
80	MP3C	Z	-5.202	6
81	MP3C	Mx	-.006	6
82	MP3A	X	3.103	4
83	MP3A	Z	-1.791	4
84	MP3A	Mx	.002	4
85	MP3B	X	3.103	4
86	MP3B	Z	-1.791	4
87	MP3B	Mx	-.002	4
88	MP3C	X	4.13	4
89	MP3C	Z	-2.384	4
90	MP3C	Mx	0	4
91	MP3A	X	2.709	1.5
92	MP3A	Z	-1.564	1.5
93	MP3A	Mx	-.001	1.5
94	MP3B	X	2.709	1.5
95	MP3B	Z	-1.564	1.5
96	MP3B	Mx	.001	1.5
97	MP3C	X	4.13	1.5
98	MP3C	Z	-2.384	1.5
99	MP3C	Mx	0	1.5
100	OVP	X	4.721	1
101	OVP	Z	-2.726	1
102	OVP	Mx	0	1

Member Point Loads (BLC 30 : Antenna Wm (90 Deg))

	Member Label	Direction	Magnitude[lb,k-ft]	Location[ft,%]
1	MP2A	X	7.829	.5
2	MP2A	Z	0	.5
3	MP2A	Mx	-.004	.5
4	MP2A	X	7.829	5.5
5	MP2A	Z	0	5.5
6	MP2A	Mx	-.004	5.5
7	MP2B	X	10.784	.5
8	MP2B	Z	0	.5
9	MP2B	Mx	.003	.5
10	MP2B	X	10.784	5.5
11	MP2B	Z	0	5.5
12	MP2B	Mx	.003	5.5
13	MP2C	X	10.784	.5
14	MP2C	Z	0	.5
15	MP2C	Mx	.003	.5
16	MP2C	X	10.784	5.5
17	MP2C	Z	0	5.5
18	MP2C	Mx	.003	5.5
19	MP4A	X	2.346	.38
20	MP4A	Z	0	.38
21	MP4A	Mx	-.001	.38
22	MP4A	X	2.346	1.63
23	MP4A	Z	0	1.63
24	MP4A	Mx	-.001	1.63
25	MP4B	X	5.081	.38
26	MP4B	Z	0	.38
27	MP4B	Mx	.001	.38
28	MP4B	X	5.081	1.63
29	MP4B	Z	0	1.63
30	MP4B	Mx	.001	1.63
31	MP4C	X	5.081	.38
32	MP4C	Z	0	.38
33	MP4C	Mx	.001	.38
34	MP4C	X	5.081	1.63
35	MP4C	Z	0	1.63
36	MP4C	Mx	.001	1.63
37	MP4A	X	.445	4.5
38	MP4A	Z	0	4.5
39	MP4A	Mx	-.000222	4.5
40	MP4B	X	1.813	4.5
41	MP4B	Z	0	4.5
42	MP4B	Mx	.000453	4.5
43	MP4C	X	1.813	4.5
44	MP4C	Z	0	4.5
45	MP4C	Mx	.000453	4.5
46	MP3A	X	6.88	2
47	MP3A	Z	0	2
48	MP3A	Mx	-.003	2
49	MP3A	X	6.88	6
50	MP3A	Z	0	6
51	MP3A	Mx	-.003	6
52	MP3B	X	9.523	2

Member Point Loads (BLC 30 : Antenna Wm (90 Deg)) (Continued)

	Member Label	Direction	Magnitude[lb,k-ft]	Location[ft,%]
53	MP3B	Z	0	2
54	MP3B	Mx	-.002	2
55	MP3B	X	9.523	6
56	MP3B	Z	0	6
57	MP3B	Mx	-.002	6
58	MP3C	X	9.523	2
59	MP3C	Z	0	2
60	MP3C	Mx	.007	2
61	MP3C	X	9.523	6
62	MP3C	Z	0	6
63	MP3C	Mx	.007	6
64	MP3A	X	6.88	2
65	MP3A	Z	0	2
66	MP3A	Mx	-.003	2
67	MP3A	X	6.88	6
68	MP3A	Z	0	6
69	MP3A	Mx	-.003	6
70	MP3B	X	9.523	2
71	MP3B	Z	0	2
72	MP3B	Mx	.007	2
73	MP3B	X	9.523	6
74	MP3B	Z	0	6
75	MP3B	Mx	.007	6
76	MP3C	X	9.523	2
77	MP3C	Z	0	2
78	MP3C	Mx	-.002	2
79	MP3C	X	9.523	6
80	MP3C	Z	0	6
81	MP3C	Mx	-.002	6
82	MP3A	X	3.188	4
83	MP3A	Z	0	4
84	MP3A	Mx	.002	4
85	MP3B	X	4.373	4
86	MP3B	Z	0	4
87	MP3B	Mx	-.001	4
88	MP3C	X	4.373	4
89	MP3C	Z	0	4
90	MP3C	Mx	-.001	4
91	MP3A	X	2.582	1.5
92	MP3A	Z	0	1.5
93	MP3A	Mx	-.001	1.5
94	MP3B	X	4.222	1.5
95	MP3B	Z	0	1.5
96	MP3B	Mx	.001	1.5
97	MP3C	X	4.222	1.5
98	MP3C	Z	0	1.5
99	MP3C	Mx	.001	1.5
100	OVP	X	4.401	1
101	OVP	Z	0	1
102	OVP	Mx	0	1

Member Point Loads (BLC 31 : Antenna Wm (120 Deg))

	Member Label	Direction	Magnitude[lb,k-ft]	Location[ft,%]
1	MP2A	X	7.633	.5
2	MP2A	Z	4.407	.5
3	MP2A	Mx	-.004	.5
4	MP2A	X	7.633	5.5
5	MP2A	Z	4.407	5.5
6	MP2A	Mx	-.004	5.5
7	MP2B	X	10.192	.5
8	MP2B	Z	5.884	.5
9	MP2B	Mx	0	.5
10	MP2B	X	10.192	5.5
11	MP2B	Z	5.884	5.5
12	MP2B	Mx	0	5.5
13	MP2C	X	7.633	.5
14	MP2C	Z	4.407	.5
15	MP2C	Mx	.004	.5
16	MP2C	X	7.633	5.5
17	MP2C	Z	4.407	5.5
18	MP2C	Mx	.004	5.5
19	MP4A	X	2.821	.38
20	MP4A	Z	1.629	.38
21	MP4A	Mx	-.001	.38
22	MP4A	X	2.821	1.63
23	MP4A	Z	1.629	1.63
24	MP4A	Mx	-.001	1.63
25	MP4B	X	5.19	.38
26	MP4B	Z	2.996	.38
27	MP4B	Mx	0	.38
28	MP4B	X	5.19	1.63
29	MP4B	Z	2.996	1.63
30	MP4B	Mx	0	1.63
31	MP4C	X	2.821	.38
32	MP4C	Z	1.629	.38
33	MP4C	Mx	.001	.38
34	MP4C	X	2.821	1.63
35	MP4C	Z	1.629	1.63
36	MP4C	Mx	.001	1.63
37	MP4A	X	.78	4.5
38	MP4A	Z	.451	4.5
39	MP4A	Mx	-.00039	4.5
40	MP4B	X	1.965	4.5
41	MP4B	Z	1.135	4.5
42	MP4B	Mx	0	4.5
43	MP4C	X	.78	4.5
44	MP4C	Z	.451	4.5
45	MP4C	Mx	.00039	4.5
46	MP3A	X	6.722	2
47	MP3A	Z	3.881	2
48	MP3A	Mx	-.001	2
49	MP3A	X	6.722	6
50	MP3A	Z	3.881	6
51	MP3A	Mx	-.001	6
52	MP3B	X	9.01	2

Member Point Loads (BLC 31 : Antenna Wm (120 Deg)) (Continued)

	Member Label	Direction	Magnitude[lb,k-ft]	Location[ft,%]
53	MP3B	Z	5.202	2
54	MP3B	Mx	-.006	2
55	MP3B	X	9.01	6
56	MP3B	Z	5.202	6
57	MP3B	Mx	-.006	6
58	MP3C	X	6.722	2
59	MP3C	Z	3.881	2
60	MP3C	Mx	.006	2
61	MP3C	X	6.722	6
62	MP3C	Z	3.881	6
63	MP3C	Mx	.006	6
64	MP3A	X	6.722	2
65	MP3A	Z	3.881	2
66	MP3A	Mx	-.006	2
67	MP3A	X	6.722	6
68	MP3A	Z	3.881	6
69	MP3A	Mx	-.006	6
70	MP3B	X	9.01	2
71	MP3B	Z	5.202	2
72	MP3B	Mx	.006	2
73	MP3B	X	9.01	6
74	MP3B	Z	5.202	6
75	MP3B	Mx	.006	6
76	MP3C	X	6.722	2
77	MP3C	Z	3.881	2
78	MP3C	Mx	.001	2
79	MP3C	X	6.722	6
80	MP3C	Z	3.881	6
81	MP3C	Mx	.001	6
82	MP3A	X	3.103	4
83	MP3A	Z	1.791	4
84	MP3A	Mx	.002	4
85	MP3B	X	4.13	4
86	MP3B	Z	2.384	4
87	MP3B	Mx	0	4
88	MP3C	X	3.103	4
89	MP3C	Z	1.791	4
90	MP3C	Mx	-.002	4
91	MP3A	X	2.709	1.5
92	MP3A	Z	1.564	1.5
93	MP3A	Mx	-.001	1.5
94	MP3B	X	4.13	1.5
95	MP3B	Z	2.384	1.5
96	MP3B	Mx	0	1.5
97	MP3C	X	2.709	1.5
98	MP3C	Z	1.564	1.5
99	MP3C	Mx	.001	1.5
100	OVP	X	3.644	1
101	OVP	Z	2.104	1
102	OVP	Mx	0	1

Member Point Loads (BLC 32 : Antenna Wm (150 Deg))

	Member Label	Direction	Magnitude[lb,k-ft]	Location[ft,%]
1	MP2A	X	5.392	.5
2	MP2A	Z	9.339	.5
3	MP2A	Mx	-.003	.5
4	MP2A	X	5.392	5.5
5	MP2A	Z	9.339	5.5
6	MP2A	Mx	-.003	5.5
7	MP2B	X	5.392	.5
8	MP2B	Z	9.339	.5
9	MP2B	Mx	-.003	.5
10	MP2B	X	5.392	5.5
11	MP2B	Z	9.339	5.5
12	MP2B	Mx	-.003	5.5
13	MP2C	X	3.914	.5
14	MP2C	Z	6.78	.5
15	MP2C	Mx	.004	.5
16	MP2C	X	3.914	5.5
17	MP2C	Z	6.78	5.5
18	MP2C	Mx	.004	5.5
19	MP4A	X	2.54	.38
20	MP4A	Z	4.4	.38
21	MP4A	Mx	-.001	.38
22	MP4A	X	2.54	1.63
23	MP4A	Z	4.4	1.63
24	MP4A	Mx	-.001	1.63
25	MP4B	X	2.54	.38
26	MP4B	Z	4.4	.38
27	MP4B	Mx	-.001	.38
28	MP4B	X	2.54	1.63
29	MP4B	Z	4.4	1.63
30	MP4B	Mx	-.001	1.63
31	MP4C	X	1.173	.38
32	MP4C	Z	2.032	.38
33	MP4C	Mx	.001	.38
34	MP4C	X	1.173	1.63
35	MP4C	Z	2.032	1.63
36	MP4C	Mx	.001	1.63
37	MP4A	X	.907	4.5
38	MP4A	Z	1.57	4.5
39	MP4A	Mx	-.000454	4.5
40	MP4B	X	.907	4.5
41	MP4B	Z	1.57	4.5
42	MP4B	Mx	-.000453	4.5
43	MP4C	X	.223	4.5
44	MP4C	Z	.385	4.5
45	MP4C	Mx	.000222	4.5
46	MP3A	X	4.762	2
47	MP3A	Z	8.247	2
48	MP3A	Mx	.002	2
49	MP3A	X	4.762	6
50	MP3A	Z	8.247	6
51	MP3A	Mx	.002	6
52	MP3B	X	4.762	2

Member Point Loads (BLC 32 : Antenna Wm (150 Deg)) (Continued)

	Member Label	Direction	Magnitude[lb,k-ft]	Location[ft,%]
53	MP3B	Z	8.247	2
54	MP3B	Mx	-.007	2
55	MP3B	X	4.762	6
56	MP3B	Z	8.247	6
57	MP3B	Mx	-.007	6
58	MP3C	X	3.44	2
59	MP3C	Z	5.959	2
60	MP3C	Mx	.003	2
61	MP3C	X	3.44	6
62	MP3C	Z	5.959	6
63	MP3C	Mx	.003	6
64	MP3A	X	4.762	2
65	MP3A	Z	8.247	2
66	MP3A	Mx	-.007	2
67	MP3A	X	4.762	6
68	MP3A	Z	8.247	6
69	MP3A	Mx	-.007	6
70	MP3B	X	4.762	2
71	MP3B	Z	8.247	2
72	MP3B	Mx	.002	2
73	MP3B	X	4.762	6
74	MP3B	Z	8.247	6
75	MP3B	Mx	.002	6
76	MP3C	X	3.44	2
77	MP3C	Z	5.959	2
78	MP3C	Mx	.003	2
79	MP3C	X	3.44	6
80	MP3C	Z	5.959	6
81	MP3C	Mx	.003	6
82	MP3A	X	2.187	4
83	MP3A	Z	3.787	4
84	MP3A	Mx	.001	4
85	MP3B	X	2.187	4
86	MP3B	Z	3.787	4
87	MP3B	Mx	.001	4
88	MP3C	X	1.594	4
89	MP3C	Z	2.761	4
90	MP3C	Mx	-.002	4
91	MP3A	X	2.111	1.5
92	MP3A	Z	3.656	1.5
93	MP3A	Mx	-.001	1.5
94	MP3B	X	2.111	1.5
95	MP3B	Z	3.656	1.5
96	MP3B	Mx	-.001	1.5
97	MP3C	X	1.291	1.5
98	MP3C	Z	2.236	1.5
99	MP3C	Mx	.001	1.5
100	OVP	X	2.532	1
101	OVP	Z	4.385	1
102	OVP	Mx	0	1

Member Point Loads (BLC 33 : Antenna Wm (180 Deg))

	Member Label	Direction	Magnitude[lb,k-ft]	Location[ft,%]
1	MP2A	X	0	.5
2	MP2A	Z	11.769	.5
3	MP2A	Mx	0	.5
4	MP2A	X	0	5.5
5	MP2A	Z	11.769	5.5
6	MP2A	Mx	0	5.5
7	MP2B	X	0	.5
8	MP2B	Z	8.814	.5
9	MP2B	Mx	-.004	.5
10	MP2B	X	0	5.5
11	MP2B	Z	8.814	5.5
12	MP2B	Mx	-.004	5.5
13	MP2C	X	0	.5
14	MP2C	Z	8.814	.5
15	MP2C	Mx	.004	.5
16	MP2C	X	0	5.5
17	MP2C	Z	8.814	5.5
18	MP2C	Mx	.004	5.5
19	MP4A	X	0	.38
20	MP4A	Z	5.993	.38
21	MP4A	Mx	0	.38
22	MP4A	X	0	1.63
23	MP4A	Z	5.993	1.63
24	MP4A	Mx	0	1.63
25	MP4B	X	0	.38
26	MP4B	Z	3.258	.38
27	MP4B	Mx	-.001	.38
28	MP4B	X	0	1.63
29	MP4B	Z	3.258	1.63
30	MP4B	Mx	-.001	1.63
31	MP4C	X	0	.38
32	MP4C	Z	3.258	.38
33	MP4C	Mx	.001	.38
34	MP4C	X	0	1.63
35	MP4C	Z	3.258	1.63
36	MP4C	Mx	.001	1.63
37	MP4A	X	0	4.5
38	MP4A	Z	2.27	4.5
39	MP4A	Mx	0	4.5
40	MP4B	X	0	4.5
41	MP4B	Z	.901	4.5
42	MP4B	Mx	-.00039	4.5
43	MP4C	X	0	4.5
44	MP4C	Z	.901	4.5
45	MP4C	Mx	.00039	4.5
46	MP3A	X	0	2
47	MP3A	Z	10.404	2
48	MP3A	Mx	.006	2
49	MP3A	X	0	6
50	MP3A	Z	10.404	6
51	MP3A	Mx	.006	6
52	MP3B	X	0	2

Member Point Loads (BLC 33 : Antenna Wm (180 Deg)) (Continued)

	Member Label	Direction	Magnitude[lb,k-ft]	Location[ft,%]
53	MP3B	Z	7.761	2
54	MP3B	Mx	-.006	2
55	MP3B	X	0	6
56	MP3B	Z	7.761	6
57	MP3B	Mx	-.006	6
58	MP3C	X	0	2
59	MP3C	Z	7.761	2
60	MP3C	Mx	.001	2
61	MP3C	X	0	6
62	MP3C	Z	7.761	6
63	MP3C	Mx	.001	6
64	MP3A	X	0	2
65	MP3A	Z	10.404	2
66	MP3A	Mx	-.006	2
67	MP3A	X	0	6
68	MP3A	Z	10.404	6
69	MP3A	Mx	-.006	6
70	MP3B	X	0	2
71	MP3B	Z	7.761	2
72	MP3B	Mx	-.001	2
73	MP3B	X	0	6
74	MP3B	Z	7.761	6
75	MP3B	Mx	-.001	6
76	MP3C	X	0	2
77	MP3C	Z	7.761	2
78	MP3C	Mx	.006	2
79	MP3C	X	0	6
80	MP3C	Z	7.761	6
81	MP3C	Mx	.006	6
82	MP3A	X	0	4
83	MP3A	Z	4.769	4
84	MP3A	Mx	0	4
85	MP3B	X	0	4
86	MP3B	Z	3.583	4
87	MP3B	Mx	.002	4
88	MP3C	X	0	4
89	MP3C	Z	3.583	4
90	MP3C	Mx	-.002	4
91	MP3A	X	0	1.5
92	MP3A	Z	4.769	1.5
93	MP3A	Mx	0	1.5
94	MP3B	X	0	1.5
95	MP3B	Z	3.129	1.5
96	MP3B	Mx	-.001	1.5
97	MP3C	X	0	1.5
98	MP3C	Z	3.129	1.5
99	MP3C	Mx	.001	1.5
100	OVP	X	0	1
101	OVP	Z	6.114	1
102	OVP	Mx	0	1

Member Point Loads (BLC 34 : Antenna Wm (210 Deg))

	Member Label	Direction	Magnitude[lb,k-ft]	Location[ft,%]
1	MP2A	X	-5.392	.5
2	MP2A	Z	9.339	.5
3	MP2A	Mx	.003	.5
4	MP2A	X	-5.392	5.5
5	MP2A	Z	9.339	5.5
6	MP2A	Mx	.003	5.5
7	MP2B	X	-3.914	.5
8	MP2B	Z	6.78	.5
9	MP2B	Mx	-.004	.5
10	MP2B	X	-3.914	5.5
11	MP2B	Z	6.78	5.5
12	MP2B	Mx	-.004	5.5
13	MP2C	X	-5.392	.5
14	MP2C	Z	9.339	.5
15	MP2C	Mx	.003	.5
16	MP2C	X	-5.392	5.5
17	MP2C	Z	9.339	5.5
18	MP2C	Mx	.003	5.5
19	MP4A	X	-2.54	.38
20	MP4A	Z	4.4	.38
21	MP4A	Mx	.001	.38
22	MP4A	X	-2.54	1.63
23	MP4A	Z	4.4	1.63
24	MP4A	Mx	.001	1.63
25	MP4B	X	-1.173	.38
26	MP4B	Z	2.032	.38
27	MP4B	Mx	-.001	.38
28	MP4B	X	-1.173	1.63
29	MP4B	Z	2.032	1.63
30	MP4B	Mx	-.001	1.63
31	MP4C	X	-2.54	.38
32	MP4C	Z	4.4	.38
33	MP4C	Mx	.001	.38
34	MP4C	X	-2.54	1.63
35	MP4C	Z	4.4	1.63
36	MP4C	Mx	.001	1.63
37	MP4A	X	-.907	4.5
38	MP4A	Z	1.57	4.5
39	MP4A	Mx	.000454	4.5
40	MP4B	X	-.223	4.5
41	MP4B	Z	.385	4.5
42	MP4B	Mx	-.000222	4.5
43	MP4C	X	-.907	4.5
44	MP4C	Z	1.57	4.5
45	MP4C	Mx	.000453	4.5
46	MP3A	X	-4.762	2
47	MP3A	Z	8.247	2
48	MP3A	Mx	.007	2
49	MP3A	X	-4.762	6
50	MP3A	Z	8.247	6
51	MP3A	Mx	.007	6
52	MP3B	X	-3.44	2

Member Point Loads (BLC 34 : Antenna Wm (210 Deg)) (Continued)

	Member Label	Direction	Magnitude[lb,k-ft]	Location[ft,%]
53	MP3B	Z	5.959	2
54	MP3B	Mx	-.003	2
55	MP3B	X	-3.44	6
56	MP3B	Z	5.959	6
57	MP3B	Mx	-.003	6
58	MP3C	X	-4.762	2
59	MP3C	Z	8.247	2
60	MP3C	Mx	-.002	2
61	MP3C	X	-4.762	6
62	MP3C	Z	8.247	6
63	MP3C	Mx	-.002	6
64	MP3A	X	-4.762	2
65	MP3A	Z	8.247	2
66	MP3A	Mx	-.002	2
67	MP3A	X	-4.762	6
68	MP3A	Z	8.247	6
69	MP3A	Mx	-.002	6
70	MP3B	X	-3.44	2
71	MP3B	Z	5.959	2
72	MP3B	Mx	-.003	2
73	MP3B	X	-3.44	6
74	MP3B	Z	5.959	6
75	MP3B	Mx	-.003	6
76	MP3C	X	-4.762	2
77	MP3C	Z	8.247	2
78	MP3C	Mx	.007	2
79	MP3C	X	-4.762	6
80	MP3C	Z	8.247	6
81	MP3C	Mx	.007	6
82	MP3A	X	-2.187	4
83	MP3A	Z	3.787	4
84	MP3A	Mx	-.001	4
85	MP3B	X	-1.594	4
86	MP3B	Z	2.761	4
87	MP3B	Mx	.002	4
88	MP3C	X	-2.187	4
89	MP3C	Z	3.787	4
90	MP3C	Mx	-.001	4
91	MP3A	X	-2.111	1.5
92	MP3A	Z	3.656	1.5
93	MP3A	Mx	.001	1.5
94	MP3B	X	-1.291	1.5
95	MP3B	Z	2.236	1.5
96	MP3B	Mx	-.001	1.5
97	MP3C	X	-2.111	1.5
98	MP3C	Z	3.656	1.5
99	MP3C	Mx	.001	1.5
100	OVP	X	-3.154	1
101	OVP	Z	5.463	1
102	OVP	Mx	0	1

Member Point Loads (BLC 35 : Antenna Wm (240 Deg))

	Member Label	Direction	Magnitude[lb,k-ft]	Location[ft,%]
1	MP2A	X	-7.633	.5
2	MP2A	Z	4.407	.5
3	MP2A	Mx	.004	.5
4	MP2A	X	-7.633	5.5
5	MP2A	Z	4.407	5.5
6	MP2A	Mx	.004	5.5
7	MP2B	X	-7.633	.5
8	MP2B	Z	4.407	.5
9	MP2B	Mx	-.004	.5
10	MP2B	X	-7.633	5.5
11	MP2B	Z	4.407	5.5
12	MP2B	Mx	-.004	5.5
13	MP2C	X	-10.192	.5
14	MP2C	Z	5.884	.5
15	MP2C	Mx	0	.5
16	MP2C	X	-10.192	5.5
17	MP2C	Z	5.884	5.5
18	MP2C	Mx	0	5.5
19	MP4A	X	-2.821	.38
20	MP4A	Z	1.629	.38
21	MP4A	Mx	.001	.38
22	MP4A	X	-2.821	1.63
23	MP4A	Z	1.629	1.63
24	MP4A	Mx	.001	1.63
25	MP4B	X	-2.821	.38
26	MP4B	Z	1.629	.38
27	MP4B	Mx	-.001	.38
28	MP4B	X	-2.821	1.63
29	MP4B	Z	1.629	1.63
30	MP4B	Mx	-.001	1.63
31	MP4C	X	-5.19	.38
32	MP4C	Z	2.996	.38
33	MP4C	Mx	0	.38
34	MP4C	X	-5.19	1.63
35	MP4C	Z	2.996	1.63
36	MP4C	Mx	0	1.63
37	MP4A	X	-.78	4.5
38	MP4A	Z	.451	4.5
39	MP4A	Mx	.00039	4.5
40	MP4B	X	-.78	4.5
41	MP4B	Z	.451	4.5
42	MP4B	Mx	-.00039	4.5
43	MP4C	X	-1.965	4.5
44	MP4C	Z	1.135	4.5
45	MP4C	Mx	0	4.5
46	MP3A	X	-6.722	2
47	MP3A	Z	3.881	2
48	MP3A	Mx	.006	2
49	MP3A	X	-6.722	6
50	MP3A	Z	3.881	6
51	MP3A	Mx	.006	6
52	MP3B	X	-6.722	2

Member Point Loads (BLC 35 : Antenna Wm (240 Deg)) (Continued)

	Member Label	Direction	Magnitude[lb,k-ft]	Location[ft,%]
53	MP3B	Z	3.881	2
54	MP3B	Mx	-.001	2
55	MP3B	X	-6.722	6
56	MP3B	Z	3.881	6
57	MP3B	Mx	-.001	6
58	MP3C	X	-9.01	2
59	MP3C	Z	5.202	2
60	MP3C	Mx	-.006	2
61	MP3C	X	-9.01	6
62	MP3C	Z	5.202	6
63	MP3C	Mx	-.006	6
64	MP3A	X	-6.722	2
65	MP3A	Z	3.881	2
66	MP3A	Mx	.001	2
67	MP3A	X	-6.722	6
68	MP3A	Z	3.881	6
69	MP3A	Mx	.001	6
70	MP3B	X	-6.722	2
71	MP3B	Z	3.881	2
72	MP3B	Mx	-.006	2
73	MP3B	X	-6.722	6
74	MP3B	Z	3.881	6
75	MP3B	Mx	-.006	6
76	MP3C	X	-9.01	2
77	MP3C	Z	5.202	2
78	MP3C	Mx	.006	2
79	MP3C	X	-9.01	6
80	MP3C	Z	5.202	6
81	MP3C	Mx	.006	6
82	MP3A	X	-3.103	4
83	MP3A	Z	1.791	4
84	MP3A	Mx	-.002	4
85	MP3B	X	-3.103	4
86	MP3B	Z	1.791	4
87	MP3B	Mx	.002	4
88	MP3C	X	-4.13	4
89	MP3C	Z	2.384	4
90	MP3C	Mx	0	4
91	MP3A	X	-2.709	1.5
92	MP3A	Z	1.564	1.5
93	MP3A	Mx	.001	1.5
94	MP3B	X	-2.709	1.5
95	MP3B	Z	1.564	1.5
96	MP3B	Mx	-.001	1.5
97	MP3C	X	-4.13	1.5
98	MP3C	Z	2.384	1.5
99	MP3C	Mx	0	1.5
100	OVP	X	-4.721	1
101	OVP	Z	2.726	1
102	OVP	Mx	0	1

Member Point Loads (BLC 36 : Antenna Wm (270 Deg))

	Member Label	Direction	Magnitude[lb,k-ft]	Location[ft,%]
1	MP2A	X	-7.829	.5
2	MP2A	Z	0	.5
3	MP2A	Mx	.004	.5
4	MP2A	X	-7.829	5.5
5	MP2A	Z	0	5.5
6	MP2A	Mx	.004	5.5
7	MP2B	X	-10.784	.5
8	MP2B	Z	0	.5
9	MP2B	Mx	-.003	.5
10	MP2B	X	-10.784	5.5
11	MP2B	Z	0	5.5
12	MP2B	Mx	-.003	5.5
13	MP2C	X	-10.784	.5
14	MP2C	Z	0	.5
15	MP2C	Mx	-.003	.5
16	MP2C	X	-10.784	5.5
17	MP2C	Z	0	5.5
18	MP2C	Mx	-.003	5.5
19	MP4A	X	-2.346	.38
20	MP4A	Z	0	.38
21	MP4A	Mx	.001	.38
22	MP4A	X	-2.346	1.63
23	MP4A	Z	0	1.63
24	MP4A	Mx	.001	1.63
25	MP4B	X	-5.081	.38
26	MP4B	Z	0	.38
27	MP4B	Mx	-.001	.38
28	MP4B	X	-5.081	1.63
29	MP4B	Z	0	1.63
30	MP4B	Mx	-.001	1.63
31	MP4C	X	-5.081	.38
32	MP4C	Z	0	.38
33	MP4C	Mx	-.001	.38
34	MP4C	X	-5.081	1.63
35	MP4C	Z	0	1.63
36	MP4C	Mx	-.001	1.63
37	MP4A	X	-.445	4.5
38	MP4A	Z	0	4.5
39	MP4A	Mx	.000222	4.5
40	MP4B	X	-1.813	4.5
41	MP4B	Z	0	4.5
42	MP4B	Mx	-.000453	4.5
43	MP4C	X	-1.813	4.5
44	MP4C	Z	0	4.5
45	MP4C	Mx	-.000453	4.5
46	MP3A	X	-6.88	2
47	MP3A	Z	0	2
48	MP3A	Mx	.003	2
49	MP3A	X	-6.88	6
50	MP3A	Z	0	6
51	MP3A	Mx	.003	6
52	MP3B	X	-9.523	2

Member Point Loads (BLC 36 : Antenna Wm (270 Deg)) (Continued)

	Member Label	Direction	Magnitude[lb,k-ft]	Location[ft,%]
53	MP3B	Z	0	2
54	MP3B	Mx	.002	2
55	MP3B	X	-9.523	6
56	MP3B	Z	0	6
57	MP3B	Mx	.002	6
58	MP3C	X	-9.523	2
59	MP3C	Z	0	2
60	MP3C	Mx	-.007	2
61	MP3C	X	-9.523	6
62	MP3C	Z	0	6
63	MP3C	Mx	-.007	6
64	MP3A	X	-6.88	2
65	MP3A	Z	0	2
66	MP3A	Mx	.003	2
67	MP3A	X	-6.88	6
68	MP3A	Z	0	6
69	MP3A	Mx	.003	6
70	MP3B	X	-9.523	2
71	MP3B	Z	0	2
72	MP3B	Mx	-.007	2
73	MP3B	X	-9.523	6
74	MP3B	Z	0	6
75	MP3B	Mx	-.007	6
76	MP3C	X	-9.523	2
77	MP3C	Z	0	2
78	MP3C	Mx	.002	2
79	MP3C	X	-9.523	6
80	MP3C	Z	0	6
81	MP3C	Mx	.002	6
82	MP3A	X	-3.188	4
83	MP3A	Z	0	4
84	MP3A	Mx	-.002	4
85	MP3B	X	-4.373	4
86	MP3B	Z	0	4
87	MP3B	Mx	.001	4
88	MP3C	X	-4.373	4
89	MP3C	Z	0	4
90	MP3C	Mx	.001	4
91	MP3A	X	-2.582	1.5
92	MP3A	Z	0	1.5
93	MP3A	Mx	.001	1.5
94	MP3B	X	-4.222	1.5
95	MP3B	Z	0	1.5
96	MP3B	Mx	-.001	1.5
97	MP3C	X	-4.222	1.5
98	MP3C	Z	0	1.5
99	MP3C	Mx	-.001	1.5
100	OVP	X	-4.401	1
101	OVP	Z	0	1
102	OVP	Mx	0	1

Member Point Loads (BLC 37 : Antenna Wm (300 Deg))

	Member Label	Direction	Magnitude[lb,k-ft]	Location[ft,%]
1	MP2A	X	-7.633	.5
2	MP2A	Z	-4.407	.5
3	MP2A	Mx	.004	.5
4	MP2A	X	-7.633	5.5
5	MP2A	Z	-4.407	5.5
6	MP2A	Mx	.004	5.5
7	MP2B	X	-10.192	.5
8	MP2B	Z	-5.884	.5
9	MP2B	Mx	0	.5
10	MP2B	X	-10.192	5.5
11	MP2B	Z	-5.884	5.5
12	MP2B	Mx	0	5.5
13	MP2C	X	-7.633	.5
14	MP2C	Z	-4.407	.5
15	MP2C	Mx	-.004	.5
16	MP2C	X	-7.633	5.5
17	MP2C	Z	-4.407	5.5
18	MP2C	Mx	-.004	5.5
19	MP4A	X	-2.821	.38
20	MP4A	Z	-1.629	.38
21	MP4A	Mx	.001	.38
22	MP4A	X	-2.821	1.63
23	MP4A	Z	-1.629	1.63
24	MP4A	Mx	.001	1.63
25	MP4B	X	-5.19	.38
26	MP4B	Z	-2.996	.38
27	MP4B	Mx	0	.38
28	MP4B	X	-5.19	1.63
29	MP4B	Z	-2.996	1.63
30	MP4B	Mx	0	1.63
31	MP4C	X	-2.821	.38
32	MP4C	Z	-1.629	.38
33	MP4C	Mx	-.001	.38
34	MP4C	X	-2.821	1.63
35	MP4C	Z	-1.629	1.63
36	MP4C	Mx	-.001	1.63
37	MP4A	X	-.78	4.5
38	MP4A	Z	-.451	4.5
39	MP4A	Mx	.00039	4.5
40	MP4B	X	-1.965	4.5
41	MP4B	Z	-1.135	4.5
42	MP4B	Mx	0	4.5
43	MP4C	X	-.78	4.5
44	MP4C	Z	-.451	4.5
45	MP4C	Mx	-.00039	4.5
46	MP3A	X	-6.722	2
47	MP3A	Z	-3.881	2
48	MP3A	Mx	.001	2
49	MP3A	X	-6.722	6
50	MP3A	Z	-3.881	6
51	MP3A	Mx	.001	6
52	MP3B	X	-9.01	2

Member Point Loads (BLC 37 : Antenna Wm (300 Deg)) (Continued)

	Member Label	Direction	Magnitude[lb,k-ft]	Location[ft,%]
53	MP3B	Z	-5.202	2
54	MP3B	Mx	.006	2
55	MP3B	X	-9.01	6
56	MP3B	Z	-5.202	6
57	MP3B	Mx	.006	6
58	MP3C	X	-6.722	2
59	MP3C	Z	-3.881	2
60	MP3C	Mx	-.006	2
61	MP3C	X	-6.722	6
62	MP3C	Z	-3.881	6
63	MP3C	Mx	-.006	6
64	MP3A	X	-6.722	2
65	MP3A	Z	-3.881	2
66	MP3A	Mx	.006	2
67	MP3A	X	-6.722	6
68	MP3A	Z	-3.881	6
69	MP3A	Mx	.006	6
70	MP3B	X	-9.01	2
71	MP3B	Z	-5.202	2
72	MP3B	Mx	-.006	2
73	MP3B	X	-9.01	6
74	MP3B	Z	-5.202	6
75	MP3B	Mx	-.006	6
76	MP3C	X	-6.722	2
77	MP3C	Z	-3.881	2
78	MP3C	Mx	-.001	2
79	MP3C	X	-6.722	6
80	MP3C	Z	-3.881	6
81	MP3C	Mx	-.001	6
82	MP3A	X	-3.103	4
83	MP3A	Z	-1.791	4
84	MP3A	Mx	-.002	4
85	MP3B	X	-4.13	4
86	MP3B	Z	-2.384	4
87	MP3B	Mx	0	4
88	MP3C	X	-3.103	4
89	MP3C	Z	-1.791	4
90	MP3C	Mx	.002	4
91	MP3A	X	-2.709	1.5
92	MP3A	Z	-1.564	1.5
93	MP3A	Mx	.001	1.5
94	MP3B	X	-4.13	1.5
95	MP3B	Z	-2.384	1.5
96	MP3B	Mx	0	1.5
97	MP3C	X	-2.709	1.5
98	MP3C	Z	-1.564	1.5
99	MP3C	Mx	-.001	1.5
100	OVP	X	-3.644	1
101	OVP	Z	-2.104	1
102	OVP	Mx	0	1

Member Point Loads (BLC 38 : Antenna Wm (330 Deg))

	Member Label	Direction	Magnitude[lb,k-ft]	Location[ft,%]
1	MP2A	X	-5.392	.5
2	MP2A	Z	-9.339	.5
3	MP2A	Mx	.003	.5
4	MP2A	X	-5.392	5.5
5	MP2A	Z	-9.339	5.5
6	MP2A	Mx	.003	5.5
7	MP2B	X	-5.392	.5
8	MP2B	Z	-9.339	.5
9	MP2B	Mx	.003	.5
10	MP2B	X	-5.392	5.5
11	MP2B	Z	-9.339	5.5
12	MP2B	Mx	.003	5.5
13	MP2C	X	-3.914	.5
14	MP2C	Z	-6.78	.5
15	MP2C	Mx	-.004	.5
16	MP2C	X	-3.914	5.5
17	MP2C	Z	-6.78	5.5
18	MP2C	Mx	-.004	5.5
19	MP4A	X	-2.54	.38
20	MP4A	Z	-4.4	.38
21	MP4A	Mx	.001	.38
22	MP4A	X	-2.54	1.63
23	MP4A	Z	-4.4	1.63
24	MP4A	Mx	.001	1.63
25	MP4B	X	-2.54	.38
26	MP4B	Z	-4.4	.38
27	MP4B	Mx	.001	.38
28	MP4B	X	-2.54	1.63
29	MP4B	Z	-4.4	1.63
30	MP4B	Mx	.001	1.63
31	MP4C	X	-1.173	.38
32	MP4C	Z	-2.032	.38
33	MP4C	Mx	-.001	.38
34	MP4C	X	-1.173	1.63
35	MP4C	Z	-2.032	1.63
36	MP4C	Mx	-.001	1.63
37	MP4A	X	-.907	4.5
38	MP4A	Z	-1.57	4.5
39	MP4A	Mx	.000454	4.5
40	MP4B	X	-.907	4.5
41	MP4B	Z	-1.57	4.5
42	MP4B	Mx	.000453	4.5
43	MP4C	X	-.223	4.5
44	MP4C	Z	-.385	4.5
45	MP4C	Mx	-.000222	4.5
46	MP3A	X	-4.762	2
47	MP3A	Z	-8.247	2
48	MP3A	Mx	-.002	2
49	MP3A	X	-4.762	6
50	MP3A	Z	-8.247	6
51	MP3A	Mx	-.002	6
52	MP3B	X	-4.762	2

Member Point Loads (BLC 38 : Antenna Wm (330 Deg)) (Continued)

	Member Label	Direction	Magnitude[lb,k-ft]	Location[ft,%]
53	MP3B	Z	-8.247	2
54	MP3B	Mx	.007	2
55	MP3B	X	-4.762	6
56	MP3B	Z	-8.247	6
57	MP3B	Mx	.007	6
58	MP3C	X	-3.44	2
59	MP3C	Z	-5.959	2
60	MP3C	Mx	-.003	2
61	MP3C	X	-3.44	6
62	MP3C	Z	-5.959	6
63	MP3C	Mx	-.003	6
64	MP3A	X	-4.762	2
65	MP3A	Z	-8.247	2
66	MP3A	Mx	.007	2
67	MP3A	X	-4.762	6
68	MP3A	Z	-8.247	6
69	MP3A	Mx	.007	6
70	MP3B	X	-4.762	2
71	MP3B	Z	-8.247	2
72	MP3B	Mx	-.002	2
73	MP3B	X	-4.762	6
74	MP3B	Z	-8.247	6
75	MP3B	Mx	-.002	6
76	MP3C	X	-3.44	2
77	MP3C	Z	-5.959	2
78	MP3C	Mx	-.003	2
79	MP3C	X	-3.44	6
80	MP3C	Z	-5.959	6
81	MP3C	Mx	-.003	6
82	MP3A	X	-2.187	4
83	MP3A	Z	-3.787	4
84	MP3A	Mx	-.001	4
85	MP3B	X	-2.187	4
86	MP3B	Z	-3.787	4
87	MP3B	Mx	-.001	4
88	MP3C	X	-1.594	4
89	MP3C	Z	-2.761	4
90	MP3C	Mx	.002	4
91	MP3A	X	-2.111	1.5
92	MP3A	Z	-3.656	1.5
93	MP3A	Mx	.001	1.5
94	MP3B	X	-2.111	1.5
95	MP3B	Z	-3.656	1.5
96	MP3B	Mx	.001	1.5
97	MP3C	X	-1.291	1.5
98	MP3C	Z	-2.236	1.5
99	MP3C	Mx	-.001	1.5
100	OVP	X	-2.532	1
101	OVP	Z	-4.385	1
102	OVP	Mx	0	1

Member Point Loads (BLC 77 : Lm1)

	Member Label	Direction	Magnitude[lb,k-ft]	Location[ft,%]
1	LIVE1	Y	-500	%100

Member Point Loads (BLC 78 : Lm2)

	Member Label	Direction	Magnitude[lb,k-ft]	Location[ft,%]
1	LIVE2	Y	-500	%100

Member Point Loads (BLC 79 : Lv1)

	Member Label	Direction	Magnitude[lb,k-ft]	Location[ft,%]
1	FACE1	Y	-250	%50

Member Point Loads (BLC 80 : Lv2)

	Member Label	Direction	Magnitude[lb,k-ft]	Location[ft,%]
1	FACE2	Y	-250	%100

Member Distributed Loads (BLC 40 : Structure Di)

	Member Label	Direction	Start Magnitude[lb/ft,...	End Magnitude[lb/ft,F...	Start Location[ft,%]	End Location[ft,%]
1	M1	Y	-14.574	-14.574	0	%100
2	MP3A	Y	-8.491	-8.491	0	%100
3	MP1A	Y	-8.491	-8.491	0	%100
4	M9	Y	-13.968	-13.968	0	%100
5	M10	Y	-14.574	-14.574	0	%100
6	M19	Y	-14.574	-14.574	0	%100
7	M28	Y	-14.574	-14.574	0	%100
8	M31	Y	-14.574	-14.574	0	%100
9	M34	Y	-14.574	-14.574	0	%100
10	M40	Y	-24.378	-24.378	0	%100
11	M46	Y	-24.378	-24.378	0	%100
12	M52	Y	-24.378	-24.378	0	%100
13	M55	Y	-14.574	-14.574	0	%100
14	M56	Y	-14.574	-14.574	0	%100
15	M57	Y	-9.434	-9.434	0	%100
16	M58	Y	-9.434	-9.434	0	%100
17	M59	Y	-5.108	-5.108	0	%100
18	M60	Y	-5.108	-5.108	0	%100
19	M61	Y	-5.108	-5.108	0	%100
20	M62	Y	-5.108	-5.108	0	%100
21	M63	Y	-5.108	-5.108	0	%100
22	M64	Y	-5.108	-5.108	0	%100
23	M65	Y	-5.108	-5.108	0	%100
24	M66	Y	-12.378	-12.378	0	%100
25	FACE1	Y	-14.574	-14.574	0	%100
26	M76	Y	-14.574	-14.574	0	%100
27	M77	Y	-14.574	-14.574	0	%100
28	FACE2	Y	-14.574	-14.574	0	%100
29	M79	Y	-14.574	-14.574	0	%100
30	M80	Y	-14.574	-14.574	0	%100
31	M85	Y	-9.434	-9.434	0	%100
32	M86	Y	-9.434	-9.434	0	%100
33	TMAA	Y	-9.434	-9.434	0	%100

Member Distributed Loads (BLC 40 : Structure Di) (Continued)

	Member Label	Direction	Start Magnitude[lb/ft,...	End Magnitude[lb/ft,F...	Start Location[ft,%]	End Location[ft,%]
34	M89	Y	-9.434	-9.434	0	%100
35	M91	Y	-9.434	-9.434	0	%100
36	M92	Y	-12.378	-12.378	0	%100
37	M96	Y	-13.968	-13.968	0	%100
38	M149	Y	-12.378	-12.378	0	%100
39	M160	Y	-9.434	-9.434	0	%100
40	M164	Y	-12.378	-12.378	0	%100
41	M146A	Y	-24.378	-24.378	0	%100
42	M149A	Y	-24.378	-24.378	0	%100
43	M152	Y	-24.378	-24.378	0	%100
44	M157	Y	-9.434	-9.434	0	%100
45	M158B	Y	-9.434	-9.434	0	%100
46	M159B	Y	-9.434	-9.434	0	%100
47	M160B	Y	-9.434	-9.434	0	%100
48	M157B	Y	-9.434	-9.434	0	%100
49	TMAC	Y	-9.434	-9.434	0	%100
50	M159	Y	-9.434	-9.434	0	%100
51	TMAB	Y	-9.434	-9.434	0	%100
52	M159C	Y	-9.434	-9.434	0	%100
53	M160D	Y	-9.434	-9.434	0	%100
54	M156B	Y	-9.434	-9.434	0	%100
55	M157C	Y	-9.434	-9.434	0	%100
56	M158C	Y	-9.434	-9.434	0	%100
57	M159D	Y	-9.434	-9.434	0	%100
58	M160E	Y	-9.434	-9.434	0	%100
59	M127	Y	-12.378	-12.378	0	%100
60	M128	Y	-12.378	-12.378	0	%100
61	MP2A	Y	-8.491	-8.491	0	%100
62	M100	Y	-13.968	-13.968	0	%100
63	M101	Y	-13.968	-13.968	0	%100
64	MP5A	Y	-8.491	-8.491	0	%100
65	M103	Y	-13.968	-13.968	0	%100
66	M104	Y	-13.968	-13.968	0	%100
67	MP4A	Y	-8.491	-8.491	0	%100
68	LIVE1	Y	-13.968	-13.968	0	%100
69	M107	Y	-13.968	-13.968	0	%100
70	MP3C	Y	-8.491	-8.491	0	%100
71	MP1C	Y	-8.491	-8.491	0	%100
72	M111	Y	-13.968	-13.968	0	%100
73	M113	Y	-13.968	-13.968	0	%100
74	MP2C	Y	-8.491	-8.491	0	%100
75	M115	Y	-13.968	-13.968	0	%100
76	M116	Y	-13.968	-13.968	0	%100
77	MP5C	Y	-8.491	-8.491	0	%100
78	M118	Y	-13.968	-13.968	0	%100
79	M119	Y	-13.968	-13.968	0	%100
80	MP4C	Y	-8.491	-8.491	0	%100
81	M121	Y	-13.968	-13.968	0	%100
82	M122	Y	-13.968	-13.968	0	%100
83	MP3B	Y	-8.491	-8.491	0	%100
84	MP1B	Y	-8.491	-8.491	0	%100
85	M126	Y	-13.968	-13.968	0	%100

Member Distributed Loads (BLC 40 : Structure Di) (Continued)

	Member Label	Direction	Start Magnitude[lb/ft,...	End Magnitude[lb/ft,F...	Start Location[ft,%]	End Location[ft,%]
86	M128A	Y	-13.968	-13.968	0	%100
87	MP2B	Y	-8.491	-8.491	0	%100
88	M130	Y	-13.968	-13.968	0	%100
89	M131	Y	-13.968	-13.968	0	%100
90	MP5B	Y	-8.491	-8.491	0	%100
91	M133	Y	-13.968	-13.968	0	%100
92	M134	Y	-13.968	-13.968	0	%100
93	MP4B	Y	-8.491	-8.491	0	%100
94	M136	Y	-13.968	-13.968	0	%100
95	M137	Y	-13.968	-13.968	0	%100
96	M138	Y	-12.378	-12.378	0	%100
97	M139	Y	-12.378	-12.378	0	%100
98	M146	Y	-8.491	-8.491	0	%100
99	OVP	Y	-8.491	-8.491	0	%100
100	M145A	Y	-12.378	-12.378	0	%100
101	M146B	Y	-12.378	-12.378	0	%100
102	M147B	Y	-12.378	-12.378	0	%100
103	M148	Y	-12.378	-12.378	0	%100

Member Distributed Loads (BLC 41 : Structure Wo (0 Deg))

	Member Label	Direction	Start Magnitude[lb/ft,...	End Magnitude[lb/ft,F...	Start Location[ft,%]	End Location[ft,%]
1	M1	X	0	0	0	%100
2	M1	Z	-25.523	-25.523	0	%100
3	MP3A	X	0	0	0	%100
4	MP3A	Z	-9.055	-9.055	0	%100
5	MP1A	X	0	0	0	%100
6	MP1A	Z	-9.055	-9.055	0	%100
7	M9	X	0	0	0	%100
8	M9	Z	0	0	0	%100
9	M10	X	0	0	0	%100
10	M10	Z	-6.381	-6.381	0	%100
11	M19	X	0	0	0	%100
12	M19	Z	-6.381	-6.381	0	%100
13	M28	X	0	0	0	%100
14	M28	Z	-24.464	-24.464	0	%100
15	M31	X	0	0	0	%100
16	M31	Z	-6.116	-6.116	0	%100
17	M34	X	0	0	0	%100
18	M34	Z	-6.116	-6.116	0	%100
19	M40	X	0	0	0	%100
20	M40	Z	-1.43	-1.43	0	%100
21	M46	X	0	0	0	%100
22	M46	Z	-.357	-.357	0	%100
23	M52	X	0	0	0	%100
24	M52	Z	-.357	-.357	0	%100
25	M55	X	0	0	0	%100
26	M55	Z	-21.857	-21.857	0	%100
27	M56	X	0	0	0	%100
28	M56	Z	0	0	0	%100
29	M57	X	0	0	0	%100
30	M57	Z	-12.709	-12.709	0	%100

Member Distributed Loads (BLC 41 : Structure Wo (0 Deg)) (Continued)

	Member Label	Direction	Start Magnitude[lb/ft,...	End Magnitude[lb/ft,F...	Start Location[ft,%]	End Location[ft,%]
31	M58	X	0	0	0	%100
32	M58	Z	-12.709	-12.709	0	%100
33	M59	X	0	0	0	%100
34	M59	Z	0	0	0	%100
35	M60	X	0	0	0	%100
36	M60	Z	0	0	0	%100
37	M61	X	0	0	0	%100
38	M61	Z	0	0	0	%100
39	M62	X	0	0	0	%100
40	M62	Z	0	0	0	%100
41	M63	X	0	0	0	%100
42	M63	Z	0	0	0	%100
43	M64	X	0	0	0	%100
44	M64	Z	0	0	0	%100
45	M65	X	0	0	0	%100
46	M65	Z	0	0	0	%100
47	M66	X	0	0	0	%100
48	M66	Z	0	0	0	%100
49	FACE1	X	0	0	0	%100
50	FACE1	Z	-19.063	-19.063	0	%100
51	M76	X	0	0	0	%100
52	M76	Z	-4.766	-4.766	0	%100
53	M77	X	0	0	0	%100
54	M77	Z	-4.766	-4.766	0	%100
55	FACE2	X	0	0	0	%100
56	FACE2	Z	-25.523	-25.523	0	%100
57	M79	X	0	0	0	%100
58	M79	Z	-6.381	-6.381	0	%100
59	M80	X	0	0	0	%100
60	M80	Z	-6.381	-6.381	0	%100
61	M85	X	0	0	0	%100
62	M85	Z	-11.067	-11.067	0	%100
63	M86	X	0	0	0	%100
64	M86	Z	-10.802	-10.802	0	%100
65	TMAA	X	0	0	0	%100
66	TMAA	Z	-10.802	-10.802	0	%100
67	M89	X	0	0	0	%100
68	M89	Z	-12.709	-12.709	0	%100
69	M91	X	0	0	0	%100
70	M91	Z	-12.709	-12.709	0	%100
71	M92	X	0	0	0	%100
72	M92	Z	-19.063	-19.063	0	%100
73	M96	X	0	0	0	%100
74	M96	Z	0	0	0	%100
75	M149	X	0	0	0	%100
76	M149	Z	-4.766	-4.766	0	%100
77	M160	X	0	0	0	%100
78	M160	Z	-11.067	-11.067	0	%100
79	M164	X	0	0	0	%100
80	M164	Z	-4.766	-4.766	0	%100
81	M146A	X	0	0	0	%100
82	M146A	Z	-.357	-.357	0	%100

Member Distributed Loads (BLC 41 : Structure Wo (0 Deg)) (Continued)

	Member Label	Direction	Start Magnitude[lb/ft,...	End Magnitude[lb/ft,F...	Start Location[ft,%]	End Location[ft,%]
83	M149A	X	0	0	0	%100
84	M149A	Z	-.357	-.357	0	%100
85	M152	X	0	0	0	%100
86	M152	Z	-1.43	-1.43	0	%100
87	M157	X	0	0	0	%100
88	M157	Z	-11.067	-11.067	0	%100
89	M158B	X	0	0	0	%100
90	M158B	Z	-11.067	-11.067	0	%100
91	M159B	X	0	0	0	%100
92	M159B	Z	-11.067	-11.067	0	%100
93	M160B	X	0	0	0	%100
94	M160B	Z	-11.067	-11.067	0	%100
95	M157B	X	0	0	0	%100
96	M157B	Z	-10.802	-10.802	0	%100
97	TMAC	X	0	0	0	%100
98	TMAC	Z	-10.802	-10.802	0	%100
99	M159	X	0	0	0	%100
100	M159	Z	-10.802	-10.802	0	%100
101	TMAB	X	0	0	0	%100
102	TMAB	Z	-10.802	-10.802	0	%100
103	M159C	X	0	0	0	%100
104	M159C	Z	-3.177	-3.177	0	%100
105	M160D	X	0	0	0	%100
106	M160D	Z	-3.177	-3.177	0	%100
107	M156B	X	0	0	0	%100
108	M156B	Z	-12.709	-12.709	0	%100
109	M157C	X	0	0	0	%100
110	M157C	Z	-6.785	-6.785	0	%100
111	M158C	X	0	0	0	%100
112	M158C	Z	-6.785	-6.785	0	%100
113	M159D	X	0	0	0	%100
114	M159D	Z	-6.785	-6.785	0	%100
115	M160E	X	0	0	0	%100
116	M160E	Z	-6.785	-6.785	0	%100
117	M127	X	0	0	0	%100
118	M127	Z	-6.712	-6.712	0	%100
119	M128	X	0	0	0	%100
120	M128	Z	-6.712	-6.712	0	%100
121	MP2A	X	0	0	0	%100
122	MP2A	Z	-9.055	-9.055	0	%100
123	M100	X	0	0	0	%100
124	M100	Z	0	0	0	%100
125	M101	X	0	0	0	%100
126	M101	Z	0	0	0	%100
127	MP5A	X	0	0	0	%100
128	MP5A	Z	-9.055	-9.055	0	%100
129	M103	X	0	0	0	%100
130	M103	Z	0	0	0	%100
131	M104	X	0	0	0	%100
132	M104	Z	0	0	0	%100
133	MP4A	X	0	0	0	%100
134	MP4A	Z	-9.055	-9.055	0	%100

Member Distributed Loads (BLC 41 : Structure Wo (0 Deg)) (Continued)

	Member Label	Direction	Start Magnitude[lb/ft,...	End Magnitude[lb/ft,F...	Start Location[ft,%]	End Location[ft,%]
135	LIVE1	X	0	0	0	%100
136	LIVE1	Z	0	0	0	%100
137	M107	X	0	0	0	%100
138	M107	Z	0	0	0	%100
139	MP3C	X	0	0	0	%100
140	MP3C	Z	-9.055	-9.055	0	%100
141	MP1C	X	0	0	0	%100
142	MP1C	Z	-9.055	-9.055	0	%100
143	M111	X	0	0	0	%100
144	M111	Z	-.715	-.715	0	%100
145	M113	X	0	0	0	%100
146	M113	Z	-.715	-.715	0	%100
147	MP2C	X	0	0	0	%100
148	MP2C	Z	-9.055	-9.055	0	%100
149	M115	X	0	0	0	%100
150	M115	Z	-.715	-.715	0	%100
151	M116	X	0	0	0	%100
152	M116	Z	-.715	-.715	0	%100
153	MP5C	X	0	0	0	%100
154	MP5C	Z	-9.055	-9.055	0	%100
155	M118	X	0	0	0	%100
156	M118	Z	-.715	-.715	0	%100
157	M119	X	0	0	0	%100
158	M119	Z	-.715	-.715	0	%100
159	MP4C	X	0	0	0	%100
160	MP4C	Z	-9.055	-9.055	0	%100
161	M121	X	0	0	0	%100
162	M121	Z	-.715	-.715	0	%100
163	M122	X	0	0	0	%100
164	M122	Z	-.715	-.715	0	%100
165	MP3B	X	0	0	0	%100
166	MP3B	Z	-9.055	-9.055	0	%100
167	MP1B	X	0	0	0	%100
168	MP1B	Z	-9.055	-9.055	0	%100
169	M126	X	0	0	0	%100
170	M126	Z	-.715	-.715	0	%100
171	M128A	X	0	0	0	%100
172	M128A	Z	-.715	-.715	0	%100
173	MP2B	X	0	0	0	%100
174	MP2B	Z	-9.055	-9.055	0	%100
175	M130	X	0	0	0	%100
176	M130	Z	-.715	-.715	0	%100
177	M131	X	0	0	0	%100
178	M131	Z	-.715	-.715	0	%100
179	MP5B	X	0	0	0	%100
180	MP5B	Z	-9.055	-9.055	0	%100
181	M133	X	0	0	0	%100
182	M133	Z	-.715	-.715	0	%100
183	M134	X	0	0	0	%100
184	M134	Z	-.715	-.715	0	%100
185	MP4B	X	0	0	0	%100
186	MP4B	Z	-9.055	-9.055	0	%100

Member Distributed Loads (BLC 41 : Structure Wo (0 Deg)) (Continued)

	Member Label	Direction	Start Magnitude[lb/ft,...	End Magnitude[lb/ft,F...	Start Location[ft,%]	End Location[ft,%]
187	M136	X	0	0	0	%100
188	M136	Z	-.715	-.715	0	%100
189	M137	X	0	0	0	%100
190	M137	Z	-.715	-.715	0	%100
191	M138	X	0	0	0	%100
192	M138	Z	-8.554	-8.554	0	%100
193	M139	X	0	0	0	%100
194	M139	Z	-8.554	-8.554	0	%100
195	M146	X	0	0	0	%100
196	M146	Z	-7.687	-7.687	0	%100
197	OVP	X	0	0	0	%100
198	OVP	Z	-9.055	-9.055	0	%100
199	M145A	X	0	0	0	%100
200	M145A	Z	-15.084	-15.084	0	%100
201	M146B	X	0	0	0	%100
202	M146B	Z	-3.006	-3.006	0	%100
203	M147B	X	0	0	0	%100
204	M147B	Z	-3.006	-3.006	0	%100
205	M148	X	0	0	0	%100
206	M148	Z	-15.084	-15.084	0	%100

Member Distributed Loads (BLC 42 : Structure Wo (30 Deg))

	Member Label	Direction	Start Magnitude[lb/ft,...	End Magnitude[lb/ft,F...	Start Location[ft,%]	End Location[ft,%]
1	M1	X	9.571	9.571	0	%100
2	M1	Z	-16.578	-16.578	0	%100
3	MP3A	X	4.527	4.527	0	%100
4	MP3A	Z	-7.842	-7.842	0	%100
5	MP1A	X	4.527	4.527	0	%100
6	MP1A	Z	-7.842	-7.842	0	%100
7	M9	X	.119	.119	0	%100
8	M9	Z	-.206	-.206	0	%100
9	M10	X	9.571	9.571	0	%100
10	M10	Z	-16.578	-16.578	0	%100
11	M19	X	0	0	0	%100
12	M19	Z	0	0	0	%100
13	M28	X	9.174	9.174	0	%100
14	M28	Z	-15.89	-15.89	0	%100
15	M31	X	9.174	9.174	0	%100
16	M31	Z	-15.89	-15.89	0	%100
17	M34	X	0	0	0	%100
18	M34	Z	0	0	0	%100
19	M40	X	.536	.536	0	%100
20	M40	Z	-.929	-.929	0	%100
21	M46	X	.536	.536	0	%100
22	M46	Z	-.929	-.929	0	%100
23	M52	X	0	0	0	%100
24	M52	Z	0	0	0	%100
25	M55	X	8.196	8.196	0	%100
26	M55	Z	-14.197	-14.197	0	%100
27	M56	X	2.586	2.586	0	%100
28	M56	Z	-4.479	-4.479	0	%100

Member Distributed Loads (BLC 42 : Structure Wo (30 Deg)) (Continued)

	Member Label	Direction	Start Magnitude[lb/ft,...	End Magnitude[lb/ft,F...	Start Location[ft,%]	End Location[ft,%]
29	M57	X	6.354	6.354	0	%100
30	M57	Z	-11.006	-11.006	0	%100
31	M58	X	6.354	6.354	0	%100
32	M58	Z	-11.006	-11.006	0	%100
33	M59	X	.316	.316	0	%100
34	M59	Z	-.546	-.546	0	%100
35	M60	X	.316	.316	0	%100
36	M60	Z	-.546	-.546	0	%100
37	M61	X	.316	.316	0	%100
38	M61	Z	-.546	-.546	0	%100
39	M62	X	.316	.316	0	%100
40	M62	Z	-.546	-.546	0	%100
41	M63	X	.316	.316	0	%100
42	M63	Z	-.546	-.546	0	%100
43	M64	X	.316	.316	0	%100
44	M64	Z	-.546	-.546	0	%100
45	M65	X	.316	.316	0	%100
46	M65	Z	-.546	-.546	0	%100
47	M66	X	1.119	1.119	0	%100
48	M66	Z	-1.938	-1.938	0	%100
49	FACE1	X	7.149	7.149	0	%100
50	FACE1	Z	-12.382	-12.382	0	%100
51	M76	X	7.149	7.149	0	%100
52	M76	Z	-12.382	-12.382	0	%100
53	M77	X	0	0	0	%100
54	M77	Z	0	0	0	%100
55	FACE2	X	9.571	9.571	0	%100
56	FACE2	Z	-16.578	-16.578	0	%100
57	M79	X	9.571	9.571	0	%100
58	M79	Z	-16.578	-16.578	0	%100
59	M80	X	0	0	0	%100
60	M80	Z	0	0	0	%100
61	M85	X	5.534	5.534	0	%100
62	M85	Z	-9.584	-9.584	0	%100
63	M86	X	5.401	5.401	0	%100
64	M86	Z	-9.355	-9.355	0	%100
65	TMAA	X	5.401	5.401	0	%100
66	TMAA	Z	-9.355	-9.355	0	%100
67	M89	X	5.367	5.367	0	%100
68	M89	Z	-9.296	-9.296	0	%100
69	M91	X	4.766	4.766	0	%100
70	M91	Z	-8.255	-8.255	0	%100
71	M92	X	7.149	7.149	0	%100
72	M92	Z	-12.382	-12.382	0	%100
73	M96	X	.119	.119	0	%100
74	M96	Z	-.206	-.206	0	%100
75	M149	X	7.149	7.149	0	%100
76	M149	Z	-12.382	-12.382	0	%100
77	M160	X	5.534	5.534	0	%100
78	M160	Z	-9.584	-9.584	0	%100
79	M164	X	0	0	0	%100
80	M164	Z	0	0	0	%100

Member Distributed Loads (BLC 42 : Structure Wo (30 Deg)) (Continued)

	Member Label	Direction	Start Magnitude[lb/ft,...	End Magnitude[lb/ft,F...	Start Location[ft,%]	End Location[ft,%]
81	M146A	X	.536	.536	0	%100
82	M146A	Z	-.929	-.929	0	%100
83	M149A	X	0	0	0	%100
84	M149A	Z	0	0	0	%100
85	M152	X	.536	.536	0	%100
86	M152	Z	-.929	-.929	0	%100
87	M157	X	5.534	5.534	0	%100
88	M157	Z	-9.584	-9.584	0	%100
89	M158B	X	5.534	5.534	0	%100
90	M158B	Z	-9.584	-9.584	0	%100
91	M159B	X	5.534	5.534	0	%100
92	M159B	Z	-9.584	-9.584	0	%100
93	M160B	X	5.534	5.534	0	%100
94	M160B	Z	-9.584	-9.584	0	%100
95	M157B	X	5.401	5.401	0	%100
96	M157B	Z	-9.355	-9.355	0	%100
97	TMAC	X	5.401	5.401	0	%100
98	TMAC	Z	-9.355	-9.355	0	%100
99	M159	X	5.401	5.401	0	%100
100	M159	Z	-9.355	-9.355	0	%100
101	TMAB	X	5.401	5.401	0	%100
102	TMAB	Z	-9.355	-9.355	0	%100
103	M159C	X	4.766	4.766	0	%100
104	M159C	Z	-8.255	-8.255	0	%100
105	M160D	X	0	0	0	%100
106	M160D	Z	0	0	0	%100
107	M156B	X	5.367	5.367	0	%100
108	M156B	Z	-9.296	-9.296	0	%100
109	M157C	X	5.367	5.367	0	%100
110	M157C	Z	-9.296	-9.296	0	%100
111	M158C	X	5.367	5.367	0	%100
112	M158C	Z	-9.296	-9.296	0	%100
113	M159D	X	2.405	2.405	0	%100
114	M159D	Z	-4.166	-4.166	0	%100
115	M160E	X	2.405	2.405	0	%100
116	M160E	Z	-4.166	-4.166	0	%100
117	M127	X	1.119	1.119	0	%100
118	M127	Z	-1.938	-1.938	0	%100
119	M128	X	4.475	4.475	0	%100
120	M128	Z	-7.75	-7.75	0	%100
121	MP2A	X	4.527	4.527	0	%100
122	MP2A	Z	-7.842	-7.842	0	%100
123	M100	X	.119	.119	0	%100
124	M100	Z	-.206	-.206	0	%100
125	M101	X	.119	.119	0	%100
126	M101	Z	-.206	-.206	0	%100
127	MP5A	X	4.527	4.527	0	%100
128	MP5A	Z	-7.842	-7.842	0	%100
129	M103	X	.119	.119	0	%100
130	M103	Z	-.206	-.206	0	%100
131	M104	X	.119	.119	0	%100
132	M104	Z	-.206	-.206	0	%100

Member Distributed Loads (BLC 42 : Structure Wo (30 Deg)) (Continued)

	Member Label	Direction	Start Magnitude[lb/ft,...	End Magnitude[lb/ft,F...	Start Location[ft,%]	End Location[ft,%]
133	MP4A	X	4.527	4.527	0	%100
134	MP4A	Z	-7.842	-7.842	0	%100
135	LIVE1	X	.119	.119	0	%100
136	LIVE1	Z	-.206	-.206	0	%100
137	M107	X	.119	.119	0	%100
138	M107	Z	-.206	-.206	0	%100
139	MP3C	X	4.527	4.527	0	%100
140	MP3C	Z	-7.842	-7.842	0	%100
141	MP1C	X	4.527	4.527	0	%100
142	MP1C	Z	-7.842	-7.842	0	%100
143	M111	X	.119	.119	0	%100
144	M111	Z	-.206	-.206	0	%100
145	M113	X	.119	.119	0	%100
146	M113	Z	-.206	-.206	0	%100
147	MP2C	X	4.527	4.527	0	%100
148	MP2C	Z	-7.842	-7.842	0	%100
149	M115	X	.119	.119	0	%100
150	M115	Z	-.206	-.206	0	%100
151	M116	X	.119	.119	0	%100
152	M116	Z	-.206	-.206	0	%100
153	MP5C	X	4.527	4.527	0	%100
154	MP5C	Z	-7.842	-7.842	0	%100
155	M118	X	.119	.119	0	%100
156	M118	Z	-.206	-.206	0	%100
157	M119	X	.119	.119	0	%100
158	M119	Z	-.206	-.206	0	%100
159	MP4C	X	4.527	4.527	0	%100
160	MP4C	Z	-7.842	-7.842	0	%100
161	M121	X	.119	.119	0	%100
162	M121	Z	-.206	-.206	0	%100
163	M122	X	.119	.119	0	%100
164	M122	Z	-.206	-.206	0	%100
165	MP3B	X	4.527	4.527	0	%100
166	MP3B	Z	-7.842	-7.842	0	%100
167	MP1B	X	4.527	4.527	0	%100
168	MP1B	Z	-7.842	-7.842	0	%100
169	M126	X	.477	.477	0	%100
170	M126	Z	-.825	-.825	0	%100
171	M128A	X	.477	.477	0	%100
172	M128A	Z	-.825	-.825	0	%100
173	MP2B	X	4.527	4.527	0	%100
174	MP2B	Z	-7.842	-7.842	0	%100
175	M130	X	.477	.477	0	%100
176	M130	Z	-.825	-.825	0	%100
177	M131	X	.477	.477	0	%100
178	M131	Z	-.825	-.825	0	%100
179	MP5B	X	4.527	4.527	0	%100
180	MP5B	Z	-7.842	-7.842	0	%100
181	M133	X	.477	.477	0	%100
182	M133	Z	-.825	-.825	0	%100
183	M134	X	.477	.477	0	%100
184	M134	Z	-.825	-.825	0	%100

Member Distributed Loads (BLC 42 : Structure Wo (30 Deg)) (Continued)

	Member Label	Direction	Start Magnitude[lb/ft,...	End Magnitude[lb/ft,F...	Start Location[ft,%]	End Location[ft,%]
185	MP4B	X	4.527	4.527	0	%100
186	MP4B	Z	-7.842	-7.842	0	%100
187	M136	X	.477	.477	0	%100
188	M136	Z	-.825	-.825	0	%100
189	M137	X	.477	.477	0	%100
190	M137	Z	-.825	-.825	0	%100
191	M138	X	1.34	1.34	0	%100
192	M138	Z	-2.32	-2.32	0	%100
193	M139	X	7.378	7.378	0	%100
194	M139	Z	-12.78	-12.78	0	%100
195	M146	X	3.844	3.844	0	%100
196	M146	Z	-6.657	-6.657	0	%100
197	OVP	X	4.527	4.527	0	%100
198	OVP	Z	-7.842	-7.842	0	%100
199	M145A	X	7.378	7.378	0	%100
200	M145A	Z	-12.78	-12.78	0	%100
201	M146B	X	1.34	1.34	0	%100
202	M146B	Z	-2.32	-2.32	0	%100
203	M147B	X	4.604	4.604	0	%100
204	M147B	Z	-7.975	-7.975	0	%100
205	M148	X	4.604	4.604	0	%100
206	M148	Z	-7.975	-7.975	0	%100

Member Distributed Loads (BLC 43 : Structure Wo (60 Deg))

	Member Label	Direction	Start Magnitude[lb/ft,...	End Magnitude[lb/ft,F...	Start Location[ft,%]	End Location[ft,%]
1	M1	X	5.526	5.526	0	%100
2	M1	Z	-3.19	-3.19	0	%100
3	MP3A	X	7.842	7.842	0	%100
4	MP3A	Z	-4.527	-4.527	0	%100
5	MP1A	X	7.842	7.842	0	%100
6	MP1A	Z	-4.527	-4.527	0	%100
7	M9	X	.619	.619	0	%100
8	M9	Z	-.357	-.357	0	%100
9	M10	X	22.104	22.104	0	%100
10	M10	Z	-12.762	-12.762	0	%100
11	M19	X	5.526	5.526	0	%100
12	M19	Z	-3.19	-3.19	0	%100
13	M28	X	5.297	5.297	0	%100
14	M28	Z	-3.058	-3.058	0	%100
15	M31	X	21.187	21.187	0	%100
16	M31	Z	-12.232	-12.232	0	%100
17	M34	X	5.297	5.297	0	%100
18	M34	Z	-3.058	-3.058	0	%100
19	M40	X	.31	.31	0	%100
20	M40	Z	-.179	-.179	0	%100
21	M46	X	1.238	1.238	0	%100
22	M46	Z	-.715	-.715	0	%100
23	M52	X	.31	.31	0	%100
24	M52	Z	-.179	-.179	0	%100
25	M55	X	4.732	4.732	0	%100
26	M55	Z	-2.732	-2.732	0	%100

Member Distributed Loads (BLC 43 : Structure Wo (60 Deg)) (Continued)

	Member Label	Direction	Start Magnitude[lb/ft,...	End Magnitude[lb/ft,F...	Start Location[ft,%]	End Location[ft,%]
27	M56	X	13.437	13.437	0	%100
28	M56	Z	-7.758	-7.758	0	%100
29	M57	X	11.006	11.006	0	%100
30	M57	Z	-6.354	-6.354	0	%100
31	M58	X	11.006	11.006	0	%100
32	M58	Z	-6.354	-6.354	0	%100
33	M59	X	1.639	1.639	0	%100
34	M59	Z	-.947	-.947	0	%100
35	M60	X	1.639	1.639	0	%100
36	M60	Z	-.947	-.947	0	%100
37	M61	X	1.639	1.639	0	%100
38	M61	Z	-.947	-.947	0	%100
39	M62	X	1.639	1.639	0	%100
40	M62	Z	-.947	-.947	0	%100
41	M63	X	1.639	1.639	0	%100
42	M63	Z	-.947	-.947	0	%100
43	M64	X	1.639	1.639	0	%100
44	M64	Z	-.947	-.947	0	%100
45	M65	X	1.639	1.639	0	%100
46	M65	Z	-.947	-.947	0	%100
47	M66	X	5.813	5.813	0	%100
48	M66	Z	-3.356	-3.356	0	%100
49	FACE1	X	4.127	4.127	0	%100
50	FACE1	Z	-2.383	-2.383	0	%100
51	M76	X	16.509	16.509	0	%100
52	M76	Z	-9.532	-9.532	0	%100
53	M77	X	4.127	4.127	0	%100
54	M77	Z	-2.383	-2.383	0	%100
55	FACE2	X	5.526	5.526	0	%100
56	FACE2	Z	-3.19	-3.19	0	%100
57	M79	X	22.104	22.104	0	%100
58	M79	Z	-12.762	-12.762	0	%100
59	M80	X	5.526	5.526	0	%100
60	M80	Z	-3.19	-3.19	0	%100
61	M85	X	9.584	9.584	0	%100
62	M85	Z	-5.534	-5.534	0	%100
63	M86	X	9.355	9.355	0	%100
64	M86	Z	-5.401	-5.401	0	%100
65	TMAA	X	9.355	9.355	0	%100
66	TMAA	Z	-5.401	-5.401	0	%100
67	M89	X	5.876	5.876	0	%100
68	M89	Z	-3.393	-3.393	0	%100
69	M91	X	2.752	2.752	0	%100
70	M91	Z	-1.589	-1.589	0	%100
71	M92	X	4.127	4.127	0	%100
72	M92	Z	-2.383	-2.383	0	%100
73	M96	X	.619	.619	0	%100
74	M96	Z	-.357	-.357	0	%100
75	M149	X	16.509	16.509	0	%100
76	M149	Z	-9.532	-9.532	0	%100
77	M160	X	9.584	9.584	0	%100
78	M160	Z	-5.534	-5.534	0	%100

Member Distributed Loads (BLC 43 : Structure Wo (60 Deg)) (Continued)

	Member Label	Direction	Start Magnitude[lb/ft,...	End Magnitude[lb/ft,F...	Start Location[ft,%]	End Location[ft,%]
79	M164	X	4.127	4.127	0	%100
80	M164	Z	-2.383	-2.383	0	%100
81	M146A	X	1.238	1.238	0	%100
82	M146A	Z	-.715	-.715	0	%100
83	M149A	X	.31	.31	0	%100
84	M149A	Z	-.179	-.179	0	%100
85	M152	X	.31	.31	0	%100
86	M152	Z	-.179	-.179	0	%100
87	M157	X	9.584	9.584	0	%100
88	M157	Z	-5.534	-5.534	0	%100
89	M158B	X	9.584	9.584	0	%100
90	M158B	Z	-5.534	-5.534	0	%100
91	M159B	X	9.584	9.584	0	%100
92	M159B	Z	-5.534	-5.534	0	%100
93	M160B	X	9.584	9.584	0	%100
94	M160B	Z	-5.534	-5.534	0	%100
95	M157B	X	9.355	9.355	0	%100
96	M157B	Z	-5.401	-5.401	0	%100
97	TMAC	X	9.355	9.355	0	%100
98	TMAC	Z	-5.401	-5.401	0	%100
99	M159	X	9.355	9.355	0	%100
100	M159	Z	-5.401	-5.401	0	%100
101	TMAB	X	9.355	9.355	0	%100
102	TMAB	Z	-5.401	-5.401	0	%100
103	M159C	X	11.006	11.006	0	%100
104	M159C	Z	-6.354	-6.354	0	%100
105	M160D	X	2.752	2.752	0	%100
106	M160D	Z	-1.589	-1.589	0	%100
107	M156B	X	5.876	5.876	0	%100
108	M156B	Z	-3.393	-3.393	0	%100
109	M157C	X	11.006	11.006	0	%100
110	M157C	Z	-6.354	-6.354	0	%100
111	M158C	X	11.006	11.006	0	%100
112	M158C	Z	-6.354	-6.354	0	%100
113	M159D	X	5.876	5.876	0	%100
114	M159D	Z	-3.393	-3.393	0	%100
115	M160E	X	5.876	5.876	0	%100
116	M160E	Z	-3.393	-3.393	0	%100
117	M127	X	0	0	0	%100
118	M127	Z	0	0	0	%100
119	M128	X	5.813	5.813	0	%100
120	M128	Z	-3.356	-3.356	0	%100
121	MP2A	X	7.842	7.842	0	%100
122	MP2A	Z	-4.527	-4.527	0	%100
123	M100	X	.619	.619	0	%100
124	M100	Z	-.357	-.357	0	%100
125	M101	X	.619	.619	0	%100
126	M101	Z	-.357	-.357	0	%100
127	MP5A	X	7.842	7.842	0	%100
128	MP5A	Z	-4.527	-4.527	0	%100
129	M103	X	.619	.619	0	%100
130	M103	Z	-.357	-.357	0	%100

Member Distributed Loads (BLC 43 : Structure Wo (60 Deg)) (Continued)

	Member Label	Direction	Start Magnitude[lb/ft,...	End Magnitude[lb/ft,F...	Start Location[ft,%]	End Location[ft,%]
131	M104	X	.619	.619	0	%100
132	M104	Z	-.357	-.357	0	%100
133	MP4A	X	7.842	7.842	0	%100
134	MP4A	Z	-4.527	-4.527	0	%100
135	LIVE1	X	.619	.619	0	%100
136	LIVE1	Z	-.357	-.357	0	%100
137	M107	X	.619	.619	0	%100
138	M107	Z	-.357	-.357	0	%100
139	MP3C	X	7.842	7.842	0	%100
140	MP3C	Z	-4.527	-4.527	0	%100
141	MP1C	X	7.842	7.842	0	%100
142	MP1C	Z	-4.527	-4.527	0	%100
143	M111	X	0	0	0	%100
144	M111	Z	0	0	0	%100
145	M113	X	0	0	0	%100
146	M113	Z	0	0	0	%100
147	MP2C	X	7.842	7.842	0	%100
148	MP2C	Z	-4.527	-4.527	0	%100
149	M115	X	0	0	0	%100
150	M115	Z	0	0	0	%100
151	M116	X	0	0	0	%100
152	M116	Z	0	0	0	%100
153	MP5C	X	7.842	7.842	0	%100
154	MP5C	Z	-4.527	-4.527	0	%100
155	M118	X	0	0	0	%100
156	M118	Z	0	0	0	%100
157	M119	X	0	0	0	%100
158	M119	Z	0	0	0	%100
159	MP4C	X	7.842	7.842	0	%100
160	MP4C	Z	-4.527	-4.527	0	%100
161	M121	X	0	0	0	%100
162	M121	Z	0	0	0	%100
163	M122	X	0	0	0	%100
164	M122	Z	0	0	0	%100
165	MP3B	X	7.842	7.842	0	%100
166	MP3B	Z	-4.527	-4.527	0	%100
167	MP1B	X	7.842	7.842	0	%100
168	MP1B	Z	-4.527	-4.527	0	%100
169	M126	X	.619	.619	0	%100
170	M126	Z	-.357	-.357	0	%100
171	M128A	X	.619	.619	0	%100
172	M128A	Z	-.357	-.357	0	%100
173	MP2B	X	7.842	7.842	0	%100
174	MP2B	Z	-4.527	-4.527	0	%100
175	M130	X	.619	.619	0	%100
176	M130	Z	-.357	-.357	0	%100
177	M131	X	.619	.619	0	%100
178	M131	Z	-.357	-.357	0	%100
179	MP5B	X	7.842	7.842	0	%100
180	MP5B	Z	-4.527	-4.527	0	%100
181	M133	X	.619	.619	0	%100
182	M133	Z	-.357	-.357	0	%100

Member Distributed Loads (BLC 43 : Structure Wo (60 Deg)) (Continued)

	Member Label	Direction	Start Magnitude[lb/ft,...	End Magnitude[lb/ft,F...	Start Location[ft,%]	End Location[ft,%]
183	M134	X	.619	.619	0	%100
184	M134	Z	-.357	-.357	0	%100
185	MP4B	X	7.842	7.842	0	%100
186	MP4B	Z	-4.527	-4.527	0	%100
187	M136	X	.619	.619	0	%100
188	M136	Z	-.357	-.357	0	%100
189	M137	X	.619	.619	0	%100
190	M137	Z	-.357	-.357	0	%100
191	M138	X	2.603	2.603	0	%100
192	M138	Z	-1.503	-1.503	0	%100
193	M139	X	13.063	13.063	0	%100
194	M139	Z	-7.542	-7.542	0	%100
195	M146	X	6.657	6.657	0	%100
196	M146	Z	-3.844	-3.844	0	%100
197	OVP	X	7.842	7.842	0	%100
198	OVP	Z	-4.527	-4.527	0	%100
199	M145A	X	7.408	7.408	0	%100
200	M145A	Z	-4.277	-4.277	0	%100
201	M146B	X	7.408	7.408	0	%100
202	M146B	Z	-4.277	-4.277	0	%100
203	M147B	X	13.063	13.063	0	%100
204	M147B	Z	-7.542	-7.542	0	%100
205	M148	X	2.603	2.603	0	%100
206	M148	Z	-1.503	-1.503	0	%100

Member Distributed Loads (BLC 44 : Structure Wo (90 Deg))

	Member Label	Direction	Start Magnitude[lb/ft,...	End Magnitude[lb/ft,F...	Start Location[ft,%]	End Location[ft,%]
1	M1	X	0	0	0	%100
2	M1	Z	0	0	0	%100
3	MP3A	X	9.055	9.055	0	%100
4	MP3A	Z	0	0	0	%100
5	MP1A	X	9.055	9.055	0	%100
6	MP1A	Z	0	0	0	%100
7	M9	X	.953	.953	0	%100
8	M9	Z	0	0	0	%100
9	M10	X	19.143	19.143	0	%100
10	M10	Z	0	0	0	%100
11	M19	X	19.143	19.143	0	%100
12	M19	Z	0	0	0	%100
13	M28	X	0	0	0	%100
14	M28	Z	0	0	0	%100
15	M31	X	18.348	18.348	0	%100
16	M31	Z	0	0	0	%100
17	M34	X	18.348	18.348	0	%100
18	M34	Z	0	0	0	%100
19	M40	X	0	0	0	%100
20	M40	Z	0	0	0	%100
21	M46	X	1.072	1.072	0	%100
22	M46	Z	0	0	0	%100
23	M52	X	1.072	1.072	0	%100
24	M52	Z	0	0	0	%100

Member Distributed Loads (BLC 44 : Structure Wo (90 Deg)) (Continued)

	Member Label	Direction	Start Magnitude[lb/ft,...	End Magnitude[lb/ft,F...	Start Location[ft,%]	End Location[ft,%]
25	M55	X	0	0	0	%100
26	M55	Z	0	0	0	%100
27	M56	X	20.687	20.687	0	%100
28	M56	Z	0	0	0	%100
29	M57	X	12.709	12.709	0	%100
30	M57	Z	0	0	0	%100
31	M58	X	12.709	12.709	0	%100
32	M58	Z	0	0	0	%100
33	M59	X	2.524	2.524	0	%100
34	M59	Z	0	0	0	%100
35	M60	X	2.524	2.524	0	%100
36	M60	Z	0	0	0	%100
37	M61	X	2.524	2.524	0	%100
38	M61	Z	0	0	0	%100
39	M62	X	2.524	2.524	0	%100
40	M62	Z	0	0	0	%100
41	M63	X	2.524	2.524	0	%100
42	M63	Z	0	0	0	%100
43	M64	X	2.524	2.524	0	%100
44	M64	Z	0	0	0	%100
45	M65	X	2.524	2.524	0	%100
46	M65	Z	0	0	0	%100
47	M66	X	8.949	8.949	0	%100
48	M66	Z	0	0	0	%100
49	FACE1	X	0	0	0	%100
50	FACE1	Z	0	0	0	%100
51	M76	X	14.297	14.297	0	%100
52	M76	Z	0	0	0	%100
53	M77	X	14.297	14.297	0	%100
54	M77	Z	0	0	0	%100
55	FACE2	X	0	0	0	%100
56	FACE2	Z	0	0	0	%100
57	M79	X	19.143	19.143	0	%100
58	M79	Z	0	0	0	%100
59	M80	X	19.143	19.143	0	%100
60	M80	Z	0	0	0	%100
61	M85	X	11.067	11.067	0	%100
62	M85	Z	0	0	0	%100
63	M86	X	10.802	10.802	0	%100
64	M86	Z	0	0	0	%100
65	TMAA	X	10.802	10.802	0	%100
66	TMAA	Z	0	0	0	%100
67	M89	X	4.811	4.811	0	%100
68	M89	Z	0	0	0	%100
69	M91	X	0	0	0	%100
70	M91	Z	0	0	0	%100
71	M92	X	0	0	0	%100
72	M92	Z	0	0	0	%100
73	M96	X	.953	.953	0	%100
74	M96	Z	0	0	0	%100
75	M149	X	14.297	14.297	0	%100
76	M149	Z	0	0	0	%100

Member Distributed Loads (BLC 44 : Structure Wo (90 Deg)) (Continued)

	Member Label	Direction	Start Magnitude[lb/ft,...	End Magnitude[lb/ft,F...	Start Location[ft,%]	End Location[ft,%]
77	M160	X	11.067	11.067	0	%100
78	M160	Z	0	0	0	%100
79	M164	X	14.297	14.297	0	%100
80	M164	Z	0	0	0	%100
81	M146A	X	1.072	1.072	0	%100
82	M146A	Z	0	0	0	%100
83	M149A	X	1.072	1.072	0	%100
84	M149A	Z	0	0	0	%100
85	M152	X	0	0	0	%100
86	M152	Z	0	0	0	%100
87	M157	X	11.067	11.067	0	%100
88	M157	Z	0	0	0	%100
89	M158B	X	11.067	11.067	0	%100
90	M158B	Z	0	0	0	%100
91	M159B	X	11.067	11.067	0	%100
92	M159B	Z	0	0	0	%100
93	M160B	X	11.067	11.067	0	%100
94	M160B	Z	0	0	0	%100
95	M157B	X	10.802	10.802	0	%100
96	M157B	Z	0	0	0	%100
97	TMAC	X	10.802	10.802	0	%100
98	TMAC	Z	0	0	0	%100
99	M159	X	10.802	10.802	0	%100
100	M159	Z	0	0	0	%100
101	TMAB	X	10.802	10.802	0	%100
102	TMAB	Z	0	0	0	%100
103	M159C	X	9.532	9.532	0	%100
104	M159C	Z	0	0	0	%100
105	M160D	X	9.532	9.532	0	%100
106	M160D	Z	0	0	0	%100
107	M156B	X	4.811	4.811	0	%100
108	M156B	Z	0	0	0	%100
109	M157C	X	10.734	10.734	0	%100
110	M157C	Z	0	0	0	%100
111	M158C	X	10.734	10.734	0	%100
112	M158C	Z	0	0	0	%100
113	M159D	X	10.734	10.734	0	%100
114	M159D	Z	0	0	0	%100
115	M160E	X	10.734	10.734	0	%100
116	M160E	Z	0	0	0	%100
117	M127	X	2.237	2.237	0	%100
118	M127	Z	0	0	0	%100
119	M128	X	2.237	2.237	0	%100
120	M128	Z	0	0	0	%100
121	MP2A	X	9.055	9.055	0	%100
122	MP2A	Z	0	0	0	%100
123	M100	X	.953	.953	0	%100
124	M100	Z	0	0	0	%100
125	M101	X	.953	.953	0	%100
126	M101	Z	0	0	0	%100
127	MP5A	X	9.055	9.055	0	%100
128	MP5A	Z	0	0	0	%100

Member Distributed Loads (BLC 44 : Structure Wo (90 Deg)) (Continued)

	Member Label	Direction	Start Magnitude[lb/ft,...	End Magnitude[lb/ft,F...	Start Location[ft,%]	End Location[ft,%]
129	M103	X	.953	.953	0	%100
130	M103	Z	0	0	0	%100
131	M104	X	.953	.953	0	%100
132	M104	Z	0	0	0	%100
133	MP4A	X	9.055	9.055	0	%100
134	MP4A	Z	0	0	0	%100
135	LIVE1	X	.953	.953	0	%100
136	LIVE1	Z	0	0	0	%100
137	M107	X	.953	.953	0	%100
138	M107	Z	0	0	0	%100
139	MP3C	X	9.055	9.055	0	%100
140	MP3C	Z	0	0	0	%100
141	MP1C	X	9.055	9.055	0	%100
142	MP1C	Z	0	0	0	%100
143	M111	X	.238	.238	0	%100
144	M111	Z	0	0	0	%100
145	M113	X	.238	.238	0	%100
146	M113	Z	0	0	0	%100
147	MP2C	X	9.055	9.055	0	%100
148	MP2C	Z	0	0	0	%100
149	M115	X	.238	.238	0	%100
150	M115	Z	0	0	0	%100
151	M116	X	.238	.238	0	%100
152	M116	Z	0	0	0	%100
153	MP5C	X	9.055	9.055	0	%100
154	MP5C	Z	0	0	0	%100
155	M118	X	.238	.238	0	%100
156	M118	Z	0	0	0	%100
157	M119	X	.238	.238	0	%100
158	M119	Z	0	0	0	%100
159	MP4C	X	9.055	9.055	0	%100
160	MP4C	Z	0	0	0	%100
161	M121	X	.238	.238	0	%100
162	M121	Z	0	0	0	%100
163	M122	X	.238	.238	0	%100
164	M122	Z	0	0	0	%100
165	MP3B	X	9.055	9.055	0	%100
166	MP3B	Z	0	0	0	%100
167	MP1B	X	9.055	9.055	0	%100
168	MP1B	Z	0	0	0	%100
169	M126	X	.238	.238	0	%100
170	M126	Z	0	0	0	%100
171	M128A	X	.238	.238	0	%100
172	M128A	Z	0	0	0	%100
173	MP2B	X	9.055	9.055	0	%100
174	MP2B	Z	0	0	0	%100
175	M130	X	.238	.238	0	%100
176	M130	Z	0	0	0	%100
177	M131	X	.238	.238	0	%100
178	M131	Z	0	0	0	%100
179	MP5B	X	9.055	9.055	0	%100
180	MP5B	Z	0	0	0	%100

Member Distributed Loads (BLC 44 : Structure Wo (90 Deg)) (Continued)

	Member Label	Direction	Start Magnitude[lb/ft,...	End Magnitude[lb/ft,F...	Start Location[ft,%]	End Location[ft,%]
181	M133	X	.238	.238	0	%100
182	M133	Z	0	0	0	%100
183	M134	X	.238	.238	0	%100
184	M134	Z	0	0	0	%100
185	MP4B	X	9.055	9.055	0	%100
186	MP4B	Z	0	0	0	%100
187	M136	X	.238	.238	0	%100
188	M136	Z	0	0	0	%100
189	M137	X	.238	.238	0	%100
190	M137	Z	0	0	0	%100
191	M138	X	9.209	9.209	0	%100
192	M138	Z	0	0	0	%100
193	M139	X	9.209	9.209	0	%100
194	M139	Z	0	0	0	%100
195	M146	X	7.687	7.687	0	%100
196	M146	Z	0	0	0	%100
197	OVP	X	9.055	9.055	0	%100
198	OVP	Z	0	0	0	%100
199	M145A	X	2.679	2.679	0	%100
200	M145A	Z	0	0	0	%100
201	M146B	X	14.757	14.757	0	%100
202	M146B	Z	0	0	0	%100
203	M147B	X	14.757	14.757	0	%100
204	M147B	Z	0	0	0	%100
205	M148	X	2.679	2.679	0	%100
206	M148	Z	0	0	0	%100

Member Distributed Loads (BLC 45 : Structure Wo (120 Deg))

	Member Label	Direction	Start Magnitude[lb/ft,...	End Magnitude[lb/ft,F...	Start Location[ft,%]	End Location[ft,%]
1	M1	X	5.526	5.526	0	%100
2	M1	Z	3.19	3.19	0	%100
3	MP3A	X	7.842	7.842	0	%100
4	MP3A	Z	4.527	4.527	0	%100
5	MP1A	X	7.842	7.842	0	%100
6	MP1A	Z	4.527	4.527	0	%100
7	M9	X	.619	.619	0	%100
8	M9	Z	.357	.357	0	%100
9	M10	X	5.526	5.526	0	%100
10	M10	Z	3.19	3.19	0	%100
11	M19	X	22.104	22.104	0	%100
12	M19	Z	12.762	12.762	0	%100
13	M28	X	5.297	5.297	0	%100
14	M28	Z	3.058	3.058	0	%100
15	M31	X	5.297	5.297	0	%100
16	M31	Z	3.058	3.058	0	%100
17	M34	X	21.187	21.187	0	%100
18	M34	Z	12.232	12.232	0	%100
19	M40	X	.31	.31	0	%100
20	M40	Z	.179	.179	0	%100
21	M46	X	.31	.31	0	%100
22	M46	Z	.179	.179	0	%100

Member Distributed Loads (BLC 45 : Structure Wo (120 Deg)) (Continued)

	Member Label	Direction	Start Magnitude[lb/ft,...	End Magnitude[lb/ft,F...	Start Location[ft,%]	End Location[ft,%]
23	M52	X	1.238	1.238	0	%100
24	M52	Z	.715	.715	0	%100
25	M55	X	4.732	4.732	0	%100
26	M55	Z	2.732	2.732	0	%100
27	M56	X	13.437	13.437	0	%100
28	M56	Z	7.758	7.758	0	%100
29	M57	X	11.006	11.006	0	%100
30	M57	Z	6.354	6.354	0	%100
31	M58	X	11.006	11.006	0	%100
32	M58	Z	6.354	6.354	0	%100
33	M59	X	1.639	1.639	0	%100
34	M59	Z	.947	.947	0	%100
35	M60	X	1.639	1.639	0	%100
36	M60	Z	.947	.947	0	%100
37	M61	X	1.639	1.639	0	%100
38	M61	Z	.947	.947	0	%100
39	M62	X	1.639	1.639	0	%100
40	M62	Z	.947	.947	0	%100
41	M63	X	1.639	1.639	0	%100
42	M63	Z	.947	.947	0	%100
43	M64	X	1.639	1.639	0	%100
44	M64	Z	.947	.947	0	%100
45	M65	X	1.639	1.639	0	%100
46	M65	Z	.947	.947	0	%100
47	M66	X	5.813	5.813	0	%100
48	M66	Z	3.356	3.356	0	%100
49	FACE1	X	4.127	4.127	0	%100
50	FACE1	Z	2.383	2.383	0	%100
51	M76	X	4.127	4.127	0	%100
52	M76	Z	2.383	2.383	0	%100
53	M77	X	16.509	16.509	0	%100
54	M77	Z	9.532	9.532	0	%100
55	FACE2	X	5.526	5.526	0	%100
56	FACE2	Z	3.19	3.19	0	%100
57	M79	X	5.526	5.526	0	%100
58	M79	Z	3.19	3.19	0	%100
59	M80	X	22.104	22.104	0	%100
60	M80	Z	12.762	12.762	0	%100
61	M85	X	9.584	9.584	0	%100
62	M85	Z	5.534	5.534	0	%100
63	M86	X	9.355	9.355	0	%100
64	M86	Z	5.401	5.401	0	%100
65	TMAA	X	9.355	9.355	0	%100
66	TMAA	Z	5.401	5.401	0	%100
67	M89	X	5.876	5.876	0	%100
68	M89	Z	3.393	3.393	0	%100
69	M91	X	2.752	2.752	0	%100
70	M91	Z	1.589	1.589	0	%100
71	M92	X	4.127	4.127	0	%100
72	M92	Z	2.383	2.383	0	%100
73	M96	X	.619	.619	0	%100
74	M96	Z	.357	.357	0	%100

Member Distributed Loads (BLC 45 : Structure Wo (120 Deg)) (Continued)

	Member Label	Direction	Start Magnitude[lb/ft,...	End Magnitude[lb/ft,F...	Start Location[ft,%]	End Location[ft,%]
75	M149	X	4.127	4.127	0	%100
76	M149	Z	2.383	2.383	0	%100
77	M160	X	9.584	9.584	0	%100
78	M160	Z	5.534	5.534	0	%100
79	M164	X	16.509	16.509	0	%100
80	M164	Z	9.532	9.532	0	%100
81	M146A	X	.31	.31	0	%100
82	M146A	Z	.179	.179	0	%100
83	M149A	X	1.238	1.238	0	%100
84	M149A	Z	.715	.715	0	%100
85	M152	X	.31	.31	0	%100
86	M152	Z	.179	.179	0	%100
87	M157	X	9.584	9.584	0	%100
88	M157	Z	5.534	5.534	0	%100
89	M158B	X	9.584	9.584	0	%100
90	M158B	Z	5.534	5.534	0	%100
91	M159B	X	9.584	9.584	0	%100
92	M159B	Z	5.534	5.534	0	%100
93	M160B	X	9.584	9.584	0	%100
94	M160B	Z	5.534	5.534	0	%100
95	M157B	X	9.355	9.355	0	%100
96	M157B	Z	5.401	5.401	0	%100
97	TMAC	X	9.355	9.355	0	%100
98	TMAC	Z	5.401	5.401	0	%100
99	M159	X	9.355	9.355	0	%100
100	M159	Z	5.401	5.401	0	%100
101	TMAB	X	9.355	9.355	0	%100
102	TMAB	Z	5.401	5.401	0	%100
103	M159C	X	2.752	2.752	0	%100
104	M159C	Z	1.589	1.589	0	%100
105	M160D	X	11.006	11.006	0	%100
106	M160D	Z	6.354	6.354	0	%100
107	M156B	X	5.876	5.876	0	%100
108	M156B	Z	3.393	3.393	0	%100
109	M157C	X	5.876	5.876	0	%100
110	M157C	Z	3.393	3.393	0	%100
111	M158C	X	5.876	5.876	0	%100
112	M158C	Z	3.393	3.393	0	%100
113	M159D	X	11.006	11.006	0	%100
114	M159D	Z	6.354	6.354	0	%100
115	M160E	X	11.006	11.006	0	%100
116	M160E	Z	6.354	6.354	0	%100
117	M127	X	5.813	5.813	0	%100
118	M127	Z	3.356	3.356	0	%100
119	M128	X	0	0	0	%100
120	M128	Z	0	0	0	%100
121	MP2A	X	7.842	7.842	0	%100
122	MP2A	Z	4.527	4.527	0	%100
123	M100	X	.619	.619	0	%100
124	M100	Z	.357	.357	0	%100
125	M101	X	.619	.619	0	%100
126	M101	Z	.357	.357	0	%100

Member Distributed Loads (BLC 45 : Structure Wo (120 Deg)) (Continued)

	Member Label	Direction	Start Magnitude[lb/ft,...	End Magnitude[lb/ft,F...	Start Location[ft,%]	End Location[ft,%]
127	MP5A	X	7.842	7.842	0	%100
128	MP5A	Z	4.527	4.527	0	%100
129	M103	X	.619	.619	0	%100
130	M103	Z	.357	.357	0	%100
131	M104	X	.619	.619	0	%100
132	M104	Z	.357	.357	0	%100
133	MP4A	X	7.842	7.842	0	%100
134	MP4A	Z	4.527	4.527	0	%100
135	LIVE1	X	.619	.619	0	%100
136	LIVE1	Z	.357	.357	0	%100
137	M107	X	.619	.619	0	%100
138	M107	Z	.357	.357	0	%100
139	MP3C	X	7.842	7.842	0	%100
140	MP3C	Z	4.527	4.527	0	%100
141	MP1C	X	7.842	7.842	0	%100
142	MP1C	Z	4.527	4.527	0	%100
143	M111	X	.619	.619	0	%100
144	M111	Z	.357	.357	0	%100
145	M113	X	.619	.619	0	%100
146	M113	Z	.357	.357	0	%100
147	MP2C	X	7.842	7.842	0	%100
148	MP2C	Z	4.527	4.527	0	%100
149	M115	X	.619	.619	0	%100
150	M115	Z	.357	.357	0	%100
151	M116	X	.619	.619	0	%100
152	M116	Z	.357	.357	0	%100
153	MP5C	X	7.842	7.842	0	%100
154	MP5C	Z	4.527	4.527	0	%100
155	M118	X	.619	.619	0	%100
156	M118	Z	.357	.357	0	%100
157	M119	X	.619	.619	0	%100
158	M119	Z	.357	.357	0	%100
159	MP4C	X	7.842	7.842	0	%100
160	MP4C	Z	4.527	4.527	0	%100
161	M121	X	.619	.619	0	%100
162	M121	Z	.357	.357	0	%100
163	M122	X	.619	.619	0	%100
164	M122	Z	.357	.357	0	%100
165	MP3B	X	7.842	7.842	0	%100
166	MP3B	Z	4.527	4.527	0	%100
167	MP1B	X	7.842	7.842	0	%100
168	MP1B	Z	4.527	4.527	0	%100
169	M126	X	0	0	0	%100
170	M126	Z	0	0	0	%100
171	M128A	X	0	0	0	%100
172	M128A	Z	0	0	0	%100
173	MP2B	X	7.842	7.842	0	%100
174	MP2B	Z	4.527	4.527	0	%100
175	M130	X	0	0	0	%100
176	M130	Z	0	0	0	%100
177	M131	X	0	0	0	%100
178	M131	Z	0	0	0	%100

Member Distributed Loads (BLC 45 : Structure Wo (120 Deg)) (Continued)

	Member Label	Direction	Start Magnitude[lb/ft,...	End Magnitude[lb/ft,F...	Start Location[ft,%]	End Location[ft,%]
179	MP5B	X	7.842	7.842	0	%100
180	MP5B	Z	4.527	4.527	0	%100
181	M133	X	0	0	0	%100
182	M133	Z	0	0	0	%100
183	M134	X	0	0	0	%100
184	M134	Z	0	0	0	%100
185	MP4B	X	7.842	7.842	0	%100
186	MP4B	Z	4.527	4.527	0	%100
187	M136	X	0	0	0	%100
188	M136	Z	0	0	0	%100
189	M137	X	0	0	0	%100
190	M137	Z	0	0	0	%100
191	M138	X	13.063	13.063	0	%100
192	M138	Z	7.542	7.542	0	%100
193	M139	X	2.603	2.603	0	%100
194	M139	Z	1.503	1.503	0	%100
195	M146	X	6.657	6.657	0	%100
196	M146	Z	3.844	3.844	0	%100
197	OVP	X	7.842	7.842	0	%100
198	OVP	Z	4.527	4.527	0	%100
199	M145A	X	2.603	2.603	0	%100
200	M145A	Z	1.503	1.503	0	%100
201	M146B	X	13.063	13.063	0	%100
202	M146B	Z	7.542	7.542	0	%100
203	M147B	X	7.408	7.408	0	%100
204	M147B	Z	4.277	4.277	0	%100
205	M148	X	7.408	7.408	0	%100
206	M148	Z	4.277	4.277	0	%100

Member Distributed Loads (BLC 46 : Structure Wo (150 Deg))

	Member Label	Direction	Start Magnitude[lb/ft,...	End Magnitude[lb/ft,F...	Start Location[ft,%]	End Location[ft,%]
1	M1	X	9.571	9.571	0	%100
2	M1	Z	16.578	16.578	0	%100
3	MP3A	X	4.527	4.527	0	%100
4	MP3A	Z	7.842	7.842	0	%100
5	MP1A	X	4.527	4.527	0	%100
6	MP1A	Z	7.842	7.842	0	%100
7	M9	X	.119	.119	0	%100
8	M9	Z	.206	.206	0	%100
9	M10	X	0	0	0	%100
10	M10	Z	0	0	0	%100
11	M19	X	9.571	9.571	0	%100
12	M19	Z	16.578	16.578	0	%100
13	M28	X	9.174	9.174	0	%100
14	M28	Z	15.89	15.89	0	%100
15	M31	X	0	0	0	%100
16	M31	Z	0	0	0	%100
17	M34	X	9.174	9.174	0	%100
18	M34	Z	15.89	15.89	0	%100
19	M40	X	.536	.536	0	%100
20	M40	Z	.929	.929	0	%100

Member Distributed Loads (BLC 46 : Structure Wo (150 Deg)) (Continued)

	Member Label	Direction	Start Magnitude[lb/ft,...	End Magnitude[lb/ft,F...	Start Location[ft,%]	End Location[ft,%]
21	M46	X	0	0	0	%100
22	M46	Z	0	0	0	%100
23	M52	X	.536	.536	0	%100
24	M52	Z	.929	.929	0	%100
25	M55	X	8.196	8.196	0	%100
26	M55	Z	14.197	14.197	0	%100
27	M56	X	2.586	2.586	0	%100
28	M56	Z	4.479	4.479	0	%100
29	M57	X	6.354	6.354	0	%100
30	M57	Z	11.006	11.006	0	%100
31	M58	X	6.354	6.354	0	%100
32	M58	Z	11.006	11.006	0	%100
33	M59	X	.316	.316	0	%100
34	M59	Z	.546	.546	0	%100
35	M60	X	.316	.316	0	%100
36	M60	Z	.546	.546	0	%100
37	M61	X	.316	.316	0	%100
38	M61	Z	.546	.546	0	%100
39	M62	X	.316	.316	0	%100
40	M62	Z	.546	.546	0	%100
41	M63	X	.316	.316	0	%100
42	M63	Z	.546	.546	0	%100
43	M64	X	.316	.316	0	%100
44	M64	Z	.546	.546	0	%100
45	M65	X	.316	.316	0	%100
46	M65	Z	.546	.546	0	%100
47	M66	X	1.119	1.119	0	%100
48	M66	Z	1.938	1.938	0	%100
49	FACE1	X	7.149	7.149	0	%100
50	FACE1	Z	12.382	12.382	0	%100
51	M76	X	0	0	0	%100
52	M76	Z	0	0	0	%100
53	M77	X	7.149	7.149	0	%100
54	M77	Z	12.382	12.382	0	%100
55	FACE2	X	9.571	9.571	0	%100
56	FACE2	Z	16.578	16.578	0	%100
57	M79	X	0	0	0	%100
58	M79	Z	0	0	0	%100
59	M80	X	9.571	9.571	0	%100
60	M80	Z	16.578	16.578	0	%100
61	M85	X	5.534	5.534	0	%100
62	M85	Z	9.584	9.584	0	%100
63	M86	X	5.401	5.401	0	%100
64	M86	Z	9.355	9.355	0	%100
65	TMAA	X	5.401	5.401	0	%100
66	TMAA	Z	9.355	9.355	0	%100
67	M89	X	5.367	5.367	0	%100
68	M89	Z	9.296	9.296	0	%100
69	M91	X	4.766	4.766	0	%100
70	M91	Z	8.255	8.255	0	%100
71	M92	X	7.149	7.149	0	%100
72	M92	Z	12.382	12.382	0	%100

Member Distributed Loads (BLC 46 : Structure Wo (150 Deg)) (Continued)

	Member Label	Direction	Start Magnitude[lb/ft,...	End Magnitude[lb/ft,F...	Start Location[ft,%]	End Location[ft,%]
73	M96	X	.119	.119	0	%100
74	M96	Z	.206	.206	0	%100
75	M149	X	0	0	0	%100
76	M149	Z	0	0	0	%100
77	M160	X	5.534	5.534	0	%100
78	M160	Z	9.584	9.584	0	%100
79	M164	X	7.149	7.149	0	%100
80	M164	Z	12.382	12.382	0	%100
81	M146A	X	0	0	0	%100
82	M146A	Z	0	0	0	%100
83	M149A	X	.536	.536	0	%100
84	M149A	Z	.929	.929	0	%100
85	M152	X	.536	.536	0	%100
86	M152	Z	.929	.929	0	%100
87	M157	X	5.534	5.534	0	%100
88	M157	Z	9.584	9.584	0	%100
89	M158B	X	5.534	5.534	0	%100
90	M158B	Z	9.584	9.584	0	%100
91	M159B	X	5.534	5.534	0	%100
92	M159B	Z	9.584	9.584	0	%100
93	M160B	X	5.534	5.534	0	%100
94	M160B	Z	9.584	9.584	0	%100
95	M157B	X	5.401	5.401	0	%100
96	M157B	Z	9.355	9.355	0	%100
97	TMAC	X	5.401	5.401	0	%100
98	TMAC	Z	9.355	9.355	0	%100
99	M159	X	5.401	5.401	0	%100
100	M159	Z	9.355	9.355	0	%100
101	TMAB	X	5.401	5.401	0	%100
102	TMAB	Z	9.355	9.355	0	%100
103	M159C	X	0	0	0	%100
104	M159C	Z	0	0	0	%100
105	M160D	X	4.766	4.766	0	%100
106	M160D	Z	8.255	8.255	0	%100
107	M156B	X	5.367	5.367	0	%100
108	M156B	Z	9.296	9.296	0	%100
109	M157C	X	2.405	2.405	0	%100
110	M157C	Z	4.166	4.166	0	%100
111	M158C	X	2.405	2.405	0	%100
112	M158C	Z	4.166	4.166	0	%100
113	M159D	X	5.367	5.367	0	%100
114	M159D	Z	9.296	9.296	0	%100
115	M160E	X	5.367	5.367	0	%100
116	M160E	Z	9.296	9.296	0	%100
117	M127	X	4.475	4.475	0	%100
118	M127	Z	7.75	7.75	0	%100
119	M128	X	1.119	1.119	0	%100
120	M128	Z	1.938	1.938	0	%100
121	MP2A	X	4.527	4.527	0	%100
122	MP2A	Z	7.842	7.842	0	%100
123	M100	X	.119	.119	0	%100
124	M100	Z	.206	.206	0	%100

Member Distributed Loads (BLC 46 : Structure Wo (150 Deg)) (Continued)

	Member Label	Direction	Start Magnitude[lb/ft,...	End Magnitude[lb/ft,F...	Start Location[ft,%]	End Location[ft,%]
125	M101	X	.119	.119	0	%100
126	M101	Z	.206	.206	0	%100
127	MP5A	X	4.527	4.527	0	%100
128	MP5A	Z	7.842	7.842	0	%100
129	M103	X	.119	.119	0	%100
130	M103	Z	.206	.206	0	%100
131	M104	X	.119	.119	0	%100
132	M104	Z	.206	.206	0	%100
133	MP4A	X	4.527	4.527	0	%100
134	MP4A	Z	7.842	7.842	0	%100
135	LIVE1	X	.119	.119	0	%100
136	LIVE1	Z	.206	.206	0	%100
137	M107	X	.119	.119	0	%100
138	M107	Z	.206	.206	0	%100
139	MP3C	X	4.527	4.527	0	%100
140	MP3C	Z	7.842	7.842	0	%100
141	MP1C	X	4.527	4.527	0	%100
142	MP1C	Z	7.842	7.842	0	%100
143	M111	X	.477	.477	0	%100
144	M111	Z	.825	.825	0	%100
145	M113	X	.477	.477	0	%100
146	M113	Z	.825	.825	0	%100
147	MP2C	X	4.527	4.527	0	%100
148	MP2C	Z	7.842	7.842	0	%100
149	M115	X	.477	.477	0	%100
150	M115	Z	.825	.825	0	%100
151	M116	X	.477	.477	0	%100
152	M116	Z	.825	.825	0	%100
153	MP5C	X	4.527	4.527	0	%100
154	MP5C	Z	7.842	7.842	0	%100
155	M118	X	.477	.477	0	%100
156	M118	Z	.825	.825	0	%100
157	M119	X	.477	.477	0	%100
158	M119	Z	.825	.825	0	%100
159	MP4C	X	4.527	4.527	0	%100
160	MP4C	Z	7.842	7.842	0	%100
161	M121	X	.477	.477	0	%100
162	M121	Z	.825	.825	0	%100
163	M122	X	.477	.477	0	%100
164	M122	Z	.825	.825	0	%100
165	MP3B	X	4.527	4.527	0	%100
166	MP3B	Z	7.842	7.842	0	%100
167	MP1B	X	4.527	4.527	0	%100
168	MP1B	Z	7.842	7.842	0	%100
169	M126	X	.119	.119	0	%100
170	M126	Z	.206	.206	0	%100
171	M128A	X	.119	.119	0	%100
172	M128A	Z	.206	.206	0	%100
173	MP2B	X	4.527	4.527	0	%100
174	MP2B	Z	7.842	7.842	0	%100
175	M130	X	.119	.119	0	%100
176	M130	Z	.206	.206	0	%100

Member Distributed Loads (BLC 46 : Structure Wo (150 Deg)) (Continued)

	Member Label	Direction	Start Magnitude[lb/ft,...	End Magnitude[lb/ft,F...	Start Location[ft,%]	End Location[ft,%]
177	M131	X	.119	.119	0	%100
178	M131	Z	.206	.206	0	%100
179	MP5B	X	4.527	4.527	0	%100
180	MP5B	Z	7.842	7.842	0	%100
181	M133	X	.119	.119	0	%100
182	M133	Z	.206	.206	0	%100
183	M134	X	.119	.119	0	%100
184	M134	Z	.206	.206	0	%100
185	MP4B	X	4.527	4.527	0	%100
186	MP4B	Z	7.842	7.842	0	%100
187	M136	X	.119	.119	0	%100
188	M136	Z	.206	.206	0	%100
189	M137	X	.119	.119	0	%100
190	M137	Z	.206	.206	0	%100
191	M138	X	7.378	7.378	0	%100
192	M138	Z	12.78	12.78	0	%100
193	M139	X	1.34	1.34	0	%100
194	M139	Z	2.32	2.32	0	%100
195	M146	X	3.844	3.844	0	%100
196	M146	Z	6.657	6.657	0	%100
197	OVP	X	4.527	4.527	0	%100
198	OVP	Z	7.842	7.842	0	%100
199	M145A	X	4.604	4.604	0	%100
200	M145A	Z	7.975	7.975	0	%100
201	M146B	X	4.604	4.604	0	%100
202	M146B	Z	7.975	7.975	0	%100
203	M147B	X	1.34	1.34	0	%100
204	M147B	Z	2.32	2.32	0	%100
205	M148	X	7.378	7.378	0	%100
206	M148	Z	12.78	12.78	0	%100

Member Distributed Loads (BLC 47 : Structure Wo (180 Deg))

	Member Label	Direction	Start Magnitude[lb/ft,...	End Magnitude[lb/ft,F...	Start Location[ft,%]	End Location[ft,%]
1	M1	X	0	0	0	%100
2	M1	Z	25.523	25.523	0	%100
3	MP3A	X	0	0	0	%100
4	MP3A	Z	9.055	9.055	0	%100
5	MP1A	X	0	0	0	%100
6	MP1A	Z	9.055	9.055	0	%100
7	M9	X	0	0	0	%100
8	M9	Z	0	0	0	%100
9	M10	X	0	0	0	%100
10	M10	Z	6.381	6.381	0	%100
11	M19	X	0	0	0	%100
12	M19	Z	6.381	6.381	0	%100
13	M28	X	0	0	0	%100
14	M28	Z	24.464	24.464	0	%100
15	M31	X	0	0	0	%100
16	M31	Z	6.116	6.116	0	%100
17	M34	X	0	0	0	%100
18	M34	Z	6.116	6.116	0	%100

Member Distributed Loads (BLC 47 : Structure Wo (180 Deg)) (Continued)

	Member Label	Direction	Start Magnitude[lb/ft,...	End Magnitude[lb/ft,F...	Start Location[ft,%]	End Location[ft,%]
19	M40	X	0	0	0	%100
20	M40	Z	1.43	1.43	0	%100
21	M46	X	0	0	0	%100
22	M46	Z	.357	.357	0	%100
23	M52	X	0	0	0	%100
24	M52	Z	.357	.357	0	%100
25	M55	X	0	0	0	%100
26	M55	Z	21.857	21.857	0	%100
27	M56	X	0	0	0	%100
28	M56	Z	0	0	0	%100
29	M57	X	0	0	0	%100
30	M57	Z	12.709	12.709	0	%100
31	M58	X	0	0	0	%100
32	M58	Z	12.709	12.709	0	%100
33	M59	X	0	0	0	%100
34	M59	Z	0	0	0	%100
35	M60	X	0	0	0	%100
36	M60	Z	0	0	0	%100
37	M61	X	0	0	0	%100
38	M61	Z	0	0	0	%100
39	M62	X	0	0	0	%100
40	M62	Z	0	0	0	%100
41	M63	X	0	0	0	%100
42	M63	Z	0	0	0	%100
43	M64	X	0	0	0	%100
44	M64	Z	0	0	0	%100
45	M65	X	0	0	0	%100
46	M65	Z	0	0	0	%100
47	M66	X	0	0	0	%100
48	M66	Z	0	0	0	%100
49	FACE1	X	0	0	0	%100
50	FACE1	Z	19.063	19.063	0	%100
51	M76	X	0	0	0	%100
52	M76	Z	4.766	4.766	0	%100
53	M77	X	0	0	0	%100
54	M77	Z	4.766	4.766	0	%100
55	FACE2	X	0	0	0	%100
56	FACE2	Z	25.523	25.523	0	%100
57	M79	X	0	0	0	%100
58	M79	Z	6.381	6.381	0	%100
59	M80	X	0	0	0	%100
60	M80	Z	6.381	6.381	0	%100
61	M85	X	0	0	0	%100
62	M85	Z	11.067	11.067	0	%100
63	M86	X	0	0	0	%100
64	M86	Z	10.802	10.802	0	%100
65	TMAA	X	0	0	0	%100
66	TMAA	Z	10.802	10.802	0	%100
67	M89	X	0	0	0	%100
68	M89	Z	12.709	12.709	0	%100
69	M91	X	0	0	0	%100
70	M91	Z	12.709	12.709	0	%100

Member Distributed Loads (BLC 47 : Structure Wo (180 Deg)) (Continued)

	Member Label	Direction	Start Magnitude[lb/ft,...	End Magnitude[lb/ft,F...	Start Location[ft,%]	End Location[ft,%]
71	M92	X	0	0	0	%100
72	M92	Z	19.063	19.063	0	%100
73	M96	X	0	0	0	%100
74	M96	Z	0	0	0	%100
75	M149	X	0	0	0	%100
76	M149	Z	4.766	4.766	0	%100
77	M160	X	0	0	0	%100
78	M160	Z	11.067	11.067	0	%100
79	M164	X	0	0	0	%100
80	M164	Z	4.766	4.766	0	%100
81	M146A	X	0	0	0	%100
82	M146A	Z	.357	.357	0	%100
83	M149A	X	0	0	0	%100
84	M149A	Z	.357	.357	0	%100
85	M152	X	0	0	0	%100
86	M152	Z	1.43	1.43	0	%100
87	M157	X	0	0	0	%100
88	M157	Z	11.067	11.067	0	%100
89	M158B	X	0	0	0	%100
90	M158B	Z	11.067	11.067	0	%100
91	M159B	X	0	0	0	%100
92	M159B	Z	11.067	11.067	0	%100
93	M160B	X	0	0	0	%100
94	M160B	Z	11.067	11.067	0	%100
95	M157B	X	0	0	0	%100
96	M157B	Z	10.802	10.802	0	%100
97	TMAC	X	0	0	0	%100
98	TMAC	Z	10.802	10.802	0	%100
99	M159	X	0	0	0	%100
100	M159	Z	10.802	10.802	0	%100
101	TMAB	X	0	0	0	%100
102	TMAB	Z	10.802	10.802	0	%100
103	M159C	X	0	0	0	%100
104	M159C	Z	3.177	3.177	0	%100
105	M160D	X	0	0	0	%100
106	M160D	Z	3.177	3.177	0	%100
107	M156B	X	0	0	0	%100
108	M156B	Z	12.709	12.709	0	%100
109	M157C	X	0	0	0	%100
110	M157C	Z	6.785	6.785	0	%100
111	M158C	X	0	0	0	%100
112	M158C	Z	6.785	6.785	0	%100
113	M159D	X	0	0	0	%100
114	M159D	Z	6.785	6.785	0	%100
115	M160E	X	0	0	0	%100
116	M160E	Z	6.785	6.785	0	%100
117	M127	X	0	0	0	%100
118	M127	Z	6.712	6.712	0	%100
119	M128	X	0	0	0	%100
120	M128	Z	6.712	6.712	0	%100
121	MP2A	X	0	0	0	%100
122	MP2A	Z	9.055	9.055	0	%100

Member Distributed Loads (BLC 47 : Structure Wo (180 Deg)) (Continued)

	Member Label	Direction	Start Magnitude[lb/ft,...	End Magnitude[lb/ft,F...	Start Location[ft,%]	End Location[ft,%]
123	M100	X	0	0	0	%100
124	M100	Z	0	0	0	%100
125	M101	X	0	0	0	%100
126	M101	Z	0	0	0	%100
127	MP5A	X	0	0	0	%100
128	MP5A	Z	9.055	9.055	0	%100
129	M103	X	0	0	0	%100
130	M103	Z	0	0	0	%100
131	M104	X	0	0	0	%100
132	M104	Z	0	0	0	%100
133	MP4A	X	0	0	0	%100
134	MP4A	Z	9.055	9.055	0	%100
135	LIVE1	X	0	0	0	%100
136	LIVE1	Z	0	0	0	%100
137	M107	X	0	0	0	%100
138	M107	Z	0	0	0	%100
139	MP3C	X	0	0	0	%100
140	MP3C	Z	9.055	9.055	0	%100
141	MP1C	X	0	0	0	%100
142	MP1C	Z	9.055	9.055	0	%100
143	M111	X	0	0	0	%100
144	M111	Z	.715	.715	0	%100
145	M113	X	0	0	0	%100
146	M113	Z	.715	.715	0	%100
147	MP2C	X	0	0	0	%100
148	MP2C	Z	9.055	9.055	0	%100
149	M115	X	0	0	0	%100
150	M115	Z	.715	.715	0	%100
151	M116	X	0	0	0	%100
152	M116	Z	.715	.715	0	%100
153	MP5C	X	0	0	0	%100
154	MP5C	Z	9.055	9.055	0	%100
155	M118	X	0	0	0	%100
156	M118	Z	.715	.715	0	%100
157	M119	X	0	0	0	%100
158	M119	Z	.715	.715	0	%100
159	MP4C	X	0	0	0	%100
160	MP4C	Z	9.055	9.055	0	%100
161	M121	X	0	0	0	%100
162	M121	Z	.715	.715	0	%100
163	M122	X	0	0	0	%100
164	M122	Z	.715	.715	0	%100
165	MP3B	X	0	0	0	%100
166	MP3B	Z	9.055	9.055	0	%100
167	MP1B	X	0	0	0	%100
168	MP1B	Z	9.055	9.055	0	%100
169	M126	X	0	0	0	%100
170	M126	Z	.715	.715	0	%100
171	M128A	X	0	0	0	%100
172	M128A	Z	.715	.715	0	%100
173	MP2B	X	0	0	0	%100
174	MP2B	Z	9.055	9.055	0	%100

Member Distributed Loads (BLC 47 : Structure Wo (180 Deg)) (Continued)

	Member Label	Direction	Start Magnitude[lb/ft,...	End Magnitude[lb/ft,F...	Start Location[ft,%]	End Location[ft,%]
175	M130	X	0	0	0	%100
176	M130	Z	.715	.715	0	%100
177	M131	X	0	0	0	%100
178	M131	Z	.715	.715	0	%100
179	MP5B	X	0	0	0	%100
180	MP5B	Z	9.055	9.055	0	%100
181	M133	X	0	0	0	%100
182	M133	Z	.715	.715	0	%100
183	M134	X	0	0	0	%100
184	M134	Z	.715	.715	0	%100
185	MP4B	X	0	0	0	%100
186	MP4B	Z	9.055	9.055	0	%100
187	M136	X	0	0	0	%100
188	M136	Z	.715	.715	0	%100
189	M137	X	0	0	0	%100
190	M137	Z	.715	.715	0	%100
191	M138	X	0	0	0	%100
192	M138	Z	8.554	8.554	0	%100
193	M139	X	0	0	0	%100
194	M139	Z	8.554	8.554	0	%100
195	M146	X	0	0	0	%100
196	M146	Z	7.687	7.687	0	%100
197	OVP	X	0	0	0	%100
198	OVP	Z	9.055	9.055	0	%100
199	M145A	X	0	0	0	%100
200	M145A	Z	15.084	15.084	0	%100
201	M146B	X	0	0	0	%100
202	M146B	Z	3.006	3.006	0	%100
203	M147B	X	0	0	0	%100
204	M147B	Z	3.006	3.006	0	%100
205	M148	X	0	0	0	%100
206	M148	Z	15.084	15.084	0	%100

Member Distributed Loads (BLC 48 : Structure Wo (210 Deg))

	Member Label	Direction	Start Magnitude[lb/ft,...	End Magnitude[lb/ft,F...	Start Location[ft,%]	End Location[ft,%]
1	M1	X	-9.571	-9.571	0	%100
2	M1	Z	16.578	16.578	0	%100
3	MP3A	X	-4.527	-4.527	0	%100
4	MP3A	Z	7.842	7.842	0	%100
5	MP1A	X	-4.527	-4.527	0	%100
6	MP1A	Z	7.842	7.842	0	%100
7	M9	X	-.119	-.119	0	%100
8	M9	Z	.206	.206	0	%100
9	M10	X	-9.571	-9.571	0	%100
10	M10	Z	16.578	16.578	0	%100
11	M19	X	0	0	0	%100
12	M19	Z	0	0	0	%100
13	M28	X	-9.174	-9.174	0	%100
14	M28	Z	15.89	15.89	0	%100
15	M31	X	-9.174	-9.174	0	%100
16	M31	Z	15.89	15.89	0	%100

Member Distributed Loads (BLC 48 : Structure Wo (210 Deg)) (Continued)

	Member Label	Direction	Start Magnitude[lb/ft,...	End Magnitude[lb/ft,F...	Start Location[ft,%]	End Location[ft,%]
17	M34	X	0	0	0	%100
18	M34	Z	0	0	0	%100
19	M40	X	-.536	-.536	0	%100
20	M40	Z	.929	.929	0	%100
21	M46	X	-.536	-.536	0	%100
22	M46	Z	.929	.929	0	%100
23	M52	X	0	0	0	%100
24	M52	Z	0	0	0	%100
25	M55	X	-8.196	-8.196	0	%100
26	M55	Z	14.197	14.197	0	%100
27	M56	X	-2.586	-2.586	0	%100
28	M56	Z	4.479	4.479	0	%100
29	M57	X	-6.354	-6.354	0	%100
30	M57	Z	11.006	11.006	0	%100
31	M58	X	-6.354	-6.354	0	%100
32	M58	Z	11.006	11.006	0	%100
33	M59	X	-.316	-.316	0	%100
34	M59	Z	.546	.546	0	%100
35	M60	X	-.316	-.316	0	%100
36	M60	Z	.546	.546	0	%100
37	M61	X	-.316	-.316	0	%100
38	M61	Z	.546	.546	0	%100
39	M62	X	-.316	-.316	0	%100
40	M62	Z	.546	.546	0	%100
41	M63	X	-.316	-.316	0	%100
42	M63	Z	.546	.546	0	%100
43	M64	X	-.316	-.316	0	%100
44	M64	Z	.546	.546	0	%100
45	M65	X	-.316	-.316	0	%100
46	M65	Z	.546	.546	0	%100
47	M66	X	-1.119	-1.119	0	%100
48	M66	Z	1.938	1.938	0	%100
49	FACE1	X	-7.149	-7.149	0	%100
50	FACE1	Z	12.382	12.382	0	%100
51	M76	X	-7.149	-7.149	0	%100
52	M76	Z	12.382	12.382	0	%100
53	M77	X	0	0	0	%100
54	M77	Z	0	0	0	%100
55	FACE2	X	-9.571	-9.571	0	%100
56	FACE2	Z	16.578	16.578	0	%100
57	M79	X	-9.571	-9.571	0	%100
58	M79	Z	16.578	16.578	0	%100
59	M80	X	0	0	0	%100
60	M80	Z	0	0	0	%100
61	M85	X	-5.534	-5.534	0	%100
62	M85	Z	9.584	9.584	0	%100
63	M86	X	-5.401	-5.401	0	%100
64	M86	Z	9.355	9.355	0	%100
65	TMAA	X	-5.401	-5.401	0	%100
66	TMAA	Z	9.355	9.355	0	%100
67	M89	X	-5.367	-5.367	0	%100
68	M89	Z	9.296	9.296	0	%100

Member Distributed Loads (BLC 48 : Structure Wo (210 Deg)) (Continued)

	Member Label	Direction	Start Magnitude[lb/ft,...	End Magnitude[lb/ft,F...	Start Location[ft,%]	End Location[ft,%]
69	M91	X	-4.766	-4.766	0	%100
70	M91	Z	8.255	8.255	0	%100
71	M92	X	-7.149	-7.149	0	%100
72	M92	Z	12.382	12.382	0	%100
73	M96	X	-.119	-.119	0	%100
74	M96	Z	.206	.206	0	%100
75	M149	X	-7.149	-7.149	0	%100
76	M149	Z	12.382	12.382	0	%100
77	M160	X	-5.534	-5.534	0	%100
78	M160	Z	9.584	9.584	0	%100
79	M164	X	0	0	0	%100
80	M164	Z	0	0	0	%100
81	M146A	X	-.536	-.536	0	%100
82	M146A	Z	.929	.929	0	%100
83	M149A	X	0	0	0	%100
84	M149A	Z	0	0	0	%100
85	M152	X	-.536	-.536	0	%100
86	M152	Z	.929	.929	0	%100
87	M157	X	-5.534	-5.534	0	%100
88	M157	Z	9.584	9.584	0	%100
89	M158B	X	-5.534	-5.534	0	%100
90	M158B	Z	9.584	9.584	0	%100
91	M159B	X	-5.534	-5.534	0	%100
92	M159B	Z	9.584	9.584	0	%100
93	M160B	X	-5.534	-5.534	0	%100
94	M160B	Z	9.584	9.584	0	%100
95	M157B	X	-5.401	-5.401	0	%100
96	M157B	Z	9.355	9.355	0	%100
97	TMAC	X	-5.401	-5.401	0	%100
98	TMAC	Z	9.355	9.355	0	%100
99	M159	X	-5.401	-5.401	0	%100
100	M159	Z	9.355	9.355	0	%100
101	TMAB	X	-5.401	-5.401	0	%100
102	TMAB	Z	9.355	9.355	0	%100
103	M159C	X	-4.766	-4.766	0	%100
104	M159C	Z	8.255	8.255	0	%100
105	M160D	X	0	0	0	%100
106	M160D	Z	0	0	0	%100
107	M156B	X	-5.367	-5.367	0	%100
108	M156B	Z	9.296	9.296	0	%100
109	M157C	X	-5.367	-5.367	0	%100
110	M157C	Z	9.296	9.296	0	%100
111	M158C	X	-5.367	-5.367	0	%100
112	M158C	Z	9.296	9.296	0	%100
113	M159D	X	-2.405	-2.405	0	%100
114	M159D	Z	4.166	4.166	0	%100
115	M160E	X	-2.405	-2.405	0	%100
116	M160E	Z	4.166	4.166	0	%100
117	M127	X	-1.119	-1.119	0	%100
118	M127	Z	1.938	1.938	0	%100
119	M128	X	-4.475	-4.475	0	%100
120	M128	Z	7.75	7.75	0	%100

Member Distributed Loads (BLC 48 : Structure Wo (210 Deg)) (Continued)

	Member Label	Direction	Start Magnitude[lb/ft,...	End Magnitude[lb/ft,F...	Start Location[ft,%]	End Location[ft,%]
121	MP2A	X	-4.527	-4.527	0	%100
122	MP2A	Z	7.842	7.842	0	%100
123	M100	X	-.119	-.119	0	%100
124	M100	Z	.206	.206	0	%100
125	M101	X	-.119	-.119	0	%100
126	M101	Z	.206	.206	0	%100
127	MP5A	X	-4.527	-4.527	0	%100
128	MP5A	Z	7.842	7.842	0	%100
129	M103	X	-.119	-.119	0	%100
130	M103	Z	.206	.206	0	%100
131	M104	X	-.119	-.119	0	%100
132	M104	Z	.206	.206	0	%100
133	MP4A	X	-4.527	-4.527	0	%100
134	MP4A	Z	7.842	7.842	0	%100
135	LIVE1	X	-.119	-.119	0	%100
136	LIVE1	Z	.206	.206	0	%100
137	M107	X	-.119	-.119	0	%100
138	M107	Z	.206	.206	0	%100
139	MP3C	X	-4.527	-4.527	0	%100
140	MP3C	Z	7.842	7.842	0	%100
141	MP1C	X	-4.527	-4.527	0	%100
142	MP1C	Z	7.842	7.842	0	%100
143	M111	X	-.119	-.119	0	%100
144	M111	Z	.206	.206	0	%100
145	M113	X	-.119	-.119	0	%100
146	M113	Z	.206	.206	0	%100
147	MP2C	X	-4.527	-4.527	0	%100
148	MP2C	Z	7.842	7.842	0	%100
149	M115	X	-.119	-.119	0	%100
150	M115	Z	.206	.206	0	%100
151	M116	X	-.119	-.119	0	%100
152	M116	Z	.206	.206	0	%100
153	MP5C	X	-4.527	-4.527	0	%100
154	MP5C	Z	7.842	7.842	0	%100
155	M118	X	-.119	-.119	0	%100
156	M118	Z	.206	.206	0	%100
157	M119	X	-.119	-.119	0	%100
158	M119	Z	.206	.206	0	%100
159	MP4C	X	-4.527	-4.527	0	%100
160	MP4C	Z	7.842	7.842	0	%100
161	M121	X	-.119	-.119	0	%100
162	M121	Z	.206	.206	0	%100
163	M122	X	-.119	-.119	0	%100
164	M122	Z	.206	.206	0	%100
165	MP3B	X	-4.527	-4.527	0	%100
166	MP3B	Z	7.842	7.842	0	%100
167	MP1B	X	-4.527	-4.527	0	%100
168	MP1B	Z	7.842	7.842	0	%100
169	M126	X	-.477	-.477	0	%100
170	M126	Z	.825	.825	0	%100
171	M128A	X	-.477	-.477	0	%100
172	M128A	Z	.825	.825	0	%100

Member Distributed Loads (BLC 48 : Structure Wo (210 Deg)) (Continued)

	Member Label	Direction	Start Magnitude[lb/ft,...	End Magnitude[lb/ft,F...	Start Location[ft,%]	End Location[ft,%]
173	MP2B	X	-4.527	-4.527	0	%100
174	MP2B	Z	7.842	7.842	0	%100
175	M130	X	-.477	-.477	0	%100
176	M130	Z	.825	.825	0	%100
177	M131	X	-.477	-.477	0	%100
178	M131	Z	.825	.825	0	%100
179	MP5B	X	-4.527	-4.527	0	%100
180	MP5B	Z	7.842	7.842	0	%100
181	M133	X	-.477	-.477	0	%100
182	M133	Z	.825	.825	0	%100
183	M134	X	-.477	-.477	0	%100
184	M134	Z	.825	.825	0	%100
185	MP4B	X	-4.527	-4.527	0	%100
186	MP4B	Z	7.842	7.842	0	%100
187	M136	X	-.477	-.477	0	%100
188	M136	Z	.825	.825	0	%100
189	M137	X	-.477	-.477	0	%100
190	M137	Z	.825	.825	0	%100
191	M138	X	-1.34	-1.34	0	%100
192	M138	Z	2.32	2.32	0	%100
193	M139	X	-7.378	-7.378	0	%100
194	M139	Z	12.78	12.78	0	%100
195	M146	X	-3.844	-3.844	0	%100
196	M146	Z	6.657	6.657	0	%100
197	OVP	X	-4.527	-4.527	0	%100
198	OVP	Z	7.842	7.842	0	%100
199	M145A	X	-7.378	-7.378	0	%100
200	M145A	Z	12.78	12.78	0	%100
201	M146B	X	-1.34	-1.34	0	%100
202	M146B	Z	2.32	2.32	0	%100
203	M147B	X	-4.604	-4.604	0	%100
204	M147B	Z	7.975	7.975	0	%100
205	M148	X	-4.604	-4.604	0	%100
206	M148	Z	7.975	7.975	0	%100

Member Distributed Loads (BLC 49 : Structure Wo (240 Deg))

	Member Label	Direction	Start Magnitude[lb/ft,...	End Magnitude[lb/ft,F...	Start Location[ft,%]	End Location[ft,%]
1	M1	X	-5.526	-5.526	0	%100
2	M1	Z	3.19	3.19	0	%100
3	MP3A	X	-7.842	-7.842	0	%100
4	MP3A	Z	4.527	4.527	0	%100
5	MP1A	X	-7.842	-7.842	0	%100
6	MP1A	Z	4.527	4.527	0	%100
7	M9	X	-.619	-.619	0	%100
8	M9	Z	.357	.357	0	%100
9	M10	X	-22.104	-22.104	0	%100
10	M10	Z	12.762	12.762	0	%100
11	M19	X	-5.526	-5.526	0	%100
12	M19	Z	3.19	3.19	0	%100
13	M28	X	-5.297	-5.297	0	%100
14	M28	Z	3.058	3.058	0	%100

Member Distributed Loads (BLC 49 : Structure Wo (240 Deg)) (Continued)

	Member Label	Direction	Start Magnitude[lb/ft,...	End Magnitude[lb/ft,F...	Start Location[ft,%]	End Location[ft,%]
15	M31	X	-21.187	-21.187	0	%100
16	M31	Z	12.232	12.232	0	%100
17	M34	X	-5.297	-5.297	0	%100
18	M34	Z	3.058	3.058	0	%100
19	M40	X	-.31	-.31	0	%100
20	M40	Z	.179	.179	0	%100
21	M46	X	-1.238	-1.238	0	%100
22	M46	Z	.715	.715	0	%100
23	M52	X	-.31	-.31	0	%100
24	M52	Z	.179	.179	0	%100
25	M55	X	-4.732	-4.732	0	%100
26	M55	Z	2.732	2.732	0	%100
27	M56	X	-13.437	-13.437	0	%100
28	M56	Z	7.758	7.758	0	%100
29	M57	X	-11.006	-11.006	0	%100
30	M57	Z	6.354	6.354	0	%100
31	M58	X	-11.006	-11.006	0	%100
32	M58	Z	6.354	6.354	0	%100
33	M59	X	-1.639	-1.639	0	%100
34	M59	Z	.947	.947	0	%100
35	M60	X	-1.639	-1.639	0	%100
36	M60	Z	.947	.947	0	%100
37	M61	X	-1.639	-1.639	0	%100
38	M61	Z	.947	.947	0	%100
39	M62	X	-1.639	-1.639	0	%100
40	M62	Z	.947	.947	0	%100
41	M63	X	-1.639	-1.639	0	%100
42	M63	Z	.947	.947	0	%100
43	M64	X	-1.639	-1.639	0	%100
44	M64	Z	.947	.947	0	%100
45	M65	X	-1.639	-1.639	0	%100
46	M65	Z	.947	.947	0	%100
47	M66	X	-5.813	-5.813	0	%100
48	M66	Z	3.356	3.356	0	%100
49	FACE1	X	-4.127	-4.127	0	%100
50	FACE1	Z	2.383	2.383	0	%100
51	M76	X	-16.509	-16.509	0	%100
52	M76	Z	9.532	9.532	0	%100
53	M77	X	-4.127	-4.127	0	%100
54	M77	Z	2.383	2.383	0	%100
55	FACE2	X	-5.526	-5.526	0	%100
56	FACE2	Z	3.19	3.19	0	%100
57	M79	X	-22.104	-22.104	0	%100
58	M79	Z	12.762	12.762	0	%100
59	M80	X	-5.526	-5.526	0	%100
60	M80	Z	3.19	3.19	0	%100
61	M85	X	-9.584	-9.584	0	%100
62	M85	Z	5.534	5.534	0	%100
63	M86	X	-9.355	-9.355	0	%100
64	M86	Z	5.401	5.401	0	%100
65	TMAA	X	-9.355	-9.355	0	%100
66	TMAA	Z	5.401	5.401	0	%100

Member Distributed Loads (BLC 49 : Structure Wo (240 Deg)) (Continued)

	Member Label	Direction	Start Magnitude[lb/ft,...	End Magnitude[lb/ft,F...	Start Location[ft,%]	End Location[ft,%]
67	M89	X	-5.876	-5.876	0	%100
68	M89	Z	3.393	3.393	0	%100
69	M91	X	-2.752	-2.752	0	%100
70	M91	Z	1.589	1.589	0	%100
71	M92	X	-4.127	-4.127	0	%100
72	M92	Z	2.383	2.383	0	%100
73	M96	X	-.619	-.619	0	%100
74	M96	Z	.357	.357	0	%100
75	M149	X	-16.509	-16.509	0	%100
76	M149	Z	9.532	9.532	0	%100
77	M160	X	-9.584	-9.584	0	%100
78	M160	Z	5.534	5.534	0	%100
79	M164	X	-4.127	-4.127	0	%100
80	M164	Z	2.383	2.383	0	%100
81	M146A	X	-1.238	-1.238	0	%100
82	M146A	Z	.715	.715	0	%100
83	M149A	X	-.31	-.31	0	%100
84	M149A	Z	.179	.179	0	%100
85	M152	X	-.31	-.31	0	%100
86	M152	Z	.179	.179	0	%100
87	M157	X	-9.584	-9.584	0	%100
88	M157	Z	5.534	5.534	0	%100
89	M158B	X	-9.584	-9.584	0	%100
90	M158B	Z	5.534	5.534	0	%100
91	M159B	X	-9.584	-9.584	0	%100
92	M159B	Z	5.534	5.534	0	%100
93	M160B	X	-9.584	-9.584	0	%100
94	M160B	Z	5.534	5.534	0	%100
95	M157B	X	-9.355	-9.355	0	%100
96	M157B	Z	5.401	5.401	0	%100
97	TMAC	X	-9.355	-9.355	0	%100
98	TMAC	Z	5.401	5.401	0	%100
99	M159	X	-9.355	-9.355	0	%100
100	M159	Z	5.401	5.401	0	%100
101	TMAB	X	-9.355	-9.355	0	%100
102	TMAB	Z	5.401	5.401	0	%100
103	M159C	X	-11.006	-11.006	0	%100
104	M159C	Z	6.354	6.354	0	%100
105	M160D	X	-2.752	-2.752	0	%100
106	M160D	Z	1.589	1.589	0	%100
107	M156B	X	-5.876	-5.876	0	%100
108	M156B	Z	3.393	3.393	0	%100
109	M157C	X	-11.006	-11.006	0	%100
110	M157C	Z	6.354	6.354	0	%100
111	M158C	X	-11.006	-11.006	0	%100
112	M158C	Z	6.354	6.354	0	%100
113	M159D	X	-5.876	-5.876	0	%100
114	M159D	Z	3.393	3.393	0	%100
115	M160E	X	-5.876	-5.876	0	%100
116	M160E	Z	3.393	3.393	0	%100
117	M127	X	0	0	0	%100
118	M127	Z	0	0	0	%100

Member Distributed Loads (BLC 49 : Structure Wo (240 Deg)) (Continued)

	Member Label	Direction	Start Magnitude[lb/ft,...	End Magnitude[lb/ft,F...	Start Location[ft,%]	End Location[ft,%]
119	M128	X	-5.813	-5.813	0	%100
120	M128	Z	3.356	3.356	0	%100
121	MP2A	X	-7.842	-7.842	0	%100
122	MP2A	Z	4.527	4.527	0	%100
123	M100	X	-.619	-.619	0	%100
124	M100	Z	.357	.357	0	%100
125	M101	X	-.619	-.619	0	%100
126	M101	Z	.357	.357	0	%100
127	MP5A	X	-7.842	-7.842	0	%100
128	MP5A	Z	4.527	4.527	0	%100
129	M103	X	-.619	-.619	0	%100
130	M103	Z	.357	.357	0	%100
131	M104	X	-.619	-.619	0	%100
132	M104	Z	.357	.357	0	%100
133	MP4A	X	-7.842	-7.842	0	%100
134	MP4A	Z	4.527	4.527	0	%100
135	LIVE1	X	-.619	-.619	0	%100
136	LIVE1	Z	.357	.357	0	%100
137	M107	X	-.619	-.619	0	%100
138	M107	Z	.357	.357	0	%100
139	MP3C	X	-7.842	-7.842	0	%100
140	MP3C	Z	4.527	4.527	0	%100
141	MP1C	X	-7.842	-7.842	0	%100
142	MP1C	Z	4.527	4.527	0	%100
143	M111	X	0	0	0	%100
144	M111	Z	0	0	0	%100
145	M113	X	0	0	0	%100
146	M113	Z	0	0	0	%100
147	MP2C	X	-7.842	-7.842	0	%100
148	MP2C	Z	4.527	4.527	0	%100
149	M115	X	0	0	0	%100
150	M115	Z	0	0	0	%100
151	M116	X	0	0	0	%100
152	M116	Z	0	0	0	%100
153	MP5C	X	-7.842	-7.842	0	%100
154	MP5C	Z	4.527	4.527	0	%100
155	M118	X	0	0	0	%100
156	M118	Z	0	0	0	%100
157	M119	X	0	0	0	%100
158	M119	Z	0	0	0	%100
159	MP4C	X	-7.842	-7.842	0	%100
160	MP4C	Z	4.527	4.527	0	%100
161	M121	X	0	0	0	%100
162	M121	Z	0	0	0	%100
163	M122	X	0	0	0	%100
164	M122	Z	0	0	0	%100
165	MP3B	X	-7.842	-7.842	0	%100
166	MP3B	Z	4.527	4.527	0	%100
167	MP1B	X	-7.842	-7.842	0	%100
168	MP1B	Z	4.527	4.527	0	%100
169	M126	X	-.619	-.619	0	%100
170	M126	Z	.357	.357	0	%100

Member Distributed Loads (BLC 49 : Structure Wo (240 Deg)) (Continued)

	Member Label	Direction	Start Magnitude[lb/ft,...	End Magnitude[lb/ft,F...	Start Location[ft,%]	End Location[ft,%]
171	M128A	X	-.619	-.619	0	%100
172	M128A	Z	.357	.357	0	%100
173	MP2B	X	-7.842	-7.842	0	%100
174	MP2B	Z	4.527	4.527	0	%100
175	M130	X	-.619	-.619	0	%100
176	M130	Z	.357	.357	0	%100
177	M131	X	-.619	-.619	0	%100
178	M131	Z	.357	.357	0	%100
179	MP5B	X	-7.842	-7.842	0	%100
180	MP5B	Z	4.527	4.527	0	%100
181	M133	X	-.619	-.619	0	%100
182	M133	Z	.357	.357	0	%100
183	M134	X	-.619	-.619	0	%100
184	M134	Z	.357	.357	0	%100
185	MP4B	X	-7.842	-7.842	0	%100
186	MP4B	Z	4.527	4.527	0	%100
187	M136	X	-.619	-.619	0	%100
188	M136	Z	.357	.357	0	%100
189	M137	X	-.619	-.619	0	%100
190	M137	Z	.357	.357	0	%100
191	M138	X	-2.603	-2.603	0	%100
192	M138	Z	1.503	1.503	0	%100
193	M139	X	-13.063	-13.063	0	%100
194	M139	Z	7.542	7.542	0	%100
195	M146	X	-6.657	-6.657	0	%100
196	M146	Z	3.844	3.844	0	%100
197	OVP	X	-7.842	-7.842	0	%100
198	OVP	Z	4.527	4.527	0	%100
199	M145A	X	-7.408	-7.408	0	%100
200	M145A	Z	4.277	4.277	0	%100
201	M146B	X	-7.408	-7.408	0	%100
202	M146B	Z	4.277	4.277	0	%100
203	M147B	X	-13.063	-13.063	0	%100
204	M147B	Z	7.542	7.542	0	%100
205	M148	X	-2.603	-2.603	0	%100
206	M148	Z	1.503	1.503	0	%100

Member Distributed Loads (BLC 50 : Structure Wo (270 Deg))

	Member Label	Direction	Start Magnitude[lb/ft,...	End Magnitude[lb/ft,F...	Start Location[ft,%]	End Location[ft,%]
1	M1	X	0	0	0	%100
2	M1	Z	0	0	0	%100
3	MP3A	X	-9.055	-9.055	0	%100
4	MP3A	Z	0	0	0	%100
5	MP1A	X	-9.055	-9.055	0	%100
6	MP1A	Z	0	0	0	%100
7	M9	X	-.953	-.953	0	%100
8	M9	Z	0	0	0	%100
9	M10	X	-19.143	-19.143	0	%100
10	M10	Z	0	0	0	%100
11	M19	X	-19.143	-19.143	0	%100
12	M19	Z	0	0	0	%100

Member Distributed Loads (BLC 50 : Structure Wo (270 Deg)) (Continued)

	Member Label	Direction	Start Magnitude[lb/ft,...	End Magnitude[lb/ft,F...	Start Location[ft,%]	End Location[ft,%]
13	M28	X	0	0	0	%100
14	M28	Z	0	0	0	%100
15	M31	X	-18.348	-18.348	0	%100
16	M31	Z	0	0	0	%100
17	M34	X	-18.348	-18.348	0	%100
18	M34	Z	0	0	0	%100
19	M40	X	0	0	0	%100
20	M40	Z	0	0	0	%100
21	M46	X	-1.072	-1.072	0	%100
22	M46	Z	0	0	0	%100
23	M52	X	-1.072	-1.072	0	%100
24	M52	Z	0	0	0	%100
25	M55	X	0	0	0	%100
26	M55	Z	0	0	0	%100
27	M56	X	-20.687	-20.687	0	%100
28	M56	Z	0	0	0	%100
29	M57	X	-12.709	-12.709	0	%100
30	M57	Z	0	0	0	%100
31	M58	X	-12.709	-12.709	0	%100
32	M58	Z	0	0	0	%100
33	M59	X	-2.524	-2.524	0	%100
34	M59	Z	0	0	0	%100
35	M60	X	-2.524	-2.524	0	%100
36	M60	Z	0	0	0	%100
37	M61	X	-2.524	-2.524	0	%100
38	M61	Z	0	0	0	%100
39	M62	X	-2.524	-2.524	0	%100
40	M62	Z	0	0	0	%100
41	M63	X	-2.524	-2.524	0	%100
42	M63	Z	0	0	0	%100
43	M64	X	-2.524	-2.524	0	%100
44	M64	Z	0	0	0	%100
45	M65	X	-2.524	-2.524	0	%100
46	M65	Z	0	0	0	%100
47	M66	X	-8.949	-8.949	0	%100
48	M66	Z	0	0	0	%100
49	FACE1	X	0	0	0	%100
50	FACE1	Z	0	0	0	%100
51	M76	X	-14.297	-14.297	0	%100
52	M76	Z	0	0	0	%100
53	M77	X	-14.297	-14.297	0	%100
54	M77	Z	0	0	0	%100
55	FACE2	X	0	0	0	%100
56	FACE2	Z	0	0	0	%100
57	M79	X	-19.143	-19.143	0	%100
58	M79	Z	0	0	0	%100
59	M80	X	-19.143	-19.143	0	%100
60	M80	Z	0	0	0	%100
61	M85	X	-11.067	-11.067	0	%100
62	M85	Z	0	0	0	%100
63	M86	X	-10.802	-10.802	0	%100
64	M86	Z	0	0	0	%100

Member Distributed Loads (BLC 50 : Structure Wo (270 Deg)) (Continued)

	Member Label	Direction	Start Magnitude[lb/ft,...	End Magnitude[lb/ft,F...	Start Location[ft,%]	End Location[ft,%]
65	TMAA	X	-10.802	-10.802	0	%100
66	TMAA	Z	0	0	0	%100
67	M89	X	-4.811	-4.811	0	%100
68	M89	Z	0	0	0	%100
69	M91	X	0	0	0	%100
70	M91	Z	0	0	0	%100
71	M92	X	0	0	0	%100
72	M92	Z	0	0	0	%100
73	M96	X	-.953	-.953	0	%100
74	M96	Z	0	0	0	%100
75	M149	X	-14.297	-14.297	0	%100
76	M149	Z	0	0	0	%100
77	M160	X	-11.067	-11.067	0	%100
78	M160	Z	0	0	0	%100
79	M164	X	-14.297	-14.297	0	%100
80	M164	Z	0	0	0	%100
81	M146A	X	-1.072	-1.072	0	%100
82	M146A	Z	0	0	0	%100
83	M149A	X	-1.072	-1.072	0	%100
84	M149A	Z	0	0	0	%100
85	M152	X	0	0	0	%100
86	M152	Z	0	0	0	%100
87	M157	X	-11.067	-11.067	0	%100
88	M157	Z	0	0	0	%100
89	M158B	X	-11.067	-11.067	0	%100
90	M158B	Z	0	0	0	%100
91	M159B	X	-11.067	-11.067	0	%100
92	M159B	Z	0	0	0	%100
93	M160B	X	-11.067	-11.067	0	%100
94	M160B	Z	0	0	0	%100
95	M157B	X	-10.802	-10.802	0	%100
96	M157B	Z	0	0	0	%100
97	TMAC	X	-10.802	-10.802	0	%100
98	TMAC	Z	0	0	0	%100
99	M159	X	-10.802	-10.802	0	%100
100	M159	Z	0	0	0	%100
101	TMAB	X	-10.802	-10.802	0	%100
102	TMAB	Z	0	0	0	%100
103	M159C	X	-9.532	-9.532	0	%100
104	M159C	Z	0	0	0	%100
105	M160D	X	-9.532	-9.532	0	%100
106	M160D	Z	0	0	0	%100
107	M156B	X	-4.811	-4.811	0	%100
108	M156B	Z	0	0	0	%100
109	M157C	X	-10.734	-10.734	0	%100
110	M157C	Z	0	0	0	%100
111	M158C	X	-10.734	-10.734	0	%100
112	M158C	Z	0	0	0	%100
113	M159D	X	-10.734	-10.734	0	%100
114	M159D	Z	0	0	0	%100
115	M160E	X	-10.734	-10.734	0	%100
116	M160E	Z	0	0	0	%100

Member Distributed Loads (BLC 50 : Structure Wo (270 Deg)) (Continued)

	Member Label	Direction	Start Magnitude[lb/ft,...	End Magnitude[lb/ft,F...	Start Location[ft,%]	End Location[ft,%]
117	M127	X	-2.237	-2.237	0	%100
118	M127	Z	0	0	0	%100
119	M128	X	-2.237	-2.237	0	%100
120	M128	Z	0	0	0	%100
121	MP2A	X	-9.055	-9.055	0	%100
122	MP2A	Z	0	0	0	%100
123	M100	X	-.953	-.953	0	%100
124	M100	Z	0	0	0	%100
125	M101	X	-.953	-.953	0	%100
126	M101	Z	0	0	0	%100
127	MP5A	X	-9.055	-9.055	0	%100
128	MP5A	Z	0	0	0	%100
129	M103	X	-.953	-.953	0	%100
130	M103	Z	0	0	0	%100
131	M104	X	-.953	-.953	0	%100
132	M104	Z	0	0	0	%100
133	MP4A	X	-9.055	-9.055	0	%100
134	MP4A	Z	0	0	0	%100
135	LIVE1	X	-.953	-.953	0	%100
136	LIVE1	Z	0	0	0	%100
137	M107	X	-.953	-.953	0	%100
138	M107	Z	0	0	0	%100
139	MP3C	X	-9.055	-9.055	0	%100
140	MP3C	Z	0	0	0	%100
141	MP1C	X	-9.055	-9.055	0	%100
142	MP1C	Z	0	0	0	%100
143	M111	X	-.238	-.238	0	%100
144	M111	Z	0	0	0	%100
145	M113	X	-.238	-.238	0	%100
146	M113	Z	0	0	0	%100
147	MP2C	X	-9.055	-9.055	0	%100
148	MP2C	Z	0	0	0	%100
149	M115	X	-.238	-.238	0	%100
150	M115	Z	0	0	0	%100
151	M116	X	-.238	-.238	0	%100
152	M116	Z	0	0	0	%100
153	MP5C	X	-9.055	-9.055	0	%100
154	MP5C	Z	0	0	0	%100
155	M118	X	-.238	-.238	0	%100
156	M118	Z	0	0	0	%100
157	M119	X	-.238	-.238	0	%100
158	M119	Z	0	0	0	%100
159	MP4C	X	-9.055	-9.055	0	%100
160	MP4C	Z	0	0	0	%100
161	M121	X	-.238	-.238	0	%100
162	M121	Z	0	0	0	%100
163	M122	X	-.238	-.238	0	%100
164	M122	Z	0	0	0	%100
165	MP3B	X	-9.055	-9.055	0	%100
166	MP3B	Z	0	0	0	%100
167	MP1B	X	-9.055	-9.055	0	%100
168	MP1B	Z	0	0	0	%100

Member Distributed Loads (BLC 50 : Structure Wo (270 Deg)) (Continued)

	Member Label	Direction	Start Magnitude[lb/ft,...	End Magnitude[lb/ft,F...	Start Location[ft,%]	End Location[ft,%]
169	M126	X	-.238	-.238	0	%100
170	M126	Z	0	0	0	%100
171	M128A	X	-.238	-.238	0	%100
172	M128A	Z	0	0	0	%100
173	MP2B	X	-9.055	-9.055	0	%100
174	MP2B	Z	0	0	0	%100
175	M130	X	-.238	-.238	0	%100
176	M130	Z	0	0	0	%100
177	M131	X	-.238	-.238	0	%100
178	M131	Z	0	0	0	%100
179	MP5B	X	-9.055	-9.055	0	%100
180	MP5B	Z	0	0	0	%100
181	M133	X	-.238	-.238	0	%100
182	M133	Z	0	0	0	%100
183	M134	X	-.238	-.238	0	%100
184	M134	Z	0	0	0	%100
185	MP4B	X	-9.055	-9.055	0	%100
186	MP4B	Z	0	0	0	%100
187	M136	X	-.238	-.238	0	%100
188	M136	Z	0	0	0	%100
189	M137	X	-.238	-.238	0	%100
190	M137	Z	0	0	0	%100
191	M138	X	-9.209	-9.209	0	%100
192	M138	Z	0	0	0	%100
193	M139	X	-9.209	-9.209	0	%100
194	M139	Z	0	0	0	%100
195	M146	X	-7.687	-7.687	0	%100
196	M146	Z	0	0	0	%100
197	OVP	X	-9.055	-9.055	0	%100
198	OVP	Z	0	0	0	%100
199	M145A	X	-2.679	-2.679	0	%100
200	M145A	Z	0	0	0	%100
201	M146B	X	-14.757	-14.757	0	%100
202	M146B	Z	0	0	0	%100
203	M147B	X	-14.757	-14.757	0	%100
204	M147B	Z	0	0	0	%100
205	M148	X	-2.679	-2.679	0	%100
206	M148	Z	0	0	0	%100

Member Distributed Loads (BLC 51 : Structure Wo (300 Deg))

	Member Label	Direction	Start Magnitude[lb/ft,...	End Magnitude[lb/ft,F...	Start Location[ft,%]	End Location[ft,%]
1	M1	X	-5.526	-5.526	0	%100
2	M1	Z	-3.19	-3.19	0	%100
3	MP3A	X	-7.842	-7.842	0	%100
4	MP3A	Z	-4.527	-4.527	0	%100
5	MP1A	X	-7.842	-7.842	0	%100
6	MP1A	Z	-4.527	-4.527	0	%100
7	M9	X	-.619	-.619	0	%100
8	M9	Z	-.357	-.357	0	%100
9	M10	X	-5.526	-5.526	0	%100
10	M10	Z	-3.19	-3.19	0	%100

Member Distributed Loads (BLC 51 : Structure Wo (300 Deg)) (Continued)

	Member Label	Direction	Start Magnitude[lb/ft,...	End Magnitude[lb/ft,F...	Start Location[ft,%]	End Location[ft,%]
11	M19	X	-22.104	-22.104	0	%100
12	M19	Z	-12.762	-12.762	0	%100
13	M28	X	-5.297	-5.297	0	%100
14	M28	Z	-3.058	-3.058	0	%100
15	M31	X	-5.297	-5.297	0	%100
16	M31	Z	-3.058	-3.058	0	%100
17	M34	X	-21.187	-21.187	0	%100
18	M34	Z	-12.232	-12.232	0	%100
19	M40	X	-.31	-.31	0	%100
20	M40	Z	-.179	-.179	0	%100
21	M46	X	-.31	-.31	0	%100
22	M46	Z	-.179	-.179	0	%100
23	M52	X	-1.238	-1.238	0	%100
24	M52	Z	-.715	-.715	0	%100
25	M55	X	-4.732	-4.732	0	%100
26	M55	Z	-2.732	-2.732	0	%100
27	M56	X	-13.437	-13.437	0	%100
28	M56	Z	-7.758	-7.758	0	%100
29	M57	X	-11.006	-11.006	0	%100
30	M57	Z	-6.354	-6.354	0	%100
31	M58	X	-11.006	-11.006	0	%100
32	M58	Z	-6.354	-6.354	0	%100
33	M59	X	-1.639	-1.639	0	%100
34	M59	Z	-.947	-.947	0	%100
35	M60	X	-1.639	-1.639	0	%100
36	M60	Z	-.947	-.947	0	%100
37	M61	X	-1.639	-1.639	0	%100
38	M61	Z	-.947	-.947	0	%100
39	M62	X	-1.639	-1.639	0	%100
40	M62	Z	-.947	-.947	0	%100
41	M63	X	-1.639	-1.639	0	%100
42	M63	Z	-.947	-.947	0	%100
43	M64	X	-1.639	-1.639	0	%100
44	M64	Z	-.947	-.947	0	%100
45	M65	X	-1.639	-1.639	0	%100
46	M65	Z	-.947	-.947	0	%100
47	M66	X	-5.813	-5.813	0	%100
48	M66	Z	-3.356	-3.356	0	%100
49	FACE1	X	-4.127	-4.127	0	%100
50	FACE1	Z	-2.383	-2.383	0	%100
51	M76	X	-4.127	-4.127	0	%100
52	M76	Z	-2.383	-2.383	0	%100
53	M77	X	-16.509	-16.509	0	%100
54	M77	Z	-9.532	-9.532	0	%100
55	FACE2	X	-5.526	-5.526	0	%100
56	FACE2	Z	-3.19	-3.19	0	%100
57	M79	X	-5.526	-5.526	0	%100
58	M79	Z	-3.19	-3.19	0	%100
59	M80	X	-22.104	-22.104	0	%100
60	M80	Z	-12.762	-12.762	0	%100
61	M85	X	-9.584	-9.584	0	%100
62	M85	Z	-5.534	-5.534	0	%100

Member Distributed Loads (BLC 51 : Structure Wo (300 Deg)) (Continued)

	Member Label	Direction	Start Magnitude[lb/ft,...	End Magnitude[lb/ft,F...	Start Location[ft,%]	End Location[ft,%]
63	M86	X	-9.355	-9.355	0	%100
64	M86	Z	-5.401	-5.401	0	%100
65	TMAA	X	-9.355	-9.355	0	%100
66	TMAA	Z	-5.401	-5.401	0	%100
67	M89	X	-5.876	-5.876	0	%100
68	M89	Z	-3.393	-3.393	0	%100
69	M91	X	-2.752	-2.752	0	%100
70	M91	Z	-1.589	-1.589	0	%100
71	M92	X	-4.127	-4.127	0	%100
72	M92	Z	-2.383	-2.383	0	%100
73	M96	X	-.619	-.619	0	%100
74	M96	Z	-.357	-.357	0	%100
75	M149	X	-4.127	-4.127	0	%100
76	M149	Z	-2.383	-2.383	0	%100
77	M160	X	-9.584	-9.584	0	%100
78	M160	Z	-5.534	-5.534	0	%100
79	M164	X	-16.509	-16.509	0	%100
80	M164	Z	-9.532	-9.532	0	%100
81	M146A	X	-.31	-.31	0	%100
82	M146A	Z	-.179	-.179	0	%100
83	M149A	X	-1.238	-1.238	0	%100
84	M149A	Z	-.715	-.715	0	%100
85	M152	X	-.31	-.31	0	%100
86	M152	Z	-.179	-.179	0	%100
87	M157	X	-9.584	-9.584	0	%100
88	M157	Z	-5.534	-5.534	0	%100
89	M158B	X	-9.584	-9.584	0	%100
90	M158B	Z	-5.534	-5.534	0	%100
91	M159B	X	-9.584	-9.584	0	%100
92	M159B	Z	-5.534	-5.534	0	%100
93	M160B	X	-9.584	-9.584	0	%100
94	M160B	Z	-5.534	-5.534	0	%100
95	M157B	X	-9.355	-9.355	0	%100
96	M157B	Z	-5.401	-5.401	0	%100
97	TMAC	X	-9.355	-9.355	0	%100
98	TMAC	Z	-5.401	-5.401	0	%100
99	M159	X	-9.355	-9.355	0	%100
100	M159	Z	-5.401	-5.401	0	%100
101	TMAB	X	-9.355	-9.355	0	%100
102	TMAB	Z	-5.401	-5.401	0	%100
103	M159C	X	-2.752	-2.752	0	%100
104	M159C	Z	-1.589	-1.589	0	%100
105	M160D	X	-11.006	-11.006	0	%100
106	M160D	Z	-6.354	-6.354	0	%100
107	M156B	X	-5.876	-5.876	0	%100
108	M156B	Z	-3.393	-3.393	0	%100
109	M157C	X	-5.876	-5.876	0	%100
110	M157C	Z	-3.393	-3.393	0	%100
111	M158C	X	-5.876	-5.876	0	%100
112	M158C	Z	-3.393	-3.393	0	%100
113	M159D	X	-11.006	-11.006	0	%100
114	M159D	Z	-6.354	-6.354	0	%100

Member Distributed Loads (BLC 51 : Structure Wo (300 Deg)) (Continued)

	Member Label	Direction	Start Magnitude[lb/ft,...	End Magnitude[lb/ft,F...	Start Location[ft,%]	End Location[ft,%]
115	M160E	X	-11.006	-11.006	0	%100
116	M160E	Z	-6.354	-6.354	0	%100
117	M127	X	-5.813	-5.813	0	%100
118	M127	Z	-3.356	-3.356	0	%100
119	M128	X	0	0	0	%100
120	M128	Z	0	0	0	%100
121	MP2A	X	-7.842	-7.842	0	%100
122	MP2A	Z	-4.527	-4.527	0	%100
123	M100	X	-.619	-.619	0	%100
124	M100	Z	-.357	-.357	0	%100
125	M101	X	-.619	-.619	0	%100
126	M101	Z	-.357	-.357	0	%100
127	MP5A	X	-7.842	-7.842	0	%100
128	MP5A	Z	-4.527	-4.527	0	%100
129	M103	X	-.619	-.619	0	%100
130	M103	Z	-.357	-.357	0	%100
131	M104	X	-.619	-.619	0	%100
132	M104	Z	-.357	-.357	0	%100
133	MP4A	X	-7.842	-7.842	0	%100
134	MP4A	Z	-4.527	-4.527	0	%100
135	LIVE1	X	-.619	-.619	0	%100
136	LIVE1	Z	-.357	-.357	0	%100
137	M107	X	-.619	-.619	0	%100
138	M107	Z	-.357	-.357	0	%100
139	MP3C	X	-7.842	-7.842	0	%100
140	MP3C	Z	-4.527	-4.527	0	%100
141	MP1C	X	-7.842	-7.842	0	%100
142	MP1C	Z	-4.527	-4.527	0	%100
143	M111	X	-.619	-.619	0	%100
144	M111	Z	-.357	-.357	0	%100
145	M113	X	-.619	-.619	0	%100
146	M113	Z	-.357	-.357	0	%100
147	MP2C	X	-7.842	-7.842	0	%100
148	MP2C	Z	-4.527	-4.527	0	%100
149	M115	X	-.619	-.619	0	%100
150	M115	Z	-.357	-.357	0	%100
151	M116	X	-.619	-.619	0	%100
152	M116	Z	-.357	-.357	0	%100
153	MP5C	X	-7.842	-7.842	0	%100
154	MP5C	Z	-4.527	-4.527	0	%100
155	M118	X	-.619	-.619	0	%100
156	M118	Z	-.357	-.357	0	%100
157	M119	X	-.619	-.619	0	%100
158	M119	Z	-.357	-.357	0	%100
159	MP4C	X	-7.842	-7.842	0	%100
160	MP4C	Z	-4.527	-4.527	0	%100
161	M121	X	-.619	-.619	0	%100
162	M121	Z	-.357	-.357	0	%100
163	M122	X	-.619	-.619	0	%100
164	M122	Z	-.357	-.357	0	%100
165	MP3B	X	-7.842	-7.842	0	%100
166	MP3B	Z	-4.527	-4.527	0	%100

Member Distributed Loads (BLC 51 : Structure Wo (300 Deg)) (Continued)

	Member Label	Direction	Start Magnitude[lb/ft,...	End Magnitude[lb/ft,F...	Start Location[ft,%]	End Location[ft,%]
167	MP1B	X	-7.842	-7.842	0	%100
168	MP1B	Z	-4.527	-4.527	0	%100
169	M126	X	0	0	0	%100
170	M126	Z	0	0	0	%100
171	M128A	X	0	0	0	%100
172	M128A	Z	0	0	0	%100
173	MP2B	X	-7.842	-7.842	0	%100
174	MP2B	Z	-4.527	-4.527	0	%100
175	M130	X	0	0	0	%100
176	M130	Z	0	0	0	%100
177	M131	X	0	0	0	%100
178	M131	Z	0	0	0	%100
179	MP5B	X	-7.842	-7.842	0	%100
180	MP5B	Z	-4.527	-4.527	0	%100
181	M133	X	0	0	0	%100
182	M133	Z	0	0	0	%100
183	M134	X	0	0	0	%100
184	M134	Z	0	0	0	%100
185	MP4B	X	-7.842	-7.842	0	%100
186	MP4B	Z	-4.527	-4.527	0	%100
187	M136	X	0	0	0	%100
188	M136	Z	0	0	0	%100
189	M137	X	0	0	0	%100
190	M137	Z	0	0	0	%100
191	M138	X	-13.063	-13.063	0	%100
192	M138	Z	-7.542	-7.542	0	%100
193	M139	X	-2.603	-2.603	0	%100
194	M139	Z	-1.503	-1.503	0	%100
195	M146	X	-6.657	-6.657	0	%100
196	M146	Z	-3.844	-3.844	0	%100
197	OVP	X	-7.842	-7.842	0	%100
198	OVP	Z	-4.527	-4.527	0	%100
199	M145A	X	-2.603	-2.603	0	%100
200	M145A	Z	-1.503	-1.503	0	%100
201	M146B	X	-13.063	-13.063	0	%100
202	M146B	Z	-7.542	-7.542	0	%100
203	M147B	X	-7.408	-7.408	0	%100
204	M147B	Z	-4.277	-4.277	0	%100
205	M148	X	-7.408	-7.408	0	%100
206	M148	Z	-4.277	-4.277	0	%100

Member Distributed Loads (BLC 52 : Structure Wo (330 Deg))

	Member Label	Direction	Start Magnitude[lb/ft,...	End Magnitude[lb/ft,F...	Start Location[ft,%]	End Location[ft,%]
1	M1	X	-9.571	-9.571	0	%100
2	M1	Z	-16.578	-16.578	0	%100
3	MP3A	X	-4.527	-4.527	0	%100
4	MP3A	Z	-7.842	-7.842	0	%100
5	MP1A	X	-4.527	-4.527	0	%100
6	MP1A	Z	-7.842	-7.842	0	%100
7	M9	X	-.119	-.119	0	%100
8	M9	Z	-.206	-.206	0	%100

Member Distributed Loads (BLC 52 : Structure Wo (330 Deg)) (Continued)

	Member Label	Direction	Start Magnitude[lb/ft,...	End Magnitude[lb/ft,F...	Start Location[ft,%]	End Location[ft,%]
9	M10	X	0	0	0	%100
10	M10	Z	0	0	0	%100
11	M19	X	-9.571	-9.571	0	%100
12	M19	Z	-16.578	-16.578	0	%100
13	M28	X	-9.174	-9.174	0	%100
14	M28	Z	-15.89	-15.89	0	%100
15	M31	X	0	0	0	%100
16	M31	Z	0	0	0	%100
17	M34	X	-9.174	-9.174	0	%100
18	M34	Z	-15.89	-15.89	0	%100
19	M40	X	-.536	-.536	0	%100
20	M40	Z	-.929	-.929	0	%100
21	M46	X	0	0	0	%100
22	M46	Z	0	0	0	%100
23	M52	X	-.536	-.536	0	%100
24	M52	Z	-.929	-.929	0	%100
25	M55	X	-8.196	-8.196	0	%100
26	M55	Z	-14.197	-14.197	0	%100
27	M56	X	-2.586	-2.586	0	%100
28	M56	Z	-4.479	-4.479	0	%100
29	M57	X	-6.354	-6.354	0	%100
30	M57	Z	-11.006	-11.006	0	%100
31	M58	X	-6.354	-6.354	0	%100
32	M58	Z	-11.006	-11.006	0	%100
33	M59	X	-.316	-.316	0	%100
34	M59	Z	-.546	-.546	0	%100
35	M60	X	-.316	-.316	0	%100
36	M60	Z	-.546	-.546	0	%100
37	M61	X	-.316	-.316	0	%100
38	M61	Z	-.546	-.546	0	%100
39	M62	X	-.316	-.316	0	%100
40	M62	Z	-.546	-.546	0	%100
41	M63	X	-.316	-.316	0	%100
42	M63	Z	-.546	-.546	0	%100
43	M64	X	-.316	-.316	0	%100
44	M64	Z	-.546	-.546	0	%100
45	M65	X	-.316	-.316	0	%100
46	M65	Z	-.546	-.546	0	%100
47	M66	X	-1.119	-1.119	0	%100
48	M66	Z	-1.938	-1.938	0	%100
49	FACE1	X	-7.149	-7.149	0	%100
50	FACE1	Z	-12.382	-12.382	0	%100
51	M76	X	0	0	0	%100
52	M76	Z	0	0	0	%100
53	M77	X	-7.149	-7.149	0	%100
54	M77	Z	-12.382	-12.382	0	%100
55	FACE2	X	-9.571	-9.571	0	%100
56	FACE2	Z	-16.578	-16.578	0	%100
57	M79	X	0	0	0	%100
58	M79	Z	0	0	0	%100
59	M80	X	-9.571	-9.571	0	%100
60	M80	Z	-16.578	-16.578	0	%100

Member Distributed Loads (BLC 52 : Structure Wo (330 Deg)) (Continued)

	Member Label	Direction	Start Magnitude[lb/ft,...	End Magnitude[lb/ft,F...	Start Location[ft,%]	End Location[ft,%]
61	M85	X	-5.534	-5.534	0	%100
62	M85	Z	-9.584	-9.584	0	%100
63	M86	X	-5.401	-5.401	0	%100
64	M86	Z	-9.355	-9.355	0	%100
65	TMAA	X	-5.401	-5.401	0	%100
66	TMAA	Z	-9.355	-9.355	0	%100
67	M89	X	-5.367	-5.367	0	%100
68	M89	Z	-9.296	-9.296	0	%100
69	M91	X	-4.766	-4.766	0	%100
70	M91	Z	-8.255	-8.255	0	%100
71	M92	X	-7.149	-7.149	0	%100
72	M92	Z	-12.382	-12.382	0	%100
73	M96	X	-.119	-.119	0	%100
74	M96	Z	-.206	-.206	0	%100
75	M149	X	0	0	0	%100
76	M149	Z	0	0	0	%100
77	M160	X	-5.534	-5.534	0	%100
78	M160	Z	-9.584	-9.584	0	%100
79	M164	X	-7.149	-7.149	0	%100
80	M164	Z	-12.382	-12.382	0	%100
81	M146A	X	0	0	0	%100
82	M146A	Z	0	0	0	%100
83	M149A	X	-.536	-.536	0	%100
84	M149A	Z	-.929	-.929	0	%100
85	M152	X	-.536	-.536	0	%100
86	M152	Z	-.929	-.929	0	%100
87	M157	X	-5.534	-5.534	0	%100
88	M157	Z	-9.584	-9.584	0	%100
89	M158B	X	-5.534	-5.534	0	%100
90	M158B	Z	-9.584	-9.584	0	%100
91	M159B	X	-5.534	-5.534	0	%100
92	M159B	Z	-9.584	-9.584	0	%100
93	M160B	X	-5.534	-5.534	0	%100
94	M160B	Z	-9.584	-9.584	0	%100
95	M157B	X	-5.401	-5.401	0	%100
96	M157B	Z	-9.355	-9.355	0	%100
97	TMAC	X	-5.401	-5.401	0	%100
98	TMAC	Z	-9.355	-9.355	0	%100
99	M159	X	-5.401	-5.401	0	%100
100	M159	Z	-9.355	-9.355	0	%100
101	TMAB	X	-5.401	-5.401	0	%100
102	TMAB	Z	-9.355	-9.355	0	%100
103	M159C	X	0	0	0	%100
104	M159C	Z	0	0	0	%100
105	M160D	X	-4.766	-4.766	0	%100
106	M160D	Z	-8.255	-8.255	0	%100
107	M156B	X	-5.367	-5.367	0	%100
108	M156B	Z	-9.296	-9.296	0	%100
109	M157C	X	-2.405	-2.405	0	%100
110	M157C	Z	-4.166	-4.166	0	%100
111	M158C	X	-2.405	-2.405	0	%100
112	M158C	Z	-4.166	-4.166	0	%100

Member Distributed Loads (BLC 52 : Structure Wo (330 Deg)) (Continued)

	Member Label	Direction	Start Magnitude[lb/ft,...	End Magnitude[lb/ft,F...	Start Location[ft,%]	End Location[ft,%]
113	M159D	X	-5.367	-5.367	0	%100
114	M159D	Z	-9.296	-9.296	0	%100
115	M160E	X	-5.367	-5.367	0	%100
116	M160E	Z	-9.296	-9.296	0	%100
117	M127	X	-4.475	-4.475	0	%100
118	M127	Z	-7.75	-7.75	0	%100
119	M128	X	-1.119	-1.119	0	%100
120	M128	Z	-1.938	-1.938	0	%100
121	MP2A	X	-4.527	-4.527	0	%100
122	MP2A	Z	-7.842	-7.842	0	%100
123	M100	X	-.119	-.119	0	%100
124	M100	Z	-.206	-.206	0	%100
125	M101	X	-.119	-.119	0	%100
126	M101	Z	-.206	-.206	0	%100
127	MP5A	X	-4.527	-4.527	0	%100
128	MP5A	Z	-7.842	-7.842	0	%100
129	M103	X	-.119	-.119	0	%100
130	M103	Z	-.206	-.206	0	%100
131	M104	X	-.119	-.119	0	%100
132	M104	Z	-.206	-.206	0	%100
133	MP4A	X	-4.527	-4.527	0	%100
134	MP4A	Z	-7.842	-7.842	0	%100
135	LIVE1	X	-.119	-.119	0	%100
136	LIVE1	Z	-.206	-.206	0	%100
137	M107	X	-.119	-.119	0	%100
138	M107	Z	-.206	-.206	0	%100
139	MP3C	X	-4.527	-4.527	0	%100
140	MP3C	Z	-7.842	-7.842	0	%100
141	MP1C	X	-4.527	-4.527	0	%100
142	MP1C	Z	-7.842	-7.842	0	%100
143	M111	X	-.477	-.477	0	%100
144	M111	Z	-.825	-.825	0	%100
145	M113	X	-.477	-.477	0	%100
146	M113	Z	-.825	-.825	0	%100
147	MP2C	X	-4.527	-4.527	0	%100
148	MP2C	Z	-7.842	-7.842	0	%100
149	M115	X	-.477	-.477	0	%100
150	M115	Z	-.825	-.825	0	%100
151	M116	X	-.477	-.477	0	%100
152	M116	Z	-.825	-.825	0	%100
153	MP5C	X	-4.527	-4.527	0	%100
154	MP5C	Z	-7.842	-7.842	0	%100
155	M118	X	-.477	-.477	0	%100
156	M118	Z	-.825	-.825	0	%100
157	M119	X	-.477	-.477	0	%100
158	M119	Z	-.825	-.825	0	%100
159	MP4C	X	-4.527	-4.527	0	%100
160	MP4C	Z	-7.842	-7.842	0	%100
161	M121	X	-.477	-.477	0	%100
162	M121	Z	-.825	-.825	0	%100
163	M122	X	-.477	-.477	0	%100
164	M122	Z	-.825	-.825	0	%100

Member Distributed Loads (BLC 52 : Structure Wo (330 Deg)) (Continued)

	Member Label	Direction	Start Magnitude[lb/ft,...	End Magnitude[lb/ft,F...	Start Location[ft,%]	End Location[ft,%]
165	MP3B	X	-4.527	-4.527	0	%100
166	MP3B	Z	-7.842	-7.842	0	%100
167	MP1B	X	-4.527	-4.527	0	%100
168	MP1B	Z	-7.842	-7.842	0	%100
169	M126	X	-.119	-.119	0	%100
170	M126	Z	-.206	-.206	0	%100
171	M128A	X	-.119	-.119	0	%100
172	M128A	Z	-.206	-.206	0	%100
173	MP2B	X	-4.527	-4.527	0	%100
174	MP2B	Z	-7.842	-7.842	0	%100
175	M130	X	-.119	-.119	0	%100
176	M130	Z	-.206	-.206	0	%100
177	M131	X	-.119	-.119	0	%100
178	M131	Z	-.206	-.206	0	%100
179	MP5B	X	-4.527	-4.527	0	%100
180	MP5B	Z	-7.842	-7.842	0	%100
181	M133	X	-.119	-.119	0	%100
182	M133	Z	-.206	-.206	0	%100
183	M134	X	-.119	-.119	0	%100
184	M134	Z	-.206	-.206	0	%100
185	MP4B	X	-4.527	-4.527	0	%100
186	MP4B	Z	-7.842	-7.842	0	%100
187	M136	X	-.119	-.119	0	%100
188	M136	Z	-.206	-.206	0	%100
189	M137	X	-.119	-.119	0	%100
190	M137	Z	-.206	-.206	0	%100
191	M138	X	-7.378	-7.378	0	%100
192	M138	Z	-12.78	-12.78	0	%100
193	M139	X	-1.34	-1.34	0	%100
194	M139	Z	-2.32	-2.32	0	%100
195	M146	X	-3.844	-3.844	0	%100
196	M146	Z	-6.657	-6.657	0	%100
197	OVP	X	-4.527	-4.527	0	%100
198	OVP	Z	-7.842	-7.842	0	%100
199	M145A	X	-4.604	-4.604	0	%100
200	M145A	Z	-7.975	-7.975	0	%100
201	M146B	X	-4.604	-4.604	0	%100
202	M146B	Z	-7.975	-7.975	0	%100
203	M147B	X	-1.34	-1.34	0	%100
204	M147B	Z	-2.32	-2.32	0	%100
205	M148	X	-7.378	-7.378	0	%100
206	M148	Z	-12.78	-12.78	0	%100

Member Distributed Loads (BLC 53 : Structure Wi (0 Deg))

	Member Label	Direction	Start Magnitude[lb/ft,...	End Magnitude[lb/ft,F...	Start Location[ft,%]	End Location[ft,%]
1	M1	X	0	0	0	%100
2	M1	Z	-6.904	-6.904	0	%100
3	MP3A	X	0	0	0	%100
4	MP3A	Z	-4.096	-4.096	0	%100
5	MP1A	X	0	0	0	%100
6	MP1A	Z	-4.028	-4.028	0	%100

Member Distributed Loads (BLC 53 : Structure Wi (0 Deg)) (Continued)

	Member Label	Direction	Start Magnitude[lb/ft,...	End Magnitude[lb/ft,F...	Start Location[ft,%]	End Location[ft,%]
7	M9	X	0	0	0	%100
8	M9	Z	0	0	0	%100
9	M10	X	0	0	0	%100
10	M10	Z	-1.726	-1.726	0	%100
11	M19	X	0	0	0	%100
12	M19	Z	-1.726	-1.726	0	%100
13	M28	X	0	0	0	%100
14	M28	Z	-6.576	-6.576	0	%100
15	M31	X	0	0	0	%100
16	M31	Z	-1.644	-1.644	0	%100
17	M34	X	0	0	0	%100
18	M34	Z	-1.644	-1.644	0	%100
19	M40	X	0	0	0	%100
20	M40	Z	-1.693	-1.693	0	%100
21	M46	X	0	0	0	%100
22	M46	Z	-.423	-.423	0	%100
23	M52	X	0	0	0	%100
24	M52	Z	-.423	-.423	0	%100
25	M55	X	0	0	0	%100
26	M55	Z	-5.781	-5.781	0	%100
27	M56	X	0	0	0	%100
28	M56	Z	0	0	0	%100
29	M57	X	0	0	0	%100
30	M57	Z	-4.759	-4.759	0	%100
31	M58	X	0	0	0	%100
32	M58	Z	-4.759	-4.759	0	%100
33	M59	X	0	0	0	%100
34	M59	Z	0	0	0	%100
35	M60	X	0	0	0	%100
36	M60	Z	0	0	0	%100
37	M61	X	0	0	0	%100
38	M61	Z	0	0	0	%100
39	M62	X	0	0	0	%100
40	M62	Z	0	0	0	%100
41	M63	X	0	0	0	%100
42	M63	Z	0	0	0	%100
43	M64	X	0	0	0	%100
44	M64	Z	0	0	0	%100
45	M65	X	0	0	0	%100
46	M65	Z	0	0	0	%100
47	M66	X	0	0	0	%100
48	M66	Z	0	0	0	%100
49	FACE1	X	0	0	0	%100
50	FACE1	Z	-4.995	-4.995	0	%100
51	M76	X	0	0	0	%100
52	M76	Z	-1.249	-1.249	0	%100
53	M77	X	0	0	0	%100
54	M77	Z	-1.249	-1.249	0	%100
55	FACE2	X	0	0	0	%100
56	FACE2	Z	-6.904	-6.904	0	%100
57	M79	X	0	0	0	%100
58	M79	Z	-1.726	-1.726	0	%100

Member Distributed Loads (BLC 53 : Structure Wi (0 Deg)) (Continued)

	Member Label	Direction	Start Magnitude[lb/ft,...	End Magnitude[lb/ft,F...	Start Location[ft,%]	End Location[ft,%]
59	M80	X	0	0	0	%100
60	M80	Z	-1.726	-1.726	0	%100
61	M85	X	0	0	0	%100
62	M85	Z	-3.805	-3.805	0	%100
63	M86	X	0	0	0	%100
64	M86	Z	-3.723	-3.723	0	%100
65	TMAA	X	0	0	0	%100
66	TMAA	Z	-3.723	-3.723	0	%100
67	M89	X	0	0	0	%100
68	M89	Z	-4.34	-4.34	0	%100
69	M91	X	0	0	0	%100
70	M91	Z	-4.34	-4.34	0	%100
71	M92	X	0	0	0	%100
72	M92	Z	-5.956	-5.956	0	%100
73	M96	X	0	0	0	%100
74	M96	Z	0	0	0	%100
75	M149	X	0	0	0	%100
76	M149	Z	-1.489	-1.489	0	%100
77	M160	X	0	0	0	%100
78	M160	Z	-3.805	-3.805	0	%100
79	M164	X	0	0	0	%100
80	M164	Z	-1.489	-1.489	0	%100
81	M146A	X	0	0	0	%100
82	M146A	Z	-.423	-.423	0	%100
83	M149A	X	0	0	0	%100
84	M149A	Z	-.423	-.423	0	%100
85	M152	X	0	0	0	%100
86	M152	Z	-1.693	-1.693	0	%100
87	M157	X	0	0	0	%100
88	M157	Z	-3.805	-3.805	0	%100
89	M158B	X	0	0	0	%100
90	M158B	Z	-3.805	-3.805	0	%100
91	M159B	X	0	0	0	%100
92	M159B	Z	-3.805	-3.805	0	%100
93	M160B	X	0	0	0	%100
94	M160B	Z	-3.805	-3.805	0	%100
95	M157B	X	0	0	0	%100
96	M157B	Z	-3.723	-3.723	0	%100
97	TMAC	X	0	0	0	%100
98	TMAC	Z	-3.723	-3.723	0	%100
99	M159	X	0	0	0	%100
100	M159	Z	-3.723	-3.723	0	%100
101	TMAB	X	0	0	0	%100
102	TMAB	Z	-3.723	-3.723	0	%100
103	M159C	X	0	0	0	%100
104	M159C	Z	-1.085	-1.085	0	%100
105	M160D	X	0	0	0	%100
106	M160D	Z	-1.085	-1.085	0	%100
107	M156B	X	0	0	0	%100
108	M156B	Z	-4.34	-4.34	0	%100
109	M157C	X	0	0	0	%100
110	M157C	Z	-2.317	-2.317	0	%100

Member Distributed Loads (BLC 53 : Structure Wi (0 Deg)) (Continued)

	Member Label	Direction	Start Magnitude[lb/ft,...	End Magnitude[lb/ft,F...	Start Location[ft,%]	End Location[ft,%]
111	M158C	X	0	0	0	%100
112	M158C	Z	-2.317	-2.317	0	%100
113	M159D	X	0	0	0	%100
114	M159D	Z	-2.317	-2.317	0	%100
115	M160E	X	0	0	0	%100
116	M160E	Z	-2.317	-2.317	0	%100
117	M127	X	0	0	0	%100
118	M127	Z	-2.485	-2.485	0	%100
119	M128	X	0	0	0	%100
120	M128	Z	-2.485	-2.485	0	%100
121	MP2A	X	0	0	0	%100
122	MP2A	Z	-4.028	-4.028	0	%100
123	M100	X	0	0	0	%100
124	M100	Z	0	0	0	%100
125	M101	X	0	0	0	%100
126	M101	Z	0	0	0	%100
127	MP5A	X	0	0	0	%100
128	MP5A	Z	-4.028	-4.028	0	%100
129	M103	X	0	0	0	%100
130	M103	Z	0	0	0	%100
131	M104	X	0	0	0	%100
132	M104	Z	0	0	0	%100
133	MP4A	X	0	0	0	%100
134	MP4A	Z	-4.028	-4.028	0	%100
135	LIVE1	X	0	0	0	%100
136	LIVE1	Z	0	0	0	%100
137	M107	X	0	0	0	%100
138	M107	Z	0	0	0	%100
139	MP3C	X	0	0	0	%100
140	MP3C	Z	-4.096	-4.096	0	%100
141	MP1C	X	0	0	0	%100
142	MP1C	Z	-4.028	-4.028	0	%100
143	M111	X	0	0	0	%100
144	M111	Z	-1.189	-1.189	0	%100
145	M113	X	0	0	0	%100
146	M113	Z	-1.189	-1.189	0	%100
147	MP2C	X	0	0	0	%100
148	MP2C	Z	-4.028	-4.028	0	%100
149	M115	X	0	0	0	%100
150	M115	Z	-1.189	-1.189	0	%100
151	M116	X	0	0	0	%100
152	M116	Z	-1.189	-1.189	0	%100
153	MP5C	X	0	0	0	%100
154	MP5C	Z	-4.028	-4.028	0	%100
155	M118	X	0	0	0	%100
156	M118	Z	-1.189	-1.189	0	%100
157	M119	X	0	0	0	%100
158	M119	Z	-1.189	-1.189	0	%100
159	MP4C	X	0	0	0	%100
160	MP4C	Z	-4.028	-4.028	0	%100
161	M121	X	0	0	0	%100
162	M121	Z	-1.189	-1.189	0	%100

Member Distributed Loads (BLC 53 : Structure Wi (0 Deg)) (Continued)

	Member Label	Direction	Start Magnitude[lb/ft,...	End Magnitude[lb/ft,F...	Start Location[ft,%]	End Location[ft,%]
163	M122	X	0	0	0	%100
164	M122	Z	-1.189	-1.189	0	%100
165	MP3B	X	0	0	0	%100
166	MP3B	Z	-4.096	-4.096	0	%100
167	MP1B	X	0	0	0	%100
168	MP1B	Z	-4.028	-4.028	0	%100
169	M126	X	0	0	0	%100
170	M126	Z	-1.189	-1.189	0	%100
171	M128A	X	0	0	0	%100
172	M128A	Z	-1.189	-1.189	0	%100
173	MP2B	X	0	0	0	%100
174	MP2B	Z	-4.028	-4.028	0	%100
175	M130	X	0	0	0	%100
176	M130	Z	-1.189	-1.189	0	%100
177	M131	X	0	0	0	%100
178	M131	Z	-1.189	-1.189	0	%100
179	MP5B	X	0	0	0	%100
180	MP5B	Z	-4.028	-4.028	0	%100
181	M133	X	0	0	0	%100
182	M133	Z	-1.189	-1.189	0	%100
183	M134	X	0	0	0	%100
184	M134	Z	-1.189	-1.189	0	%100
185	MP4B	X	0	0	0	%100
186	MP4B	Z	-4.028	-4.028	0	%100
187	M136	X	0	0	0	%100
188	M136	Z	-1.189	-1.189	0	%100
189	M137	X	0	0	0	%100
190	M137	Z	-1.189	-1.189	0	%100
191	M138	X	0	0	0	%100
192	M138	Z	-2.605	-2.605	0	%100
193	M139	X	0	0	0	%100
194	M139	Z	-2.605	-2.605	0	%100
195	M146	X	0	0	0	%100
196	M146	Z	-3.249	-3.249	0	%100
197	OVP	X	0	0	0	%100
198	OVP	Z	-3.766	-3.766	0	%100
199	M145A	X	0	0	0	%100
200	M145A	Z	-4.594	-4.594	0	%100
201	M146B	X	0	0	0	%100
202	M146B	Z	-.916	-.916	0	%100
203	M147B	X	0	0	0	%100
204	M147B	Z	-.916	-.916	0	%100
205	M148	X	0	0	0	%100
206	M148	Z	-4.594	-4.594	0	%100

Member Distributed Loads (BLC 54 : Structure Wi (30 Deg))

	Member Label	Direction	Start Magnitude[lb/ft,...	End Magnitude[lb/ft,F...	Start Location[ft,%]	End Location[ft,%]
1	M1	X	2.589	2.589	0	%100
2	M1	Z	-4.484	-4.484	0	%100
3	MP3A	X	2.048	2.048	0	%100
4	MP3A	Z	-3.547	-3.547	0	%100

Member Distributed Loads (BLC 54 : Structure Wi (30 Deg)) (Continued)

	Member Label	Direction	Start Magnitude[lb/ft,...	End Magnitude[lb/ft,F...	Start Location[ft,%]	End Location[ft,%]
5	MP1A	X	2.014	2.014	0	%100
6	MP1A	Z	-3.488	-3.488	0	%100
7	M9	X	.198	.198	0	%100
8	M9	Z	-.343	-.343	0	%100
9	M10	X	2.589	2.589	0	%100
10	M10	Z	-4.484	-4.484	0	%100
11	M19	X	0	0	0	%100
12	M19	Z	0	0	0	%100
13	M28	X	2.466	2.466	0	%100
14	M28	Z	-4.271	-4.271	0	%100
15	M31	X	2.466	2.466	0	%100
16	M31	Z	-4.271	-4.271	0	%100
17	M34	X	0	0	0	%100
18	M34	Z	0	0	0	%100
19	M40	X	.635	.635	0	%100
20	M40	Z	-1.1	-1.1	0	%100
21	M46	X	.635	.635	0	%100
22	M46	Z	-1.1	-1.1	0	%100
23	M52	X	0	0	0	%100
24	M52	Z	0	0	0	%100
25	M55	X	2.168	2.168	0	%100
26	M55	Z	-3.755	-3.755	0	%100
27	M56	X	.682	.682	0	%100
28	M56	Z	-1.181	-1.181	0	%100
29	M57	X	2.38	2.38	0	%100
30	M57	Z	-4.122	-4.122	0	%100
31	M58	X	2.38	2.38	0	%100
32	M58	Z	-4.122	-4.122	0	%100
33	M59	X	.244	.244	0	%100
34	M59	Z	-.422	-.422	0	%100
35	M60	X	.244	.244	0	%100
36	M60	Z	-.422	-.422	0	%100
37	M61	X	.244	.244	0	%100
38	M61	Z	-.422	-.422	0	%100
39	M62	X	.244	.244	0	%100
40	M62	Z	-.422	-.422	0	%100
41	M63	X	.244	.244	0	%100
42	M63	Z	-.422	-.422	0	%100
43	M64	X	.244	.244	0	%100
44	M64	Z	-.422	-.422	0	%100
45	M65	X	.244	.244	0	%100
46	M65	Z	-.422	-.422	0	%100
47	M66	X	.414	.414	0	%100
48	M66	Z	-.717	-.717	0	%100
49	FACE1	X	1.873	1.873	0	%100
50	FACE1	Z	-3.245	-3.245	0	%100
51	M76	X	1.873	1.873	0	%100
52	M76	Z	-3.245	-3.245	0	%100
53	M77	X	0	0	0	%100
54	M77	Z	0	0	0	%100
55	FACE2	X	2.589	2.589	0	%100
56	FACE2	Z	-4.484	-4.484	0	%100

Member Distributed Loads (BLC 54 : Structure Wi (30 Deg)) (Continued)

	Member Label	Direction	Start Magnitude[lb/ft,...	End Magnitude[lb/ft,F...	Start Location[ft,%]	End Location[ft,%]
57	M79	X	2.589	2.589	0	%100
58	M79	Z	-4.484	-4.484	0	%100
59	M80	X	0	0	0	%100
60	M80	Z	0	0	0	%100
61	M85	X	1.903	1.903	0	%100
62	M85	Z	-3.295	-3.295	0	%100
63	M86	X	1.862	1.862	0	%100
64	M86	Z	-3.224	-3.224	0	%100
65	TMAA	X	1.862	1.862	0	%100
66	TMAA	Z	-3.224	-3.224	0	%100
67	M89	X	1.833	1.833	0	%100
68	M89	Z	-3.174	-3.174	0	%100
69	M91	X	1.627	1.627	0	%100
70	M91	Z	-2.819	-2.819	0	%100
71	M92	X	2.233	2.233	0	%100
72	M92	Z	-3.868	-3.868	0	%100
73	M96	X	.198	.198	0	%100
74	M96	Z	-.343	-.343	0	%100
75	M149	X	2.233	2.233	0	%100
76	M149	Z	-3.868	-3.868	0	%100
77	M160	X	1.903	1.903	0	%100
78	M160	Z	-3.295	-3.295	0	%100
79	M164	X	0	0	0	%100
80	M164	Z	0	0	0	%100
81	M146A	X	.635	.635	0	%100
82	M146A	Z	-1.1	-1.1	0	%100
83	M149A	X	0	0	0	%100
84	M149A	Z	0	0	0	%100
85	M152	X	.635	.635	0	%100
86	M152	Z	-1.1	-1.1	0	%100
87	M157	X	1.903	1.903	0	%100
88	M157	Z	-3.295	-3.295	0	%100
89	M158B	X	1.903	1.903	0	%100
90	M158B	Z	-3.295	-3.295	0	%100
91	M159B	X	1.903	1.903	0	%100
92	M159B	Z	-3.295	-3.295	0	%100
93	M160B	X	1.903	1.903	0	%100
94	M160B	Z	-3.295	-3.295	0	%100
95	M157B	X	1.862	1.862	0	%100
96	M157B	Z	-3.224	-3.224	0	%100
97	TMAC	X	1.862	1.862	0	%100
98	TMAC	Z	-3.224	-3.224	0	%100
99	M159	X	1.862	1.862	0	%100
100	M159	Z	-3.224	-3.224	0	%100
101	TMAB	X	1.862	1.862	0	%100
102	TMAB	Z	-3.224	-3.224	0	%100
103	M159C	X	1.627	1.627	0	%100
104	M159C	Z	-2.819	-2.819	0	%100
105	M160D	X	0	0	0	%100
106	M160D	Z	0	0	0	%100
107	M156B	X	1.833	1.833	0	%100
108	M156B	Z	-3.174	-3.174	0	%100

Member Distributed Loads (BLC 54 : Structure Wi (30 Deg)) (Continued)

	Member Label	Direction	Start Magnitude[lb/ft,...	End Magnitude[lb/ft,F...	Start Location[ft,%]	End Location[ft,%]
109	M157C	X	1.833	1.833	0	%100
110	M157C	Z	-3.174	-3.174	0	%100
111	M158C	X	1.833	1.833	0	%100
112	M158C	Z	-3.174	-3.174	0	%100
113	M159D	X	.821	.821	0	%100
114	M159D	Z	-1.423	-1.423	0	%100
115	M160E	X	.821	.821	0	%100
116	M160E	Z	-1.423	-1.423	0	%100
117	M127	X	.414	.414	0	%100
118	M127	Z	-.717	-.717	0	%100
119	M128	X	1.657	1.657	0	%100
120	M128	Z	-2.869	-2.869	0	%100
121	MP2A	X	2.014	2.014	0	%100
122	MP2A	Z	-3.488	-3.488	0	%100
123	M100	X	.198	.198	0	%100
124	M100	Z	-.343	-.343	0	%100
125	M101	X	.198	.198	0	%100
126	M101	Z	-.343	-.343	0	%100
127	MP5A	X	2.014	2.014	0	%100
128	MP5A	Z	-3.488	-3.488	0	%100
129	M103	X	.198	.198	0	%100
130	M103	Z	-.343	-.343	0	%100
131	M104	X	.198	.198	0	%100
132	M104	Z	-.343	-.343	0	%100
133	MP4A	X	2.014	2.014	0	%100
134	MP4A	Z	-3.488	-3.488	0	%100
135	LIVE1	X	.198	.198	0	%100
136	LIVE1	Z	-.343	-.343	0	%100
137	M107	X	.198	.198	0	%100
138	M107	Z	-.343	-.343	0	%100
139	MP3C	X	2.048	2.048	0	%100
140	MP3C	Z	-3.547	-3.547	0	%100
141	MP1C	X	2.014	2.014	0	%100
142	MP1C	Z	-3.488	-3.488	0	%100
143	M111	X	.198	.198	0	%100
144	M111	Z	-.343	-.343	0	%100
145	M113	X	.198	.198	0	%100
146	M113	Z	-.343	-.343	0	%100
147	MP2C	X	2.014	2.014	0	%100
148	MP2C	Z	-3.488	-3.488	0	%100
149	M115	X	.198	.198	0	%100
150	M115	Z	-.343	-.343	0	%100
151	M116	X	.198	.198	0	%100
152	M116	Z	-.343	-.343	0	%100
153	MP5C	X	2.014	2.014	0	%100
154	MP5C	Z	-3.488	-3.488	0	%100
155	M118	X	.198	.198	0	%100
156	M118	Z	-.343	-.343	0	%100
157	M119	X	.198	.198	0	%100
158	M119	Z	-.343	-.343	0	%100
159	MP4C	X	2.014	2.014	0	%100
160	MP4C	Z	-3.488	-3.488	0	%100

Member Distributed Loads (BLC 54 : Structure Wi (30 Deg)) (Continued)

	Member Label	Direction	Start Magnitude[lb/ft,...	End Magnitude[lb/ft,F...	Start Location[ft,%]	End Location[ft,%]
161	M121	X	.198	.198	0	%100
162	M121	Z	-.343	-.343	0	%100
163	M122	X	.198	.198	0	%100
164	M122	Z	-.343	-.343	0	%100
165	MP3B	X	2.048	2.048	0	%100
166	MP3B	Z	-3.547	-3.547	0	%100
167	MP1B	X	2.014	2.014	0	%100
168	MP1B	Z	-3.488	-3.488	0	%100
169	M126	X	.793	.793	0	%100
170	M126	Z	-1.373	-1.373	0	%100
171	M128A	X	.793	.793	0	%100
172	M128A	Z	-1.373	-1.373	0	%100
173	MP2B	X	2.014	2.014	0	%100
174	MP2B	Z	-3.488	-3.488	0	%100
175	M130	X	.793	.793	0	%100
176	M130	Z	-1.373	-1.373	0	%100
177	M131	X	.793	.793	0	%100
178	M131	Z	-1.373	-1.373	0	%100
179	MP5B	X	2.014	2.014	0	%100
180	MP5B	Z	-3.488	-3.488	0	%100
181	M133	X	.793	.793	0	%100
182	M133	Z	-1.373	-1.373	0	%100
183	M134	X	.793	.793	0	%100
184	M134	Z	-1.373	-1.373	0	%100
185	MP4B	X	2.014	2.014	0	%100
186	MP4B	Z	-3.488	-3.488	0	%100
187	M136	X	.793	.793	0	%100
188	M136	Z	-1.373	-1.373	0	%100
189	M137	X	.793	.793	0	%100
190	M137	Z	-1.373	-1.373	0	%100
191	M138	X	.408	.408	0	%100
192	M138	Z	-.707	-.707	0	%100
193	M139	X	2.247	2.247	0	%100
194	M139	Z	-3.892	-3.892	0	%100
195	M146	X	1.625	1.625	0	%100
196	M146	Z	-2.814	-2.814	0	%100
197	OVP	X	1.883	1.883	0	%100
198	OVP	Z	-3.261	-3.261	0	%100
199	M145A	X	2.247	2.247	0	%100
200	M145A	Z	-3.892	-3.892	0	%100
201	M146B	X	.408	.408	0	%100
202	M146B	Z	-.707	-.707	0	%100
203	M147B	X	1.402	1.402	0	%100
204	M147B	Z	-2.429	-2.429	0	%100
205	M148	X	1.402	1.402	0	%100
206	M148	Z	-2.429	-2.429	0	%100

Member Distributed Loads (BLC 55 : Structure Wi (60 Deg))

	Member Label	Direction	Start Magnitude[lb/ft,...	End Magnitude[lb/ft,F...	Start Location[ft,%]	End Location[ft,%]
1	M1	X	1.495	1.495	0	%100
2	M1	Z	-.863	-.863	0	%100

Member Distributed Loads (BLC 55 : Structure Wi (60 Deg)) (Continued)

	Member Label	Direction	Start Magnitude[lb/ft,...	End Magnitude[lb/ft,F...	Start Location[ft,%]	End Location[ft,%]
3	MP3A	X	3.547	3.547	0	%100
4	MP3A	Z	-2.048	-2.048	0	%100
5	MP1A	X	3.488	3.488	0	%100
6	MP1A	Z	-2.014	-2.014	0	%100
7	M9	X	1.03	1.03	0	%100
8	M9	Z	-.594	-.594	0	%100
9	M10	X	5.979	5.979	0	%100
10	M10	Z	-3.452	-3.452	0	%100
11	M19	X	1.495	1.495	0	%100
12	M19	Z	-.863	-.863	0	%100
13	M28	X	1.424	1.424	0	%100
14	M28	Z	-.822	-.822	0	%100
15	M31	X	5.695	5.695	0	%100
16	M31	Z	-3.288	-3.288	0	%100
17	M34	X	1.424	1.424	0	%100
18	M34	Z	-.822	-.822	0	%100
19	M40	X	.367	.367	0	%100
20	M40	Z	-.212	-.212	0	%100
21	M46	X	1.466	1.466	0	%100
22	M46	Z	-.847	-.847	0	%100
23	M52	X	.367	.367	0	%100
24	M52	Z	-.212	-.212	0	%100
25	M55	X	1.252	1.252	0	%100
26	M55	Z	-.723	-.723	0	%100
27	M56	X	3.543	3.543	0	%100
28	M56	Z	-2.045	-2.045	0	%100
29	M57	X	4.122	4.122	0	%100
30	M57	Z	-2.38	-2.38	0	%100
31	M58	X	4.122	4.122	0	%100
32	M58	Z	-2.38	-2.38	0	%100
33	M59	X	1.266	1.266	0	%100
34	M59	Z	-.731	-.731	0	%100
35	M60	X	1.266	1.266	0	%100
36	M60	Z	-.731	-.731	0	%100
37	M61	X	1.266	1.266	0	%100
38	M61	Z	-.731	-.731	0	%100
39	M62	X	1.266	1.266	0	%100
40	M62	Z	-.731	-.731	0	%100
41	M63	X	1.266	1.266	0	%100
42	M63	Z	-.731	-.731	0	%100
43	M64	X	1.266	1.266	0	%100
44	M64	Z	-.731	-.731	0	%100
45	M65	X	1.266	1.266	0	%100
46	M65	Z	-.731	-.731	0	%100
47	M66	X	2.152	2.152	0	%100
48	M66	Z	-1.242	-1.242	0	%100
49	FACE1	X	1.082	1.082	0	%100
50	FACE1	Z	-.624	-.624	0	%100
51	M76	X	4.326	4.326	0	%100
52	M76	Z	-2.498	-2.498	0	%100
53	M77	X	1.082	1.082	0	%100
54	M77	Z	-.624	-.624	0	%100

Member Distributed Loads (BLC 55 : Structure Wi (60 Deg)) (Continued)

	Member Label	Direction	Start Magnitude[lb/ft,...	End Magnitude[lb/ft,F...	Start Location[ft,%]	End Location[ft,%]
55	FACE2	X	1.495	1.495	0	%100
56	FACE2	Z	-.863	-.863	0	%100
57	M79	X	5.979	5.979	0	%100
58	M79	Z	-3.452	-3.452	0	%100
59	M80	X	1.495	1.495	0	%100
60	M80	Z	-.863	-.863	0	%100
61	M85	X	3.295	3.295	0	%100
62	M85	Z	-1.903	-1.903	0	%100
63	M86	X	3.224	3.224	0	%100
64	M86	Z	-1.862	-1.862	0	%100
65	TMAA	X	3.224	3.224	0	%100
66	TMAA	Z	-1.862	-1.862	0	%100
67	M89	X	2.007	2.007	0	%100
68	M89	Z	-1.159	-1.159	0	%100
69	M91	X	.94	.94	0	%100
70	M91	Z	-.542	-.542	0	%100
71	M92	X	1.289	1.289	0	%100
72	M92	Z	-.744	-.744	0	%100
73	M96	X	1.03	1.03	0	%100
74	M96	Z	-.594	-.594	0	%100
75	M149	X	5.158	5.158	0	%100
76	M149	Z	-2.978	-2.978	0	%100
77	M160	X	3.295	3.295	0	%100
78	M160	Z	-1.903	-1.903	0	%100
79	M164	X	1.289	1.289	0	%100
80	M164	Z	-.744	-.744	0	%100
81	M146A	X	1.466	1.466	0	%100
82	M146A	Z	-.847	-.847	0	%100
83	M149A	X	.367	.367	0	%100
84	M149A	Z	-.212	-.212	0	%100
85	M152	X	.367	.367	0	%100
86	M152	Z	-.212	-.212	0	%100
87	M157	X	3.295	3.295	0	%100
88	M157	Z	-1.903	-1.903	0	%100
89	M158B	X	3.295	3.295	0	%100
90	M158B	Z	-1.903	-1.903	0	%100
91	M159B	X	3.295	3.295	0	%100
92	M159B	Z	-1.903	-1.903	0	%100
93	M160B	X	3.295	3.295	0	%100
94	M160B	Z	-1.903	-1.903	0	%100
95	M157B	X	3.224	3.224	0	%100
96	M157B	Z	-1.862	-1.862	0	%100
97	TMAC	X	3.224	3.224	0	%100
98	TMAC	Z	-1.862	-1.862	0	%100
99	M159	X	3.224	3.224	0	%100
100	M159	Z	-1.862	-1.862	0	%100
101	TMAB	X	3.224	3.224	0	%100
102	TMAB	Z	-1.862	-1.862	0	%100
103	M159C	X	3.758	3.758	0	%100
104	M159C	Z	-2.17	-2.17	0	%100
105	M160D	X	.94	.94	0	%100
106	M160D	Z	-.542	-.542	0	%100

Member Distributed Loads (BLC 55 : Structure Wi (60 Deg)) (Continued)

	Member Label	Direction	Start Magnitude[lb/ft,...	End Magnitude[lb/ft,F...	Start Location[ft,%]	End Location[ft,%]
107	M156B	X	2.007	2.007	0	%100
108	M156B	Z	-1.159	-1.159	0	%100
109	M157C	X	3.758	3.758	0	%100
110	M157C	Z	-2.17	-2.17	0	%100
111	M158C	X	3.758	3.758	0	%100
112	M158C	Z	-2.17	-2.17	0	%100
113	M159D	X	2.007	2.007	0	%100
114	M159D	Z	-1.159	-1.159	0	%100
115	M160E	X	2.007	2.007	0	%100
116	M160E	Z	-1.159	-1.159	0	%100
117	M127	X	0	0	0	%100
118	M127	Z	0	0	0	%100
119	M128	X	2.152	2.152	0	%100
120	M128	Z	-1.242	-1.242	0	%100
121	MP2A	X	3.488	3.488	0	%100
122	MP2A	Z	-2.014	-2.014	0	%100
123	M100	X	1.03	1.03	0	%100
124	M100	Z	-.594	-.594	0	%100
125	M101	X	1.03	1.03	0	%100
126	M101	Z	-.594	-.594	0	%100
127	MP5A	X	3.488	3.488	0	%100
128	MP5A	Z	-2.014	-2.014	0	%100
129	M103	X	1.03	1.03	0	%100
130	M103	Z	-.594	-.594	0	%100
131	M104	X	1.03	1.03	0	%100
132	M104	Z	-.594	-.594	0	%100
133	MP4A	X	3.488	3.488	0	%100
134	MP4A	Z	-2.014	-2.014	0	%100
135	LIVE1	X	1.03	1.03	0	%100
136	LIVE1	Z	-.594	-.594	0	%100
137	M107	X	1.03	1.03	0	%100
138	M107	Z	-.594	-.594	0	%100
139	MP3C	X	3.547	3.547	0	%100
140	MP3C	Z	-2.048	-2.048	0	%100
141	MP1C	X	3.488	3.488	0	%100
142	MP1C	Z	-2.014	-2.014	0	%100
143	M111	X	0	0	0	%100
144	M111	Z	0	0	0	%100
145	M113	X	0	0	0	%100
146	M113	Z	0	0	0	%100
147	MP2C	X	3.488	3.488	0	%100
148	MP2C	Z	-2.014	-2.014	0	%100
149	M115	X	0	0	0	%100
150	M115	Z	0	0	0	%100
151	M116	X	0	0	0	%100
152	M116	Z	0	0	0	%100
153	MP5C	X	3.488	3.488	0	%100
154	MP5C	Z	-2.014	-2.014	0	%100
155	M118	X	0	0	0	%100
156	M118	Z	0	0	0	%100
157	M119	X	0	0	0	%100
158	M119	Z	0	0	0	%100

Member Distributed Loads (BLC 55 : Structure Wi (60 Deg)) (Continued)

	Member Label	Direction	Start Magnitude[lb/ft,...	End Magnitude[lb/ft,F...	Start Location[ft,%]	End Location[ft,%]
159	MP4C	X	3.488	3.488	0	%100
160	MP4C	Z	-2.014	-2.014	0	%100
161	M121	X	0	0	0	%100
162	M121	Z	0	0	0	%100
163	M122	X	0	0	0	%100
164	M122	Z	0	0	0	%100
165	MP3B	X	3.547	3.547	0	%100
166	MP3B	Z	-2.048	-2.048	0	%100
167	MP1B	X	3.488	3.488	0	%100
168	MP1B	Z	-2.014	-2.014	0	%100
169	M126	X	1.03	1.03	0	%100
170	M126	Z	-.594	-.594	0	%100
171	M128A	X	1.03	1.03	0	%100
172	M128A	Z	-.594	-.594	0	%100
173	MP2B	X	3.488	3.488	0	%100
174	MP2B	Z	-2.014	-2.014	0	%100
175	M130	X	1.03	1.03	0	%100
176	M130	Z	-.594	-.594	0	%100
177	M131	X	1.03	1.03	0	%100
178	M131	Z	-.594	-.594	0	%100
179	MP5B	X	3.488	3.488	0	%100
180	MP5B	Z	-2.014	-2.014	0	%100
181	M133	X	1.03	1.03	0	%100
182	M133	Z	-.594	-.594	0	%100
183	M134	X	1.03	1.03	0	%100
184	M134	Z	-.594	-.594	0	%100
185	MP4B	X	3.488	3.488	0	%100
186	MP4B	Z	-2.014	-2.014	0	%100
187	M136	X	1.03	1.03	0	%100
188	M136	Z	-.594	-.594	0	%100
189	M137	X	1.03	1.03	0	%100
190	M137	Z	-.594	-.594	0	%100
191	M138	X	.793	.793	0	%100
192	M138	Z	-.458	-.458	0	%100
193	M139	X	3.978	3.978	0	%100
194	M139	Z	-2.297	-2.297	0	%100
195	M146	X	2.814	2.814	0	%100
196	M146	Z	-1.625	-1.625	0	%100
197	OVP	X	3.261	3.261	0	%100
198	OVP	Z	-1.883	-1.883	0	%100
199	M145A	X	2.256	2.256	0	%100
200	M145A	Z	-1.303	-1.303	0	%100
201	M146B	X	2.256	2.256	0	%100
202	M146B	Z	-1.303	-1.303	0	%100
203	M147B	X	3.978	3.978	0	%100
204	M147B	Z	-2.297	-2.297	0	%100
205	M148	X	.793	.793	0	%100
206	M148	Z	-.458	-.458	0	%100

Member Distributed Loads (BLC 56 : Structure Wi (90 Deg))

	Member Label	Direction	Start Magnitude[lb/ft,...	End Magnitude[lb/ft,F...	Start Location[ft,%]	End Location[ft,%]

Member Distributed Loads (BLC 56 : Structure Wi (90 Deg)) (Continued)

	Member Label	Direction	Start Magnitude[lb/ft,...	End Magnitude[lb/ft,F...	Start Location[ft,%]	End Location[ft,%]
1	M1	X	0	0	0	%100
2	M1	Z	0	0	0	%100
3	MP3A	X	4.096	4.096	0	%100
4	MP3A	Z	0	0	0	%100
5	MP1A	X	4.028	4.028	0	%100
6	MP1A	Z	0	0	0	%100
7	M9	X	1.585	1.585	0	%100
8	M9	Z	0	0	0	%100
9	M10	X	5.178	5.178	0	%100
10	M10	Z	0	0	0	%100
11	M19	X	5.178	5.178	0	%100
12	M19	Z	0	0	0	%100
13	M28	X	0	0	0	%100
14	M28	Z	0	0	0	%100
15	M31	X	4.932	4.932	0	%100
16	M31	Z	0	0	0	%100
17	M34	X	4.932	4.932	0	%100
18	M34	Z	0	0	0	%100
19	M40	X	0	0	0	%100
20	M40	Z	0	0	0	%100
21	M46	X	1.27	1.27	0	%100
22	M46	Z	0	0	0	%100
23	M52	X	1.27	1.27	0	%100
24	M52	Z	0	0	0	%100
25	M55	X	0	0	0	%100
26	M55	Z	0	0	0	%100
27	M56	X	5.455	5.455	0	%100
28	M56	Z	0	0	0	%100
29	M57	X	4.759	4.759	0	%100
30	M57	Z	0	0	0	%100
31	M58	X	4.759	4.759	0	%100
32	M58	Z	0	0	0	%100
33	M59	X	1.949	1.949	0	%100
34	M59	Z	0	0	0	%100
35	M60	X	1.949	1.949	0	%100
36	M60	Z	0	0	0	%100
37	M61	X	1.949	1.949	0	%100
38	M61	Z	0	0	0	%100
39	M62	X	1.949	1.949	0	%100
40	M62	Z	0	0	0	%100
41	M63	X	1.949	1.949	0	%100
42	M63	Z	0	0	0	%100
43	M64	X	1.949	1.949	0	%100
44	M64	Z	0	0	0	%100
45	M65	X	1.949	1.949	0	%100
46	M65	Z	0	0	0	%100
47	M66	X	3.313	3.313	0	%100
48	M66	Z	0	0	0	%100
49	FACE1	X	0	0	0	%100
50	FACE1	Z	0	0	0	%100
51	M76	X	3.747	3.747	0	%100
52	M76	Z	0	0	0	%100

Member Distributed Loads (BLC 56 : Structure Wi (90 Deg)) (Continued)

	Member Label	Direction	Start Magnitude[lb/ft,...	End Magnitude[lb/ft,F...	Start Location[ft,%]	End Location[ft,%]
53	M77	X	3.747	3.747	0	%100
54	M77	Z	0	0	0	%100
55	FACE2	X	0	0	0	%100
56	FACE2	Z	0	0	0	%100
57	M79	X	5.178	5.178	0	%100
58	M79	Z	0	0	0	%100
59	M80	X	5.178	5.178	0	%100
60	M80	Z	0	0	0	%100
61	M85	X	3.805	3.805	0	%100
62	M85	Z	0	0	0	%100
63	M86	X	3.723	3.723	0	%100
64	M86	Z	0	0	0	%100
65	TMAA	X	3.723	3.723	0	%100
66	TMAA	Z	0	0	0	%100
67	M89	X	1.643	1.643	0	%100
68	M89	Z	0	0	0	%100
69	M91	X	0	0	0	%100
70	M91	Z	0	0	0	%100
71	M92	X	0	0	0	%100
72	M92	Z	0	0	0	%100
73	M96	X	1.585	1.585	0	%100
74	M96	Z	0	0	0	%100
75	M149	X	4.467	4.467	0	%100
76	M149	Z	0	0	0	%100
77	M160	X	3.805	3.805	0	%100
78	M160	Z	0	0	0	%100
79	M164	X	4.467	4.467	0	%100
80	M164	Z	0	0	0	%100
81	M146A	X	1.27	1.27	0	%100
82	M146A	Z	0	0	0	%100
83	M149A	X	1.27	1.27	0	%100
84	M149A	Z	0	0	0	%100
85	M152	X	0	0	0	%100
86	M152	Z	0	0	0	%100
87	M157	X	3.805	3.805	0	%100
88	M157	Z	0	0	0	%100
89	M158B	X	3.805	3.805	0	%100
90	M158B	Z	0	0	0	%100
91	M159B	X	3.805	3.805	0	%100
92	M159B	Z	0	0	0	%100
93	M160B	X	3.805	3.805	0	%100
94	M160B	Z	0	0	0	%100
95	M157B	X	3.723	3.723	0	%100
96	M157B	Z	0	0	0	%100
97	TMAC	X	3.723	3.723	0	%100
98	TMAC	Z	0	0	0	%100
99	M159	X	3.723	3.723	0	%100
100	M159	Z	0	0	0	%100
101	TMAB	X	3.723	3.723	0	%100
102	TMAB	Z	0	0	0	%100
103	M159C	X	3.255	3.255	0	%100
104	M159C	Z	0	0	0	%100

Member Distributed Loads (BLC 56 : Structure Wi (90 Deg)) (Continued)

	Member Label	Direction	Start Magnitude[lb/ft,...	End Magnitude[lb/ft,F...	Start Location[ft,%]	End Location[ft,%]
105	M160D	X	3.255	3.255	0	%100
106	M160D	Z	0	0	0	%100
107	M156B	X	1.643	1.643	0	%100
108	M156B	Z	0	0	0	%100
109	M157C	X	3.665	3.665	0	%100
110	M157C	Z	0	0	0	%100
111	M158C	X	3.665	3.665	0	%100
112	M158C	Z	0	0	0	%100
113	M159D	X	3.665	3.665	0	%100
114	M159D	Z	0	0	0	%100
115	M160E	X	3.665	3.665	0	%100
116	M160E	Z	0	0	0	%100
117	M127	X	.828	.828	0	%100
118	M127	Z	0	0	0	%100
119	M128	X	.828	.828	0	%100
120	M128	Z	0	0	0	%100
121	MP2A	X	4.028	4.028	0	%100
122	MP2A	Z	0	0	0	%100
123	M100	X	1.585	1.585	0	%100
124	M100	Z	0	0	0	%100
125	M101	X	1.585	1.585	0	%100
126	M101	Z	0	0	0	%100
127	MP5A	X	4.028	4.028	0	%100
128	MP5A	Z	0	0	0	%100
129	M103	X	1.585	1.585	0	%100
130	M103	Z	0	0	0	%100
131	M104	X	1.585	1.585	0	%100
132	M104	Z	0	0	0	%100
133	MP4A	X	4.028	4.028	0	%100
134	MP4A	Z	0	0	0	%100
135	LIVE1	X	1.585	1.585	0	%100
136	LIVE1	Z	0	0	0	%100
137	M107	X	1.585	1.585	0	%100
138	M107	Z	0	0	0	%100
139	MP3C	X	4.096	4.096	0	%100
140	MP3C	Z	0	0	0	%100
141	MP1C	X	4.028	4.028	0	%100
142	MP1C	Z	0	0	0	%100
143	M111	X	.396	.396	0	%100
144	M111	Z	0	0	0	%100
145	M113	X	.396	.396	0	%100
146	M113	Z	0	0	0	%100
147	MP2C	X	4.028	4.028	0	%100
148	MP2C	Z	0	0	0	%100
149	M115	X	.396	.396	0	%100
150	M115	Z	0	0	0	%100
151	M116	X	.396	.396	0	%100
152	M116	Z	0	0	0	%100
153	MP5C	X	4.028	4.028	0	%100
154	MP5C	Z	0	0	0	%100
155	M118	X	.396	.396	0	%100
156	M118	Z	0	0	0	%100

Member Distributed Loads (BLC 56 : Structure Wi (90 Deg)) (Continued)

	Member Label	Direction	Start Magnitude[lb/ft,...	End Magnitude[lb/ft,F...	Start Location[ft,%]	End Location[ft,%]
157	M119	X	.396	.396	0	%100
158	M119	Z	0	0	0	%100
159	MP4C	X	4.028	4.028	0	%100
160	MP4C	Z	0	0	0	%100
161	M121	X	.396	.396	0	%100
162	M121	Z	0	0	0	%100
163	M122	X	.396	.396	0	%100
164	M122	Z	0	0	0	%100
165	MP3B	X	4.096	4.096	0	%100
166	MP3B	Z	0	0	0	%100
167	MP1B	X	4.028	4.028	0	%100
168	MP1B	Z	0	0	0	%100
169	M126	X	.396	.396	0	%100
170	M126	Z	0	0	0	%100
171	M128A	X	.396	.396	0	%100
172	M128A	Z	0	0	0	%100
173	MP2B	X	4.028	4.028	0	%100
174	MP2B	Z	0	0	0	%100
175	M130	X	.396	.396	0	%100
176	M130	Z	0	0	0	%100
177	M131	X	.396	.396	0	%100
178	M131	Z	0	0	0	%100
179	MP5B	X	4.028	4.028	0	%100
180	MP5B	Z	0	0	0	%100
181	M133	X	.396	.396	0	%100
182	M133	Z	0	0	0	%100
183	M134	X	.396	.396	0	%100
184	M134	Z	0	0	0	%100
185	MP4B	X	4.028	4.028	0	%100
186	MP4B	Z	0	0	0	%100
187	M136	X	.396	.396	0	%100
188	M136	Z	0	0	0	%100
189	M137	X	.396	.396	0	%100
190	M137	Z	0	0	0	%100
191	M138	X	2.804	2.804	0	%100
192	M138	Z	0	0	0	%100
193	M139	X	2.804	2.804	0	%100
194	M139	Z	0	0	0	%100
195	M146	X	3.249	3.249	0	%100
196	M146	Z	0	0	0	%100
197	OVP	X	3.766	3.766	0	%100
198	OVP	Z	0	0	0	%100
199	M145A	X	.816	.816	0	%100
200	M145A	Z	0	0	0	%100
201	M146B	X	4.494	4.494	0	%100
202	M146B	Z	0	0	0	%100
203	M147B	X	4.494	4.494	0	%100
204	M147B	Z	0	0	0	%100
205	M148	X	.816	.816	0	%100
206	M148	Z	0	0	0	%100

Member Distributed Loads (BLC 57 : Structure Wi (120 Deg))

	Member Label	Direction	Start Magnitude[lb/ft,...	End Magnitude[lb/ft,F...	Start Location[ft,%]	End Location[ft,%]
1	M1	X	1.495	1.495	0	%100
2	M1	Z	.863	.863	0	%100
3	MP3A	X	3.547	3.547	0	%100
4	MP3A	Z	2.048	2.048	0	%100
5	MP1A	X	3.488	3.488	0	%100
6	MP1A	Z	2.014	2.014	0	%100
7	M9	X	1.03	1.03	0	%100
8	M9	Z	.594	.594	0	%100
9	M10	X	1.495	1.495	0	%100
10	M10	Z	.863	.863	0	%100
11	M19	X	5.979	5.979	0	%100
12	M19	Z	3.452	3.452	0	%100
13	M28	X	1.424	1.424	0	%100
14	M28	Z	.822	.822	0	%100
15	M31	X	1.424	1.424	0	%100
16	M31	Z	.822	.822	0	%100
17	M34	X	5.695	5.695	0	%100
18	M34	Z	3.288	3.288	0	%100
19	M40	X	.367	.367	0	%100
20	M40	Z	.212	.212	0	%100
21	M46	X	.367	.367	0	%100
22	M46	Z	.212	.212	0	%100
23	M52	X	1.466	1.466	0	%100
24	M52	Z	.847	.847	0	%100
25	M55	X	1.252	1.252	0	%100
26	M55	Z	.723	.723	0	%100
27	M56	X	3.543	3.543	0	%100
28	M56	Z	2.045	2.045	0	%100
29	M57	X	4.122	4.122	0	%100
30	M57	Z	2.38	2.38	0	%100
31	M58	X	4.122	4.122	0	%100
32	M58	Z	2.38	2.38	0	%100
33	M59	X	1.266	1.266	0	%100
34	M59	Z	.731	.731	0	%100
35	M60	X	1.266	1.266	0	%100
36	M60	Z	.731	.731	0	%100
37	M61	X	1.266	1.266	0	%100
38	M61	Z	.731	.731	0	%100
39	M62	X	1.266	1.266	0	%100
40	M62	Z	.731	.731	0	%100
41	M63	X	1.266	1.266	0	%100
42	M63	Z	.731	.731	0	%100
43	M64	X	1.266	1.266	0	%100
44	M64	Z	.731	.731	0	%100
45	M65	X	1.266	1.266	0	%100
46	M65	Z	.731	.731	0	%100
47	M66	X	2.152	2.152	0	%100
48	M66	Z	1.242	1.242	0	%100
49	FACE1	X	1.082	1.082	0	%100
50	FACE1	Z	.624	.624	0	%100
51	M76	X	1.082	1.082	0	%100
52	M76	Z	.624	.624	0	%100

Member Distributed Loads (BLC 57 : Structure Wi (120 Deg)) (Continued)

	Member Label	Direction	Start Magnitude[lb/ft,...	End Magnitude[lb/ft,F...	Start Location[ft,%]	End Location[ft,%]
53	M77	X	4.326	4.326	0	%100
54	M77	Z	2.498	2.498	0	%100
55	FACE2	X	1.495	1.495	0	%100
56	FACE2	Z	.863	.863	0	%100
57	M79	X	1.495	1.495	0	%100
58	M79	Z	.863	.863	0	%100
59	M80	X	5.979	5.979	0	%100
60	M80	Z	3.452	3.452	0	%100
61	M85	X	3.295	3.295	0	%100
62	M85	Z	1.903	1.903	0	%100
63	M86	X	3.224	3.224	0	%100
64	M86	Z	1.862	1.862	0	%100
65	TMAA	X	3.224	3.224	0	%100
66	TMAA	Z	1.862	1.862	0	%100
67	M89	X	2.007	2.007	0	%100
68	M89	Z	1.159	1.159	0	%100
69	M91	X	.94	.94	0	%100
70	M91	Z	.542	.542	0	%100
71	M92	X	1.289	1.289	0	%100
72	M92	Z	.744	.744	0	%100
73	M96	X	1.03	1.03	0	%100
74	M96	Z	.594	.594	0	%100
75	M149	X	1.289	1.289	0	%100
76	M149	Z	.744	.744	0	%100
77	M160	X	3.295	3.295	0	%100
78	M160	Z	1.903	1.903	0	%100
79	M164	X	5.158	5.158	0	%100
80	M164	Z	2.978	2.978	0	%100
81	M146A	X	.367	.367	0	%100
82	M146A	Z	.212	.212	0	%100
83	M149A	X	1.466	1.466	0	%100
84	M149A	Z	.847	.847	0	%100
85	M152	X	.367	.367	0	%100
86	M152	Z	.212	.212	0	%100
87	M157	X	3.295	3.295	0	%100
88	M157	Z	1.903	1.903	0	%100
89	M158B	X	3.295	3.295	0	%100
90	M158B	Z	1.903	1.903	0	%100
91	M159B	X	3.295	3.295	0	%100
92	M159B	Z	1.903	1.903	0	%100
93	M160B	X	3.295	3.295	0	%100
94	M160B	Z	1.903	1.903	0	%100
95	M157B	X	3.224	3.224	0	%100
96	M157B	Z	1.862	1.862	0	%100
97	TMAC	X	3.224	3.224	0	%100
98	TMAC	Z	1.862	1.862	0	%100
99	M159	X	3.224	3.224	0	%100
100	M159	Z	1.862	1.862	0	%100
101	TMAB	X	3.224	3.224	0	%100
102	TMAB	Z	1.862	1.862	0	%100
103	M159C	X	.94	.94	0	%100
104	M159C	Z	.542	.542	0	%100

Member Distributed Loads (BLC 57 : Structure Wi (120 Deg)) (Continued)

	Member Label	Direction	Start Magnitude[lb/ft,...	End Magnitude[lb/ft,F...	Start Location[ft,%]	End Location[ft,%]
105	M160D	X	3.758	3.758	0	%100
106	M160D	Z	2.17	2.17	0	%100
107	M156B	X	2.007	2.007	0	%100
108	M156B	Z	1.159	1.159	0	%100
109	M157C	X	2.007	2.007	0	%100
110	M157C	Z	1.159	1.159	0	%100
111	M158C	X	2.007	2.007	0	%100
112	M158C	Z	1.159	1.159	0	%100
113	M159D	X	3.758	3.758	0	%100
114	M159D	Z	2.17	2.17	0	%100
115	M160E	X	3.758	3.758	0	%100
116	M160E	Z	2.17	2.17	0	%100
117	M127	X	2.152	2.152	0	%100
118	M127	Z	1.242	1.242	0	%100
119	M128	X	0	0	0	%100
120	M128	Z	0	0	0	%100
121	MP2A	X	3.488	3.488	0	%100
122	MP2A	Z	2.014	2.014	0	%100
123	M100	X	1.03	1.03	0	%100
124	M100	Z	.594	.594	0	%100
125	M101	X	1.03	1.03	0	%100
126	M101	Z	.594	.594	0	%100
127	MP5A	X	3.488	3.488	0	%100
128	MP5A	Z	2.014	2.014	0	%100
129	M103	X	1.03	1.03	0	%100
130	M103	Z	.594	.594	0	%100
131	M104	X	1.03	1.03	0	%100
132	M104	Z	.594	.594	0	%100
133	MP4A	X	3.488	3.488	0	%100
134	MP4A	Z	2.014	2.014	0	%100
135	LIVE1	X	1.03	1.03	0	%100
136	LIVE1	Z	.594	.594	0	%100
137	M107	X	1.03	1.03	0	%100
138	M107	Z	.594	.594	0	%100
139	MP3C	X	3.547	3.547	0	%100
140	MP3C	Z	2.048	2.048	0	%100
141	MP1C	X	3.488	3.488	0	%100
142	MP1C	Z	2.014	2.014	0	%100
143	M111	X	1.03	1.03	0	%100
144	M111	Z	.594	.594	0	%100
145	M113	X	1.03	1.03	0	%100
146	M113	Z	.594	.594	0	%100
147	MP2C	X	3.488	3.488	0	%100
148	MP2C	Z	2.014	2.014	0	%100
149	M115	X	1.03	1.03	0	%100
150	M115	Z	.594	.594	0	%100
151	M116	X	1.03	1.03	0	%100
152	M116	Z	.594	.594	0	%100
153	MP5C	X	3.488	3.488	0	%100
154	MP5C	Z	2.014	2.014	0	%100
155	M118	X	1.03	1.03	0	%100
156	M118	Z	.594	.594	0	%100

Member Distributed Loads (BLC 57 : Structure Wi (120 Deg)) (Continued)

	Member Label	Direction	Start Magnitude[lb/ft,...	End Magnitude[lb/ft,F...	Start Location[ft,%]	End Location[ft,%]
157	M119	X	1.03	1.03	0	%100
158	M119	Z	.594	.594	0	%100
159	MP4C	X	3.488	3.488	0	%100
160	MP4C	Z	2.014	2.014	0	%100
161	M121	X	1.03	1.03	0	%100
162	M121	Z	.594	.594	0	%100
163	M122	X	1.03	1.03	0	%100
164	M122	Z	.594	.594	0	%100
165	MP3B	X	3.547	3.547	0	%100
166	MP3B	Z	2.048	2.048	0	%100
167	MP1B	X	3.488	3.488	0	%100
168	MP1B	Z	2.014	2.014	0	%100
169	M126	X	0	0	0	%100
170	M126	Z	0	0	0	%100
171	M128A	X	0	0	0	%100
172	M128A	Z	0	0	0	%100
173	MP2B	X	3.488	3.488	0	%100
174	MP2B	Z	2.014	2.014	0	%100
175	M130	X	0	0	0	%100
176	M130	Z	0	0	0	%100
177	M131	X	0	0	0	%100
178	M131	Z	0	0	0	%100
179	MP5B	X	3.488	3.488	0	%100
180	MP5B	Z	2.014	2.014	0	%100
181	M133	X	0	0	0	%100
182	M133	Z	0	0	0	%100
183	M134	X	0	0	0	%100
184	M134	Z	0	0	0	%100
185	MP4B	X	3.488	3.488	0	%100
186	MP4B	Z	2.014	2.014	0	%100
187	M136	X	0	0	0	%100
188	M136	Z	0	0	0	%100
189	M137	X	0	0	0	%100
190	M137	Z	0	0	0	%100
191	M138	X	3.978	3.978	0	%100
192	M138	Z	2.297	2.297	0	%100
193	M139	X	.793	.793	0	%100
194	M139	Z	.458	.458	0	%100
195	M146	X	2.814	2.814	0	%100
196	M146	Z	1.625	1.625	0	%100
197	OVP	X	3.261	3.261	0	%100
198	OVP	Z	1.883	1.883	0	%100
199	M145A	X	.793	.793	0	%100
200	M145A	Z	.458	.458	0	%100
201	M146B	X	3.978	3.978	0	%100
202	M146B	Z	2.297	2.297	0	%100
203	M147B	X	2.256	2.256	0	%100
204	M147B	Z	1.303	1.303	0	%100
205	M148	X	2.256	2.256	0	%100
206	M148	Z	1.303	1.303	0	%100

Member Distributed Loads (BLC 58 : Structure Wi (150 Deg))

	Member Label	Direction	Start Magnitude[lb/ft,...	End Magnitude[lb/ft,F...	Start Location[ft,%]	End Location[ft,%]
1	M1	X	2.589	2.589	0	%100
2	M1	Z	4.484	4.484	0	%100
3	MP3A	X	2.048	2.048	0	%100
4	MP3A	Z	3.547	3.547	0	%100
5	MP1A	X	2.014	2.014	0	%100
6	MP1A	Z	3.488	3.488	0	%100
7	M9	X	.198	.198	0	%100
8	M9	Z	.343	.343	0	%100
9	M10	X	0	0	0	%100
10	M10	Z	0	0	0	%100
11	M19	X	2.589	2.589	0	%100
12	M19	Z	4.484	4.484	0	%100
13	M28	X	2.466	2.466	0	%100
14	M28	Z	4.271	4.271	0	%100
15	M31	X	0	0	0	%100
16	M31	Z	0	0	0	%100
17	M34	X	2.466	2.466	0	%100
18	M34	Z	4.271	4.271	0	%100
19	M40	X	.635	.635	0	%100
20	M40	Z	1.1	1.1	0	%100
21	M46	X	0	0	0	%100
22	M46	Z	0	0	0	%100
23	M52	X	.635	.635	0	%100
24	M52	Z	1.1	1.1	0	%100
25	M55	X	2.168	2.168	0	%100
26	M55	Z	3.755	3.755	0	%100
27	M56	X	.682	.682	0	%100
28	M56	Z	1.181	1.181	0	%100
29	M57	X	2.38	2.38	0	%100
30	M57	Z	4.122	4.122	0	%100
31	M58	X	2.38	2.38	0	%100
32	M58	Z	4.122	4.122	0	%100
33	M59	X	.244	.244	0	%100
34	M59	Z	.422	.422	0	%100
35	M60	X	.244	.244	0	%100
36	M60	Z	.422	.422	0	%100
37	M61	X	.244	.244	0	%100
38	M61	Z	.422	.422	0	%100
39	M62	X	.244	.244	0	%100
40	M62	Z	.422	.422	0	%100
41	M63	X	.244	.244	0	%100
42	M63	Z	.422	.422	0	%100
43	M64	X	.244	.244	0	%100
44	M64	Z	.422	.422	0	%100
45	M65	X	.244	.244	0	%100
46	M65	Z	.422	.422	0	%100
47	M66	X	.414	.414	0	%100
48	M66	Z	.717	.717	0	%100
49	FACE1	X	1.873	1.873	0	%100
50	FACE1	Z	3.245	3.245	0	%100
51	M76	X	0	0	0	%100
52	M76	Z	0	0	0	%100

Member Distributed Loads (BLC 58 : Structure Wi (150 Deg)) (Continued)

	Member Label	Direction	Start Magnitude[lb/ft,...	End Magnitude[lb/ft,F...	Start Location[ft,%]	End Location[ft,%]
53	M77	X	1.873	1.873	0	%100
54	M77	Z	3.245	3.245	0	%100
55	FACE2	X	2.589	2.589	0	%100
56	FACE2	Z	4.484	4.484	0	%100
57	M79	X	0	0	0	%100
58	M79	Z	0	0	0	%100
59	M80	X	2.589	2.589	0	%100
60	M80	Z	4.484	4.484	0	%100
61	M85	X	1.903	1.903	0	%100
62	M85	Z	3.295	3.295	0	%100
63	M86	X	1.862	1.862	0	%100
64	M86	Z	3.224	3.224	0	%100
65	TMAA	X	1.862	1.862	0	%100
66	TMAA	Z	3.224	3.224	0	%100
67	M89	X	1.833	1.833	0	%100
68	M89	Z	3.174	3.174	0	%100
69	M91	X	1.627	1.627	0	%100
70	M91	Z	2.819	2.819	0	%100
71	M92	X	2.233	2.233	0	%100
72	M92	Z	3.868	3.868	0	%100
73	M96	X	.198	.198	0	%100
74	M96	Z	.343	.343	0	%100
75	M149	X	0	0	0	%100
76	M149	Z	0	0	0	%100
77	M160	X	1.903	1.903	0	%100
78	M160	Z	3.295	3.295	0	%100
79	M164	X	2.233	2.233	0	%100
80	M164	Z	3.868	3.868	0	%100
81	M146A	X	0	0	0	%100
82	M146A	Z	0	0	0	%100
83	M149A	X	.635	.635	0	%100
84	M149A	Z	1.1	1.1	0	%100
85	M152	X	.635	.635	0	%100
86	M152	Z	1.1	1.1	0	%100
87	M157	X	1.903	1.903	0	%100
88	M157	Z	3.295	3.295	0	%100
89	M158B	X	1.903	1.903	0	%100
90	M158B	Z	3.295	3.295	0	%100
91	M159B	X	1.903	1.903	0	%100
92	M159B	Z	3.295	3.295	0	%100
93	M160B	X	1.903	1.903	0	%100
94	M160B	Z	3.295	3.295	0	%100
95	M157B	X	1.862	1.862	0	%100
96	M157B	Z	3.224	3.224	0	%100
97	TMAC	X	1.862	1.862	0	%100
98	TMAC	Z	3.224	3.224	0	%100
99	M159	X	1.862	1.862	0	%100
100	M159	Z	3.224	3.224	0	%100
101	TMAB	X	1.862	1.862	0	%100
102	TMAB	Z	3.224	3.224	0	%100
103	M159C	X	0	0	0	%100
104	M159C	Z	0	0	0	%100

Member Distributed Loads (BLC 58 : Structure Wi (150 Deg)) (Continued)

	Member Label	Direction	Start Magnitude[lb/ft,...	End Magnitude[lb/ft,F...	Start Location[ft,%]	End Location[ft,%]
105	M160D	X	1.627	1.627	0	%100
106	M160D	Z	2.819	2.819	0	%100
107	M156B	X	1.833	1.833	0	%100
108	M156B	Z	3.174	3.174	0	%100
109	M157C	X	.821	.821	0	%100
110	M157C	Z	1.423	1.423	0	%100
111	M158C	X	.821	.821	0	%100
112	M158C	Z	1.423	1.423	0	%100
113	M159D	X	1.833	1.833	0	%100
114	M159D	Z	3.174	3.174	0	%100
115	M160E	X	1.833	1.833	0	%100
116	M160E	Z	3.174	3.174	0	%100
117	M127	X	1.657	1.657	0	%100
118	M127	Z	2.869	2.869	0	%100
119	M128	X	.414	.414	0	%100
120	M128	Z	.717	.717	0	%100
121	MP2A	X	2.014	2.014	0	%100
122	MP2A	Z	3.488	3.488	0	%100
123	M100	X	.198	.198	0	%100
124	M100	Z	.343	.343	0	%100
125	M101	X	.198	.198	0	%100
126	M101	Z	.343	.343	0	%100
127	MP5A	X	2.014	2.014	0	%100
128	MP5A	Z	3.488	3.488	0	%100
129	M103	X	.198	.198	0	%100
130	M103	Z	.343	.343	0	%100
131	M104	X	.198	.198	0	%100
132	M104	Z	.343	.343	0	%100
133	MP4A	X	2.014	2.014	0	%100
134	MP4A	Z	3.488	3.488	0	%100
135	LIVE1	X	.198	.198	0	%100
136	LIVE1	Z	.343	.343	0	%100
137	M107	X	.198	.198	0	%100
138	M107	Z	.343	.343	0	%100
139	MP3C	X	2.048	2.048	0	%100
140	MP3C	Z	3.547	3.547	0	%100
141	MP1C	X	2.014	2.014	0	%100
142	MP1C	Z	3.488	3.488	0	%100
143	M111	X	.793	.793	0	%100
144	M111	Z	1.373	1.373	0	%100
145	M113	X	.793	.793	0	%100
146	M113	Z	1.373	1.373	0	%100
147	MP2C	X	2.014	2.014	0	%100
148	MP2C	Z	3.488	3.488	0	%100
149	M115	X	.793	.793	0	%100
150	M115	Z	1.373	1.373	0	%100
151	M116	X	.793	.793	0	%100
152	M116	Z	1.373	1.373	0	%100
153	MP5C	X	2.014	2.014	0	%100
154	MP5C	Z	3.488	3.488	0	%100
155	M118	X	.793	.793	0	%100
156	M118	Z	1.373	1.373	0	%100

Member Distributed Loads (BLC 58 : Structure Wi (150 Deg)) (Continued)

	Member Label	Direction	Start Magnitude[lb/ft,...	End Magnitude[lb/ft,F...	Start Location[ft,%]	End Location[ft,%]
157	M119	X	.793	.793	0	%100
158	M119	Z	1.373	1.373	0	%100
159	MP4C	X	2.014	2.014	0	%100
160	MP4C	Z	3.488	3.488	0	%100
161	M121	X	.793	.793	0	%100
162	M121	Z	1.373	1.373	0	%100
163	M122	X	.793	.793	0	%100
164	M122	Z	1.373	1.373	0	%100
165	MP3B	X	2.048	2.048	0	%100
166	MP3B	Z	3.547	3.547	0	%100
167	MP1B	X	2.014	2.014	0	%100
168	MP1B	Z	3.488	3.488	0	%100
169	M126	X	.198	.198	0	%100
170	M126	Z	.343	.343	0	%100
171	M128A	X	.198	.198	0	%100
172	M128A	Z	.343	.343	0	%100
173	MP2B	X	2.014	2.014	0	%100
174	MP2B	Z	3.488	3.488	0	%100
175	M130	X	.198	.198	0	%100
176	M130	Z	.343	.343	0	%100
177	M131	X	.198	.198	0	%100
178	M131	Z	.343	.343	0	%100
179	MP5B	X	2.014	2.014	0	%100
180	MP5B	Z	3.488	3.488	0	%100
181	M133	X	.198	.198	0	%100
182	M133	Z	.343	.343	0	%100
183	M134	X	.198	.198	0	%100
184	M134	Z	.343	.343	0	%100
185	MP4B	X	2.014	2.014	0	%100
186	MP4B	Z	3.488	3.488	0	%100
187	M136	X	.198	.198	0	%100
188	M136	Z	.343	.343	0	%100
189	M137	X	.198	.198	0	%100
190	M137	Z	.343	.343	0	%100
191	M138	X	2.247	2.247	0	%100
192	M138	Z	3.892	3.892	0	%100
193	M139	X	.408	.408	0	%100
194	M139	Z	.707	.707	0	%100
195	M146	X	1.625	1.625	0	%100
196	M146	Z	2.814	2.814	0	%100
197	OVP	X	1.883	1.883	0	%100
198	OVP	Z	3.261	3.261	0	%100
199	M145A	X	1.402	1.402	0	%100
200	M145A	Z	2.429	2.429	0	%100
201	M146B	X	1.402	1.402	0	%100
202	M146B	Z	2.429	2.429	0	%100
203	M147B	X	.408	.408	0	%100
204	M147B	Z	.707	.707	0	%100
205	M148	X	2.247	2.247	0	%100
206	M148	Z	3.892	3.892	0	%100

Member Distributed Loads (BLC 59 : Structure Wi (180 Deg))

	Member Label	Direction	Start Magnitude[lb/ft,...	End Magnitude[lb/ft,F...	Start Location[ft,%]	End Location[ft,%]
1	M1	X	0	0	0	%100
2	M1	Z	6.904	6.904	0	%100
3	MP3A	X	0	0	0	%100
4	MP3A	Z	4.096	4.096	0	%100
5	MP1A	X	0	0	0	%100
6	MP1A	Z	4.028	4.028	0	%100
7	M9	X	0	0	0	%100
8	M9	Z	0	0	0	%100
9	M10	X	0	0	0	%100
10	M10	Z	1.726	1.726	0	%100
11	M19	X	0	0	0	%100
12	M19	Z	1.726	1.726	0	%100
13	M28	X	0	0	0	%100
14	M28	Z	6.576	6.576	0	%100
15	M31	X	0	0	0	%100
16	M31	Z	1.644	1.644	0	%100
17	M34	X	0	0	0	%100
18	M34	Z	1.644	1.644	0	%100
19	M40	X	0	0	0	%100
20	M40	Z	1.693	1.693	0	%100
21	M46	X	0	0	0	%100
22	M46	Z	.423	.423	0	%100
23	M52	X	0	0	0	%100
24	M52	Z	.423	.423	0	%100
25	M55	X	0	0	0	%100
26	M55	Z	5.781	5.781	0	%100
27	M56	X	0	0	0	%100
28	M56	Z	0	0	0	%100
29	M57	X	0	0	0	%100
30	M57	Z	4.759	4.759	0	%100
31	M58	X	0	0	0	%100
32	M58	Z	4.759	4.759	0	%100
33	M59	X	0	0	0	%100
34	M59	Z	0	0	0	%100
35	M60	X	0	0	0	%100
36	M60	Z	0	0	0	%100
37	M61	X	0	0	0	%100
38	M61	Z	0	0	0	%100
39	M62	X	0	0	0	%100
40	M62	Z	0	0	0	%100
41	M63	X	0	0	0	%100
42	M63	Z	0	0	0	%100
43	M64	X	0	0	0	%100
44	M64	Z	0	0	0	%100
45	M65	X	0	0	0	%100
46	M65	Z	0	0	0	%100
47	M66	X	0	0	0	%100
48	M66	Z	0	0	0	%100
49	FACE1	X	0	0	0	%100
50	FACE1	Z	4.995	4.995	0	%100
51	M76	X	0	0	0	%100
52	M76	Z	1.249	1.249	0	%100

Member Distributed Loads (BLC 59 : Structure Wi (180 Deg)) (Continued)

	Member Label	Direction	Start Magnitude[lb/ft,...	End Magnitude[lb/ft,F...	Start Location[ft,%]	End Location[ft,%]
53	M77	X	0	0	0	%100
54	M77	Z	1.249	1.249	0	%100
55	FACE2	X	0	0	0	%100
56	FACE2	Z	6.904	6.904	0	%100
57	M79	X	0	0	0	%100
58	M79	Z	1.726	1.726	0	%100
59	M80	X	0	0	0	%100
60	M80	Z	1.726	1.726	0	%100
61	M85	X	0	0	0	%100
62	M85	Z	3.805	3.805	0	%100
63	M86	X	0	0	0	%100
64	M86	Z	3.723	3.723	0	%100
65	TMAA	X	0	0	0	%100
66	TMAA	Z	3.723	3.723	0	%100
67	M89	X	0	0	0	%100
68	M89	Z	4.34	4.34	0	%100
69	M91	X	0	0	0	%100
70	M91	Z	4.34	4.34	0	%100
71	M92	X	0	0	0	%100
72	M92	Z	5.956	5.956	0	%100
73	M96	X	0	0	0	%100
74	M96	Z	0	0	0	%100
75	M149	X	0	0	0	%100
76	M149	Z	1.489	1.489	0	%100
77	M160	X	0	0	0	%100
78	M160	Z	3.805	3.805	0	%100
79	M164	X	0	0	0	%100
80	M164	Z	1.489	1.489	0	%100
81	M146A	X	0	0	0	%100
82	M146A	Z	.423	.423	0	%100
83	M149A	X	0	0	0	%100
84	M149A	Z	.423	.423	0	%100
85	M152	X	0	0	0	%100
86	M152	Z	1.693	1.693	0	%100
87	M157	X	0	0	0	%100
88	M157	Z	3.805	3.805	0	%100
89	M158B	X	0	0	0	%100
90	M158B	Z	3.805	3.805	0	%100
91	M159B	X	0	0	0	%100
92	M159B	Z	3.805	3.805	0	%100
93	M160B	X	0	0	0	%100
94	M160B	Z	3.805	3.805	0	%100
95	M157B	X	0	0	0	%100
96	M157B	Z	3.723	3.723	0	%100
97	TMAC	X	0	0	0	%100
98	TMAC	Z	3.723	3.723	0	%100
99	M159	X	0	0	0	%100
100	M159	Z	3.723	3.723	0	%100
101	TMAB	X	0	0	0	%100
102	TMAB	Z	3.723	3.723	0	%100
103	M159C	X	0	0	0	%100
104	M159C	Z	1.085	1.085	0	%100

Member Distributed Loads (BLC 59 : Structure Wi (180 Deg)) (Continued)

	Member Label	Direction	Start Magnitude[lb/ft,...	End Magnitude[lb/ft,F...	Start Location[ft,%]	End Location[ft,%]
105	M160D	X	0	0	0	%100
106	M160D	Z	1.085	1.085	0	%100
107	M156B	X	0	0	0	%100
108	M156B	Z	4.34	4.34	0	%100
109	M157C	X	0	0	0	%100
110	M157C	Z	2.317	2.317	0	%100
111	M158C	X	0	0	0	%100
112	M158C	Z	2.317	2.317	0	%100
113	M159D	X	0	0	0	%100
114	M159D	Z	2.317	2.317	0	%100
115	M160E	X	0	0	0	%100
116	M160E	Z	2.317	2.317	0	%100
117	M127	X	0	0	0	%100
118	M127	Z	2.485	2.485	0	%100
119	M128	X	0	0	0	%100
120	M128	Z	2.485	2.485	0	%100
121	MP2A	X	0	0	0	%100
122	MP2A	Z	4.028	4.028	0	%100
123	M100	X	0	0	0	%100
124	M100	Z	0	0	0	%100
125	M101	X	0	0	0	%100
126	M101	Z	0	0	0	%100
127	MP5A	X	0	0	0	%100
128	MP5A	Z	4.028	4.028	0	%100
129	M103	X	0	0	0	%100
130	M103	Z	0	0	0	%100
131	M104	X	0	0	0	%100
132	M104	Z	0	0	0	%100
133	MP4A	X	0	0	0	%100
134	MP4A	Z	4.028	4.028	0	%100
135	LIVE1	X	0	0	0	%100
136	LIVE1	Z	0	0	0	%100
137	M107	X	0	0	0	%100
138	M107	Z	0	0	0	%100
139	MP3C	X	0	0	0	%100
140	MP3C	Z	4.096	4.096	0	%100
141	MP1C	X	0	0	0	%100
142	MP1C	Z	4.028	4.028	0	%100
143	M111	X	0	0	0	%100
144	M111	Z	1.189	1.189	0	%100
145	M113	X	0	0	0	%100
146	M113	Z	1.189	1.189	0	%100
147	MP2C	X	0	0	0	%100
148	MP2C	Z	4.028	4.028	0	%100
149	M115	X	0	0	0	%100
150	M115	Z	1.189	1.189	0	%100
151	M116	X	0	0	0	%100
152	M116	Z	1.189	1.189	0	%100
153	MP5C	X	0	0	0	%100
154	MP5C	Z	4.028	4.028	0	%100
155	M118	X	0	0	0	%100
156	M118	Z	1.189	1.189	0	%100

Member Distributed Loads (BLC 59 : Structure Wi (180 Deg)) (Continued)

	Member Label	Direction	Start Magnitude[lb/ft,...	End Magnitude[lb/ft,F...	Start Location[ft,%]	End Location[ft,%]
157	M119	X	0	0	0	%100
158	M119	Z	1.189	1.189	0	%100
159	MP4C	X	0	0	0	%100
160	MP4C	Z	4.028	4.028	0	%100
161	M121	X	0	0	0	%100
162	M121	Z	1.189	1.189	0	%100
163	M122	X	0	0	0	%100
164	M122	Z	1.189	1.189	0	%100
165	MP3B	X	0	0	0	%100
166	MP3B	Z	4.096	4.096	0	%100
167	MP1B	X	0	0	0	%100
168	MP1B	Z	4.028	4.028	0	%100
169	M126	X	0	0	0	%100
170	M126	Z	1.189	1.189	0	%100
171	M128A	X	0	0	0	%100
172	M128A	Z	1.189	1.189	0	%100
173	MP2B	X	0	0	0	%100
174	MP2B	Z	4.028	4.028	0	%100
175	M130	X	0	0	0	%100
176	M130	Z	1.189	1.189	0	%100
177	M131	X	0	0	0	%100
178	M131	Z	1.189	1.189	0	%100
179	MP5B	X	0	0	0	%100
180	MP5B	Z	4.028	4.028	0	%100
181	M133	X	0	0	0	%100
182	M133	Z	1.189	1.189	0	%100
183	M134	X	0	0	0	%100
184	M134	Z	1.189	1.189	0	%100
185	MP4B	X	0	0	0	%100
186	MP4B	Z	4.028	4.028	0	%100
187	M136	X	0	0	0	%100
188	M136	Z	1.189	1.189	0	%100
189	M137	X	0	0	0	%100
190	M137	Z	1.189	1.189	0	%100
191	M138	X	0	0	0	%100
192	M138	Z	2.605	2.605	0	%100
193	M139	X	0	0	0	%100
194	M139	Z	2.605	2.605	0	%100
195	M146	X	0	0	0	%100
196	M146	Z	3.249	3.249	0	%100
197	OVP	X	0	0	0	%100
198	OVP	Z	3.766	3.766	0	%100
199	M145A	X	0	0	0	%100
200	M145A	Z	4.594	4.594	0	%100
201	M146B	X	0	0	0	%100
202	M146B	Z	.916	.916	0	%100
203	M147B	X	0	0	0	%100
204	M147B	Z	.916	.916	0	%100
205	M148	X	0	0	0	%100
206	M148	Z	4.594	4.594	0	%100

Member Distributed Loads (BLC 60 : Structure Wi (210 Deg))

	Member Label	Direction	Start Magnitude[lb/ft,...	End Magnitude[lb/ft,F...	Start Location[ft,%]	End Location[ft,%]
1	M1	X	-2.589	-2.589	0	%100
2	M1	Z	4.484	4.484	0	%100
3	MP3A	X	-2.048	-2.048	0	%100
4	MP3A	Z	3.547	3.547	0	%100
5	MP1A	X	-2.014	-2.014	0	%100
6	MP1A	Z	3.488	3.488	0	%100
7	M9	X	-.198	-.198	0	%100
8	M9	Z	.343	.343	0	%100
9	M10	X	-2.589	-2.589	0	%100
10	M10	Z	4.484	4.484	0	%100
11	M19	X	0	0	0	%100
12	M19	Z	0	0	0	%100
13	M28	X	-2.466	-2.466	0	%100
14	M28	Z	4.271	4.271	0	%100
15	M31	X	-2.466	-2.466	0	%100
16	M31	Z	4.271	4.271	0	%100
17	M34	X	0	0	0	%100
18	M34	Z	0	0	0	%100
19	M40	X	-.635	-.635	0	%100
20	M40	Z	1.1	1.1	0	%100
21	M46	X	-.635	-.635	0	%100
22	M46	Z	1.1	1.1	0	%100
23	M52	X	0	0	0	%100
24	M52	Z	0	0	0	%100
25	M55	X	-2.168	-2.168	0	%100
26	M55	Z	3.755	3.755	0	%100
27	M56	X	-.682	-.682	0	%100
28	M56	Z	1.181	1.181	0	%100
29	M57	X	-2.38	-2.38	0	%100
30	M57	Z	4.122	4.122	0	%100
31	M58	X	-2.38	-2.38	0	%100
32	M58	Z	4.122	4.122	0	%100
33	M59	X	-.244	-.244	0	%100
34	M59	Z	.422	.422	0	%100
35	M60	X	-.244	-.244	0	%100
36	M60	Z	.422	.422	0	%100
37	M61	X	-.244	-.244	0	%100
38	M61	Z	.422	.422	0	%100
39	M62	X	-.244	-.244	0	%100
40	M62	Z	.422	.422	0	%100
41	M63	X	-.244	-.244	0	%100
42	M63	Z	.422	.422	0	%100
43	M64	X	-.244	-.244	0	%100
44	M64	Z	.422	.422	0	%100
45	M65	X	-.244	-.244	0	%100
46	M65	Z	.422	.422	0	%100
47	M66	X	-.414	-.414	0	%100
48	M66	Z	.717	.717	0	%100
49	FACE1	X	-1.873	-1.873	0	%100
50	FACE1	Z	3.245	3.245	0	%100
51	M76	X	-1.873	-1.873	0	%100
52	M76	Z	3.245	3.245	0	%100

Member Distributed Loads (BLC 60 : Structure Wi (210 Deg)) (Continued)

	Member Label	Direction	Start Magnitude[lb/ft,...	End Magnitude[lb/ft,F...	Start Location[ft,%]	End Location[ft,%]
53	M77	X	0	0	0	%100
54	M77	Z	0	0	0	%100
55	FACE2	X	-2.589	-2.589	0	%100
56	FACE2	Z	4.484	4.484	0	%100
57	M79	X	-2.589	-2.589	0	%100
58	M79	Z	4.484	4.484	0	%100
59	M80	X	0	0	0	%100
60	M80	Z	0	0	0	%100
61	M85	X	-1.903	-1.903	0	%100
62	M85	Z	3.295	3.295	0	%100
63	M86	X	-1.862	-1.862	0	%100
64	M86	Z	3.224	3.224	0	%100
65	TMAA	X	-1.862	-1.862	0	%100
66	TMAA	Z	3.224	3.224	0	%100
67	M89	X	-1.833	-1.833	0	%100
68	M89	Z	3.174	3.174	0	%100
69	M91	X	-1.627	-1.627	0	%100
70	M91	Z	2.819	2.819	0	%100
71	M92	X	-2.233	-2.233	0	%100
72	M92	Z	3.868	3.868	0	%100
73	M96	X	-.198	-.198	0	%100
74	M96	Z	.343	.343	0	%100
75	M149	X	-2.233	-2.233	0	%100
76	M149	Z	3.868	3.868	0	%100
77	M160	X	-1.903	-1.903	0	%100
78	M160	Z	3.295	3.295	0	%100
79	M164	X	0	0	0	%100
80	M164	Z	0	0	0	%100
81	M146A	X	-.635	-.635	0	%100
82	M146A	Z	1.1	1.1	0	%100
83	M149A	X	0	0	0	%100
84	M149A	Z	0	0	0	%100
85	M152	X	-.635	-.635	0	%100
86	M152	Z	1.1	1.1	0	%100
87	M157	X	-1.903	-1.903	0	%100
88	M157	Z	3.295	3.295	0	%100
89	M158B	X	-1.903	-1.903	0	%100
90	M158B	Z	3.295	3.295	0	%100
91	M159B	X	-1.903	-1.903	0	%100
92	M159B	Z	3.295	3.295	0	%100
93	M160B	X	-1.903	-1.903	0	%100
94	M160B	Z	3.295	3.295	0	%100
95	M157B	X	-1.862	-1.862	0	%100
96	M157B	Z	3.224	3.224	0	%100
97	TMAC	X	-1.862	-1.862	0	%100
98	TMAC	Z	3.224	3.224	0	%100
99	M159	X	-1.862	-1.862	0	%100
100	M159	Z	3.224	3.224	0	%100
101	TMAB	X	-1.862	-1.862	0	%100
102	TMAB	Z	3.224	3.224	0	%100
103	M159C	X	-1.627	-1.627	0	%100
104	M159C	Z	2.819	2.819	0	%100

Member Distributed Loads (BLC 60 : Structure Wi (210 Deg)) (Continued)

	Member Label	Direction	Start Magnitude[lb/ft,...	End Magnitude[lb/ft,F...	Start Location[ft,%]	End Location[ft,%]
105	M160D	X	0	0	0	%100
106	M160D	Z	0	0	0	%100
107	M156B	X	-1.833	-1.833	0	%100
108	M156B	Z	3.174	3.174	0	%100
109	M157C	X	-1.833	-1.833	0	%100
110	M157C	Z	3.174	3.174	0	%100
111	M158C	X	-1.833	-1.833	0	%100
112	M158C	Z	3.174	3.174	0	%100
113	M159D	X	-.821	-.821	0	%100
114	M159D	Z	1.423	1.423	0	%100
115	M160E	X	-.821	-.821	0	%100
116	M160E	Z	1.423	1.423	0	%100
117	M127	X	-.414	-.414	0	%100
118	M127	Z	.717	.717	0	%100
119	M128	X	-1.657	-1.657	0	%100
120	M128	Z	2.869	2.869	0	%100
121	MP2A	X	-2.014	-2.014	0	%100
122	MP2A	Z	3.488	3.488	0	%100
123	M100	X	-.198	-.198	0	%100
124	M100	Z	.343	.343	0	%100
125	M101	X	-.198	-.198	0	%100
126	M101	Z	.343	.343	0	%100
127	MP5A	X	-2.014	-2.014	0	%100
128	MP5A	Z	3.488	3.488	0	%100
129	M103	X	-.198	-.198	0	%100
130	M103	Z	.343	.343	0	%100
131	M104	X	-.198	-.198	0	%100
132	M104	Z	.343	.343	0	%100
133	MP4A	X	-2.014	-2.014	0	%100
134	MP4A	Z	3.488	3.488	0	%100
135	LIVE1	X	-.198	-.198	0	%100
136	LIVE1	Z	.343	.343	0	%100
137	M107	X	-.198	-.198	0	%100
138	M107	Z	.343	.343	0	%100
139	MP3C	X	-2.048	-2.048	0	%100
140	MP3C	Z	3.547	3.547	0	%100
141	MP1C	X	-2.014	-2.014	0	%100
142	MP1C	Z	3.488	3.488	0	%100
143	M111	X	-.198	-.198	0	%100
144	M111	Z	.343	.343	0	%100
145	M113	X	-.198	-.198	0	%100
146	M113	Z	.343	.343	0	%100
147	MP2C	X	-2.014	-2.014	0	%100
148	MP2C	Z	3.488	3.488	0	%100
149	M115	X	-.198	-.198	0	%100
150	M115	Z	.343	.343	0	%100
151	M116	X	-.198	-.198	0	%100
152	M116	Z	.343	.343	0	%100
153	MP5C	X	-2.014	-2.014	0	%100
154	MP5C	Z	3.488	3.488	0	%100
155	M118	X	-.198	-.198	0	%100
156	M118	Z	.343	.343	0	%100

Member Distributed Loads (BLC 60 : Structure Wi (210 Deg)) (Continued)

	Member Label	Direction	Start Magnitude[lb/ft,...	End Magnitude[lb/ft,F...	Start Location[ft,%]	End Location[ft,%]
157	M119	X	-.198	-.198	0	%100
158	M119	Z	.343	.343	0	%100
159	MP4C	X	-2.014	-2.014	0	%100
160	MP4C	Z	3.488	3.488	0	%100
161	M121	X	-.198	-.198	0	%100
162	M121	Z	.343	.343	0	%100
163	M122	X	-.198	-.198	0	%100
164	M122	Z	.343	.343	0	%100
165	MP3B	X	-2.048	-2.048	0	%100
166	MP3B	Z	3.547	3.547	0	%100
167	MP1B	X	-2.014	-2.014	0	%100
168	MP1B	Z	3.488	3.488	0	%100
169	M126	X	-.793	-.793	0	%100
170	M126	Z	1.373	1.373	0	%100
171	M128A	X	-.793	-.793	0	%100
172	M128A	Z	1.373	1.373	0	%100
173	MP2B	X	-2.014	-2.014	0	%100
174	MP2B	Z	3.488	3.488	0	%100
175	M130	X	-.793	-.793	0	%100
176	M130	Z	1.373	1.373	0	%100
177	M131	X	-.793	-.793	0	%100
178	M131	Z	1.373	1.373	0	%100
179	MP5B	X	-2.014	-2.014	0	%100
180	MP5B	Z	3.488	3.488	0	%100
181	M133	X	-.793	-.793	0	%100
182	M133	Z	1.373	1.373	0	%100
183	M134	X	-.793	-.793	0	%100
184	M134	Z	1.373	1.373	0	%100
185	MP4B	X	-2.014	-2.014	0	%100
186	MP4B	Z	3.488	3.488	0	%100
187	M136	X	-.793	-.793	0	%100
188	M136	Z	1.373	1.373	0	%100
189	M137	X	-.793	-.793	0	%100
190	M137	Z	1.373	1.373	0	%100
191	M138	X	-.408	-.408	0	%100
192	M138	Z	.707	.707	0	%100
193	M139	X	-2.247	-2.247	0	%100
194	M139	Z	3.892	3.892	0	%100
195	M146	X	-1.625	-1.625	0	%100
196	M146	Z	2.814	2.814	0	%100
197	OVP	X	-1.883	-1.883	0	%100
198	OVP	Z	3.261	3.261	0	%100
199	M145A	X	-2.247	-2.247	0	%100
200	M145A	Z	3.892	3.892	0	%100
201	M146B	X	-.408	-.408	0	%100
202	M146B	Z	.707	.707	0	%100
203	M147B	X	-1.402	-1.402	0	%100
204	M147B	Z	2.429	2.429	0	%100
205	M148	X	-1.402	-1.402	0	%100
206	M148	Z	2.429	2.429	0	%100

Member Distributed Loads (BLC 61 : Structure Wi (240 Deg))

	Member Label	Direction	Start Magnitude[lb/ft,...	End Magnitude[lb/ft,F...	Start Location[ft,%]	End Location[ft,%]
1	M1	X	-1.495	-1.495	0	%100
2	M1	Z	.863	.863	0	%100
3	MP3A	X	-3.547	-3.547	0	%100
4	MP3A	Z	2.048	2.048	0	%100
5	MP1A	X	-3.488	-3.488	0	%100
6	MP1A	Z	2.014	2.014	0	%100
7	M9	X	-1.03	-1.03	0	%100
8	M9	Z	.594	.594	0	%100
9	M10	X	-5.979	-5.979	0	%100
10	M10	Z	3.452	3.452	0	%100
11	M19	X	-1.495	-1.495	0	%100
12	M19	Z	.863	.863	0	%100
13	M28	X	-1.424	-1.424	0	%100
14	M28	Z	.822	.822	0	%100
15	M31	X	-5.695	-5.695	0	%100
16	M31	Z	3.288	3.288	0	%100
17	M34	X	-1.424	-1.424	0	%100
18	M34	Z	.822	.822	0	%100
19	M40	X	-.367	-.367	0	%100
20	M40	Z	.212	.212	0	%100
21	M46	X	-1.466	-1.466	0	%100
22	M46	Z	.847	.847	0	%100
23	M52	X	-.367	-.367	0	%100
24	M52	Z	.212	.212	0	%100
25	M55	X	-1.252	-1.252	0	%100
26	M55	Z	.723	.723	0	%100
27	M56	X	-3.543	-3.543	0	%100
28	M56	Z	2.045	2.045	0	%100
29	M57	X	-4.122	-4.122	0	%100
30	M57	Z	2.38	2.38	0	%100
31	M58	X	-4.122	-4.122	0	%100
32	M58	Z	2.38	2.38	0	%100
33	M59	X	-1.266	-1.266	0	%100
34	M59	Z	.731	.731	0	%100
35	M60	X	-1.266	-1.266	0	%100
36	M60	Z	.731	.731	0	%100
37	M61	X	-1.266	-1.266	0	%100
38	M61	Z	.731	.731	0	%100
39	M62	X	-1.266	-1.266	0	%100
40	M62	Z	.731	.731	0	%100
41	M63	X	-1.266	-1.266	0	%100
42	M63	Z	.731	.731	0	%100
43	M64	X	-1.266	-1.266	0	%100
44	M64	Z	.731	.731	0	%100
45	M65	X	-1.266	-1.266	0	%100
46	M65	Z	.731	.731	0	%100
47	M66	X	-2.152	-2.152	0	%100
48	M66	Z	1.242	1.242	0	%100
49	FACE1	X	-1.082	-1.082	0	%100
50	FACE1	Z	.624	.624	0	%100
51	M76	X	-4.326	-4.326	0	%100
52	M76	Z	2.498	2.498	0	%100

Member Distributed Loads (BLC 61 : Structure Wi (240 Deg)) (Continued)

	Member Label	Direction	Start Magnitude[lb/ft,...	End Magnitude[lb/ft,F...	Start Location[ft,%]	End Location[ft,%]
53	M77	X	-1.082	-1.082	0	%100
54	M77	Z	.624	.624	0	%100
55	FACE2	X	-1.495	-1.495	0	%100
56	FACE2	Z	.863	.863	0	%100
57	M79	X	-5.979	-5.979	0	%100
58	M79	Z	3.452	3.452	0	%100
59	M80	X	-1.495	-1.495	0	%100
60	M80	Z	.863	.863	0	%100
61	M85	X	-3.295	-3.295	0	%100
62	M85	Z	1.903	1.903	0	%100
63	M86	X	-3.224	-3.224	0	%100
64	M86	Z	1.862	1.862	0	%100
65	TMAA	X	-3.224	-3.224	0	%100
66	TMAA	Z	1.862	1.862	0	%100
67	M89	X	-2.007	-2.007	0	%100
68	M89	Z	1.159	1.159	0	%100
69	M91	X	-.94	-.94	0	%100
70	M91	Z	.542	.542	0	%100
71	M92	X	-1.289	-1.289	0	%100
72	M92	Z	.744	.744	0	%100
73	M96	X	-1.03	-1.03	0	%100
74	M96	Z	.594	.594	0	%100
75	M149	X	-5.158	-5.158	0	%100
76	M149	Z	2.978	2.978	0	%100
77	M160	X	-3.295	-3.295	0	%100
78	M160	Z	1.903	1.903	0	%100
79	M164	X	-1.289	-1.289	0	%100
80	M164	Z	.744	.744	0	%100
81	M146A	X	-1.466	-1.466	0	%100
82	M146A	Z	.847	.847	0	%100
83	M149A	X	-.367	-.367	0	%100
84	M149A	Z	.212	.212	0	%100
85	M152	X	-.367	-.367	0	%100
86	M152	Z	.212	.212	0	%100
87	M157	X	-3.295	-3.295	0	%100
88	M157	Z	1.903	1.903	0	%100
89	M158B	X	-3.295	-3.295	0	%100
90	M158B	Z	1.903	1.903	0	%100
91	M159B	X	-3.295	-3.295	0	%100
92	M159B	Z	1.903	1.903	0	%100
93	M160B	X	-3.295	-3.295	0	%100
94	M160B	Z	1.903	1.903	0	%100
95	M157B	X	-3.224	-3.224	0	%100
96	M157B	Z	1.862	1.862	0	%100
97	TMAC	X	-3.224	-3.224	0	%100
98	TMAC	Z	1.862	1.862	0	%100
99	M159	X	-3.224	-3.224	0	%100
100	M159	Z	1.862	1.862	0	%100
101	TMAB	X	-3.224	-3.224	0	%100
102	TMAB	Z	1.862	1.862	0	%100
103	M159C	X	-3.758	-3.758	0	%100
104	M159C	Z	2.17	2.17	0	%100

Member Distributed Loads (BLC 61 : Structure Wi (240 Deg)) (Continued)

	Member Label	Direction	Start Magnitude[lb/ft,...	End Magnitude[lb/ft,F...	Start Location[ft,%]	End Location[ft,%]
105	M160D	X	-.94	-.94	0	%100
106	M160D	Z	.542	.542	0	%100
107	M156B	X	-2.007	-2.007	0	%100
108	M156B	Z	1.159	1.159	0	%100
109	M157C	X	-3.758	-3.758	0	%100
110	M157C	Z	2.17	2.17	0	%100
111	M158C	X	-3.758	-3.758	0	%100
112	M158C	Z	2.17	2.17	0	%100
113	M159D	X	-2.007	-2.007	0	%100
114	M159D	Z	1.159	1.159	0	%100
115	M160E	X	-2.007	-2.007	0	%100
116	M160E	Z	1.159	1.159	0	%100
117	M127	X	0	0	0	%100
118	M127	Z	0	0	0	%100
119	M128	X	-2.152	-2.152	0	%100
120	M128	Z	1.242	1.242	0	%100
121	MP2A	X	-3.488	-3.488	0	%100
122	MP2A	Z	2.014	2.014	0	%100
123	M100	X	-1.03	-1.03	0	%100
124	M100	Z	.594	.594	0	%100
125	M101	X	-1.03	-1.03	0	%100
126	M101	Z	.594	.594	0	%100
127	MP5A	X	-3.488	-3.488	0	%100
128	MP5A	Z	2.014	2.014	0	%100
129	M103	X	-1.03	-1.03	0	%100
130	M103	Z	.594	.594	0	%100
131	M104	X	-1.03	-1.03	0	%100
132	M104	Z	.594	.594	0	%100
133	MP4A	X	-3.488	-3.488	0	%100
134	MP4A	Z	2.014	2.014	0	%100
135	LIVE1	X	-1.03	-1.03	0	%100
136	LIVE1	Z	.594	.594	0	%100
137	M107	X	-1.03	-1.03	0	%100
138	M107	Z	.594	.594	0	%100
139	MP3C	X	-3.547	-3.547	0	%100
140	MP3C	Z	2.048	2.048	0	%100
141	MP1C	X	-3.488	-3.488	0	%100
142	MP1C	Z	2.014	2.014	0	%100
143	M111	X	0	0	0	%100
144	M111	Z	0	0	0	%100
145	M113	X	0	0	0	%100
146	M113	Z	0	0	0	%100
147	MP2C	X	-3.488	-3.488	0	%100
148	MP2C	Z	2.014	2.014	0	%100
149	M115	X	0	0	0	%100
150	M115	Z	0	0	0	%100
151	M116	X	0	0	0	%100
152	M116	Z	0	0	0	%100
153	MP5C	X	-3.488	-3.488	0	%100
154	MP5C	Z	2.014	2.014	0	%100
155	M118	X	0	0	0	%100
156	M118	Z	0	0	0	%100

Member Distributed Loads (BLC 61 : Structure Wi (240 Deg)) (Continued)

	Member Label	Direction	Start Magnitude[lb/ft,...	End Magnitude[lb/ft,F...	Start Location[ft,%]	End Location[ft,%]
157	M119	X	0	0	0	%100
158	M119	Z	0	0	0	%100
159	MP4C	X	-3.488	-3.488	0	%100
160	MP4C	Z	2.014	2.014	0	%100
161	M121	X	0	0	0	%100
162	M121	Z	0	0	0	%100
163	M122	X	0	0	0	%100
164	M122	Z	0	0	0	%100
165	MP3B	X	-3.547	-3.547	0	%100
166	MP3B	Z	2.048	2.048	0	%100
167	MP1B	X	-3.488	-3.488	0	%100
168	MP1B	Z	2.014	2.014	0	%100
169	M126	X	-1.03	-1.03	0	%100
170	M126	Z	.594	.594	0	%100
171	M128A	X	-1.03	-1.03	0	%100
172	M128A	Z	.594	.594	0	%100
173	MP2B	X	-3.488	-3.488	0	%100
174	MP2B	Z	2.014	2.014	0	%100
175	M130	X	-1.03	-1.03	0	%100
176	M130	Z	.594	.594	0	%100
177	M131	X	-1.03	-1.03	0	%100
178	M131	Z	.594	.594	0	%100
179	MP5B	X	-3.488	-3.488	0	%100
180	MP5B	Z	2.014	2.014	0	%100
181	M133	X	-1.03	-1.03	0	%100
182	M133	Z	.594	.594	0	%100
183	M134	X	-1.03	-1.03	0	%100
184	M134	Z	.594	.594	0	%100
185	MP4B	X	-3.488	-3.488	0	%100
186	MP4B	Z	2.014	2.014	0	%100
187	M136	X	-1.03	-1.03	0	%100
188	M136	Z	.594	.594	0	%100
189	M137	X	-1.03	-1.03	0	%100
190	M137	Z	.594	.594	0	%100
191	M138	X	-.793	-.793	0	%100
192	M138	Z	.458	.458	0	%100
193	M139	X	-3.978	-3.978	0	%100
194	M139	Z	2.297	2.297	0	%100
195	M146	X	-2.814	-2.814	0	%100
196	M146	Z	1.625	1.625	0	%100
197	OVP	X	-3.261	-3.261	0	%100
198	OVP	Z	1.883	1.883	0	%100
199	M145A	X	-2.256	-2.256	0	%100
200	M145A	Z	1.303	1.303	0	%100
201	M146B	X	-2.256	-2.256	0	%100
202	M146B	Z	1.303	1.303	0	%100
203	M147B	X	-3.978	-3.978	0	%100
204	M147B	Z	2.297	2.297	0	%100
205	M148	X	-.793	-.793	0	%100
206	M148	Z	.458	.458	0	%100

Member Distributed Loads (BLC 62 : Structure Wi (270 Deg))

	Member Label	Direction	Start Magnitude[lb/ft,...	End Magnitude[lb/ft,F...	Start Location[ft,%]	End Location[ft,%]
1	M1	X	0	0	0	%100
2	M1	Z	0	0	0	%100
3	MP3A	X	-4.096	-4.096	0	%100
4	MP3A	Z	0	0	0	%100
5	MP1A	X	-4.028	-4.028	0	%100
6	MP1A	Z	0	0	0	%100
7	M9	X	-1.585	-1.585	0	%100
8	M9	Z	0	0	0	%100
9	M10	X	-5.178	-5.178	0	%100
10	M10	Z	0	0	0	%100
11	M19	X	-5.178	-5.178	0	%100
12	M19	Z	0	0	0	%100
13	M28	X	0	0	0	%100
14	M28	Z	0	0	0	%100
15	M31	X	-4.932	-4.932	0	%100
16	M31	Z	0	0	0	%100
17	M34	X	-4.932	-4.932	0	%100
18	M34	Z	0	0	0	%100
19	M40	X	0	0	0	%100
20	M40	Z	0	0	0	%100
21	M46	X	-1.27	-1.27	0	%100
22	M46	Z	0	0	0	%100
23	M52	X	-1.27	-1.27	0	%100
24	M52	Z	0	0	0	%100
25	M55	X	0	0	0	%100
26	M55	Z	0	0	0	%100
27	M56	X	-5.455	-5.455	0	%100
28	M56	Z	0	0	0	%100
29	M57	X	-4.759	-4.759	0	%100
30	M57	Z	0	0	0	%100
31	M58	X	-4.759	-4.759	0	%100
32	M58	Z	0	0	0	%100
33	M59	X	-1.949	-1.949	0	%100
34	M59	Z	0	0	0	%100
35	M60	X	-1.949	-1.949	0	%100
36	M60	Z	0	0	0	%100
37	M61	X	-1.949	-1.949	0	%100
38	M61	Z	0	0	0	%100
39	M62	X	-1.949	-1.949	0	%100
40	M62	Z	0	0	0	%100
41	M63	X	-1.949	-1.949	0	%100
42	M63	Z	0	0	0	%100
43	M64	X	-1.949	-1.949	0	%100
44	M64	Z	0	0	0	%100
45	M65	X	-1.949	-1.949	0	%100
46	M65	Z	0	0	0	%100
47	M66	X	-3.313	-3.313	0	%100
48	M66	Z	0	0	0	%100
49	FACE1	X	0	0	0	%100
50	FACE1	Z	0	0	0	%100
51	M76	X	-3.747	-3.747	0	%100
52	M76	Z	0	0	0	%100

Member Distributed Loads (BLC 62 : Structure Wi (270 Deg)) (Continued)

	Member Label	Direction	Start Magnitude[lb/ft,...	End Magnitude[lb/ft,F...	Start Location[ft,%]	End Location[ft,%]
53	M77	X	-3.747	-3.747	0	%100
54	M77	Z	0	0	0	%100
55	FACE2	X	0	0	0	%100
56	FACE2	Z	0	0	0	%100
57	M79	X	-5.178	-5.178	0	%100
58	M79	Z	0	0	0	%100
59	M80	X	-5.178	-5.178	0	%100
60	M80	Z	0	0	0	%100
61	M85	X	-3.805	-3.805	0	%100
62	M85	Z	0	0	0	%100
63	M86	X	-3.723	-3.723	0	%100
64	M86	Z	0	0	0	%100
65	TMAA	X	-3.723	-3.723	0	%100
66	TMAA	Z	0	0	0	%100
67	M89	X	-1.643	-1.643	0	%100
68	M89	Z	0	0	0	%100
69	M91	X	0	0	0	%100
70	M91	Z	0	0	0	%100
71	M92	X	0	0	0	%100
72	M92	Z	0	0	0	%100
73	M96	X	-1.585	-1.585	0	%100
74	M96	Z	0	0	0	%100
75	M149	X	-4.467	-4.467	0	%100
76	M149	Z	0	0	0	%100
77	M160	X	-3.805	-3.805	0	%100
78	M160	Z	0	0	0	%100
79	M164	X	-4.467	-4.467	0	%100
80	M164	Z	0	0	0	%100
81	M146A	X	-1.27	-1.27	0	%100
82	M146A	Z	0	0	0	%100
83	M149A	X	-1.27	-1.27	0	%100
84	M149A	Z	0	0	0	%100
85	M152	X	0	0	0	%100
86	M152	Z	0	0	0	%100
87	M157	X	-3.805	-3.805	0	%100
88	M157	Z	0	0	0	%100
89	M158B	X	-3.805	-3.805	0	%100
90	M158B	Z	0	0	0	%100
91	M159B	X	-3.805	-3.805	0	%100
92	M159B	Z	0	0	0	%100
93	M160B	X	-3.805	-3.805	0	%100
94	M160B	Z	0	0	0	%100
95	M157B	X	-3.723	-3.723	0	%100
96	M157B	Z	0	0	0	%100
97	TMAC	X	-3.723	-3.723	0	%100
98	TMAC	Z	0	0	0	%100
99	M159	X	-3.723	-3.723	0	%100
100	M159	Z	0	0	0	%100
101	TMAB	X	-3.723	-3.723	0	%100
102	TMAB	Z	0	0	0	%100
103	M159C	X	-3.255	-3.255	0	%100
104	M159C	Z	0	0	0	%100

Member Distributed Loads (BLC 62 : Structure Wi (270 Deg)) (Continued)

	Member Label	Direction	Start Magnitude[lb/ft,...	End Magnitude[lb/ft,F...	Start Location[ft,%]	End Location[ft,%]
105	M160D	X	-3.255	-3.255	0	%100
106	M160D	Z	0	0	0	%100
107	M156B	X	-1.643	-1.643	0	%100
108	M156B	Z	0	0	0	%100
109	M157C	X	-3.665	-3.665	0	%100
110	M157C	Z	0	0	0	%100
111	M158C	X	-3.665	-3.665	0	%100
112	M158C	Z	0	0	0	%100
113	M159D	X	-3.665	-3.665	0	%100
114	M159D	Z	0	0	0	%100
115	M160E	X	-3.665	-3.665	0	%100
116	M160E	Z	0	0	0	%100
117	M127	X	-.828	-.828	0	%100
118	M127	Z	0	0	0	%100
119	M128	X	-.828	-.828	0	%100
120	M128	Z	0	0	0	%100
121	MP2A	X	-4.028	-4.028	0	%100
122	MP2A	Z	0	0	0	%100
123	M100	X	-1.585	-1.585	0	%100
124	M100	Z	0	0	0	%100
125	M101	X	-1.585	-1.585	0	%100
126	M101	Z	0	0	0	%100
127	MP5A	X	-4.028	-4.028	0	%100
128	MP5A	Z	0	0	0	%100
129	M103	X	-1.585	-1.585	0	%100
130	M103	Z	0	0	0	%100
131	M104	X	-1.585	-1.585	0	%100
132	M104	Z	0	0	0	%100
133	MP4A	X	-4.028	-4.028	0	%100
134	MP4A	Z	0	0	0	%100
135	LIVE1	X	-1.585	-1.585	0	%100
136	LIVE1	Z	0	0	0	%100
137	M107	X	-1.585	-1.585	0	%100
138	M107	Z	0	0	0	%100
139	MP3C	X	-4.096	-4.096	0	%100
140	MP3C	Z	0	0	0	%100
141	MP1C	X	-4.028	-4.028	0	%100
142	MP1C	Z	0	0	0	%100
143	M111	X	-.396	-.396	0	%100
144	M111	Z	0	0	0	%100
145	M113	X	-.396	-.396	0	%100
146	M113	Z	0	0	0	%100
147	MP2C	X	-4.028	-4.028	0	%100
148	MP2C	Z	0	0	0	%100
149	M115	X	-.396	-.396	0	%100
150	M115	Z	0	0	0	%100
151	M116	X	-.396	-.396	0	%100
152	M116	Z	0	0	0	%100
153	MP5C	X	-4.028	-4.028	0	%100
154	MP5C	Z	0	0	0	%100
155	M118	X	-.396	-.396	0	%100
156	M118	Z	0	0	0	%100

Member Distributed Loads (BLC 62 : Structure Wi (270 Deg)) (Continued)

	Member Label	Direction	Start Magnitude[lb/ft,...	End Magnitude[lb/ft,F...	Start Location[ft,%]	End Location[ft,%]
157	M119	X	-.396	-.396	0	%100
158	M119	Z	0	0	0	%100
159	MP4C	X	-4.028	-4.028	0	%100
160	MP4C	Z	0	0	0	%100
161	M121	X	-.396	-.396	0	%100
162	M121	Z	0	0	0	%100
163	M122	X	-.396	-.396	0	%100
164	M122	Z	0	0	0	%100
165	MP3B	X	-4.096	-4.096	0	%100
166	MP3B	Z	0	0	0	%100
167	MP1B	X	-4.028	-4.028	0	%100
168	MP1B	Z	0	0	0	%100
169	M126	X	-.396	-.396	0	%100
170	M126	Z	0	0	0	%100
171	M128A	X	-.396	-.396	0	%100
172	M128A	Z	0	0	0	%100
173	MP2B	X	-4.028	-4.028	0	%100
174	MP2B	Z	0	0	0	%100
175	M130	X	-.396	-.396	0	%100
176	M130	Z	0	0	0	%100
177	M131	X	-.396	-.396	0	%100
178	M131	Z	0	0	0	%100
179	MP5B	X	-4.028	-4.028	0	%100
180	MP5B	Z	0	0	0	%100
181	M133	X	-.396	-.396	0	%100
182	M133	Z	0	0	0	%100
183	M134	X	-.396	-.396	0	%100
184	M134	Z	0	0	0	%100
185	MP4B	X	-4.028	-4.028	0	%100
186	MP4B	Z	0	0	0	%100
187	M136	X	-.396	-.396	0	%100
188	M136	Z	0	0	0	%100
189	M137	X	-.396	-.396	0	%100
190	M137	Z	0	0	0	%100
191	M138	X	-2.804	-2.804	0	%100
192	M138	Z	0	0	0	%100
193	M139	X	-2.804	-2.804	0	%100
194	M139	Z	0	0	0	%100
195	M146	X	-3.249	-3.249	0	%100
196	M146	Z	0	0	0	%100
197	OVP	X	-3.766	-3.766	0	%100
198	OVP	Z	0	0	0	%100
199	M145A	X	-.816	-.816	0	%100
200	M145A	Z	0	0	0	%100
201	M146B	X	-4.494	-4.494	0	%100
202	M146B	Z	0	0	0	%100
203	M147B	X	-4.494	-4.494	0	%100
204	M147B	Z	0	0	0	%100
205	M148	X	-.816	-.816	0	%100
206	M148	Z	0	0	0	%100

Member Distributed Loads (BLC 63 : Structure Wi (300 Deg))

	Member Label	Direction	Start Magnitude[lb/ft,...	End Magnitude[lb/ft,F...	Start Location[ft,%]	End Location[ft,%]
1	M1	X	-1.495	-1.495	0	%100
2	M1	Z	-.863	-.863	0	%100
3	MP3A	X	-3.547	-3.547	0	%100
4	MP3A	Z	-2.048	-2.048	0	%100
5	MP1A	X	-3.488	-3.488	0	%100
6	MP1A	Z	-2.014	-2.014	0	%100
7	M9	X	-1.03	-1.03	0	%100
8	M9	Z	-.594	-.594	0	%100
9	M10	X	-1.495	-1.495	0	%100
10	M10	Z	-.863	-.863	0	%100
11	M19	X	-5.979	-5.979	0	%100
12	M19	Z	-3.452	-3.452	0	%100
13	M28	X	-1.424	-1.424	0	%100
14	M28	Z	-.822	-.822	0	%100
15	M31	X	-1.424	-1.424	0	%100
16	M31	Z	-.822	-.822	0	%100
17	M34	X	-5.695	-5.695	0	%100
18	M34	Z	-3.288	-3.288	0	%100
19	M40	X	-.367	-.367	0	%100
20	M40	Z	-.212	-.212	0	%100
21	M46	X	-.367	-.367	0	%100
22	M46	Z	-.212	-.212	0	%100
23	M52	X	-1.466	-1.466	0	%100
24	M52	Z	-.847	-.847	0	%100
25	M55	X	-1.252	-1.252	0	%100
26	M55	Z	-.723	-.723	0	%100
27	M56	X	-3.543	-3.543	0	%100
28	M56	Z	-2.045	-2.045	0	%100
29	M57	X	-4.122	-4.122	0	%100
30	M57	Z	-2.38	-2.38	0	%100
31	M58	X	-4.122	-4.122	0	%100
32	M58	Z	-2.38	-2.38	0	%100
33	M59	X	-1.266	-1.266	0	%100
34	M59	Z	-.731	-.731	0	%100
35	M60	X	-1.266	-1.266	0	%100
36	M60	Z	-.731	-.731	0	%100
37	M61	X	-1.266	-1.266	0	%100
38	M61	Z	-.731	-.731	0	%100
39	M62	X	-1.266	-1.266	0	%100
40	M62	Z	-.731	-.731	0	%100
41	M63	X	-1.266	-1.266	0	%100
42	M63	Z	-.731	-.731	0	%100
43	M64	X	-1.266	-1.266	0	%100
44	M64	Z	-.731	-.731	0	%100
45	M65	X	-1.266	-1.266	0	%100
46	M65	Z	-.731	-.731	0	%100
47	M66	X	-2.152	-2.152	0	%100
48	M66	Z	-1.242	-1.242	0	%100
49	FACE1	X	-1.082	-1.082	0	%100
50	FACE1	Z	-.624	-.624	0	%100
51	M76	X	-1.082	-1.082	0	%100
52	M76	Z	-.624	-.624	0	%100

Member Distributed Loads (BLC 63 : Structure Wi (300 Deg)) (Continued)

	Member Label	Direction	Start Magnitude[lb/ft,...	End Magnitude[lb/ft,F...	Start Location[ft,%]	End Location[ft,%]
53	M77	X	-4.326	-4.326	0	%100
54	M77	Z	-2.498	-2.498	0	%100
55	FACE2	X	-1.495	-1.495	0	%100
56	FACE2	Z	-.863	-.863	0	%100
57	M79	X	-1.495	-1.495	0	%100
58	M79	Z	-.863	-.863	0	%100
59	M80	X	-5.979	-5.979	0	%100
60	M80	Z	-3.452	-3.452	0	%100
61	M85	X	-3.295	-3.295	0	%100
62	M85	Z	-1.903	-1.903	0	%100
63	M86	X	-3.224	-3.224	0	%100
64	M86	Z	-1.862	-1.862	0	%100
65	TMAA	X	-3.224	-3.224	0	%100
66	TMAA	Z	-1.862	-1.862	0	%100
67	M89	X	-2.007	-2.007	0	%100
68	M89	Z	-1.159	-1.159	0	%100
69	M91	X	-.94	-.94	0	%100
70	M91	Z	-.542	-.542	0	%100
71	M92	X	-1.289	-1.289	0	%100
72	M92	Z	-.744	-.744	0	%100
73	M96	X	-1.03	-1.03	0	%100
74	M96	Z	-.594	-.594	0	%100
75	M149	X	-1.289	-1.289	0	%100
76	M149	Z	-.744	-.744	0	%100
77	M160	X	-3.295	-3.295	0	%100
78	M160	Z	-1.903	-1.903	0	%100
79	M164	X	-5.158	-5.158	0	%100
80	M164	Z	-2.978	-2.978	0	%100
81	M146A	X	-.367	-.367	0	%100
82	M146A	Z	-.212	-.212	0	%100
83	M149A	X	-1.466	-1.466	0	%100
84	M149A	Z	-.847	-.847	0	%100
85	M152	X	-.367	-.367	0	%100
86	M152	Z	-.212	-.212	0	%100
87	M157	X	-3.295	-3.295	0	%100
88	M157	Z	-1.903	-1.903	0	%100
89	M158B	X	-3.295	-3.295	0	%100
90	M158B	Z	-1.903	-1.903	0	%100
91	M159B	X	-3.295	-3.295	0	%100
92	M159B	Z	-1.903	-1.903	0	%100
93	M160B	X	-3.295	-3.295	0	%100
94	M160B	Z	-1.903	-1.903	0	%100
95	M157B	X	-3.224	-3.224	0	%100
96	M157B	Z	-1.862	-1.862	0	%100
97	TMAC	X	-3.224	-3.224	0	%100
98	TMAC	Z	-1.862	-1.862	0	%100
99	M159	X	-3.224	-3.224	0	%100
100	M159	Z	-1.862	-1.862	0	%100
101	TMAB	X	-3.224	-3.224	0	%100
102	TMAB	Z	-1.862	-1.862	0	%100
103	M159C	X	-.94	-.94	0	%100
104	M159C	Z	-.542	-.542	0	%100

Member Distributed Loads (BLC 63 : Structure Wi (300 Deg)) (Continued)

	Member Label	Direction	Start Magnitude[lb/ft,...	End Magnitude[lb/ft,F...	Start Location[ft,%]	End Location[ft,%]
105	M160D	X	-3.758	-3.758	0	%100
106	M160D	Z	-2.17	-2.17	0	%100
107	M156B	X	-2.007	-2.007	0	%100
108	M156B	Z	-1.159	-1.159	0	%100
109	M157C	X	-2.007	-2.007	0	%100
110	M157C	Z	-1.159	-1.159	0	%100
111	M158C	X	-2.007	-2.007	0	%100
112	M158C	Z	-1.159	-1.159	0	%100
113	M159D	X	-3.758	-3.758	0	%100
114	M159D	Z	-2.17	-2.17	0	%100
115	M160E	X	-3.758	-3.758	0	%100
116	M160E	Z	-2.17	-2.17	0	%100
117	M127	X	-2.152	-2.152	0	%100
118	M127	Z	-1.242	-1.242	0	%100
119	M128	X	0	0	0	%100
120	M128	Z	0	0	0	%100
121	MP2A	X	-3.488	-3.488	0	%100
122	MP2A	Z	-2.014	-2.014	0	%100
123	M100	X	-1.03	-1.03	0	%100
124	M100	Z	-.594	-.594	0	%100
125	M101	X	-1.03	-1.03	0	%100
126	M101	Z	-.594	-.594	0	%100
127	MP5A	X	-3.488	-3.488	0	%100
128	MP5A	Z	-2.014	-2.014	0	%100
129	M103	X	-1.03	-1.03	0	%100
130	M103	Z	-.594	-.594	0	%100
131	M104	X	-1.03	-1.03	0	%100
132	M104	Z	-.594	-.594	0	%100
133	MP4A	X	-3.488	-3.488	0	%100
134	MP4A	Z	-2.014	-2.014	0	%100
135	LIVE1	X	-1.03	-1.03	0	%100
136	LIVE1	Z	-.594	-.594	0	%100
137	M107	X	-1.03	-1.03	0	%100
138	M107	Z	-.594	-.594	0	%100
139	MP3C	X	-3.547	-3.547	0	%100
140	MP3C	Z	-2.048	-2.048	0	%100
141	MP1C	X	-3.488	-3.488	0	%100
142	MP1C	Z	-2.014	-2.014	0	%100
143	M111	X	-1.03	-1.03	0	%100
144	M111	Z	-.594	-.594	0	%100
145	M113	X	-1.03	-1.03	0	%100
146	M113	Z	-.594	-.594	0	%100
147	MP2C	X	-3.488	-3.488	0	%100
148	MP2C	Z	-2.014	-2.014	0	%100
149	M115	X	-1.03	-1.03	0	%100
150	M115	Z	-.594	-.594	0	%100
151	M116	X	-1.03	-1.03	0	%100
152	M116	Z	-.594	-.594	0	%100
153	MP5C	X	-3.488	-3.488	0	%100
154	MP5C	Z	-2.014	-2.014	0	%100
155	M118	X	-1.03	-1.03	0	%100
156	M118	Z	-.594	-.594	0	%100

Member Distributed Loads (BLC 63 : Structure Wi (300 Deg)) (Continued)

	Member Label	Direction	Start Magnitude[lb/ft,...	End Magnitude[lb/ft,F...	Start Location[ft,%]	End Location[ft,%]
157	M119	X	-1.03	-1.03	0	%100
158	M119	Z	-.594	-.594	0	%100
159	MP4C	X	-3.488	-3.488	0	%100
160	MP4C	Z	-2.014	-2.014	0	%100
161	M121	X	-1.03	-1.03	0	%100
162	M121	Z	-.594	-.594	0	%100
163	M122	X	-1.03	-1.03	0	%100
164	M122	Z	-.594	-.594	0	%100
165	MP3B	X	-3.547	-3.547	0	%100
166	MP3B	Z	-2.048	-2.048	0	%100
167	MP1B	X	-3.488	-3.488	0	%100
168	MP1B	Z	-2.014	-2.014	0	%100
169	M126	X	0	0	0	%100
170	M126	Z	0	0	0	%100
171	M128A	X	0	0	0	%100
172	M128A	Z	0	0	0	%100
173	MP2B	X	-3.488	-3.488	0	%100
174	MP2B	Z	-2.014	-2.014	0	%100
175	M130	X	0	0	0	%100
176	M130	Z	0	0	0	%100
177	M131	X	0	0	0	%100
178	M131	Z	0	0	0	%100
179	MP5B	X	-3.488	-3.488	0	%100
180	MP5B	Z	-2.014	-2.014	0	%100
181	M133	X	0	0	0	%100
182	M133	Z	0	0	0	%100
183	M134	X	0	0	0	%100
184	M134	Z	0	0	0	%100
185	MP4B	X	-3.488	-3.488	0	%100
186	MP4B	Z	-2.014	-2.014	0	%100
187	M136	X	0	0	0	%100
188	M136	Z	0	0	0	%100
189	M137	X	0	0	0	%100
190	M137	Z	0	0	0	%100
191	M138	X	-3.978	-3.978	0	%100
192	M138	Z	-2.297	-2.297	0	%100
193	M139	X	-.793	-.793	0	%100
194	M139	Z	-.458	-.458	0	%100
195	M146	X	-2.814	-2.814	0	%100
196	M146	Z	-1.625	-1.625	0	%100
197	OVP	X	-3.261	-3.261	0	%100
198	OVP	Z	-1.883	-1.883	0	%100
199	M145A	X	-.793	-.793	0	%100
200	M145A	Z	-.458	-.458	0	%100
201	M146B	X	-3.978	-3.978	0	%100
202	M146B	Z	-2.297	-2.297	0	%100
203	M147B	X	-2.256	-2.256	0	%100
204	M147B	Z	-1.303	-1.303	0	%100
205	M148	X	-2.256	-2.256	0	%100
206	M148	Z	-1.303	-1.303	0	%100

Member Distributed Loads (BLC 64 : Structure Wi (330 Deg))

	Member Label	Direction	Start Magnitude[lb/ft,...	End Magnitude[lb/ft,F...	Start Location[ft,%]	End Location[ft,%]
1	M1	X	-2.589	-2.589	0	%100
2	M1	Z	-4.484	-4.484	0	%100
3	MP3A	X	-2.048	-2.048	0	%100
4	MP3A	Z	-3.547	-3.547	0	%100
5	MP1A	X	-2.014	-2.014	0	%100
6	MP1A	Z	-3.488	-3.488	0	%100
7	M9	X	-.198	-.198	0	%100
8	M9	Z	-.343	-.343	0	%100
9	M10	X	0	0	0	%100
10	M10	Z	0	0	0	%100
11	M19	X	-2.589	-2.589	0	%100
12	M19	Z	-4.484	-4.484	0	%100
13	M28	X	-2.466	-2.466	0	%100
14	M28	Z	-4.271	-4.271	0	%100
15	M31	X	0	0	0	%100
16	M31	Z	0	0	0	%100
17	M34	X	-2.466	-2.466	0	%100
18	M34	Z	-4.271	-4.271	0	%100
19	M40	X	-.635	-.635	0	%100
20	M40	Z	-1.1	-1.1	0	%100
21	M46	X	0	0	0	%100
22	M46	Z	0	0	0	%100
23	M52	X	-.635	-.635	0	%100
24	M52	Z	-1.1	-1.1	0	%100
25	M55	X	-2.168	-2.168	0	%100
26	M55	Z	-3.755	-3.755	0	%100
27	M56	X	-.682	-.682	0	%100
28	M56	Z	-1.181	-1.181	0	%100
29	M57	X	-2.38	-2.38	0	%100
30	M57	Z	-4.122	-4.122	0	%100
31	M58	X	-2.38	-2.38	0	%100
32	M58	Z	-4.122	-4.122	0	%100
33	M59	X	-.244	-.244	0	%100
34	M59	Z	-.422	-.422	0	%100
35	M60	X	-.244	-.244	0	%100
36	M60	Z	-.422	-.422	0	%100
37	M61	X	-.244	-.244	0	%100
38	M61	Z	-.422	-.422	0	%100
39	M62	X	-.244	-.244	0	%100
40	M62	Z	-.422	-.422	0	%100
41	M63	X	-.244	-.244	0	%100
42	M63	Z	-.422	-.422	0	%100
43	M64	X	-.244	-.244	0	%100
44	M64	Z	-.422	-.422	0	%100
45	M65	X	-.244	-.244	0	%100
46	M65	Z	-.422	-.422	0	%100
47	M66	X	-.414	-.414	0	%100
48	M66	Z	-.717	-.717	0	%100
49	FACE1	X	-1.873	-1.873	0	%100
50	FACE1	Z	-3.245	-3.245	0	%100
51	M76	X	0	0	0	%100
52	M76	Z	0	0	0	%100

Member Distributed Loads (BLC 64 : Structure Wi (330 Deg)) (Continued)

	Member Label	Direction	Start Magnitude[lb/ft,...	End Magnitude[lb/ft,F...	Start Location[ft,%]	End Location[ft,%]
53	M77	X	-1.873	-1.873	0	%100
54	M77	Z	-3.245	-3.245	0	%100
55	FACE2	X	-2.589	-2.589	0	%100
56	FACE2	Z	-4.484	-4.484	0	%100
57	M79	X	0	0	0	%100
58	M79	Z	0	0	0	%100
59	M80	X	-2.589	-2.589	0	%100
60	M80	Z	-4.484	-4.484	0	%100
61	M85	X	-1.903	-1.903	0	%100
62	M85	Z	-3.295	-3.295	0	%100
63	M86	X	-1.862	-1.862	0	%100
64	M86	Z	-3.224	-3.224	0	%100
65	TMAA	X	-1.862	-1.862	0	%100
66	TMAA	Z	-3.224	-3.224	0	%100
67	M89	X	-1.833	-1.833	0	%100
68	M89	Z	-3.174	-3.174	0	%100
69	M91	X	-1.627	-1.627	0	%100
70	M91	Z	-2.819	-2.819	0	%100
71	M92	X	-2.233	-2.233	0	%100
72	M92	Z	-3.868	-3.868	0	%100
73	M96	X	-.198	-.198	0	%100
74	M96	Z	-.343	-.343	0	%100
75	M149	X	0	0	0	%100
76	M149	Z	0	0	0	%100
77	M160	X	-1.903	-1.903	0	%100
78	M160	Z	-3.295	-3.295	0	%100
79	M164	X	-2.233	-2.233	0	%100
80	M164	Z	-3.868	-3.868	0	%100
81	M146A	X	0	0	0	%100
82	M146A	Z	0	0	0	%100
83	M149A	X	-.635	-.635	0	%100
84	M149A	Z	-1.1	-1.1	0	%100
85	M152	X	-.635	-.635	0	%100
86	M152	Z	-1.1	-1.1	0	%100
87	M157	X	-1.903	-1.903	0	%100
88	M157	Z	-3.295	-3.295	0	%100
89	M158B	X	-1.903	-1.903	0	%100
90	M158B	Z	-3.295	-3.295	0	%100
91	M159B	X	-1.903	-1.903	0	%100
92	M159B	Z	-3.295	-3.295	0	%100
93	M160B	X	-1.903	-1.903	0	%100
94	M160B	Z	-3.295	-3.295	0	%100
95	M157B	X	-1.862	-1.862	0	%100
96	M157B	Z	-3.224	-3.224	0	%100
97	TMAC	X	-1.862	-1.862	0	%100
98	TMAC	Z	-3.224	-3.224	0	%100
99	M159	X	-1.862	-1.862	0	%100
100	M159	Z	-3.224	-3.224	0	%100
101	TMAB	X	-1.862	-1.862	0	%100
102	TMAB	Z	-3.224	-3.224	0	%100
103	M159C	X	0	0	0	%100
104	M159C	Z	0	0	0	%100

Member Distributed Loads (BLC 64 : Structure Wi (330 Deg)) (Continued)

	Member Label	Direction	Start Magnitude[lb/ft,...	End Magnitude[lb/ft,F...	Start Location[ft,%]	End Location[ft,%]
105	M160D	X	-1.627	-1.627	0	%100
106	M160D	Z	-2.819	-2.819	0	%100
107	M156B	X	-1.833	-1.833	0	%100
108	M156B	Z	-3.174	-3.174	0	%100
109	M157C	X	-.821	-.821	0	%100
110	M157C	Z	-1.423	-1.423	0	%100
111	M158C	X	-.821	-.821	0	%100
112	M158C	Z	-1.423	-1.423	0	%100
113	M159D	X	-1.833	-1.833	0	%100
114	M159D	Z	-3.174	-3.174	0	%100
115	M160E	X	-1.833	-1.833	0	%100
116	M160E	Z	-3.174	-3.174	0	%100
117	M127	X	-1.657	-1.657	0	%100
118	M127	Z	-2.869	-2.869	0	%100
119	M128	X	-.414	-.414	0	%100
120	M128	Z	-.717	-.717	0	%100
121	MP2A	X	-2.014	-2.014	0	%100
122	MP2A	Z	-3.488	-3.488	0	%100
123	M100	X	-.198	-.198	0	%100
124	M100	Z	-.343	-.343	0	%100
125	M101	X	-.198	-.198	0	%100
126	M101	Z	-.343	-.343	0	%100
127	MP5A	X	-2.014	-2.014	0	%100
128	MP5A	Z	-3.488	-3.488	0	%100
129	M103	X	-.198	-.198	0	%100
130	M103	Z	-.343	-.343	0	%100
131	M104	X	-.198	-.198	0	%100
132	M104	Z	-.343	-.343	0	%100
133	MP4A	X	-2.014	-2.014	0	%100
134	MP4A	Z	-3.488	-3.488	0	%100
135	LIVE1	X	-.198	-.198	0	%100
136	LIVE1	Z	-.343	-.343	0	%100
137	M107	X	-.198	-.198	0	%100
138	M107	Z	-.343	-.343	0	%100
139	MP3C	X	-2.048	-2.048	0	%100
140	MP3C	Z	-3.547	-3.547	0	%100
141	MP1C	X	-2.014	-2.014	0	%100
142	MP1C	Z	-3.488	-3.488	0	%100
143	M111	X	-.793	-.793	0	%100
144	M111	Z	-1.373	-1.373	0	%100
145	M113	X	-.793	-.793	0	%100
146	M113	Z	-1.373	-1.373	0	%100
147	MP2C	X	-2.014	-2.014	0	%100
148	MP2C	Z	-3.488	-3.488	0	%100
149	M115	X	-.793	-.793	0	%100
150	M115	Z	-1.373	-1.373	0	%100
151	M116	X	-.793	-.793	0	%100
152	M116	Z	-1.373	-1.373	0	%100
153	MP5C	X	-2.014	-2.014	0	%100
154	MP5C	Z	-3.488	-3.488	0	%100
155	M118	X	-.793	-.793	0	%100
156	M118	Z	-1.373	-1.373	0	%100

Member Distributed Loads (BLC 64 : Structure Wi (330 Deg)) (Continued)

	Member Label	Direction	Start Magnitude[lb/ft,...	End Magnitude[lb/ft,F...	Start Location[ft,%]	End Location[ft,%]
157	M119	X	-.793	-.793	0	%100
158	M119	Z	-1.373	-1.373	0	%100
159	MP4C	X	-2.014	-2.014	0	%100
160	MP4C	Z	-3.488	-3.488	0	%100
161	M121	X	-.793	-.793	0	%100
162	M121	Z	-1.373	-1.373	0	%100
163	M122	X	-.793	-.793	0	%100
164	M122	Z	-1.373	-1.373	0	%100
165	MP3B	X	-2.048	-2.048	0	%100
166	MP3B	Z	-3.547	-3.547	0	%100
167	MP1B	X	-2.014	-2.014	0	%100
168	MP1B	Z	-3.488	-3.488	0	%100
169	M126	X	-.198	-.198	0	%100
170	M126	Z	-.343	-.343	0	%100
171	M128A	X	-.198	-.198	0	%100
172	M128A	Z	-.343	-.343	0	%100
173	MP2B	X	-2.014	-2.014	0	%100
174	MP2B	Z	-3.488	-3.488	0	%100
175	M130	X	-.198	-.198	0	%100
176	M130	Z	-.343	-.343	0	%100
177	M131	X	-.198	-.198	0	%100
178	M131	Z	-.343	-.343	0	%100
179	MP5B	X	-2.014	-2.014	0	%100
180	MP5B	Z	-3.488	-3.488	0	%100
181	M133	X	-.198	-.198	0	%100
182	M133	Z	-.343	-.343	0	%100
183	M134	X	-.198	-.198	0	%100
184	M134	Z	-.343	-.343	0	%100
185	MP4B	X	-2.014	-2.014	0	%100
186	MP4B	Z	-3.488	-3.488	0	%100
187	M136	X	-.198	-.198	0	%100
188	M136	Z	-.343	-.343	0	%100
189	M137	X	-.198	-.198	0	%100
190	M137	Z	-.343	-.343	0	%100
191	M138	X	-2.247	-2.247	0	%100
192	M138	Z	-3.892	-3.892	0	%100
193	M139	X	-.408	-.408	0	%100
194	M139	Z	-.707	-.707	0	%100
195	M146	X	-1.625	-1.625	0	%100
196	M146	Z	-2.814	-2.814	0	%100
197	OVP	X	-1.883	-1.883	0	%100
198	OVP	Z	-3.261	-3.261	0	%100
199	M145A	X	-1.402	-1.402	0	%100
200	M145A	Z	-2.429	-2.429	0	%100
201	M146B	X	-1.402	-1.402	0	%100
202	M146B	Z	-2.429	-2.429	0	%100
203	M147B	X	-.408	-.408	0	%100
204	M147B	Z	-.707	-.707	0	%100
205	M148	X	-2.247	-2.247	0	%100
206	M148	Z	-3.892	-3.892	0	%100

Member Distributed Loads (BLC 65 : Structure Wm (0 Deg))

	Member Label	Direction	Start Magnitude[lb/ft,...	End Magnitude[lb/ft,F...	Start Location[ft,%]	End Location[ft,%]
1	M1	X	0	0	0	%100
2	M1	Z	-1.707	-1.707	0	%100
3	MP3A	X	0	0	0	%100
4	MP3A	Z	-.606	-.606	0	%100
5	MP1A	X	0	0	0	%100
6	MP1A	Z	-.606	-.606	0	%100
7	M9	X	0	0	0	%100
8	M9	Z	0	0	0	%100
9	M10	X	0	0	0	%100
10	M10	Z	-.427	-.427	0	%100
11	M19	X	0	0	0	%100
12	M19	Z	-.427	-.427	0	%100
13	M28	X	0	0	0	%100
14	M28	Z	-1.636	-1.636	0	%100
15	M31	X	0	0	0	%100
16	M31	Z	-.409	-.409	0	%100
17	M34	X	0	0	0	%100
18	M34	Z	-.409	-.409	0	%100
19	M40	X	0	0	0	%100
20	M40	Z	-.096	-.096	0	%100
21	M46	X	0	0	0	%100
22	M46	Z	-.024	-.024	0	%100
23	M52	X	0	0	0	%100
24	M52	Z	-.024	-.024	0	%100
25	M55	X	0	0	0	%100
26	M55	Z	-1.462	-1.462	0	%100
27	M56	X	0	0	0	%100
28	M56	Z	0	0	0	%100
29	M57	X	0	0	0	%100
30	M57	Z	-.85	-.85	0	%100
31	M58	X	0	0	0	%100
32	M58	Z	-.85	-.85	0	%100
33	M59	X	0	0	0	%100
34	M59	Z	0	0	0	%100
35	M60	X	0	0	0	%100
36	M60	Z	0	0	0	%100
37	M61	X	0	0	0	%100
38	M61	Z	0	0	0	%100
39	M62	X	0	0	0	%100
40	M62	Z	0	0	0	%100
41	M63	X	0	0	0	%100
42	M63	Z	0	0	0	%100
43	M64	X	0	0	0	%100
44	M64	Z	0	0	0	%100
45	M65	X	0	0	0	%100
46	M65	Z	0	0	0	%100
47	M66	X	0	0	0	%100
48	M66	Z	0	0	0	%100
49	FACE1	X	0	0	0	%100
50	FACE1	Z	-1.275	-1.275	0	%100
51	M76	X	0	0	0	%100
52	M76	Z	-.319	-.319	0	%100

Member Distributed Loads (BLC 65 : Structure Wm (0 Deg)) (Continued)

	Member Label	Direction	Start Magnitude[lb/ft,...	End Magnitude[lb/ft,F...	Start Location[ft,%]	End Location[ft,%]
53	M77	X	0	0	0	%100
54	M77	Z	-.319	-.319	0	%100
55	FACE2	X	0	0	0	%100
56	FACE2	Z	-1.707	-1.707	0	%100
57	M79	X	0	0	0	%100
58	M79	Z	-.427	-.427	0	%100
59	M80	X	0	0	0	%100
60	M80	Z	-.427	-.427	0	%100
61	M85	X	0	0	0	%100
62	M85	Z	-.74	-.74	0	%100
63	M86	X	0	0	0	%100
64	M86	Z	-.723	-.723	0	%100
65	TMAA	X	0	0	0	%100
66	TMAA	Z	-.723	-.723	0	%100
67	M89	X	0	0	0	%100
68	M89	Z	-.85	-.85	0	%100
69	M91	X	0	0	0	%100
70	M91	Z	-.85	-.85	0	%100
71	M92	X	0	0	0	%100
72	M92	Z	-1.275	-1.275	0	%100
73	M96	X	0	0	0	%100
74	M96	Z	0	0	0	%100
75	M149	X	0	0	0	%100
76	M149	Z	-.319	-.319	0	%100
77	M160	X	0	0	0	%100
78	M160	Z	-.74	-.74	0	%100
79	M164	X	0	0	0	%100
80	M164	Z	-.319	-.319	0	%100
81	M146A	X	0	0	0	%100
82	M146A	Z	-.024	-.024	0	%100
83	M149A	X	0	0	0	%100
84	M149A	Z	-.024	-.024	0	%100
85	M152	X	0	0	0	%100
86	M152	Z	-.096	-.096	0	%100
87	M157	X	0	0	0	%100
88	M157	Z	-.74	-.74	0	%100
89	M158B	X	0	0	0	%100
90	M158B	Z	-.74	-.74	0	%100
91	M159B	X	0	0	0	%100
92	M159B	Z	-.74	-.74	0	%100
93	M160B	X	0	0	0	%100
94	M160B	Z	-.74	-.74	0	%100
95	M157B	X	0	0	0	%100
96	M157B	Z	-.723	-.723	0	%100
97	TMAC	X	0	0	0	%100
98	TMAC	Z	-.723	-.723	0	%100
99	M159	X	0	0	0	%100
100	M159	Z	-.723	-.723	0	%100
101	TMAB	X	0	0	0	%100
102	TMAB	Z	-.723	-.723	0	%100
103	M159C	X	0	0	0	%100
104	M159C	Z	-.213	-.213	0	%100

Member Distributed Loads (BLC 65 : Structure Wm (0 Deg)) (Continued)

	Member Label	Direction	Start Magnitude[lb/ft,...	End Magnitude[lb/ft,F...	Start Location[ft,%]	End Location[ft,%]
105	M160D	X	0	0	0	%100
106	M160D	Z	-.213	-.213	0	%100
107	M156B	X	0	0	0	%100
108	M156B	Z	-.85	-.85	0	%100
109	M157C	X	0	0	0	%100
110	M157C	Z	-.454	-.454	0	%100
111	M158C	X	0	0	0	%100
112	M158C	Z	-.454	-.454	0	%100
113	M159D	X	0	0	0	%100
114	M159D	Z	-.454	-.454	0	%100
115	M160E	X	0	0	0	%100
116	M160E	Z	-.454	-.454	0	%100
117	M127	X	0	0	0	%100
118	M127	Z	-.449	-.449	0	%100
119	M128	X	0	0	0	%100
120	M128	Z	-.449	-.449	0	%100
121	MP2A	X	0	0	0	%100
122	MP2A	Z	-.606	-.606	0	%100
123	M100	X	0	0	0	%100
124	M100	Z	0	0	0	%100
125	M101	X	0	0	0	%100
126	M101	Z	0	0	0	%100
127	MP5A	X	0	0	0	%100
128	MP5A	Z	-.606	-.606	0	%100
129	M103	X	0	0	0	%100
130	M103	Z	0	0	0	%100
131	M104	X	0	0	0	%100
132	M104	Z	0	0	0	%100
133	MP4A	X	0	0	0	%100
134	MP4A	Z	-.606	-.606	0	%100
135	LIVE1	X	0	0	0	%100
136	LIVE1	Z	0	0	0	%100
137	M107	X	0	0	0	%100
138	M107	Z	0	0	0	%100
139	MP3C	X	0	0	0	%100
140	MP3C	Z	-.606	-.606	0	%100
141	MP1C	X	0	0	0	%100
142	MP1C	Z	-.606	-.606	0	%100
143	M111	X	0	0	0	%100
144	M111	Z	-.048	-.048	0	%100
145	M113	X	0	0	0	%100
146	M113	Z	-.048	-.048	0	%100
147	MP2C	X	0	0	0	%100
148	MP2C	Z	-.606	-.606	0	%100
149	M115	X	0	0	0	%100
150	M115	Z	-.048	-.048	0	%100
151	M116	X	0	0	0	%100
152	M116	Z	-.048	-.048	0	%100
153	MP5C	X	0	0	0	%100
154	MP5C	Z	-.606	-.606	0	%100
155	M118	X	0	0	0	%100
156	M118	Z	-.048	-.048	0	%100

Member Distributed Loads (BLC 65 : Structure Wm (0 Deg)) (Continued)

	Member Label	Direction	Start Magnitude[lb/ft,...	End Magnitude[lb/ft,F...	Start Location[ft,%]	End Location[ft,%]
157	M119	X	0	0	0	%100
158	M119	Z	-.048	-.048	0	%100
159	MP4C	X	0	0	0	%100
160	MP4C	Z	-.606	-.606	0	%100
161	M121	X	0	0	0	%100
162	M121	Z	-.048	-.048	0	%100
163	M122	X	0	0	0	%100
164	M122	Z	-.048	-.048	0	%100
165	MP3B	X	0	0	0	%100
166	MP3B	Z	-.606	-.606	0	%100
167	MP1B	X	0	0	0	%100
168	MP1B	Z	-.606	-.606	0	%100
169	M126	X	0	0	0	%100
170	M126	Z	-.048	-.048	0	%100
171	M128A	X	0	0	0	%100
172	M128A	Z	-.048	-.048	0	%100
173	MP2B	X	0	0	0	%100
174	MP2B	Z	-.606	-.606	0	%100
175	M130	X	0	0	0	%100
176	M130	Z	-.048	-.048	0	%100
177	M131	X	0	0	0	%100
178	M131	Z	-.048	-.048	0	%100
179	MP5B	X	0	0	0	%100
180	MP5B	Z	-.606	-.606	0	%100
181	M133	X	0	0	0	%100
182	M133	Z	-.048	-.048	0	%100
183	M134	X	0	0	0	%100
184	M134	Z	-.048	-.048	0	%100
185	MP4B	X	0	0	0	%100
186	MP4B	Z	-.606	-.606	0	%100
187	M136	X	0	0	0	%100
188	M136	Z	-.048	-.048	0	%100
189	M137	X	0	0	0	%100
190	M137	Z	-.048	-.048	0	%100
191	M138	X	0	0	0	%100
192	M138	Z	-.572	-.572	0	%100
193	M139	X	0	0	0	%100
194	M139	Z	-.572	-.572	0	%100
195	M146	X	0	0	0	%100
196	M146	Z	-.514	-.514	0	%100
197	OVP	X	0	0	0	%100
198	OVP	Z	-.606	-.606	0	%100
199	M145A	X	0	0	0	%100
200	M145A	Z	-1.009	-1.009	0	%100
201	M146B	X	0	0	0	%100
202	M146B	Z	-.201	-.201	0	%100
203	M147B	X	0	0	0	%100
204	M147B	Z	-.201	-.201	0	%100
205	M148	X	0	0	0	%100
206	M148	Z	-1.009	-1.009	0	%100

Member Distributed Loads (BLC 66 : Structure Wm (30 Deg))

	Member Label	Direction	Start Magnitude[lb/ft,...	End Magnitude[lb/ft,F...	Start Location[ft,%]	End Location[ft,%]
1	M1	X	.64	.64	0	%100
2	M1	Z	-1.109	-1.109	0	%100
3	MP3A	X	.303	.303	0	%100
4	MP3A	Z	-.524	-.524	0	%100
5	MP1A	X	.303	.303	0	%100
6	MP1A	Z	-.524	-.524	0	%100
7	M9	X	.008	.008	0	%100
8	M9	Z	-.014	-.014	0	%100
9	M10	X	.64	.64	0	%100
10	M10	Z	-1.109	-1.109	0	%100
11	M19	X	0	0	0	%100
12	M19	Z	0	0	0	%100
13	M28	X	.614	.614	0	%100
14	M28	Z	-1.063	-1.063	0	%100
15	M31	X	.614	.614	0	%100
16	M31	Z	-1.063	-1.063	0	%100
17	M34	X	0	0	0	%100
18	M34	Z	0	0	0	%100
19	M40	X	.036	.036	0	%100
20	M40	Z	-.062	-.062	0	%100
21	M46	X	.036	.036	0	%100
22	M46	Z	-.062	-.062	0	%100
23	M52	X	0	0	0	%100
24	M52	Z	0	0	0	%100
25	M55	X	.548	.548	0	%100
26	M55	Z	-.95	-.95	0	%100
27	M56	X	.173	.173	0	%100
28	M56	Z	-.3	-.3	0	%100
29	M57	X	.425	.425	0	%100
30	M57	Z	-.736	-.736	0	%100
31	M58	X	.425	.425	0	%100
32	M58	Z	-.736	-.736	0	%100
33	M59	X	.021	.021	0	%100
34	M59	Z	-.037	-.037	0	%100
35	M60	X	.021	.021	0	%100
36	M60	Z	-.037	-.037	0	%100
37	M61	X	.021	.021	0	%100
38	M61	Z	-.037	-.037	0	%100
39	M62	X	.021	.021	0	%100
40	M62	Z	-.037	-.037	0	%100
41	M63	X	.021	.021	0	%100
42	M63	Z	-.037	-.037	0	%100
43	M64	X	.021	.021	0	%100
44	M64	Z	-.037	-.037	0	%100
45	M65	X	.021	.021	0	%100
46	M65	Z	-.037	-.037	0	%100
47	M66	X	.075	.075	0	%100
48	M66	Z	-.13	-.13	0	%100
49	FACE1	X	.478	.478	0	%100
50	FACE1	Z	-.828	-.828	0	%100
51	M76	X	.478	.478	0	%100
52	M76	Z	-.828	-.828	0	%100

Member Distributed Loads (BLC 66 : Structure Wm (30 Deg)) (Continued)

	Member Label	Direction	Start Magnitude[lb/ft,...	End Magnitude[lb/ft,F...	Start Location[ft,%]	End Location[ft,%]
53	M77	X	0	0	0	%100
54	M77	Z	0	0	0	%100
55	FACE2	X	.64	.64	0	%100
56	FACE2	Z	-1.109	-1.109	0	%100
57	M79	X	.64	.64	0	%100
58	M79	Z	-1.109	-1.109	0	%100
59	M80	X	0	0	0	%100
60	M80	Z	0	0	0	%100
61	M85	X	.37	.37	0	%100
62	M85	Z	-.641	-.641	0	%100
63	M86	X	.361	.361	0	%100
64	M86	Z	-.626	-.626	0	%100
65	TMAA	X	.361	.361	0	%100
66	TMAA	Z	-.626	-.626	0	%100
67	M89	X	.359	.359	0	%100
68	M89	Z	-.622	-.622	0	%100
69	M91	X	.319	.319	0	%100
70	M91	Z	-.552	-.552	0	%100
71	M92	X	.478	.478	0	%100
72	M92	Z	-.828	-.828	0	%100
73	M96	X	.008	.008	0	%100
74	M96	Z	-.014	-.014	0	%100
75	M149	X	.478	.478	0	%100
76	M149	Z	-.828	-.828	0	%100
77	M160	X	.37	.37	0	%100
78	M160	Z	-.641	-.641	0	%100
79	M164	X	0	0	0	%100
80	M164	Z	0	0	0	%100
81	M146A	X	.036	.036	0	%100
82	M146A	Z	-.062	-.062	0	%100
83	M149A	X	0	0	0	%100
84	M149A	Z	0	0	0	%100
85	M152	X	.036	.036	0	%100
86	M152	Z	-.062	-.062	0	%100
87	M157	X	.37	.37	0	%100
88	M157	Z	-.641	-.641	0	%100
89	M158B	X	.37	.37	0	%100
90	M158B	Z	-.641	-.641	0	%100
91	M159B	X	.37	.37	0	%100
92	M159B	Z	-.641	-.641	0	%100
93	M160B	X	.37	.37	0	%100
94	M160B	Z	-.641	-.641	0	%100
95	M157B	X	.361	.361	0	%100
96	M157B	Z	-.626	-.626	0	%100
97	TMAC	X	.361	.361	0	%100
98	TMAC	Z	-.626	-.626	0	%100
99	M159	X	.361	.361	0	%100
100	M159	Z	-.626	-.626	0	%100
101	TMAB	X	.361	.361	0	%100
102	TMAB	Z	-.626	-.626	0	%100
103	M159C	X	.319	.319	0	%100
104	M159C	Z	-.552	-.552	0	%100

Member Distributed Loads (BLC 66 : Structure Wm (30 Deg)) (Continued)

	Member Label	Direction	Start Magnitude[lb/ft,...	End Magnitude[lb/ft,F...	Start Location[ft,%]	End Location[ft,%]
105	M160D	X	0	0	0	%100
106	M160D	Z	0	0	0	%100
107	M156B	X	.359	.359	0	%100
108	M156B	Z	-.622	-.622	0	%100
109	M157C	X	.359	.359	0	%100
110	M157C	Z	-.622	-.622	0	%100
111	M158C	X	.359	.359	0	%100
112	M158C	Z	-.622	-.622	0	%100
113	M159D	X	.161	.161	0	%100
114	M159D	Z	-.279	-.279	0	%100
115	M160E	X	.161	.161	0	%100
116	M160E	Z	-.279	-.279	0	%100
117	M127	X	.075	.075	0	%100
118	M127	Z	-.13	-.13	0	%100
119	M128	X	.299	.299	0	%100
120	M128	Z	-.518	-.518	0	%100
121	MP2A	X	.303	.303	0	%100
122	MP2A	Z	-.524	-.524	0	%100
123	M100	X	.008	.008	0	%100
124	M100	Z	-.014	-.014	0	%100
125	M101	X	.008	.008	0	%100
126	M101	Z	-.014	-.014	0	%100
127	MP5A	X	.303	.303	0	%100
128	MP5A	Z	-.524	-.524	0	%100
129	M103	X	.008	.008	0	%100
130	M103	Z	-.014	-.014	0	%100
131	M104	X	.008	.008	0	%100
132	M104	Z	-.014	-.014	0	%100
133	MP4A	X	.303	.303	0	%100
134	MP4A	Z	-.524	-.524	0	%100
135	LIVE1	X	.008	.008	0	%100
136	LIVE1	Z	-.014	-.014	0	%100
137	M107	X	.008	.008	0	%100
138	M107	Z	-.014	-.014	0	%100
139	MP3C	X	.303	.303	0	%100
140	MP3C	Z	-.524	-.524	0	%100
141	MP1C	X	.303	.303	0	%100
142	MP1C	Z	-.524	-.524	0	%100
143	M111	X	.008	.008	0	%100
144	M111	Z	-.014	-.014	0	%100
145	M113	X	.008	.008	0	%100
146	M113	Z	-.014	-.014	0	%100
147	MP2C	X	.303	.303	0	%100
148	MP2C	Z	-.524	-.524	0	%100
149	M115	X	.008	.008	0	%100
150	M115	Z	-.014	-.014	0	%100
151	M116	X	.008	.008	0	%100
152	M116	Z	-.014	-.014	0	%100
153	MP5C	X	.303	.303	0	%100
154	MP5C	Z	-.524	-.524	0	%100
155	M118	X	.008	.008	0	%100
156	M118	Z	-.014	-.014	0	%100

Member Distributed Loads (BLC 66 : Structure Wm (30 Deg)) (Continued)

	Member Label	Direction	Start Magnitude[lb/ft,...	End Magnitude[lb/ft,F...	Start Location[ft,%]	End Location[ft,%]
157	M119	X	.008	.008	0	%100
158	M119	Z	-.014	-.014	0	%100
159	MP4C	X	.303	.303	0	%100
160	MP4C	Z	-.524	-.524	0	%100
161	M121	X	.008	.008	0	%100
162	M121	Z	-.014	-.014	0	%100
163	M122	X	.008	.008	0	%100
164	M122	Z	-.014	-.014	0	%100
165	MP3B	X	.303	.303	0	%100
166	MP3B	Z	-.524	-.524	0	%100
167	MP1B	X	.303	.303	0	%100
168	MP1B	Z	-.524	-.524	0	%100
169	M126	X	.032	.032	0	%100
170	M126	Z	-.055	-.055	0	%100
171	M128A	X	.032	.032	0	%100
172	M128A	Z	-.055	-.055	0	%100
173	MP2B	X	.303	.303	0	%100
174	MP2B	Z	-.524	-.524	0	%100
175	M130	X	.032	.032	0	%100
176	M130	Z	-.055	-.055	0	%100
177	M131	X	.032	.032	0	%100
178	M131	Z	-.055	-.055	0	%100
179	MP5B	X	.303	.303	0	%100
180	MP5B	Z	-.524	-.524	0	%100
181	M133	X	.032	.032	0	%100
182	M133	Z	-.055	-.055	0	%100
183	M134	X	.032	.032	0	%100
184	M134	Z	-.055	-.055	0	%100
185	MP4B	X	.303	.303	0	%100
186	MP4B	Z	-.524	-.524	0	%100
187	M136	X	.032	.032	0	%100
188	M136	Z	-.055	-.055	0	%100
189	M137	X	.032	.032	0	%100
190	M137	Z	-.055	-.055	0	%100
191	M138	X	.09	.09	0	%100
192	M138	Z	-.155	-.155	0	%100
193	M139	X	.494	.494	0	%100
194	M139	Z	-.855	-.855	0	%100
195	M146	X	.257	.257	0	%100
196	M146	Z	-.445	-.445	0	%100
197	OVP	X	.303	.303	0	%100
198	OVP	Z	-.524	-.524	0	%100
199	M145A	X	.494	.494	0	%100
200	M145A	Z	-.855	-.855	0	%100
201	M146B	X	.09	.09	0	%100
202	M146B	Z	-.155	-.155	0	%100
203	M147B	X	.308	.308	0	%100
204	M147B	Z	-.533	-.533	0	%100
205	M148	X	.308	.308	0	%100
206	M148	Z	-.533	-.533	0	%100

Member Distributed Loads (BLC 67 : Structure Wm (60 Deg))

	Member Label	Direction	Start Magnitude[lb/ft,...	End Magnitude[lb/ft,F...	Start Location[ft,%]	End Location[ft,%]
1	M1	X	.37	.37	0	%100
2	M1	Z	-.213	-.213	0	%100
3	MP3A	X	.524	.524	0	%100
4	MP3A	Z	-.303	-.303	0	%100
5	MP1A	X	.524	.524	0	%100
6	MP1A	Z	-.303	-.303	0	%100
7	M9	X	.041	.041	0	%100
8	M9	Z	-.024	-.024	0	%100
9	M10	X	1.478	1.478	0	%100
10	M10	Z	-.854	-.854	0	%100
11	M19	X	.37	.37	0	%100
12	M19	Z	-.213	-.213	0	%100
13	M28	X	.354	.354	0	%100
14	M28	Z	-.205	-.205	0	%100
15	M31	X	1.417	1.417	0	%100
16	M31	Z	-.818	-.818	0	%100
17	M34	X	.354	.354	0	%100
18	M34	Z	-.205	-.205	0	%100
19	M40	X	.021	.021	0	%100
20	M40	Z	-.012	-.012	0	%100
21	M46	X	.083	.083	0	%100
22	M46	Z	-.048	-.048	0	%100
23	M52	X	.021	.021	0	%100
24	M52	Z	-.012	-.012	0	%100
25	M55	X	.317	.317	0	%100
26	M55	Z	-.183	-.183	0	%100
27	M56	X	.899	.899	0	%100
28	M56	Z	-.519	-.519	0	%100
29	M57	X	.736	.736	0	%100
30	M57	Z	-.425	-.425	0	%100
31	M58	X	.736	.736	0	%100
32	M58	Z	-.425	-.425	0	%100
33	M59	X	.11	.11	0	%100
34	M59	Z	-.063	-.063	0	%100
35	M60	X	.11	.11	0	%100
36	M60	Z	-.063	-.063	0	%100
37	M61	X	.11	.11	0	%100
38	M61	Z	-.063	-.063	0	%100
39	M62	X	.11	.11	0	%100
40	M62	Z	-.063	-.063	0	%100
41	M63	X	.11	.11	0	%100
42	M63	Z	-.063	-.063	0	%100
43	M64	X	.11	.11	0	%100
44	M64	Z	-.063	-.063	0	%100
45	M65	X	.11	.11	0	%100
46	M65	Z	-.063	-.063	0	%100
47	M66	X	.389	.389	0	%100
48	M66	Z	-.224	-.224	0	%100
49	FACE1	X	.276	.276	0	%100
50	FACE1	Z	-.159	-.159	0	%100
51	M76	X	1.104	1.104	0	%100
52	M76	Z	-.638	-.638	0	%100

Member Distributed Loads (BLC 67 : Structure Wm (60 Deg)) (Continued)

	Member Label	Direction	Start Magnitude[lb/ft,...	End Magnitude[lb/ft,F...	Start Location[ft,%]	End Location[ft,%]
53	M77	X	.276	.276	0	%100
54	M77	Z	-.159	-.159	0	%100
55	FACE2	X	.37	.37	0	%100
56	FACE2	Z	-.213	-.213	0	%100
57	M79	X	1.478	1.478	0	%100
58	M79	Z	-.854	-.854	0	%100
59	M80	X	.37	.37	0	%100
60	M80	Z	-.213	-.213	0	%100
61	M85	X	.641	.641	0	%100
62	M85	Z	-.37	-.37	0	%100
63	M86	X	.626	.626	0	%100
64	M86	Z	-.361	-.361	0	%100
65	TMAA	X	.626	.626	0	%100
66	TMAA	Z	-.361	-.361	0	%100
67	M89	X	.393	.393	0	%100
68	M89	Z	-.227	-.227	0	%100
69	M91	X	.184	.184	0	%100
70	M91	Z	-.106	-.106	0	%100
71	M92	X	.276	.276	0	%100
72	M92	Z	-.159	-.159	0	%100
73	M96	X	.041	.041	0	%100
74	M96	Z	-.024	-.024	0	%100
75	M149	X	1.104	1.104	0	%100
76	M149	Z	-.638	-.638	0	%100
77	M160	X	.641	.641	0	%100
78	M160	Z	-.37	-.37	0	%100
79	M164	X	.276	.276	0	%100
80	M164	Z	-.159	-.159	0	%100
81	M146A	X	.083	.083	0	%100
82	M146A	Z	-.048	-.048	0	%100
83	M149A	X	.021	.021	0	%100
84	M149A	Z	-.012	-.012	0	%100
85	M152	X	.021	.021	0	%100
86	M152	Z	-.012	-.012	0	%100
87	M157	X	.641	.641	0	%100
88	M157	Z	-.37	-.37	0	%100
89	M158B	X	.641	.641	0	%100
90	M158B	Z	-.37	-.37	0	%100
91	M159B	X	.641	.641	0	%100
92	M159B	Z	-.37	-.37	0	%100
93	M160B	X	.641	.641	0	%100
94	M160B	Z	-.37	-.37	0	%100
95	M157B	X	.626	.626	0	%100
96	M157B	Z	-.361	-.361	0	%100
97	TMAC	X	.626	.626	0	%100
98	TMAC	Z	-.361	-.361	0	%100
99	M159	X	.626	.626	0	%100
100	M159	Z	-.361	-.361	0	%100
101	TMAB	X	.626	.626	0	%100
102	TMAB	Z	-.361	-.361	0	%100
103	M159C	X	.736	.736	0	%100
104	M159C	Z	-.425	-.425	0	%100

Member Distributed Loads (BLC 67 : Structure Wm (60 Deg)) (Continued)

	Member Label	Direction	Start Magnitude[lb/ft,...	End Magnitude[lb/ft,F...	Start Location[ft,%]	End Location[ft,%]
105	M160D	X	.184	.184	0	%100
106	M160D	Z	-.106	-.106	0	%100
107	M156B	X	.393	.393	0	%100
108	M156B	Z	-.227	-.227	0	%100
109	M157C	X	.736	.736	0	%100
110	M157C	Z	-.425	-.425	0	%100
111	M158C	X	.736	.736	0	%100
112	M158C	Z	-.425	-.425	0	%100
113	M159D	X	.393	.393	0	%100
114	M159D	Z	-.227	-.227	0	%100
115	M160E	X	.393	.393	0	%100
116	M160E	Z	-.227	-.227	0	%100
117	M127	X	0	0	0	%100
118	M127	Z	0	0	0	%100
119	M128	X	.389	.389	0	%100
120	M128	Z	-.224	-.224	0	%100
121	MP2A	X	.524	.524	0	%100
122	MP2A	Z	-.303	-.303	0	%100
123	M100	X	.041	.041	0	%100
124	M100	Z	-.024	-.024	0	%100
125	M101	X	.041	.041	0	%100
126	M101	Z	-.024	-.024	0	%100
127	MP5A	X	.524	.524	0	%100
128	MP5A	Z	-.303	-.303	0	%100
129	M103	X	.041	.041	0	%100
130	M103	Z	-.024	-.024	0	%100
131	M104	X	.041	.041	0	%100
132	M104	Z	-.024	-.024	0	%100
133	MP4A	X	.524	.524	0	%100
134	MP4A	Z	-.303	-.303	0	%100
135	LIVE1	X	.041	.041	0	%100
136	LIVE1	Z	-.024	-.024	0	%100
137	M107	X	.041	.041	0	%100
138	M107	Z	-.024	-.024	0	%100
139	MP3C	X	.524	.524	0	%100
140	MP3C	Z	-.303	-.303	0	%100
141	MP1C	X	.524	.524	0	%100
142	MP1C	Z	-.303	-.303	0	%100
143	M111	X	0	0	0	%100
144	M111	Z	0	0	0	%100
145	M113	X	0	0	0	%100
146	M113	Z	0	0	0	%100
147	MP2C	X	.524	.524	0	%100
148	MP2C	Z	-.303	-.303	0	%100
149	M115	X	0	0	0	%100
150	M115	Z	0	0	0	%100
151	M116	X	0	0	0	%100
152	M116	Z	0	0	0	%100
153	MP5C	X	.524	.524	0	%100
154	MP5C	Z	-.303	-.303	0	%100
155	M118	X	0	0	0	%100
156	M118	Z	0	0	0	%100

Member Distributed Loads (BLC 67 : Structure Wm (60 Deg)) (Continued)

	Member Label	Direction	Start Magnitude[lb/ft,...	End Magnitude[lb/ft,F...	Start Location[ft,%]	End Location[ft,%]
157	M119	X	0	0	0	%100
158	M119	Z	0	0	0	%100
159	MP4C	X	.524	.524	0	%100
160	MP4C	Z	-.303	-.303	0	%100
161	M121	X	0	0	0	%100
162	M121	Z	0	0	0	%100
163	M122	X	0	0	0	%100
164	M122	Z	0	0	0	%100
165	MP3B	X	.524	.524	0	%100
166	MP3B	Z	-.303	-.303	0	%100
167	MP1B	X	.524	.524	0	%100
168	MP1B	Z	-.303	-.303	0	%100
169	M126	X	.041	.041	0	%100
170	M126	Z	-.024	-.024	0	%100
171	M128A	X	.041	.041	0	%100
172	M128A	Z	-.024	-.024	0	%100
173	MP2B	X	.524	.524	0	%100
174	MP2B	Z	-.303	-.303	0	%100
175	M130	X	.041	.041	0	%100
176	M130	Z	-.024	-.024	0	%100
177	M131	X	.041	.041	0	%100
178	M131	Z	-.024	-.024	0	%100
179	MP5B	X	.524	.524	0	%100
180	MP5B	Z	-.303	-.303	0	%100
181	M133	X	.041	.041	0	%100
182	M133	Z	-.024	-.024	0	%100
183	M134	X	.041	.041	0	%100
184	M134	Z	-.024	-.024	0	%100
185	MP4B	X	.524	.524	0	%100
186	MP4B	Z	-.303	-.303	0	%100
187	M136	X	.041	.041	0	%100
188	M136	Z	-.024	-.024	0	%100
189	M137	X	.041	.041	0	%100
190	M137	Z	-.024	-.024	0	%100
191	M138	X	.174	.174	0	%100
192	M138	Z	-.101	-.101	0	%100
193	M139	X	.874	.874	0	%100
194	M139	Z	-.504	-.504	0	%100
195	M146	X	.445	.445	0	%100
196	M146	Z	-.257	-.257	0	%100
197	OVP	X	.524	.524	0	%100
198	OVP	Z	-.303	-.303	0	%100
199	M145A	X	.496	.496	0	%100
200	M145A	Z	-.286	-.286	0	%100
201	M146B	X	.496	.496	0	%100
202	M146B	Z	-.286	-.286	0	%100
203	M147B	X	.874	.874	0	%100
204	M147B	Z	-.504	-.504	0	%100
205	M148	X	.174	.174	0	%100
206	M148	Z	-.101	-.101	0	%100

Member Distributed Loads (BLC 68 : Structure Wm (90 Deg))

	Member Label	Direction	Start Magnitude[lb/ft,...	End Magnitude[lb/ft,F...	Start Location[ft,%]	End Location[ft,%]
1	M1	X	0	0	0	%100
2	M1	Z	0	0	0	%100
3	MP3A	X	.606	.606	0	%100
4	MP3A	Z	0	0	0	%100
5	MP1A	X	.606	.606	0	%100
6	MP1A	Z	0	0	0	%100
7	M9	X	.064	.064	0	%100
8	M9	Z	0	0	0	%100
9	M10	X	1.28	1.28	0	%100
10	M10	Z	0	0	0	%100
11	M19	X	1.28	1.28	0	%100
12	M19	Z	0	0	0	%100
13	M28	X	0	0	0	%100
14	M28	Z	0	0	0	%100
15	M31	X	1.227	1.227	0	%100
16	M31	Z	0	0	0	%100
17	M34	X	1.227	1.227	0	%100
18	M34	Z	0	0	0	%100
19	M40	X	0	0	0	%100
20	M40	Z	0	0	0	%100
21	M46	X	.072	.072	0	%100
22	M46	Z	0	0	0	%100
23	M52	X	.072	.072	0	%100
24	M52	Z	0	0	0	%100
25	M55	X	0	0	0	%100
26	M55	Z	0	0	0	%100
27	M56	X	1.384	1.384	0	%100
28	M56	Z	0	0	0	%100
29	M57	X	.85	.85	0	%100
30	M57	Z	0	0	0	%100
31	M58	X	.85	.85	0	%100
32	M58	Z	0	0	0	%100
33	M59	X	.169	.169	0	%100
34	M59	Z	0	0	0	%100
35	M60	X	.169	.169	0	%100
36	M60	Z	0	0	0	%100
37	M61	X	.169	.169	0	%100
38	M61	Z	0	0	0	%100
39	M62	X	.169	.169	0	%100
40	M62	Z	0	0	0	%100
41	M63	X	.169	.169	0	%100
42	M63	Z	0	0	0	%100
43	M64	X	.169	.169	0	%100
44	M64	Z	0	0	0	%100
45	M65	X	.169	.169	0	%100
46	M65	Z	0	0	0	%100
47	M66	X	.599	.599	0	%100
48	M66	Z	0	0	0	%100
49	FACE1	X	0	0	0	%100
50	FACE1	Z	0	0	0	%100
51	M76	X	.956	.956	0	%100
52	M76	Z	0	0	0	%100

Member Distributed Loads (BLC 68 : Structure Wm (90 Deg)) (Continued)

	Member Label	Direction	Start Magnitude[lb/ft,...	End Magnitude[lb/ft,F...	Start Location[ft,%]	End Location[ft,%]
53	M77	X	.956	.956	0	%100
54	M77	Z	0	0	0	%100
55	FACE2	X	0	0	0	%100
56	FACE2	Z	0	0	0	%100
57	M79	X	1.28	1.28	0	%100
58	M79	Z	0	0	0	%100
59	M80	X	1.28	1.28	0	%100
60	M80	Z	0	0	0	%100
61	M85	X	.74	.74	0	%100
62	M85	Z	0	0	0	%100
63	M86	X	.723	.723	0	%100
64	M86	Z	0	0	0	%100
65	TMAA	X	.723	.723	0	%100
66	TMAA	Z	0	0	0	%100
67	M89	X	.322	.322	0	%100
68	M89	Z	0	0	0	%100
69	M91	X	0	0	0	%100
70	M91	Z	0	0	0	%100
71	M92	X	0	0	0	%100
72	M92	Z	0	0	0	%100
73	M96	X	.064	.064	0	%100
74	M96	Z	0	0	0	%100
75	M149	X	.956	.956	0	%100
76	M149	Z	0	0	0	%100
77	M160	X	.74	.74	0	%100
78	M160	Z	0	0	0	%100
79	M164	X	.956	.956	0	%100
80	M164	Z	0	0	0	%100
81	M146A	X	.072	.072	0	%100
82	M146A	Z	0	0	0	%100
83	M149A	X	.072	.072	0	%100
84	M149A	Z	0	0	0	%100
85	M152	X	0	0	0	%100
86	M152	Z	0	0	0	%100
87	M157	X	.74	.74	0	%100
88	M157	Z	0	0	0	%100
89	M158B	X	.74	.74	0	%100
90	M158B	Z	0	0	0	%100
91	M159B	X	.74	.74	0	%100
92	M159B	Z	0	0	0	%100
93	M160B	X	.74	.74	0	%100
94	M160B	Z	0	0	0	%100
95	M157B	X	.723	.723	0	%100
96	M157B	Z	0	0	0	%100
97	TMAC	X	.723	.723	0	%100
98	TMAC	Z	0	0	0	%100
99	M159	X	.723	.723	0	%100
100	M159	Z	0	0	0	%100
101	TMAB	X	.723	.723	0	%100
102	TMAB	Z	0	0	0	%100
103	M159C	X	.638	.638	0	%100
104	M159C	Z	0	0	0	%100

Member Distributed Loads (BLC 68 : Structure Wm (90 Deg)) (Continued)

	Member Label	Direction	Start Magnitude[lb/ft,...	End Magnitude[lb/ft,F...	Start Location[ft,%]	End Location[ft,%]
105	M160D	X	.638	.638	0	%100
106	M160D	Z	0	0	0	%100
107	M156B	X	.322	.322	0	%100
108	M156B	Z	0	0	0	%100
109	M157C	X	.718	.718	0	%100
110	M157C	Z	0	0	0	%100
111	M158C	X	.718	.718	0	%100
112	M158C	Z	0	0	0	%100
113	M159D	X	.718	.718	0	%100
114	M159D	Z	0	0	0	%100
115	M160E	X	.718	.718	0	%100
116	M160E	Z	0	0	0	%100
117	M127	X	.15	.15	0	%100
118	M127	Z	0	0	0	%100
119	M128	X	.15	.15	0	%100
120	M128	Z	0	0	0	%100
121	MP2A	X	.606	.606	0	%100
122	MP2A	Z	0	0	0	%100
123	M100	X	.064	.064	0	%100
124	M100	Z	0	0	0	%100
125	M101	X	.064	.064	0	%100
126	M101	Z	0	0	0	%100
127	MP5A	X	.606	.606	0	%100
128	MP5A	Z	0	0	0	%100
129	M103	X	.064	.064	0	%100
130	M103	Z	0	0	0	%100
131	M104	X	.064	.064	0	%100
132	M104	Z	0	0	0	%100
133	MP4A	X	.606	.606	0	%100
134	MP4A	Z	0	0	0	%100
135	LIVE1	X	.064	.064	0	%100
136	LIVE1	Z	0	0	0	%100
137	M107	X	.064	.064	0	%100
138	M107	Z	0	0	0	%100
139	MP3C	X	.606	.606	0	%100
140	MP3C	Z	0	0	0	%100
141	MP1C	X	.606	.606	0	%100
142	MP1C	Z	0	0	0	%100
143	M111	X	.016	.016	0	%100
144	M111	Z	0	0	0	%100
145	M113	X	.016	.016	0	%100
146	M113	Z	0	0	0	%100
147	MP2C	X	.606	.606	0	%100
148	MP2C	Z	0	0	0	%100
149	M115	X	.016	.016	0	%100
150	M115	Z	0	0	0	%100
151	M116	X	.016	.016	0	%100
152	M116	Z	0	0	0	%100
153	MP5C	X	.606	.606	0	%100
154	MP5C	Z	0	0	0	%100
155	M118	X	.016	.016	0	%100
156	M118	Z	0	0	0	%100

Member Distributed Loads (BLC 68 : Structure Wm (90 Deg)) (Continued)

	Member Label	Direction	Start Magnitude[lb/ft,...	End Magnitude[lb/ft,F...	Start Location[ft,%]	End Location[ft,%]
157	M119	X	.016	.016	0	%100
158	M119	Z	0	0	0	%100
159	MP4C	X	.606	.606	0	%100
160	MP4C	Z	0	0	0	%100
161	M121	X	.016	.016	0	%100
162	M121	Z	0	0	0	%100
163	M122	X	.016	.016	0	%100
164	M122	Z	0	0	0	%100
165	MP3B	X	.606	.606	0	%100
166	MP3B	Z	0	0	0	%100
167	MP1B	X	.606	.606	0	%100
168	MP1B	Z	0	0	0	%100
169	M126	X	.016	.016	0	%100
170	M126	Z	0	0	0	%100
171	M128A	X	.016	.016	0	%100
172	M128A	Z	0	0	0	%100
173	MP2B	X	.606	.606	0	%100
174	MP2B	Z	0	0	0	%100
175	M130	X	.016	.016	0	%100
176	M130	Z	0	0	0	%100
177	M131	X	.016	.016	0	%100
178	M131	Z	0	0	0	%100
179	MP5B	X	.606	.606	0	%100
180	MP5B	Z	0	0	0	%100
181	M133	X	.016	.016	0	%100
182	M133	Z	0	0	0	%100
183	M134	X	.016	.016	0	%100
184	M134	Z	0	0	0	%100
185	MP4B	X	.606	.606	0	%100
186	MP4B	Z	0	0	0	%100
187	M136	X	.016	.016	0	%100
188	M136	Z	0	0	0	%100
189	M137	X	.016	.016	0	%100
190	M137	Z	0	0	0	%100
191	M138	X	.616	.616	0	%100
192	M138	Z	0	0	0	%100
193	M139	X	.616	.616	0	%100
194	M139	Z	0	0	0	%100
195	M146	X	.514	.514	0	%100
196	M146	Z	0	0	0	%100
197	OVP	X	.606	.606	0	%100
198	OVP	Z	0	0	0	%100
199	M145A	X	.179	.179	0	%100
200	M145A	Z	0	0	0	%100
201	M146B	X	.987	.987	0	%100
202	M146B	Z	0	0	0	%100
203	M147B	X	.987	.987	0	%100
204	M147B	Z	0	0	0	%100
205	M148	X	.179	.179	0	%100
206	M148	Z	0	0	0	%100

Member Distributed Loads (BLC 69 : Structure Wm (120 Deg))

	Member Label	Direction	Start Magnitude[lb/ft,...	End Magnitude[lb/ft,F...	Start Location[ft,%]	End Location[ft,%]
1	M1	X	.37	.37	0	%100
2	M1	Z	.213	.213	0	%100
3	MP3A	X	.524	.524	0	%100
4	MP3A	Z	.303	.303	0	%100
5	MP1A	X	.524	.524	0	%100
6	MP1A	Z	.303	.303	0	%100
7	M9	X	.041	.041	0	%100
8	M9	Z	.024	.024	0	%100
9	M10	X	.37	.37	0	%100
10	M10	Z	.213	.213	0	%100
11	M19	X	1.478	1.478	0	%100
12	M19	Z	.854	.854	0	%100
13	M28	X	.354	.354	0	%100
14	M28	Z	.205	.205	0	%100
15	M31	X	.354	.354	0	%100
16	M31	Z	.205	.205	0	%100
17	M34	X	1.417	1.417	0	%100
18	M34	Z	.818	.818	0	%100
19	M40	X	.021	.021	0	%100
20	M40	Z	.012	.012	0	%100
21	M46	X	.021	.021	0	%100
22	M46	Z	.012	.012	0	%100
23	M52	X	.083	.083	0	%100
24	M52	Z	.048	.048	0	%100
25	M55	X	.317	.317	0	%100
26	M55	Z	.183	.183	0	%100
27	M56	X	.899	.899	0	%100
28	M56	Z	.519	.519	0	%100
29	M57	X	.736	.736	0	%100
30	M57	Z	.425	.425	0	%100
31	M58	X	.736	.736	0	%100
32	M58	Z	.425	.425	0	%100
33	M59	X	.11	.11	0	%100
34	M59	Z	.063	.063	0	%100
35	M60	X	.11	.11	0	%100
36	M60	Z	.063	.063	0	%100
37	M61	X	.11	.11	0	%100
38	M61	Z	.063	.063	0	%100
39	M62	X	.11	.11	0	%100
40	M62	Z	.063	.063	0	%100
41	M63	X	.11	.11	0	%100
42	M63	Z	.063	.063	0	%100
43	M64	X	.11	.11	0	%100
44	M64	Z	.063	.063	0	%100
45	M65	X	.11	.11	0	%100
46	M65	Z	.063	.063	0	%100
47	M66	X	.389	.389	0	%100
48	M66	Z	.224	.224	0	%100
49	FACE1	X	.276	.276	0	%100
50	FACE1	Z	.159	.159	0	%100
51	M76	X	.276	.276	0	%100
52	M76	Z	.159	.159	0	%100

Member Distributed Loads (BLC 69 : Structure Wm (120 Deg)) (Continued)

	Member Label	Direction	Start Magnitude[lb/ft,...	End Magnitude[lb/ft,F...	Start Location[ft,%]	End Location[ft,%]
53	M77	X	1.104	1.104	0	%100
54	M77	Z	.638	.638	0	%100
55	FACE2	X	.37	.37	0	%100
56	FACE2	Z	.213	.213	0	%100
57	M79	X	.37	.37	0	%100
58	M79	Z	.213	.213	0	%100
59	M80	X	1.478	1.478	0	%100
60	M80	Z	.854	.854	0	%100
61	M85	X	.641	.641	0	%100
62	M85	Z	.37	.37	0	%100
63	M86	X	.626	.626	0	%100
64	M86	Z	.361	.361	0	%100
65	TMAA	X	.626	.626	0	%100
66	TMAA	Z	.361	.361	0	%100
67	M89	X	.393	.393	0	%100
68	M89	Z	.227	.227	0	%100
69	M91	X	.184	.184	0	%100
70	M91	Z	.106	.106	0	%100
71	M92	X	.276	.276	0	%100
72	M92	Z	.159	.159	0	%100
73	M96	X	.041	.041	0	%100
74	M96	Z	.024	.024	0	%100
75	M149	X	.276	.276	0	%100
76	M149	Z	.159	.159	0	%100
77	M160	X	.641	.641	0	%100
78	M160	Z	.37	.37	0	%100
79	M164	X	1.104	1.104	0	%100
80	M164	Z	.638	.638	0	%100
81	M146A	X	.021	.021	0	%100
82	M146A	Z	.012	.012	0	%100
83	M149A	X	.083	.083	0	%100
84	M149A	Z	.048	.048	0	%100
85	M152	X	.021	.021	0	%100
86	M152	Z	.012	.012	0	%100
87	M157	X	.641	.641	0	%100
88	M157	Z	.37	.37	0	%100
89	M158B	X	.641	.641	0	%100
90	M158B	Z	.37	.37	0	%100
91	M159B	X	.641	.641	0	%100
92	M159B	Z	.37	.37	0	%100
93	M160B	X	.641	.641	0	%100
94	M160B	Z	.37	.37	0	%100
95	M157B	X	.626	.626	0	%100
96	M157B	Z	.361	.361	0	%100
97	TMAC	X	.626	.626	0	%100
98	TMAC	Z	.361	.361	0	%100
99	M159	X	.626	.626	0	%100
100	M159	Z	.361	.361	0	%100
101	TMAB	X	.626	.626	0	%100
102	TMAB	Z	.361	.361	0	%100
103	M159C	X	.184	.184	0	%100
104	M159C	Z	.106	.106	0	%100

Member Distributed Loads (BLC 69 : Structure Wm (120 Deg)) (Continued)

	Member Label	Direction	Start Magnitude[lb/ft,...	End Magnitude[lb/ft,F...	Start Location[ft,%]	End Location[ft,%]
105	M160D	X	.736	.736	0	%100
106	M160D	Z	.425	.425	0	%100
107	M156B	X	.393	.393	0	%100
108	M156B	Z	.227	.227	0	%100
109	M157C	X	.393	.393	0	%100
110	M157C	Z	.227	.227	0	%100
111	M158C	X	.393	.393	0	%100
112	M158C	Z	.227	.227	0	%100
113	M159D	X	.736	.736	0	%100
114	M159D	Z	.425	.425	0	%100
115	M160E	X	.736	.736	0	%100
116	M160E	Z	.425	.425	0	%100
117	M127	X	.389	.389	0	%100
118	M127	Z	.224	.224	0	%100
119	M128	X	0	0	0	%100
120	M128	Z	0	0	0	%100
121	MP2A	X	.524	.524	0	%100
122	MP2A	Z	.303	.303	0	%100
123	M100	X	.041	.041	0	%100
124	M100	Z	.024	.024	0	%100
125	M101	X	.041	.041	0	%100
126	M101	Z	.024	.024	0	%100
127	MP5A	X	.524	.524	0	%100
128	MP5A	Z	.303	.303	0	%100
129	M103	X	.041	.041	0	%100
130	M103	Z	.024	.024	0	%100
131	M104	X	.041	.041	0	%100
132	M104	Z	.024	.024	0	%100
133	MP4A	X	.524	.524	0	%100
134	MP4A	Z	.303	.303	0	%100
135	LIVE1	X	.041	.041	0	%100
136	LIVE1	Z	.024	.024	0	%100
137	M107	X	.041	.041	0	%100
138	M107	Z	.024	.024	0	%100
139	MP3C	X	.524	.524	0	%100
140	MP3C	Z	.303	.303	0	%100
141	MP1C	X	.524	.524	0	%100
142	MP1C	Z	.303	.303	0	%100
143	M111	X	.041	.041	0	%100
144	M111	Z	.024	.024	0	%100
145	M113	X	.041	.041	0	%100
146	M113	Z	.024	.024	0	%100
147	MP2C	X	.524	.524	0	%100
148	MP2C	Z	.303	.303	0	%100
149	M115	X	.041	.041	0	%100
150	M115	Z	.024	.024	0	%100
151	M116	X	.041	.041	0	%100
152	M116	Z	.024	.024	0	%100
153	MP5C	X	.524	.524	0	%100
154	MP5C	Z	.303	.303	0	%100
155	M118	X	.041	.041	0	%100
156	M118	Z	.024	.024	0	%100

Member Distributed Loads (BLC 69 : Structure Wm (120 Deg)) (Continued)

	Member Label	Direction	Start Magnitude[lb/ft,...	End Magnitude[lb/ft,F...	Start Location[ft,%]	End Location[ft,%]
157	M119	X	.041	.041	0	%100
158	M119	Z	.024	.024	0	%100
159	MP4C	X	.524	.524	0	%100
160	MP4C	Z	.303	.303	0	%100
161	M121	X	.041	.041	0	%100
162	M121	Z	.024	.024	0	%100
163	M122	X	.041	.041	0	%100
164	M122	Z	.024	.024	0	%100
165	MP3B	X	.524	.524	0	%100
166	MP3B	Z	.303	.303	0	%100
167	MP1B	X	.524	.524	0	%100
168	MP1B	Z	.303	.303	0	%100
169	M126	X	0	0	0	%100
170	M126	Z	0	0	0	%100
171	M128A	X	0	0	0	%100
172	M128A	Z	0	0	0	%100
173	MP2B	X	.524	.524	0	%100
174	MP2B	Z	.303	.303	0	%100
175	M130	X	0	0	0	%100
176	M130	Z	0	0	0	%100
177	M131	X	0	0	0	%100
178	M131	Z	0	0	0	%100
179	MP5B	X	.524	.524	0	%100
180	MP5B	Z	.303	.303	0	%100
181	M133	X	0	0	0	%100
182	M133	Z	0	0	0	%100
183	M134	X	0	0	0	%100
184	M134	Z	0	0	0	%100
185	MP4B	X	.524	.524	0	%100
186	MP4B	Z	.303	.303	0	%100
187	M136	X	0	0	0	%100
188	M136	Z	0	0	0	%100
189	M137	X	0	0	0	%100
190	M137	Z	0	0	0	%100
191	M138	X	.874	.874	0	%100
192	M138	Z	.504	.504	0	%100
193	M139	X	.174	.174	0	%100
194	M139	Z	.101	.101	0	%100
195	M146	X	.445	.445	0	%100
196	M146	Z	.257	.257	0	%100
197	OVP	X	.524	.524	0	%100
198	OVP	Z	.303	.303	0	%100
199	M145A	X	.174	.174	0	%100
200	M145A	Z	.101	.101	0	%100
201	M146B	X	.874	.874	0	%100
202	M146B	Z	.504	.504	0	%100
203	M147B	X	.496	.496	0	%100
204	M147B	Z	.286	.286	0	%100
205	M148	X	.496	.496	0	%100
206	M148	Z	.286	.286	0	%100

Member Distributed Loads (BLC 70 : Structure Wm (150 Deg))

	Member Label	Direction	Start Magnitude[lb/ft,...	End Magnitude[lb/ft,F...	Start Location[ft,%]	End Location[ft,%]
1	M1	X	.64	.64	0	%100
2	M1	Z	1.109	1.109	0	%100
3	MP3A	X	.303	.303	0	%100
4	MP3A	Z	.524	.524	0	%100
5	MP1A	X	.303	.303	0	%100
6	MP1A	Z	.524	.524	0	%100
7	M9	X	.008	.008	0	%100
8	M9	Z	.014	.014	0	%100
9	M10	X	0	0	0	%100
10	M10	Z	0	0	0	%100
11	M19	X	.64	.64	0	%100
12	M19	Z	1.109	1.109	0	%100
13	M28	X	.614	.614	0	%100
14	M28	Z	1.063	1.063	0	%100
15	M31	X	0	0	0	%100
16	M31	Z	0	0	0	%100
17	M34	X	.614	.614	0	%100
18	M34	Z	1.063	1.063	0	%100
19	M40	X	.036	.036	0	%100
20	M40	Z	.062	.062	0	%100
21	M46	X	0	0	0	%100
22	M46	Z	0	0	0	%100
23	M52	X	.036	.036	0	%100
24	M52	Z	.062	.062	0	%100
25	M55	X	.548	.548	0	%100
26	M55	Z	.95	.95	0	%100
27	M56	X	.173	.173	0	%100
28	M56	Z	.3	.3	0	%100
29	M57	X	.425	.425	0	%100
30	M57	Z	.736	.736	0	%100
31	M58	X	.425	.425	0	%100
32	M58	Z	.736	.736	0	%100
33	M59	X	.021	.021	0	%100
34	M59	Z	.037	.037	0	%100
35	M60	X	.021	.021	0	%100
36	M60	Z	.037	.037	0	%100
37	M61	X	.021	.021	0	%100
38	M61	Z	.037	.037	0	%100
39	M62	X	.021	.021	0	%100
40	M62	Z	.037	.037	0	%100
41	M63	X	.021	.021	0	%100
42	M63	Z	.037	.037	0	%100
43	M64	X	.021	.021	0	%100
44	M64	Z	.037	.037	0	%100
45	M65	X	.021	.021	0	%100
46	M65	Z	.037	.037	0	%100
47	M66	X	.075	.075	0	%100
48	M66	Z	.13	.13	0	%100
49	FACE1	X	.478	.478	0	%100
50	FACE1	Z	.828	.828	0	%100
51	M76	X	0	0	0	%100
52	M76	Z	0	0	0	%100

Member Distributed Loads (BLC 70 : Structure Wm (150 Deg)) (Continued)

	Member Label	Direction	Start Magnitude[lb/ft,...	End Magnitude[lb/ft,F...	Start Location[ft,%]	End Location[ft,%]
53	M77	X	.478	.478	0	%100
54	M77	Z	.828	.828	0	%100
55	FACE2	X	.64	.64	0	%100
56	FACE2	Z	1.109	1.109	0	%100
57	M79	X	0	0	0	%100
58	M79	Z	0	0	0	%100
59	M80	X	.64	.64	0	%100
60	M80	Z	1.109	1.109	0	%100
61	M85	X	.37	.37	0	%100
62	M85	Z	.641	.641	0	%100
63	M86	X	.361	.361	0	%100
64	M86	Z	.626	.626	0	%100
65	TMAA	X	.361	.361	0	%100
66	TMAA	Z	.626	.626	0	%100
67	M89	X	.359	.359	0	%100
68	M89	Z	.622	.622	0	%100
69	M91	X	.319	.319	0	%100
70	M91	Z	.552	.552	0	%100
71	M92	X	.478	.478	0	%100
72	M92	Z	.828	.828	0	%100
73	M96	X	.008	.008	0	%100
74	M96	Z	.014	.014	0	%100
75	M149	X	0	0	0	%100
76	M149	Z	0	0	0	%100
77	M160	X	.37	.37	0	%100
78	M160	Z	.641	.641	0	%100
79	M164	X	.478	.478	0	%100
80	M164	Z	.828	.828	0	%100
81	M146A	X	0	0	0	%100
82	M146A	Z	0	0	0	%100
83	M149A	X	.036	.036	0	%100
84	M149A	Z	.062	.062	0	%100
85	M152	X	.036	.036	0	%100
86	M152	Z	.062	.062	0	%100
87	M157	X	.37	.37	0	%100
88	M157	Z	.641	.641	0	%100
89	M158B	X	.37	.37	0	%100
90	M158B	Z	.641	.641	0	%100
91	M159B	X	.37	.37	0	%100
92	M159B	Z	.641	.641	0	%100
93	M160B	X	.37	.37	0	%100
94	M160B	Z	.641	.641	0	%100
95	M157B	X	.361	.361	0	%100
96	M157B	Z	.626	.626	0	%100
97	TMAC	X	.361	.361	0	%100
98	TMAC	Z	.626	.626	0	%100
99	M159	X	.361	.361	0	%100
100	M159	Z	.626	.626	0	%100
101	TMAB	X	.361	.361	0	%100
102	TMAB	Z	.626	.626	0	%100
103	M159C	X	0	0	0	%100
104	M159C	Z	0	0	0	%100

Member Distributed Loads (BLC 70 : Structure Wm (150 Deg)) (Continued)

	Member Label	Direction	Start Magnitude[lb/ft,...	End Magnitude[lb/ft,F...	Start Location[ft,%]	End Location[ft,%]
105	M160D	X	.319	.319	0	%100
106	M160D	Z	.552	.552	0	%100
107	M156B	X	.359	.359	0	%100
108	M156B	Z	.622	.622	0	%100
109	M157C	X	.161	.161	0	%100
110	M157C	Z	.279	.279	0	%100
111	M158C	X	.161	.161	0	%100
112	M158C	Z	.279	.279	0	%100
113	M159D	X	.359	.359	0	%100
114	M159D	Z	.622	.622	0	%100
115	M160E	X	.359	.359	0	%100
116	M160E	Z	.622	.622	0	%100
117	M127	X	.299	.299	0	%100
118	M127	Z	.518	.518	0	%100
119	M128	X	.075	.075	0	%100
120	M128	Z	.13	.13	0	%100
121	MP2A	X	.303	.303	0	%100
122	MP2A	Z	.524	.524	0	%100
123	M100	X	.008	.008	0	%100
124	M100	Z	.014	.014	0	%100
125	M101	X	.008	.008	0	%100
126	M101	Z	.014	.014	0	%100
127	MP5A	X	.303	.303	0	%100
128	MP5A	Z	.524	.524	0	%100
129	M103	X	.008	.008	0	%100
130	M103	Z	.014	.014	0	%100
131	M104	X	.008	.008	0	%100
132	M104	Z	.014	.014	0	%100
133	MP4A	X	.303	.303	0	%100
134	MP4A	Z	.524	.524	0	%100
135	LIVE1	X	.008	.008	0	%100
136	LIVE1	Z	.014	.014	0	%100
137	M107	X	.008	.008	0	%100
138	M107	Z	.014	.014	0	%100
139	MP3C	X	.303	.303	0	%100
140	MP3C	Z	.524	.524	0	%100
141	MP1C	X	.303	.303	0	%100
142	MP1C	Z	.524	.524	0	%100
143	M111	X	.032	.032	0	%100
144	M111	Z	.055	.055	0	%100
145	M113	X	.032	.032	0	%100
146	M113	Z	.055	.055	0	%100
147	MP2C	X	.303	.303	0	%100
148	MP2C	Z	.524	.524	0	%100
149	M115	X	.032	.032	0	%100
150	M115	Z	.055	.055	0	%100
151	M116	X	.032	.032	0	%100
152	M116	Z	.055	.055	0	%100
153	MP5C	X	.303	.303	0	%100
154	MP5C	Z	.524	.524	0	%100
155	M118	X	.032	.032	0	%100
156	M118	Z	.055	.055	0	%100

Member Distributed Loads (BLC 70 : Structure Wm (150 Deg)) (Continued)

	Member Label	Direction	Start Magnitude[lb/ft,...	End Magnitude[lb/ft,F...	Start Location[ft,%]	End Location[ft,%]
157	M119	X	.032	.032	0	%100
158	M119	Z	.055	.055	0	%100
159	MP4C	X	.303	.303	0	%100
160	MP4C	Z	.524	.524	0	%100
161	M121	X	.032	.032	0	%100
162	M121	Z	.055	.055	0	%100
163	M122	X	.032	.032	0	%100
164	M122	Z	.055	.055	0	%100
165	MP3B	X	.303	.303	0	%100
166	MP3B	Z	.524	.524	0	%100
167	MP1B	X	.303	.303	0	%100
168	MP1B	Z	.524	.524	0	%100
169	M126	X	.008	.008	0	%100
170	M126	Z	.014	.014	0	%100
171	M128A	X	.008	.008	0	%100
172	M128A	Z	.014	.014	0	%100
173	MP2B	X	.303	.303	0	%100
174	MP2B	Z	.524	.524	0	%100
175	M130	X	.008	.008	0	%100
176	M130	Z	.014	.014	0	%100
177	M131	X	.008	.008	0	%100
178	M131	Z	.014	.014	0	%100
179	MP5B	X	.303	.303	0	%100
180	MP5B	Z	.524	.524	0	%100
181	M133	X	.008	.008	0	%100
182	M133	Z	.014	.014	0	%100
183	M134	X	.008	.008	0	%100
184	M134	Z	.014	.014	0	%100
185	MP4B	X	.303	.303	0	%100
186	MP4B	Z	.524	.524	0	%100
187	M136	X	.008	.008	0	%100
188	M136	Z	.014	.014	0	%100
189	M137	X	.008	.008	0	%100
190	M137	Z	.014	.014	0	%100
191	M138	X	.494	.494	0	%100
192	M138	Z	.855	.855	0	%100
193	M139	X	.09	.09	0	%100
194	M139	Z	.155	.155	0	%100
195	M146	X	.257	.257	0	%100
196	M146	Z	.445	.445	0	%100
197	OVP	X	.303	.303	0	%100
198	OVP	Z	.524	.524	0	%100
199	M145A	X	.308	.308	0	%100
200	M145A	Z	.533	.533	0	%100
201	M146B	X	.308	.308	0	%100
202	M146B	Z	.533	.533	0	%100
203	M147B	X	.09	.09	0	%100
204	M147B	Z	.155	.155	0	%100
205	M148	X	.494	.494	0	%100
206	M148	Z	.855	.855	0	%100

Member Distributed Loads (BLC 71 : Structure Wm (180 Deg))

	Member Label	Direction	Start Magnitude[lb/ft,...	End Magnitude[lb/ft,F...	Start Location[ft,%]	End Location[ft,%]
1	M1	X	0	0	0	%100
2	M1	Z	1.707	1.707	0	%100
3	MP3A	X	0	0	0	%100
4	MP3A	Z	.606	.606	0	%100
5	MP1A	X	0	0	0	%100
6	MP1A	Z	.606	.606	0	%100
7	M9	X	0	0	0	%100
8	M9	Z	0	0	0	%100
9	M10	X	0	0	0	%100
10	M10	Z	.427	.427	0	%100
11	M19	X	0	0	0	%100
12	M19	Z	.427	.427	0	%100
13	M28	X	0	0	0	%100
14	M28	Z	1.636	1.636	0	%100
15	M31	X	0	0	0	%100
16	M31	Z	.409	.409	0	%100
17	M34	X	0	0	0	%100
18	M34	Z	.409	.409	0	%100
19	M40	X	0	0	0	%100
20	M40	Z	.096	.096	0	%100
21	M46	X	0	0	0	%100
22	M46	Z	.024	.024	0	%100
23	M52	X	0	0	0	%100
24	M52	Z	.024	.024	0	%100
25	M55	X	0	0	0	%100
26	M55	Z	1.462	1.462	0	%100
27	M56	X	0	0	0	%100
28	M56	Z	0	0	0	%100
29	M57	X	0	0	0	%100
30	M57	Z	.85	.85	0	%100
31	M58	X	0	0	0	%100
32	M58	Z	.85	.85	0	%100
33	M59	X	0	0	0	%100
34	M59	Z	0	0	0	%100
35	M60	X	0	0	0	%100
36	M60	Z	0	0	0	%100
37	M61	X	0	0	0	%100
38	M61	Z	0	0	0	%100
39	M62	X	0	0	0	%100
40	M62	Z	0	0	0	%100
41	M63	X	0	0	0	%100
42	M63	Z	0	0	0	%100
43	M64	X	0	0	0	%100
44	M64	Z	0	0	0	%100
45	M65	X	0	0	0	%100
46	M65	Z	0	0	0	%100
47	M66	X	0	0	0	%100
48	M66	Z	0	0	0	%100
49	FACE1	X	0	0	0	%100
50	FACE1	Z	1.275	1.275	0	%100
51	M76	X	0	0	0	%100
52	M76	Z	.319	.319	0	%100

Member Distributed Loads (BLC 71 : Structure Wm (180 Deg)) (Continued)

	Member Label	Direction	Start Magnitude[lb/ft,...	End Magnitude[lb/ft,F...	Start Location[ft,%]	End Location[ft,%]
53	M77	X	0	0	0	%100
54	M77	Z	.319	.319	0	%100
55	FACE2	X	0	0	0	%100
56	FACE2	Z	1.707	1.707	0	%100
57	M79	X	0	0	0	%100
58	M79	Z	.427	.427	0	%100
59	M80	X	0	0	0	%100
60	M80	Z	.427	.427	0	%100
61	M85	X	0	0	0	%100
62	M85	Z	.74	.74	0	%100
63	M86	X	0	0	0	%100
64	M86	Z	.723	.723	0	%100
65	TMAA	X	0	0	0	%100
66	TMAA	Z	.723	.723	0	%100
67	M89	X	0	0	0	%100
68	M89	Z	.85	.85	0	%100
69	M91	X	0	0	0	%100
70	M91	Z	.85	.85	0	%100
71	M92	X	0	0	0	%100
72	M92	Z	1.275	1.275	0	%100
73	M96	X	0	0	0	%100
74	M96	Z	0	0	0	%100
75	M149	X	0	0	0	%100
76	M149	Z	.319	.319	0	%100
77	M160	X	0	0	0	%100
78	M160	Z	.74	.74	0	%100
79	M164	X	0	0	0	%100
80	M164	Z	.319	.319	0	%100
81	M146A	X	0	0	0	%100
82	M146A	Z	.024	.024	0	%100
83	M149A	X	0	0	0	%100
84	M149A	Z	.024	.024	0	%100
85	M152	X	0	0	0	%100
86	M152	Z	.096	.096	0	%100
87	M157	X	0	0	0	%100
88	M157	Z	.74	.74	0	%100
89	M158B	X	0	0	0	%100
90	M158B	Z	.74	.74	0	%100
91	M159B	X	0	0	0	%100
92	M159B	Z	.74	.74	0	%100
93	M160B	X	0	0	0	%100
94	M160B	Z	.74	.74	0	%100
95	M157B	X	0	0	0	%100
96	M157B	Z	.723	.723	0	%100
97	TMAC	X	0	0	0	%100
98	TMAC	Z	.723	.723	0	%100
99	M159	X	0	0	0	%100
100	M159	Z	.723	.723	0	%100
101	TMAB	X	0	0	0	%100
102	TMAB	Z	.723	.723	0	%100
103	M159C	X	0	0	0	%100
104	M159C	Z	.213	.213	0	%100

Member Distributed Loads (BLC 71 : Structure Wm (180 Deg)) (Continued)

	Member Label	Direction	Start Magnitude[lb/ft,...	End Magnitude[lb/ft,F...	Start Location[ft,%]	End Location[ft,%]
105	M160D	X	0	0	0	%100
106	M160D	Z	.213	.213	0	%100
107	M156B	X	0	0	0	%100
108	M156B	Z	.85	.85	0	%100
109	M157C	X	0	0	0	%100
110	M157C	Z	.454	.454	0	%100
111	M158C	X	0	0	0	%100
112	M158C	Z	.454	.454	0	%100
113	M159D	X	0	0	0	%100
114	M159D	Z	.454	.454	0	%100
115	M160E	X	0	0	0	%100
116	M160E	Z	.454	.454	0	%100
117	M127	X	0	0	0	%100
118	M127	Z	.449	.449	0	%100
119	M128	X	0	0	0	%100
120	M128	Z	.449	.449	0	%100
121	MP2A	X	0	0	0	%100
122	MP2A	Z	.606	.606	0	%100
123	M100	X	0	0	0	%100
124	M100	Z	0	0	0	%100
125	M101	X	0	0	0	%100
126	M101	Z	0	0	0	%100
127	MP5A	X	0	0	0	%100
128	MP5A	Z	.606	.606	0	%100
129	M103	X	0	0	0	%100
130	M103	Z	0	0	0	%100
131	M104	X	0	0	0	%100
132	M104	Z	0	0	0	%100
133	MP4A	X	0	0	0	%100
134	MP4A	Z	.606	.606	0	%100
135	LIVE1	X	0	0	0	%100
136	LIVE1	Z	0	0	0	%100
137	M107	X	0	0	0	%100
138	M107	Z	0	0	0	%100
139	MP3C	X	0	0	0	%100
140	MP3C	Z	.606	.606	0	%100
141	MP1C	X	0	0	0	%100
142	MP1C	Z	.606	.606	0	%100
143	M111	X	0	0	0	%100
144	M111	Z	.048	.048	0	%100
145	M113	X	0	0	0	%100
146	M113	Z	.048	.048	0	%100
147	MP2C	X	0	0	0	%100
148	MP2C	Z	.606	.606	0	%100
149	M115	X	0	0	0	%100
150	M115	Z	.048	.048	0	%100
151	M116	X	0	0	0	%100
152	M116	Z	.048	.048	0	%100
153	MP5C	X	0	0	0	%100
154	MP5C	Z	.606	.606	0	%100
155	M118	X	0	0	0	%100
156	M118	Z	.048	.048	0	%100

Member Distributed Loads (BLC 71 : Structure Wm (180 Deg)) (Continued)

	Member Label	Direction	Start Magnitude[lb/ft,...	End Magnitude[lb/ft,F...	Start Location[ft,%]	End Location[ft,%]
157	M119	X	0	0	0	%100
158	M119	Z	.048	.048	0	%100
159	MP4C	X	0	0	0	%100
160	MP4C	Z	.606	.606	0	%100
161	M121	X	0	0	0	%100
162	M121	Z	.048	.048	0	%100
163	M122	X	0	0	0	%100
164	M122	Z	.048	.048	0	%100
165	MP3B	X	0	0	0	%100
166	MP3B	Z	.606	.606	0	%100
167	MP1B	X	0	0	0	%100
168	MP1B	Z	.606	.606	0	%100
169	M126	X	0	0	0	%100
170	M126	Z	.048	.048	0	%100
171	M128A	X	0	0	0	%100
172	M128A	Z	.048	.048	0	%100
173	MP2B	X	0	0	0	%100
174	MP2B	Z	.606	.606	0	%100
175	M130	X	0	0	0	%100
176	M130	Z	.048	.048	0	%100
177	M131	X	0	0	0	%100
178	M131	Z	.048	.048	0	%100
179	MP5B	X	0	0	0	%100
180	MP5B	Z	.606	.606	0	%100
181	M133	X	0	0	0	%100
182	M133	Z	.048	.048	0	%100
183	M134	X	0	0	0	%100
184	M134	Z	.048	.048	0	%100
185	MP4B	X	0	0	0	%100
186	MP4B	Z	.606	.606	0	%100
187	M136	X	0	0	0	%100
188	M136	Z	.048	.048	0	%100
189	M137	X	0	0	0	%100
190	M137	Z	.048	.048	0	%100
191	M138	X	0	0	0	%100
192	M138	Z	.572	.572	0	%100
193	M139	X	0	0	0	%100
194	M139	Z	.572	.572	0	%100
195	M146	X	0	0	0	%100
196	M146	Z	.514	.514	0	%100
197	OVP	X	0	0	0	%100
198	OVP	Z	.606	.606	0	%100
199	M145A	X	0	0	0	%100
200	M145A	Z	1.009	1.009	0	%100
201	M146B	X	0	0	0	%100
202	M146B	Z	.201	.201	0	%100
203	M147B	X	0	0	0	%100
204	M147B	Z	.201	.201	0	%100
205	M148	X	0	0	0	%100
206	M148	Z	1.009	1.009	0	%100

Member Distributed Loads (BLC 72 : Structure Wm (210 Deg))

	Member Label	Direction	Start Magnitude[lb/ft,...	End Magnitude[lb/ft,F...	Start Location[ft,%]	End Location[ft,%]
1	M1	X	-.64	-.64	0	%100
2	M1	Z	1.109	1.109	0	%100
3	MP3A	X	-.303	-.303	0	%100
4	MP3A	Z	.524	.524	0	%100
5	MP1A	X	-.303	-.303	0	%100
6	MP1A	Z	.524	.524	0	%100
7	M9	X	-.008	-.008	0	%100
8	M9	Z	.014	.014	0	%100
9	M10	X	-.64	-.64	0	%100
10	M10	Z	1.109	1.109	0	%100
11	M19	X	0	0	0	%100
12	M19	Z	0	0	0	%100
13	M28	X	-.614	-.614	0	%100
14	M28	Z	1.063	1.063	0	%100
15	M31	X	-.614	-.614	0	%100
16	M31	Z	1.063	1.063	0	%100
17	M34	X	0	0	0	%100
18	M34	Z	0	0	0	%100
19	M40	X	-.036	-.036	0	%100
20	M40	Z	.062	.062	0	%100
21	M46	X	-.036	-.036	0	%100
22	M46	Z	.062	.062	0	%100
23	M52	X	0	0	0	%100
24	M52	Z	0	0	0	%100
25	M55	X	-.548	-.548	0	%100
26	M55	Z	.95	.95	0	%100
27	M56	X	-.173	-.173	0	%100
28	M56	Z	.3	.3	0	%100
29	M57	X	-.425	-.425	0	%100
30	M57	Z	.736	.736	0	%100
31	M58	X	-.425	-.425	0	%100
32	M58	Z	.736	.736	0	%100
33	M59	X	-.021	-.021	0	%100
34	M59	Z	.037	.037	0	%100
35	M60	X	-.021	-.021	0	%100
36	M60	Z	.037	.037	0	%100
37	M61	X	-.021	-.021	0	%100
38	M61	Z	.037	.037	0	%100
39	M62	X	-.021	-.021	0	%100
40	M62	Z	.037	.037	0	%100
41	M63	X	-.021	-.021	0	%100
42	M63	Z	.037	.037	0	%100
43	M64	X	-.021	-.021	0	%100
44	M64	Z	.037	.037	0	%100
45	M65	X	-.021	-.021	0	%100
46	M65	Z	.037	.037	0	%100
47	M66	X	-.075	-.075	0	%100
48	M66	Z	.13	.13	0	%100
49	FACE1	X	-.478	-.478	0	%100
50	FACE1	Z	.828	.828	0	%100
51	M76	X	-.478	-.478	0	%100
52	M76	Z	.828	.828	0	%100

Member Distributed Loads (BLC 72 : Structure Wm (210 Deg)) (Continued)

	Member Label	Direction	Start Magnitude[lb/ft,...	End Magnitude[lb/ft,F...	Start Location[ft,%]	End Location[ft,%]
53	M77	X	0	0	0	%100
54	M77	Z	0	0	0	%100
55	FACE2	X	-.64	-.64	0	%100
56	FACE2	Z	1.109	1.109	0	%100
57	M79	X	-.64	-.64	0	%100
58	M79	Z	1.109	1.109	0	%100
59	M80	X	0	0	0	%100
60	M80	Z	0	0	0	%100
61	M85	X	-.37	-.37	0	%100
62	M85	Z	.641	.641	0	%100
63	M86	X	-.361	-.361	0	%100
64	M86	Z	.626	.626	0	%100
65	TMAA	X	-.361	-.361	0	%100
66	TMAA	Z	.626	.626	0	%100
67	M89	X	-.359	-.359	0	%100
68	M89	Z	.622	.622	0	%100
69	M91	X	-.319	-.319	0	%100
70	M91	Z	.552	.552	0	%100
71	M92	X	-.478	-.478	0	%100
72	M92	Z	.828	.828	0	%100
73	M96	X	-.008	-.008	0	%100
74	M96	Z	.014	.014	0	%100
75	M149	X	-.478	-.478	0	%100
76	M149	Z	.828	.828	0	%100
77	M160	X	-.37	-.37	0	%100
78	M160	Z	.641	.641	0	%100
79	M164	X	0	0	0	%100
80	M164	Z	0	0	0	%100
81	M146A	X	-.036	-.036	0	%100
82	M146A	Z	.062	.062	0	%100
83	M149A	X	0	0	0	%100
84	M149A	Z	0	0	0	%100
85	M152	X	-.036	-.036	0	%100
86	M152	Z	.062	.062	0	%100
87	M157	X	-.37	-.37	0	%100
88	M157	Z	.641	.641	0	%100
89	M158B	X	-.37	-.37	0	%100
90	M158B	Z	.641	.641	0	%100
91	M159B	X	-.37	-.37	0	%100
92	M159B	Z	.641	.641	0	%100
93	M160B	X	-.37	-.37	0	%100
94	M160B	Z	.641	.641	0	%100
95	M157B	X	-.361	-.361	0	%100
96	M157B	Z	.626	.626	0	%100
97	TMAC	X	-.361	-.361	0	%100
98	TMAC	Z	.626	.626	0	%100
99	M159	X	-.361	-.361	0	%100
100	M159	Z	.626	.626	0	%100
101	TMAB	X	-.361	-.361	0	%100
102	TMAB	Z	.626	.626	0	%100
103	M159C	X	-.319	-.319	0	%100
104	M159C	Z	.552	.552	0	%100

Member Distributed Loads (BLC 72 : Structure Wm (210 Deg)) (Continued)

	Member Label	Direction	Start Magnitude[lb/ft,...	End Magnitude[lb/ft,F...	Start Location[ft,%]	End Location[ft,%]
105	M160D	X	0	0	0	%100
106	M160D	Z	0	0	0	%100
107	M156B	X	-.359	-.359	0	%100
108	M156B	Z	.622	.622	0	%100
109	M157C	X	-.359	-.359	0	%100
110	M157C	Z	.622	.622	0	%100
111	M158C	X	-.359	-.359	0	%100
112	M158C	Z	.622	.622	0	%100
113	M159D	X	-.161	-.161	0	%100
114	M159D	Z	.279	.279	0	%100
115	M160E	X	-.161	-.161	0	%100
116	M160E	Z	.279	.279	0	%100
117	M127	X	-.075	-.075	0	%100
118	M127	Z	.13	.13	0	%100
119	M128	X	-.299	-.299	0	%100
120	M128	Z	.518	.518	0	%100
121	MP2A	X	-.303	-.303	0	%100
122	MP2A	Z	.524	.524	0	%100
123	M100	X	-.008	-.008	0	%100
124	M100	Z	.014	.014	0	%100
125	M101	X	-.008	-.008	0	%100
126	M101	Z	.014	.014	0	%100
127	MP5A	X	-.303	-.303	0	%100
128	MP5A	Z	.524	.524	0	%100
129	M103	X	-.008	-.008	0	%100
130	M103	Z	.014	.014	0	%100
131	M104	X	-.008	-.008	0	%100
132	M104	Z	.014	.014	0	%100
133	MP4A	X	-.303	-.303	0	%100
134	MP4A	Z	.524	.524	0	%100
135	LIVE1	X	-.008	-.008	0	%100
136	LIVE1	Z	.014	.014	0	%100
137	M107	X	-.008	-.008	0	%100
138	M107	Z	.014	.014	0	%100
139	MP3C	X	-.303	-.303	0	%100
140	MP3C	Z	.524	.524	0	%100
141	MP1C	X	-.303	-.303	0	%100
142	MP1C	Z	.524	.524	0	%100
143	M111	X	-.008	-.008	0	%100
144	M111	Z	.014	.014	0	%100
145	M113	X	-.008	-.008	0	%100
146	M113	Z	.014	.014	0	%100
147	MP2C	X	-.303	-.303	0	%100
148	MP2C	Z	.524	.524	0	%100
149	M115	X	-.008	-.008	0	%100
150	M115	Z	.014	.014	0	%100
151	M116	X	-.008	-.008	0	%100
152	M116	Z	.014	.014	0	%100
153	MP5C	X	-.303	-.303	0	%100
154	MP5C	Z	.524	.524	0	%100
155	M118	X	-.008	-.008	0	%100
156	M118	Z	.014	.014	0	%100

Member Distributed Loads (BLC 72 : Structure Wm (210 Deg)) (Continued)

	Member Label	Direction	Start Magnitude[lb/ft,...	End Magnitude[lb/ft,F...	Start Location[ft,%]	End Location[ft,%]
157	M119	X	-.008	-.008	0	%100
158	M119	Z	.014	.014	0	%100
159	MP4C	X	-.303	-.303	0	%100
160	MP4C	Z	.524	.524	0	%100
161	M121	X	-.008	-.008	0	%100
162	M121	Z	.014	.014	0	%100
163	M122	X	-.008	-.008	0	%100
164	M122	Z	.014	.014	0	%100
165	MP3B	X	-.303	-.303	0	%100
166	MP3B	Z	.524	.524	0	%100
167	MP1B	X	-.303	-.303	0	%100
168	MP1B	Z	.524	.524	0	%100
169	M126	X	-.032	-.032	0	%100
170	M126	Z	.055	.055	0	%100
171	M128A	X	-.032	-.032	0	%100
172	M128A	Z	.055	.055	0	%100
173	MP2B	X	-.303	-.303	0	%100
174	MP2B	Z	.524	.524	0	%100
175	M130	X	-.032	-.032	0	%100
176	M130	Z	.055	.055	0	%100
177	M131	X	-.032	-.032	0	%100
178	M131	Z	.055	.055	0	%100
179	MP5B	X	-.303	-.303	0	%100
180	MP5B	Z	.524	.524	0	%100
181	M133	X	-.032	-.032	0	%100
182	M133	Z	.055	.055	0	%100
183	M134	X	-.032	-.032	0	%100
184	M134	Z	.055	.055	0	%100
185	MP4B	X	-.303	-.303	0	%100
186	MP4B	Z	.524	.524	0	%100
187	M136	X	-.032	-.032	0	%100
188	M136	Z	.055	.055	0	%100
189	M137	X	-.032	-.032	0	%100
190	M137	Z	.055	.055	0	%100
191	M138	X	-.09	-.09	0	%100
192	M138	Z	.155	.155	0	%100
193	M139	X	-.494	-.494	0	%100
194	M139	Z	.855	.855	0	%100
195	M146	X	-.257	-.257	0	%100
196	M146	Z	.445	.445	0	%100
197	OVP	X	-.303	-.303	0	%100
198	OVP	Z	.524	.524	0	%100
199	M145A	X	-.494	-.494	0	%100
200	M145A	Z	.855	.855	0	%100
201	M146B	X	-.09	-.09	0	%100
202	M146B	Z	.155	.155	0	%100
203	M147B	X	-.308	-.308	0	%100
204	M147B	Z	.533	.533	0	%100
205	M148	X	-.308	-.308	0	%100
206	M148	Z	.533	.533	0	%100

Member Distributed Loads (BLC 73 : Structure Wm (240 Deg))

	Member Label	Direction	Start Magnitude[lb/ft,...	End Magnitude[lb/ft,F...	Start Location[ft,%]	End Location[ft,%]
1	M1	X	-.37	-.37	0	%100
2	M1	Z	.213	.213	0	%100
3	MP3A	X	-.524	-.524	0	%100
4	MP3A	Z	.303	.303	0	%100
5	MP1A	X	-.524	-.524	0	%100
6	MP1A	Z	.303	.303	0	%100
7	M9	X	-.041	-.041	0	%100
8	M9	Z	.024	.024	0	%100
9	M10	X	-1.478	-1.478	0	%100
10	M10	Z	.854	.854	0	%100
11	M19	X	-.37	-.37	0	%100
12	M19	Z	.213	.213	0	%100
13	M28	X	-.354	-.354	0	%100
14	M28	Z	.205	.205	0	%100
15	M31	X	-1.417	-1.417	0	%100
16	M31	Z	.818	.818	0	%100
17	M34	X	-.354	-.354	0	%100
18	M34	Z	.205	.205	0	%100
19	M40	X	-.021	-.021	0	%100
20	M40	Z	.012	.012	0	%100
21	M46	X	-.083	-.083	0	%100
22	M46	Z	.048	.048	0	%100
23	M52	X	-.021	-.021	0	%100
24	M52	Z	.012	.012	0	%100
25	M55	X	-.317	-.317	0	%100
26	M55	Z	.183	.183	0	%100
27	M56	X	-.899	-.899	0	%100
28	M56	Z	.519	.519	0	%100
29	M57	X	-.736	-.736	0	%100
30	M57	Z	.425	.425	0	%100
31	M58	X	-.736	-.736	0	%100
32	M58	Z	.425	.425	0	%100
33	M59	X	-.11	-.11	0	%100
34	M59	Z	.063	.063	0	%100
35	M60	X	-.11	-.11	0	%100
36	M60	Z	.063	.063	0	%100
37	M61	X	-.11	-.11	0	%100
38	M61	Z	.063	.063	0	%100
39	M62	X	-.11	-.11	0	%100
40	M62	Z	.063	.063	0	%100
41	M63	X	-.11	-.11	0	%100
42	M63	Z	.063	.063	0	%100
43	M64	X	-.11	-.11	0	%100
44	M64	Z	.063	.063	0	%100
45	M65	X	-.11	-.11	0	%100
46	M65	Z	.063	.063	0	%100
47	M66	X	-.389	-.389	0	%100
48	M66	Z	.224	.224	0	%100
49	FACE1	X	-.276	-.276	0	%100
50	FACE1	Z	.159	.159	0	%100
51	M76	X	-1.104	-1.104	0	%100
52	M76	Z	.638	.638	0	%100

Member Distributed Loads (BLC 73 : Structure Wm (240 Deg)) (Continued)

	Member Label	Direction	Start Magnitude[lb/ft,...	End Magnitude[lb/ft,F...	Start Location[ft,%]	End Location[ft,%]
53	M77	X	-.276	-.276	0	%100
54	M77	Z	.159	.159	0	%100
55	FACE2	X	-.37	-.37	0	%100
56	FACE2	Z	.213	.213	0	%100
57	M79	X	-1.478	-1.478	0	%100
58	M79	Z	.854	.854	0	%100
59	M80	X	-.37	-.37	0	%100
60	M80	Z	.213	.213	0	%100
61	M85	X	-.641	-.641	0	%100
62	M85	Z	.37	.37	0	%100
63	M86	X	-.626	-.626	0	%100
64	M86	Z	.361	.361	0	%100
65	TMAA	X	-.626	-.626	0	%100
66	TMAA	Z	.361	.361	0	%100
67	M89	X	-.393	-.393	0	%100
68	M89	Z	.227	.227	0	%100
69	M91	X	-.184	-.184	0	%100
70	M91	Z	.106	.106	0	%100
71	M92	X	-.276	-.276	0	%100
72	M92	Z	.159	.159	0	%100
73	M96	X	-.041	-.041	0	%100
74	M96	Z	.024	.024	0	%100
75	M149	X	-1.104	-1.104	0	%100
76	M149	Z	.638	.638	0	%100
77	M160	X	-.641	-.641	0	%100
78	M160	Z	.37	.37	0	%100
79	M164	X	-.276	-.276	0	%100
80	M164	Z	.159	.159	0	%100
81	M146A	X	-.083	-.083	0	%100
82	M146A	Z	.048	.048	0	%100
83	M149A	X	-.021	-.021	0	%100
84	M149A	Z	.012	.012	0	%100
85	M152	X	-.021	-.021	0	%100
86	M152	Z	.012	.012	0	%100
87	M157	X	-.641	-.641	0	%100
88	M157	Z	.37	.37	0	%100
89	M158B	X	-.641	-.641	0	%100
90	M158B	Z	.37	.37	0	%100
91	M159B	X	-.641	-.641	0	%100
92	M159B	Z	.37	.37	0	%100
93	M160B	X	-.641	-.641	0	%100
94	M160B	Z	.37	.37	0	%100
95	M157B	X	-.626	-.626	0	%100
96	M157B	Z	.361	.361	0	%100
97	TMAC	X	-.626	-.626	0	%100
98	TMAC	Z	.361	.361	0	%100
99	M159	X	-.626	-.626	0	%100
100	M159	Z	.361	.361	0	%100
101	TMAB	X	-.626	-.626	0	%100
102	TMAB	Z	.361	.361	0	%100
103	M159C	X	-.736	-.736	0	%100
104	M159C	Z	.425	.425	0	%100

Member Distributed Loads (BLC 73 : Structure Wm (240 Deg)) (Continued)

	Member Label	Direction	Start Magnitude[lb/ft,...	End Magnitude[lb/ft,F...	Start Location[ft,%]	End Location[ft,%]
105	M160D	X	-.184	-.184	0	%100
106	M160D	Z	.106	.106	0	%100
107	M156B	X	-.393	-.393	0	%100
108	M156B	Z	.227	.227	0	%100
109	M157C	X	-.736	-.736	0	%100
110	M157C	Z	.425	.425	0	%100
111	M158C	X	-.736	-.736	0	%100
112	M158C	Z	.425	.425	0	%100
113	M159D	X	-.393	-.393	0	%100
114	M159D	Z	.227	.227	0	%100
115	M160E	X	-.393	-.393	0	%100
116	M160E	Z	.227	.227	0	%100
117	M127	X	0	0	0	%100
118	M127	Z	0	0	0	%100
119	M128	X	-.389	-.389	0	%100
120	M128	Z	.224	.224	0	%100
121	MP2A	X	-.524	-.524	0	%100
122	MP2A	Z	.303	.303	0	%100
123	M100	X	-.041	-.041	0	%100
124	M100	Z	.024	.024	0	%100
125	M101	X	-.041	-.041	0	%100
126	M101	Z	.024	.024	0	%100
127	MP5A	X	-.524	-.524	0	%100
128	MP5A	Z	.303	.303	0	%100
129	M103	X	-.041	-.041	0	%100
130	M103	Z	.024	.024	0	%100
131	M104	X	-.041	-.041	0	%100
132	M104	Z	.024	.024	0	%100
133	MP4A	X	-.524	-.524	0	%100
134	MP4A	Z	.303	.303	0	%100
135	LIVE1	X	-.041	-.041	0	%100
136	LIVE1	Z	.024	.024	0	%100
137	M107	X	-.041	-.041	0	%100
138	M107	Z	.024	.024	0	%100
139	MP3C	X	-.524	-.524	0	%100
140	MP3C	Z	.303	.303	0	%100
141	MP1C	X	-.524	-.524	0	%100
142	MP1C	Z	.303	.303	0	%100
143	M111	X	0	0	0	%100
144	M111	Z	0	0	0	%100
145	M113	X	0	0	0	%100
146	M113	Z	0	0	0	%100
147	MP2C	X	-.524	-.524	0	%100
148	MP2C	Z	.303	.303	0	%100
149	M115	X	0	0	0	%100
150	M115	Z	0	0	0	%100
151	M116	X	0	0	0	%100
152	M116	Z	0	0	0	%100
153	MP5C	X	-.524	-.524	0	%100
154	MP5C	Z	.303	.303	0	%100
155	M118	X	0	0	0	%100
156	M118	Z	0	0	0	%100

Member Distributed Loads (BLC 73 : Structure Wm (240 Deg)) (Continued)

	Member Label	Direction	Start Magnitude[lb/ft,...	End Magnitude[lb/ft,F...	Start Location[ft,%]	End Location[ft,%]
157	M119	X	0	0	0	%100
158	M119	Z	0	0	0	%100
159	MP4C	X	-.524	-.524	0	%100
160	MP4C	Z	.303	.303	0	%100
161	M121	X	0	0	0	%100
162	M121	Z	0	0	0	%100
163	M122	X	0	0	0	%100
164	M122	Z	0	0	0	%100
165	MP3B	X	-.524	-.524	0	%100
166	MP3B	Z	.303	.303	0	%100
167	MP1B	X	-.524	-.524	0	%100
168	MP1B	Z	.303	.303	0	%100
169	M126	X	-.041	-.041	0	%100
170	M126	Z	.024	.024	0	%100
171	M128A	X	-.041	-.041	0	%100
172	M128A	Z	.024	.024	0	%100
173	MP2B	X	-.524	-.524	0	%100
174	MP2B	Z	.303	.303	0	%100
175	M130	X	-.041	-.041	0	%100
176	M130	Z	.024	.024	0	%100
177	M131	X	-.041	-.041	0	%100
178	M131	Z	.024	.024	0	%100
179	MP5B	X	-.524	-.524	0	%100
180	MP5B	Z	.303	.303	0	%100
181	M133	X	-.041	-.041	0	%100
182	M133	Z	.024	.024	0	%100
183	M134	X	-.041	-.041	0	%100
184	M134	Z	.024	.024	0	%100
185	MP4B	X	-.524	-.524	0	%100
186	MP4B	Z	.303	.303	0	%100
187	M136	X	-.041	-.041	0	%100
188	M136	Z	.024	.024	0	%100
189	M137	X	-.041	-.041	0	%100
190	M137	Z	.024	.024	0	%100
191	M138	X	-.174	-.174	0	%100
192	M138	Z	.101	.101	0	%100
193	M139	X	-.874	-.874	0	%100
194	M139	Z	.504	.504	0	%100
195	M146	X	-.445	-.445	0	%100
196	M146	Z	.257	.257	0	%100
197	OVP	X	-.524	-.524	0	%100
198	OVP	Z	.303	.303	0	%100
199	M145A	X	-.496	-.496	0	%100
200	M145A	Z	.286	.286	0	%100
201	M146B	X	-.496	-.496	0	%100
202	M146B	Z	.286	.286	0	%100
203	M147B	X	-.874	-.874	0	%100
204	M147B	Z	.504	.504	0	%100
205	M148	X	-.174	-.174	0	%100
206	M148	Z	.101	.101	0	%100

Member Distributed Loads (BLC 74 : Structure Wm (270 Deg))

	Member Label	Direction	Start Magnitude[lb/ft,...	End Magnitude[lb/ft,F...	Start Location[ft,%]	End Location[ft,%]
1	M1	X	0	0	0	%100
2	M1	Z	0	0	0	%100
3	MP3A	X	-.606	-.606	0	%100
4	MP3A	Z	0	0	0	%100
5	MP1A	X	-.606	-.606	0	%100
6	MP1A	Z	0	0	0	%100
7	M9	X	-.064	-.064	0	%100
8	M9	Z	0	0	0	%100
9	M10	X	-1.28	-1.28	0	%100
10	M10	Z	0	0	0	%100
11	M19	X	-1.28	-1.28	0	%100
12	M19	Z	0	0	0	%100
13	M28	X	0	0	0	%100
14	M28	Z	0	0	0	%100
15	M31	X	-1.227	-1.227	0	%100
16	M31	Z	0	0	0	%100
17	M34	X	-1.227	-1.227	0	%100
18	M34	Z	0	0	0	%100
19	M40	X	0	0	0	%100
20	M40	Z	0	0	0	%100
21	M46	X	-.072	-.072	0	%100
22	M46	Z	0	0	0	%100
23	M52	X	-.072	-.072	0	%100
24	M52	Z	0	0	0	%100
25	M55	X	0	0	0	%100
26	M55	Z	0	0	0	%100
27	M56	X	-1.384	-1.384	0	%100
28	M56	Z	0	0	0	%100
29	M57	X	-.85	-.85	0	%100
30	M57	Z	0	0	0	%100
31	M58	X	-.85	-.85	0	%100
32	M58	Z	0	0	0	%100
33	M59	X	-.169	-.169	0	%100
34	M59	Z	0	0	0	%100
35	M60	X	-.169	-.169	0	%100
36	M60	Z	0	0	0	%100
37	M61	X	-.169	-.169	0	%100
38	M61	Z	0	0	0	%100
39	M62	X	-.169	-.169	0	%100
40	M62	Z	0	0	0	%100
41	M63	X	-.169	-.169	0	%100
42	M63	Z	0	0	0	%100
43	M64	X	-.169	-.169	0	%100
44	M64	Z	0	0	0	%100
45	M65	X	-.169	-.169	0	%100
46	M65	Z	0	0	0	%100
47	M66	X	-.599	-.599	0	%100
48	M66	Z	0	0	0	%100
49	FACE1	X	0	0	0	%100
50	FACE1	Z	0	0	0	%100
51	M76	X	-.956	-.956	0	%100
52	M76	Z	0	0	0	%100

Member Distributed Loads (BLC 74 : Structure Wm (270 Deg)) (Continued)

	Member Label	Direction	Start Magnitude[lb/ft,...	End Magnitude[lb/ft,F...	Start Location[ft,%]	End Location[ft,%]
53	M77	X	-.956	-.956	0	%100
54	M77	Z	0	0	0	%100
55	FACE2	X	0	0	0	%100
56	FACE2	Z	0	0	0	%100
57	M79	X	-1.28	-1.28	0	%100
58	M79	Z	0	0	0	%100
59	M80	X	-1.28	-1.28	0	%100
60	M80	Z	0	0	0	%100
61	M85	X	-.74	-.74	0	%100
62	M85	Z	0	0	0	%100
63	M86	X	-.723	-.723	0	%100
64	M86	Z	0	0	0	%100
65	TMAA	X	-.723	-.723	0	%100
66	TMAA	Z	0	0	0	%100
67	M89	X	-.322	-.322	0	%100
68	M89	Z	0	0	0	%100
69	M91	X	0	0	0	%100
70	M91	Z	0	0	0	%100
71	M92	X	0	0	0	%100
72	M92	Z	0	0	0	%100
73	M96	X	-.064	-.064	0	%100
74	M96	Z	0	0	0	%100
75	M149	X	-.956	-.956	0	%100
76	M149	Z	0	0	0	%100
77	M160	X	-.74	-.74	0	%100
78	M160	Z	0	0	0	%100
79	M164	X	-.956	-.956	0	%100
80	M164	Z	0	0	0	%100
81	M146A	X	-.072	-.072	0	%100
82	M146A	Z	0	0	0	%100
83	M149A	X	-.072	-.072	0	%100
84	M149A	Z	0	0	0	%100
85	M152	X	0	0	0	%100
86	M152	Z	0	0	0	%100
87	M157	X	-.74	-.74	0	%100
88	M157	Z	0	0	0	%100
89	M158B	X	-.74	-.74	0	%100
90	M158B	Z	0	0	0	%100
91	M159B	X	-.74	-.74	0	%100
92	M159B	Z	0	0	0	%100
93	M160B	X	-.74	-.74	0	%100
94	M160B	Z	0	0	0	%100
95	M157B	X	-.723	-.723	0	%100
96	M157B	Z	0	0	0	%100
97	TMAC	X	-.723	-.723	0	%100
98	TMAC	Z	0	0	0	%100
99	M159	X	-.723	-.723	0	%100
100	M159	Z	0	0	0	%100
101	TMAB	X	-.723	-.723	0	%100
102	TMAB	Z	0	0	0	%100
103	M159C	X	-.638	-.638	0	%100
104	M159C	Z	0	0	0	%100

Member Distributed Loads (BLC 74 : Structure Wm (270 Deg)) (Continued)

	Member Label	Direction	Start Magnitude[lb/ft,...	End Magnitude[lb/ft,F...	Start Location[ft,%]	End Location[ft,%]
105	M160D	X	-.638	-.638	0	%100
106	M160D	Z	0	0	0	%100
107	M156B	X	-.322	-.322	0	%100
108	M156B	Z	0	0	0	%100
109	M157C	X	-.718	-.718	0	%100
110	M157C	Z	0	0	0	%100
111	M158C	X	-.718	-.718	0	%100
112	M158C	Z	0	0	0	%100
113	M159D	X	-.718	-.718	0	%100
114	M159D	Z	0	0	0	%100
115	M160E	X	-.718	-.718	0	%100
116	M160E	Z	0	0	0	%100
117	M127	X	-.15	-.15	0	%100
118	M127	Z	0	0	0	%100
119	M128	X	-.15	-.15	0	%100
120	M128	Z	0	0	0	%100
121	MP2A	X	-.606	-.606	0	%100
122	MP2A	Z	0	0	0	%100
123	M100	X	-.064	-.064	0	%100
124	M100	Z	0	0	0	%100
125	M101	X	-.064	-.064	0	%100
126	M101	Z	0	0	0	%100
127	MP5A	X	-.606	-.606	0	%100
128	MP5A	Z	0	0	0	%100
129	M103	X	-.064	-.064	0	%100
130	M103	Z	0	0	0	%100
131	M104	X	-.064	-.064	0	%100
132	M104	Z	0	0	0	%100
133	MP4A	X	-.606	-.606	0	%100
134	MP4A	Z	0	0	0	%100
135	LIVE1	X	-.064	-.064	0	%100
136	LIVE1	Z	0	0	0	%100
137	M107	X	-.064	-.064	0	%100
138	M107	Z	0	0	0	%100
139	MP3C	X	-.606	-.606	0	%100
140	MP3C	Z	0	0	0	%100
141	MP1C	X	-.606	-.606	0	%100
142	MP1C	Z	0	0	0	%100
143	M111	X	-.016	-.016	0	%100
144	M111	Z	0	0	0	%100
145	M113	X	-.016	-.016	0	%100
146	M113	Z	0	0	0	%100
147	MP2C	X	-.606	-.606	0	%100
148	MP2C	Z	0	0	0	%100
149	M115	X	-.016	-.016	0	%100
150	M115	Z	0	0	0	%100
151	M116	X	-.016	-.016	0	%100
152	M116	Z	0	0	0	%100
153	MP5C	X	-.606	-.606	0	%100
154	MP5C	Z	0	0	0	%100
155	M118	X	-.016	-.016	0	%100
156	M118	Z	0	0	0	%100

Member Distributed Loads (BLC 74 : Structure Wm (270 Deg)) (Continued)

	Member Label	Direction	Start Magnitude[lb/ft,...	End Magnitude[lb/ft,F...	Start Location[ft,%]	End Location[ft,%]
157	M119	X	-.016	-.016	0	%100
158	M119	Z	0	0	0	%100
159	MP4C	X	-.606	-.606	0	%100
160	MP4C	Z	0	0	0	%100
161	M121	X	-.016	-.016	0	%100
162	M121	Z	0	0	0	%100
163	M122	X	-.016	-.016	0	%100
164	M122	Z	0	0	0	%100
165	MP3B	X	-.606	-.606	0	%100
166	MP3B	Z	0	0	0	%100
167	MP1B	X	-.606	-.606	0	%100
168	MP1B	Z	0	0	0	%100
169	M126	X	-.016	-.016	0	%100
170	M126	Z	0	0	0	%100
171	M128A	X	-.016	-.016	0	%100
172	M128A	Z	0	0	0	%100
173	MP2B	X	-.606	-.606	0	%100
174	MP2B	Z	0	0	0	%100
175	M130	X	-.016	-.016	0	%100
176	M130	Z	0	0	0	%100
177	M131	X	-.016	-.016	0	%100
178	M131	Z	0	0	0	%100
179	MP5B	X	-.606	-.606	0	%100
180	MP5B	Z	0	0	0	%100
181	M133	X	-.016	-.016	0	%100
182	M133	Z	0	0	0	%100
183	M134	X	-.016	-.016	0	%100
184	M134	Z	0	0	0	%100
185	MP4B	X	-.606	-.606	0	%100
186	MP4B	Z	0	0	0	%100
187	M136	X	-.016	-.016	0	%100
188	M136	Z	0	0	0	%100
189	M137	X	-.016	-.016	0	%100
190	M137	Z	0	0	0	%100
191	M138	X	-.616	-.616	0	%100
192	M138	Z	0	0	0	%100
193	M139	X	-.616	-.616	0	%100
194	M139	Z	0	0	0	%100
195	M146	X	-.514	-.514	0	%100
196	M146	Z	0	0	0	%100
197	OVP	X	-.606	-.606	0	%100
198	OVP	Z	0	0	0	%100
199	M145A	X	-.179	-.179	0	%100
200	M145A	Z	0	0	0	%100
201	M146B	X	-.987	-.987	0	%100
202	M146B	Z	0	0	0	%100
203	M147B	X	-.987	-.987	0	%100
204	M147B	Z	0	0	0	%100
205	M148	X	-.179	-.179	0	%100
206	M148	Z	0	0	0	%100

Member Distributed Loads (BLC 75 : Structure Wm (300 Deg))

	Member Label	Direction	Start Magnitude[lb/ft,...	End Magnitude[lb/ft,F...	Start Location[ft,%]	End Location[ft,%]
1	M1	X	-.37	-.37	0	%100
2	M1	Z	-.213	-.213	0	%100
3	MP3A	X	-.524	-.524	0	%100
4	MP3A	Z	-.303	-.303	0	%100
5	MP1A	X	-.524	-.524	0	%100
6	MP1A	Z	-.303	-.303	0	%100
7	M9	X	-.041	-.041	0	%100
8	M9	Z	-.024	-.024	0	%100
9	M10	X	-.37	-.37	0	%100
10	M10	Z	-.213	-.213	0	%100
11	M19	X	-1.478	-1.478	0	%100
12	M19	Z	-.854	-.854	0	%100
13	M28	X	-.354	-.354	0	%100
14	M28	Z	-.205	-.205	0	%100
15	M31	X	-.354	-.354	0	%100
16	M31	Z	-.205	-.205	0	%100
17	M34	X	-1.417	-1.417	0	%100
18	M34	Z	-.818	-.818	0	%100
19	M40	X	-.021	-.021	0	%100
20	M40	Z	-.012	-.012	0	%100
21	M46	X	-.021	-.021	0	%100
22	M46	Z	-.012	-.012	0	%100
23	M52	X	-.083	-.083	0	%100
24	M52	Z	-.048	-.048	0	%100
25	M55	X	-.317	-.317	0	%100
26	M55	Z	-.183	-.183	0	%100
27	M56	X	-.899	-.899	0	%100
28	M56	Z	-.519	-.519	0	%100
29	M57	X	-.736	-.736	0	%100
30	M57	Z	-.425	-.425	0	%100
31	M58	X	-.736	-.736	0	%100
32	M58	Z	-.425	-.425	0	%100
33	M59	X	-.11	-.11	0	%100
34	M59	Z	-.063	-.063	0	%100
35	M60	X	-.11	-.11	0	%100
36	M60	Z	-.063	-.063	0	%100
37	M61	X	-.11	-.11	0	%100
38	M61	Z	-.063	-.063	0	%100
39	M62	X	-.11	-.11	0	%100
40	M62	Z	-.063	-.063	0	%100
41	M63	X	-.11	-.11	0	%100
42	M63	Z	-.063	-.063	0	%100
43	M64	X	-.11	-.11	0	%100
44	M64	Z	-.063	-.063	0	%100
45	M65	X	-.11	-.11	0	%100
46	M65	Z	-.063	-.063	0	%100
47	M66	X	-.389	-.389	0	%100
48	M66	Z	-.224	-.224	0	%100
49	FACE1	X	-.276	-.276	0	%100
50	FACE1	Z	-.159	-.159	0	%100
51	M76	X	-.276	-.276	0	%100
52	M76	Z	-.159	-.159	0	%100

Member Distributed Loads (BLC 75 : Structure Wm (300 Deg)) (Continued)

	Member Label	Direction	Start Magnitude[lb/ft,...	End Magnitude[lb/ft,F...	Start Location[ft,%]	End Location[ft,%]
53	M77	X	-1.104	-1.104	0	%100
54	M77	Z	-.638	-.638	0	%100
55	FACE2	X	-.37	-.37	0	%100
56	FACE2	Z	-.213	-.213	0	%100
57	M79	X	-.37	-.37	0	%100
58	M79	Z	-.213	-.213	0	%100
59	M80	X	-1.478	-1.478	0	%100
60	M80	Z	-.854	-.854	0	%100
61	M85	X	-.641	-.641	0	%100
62	M85	Z	-.37	-.37	0	%100
63	M86	X	-.626	-.626	0	%100
64	M86	Z	-.361	-.361	0	%100
65	TMAA	X	-.626	-.626	0	%100
66	TMAA	Z	-.361	-.361	0	%100
67	M89	X	-.393	-.393	0	%100
68	M89	Z	-.227	-.227	0	%100
69	M91	X	-.184	-.184	0	%100
70	M91	Z	-.106	-.106	0	%100
71	M92	X	-.276	-.276	0	%100
72	M92	Z	-.159	-.159	0	%100
73	M96	X	-.041	-.041	0	%100
74	M96	Z	-.024	-.024	0	%100
75	M149	X	-.276	-.276	0	%100
76	M149	Z	-.159	-.159	0	%100
77	M160	X	-.641	-.641	0	%100
78	M160	Z	-.37	-.37	0	%100
79	M164	X	-1.104	-1.104	0	%100
80	M164	Z	-.638	-.638	0	%100
81	M146A	X	-.021	-.021	0	%100
82	M146A	Z	-.012	-.012	0	%100
83	M149A	X	-.083	-.083	0	%100
84	M149A	Z	-.048	-.048	0	%100
85	M152	X	-.021	-.021	0	%100
86	M152	Z	-.012	-.012	0	%100
87	M157	X	-.641	-.641	0	%100
88	M157	Z	-.37	-.37	0	%100
89	M158B	X	-.641	-.641	0	%100
90	M158B	Z	-.37	-.37	0	%100
91	M159B	X	-.641	-.641	0	%100
92	M159B	Z	-.37	-.37	0	%100
93	M160B	X	-.641	-.641	0	%100
94	M160B	Z	-.37	-.37	0	%100
95	M157B	X	-.626	-.626	0	%100
96	M157B	Z	-.361	-.361	0	%100
97	TMAC	X	-.626	-.626	0	%100
98	TMAC	Z	-.361	-.361	0	%100
99	M159	X	-.626	-.626	0	%100
100	M159	Z	-.361	-.361	0	%100
101	TMAB	X	-.626	-.626	0	%100
102	TMAB	Z	-.361	-.361	0	%100
103	M159C	X	-.184	-.184	0	%100
104	M159C	Z	-.106	-.106	0	%100

Member Distributed Loads (BLC 75 : Structure Wm (300 Deg)) (Continued)

	Member Label	Direction	Start Magnitude[lb/ft,...	End Magnitude[lb/ft,F...	Start Location[ft,%]	End Location[ft,%]
105	M160D	X	-.736	-.736	0	%100
106	M160D	Z	-.425	-.425	0	%100
107	M156B	X	-.393	-.393	0	%100
108	M156B	Z	-.227	-.227	0	%100
109	M157C	X	-.393	-.393	0	%100
110	M157C	Z	-.227	-.227	0	%100
111	M158C	X	-.393	-.393	0	%100
112	M158C	Z	-.227	-.227	0	%100
113	M159D	X	-.736	-.736	0	%100
114	M159D	Z	-.425	-.425	0	%100
115	M160E	X	-.736	-.736	0	%100
116	M160E	Z	-.425	-.425	0	%100
117	M127	X	-.389	-.389	0	%100
118	M127	Z	-.224	-.224	0	%100
119	M128	X	0	0	0	%100
120	M128	Z	0	0	0	%100
121	MP2A	X	-.524	-.524	0	%100
122	MP2A	Z	-.303	-.303	0	%100
123	M100	X	-.041	-.041	0	%100
124	M100	Z	-.024	-.024	0	%100
125	M101	X	-.041	-.041	0	%100
126	M101	Z	-.024	-.024	0	%100
127	MP5A	X	-.524	-.524	0	%100
128	MP5A	Z	-.303	-.303	0	%100
129	M103	X	-.041	-.041	0	%100
130	M103	Z	-.024	-.024	0	%100
131	M104	X	-.041	-.041	0	%100
132	M104	Z	-.024	-.024	0	%100
133	MP4A	X	-.524	-.524	0	%100
134	MP4A	Z	-.303	-.303	0	%100
135	LIVE1	X	-.041	-.041	0	%100
136	LIVE1	Z	-.024	-.024	0	%100
137	M107	X	-.041	-.041	0	%100
138	M107	Z	-.024	-.024	0	%100
139	MP3C	X	-.524	-.524	0	%100
140	MP3C	Z	-.303	-.303	0	%100
141	MP1C	X	-.524	-.524	0	%100
142	MP1C	Z	-.303	-.303	0	%100
143	M111	X	-.041	-.041	0	%100
144	M111	Z	-.024	-.024	0	%100
145	M113	X	-.041	-.041	0	%100
146	M113	Z	-.024	-.024	0	%100
147	MP2C	X	-.524	-.524	0	%100
148	MP2C	Z	-.303	-.303	0	%100
149	M115	X	-.041	-.041	0	%100
150	M115	Z	-.024	-.024	0	%100
151	M116	X	-.041	-.041	0	%100
152	M116	Z	-.024	-.024	0	%100
153	MP5C	X	-.524	-.524	0	%100
154	MP5C	Z	-.303	-.303	0	%100
155	M118	X	-.041	-.041	0	%100
156	M118	Z	-.024	-.024	0	%100

Member Distributed Loads (BLC 75 : Structure Wm (300 Deg)) (Continued)

	Member Label	Direction	Start Magnitude[lb/ft,...	End Magnitude[lb/ft,F...	Start Location[ft,%]	End Location[ft,%]
157	M119	X	-.041	-.041	0	%100
158	M119	Z	-.024	-.024	0	%100
159	MP4C	X	-.524	-.524	0	%100
160	MP4C	Z	-.303	-.303	0	%100
161	M121	X	-.041	-.041	0	%100
162	M121	Z	-.024	-.024	0	%100
163	M122	X	-.041	-.041	0	%100
164	M122	Z	-.024	-.024	0	%100
165	MP3B	X	-.524	-.524	0	%100
166	MP3B	Z	-.303	-.303	0	%100
167	MP1B	X	-.524	-.524	0	%100
168	MP1B	Z	-.303	-.303	0	%100
169	M126	X	0	0	0	%100
170	M126	Z	0	0	0	%100
171	M128A	X	0	0	0	%100
172	M128A	Z	0	0	0	%100
173	MP2B	X	-.524	-.524	0	%100
174	MP2B	Z	-.303	-.303	0	%100
175	M130	X	0	0	0	%100
176	M130	Z	0	0	0	%100
177	M131	X	0	0	0	%100
178	M131	Z	0	0	0	%100
179	MP5B	X	-.524	-.524	0	%100
180	MP5B	Z	-.303	-.303	0	%100
181	M133	X	0	0	0	%100
182	M133	Z	0	0	0	%100
183	M134	X	0	0	0	%100
184	M134	Z	0	0	0	%100
185	MP4B	X	-.524	-.524	0	%100
186	MP4B	Z	-.303	-.303	0	%100
187	M136	X	0	0	0	%100
188	M136	Z	0	0	0	%100
189	M137	X	0	0	0	%100
190	M137	Z	0	0	0	%100
191	M138	X	-.874	-.874	0	%100
192	M138	Z	-.504	-.504	0	%100
193	M139	X	-.174	-.174	0	%100
194	M139	Z	-.101	-.101	0	%100
195	M146	X	-.445	-.445	0	%100
196	M146	Z	-.257	-.257	0	%100
197	OVP	X	-.524	-.524	0	%100
198	OVP	Z	-.303	-.303	0	%100
199	M145A	X	-.174	-.174	0	%100
200	M145A	Z	-.101	-.101	0	%100
201	M146B	X	-.874	-.874	0	%100
202	M146B	Z	-.504	-.504	0	%100
203	M147B	X	-.496	-.496	0	%100
204	M147B	Z	-.286	-.286	0	%100
205	M148	X	-.496	-.496	0	%100
206	M148	Z	-.286	-.286	0	%100

Member Distributed Loads (BLC 76 : Structure Wm (330 Deg))

	Member Label	Direction	Start Magnitude[lb/ft,...	End Magnitude[lb/ft,F...	Start Location[ft,%]	End Location[ft,%]
1	M1	X	-.64	-.64	0	%100
2	M1	Z	-1.109	-1.109	0	%100
3	MP3A	X	-.303	-.303	0	%100
4	MP3A	Z	-.524	-.524	0	%100
5	MP1A	X	-.303	-.303	0	%100
6	MP1A	Z	-.524	-.524	0	%100
7	M9	X	-.008	-.008	0	%100
8	M9	Z	-.014	-.014	0	%100
9	M10	X	0	0	0	%100
10	M10	Z	0	0	0	%100
11	M19	X	-.64	-.64	0	%100
12	M19	Z	-1.109	-1.109	0	%100
13	M28	X	-.614	-.614	0	%100
14	M28	Z	-1.063	-1.063	0	%100
15	M31	X	0	0	0	%100
16	M31	Z	0	0	0	%100
17	M34	X	-.614	-.614	0	%100
18	M34	Z	-1.063	-1.063	0	%100
19	M40	X	-.036	-.036	0	%100
20	M40	Z	-.062	-.062	0	%100
21	M46	X	0	0	0	%100
22	M46	Z	0	0	0	%100
23	M52	X	-.036	-.036	0	%100
24	M52	Z	-.062	-.062	0	%100
25	M55	X	-.548	-.548	0	%100
26	M55	Z	-.95	-.95	0	%100
27	M56	X	-.173	-.173	0	%100
28	M56	Z	-.3	-.3	0	%100
29	M57	X	-.425	-.425	0	%100
30	M57	Z	-.736	-.736	0	%100
31	M58	X	-.425	-.425	0	%100
32	M58	Z	-.736	-.736	0	%100
33	M59	X	-.021	-.021	0	%100
34	M59	Z	-.037	-.037	0	%100
35	M60	X	-.021	-.021	0	%100
36	M60	Z	-.037	-.037	0	%100
37	M61	X	-.021	-.021	0	%100
38	M61	Z	-.037	-.037	0	%100
39	M62	X	-.021	-.021	0	%100
40	M62	Z	-.037	-.037	0	%100
41	M63	X	-.021	-.021	0	%100
42	M63	Z	-.037	-.037	0	%100
43	M64	X	-.021	-.021	0	%100
44	M64	Z	-.037	-.037	0	%100
45	M65	X	-.021	-.021	0	%100
46	M65	Z	-.037	-.037	0	%100
47	M66	X	-.075	-.075	0	%100
48	M66	Z	-.13	-.13	0	%100
49	FACE1	X	-.478	-.478	0	%100
50	FACE1	Z	-.828	-.828	0	%100
51	M76	X	0	0	0	%100
52	M76	Z	0	0	0	%100

Member Distributed Loads (BLC 76 : Structure Wm (330 Deg)) (Continued)

	Member Label	Direction	Start Magnitude[lb/ft,...	End Magnitude[lb/ft,F...	Start Location[ft,%]	End Location[ft,%]
53	M77	X	-.478	-.478	0	%100
54	M77	Z	-.828	-.828	0	%100
55	FACE2	X	-.64	-.64	0	%100
56	FACE2	Z	-1.109	-1.109	0	%100
57	M79	X	0	0	0	%100
58	M79	Z	0	0	0	%100
59	M80	X	-.64	-.64	0	%100
60	M80	Z	-1.109	-1.109	0	%100
61	M85	X	-.37	-.37	0	%100
62	M85	Z	-.641	-.641	0	%100
63	M86	X	-.361	-.361	0	%100
64	M86	Z	-.626	-.626	0	%100
65	TMAA	X	-.361	-.361	0	%100
66	TMAA	Z	-.626	-.626	0	%100
67	M89	X	-.359	-.359	0	%100
68	M89	Z	-.622	-.622	0	%100
69	M91	X	-.319	-.319	0	%100
70	M91	Z	-.552	-.552	0	%100
71	M92	X	-.478	-.478	0	%100
72	M92	Z	-.828	-.828	0	%100
73	M96	X	-.008	-.008	0	%100
74	M96	Z	-.014	-.014	0	%100
75	M149	X	0	0	0	%100
76	M149	Z	0	0	0	%100
77	M160	X	-.37	-.37	0	%100
78	M160	Z	-.641	-.641	0	%100
79	M164	X	-.478	-.478	0	%100
80	M164	Z	-.828	-.828	0	%100
81	M146A	X	0	0	0	%100
82	M146A	Z	0	0	0	%100
83	M149A	X	-.036	-.036	0	%100
84	M149A	Z	-.062	-.062	0	%100
85	M152	X	-.036	-.036	0	%100
86	M152	Z	-.062	-.062	0	%100
87	M157	X	-.37	-.37	0	%100
88	M157	Z	-.641	-.641	0	%100
89	M158B	X	-.37	-.37	0	%100
90	M158B	Z	-.641	-.641	0	%100
91	M159B	X	-.37	-.37	0	%100
92	M159B	Z	-.641	-.641	0	%100
93	M160B	X	-.37	-.37	0	%100
94	M160B	Z	-.641	-.641	0	%100
95	M157B	X	-.361	-.361	0	%100
96	M157B	Z	-.626	-.626	0	%100
97	TMAC	X	-.361	-.361	0	%100
98	TMAC	Z	-.626	-.626	0	%100
99	M159	X	-.361	-.361	0	%100
100	M159	Z	-.626	-.626	0	%100
101	TMAB	X	-.361	-.361	0	%100
102	TMAB	Z	-.626	-.626	0	%100
103	M159C	X	0	0	0	%100
104	M159C	Z	0	0	0	%100

Member Distributed Loads (BLC 76 : Structure Wm (330 Deg)) (Continued)

	Member Label	Direction	Start Magnitude[lb/ft,...	End Magnitude[lb/ft,F...	Start Location[ft,%]	End Location[ft,%]
105	M160D	X	-.319	-.319	0	%100
106	M160D	Z	-.552	-.552	0	%100
107	M156B	X	-.359	-.359	0	%100
108	M156B	Z	-.622	-.622	0	%100
109	M157C	X	-.161	-.161	0	%100
110	M157C	Z	-.279	-.279	0	%100
111	M158C	X	-.161	-.161	0	%100
112	M158C	Z	-.279	-.279	0	%100
113	M159D	X	-.359	-.359	0	%100
114	M159D	Z	-.622	-.622	0	%100
115	M160E	X	-.359	-.359	0	%100
116	M160E	Z	-.622	-.622	0	%100
117	M127	X	-.299	-.299	0	%100
118	M127	Z	-.518	-.518	0	%100
119	M128	X	-.075	-.075	0	%100
120	M128	Z	-.13	-.13	0	%100
121	MP2A	X	-.303	-.303	0	%100
122	MP2A	Z	-.524	-.524	0	%100
123	M100	X	-.008	-.008	0	%100
124	M100	Z	-.014	-.014	0	%100
125	M101	X	-.008	-.008	0	%100
126	M101	Z	-.014	-.014	0	%100
127	MP5A	X	-.303	-.303	0	%100
128	MP5A	Z	-.524	-.524	0	%100
129	M103	X	-.008	-.008	0	%100
130	M103	Z	-.014	-.014	0	%100
131	M104	X	-.008	-.008	0	%100
132	M104	Z	-.014	-.014	0	%100
133	MP4A	X	-.303	-.303	0	%100
134	MP4A	Z	-.524	-.524	0	%100
135	LIVE1	X	-.008	-.008	0	%100
136	LIVE1	Z	-.014	-.014	0	%100
137	M107	X	-.008	-.008	0	%100
138	M107	Z	-.014	-.014	0	%100
139	MP3C	X	-.303	-.303	0	%100
140	MP3C	Z	-.524	-.524	0	%100
141	MP1C	X	-.303	-.303	0	%100
142	MP1C	Z	-.524	-.524	0	%100
143	M111	X	-.032	-.032	0	%100
144	M111	Z	-.055	-.055	0	%100
145	M113	X	-.032	-.032	0	%100
146	M113	Z	-.055	-.055	0	%100
147	MP2C	X	-.303	-.303	0	%100
148	MP2C	Z	-.524	-.524	0	%100
149	M115	X	-.032	-.032	0	%100
150	M115	Z	-.055	-.055	0	%100
151	M116	X	-.032	-.032	0	%100
152	M116	Z	-.055	-.055	0	%100
153	MP5C	X	-.303	-.303	0	%100
154	MP5C	Z	-.524	-.524	0	%100
155	M118	X	-.032	-.032	0	%100
156	M118	Z	-.055	-.055	0	%100

Member Distributed Loads (BLC 76 : Structure Wm (330 Deg)) (Continued)

	Member Label	Direction	Start Magnitude[lb/ft,...	End Magnitude[lb/ft,F...	Start Location[ft,%]	End Location[ft,%]
157	M119	X	-.032	-.032	0	%100
158	M119	Z	-.055	-.055	0	%100
159	MP4C	X	-.303	-.303	0	%100
160	MP4C	Z	-.524	-.524	0	%100
161	M121	X	-.032	-.032	0	%100
162	M121	Z	-.055	-.055	0	%100
163	M122	X	-.032	-.032	0	%100
164	M122	Z	-.055	-.055	0	%100
165	MP3B	X	-.303	-.303	0	%100
166	MP3B	Z	-.524	-.524	0	%100
167	MP1B	X	-.303	-.303	0	%100
168	MP1B	Z	-.524	-.524	0	%100
169	M126	X	-.008	-.008	0	%100
170	M126	Z	-.014	-.014	0	%100
171	M128A	X	-.008	-.008	0	%100
172	M128A	Z	-.014	-.014	0	%100
173	MP2B	X	-.303	-.303	0	%100
174	MP2B	Z	-.524	-.524	0	%100
175	M130	X	-.008	-.008	0	%100
176	M130	Z	-.014	-.014	0	%100
177	M131	X	-.008	-.008	0	%100
178	M131	Z	-.014	-.014	0	%100
179	MP5B	X	-.303	-.303	0	%100
180	MP5B	Z	-.524	-.524	0	%100
181	M133	X	-.008	-.008	0	%100
182	M133	Z	-.014	-.014	0	%100
183	M134	X	-.008	-.008	0	%100
184	M134	Z	-.014	-.014	0	%100
185	MP4B	X	-.303	-.303	0	%100
186	MP4B	Z	-.524	-.524	0	%100
187	M136	X	-.008	-.008	0	%100
188	M136	Z	-.014	-.014	0	%100
189	M137	X	-.008	-.008	0	%100
190	M137	Z	-.014	-.014	0	%100
191	M138	X	-.494	-.494	0	%100
192	M138	Z	-.855	-.855	0	%100
193	M139	X	-.09	-.09	0	%100
194	M139	Z	-.155	-.155	0	%100
195	M146	X	-.257	-.257	0	%100
196	M146	Z	-.445	-.445	0	%100
197	OVP	X	-.303	-.303	0	%100
198	OVP	Z	-.524	-.524	0	%100
199	M145A	X	-.308	-.308	0	%100
200	M145A	Z	-.533	-.533	0	%100
201	M146B	X	-.308	-.308	0	%100
202	M146B	Z	-.533	-.533	0	%100
203	M147B	X	-.09	-.09	0	%100
204	M147B	Z	-.155	-.155	0	%100
205	M148	X	-.494	-.494	0	%100
206	M148	Z	-.855	-.855	0	%100

Member Distributed Loads (BLC 81 : BLC 39 Transient Area Loads)

	Member Label	Direction	Start Magnitude[lb/ft,...	End Magnitude[lb/ft,F...	Start Location[ft,%]	End Location[ft,%]
1	M1	Y	-.42	-5.376	.55	1.54
2	M1	Y	-5.376	-10.667	1.54	2.53
3	M1	Y	-10.667	-13.714	2.53	3.52
4	M1	Y	-13.714	-12.227	3.52	4.51
5	M1	Y	-12.227	-7.431	4.51	5.5
6	M80	Y	-4.063	-12.782	0	.99
7	M80	Y	-12.782	-15.408	.99	1.98
8	M80	Y	-15.408	-10.921	1.98	2.97
9	M80	Y	-10.921	-6.717	2.97	3.96
10	M80	Y	-6.717	-3.817	3.96	4.95
11	M10	Y	-3.834	-6.662	.55	1.54
12	M10	Y	-6.662	-10.817	1.54	2.53
13	M10	Y	-10.817	-15.327	2.53	3.52
14	M10	Y	-15.327	-12.783	3.52	4.51
15	M10	Y	-12.783	-4.155	4.51	5.5
16	FACE2	Y	-7.404	-12.259	0	.99
17	FACE2	Y	-12.259	-13.81	.99	1.98
18	FACE2	Y	-13.81	-10.733	1.98	2.97
19	FACE2	Y	-10.733	-5.379	2.97	3.96
20	FACE2	Y	-5.379	-.423	3.96	4.95
21	M28	Y	-.419	-8.85	0	.187
22	M28	Y	-8.85	-8.72	.187	.373
23	M28	Y	-8.72	-2.385	.373	.56
24	M28	Y	-2.385	-.419	.56	.747
25	M28	Y	-.419	-.419	.747	.933
26	M29	Y	2.102	-1.058	0	.056
27	M29	Y	-1.058	-16.83	.056	.111
28	M29	Y	-16.83	-44.836	.111	.167
29	M31	Y	-.419	-.419	3.733	3.92
30	M31	Y	-.419	-2.388	3.92	4.107
31	M31	Y	-2.388	-8.725	4.107	4.293
32	M31	Y	-8.725	-8.853	4.293	4.48
33	M31	Y	-8.853	-.419	4.48	4.667
34	M33	Y	2.1	-1.054	0	.056
35	M33	Y	-1.054	-16.81	.056	.111
36	M33	Y	-16.81	-44.794	.111	.167
37	M19	Y	-.134	-3.816	0	1.1
38	M19	Y	-3.816	-5.837	1.1	2.2
39	M19	Y	-5.837	-4.34	2.2	3.3
40	M19	Y	-4.34	-3.166	3.3	4.4
41	M19	Y	-3.166	-2.462	4.4	5.5
42	M56	Y	-16.184	-12.857	0	.4
43	M56	Y	-12.857	-14.888	.4	.8
44	M56	Y	-14.888	-18.1	.8	1.2
45	M56	Y	-18.1	-19.53	1.2	1.6
46	M56	Y	-19.53	-23.353	1.6	2
47	M79	Y	-3.328	-10.735	0	1.1
48	M79	Y	-10.735	-11.995	1.1	2.2
49	M79	Y	-11.995	-7.954	2.2	3.3
50	M79	Y	-7.954	-4.093	3.3	4.4
51	M79	Y	-4.093	-.503	4.4	5.5
52	M31	Y	-.419	-8.85	0	.187

Member Distributed Loads (BLC 81 : BLC 39 Transient Area Loads) (Continued)

	Member Label	Direction	Start Magnitude[lb/ft,...	End Magnitude[lb/ft,F...	Start Location[ft,%]	End Location[ft,%]
53	M31	Y	-8.85	-8.72	.187	.373
54	M31	Y	-8.72	-2.385	.373	.56
55	M31	Y	-2.385	-.419	.56	.747
56	M31	Y	-.419	-.419	.747	.933
57	M32	Y	2.102	-1.058	0	.056
58	M32	Y	-1.058	-16.83	.056	.111
59	M32	Y	-16.83	-44.836	.111	.167
60	M34	Y	-.419	-.419	3.733	3.92
61	M34	Y	-.419	-2.388	3.92	4.107
62	M34	Y	-2.388	-8.725	4.107	4.293
63	M34	Y	-8.725	-8.853	4.293	4.48
64	M34	Y	-8.853	-.419	4.48	4.667
65	M36	Y	2.1	-1.054	0	.056
66	M36	Y	-1.054	-16.81	.056	.111
67	M36	Y	-16.81	-44.794	.111	.167
68	M28	Y	-.419	-.419	3.733	3.92
69	M28	Y	-.419	-2.388	3.92	4.107
70	M28	Y	-2.388	-8.725	4.107	4.293
71	M28	Y	-8.725	-8.853	4.293	4.48
72	M28	Y	-8.853	-.419	4.48	4.667
73	M30	Y	2.1	-1.054	0	.056
74	M30	Y	-1.054	-16.81	.056	.111
75	M30	Y	-16.81	-44.794	.111	.167
76	M34	Y	-.419	-8.85	0	.187
77	M34	Y	-8.85	-8.72	.187	.373
78	M34	Y	-8.72	-2.385	.373	.56
79	M34	Y	-2.385	-.419	.56	.747
80	M34	Y	-.419	-.419	.747	.933
81	M35	Y	2.102	-1.058	0	.056
82	M35	Y	-1.058	-16.83	.056	.111
83	M35	Y	-16.83	-44.836	.111	.167

Member Distributed Loads (BLC 82 : BLC 40 Transient Area Loads)

	Member Label	Direction	Start Magnitude[lb/ft,...	End Magnitude[lb/ft,F...	Start Location[ft,%]	End Location[ft,%]
1	M1	Y	-.56	-7.168	.55	1.54
2	M1	Y	-7.168	-14.223	1.54	2.53
3	M1	Y	-14.223	-18.286	2.53	3.52
4	M1	Y	-18.286	-16.302	3.52	4.51
5	M1	Y	-16.302	-9.908	4.51	5.5
6	M80	Y	-5.417	-17.043	0	.99
7	M80	Y	-17.043	-20.545	.99	1.98
8	M80	Y	-20.545	-14.562	1.98	2.97
9	M80	Y	-14.562	-8.957	2.97	3.96
10	M80	Y	-8.957	-5.089	3.96	4.95
11	M10	Y	-5.112	-8.882	.55	1.54
12	M10	Y	-8.882	-14.422	1.54	2.53
13	M10	Y	-14.422	-20.436	2.53	3.52
14	M10	Y	-20.436	-17.044	3.52	4.51
15	M10	Y	-17.044	-5.54	4.51	5.5
16	FACE2	Y	-9.872	-16.346	0	.99
17	FACE2	Y	-16.346	-18.414	.99	1.98

Member Distributed Loads (BLC 82 : BLC 40 Transient Area Loads) (Continued)

	Member Label	Direction	Start Magnitude[lb/ft,...	End Magnitude[lb/ft,F...	Start Location[ft,%]	End Location[ft,%]
18	FACE2	Y	-18.414	-14.311	1.98	2.97
19	FACE2	Y	-14.311	-7.172	2.97	3.96
20	FACE2	Y	-7.172	-.564	3.96	4.95
21	M28	Y	-.559	-11.8	0	.187
22	M28	Y	-11.8	-11.626	.187	.373
23	M28	Y	-11.626	-3.18	.373	.56
24	M28	Y	-3.18	-.559	.56	.747
25	M28	Y	-.559	-.559	.747	.933
26	M29	Y	2.802	-1.411	0	.056
27	M29	Y	-1.411	-22.44	.056	.111
28	M29	Y	-22.44	-59.781	.111	.167
29	M31	Y	-.559	-.559	3.733	3.92
30	M31	Y	-.559	-3.184	3.92	4.107
31	M31	Y	-3.184	-11.633	4.107	4.293
32	M31	Y	-11.633	-11.805	4.293	4.48
33	M31	Y	-11.805	-.559	4.48	4.667
34	M33	Y	2.8	-1.406	0	.056
35	M33	Y	-1.406	-22.414	.056	.111
36	M33	Y	-22.414	-59.726	.111	.167
37	M19	Y	-.178	-5.088	0	1.1
38	M19	Y	-5.088	-7.782	1.1	2.2
39	M19	Y	-7.782	-5.786	2.2	3.3
40	M19	Y	-5.786	-4.221	3.3	4.4
41	M19	Y	-4.221	-3.283	4.4	5.5
42	M56	Y	-21.579	-17.143	0	.4
43	M56	Y	-17.143	-19.851	.4	.8
44	M56	Y	-19.851	-24.134	.8	1.2
45	M56	Y	-24.134	-26.04	1.2	1.6
46	M56	Y	-26.04	-31.138	1.6	2
47	M79	Y	-4.438	-14.313	0	1.1
48	M79	Y	-14.313	-15.994	1.1	2.2
49	M79	Y	-15.994	-10.606	2.2	3.3
50	M79	Y	-10.606	-5.457	3.3	4.4
51	M79	Y	-5.457	-.671	4.4	5.5
52	M31	Y	-.559	-11.8	0	.187
53	M31	Y	-11.8	-11.626	.187	.373
54	M31	Y	-11.626	-3.18	.373	.56
55	M31	Y	-3.18	-.559	.56	.747
56	M31	Y	-.559	-.559	.747	.933
57	M32	Y	2.802	-1.411	0	.056
58	M32	Y	-1.411	-22.44	.056	.111
59	M32	Y	-22.44	-59.781	.111	.167
60	M34	Y	-.559	-.559	3.733	3.92
61	M34	Y	-.559	-3.184	3.92	4.107
62	M34	Y	-3.184	-11.633	4.107	4.293
63	M34	Y	-11.633	-11.805	4.293	4.48
64	M34	Y	-11.805	-.559	4.48	4.667
65	M36	Y	2.8	-1.406	0	.056
66	M36	Y	-1.406	-22.414	.056	.111
67	M36	Y	-22.414	-59.726	.111	.167
68	M28	Y	-.559	-.559	3.733	3.92
69	M28	Y	-.559	-3.184	3.92	4.107

Member Distributed Loads (BLC 82 : BLC 40 Transient Area Loads) (Continued)

	Member Label	Direction	Start Magnitude[lb/ft,...	End Magnitude[lb/ft,F...	Start Location[ft,%]	End Location[ft,%]
70	M28	Y	-3.184	-11.633	4.107	4.293
71	M28	Y	-11.633	-11.805	4.293	4.48
72	M28	Y	-11.805	-.559	4.48	4.667
73	M30	Y	2.8	-1.406	0	.056
74	M30	Y	-1.406	-22.414	.056	.111
75	M30	Y	-22.414	-59.726	.111	.167
76	M34	Y	-.559	-11.8	0	.187
77	M34	Y	-11.8	-11.626	.187	.373
78	M34	Y	-11.626	-3.18	.373	.56
79	M34	Y	-3.18	-.559	.56	.747
80	M34	Y	-.559	-.559	.747	.933
81	M35	Y	2.802	-1.411	0	.056
82	M35	Y	-1.411	-22.44	.056	.111
83	M35	Y	-22.44	-59.781	.111	.167

Member Area Loads (BLC 39 : Structure D)

	Joint A	Joint B	Joint C	Joint D	Direction	Distribution	Magnitude[ksf]
1	N74	N73	N44	N5	Y	C-D	-.009
2	N80	N79	N4	N25	Y	C-D	-.009
3	N431	N431A	N44	N45	Y	A-B	-.009
4	N45	N24	N67A	N68B	Y	A-B	-.009
5	N430A	N433	N4	N5	Y	A-B	-.009
6	N432	N429A	N24	N25	Y	A-B	-.009

Member Area Loads (BLC 40 : Structure Di)

	Joint A	Joint B	Joint C	Joint D	Direction	Distribution	Magnitude[ksf]
1	N74	N73	N44	N5	Y	A-B	-.012
2	N80	N79	N4	N25	Y	A-B	-.012
3	N431	N431A	N44	N45	Y	A-B	-.012
4	N45	N24	N67A	N68B	Y	A-B	-.012
5	N430A	N433	N4	N5	Y	A-B	-.012
6	N432	N429A	N24	N25	Y	A-B	-.012

Envelope Joint Reactions

	Joint		X [lb]	LC	Y [lb]	LC	Z [lb]	LC	MX [k-ft]	LC	MY [k-ft]	LC	MZ [k-ft]	LC
1	N109	max	495.024	10	3469.813	20	-606.022	1	3.741	21	1.326	4	.07	50
2		min	-529.974	4	745.91	2	-8254.707	19	1.182	3	-1.336	10	-.101	34
3	N542A	max	-303.555	8	3078.004	15	4112.202	16	-.394	8	1.019	12	-.724	10
4		min	-6977.001	14	619.102	9	-87.705	10	-1.712	14	-1.022	6	-3.014	16
5	N544	max	6946.933	24	3021.964	23	4159.399	22	-.387	7	.887	8	2.947	22
6		min	425.84	6	647.856	4	-135.38	4	-1.69	13	-.922	2	.737	4
7	N528B	max	549.344	11	894.32	7	1310.857	1	0	7	0	4	0	10
8		min	-529.882	5	-639.304	1	-1749.916	7	0	13	0	10	0	4
9	N539	max	1149.594	9	903.347	3	1076.913	2	0	10	0	12	0	20
10		min	-1524.873	3	-639.075	9	-809.867	8	0	4	0	6	0	2
11	N544A	max	1550.629	11	909.036	11	1055.564	12	0	16	0	8	0	12
12		min	-1169.421	5	-636.595	5	-767.302	6	0	10	0	2	0	18
13	Totals:	max	6376.92	10	10459.151	13	6399.362	1						

Envelope Joint Reactions (Continued)

	Joint		X [lb]	LC	Y [lb]	LC	Z [lb]	LC	MX [k-ft]	LC	MY [k-ft]	LC	MZ [k-ft]	LC
14		min	-6376.919	4	3765.816	7	-6399.371	7						

Envelope AISC 15th(360-16): LRFD Steel Code Checks

	Member	Shape	Code Check	Loc[ft]	LC	Shear ...	Loc[ft]	Dir	LC	phi*Pnc ...	phi*Pnt ...	phi*Mn ...	phi*Mn ...	Cb	Eqn
1	M1	C5X6.7	.272	5.042	11	.171	2.005	y	14	24375.2...	63828	1.604	9.585	1...	H1-1b
2	MP3A	PIPE_2.0	.268	2.917	7	.107	2.917		6	14916.0...	32130	1.872	1.872	1...	H1-1b
3	MP1A	PIPE_2.0	.010	1.806	5	.020	1.806		6	18857.4...	32130	1.872	1.872	1...	H1-1b
4	M9	PL1/4x5	.094	.333	13	.012	.333	y	6	34452.03	40500	.211	3.991	1...	H1-1b
5	M10	C5X6.7	.238	5.042	7	.170	2.005	y	22	24375.2...	63828	1.604	9.585	1...	H1-1b
6	M19	C5X6.7	.328	5.042	4	.193	2.635	z	17	24375.2...	63828	1.604	9.585	1...	H1-1b
7	M28	C5X6.7	.600	2.333	19	.106	2.333	y	13	31951.1...	63828	1.604	9.585	1...	H1-1b
8	M31	C5X6.7	.495	2.333	15	.089	2.333	y	17	31951.1...	63828	1.604	9.585	1...	H1-1b
9	M34	C5X6.7	.476	2.333	23	.087	2.333	y	21	31951.1...	63828	1.604	9.585	1...	H1-1b
10	M40	PL3/8x10	.018	.833	16	.005	0	y	10	77531.3...	121500	.949	23.87	1...	H1-1b
11	M46	PL3/8x10	.023	.833	23	.007	0	y	6	77531.3...	121500	.949	24.097	1...	H1-1b
12	M52	PL3/8x10	.023	.833	19	.007	0	y	2	77531.3...	121500	.949	24.139	1...	H1-1b
13	M55	C5X6.7	.262	0	17	.127	.252	z	18	50712.0...	63828	1.604	9.585	1...	H1-1b
14	M56	C5X6.7	.349	0	4	.210	1.583	z	10	56209.8...	63828	1.604	9.585	1...	H1-1b
15	M57	L2x2x3	.276	2.042	10	.021	1.969	z	8	3497.983	23392.8	.558	1.123	2...	H2-1
16	M58	L2x2x3	.272	2.042	4	.018	2.042	y	7	3497.983	23392.8	.558	1.125	2...	H2-1
17	M59	SR_0.75	.025	0	7	.015	1.167		13	10673.2...	14313.8...	.179	.179	2...	H1-1b
18	M60	SR_0.75	.095	0	1	.013	1.167		7	10673.2...	14313.8...	.179	.179	2...	H1-1b
19	M61	SR_0.75	.118	0	1	.022	1.167		7	10673.2...	14313.8...	.179	.179	2...	H1-1b
20	M62	SR_0.75	.122	0	1	.027	1.167		7	10673.2...	14313.8...	.179	.179	2...	H1-1b
21	M63	SR_0.75	.080	0	1	.021	1.167		7	10673.2...	14313.8...	.179	.179	2...	H1-1b
22	M64	SR_0.75	.018	0	7	.015	1.167		24	10673.2...	14313.8...	.179	.179	2...	H1-1b
23	M65	SR_0.75	.074	0	1	.007	1.167		7	10673.2...	14313.8...	.179	.179	2...	H1-1b
24	M66	HSS3X3X6	.395	2.25	22	.105	1.734	y	17	134307...	140346	11.213	11.213	3...	H1-1b
25	FACE1	C5X6.7	.113	.5	2	.097	0	y	16	61831.7...	63828	1.604	9.585	1...	H1-1b
26	M76	C5X6.7	.119	.5	10	.100	0	y	13	61831.7...	63828	1.604	9.585	1...	H1-1b
27	M77	C5X6.7	.130	0	4	.106	.5	y	18	61831.7...	63828	1.604	9.585	1...	H1-1b
28	FACE2	C5X6.7	.268	.458	3	.181	3.495	y	24	24375.2...	63828	1.604	9.585	2...	H1-1b
29	M79	C5X6.7	.257	.458	10	.183	2.865	z	20	24375.2...	63828	1.604	9.585	2...	H1-1b
30	M80	C5X6.7	.259	.458	3	.179	3.495	y	16	24375.2...	63828	1.604	9.585	1...	H1-1b
31	M85	L1.5x1.5x4	.084	2.875	8	.006	2.875	y	4	10682.7...	22275	.36	.834	1...	H2-1
32	M86	L1.5x1.5x4	.101	0	30	.028	0	y	1	11837.42	22275	.36	.834	2...	H2-1
33	TMAA	L1.5x1.5x4	.091	1.222	1	.031	0	z	1	11837.42	22275	.36	.834	1...	H2-1
34	M89	L1.5x1.5x4	.241	0	18	.009	0	y	24	4896.026	22275	.36	.834	2...	H2-1
35	M91	L1.5x1.5x4	.073	2.167	1	.008	4.333	z	6	4897.837	22275	.36	.766	1...	H2-1
36	M92	L3X3X4	.431	3.257	8	.129	9.655	z	17	6200.183	46656	1.688	3.065	1...	H2-1
37	M96	PL1/4x5	.064	.333	19	.040	.333	y	6	34452.03	40500	.211	4.022	1...	H1-1b
38	M149	L3X3X4	.442	7.91	2	.123	1.512	z	17	6200.183	46656	1.688	3.089	1...	H2-1
39	M160	L1.5x1.5x4	.097	2.875	10	.007	2.875	z	10	10682.7...	22275	.36	.834	1...	H2-1
40	M164	L3X3X4	.444	7.91	10	.130	9.655	z	21	6200.183	46656	1.688	3.11	1...	H2-1
41	M146A	PL3/8x10	.073	.833	21	.008	0	y	12	77531.3...	121500	.949	21.569	1	H1-1b
42	M149A	PL3/8x10	.071	.833	17	.008	0	y	8	77531.3...	121500	.949	21.628	1...	H1-1b
43	M152	PL3/8x10	.074	.833	13	.011	0	y	4	77531.3...	121500	.949	21.598	1...	H1-1b
44	M157	L1.5x1.5x4	.081	2.875	4	.006	2.875	y	12	10682.7...	22275	.36	.834	1...	H2-1
45	M158B	L1.5x1.5x4	.094	2.875	6	.007	2.875	z	6	10682.7...	22275	.36	.834	1...	H2-1
46	M159B	L1.5x1.5x4	.087	2.875	12	.007	0	z	5	10682.7...	22275	.36	.834	1...	H2-1

Envelope AISC 15th(360-16): LRFD Steel Code Checks (Continued)

	Member	Shape	Code Check	Loc[ft]	LC	Shear ...	Loc[ft]	Dir	LC	phi*Pnc ...	phi*Pnt ...	phi*Mn ...	phi*Mn ...	Cb	Eqn
47	M160B	L1.5x1.5x4	.100	2.875	2	.006	2.875	z	1	10682.7...	22275	.36	.834	1...	H2-1
48	M157B	L1.5x1.5x4	.097	1.222	9	.029	0	y	9	11837.42	22275	.36	.834	1...	H2-1
49	TMAC	L1.5x1.5x4	.089	0	8	.032	0	z	9	11837.42	22275	.36	.834	1...	H2-1
50	M159	L1.5x1.5x4	.104	0	6	.023	1.222	z	5	11837.42	22275	.36	.834	1...	H2-1
51	TMAB	L1.5x1.5x4	.090	1.222	5	.031	0	z	5	11837.42	22275	.36	.834	1...	H2-1
52	M159C	L1.5x1.5x4	.073	2.167	9	.008	0	z	10	4897.837	22275	.36	.766	1...	H2-1
53	M160D	L1.5x1.5x4	.075	2.122	5	.009	4.333	z	4	4897.837	22275	.36	.766	1...	H2-1
54	M156B	L1.5x1.5x4	.231	0	20	.009	0	z	17	4896.026	22275	.36	.834	2...	H2-1
55	M157C	L1.5x1.5x4	.228	0	14	.009	0	y	20	4896.026	22275	.36	.834	2...	H2-1
56	M158C	L1.5x1.5x4	.274	0	16	.010	0	z	13	4896.026	22275	.36	.834	2...	H2-1
57	M159D	L1.5x1.5x4	.253	0	22	.012	0	y	17	4896.026	22275	.36	.834	2...	H2-1
58	M160E	L1.5x1.5x4	.217	0	24	.010	0	z	21	4896.026	22275	.36	.834	2...	H2-1
59	M127	HSS3X3X6	.353	2.25	16	.097	2.25	y	16	134307...	140346	11.213	11.213	3...	H1-1b
60	M128	HSS3X3X6	.349	2.25	22	.094	2.25	y	22	134307...	140346	11.213	11.213	3...	H1-1b
61	MP2A	PIPE_2.0	.136	1.806	7	.050	1.736		9	18857.4...	32130	1.872	1.872	2...	H1-1b
62	M100	PL1/4x5	.340	.333	24	.068	.333	y	5	34452.03	40500	.211	4.181	1...	H1-1b
63	M101	PL1/4x5	.267	.333	17	.072	.333	y	10	34452.03	40500	.211	4.219	1...	H1-1b
64	MP5A	PIPE_2.0	.010	1.806	9	.017	1.806		4	18857.4...	32130	1.872	1.872	1...	H1-1b
65	M103	PL1/4x5	.095	.333	13	.024	.333	y	26	34452.03	40500	.211	3.997	1...	H1-1b
66	M104	PL1/4x5	.062	.333	19	.035	.333	y	8	34452.03	40500	.211	4.059	1...	H1-1b
67	MP4A	PIPE_2.0	.112	1.806	7	.045	1.806		20	18857.4...	32130	1.872	1.872	2...	H1-1b
68	LIVE1	PL1/4x5	.318	.333	13	.021	.333	y	9	34452.03	40500	.211	3.974	1...	H1-1b
69	M107	PL1/4x5	.254	.333	20	.031	.333	y	3	34452.03	40500	.211	4.163	1...	H1-1b
70	MP3C	PIPE_2.0	.268	2.917	3	.107	2.917		10	14916.0...	32130	1.872	1.872	2...	H1-1b
71	MP1C	PIPE_2.0	.011	1.806	1	.021	4.861		4	18857.4...	32130	1.872	1.872	3...	H1-1b
72	M111	PL1/4x5	.097	.333	20	.012	.333	y	8	34452.03	40500	.211	4.219	1...	H1-1b
73	M113	PL1/4x5	.058	.333	16	.043	.333	y	2	34452.03	40500	.211	4.163	1...	H1-1b
74	MP2C	PIPE_2.0	.136	1.806	3	.051	1.806		13	18857.4...	32130	1.872	1.872	1...	H1-1b
75	M115	PL1/4x5	.393	.333	20	.068	.333	y	1	34452.03	40500	.211	4.153	1...	H1-1b
76	M116	PL1/4x5	.220	.333	13	.071	.333	y	6	34452.03	40500	.211	4.205	1...	H1-1b
77	MP5C	PIPE_2.0	.010	1.806	5	.016	1.806		12	18857.4...	32130	1.872	1.872	1...	H1-1b
78	M118	PL1/4x5	.094	.333	21	.011	.333	y	10	34452.03	40500	.211	3.99	1...	H1-1b
79	M119	PL1/4x5	.062	.333	15	.034	.333	y	4	34452.03	40500	.211	4.046	1...	H1-1b
80	MP4C	PIPE_2.0	.112	1.806	3	.045	1.806		16	18857.4...	32130	1.872	1.872	1...	H1-1b
81	M121	PL1/4x5	.318	.333	21	.020	.333	y	5	34452.03	40500	.211	3.974	1...	H1-1b
82	M122	PL1/4x5	.254	.333	16	.031	.333	y	11	34452.03	40500	.211	4.164	1...	H1-1b
83	MP3B	PIPE_2.0	.268	2.917	11	.119	2.917		4	14916.0...	32130	1.872	1.872	2...	H1-1b
84	MP1B	PIPE_2.0	.010	1.806	9	.020	1.806		10	18857.4...	32130	1.872	1.872	1...	H1-1b
85	M126	PL1/4x5	.094	.333	17	.012	.333	y	4	34452.03	40500	.211	4.007	1...	H1-1b
86	M128A	PL1/4x5	.064	.333	23	.042	.333	y	10	34452.03	40500	.211	4.026	1...	H1-1b
87	MP2B	PIPE_2.0	.136	1.806	11	.050	1.806		10	18857.4...	32130	1.872	1.872	1...	H1-1b
88	M130	PL1/4x5	.339	.333	16	.068	.333	y	9	34452.03	40500	.211	4.171	1...	H1-1b
89	M131	PL1/4x5	.270	.333	21	.072	.333	y	2	34452.03	40500	.211	4.213	1...	H1-1b
90	MP5B	PIPE_2.0	.010	1.806	1	.025	4.861		4	18857.4...	32130	1.872	1.872	2...	H1-1b
91	M133	PL1/4x5	.095	.333	17	.013	.333	y	6	34452.03	40500	.211	3.979	1...	H1-1b
92	M134	PL1/4x5	.065	.333	20	.034	.333	y	24	34452.03	40500	.211	4.219	1...	H1-1b
93	MP4B	PIPE_2.0	.135	1.806	11	.054	1.806		13	18857.4...	32130	1.872	1.872	1...	H1-1b
94	M136	PL1/4x5	.412	.333	17	.024	.333	y	1	34452.03	40500	.211	3.985	1...	H1-1b
95	M137	PL1/4x5	.237	.333	13	.047	.333	y	7	34452.03	40500	.211	4.219	1...	H1-1b
96	M138	L3X3X3	.047	1.866	2	.006	3.731	z	13	24500.9...	35316	1.32	2.564	1...	H2-1
97	M139	L3X3X3	.049	1.866	12	.006	3.731	y	13	24500.9...	35316	1.32	2.564	1...	H2-1
98	M146	PIPE_2.0	.020	2.5	10	.015	2.5		7	28122.4...	32130	1.872	1.872	1...	H1-1b

Envelope AISC 15th(360-16): LRFD Steel Code Checks (Continued)

	Member	Shape	Code Check	Loc[ft]	LC	Shear ...	Loc[ft]	Dir	LC	phi*Pnc ...	phi*Pnt ...	phi*Mn ...	phi*Mn ...	Cb	Eqn
99	OVP	PIPE 2.0	.188	3.958	2	.014	3.958		2	23808.54	32130	1.872	1.872	1...	H1-1b
100	M145A	L3X3X3	.048	1.866	10	.006	3.731	z	22	24500.9...	35316	1.32	2.564	1...	H2-1
101	M146B	L3X3X3	.048	1.866	14	.005	0	y	20	24500.9...	35316	1.32	2.564	1...	H2-1
102	M147B	L3X3X3	.048	1.866	24	.006	0	z	18	24500.9...	35316	1.32	2.564	1...	H2-1
103	M148	L3X3X3	.050	1.866	4	.006	3.731	y	16	24500.9...	35316	1.32	2.564	1...	H2-1

Client:	Verizon Wireless	Date:	7/1/2021
Site Name:	CANTON CT		
Project No.	21777544A		
Title:	Mount Analysis	Page:	1

Version 3.1

I. Mount-to-Tower Connection Check

RISA Model Data

Nodes *(labeled per RISA)*	Orientation *(per graphic of typical platform)*
N542A	30
N544	150
N109	270

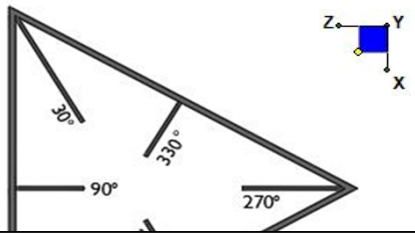

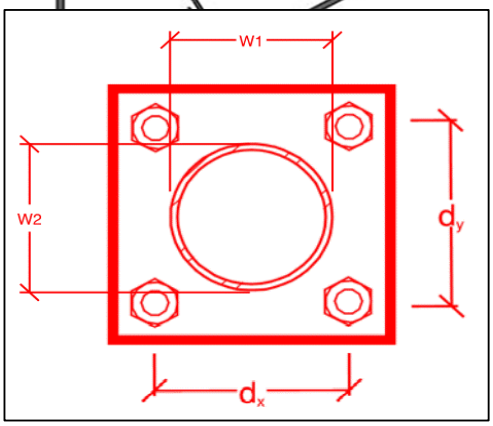

Tower Connection Plate and Weld Check

Connecting Standoff Member Shape:	Rect
W1 (in):	3
W2 (in):	3
Weld Size (1/16 in):	4
Phi*Rn (kip/in):	5.57
Required Weld Strength (kip/in):	4.42
Weld Capacity:	**79.4%**

Mount Desktop – Post Modification Inspection (PMI) Report Requirements

Documents & Photos Required from Contractor – Passing Mount Analysis

Purpose – to provide Maser Consulting Connecticut the proper documentation in order to complete the required Mount Desktop review of the Post Modification Inspection Report.

- Contractor is responsible for making certain the photos provided as noted below provide confirmation that the installation was completed in accordance with this Passing Mount Analysis.
- Contractor shall relay any data that can impact the performance of the mount, this includes safety issues.

Base Requirements:

- Any special photos outside of the standard requirements will be indicated on the passing MA
- Verification that loading is as communicated in the Passing Mount Analysis. NOTE If loading is different than what is conveyed contact Maser Consulting Connecticut immediately.
- Each photo should be time and date stamped
- Photos should be high resolution and submitted in a Zip File and should be organized in the file structure as depicted in Schedule A attached.
- Contractor shall ensure that the safety climb wire rope is supported and not adversely impacted by the install of the modification components. This may involve the install of wire rope guides, or other items to protect the wire rope.
- The photos in the file structure should be uploaded to ***https://pmi.vzwsmart.com*** as depicted on the drawings

Photo Requirements:

- *Base and "During Installation Photos"*
  - Base pictures include
    - Photo of Gate Signs showing the tower owner, site name, and number
    - Photo of carrier shelter showing the carrier site name and number if available
    - Photos of the galvanizing compound and/or paint used (if applicable), clearly showing the label and name
  - "During Installation Photos if provided - must be placed only in this folder
- *Photos taken at ground level*
  - Overall tower structure before and after installation of the equipment modifications
  - Photos of the appropriate mount before and after installation of the modifications; if the mounts are at different rad elevations, pictures must be provided for all elevations that the modifications were installed
- *Photos taken at Mount Elevation*
  - Photos showing each individual sector before and also after installation of equipment.

- These photos should also certify that the placement and geometry of the equipment on the mount is as depicted on the sketch and table in the mount analysis
- Photos showing the safety climb wire rope above and below the mount prior to modification.
- Photos showing the climbing facility and safety climb if present.

Antenna & equipment placement and Geometry Confirmation:

- The contractor must certify that the antenna & equipment placement and geometry is in accordance with the antenna placement diagrams as included in this mount analysis.

☐ The contractor certifies that the photos support and the equipment on the mount is as depicted on the antenna placement diagrams as included in this mount analysis.

☐ The contractor notes that the equipment on the mount is not in accordance with the antenna placement diagrams and has accordingly marked up the diagrams or provided a diagram outlining the differences.

Certifying Individual: Company _____

Name _____

Signature _____

Special Instructions / Validation as required from the MA or any other information the contractor deems necessary to share that was identified:

Issue:

Response:

Schedule A – Photo & Document File Structure

- VzW Site Number / Name
  - Base & "During Installation" Photos
  - Pre-Installation Photos
    - Alpha
    - Beta
    - Gamma
    - Ground Level
    - Tape Drop
  - Post-Installation Photos
    - Alpha
    - Beta
    - Gamma
    - Ground Level
    - Tape Drop
    - Photos of climbing facility and safety climb – If Present
  - Certifications – Submission of this document including certifications
  - Specific Required Additional Photos

Structure: 467476-VZW - CANTON CT

Sector: **A**

Structure Type: Monopole

Mount Elev: 118.00

10050595

7/1/2021

Page: 1

MASER CONSULTING — CONNECTICUT —

Plan View

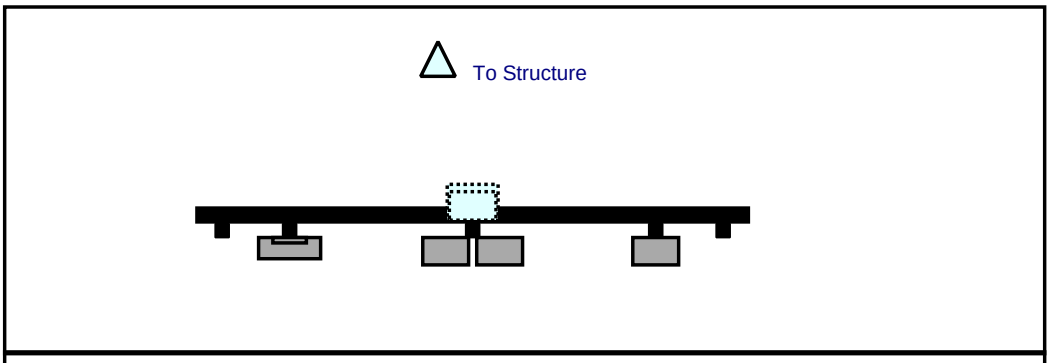

Front View
Looking at Structure

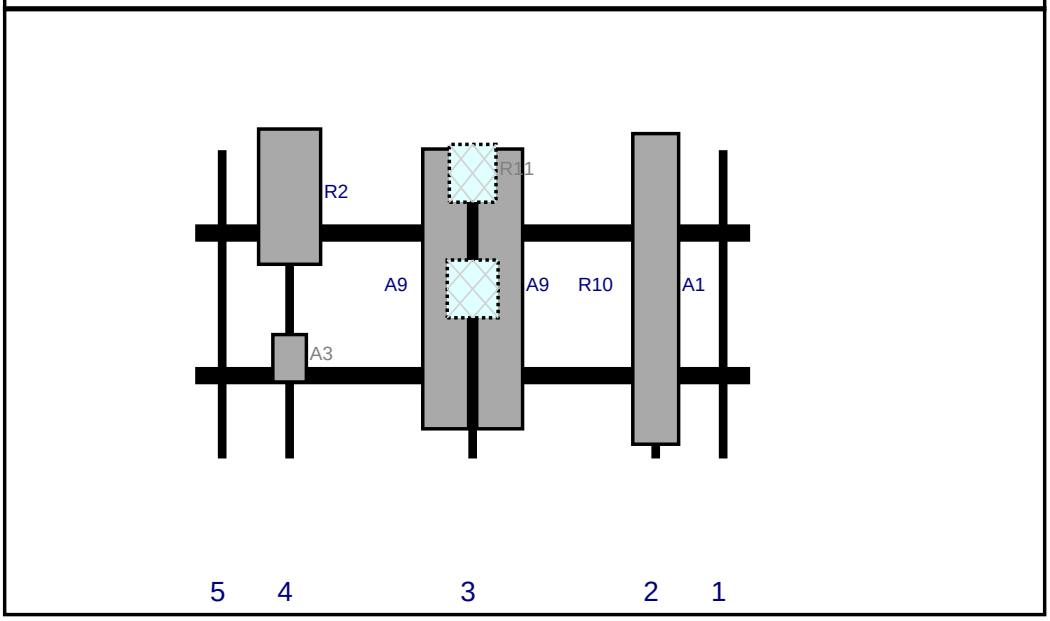

Ref#	Model	Height (in)	Width (in)	H Dist Frm L.	Pipe #	Pipe Pos V	Ant Pos	C. Ant Frm T.	Ant H Off	Status	Validation
A1	LNX-6514DS-A1M	80.6	11.9	119.5	2	a	Front	36	0	Added	
A9	SBNHH-1D65B	72.6	11.9	72	3	a	Front	36	7	Retained	04/14/2021
A9	SBNHH-1D65B	72.6	11.9	72	3	b	Front	36	-7	Retained	04/14/2021
R10	B2/B66A RRH-BR049 (RFV01U-D1A)	15	13.2	72	3	a	Behind	36	0	Retained	04/14/2021
R11	B5/B13 RRH-BR04C (RFV01U-D2A)	15	12.1	72	3	a	Behind	6	0	Retained	04/14/2021
A3	XXDWMM-12.5-65-8T	12.3	8.7	24.5	4	a	Front	54	0	Added	
R2	MT6407-77A	35.1	16.1	24.5	4	a	Front	12.06	0	Added	

Copyright 2019 by Tower Engineering Solutions, LLC. All Rights Reserved

Plan View

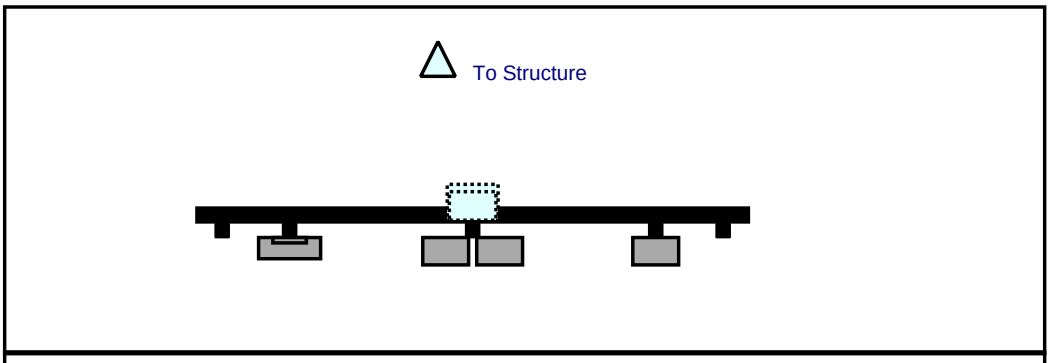

Front View
Looking at Structure

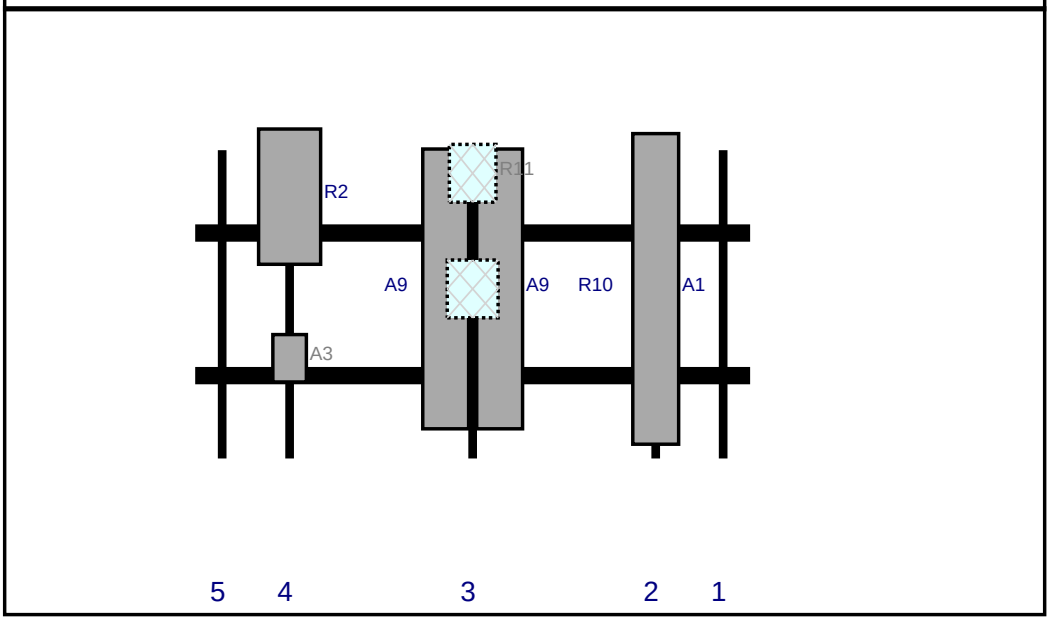

Ref#	Model	Height (in)	Width (in)	H Dist Frm L.	Pipe #	Pipe Pos V	Ant Pos	C. Ant Frm T.	Ant H Off	Status	Validation
A1	LNX-6514DS-A1M	80.6	11.9	119.5	2	a	Front	36	0	Added	
A9	SBNHH-1D65B	72.6	11.9	72	3	a	Front	36	7	Retained	04/14/2021
A9	SBNHH-1D65B	72.6	11.9	72	3	b	Front	36	-7	Retained	04/14/2021
R10	B2/B66A RRH-BR049 (RFV01U-D1A)	15	13.2	72	3	a	Behind	36	0	Retained	04/14/2021
R11	B5/B13 RRH-BR04C (RFV01U-D2A)	15	12.1	72	3	a	Behind	6	0	Retained	04/14/2021
A3	XXDWMM-12.5-65-8T	12.3	8.7	24.5	4	a	Front	54	0	Added	
R2	MT6407-77A	35.1	16.1	24.5	4	a	Front	12.06	0	Added	

Copyright 2019 by Tower Engineering Solutions, LLC. All Rights Reserved

Plan View

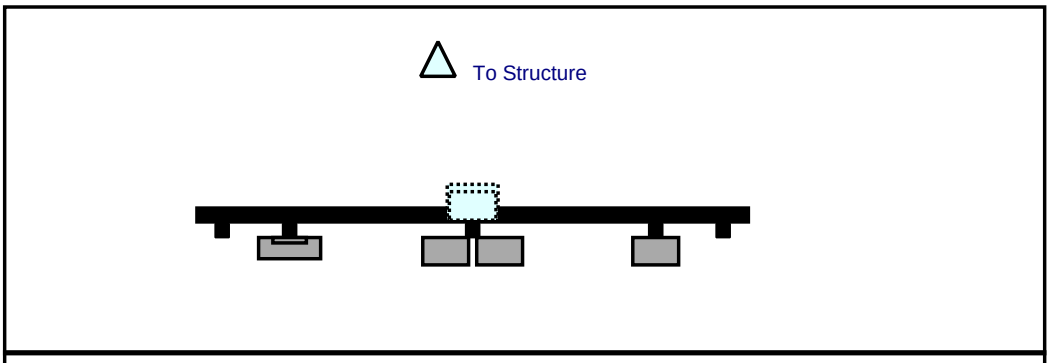

Front View
Looking at Structure

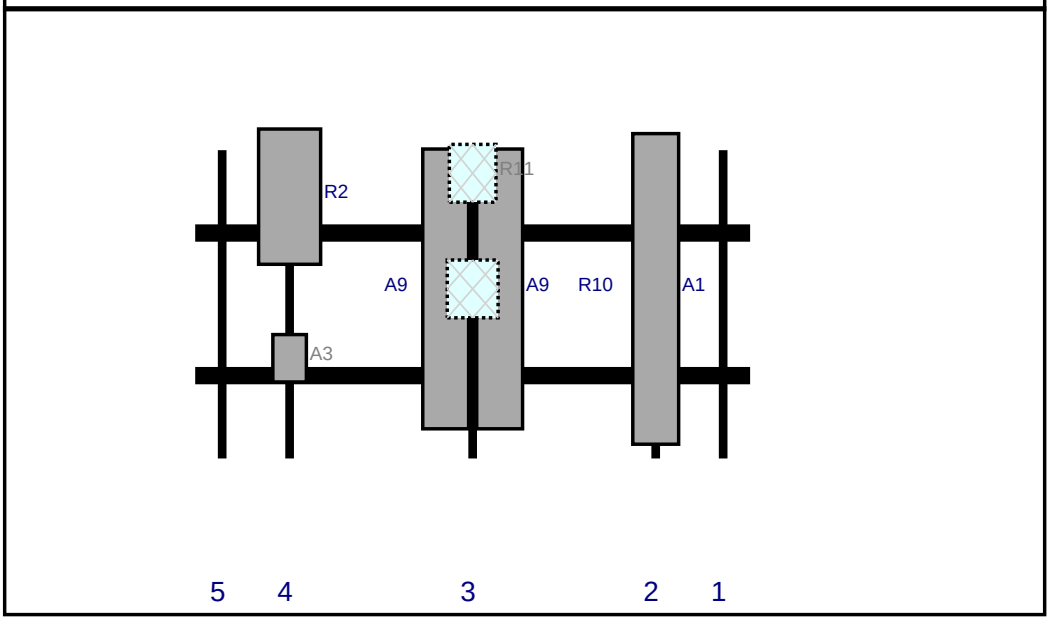

Ref#	Model	Height (in)	Width (in)	H Dist Frm L.	Pipe #	Pipe Pos V	Ant Pos	C. Ant Frm T.	Ant H Off	Status	Validation
A1	LNX-6514DS-A1M	80.6	11.9	119.5	2	a	Front	36	0	Added	
A9	SBNHH-1D65B	72.6	11.9	72	3	a	Front	36	7	Retained	04/14/2021
A9	SBNHH-1D65B	72.6	11.9	72	3	b	Front	36	-7	Retained	04/14/2021
R10	B2/B66A RRH-BR049 (RFV01U-D1A)	15	13.2	72	3	a	Behind	36	0	Retained	04/14/2021
R11	B5/B13 RRH-BR04C (RFV01U-D2A)	15	12.1	72	3	a	Behind	6	0	Retained	04/14/2021
A3	XXDWMM-12.5-65-8T	12.3	8.7	24.5	4	a	Front	54	0	Added	
R2	MT6407-77A	35.1	16.1	24.5	4	a	Front	12.06	0	Added	

Copyright 2019 by Tower Engineering Solutions, LLC. All Rights Reserved

Maser Consulting Connecticut

Subject	TIA-222-H Usage	
Site Information	Site ID:	*467476-VZW / CANTON CT*
	Site Name:	*CANTON CT*
	Carrier Name:	*Verizon Wireless*
	Address:	*14 Canton Springs Road* *Canton, Connecticut 06019* *Hartford County*
	Latitude:	*41.822876°*
	Longitude:	*-72.895101°*
Structure Information	Tower Type:	*Monopole*
	Mount Type:	*12.00-Ft Platform*

To Whom It May Concern,

We respectfully submit the above referenced Antenna Mount Structural Analysis report in conformance with ANSI/TIA-222-H, Structural Standard for Antenna Supporting Structures and Antennas and Small Wind Turbine Support Structures.

The 2015 International Building Code states that, in Section 3108, telecommunication towers shall be designed and constructed in accordance with the provisions of TIA-222. TIA-222-H is the latest revision of the TIA-222 Standard, effective as of January 01, 2018.

As with all ANSI standards and engineering best practice is to apply the most current revision of the standard. This ensures the engineer is applying all updates. As an example, the TIA-222-H Standard includes updates to bring it in line with the latest AISC and ACI standards and it also incorporates the latest wind speed maps by ASCE 7 based on updated studies of the wind data.

The TIA-222-H standard clarifies these specific requirements for the antenna mount analysis such as modeling methods, seismic analysis, 30-degree increment wind directions and maintenance loading. Therefore, it is our opinion that TIA-222-H is the most appropriate standard for antenna mount structural analysis and is acceptable for use at this site to ensure the engineer is taking into account the most current engineering standard available.

Sincerely,

Dejian Xu

Dejian Xu, PE
Technical Manager

Site Name: ***CANTON CT***
Cumulative Power Density

Operator	Operating Frequency	Number of Trans.	ERP Per Trans.	Total ERP	Distance to Target	Calculated Power Density	Maximum Permissible Exposure*	Fraction of MPE
	(MHz)		(watts)	(watts)	(feet)	(mW/cm^2)	(mW/cm^2)	(%)
VZW 700	751	4	689	2756	120	0.0069	0.5007	1.37%
VZW CDMA	869	2	389	778	120	0.0019	0.5793	0.34%
VZW Cellular	869	4	819	3276	120	0.0082	0.5793	1.41%
VZW PCS	1970	4	1593	6372	120	0.0159	1.0000	1.59%
VZW AWS	2110	4	1580	6320	120	0.0158	1.0000	1.58%
VZW CBAND	3730.08	4	6531	26124	122	0.0631	1.0000	6.31%
VZW CBRS	3625	4	12	48	118.5	0.0001	1.0000	0.01%
Total Percentage of Maximum Permissible Exposure								12.62%

*Guidelines adopted by the FCC on August 1, 1996, 47 CFR Part 1 based on NCRP Report 86, 1986 and generally on ANSI/IEEE C95.1-1992
**Calculation includes a -10 dB Off Beam Antenna Pattern Adjustment pursuant to Attachments B and C of the Siting Council's November 10, 2015 Memorandum for Exempt Modification filings

MHz = Megahertz
mW/cm^2 = milliwatts per square centimeter
ERP = Effective Radiated Power

Absolute worst case maximum values used.

Town of Canton

Geographic Information System (GIS)

Date Printed: 9/15/2021

MAP DISCLAIMER - NOTICE OF LIABILITY

This map is for assessment purposes only. It is not for legal description or conveyances. All information is subject to verification by any user. The Town of Canton and its mapping contractors assume no legal responsibility for the information contained herein.

Approximate Scale: 1 inch = 100 feet

0 100 Feet

N W E S

The Assessor's office is responsible for the maintenance of records on the ownership of properties. Assessments are computed at 70% of the estimated market value of real property at the time of the last revaluation which was 2018.

TOWN OF CANTON CT

Information on the Property Records for the Municipality of Canton was last updated on 9/14/2021.

Parcel Information

Location:	14 CANTON SPRINGS ROAD	Property Use:	Automotive	Primary Use:	Parking Structure
Unique ID:	1640014	Map Block Lot:	31/164/0014	Acres:	0.49
490 Acres:	0.00	Zone:	CVDVD	Volume / Page:	059 /433
Developers Map / Lot:		Census:			

Value Information

	Appraised Value	Assessed Value
Land	36,750	25,720
Buildings	463,513	324,460
Detached Outbuildings	4,000	2,800

	Appraised Value	Assessed Value
Total	504,263	352,980

Owner's Information

Owner's Data
CANTON VOLUNTEER FIRE DEPARTMENT P.O. BOX 104 CANTON CT 06019

Building 1

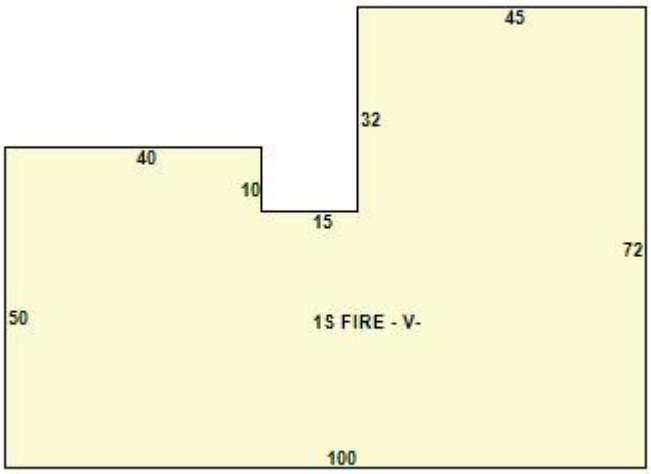

Category:	Public Use	Use:	Fire Station - Volunteer	GLA:	5,840
Stories:	1.00	Construction:	Wood Frame	Year Built:	1962

Heating:	FHA	Fuel:	UnKnown	Cooling Percent:	100
Siding:	Wood Frame	Roof Material:	Asphalt	Beds/Units:	0

Special Features

Attached Components

Detached Outbuildings

Type:	Year Built:	Length:	Width:	Area:
Paving	1962	0.00	0.00	5,000

Owner History - Sales

Owner Name	Volume	Page	Sale Date	Deed Type	Sale Price
CANTON VOLUNTEER FIRE	059	433			$0

Information Published With Permission From The Assessor