SITE NUMBER: CTV2139

SITE NAME: BROOKLYN H2O

FA CODE: 10035125

PACE ID: MRCTB056926, MRCTB056964, MRCTB056983, MRCTB057002

PROJECT: LTE 3C, 4C, 5C, 5G NR RADIO, 5G NR 1DR-1

PROJECT INFORMATION

SCOPE OF WORK:

ITEMS TO BE MOUNTED ON THE EXISTING WATER TANK:
- INSTALL ANTENNA (TPA65R-BU8DA-K) @ POS. 3 (TYP. OF 1 PER SECTOR, TOTAL OF 3)
- INSTALL ANTENNA (DMP65R-BU8DA) @ POS. 4 (TYP. OF 1 PER SECTOR, TOTAL OF 3)
- INSTALL RRUS-4478 B14 (700) (TYP. OF 1 PER SECTOR, TOTAL OF 3)
- INSTALL RRUS-4449 B5/B12 (700/850) (TYP. OF 1 PER SECTOR, TOTAL OF 3) (ADD "Y" CABLE)
- INSTALL RRUS-8843 B2/B66A (PCS/AWS) (TYP. OF 1 PER SECTOR, TOTAL OF 3) (ADD "Y" CABLE)
- INSTALL RRUS-4415 B30 (WCS) (TYP. OF 1 PER SECTOR, TOTAL OF 3
- INSTALL SURGE ARRESTOR DC6-48-60-18 (TYP. OF 1 PER SECTOR, TOTAL OF 3)
- INSTALL (3) 18 PAIR FIBER AND (6) 6AWG DC TRUNKS.
- RELOCATED EXISTING ANTENNA (7770) @ POS. 1 (TYP. OF 1 PER SECTOR, TOTAL OF 3)

ITEMS TO BE MOUNTED AT EQUIPMENT LOCATION:
- ADD 2ND 6630, (1) XMU, AND IDLe CABLE.
- ADD (2) DC12S IN RACK (TOTAL OF 3)
- PROPOSED (3) RECTIFIERS INSIDE EXISTING POWER PLANT.
- PROPOSED BATTERY RACK WITH (2) STRINGS OF BATTERIES.
- FINAL BBU=2X6630+1XXMU+IDLE.

ITEMS TO BE REMOVED:
- EXISTING LTE AT&T ANTENNA (AM-X-CD-17-65-00T-RET) @ POS. 1 (TYP. OF 1 PER SECTOR, TOTAL OF 3).
- EXISTING LTE AT&T ANTENNA (7770) @ POS. 4 (TYP. OF 1 PER SECTOR, TOTAL OF 3).
- EXISTING RRUS-11 B12 (TYP. OF 1 PER SECTOR, TOTAL OF 3).
- EXISTING RRUS-12 B2 (TYP. OF 1 PER SECTOR, TOTAL OF 3).
- EXISTING SURGE ARRESTOR DC2-48-60-0-9E (TYP. OF 1 PER SECTOR, TOTAL OF 3)
- EXISTING FC12-PC6-10E (TYP. OF 1)
- EXISTING DIPLEXERS LGP21901 (TYP. OF 4 PER SECTOR, TOTAL OF 12)(GROUND).
- EXISTING DIPLEXERS LGP21901 (TYP. OF 2 PER SECTOR, TOTAL OF 6)(TOP).
- EXISTING (2) DC TRUNKS AND (1) FIBER LINES

ITEMS TO REMAIN:
- (3) ANTENNAS, (6) TMAS, (12) 1-1/4" COAX CABLES.

RFDS:	FINAL APPROVED V2 RFDS 01/12/22
SITE ADDRESS:	50 TIFFANY STREET BROOKLYN, CT 06234
LATITUDE:	41.7974089°, 41° 47' 50.6720" N
LONGITUDE:	-71.8866939°, 71° 53' 12.09804" W
TYPE OF SITE:	WATER TANK / INDOOR EQUIPMENT
STRUCTURE HEIGHT:	130'-0"±
RAD CENTER:	131'-0"±
CURRENT USE:	TELECOMMUNICATIONS FACILITY
PROPOSED USE:	TELECOMMUNICATIONS FACILITY

DRAWING INDEX

SHEET NO.	DESCRIPTION	REV.
T-1	TITLE SHEET	1
GN-1	GENERAL NOTES	1
A-1	COMPOUND & EQUIPMENT PLAN	1
A-2	ANTENNA PLANS	1
A-3	ELEVATION	1
A-4	DETAILS	1
G-1	GROUNDING DETAILS	1
RF-1	RF PLUMBING DIAGRAM	1

VICINITY MAP

DIRECTIONS TO SITE: (FROM AT&T ADDRESS)

HEAD SOUTHEAST TOWARD CAPITAL BLVD, TURN LEFT ONTO CAPITAL BLVD, USE THE LEFT LANE TO TURN LEFT ONTO STATE HWY 411, TURN LEFT TO MERGE WITH I-91 N, MERGE WITH I-91 N, USE THE LEFT LANE TO TAKE EXIT 29 FOR U.S.5 N/CONNECTICUT 15 N/I-84 E TOWARD E HARTFORD/BOSTON, MERGE WITH US-5 N, CONTINUE ONTO CT-15 N, TAKE THE EXIT ON THE LEFT ONTO I-84 E TOWARD BOSTON, TAKE EXIT 59 FOR I-384 E TOWARD PROVIDENCE, CONTINUE ONTO I-384, CONTINUE ONTO US-44 E/US-6 E, KEEP RIGHT AT THE Y JUNCTION TO CONTINUE ON US-6 E, FOLLOW SIGNS FOR WILLIMANTIC/PROVIDENCE, TURN LEFT TO STAY ON US-6 E, USE THE RIGHT 2 LANES TO TURN RIGHT TO STAY ON US-6 E, BROOKLYN, CT 06234

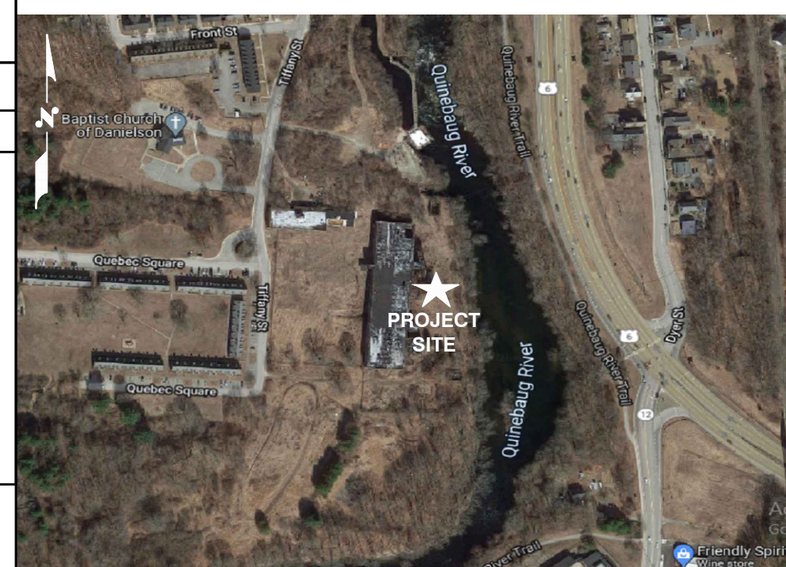

GENERAL NOTES

1. THIS DOCUMENT IS THE CREATION, DESIGN, PROPERTY AND COPYRIGHTED WORK OF AT&T. ANY DUPLICATION OR USE WITHOUT EXPRESS WRITTEN CONSENT IS STRICTLY PROHIBITED. DUPLICATION AND USE BY GOVERNMENT AGENCIES FOR THE PURPOSES OF CONDUCTING THEIR LAWFULLY AUTHORIZED REGULATORY AND ADMINISTRATIVE FUNCTIONS IS SPECIFICALLY ALLOWED.
2. THE FACILITY IS AN UNMANNED PRIVATE AND SECURED EQUIPMENT INSTALLATION. IT IS ONLY ACCESSED BY TRAINED TECHNICIANS FOR PERIODIC ROUTINE MAINTENANCE AND THEREFORE DOES NOT REQUIRE ANY WATER OR SANITARY SEWER SERVICE. THE FACILITY IS NOT GOVERNED BY REGULATIONS REQUIRING PUBLIC ACCESS PER ADA REQUIREMENTS.
3. CONTRACTOR SHALL VERIFY ALL PLANS AND EXISTING DIMENSIONS AND CONDITIONS ON THE JOB SITE AND SHALL IMMEDIATELY NOTIFY THE AT&T MOBILITY REPRESENTATIVE IN WRITING OF DISCREPANCIES BEFORE PROCEEDING WITH THE WORK OR BE RESPONSIBLE FOR SAME.
4. CONSTRUCTION DRAWINGS ARE VALID FOR SIX MONTHS AFTER ENGINEER OF RECORD'S STAMPED AND SIGNED SUBMITTAL DATE LISTED HEREIN.

72 HOURS

CALL BEFORE YOU DIG

CALL TOLL FREE 1-800-922-4455

OR CALL 811

UNDERGROUND SERVICE ALERT

STATE OF CONNECTICUT — DANIEL A. SKAMM — No. 24178 — LICENSED PROFESSIONAL ENGINEER

HUDSON Design Group LLC
45 BEECHWOOD DRIVE
NORTH ANDOVER, MA 01845
TEL: (978) 557-5553
FAX: (978) 336-5586

smartlink
SMARTLINK
1997 ANNAPOLIS EXCHANGE PKWY SUITE 200
ANNAPOLIS, MD 21401

SITE NUMBER: CTV2139
SITE NAME: BROOKLYN H2O

50 TIFFANY STREET
BROOKLYN, CT 06234
WINDHAM COUNTY

at&t
500 ENTERPRISE DRIVE, SUITE 3A
ROCKY HILL, CT 06067

NO.	DATE	REVISIONS	BY	CHK	APP'D
1	03/09/22	ISSUED FOR CONSTRUCTION	MB	MKT	DPH
0	01/25/22	ISSUED FOR REVIEW	ASK	MKT	DPH

SCALE: AS SHOWN | DESIGNED BY: AT | DRAWN BY: ASK

AT&T

TITLE SHEET
LTE 3C, 4C, 5C, 5G NR RADIO, 5G NR 1DR-1

SITE NUMBER	DRAWING NUMBER	REV
CTV2139	T-1	1

GROUNDING NOTES

1. THE SUBCONTRACTOR SHALL REVIEW AND INSPECT THE EXISTING FACILITY GROUNDING SYSTEM AND LIGHTNING PROTECTION SYSTEM (AS DESIGNED AND INSTALLED) FOR STRICT COMPLIANCE WITH THE NEC (AS ADOPTED BY THE AHJ), THE SITE-SPECIFIC (UL, LPI, OR NFPA) LIGHTING PROTECTION CODE, AND GENERAL COMPLIANCE WITH TELCORDIA AND TIA GROUNDING STANDARDS. THE SUBCONTRACTOR SHALL REPORT ANY VIOLATIONS OR ADVERSE FINDINGS TO THE CONTRACTOR FOR RESOLUTION.
2. ALL GROUND ELECTRODE SYSTEMS (INCLUDING TELECOMMUNICATION, RADIO, LIGHTNING PROTECTION, AND AC POWER GES'S) SHALL BE BONDED TOGETHER, AT OR BELOW GRADE, BY TWO OR MORE COPPER BONDING CONDUCTORS IN ACCORDANCE WITH THE NEC.
3. THE SUBCONTRACTOR SHALL PERFORM IEEE FALL-OF-POTENTIAL RESISTANCE TO EARTH TESTING (PER IEEE 1100 AND 81 STANDARDS) FOR NEW GROUND ELECTRODE SYSTEMS. THE SUBCONTRACTOR SHALL FURNISH AND INSTALL SUPPLEMENTAL GROUND ELECTRODES AS NEEDED TO ACHIEVE A TEST RESULT OF 5 OHMS OR LESS.
4. METAL RACEWAY SHALL NOT BE USED AS THE NEC REQUIRED EQUIPMENT GROUND CONDUCTOR. STRANDED COPPER CONDUCTORS WITH GREEN INSULATION, SIZED IN ACCORDANCE WITH THE NEC, SHALL BE FURNISHED AND INSTALLED WITH THE POWER CIRCUITS TO BTS EQUIPMENT.
5. EACH BTS CABINET FRAME SHALL BE DIRECTLY CONNECTED TO THE MASTER GROUND BAR WITH GREEN INSULATED SUPPLEMENTAL EQUIPMENT GROUND WIRES, #6 AWG STRANDED COPPER OR LARGER FOR INDOOR BTS AND #2 AWG STRANDED COPPER FOR OUTDOOR BTS.
6. EXOTHERMIC WELDS SHALL BE USED FOR ALL GROUNDING CONNECTIONS BELOW GRADE.
7. APPROVED ANTIOXIDANT COATINGS (I.E., CONDUCTIVE GEL OR PASTE) SHALL BE USED ON ALL COMPRESSION AND BOLTED GROUND CONNECTIONS.
8. ICE BRIDGE BONDING CONDUCTORS SHALL BE EXOTHERMICALLY BONDED OR BOLTED TO GROUND BAR.
9. ALUMINUM CONDUCTOR OR COPPER CLAD STEEL CONDUCTOR SHALL NOT BE USED FOR GROUNDING CONNECTIONS.
10. MISCELLANEOUS ELECTRICAL AND NON-ELECTRICAL METAL BOXES, FRAMES AND SUPPORTS SHALL BE BONDED TO THE GROUND RING, IN ACCORDANCE WITH THE NEC.
11. METAL CONDUIT SHALL BE MADE ELECTRICALLY CONTINUOUS WITH LISTED BONDING FITTINGS OR BY BONDING ACROSS THE DISCONTINUITY WITH #6 AWG COPPER WIRE UL APPROVED GROUNDING TYPE CONDUIT CLAMPS.
12. ALL NEW STRUCTURES WITH A FOUNDATION AND/OR FOOTING HAVING 20 FT. OR MORE OF 1/2 IN. OR GREATER ELECTRICALLY CONDUCTIVE REINFORCING STEEL MUST HAVE IT BONDED TO THE GROUND RING USING AN EXOTHERMIC WELD CONNECTION USING #2 AWG SOLID BARE TINNED COPPER GROUND WIRE, PER NEC 250.50

GENERAL NOTES

1. FOR THE PURPOSE OF CONSTRUCTION DRAWING, THE FOLLOWING DEFINITIONS SHALL APPLY:

   CONTRACTOR – SMARTLINK
   SUBCONTRACTOR – GENERAL CONTRACTOR (CONSTRUCTION)
   OWNER – AT&T MOBILITY

2. PRIOR TO THE SUBMISSION OF BIDS, THE BIDDING SUBCONTRACTOR SHALL VISIT THE CELL SITE TO FAMILIARIZE WITH THE EXISTING CONDITIONS AND TO CONFIRM THAT THE WORK CAN BE ACCOMPLISHED AS SHOWN ON THE CONSTRUCTION DRAWINGS. ANY DISCREPANCY FOUND SHALL BE BROUGHT TO THE ATTENTION OF CONTRACTOR.
3. ALL MATERIALS FURNISHED AND INSTALLED SHALL BE IN STRICT ACCORDANCE WITH ALL APPLICABLE CODES, REGULATIONS, AND ORDINANCES. SUBCONTRACTOR SHALL ISSUE ALL APPROPRIATE NOTICES AND COMPLY WITH ALL LAWS, ORDINANCES, RULES, REGULATIONS, AND LAWFUL ORDERS OF ANY PUBLIC AUTHORITY REGARDING THE PERFORMANCE OF THE WORK. ALL WORK CARRIED OUT SHALL COMPLY WITH ALL APPLICABLE MUNICIPAL AND UTILITY COMPANY SPECIFICATIONS AND LOCAL JURISDICTIONAL CODES, ORDINANCES AND APPLICABLE REGULATIONS.
4. DRAWINGS PROVIDED HERE ARE NOT TO BE SCALED AND ARE INTENDED TO SHOW OUTLINE ONLY.
5. UNLESS NOTED OTHERWISE, THE WORK SHALL INCLUDE FURNISHING MATERIALS, EQUIPMENT, APPURTENANCES, AND LABOR NECESSARY TO COMPLETE ALL INSTALLATIONS AS INDICATED ON THE DRAWINGS.
6. "KITTING LIST" SUPPLIED WITH THE BID PACKAGE IDENTIFIES ITEMS THAT WILL BE SUPPLIED BY CONTRACTOR. ITEMS NOT INCLUDED IN THE BILL OF MATERIALS AND KITTING LIST SHALL BE SUPPLIED BY THE SUBCONTRACTOR.
7. THE SUBCONTRACTOR SHALL INSTALL ALL EQUIPMENT AND MATERIALS IN ACCORDANCE WITH MANUFACTURER'S RECOMMENDATIONS UNLESS SPECIFICALLY STATED OTHERWISE.
8. IF THE SPECIFIED EQUIPMENT CANNOT BE INSTALLED AS SHOWN ON THESE DRAWINGS, THE SUBCONTRACTOR SHALL PROPOSE AN ALTERNATIVE INSTALLATION SPACE FOR APPROVAL BY THE CONTRACTOR.
9. SUBCONTRACTOR SHALL DETERMINE ACTUAL ROUTING OF CONDUIT, POWER AND T1 CABLES, GROUNDING CABLES AS SHOWN ON THE POWER, GROUNDING AND TELCO PLAN DRAWING. SUBCONTRACTOR SHALL UTILIZE EXISTING TRAYS AND/OR SHALL ADD NEW TRAYS AS NECESSARY. SUBCONTRACTOR SHALL CONFIRM THE ACTUAL ROUTING WITH THE CONTRACTOR.
10. THE SUBCONTRACTOR SHALL PROTECT EXISTING IMPROVEMENTS, PAVEMENTS, CURBS, LANDSCAPING AND STRUCTURES. ANY DAMAGED PART SHALL BE REPAIRED AT SUBCONTRACTOR'S EXPENSE TO THE SATISFACTION OF OWNER.
11. SUBCONTRACTOR SHALL LEGALLY AND PROPERLY DISPOSE OF ALL SCRAP MATERIALS SUCH AS COAXIAL CABLES AND OTHER ITEMS REMOVED FROM THE EXISTING FACILITY. ANTENNAS REMOVED SHALL BE RETURNED TO THE OWNER'S DESIGNATED LOCATION.
12. SUBCONTRACTOR SHALL LEAVE PREMISES IN CLEAN CONDITION.
13. ALL CONCRETE REPAIR WORK SHALL BE DONE IN ACCORDANCE WITH AMERICAN CONCRETE INSTITUTE (ACI) 301.
14. ANY NEW CONCRETE NEEDED FOR THE CONSTRUCTION SHALL BE AIR-ENTRAINED AND SHALL HAVE 4000 PSI STRENGTH AT 28 DAYS. ALL CONCRETE WORK SHALL BE DONE IN ACCORDANCE WITH ACI 318 CODE REQUIREMENTS.
15. ALL STRUCTURAL STEEL WORK SHALL BE DETAILED, FABRICATED AND ERECTED IN ACCORDANCE WITH AISC SPECIFICATIONS. ALL STRUCTURAL STEEL SHALL BE ASTM A36 (Fy = 36 ksi) UNLESS OTHERWISE NOTED. PIPES SHALL BE ASTM A53 TYPE E (Fy = 36 ksi). ALL STEEL EXPOSED TO WEATHER SHALL BE HOT DIPPED GALVANIZED. TOUCH UP ALL SCRATCHES AND OTHER MARKS IN THE FIELD AFTER STEEL IS ERECTED USING A COMPATIBLE ZINC RICH PAINT.
16. CONSTRUCTION SHALL COMPLY WITH SPECIFICATIONS AND "GENERAL CONSTRUCTION SERVICES FOR CONSTRUCTION OF AT&T SITES."
17. SUBCONTRACTOR SHALL VERIFY ALL EXISTING DIMENSIONS AND CONDITIONS PRIOR TO COMMENCING ANY WORK. ALL DIMENSIONS OF EXISTING CONSTRUCTION SHOWN ON THE DRAWINGS MUST BE VERIFIED. SUBCONTRACTOR SHALL NOTIFY THE CONTRACTOR OF ANY DISCREPANCIES PRIOR TO ORDERING MATERIAL OR PROCEEDING WITH CONSTRUCTION.
18. THE EXISTING CELL SITE IS IN FULL COMMERCIAL OPERATION. ANY CONSTRUCTION WORK BY SUBCONTRACTOR SHALL NOT DISRUPT THE EXISTING NORMAL OPERATION. ANY WORK ON EXISTING EQUIPMENT MUST BE COORDINATED WITH CONTRACTOR. ALSO, WORK SHOULD BE SCHEDULED FOR AN APPROPRIATE MAINTENANCE WINDOW USUALLY IN LOW TRAFFIC PERIODS AFTER MIDNIGHT.
19. SINCE THE CELL SITE IS ACTIVE, ALL SAFETY PRECAUTIONS MUST BE TAKEN WHEN WORKING AROUND HIGH LEVELS OF ELECTROMAGNETIC RADIATION. EQUIPMENT SHOULD BE SHUTDOWN PRIOR TO PERFORMING ANY WORK THAT COULD EXPOSE THE WORKERS TO DANGER. PERSONAL RF EXPOSURE MONITORS ARE ADVISED TO BE WORN TO ALERT OF ANY DANGEROUS EXPOSURE LEVELS.
20. **APPLICABLE BUILDING CODES:**
    SUBCONTRACTOR'S WORK SHALL COMPLY WITH ALL APPLICABLE NATIONAL, STATE, AND LOCAL CODES AS ADOPTED BY THE LOCAL AUTHORITY HAVING JURISDICTION (AHJ) FOR THE LOCATION. THE EDITION OF THE AHJ ADOPTED CODES AND STANDARDS IN EFFECT ON THE DATE OF CONTRACT AWARD SHALL GOVERN THE DESIGN.

    BUILDING CODE: IBC 2015 WITH 2018 CT STATE BUILDING CODE AMENDMENTS
    ELECTRICAL CODE: 2017 NATIONAL ELECTRICAL CODE (NFPA 70-2017)

    SUBCONTRACTOR'S WORK SHALL COMPLY WITH THE LATEST EDITION OF THE FOLLOWING STANDARDS:

    AMERICAN CONCRETE INSTITUTE (ACI) 318; BUILDING CODE REQUIREMENTS FOR STRUCTURAL CONCRETE;

    AMERICAN INSTITUTE OF STEEL CONSTRUCTION (AISC) MANUAL OF STEEL CONSTRUCTION, ASD, FOURTEENTH EDITION;

    TELECOMMUNICATIONS INDUSTRY ASSOCIATION (TIA) 222-H, STRUCTURAL STANDARDS FOR STEEL

    FOR ANY CONFLICTS BETWEEN SECTIONS OF LISTED CODES AND STANDARDS REGARDING MATERIAL, METHODS OF CONSTRUCTION, OR OTHER REQUIREMENTS, THE MOST RESTRICTIVE REQUIREMENT SHALL GOVERN. WHERE THERE IS CONFLICT BETWEEN A GENERAL REQUIREMENT AND A SPECIFIC REQUIREMENT, THE SPECIFIC REQUIREMENT SHALL GOVERN.

ABBREVIATIONS

AGL	ABOVE GRADE LEVEL	EQ	EQUAL	REQ	REQUIRED
AWG	AMERICAN WIRE GAUGE	GC	GENERAL CONTRACTOR	RF	RADIO FREQUENCY
BBU	BATTERY BACKUP UNIT	GRC	GALVANIZED RIGID CONDUIT	TBD	TO BE DETERMINED
BTCW	BARE TINNED SOLID COPPER WIRE	MGB	MASTER GROUND BAR	TBR	TO BE REMOVED
BGR	BURIED GROUND RING	MIN	MINIMUM	TBRR	TO BE REMOVED AND REPLACED
BTS	BASE TRANSCEIVER STATION	P	PROPOSED	TYP	TYPICAL
E	EXISTING	NTS	NOT TO SCALE	UG	UNDER GROUND
EGB	EQUIPMENT GROUND BAR	RAD	RADIATION CENTER (ANTENNA)	VIF	VERIFY IN FIELD
EGR	EQUIPMENT GROUND RING	REF	REFERENCE		

HUDSON Design Group LLC
45 BEECHWOOD DRIVE
NORTH ANDOVER, MA 01845
TEL: (978) 557-5553
FAX: (978) 336-5586

smartlink
SMARTLINK
1997 ANNAPOLIS EXCHANGE PKWY SUITE 200
ANNAPOLIS, MD 21401

SITE NUMBER: CTV2139
SITE NAME: BROOKLYN H2O

50 TIFFANY STREET
BROOKLYN, CT 06234
WINDHAM COUNTY

at&t
500 ENTERPRISE DRIVE, SUITE 3A
ROCKY HILL, CT 06067

NO.	DATE	REVISIONS	BY	CHK	APP'D
1	03/09/22	ISSUED FOR CONSTRUCTION	MB	MKT	DPH
0	01/25/22	ISSUED FOR REVIEW	ASK	MKT	DPH

SCALE: AS SHOWN | DESIGNED BY: AT | DRAWN BY: ASK

STATE OF CONNECTICUT · DANIEL P. HAMM · No. 24178 · LICENSED PROFESSIONAL ENGINEER

AT&T

GENERAL NOTES
LTE 3C, 4C, 5C, 5G NR RADIO, 5G NR 1DR-1

SITE NUMBER	DRAWING NUMBER	REV
CTV2139	GN-1	1

NOTE:

REFER TO STRUCTURAL ANALYSIS BY: HUDSON DESIGN GROUP, LLC, DATED: FEBRUARY 04, 2022, FOR THE CAPACITY OF THE EXISTING STRUCTURES TO SUPPORT THE PROPOSED EQUIPMENT.

NOTE:

REFER TO FINAL APPROVED V2 RFDS 01/12/22

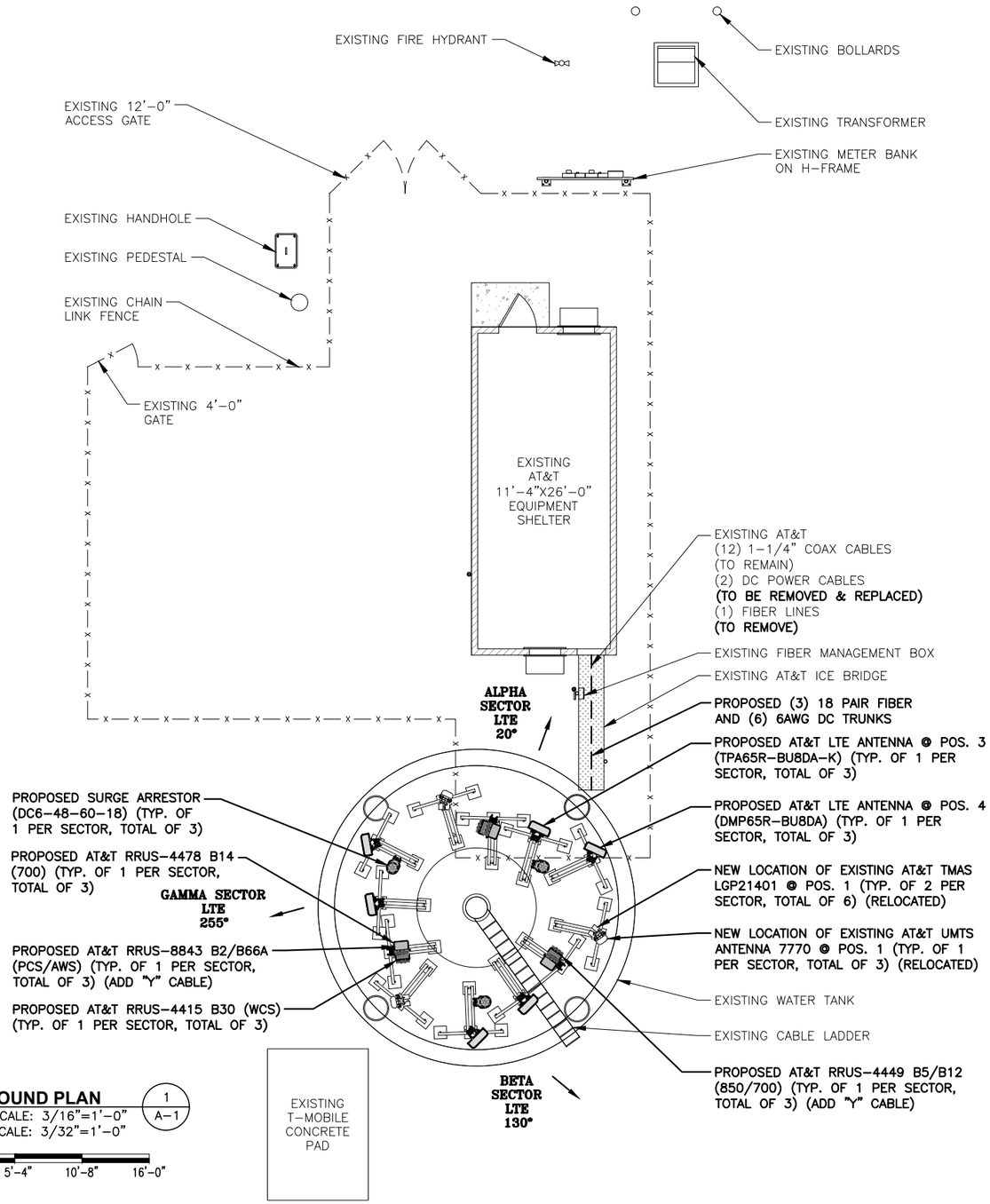

13°8' MAGNETIC NORTH TRUE NORTH

COMPOUND PLAN

1 / A-1

22x34 SCALE: 3/16"=1'-0"
11x17 SCALE: 3/32"=1'-0"

0 2'-8" 5'-4" 10'-8" 16'-0"

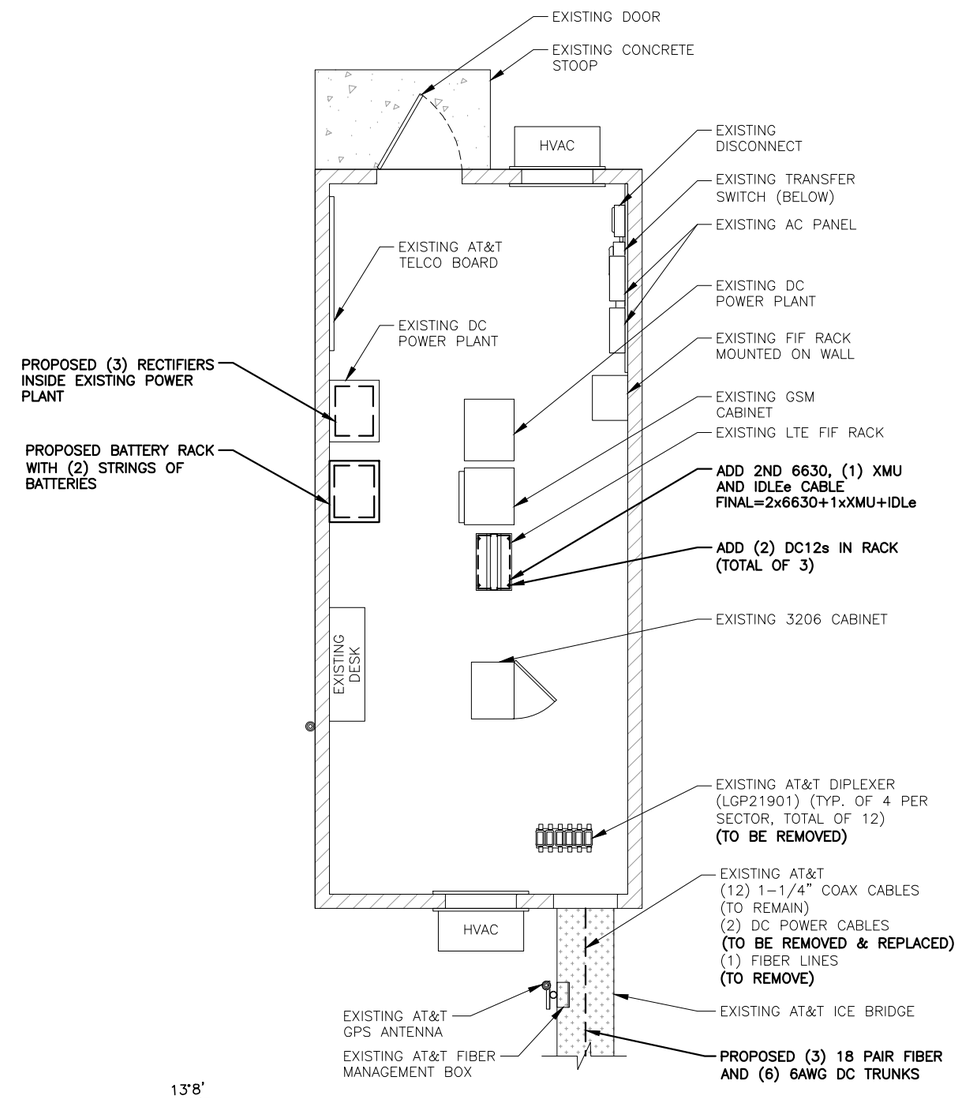

13°8' MAGNETIC NORTH TRUE NORTH

EQUIPMENT PLAN

2 / A-1

22x34 SCALE: 3/8"=1'-0"
11x17 SCALE: 3/16"=1'-0"

0 2'-8" 5'-4" 8'-0"

STATE OF CONNECTICUT DANIEL P. HAMM NO. 24178 LICENSED PROFESSIONAL ENGINEER

HUDSON Design Group LLC
45 BEECHWOOD DRIVE
NORTH ANDOVER, MA 01845
TEL: (978) 557-5553
FAX: (978) 336-5586

smartlink
SMARTLINK
1997 ANNAPOLIS EXCHANGE PKWY SUITE 200
ANNAPOLIS, MD 21401

SITE NUMBER: CTV2139
SITE NAME: BROOKLYN H2O

50 TIFFANY STREET
BROOKLYN, CT 06234
WINDHAM COUNTY

at&t
500 ENTERPRISE DRIVE, SUITE 3A
ROCKY HILL, CT 06067

NO.	DATE	REVISIONS	BY	CHK	APP'D
1	03/09/22	ISSUED FOR CONSTRUCTION	MB	MKT	DPH
0	01/25/22	ISSUED FOR REVIEW	ASK	MKT	DPH

SCALE: AS SHOWN | DESIGNED BY: AT | DRAWN BY: ASK

AT&T

COMPOUND & EQUIPMENT PLANS
LTE 3C, 4C, 5C, 5G NR RADIO, 5G NR 1DR-1

SITE NUMBER	DRAWING NUMBER	REV
CTV2139	A-1	1

NOTE:

REFER TO STRUCTURAL ANALYSIS BY: HUDSON DESIGN GROUP, LLC, DATED: FEBRUARY 04, 2022, FOR THE CAPACITY OF THE EXISTING STRUCTURES TO SUPPORT THE PROPOSED EQUIPMENT.

NOTE:

REFER TO FINAL APPROVED V2 RFDS 01/12/22

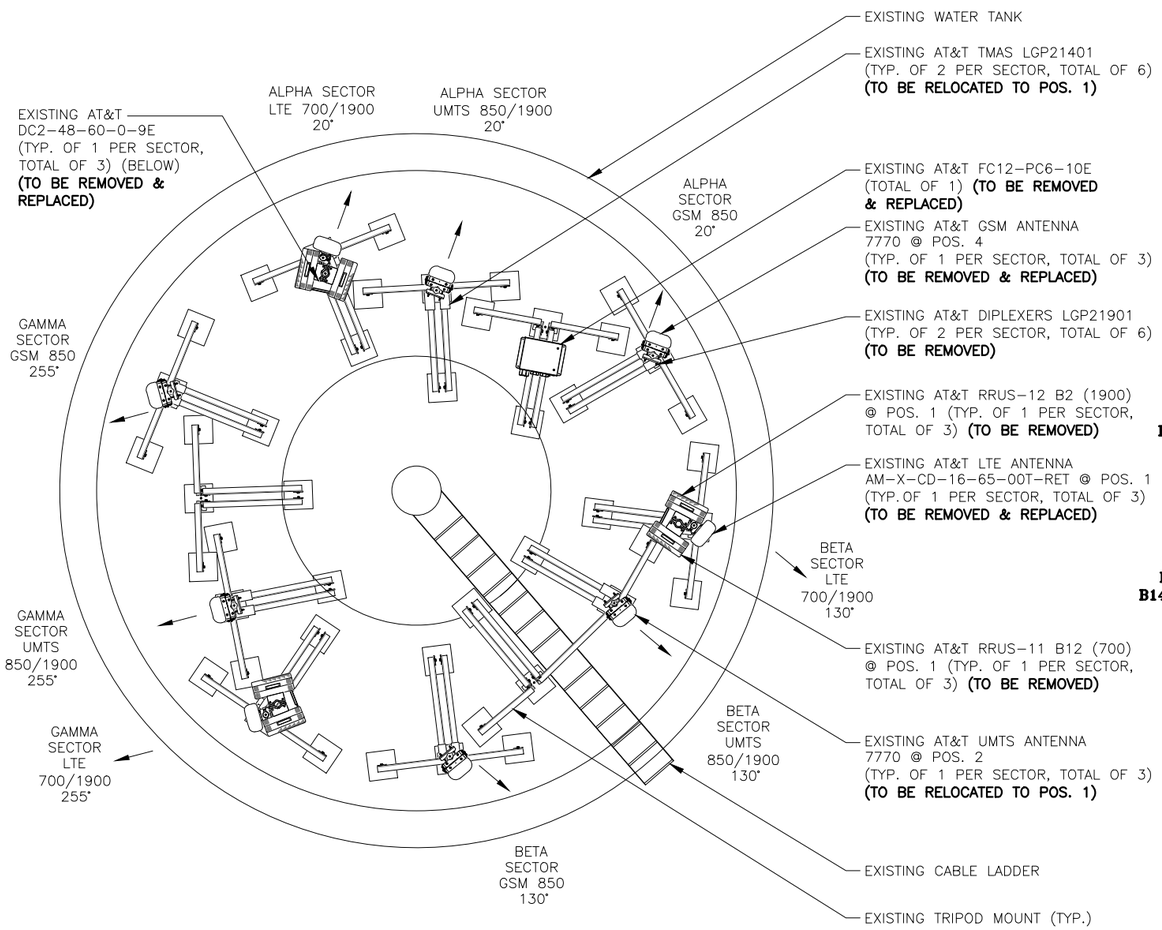

EXISTING ANTENNA LAYOUT (1 / A-2)
SCALE: N.T.S

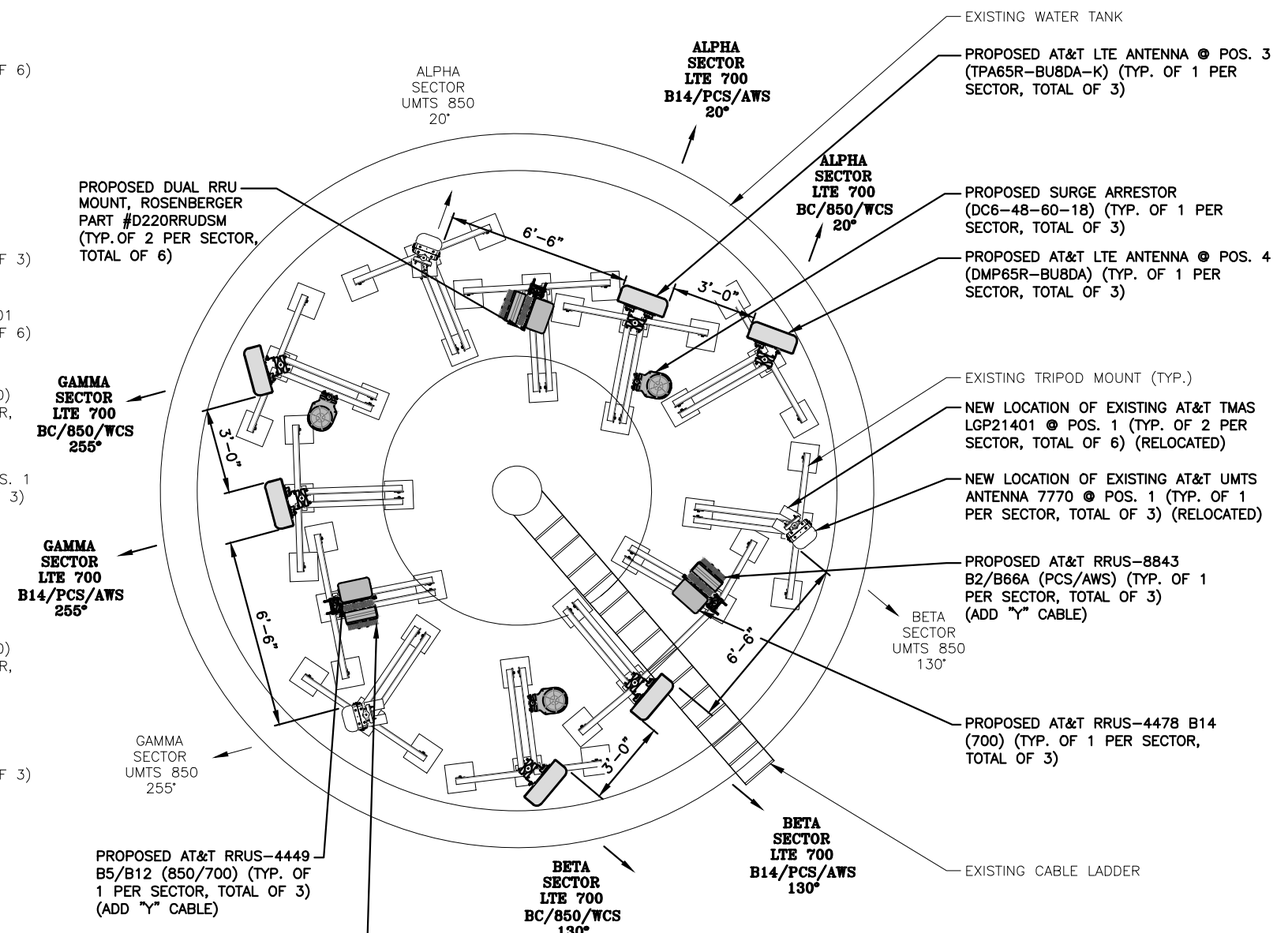

PROPOSED ANTENNA LAYOUT (2 / A-2)
SCALE: N.T.S

HUDSON Design Group LLC
45 BEECHWOOD DRIVE
NORTH ANDOVER, MA 01845
TEL: (978) 557-5553
FAX: (978) 336-5586

smartlink
SMARTLINK
1997 ANNAPOLIS EXCHANGE PKWY SUITE 200
ANNAPOLIS, MD 21401

SITE NUMBER: CTV2139
SITE NAME: BROOKLYN H2O

50 TIFFANY STREET
BROOKLYN, CT 06234
WINDHAM COUNTY

at&t
500 ENTERPRISE DRIVE, SUITE 3A
ROCKY HILL, CT 06067

NO.	DATE	REVISIONS	BY	CHK	APP'D
1	03/09/22	ISSUED FOR CONSTRUCTION	AB	MKT	DPH
0	01/25/22	ISSUED FOR REVIEW	ASK	MKT	DPH

SCALE: AS SHOWN | DESIGNED BY: AT | DRAWN BY: ASK

STATE OF CONNECTICUT
DANIEL P. HAMM
No. 24178
LICENSED PROFESSIONAL ENGINEER

AT&T

ANTENNA LAYOUTS
LTE 3C, 4C, 5C, 5G NR RADIO, 5G NR 1DR-1

SITE NUMBER	DRAWING NUMBER	REV
CTV2139	A-2	1

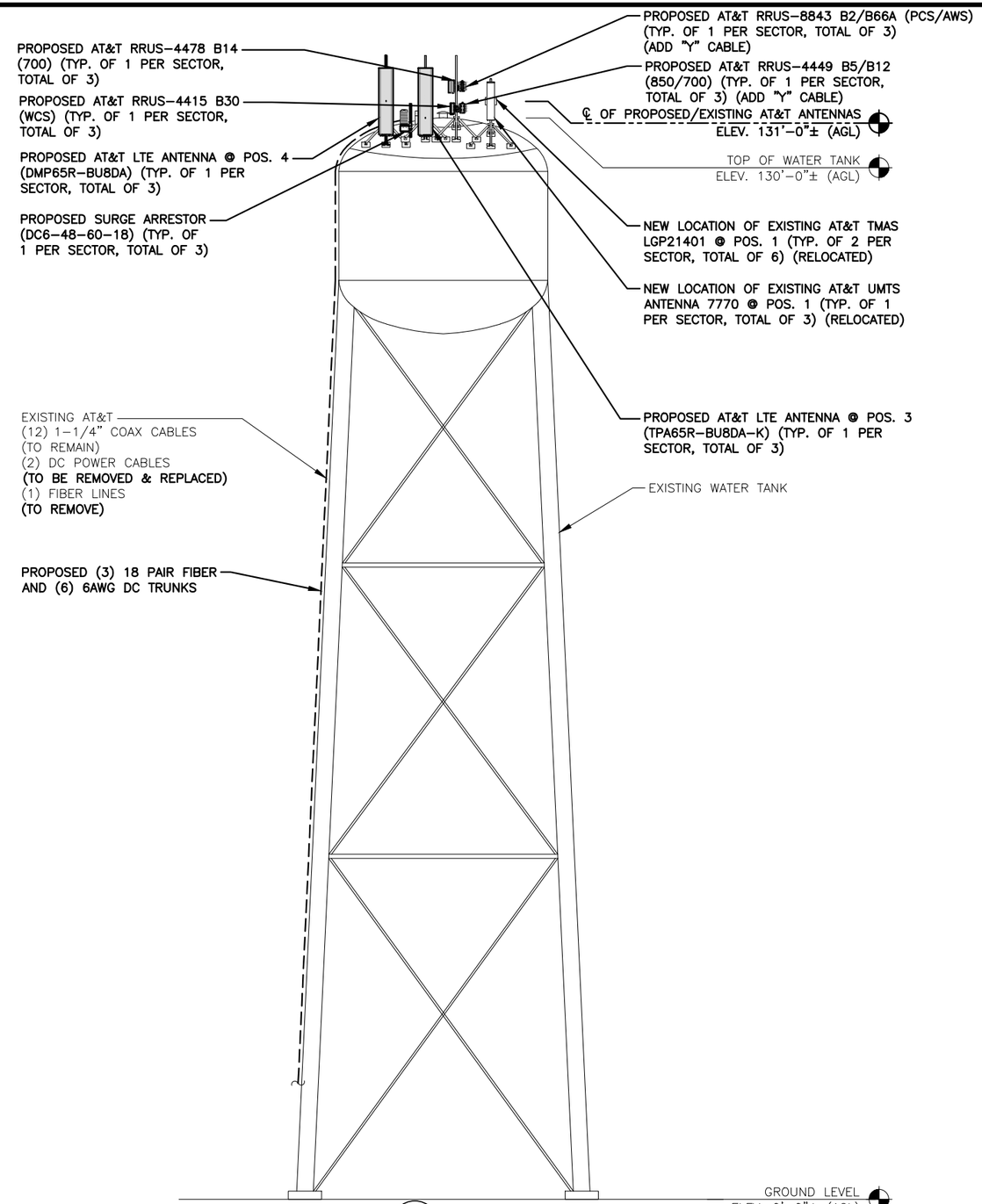

ELEVATION 1 / A-3
22x34 SCALE: 1/8"=1'-0"
11x17 SCALE: 1/16"=1'-0"

0 4'-0" 8'-0" 16'-0" 24'-0"

NOTE:

REFER TO FINAL APPROVED V2 RFDS 01/12/22

NOTE:

REFER TO STRUCTURAL ANALYSIS BY: HUDSON DESIGN GROUP, LLC, DATED: FEBRUARY 04, 2022, FOR THE CAPACITY OF THE EXISTING STRUCTURES TO SUPPORT THE PROPOSED EQUIPMENT.

HUDSON Design Group LLC
45 BEECHWOOD DRIVE
NORTH ANDOVER, MA 01845
TEL: (978) 557-5553
FAX: (978) 336-5586

smartlink
SMARTLINK
1997 ANNAPOLIS EXCHANGE PKWY SUITE 200
ANNAPOLIS, MD 21401

SITE NUMBER: CTV2139
SITE NAME: BROOKLYN H2O

50 TIFFANY STREET
BROOKLYN, CT 06234
WINDHAM COUNTY

at&t
500 ENTERPRISE DRIVE, SUITE 3A
ROCKY HILL, CT 06067

NO.	DATE	REVISIONS	BY	CHK	APP'D
1	03/09/22	ISSUED FOR CONSTRUCTION	AB	MKT	DPH
0	01/25/22	ISSUED FOR REVIEW	ASK	MKT	DPH

SCALE: AS SHOWN | DESIGNED BY: AT | DRAWN BY: ASK

STATE OF CONNECTICUT
DANIEL P. HAMM
No. 24178
LICENSED PROFESSIONAL ENGINEER

AT&T

ELEVATION
LTE 3C, 4C, 5C, 5G NR RADIO, 5G NR 1DR-1

SITE NUMBER	DRAWING NUMBER	REV
CTV2139	A-3	1

ANTENNA SCHEDULE

FINAL APPROVED V2 RFDS 01/12/22

SECTOR	EXISTING/ PROPOSED	BAND	ANTENNA	SIZE (INCHES) (L x W x D)	ANTENNA ℄ HEIGHT	AZIMUTH	TMA/ DIPLEXER	RRU	SIZE (INCHES) (L x W x D)	FEEDER	RAYCAP
A1	EXISTING	UMTS 850	7770	55"X11"X5"	131'-0"±	20°	(E)(2) LGP21401	–	–	(E)(2) 1-1/4" COAX CABLE	(P) (1) RAYCAP DC6-48-60-18
A2	–	–	–	–	–	–	–	–	–	(E)(2) 1-1/4" COAX CABLE	
A3	PROPOSED	LTE 700 B14/PCS/AWS	TPA65R-BU8DA-K	96"X20.7"X7.7"	131'-0"±	20°	–	(P)(1) 4478 B14 (700) (P)(1) 8843 B2/B66A (PCS/AWS)	16.5"x13.4"x5.9" 14.9"x13.2"x10.9"	(P)(1) Y-CABLE	
A4	PROPOSED	LTE 700 BC/850/WCS	DMP65R-BU8DA	96"x20.7"x7.7"	131'-0"±	20°	–	(P)(1) 4449 B5/B12 (700/850) (P)(1) 4415 B30 (WCS)	17.9"x13.2"x10.4" 16.5"x13.4"x5.9"	(P)(1) 18 PAIR FIBER (P)(2) 6AWG DC TRUNKS (APX. LENGTH 280'±) (P)(1) Y-CABLE	
B1	EXISTING	UMTS 850	7770	55"X11"X5"	131'-0"±	130°	(E)(2) LGP21401	–	–	(E)(2) 1-1/4" COAX CABLE	(P) (1) RAYCAP DC6-48-60-18
B2	–	–	–	–	–	–	–	–	–	(E)(2) 1-1/4" COAX CABLE	
B3	PROPOSED	LTE 700 B14/PCS/AWS	TPA65R-BU8DA-K	96"X20.7"X7.7"	131'-0"±	130°	–	(P)(1) 4478 B14 (700) (P)(1) 8843 B2/B66A (PCS/AWS)	16.5"x13.4"x5.9" 14.9"x13.2"x10.9"	(P)(1) Y-CABLE	
B4	PROPOSED	LTE 700 BC/850/WCS	DMP65R-BU8DA	96"x20.7"x7.7"	131'-0"±	130°	–	(P)(1) 4449 B5/B12 (700/850) (P)(1) 4415 B30 (WCS)	17.9"x13.2"x10.4" 16.5"x13.4"x5.9"	(P)(1) 18 PAIR FIBER (P)(2) 6AWG DC TRUNKS (APX. LENGTH 280'±) (P)(1) Y-CABLE	
C1	EXISTING	UMTS 850	7770	55"X11"X5"	131'-0"±	255°	(E)(2) LGP21401	–	–	(E)(2) 1-1/4" COAX CABLE	(P) (1) RAYCAP DC6-48-60-18
C2	–	–	–	–	–	–	–	–	–	(E)(2) 1-1/4" COAX CABLE	
C3	PROPOSED	LTE 700 B14/PCS/AWS	TPA65R-BU8DA-K	96"X20.7"X7.7"	131'-0"±	255°	–	(P)(1) 4478 B14 (700) (P)(1) 8843 B2/B66A (PCS/AWS)	16.5"x13.4"x5.9" 14.9"x13.2"x10.9"	(P)(1) Y-CABLE	
C4	PROPOSED	LTE 700 BC/850/WCS	DMP65R-BU8DA	96"x20.7"x7.7"	131'-0"±	255°	–	(P)(1) 4449 B5/B12 (700/850) (P)(1) 4415 B30 (WCS)	17.9"x13.2"x10.4" 16.5"x13.4"x5.9"	(P)(1) 18 PAIR FIBER (P)(2) 6AWG DC TRUNKS (APX. LENGTH 280'±) (P)(1) Y-CABLE	

RRU CHART

QUANTITY	MODEL	SIZE (L x W x D)
3(P)	4449 B5/B12 (700)	17.9"x13.2"x10.4"
3(P)	4478 B14 (700)	18.1"X13.4"X8.3"
3(P)	8843 B2/B66A (PCS/AWS)	14.9"x13.2"x10.9"
3(P)	4415 B30 (1900)	16.5"x13.4"x5.9"

NOTE:
MOUNT PER MANUFACTURER'S SPECIFICATIONS

NOTE:
REFER TO FINAL APPROVED V2 RFDS 01/12/22

NOTE:
REFER TO STRUCTURAL ANALYSIS BY: HUDSON DESIGN GROUP, LLC, DATED: FEBRUARY 04, 2022, FOR THE CAPACITY OF THE EXISTING STRUCTURES TO SUPPORT THE PROPOSED EQUIPMENT.

NOTE:
SEE RFDS FOR RRH FREQUENCY AND MODEL NUMBER

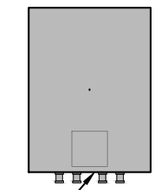

PROPOSED RRU REFER TO THE FINAL RFDS AND CHART FOR QUANTITY, MODEL AND DIMENSIONS

NOTE:
MOUNT PER MANUFACTURER'S SPECIFICATIONS.

PROPOSED RRUS DETAIL (2 / A-4)
SCALE: N.T.S

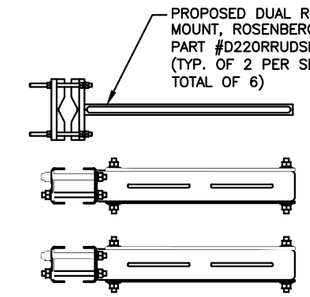

BACK TO BACK RRU MOUNT DETAIL (3 / A-4)
SCALE: N.T.S

FINAL ANTENNA CONFIGURATION (1 / A-4)
SCALE: N.T.S

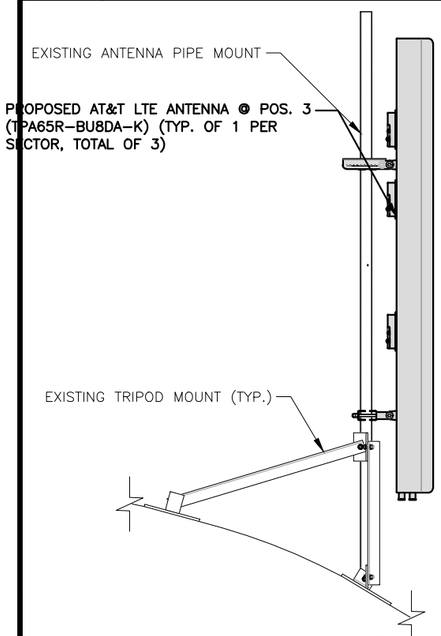

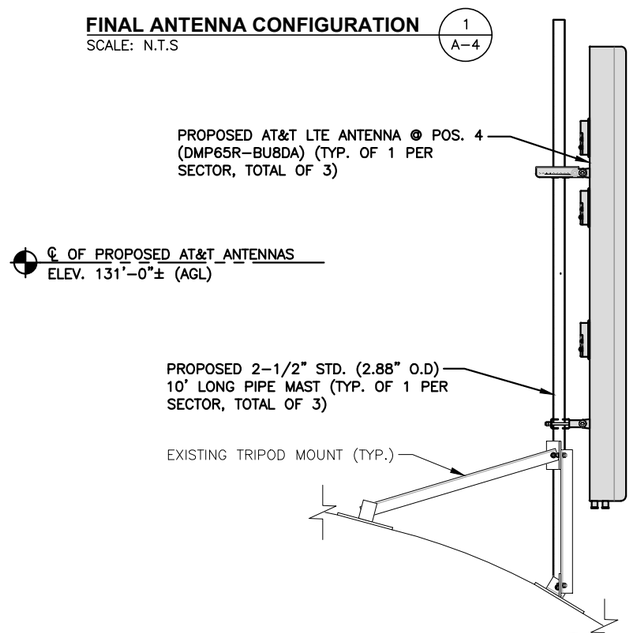

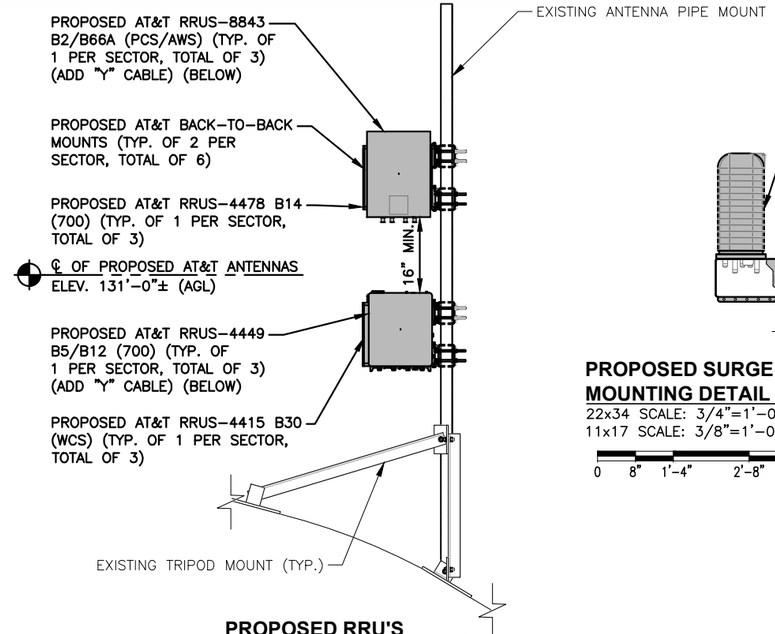

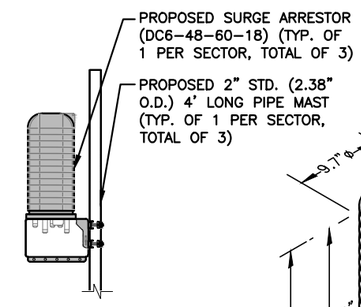

PROPOSED SURGE ARRESTOR MOUNTING DETAIL (7 / A-4)
22x34 SCALE: 3/4"=1'-0"
11x17 SCALE: 3/8"=1'-0"

0 8" 1'-4" 2'-8" 4'-0"

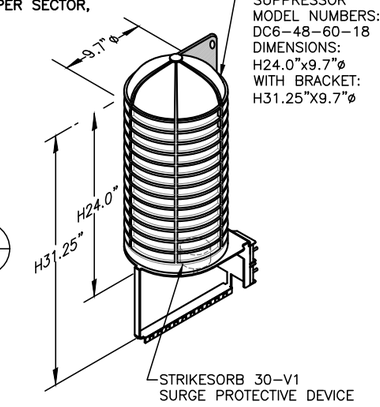

NOTE:
MOUNT PER MANUFACTURER'S SPECIFICATIONS.

PROPOSED ANTENNA @ POS. 3 (4 / A-4)
22x34 SCALE: 3/4"=1'-0"
11x17 SCALE: 3/8"=1'-0"

0 8" 1'-4" 2'-8" 4'-0"

PROPOSED ANTENNA @ POS. 4 (5 / A-4)
22x34 SCALE: 3/4"=1'-0"
11x17 SCALE: 3/8"=1'-0"

0 8" 1'-4" 2'-8" 4'-0"

PROPOSED RRU'S MOUNTING DETAIL (6 / A-4)
22x34 SCALE: 3/4"=1'-0"
11x17 SCALE: 3/8"=1'-0"

0 8" 1'-4" 2'-8" 4'-0"

DC SURGE SUPPRESSOR DETAIL (8 / A-4)
SCALE: N.T.S

HUDSON Design Group LLC
45 BEECHWOOD DRIVE
NORTH ANDOVER, MA 01845
TEL: (978) 557-5553
FAX: (978) 336-5586

smartlink
SMARTLINK
1997 ANNAPOLIS EXCHANGE PKWY SUITE 200
ANNAPOLIS, MD 21401

SITE NUMBER: CTV2139
SITE NAME: BROOKLYN H2O

50 TIFFANY STREET
BROOKLYN, CT 06234
WINDHAM COUNTY

at&t
500 ENTERPRISE DRIVE, SUITE 3A
ROCKY HILL, CT 06067

NO.	DATE	REVISIONS	BY	CHK	APP'D
1	03/09/22	ISSUED FOR CONSTRUCTION	AB	MKT	DPH
0	01/25/22	ISSUED FOR REVIEW	ASK	MKT	DPH

SCALE: AS SHOWN | DESIGNED BY: AT | DRAWN BY: ASK

STATE OF CONNECTICUT · DANIEL P. HAMM · No. 24178 · LICENSED PROFESSIONAL ENGINEER

AT&T

DETAILS
LTE 3C, 4C, 5C, 5G NR RADIO, 5G NR 1DR-1

SITE NUMBER	DRAWING NUMBER	REV
CTV2139	A-4	1

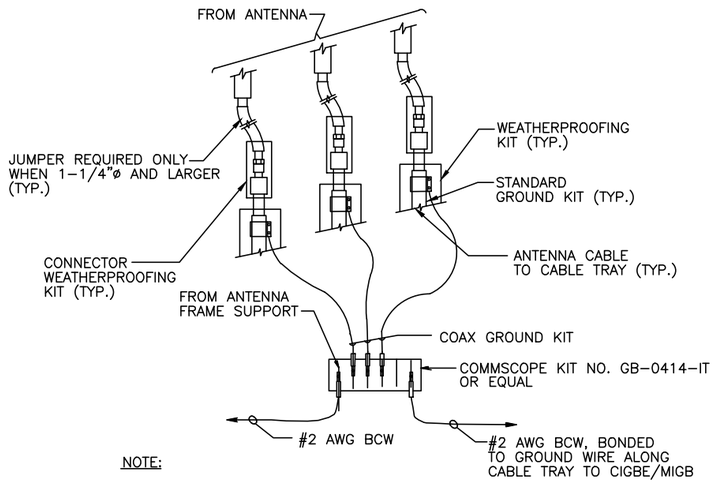

NOTE:

1. DO NOT INSTALL CABLE GROUND KIT AT A BEND AND ALWAYS DIRECT GROUND WIRE DOWN TO CIGBE.

GROUND WIRE TO GROUND BAR CONNECTION DETAIL (1 / G-1)

SCALE: N.T.S

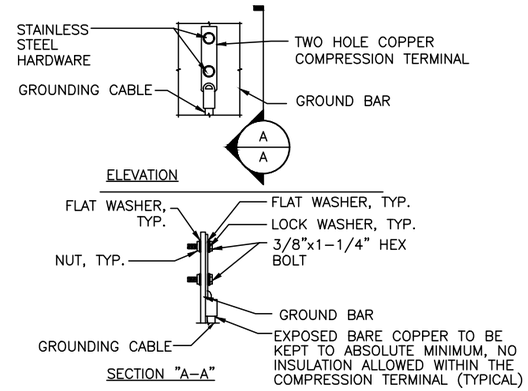

NOTES:

1. "DOUBLING UP" OR "STACKING" OF CONNECTION IS NOT PERMITTED.
2. OXIDE INHIBITING COMPOUND TO BE USED AT ALL LOCATION.
3. CADWELD DOWNLEADS FROM UPPER EGB, LOWER EGB, AND MGB

TYPICAL GROUND BAR CONNECTION DETAIL (3 / G-1)

SCALE: N.T.S

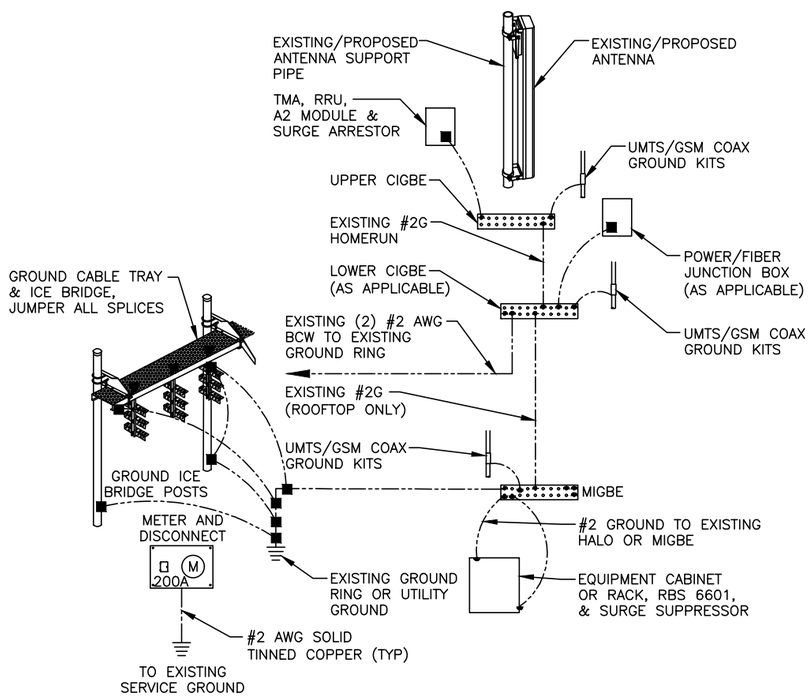

GROUNDING RISER DIAGRAM (2 / G-1)

SCALE: N.T.S

EACH GROUND CONDUCTOR TERMINATING ON ANY GROUND BAR SHALL HAVE AN IDENTIFICATION TAG ATTACHED AT EACH END THAT WILL IDENTIFY ITS ORIGIN AND DESTINATION.

SECTION "P" – SURGE PRODUCERS

CABLE ENTRY PORTS (HATCH PLATES) (#2 AWG)
GENERATOR FRAMEWORK (IF AVAILABLE) (#2 AWG)
TELCO GROUND BAR
COMMERCIAL POWER COMMON NEUTRAL/GROUND BOND (#2 AWG)
+24V POWER SUPPLY RETURN BAR (#2 AWG)
−48V POWER SUPPLY RETURN BAR (#2 AWG)
RECTIFIER FRAMES.

SECTION "A" – SURGE ABSORBERS

INTERIOR GROUND RING (#2 AWG)
EXTERNAL EARTH GROUND FIELD (BURIED GROUND RING) (#2 AWG)
METALLIC COLD WATER PIPE (IF AVAILABLE) (#2 AWG)
BUILDING STEEL (IF AVAILABLE) (#2 AWG)

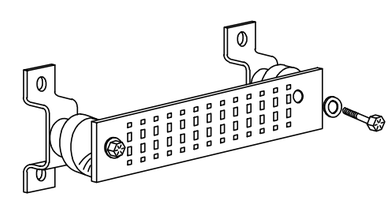

GROUND BAR - DETAIL (AS REQUIRED)

SCALE: N.T.S

HUDSON Design Group LLC
45 BEECHWOOD DRIVE
NORTH ANDOVER, MA 01845
TEL: (978) 557-5553
FAX: (978) 336-5586

smartlink
SMARTLINK
1997 ANNAPOLIS EXCHANGE PKWY SUITE 200
ANNAPOLIS, MD 21401

SITE NUMBER: CTV2139
SITE NAME: BROOKLYN H2O

50 TIFFANY STREET
BROOKLYN, CT 06234
WINDHAM COUNTY

at&t
500 ENTERPRISE DRIVE, SUITE 3A
ROCKY HILL, CT 06067

NO.	DATE	REVISIONS	BY	CHK	APP'D
1	03/09/22	ISSUED FOR CONSTRUCTION	MB	MKT	DPH
0	01/25/22	ISSUED FOR REVIEW	ASK	MKT	DPH

SCALE: AS SHOWN | DESIGNED BY: AT | DRAWN BY: ASK

STATE OF CONNECTICUT · DANIEL P. HAMM · No. 24178 · LICENSED PROFESSIONAL ENGINEER

AT&T

GROUNDING DETAILS
LTE 3C, 4C, 5C, 5G NR RADIO, 5G NR 1DR-1

SITE NUMBER	DRAWING NUMBER	REV
CTV2139	G-1	1

FINAL APPROVED V2 RFDS 01/12/22

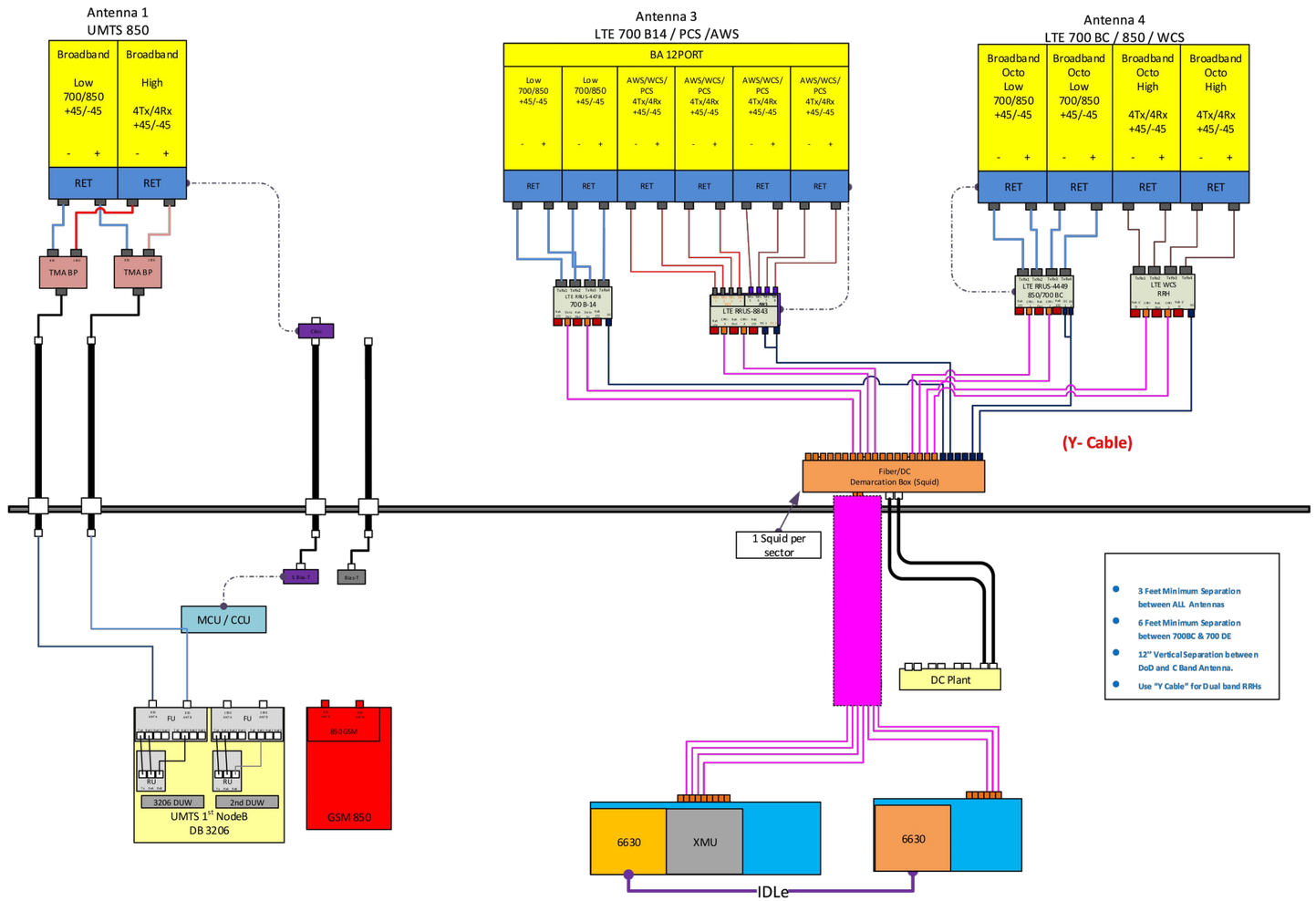

RF PLUMBING DIAGRAM (1 / RF–1)
SCALE: N.T.S

NOTE:
1. CONTRACTOR TO CONFIRM ALL PARTS.
2. INSTALL ALL EQUIPMENT TO MANUFACTURER'S RECOMMENDATIONS

NOTE:
REFER TO FINAL APPROVED V2 RFDS 01/12/22

STATE OF CONNECTICUT
DANIEL P. HAMM
No. 24178
LICENSED PROFESSIONAL ENGINEER

HUDSON Design Group LLC
45 BEECHWOOD DRIVE
NORTH ANDOVER, MA 01845
TEL: (978) 557-5553
FAX: (978) 336-5586

smartlink
SMARTLINK
1997 ANNAPOLIS EXCHANGE PKWY SUITE 200
ANNAPOLIS, MD 21401

SITE NUMBER: CTV2139
SITE NAME: BROOKLYN H2O

50 TIFFANY STREET
BROOKLYN, CT 06234
WINDHAM COUNTY

at&t
500 ENTERPRISE DRIVE, SUITE 3A
ROCKY HILL, CT 06067

NO.	DATE	REVISIONS	BY	CHK	APP'D
1	03/09/22	ISSUED FOR CONSTRUCTION	AB	MKT	DPH
0	01/25/22	ISSUED FOR REVIEW	ASK	MKT	DPH

SCALE: AS SHOWN | DESIGNED BY: AT | DRAWN BY: ASK

AT&T

RF PLUMBING DIAGRAM
LTE 3C, 4C, 5C, 5G NR RADIO, 5G NR 1DR–1

SITE NUMBER	DRAWING NUMBER	REV
CTV2139	RF–1	1