NORTHEAST SITE SOLUTIONS
*Turnkey Wireless Development*

Northeast Site Solutions
Denise Sabo
4 Angela's Way, Burlington CT 06013
203-435-3640
denise@northeastsitesolutions.com

August 18, 2022

Members of the Siting Council
Connecticut Siting Council
Ten Franklin Square
New Britain, CT 06051

RE: Tower Share Application
100 Tatnic Hill Road, Brooklyn, CT 06234
Latitude: 41.767222
Longitude: -71.971944
Site #: CT01915-S_ BOBOS00046A_SBA_DISH

Dear Ms. Bachman:

This letter and attachments are submitted on behalf of Dish Wireless LLC. Dish Wireless LLC plans to install antennas and related equipment to the tower site located at 100 Tatnic Hill Road, Brooklyn, Connecticut.

Dish Wireless LLC proposes to install three (3) 600/1900 MHz 5G antennas and six (6) RRUs, at the 110-foot level of the existing 175-foot monopole tower, one (1) Fiber cable will also be installed. Dish Wireless LLC equipment cabinets will be placed within a 7' x 5' lease area within the fenced compound. Included are plans by B+T, dated August 8, 2022, Exhibit C. Also included is a structural analysis prepared by TES, dated August 10, 2022, confirming that the existing tower is structurally capable of supporting the proposed equipment. Attached as Exhibit D. The facility was originally approved by the Town of Brooklyn Planning & Zoning Commission on August 4, 1999. Please see attached Exhibit A.

Please accept this letter as notification pursuant to Regulations of Connecticut State Agencies 16-50aa, of Dish Wireless LLC intent to share a telecommunications facility pursuant to R.C.S.A. 16-50j-88. In accordance with R.C.S.A., a copy of this letter is being sent to Austin Tanner, First Selectman and Jana Butts Roberson, Director of Community Development for the Town of Brooklyn, as well as the tower owner (SBA) and property owner (Benjamin & Sophie Davidson).

The planned modifications of the facility fall squarely within those activities explicitly provided for in R.C.S.A. 16-50j-89.

1. The proposed modification will not result in an increase in the height of the existing structure. The top of the existing tower is 175-feet and the Dish Wireless LLC antennas will be located at a center line height of 110-feet.

2. The proposed modifications will not result in an increase of the site boundary as depicted on the attached site plan.

3. The proposed modifications will not increase noise levels at the facility by six decibels or more, or to levels that exceed local and state criteria. The incremental effect of the proposed changes will be negligent.

4. The operation of the proposed antennas will not increase radio frequency emissions at the facility to a level at or above the Federal Communications Commission safety standard. The combined site operations will result in a total power density of 14.19% as evidenced by Exhibit F.

Connecticut General Statutes 16-50aa indicates that the Council must approve the shared use of a telecommunications facility provided it finds the shared use is technically, legally, environmentally, and economically feasible and meets public safety concerns. As demonstrated in this letter, Dish Wireless LLC respectfully submits that the shared use of this facility satisfies these criteria.

A. Technical Feasibility. The existing monopole has been deemed structurally capable of supporting Dish Wireless LLC proposed loading. The structural analysis is included as Exhibit D.

B. Legal Feasibility. As referenced above, C.G.S. 16-50aa has been authorized to issue orders approving the shared use of an existing tower such as this monopole tower in Brooklyn. Under the authority granted to the Council, an order of the Council approving the requested shared use would permit Dish Wireless LLC to obtain a building permit for the proposed installation. Further, a Letter of Authorization is included as Exhibit G, authorizing Dish Wireless LLC to file this application for shared use.

C. Environmental Feasibility. The proposed shared use of this facility would have a minimal environmental impact. The installation of Dish Wireless LLC equipment at the 110-foot level of the existing 175-foot tower would have an insignificant visual impact on the area around the tower. Dish Wireless LLC ground equipment would be installed within the existing facility compound. Dish Wireless LLC shared use would therefore not cause any significant alteration in the physical or environmental characteristics of the existing site. Additionally, as evidenced by Exhibit F, the proposed antennas would not increase radio frequency emissions to a level at or above the Federal Communications Commission safety standard.

D. Economic Feasibility. Dish Wireless LLC will be entering into an agreement with the owner of this facility to mutually agreeable terms. As previously mentioned, the Letter of Authorization has been provided by the owner to assist Dish Wireless LLC with this tower sharing application.

E. Public Safety Concerns. As discussed above, the tower is structurally capable of supporting Dish Wireless LLC proposed loading. Dish Wireless LLC is not aware of any public safety concerns relative to the proposed sharing of the existing tower. Dish Wireless LLC intentions of providing new and improved wireless service through the shared use of this facility is expected to enhance the safety and welfare of local residents and individuals traveling through Brooklyn.

Sincerely,

*Denise Sabo*

Denise Sabo
Mobile: 203-435-3640
Fax: 413-521-0558
Office: 4 Angela's Way, Burlington CT 06013
Email: denise@northeastsitesolutions.com

NORTHEAST SITE SOLUTIONS
*Turnkey Wireless Development*

Attachments

Cc: Austin Tanner, First Selectman
Town of Brooklyn
4 Wolf Den Road
PO Box 356
Brooklyn 06234

Jana Butts Roberson, Director of Community Development
Town of Brooklyn
69 South Main Street
Suite 22
Brooklyn, CT 06234

Benjamin & Sophie Davidson – Property Owners
C/O SBA Towers
Attn. Tax Dept CT01915-S
8051 Congress Ave
Boca Raton, FL 33487

SBA - Tower Owner

# Exhibit A

PLANNING AND ZONING COMMISSION

# TOWN OF BROOKLYN

CONNECTICUT 06234

**Norwich Bulletin Classified/Legals Department**
**Please run the following Legal Ad One Time Only:**
**Monday, August 9, 1999**

(Bill to the Town of Brooklyn, Account #10089300)
Contact Chuck Dobrowski at 779-3411 with any question/problems
Thank you.)

Town of Brooklyn
Planning and Zoning Commission
Notice of Decision

At the Regular Meeting of the Brooklyn Planning and Zoning Commission held on August 4, 1999, the following decisions were rendered.

Zone Change Application 99-02 of Angela C. Revera, request for Zone Change at 207 Day Street, from R30 to RA. – APPLICATION WAS DENIED

SPR-99-17 of SBA Inc./Sprint PCS, construction of telecommunications facility at 130 Old Tatnic Hill Road, Map 15, Lot 16. – APPLICATION WAS APPROVED

SPR-99-18 of Nextel Communications, construction of telecommunications facility at Tatnic Hill Road, Map 14, Lot 10. – APPLICATION WAS WITHDRAWN

SD-99-06, Theodore Stever, Allen Hill Road, three lot subdivision. – APPLICATION WAS APPROVED WITH CONDITIONS

SPR99-19 Kenyon Oil Company, 409 Providence Road, construction of Convenience Store and Gas Station. – APPLICATION TABLED.

Madeline J. Adams
for Bruce Parsons
Chairman

# Exhibit B

# 100 TATNIC HILL RD

Sales | Print | Field Card | Map It

| | | | |
|---|---|---|---|
| **Location** | 100 TATNIC HILL RD | **Mblu** | 15/ / 16-5/ / |
| **Acct#** | 00116805 | **Owner** | DAVIDSON BENJAMIN & SOPHIE |
| **Assessment** | $187,000 | **Appraisal** | $267,100 |
| **PID** | 1241 | **Building Count** | 1 |

## Current Value

| Appraisal | | | |
|---|---|---|---|
| **Valuation Year** | **Improvements** | **Land** | **Total** |
| 2020 | $0 | $267,100 | $267,100 |
| **Assessment** | | | |
| **Valuation Year** | **Improvements** | **Land** | **Total** |
| 2020 | $0 | $187,000 | $187,000 |

## Owner of Record

| | | | |
|---|---|---|---|
| **Owner** | DAVIDSON BENJAMIN & SOPHIE | **Sale Price** | $0 |
| **Co-Owner** | C/O SBA TOWERS | **Certificate** | |
| **Care Of** | | **Book** | 0216 |
| **Address** | ATTN: TAX DEPT CT01915-S<br>8051 CONGRESS AVE<br>BOCA RATON, FL 33487-1307 | **Page** | 0006 |
| | | **Sale Date** | 09/09/1999 |
| | | **Instrument** | |
| | | **Qualified** | |

oklyn canterbury chaplin eastford hampton killingly plainfield
nam scotland sterling thompson union voluntown woodstock

100 TATNIC HILL RD

Sign in

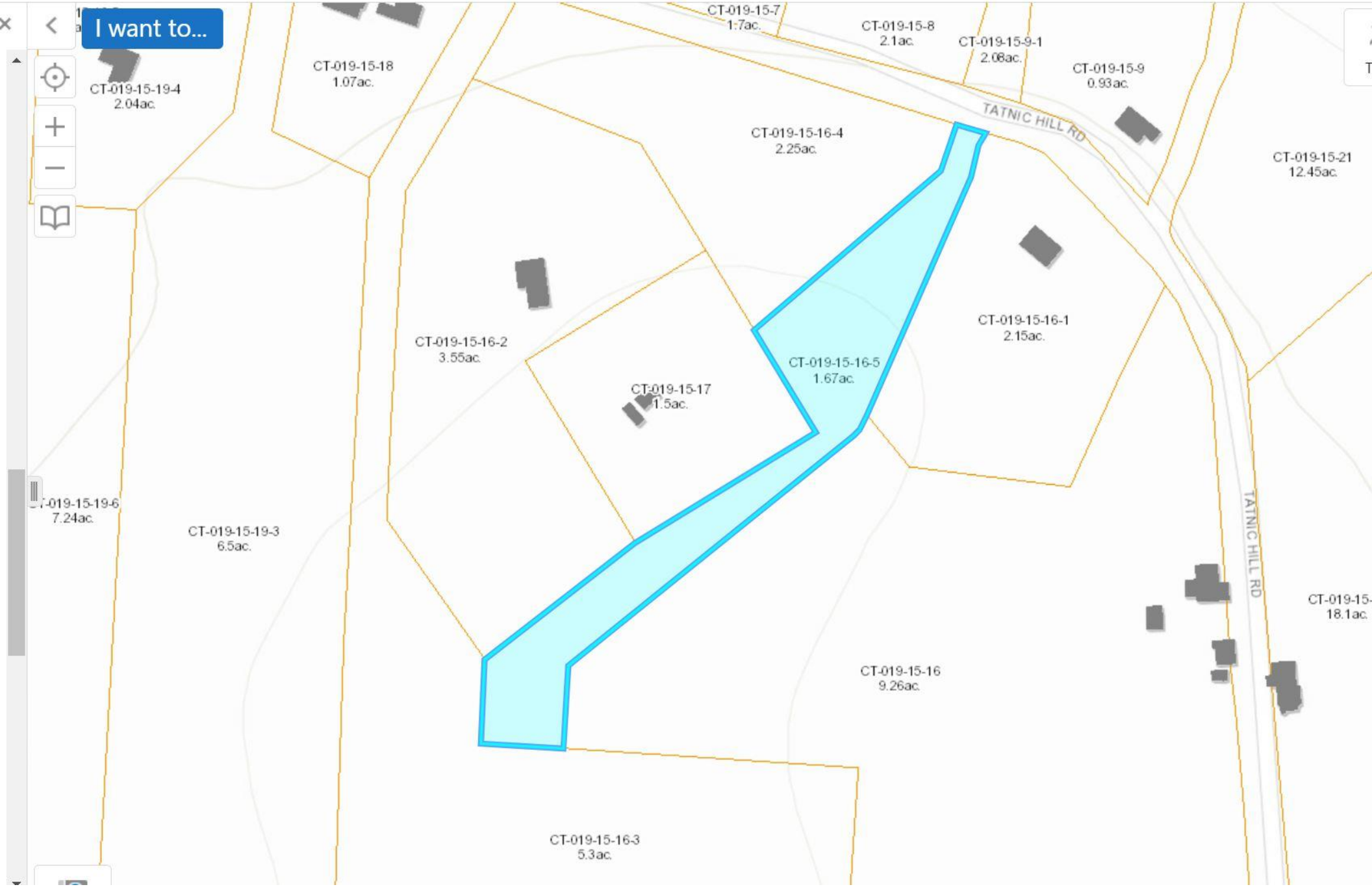

# Exhibit C

DISH Wireless L.L.C. SITE ID:

# BOBOS00046A

DISH Wireless L.L.C. SITE ADDRESS:

# 100 OLD TATNIC HILL ROAD BROOKLYN, CT 06234

SBA APPROVED

By Stephen Roth at 5:13:50 AM, 8/10/2022

NOTE:

THE PROJECT DEPICTED IN THESE PLANS QUALIFIES AS AN ELIGIBLE FACILITIES REQUEST ENTITLED TO EXPEDITED REVIEW UNDER 47 U.S.C. 1455(A) AS A MODIFICATION OF AN EXISTING WIRELESS TOWER THAT INVOLVES THE COLLOCATION REMOVAL AND/OR REPLACEMENT OF THE TRANSMISSION EQUIPMENT THAT IS NOT A SUBSTANTIAL CHANGE UNDER CFR 1.61000 (B)(7).

## SCOPE OF WORK

THIS IS NOT AN ALL INCLUSIVE LIST. CONTRACTOR SHALL UTILIZE SPECIFIED EQUIPMENT PART OR ENGINEER APPROVED EQUIVALENT. CONTRACTOR SHALL VERIFY ALL NEEDED EQUIPMENT TO PROVIDE A FUNCTIONAL SITE. THE PROJECT GENERALLY CONSISTS OF THE FOLLOWING:

TOWER SCOPE OF WORK:
- INSTALL (3) PROPOSED PANEL ANTENNAS (1 PER SECTOR)
- INSTALL (1) PROPOSED ANTENNA PLATFORM MOUNT
- INSTALL PROPOSED JUMPERS
- INSTALL (6) PROPOSED RRUs (2 PER SECTOR)
- INSTALL (1) PROPOSED OVER VOLTAGE PROTECTION DEVICE (OVP)
- INSTALL (1) PROPOSED HYBRID CABLE

GROUND SCOPE OF WORK:
- INSTALL (1) PROPOSED METAL PLATFORM
- INSTALL (1) PROPOSED ICE BRIDGE
- INSTALL (1) PROPOSED PPC CABINET
- INSTALL (1) PROPOSED EQUIPMENT CABINET
- INSTALL (1) PROPOSED POWER CONDUIT
- INSTALL (1) PROPOSED TELCO CONDUIT
- INSTALL (1) PROPOSED TELCO-FIBER BOX
- INSTALL (1) PROPOSED GPS UNIT
- INSTALL (1) PROPOSED FIBER NID (IF REQUIRED)

## SITE INFORMATION

| | |
|---|---|
| PROPERTY OWNER: | DAVIDSON BENJAMIN & SOPHIE |
| ADDRESS: | ATTN:TAX DEPT CT01915-S<br>BOCA RATON, FL 33487 |
| TOWER TYPE: | MONOPOLE |
| TOWER CO SITE ID: | CT01915-S |
| TOWER APP NUMBER: | 173263 |
| COUNTY: | WINDHAM |
| LATITUDE (NAD 83): | 41° 46' 01.8" N<br>41.76716044 |
| LONGITUDE (NAD 83): | 71° 58' 19.0" W<br>-71.97194933 |
| ZONING JURISDICTION: | WINDHAM COUNTY |
| ZONING DISTRICT: | RESIDENTIAL |
| PARCEL NUMBER: | CT-019-15-16-5 |
| OCCUPANCY GROUP: | U |
| CONSTRUCTION TYPE: | II-B |
| POWER COMPANY: | EVERSOURCE |
| TELEPHONE COMPANY: | COMCAST |

## PROJECT DIRECTORY

| | |
|---|---|
| APPLICANT: | DISH Wireless L.L.C.<br>5701 SOUTH SANTA FE DRIVE<br>LITTLETON, CO 80120 |
| TOWER OWNER: | SBA COMMUNICATAIONS CORP.<br>8051 CONGRESS AVENUE<br>BOCA RATON, FL 33487<br>(800) 487-7483 |
| SITE DESIGNER: | B+T GROUP<br>1717 S. BOULDER AVE, SUITE 300<br>TULSA, OK 74119<br>(918) 587-4630 |
| SITE ACQUISITION: | CHAD WILCOX<br>CHAD.WILCOX@DISH.COM |
| CONST. MANAGER: | AARON CHANDLER<br>AARON.CHANDLER@DISH.COM |
| RF ENGINEER: | ARVIN SEBASTIAN<br>ARVIN.SEBASTIAN@DISH.COM |

## CONNECTICUT CODE OF COMPLIANCE

ALL WORK SHALL BE PERFORMED AND MATERIALS INSTALLED IN ACCORDANCE WITH THE CURRENT EDITIONS OF THE FOLLOWING CODES AS ADOPTED BY THE LOCAL GOVERNING AUTHORITIES. NOTHING IN THESE PLANS IS TO BE CONSTRUED TO PERMIT WORK NOT CONFORMING TO THESE CODES

| CODE TYPE | CODE |
|---|---|
| BUILDING | 2018 CT STATE BUILDING CODE/2015 IBC W/ CT AMENDMENTS |
| MECHANICAL | 2018 CT STATE BUILDING CODE/2015 IMC W/ CT AMENDMENTS |
| ELECTRICAL | 2018 CT STATE BUILDING CODE/2017 NEC W/ CT AMENDMENTS |

## SITE PHOTO

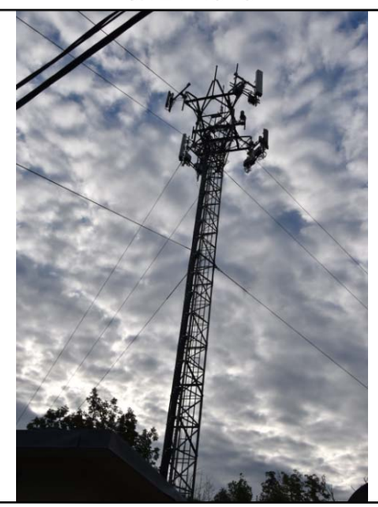

## DIRECTIONS

DIRECTIONS FROM BRADLEY INTERNATIONAL AIRPORT:
CONTINUE TO EAST GRANBY, HEAD NORTH TOWARD BRADLEY INTERNATIONAL AIRPORT, SLIGHT LEFT ONTO BRADLEY INTERNATIONAL AIRPORT, CONTINUE STRAIGHT, TAKE I-91 S, I-291 E, I-384 AND US-6 E TO WINDHAM RD IN BROOKLYN, CONTINUE ONTO BRADLEY INTERNATIONAL AIRPORT CON, CONTINUE ONTO CT-20 E/BRADLEY INTERNATIONAL AIRPORT CON, TAKE THE EXIT ONTO I-91 S TOWARD HARTFORD, TAKE EXIT 35A FOR I-291 TOWARD MANCHESTER, CONTINUE ONTO I-291 E TAKE THE I-384 E EXIT, CONTINUE ONTO I-384, CONTINUE ONTO US-44 E/US-6 E, KEEP RIGHT AT THE Y JUNCTION TO CONTINUE ON US-6 E, FOLLOW SIGNS FOR WILLIMANTIC/PROVIDENCE, TURN LEFT TO STAY ON US-6 E, USE THE RIGHT 2 LANES TO TURN RIGHT TO STAY ON US-6 E, TAKE TRIPP HOLLOW RD TO TATNIC HILL RD, TURN RIGHT ONTO WINDHAM RD, SHARP LEFT ONTO TATNIC RD, TURN RIGHT ONTO TRIPP HOLLOW RD, TURN LEFT ONTO TATNIC HILL RD – ARRIVE AT BOBOS00046A.

## SHEET INDEX


| SHEET NO. | SHEET TITLE |
|---|---|
| T-1 | TITLE SHEET |
| L-1 | SITE SURVEY |
| A-1 | OVERALL AND ENLARGED SITE PLAN |
| A-2 | ELEVATION, ANTENNA LAYOUT AND SCHEDULE |
| A-3 | EQUIPMENT PLATFORM AND H-FRAME DETAILS |
| A-4 | EQUIPMENT DETAILS |
| A-5 | EQUIPMENT DETAILS |
| A-6 | EQUIPMENT DETAILS |
| E-1 | ELECTRICAL/FIBER ROUTE PLAN AND NOTES |
| E-2 | ELECTRICAL DETAILS |
| E-3 | ELECTRICAL ONE-LINE, FAULT CALCS & PANEL SCHEDULE |
| G-1 | GROUNDING PLANS AND NOTES |
| G-2 | GROUNDING DETAILS |
| G-3 | GROUNDING DETAILS |
| RF-1 | RF CABLE COLOR CODE |
| GN-1 | LEGEND AND ABBREVIATIONS |
| GN-2 | GENERAL NOTES |
| GN-3 | GENERAL NOTES |
| GN-4 | GENERAL NOTES |


**UNDERGROUND SERVICE ALERT CBYD 811**
**UTILITY NOTIFICATION CENTER OF CONNECTICUT**
**(800) 922-4455**
**WWW.CBYD.COM**

CALL 2 WORKING DAYS UTILITY NOTIFICATION PRIOR TO CONSTRUCTION

811

## GENERAL NOTES

THE FACILITY IS UNMANNED AND NOT FOR HUMAN HABITATION. A TECHNICIAN WILL VISIT THE SITE AS REQUIRED FOR ROUTINE MAINTENANCE. THE PROJECT WILL NOT RESULT IN ANY SIGNIFICANT DISTURBANCE OR EFFECT ON DRAINAGE. NO SANITARY SEWER SERVICE, POTABLE WATER, OR TRASH DISPOSAL IS REQUIRED AND NO COMMERCIAL SIGNAGE IS PROPOSED.

## 11"x17" PLOT WILL BE HALF SCALE UNLESS OTHERWISE NOTED

CONTRACTOR SHALL VERIFY ALL PLANS, EXISTING DIMENSIONS, AND CONDITIONS ON THE JOB SITE, AND SHALL IMMEDIATELY NOTIFY THE ENGINEER IN WRITING OF ANY DISCREPANCIES BEFORE PROCEEDING WITH THE WORK.

## VICINITY MAP

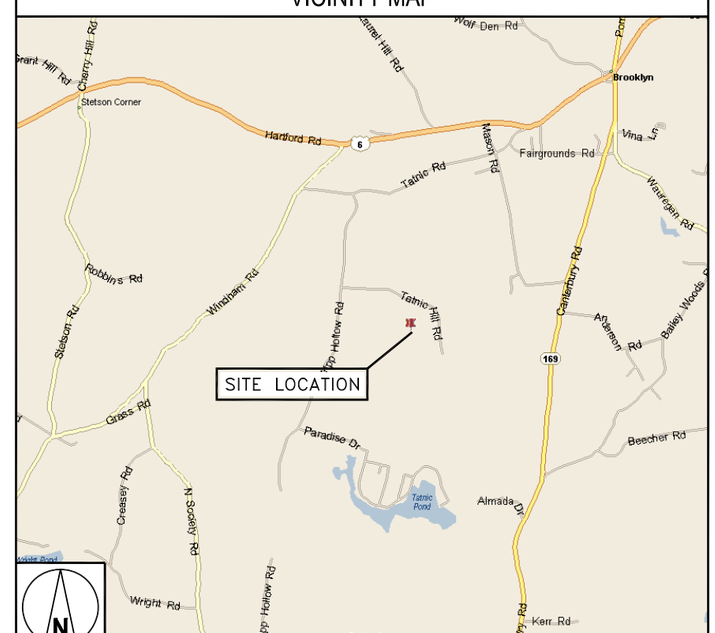


NO SCALE

dish wireless

5701 SOUTH SANTA FE DRIVE
LITTLETON, CO 80120

SBA

8051 CONGRESS AVENUE
BOCA RATON, FL 33487

B+T GRP
1717 S. BOULDER
SUITE 300
TULSA, OK 74119
PH: (918) 587-4630
www.btgrp.com

8/8/22

STATE OF CONNECTICUT
CHAD WILCOX
No. 23924
LICENSED
PROFESSIONAL ENGINEER

MTS ENGINEERING P.L.L.C.
BER:2386985
Expires 3/31/23

IT IS A VIOLATION OF LAW FOR ANY PERSON, UNLESS THEY ARE ACTING UNDER THE DIRECTION OF A LICENSED PROFESSIONAL ENGINEER, TO ALTER THIS DOCUMENT.

| DRAWN BY: | CHECKED BY: | APPROVED BY: |
|---|---|---|
| YN | KJG | CDD |

RFDS REV #: 1.0

CONSTRUCTION DOCUMENTS

SUBMITTALS

| REV | DATE | DESCRIPTION |
|---|---|---|
| A | 11/29/21 | ISSUED FOR REVIEW |
| 0 | 11/27/22 | ISSUED FOR CONSTRUCTION |
| 1 | 6/15/22 | ISSUED FOR CONSTRUCTION |
| 2 | 8/8/22 | ISSUED FOR CONSTRUCTION |

A&E PROJECT NUMBER

149435.001.01

DISH Wireless L.L.C.
PROJECT INFORMATION

BOBOS00046A
100 OLD TATNIC HILL ROAD
BROOKLYN, CT 06234

SHEET TITLE

TITLE SHEET

SHEET NUMBER

T-1



149435.001.01_CT01915-S BOBOS00046A SBA Dish CDs.dwg – Sheet:T-1 – User: rcarson – Aug 08, 2022 – 11:05am

CT1915-S

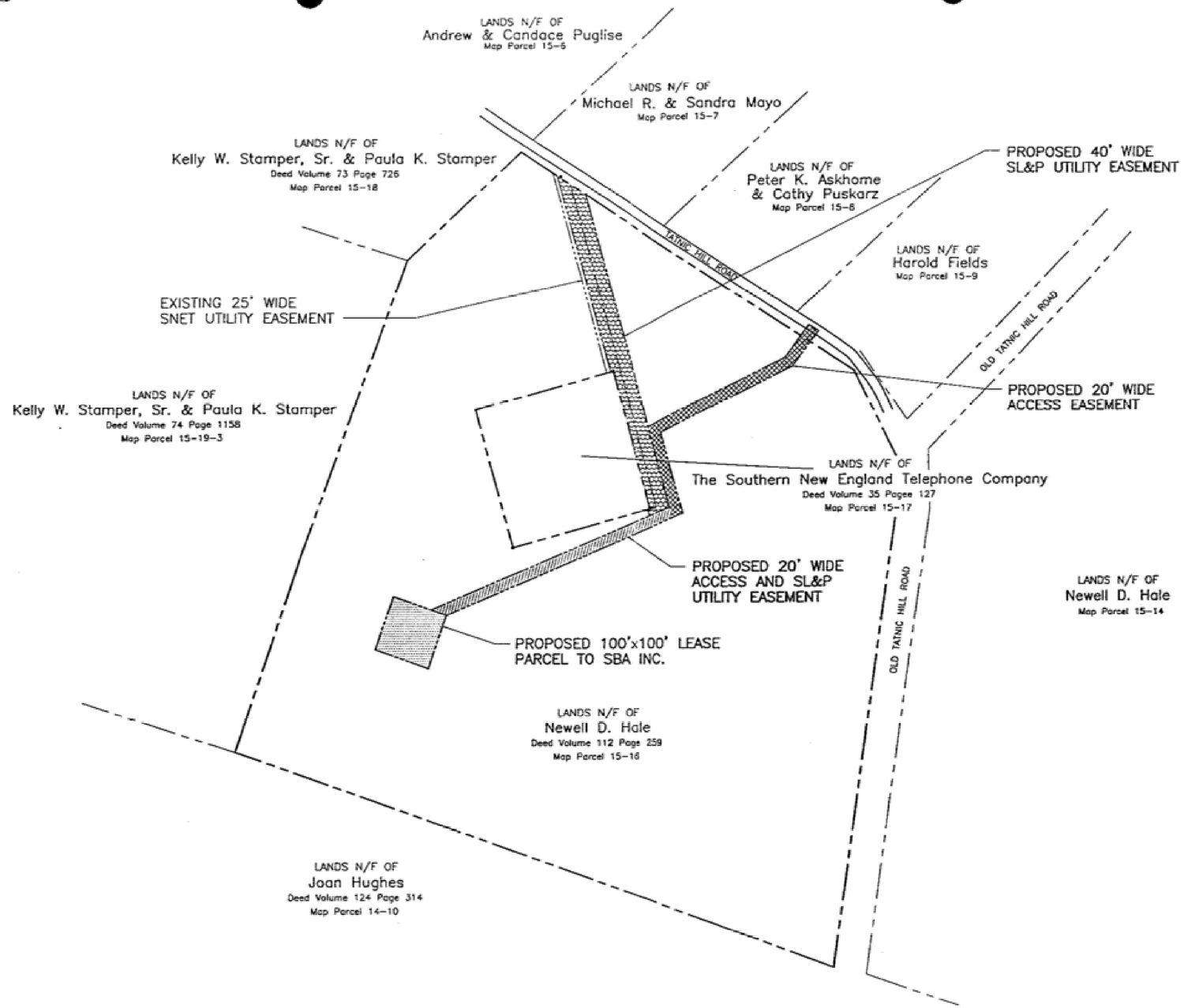


CT1915-S

N
MAP NORTH

SCALE: 1"=200'

200' 0' 100' 200' 400'

ERDMAN ANTHONY CONSULTING ENGINEERS
Rochester, NY - Mechanicsburg, PA - Boston, MA - Buffalo, NY - Albany, NY
Albany Office: 317 Brick Church Road, Troy N.Y. 12180 Tele(518) 279-0505 Fax (518) 279-0555

PROJ. NO. 177040.14 | PROJ. MGR. T.L.O. | DESIGN BY: S.D.R. | CHECKED BY: W.E.B. | DRAWN BY: T.A.D.

ALL RIGHTS RESERVED: No part of this document may be reproduced, stored in a retrieval system, or transmitted, in any form or by any means electronic, mechanical, photocopying, recording, or otherwise without the prior written authorization of ERDMAN ANTHONY ASSOCIATES, INC.

| REV. | DESCRIPTION | BY | DATE |
|---|---|---|---|
| 04 | | | |
| 03 | | | |
| 02 | | | |
| 01 | | | |

CLIENT: SBA, Inc.
49 Leavenworth Street
Suite 200
Waterbury, CT 06702
(203) 578-3697
CONTACT: RANDY FRESCHLIN
(860) 439-0152

PROJECT NAME: 56a BROOKLYN ~~SOUTH~~ COMMUNICATIONS FACILITY

DRAWING TITLE: LEASE EXHIBIT MAP

DATE: 6/28/99
SHEET NO. 1 of 1
DRAWING NO. L-1

## NOTES

1. CONTRACTOR SHALL FIELD VERIFY ALL PROPOSED UNDERGROUND UTILITY CONDUIT ROUTE.
2. ANTENNAS AND MOUNTS OMITTED FOR CLARITY.

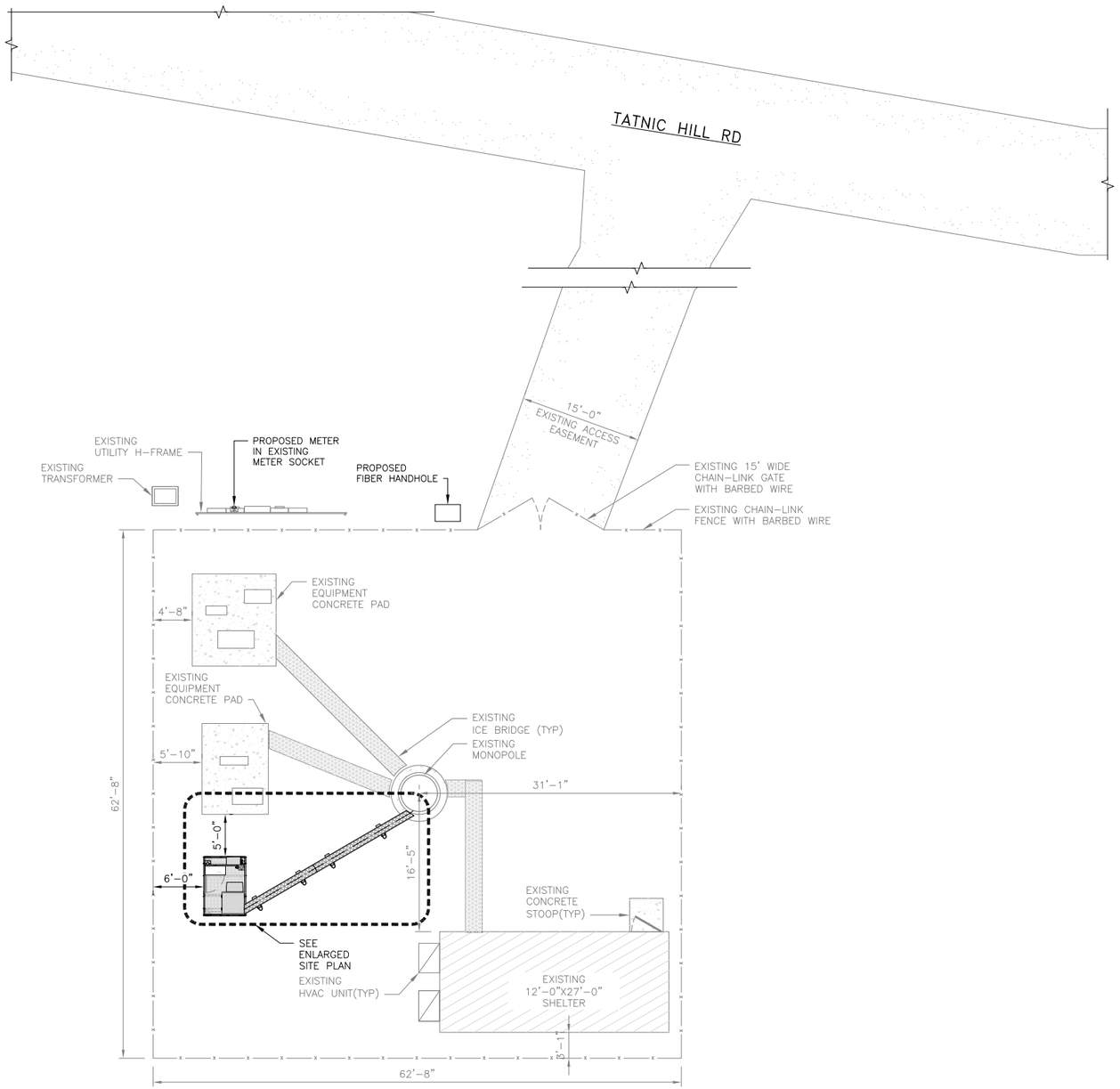


OVERALL SITE PLAN

8' 4' 0 8' 16'
1/8"=1'-0"

1

## NOTES

1. CONTRACTOR SHALL FIELD VERIFY ALL DIMENSIONS.
2. CONTRACTOR SHALL MAINTAIN A 10'-0" MINIMUM SEPARATION BETWEEN THE PROPOSED GPS UNIT, TRANSMITTING ANTENNAS AND EXISTING GPS UNITS.
3. ANTENNAS AND MOUNTS OMITTED FOR CLARITY.

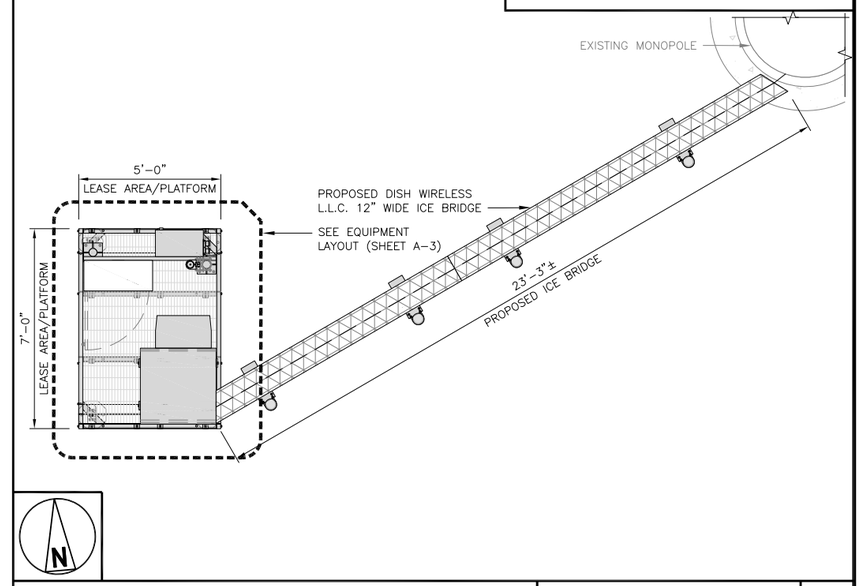


ENLARGED SITE PLAN

12" 6" 0 1' 2' 3' 4' 5' 6' 7'
3/8"=1'-0"

2

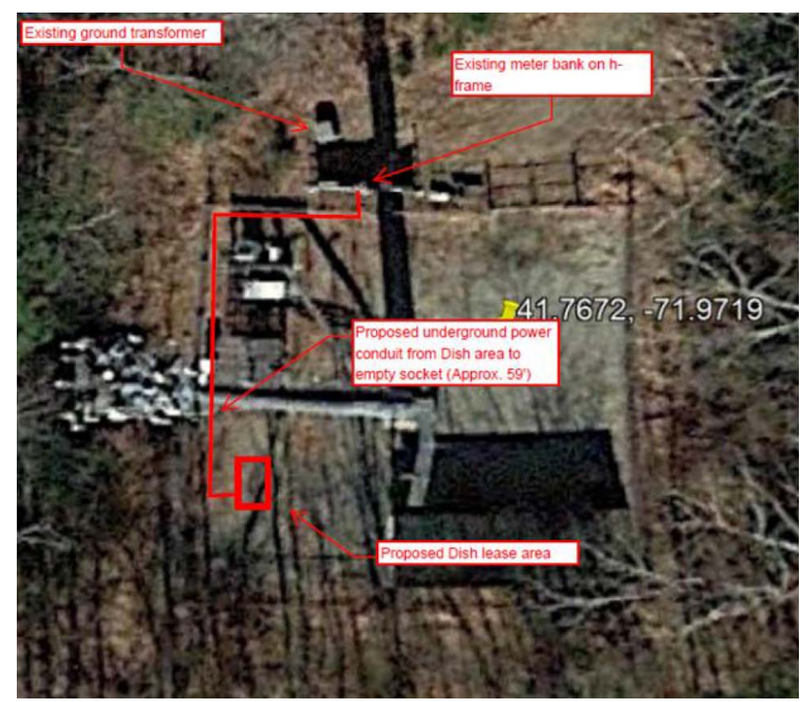


UTILITY AERIAL VIEW

NO SCALE

3

dish wireless

5701 SOUTH SANTA FE DRIVE
LITTLETON, CO 80120

SBA

8051 CONGRESS AVENUE
BOCA RATON, FL 33487

B+T GRP
1717 S. BOULDER
SUITE 300
TULSA, OK 74119
PH: (918) 587-4630
www.btgrp.com

8/8/22

STATE OF CONNECTICUT
CHAD TITLE
No. 23924
LICENSED
PROFESSIONAL ENGINEER

MTS ENGINEERING P.L.L.C.
BER:2386985
Expires 3/31/23

IT IS A VIOLATION OF LAW FOR ANY PERSON, UNLESS THEY ARE ACTING UNDER THE DIRECTION OF A LICENSED PROFESSIONAL ENGINEER, TO ALTER THIS DOCUMENT.

| DRAWN BY: | CHECKED BY: | APPROVED BY: |
|---|---|---|
| YN | KJG | CDD |

RFDS REV #: 1.0

CONSTRUCTION DOCUMENTS

SUBMITTALS

| REV | DATE | DESCRIPTION |
|---|---|---|
| A | 11/29/21 | ISSUED FOR REVIEW |
| 0 | 11/27/22 | ISSUED FOR CONSTRUCTION |
| 1 | 6/15/22 | ISSUED FOR CONSTRUCTION |
| 2 | 8/8/22 | ISSUED FOR CONSTRUCTION |

A&E PROJECT NUMBER
149435.001.01

DISH Wireless L.L.C.
PROJECT INFORMATION

BOBOS00046A
100 OLD TATNIC HILL ROAD
BROOKLYN, CT 06234

SHEET TITLE
OVERALL AND ENLARGED SITE PLAN

SHEET NUMBER
A-1

## NOTES

1. CONTRACTOR SHALL FIELD VERIFY ALL DIMENSIONS.
2. ANTENNA AND MW DISH SPECIFICATIONS REFER TO ANTENNA SCHEDULE AND TO FINAL CONSTRUCTION RFDS FOR ALL RF DETAILS
3. EXISTING EQUIPMENT AND FENCE OMITTED FOR CLARITY.

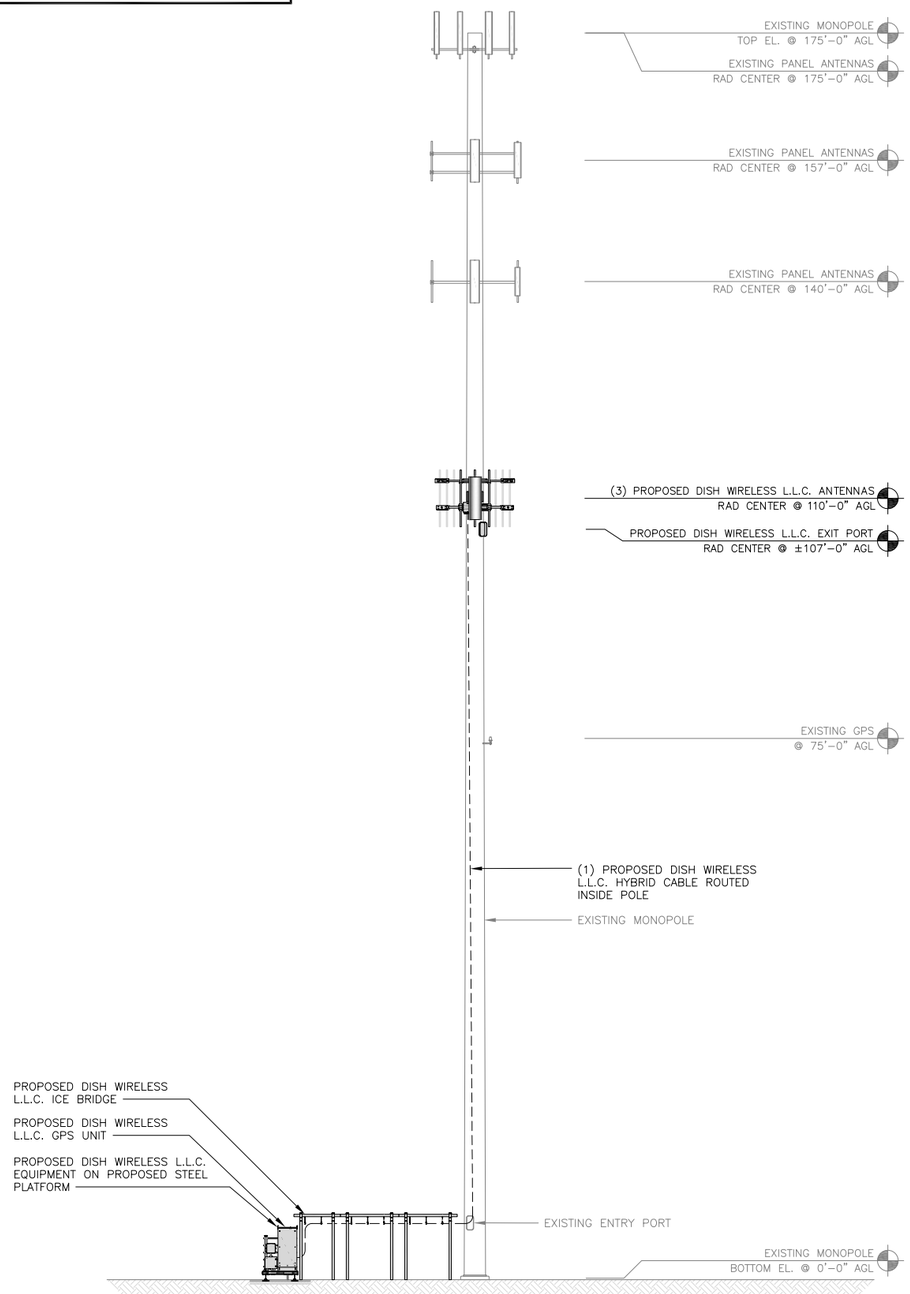


PROPOSED SOUTH ELEVATION

12' 8' 4' 0 10' 20'
3/32"=1'-0"

1

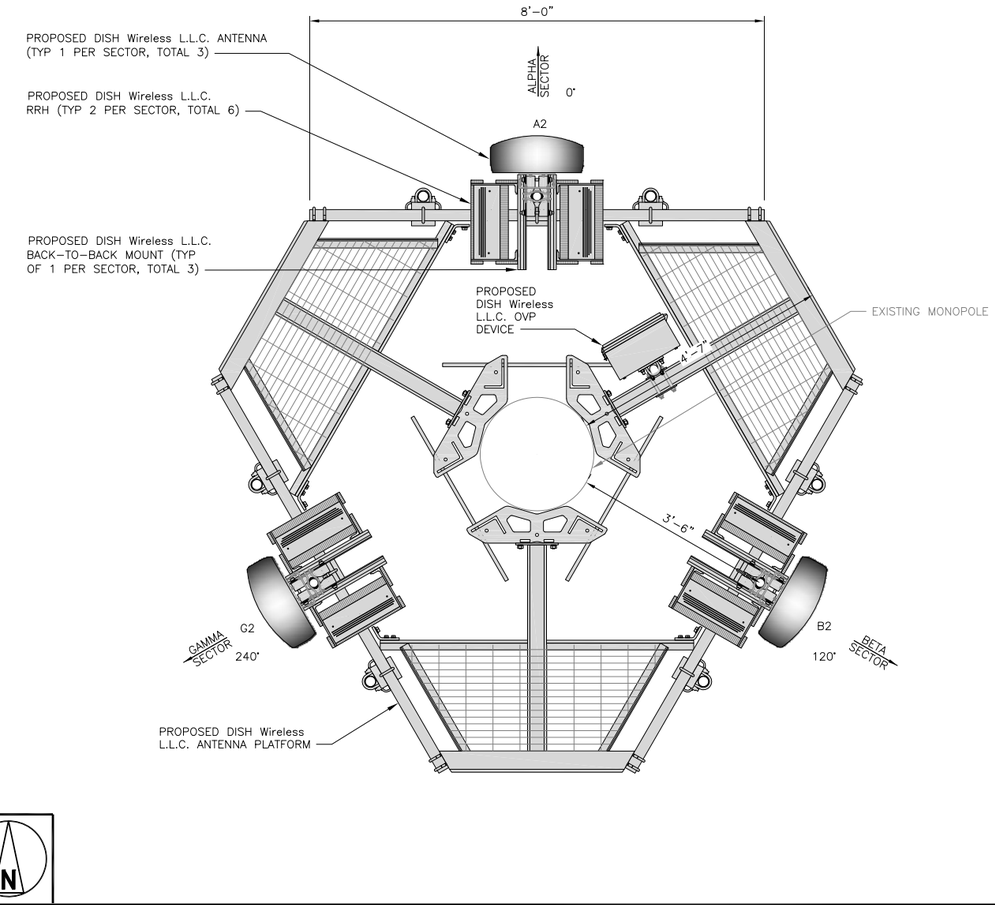


ANTENNA LAYOUT

12" 6" 0 1' 2' 3'
3/4"=1'-0"

2

| SECTOR | POSITION | ANTENNA | | | | | | TRANSMISSION CABLE |
|---|---|---|---|---|---|---|---|---|
| | | EXISTING OR PROPOSED | MANUFACTURER – MODEL NUMBER | TECHNOLOGY | SIZE (HxW) | AZIMUTH | RAD CENTER | FEED LINE TYPE AND LENGTH |
| ALPHA | A2 | PROPOSED | COMMSCOPE – FFVV-65B-R2 | 5G | 72.0" x 19.6" | 0° | 110'-0" | (1) HIGH-CAPACITY HYBRID CABLE (150' LONG) |
| BETA | B2 | PROPOSED | COMMSCOPE – FFVV-65B-R2 | 5G | 72.0" x 19.6" | 120° | 110'-0" | |
| GAMMA | G2 | PROPOSED | COMMSCOPE – FFVV-65B-R2 | 5G | 72.0" x 19.6" | 240° | 110'-0" | |

| SECTOR | POSITION | RRH | |
|---|---|---|---|
| | | MANUFACTURER – MODEL NUMBER | TECHNOLOGY |
| ALPHA | A2 | FUJITSU – TA08025-B605 | 5G |
| | A2 | FUJITSU – TA08025-B604 | 5G |
| BETA | B2 | FUJITSU – TA08025-B605 | 5G |
| | B2 | FUJITSU – TA08025-B604 | 5G |
| GAMMA | G2 | FUJITSU – TA08025-B605 | 5G |
| | G2 | FUJITSU – TA08025-B604 | 5G |

NOTES

1. CONTRACTOR TO REFER TO FINAL CONSTRUCTION RFDS FOR ALL RF DETAILS.
2. ANTENNA AND RRH MODELS MAY CHANGE DUE TO EQUIPMENT AVAILABILITY. ALL EQUIPMENT CHANGES MUST BE APPROVED AND REMAIN IN COMPLIANCE WITH THE PROPOSED DESIGN AND STRUCTURAL ANALYSES.

| OVP | | |
|---|---|---|
| EXISTING OR PROPOSED | MANUFACTURER – MODEL NUMBER | SIZE (HxWxD) |
| PROPOSED | RAYCAP-RDIDC-9181-PF-48 | 18.98"x14.39"x8.15" |

ANTENNA SCHEDULE

NO SCALE

3


dish wireless
5701 SOUTH SANTA FE DRIVE
LITTLETON, CO 80120

SBA
8051 CONGRESS AVENUE
BOCA RATON, FL 33487

B+T GRP
1717 S. BOULDER
SUITE 300
TULSA, OK 74119
PH: (918) 587-4630
www.btgrp.com


8/8/22

STATE OF CONNECTICUT
CHAD J. TITLE
No. 23924
LICENSED
PROFESSIONAL ENGINEER

MTS ENGINEERING P.L.L.C.
BER:2386985
Expires 3/31/23


IT IS A VIOLATION OF LAW FOR ANY PERSON, UNLESS THEY ARE ACTING UNDER THE DIRECTION OF A LICENSED PROFESSIONAL ENGINEER, TO ALTER THIS DOCUMENT.


| DRAWN BY: | CHECKED BY: | APPROVED BY: |
|---|---|---|
| YN | KJG | CDD |

RFDS REV #: 1.0

CONSTRUCTION DOCUMENTS

SUBMITTALS

| REV | DATE | DESCRIPTION |
|---|---|---|
| A | 11/29/21 | ISSUED FOR REVIEW |
| 0 | 11/27/22 | ISSUED FOR CONSTRUCTION |
| 1 | 6/15/22 | ISSUED FOR CONSTRUCTION |
| 2 | 8/8/22 | ISSUED FOR CONSTRUCTION |

A&E PROJECT NUMBER
149435.001.01

DISH Wireless L.L.C.
PROJECT INFORMATION
BOBOS00046A
100 OLD TATNIC HILL ROAD
BROOKLYN, CT 06234

SHEET TITLE
ELEVATION, ANTENNA LAYOUT AND SCHEDULE

SHEET NUMBER
A-2

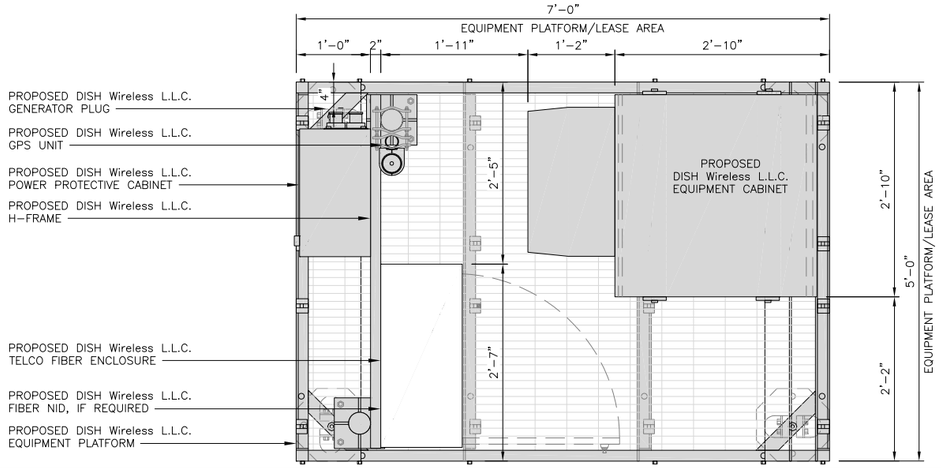


PLATFORM EQUIPMENT PLAN

12" 9" 6" 3" 0 1' 2'
1"=1'-0"

1

| COMMSCOPE MTC4045LP 5X7 PLATFORM | |
|---|---|
| DIMENSIONS (HxWxD) | 16"x84"x60" |
| TOTAL WEIGHT | 423 LBS |

NOTE:
GC TO PROVIDE EXTENDED THREAD FOR PLATFORM IF REQUIRED HEIGHT EXCEEDS 17"

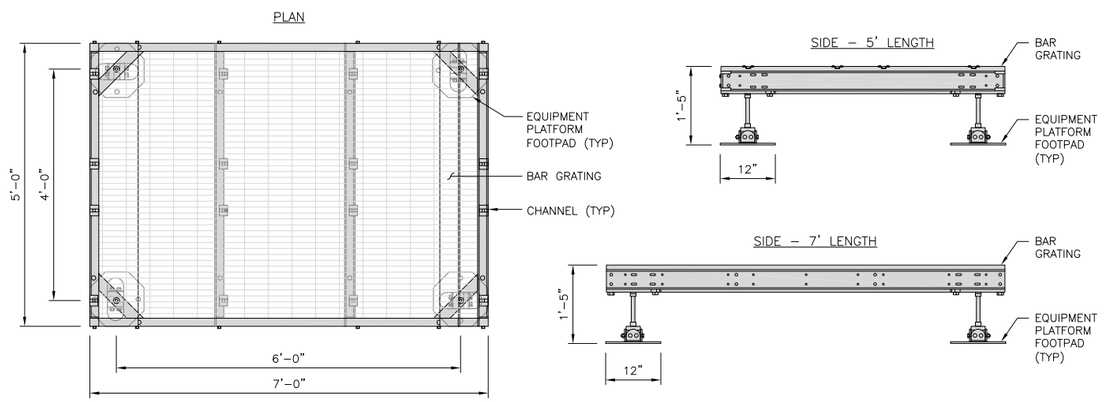


PLATFORM DETAIL

NO SCALE

2

| COMMSCOPE MTC4045HFLD H-FRAME | |
|---|---|
| UNISTRUT/SUPPORT RAILS QTY | 5 |
| WEIGHT | 59.74 lbs |

NOTE:
OR DISH Wireless L.L.C. APPROVED EQUIVALENT

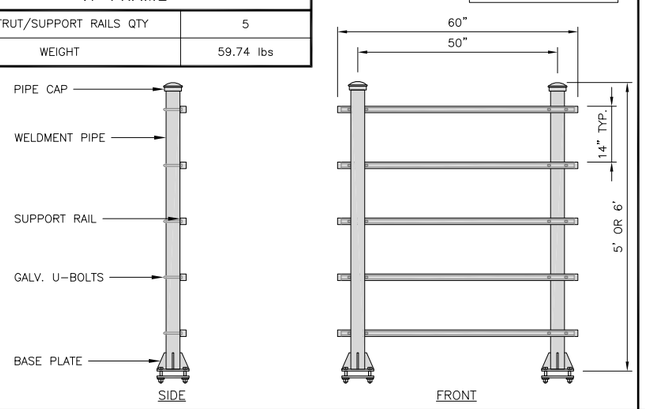


H-FRAME DETAIL

NO SCALE

3

NOT USED

NO SCALE

4

## NOTES

1. CONTRACTOR TO BURY PLATFORM FEET WITH A MINIMUM OF 2" OF FILL PER EXISTING SITE SURFACE
2. WEED BARRIER FABRIC TO BE ADDED AT DISCRETION OF DISH Wireless L.L.C. CONSTRUCTION MANAGER AT TIME OF CONSTRUCTION. ONE SHEET 8'x8' INSTALLED UNDER ALL FOUR FEET OF THE PLATFORM (4 MIL BLACK PLASTIC)
3. EQUIPMENT CABINET OMITTED FOR CLARITY

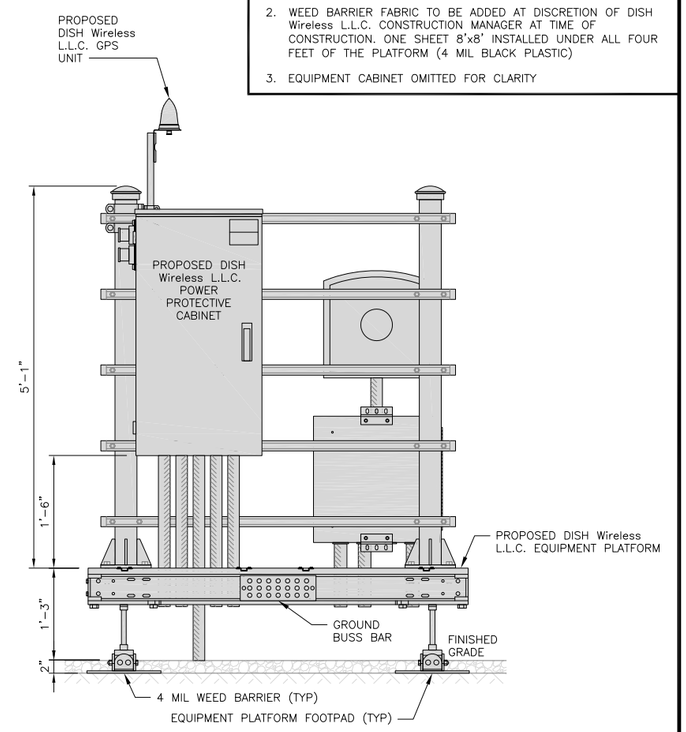


FRONT ELEVATION

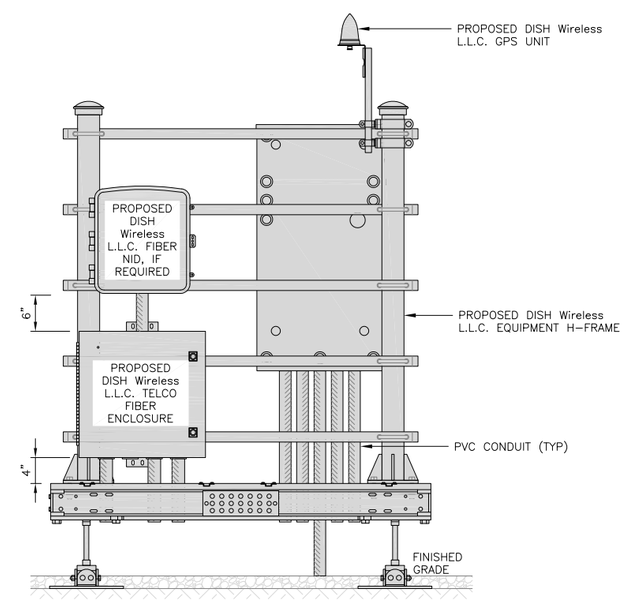


BACK ELEVATION

H-FRAME EQUIPMENT ELEVATION

12" 9" 6" 3" 0 1' 2'
1"=1'-0"

5


dish wireless
5701 SOUTH SANTA FE DRIVE
LITTLETON, CO 80120

SBA
8051 CONGRESS AVENUE
BOCA RATON, FL 33487

B+T GRP
1717 S. BOULDER
SUITE 300
TULSA, OK 74119
PH: (918) 587-4630
www.btgrp.com


8/8/22

STATE OF CONNECTICUT
CHAD J. TITLE
No. 23924
LICENSED
PROFESSIONAL ENGINEER

MTS ENGINEERING P.L.L.C.
BER:2386985
Expires 3/31/23


IT IS A VIOLATION OF LAW FOR ANY PERSON, UNLESS THEY ARE ACTING UNDER THE DIRECTION OF A LICENSED PROFESSIONAL ENGINEER, TO ALTER THIS DOCUMENT.


| DRAWN BY: | CHECKED BY: | APPROVED BY: |
|---|---|---|
| YN | KJG | CDD |

RFDS REV #: 1.0

CONSTRUCTION DOCUMENTS

SUBMITTALS

| REV | DATE | DESCRIPTION |
|---|---|---|
| A | 11/29/21 | ISSUED FOR REVIEW |
| 0 | 11/27/22 | ISSUED FOR CONSTRUCTION |
| 1 | 6/15/22 | ISSUED FOR CONSTRUCTION |
| 2 | 8/8/22 | ISSUED FOR CONSTRUCTION |

A&E PROJECT NUMBER
149435.001.01

DISH Wireless L.L.C. PROJECT INFORMATION
BOBOS00046A
100 OLD TATNIC HILL ROAD
BROOKLYN, CT 06234

SHEET TITLE
EQUIPMENT PLATFORM AND H-FRAME DETAILS

SHEET NUMBER
A-3

| ENERSYS HVAC 2000005995 | |
|---|---|
| DIMENSIONS (HxWxD) | 73"x30"x32" |
| POWER SYSTEM | -48V ALPHA/600A |
| HVAC | 600W |
| TOTAL WEIGHT (EMPTY) | 371 lbs |

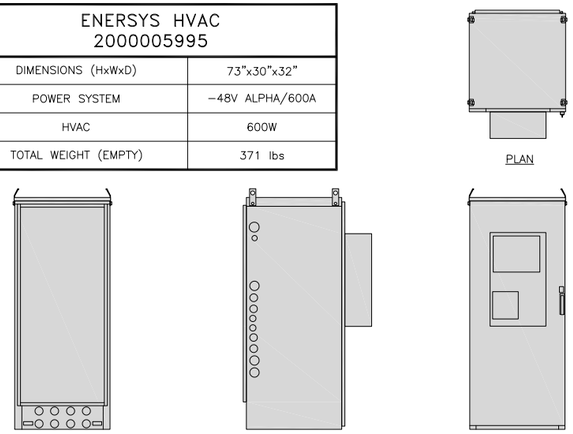


CABINET DETAIL — NO SCALE — 1

| RAYCAP PPC RDIAC-2465-P-240-MTS | |
|---|---|
| ENCLOSURE DIMENSIONS (HxWxD): | 39"x22.855"x12.593 |
| WEIGHT: | 80 lbs |
| OPERATING AC VOLTAGE | 240/120 1 PHASE 3W+G |

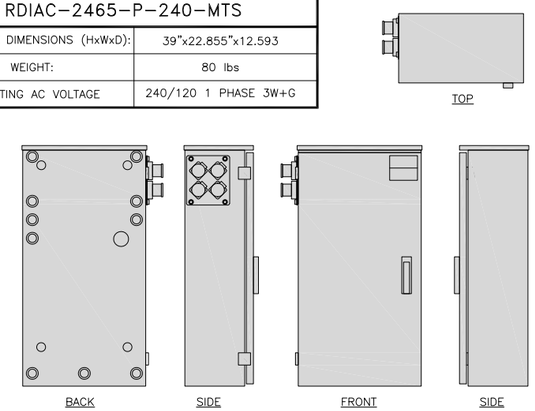


POWER PROTECTION CABINET (PPC) DETAIL — NO SCALE — 2

NOT USED — NO SCALE — 3

NOT USED — NO SCALE — 4

| CIENA 3931 FIBER NID ENCLOSURE | |
|---|---|
| DIMENSIONS (HxWxD) | 17"x16.8"x7" |
| WEIGHT | 28.6 lbs |

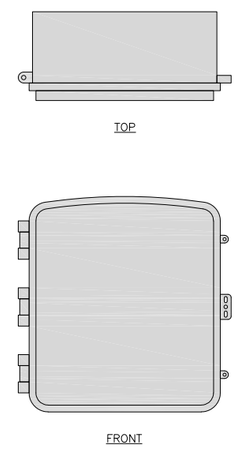


FIBER NID ENCLOSURE DETAIL — NO SCALE — 5

| CHARLES CFIT-PF2020DSH1 FIBER TELCO ENCLOSURE | |
|---|---|
| ENCLOSURE DIMS (HxWxD) | 20"x20"x9" |
| ENCLOSURE WEIGHT | 20 lbs |
| MOUNTING | WALL |
| COMPLIANCE | TYPE 4 |

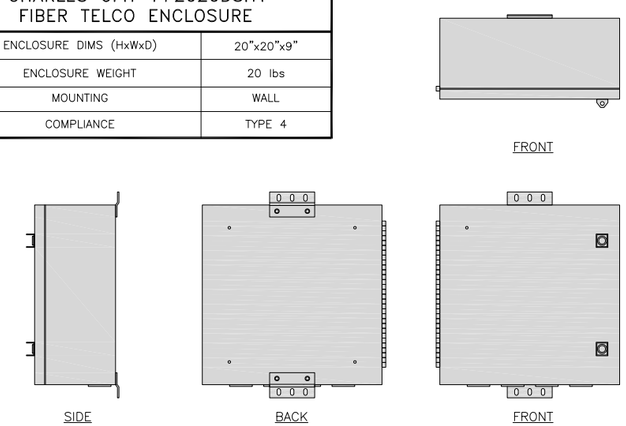


FIBER TELCO ENCLOSURE DETAIL — NO SCALE — 6

| COMMSCOPE WB-K110-B WAVEGUIDE BRIDGE KIT | |
|---|---|
| DIMENSIONS (HxL) | 160"x10' |
| WEIGHT/ VOLUME | 325.0 LBS |
| CABLE RUN (QTY) | 12 |

| INCLUDED PRODUCTS: | |
|---|---|
| | WB-T12-3 TRAPEZE KIT, 3 RUNGS |
| | WB-LB12-3 SUPPORT BRACKET |
| | MF-130 DIRECT BURIAL PIPE COLUMN, 13'-4" |

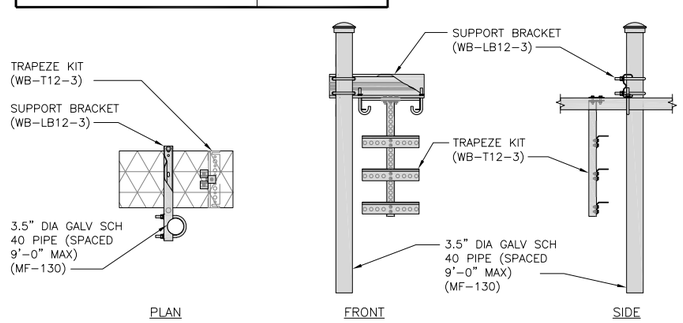


ICE BRIDGE DETAIL — NO SCALE — 7

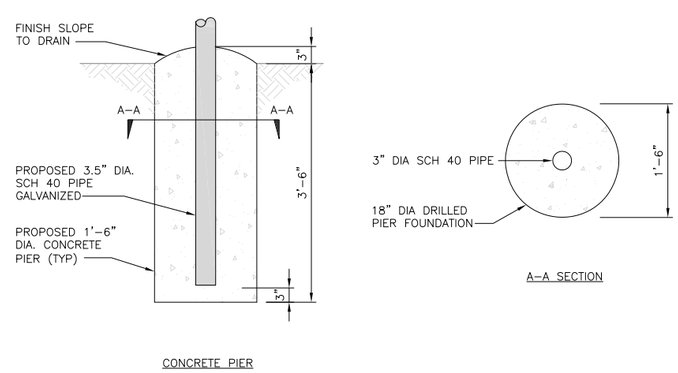


TYPICAL ICE BRIDGE CONCRETE PIER DETAIL — NO SCALE — 8

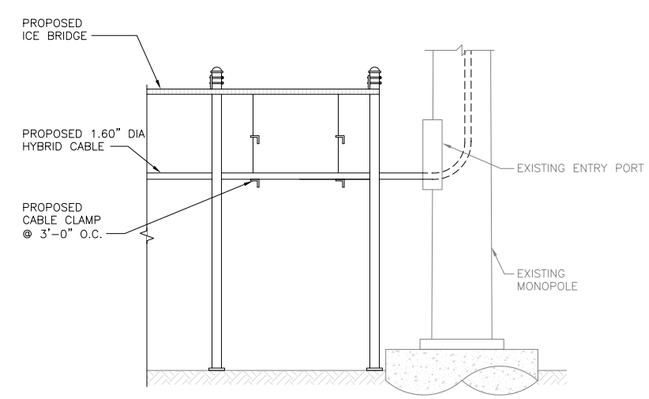


HYBRID CABLE RUN — NO SCALE — 9


dish wireless
5701 SOUTH SANTA FE DRIVE
LITTLETON, CO 80120

SBA
8051 CONGRESS AVENUE
BOCA RATON, FL 33487

B+T GRP
1717 S. BOULDER
SUITE 300
TULSA, OK 74119
PH: (918) 587-4630
www.btgrp.com


8/8/22

STATE OF CONNECTICUT — CHAD CASTILE — No. 23924 — LICENSED PROFESSIONAL ENGINEER

MTS ENGINEERING P.L.L.C.
BER:2386985
Expires 3/31/23


IT IS A VIOLATION OF LAW FOR ANY PERSON, UNLESS THEY ARE ACTING UNDER THE DIRECTION OF A LICENSED PROFESSIONAL ENGINEER, TO ALTER THIS DOCUMENT.


| DRAWN BY: | CHECKED BY: | APPROVED BY: |
|---|---|---|
| YN | KJG | CDD |

RFDS REV #: 1.0

CONSTRUCTION DOCUMENTS

SUBMITTALS

| REV | DATE | DESCRIPTION |
|---|---|---|
| A | 11/29/21 | ISSUED FOR REVIEW |
| 0 | 11/27/22 | ISSUED FOR CONSTRUCTION |
| 1 | 6/15/22 | ISSUED FOR CONSTRUCTION |
| 2 | 8/8/22 | ISSUED FOR CONSTRUCTION |

A&E PROJECT NUMBER
149435.001.01

DISH Wireless L.L.C. PROJECT INFORMATION
BOBOS00046A
100 OLD TATNIC HILL ROAD
BROOKLYN, CT 06234

SHEET TITLE
EQUIPMENT DETAILS

SHEET NUMBER
A-4

| PCTEL GPSGL-TMG-SPI-40NCB | |
|---|---|
| DIMENSIONS (DIAxH) MM/INCH | 81x184mm 3.2"x7.25" |
| WEIGHT W/ACCESSORIES | 075 lbs |
| CONNECTOR | N-FEMALE |
| FREQUENCY RANGE | 1590 ± 30MHz |

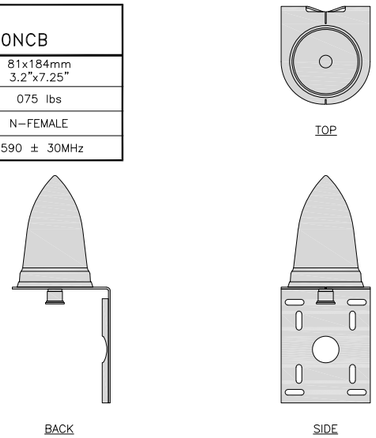


GPS DETAIL | NO SCALE | 1

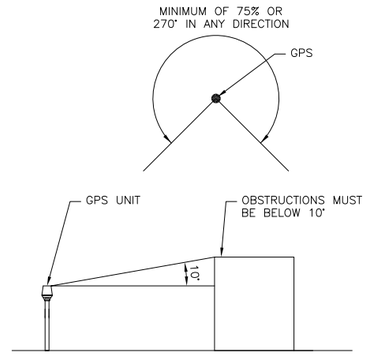


GPS MINIMUM SKY VIEW REQUIREMENTS | NO SCALE | 2

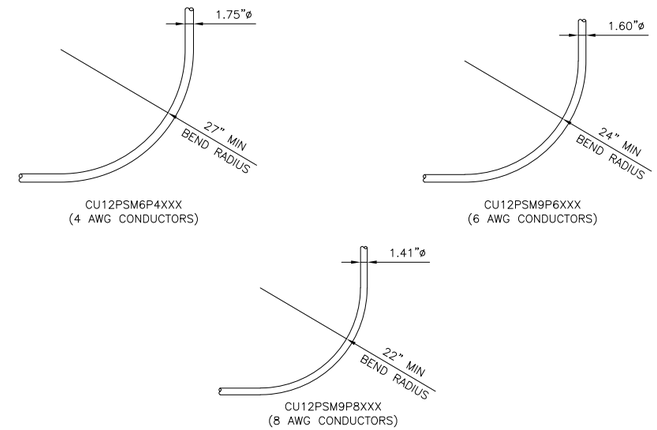


CABLES UNLIMITED HYBRID CABLE MINIMUM BEND RADIUSES | NO SCALE | 3

NOT USED | NO SCALE | 4

NOT USED | NO SCALE | 5

NOT USED | NO SCALE | 6

NOT USED | NO SCALE | 7

NOT USED | NO SCALE | 8

NOT USED | NO SCALE | 9


dish wireless
5701 SOUTH SANTA FE DRIVE
LITTLETON, CO 80120

SBA
8051 CONGRESS AVENUE
BOCA RATON, FL 33487

B+T GRP
1717 S. BOULDER
SUITE 300
TULSA, OK 74119
PH: (918) 587-4630
www.btgrp.com


8/8/22

STATE OF CONNECTICUT
CHAD TUTTLE
No. 23924
LICENSED
PROFESSIONAL ENGINEER

MTS ENGINEERING P.L.L.C.
BER:2386985
Expires 3/31/23


IT IS A VIOLATION OF LAW FOR ANY PERSON, UNLESS THEY ARE ACTING UNDER THE DIRECTION OF A LICENSED PROFESSIONAL ENGINEER, TO ALTER THIS DOCUMENT.


| DRAWN BY: | CHECKED BY: | APPROVED BY: |
|---|---|---|
| YN | KJG | CDD |

RFDS REV #: 1.0

CONSTRUCTION DOCUMENTS

SUBMITTALS

| REV | DATE | DESCRIPTION |
|---|---|---|
| A | 11/29/21 | ISSUED FOR REVIEW |
| 0 | 11/27/22 | ISSUED FOR CONSTRUCTION |
| 1 | 6/15/22 | ISSUED FOR CONSTRUCTION |
| 2 | 8/8/22 | ISSUED FOR CONSTRUCTION |

A&E PROJECT NUMBER
149435.001.01

DISH Wireless L.L.C.
PROJECT INFORMATION
BOBOS00046A
100 OLD TATNIC HILL ROAD
BROOKLYN, CT 06234

SHEET TITLE
EQUIPMENT DETAILS

SHEET NUMBER
A-5

| FUJITSU TRIPLE BAND TA08025-B605 | |
|---|---|
| DIMENSIONS (HxWxD) | 14.9"x15.7"x9" |
| WEIGHT | 74.95 lbs |
| CONNECTOR TYPE | 4.3-10 RF CONNECTOR |
| POWER SUPPLY | DC -58~-36V |

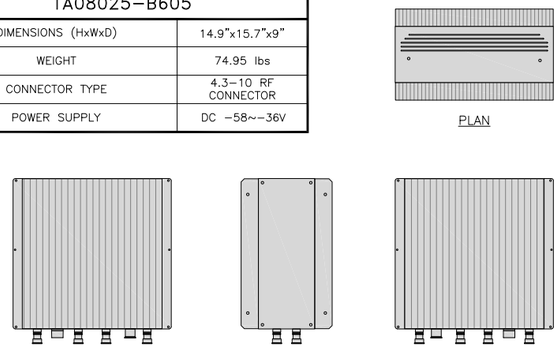


RRH DETAIL — NO SCALE — 1

| FUJITSU DUAL BAND TA08025-B604 | |
|---|---|
| DIMENSIONS (HxWxD) | 14.9"x15.7"x7.8" |
| WEIGHT | 63.9 lbs |
| CONNECTOR TYPE | 4.3-10 RF CONNECTOR |
| POWER SUPPLY | DC -58~-36V |

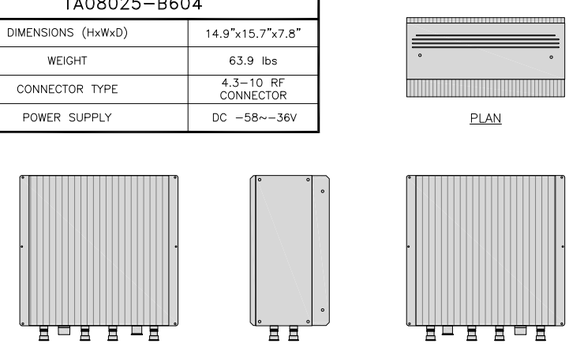


RRH DETAIL — NO SCALE — 2

| SABRE DOUBLE Z-BRACKET C10123155 | |
|---|---|
| DIMENSIONS (HxWxD) (1 BRACKET) | 5"x20"x1-13/16" |
| WEIGHT (FULL ASSEMBLY) | 35.79 lbs |
| PACKAGE QUANTITY | 4 |

| # | DESCRIPTION |
|---|---|
| 1 | PLATE, CHANNEL BRACKET |
| 2 | RRH Z BRACKET, 3/16" |
| 3 | THREADED ROD ASSEMBLY 1/2"x12" |

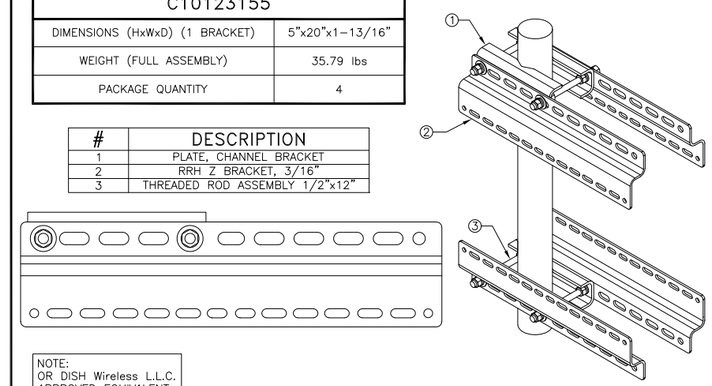


NOTE:
OR DISH Wireless L.L.C.
APPROVED EQUIVALENT

RRH MOUNT DETAIL — NO SCALE — 3

| COMMSCOPE FFVV-65B-R2 | |
|---|---|
| DIMENSIONS (HxWxD)(MM/IN) | 1828x498x197 72"x19.6"x7.8" |
| RF CONNECTOR INTERFACE | 4.3-10 FEMALE |
| WEIGHT | 70.8 lbs |
| WEIGHT WITH BRACKETS | 98.1 lbs |

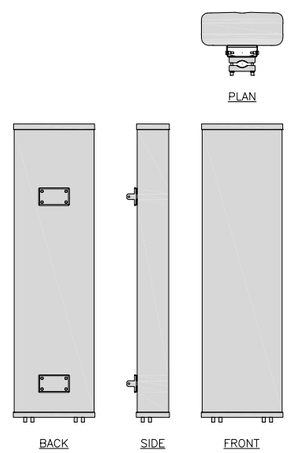


ANTENNA DETAIL — NO SCALE — 4

NOT USED — NO SCALE — 5

| JMA ANTENNA MOUNT BRACKET #91900318 | |
|---|---|
| TOTAL WEIGHT (WITH BRACKETS) | 18 lbs (8.18 Kg) |
| POLE DIAMETER RANGE | 2.5" TO 4.5" |

NOTE:
KIT #91900318: TOP AND BOTTOM BRACKETS FOR 4-,6-, AND 8-FOOT ANTENNAS

ANTENNA BRACKET NOT PART OF KIT

NOTE:
OR DISH Wireless L.L.C.
APPROVED EQUIVALENT

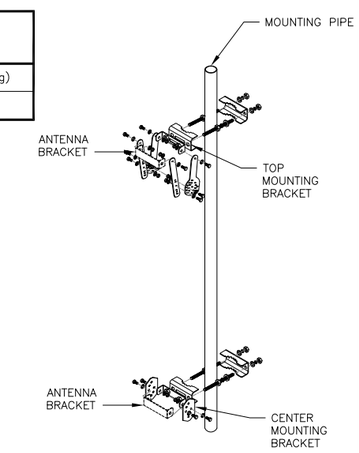


ANTENNA BRACKET DETAIL — NO SCALE — 6

| RAYCAP RDIDC-9181-PF-48 DC SURGE PROTECTION (OVP) | |
|---|---|
| DIMENSIONS (HxWxD) | 18.98"x14.39"x8.15" |
| WEIGHT | 21.82 LBS |

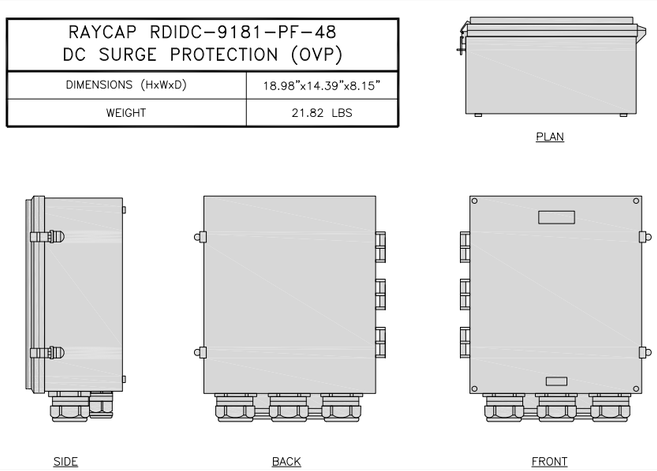


SURGE SUPPRESSION DETAIL (OVP) — NO SCALE — 7

| COMMSCOPE XP-2040 CROSSOVER PLATE | |
|---|---|
| DIMENSIONS (HxW) | 10"x12" |
| WEIGHT | 11 lbs |

NOTE:
OR DISH Wireless L.L.C.
APPROVED EQUIVALENT

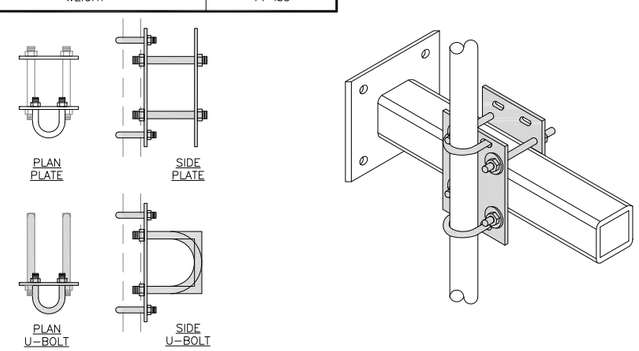


RRH/OVP MOUNT DETAIL — NO SCALE — 8

| COMMSCOPE MC-PK8-DSH | |
|---|---|
| FACE WIDTH | 96" |
| WEIGHT | 1373.08 lbs |
| NOTE: 15" TO 38" O.D. | |

NOTE:
OR DISH Wireless L.L.C.
APPROVED EQUIVALENT

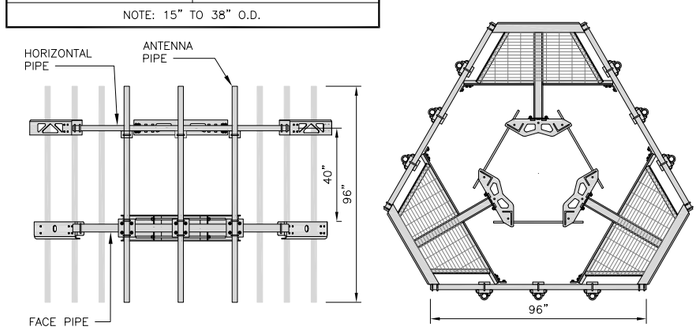


ANTENNA PLATFORM DETAIL — NO SCALE — 9


dish wireless
5701 SOUTH SANTA FE DRIVE
LITTLETON, CO 80120

SBA
8051 CONGRESS AVENUE
BOCA RATON, FL 33487

B+T GRP
1717 S. BOULDER
SUITE 300
TULSA, OK 74119
PH: (918) 587-4630
www.btgrp.com


8/8/22

STATE OF CONNECTICUT — CHAD J. TITLE — No. 23924 — LICENSED PROFESSIONAL ENGINEER


MTS ENGINEERING P.L.L.C.
BER:2386985
Expires 3/31/23



IT IS A VIOLATION OF LAW FOR ANY PERSON, UNLESS THEY ARE ACTING UNDER THE DIRECTION OF A LICENSED PROFESSIONAL ENGINEER, TO ALTER THIS DOCUMENT.


| DRAWN BY: | CHECKED BY: | APPROVED BY: |
|---|---|---|
| YN | KJG | CDD |

RFDS REV #: 1.0

CONSTRUCTION DOCUMENTS

SUBMITTALS

| REV | DATE | DESCRIPTION |
|---|---|---|
| A | 11/29/21 | ISSUED FOR REVIEW |
| 0 | 11/27/22 | ISSUED FOR CONSTRUCTION |
| 1 | 6/15/22 | ISSUED FOR CONSTRUCTION |
| 2 | 8/8/22 | ISSUED FOR CONSTRUCTION |

A&E PROJECT NUMBER
149435.001.01

DISH Wireless L.L.C. PROJECT INFORMATION
BOBOS00046A
100 OLD TATNIC HILL ROAD
BROOKLYN, CT 06234

SHEET TITLE
EQUIPMENT DETAILS

SHEET NUMBER
A-6

## NOTES

1. CONTRACTOR SHALL FIELD VERIFY ALL PROPOSED UNDERGROUND UTILITY CONDUIT ROUTE.
2. ANTENNAS AND MOUNTS OMITTED FOR CLARITY.
3. THE GROUND LEASE DOES NOT SPECIFY OUR UTILITY RIGHTS. "PWR" AND "FBR" PATH DEPICTED ON A–1 AND E–1 ARE BASED ON BEST AVAILABLE INFORMATION INCLUDING BUT NOT LIMITED TO FIELD VERIFICATION, PRIOR PROJECT DOCUMENTATION AND OTHER REAL PROPERTY RIGHTS DOCUMENTS. WHEN INSTALLING THE UTILITIES PLAEASE LOCATE AND FOLLOW EXSITING PATH. IF EXISTING PATH IS NOT AN OPTION PLEASE NOTIFY TOWER OWNER AS FURTHER COORINATION MAY BE NEEDED.

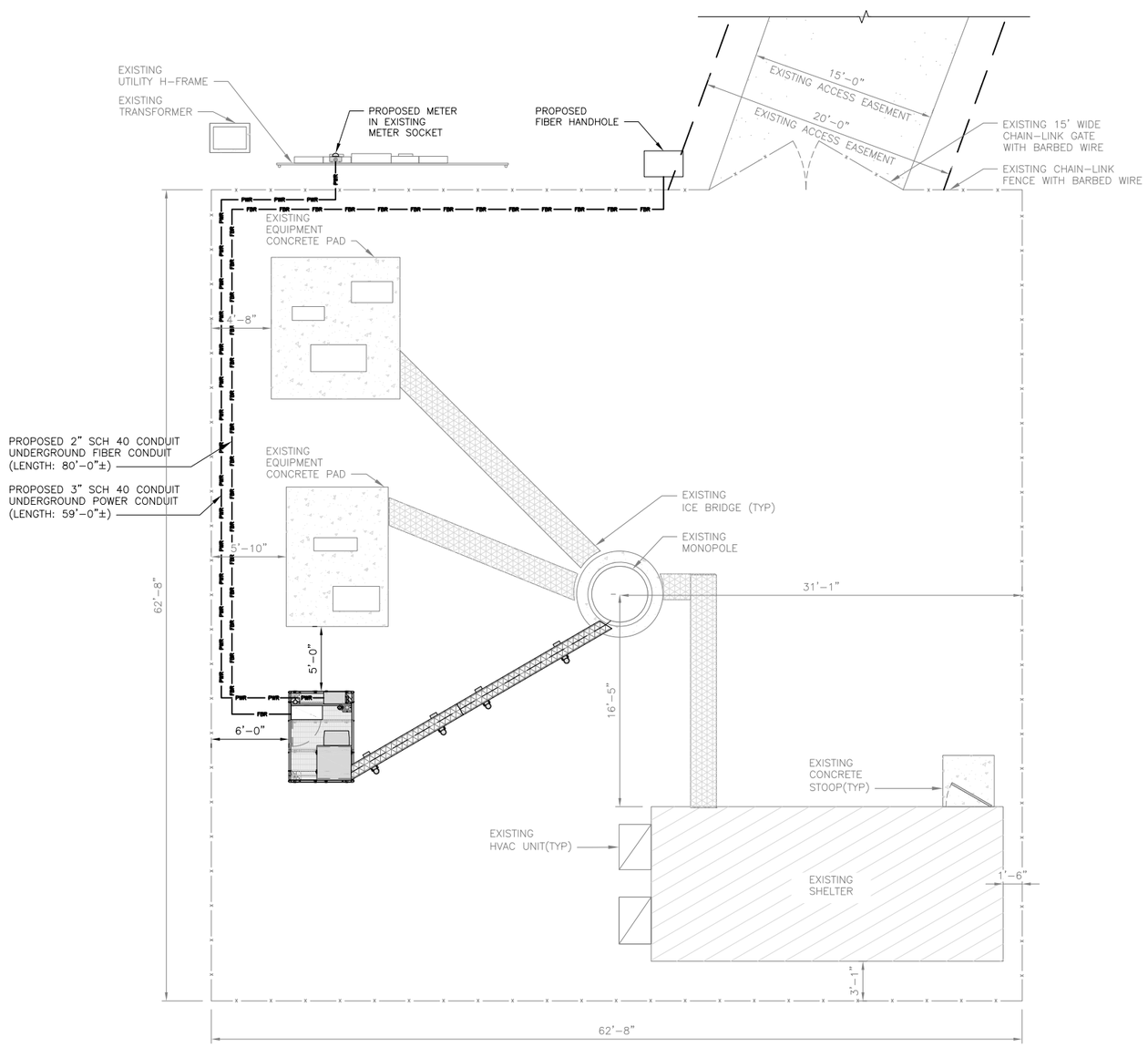


N

UTILITY ROUTE PLAN

6' 4' 2' 0 5' 10'
3/16"=1'–0"

1

DC POWER WIRING SHALL BE COLOR CODED AT EACH END FOR IDENTIFYING +24V AND –48V CONDUCTORS. RED MARKINGS SHALL IDENTIFY +24V AND BLUE MARKINGS SHALL IDENTIFY –48V.

1. CONTRACTOR SHALL INSPECT THE EXISTING CONDITIONS PRIOR TO SUBMITTING A BID. ANY QUESTIONS ARISING DURING THE BID PERIOD IN REGARDS TO THE CONTRACTOR'S FUNCTIONS, THE SCOPE OF WORK, OR ANY OTHER ISSUE RELATED TO THIS PROJECT SHALL BE BROUGHT UP DURING THE BID PERIOD WITH THE PROJECT MANAGER FOR CLARIFICATION, NOT AFTER THE CONTRACT HAS BEEN AWARDED.
2. ALL ELECTRICAL WORK SHALL BE DONE IN ACCORDANCE WITH CURRENT NATIONAL ELECTRICAL CODES AND ALL STATE AND LOCAL CODES, LAWS, AND ORDINANCES. PROVIDE ALL COMPONENTS AND WIRING SIZES AS REQUIRED TO MEET NEC STANDARDS.
3. LOCATION OF EQUIPMENT, CONDUIT AND DEVICES SHOWN ON THE DRAWINGS ARE APPROXIMATE AND SHALL BE COORDINATED WITH FIELD CONDITIONS PRIOR TO CONSTRUCTION.
4. CONDUIT ROUGH–IN SHALL BE COORDINATED WITH THE MECHANICAL EQUIPMENT TO AVOID LOCATION CONFLICTS. VERIFY WITH THE MECHANICAL EQUIPMENT CONTRACTOR AND COMPLY AS REQUIRED.
5. CONTRACTOR SHALL PROVIDE ALL BREAKERS, CONDUITS AND CIRCUITS AS REQUIRED FOR A COMPLETE SYSTEM.
6. CONTRACTOR SHALL PROVIDE PULL BOXES AND JUNCTION BOXES AS REQUIRED BY THE NEC ARTICLE 314.
7. CONTRACTOR SHALL PROVIDE ALL STRAIN RELIEF AND CABLE SUPPORTS FOR ALL CABLE ASSEMBLIES. INSTALLATION SHALL BE IN ACCORDANCE WITH MANUFACTURER'S SPECIFICATIONS AND RECOMMENDATIONS.
8. ALL DISCONNECTS AND CONTROLLING DEVICES SHALL BE PROVIDED WITH ENGRAVED PHENOLIC NAMEPLATES INDICATING EQUIPMENT CONTROLLED, BRANCH CIRCUITS INSTALLED ON, AND PANEL FIELD LOCATIONS FED FROM.
9. INSTALL AN EQUIPMENT GROUNDING CONDUCTOR IN ALL CONDUITS PER THE SPECIFICATIONS AND NEC 250. THE EQUIPMENT GROUNDING CONDUCTORS SHALL BE BONDED AT ALL JUNCTION BOXES, PULL BOXES, AND ALL DISCONNECT SWITCHES, AND EQUIPMENT CABINETS.
10. ALL NEW MATERIAL SHALL HAVE A U.L. LABEL.
11. PANEL SCHEDULE LOADING AND CIRCUIT ARRANGEMENTS REFLECT POST–CONSTRUCTION EQUIPMENT.
12. CONTRACTOR SHALL BE RESPONSIBLE FOR AS–BUILT PANEL SCHEDULE AND SITE DRAWINGS.
13. ALL TRENCHES IN COMPOUND TO BE HAND DUG

ELECTRICAL NOTES

NO SCALE

2


dish wireless
5701 SOUTH SANTA FE DRIVE
LITTLETON, CO 80120

SBA
8051 CONGRESS AVENUE
BOCA RATON, FL 33487

B+T GRP
1717 S. BOULDER
SUITE 300
TULSA, OK 74119
PH: (918) 587-4630
www.btgrp.com


8/8/22

STATE OF CONNECTICUT
CHAD TITLE
No. 23924
LICENSED
PROFESSIONAL ENGINEER

MTS ENGINEERING P.L.L.C.
BER:2386985
Expires 3/31/23


IT IS A VIOLATION OF LAW FOR ANY PERSON, UNLESS THEY ARE ACTING UNDER THE DIRECTION OF A LICENSED PROFESSIONAL ENGINEER, TO ALTER THIS DOCUMENT.


| DRAWN BY: | CHECKED BY: | APPROVED BY: |
|---|---|---|
| YN | KJG | CDD |

RFDS REV #: 1.0

CONSTRUCTION DOCUMENTS

SUBMITTALS

| REV | DATE | DESCRIPTION |
|---|---|---|
| A | 11/29/21 | ISSUED FOR REVIEW |
| 0 | 11/27/22 | ISSUED FOR CONSTRUCTION |
| 1 | 6/15/22 | ISSUED FOR CONSTRUCTION |
| 2 | 8/8/22 | ISSUED FOR CONSTRUCTION |

A&E PROJECT NUMBER
149435.001.01

DISH Wireless L.L.C.
PROJECT INFORMATION
BOBOS00046A
100 OLD TATNIC HILL ROAD
BROOKLYN, CT 06234

SHEET TITLE
ELECTRICAL/FIBER ROUTE PLAN AND NOTES

SHEET NUMBER
E-1

## CARLON EXPANSION FITTINGS

| COUPLING END PART# | MALE TERMINAL ADAPTER END PART# | SIZE | STD CTN QTY. | TRAVEL LENGTH |
|---|---|---|---|---|
| E945D | E945DX | 1/2" | 20 | 4" |
| E945E | E945EX | 3/4" | 15 | 4" |
| E945F | E945FX | 1" | 10 | 4" |
| E945G | E945GX | 1 1/4" | 5 | 4" |
| E945H | E945HX | 1 1/2" | 5 | 4" |
| E945J | E945JX | 2" | 15 | 8" |
| E945K | E945KX | 2 1/2" | 10 | 8" |
| E945L | E945LX | 3" | 10 | 8" |
| E945M | E945MX | 3 1/2" | 5 | 8" |
| E945N | E945NX | 4" | 5 | 8" |
| E945P | E945PX | 5" | 1 | 8" |
| E945R | E945RX | 6" | 1 | 8" |

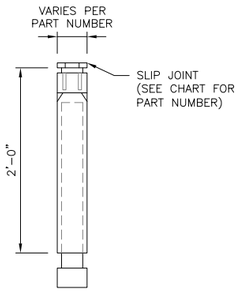


NOTE:
CONTRACTOR TO INSTALL EXPANSION FITTING SLIP JOINT AT METER CENTER CONDUIT TERMINATION, AS PER LOCAL UTILITY POLICY, ORDINANCE AND/OR SPECIFIED REQUIREMENT.

EXPANSION JOINT DETAIL — NO SCALE — 1

## TRENCHING NOTES

1. CONTRACTOR SHALL RESTORE THE TRENCH TO ITS ORIGINAL CONDITIONS BY EITHER SEEDING OR SODDING GRASS AREAS, OR REPLACING ASPHALT OR CONCRETE AREAS TO ITS ORIGINAL CROSS SECTION.
2. TRENCHING SAFETY; INCLUDING, BUT NOT LIMITED TO SOIL CLASSIFICATION, SLOPING, AND SHORING, SHALL BE GOVERNED BY THE CURRENT OSHA TRENCHING AND EXCAVATION SAFETY STANDARDS.
3. ALL CONDUITS SHALL BE INSTALLED IN COMPLIANCE WITH THE CURRENT NATIONAL ELECTRIC CODE (NEC) OR AS REQUIRED BY THE LOCAL JURISDICTION, WHICHEVER IS THE MOST STRINGENT.

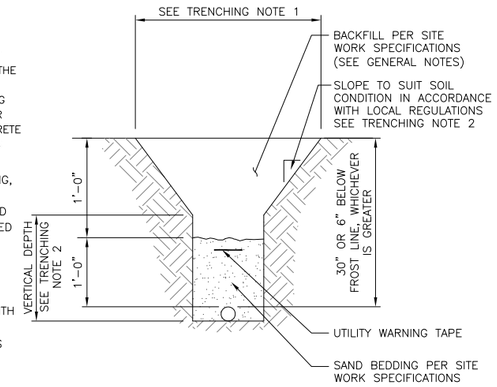


TYPICAL UNDERGROUND TRENCH DETAIL — NO SCALE — 2

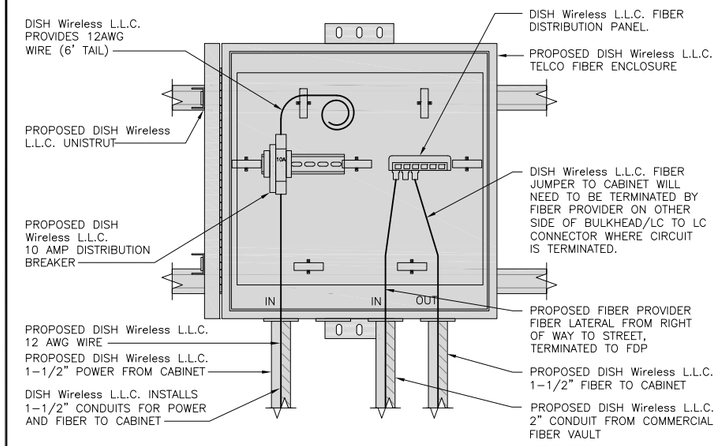


DARK TELCO BOX – INTERIOR WIRING LAYOUT — NO SCALE — 3

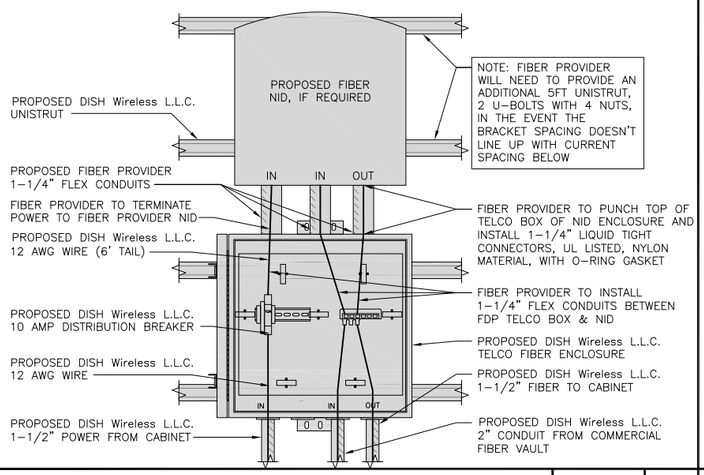


LIT TELCO BOX – INTERIOR WIRING LAYOUT (OPTIONAL) — NO SCALE — 4

NOT USED — NO SCALE — 5

NOT USED — NO SCALE — 6

NOT USED — NO SCALE — 7

NOT USED — NO SCALE — 8

NOT USED — NO SCALE — 9


dish wireless
5701 SOUTH SANTA FE DRIVE
LITTLETON, CO 80120

SBA
8051 CONGRESS AVENUE
BOCA RATON, FL 33487

B+T GRP
1717 S. BOULDER
SUITE 300
TULSA, OK 74119
PH: (918) 587-4630
www.btgrp.com


8/8/22

STATE OF CONNECTICUT — CHAD J. TITLE — No. 23924 — LICENSED PROFESSIONAL ENGINEER

MTS ENGINEERING P.L.L.C.
BER:2386985
Expires 3/31/23


IT IS A VIOLATION OF LAW FOR ANY PERSON, UNLESS THEY ARE ACTING UNDER THE DIRECTION OF A LICENSED PROFESSIONAL ENGINEER, TO ALTER THIS DOCUMENT.


| DRAWN BY: | CHECKED BY: | APPROVED BY: |
|---|---|---|
| YN | KJG | CDD |

RFDS REV #: 1.0

CONSTRUCTION DOCUMENTS

SUBMITTALS

| REV | DATE | DESCRIPTION |
|---|---|---|
| A | 11/29/21 | ISSUED FOR REVIEW |
| 0 | 11/27/22 | ISSUED FOR CONSTRUCTION |
| 1 | 6/15/22 | ISSUED FOR CONSTRUCTION |
| 2 | 8/8/22 | ISSUED FOR CONSTRUCTION |

A&E PROJECT NUMBER
149435.001.01

DISH Wireless L.L.C.
PROJECT INFORMATION
BOBOS00046A
100 OLD TATNIC HILL ROAD
BROOKLYN, CT 06234

SHEET TITLE
ELECTRICAL DETAILS

SHEET NUMBER
E-2

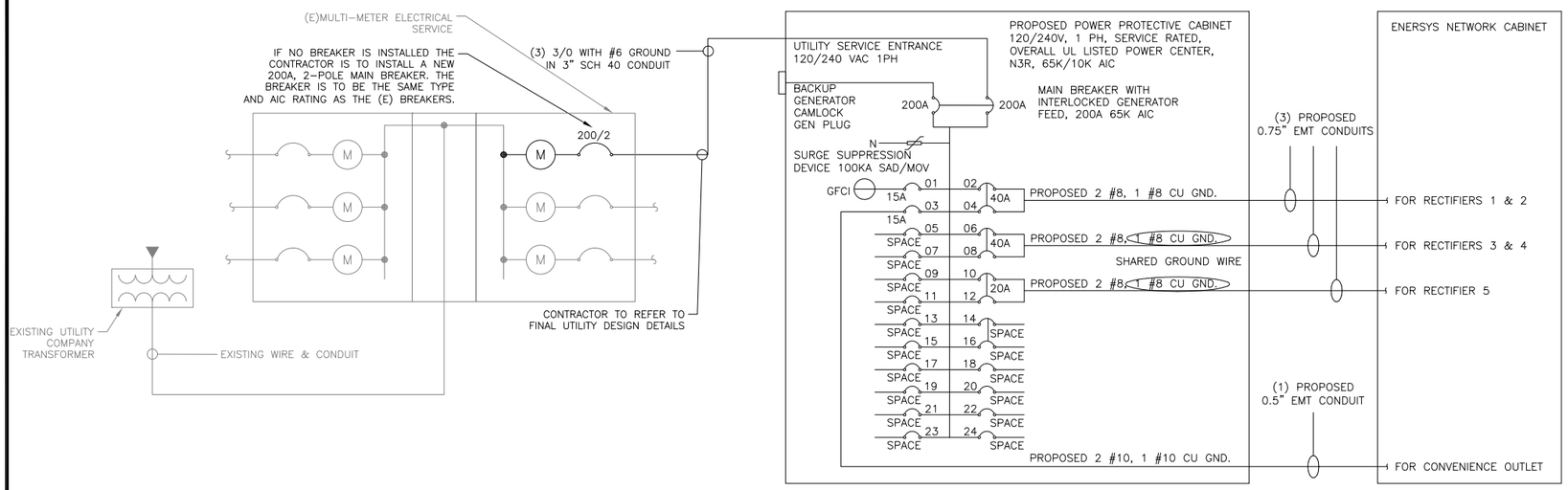


NOTE:
BRANCH CIRCUIT WIRING SUPPLYING RECTIFIERS ARE TO BE RATED UL1015, 105°C, 600V, AND PVC INSULATED, IN THE SIZES SHOWN IN THE ONE-LINE DIAGRAM. CONTRACTOR MAY SUBSTITUTE UL1015 WIRE FOR THWN-2 FOR CONVENIENCE OUTLET BRANCH CIRCUIT.

BREAKERS REQUIRED:
(2) 40A, 2P BREAKER – SQUARE D P/N:QO240
(1) 20A, 2P BREAKER – SQUARE D P/N:QO220
(1) 20A, 1P BREAKER – SQUARE D P/N:QO120

## NOTES

THE ENGINEER OF RECORD HAS PERFORMED ALL REQUIRED SHORT CIRCUIT CALCULATIONS AND THE AIC RATINGS FOR EACH DEVICE IS ADEQUATE TO PROTECT THE EQUIPMENT AND THE ELECTRICAL SYSTEM.

THE ENGINEER OF RECORD HAS PERFORMED ALL REQUIRED VOLTAGE DROP CALCULATIONS AND ALL BRANCH CIRCUIT AND FEEDERS COMPLY WITH THE NEC (LISTED ON T-1) ARTICLE 210.19(A)(1) FPN NO. 4.

CONDUIT SIZING: AT 40% FILL PER NEC CHAPTER 9, TABLE 4, ARTICLE 358.
0.5" CONDUIT – 0.122 SQ. IN AREA
0.75" CONDUIT – 0.213 SQ. IN AREA
2.0" CONDUIT – 1.316 SQ. IN AREA
3.0" CONDUIT – 2.907 SQ. IN AREA

CABINET CONVENIENCE OUTLET CONDUCTORS (1 CONDUIT): USING THWN-2, CU.

#10 – 0.0211 SQ. IN X 2 = 0.0422 SQ. IN
#10 – 0.0211 SQ. IN X 1 = 0.0211 SQ. IN <GROUND
TOTAL = 0.0633 SQ. IN

0.5" EMT CONDUIT IS ADEQUATE TO HANDLE THE TOTAL OF (3) WIRES, INCLUDING GROUND WIRE, AS INDICATED ABOVE.

RECTIFIER CONDUCTORS (3 CONDUITS): USING UL1015, CU.

#8 – 0.0552 SQ. IN X 2 = 0.1103 SQ. IN
#8 – 0.0131 SQ. IN X 1 = 0.0131 SQ. IN <BARE GROUND
TOTAL = 0.1234 SQ. IN

0.75" EMT CONDUIT IS ADEQUATE TO HANDLE THE TOTAL OF (3) WIRES, INCLUDING GROUND WIRE, AS INDICATED ABOVE.

PPC FEED CONDUCTORS (1 CONDUIT): USING THWN, CU.

3/0 – 0.2679 SQ. IN X 3 = 0.8037 SQ. IN
#6 – 0.0507 SQ. IN X 1 = 0.0507 SQ. IN <GROUND
TOTAL = 0.8544 SQ. IN

3.0" SCH 40 PVC CONDUIT IS ADEQUATE TO HANDLE THE TOTAL OF (4) WIRES, INCLUDING GROUND WIRE, AS INDICATED ABOVE.

PPC ONE-LINE DIAGRAM | NO SCALE | 1

## PROPOSED ENERSYS PANEL SCHEDULE

| LOAD SERVED | VOLT AMPS (WATTS) L1 | VOLT AMPS (WATTS) L2 | TRIP | CKT # | PHASE | | CKT # | TRIP | VOLT AMPS (WATTS) L1 | VOLT AMPS (WATTS) L2 | LOAD SERVED |
|---|---|---|---|---|---|---|---|---|---|---|---|
| PPC GFCI OUTLET | 180 | | 15A | 1 | A | | 2 | 40A | 3840 | | ENERSYS ALPHA CORDEX |
| ENERSYS GFCI OUTLET | | 180 | 15A | 3 | B | | 4 | | | 3840 | RECTIFIERS 1 & 2 |
| –SPACE– | | | | 5 | A | | 6 | 40A | 3840 | | ENERSYS ALPHA CORDEX |
| –SPACE– | | | | 7 | B | | 8 | | | 3840 | RECTIFIER 3 & 4 |
| –SPACE– | | | | 9 | A | | 10 | 20A | 1920 | | ENERSYS ALPHA CORDEX |
| –SPACE– | | | | 11 | B | | 12 | | | 1920 | RECTIFIER 5 |
| –SPACE– | | | | 13 | A | | 14 | | | | –SPACE– |
| –SPACE– | | | | 15 | B | | 16 | | | | –SPACE– |
| –SPACE– | | | | 17 | A | | 18 | | | | –SPACE– |
| –SPACE– | | | | 19 | B | | 20 | | | | –SPACE– |
| –SPACE– | | | | 21 | A | | 22 | | | | –SPACE– |
| –SPACE– | | | | 23 | B | | 24 | | | | –SPACE– |
| VOLTAGE AMPS | 180 | 180 | | | | | | | 9500 | 9500 | |
| 200A MCB, 1ϕ, 24 SPACE, 120/240V | | | L1 | | L2 | | | | | | |
| MB RATING: 65,000 AIC | | | 9680 | | 9680 | | VOLTAGE AMPS | | | | |
| | | | 81 | | 81 | | AMPS | | | | |
| | | | 81 | | | | MAX AMPS | | | | |
| | | | 102 | | | | MAX 125% | | | | |

PANEL SCHEDULE | NO SCALE | 2

NOT USED | NO SCALE | 3


dish wireless
5701 SOUTH SANTA FE DRIVE
LITTLETON, CO 80120

SBA
8051 CONGRESS AVENUE
BOCA RATON, FL 33487

B+T GRP
1717 S. BOULDER
SUITE 300
TULSA, OK 74119
PH: (918) 587-4630
www.btgrp.com


8/8/22

STATE OF CONNECTICUT
CHAD T. TITLE
No. 23924
LICENSED
PROFESSIONAL ENGINEER

MTS ENGINEERING P.L.L.C.
BER:2386985
Expires 3/31/23


IT IS A VIOLATION OF LAW FOR ANY PERSON, UNLESS THEY ARE ACTING UNDER THE DIRECTION OF A LICENSED PROFESSIONAL ENGINEER, TO ALTER THIS DOCUMENT.


| DRAWN BY: | CHECKED BY: | APPROVED BY: |
|---|---|---|
| YN | KJG | CDD |

RFDS REV #: 1.0

CONSTRUCTION DOCUMENTS

SUBMITTALS

| REV | DATE | DESCRIPTION |
|---|---|---|
| A | 11/29/21 | ISSUED FOR REVIEW |
| 0 | 11/27/22 | ISSUED FOR CONSTRUCTION |
| 1 | 6/15/22 | ISSUED FOR CONSTRUCTION |
| 2 | 8/8/22 | ISSUED FOR CONSTRUCTION |

A&E PROJECT NUMBER
149435.001.01

DISH Wireless L.L.C.
PROJECT INFORMATION
BOBOS00046A
100 OLD TATNIC HILL ROAD
BROOKLYN, CT 06234

SHEET TITLE
ELECTRICAL ONE-LINE, FAULT CALCS & PANEL SCHEDULE

SHEET NUMBER
E-3

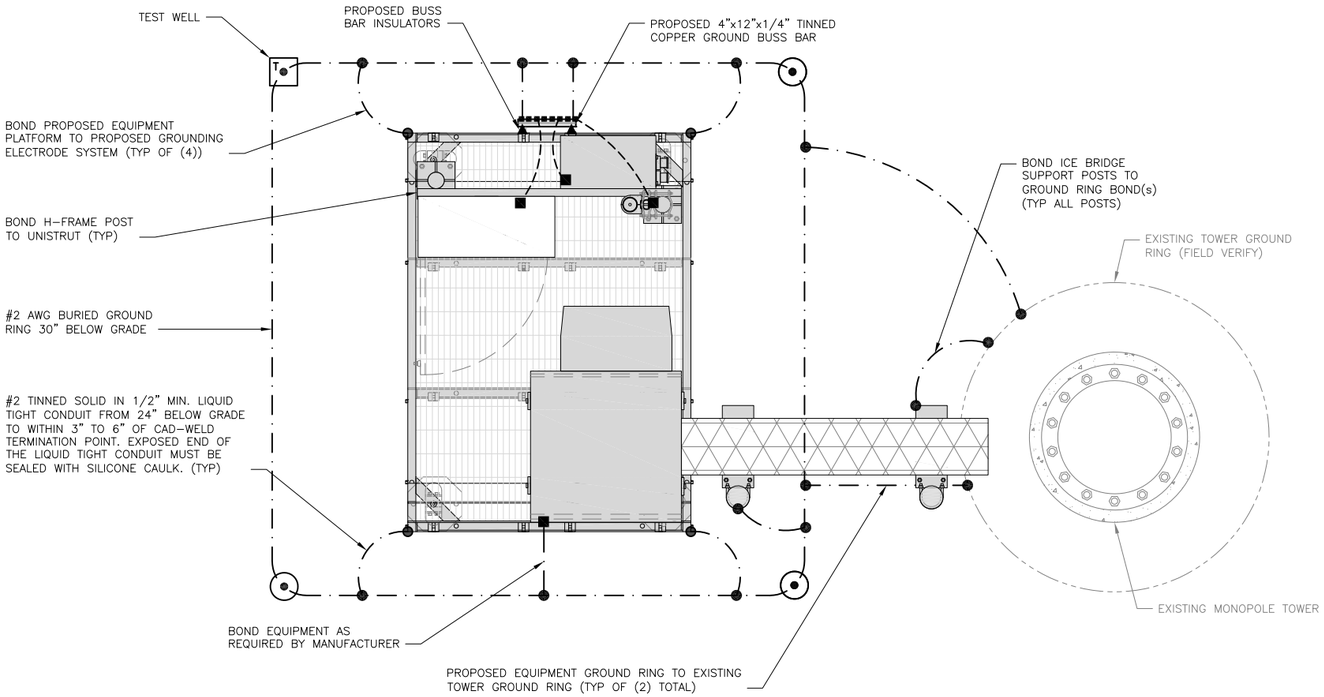


TYPICAL EQUIPMENT GROUNDING PLAN | NO SCALE | 1

## NOTES

ANTENNAS AND OVP SHOWN ARE GENERIC AND NOT REFERENCING TO A SPECIFIC MANUFACTURER. THIS LAYOUT IS FOR REFERENCE PURPOSES ONLY

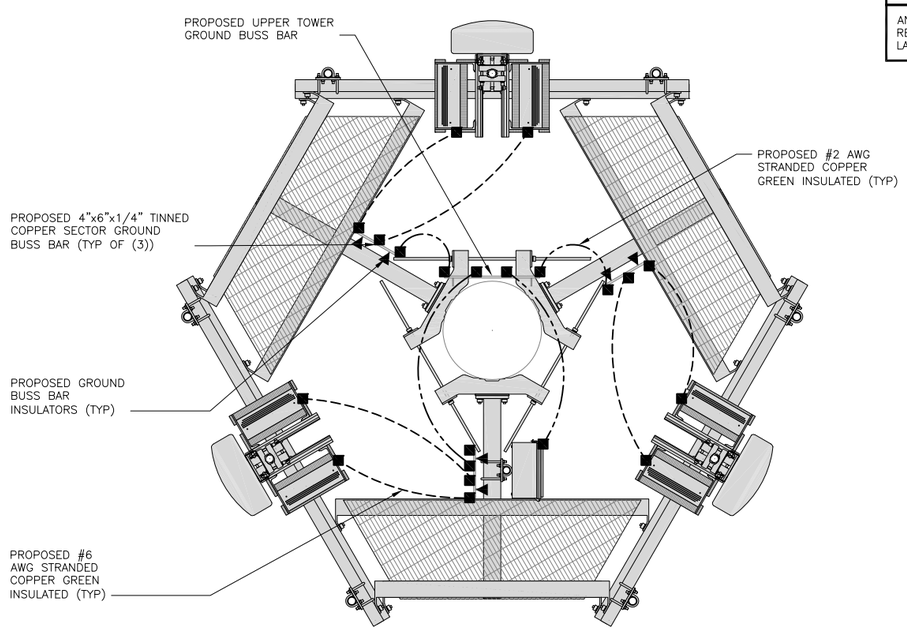


TYPICAL ANTENNA GROUNDING PLAN | NO SCALE | 2

EXOTHERMIC CONNECTION
MECHANICAL CONNECTION
GROUND BUS BAR
GROUND ROD
TEST GROUND ROD WITH INSPECTION SLEEVE
#6 AWG STRANDED & INSULATED
#2 AWG SOLID COPPER TINNED
#2 AWG STRANDED & INSULATED
BUSS BAR INSULATOR

## GROUNDING LEGEND

1. GROUNDING IS SHOWN DIAGRAMMATICALLY ONLY.
2. CONTRACTOR SHALL GROUND ALL EQUIPMENT AS A COMPLETE SYSTEM. GROUNDING SHALL BE IN COMPLIANCE WITH NEC SECTION 250 AND DISH Wireless L.L.C. GROUNDING AND BONDING REQUIREMENTS AND MANUFACTURER'S SPECIFICATIONS.
3. ALL GROUND CONDUCTORS SHALL BE COPPER; NO ALUMINUM CONDUCTORS SHALL BE USED.

## GROUNDING KEY NOTES

(A) EXTERIOR GROUND RING: #2 AWG SOLID COPPER, BURIED AT A DEPTH OF AT LEAST 30 INCHES BELOW GRADE, OR 6 INCHES BELOW THE FROST LINE AND APPROXIMATELY 24 INCHES FROM THE EXTERIOR WALL OR FOOTING.

(B) TOWER GROUND RING: THE GROUND RING SYSTEM SHALL BE INSTALLED AROUND AN ANTENNA TOWER'S LEGS, AND/OR GUY ANCHORS. WHERE SEPARATE SYSTEMS HAVE BEEN PROVIDED FOR THE TOWER AND THE BUILDING, AT LEAST TWO BONDS SHALL BE MADE BETWEEN THE TOWER RING GROUND SYSTEM AND THE BUILDING RING GROUND SYSTEM USING MINIMUM #2 AWG SOLID COPPER CONDUCTORS.

(C) INTERIOR GROUND RING: #2 AWG STRANDED GREEN INSULATED COPPER CONDUCTOR EXTENDED AROUND THE PERIMETER OF THE EQUIPMENT AREA. ALL NON-TELECOMMUNICATIONS RELATED METALLIC OBJECTS FOUND WITHIN A SITE SHALL BE GROUNDED TO THE INTERIOR GROUND RING WITH #6 AWG STRANDED GREEN INSULATED CONDUCTOR.

(D) BOND TO INTERIOR GROUND RING: #2 AWG SOLID TINNED COPPER WIRE PRIMARY BONDS SHALL BE PROVIDED AT LEAST AT FOUR POINTS ON THE INTERIOR GROUND RING, LOCATED AT THE CORNERS OF THE BUILDING.

(E) GROUND ROD: UL LISTED COPPER CLAD STEEL. MINIMUM 1/2" DIAMETER BY EIGHT FEET LONG. GROUND RODS SHALL BE INSTALLED WITH INSPECTION SLEEVES. GROUND RODS SHALL BE DRIVEN TO THE DEPTH OF GROUND RING CONDUCTOR.

(F) CELL REFERENCE GROUND BAR: POINT OF GROUND REFERENCE FOR ALL COMMUNICATIONS EQUIPMENT FRAMES. ALL BONDS ARE MADE WITH #2 AWG UNLESS NOTED OTHERWISE STRANDED GREEN INSULATED COPPER CONDUCTORS. BOND TO GROUND RING WITH (2) #2 SOLID TINNED COPPER CONDUCTORS.

(G) HATCH PLATE GROUND BAR: BOND TO THE INTERIOR GROUND RING WITH TWO #2 AWG STRANDED GREEN INSULATED COPPER CONDUCTORS. WHEN A HATCH-PLATE AND A CELL REFERENCE GROUND BAR ARE BOTH PRESENT, THE CRGB MUST BE CONNECTED TO THE HATCH-PLATE AND TO THE INTERIOR GROUND RING USING (2) TWO #2 AWG STRANDED GREEN INSULATED COPPER CONDUCTORS EACH.

(H) EXTERIOR CABLE ENTRY PORT GROUND BARS: LOCATED AT THE ENTRANCE TO THE CELL SITE BUILDING. BOND TO GROUND RING WITH A #2 AWG SOLID TINNED COPPER CONDUCTORS WITH AN EXOTHERMIC WELD AND INSPECTION SLEEVE.

(I) TELCO GROUND BAR: BOND TO BOTH CELL REFERENCE GROUND BAR OR EXTERIOR GROUND RING.

(J) FRAME BONDING: THE BONDING POINT FOR TELECOM EQUIPMENT FRAMES SHALL BE THE GROUND BUS THAT IS NOT ISOLATED FROM THE EQUIPMENTS METAL FRAMEWORK.

(K) INTERIOR UNIT BONDS: METAL FRAMES, CABINETS AND INDIVIDUAL METALLIC UNITS LOCATED WITH THE AREA OF THE INTERIOR GROUND RING REQUIRE A #6 AWG STRANDED GREEN INSULATED COPPER BOND TO THE INTERIOR GROUND RING.

(L) FENCE AND GATE GROUNDING: METAL FENCES WITHIN 7 FEET OF THE EXTERIOR GROUND RING OR OBJECTS BONDED TO THE EXTERIOR GROUND RING SHALL BE BONDED TO THE GROUND RING WITH A #2 AWG SOLID TINNED COPPER CONDUCTOR AT AN INTERVAL NOT EXCEEDING 25 FEET. BONDS SHALL BE MADE AT EACH GATE POST AND ACROSS GATE OPENINGS.

(M) EXTERIOR UNIT BONDS: METALLIC OBJECTS, EXTERNAL TO OR MOUNTED TO THE BUILDING, SHALL BE BONDED TO THE EXTERIOR GROUND RING. USING #2 TINNED SOLID COPPER WIRE

(N) ICE BRIDGE SUPPORTS: EACH ICE BRIDGE LEG SHALL BE BONDED TO THE GROUND RING WITH #2 AWG BARE TINNED COPPER CONDUCTOR. PROVIDE EXOTHERMIC WELDS AT BOTH THE ICE BRIDGE LEG AND BURIED GROUND RING.

(O) DURING ALL DC POWER SYSTEM CHANGES INCLUDING DC SYSTEM CHANGE OUTS, RECTIFIER REPLACEMENTS OR ADDITIONS, BREAKER DISTRIBUTION CHANGES, BATTERY ADDITIONS, BATTERY REPLACEMENTS AND INSTALLATIONS OR CHANGES TO DC CONVERTER SYSTEMS IT SHALL BE REQUIRED THAT SERVICE CONTRACTORS VERIFY ALL DC POWER SYSTEMS ARE EQUIPPED WITH A MASTER DC SYSTEM RETURN GROUND CONDUCTOR FROM THE DC POWER SYSTEM COMMON RETURN BUS DIRECTLY CONNECTED TO THE CELL SITE REFERENCE GROUND BAR

(P) TOWER TOP COLLECTOR BUSS BAR IS TO BE MECHANICALLY BONDED TO PROPOSED ANTENNA MOUNT COLLAR.

REFER TO DISH Wireless L.L.C. GROUNDING NOTES.

GROUNDING KEY NOTES | NO SCALE | 3


dish wireless
5701 SOUTH SANTA FE DRIVE
LITTLETON, CO 80120

SBA
8051 CONGRESS AVENUE
BOCA RATON, FL 33487

B+T GRP
1717 S. BOULDER
SUITE 300
TULSA, OK 74119
PH: (918) 587-4630
www.btgrp.com


8/8/22

STATE OF CONNECTICUT
CHAD J. CASTLE
No. 23924
LICENSED
PROFESSIONAL ENGINEER

MTS ENGINEERING P.L.L.C.
BER:2386985
Expires 3/31/23


IT IS A VIOLATION OF LAW FOR ANY PERSON, UNLESS THEY ARE ACTING UNDER THE DIRECTION OF A LICENSED PROFESSIONAL ENGINEER, TO ALTER THIS DOCUMENT.


| DRAWN BY: | CHECKED BY: | APPROVED BY: |
|---|---|---|
| YN | KJG | CDD |

RFDS REV #: 1.0

CONSTRUCTION DOCUMENTS

SUBMITTALS

| REV | DATE | DESCRIPTION |
|---|---|---|
| A | 11/29/21 | ISSUED FOR REVIEW |
| 0 | 11/27/22 | ISSUED FOR CONSTRUCTION |
| 1 | 6/15/22 | ISSUED FOR CONSTRUCTION |
| 2 | 8/8/22 | ISSUED FOR CONSTRUCTION |

A&E PROJECT NUMBER
149435.001.01

DISH Wireless L.L.C.
PROJECT INFORMATION
BOBOS00046A
100 OLD TATNIC HILL ROAD
BROOKLYN, CT 06234

SHEET TITLE
GROUNDING PLANS AND NOTES

SHEET NUMBER
G-1

## NOTES

EQUIPMENT CABINET OMITTED FOR CLARITY

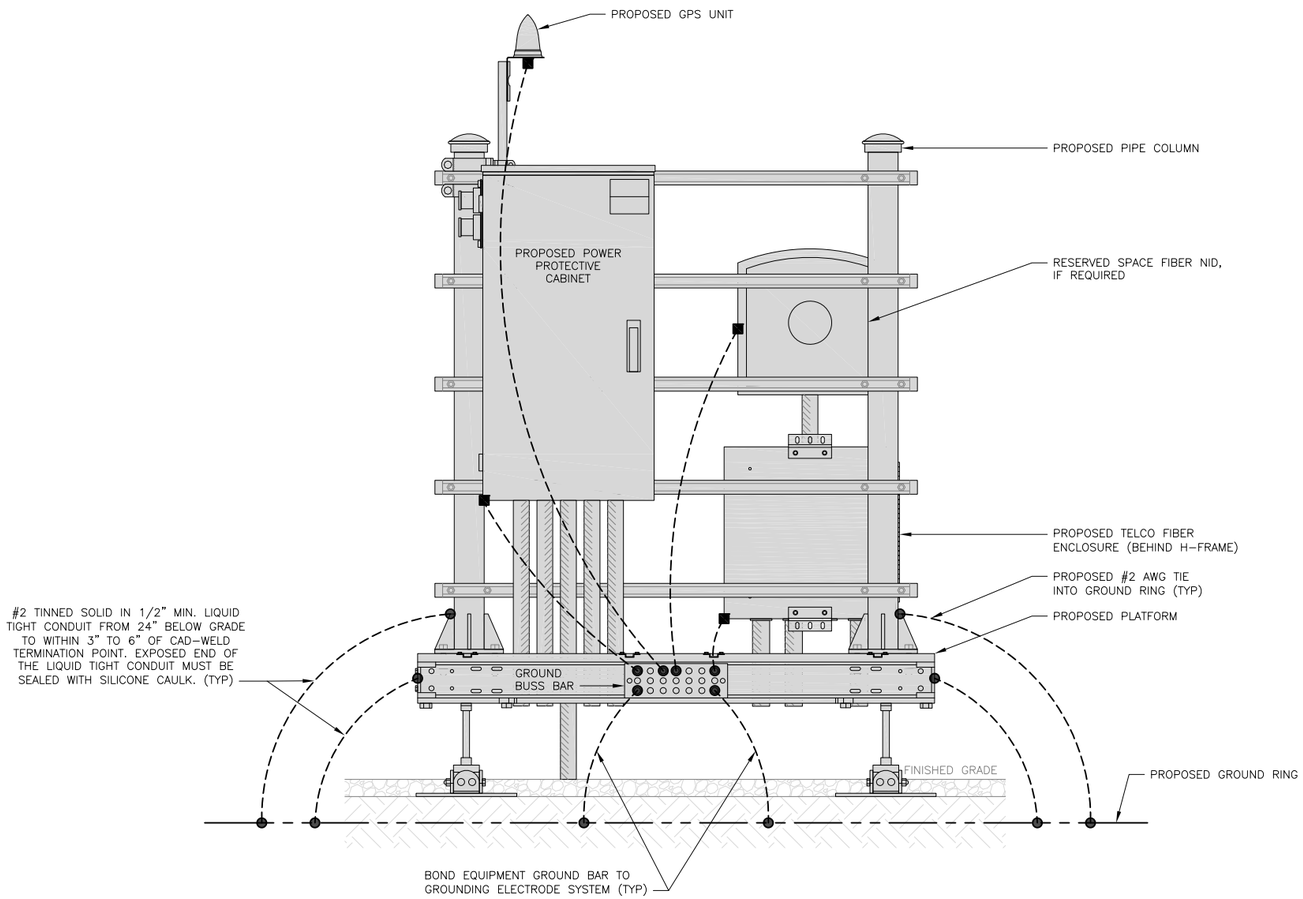


H-FRAME GROUNDING DETAIL | NO SCALE | 1

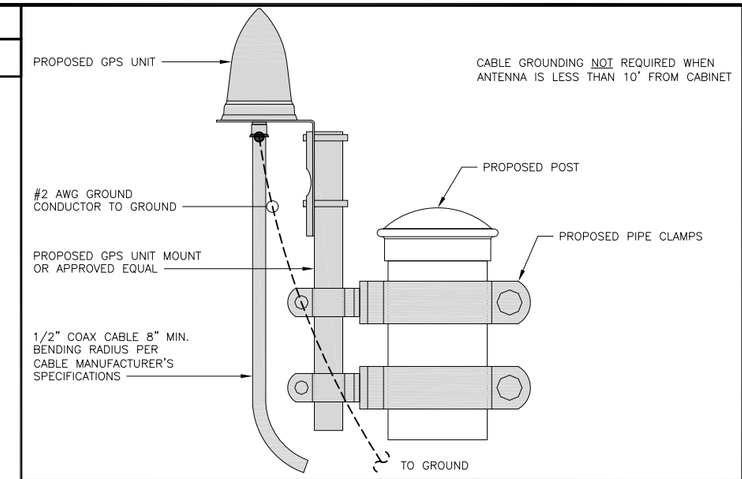


TYPICAL GPS UNIT GROUNDING | NO SCALE | 2

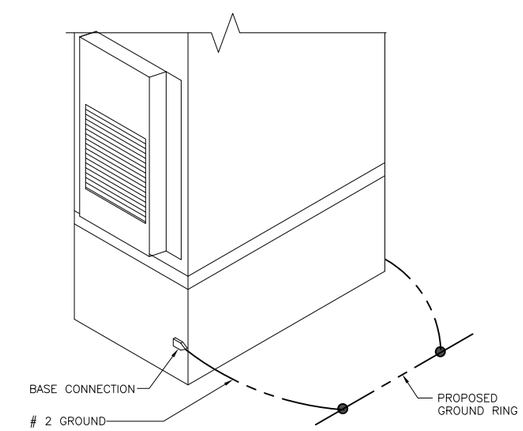


OUTDOOR CABINET GROUNDING | NO SCALE | 3

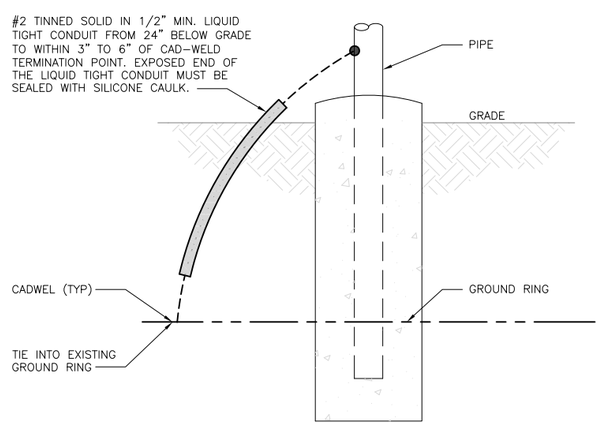


TRANSITIONING GROUND DETAIL | NO SCALE | 4

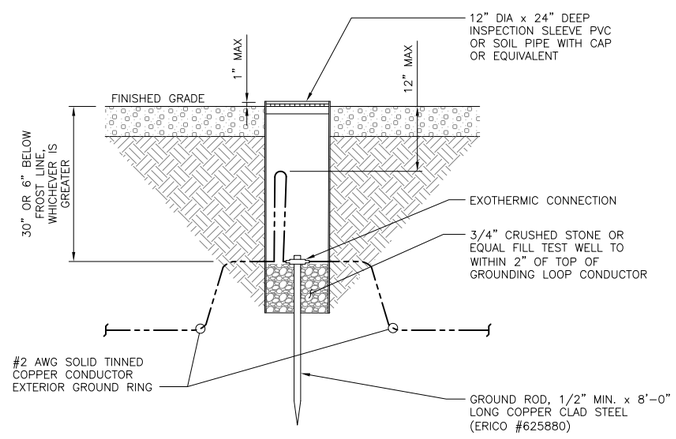


TYPICAL TEST GROUND ROD WITH INSPECTION SLEEVE | NO SCALE | 5

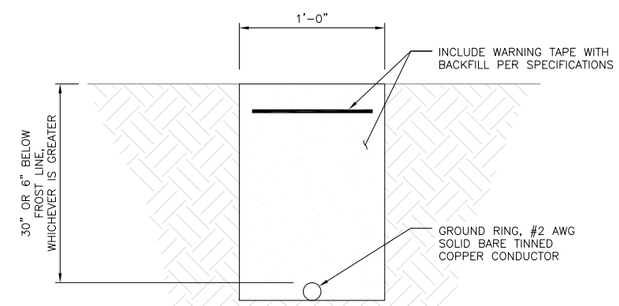


TYPICAL GROUND RING TRENCH | NO SCALE | 6


dish wireless
5701 SOUTH SANTA FE DRIVE
LITTLETON, CO 80120

SBA
8051 CONGRESS AVENUE
BOCA RATON, FL 33487

B+T GRP
1717 S. BOULDER
SUITE 300
TULSA, OK 74119
PH: (918) 587-4630
www.btgrp.com


8/8/22

STATE OF CONNECTICUT — CHAD TITLE — No. 23924 — LICENSED PROFESSIONAL ENGINEER

MTS ENGINEERING P.L.L.C.
BER:2386985
Expires 3/31/23


IT IS A VIOLATION OF LAW FOR ANY PERSON, UNLESS THEY ARE ACTING UNDER THE DIRECTION OF A LICENSED PROFESSIONAL ENGINEER, TO ALTER THIS DOCUMENT.


| DRAWN BY: | CHECKED BY: | APPROVED BY: |
|---|---|---|
| YN | KJG | CDD |

RFDS REV #: 1.0

CONSTRUCTION DOCUMENTS

SUBMITTALS

| REV | DATE | DESCRIPTION |
|---|---|---|
| A | 11/29/21 | ISSUED FOR REVIEW |
| 0 | 11/27/22 | ISSUED FOR CONSTRUCTION |
| 1 | 6/15/22 | ISSUED FOR CONSTRUCTION |
| 2 | 8/8/22 | ISSUED FOR CONSTRUCTION |

A&E PROJECT NUMBER

149435.001.01

DISH Wireless L.L.C.
PROJECT INFORMATION

BOBOS00046A
100 OLD TATNIC HILL ROAD
BROOKLYN, CT 06234

SHEET TITLE

GROUNDING DETAILS

SHEET NUMBER

**G-2**

1. EXOTHERMIC WELD (2) TWO, #2 AWG BARE TINNED SOLID COPPER CONDUCTORS TO GROUND BAR. ROUTE CONDUCTORS TO BURIED GROUND RING AND PROVIDE PARALLEL EXOTHERMIC WELD.
2. ALL EXTERIOR GROUNDING HARDWARE SHALL BE STAINLESS STEEL 3/8" DIAMETER OR LARGER. ALL HARDWARE 18-8 STAINLESS STEEL INCLUDING LOCK WASHERS, COAT ALL SURFACES WITH AN ANTI-OXIDANT COMPOUND BEFORE MATING.
3. FOR GROUND BOND TO STEEL ONLY: COAT ALL SURFACES WITH AN ANTI-OXIDANT COMPOUND BEFORE MATING.
4. DO NOT INSTALL CABLE GROUNDING KIT AT A BEND AND ALWAYS DIRECT GROUND CONDUCTOR DOWN TO GROUNDING BUS.
5. NUT & WASHER SHALL BE PLACED ON THE FRONT SIDE OF THE GROUND BAR AND BOLTED ON THE BACK SIDE.
6. ALL GROUNDING PARTS AND EQUIPMENT TO BE SUPPLIED AND INSTALLED BY CONTRACTOR.
7. THE CONTRACTOR SHALL BE RESPONSIBLE FOR INSTALLING ADDITIONAL GROUND BAR AS REQUIRED.
8. ENSURE THE WIRE INSULATION TERMINATION IS WITHIN 1/8" OF THE BARREL (NO SHINERS).

TYPICAL GROUNDING NOTES | NO SCALE | 1

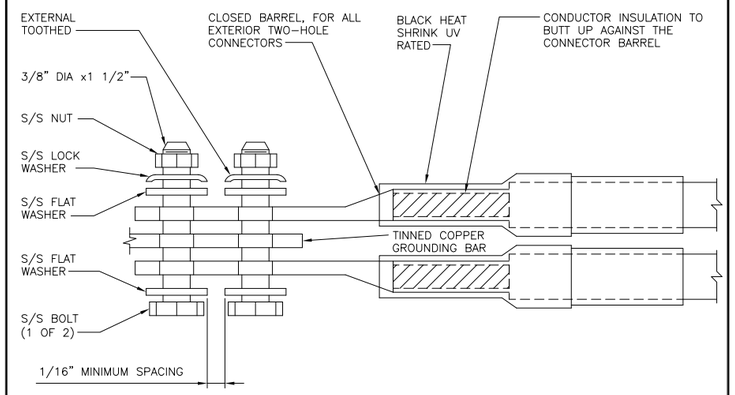


TYPICAL EXTERIOR TWO HOLE LUG | NO SCALE | 2

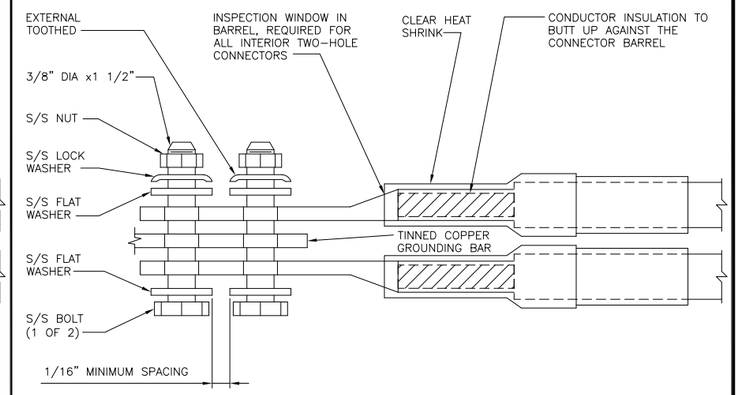


TYPICAL INTERIOR TWO HOLE LUG | NO SCALE | 3

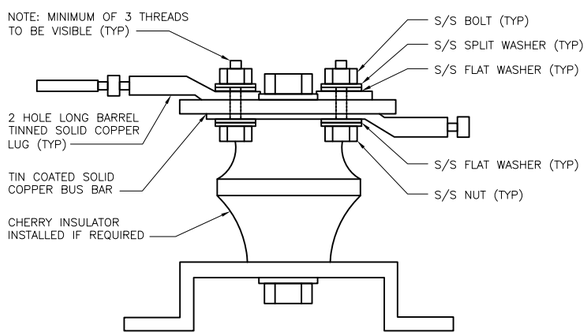


LUG DETAIL | NO SCALE | 4

NOT USED | NO SCALE | 5

NOT USED | NO SCALE | 6

NOT USED | NO SCALE | 7

NOT USED | NO SCALE | 8

NOT USED | NO SCALE | 9


dish wireless
5701 SOUTH SANTA FE DRIVE
LITTLETON, CO 80120

SBA
8051 CONGRESS AVENUE
BOCA RATON, FL 33487

B+T GRP
1717 S. BOULDER
SUITE 300
TULSA, OK 74119
PH: (918) 587-4630
www.btgrp.com


8/8/22

STATE OF CONNECTICUT
CHAD MITTLE
No. 23924
LICENSED
PROFESSIONAL ENGINEER

MTS ENGINEERING P.L.L.C.
BER:2386985
Expires 3/31/23


IT IS A VIOLATION OF LAW FOR ANY PERSON, UNLESS THEY ARE ACTING UNDER THE DIRECTION OF A LICENSED PROFESSIONAL ENGINEER, TO ALTER THIS DOCUMENT.


| DRAWN BY: | CHECKED BY: | APPROVED BY: |
|---|---|---|
| YN | KJG | CDD |

RFDS REV #: 1.0

CONSTRUCTION DOCUMENTS

SUBMITTALS

| REV | DATE | DESCRIPTION |
|---|---|---|
| A | 11/29/21 | ISSUED FOR REVIEW |
| 0 | 11/27/22 | ISSUED FOR CONSTRUCTION |
| 1 | 6/15/22 | ISSUED FOR CONSTRUCTION |
| 2 | 8/8/22 | ISSUED FOR CONSTRUCTION |

A&E PROJECT NUMBER
149435.001.01

DISH Wireless L.L.C.
PROJECT INFORMATION
BOBOS00046A
100 OLD TATNIC HILL ROAD
BROOKLYN, CT 06234

SHEET TITLE
GROUNDING DETAILS

SHEET NUMBER
G-3

## HYBRID/DISCREET CABLES

3/4" TAPE WIDTHS WITH 3/4" SPACING

LOW–BAND RRH
(600 MHz N71 BASEBAND) +
(850 MHz N26 BAND) +
(700 MHz N29 BAND) – OPTIONAL PER MARKET

ADD FREQUENCY COLOR TO SECTOR BAND
(CBRS WILL USE YELLOW BAND)

| ALPHA RRH | | | | BETA RRH | | | | GAMMA RRH | | | |
|---|---|---|---|---|---|---|---|---|---|---|---|
| PORT 1 + SLANT | PORT 2 – SLANT | PORT 3 + SLANT | PORT 4 – SLANT | PORT 1 + SLANT | PORT 2 – SLANT | PORT 3 + SLANT | PORT 4 – SLANT | PORT 1 + SLANT | PORT 2 – SLANT | PORT 3 + SLANT | PORT 4 – SLANT |
| RED | RED | RED | RED | BLUE | BLUE | BLUE | BLUE | GREEN | GREEN | GREEN | GREEN |
| ORANGE | ORANGE | RED | RED | ORANGE | ORANGE | BLUE | BLUE | ORANGE | ORANGE | GREEN | GREEN |
| | WHITE (–) PORT | ORANGE | ORANGE | | WHITE (–) PORT | ORANGE | ORANGE | | WHITE (–) PORT | ORANGE | ORANGE |
| | | | WHITE (–) PORT | | | | WHITE (–) PORT | | | | WHITE (–) PORT |

MID–BAND RRH
(AWS BANDS N66+N70)

ADD FREQUENCY COLOR TO SECTOR BAND
(CBRS WILL USE YELLOW BANDS)

| | | | | | | | | | | | |
|---|---|---|---|---|---|---|---|---|---|---|---|
| RED | RED | RED | RED | BLUE | BLUE | BLUE | BLUE | GREEN | GREEN | GREEN | GREEN |
| PURPLE | PURPLE | RED | RED | PURPLE | PURPLE | BLUE | BLUE | PURPLE | PURPLE | GREEN | GREEN |
| | WHITE (–) PORT | PURPLE | PURPLE | | WHITE (–) PORT | PURPLE | PURPLE | | WHITE (–) PORT | PURPLE | PURPLE |
| | | | WHITE (–) PORT | | | | WHITE (–) PORT | | | | WHITE (–) PORT |

## HYBRID/DISCREET CABLES

INCLUDE SECTOR BANDS BEING SUPPORTED ALONG WITH FREQUENCY BANDS.

EXAMPLE 1 – HYBRID, OR DISCREET, SUPPORTS ALL SECTORS, BOTH LOW–BANDS AND MID–BANDS.

EXAMPLE 2 – HYBRID, OR DISCREET, SUPPORTS CBRS ONLY, ALL SECTORS.

EXAMPLE 3 – MAIN COAX WITH GROUND MOUNTED RRHs.

| EXAMPLE 1 | EXAMPLE 2 | EXAMPLE 3 COAX#1 (ALPHA) | CANISTER COAX #2 (ALPHA) |
|---|---|---|---|
| RED | RED | RED | RED |
| BLUE | BLUE | | RED |
| GREEN | GREEN | | |
| ORANGE | YELLOW | | |
| PURPLE | | | |

CONTRACTOR TO REFER TO FINAL CONSTRUCTION RFDS FOR ALL RD DETAILS. FINAL RFDS IS IN NEXSYSONE.

## FIBER JUMPERS TO RRHs

LOW–BAND HHR FIBER CABLES HAVE SECTOR STRIPE ONLY.

| LOW BAND RRH | MID BAND RRH | LOW BAND RRH | MID BAND RRH | LOW BAND RRH | MID BAND RRH |
|---|---|---|---|---|---|
| RED | RED | BLUE | BLUE | GREEN | GREEN |
| ORANGE | PURPLE | ORANGE | PURPLE | ORANGE | PURPLE |

## POWER CABLES TO RRHs

LOW–BAND RRH POWER CABLES HAVE SECTOR STRIPE ONLY

| LOW BAND RRH | MID BAND RRH | LOW BAND RRH | MID BAND RRH | LOW BAND RRH | MID BAND RRH |
|---|---|---|---|---|---|
| RED | RED | BLUE | BLUE | GREEN | GREEN |
| ORANGE | PURPLE | ORANGE | PURPLE | ORANGE | PURPLE |

## RET MOTORS AT ANTENNAS

RET CONTROL IS HANDLED BY THE MID–BAND RRH WHEN ONE SET OF RET PORTS EXIST ON ANTENNA.

SEPARATE RET CABLES ARE USED WHEN ANTENNA PORTS PROVIDE INPUTS FOR BOTH LOW AND MID BANDS.

| ANTENNA 1 MID BAND IN | ANTENNA 1 LOW BAND IN | ANTENNA 1 MID BAND IN | ANTENNA 1 LOW BAND IN | ANTENNA 1 MID BAND IN | ANTENNA 1 LOW BAND IN |
|---|---|---|---|---|---|
| RED | RED | BLUE | BLUE | GREEN | GREEN |
| PURPLE | ORANGE | PURPLE | ORANGE | PURPLE | ORANGE |

## MICROWAVE RADIO LINKS

LINKS WILL HAVE A 1.5–2 INCH WHITE WRAP WITH THE AZIMUTH COLOR OVERLAPPING IN THE MIDDLE.
ADD ADDITIONAL SECTOR COLOR BANDS FOR EACH ADDITIONAL MW RADIO.

MICROWAVE CABLES WILL REQUIRE P–TOUCH LABELS INSIDE THE CABINET TO IDENTIFY THE LOCAL AND REMOTE SITE ID's.

| FORWARD AZIMUTH OF 0–120 DEGREES PRIMARY | FORWARD AZIMUTH OF 0–120 DEGREES SECONDARY | FORWARD AZIMUTH OF 120–240 DEGREES PRIMARY | FORWARD AZIMUTH OF 120–240 DEGREES SECONDARY | FORWARD AZIMUTH OF 240–359 DEGREES PRIMARY | FORWARD AZIMUTH OF 240–359 DEGREES SECONDARY |
|---|---|---|---|---|---|
| WHITE | WHITE | WHITE | WHITE | WHITE | WHITE |
| RED | RED | BLUE | BLUE | GREEN | GREEN |
| WHITE | WHITE | WHITE | WHITE | WHITE | WHITE |
| | RED | | BLUE | | GREEN |
| | WHITE | | WHITE | | WHITE |

RF CABLE COLOR CODES | NO SCALE | 1

LOW BANDS (N71+N26)
OPTIONAL – (N29)
ORANGE

AWS
(N66+N70+H–BLOCK)
PURPLE

CBRS TECH
(3 GHz)
YELLOW

NEGATIVE SLANT PORT
ON ANT/RRH
WHITE

ALPHA SECTOR
RED

BETA SECTOR
BLUE

GAMMA SECTOR
GREEN

COLOR IDENTIFIER | NO SCALE | 2

NOT USED | NO SCALE | 3

NOT USED | NO SCALE | 4


dish wireless
5701 SOUTH SANTA FE DRIVE
LITTLETON, CO 80120

SBA
8051 CONGRESS AVENUE
BOCA RATON, FL 33487

B+T GRP
1717 S. BOULDER
SUITE 300
TULSA, OK 74119
PH: (918) 587-4630
www.btgrp.com


8/8/22

STATE OF CONNECTICUT
CHAD J. TITLE
No. 23924
LICENSED
PROFESSIONAL ENGINEER

MTS ENGINEERING P.L.L.C.
BER:2386985
Expires 3/31/23


IT IS A VIOLATION OF LAW FOR ANY PERSON, UNLESS THEY ARE ACTING UNDER THE DIRECTION OF A LICENSED PROFESSIONAL ENGINEER, TO ALTER THIS DOCUMENT.


| DRAWN BY: | CHECKED BY: | APPROVED BY: |
|---|---|---|
| YN | KJG | CDD |

RFDS REV #: 1.0

CONSTRUCTION DOCUMENTS

SUBMITTALS

| REV | DATE | DESCRIPTION |
|---|---|---|
| A | 11/29/21 | ISSUED FOR REVIEW |
| 0 | 11/27/22 | ISSUED FOR CONSTRUCTION |
| 1 | 6/15/22 | ISSUED FOR CONSTRUCTION |
| 2 | 8/8/22 | ISSUED FOR CONSTRUCTION |

A&E PROJECT NUMBER
149435.001.01

DISH Wireless L.L.C.
PROJECT INFORMATION

BOBOS00046A
100 OLD TATNIC HILL ROAD
BROOKLYN, CT 06234

SHEET TITLE
RF
CABLE COLOR CODES

SHEET NUMBER
**RF-1**

EXOTHERMIC CONNECTION

MECHANICAL CONNECTION

BUSS BAR INSULATOR

CHEMICAL ELECTROLYTIC GROUNDING SYSTEM

TEST CHEMICAL ELECTROLYTIC GROUNDING SYSTEM

EXOTHERMIC WITH INSPECTION SLEEVE

GROUNDING BAR

GROUND ROD

TEST GROUND ROD WITH INSPECTION SLEEVE

SINGLE POLE SWITCH

DUPLEX RECEPTACLE

DUPLEX GFCI RECEPTACLE

FLUORESCENT LIGHTING FIXTURE (2) TWO LAMPS 48–T8

SMOKE DETECTION (DC)

EMERGENCY LIGHTING (DC)

SECURITY LIGHT W/PHOTOCELL LITHONIA ALXW LED–1–25A400/51K–SR4–120–PE–DDBTXD

CHAIN LINK FENCE

WOOD/WROUGHT IRON FENCE

WALL STRUCTURE

LEASE AREA

PROPERTY LINE (PL)

SETBACKS

ICE BRIDGE

CABLE TRAY

WATER LINE

UNDERGROUND POWER

UNDERGROUND TELCO

OVERHEAD POWER

OVERHEAD TELCO

UNDERGROUND TELCO/POWER

ABOVE GROUND POWER

ABOVE GROUND TELCO

ABOVE GROUND TELCO/POWER

WORKPOINT

SECTION REFERENCE

DETAIL REFERENCE

## LEGEND

| | |
|---|---|
| AB | ANCHOR BOLT |
| ABV | ABOVE |
| AC | ALTERNATING CURRENT |
| ADDL | ADDITIONAL |
| AFF | ABOVE FINISHED FLOOR |
| AFG | ABOVE FINISHED GRADE |
| AGL | ABOVE GROUND LEVEL |
| AIC | AMPERAGE INTERRUPTION CAPACITY |
| ALUM | ALUMINUM |
| ALT | ALTERNATE |
| ANT | ANTENNA |
| APPROX | APPROXIMATE |
| ARCH | ARCHITECTURAL |
| ATS | AUTOMATIC TRANSFER SWITCH |
| AWG | AMERICAN WIRE GAUGE |
| BATT | BATTERY |
| BLDG | BUILDING |
| BLK | BLOCK |
| BLKG | BLOCKING |
| BM | BEAM |
| BTC | BARE TINNED COPPER CONDUCTOR |
| BOF | BOTTOM OF FOOTING |
| CAB | CABINET |
| CANT | CANTILEVERED |
| CHG | CHARGING |
| CLG | CEILING |
| CLR | CLEAR |
| COL | COLUMN |
| COMM | COMMON |
| CONC | CONCRETE |
| CONSTR | CONSTRUCTION |
| DBL | DOUBLE |
| DC | DIRECT CURRENT |
| DEPT | DEPARTMENT |
| DF | DOUGLAS FIR |
| DIA | DIAMETER |
| DIAG | DIAGONAL |
| DIM | DIMENSION |
| DWG | DRAWING |
| DWL | DOWEL |
| EA | EACH |
| EC | ELECTRICAL CONDUCTOR |
| EL. | ELEVATION |
| ELEC | ELECTRICAL |
| EMT | ELECTRICAL METALLIC TUBING |
| ENG | ENGINEER |
| EQ | EQUAL |
| EXP | EXPANSION |
| EXT | EXTERIOR |
| EW | EACH WAY |
| FAB | FABRICATION |
| FF | FINISH FLOOR |
| FG | FINISH GRADE |
| FIF | FACILITY INTERFACE FRAME |
| FIN | FINISH(ED) |
| FLR | FLOOR |
| FDN | FOUNDATION |
| FOC | FACE OF CONCRETE |
| FOM | FACE OF MASONRY |
| FOS | FACE OF STUD |
| FOW | FACE OF WALL |
| FS | FINISH SURFACE |
| FT | FOOT |
| FTG | FOOTING |
| GA | GAUGE |
| GEN | GENERATOR |
| GFCI | GROUND FAULT CIRCUIT INTERRUPTER |
| GLB | GLUE LAMINATED BEAM |
| GLV | GALVANIZED |
| GPS | GLOBAL POSITIONING SYSTEM |
| GND | GROUND |
| GSM | GLOBAL SYSTEM FOR MOBILE |
| HDG | HOT DIPPED GALVANIZED |
| HDR | HEADER |
| HGR | HANGER |
| HVAC | HEAT/VENTILATION/AIR CONDITIONING |
| HT | HEIGHT |
| IGR | INTERIOR GROUND RING |
| IN | INCH |
| INT | INTERIOR |
| LB(S) | POUND(S) |
| LF | LINEAR FEET |
| LTE | LONG TERM EVOLUTION |
| MAS | MASONRY |
| MAX | MAXIMUM |
| MB | MACHINE BOLT |
| MECH | MECHANICAL |
| MFR | MANUFACTURER |
| MGB | MASTER GROUND BAR |
| MIN | MINIMUM |
| MISC | MISCELLANEOUS |
| MTL | METAL |
| MTS | MANUAL TRANSFER SWITCH |
| MW | MICROWAVE |
| NEC | NATIONAL ELECTRIC CODE |
| NM | NEWTON METERS |
| NO. | NUMBER |
| # | NUMBER |
| NTS | NOT TO SCALE |
| OC | ON–CENTER |
| OSHA | OCCUPATIONAL SAFETY AND HEALTH ADMINISTRATION |
| OPNG | OPENING |
| P/C | PRECAST CONCRETE |
| PCS | PERSONAL COMMUNICATION SERVICES |
| PCU | PRIMARY CONTROL UNIT |
| PRC | PRIMARY RADIO CABINET |
| PP | POLARIZING PRESERVING |
| PSF | POUNDS PER SQUARE FOOT |
| PSI | POUNDS PER SQUARE INCH |
| PT | PRESSURE TREATED |
| PWR | POWER CABINET |
| QTY | QUANTITY |
| RAD | RADIUS |
| RECT | RECTIFIER |
| REF | REFERENCE |
| REINF | REINFORCEMENT |
| REQ'D | REQUIRED |
| RET | REMOTE ELECTRIC TILT |
| RF | RADIO FREQUENCY |
| RMC | RIGID METALLIC CONDUIT |
| RRH | REMOTE RADIO HEAD |
| RRU | REMOTE RADIO UNIT |
| RWY | RACEWAY |
| SCH | SCHEDULE |
| SHT | SHEET |
| SIAD | SMART INTEGRATED ACCESS DEVICE |
| SIM | SIMILAR |
| SPEC | SPECIFICATION |
| SQ | SQUARE |
| SS | STAINLESS STEEL |
| STD | STANDARD |
| STL | STEEL |
| TEMP | TEMPORARY |
| THK | THICKNESS |
| TMA | TOWER MOUNTED AMPLIFIER |
| TN | TOE NAIL |
| TOA | TOP OF ANTENNA |
| TOC | TOP OF CURB |
| TOF | TOP OF FOUNDATION |
| TOP | TOP OF PLATE (PARAPET) |
| TOS | TOP OF STEEL |
| TOW | TOP OF WALL |
| TVSS | TRANSIENT VOLTAGE SURGE SUPPRESSION |
| TYP | TYPICAL |
| UG | UNDERGROUND |
| UL | UNDERWRITERS LABORATORY |
| UNO | UNLESS NOTED OTHERWISE |
| UMTS | UNIVERSAL MOBILE TELECOMMUNICATIONS SYSTEM |
| UPS | UNITERRUPTIBLE POWER SYSTEM (DC POWER PLANT) |
| VIF | VERIFIED IN FIELD |
| W | WIDE |
| W/ | WITH |
| WD | WOOD |
| WP | WEATHERPROOF |
| WT | WEIGHT |

## ABBREVIATIONS


dish wireless

5701 SOUTH SANTA FE DRIVE
LITTLETON, CO 80120

SBA

8051 CONGRESS AVENUE
BOCA RATON, FL 33487

B+T GRP
1717 S. BOULDER
SUITE 300
TULSA, OK 74119
PH: (918) 587-4630
www.btgrp.com


8/8/22

STATE OF CONNECTICUT
CHAD CASTILE
No. 23924
LICENSED
PROFESSIONAL ENGINEER

MTS ENGINEERING P.L.L.C.
BER:2386985
Expires 3/31/23


IT IS A VIOLATION OF LAW FOR ANY PERSON, UNLESS THEY ARE ACTING UNDER THE DIRECTION OF A LICENSED PROFESSIONAL ENGINEER, TO ALTER THIS DOCUMENT.


| DRAWN BY: | CHECKED BY: | APPROVED BY: |
|---|---|---|
| YN | KJG | CDD |

RFDS REV #: 1.0

CONSTRUCTION DOCUMENTS

SUBMITTALS

| REV | DATE | DESCRIPTION |
|---|---|---|
| A | 11/29/21 | ISSUED FOR REVIEW |
| 0 | 11/27/22 | ISSUED FOR CONSTRUCTION |
| 1 | 6/15/22 | ISSUED FOR CONSTRUCTION |
| 2 | 8/8/22 | ISSUED FOR CONSTRUCTION |

A&E PROJECT NUMBER

149435.001.01

DISH Wireless L.L.C.
PROJECT INFORMATION

BOBOS00046A
100 OLD TATNIC HILL ROAD
BROOKLYN, CT 06234

SHEET TITLE

LEGEND AND ABBREVIATIONS

SHEET NUMBER

GN-1

SITE ACTIVITY REQUIREMENTS:

1. NOTICE TO PROCEED – NO WORK SHALL COMMENCE PRIOR TO CONTRACTOR RECEIVING A WRITTEN NOTICE TO PROCEED (NTP) AND THE ISSUANCE OF A PURCHASE ORDER. PRIOR TO ACCESSING/ENTERING THE SITE YOU MUST CONTACT THE DISH Wireless L.L.C. AND TOWER OWNER NOC & THE DISH Wireless L.L.C. AND TOWER OWNER CONSTRUCTION MANAGER.

2. "LOOK UP" – DISH Wireless L.L.C. AND TOWER OWNER SAFETY CLIMB REQUIREMENT:

THE INTEGRITY OF THE SAFETY CLIMB AND ALL COMPONENTS OF THE CLIMBING FACILITY SHALL BE CONSIDERED DURING ALL STAGES OF DESIGN, INSTALLATION, AND INSPECTION. TOWER MODIFICATION, MOUNT REINFORCEMENTS, AND/OR EQUIPMENT INSTALLATIONS SHALL NOT COMPROMISE THE INTEGRITY OR FUNCTIONAL USE OF THE SAFETY CLIMB OR ANY COMPONENTS OF THE CLIMBING FACILITY ON THE STRUCTURE. THIS SHALL INCLUDE, BUT NOT BE LIMITED TO: PINCHING OF THE WIRE ROPE, BENDING OF THE WIRE ROPE FROM ITS SUPPORTS, DIRECT CONTACT OR CLOSE PROXIMITY TO THE WIRE ROPE WHICH MAY CAUSE FRICTIONAL WEAR, IMPACT TO THE ANCHORAGE POINTS IN ANY WAY, OR TO IMPEDE/BLOCK ITS INTENDED USE. ANY COMPROMISED SAFETY CLIMB, INCLUDING EXISTING CONDITIONS MUST BE TAGGED OUT AND REPORTED TO YOUR DISH Wireless L.L.C. AND DISH Wireless L.L.C. AND TOWER OWNER POC OR CALL THE NOC TO GENERATE A SAFETY CLIMB MAINTENANCE AND CONTRACTOR NOTICE TICKET.

3. PRIOR TO THE START OF CONSTRUCTION, ALL REQUIRED JURISDICTIONAL PERMITS SHALL BE OBTAINED. THIS INCLUDES, BUT IS NOT LIMITED TO, BUILDING, ELECTRICAL, MECHANICAL, FIRE, FLOOD ZONE, ENVIRONMENTAL, AND ZONING. AFTER ONSITE ACTIVITIES AND CONSTRUCTION ARE COMPLETED, ALL REQUIRED PERMITS SHALL BE SATISFIED AND CLOSED OUT ACCORDING TO LOCAL JURISDICTIONAL REQUIREMENTS.

4. ALL CONSTRUCTION MEANS AND METHODS; INCLUDING BUT NOT LIMITED TO, ERECTION PLANS, RIGGING PLANS, CLIMBING PLANS, AND RESCUE PLANS SHALL BE THE RESPONSIBILITY OF THE GENERAL CONTRACTOR RESPONSIBLE FOR THE EXECUTION OF THE WORK CONTAINED HEREIN, AND SHALL MEET ANSI/ASSE A10.48 (LATEST EDITION); FEDERAL, STATE, AND LOCAL REGULATIONS; AND ANY APPLICABLE INDUSTRY CONSENSUS STANDARDS RELATED TO THE CONSTRUCTION ACTIVITIES BEING PERFORMED. ALL RIGGING PLANS SHALL ADHERE TO ANSI/ASSE A10.48 (LATEST EDITION) AND DISH Wireless L.L.C. AND TOWER OWNER STANDARDS, INCLUDING THE REQUIRED INVOLVEMENT OF A QUALIFIED ENGINEER FOR CLASS IV CONSTRUCTION, TO CERTIFY THE SUPPORTING STRUCTURE(S) IN ACCORDANCE WITH ANSI/TIA–322 (LATEST EDITION).

5. ALL SITE WORK TO COMPLY WITH DISH Wireless L.L.C. AND TOWER OWNER INSTALLATION STANDARDS FOR CONSTRUCTION ACTIVITIES ON DISH Wireless L.L.C. AND TOWER OWNER TOWER SITE AND LATEST VERSION OF ANSI/TIA–1019–A–2012 "STANDARD FOR INSTALLATION, ALTERATION, AND MAINTENANCE OF ANTENNA SUPPORTING STRUCTURES AND ANTENNAS."

6. IF THE SPECIFIED EQUIPMENT CAN NOT BE INSTALLED AS SHOWN ON THESE DRAWINGS, THE CONTRACTOR SHALL PROPOSE AN ALTERNATIVE INSTALLATION FOR APPROVAL BY DISH Wireless L.L.C. AND TOWER OWNER PRIOR TO PROCEEDING WITH ANY SUCH CHANGE OF INSTALLATION.

7. ALL MATERIALS FURNISHED AND INSTALLED SHALL BE IN STRICT ACCORDANCE WITH ALL APPLICABLE CODES, REGULATIONS AND ORDINANCES. CONTRACTOR SHALL ISSUE ALL APPROPRIATE NOTICES AND COMPLY WITH ALL LAWS, ORDINANCES, RULES, REGULATIONS AND LAWFUL ORDERS OF ANY PUBLIC AUTHORITY REGARDING THE PERFORMANCE OF THE WORK. ALL WORK CARRIED OUT SHALL COMPLY WITH ALL APPLICABLE MUNICIPAL AND UTILITY COMPANY SPECIFICATIONS AND LOCAL JURISDICTIONAL CODES, ORDINANCES AND APPLICABLE REGULATIONS.

8. THE CONTRACTOR SHALL INSTALL ALL EQUIPMENT AND MATERIALS IN ACCORDANCE WITH MANUFACTURER'S RECOMMENDATIONS UNLESS SPECIFICALLY STATED OTHERWISE.

9. THE CONTRACTOR SHALL CONTACT UTILITY LOCATING SERVICES INCLUDING PRIVATE LOCATES SERVICES PRIOR TO THE START OF CONSTRUCTION.

10. ALL EXISTING ACTIVE SEWER, WATER, GAS, ELECTRIC AND OTHER UTILITIES WHERE ENCOUNTERED IN THE WORK, SHALL BE PROTECTED AT ALL TIMES AND WHERE REQUIRED FOR THE PROPER EXECUTION OF THE WORK, SHALL BE RELOCATED AS DIRECTED BY CONTRACTOR. EXTREME CAUTION SHOULD BE USED BY THE CONTRACTOR WHEN EXCAVATING OR DRILLING PIERS AROUND OR NEAR UTILITIES. CONTRACTOR SHALL PROVIDE SAFETY TRAINING FOR THE WORKING CREW. THIS WILL INCLUDE BUT NOT BE LIMITED TO A) FALL PROTECTION B) CONFINED SPACE C) ELECTRICAL SAFETY D) TRENCHING AND EXCAVATION E) CONSTRUCTION SAFETY PROCEDURES.

11. ALL SITE WORK SHALL BE AS INDICATED ON THE STAMPED CONSTRUCTION DRAWINGS AND DISH PROJECT SPECIFICATIONS, LATEST APPROVED REVISION.

12. CONTRACTOR SHALL KEEP THE SITE FREE FROM ACCUMULATING WASTE MATERIAL, DEBRIS, AND TRASH AT THE COMPLETION OF THE WORK. IF NECESSARY, RUBBISH, STUMPS, DEBRIS, STICKS, STONES AND OTHER REFUSE SHALL BE REMOVED FROM THE SITE AND DISPOSED OF LEGALLY.

13. ALL EXISTING INACTIVE SEWER, WATER, GAS, ELECTRIC AND OTHER UTILITIES, WHICH INTERFERE WITH THE EXECUTION OF THE WORK, SHALL BE REMOVED AND/OR CAPPED, PLUGGED OR OTHERWISE DISCONTINUED AT POINTS WHICH WILL NOT INTERFERE WITH THE EXECUTION OF THE WORK, SUBJECT TO THE APPROVAL OF DISH Wireless L.L.C. AND TOWER OWNER, AND/OR LOCAL UTILITIES.

14. THE CONTRACTOR SHALL PROVIDE SITE SIGNAGE IN ACCORDANCE WITH THE TECHNICAL SPECIFICATION FOR SITE SIGNAGE REQUIRED BY LOCAL JURISDICTION AND SIGNAGE REQUIRED ON INDIVIDUAL PIECES OF EQUIPMENT, ROOMS, AND SHELTERS.

15. THE SITE SHALL BE GRADED TO CAUSE SURFACE WATER TO FLOW AWAY FROM THE CARRIER'S EQUIPMENT AND TOWER AREAS.

16. THE SUB GRADE SHALL BE COMPACTED AND BROUGHT TO A SMOOTH UNIFORM GRADE PRIOR TO FINISHED SURFACE APPLICATION.

17. THE AREAS OF THE OWNERS PROPERTY DISTURBED BY THE WORK AND NOT COVERED BY THE TOWER, EQUIPMENT OR DRIVEWAY, SHALL BE GRADED TO A UNIFORM SLOPE, AND STABILIZED TO PREVENT EROSION AS SPECIFIED ON THE CONSTRUCTION DRAWINGS AND/OR PROJECT SPECIFICATIONS.

18. CONTRACTOR SHALL MINIMIZE DISTURBANCE TO EXISTING SITE DURING CONSTRUCTION. EROSION CONTROL MEASURES, IF REQUIRED DURING CONSTRUCTION, SHALL BE IN CONFORMANCE WITH THE LOCAL GUIDELINES FOR EROSION AND SEDIMENT CONTROL.

19. THE CONTRACTOR SHALL PROTECT EXISTING IMPROVEMENTS, PAVEMENTS, CURBS, LANDSCAPING AND STRUCTURES. ANY DAMAGED PART SHALL BE REPAIRED AT CONTRACTOR'S EXPENSE TO THE SATISFACTION OF OWNER.

20. CONTRACTOR SHALL LEGALLY AND PROPERLY DISPOSE OF ALL SCRAP MATERIALS SUCH AS COAXIAL CABLES AND OTHER ITEMS REMOVED FROM THE EXISTING FACILITY. ANTENNAS AND RADIOS REMOVED SHALL BE RETURNED TO THE OWNER'S DESIGNATED LOCATION.

21. CONTRACTOR SHALL LEAVE PREMISES IN CLEAN CONDITION. TRASH AND DEBRIS SHOULD BE REMOVED FROM SITE ON A DAILY BASIS.

22. NO FILL OR EMBANKMENT MATERIAL SHALL BE PLACED ON FROZEN GROUND. FROZEN MATERIALS, SNOW OR ICE SHALL NOT BE PLACED IN ANY FILL OR EMBANKMENT.

GENERAL NOTES:

1.FOR THE PURPOSE OF CONSTRUCTION DRAWING, THE FOLLOWING DEFINITIONS SHALL APPLY:

CONTRACTOR:GENERAL CONTRACTOR RESPONSIBLE FOR CONSTRUCTION

CARRIER:DISH Wireless L.L.C.

TOWER OWNER:TOWER OWNER

2. THESE DRAWINGS HAVE BEEN PREPARED USING STANDARDS OF PROFESSIONAL CARE AND COMPLETENESS NORMALLY EXERCISED UNDER SIMILAR CIRCUMSTANCES BY REPUTABLE ENGINEERS IN THIS OR SIMILAR LOCALITIES. IT IS ASSUMED THAT THE WORK DEPICTED WILL BE PERFORMED BY AN EXPERIENCED CONTRACTOR AND/OR WORKPEOPLE WHO HAVE A WORKING KNOWLEDGE OF THE APPLICABLE CODE STANDARDS AND REQUIREMENTS AND OF INDUSTRY ACCEPTED STANDARD GOOD PRACTICE. AS NOT EVERY CONDITION OR ELEMENT IS (OR CAN BE) EXPLICITLY SHOWN ON THESE DRAWINGS, THE CONTRACTOR SHALL USE INDUSTRY ACCEPTED STANDARD GOOD PRACTICE FOR MISCELLANEOUS WORK NOT EXPLICITLY SHOWN.

3. THESE DRAWINGS REPRESENT THE FINISHED STRUCTURE. THEY DO NOT INDICATE THE MEANS OR METHODS OF CONSTRUCTION. THE CONTRACTOR SHALL BE SOLELY RESPONSIBLE FOR THE CONSTRUCTION MEANS, METHODS, TECHNIQUES, SEQUENCES, AND PROCEDURES. THE CONTRACTOR SHALL PROVIDE ALL MEASURES NECESSARY FOR PROTECTION OF LIFE AND PROPERTY DURING CONSTRUCTION. SUCH MEASURES SHALL INCLUDE, BUT NOT BE LIMITED TO, BRACING, FORMWORK, SHORING, ETC. SITE VISITS BY THE ENGINEER OR HIS REPRESENTATIVE WILL NOT INCLUDE INSPECTION OF THESE ITEMS AND IS FOR STRUCTURAL OBSERVATION OF THE FINISHED STRUCTURE ONLY.

4. NOTES AND DETAILS IN THE CONSTRUCTION DRAWINGS SHALL TAKE PRECEDENCE OVER GENERAL NOTES AND TYPICAL DETAILS. WHERE NO DETAILS ARE SHOWN, CONSTRUCTION SHALL CONFORM TO SIMILAR WORK ON THE PROJECT, AND/OR AS PROVIDED FOR IN THE CONTRACT DOCUMENTS. WHERE DISCREPANCIES OCCUR BETWEEN PLANS, DETAILS, GENERAL NOTES, AND SPECIFICATIONS, THE GREATER, MORE STRICT REQUIREMENTS, SHALL GOVERN. IF FURTHER CLARIFICATION IS REQUIRED CONTACT THE ENGINEER OF RECORD.

5. SUBSTANTIAL EFFORT HAS BEEN MADE TO PROVIDE ACCURATE DIMENSIONS AND MEASUREMENTS ON THE DRAWINGS TO ASSIST IN THE FABRICATION AND/OR PLACEMENT OF CONSTRUCTION ELEMENTS BUT IT IS THE SOLE RESPONSIBILITY OF THE CONTRACTOR TO FIELD VERIFY THE DIMENSIONS, MEASUREMENTS, AND/OR CLEARANCES SHOWN IN THE CONSTRUCTION DRAWINGS PRIOR TO FABRICATION OR CUTTING OF ANY NEW OR EXISTING CONSTRUCTION ELEMENTS. IF IT IS DETERMINED THAT THERE ARE DISCREPANCIES AND/OR CONFLICTS WITH THE CONSTRUCTION DRAWINGS THE ENGINEER OF RECORD IS TO BE NOTIFIED AS SOON AS POSSIBLE.

6. PRIOR TO THE SUBMISSION OF BIDS, THE BIDDING CONTRACTOR SHALL VISIT THE CELL SITE TO FAMILIARIZE WITH THE EXISTING CONDITIONS AND TO CONFIRM THAT THE WORK CAN BE ACCOMPLISHED AS SHOWN ON THE CONSTRUCTION DRAWINGS. ANY DISCREPANCY FOUND SHALL BE BROUGHT TO THE ATTENTION OF CARRIER POC AND TOWER OWNER.

7. ALL MATERIALS FURNISHED AND INSTALLED SHALL BE IN STRICT ACCORDANCE WITH ALL APPLICABLE CODES, REGULATIONS AND ORDINANCES. CONTRACTOR SHALL ISSUE ALL APPROPRIATE NOTICES AND COMPLY WITH ALL LAWS, ORDINANCES, RULES, REGULATIONS AND LAWFUL ORDERS OF ANY PUBLIC AUTHORITY REGARDING THE PERFORMANCE OF THE WORK. ALL WORK CARRIED OUT SHALL COMPLY WITH ALL APPLICABLE MUNICIPAL AND UTILITY COMPANY SPECIFICATIONS AND LOCAL JURISDICTIONAL CODES, ORDINANCES AND APPLICABLE REGULATIONS.

8. UNLESS NOTED OTHERWISE, THE WORK SHALL INCLUDE FURNISHING MATERIALS, EQUIPMENT, APPURTENANCES AND LABOR NECESSARY TO COMPLETE ALL INSTALLATIONS AS INDICATED ON THE DRAWINGS.

9. THE CONTRACTOR SHALL INSTALL ALL EQUIPMENT AND MATERIALS IN ACCORDANCE WITH MANUFACTURER'S RECOMMENDATIONS UNLESS SPECIFICALLY STATED OTHERWISE.

10. IF THE SPECIFIED EQUIPMENT CAN NOT BE INSTALLED AS SHOWN ON THESE DRAWINGS, THE CONTRACTOR SHALL PROPOSE AN ALTERNATIVE INSTALLATION FOR APPROVAL BY THE CARRIER AND TOWER OWNER PRIOR TO PROCEEDING WITH ANY SUCH CHANGE OF INSTALLATION.

11. CONTRACTOR IS TO PERFORM A SITE INVESTIGATION, BEFORE SUBMITTING BIDS, TO DETERMINE THE BEST ROUTING OF ALL CONDUITS FOR POWER, AND TELCO AND FOR GROUNDING CABLES AS SHOWN IN THE POWER, TELCO, AND GROUNDING PLAN DRAWINGS.

12. THE CONTRACTOR SHALL PROTECT EXISTING IMPROVEMENTS, PAVEMENTS, CURBS, LANDSCAPING AND STRUCTURES. ANY DAMAGED PART SHALL BE REPAIRED AT CONTRACTOR'S EXPENSE TO THE SATISFACTION OF DISH Wireless L.L.C. AND TOWER OWNER

13. CONTRACTOR SHALL LEGALLY AND PROPERLY DISPOSE OF ALL SCRAP MATERIALS SUCH AS COAXIAL CABLES AND OTHER ITEMS REMOVED FROM THE EXISTING FACILITY. ANTENNAS REMOVED SHALL BE RETURNED TO THE OWNER'S DESIGNATED LOCATION.

14. CONTRACTOR SHALL LEAVE PREMISES IN CLEAN CONDITION. TRASH AND DEBRIS SHOULD BE REMOVED FROM SITE ON A DAILY BASIS.


dish wireless
5701 SOUTH SANTA FE DRIVE
LITTLETON, CO 80120

SBA
8051 CONGRESS AVENUE
BOCA RATON, FL 33487

B+T GRP
1717 S. BOULDER
SUITE 300
TULSA, OK 74119
PH: (918) 587-4630
www.btgrp.com


8/8/22

STATE OF CONNECTICUT
CHAD W. LITTLE
No. 23924
LICENSED
PROFESSIONAL ENGINEER


MTS ENGINEERING P.L.L.C.
BER:2386985
Expires 3/31/23



IT IS A VIOLATION OF LAW FOR ANY PERSON, UNLESS THEY ARE ACTING UNDER THE DIRECTION OF A LICENSED PROFESSIONAL ENGINEER, TO ALTER THIS DOCUMENT.


| DRAWN BY: | CHECKED BY: | APPROVED BY: |
|---|---|---|
| YN | KJG | CDD |

RFDS REV #: 1.0

CONSTRUCTION DOCUMENTS

SUBMITTALS

| REV | DATE | DESCRIPTION |
|---|---|---|
| A | 11/29/21 | ISSUED FOR REVIEW |
| 0 | 11/27/22 | ISSUED FOR CONSTRUCTION |
| 1 | 6/15/22 | ISSUED FOR CONSTRUCTION |
| 2 | 8/8/22 | ISSUED FOR CONSTRUCTION |
| | | |
| | | |

A&E PROJECT NUMBER

149435.001.01

DISH Wireless L.L.C.
PROJECT INFORMATION

BOBOS00046A
100 OLD TATNIC HILL ROAD
BROOKLYN, CT 06234

SHEET TITLE

GENERAL NOTES

SHEET NUMBER

**GN-2**




149435.001.01_070910-3 BOBOS00046A SBA Dish 02a.dwg – SheetGN-2 – User: rcarson – Aug 08, 2022 – 11:06am

CONCRETE, FOUNDATIONS, AND REINFORCING STEEL:

1. ALL CONCRETE WORK SHALL BE IN ACCORDANCE WITH THE ACI 301, ACI 318, ACI 336, ASTM A184, ASTM A185 AND THE DESIGN AND CONSTRUCTION SPECIFICATION FOR CAST–IN–PLACE CONCRETE.

2. UNLESS NOTED OTHERWISE, SOIL BEARING PRESSURE USED FOR DESIGN OF SLABS AND FOUNDATIONS IS ASSUMED TO BE 1000 psf.

3. ALL CONCRETE SHALL HAVE A MINIMUM COMPRESSIVE STRENGTH (f'c) OF 3000 psi AT 28 DAYS, UNLESS NOTED OTHERWISE. NO MORE THAN 90 MINUTES SHALL ELAPSE FROM BATCH TIME TO TIME OF PLACEMENT UNLESS APPROVED BY THE ENGINEER OF RECORD. TEMPERATURE OF CONCRETE SHALL NOT EXCEED 90°f AT TIME OF PLACEMENT.

4. CONCRETE EXPOSED TO FREEZE–THAW CYCLES SHALL CONTAIN AIR ENTRAINING ADMIXTURES. AMOUNT OF AIR ENTRAINMENT TO BE BASED ON SIZE OF AGGREGATE AND F3 CLASS EXPOSURE (VERY SEVERE). CEMENT USED TO BE TYPE II PORTLAND CEMENT WITH A MAXIMUM WATER–TO–CEMENT RATIO (W/C) OF 0.45.

5. ALL STEEL REINFORCING SHALL CONFORM TO ASTM A615. ALL WELDED WIRE FABRIC (WWF) SHALL CONFORM TO ASTM A185. ALL SPLICES SHALL BE CLASS "B" TENSION SPLICES, UNLESS NOTED OTHERWISE. ALL HOOKS SHALL BE STANDARD 90 DEGREE HOOKS, UNLESS NOTED OTHERWISE. YIELD STRENGTH (Fy) OF STANDARD DEFORMED BARS ARE AS FOLLOWS:

#4 BARS AND SMALLER 40 ksi

#5 BARS AND LARGER 60 ksi

6. THE FOLLOWING MINIMUM CONCRETE COVER SHALL BE PROVIDED FOR REINFORCING STEEL UNLESS SHOWN OTHERWISE ON DRAWINGS:

- CONCRETE CAST AGAINST AND PERMANENTLY EXPOSED TO EARTH 3"
- CONCRETE EXPOSED TO EARTH OR WEATHER:
- #6 BARS AND LARGER 2"
- #5 BARS AND SMALLER 1–1/2"
- CONCRETE NOT EXPOSED TO EARTH OR WEATHER:
- SLAB AND WALLS 3/4"
- BEAMS AND COLUMNS 1–1/2"

7. A TOOLED EDGE OR A 3/4" CHAMFER SHALL BE PROVIDED AT ALL EXPOSED EDGES OF CONCRETE, UNLESS NOTED OTHERWISE, IN ACCORDANCE WITH ACI 301 SECTION 4.2.4.

ELECTRICAL INSTALLATION NOTES:

1. ALL ELECTRICAL WORK SHALL BE PERFORMED IN ACCORDANCE WITH THE PROJECT SPECIFICATIONS, NEC AND ALL APPLICABLE FEDERAL, STATE, AND LOCAL CODES/ORDINANCES.

2. CONDUIT ROUTINGS ARE SCHEMATIC. CONTRACTOR SHALL INSTALL CONDUITS SO THAT ACCESS TO EQUIPMENT IS NOT BLOCKED AND TRIP HAZARDS ARE ELIMINATED.

3. WIRING, RACEWAY AND SUPPORT METHODS AND MATERIALS SHALL COMPLY WITH THE REQUIREMENTS OF THE NEC.

4. ALL CIRCUITS SHALL BE SEGREGATED AND MAINTAIN MINIMUM CABLE SEPARATION AS REQUIRED BY THE NEC.

4.1. ALL EQUIPMENT SHALL BEAR THE UNDERWRITERS LABORATORIES LABEL OF APPROVAL, AND SHALL CONFORM TO REQUIREMENT OF THE NATIONAL ELECTRICAL CODE.

4.2. ALL OVERCURRENT DEVICES SHALL HAVE AN INTERRUPTING CURRENT RATING THAT SHALL BE GREATER THAN THE SHORT CIRCUIT CURRENT TO WHICH THEY ARE SUBJECTED, 22,000 AIC MINIMUM. VERIFY AVAILABLE SHORT CIRCUIT CURRENT DOES NOT EXCEED THE RATING OF ELECTRICAL EQUIPMENT IN ACCORDANCE WITH ARTICLE 110.24 NEC OR THE MOST CURRENT ADOPTED CODE PRE THE GOVERNING JURISDICTION.

5. EACH END OF EVERY POWER PHASE CONDUCTOR, GROUNDING CONDUCTOR, AND TELCO CONDUCTOR OR CABLE SHALL BE LABELED WITH COLOR–CODED INSULATION OR ELECTRICAL TAPE (3M BRAND, 1/2" PLASTIC ELECTRICAL TAPE WITH UV PROTECTION, OR EQUAL). THE IDENTIFICATION METHOD SHALL CONFORM WITH NEC AND OSHA.

6. ALL ELECTRICAL COMPONENTS SHALL BE CLEARLY LABELED WITH LAMICOID TAGS SHOWING THEIR RATED VOLTAGE, PHASE CONFIGURATION, WIRE CONFIGURATION, POWER OR AMPACITY RATING AND BRANCH CIRCUIT ID NUMBERS (i.e. PANEL BOARD AND CIRCUIT ID'S).

7. PANEL BOARDS (ID NUMBERS) SHALL BE CLEARLY LABELED WITH PLASTIC LABELS.

8. TIE WRAPS ARE NOT ALLOWED.

9. ALL POWER AND EQUIPMENT GROUND WIRING IN TUBING OR CONDUIT SHALL BE SINGLE COPPER CONDUCTOR (#14 OR LARGER) WITH TYPE THHW, THWN, THWN–2, XHHW, XHHW–2, THW, THW–2, RHW, OR RHW–2 INSULATION UNLESS OTHERWISE SPECIFIED.

10. SUPPLEMENTAL EQUIPMENT GROUND WIRING LOCATED INDOORS SHALL BE SINGLE COPPER CONDUCTOR (#6 OR LARGER) WITH TYPE THHW, THWN, THWN–2, XHHW, XHHW–2, THW, THW–2, RHW, OR RHW–2 INSULATION UNLESS OTHERWISE SPECIFIED.

11. POWER AND CONTROL WIRING IN FLEXIBLE CORD SHALL BE MULTI–CONDUCTOR, TYPE SOOW CORD (#14 OR LARGER) UNLESS OTHERWISE SPECIFIED.

12. POWER AND CONTROL WIRING FOR USE IN CABLE TRAY SHALL BE MULTI–CONDUCTOR, TYPE TC CABLE (#14 OR LARGER), WITH TYPE THHW, THWN, THWN–2, XHHW, XHHW–2, THW, THW–2, RHW, OR RHW–2 INSULATION UNLESS OTHERWISE SPECIFIED.

13. ALL POWER AND GROUNDING CONNECTIONS SHALL BE CRIMP–STYLE, COMPRESSION WIRE LUGS AND WIRE NUTS BY THOMAS AND BETTS (OR EQUAL). LUGS AND WIRE NUTS SHALL BE RATED FOR OPERATION NOT LESS THAN 75° C (90° C IF AVAILABLE).

14. RACEWAY AND CABLE TRAY SHALL BE LISTED OR LABELED FOR ELECTRICAL USE IN ACCORDANCE WITH NEMA, UL, ANSI/IEEE AND NEC.

15. ELECTRICAL METALLIC TUBING (EMT), INTERMEDIATE METAL CONDUIT (IMC), OR RIGID METAL CONDUIT (RMC) SHALL BE USED FOR EXPOSED INDOOR LOCATIONS.

16. ELECTRICAL METALLIC TUBING (EMT) OR METAL–CLAD CABLE (MC) SHALL BE USED FOR CONCEALED INDOOR LOCATIONS.

17. SCHEDULE 40 PVC UNDERGROUND ON STRAIGHTS AND SCHEDULE 80 PVC FOR ALL ELBOWS/90s AND ALL APPROVED ABOVE GRADE PVC CONDUIT.

18. LIQUID–TIGHT FLEXIBLE METALLIC CONDUIT (LIQUID–TITE FLEX) SHALL BE USED INDOORS AND OUTDOORS, WHERE VIBRATION OCCURS OR FLEXIBILITY IS NEEDED.

19. CONDUIT AND TUBING FITTINGS SHALL BE THREADED OR COMPRESSION–TYPE AND APPROVED FOR THE LOCATION USED. SET SCREW FITTINGS ARE NOT ACCEPTABLE.

20. CABINETS, BOXES AND WIRE WAYS SHALL BE LABELED FOR ELECTRICAL USE IN ACCORDANCE WITH NEMA, UL, ANSI/IEEE AND THE NEC.

21. WIREWAYS SHALL BE METAL WITH AN ENAMEL FINISH AND INCLUDE A HINGED COVER, DESIGNED TO SWING OPEN DOWNWARDS (WIREMOLD SPECMATE WIREWAY).

22. SLOTTED WIRING DUCT SHALL BE PVC AND INCLUDE COVER (PANDUIT TYPE E OR EQUAL).

23. CONDUITS SHALL BE FASTENED SECURELY IN PLACE WITH APPROVED NON–PERFORATED STRAPS AND HANGERS. EXPLOSIVE DEVICES (i.e. POWDER–ACTUATED) FOR ATTACHING HANGERS TO STRUCTURE WILL NOT BE PERMITTED. CLOSELY FOLLOW THE LINES OF THE STRUCTURE, MAINTAIN CLOSE PROXIMITY TO THE STRUCTURE AND KEEP CONDUITS IN TIGHT ENVELOPES. CHANGES IN DIRECTION TO ROUTE AROUND OBSTACLES SHALL BE MADE WITH CONDUIT OUTLET BODIES. CONDUIT SHALL BE INSTALLED IN A NEAT AND WORKMANLIKE MANNER. PARALLEL AND PERPENDICULAR TO STRUCTURE WALL AND CEILING LINES. ALL CONDUIT SHALL BE FISHED TO CLEAR OBSTRUCTIONS. ENDS OF CONDUITS SHALL BE TEMPORARILY CAPPED FLUSH TO FINISH GRADE TO PREVENT CONCRETE, PLASTER OR DIRT FROM ENTERING. CONDUITS SHALL BE RIGIDLY CLAMPED TO BOXES BY GALVANIZED MALLEABLE IRON BUSHING ON INSIDE AND GALVANIZED MALLEABLE IRON LOCKNUT ON OUTSIDE AND INSIDE.

24. EQUIPMENT CABINETS, TERMINAL BOXES, JUNCTION BOXES AND PULL BOXES SHALL BE GALVANIZED OR EPOXY–COATED SHEET STEEL. SHALL MEET OR EXCEED UL 50 AND BE RATED NEMA 1 (OR BETTER) FOR INTERIOR LOCATIONS AND NEMA 3 (OR BETTER) FOR EXTERIOR LOCATIONS.

25. METAL RECEPTACLE, SWITCH AND DEVICE BOXES SHALL BE GALVANIZED, EPOXY–COATED OR NON–CORRODING; SHALL MEET OR EXCEED UL 514A AND NEMA OS 1 AND BE RATED NEMA 1 (OR BETTER) FOR INTERIOR LOCATIONS AND WEATHER PROTECTED (WP OR BETTER) FOR EXTERIOR LOCATIONS.

26. NONMETALLIC RECEPTACLE, SWITCH AND DEVICE BOXES SHALL MEET OR EXCEED NEMA OS 2 (NEWEST REVISION) AND BE RATED NEMA 1 (OR BETTER) FOR INTERIOR LOCATIONS AND WEATHER PROTECTED (WP OR BETTER) FOR EXTERIOR LOCATIONS.

27. THE CONTRACTOR SHALL NOTIFY AND OBTAIN NECESSARY AUTHORIZATION FROM THE CARRIER AND/OR DISH Wireless L.L.C. AND TOWER OWNER BEFORE COMMENCING WORK ON THE AC POWER DISTRIBUTION PANELS.

28. THE CONTRACTOR SHALL PROVIDE NECESSARY TAGGING ON THE BREAKERS, CABLES AND DISTRIBUTION PANELS IN ACCORDANCE WITH THE APPLICABLE CODES AND STANDARDS TO SAFEGUARD LIFE AND PROPERTY.

29. INSTALL LAMICOID LABEL ON THE METER CENTER TO SHOW "DISH Wireless L.L.C.".

30. ALL EMPTY/SPARE CONDUITS THAT ARE INSTALLED ARE TO HAVE A METERED MULE TAPE PULL CORD INSTALLED.


dish wireless
5701 SOUTH SANTA FE DRIVE
LITTLETON, CO 80120

SBA
8051 CONGRESS AVENUE
BOCA RATON, FL 33487

B+T GRP
1717 S. BOULDER
SUITE 300
TULSA, OK 74119
PH: (918) 587-4630
www.btgrp.com


8/8/22

STATE OF CONNECTICUT
CHAD J. LITTLE
No. 23924
LICENSED
PROFESSIONAL ENGINEER


MTS ENGINEERING P.L.L.C.
BER:2386985
Expires 3/31/23



IT IS A VIOLATION OF LAW FOR ANY PERSON, UNLESS THEY ARE ACTING UNDER THE DIRECTION OF A LICENSED PROFESSIONAL ENGINEER, TO ALTER THIS DOCUMENT.


| DRAWN BY: | CHECKED BY: | APPROVED BY: |
|---|---|---|
| YN | KJG | CDD |

RFDS REV #: 1.0

CONSTRUCTION DOCUMENTS

SUBMITTALS

| REV | DATE | DESCRIPTION |
|---|---|---|
| A | 11/29/21 | ISSUED FOR REVIEW |
| 0 | 11/27/22 | ISSUED FOR CONSTRUCTION |
| 1 | 6/15/22 | ISSUED FOR CONSTRUCTION |
| 2 | 8/8/22 | ISSUED FOR CONSTRUCTION |
| | | |
| | | |

A&E PROJECT NUMBER

149435.001.01

DISH Wireless L.L.C.
PROJECT INFORMATION

BOBOS00046A
100 OLD TATNIC HILL ROAD
BROOKLYN, CT 06234

SHEET TITLE

GENERAL NOTES

SHEET NUMBER

**GN-3**

GROUNDING NOTES:

1. ALL GROUND ELECTRODE SYSTEMS (INCLUDING TELECOMMUNICATION, RADIO, LIGHTNING PROTECTION AND AC POWER GES'S) SHALL BE BONDED TOGETHER AT OR BELOW GRADE, BY TWO OR MORE COPPER BONDING CONDUCTORS IN ACCORDANCE WITH THE NEC.

2. THE CONTRACTOR SHALL PERFORM IEEE FALL-OF-POTENTIAL RESISTANCE TO EARTH TESTING (PER IEEE 1100 AND 81) FOR GROUND ELECTRODE SYSTEMS, THE CONTRACTOR SHALL FURNISH AND INSTALL SUPPLEMENTAL GROUND ELECTRODES AS NEEDED TO ACHIEVE A TEST RESULT OF 5 OHMS OR LESS.

3. THE CONTRACTOR IS RESPONSIBLE FOR PROPERLY SEQUENCING GROUNDING AND UNDERGROUND CONDUIT INSTALLATION AS TO PREVENT ANY LOSS OF CONTINUITY IN THE GROUNDING SYSTEM OR DAMAGE TO THE CONDUIT AND PROVIDE TESTING RESULTS.

4. METAL CONDUIT AND TRAY SHALL BE GROUNDED AND MADE ELECTRICALLY CONTINUOUS WITH LISTED BONDING FITTINGS OR BY BONDING ACROSS THE DISCONTINUITY WITH #6 COPPER WIRE UL APPROVED GROUNDING TYPE CONDUIT CLAMPS.

5. METAL RACEWAY SHALL NOT BE USED AS THE NEC REQUIRED EQUIPMENT GROUND CONDUCTOR. STRANDED COPPER CONDUCTORS WITH GREEN INSULATION, SIZED IN ACCORDANCE WITH THE NEC, SHALL BE FURNISHED AND INSTALLED WITH THE POWER CIRCUITS TO BTS EQUIPMENT.

6. EACH CABINET FRAME SHALL BE DIRECTLY CONNECTED TO THE MASTER GROUND BAR WITH GREEN INSULATED SUPPLEMENTAL EQUIPMENT GROUND WIRES, #6 STRANDED COPPER OR LARGER FOR INDOOR BTS; #2 BARE SOLID TINNED COPPER FOR OUTDOOR BTS.

7. CONNECTIONS TO THE GROUND BUS SHALL NOT BE DOUBLED UP OR STACKED BACK TO BACK CONNECTIONS ON OPPOSITE SIDE OF THE GROUND BUS ARE PERMITTED.

8. ALL EXTERIOR GROUND CONDUCTORS BETWEEN EQUIPMENT/GROUND BARS AND THE GROUND RING SHALL BE #2 SOLID TINNED COPPER UNLESS OTHERWISE INDICATED.

9. ALUMINUM CONDUCTOR OR COPPER CLAD STEEL CONDUCTOR SHALL NOT BE USED FOR GROUNDING CONNECTIONS.

10. USE OF 90° BENDS IN THE PROTECTION GROUNDING CONDUCTORS SHALL BE AVOIDED WHEN 45° BENDS CAN BE ADEQUATELY SUPPORTED.

11. EXOTHERMIC WELDS SHALL BE USED FOR ALL GROUNDING CONNECTIONS BELOW GRADE.

12. ALL GROUND CONNECTIONS ABOVE GRADE (INTERIOR AND EXTERIOR) SHALL BE FORMED USING HIGH PRESS CRIMPS.

13. COMPRESSION GROUND CONNECTIONS MAY BE REPLACED BY EXOTHERMIC WELD CONNECTIONS.

14. ICE BRIDGE BONDING CONDUCTORS SHALL BE EXOTHERMICALLY BONDED OR BOLTED TO THE BRIDGE AND THE TOWER GROUND BAR.

15. APPROVED ANTIOXIDANT COATINGS (i.e. CONDUCTIVE GEL OR PASTE) SHALL BE USED ON ALL COMPRESSION AND BOLTED GROUND CONNECTIONS.

16. ALL EXTERIOR GROUND CONNECTIONS SHALL BE COATED WITH A CORROSION RESISTANT MATERIAL.

17. MISCELLANEOUS ELECTRICAL AND NON-ELECTRICAL METAL BOXES, FRAMES AND SUPPORTS SHALL BE BONDED TO THE GROUND RING, IN ACCORDANCE WITH THE NEC.

18. BOND ALL METALLIC OBJECTS WITHIN 6 ft OF MAIN GROUND RING WITH (1) #2 BARE SOLID TINNED COPPER GROUND CONDUCTOR.

19. GROUND CONDUCTORS USED FOR THE FACILITY GROUNDING AND LIGHTNING PROTECTION SYSTEMS SHALL NOT BE ROUTED THROUGH METALLIC OBJECTS THAT FORM A RING AROUND THE CONDUCTOR, SUCH AS METALLIC CONDUITS, METAL SUPPORT CLIPS OR SLEEVES THROUGH WALLS OR FLOORS. WHEN IT IS REQUIRED TO BE HOUSED IN CONDUIT TO MEET CODE REQUIREMENTS OR LOCAL CONDITIONS, NON-METALLIC MATERIAL SUCH AS PVC CONDUIT SHALL BE USED. WHERE USE OF METAL CONDUIT IS UNAVOIDABLE (i.e., NONMETALLIC CONDUIT PROHIBITED BY LOCAL CODE) THE GROUND CONDUCTOR SHALL BE BONDED TO EACH END OF THE METAL CONDUIT.

20. ALL GROUNDS THAT TRANSITION FROM BELOW GRADE TO ABOVE GRADE MUST BE #2 BARE SOLID TINNED COPPER IN 3/4" NON-METALLIC, FLEXIBLE CONDUIT FROM 24" BELOW GRADE TO WITHIN 3" TO 6" OF CAD-WELD TERMINATION POINT. THE EXPOSED END OF THE CONDUIT MUST BE SEALED WITH SILICONE CAULK. (ADD TRANSITIONING GROUND STANDARD DETAIL AS WELL).

21. BUILDINGS WHERE THE MAIN GROUNDING CONDUCTORS ARE REQUIRED TO BE ROUTED TO GRADE, THE CONTRACTOR SHALL ROUTE TWO GROUNDING CONDUCTORS FROM THE ROOFTOP, TOWERS, AND WATER TOWERS GROUNDING RING, TO THE EXISTING GROUNDING SYSTEM, THE GROUNDING CONDUCTORS SHALL NOT BE SMALLER THAN 2/0 COPPER. ROOFTOP GROUNDING RING SHALL BE BONDED TO THE EXISTING GROUNDING SYSTEM, THE BUILDING STEEL COLUMNS, LIGHTNING PROTECTION SYSTEM, AND BUILDING MAIN WATER LINE (FERROUS OR NONFERROUS METAL PIPING ONLY). DO NOT ATTACH GROUNDING TO FIRE SPRINKLER SYSTEM PIPES.


dish wireless
5701 SOUTH SANTA FE DRIVE
LITTLETON, CO 80120

SBA
8051 CONGRESS AVENUE
BOCA RATON, FL 33487

B+T GRP
1717 S. BOULDER
SUITE 300
TULSA, OK 74119
PH: (918) 587-4630
www.btgrp.com


8/8/22

STATE OF CONNECTICUT
CHAD C. TITLE
No. 23924
LICENSED
PROFESSIONAL ENGINEER

MTS ENGINEERING P.L.L.C.
BER:2386985
Expires 3/31/23


IT IS A VIOLATION OF LAW FOR ANY PERSON, UNLESS THEY ARE ACTING UNDER THE DIRECTION OF A LICENSED PROFESSIONAL ENGINEER, TO ALTER THIS DOCUMENT.


| DRAWN BY: | CHECKED BY: | APPROVED BY: |
|---|---|---|
| YN | KJG | CDD |

RFDS REV #: 1.0

CONSTRUCTION DOCUMENTS

SUBMITTALS

| REV | DATE | DESCRIPTION |
|---|---|---|
| A | 11/29/21 | ISSUED FOR REVIEW |
| 0 | 11/27/22 | ISSUED FOR CONSTRUCTION |
| 1 | 6/15/22 | ISSUED FOR CONSTRUCTION |
| 2 | 8/8/22 | ISSUED FOR CONSTRUCTION |
| | | |
| | | |

A&E PROJECT NUMBER

149435.001.01

DISH Wireless L.L.C.
PROJECT INFORMATION

BOBOS00046A
100 OLD TATNIC HILL ROAD
BROOKLYN, CT 06234

SHEET TITLE

GENERAL NOTES

SHEET NUMBER

**GN-4**




149435.001.01_070191D-3 BOBOS00046A SBA Dish 00s.dwg – Sheet:GN-4 – User: rcarson – Aug 08, 2022 – 11:08am

# Exhibit D

Tower Engineering Solutions
Phone (972) 483-0607, Fax (972) 975-9615
1320 Greenway Drive, Suite 600, Irving, Texas 75038

# Structural Analysis Report

**Existing 175 ft SUMMIT Monopole**

**Customer Name: SBA Communications Corp**

**Customer Site Number: CT01915-S**

**Customer Site Name: South Brooklyn**

**Carrier Name: Dish Wireless (App#: 173263-1)**

**Carrier Site ID / Name: BOBOS00046A / 0**

**Site Location: 100 Old Tatnic Hill Road**

**Brooklyn, Connecticut**

**Windham County**

**Latitude: 41.767160**

**Longitude: -71.971949**

Exp. 01/31/2024

08/10/2022

**Analysis Result:**

**Max Structural Usage: 82.8% [Pass]**

**Max Foundation Usage: 58.0% [Pass]**

**Additional Usage Caused by New Mount/Mount Modification: N/A**

**Report Prepared By: Mohammed Al Rubaye**

Tower Engineering Solutions
Phone (972) 483-0607, Fax (972) 975-9615
1320 Greenway Drive, Suite 600, Irving, Texas 75038

# Structural Analysis Report

**Existing 175 ft SUMMIT Monopole**

**Customer Name: SBA Communications Corp**

**Customer Site Number: CT01915-S**

**Customer Site Name: South Brooklyn**

**Carrier Name: Dish Wireless (App#: 173263-1)**

**Carrier Site ID / Name: BOBOS00046A / 0**

**Site Location: 100 Old Tatnic Hill Road**

**Brooklyn, Connecticut**

**Windham County**

**Latitude: 41.767160**

**Longitude: -71.971949**

**Analysis Result:**

**Max Structural Usage: 82.8% [Pass]**

**Max Foundation Usage: 58.0% [Pass]**

**Additional Usage Caused by New Mount/Mount Modification: N/A**

**Report Prepared By: Mohammed Al Rubaye**

## Introduction

The purpose of this report is to summarize the analysis results on the 175 ft SUMMIT Monopole to support the proposed antennas and transmission lines in addition to those currently installed.

The pending modification by **TES** listed under Sources of Information was also considered completed and was included in this analysis.

## Sources of Information

| | |
|---|---|
| **Tower Drawings** | Tower Drawings prepared by Paul J. Ford and Company, Job # 29200-401 Dated 04/05/2000 |
| **Foundation Drawing** | Foundation Drawings prepared by Paul J. Ford and Company, Job # 29200-401 Dated 04/05/2000 |
| **Geotechnical Report** | Geotechnical Report prepared by FDH Engineering, Project # 1201186EG1 Dated 08/16/2012 |
| **Mount Analysis** | N/A |
| **Modification Drawings** | N/A |
| **Pending Modification** | TES Pending Job # 121972. Dated 01/18/2022 |

## Analysis Criteria

The rigorous analysis was performed in accordance with the requirements and stipulations of the TIA-222-G**.** In accordance with this standard, the structure was analyzed using **TESPoles,** a proprietary analysis software. The program considers the structure as an elastic 3-D model with second-order effects and temperature effects incorporated in the analysis. The analysis was performed using multiple wind directions.

| | |
|---|---|
| **Wind Speed Used in the Analysis:** | Ultimate Design Wind Speed $V_{ult}$ = 130.0 mph (3-Sec. Gust)/ Nominal Design Wind Speed $V_{asd}$ = 101.0 mph (3-Sec. Gust) |
| **Basic Wind Speed with Ice:** | 50 mph (3-Sec. Gust) with 1” radial ice concurrent |
| **Operational Wind Speed:** | 60 mph + 0” Radial ice |
| **Standard/Codes:** | TIA-222-G-2 / 2015 IBC / 2018 Connecticut State Building Code |
| **Exposure Category:** | B |
| **Structure Class:** | II |
| **Topographic Category:** | 1 |
| **Crest Height:** | 0 ft |
| **Seismic Parameters:** | SS = 0.171, S1 = 0.062 |

This structural analysis is based upon the tower being classified as Structure Class II; however, if a different classification is required subsequent to the date hereof, the tower classification will be changed to meet such requirement and a new structural analysis will be run.

## Existing Antennas, Mounts and Transmission Lines

The table below summarizes the antennas, mounts and transmission lines that were considered in the analysis as existing on the tower.

| Items | Elevation (ft) | Qty. | Antenna Descriptions | Mount Type & Qty. | Transmission Lines | Owner |
|---|---|---|---|---|---|---|
| 1 | 177.0 | 3 | Samsung MT6407-77A - Panel | LP Platform w/ Mods [(6) Support Rail, (1) PLK5 Kicker Kit, (1) PLK7 Collar Mount, (3) 24" P2 1/2 STD] | (1) 1 5/8" 6x12 Hybriflex (11) 1 5/8" (1) 1 5/8" Hybrid | Verizon |
| 2 | | 3 | Antel BXA-70080-6CF - Panel | | | |
| 3 | | 6 | JMA Wireless MX06FRO660-03 - Panel | | | |
| 4 | | 3 | Samsung B2/B66A RRU | | | |
| 5 | | 3 | Samsung B5/B13 RRU | | | |
| 6 | | 1 | Raycap RVZDC-6627-PF-48 OVP | | | |
| 7 | 157.0 | 3 | RFS - APXVTM14-C-I20 - Panel | (1) LP Platform w/ handrail kit & v-brace kit [(1) SitePro PRK-1245L (1) SitePro HRK-14-U & (1) SitePro PRK-SFS-H-L] | (4) 1 1/4" Fiber | Sprint Nextel |
| 8 | | 3 | Commscope - NNVV-65B-R4 - Panel | | | |
| 9 | | 3 | ALU - 1900 MHz - RRU | | | |
| 10 | | 6 | ALU - 800 MHz - RRU | | | |
| 11 | | 3 | ALU - TD-RRH8x20-25 - RRU | | | |
| 12 | 140.0 | 3 | RFS APXV18-206516S-C-A20 | Platform w/ Handrails Commscope MT-195-12 | (9) 1 5/8" (3) 1 5/8"Fiber | T-Mobile |
| 13 | | 3 | RFS APXVAARR24_43-U-NA20 | | | |
| 14 | | 3 | Ericsson KRY 112 489/2 | | | |
| 15 | | 3 | Ericsson Radio 4449 B71+B12 | | | |
| 16 | | 3 | Kathrein 782 11056 | | | |
| 17 | | 3 | Kathrein 782 11056 | | | |
| 22 | 75.0 | 1 | GPS | Direct | (1) 1/2" | Sprint Nextel |

## Proposed Carrier's Final Configuration of Antennas, Mounts and Transmission Lines

Information pertaining to the proposed carrier's final configuration of antennas and transmission lines was provided by SBA Communications Corp. The proposed antennas and lines are listed below.

| Items | Elevation (ft) | Qty. | Antenna Descriptions | Mount Type & Qty. | Transmission Lines | Owner |
|---|---|---|---|---|---|---|
| 18 | 110.0 | 3 | Commscope FFVV-65B-R2 - Panel | Commscope MC-PK8-DSH | (1) 1.6" Hybrid | Dish Wireless |
| 19 | | 3 | Fujitsu TA08025-B605 RRU | | | |
| 20 | | 3 | Fujitsu TA08025-B604 RRU | | | |
| 21 | | 1 | Raycap RDIDC-9181-PF-48-OVP | | | |

See the attached coax layout for the line placement considered in the analysis.

## Analysis Results

The results of the structural analysis, performed for the wind and ice loading and antenna equipment as defined above, are summarized as the following:

| | Pole shafts | Anchor Bolts | Base Plate |
|---|---|---|---|
| Max. Usage: | **82.8%** | **41.3%** | **80.7%** |
| Pass/Fail | **Pass** | **Pass** | **Pass** |

## Foundations

| | Moment (Kip-Ft) | Shear (Kips) | Axial (Kips) |
|---|---|---|---|
| Analysis Reactions | 4361.4 | 33.7 | 99.7 |

The foundation has been investigated using the supplied documents and soils report and was found adequate. Therefore, no modification to the foundation will be required.

## Operational Condition (Rigidity):

Operational characteristics of the tower are found to be within the limits prescribed by TIA-222 for the installed antennas. The maximum twist/sway at the elevation of the proposed equipment is 1.7978 degrees under the operational wind speed as specified in the Analysis Criteria.

## Conclusions

Based on the analysis results, the structure and its foundation will be adequate to safely support the existing and proposed equipment and meet the minimum requirements per the TIA-222-G-2 Standard after the following pending modification is successfully completed.

- Pending modification design drawing by **TES** Job # 121972.

# Standard Conditions

1. This analysis was performed based on the information supplied to **(TES) Tower Engineering Solutions, LLC.** Verification of the information provided was not included in the Scope of Work for **TES**. The accuracy of the analysis is dependent on the accuracy of the information provided.

2. The structural analysis was performance based upon the evidence available at the time of this report. All information provided by the client is considered to be accurate.

3. The analyses will be performed based on the codes as specified by the client or based on the best knowledge of the engineering staff of **TES**. In the absence of information to the contrary, all work will be performed in accordance with the latest relevant revision of ANSI/TIA-222. If wind speed and/or ice loads are different from the minimum values recommended by the ANSI/TIA-222 standard or other codes, **TES** should be notified in writing and the applicable minimum values provided by the client.

4. The configuration of the existing mounts, antennas, coax and other appurtenances were supplied by the customer for the current structural analysis. **TES** has not visited the tower site to verify the adequacy of the information provided. If there is any discrepancy found in the report regarding the existing conditions, **TES** should be notified immediately to evaluate the effect of the discrepancy on the analysis results.

5. The client will assume responsibility for rework associated with the differences in initially provided information, including tower and foundation information, existing and/or proposed equipment and transmission lines.

6. If a feasibility analysis was performed, final acceptance of changed conditions shall be based upon a rigorous structural analysis.

# Usage Diagram - Max Ratio 82.78% at 83.8ft

| | | | | |
|---|---|---|---|---|
| **Structure:** | CT01915-S-SBA | **Code:** | EIA/TIA-222-G | 8/10/2022 |
| **Site Name:** | South Brooklyn | **Exposure:** | B | |
| **Height:** | 175.00 (ft) | **Gh:** | 1.1 | |
| **Base Elev:** | 0.000 (ft) | | | Page: 1 |

Tower Engineering Solutions

Dead Load Factor: 1.20

Wind Load Factor: 1.60

**Load Case : 1.2D + 1.6W 101 mph Wind**

**Iterations:** 26

*Copyright © 2022 by Tower Engineering Solutions, LLC. All rights reserved.*

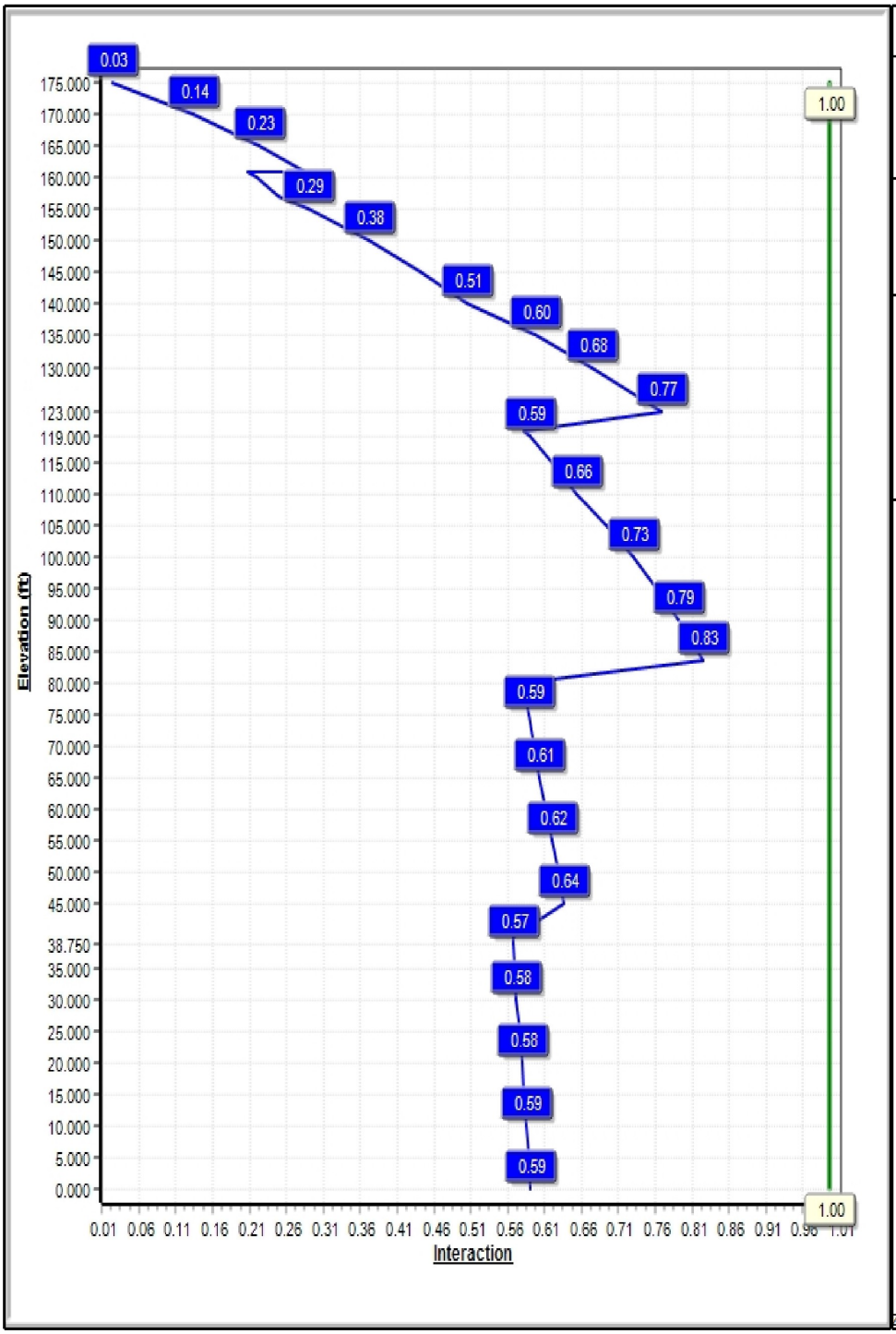


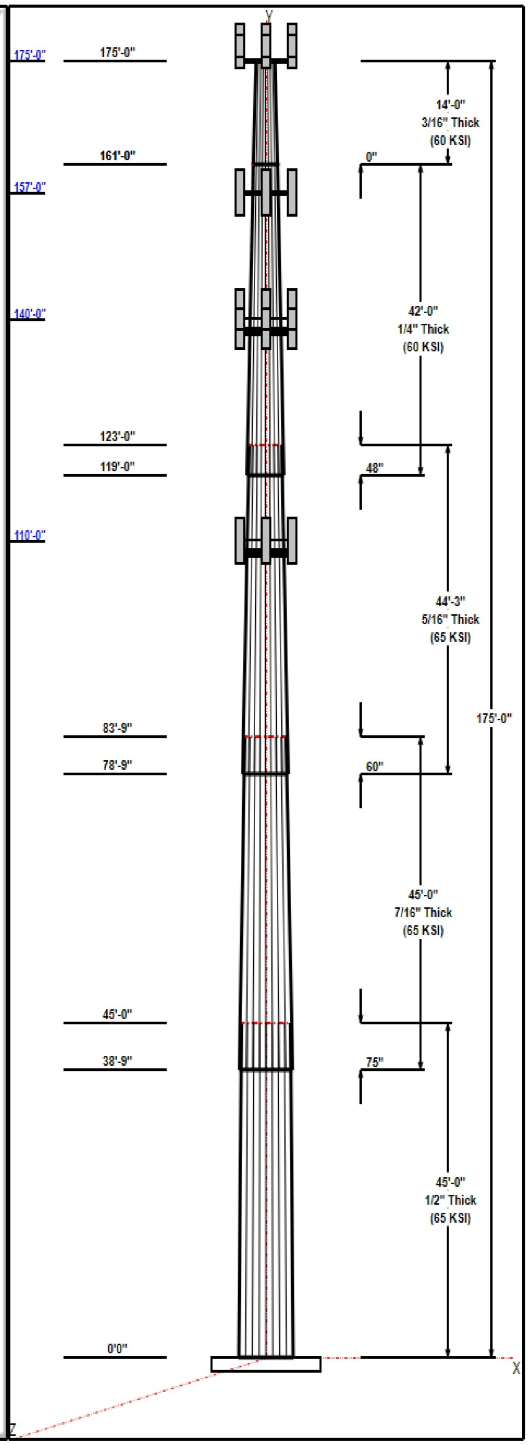

# Structure: CT01915-S-SBA

| | | | | |
|---|---|---|---|---|
| **Type:** | Tapered | **Base Shape:** | 18 Sided | 8/10/2022 |
| **Site Name:** | South Brooklyn | **Taper:** | 0.23000 | |
| **Height:** | 175.00 (ft) | | | |
| **Base Elev:** | 0.00 (ft) | | | Page: 2 |

TES Tower Engineering Solutions

## Shaft Properties

| Seq | Length (ft) | Top (in) | Bottom (in) | Thick (in) | Joint Type | Taper | Grade (ksi) |
|---|---|---|---|---|---|---|---|
| 1 | 45.00 | 46.68 | 57.03 | 0.500 | | 0.23000 | 65 |
| 2 | 45.00 | 38.64 | 48.99 | 0.438 | Slip | 0.23000 | 65 |
| 3 | 44.25 | 30.24 | 40.42 | 0.313 | Slip | 0.23000 | 65 |
| 4 | 42.00 | 22.00 | 31.66 | 0.250 | Slip | 0.23000 | 60 |
| 5 | 14.00 | 18.78 | 22.00 | 0.188 | Butt | 0.23000 | 60 |

## Discrete Appurtenances

| Attach Elev (ft) | Force Elev (ft) | Qty | Description | Carrier |
|---|---|---|---|---|
| 175.00 | 177.00 | 3 | Samsung MT6407-77A | Verizon |
| 175.00 | 177.00 | 3 | Antel BXA-70080-6CF | Verizon |
| 175.00 | 177.00 | 6 | JMA Wireless | Verizon |
| 175.00 | 177.00 | 3 | Samsung B2/B66A | Verizon |
| 175.00 | 177.00 | 3 | Samsung B5/B13 | Verizon |
| 175.00 | 177.00 | 1 | RVZDC-6627-PF-48 | Verizon |
| 175.00 | 175.00 | 1 | MS-KI22-5 (Kickers w/o | Verizon |
| 175.00 | 177.00 | 1 | MS-HRECP | Verizon |
| 175.00 | 175.00 | 1 | MS-H1242 (Heavy Collar | Verizon |
| 175.00 | 175.00 | 1 | 6' Lightning rod | |
| 175.00 | 175.00 | 1 | Low Profile Platform-flat | Verizon |
| 161.00 | 161.00 | 1 | Bridge Stiffener | |
| 157.00 | 157.00 | 3 | APXVTM14-C-I20 | Sprint Nextel |
| 157.00 | 157.00 | 3 | NNVV-65B-R4 | Sprint Nextel |
| 157.00 | 157.00 | 3 | ALU - 1900 MHz - RRU | Sprint Nextel |
| 157.00 | 157.00 | 6 | ALU - 800 MHz - RRU | Sprint Nextel |
| 157.00 | 157.00 | 3 | ALU - TD-RRH8x20-25 - | Sprint Nextel |
| 157.00 | 157.00 | 1 | Platform w/ Handrail + | Sprint Nextel |
| 140.00 | 140.00 | 3 | APXVAARR24_43-U-NA20 | T-Mobile |
| 140.00 | 140.00 | 3 | KRY 112 489/2 | T-Mobile |
| 140.00 | 140.00 | 1 | MT-195-12 | T-Mobile |
| 140.00 | 140.00 | 3 | Ericsson AIR6449 B41 | T-Mobile |
| 140.00 | 140.00 | 3 | Ericsson 4449 B71 + B85 | T-Mobile |
| 140.00 | 140.00 | 3 | Ericsson 4460 B25 + B66 | T-Mobile |
| 140.00 | 140.00 | 3 | Kathrein 782 11056 | T-Mobile |
| 140.00 | 140.00 | 1 | MS-HRECP-35 | T-Mobile |
| 110.00 | 110.00 | 3 | Commscope | Dish Wireless |
| 110.00 | 110.00 | 1 | MC-PK8-DSH | Dish Wireless |
| 110.00 | 110.00 | 3 | Fujitsu TA08025-B605 | Dish Wireless |
| 110.00 | 110.00 | 3 | Fujitsu TA08025-B604 | Dish Wireless |
| 110.00 | 110.00 | 1 | Raycap | Dish Wireless |
| 75.00 | 75.00 | 1 | GPS | Sprint Nextel |

## Linear Appurtenances

| Elev From (ft) | Elev To (ft) | Placement | Description | Carrier |
|---|---|---|---|---|
| 0.00 | 175.00 | Inside | 1 5/8" 6x12 Hybriflex LI | Verizon |
| 0.00 | 175.00 | Inside | 1 5/8" Coax | Verizon |
| 0.00 | 175.00 | Inside | 1 5/8" Hybrid | Verizon |
| 0.00 | 157.00 | Inside | 1 1/4" Fiber | Sprint Nextel |
| 0.00 | 140.00 | Inside | 1 5/8" Coax | T-Mobile |
| 0.00 | 140.00 | Inside | 1 5/8" Fiber | T-Mobile |
| 0.00 | 140.00 | Inside | 1.9" Fiber | T-Mobile |
| 0.00 | 110.00 | Inside | 1.6" Hybrid | Dish Wireless |
| 0.00 | 75.00 | Inside | 1/2" Coax | Sprint Nextel |

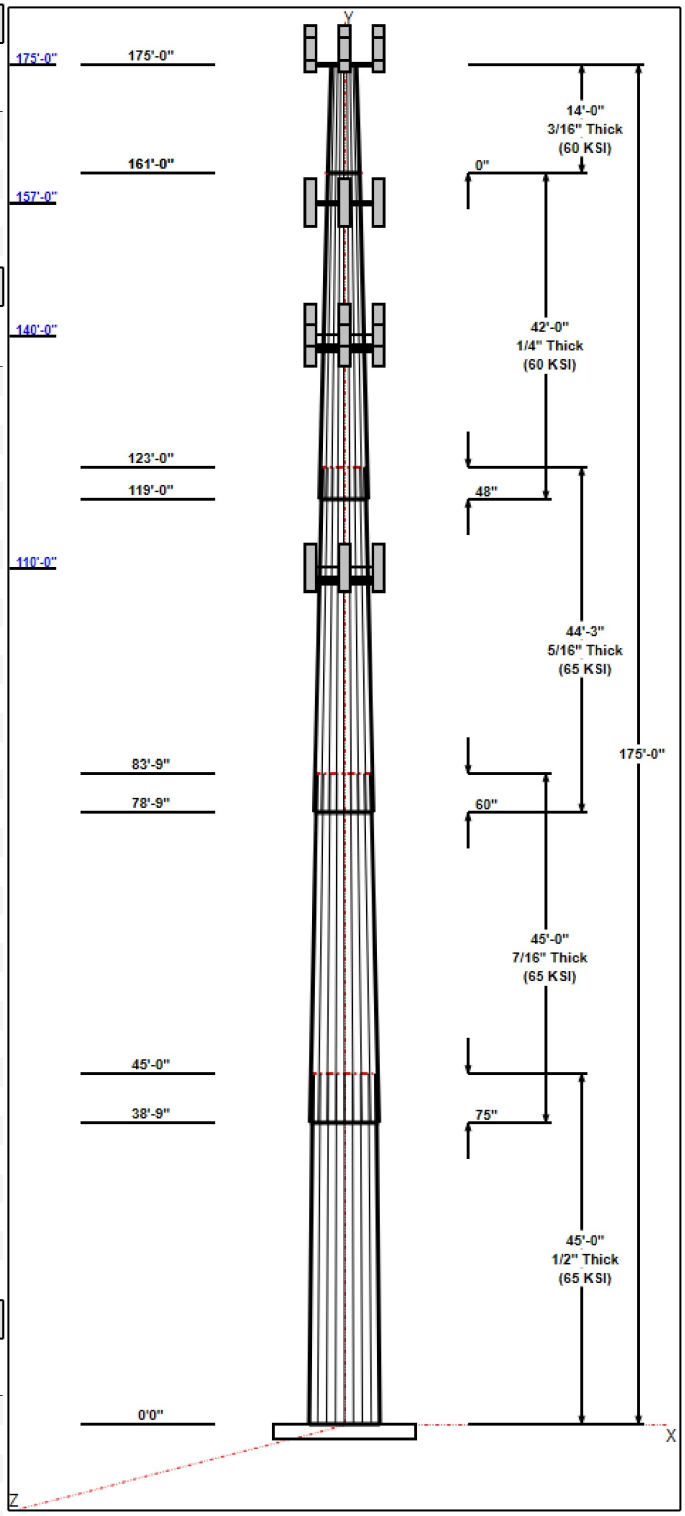


*Copyright © 2022 by Tower Engineering Solutions, LLC. All rights reserved.*

### Anchor Bolts

| Qty | Specifications | Grade (ksi) | Arrangement |
|---|---|---|---|
| 32 | 2.25" 18J | 75.0 | Cluster |

### Base Plate

| Thickness (in) | Specifications (in) | Grade (ksi) | Geometry |
|---|---|---|---|
| 2.5000 | 68.0 | 50.0 | Clipped |

### Reactions

| Load Case | Moment (FT-Kips) | Shear (Kips) | Axial (Kips) |
|---|---|---|---|
| 1.2D + 1.6W 101 mph Wind | 4361.4 | 33.7 | 58.6 |
| 0.9D + 1.6W 101 mph Wind | 4299.6 | 33.7 | 44.0 |
| 1.2D + 1.0Di + 1.0Wi 50 mph Wind | 1315.3 | 9.7 | 99.7 |
| 1.2D + 1.0E | 268.5 | 2.0 | 58.7 |
| 0.9D + 1.0E | 264.3 | 2.0 | 44.0 |
| 1.0D + 1.0W 60 mph Wind | 954.9 | 7.4 | 48.9 |

*Copyright © 2022 by Tower Engineering Solutions, LLC. All rights reserved.*

# Structure: CT01915-S-SBA - Coax Line Placement

**Type:** Monopole
**Site Name:** South Brooklyn
**Height:** 175.00 (ft)

8/10/2022



Tower Engineering Solutions

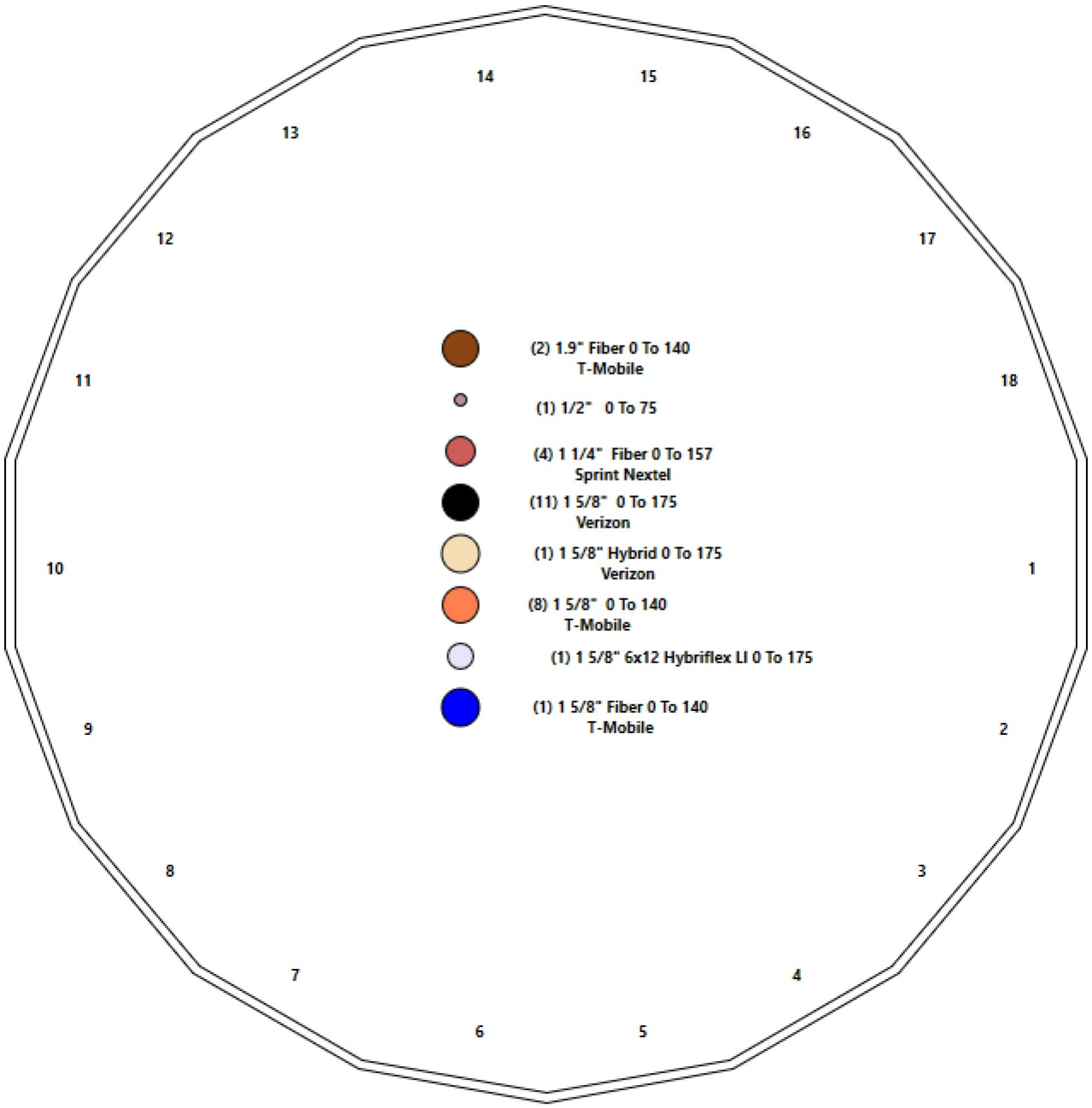


*Copyright © 2022 by Tower Engineering Solutions, LLC. All rights reserved.*

# Shaft Properties

| | | | | | |
|---|---|---|---|---|---|
| **Structure:** | CT01915-S-SBA | | **Code:** | TIA-222-G | 8/10/2022 |
| **Site Name:** | South Brooklyn | | **Exposure:** | B | |
| **Height:** | 175.00 (ft) | | **Crest Height:** | 0.00 | |
| **Base Elev:** | 0.000 (ft) | | **Site Class:** | D - Stiff Soil | |
| **Gh:** | 1.1 | **Topography:** 1 | **Struct Class:** | II | Page: 5 |

Tower Engineering Solutions

| Sec. No. | Shape | Length (ft) | Thick (in) | Fy (ksi) | Joint Type | Overlap (in) | Weight (lb) |
|---|---|---|---|---|---|---|---|
| 1 | 18 | 45.000 | 0.5000 | 65 | | 0.00 | 12,479 |
| 2 | 18 | 45.000 | 0.4375 | 65 | Slip | 75.00 | 9,224 |
| 3 | 18 | 44.250 | 0.3125 | 65 | Slip | 60.00 | 5,229 |
| 4 | 18 | 42.000 | 0.2500 | 60 | Slip | 48.00 | 3,014 |
| 5 | 18 | 14.000 | 0.1875 | 60 | Flange | 0.00 | 573 |
| | | | | | **Total Shaft Weight:** | | **30,519** |

| | Bottom | | | | | | Top | | | | | | |
|---|---|---|---|---|---|---|---|---|---|---|---|---|---|
| **Sec. No.** | **Dia (in)** | **Elev (ft)** | **Area (sqin)** | **Ix (in^4)** | **W/t Ratio** | **D/t Ratio** | **Dia (in)** | **Elev (ft)** | **Area (sqin)** | **Ix (in^4)** | **W/t Ratio** | **D/t Ratio** | **Taper** |
| 1 | 57.03 | 0.00 | 89.71 | 36220.24 | 18.70 | 114.06 | 46.68 | 45.00 | 73.29 | 19745.8 | 15.05 | 93.36 | 0.230000 |
| 2 | 48.99 | 38.75 | 67.42 | 20082.80 | 18.33 | 111.98 | 38.64 | 83.75 | 53.05 | 9783.25 | 14.16 | 88.33 | 0.230000 |
| 3 | 40.42 | 78.75 | 39.78 | 8083.32 | 21.39 | 129.34 | 30.24 | 123.00 | 29.68 | 3358.97 | 15.65 | 96.77 | 0.230000 |
| 4 | 31.66 | 119.0 | 24.92 | 3106.62 | 20.92 | 126.64 | 22.00 | 161.00 | 17.26 | 1031.48 | 14.11 | 88.00 | 0.230000 |
| 5 | 22.00 | 161.0 | 12.98 | 780.30 | 19.28 | 117.33 | 18.78 | 175.00 | 11.06 | 483.24 | 16.25 | 100.1 | 0.230000 |

*Copyright © 2022 by Tower Engineering Solutions, LLC. All rights reserved.*

# Load Summary

| | | | | | |
|---|---|---|---|---|---|
| **Structure:** | CT01915-S-SBA | **Code:** | TIA-222-G | 8/10/2022 | |
| **Site Name:** | South Brooklyn | **Exposure:** | B | | |
| **Height:** | 175.00 (ft) | **Crest Height:** | 0.00 | | |
| **Base Elev:** | 0.000 (ft) | **Site Class:** | D - Stiff Soil | | |
| **Gh:** | 1.1 **Topography:** 1 | **Struct Class:** | II | Page: 6 | |

Tower Engineering Solutions

## Discrete Appurtenances

| No. | Elev (ft) | Description | Qty | No Ice Weight (lb) | No Ice CaAa (sf) | No Ice CaAa Factor | Ice Weight (lb) | Ice CaAa (sf) | Ice CaAa Factor | Hor. Ecc. (ft) | Vert Ecc (ft) |
|---|---|---|---|---|---|---|---|---|---|---|---|
| 1 | 175.00 | Samsung MT6407-77A | 3 | 79.40 | 4.69 | 0.70 | 253.55 | 5.994 | 0.70 | 0.00 | 2.00 |
| 2 | 175.00 | Antel BXA-70080-6CF | 3 | 18.00 | 5.76 | 0.87 | 189.54 | 8.972 | 0.87 | 0.00 | 2.00 |
| 3 | 175.00 | JMA Wireless MX06FRO660-03 | 6 | 46.00 | 9.87 | 0.87 | 430.19 | 11.769 | 0.87 | 0.00 | 2.00 |
| 4 | 175.00 | Samsung B2/B66A | 3 | 84.40 | 1.87 | 0.67 | 197.19 | 2.673 | 0.67 | 0.00 | 2.00 |
| 5 | 175.00 | Samsung B5/B13 | 3 | 70.30 | 1.87 | 0.67 | 172.98 | 2.673 | 0.67 | 0.00 | 2.00 |
| 6 | 175.00 | RVZDC-6627-PF-48 | 1 | 32.00 | 4.06 | 1.00 | 186.26 | 5.173 | 1.00 | 0.00 | 2.00 |
| 7 | 175.00 | MS-KI22-5 (Kickers w/o Collar) | 1 | 146.00 | 5.33 | 1.00 | 422.01 | 12.887 | 1.00 | 0.00 | 0.00 |
| 8 | 175.00 | MS-HRECP | 1 | 514.00 | 12.00 | 1.00 | 1339.95 | 27.880 | 1.00 | 0.00 | 2.00 |
| 9 | 175.00 | MS-H1242 (Heavy Collar Mount) | 1 | 150.60 | 2.50 | 1.00 | 435.31 | 6.045 | 1.00 | 0.00 | 0.00 |
| 10 | 175.00 | 6' Lightning rod | 1 | 6.50 | 0.38 | 1.00 | 55.65 | 1.853 | 1.00 | 0.00 | 0.00 |
| 11 | 175.00 | Low Profile Platform-flat | 1 | 1200.00 | 37.00 | 1.00 | 2617.86 | 78.969 | 1.00 | 0.00 | 0.00 |
| 12 | 161.00 | Bridge Stiffener | 1 | 204.17 | 5.77 | 1.00 | 395.56 | 11.179 | 1.00 | 0.00 | 0.00 |
| 13 | 157.00 | APXVTM14-C-I20 | 3 | 56.20 | 6.34 | 0.77 | 286.02 | 7.864 | 0.77 | 0.00 | 0.00 |
| 14 | 157.00 | NNVV-65B-R4 | 3 | 84.70 | 12.27 | 0.74 | 503.26 | 14.220 | 0.74 | 0.00 | 0.00 |
| 15 | 157.00 | ALU - 1900 MHz - RRU | 3 | 60.00 | 2.77 | 0.67 | 171.76 | 4.469 | 0.67 | 0.00 | 0.00 |
| 16 | 157.00 | ALU - 800 MHz - RRU | 6 | 53.00 | 2.49 | 0.67 | 152.06 | 4.022 | 0.67 | 0.00 | 0.00 |
| 17 | 157.00 | ALU - TD-RRH8x20-25 - RRU | 3 | 70.00 | 4.05 | 0.67 | 228.65 | 5.168 | 0.67 | 0.00 | 0.00 |
| 18 | 157.00 | Platform w/ Handrail + | 1 | 2800.00 | 54.00 | 1.00 | 6072.63 | 14.590 | 1.00 | 0.00 | 0.00 |
| 19 | 140.00 | APXVAARR24_43-U-NA20 | 3 | 128.00 | 20.24 | 0.70 | 704.43 | 22.787 | 0.70 | 0.00 | 0.00 |
| 20 | 140.00 | KRY 112 489/2 | 3 | 15.40 | 0.67 | 0.67 | 43.19 | 1.522 | 0.67 | 0.00 | 0.00 |
| 21 | 140.00 | MT-195-12 | 1 | 2000.00 | 40.00 | 1.00 | 4773.15 | 67.731 | 1.00 | 0.00 | 0.00 |
| 22 | 140.00 | Ericsson AIR6449 B41 | 3 | 103.00 | 5.65 | 0.71 | 284.57 | 6.909 | 0.71 | 0.00 | 0.00 |
| 23 | 140.00 | Ericsson 4449 B71 + B85 RRU | 3 | 75.00 | 1.97 | 0.67 | 153.34 | 2.724 | 0.67 | 0.00 | 0.00 |
| 24 | 140.00 | Ericsson 4460 B25 + B66 RRU | 3 | 104.00 | 2.85 | 0.67 | 194.85 | 3.743 | 0.67 | 0.00 | 0.00 |
| 25 | 140.00 | Kathrein 782 11056 | 3 | 1.80 | 0.28 | 0.67 | 7.79 | 0.811 | 0.67 | 0.00 | 0.00 |
| 26 | 140.00 | MS-HRECP-35 | 1 | 514.00 | 12.25 | 1.00 | 1321.72 | 28.103 | 1.00 | 0.00 | 0.00 |
| 27 | 110.00 | Commscope FFVV-65B-R2 | 3 | 70.80 | 12.27 | 0.74 | 408.44 | 14.152 | 0.74 | 0.00 | 0.00 |
| 28 | 110.00 | MC-PK8-DSH | 1 | 1727.00 | 37.59 | 1.00 | 3908.72 | 98.645 | 1.00 | 0.00 | 0.00 |
| 29 | 110.00 | Fujitsu TA08025-B605 RRU | 3 | 75.00 | 1.96 | 0.67 | 142.61 | 2.685 | 0.67 | 0.00 | 0.00 |
| 30 | 110.00 | Fujitsu TA08025-B604 RRU | 3 | 63.90 | 1.96 | 0.67 | 129.34 | 2.685 | 0.67 | 0.00 | 0.00 |
| 31 | 110.00 | Raycap RDIDC-9181-PF-48-OVP | 1 | 21.90 | 2.01 | 1.00 | 90.73 | 2.745 | 1.00 | 0.00 | 0.00 |
| 32 | 75.00 | GPS | 1 | 10.00 | 1.00 | 1.00 | 46.47 | 1.886 | 1.00 | 0.00 | 0.00 |
| | | **Totals:** | **76** | **13,399.87** | | | **37,374.08** | | | | |

## Linear Appurtenances

| Bottom Elev. (ft) | Top Elev. (ft) | Description | Exposed Width | Exposed |
|---|---|---|---|---|
| 0.00 | 175.00 | (1) 1 5/8" 6x12 Hybriflex LI | 0.00 | Inside |
| 0.00 | 175.00 | (11) 1 5/8" Coax | 0.00 | Inside |
| 0.00 | 175.00 | (1) 1 5/8" Hybrid | 0.00 | Inside |
| 0.00 | 157.00 | (4) 1 1/4" Fiber | 0.00 | Inside |
| 0.00 | 140.00 | (8) 1 5/8" Coax | 0.00 | Inside |
| 0.00 | 140.00 | (1) 1 5/8" Fiber | 0.00 | Inside |
| 0.00 | 140.00 | (2) 1.9" Fiber | 0.00 | Inside |
| 0.00 | 110.00 | (1) 1.6" Hybrid | 0.00 | Inside |
| 0.00 | 75.00 | (1) 1/2" Coax | 0.00 | Inside |

*Copyright © 2022 by Tower Engineering Solutions, LLC. All rights reserved.*

## Discrete Appurtenances

| No. | Elev (ft) | Description | Qty | No Ice Weight (lb) | No Ice CaAa (sf) | No Ice CaAa Factor | Ice Weight (lb) | Ice CaAa (sf) | Ice CaAa Factor | Hor. Ecc. (ft) | Vert Ecc (ft) |
|---|---|---|---|---|---|---|---|---|---|---|---|

*Copyright © 2022 by Tower Engineering Solutions, LLC. All rights reserved.*

# Shaft Section Properties

| | | | | | |
|---|---|---|---|---|---|
| **Structure:** | CT01915-S-SBA | **Code:** | TIA-222-G | 8/10/2022 | |
| **Site Name:** | South Brooklyn | **Exposure:** | B | | |
| **Height:** | 175.00 (ft) | **Crest Height:** | 0.00 | | |
| **Base Elev:** | 0.000 (ft) | **Site Class:** | D - Stiff Soil | | |
| **Gh:** | 1.1 **Topography:** 1 | **Struct Class:** | II | Page: 8 | |

Tower Engineering Solutions

**Increment Length:** **5 (ft)**

| Elev (ft) | Description | Thick (in) | Dia (in) | Area (in^2) | Ix (in^4) | W/t Ratio | D/t Ratio | Fpy (ksi) | S (in^3) | Weight (lb) |
|---|---|---|---|---|---|---|---|---|---|---|
| 0.00 | | 0.5000 | 57.030 | 89.710 | 36220.2 | 18.70 | 114.06 | 79.4 | 1250. | 0.0 |
| 5.00 | | 0.5000 | 55.880 | 87.885 | 34054.4 | 18.30 | 111.76 | 79.9 | 1200. | 1510.8 |
| 10.00 | | 0.5000 | 54.730 | 86.060 | 31976.7 | 17.89 | 109.46 | 80.4 | 1150. | 1479.7 |
| 15.00 | | 0.5000 | 53.580 | 84.235 | 29985.2 | 17.48 | 107.16 | 80.8 | 1102. | 1448.7 |
| 20.00 | | 0.5000 | 52.430 | 82.410 | 28078.2 | 17.08 | 104.86 | 81.3 | 1054. | 1417.6 |
| 25.00 | | 0.5000 | 51.280 | 80.585 | 26253.8 | 16.67 | 102.56 | 81.8 | 1008. | 1386.6 |
| 30.00 | | 0.5000 | 50.130 | 78.760 | 24510.2 | 16.27 | 100.26 | 82.3 | 963.0 | 1355.5 |
| 35.00 | | 0.5000 | 48.980 | 76.935 | 22845.6 | 15.86 | 97.96 | 82.5 | 918.7 | 1324.5 |
| 38.75 | Bot - Section 2 | 0.5000 | 48.117 | 75.566 | 21647.8 | 15.56 | 96.23 | 82.5 | 886.1 | 973.0 |
| 40.00 | | 0.5000 | 47.830 | 75.110 | 21258.1 | 15.46 | 95.66 | 82.5 | 875.4 | 606.4 |
| 45.00 | Top - Section 1 | 0.4375 | 47.555 | 65.426 | 18351.4 | 17.76 | 108.70 | 0.0 | 0.0 | 2389.1 |
| 50.00 | | 0.4375 | 46.405 | 63.829 | 17040.2 | 17.29 | 106.07 | 81.1 | 723.3 | 1099.6 |
| 55.00 | | 0.4375 | 45.255 | 62.232 | 15793.0 | 16.83 | 103.44 | 81.6 | 687.4 | 1072.4 |
| 60.00 | | 0.4375 | 44.105 | 60.636 | 14608.2 | 16.37 | 100.81 | 82.2 | 652.4 | 1045.2 |
| 65.00 | | 0.4375 | 42.955 | 59.039 | 13484.2 | 15.90 | 98.18 | 82.5 | 618.3 | 1018.1 |
| 70.00 | | 0.4375 | 41.805 | 57.442 | 12419.4 | 15.44 | 95.55 | 82.5 | 585.1 | 990.9 |
| 75.00 | | 0.4375 | 40.655 | 55.845 | 11412.2 | 14.97 | 92.93 | 82.5 | 552.9 | 963.7 |
| 78.75 | Bot - Section 3 | 0.4375 | 39.792 | 54.647 | 10693.6 | 14.63 | 90.95 | 82.5 | 529.3 | 705.0 |
| 80.00 | | 0.4375 | 39.505 | 54.248 | 10460.9 | 14.51 | 90.30 | 82.5 | 521.6 | 400.2 |
| 83.75 | Top - Section 2 | 0.3125 | 39.267 | 38.637 | 7407.7 | 20.75 | 125.66 | 0.0 | 0.0 | 1183.1 |
| 85.00 | | 0.3125 | 38.980 | 38.352 | 7244.9 | 20.58 | 124.74 | 77.2 | 366.1 | 163.7 |
| 90.00 | | 0.3125 | 37.830 | 37.211 | 6617.5 | 19.93 | 121.06 | 78.0 | 344.5 | 642.8 |
| 95.00 | | 0.3125 | 36.680 | 36.071 | 6027.5 | 19.29 | 117.38 | 78.7 | 323.7 | 623.4 |
| 100.00 | | 0.3125 | 35.530 | 34.930 | 5473.6 | 18.64 | 113.70 | 79.5 | 303.4 | 604.0 |
| 105.00 | | 0.3125 | 34.380 | 33.789 | 4954.7 | 17.99 | 110.02 | 80.2 | 283.9 | 584.6 |
| 110.00 | | 0.3125 | 33.230 | 32.649 | 4469.7 | 17.34 | 106.34 | 81.0 | 264.9 | 565.2 |
| 115.00 | | 0.3125 | 32.080 | 31.508 | 4017.4 | 16.69 | 102.66 | 81.8 | 246.7 | 545.8 |
| 119.00 | Bot - Section 4 | 0.3125 | 31.160 | 30.596 | 3678.4 | 16.17 | 99.71 | 82.4 | 232.5 | 422.7 |
| 120.00 | | 0.3125 | 30.930 | 30.368 | 3596.7 | 16.04 | 98.98 | 82.5 | 229.0 | 188.2 |
| 123.00 | Top - Section 3 | 0.2500 | 30.740 | 24.193 | 2841.6 | 20.27 | 122.96 | 0.0 | 0.0 | 556.3 |
| 125.00 | | 0.2500 | 30.280 | 23.828 | 2714.9 | 19.95 | 121.12 | 72.8 | 176.6 | 163.4 |
| 130.00 | | 0.2500 | 29.130 | 22.915 | 2414.8 | 19.14 | 116.52 | 73.6 | 163.3 | 397.6 |
| 135.00 | | 0.2500 | 27.980 | 22.003 | 2137.6 | 18.32 | 111.92 | 74.5 | 150.5 | 382.1 |
| 140.00 | | 0.2500 | 26.830 | 21.090 | 1882.6 | 17.51 | 107.32 | 75.3 | 138.2 | 366.6 |
| 145.00 | | 0.2500 | 25.680 | 20.178 | 1648.6 | 16.70 | 102.72 | 76.2 | 126.4 | 351.1 |
| 150.00 | | 0.2500 | 24.530 | 19.265 | 1434.9 | 15.89 | 98.12 | 76.2 | 115.2 | 335.5 |
| 155.00 | | 0.2500 | 23.380 | 18.353 | 1240.5 | 15.08 | 93.52 | 76.2 | 104.5 | 320.0 |
| 157.00 | | 0.2500 | 22.920 | 17.988 | 1168.0 | 14.76 | 91.68 | 76.2 | 100.4 | 123.7 |
| 160.00 | | 0.2500 | 22.230 | 17.441 | 1064.6 | 14.27 | 88.92 | 76.2 | 94.3 | 180.8 |
| 161.00 | Top - Section 4 | 0.2500 | 22.000 | 17.258 | 1031.5 | 14.11 | 88.00 | 76.2 | 92.3 | 59.0 |
| 161.00 | Bot - Section 5 | 0.1875 | 22.000 | 12.981 | 780.3 | 18.81 | 117.33 | 73.5 | 69.9 | |
| 165.00 | | 0.1875 | 21.080 | 12.433 | 685.7 | 18.41 | 112.43 | 74.4 | 64.1 | 173.0 |
| 170.00 | | 0.1875 | 19.930 | 11.749 | 578.6 | 17.33 | 106.29 | 75.5 | 57.2 | 205.7 |
| 175.00 | | 0.1875 | 18.780 | 11.064 | 483.2 | 16.25 | 100.16 | 76.2 | 50.7 | 194.1 |
| | | | | | | | | | | **30519.4** |

*Copyright © 2022 by Tower Engineering Solutions, LLC. All rights reserved.*

# Wind Loading - Shaft

| | | | | | |
|---|---|---|---|---|---|
| **Structure:** | CT01915-S-SBA | | **Code:** | TIA-222-G | 8/10/2022 |
| **Site Name:** | South Brooklyn | | **Exposure:** | B | |
| **Height:** | 175.00 (ft) | | **Crest Height:** | 0.00 | |
| **Base Elev:** | 0.000 (ft) | | **Site Class:** | D - Stiff Soil | |
| **Gh:** | 1.1 | **Topography:** 1 | **Struct Class:** | II | Page: 9 |

Tower Engineering Solutions

**Load Case:** 1.2D + 1.6W 101 mph Wind

**Dead Load Factor** 1.20

**Wind Load Factor** 1.60

**Iterations** 26

| Elev (ft) | Description | Kzt | Kz | qz (psf) | qzGh (psf) | C (mph-ft) | Cf | Ice Thick (in) | Tributary (ft) | Aa (sf) | CfAa (sf) | Wind Force X (lb) | Dead Load Ice (lb) | Tot Dead Load (lb) |
|---|---|---|---|---|---|---|---|---|---|---|---|---|---|---|
| 0.00 | | 1.00 | 0.70 | 17.366 | 19.10 | 407.79 | 0.650 | 0.000 | 0.00 | 0.000 | 0.00 | 0.0 | 0.0 | 0.0 |
| 5.00 | | 1.00 | 0.70 | 17.366 | 19.10 | 399.57 | 0.650 | 0.000 | 5.00 | 23.886 | 15.53 | 474.5 | 0.0 | 1812.9 |
| 10.00 | | 1.00 | 0.70 | 17.366 | 19.10 | 391.35 | 0.650 | 0.000 | 5.00 | 23.399 | 15.21 | 464.9 | 0.0 | 1775.7 |
| 15.00 | | 1.00 | 0.70 | 17.366 | 19.10 | 383.12 | 0.650 | 0.000 | 5.00 | 22.913 | 14.89 | 455.2 | 0.0 | 1738.4 |
| 20.00 | | 1.00 | 0.70 | 17.366 | 19.10 | 374.90 | 0.650 | 0.000 | 5.00 | 22.426 | 14.58 | 445.5 | 0.0 | 1701.2 |
| 25.00 | | 1.00 | 0.70 | 17.366 | 19.10 | 366.68 | 0.650 | 0.000 | 5.00 | 21.940 | 14.26 | 435.9 | 0.0 | 1663.9 |
| 30.00 | | 1.00 | 0.70 | 17.381 | 19.12 | 358.61 | 0.650 | 0.000 | 5.00 | 21.453 | 13.94 | 426.6 | 0.0 | 1626.6 |
| 35.00 | | 1.00 | 0.73 | 18.163 | 19.98 | 358.18 | 0.650 | 0.000 | 5.00 | 20.966 | 13.63 | 435.7 | 0.0 | 1589.4 |
| 38.75 | Bot - Section 2 | 1.00 | 0.75 | 18.699 | 20.57 | 357.03 | 0.650 | 0.000 | 3.75 | 15.406 | 10.01 | 329.6 | 0.0 | 1167.6 |
| 40.00 | | 1.00 | 0.76 | 18.870 | 20.76 | 356.51 | 0.650 | 0.000 | 1.25 | 5.167 | 3.36 | 111.5 | 0.0 | 727.7 |
| 45.00 | Top - Section 1 | 1.00 | 0.79 | 19.516 | 21.47 | 353.84 | 0.650 | 0.000 | 5.00 | 20.364 | 13.24 | 454.6 | 0.0 | 2867.0 |
| 50.00 | | 1.00 | 0.81 | 20.112 | 22.12 | 357.09 | 0.650 | 0.000 | 5.00 | 19.877 | 12.92 | 457.3 | 0.0 | 1319.5 |
| 55.00 | | 1.00 | 0.83 | 20.667 | 22.73 | 353.02 | 0.650 | 0.000 | 5.00 | 19.390 | 12.60 | 458.5 | 0.0 | 1286.9 |
| 60.00 | | 1.00 | 0.85 | 21.187 | 23.31 | 348.35 | 0.650 | 0.000 | 5.00 | 18.904 | 12.29 | 458.2 | 0.0 | 1254.3 |
| 65.00 | | 1.00 | 0.87 | 21.678 | 23.85 | 343.17 | 0.650 | 0.000 | 5.00 | 18.417 | 11.97 | 456.7 | 0.0 | 1221.7 |
| 70.00 | | 1.00 | 0.89 | 22.142 | 24.36 | 337.53 | 0.650 | 0.000 | 5.00 | 17.931 | 11.65 | 454.2 | 0.0 | 1189.1 |
| 75.00 | Appurtenance(s) | 1.00 | 0.91 | 22.582 | 24.84 | 331.50 | 0.650 | 0.000 | 5.00 | 17.444 | 11.34 | 450.7 | 0.0 | 1156.5 |
| 78.75 | Bot - Section 3 | 1.00 | 0.92 | 22.899 | 25.19 | 326.74 | 0.650 | 0.000 | 3.75 | 12.764 | 8.30 | 334.4 | 0.0 | 846.0 |
| 80.00 | | 1.00 | 0.93 | 23.003 | 25.30 | 325.11 | 0.650 | 0.000 | 1.25 | 4.260 | 2.77 | 112.1 | 0.0 | 480.2 |
| 83.75 | Top - Section 2 | 1.00 | 0.94 | 23.306 | 25.64 | 320.10 | 0.650 | 0.000 | 3.75 | 12.597 | 8.19 | 335.9 | 0.0 | 1419.7 |
| 85.00 | | 1.00 | 0.94 | 23.404 | 25.74 | 323.58 | 0.650 | 0.000 | 1.25 | 4.138 | 2.69 | 110.8 | 0.0 | 196.5 |
| 90.00 | | 1.00 | 0.96 | 23.790 | 26.17 | 316.60 | 0.650 | 0.000 | 5.00 | 16.249 | 10.56 | 442.2 | 0.0 | 771.4 |
| 95.00 | | 1.00 | 0.97 | 24.160 | 26.58 | 309.36 | 0.650 | 0.000 | 5.00 | 15.762 | 10.25 | 435.7 | 0.0 | 748.1 |
| 100.00 | | 1.00 | 0.99 | 24.517 | 26.97 | 301.87 | 0.650 | 0.000 | 5.00 | 15.276 | 9.93 | 428.4 | 0.0 | 724.8 |
| 105.00 | | 1.00 | 1.00 | 24.861 | 27.35 | 294.14 | 0.650 | 0.000 | 5.00 | 14.789 | 9.61 | 420.6 | 0.0 | 701.5 |
| 110.00 | Appurtenance(s) | 1.00 | 1.02 | 25.194 | 27.71 | 286.19 | 0.650 | 0.000 | 5.00 | 14.303 | 9.30 | 412.2 | 0.0 | 678.2 |
| 115.00 | | 1.00 | 1.03 | 25.516 | 28.07 | 278.05 | 0.650 | 0.000 | 5.00 | 13.816 | 8.98 | 403.3 | 0.0 | 654.9 |
| 119.00 | Bot - Section 4 | 1.00 | 1.04 | 25.766 | 28.34 | 271.40 | 0.650 | 0.000 | 4.00 | 10.703 | 6.96 | 315.5 | 0.0 | 507.2 |
| 120.00 | | 1.00 | 1.04 | 25.828 | 28.41 | 269.72 | 0.650 | 0.000 | 1.00 | 2.669 | 1.74 | 78.9 | 0.0 | 225.9 |
| 123.00 | Top - Section 3 | 1.00 | 1.05 | 26.011 | 28.61 | 264.63 | 0.650 | 0.000 | 3.00 | 7.891 | 5.13 | 234.8 | 0.0 | 667.5 |
| 125.00 | | 1.00 | 1.05 | 26.131 | 28.74 | 265.59 | 0.650 | 0.000 | 2.00 | 5.163 | 3.36 | 154.4 | 0.0 | 196.1 |
| 130.00 | | 1.00 | 1.07 | 26.425 | 29.07 | 256.94 | 0.650 | 0.000 | 5.00 | 12.568 | 8.17 | 379.9 | 0.0 | 477.2 |
| 135.00 | | 1.00 | 1.08 | 26.712 | 29.38 | 248.13 | 0.650 | 0.000 | 5.00 | 12.081 | 7.85 | 369.2 | 0.0 | 458.5 |
| 140.00 | Appurtenance(s) | 1.00 | 1.09 | 26.991 | 29.69 | 239.17 | 0.650 | 0.000 | 5.00 | 11.595 | 7.54 | 358.0 | 0.0 | 439.9 |
| 145.00 | | 1.00 | 1.10 | 27.263 | 29.99 | 230.07 | 0.650 | 0.000 | 5.00 | 11.108 | 7.22 | 346.5 | 0.0 | 421.3 |
| 150.00 | | 1.00 | 1.11 | 27.528 | 30.28 | 220.84 | 0.650 | 0.000 | 5.00 | 10.622 | 6.90 | 334.5 | 0.0 | 402.7 |
| 155.00 | | 1.00 | 1.12 | 27.787 | 30.57 | 211.47 | 0.650 | 0.000 | 5.00 | 10.135 | 6.59 | 322.2 | 0.0 | 384.0 |
| 157.00 | Appurtenance(s) | 1.00 | 1.12 | 27.889 | 30.68 | 207.69 | 0.650 | 0.000 | 2.00 | 3.918 | 2.55 | 125.0 | 0.0 | 148.4 |
| 160.00 | | 1.00 | 1.13 | 28.040 | 30.84 | 201.98 | 0.650 | 0.000 | 3.00 | 5.731 | 3.73 | 183.8 | 0.0 | 217.0 |
| 161.00 | Top - Section 4 | 1.00 | 1.13 | 28.090 | 30.90 | 200.07 | 0.650 | 0.000 | 1.00 | 1.871 | 1.22 | 60.1 | 0.0 | 70.8 |
| 165.00 | | 1.00 | 1.14 | 28.288 | 31.12 | 192.38 | 0.650 | 0.000 | 4.00 | 7.291 | 4.74 | 235.9 | 0.0 | 207.5 |
| 170.00 | | 1.00 | 1.15 | 28.530 | 31.38 | 182.66 | 0.650 | 0.000 | 5.00 | 8.676 | 5.64 | 283.2 | 0.0 | 246.9 |
| 175.00 | Appurtenance(s) | 1.00 | 1.16 | 28.768 | 31.64 | 172.84 | 0.650 | 0.000 | 5.00 | 8.189 | 5.32 | 269.5 | 0.0 | 232.9 |
| | | | | | | | | **Totals:** | **175.00** | | | **14,256.5** | | **36,623.3** |

*Copyright © 2022 by Tower Engineering Solutions, LLC. All rights reserved.*

# Discrete Appurtenance Forces

| | | | | | |
|---|---|---|---|---|---|
| **Structure:** | CT01915-S-SBA | | **Code:** | TIA-222-G | 8/10/2022 |
| **Site Name:** | South Brooklyn | | **Exposure:** | B | |
| **Height:** | 175.00 (ft) | | **Crest Height:** | 0.00 | |
| **Base Elev:** | 0.000 (ft) | | **Site Class:** | D - Stiff Soil | |
| **Gh:** | 1.1 | **Topography:** 1 | **Struct Class:** | II | Page: 10 |

Tower Engineering Solutions

**Load Case:** 1.2D + 1.6W 101 mph Wind

**Dead Load Factor** 1.20

**Wind Load Factor** 1.60

**Iterations** 26

| No. | Elev (ft) | Description | Qty | qz (psf) | qzGh (psf) | Orient Factor x Ka | Ka | Total CaAa (sf) | Dead Load (lb) | Horiz Ecc (ft) | Vert Ecc (ft) | Wind FX (lb) | Mom Y (lb-ft) | Mom Z (lb-ft) |
|---|---|---|---|---|---|---|---|---|---|---|---|---|---|---|
| 1 | 175.00 | Samsung B5/B13 | 3 | 28.861 | 31.747 | 0.50 | 0.75 | 2.82 | 253.08 | 0.000 | 2.000 | 143.19 | 0.00 | 286.39 |
| 2 | 175.00 | Samsung MT6407-77A | 3 | 28.861 | 31.747 | 0.52 | 0.75 | 7.39 | 285.84 | 0.000 | 2.000 | 375.22 | 0.00 | 750.43 |
| 3 | 175.00 | Antel BXA-70080-6CF | 3 | 28.861 | 31.747 | 0.65 | 0.75 | 11.28 | 64.80 | 0.000 | 2.000 | 572.73 | 0.00 | 1145.46 |
| 4 | 175.00 | JMA Wireless | 6 | 28.861 | 31.747 | 0.65 | 0.75 | 38.64 | 331.20 | 0.000 | 2.000 | 1962.80 | 0.00 | 3925.60 |
| 5 | 175.00 | Samsung B2/B66A | 3 | 28.861 | 31.747 | 0.50 | 0.75 | 2.82 | 303.84 | 0.000 | 2.000 | 143.19 | 0.00 | 286.39 |
| 6 | 175.00 | MS-H1242 (Heavy Collar | 1 | 28.768 | 31.644 | 1.00 | 1.00 | 2.50 | 180.72 | 0.000 | 0.000 | 126.58 | 0.00 | 0.00 |
| 7 | 175.00 | RVZDC-6627-PF-48 | 1 | 28.861 | 31.747 | 0.75 | 0.75 | 3.04 | 38.40 | 0.000 | 2.000 | 154.67 | 0.00 | 309.35 |
| 8 | 175.00 | MS-KI22-5 (Kickers w/o | 1 | 28.768 | 31.644 | 1.00 | 1.00 | 5.33 | 175.20 | 0.000 | 0.000 | 269.86 | 0.00 | 0.00 |
| 9 | 175.00 | 6' Lightning rod | 1 | 28.768 | 31.644 | 1.00 | 1.00 | 0.38 | 7.80 | 0.000 | 0.000 | 19.24 | 0.00 | 0.00 |
| 10 | 175.00 | Low Profile Platform-flat | 1 | 28.768 | 31.644 | 1.00 | 1.00 | 37.00 | 1440.00 | 0.000 | 0.000 | 1873.35 | 0.00 | 0.00 |
| 11 | 175.00 | MS-HRECP | 1 | 28.861 | 31.747 | 1.00 | 1.00 | 12.00 | 616.80 | 0.000 | 2.000 | 609.55 | 0.00 | 1219.10 |
| 12 | 161.00 | Bridge Stiffener | 1 | 28.090 | 30.899 | 1.00 | 1.00 | 5.77 | 245.00 | 0.000 | 0.000 | 285.26 | 0.00 | 0.00 |
| 13 | 157.00 | ALU - TD-RRH8x20-25 - | 3 | 27.889 | 30.678 | 0.50 | 0.75 | 6.11 | 252.00 | 0.000 | 0.000 | 299.68 | 0.00 | 0.00 |
| 14 | 157.00 | ALU - 800 MHz - RRU | 6 | 27.889 | 30.678 | 0.50 | 0.75 | 7.51 | 381.60 | 0.000 | 0.000 | 368.50 | 0.00 | 0.00 |
| 15 | 157.00 | ALU - 1900 MHz - RRU | 3 | 27.889 | 30.678 | 0.50 | 0.75 | 4.18 | 216.00 | 0.000 | 0.000 | 204.97 | 0.00 | 0.00 |
| 16 | 157.00 | NNVV-65B-R4 | 3 | 27.889 | 30.678 | 0.55 | 0.75 | 20.43 | 304.92 | 0.000 | 0.000 | 1002.78 | 0.00 | 0.00 |
| 17 | 157.00 | APXVTM14-C-I20 | 3 | 27.889 | 30.678 | 0.58 | 0.75 | 10.98 | 202.32 | 0.000 | 0.000 | 539.15 | 0.00 | 0.00 |
| 18 | 157.00 | Platform w/ Handrail + | 1 | 27.889 | 30.678 | 1.00 | 1.00 | 54.00 | 3360.00 | 0.000 | 0.000 | 2650.59 | 0.00 | 0.00 |
| 19 | 140.00 | Ericsson AIR6449 B41 | 3 | 26.991 | 29.690 | 0.53 | 0.75 | 9.03 | 370.80 | 0.000 | 0.000 | 428.76 | 0.00 | 0.00 |
| 20 | 140.00 | APXVAARR24_43-U-NA2 | 3 | 26.991 | 29.690 | 0.52 | 0.75 | 31.88 | 460.80 | 0.000 | 0.000 | 1514.33 | 0.00 | 0.00 |
| 21 | 140.00 | MT-195-12 | 1 | 26.991 | 29.690 | 1.00 | 1.00 | 40.00 | 2400.00 | 0.000 | 0.000 | 1900.15 | 0.00 | 0.00 |
| 22 | 140.00 | KRY 112 489/2 | 3 | 26.991 | 29.690 | 0.50 | 0.75 | 1.01 | 55.44 | 0.000 | 0.000 | 47.98 | 0.00 | 0.00 |
| 23 | 140.00 | Ericsson 4449 B71 + B85 | 3 | 26.991 | 29.690 | 0.50 | 0.75 | 2.97 | 270.00 | 0.000 | 0.000 | 141.08 | 0.00 | 0.00 |
| 24 | 140.00 | Ericsson 4460 B25 + B66 | 3 | 26.991 | 29.690 | 0.50 | 0.75 | 4.30 | 374.40 | 0.000 | 0.000 | 204.09 | 0.00 | 0.00 |
| 25 | 140.00 | Kathrein 782 11056 | 3 | 26.991 | 29.690 | 0.50 | 0.75 | 0.42 | 6.48 | 0.000 | 0.000 | 20.05 | 0.00 | 0.00 |
| 26 | 140.00 | MS-HRECP-35 | 1 | 26.991 | 29.690 | 1.00 | 1.00 | 12.25 | 616.80 | 0.000 | 0.000 | 581.92 | 0.00 | 0.00 |
| 27 | 110.00 | Raycap | 1 | 25.194 | 27.713 | 1.00 | 1.00 | 2.01 | 26.28 | 0.000 | 0.000 | 89.13 | 0.00 | 0.00 |
| 28 | 110.00 | Fujitsu TA08025-B604 | 3 | 25.194 | 27.713 | 0.50 | 0.75 | 2.95 | 230.04 | 0.000 | 0.000 | 131.01 | 0.00 | 0.00 |
| 29 | 110.00 | Fujitsu TA08025-B605 | 3 | 25.194 | 27.713 | 0.50 | 0.75 | 2.95 | 270.00 | 0.000 | 0.000 | 131.01 | 0.00 | 0.00 |
| 30 | 110.00 | MC-PK8-DSH | 1 | 25.194 | 27.713 | 1.00 | 1.00 | 37.59 | 2072.40 | 0.000 | 0.000 | 1666.77 | 0.00 | 0.00 |
| 31 | 110.00 | Commscope | 3 | 25.194 | 27.713 | 0.55 | 0.75 | 20.43 | 254.88 | 0.000 | 0.000 | 905.86 | 0.00 | 0.00 |
| 32 | 75.00 | GPS | 1 | 22.582 | 24.841 | 1.00 | 1.00 | 1.00 | 12.00 | 0.000 | 0.000 | 39.74 | 0.00 | 0.00 |
| | | | | | | | **Totals:** | | **16,079.84** | | | **19,403.23** | | |

*Copyright © 2022 by Tower Engineering Solutions, LLC. All rights reserved.*

# Total Applied Force Summary

| | | | | | |
|---|---|---|---|---|---|
| **Structure:** | CT01915-S-SBA | | **Code:** | TIA-222-G | 8/10/2022 |
| **Site Name:** | South Brooklyn | | **Exposure:** | B | |
| **Height:** | 175.00 (ft) | | **Crest Height:** | 0.00 | |
| **Base Elev:** | 0.000 (ft) | | **Site Class:** | D - Stiff Soil | |
| **Gh:** | 1.1 | **Topography:** 1 | **Struct Class:** | II | Page: 11 |

Tower Engineering Solutions

**Load Case:** 1.2D + 1.6W 101 mph Wind

**Dead Load Factor** 1.20

**Wind Load Factor** 1.60

**Iterations** 26

| Elev (ft) | Description | Lateral FX (-) (lb) | Axial FY (-) (lb) | Torsion MY (lb-ft) | Moment MZ (lb-ft) |
|---|---|---|---|---|---|
| 0.00 | | 0.00 | 0.00 | 0.00 | 0.00 |
| 5.00 | | 474.54 | 2006.08 | 0.00 | 0.00 |
| 10.00 | | 464.87 | 1968.82 | 0.00 | 0.00 |
| 15.00 | | 455.20 | 1931.56 | 0.00 | 0.00 |
| 20.00 | | 445.54 | 1894.30 | 0.00 | 0.00 |
| 25.00 | | 435.87 | 1857.04 | 0.00 | 0.00 |
| 30.00 | | 426.56 | 1819.78 | 0.00 | 0.00 |
| 35.00 | | 435.66 | 1782.52 | 0.00 | 0.00 |
| 38.75 | | 329.56 | 1312.44 | 0.00 | 0.00 |
| 40.00 | | 111.54 | 775.94 | 0.00 | 0.00 |
| 45.00 | | 454.63 | 3060.09 | 0.00 | 0.00 |
| 50.00 | | 457.33 | 1512.62 | 0.00 | 0.00 |
| 55.00 | | 458.45 | 1480.01 | 0.00 | 0.00 |
| 60.00 | | 458.20 | 1447.41 | 0.00 | 0.00 |
| 65.00 | | 456.73 | 1414.81 | 0.00 | 0.00 |
| 70.00 | | 454.18 | 1382.21 | 0.00 | 0.00 |
| 75.00 | (1) attachments | 490.40 | 1361.60 | 0.00 | 0.00 |
| 78.75 | | 334.37 | 990.09 | 0.00 | 0.00 |
| 80.00 | | 112.10 | 528.26 | 0.00 | 0.00 |
| 83.75 | | 335.86 | 1563.82 | 0.00 | 0.00 |
| 85.00 | | 110.80 | 244.53 | 0.00 | 0.00 |
| 90.00 | | 442.22 | 963.55 | 0.00 | 0.00 |
| 95.00 | | 435.66 | 940.26 | 0.00 | 0.00 |
| 100.00 | | 428.45 | 916.97 | 0.00 | 0.00 |
| 105.00 | | 420.62 | 893.69 | 0.00 | 0.00 |
| 110.00 | (11) attachments | 3336.02 | 3724.00 | 0.00 | 0.00 |
| 115.00 | | 403.29 | 836.19 | 0.00 | 0.00 |
| 119.00 | | 315.47 | 652.19 | 0.00 | 0.00 |
| 120.00 | | 78.87 | 262.11 | 0.00 | 0.00 |
| 123.00 | | 234.81 | 776.28 | 0.00 | 0.00 |
| 125.00 | | 154.35 | 268.59 | 0.00 | 0.00 |
| 130.00 | | 379.94 | 658.43 | 0.00 | 0.00 |
| 135.00 | | 369.19 | 639.80 | 0.00 | 0.00 |
| 140.00 | (20) attachments | 5196.39 | 5175.89 | 0.00 | 0.00 |
| 145.00 | | 346.45 | 522.12 | 0.00 | 0.00 |
| 150.00 | | 334.50 | 503.49 | 0.00 | 0.00 |
| 155.00 | | 322.18 | 484.86 | 0.00 | 0.00 |
| 157.00 | (19) attachments | 5190.68 | 4905.57 | 0.00 | 0.00 |
| 160.00 | | 183.83 | 268.00 | 0.00 | 0.00 |
| 161.00 | (1) attachments | 345.40 | 332.85 | 0.00 | 0.00 |
| 165.00 | | 235.94 | 275.55 | 0.00 | 0.00 |
| 170.00 | | 283.16 | 331.86 | 0.00 | 0.00 |
| 175.00 | (24) attachments | 6519.89 | 4015.57 | 0.00 | 7922.71 |
| | **Totals:** | **33,659.74** | **58,681.73** | **0.00** | **7,922.71** |

*Copyright © 2022 by Tower Engineering Solutions, LLC. All rights reserved.*

# Calculated Forces

| | | | | | |
|---|---|---|---|---|---|
| **Structure:** | CT01915-S-SBA | **Code:** | TIA-222-G | 8/10/2022 | |
| **Site Name:** | South Brooklyn | **Exposure:** | B | | |
| **Height:** | 175.00 (ft) | **Crest Height:** | 0.00 | | |
| **Base Elev:** | 0.000 (ft) | **Site Class:** | D - Stiff Soil | | |
| **Gh:** | 1.1 **Topography:** 1 | **Struct Class:** | II | Page: 12 | |

Tower Engineering Solutions

**Load Case:** 1.2D + 1.6W 101 mph Wind

**Dead Load Factor** 1.20

**Wind Load Factor** 1.60

**Iterations** 26

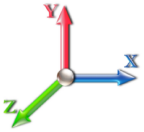


| Seg Elev (ft) | Pu FY (-) (kips) | Vu FX (-) (kips) | Tu MY (-) (ft-kips) | Mu MZ (ft-kips) | Mu MX (ft-kips) | Resultant Moment (ft-kips) | phi Pn (kips) | phi Vn (kips) | phi Tn (ft-kips) | phi Mn (ft-kips) | Total Deflect (in) | Rotation Sway (deg) | Rotation Twist (deg) | Stress Ratio |
|---|---|---|---|---|---|---|---|---|---|---|---|---|---|---|
| 0.00 | -58.63 | -33.75 | 0.00 | -4361.4 | 0.00 | 4361.43 | 6411.04 | 3205.52 | 14877.2 | 7449.66 | 0.00 | 0.000 | 0.000 | 0.595 |
| 5.00 | -56.53 | -33.44 | 0.00 | -4192.6 | 0.00 | 4192.69 | 6318.35 | 3159.17 | 14361.2 | 7191.28 | 0.09 | -0.168 | 0.000 | 0.592 |
| 10.00 | -54.46 | -33.13 | 0.00 | -4025.5 | 0.00 | 4025.51 | 6224.09 | 3112.04 | 13850.5 | 6935.58 | 0.36 | -0.340 | 0.000 | 0.589 |
| 15.00 | -52.43 | -32.82 | 0.00 | -3859.8 | 0.00 | 3859.87 | 6128.26 | 3064.13 | 13345.4 | 6682.66 | 0.81 | -0.515 | 0.000 | 0.586 |
| 20.00 | -50.44 | -32.52 | 0.00 | -3695.7 | 0.00 | 3695.76 | 6030.87 | 3015.43 | 12846.2 | 6432.65 | 1.44 | -0.694 | 0.000 | 0.583 |
| 25.00 | -48.48 | -32.21 | 0.00 | -3533.1 | 0.00 | 3533.19 | 5931.91 | 2965.95 | 12352.9 | 6185.64 | 2.27 | -0.877 | 0.000 | 0.579 |
| 30.00 | -46.57 | -31.91 | 0.00 | -3372.1 | 0.00 | 3372.13 | 5831.38 | 2915.69 | 11865.8 | 5941.76 | 3.29 | -1.064 | 0.000 | 0.576 |
| 35.00 | -44.70 | -31.57 | 0.00 | -3212.6 | 0.00 | 3212.60 | 5715.88 | 2857.94 | 11358.6 | 5687.79 | 4.50 | -1.256 | 0.000 | 0.573 |
| 38.75 | -43.34 | -31.28 | 0.00 | -3094.2 | 0.00 | 3094.22 | 5614.19 | 2807.10 | 10956.1 | 5486.19 | 5.55 | -1.403 | 0.000 | 0.572 |
| 40.00 | -42.50 | -31.25 | 0.00 | -3055.1 | 0.00 | 3055.12 | 5580.30 | 2790.15 | 10823.5 | 5419.80 | 5.92 | -1.453 | 0.000 | 0.571 |
| 45.00 | -39.35 | -30.85 | 0.00 | -2898.9 | 0.00 | 2898.90 | 4741.11 | 2370.56 | 9166.15 | 4589.89 | 7.55 | -1.653 | 0.000 | 0.640 |
| 50.00 | -37.73 | -30.48 | 0.00 | -2744.6 | 0.00 | 2744.67 | 4656.71 | 2328.36 | 8781.22 | 4397.14 | 9.39 | -1.856 | 0.000 | 0.632 |
| 55.00 | -36.15 | -30.12 | 0.00 | -2592.2 | 0.00 | 2592.26 | 4570.75 | 2285.37 | 8401.44 | 4206.97 | 11.45 | -2.079 | 0.000 | 0.624 |
| 60.00 | -34.61 | -29.74 | 0.00 | -2441.6 | 0.00 | 2441.68 | 4483.21 | 2241.61 | 8027.05 | 4019.49 | 13.75 | -2.305 | 0.000 | 0.615 |
| 65.00 | -33.09 | -29.36 | 0.00 | -2292.9 | 0.00 | 2292.97 | 4386.28 | 2193.14 | 7644.63 | 3828.00 | 16.29 | -2.536 | 0.000 | 0.607 |
| 70.00 | -31.61 | -28.97 | 0.00 | -2146.1 | 0.00 | 2146.18 | 4267.64 | 2133.82 | 7234.64 | 3622.70 | 19.07 | -2.770 | 0.000 | 0.600 |
| 75.00 | -30.18 | -28.52 | 0.00 | -2001.3 | 0.00 | 2001.32 | 4149.01 | 2074.50 | 6835.94 | 3423.05 | 22.10 | -3.007 | 0.000 | 0.592 |
| 78.75 | -29.15 | -28.20 | 0.00 | -1894.3 | 0.00 | 1894.35 | 4060.03 | 2030.01 | 6544.34 | 3277.03 | 24.53 | -3.190 | 0.000 | 0.585 |
| 80.00 | -28.56 | -28.12 | 0.00 | -1859.1 | 0.00 | 1859.11 | 4030.37 | 2015.18 | 6448.55 | 3229.07 | 25.38 | -3.252 | 0.000 | 0.583 |
| 83.75 | -26.96 | -27.75 | 0.00 | -1753.6 | 0.00 | 1753.66 | 2677.54 | 1338.77 | 4285.17 | 2145.77 | 28.00 | -3.436 | 0.000 | 0.828 |
| 85.00 | -26.63 | -27.72 | 0.00 | -1718.9 | 0.00 | 1718.97 | 2664.37 | 1332.18 | 4232.36 | 2119.33 | 28.91 | -3.499 | 0.000 | 0.822 |
| 90.00 | -25.54 | -27.36 | 0.00 | -1580.4 | 0.00 | 1580.40 | 2610.69 | 1305.34 | 4022.76 | 2014.37 | 32.75 | -3.823 | 0.000 | 0.795 |
| 95.00 | -24.48 | -27.00 | 0.00 | -1443.6 | 0.00 | 1443.60 | 2555.44 | 1277.72 | 3815.94 | 1910.80 | 36.92 | -4.148 | 0.000 | 0.766 |
| 100.00 | -23.45 | -26.63 | 0.00 | -1308.6 | 0.00 | 1308.62 | 2498.62 | 1249.31 | 3612.11 | 1808.74 | 41.44 | -4.473 | 0.000 | 0.733 |
| 105.00 | -22.45 | -26.27 | 0.00 | -1175.4 | 0.00 | 1175.45 | 2440.24 | 1220.12 | 3411.50 | 1708.29 | 46.29 | -4.796 | 0.000 | 0.698 |
| 110.00 | -18.90 | -22.73 | 0.00 | -1044.1 | 0.00 | 1044.10 | 2380.29 | 1190.15 | 3214.34 | 1609.56 | 51.48 | -5.114 | 0.000 | 0.657 |
| 115.00 | -17.99 | -22.34 | 0.00 | -930.46 | 0.00 | 930.46 | 2318.78 | 1159.39 | 3020.85 | 1512.67 | 57.00 | -5.429 | 0.000 | 0.623 |
| 119.00 | -17.32 | -22.01 | 0.00 | -841.11 | 0.00 | 841.11 | 2268.44 | 1134.22 | 2868.85 | 1436.56 | 61.65 | -5.680 | 0.000 | 0.594 |
| 120.00 | -17.01 | -21.94 | 0.00 | -819.10 | 0.00 | 819.10 | 2255.69 | 1127.85 | 2831.25 | 1417.73 | 62.84 | -5.744 | 0.000 | 0.586 |
| 123.00 | -16.21 | -21.67 | 0.00 | -753.27 | 0.00 | 753.27 | 1577.63 | 788.82 | 1975.86 | 989.40 | 66.51 | -5.930 | 0.000 | 0.772 |
| 125.00 | -15.87 | -21.56 | 0.00 | -709.93 | 0.00 | 709.93 | 1561.09 | 780.55 | 1925.40 | 964.13 | 69.02 | -6.054 | 0.000 | 0.747 |
| 130.00 | -15.13 | -21.20 | 0.00 | -602.14 | 0.00 | 602.14 | 1518.76 | 759.38 | 1800.86 | 901.77 | 75.53 | -6.398 | 0.000 | 0.678 |
| 135.00 | -14.42 | -20.84 | 0.00 | -496.16 | 0.00 | 496.16 | 1475.03 | 737.52 | 1678.77 | 840.64 | 82.39 | -6.722 | 0.000 | 0.601 |
| 140.00 | -9.83 | -15.11 | 0.00 | -391.98 | 0.00 | 391.98 | 1429.92 | 714.96 | 1559.34 | 780.83 | 89.58 | -7.017 | 0.000 | 0.509 |
| 145.00 | -9.29 | -14.74 | 0.00 | -316.46 | 0.00 | 316.46 | 1383.42 | 691.71 | 1442.75 | 722.45 | 97.06 | -7.285 | 0.000 | 0.445 |
| 150.00 | -8.78 | -14.38 | 0.00 | -242.77 | 0.00 | 242.77 | 1321.23 | 660.61 | 1314.97 | 658.46 | 104.80 | -7.526 | 0.000 | 0.376 |
| 155.00 | -8.31 | -14.01 | 0.00 | -170.89 | 0.00 | 170.89 | 1258.65 | 629.32 | 1192.75 | 597.26 | 112.77 | -7.731 | 0.000 | 0.293 |
| 157.00 | -4.14 | -8.21 | 0.00 | -142.87 | 0.00 | 142.87 | 1233.62 | 616.81 | 1145.53 | 573.62 | 116.02 | -7.803 | 0.000 | 0.253 |
| 160.00 | -3.89 | -8.00 | 0.00 | -118.24 | 0.00 | 118.24 | 1196.07 | 598.03 | 1076.49 | 539.05 | 120.94 | -7.898 | 0.000 | 0.223 |
| 161.00 | -3.60 | -7.61 | 0.00 | -110.24 | 0.00 | 110.24 | 1183.55 | 591.78 | 1053.96 | 527.76 | 122.59 | -7.929 | 0.000 | 0.212 |
| 161.00 | -3.60 | -7.61 | 0.00 | -110.24 | 0.00 | 110.24 | 858.57 | 429.28 | 768.96 | 385.05 | 122.59 | -7.929 | 0.000 | 0.291 |
| 165.00 | -3.34 | -7.35 | 0.00 | -79.79 | 0.00 | 79.79 | 832.45 | 416.23 | 713.85 | 357.46 | 129.26 | -8.034 | 0.000 | 0.228 |
| 170.00 | -3.04 | -7.03 | 0.00 | -43.05 | 0.00 | 43.05 | 798.56 | 399.28 | 646.76 | 323.86 | 137.72 | -8.161 | 0.000 | 0.137 |
| 175.00 | 0.00 | -6.52 | 0.00 | -7.92 | 0.00 | 7.92 | 758.80 | 379.40 | 578.42 | 289.64 | 146.28 | -8.224 | 0.000 | 0.028 |

*Copyright © 2022 by Tower Engineering Solutions, LLC. All rights reserved.*

# Wind Loading - Shaft

| | | | | | |
|---|---|---|---|---|---|
| **Structure:** | CT01915-S-SBA | | **Code:** | TIA-222-G | 8/10/2022 |
| **Site Name:** | South Brooklyn | | **Exposure:** | B | |
| **Height:** | 175.00 (ft) | | **Crest Height:** | 0.00 | |
| **Base Elev:** | 0.000 (ft) | | **Site Class:** | D - Stiff Soil | |
| **Gh:** | 1.1 | **Topography:** 1 | **Struct Class:** | II | Page: 13 |

Tower Engineering Solutions

**Load Case:** 0.9D + 1.6W 101 mph Wind

**Dead Load Factor** 0.90

**Wind Load Factor** 1.60

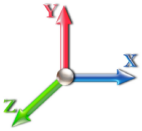


**Iterations** 26

| Elev (ft) | Description | Kzt | Kz | qz (psf) | qzGh (psf) | C (mph-ft) | Cf | Ice Thick (in) | Tributary (ft) | Aa (sf) | CfAa (sf) | Wind Force X (lb) | Dead Load Ice (lb) | Tot Dead Load (lb) |
|---|---|---|---|---|---|---|---|---|---|---|---|---|---|---|
| 0.00 | | 1.00 | 0.70 | 17.366 | 19.10 | 407.79 | 0.650 | 0.000 | 0.00 | 0.000 | 0.00 | 0.0 | 0.0 | 0.0 |
| 5.00 | | 1.00 | 0.70 | 17.366 | 19.10 | 399.57 | 0.650 | 0.000 | 5.00 | 23.886 | 15.53 | 474.5 | 0.0 | 1359.7 |
| 10.00 | | 1.00 | 0.70 | 17.366 | 19.10 | 391.35 | 0.650 | 0.000 | 5.00 | 23.399 | 15.21 | 464.9 | 0.0 | 1331.8 |
| 15.00 | | 1.00 | 0.70 | 17.366 | 19.10 | 383.12 | 0.650 | 0.000 | 5.00 | 22.913 | 14.89 | 455.2 | 0.0 | 1303.8 |
| 20.00 | | 1.00 | 0.70 | 17.366 | 19.10 | 374.90 | 0.650 | 0.000 | 5.00 | 22.426 | 14.58 | 445.5 | 0.0 | 1275.9 |
| 25.00 | | 1.00 | 0.70 | 17.366 | 19.10 | 366.68 | 0.650 | 0.000 | 5.00 | 21.940 | 14.26 | 435.9 | 0.0 | 1247.9 |
| 30.00 | | 1.00 | 0.70 | 17.381 | 19.12 | 358.61 | 0.650 | 0.000 | 5.00 | 21.453 | 13.94 | 426.6 | 0.0 | 1220.0 |
| 35.00 | | 1.00 | 0.73 | 18.163 | 19.98 | 358.18 | 0.650 | 0.000 | 5.00 | 20.966 | 13.63 | 435.7 | 0.0 | 1192.0 |
| 38.75 | Bot - Section 2 | 1.00 | 0.75 | 18.699 | 20.57 | 357.03 | 0.650 | 0.000 | 3.75 | 15.406 | 10.01 | 329.6 | 0.0 | 875.7 |
| 40.00 | | 1.00 | 0.76 | 18.870 | 20.76 | 356.51 | 0.650 | 0.000 | 1.25 | 5.167 | 3.36 | 111.5 | 0.0 | 545.7 |
| 45.00 | Top - Section 1 | 1.00 | 0.79 | 19.516 | 21.47 | 353.84 | 0.650 | 0.000 | 5.00 | 20.364 | 13.24 | 454.6 | 0.0 | 2150.2 |
| 50.00 | | 1.00 | 0.81 | 20.112 | 22.12 | 357.09 | 0.650 | 0.000 | 5.00 | 19.877 | 12.92 | 457.3 | 0.0 | 989.6 |
| 55.00 | | 1.00 | 0.83 | 20.667 | 22.73 | 353.02 | 0.650 | 0.000 | 5.00 | 19.390 | 12.60 | 458.5 | 0.0 | 965.2 |
| 60.00 | | 1.00 | 0.85 | 21.187 | 23.31 | 348.35 | 0.650 | 0.000 | 5.00 | 18.904 | 12.29 | 458.2 | 0.0 | 940.7 |
| 65.00 | | 1.00 | 0.87 | 21.678 | 23.85 | 343.17 | 0.650 | 0.000 | 5.00 | 18.417 | 11.97 | 456.7 | 0.0 | 916.3 |
| 70.00 | | 1.00 | 0.89 | 22.142 | 24.36 | 337.53 | 0.650 | 0.000 | 5.00 | 17.931 | 11.65 | 454.2 | 0.0 | 891.8 |
| 75.00 | Appurtenance(s) | 1.00 | 0.91 | 22.582 | 24.84 | 331.50 | 0.650 | 0.000 | 5.00 | 17.444 | 11.34 | 450.7 | 0.0 | 867.4 |
| 78.75 | Bot - Section 3 | 1.00 | 0.92 | 22.899 | 25.19 | 326.74 | 0.650 | 0.000 | 3.75 | 12.764 | 8.30 | 334.4 | 0.0 | 634.5 |
| 80.00 | | 1.00 | 0.93 | 23.003 | 25.30 | 325.11 | 0.650 | 0.000 | 1.25 | 4.260 | 2.77 | 112.1 | 0.0 | 360.2 |
| 83.75 | Top - Section 2 | 1.00 | 0.94 | 23.306 | 25.64 | 320.10 | 0.650 | 0.000 | 3.75 | 12.597 | 8.19 | 335.9 | 0.0 | 1064.8 |
| 85.00 | | 1.00 | 0.94 | 23.404 | 25.74 | 323.58 | 0.650 | 0.000 | 1.25 | 4.138 | 2.69 | 110.8 | 0.0 | 147.4 |
| 90.00 | | 1.00 | 0.96 | 23.790 | 26.17 | 316.60 | 0.650 | 0.000 | 5.00 | 16.249 | 10.56 | 442.2 | 0.0 | 578.5 |
| 95.00 | | 1.00 | 0.97 | 24.160 | 26.58 | 309.36 | 0.650 | 0.000 | 5.00 | 15.762 | 10.25 | 435.7 | 0.0 | 561.1 |
| 100.00 | | 1.00 | 0.99 | 24.517 | 26.97 | 301.87 | 0.650 | 0.000 | 5.00 | 15.276 | 9.93 | 428.4 | 0.0 | 543.6 |
| 105.00 | | 1.00 | 1.00 | 24.861 | 27.35 | 294.14 | 0.650 | 0.000 | 5.00 | 14.789 | 9.61 | 420.6 | 0.0 | 526.1 |
| 110.00 | Appurtenance(s) | 1.00 | 1.02 | 25.194 | 27.71 | 286.19 | 0.650 | 0.000 | 5.00 | 14.303 | 9.30 | 412.2 | 0.0 | 508.7 |
| 115.00 | | 1.00 | 1.03 | 25.516 | 28.07 | 278.05 | 0.650 | 0.000 | 5.00 | 13.816 | 8.98 | 403.3 | 0.0 | 491.2 |
| 119.00 | Bot - Section 4 | 1.00 | 1.04 | 25.766 | 28.34 | 271.40 | 0.650 | 0.000 | 4.00 | 10.703 | 6.96 | 315.5 | 0.0 | 380.4 |
| 120.00 | | 1.00 | 1.04 | 25.828 | 28.41 | 269.72 | 0.650 | 0.000 | 1.00 | 2.669 | 1.74 | 78.9 | 0.0 | 169.4 |
| 123.00 | Top - Section 3 | 1.00 | 1.05 | 26.011 | 28.61 | 264.63 | 0.650 | 0.000 | 3.00 | 7.891 | 5.13 | 234.8 | 0.0 | 500.6 |
| 125.00 | | 1.00 | 1.05 | 26.131 | 28.74 | 265.59 | 0.650 | 0.000 | 2.00 | 5.163 | 3.36 | 154.4 | 0.0 | 147.1 |
| 130.00 | | 1.00 | 1.07 | 26.425 | 29.07 | 256.94 | 0.650 | 0.000 | 5.00 | 12.568 | 8.17 | 379.9 | 0.0 | 357.9 |
| 135.00 | | 1.00 | 1.08 | 26.712 | 29.38 | 248.13 | 0.650 | 0.000 | 5.00 | 12.081 | 7.85 | 369.2 | 0.0 | 343.9 |
| 140.00 | Appurtenance(s) | 1.00 | 1.09 | 26.991 | 29.69 | 239.17 | 0.650 | 0.000 | 5.00 | 11.595 | 7.54 | 358.0 | 0.0 | 329.9 |
| 145.00 | | 1.00 | 1.10 | 27.263 | 29.99 | 230.07 | 0.650 | 0.000 | 5.00 | 11.108 | 7.22 | 346.5 | 0.0 | 316.0 |
| 150.00 | | 1.00 | 1.11 | 27.528 | 30.28 | 220.84 | 0.650 | 0.000 | 5.00 | 10.622 | 6.90 | 334.5 | 0.0 | 302.0 |
| 155.00 | | 1.00 | 1.12 | 27.787 | 30.57 | 211.47 | 0.650 | 0.000 | 5.00 | 10.135 | 6.59 | 322.2 | 0.0 | 288.0 |
| 157.00 | Appurtenance(s) | 1.00 | 1.12 | 27.889 | 30.68 | 207.69 | 0.650 | 0.000 | 2.00 | 3.918 | 2.55 | 125.0 | 0.0 | 111.3 |
| 160.00 | | 1.00 | 1.13 | 28.040 | 30.84 | 201.98 | 0.650 | 0.000 | 3.00 | 5.731 | 3.73 | 183.8 | 0.0 | 162.7 |
| 161.00 | Top - Section 4 | 1.00 | 1.13 | 28.090 | 30.90 | 200.07 | 0.650 | 0.000 | 1.00 | 1.871 | 1.22 | 60.1 | 0.0 | 53.1 |
| 165.00 | | 1.00 | 1.14 | 28.288 | 31.12 | 192.38 | 0.650 | 0.000 | 4.00 | 7.291 | 4.74 | 235.9 | 0.0 | 155.7 |
| 170.00 | | 1.00 | 1.15 | 28.530 | 31.38 | 182.66 | 0.650 | 0.000 | 5.00 | 8.676 | 5.64 | 283.2 | 0.0 | 185.1 |
| 175.00 | Appurtenance(s) | 1.00 | 1.16 | 28.768 | 31.64 | 172.84 | 0.650 | 0.000 | 5.00 | 8.189 | 5.32 | 269.5 | 0.0 | 174.7 |
| | | | | | | | | **Totals:** | **175.00** | | | **14,256.5** | | **27,467.4** |

*Copyright © 2022 by Tower Engineering Solutions, LLC. All rights reserved.*

# Discrete Appurtenance Forces

| | | | | | |
|---|---|---|---|---|---|
| **Structure:** | CT01915-S-SBA | **Code:** | TIA-222-G | 8/10/2022 | |
| **Site Name:** | South Brooklyn | **Exposure:** | B | | |
| **Height:** | 175.00 (ft) | **Crest Height:** | 0.00 | | |
| **Base Elev:** | 0.000 (ft) | **Site Class:** | D - Stiff Soil | | |
| **Gh:** | 1.1 **Topography:** 1 | **Struct Class:** | II | Page: 14 | |

Tower Engineering Solutions

**Load Case:** 0.9D + 1.6W 101 mph Wind

**Dead Load Factor** 0.90

**Wind Load Factor** 1.60

**Iterations** 26

| No. | Elev (ft) | Description | Qty | qz (psf) | qzGh (psf) | Orient Factor x Ka | Ka | Total CaAa (sf) | Dead Load (lb) | Horiz Ecc (ft) | Vert Ecc (ft) | Wind FX (lb) | Mom Y (lb-ft) | Mom Z (lb-ft) |
|---|---|---|---|---|---|---|---|---|---|---|---|---|---|---|
| 1 | 175.00 | Samsung B5/B13 | 3 | 28.861 | 31.747 | 0.50 | 0.75 | 2.82 | 189.81 | 0.000 | 2.000 | 143.19 | 0.00 | 286.39 |
| 2 | 175.00 | Samsung MT6407-77A | 3 | 28.861 | 31.747 | 0.52 | 0.75 | 7.39 | 214.38 | 0.000 | 2.000 | 375.22 | 0.00 | 750.43 |
| 3 | 175.00 | Antel BXA-70080-6CF | 3 | 28.861 | 31.747 | 0.65 | 0.75 | 11.28 | 48.60 | 0.000 | 2.000 | 572.73 | 0.00 | 1145.46 |
| 4 | 175.00 | JMA Wireless | 6 | 28.861 | 31.747 | 0.65 | 0.75 | 38.64 | 248.40 | 0.000 | 2.000 | 1962.80 | 0.00 | 3925.60 |
| 5 | 175.00 | Samsung B2/B66A | 3 | 28.861 | 31.747 | 0.50 | 0.75 | 2.82 | 227.88 | 0.000 | 2.000 | 143.19 | 0.00 | 286.39 |
| 6 | 175.00 | MS-H1242 (Heavy Collar | 1 | 28.768 | 31.644 | 1.00 | 1.00 | 2.50 | 135.54 | 0.000 | 0.000 | 126.58 | 0.00 | 0.00 |
| 7 | 175.00 | RVZDC-6627-PF-48 | 1 | 28.861 | 31.747 | 0.75 | 0.75 | 3.04 | 28.80 | 0.000 | 2.000 | 154.67 | 0.00 | 309.35 |
| 8 | 175.00 | MS-KI22-5 (Kickers w/o | 1 | 28.768 | 31.644 | 1.00 | 1.00 | 5.33 | 131.40 | 0.000 | 0.000 | 269.86 | 0.00 | 0.00 |
| 9 | 175.00 | 6' Lightning rod | 1 | 28.768 | 31.644 | 1.00 | 1.00 | 0.38 | 5.85 | 0.000 | 0.000 | 19.24 | 0.00 | 0.00 |
| 10 | 175.00 | Low Profile Platform-flat | 1 | 28.768 | 31.644 | 1.00 | 1.00 | 37.00 | 1080.00 | 0.000 | 0.000 | 1873.35 | 0.00 | 0.00 |
| 11 | 175.00 | MS-HRECP | 1 | 28.861 | 31.747 | 1.00 | 1.00 | 12.00 | 462.60 | 0.000 | 2.000 | 609.55 | 0.00 | 1219.10 |
| 12 | 161.00 | Bridge Stiffener | 1 | 28.090 | 30.899 | 1.00 | 1.00 | 5.77 | 183.75 | 0.000 | 0.000 | 285.26 | 0.00 | 0.00 |
| 13 | 157.00 | ALU - TD-RRH8x20-25 - | 3 | 27.889 | 30.678 | 0.50 | 0.75 | 6.11 | 189.00 | 0.000 | 0.000 | 299.68 | 0.00 | 0.00 |
| 14 | 157.00 | ALU - 800 MHz - RRU | 6 | 27.889 | 30.678 | 0.50 | 0.75 | 7.51 | 286.20 | 0.000 | 0.000 | 368.50 | 0.00 | 0.00 |
| 15 | 157.00 | ALU - 1900 MHz - RRU | 3 | 27.889 | 30.678 | 0.50 | 0.75 | 4.18 | 162.00 | 0.000 | 0.000 | 204.97 | 0.00 | 0.00 |
| 16 | 157.00 | NNVV-65B-R4 | 3 | 27.889 | 30.678 | 0.55 | 0.75 | 20.43 | 228.69 | 0.000 | 0.000 | 1002.78 | 0.00 | 0.00 |
| 17 | 157.00 | APXVTM14-C-I20 | 3 | 27.889 | 30.678 | 0.58 | 0.75 | 10.98 | 151.74 | 0.000 | 0.000 | 539.15 | 0.00 | 0.00 |
| 18 | 157.00 | Platform w/ Handrail + | 1 | 27.889 | 30.678 | 1.00 | 1.00 | 54.00 | 2520.00 | 0.000 | 0.000 | 2650.59 | 0.00 | 0.00 |
| 19 | 140.00 | Ericsson AIR6449 B41 | 3 | 26.991 | 29.690 | 0.53 | 0.75 | 9.03 | 278.10 | 0.000 | 0.000 | 428.76 | 0.00 | 0.00 |
| 20 | 140.00 | APXVAARR24_43-U-NA2 | 3 | 26.991 | 29.690 | 0.52 | 0.75 | 31.88 | 345.60 | 0.000 | 0.000 | 1514.33 | 0.00 | 0.00 |
| 21 | 140.00 | MT-195-12 | 1 | 26.991 | 29.690 | 1.00 | 1.00 | 40.00 | 1800.00 | 0.000 | 0.000 | 1900.15 | 0.00 | 0.00 |
| 22 | 140.00 | KRY 112 489/2 | 3 | 26.991 | 29.690 | 0.50 | 0.75 | 1.01 | 41.58 | 0.000 | 0.000 | 47.98 | 0.00 | 0.00 |
| 23 | 140.00 | Ericsson 4449 B71 + B85 | 3 | 26.991 | 29.690 | 0.50 | 0.75 | 2.97 | 202.50 | 0.000 | 0.000 | 141.08 | 0.00 | 0.00 |
| 24 | 140.00 | Ericsson 4460 B25 + B66 | 3 | 26.991 | 29.690 | 0.50 | 0.75 | 4.30 | 280.80 | 0.000 | 0.000 | 204.09 | 0.00 | 0.00 |
| 25 | 140.00 | Kathrein 782 11056 | 3 | 26.991 | 29.690 | 0.50 | 0.75 | 0.42 | 4.86 | 0.000 | 0.000 | 20.05 | 0.00 | 0.00 |
| 26 | 140.00 | MS-HRECP-35 | 1 | 26.991 | 29.690 | 1.00 | 1.00 | 12.25 | 462.60 | 0.000 | 0.000 | 581.92 | 0.00 | 0.00 |
| 27 | 110.00 | Raycap | 1 | 25.194 | 27.713 | 1.00 | 1.00 | 2.01 | 19.71 | 0.000 | 0.000 | 89.13 | 0.00 | 0.00 |
| 28 | 110.00 | Fujitsu TA08025-B604 | 3 | 25.194 | 27.713 | 0.50 | 0.75 | 2.95 | 172.53 | 0.000 | 0.000 | 131.01 | 0.00 | 0.00 |
| 29 | 110.00 | Fujitsu TA08025-B605 | 3 | 25.194 | 27.713 | 0.50 | 0.75 | 2.95 | 202.50 | 0.000 | 0.000 | 131.01 | 0.00 | 0.00 |
| 30 | 110.00 | MC-PK8-DSH | 1 | 25.194 | 27.713 | 1.00 | 1.00 | 37.59 | 1554.30 | 0.000 | 0.000 | 1666.77 | 0.00 | 0.00 |
| 31 | 110.00 | Commscope | 3 | 25.194 | 27.713 | 0.55 | 0.75 | 20.43 | 191.16 | 0.000 | 0.000 | 905.86 | 0.00 | 0.00 |
| 32 | 75.00 | GPS | 1 | 22.582 | 24.841 | 1.00 | 1.00 | 1.00 | 9.00 | 0.000 | 0.000 | 39.74 | 0.00 | 0.00 |
| | | | | | | | **Totals:** | | **12,059.88** | | | **19,403.23** | | |

*Copyright © 2022 by Tower Engineering Solutions, LLC. All rights reserved.*

# Total Applied Force Summary

| | | | | | |
|---|---|---|---|---|---|
| **Structure:** | CT01915-S-SBA | | **Code:** | TIA-222-G | 8/10/2022 |
| **Site Name:** | South Brooklyn | | **Exposure:** | B | |
| **Height:** | 175.00 (ft) | | **Crest Height:** | 0.00 | |
| **Base Elev:** | 0.000 (ft) | | **Site Class:** | D - Stiff Soil | |
| **Gh:** | 1.1 | **Topography:** 1 | **Struct Class:** | II | Page: 15 |

Tower Engineering Solutions

**Load Case:** 0.9D + 1.6W 101 mph Wind

**Dead Load Factor** 0.90

**Wind Load Factor** 1.60

**Iterations** 26

| Elev (ft) | Description | Lateral FX (-) (lb) | Axial FY (-) (lb) | Torsion MY (lb-ft) | Moment MZ (lb-ft) |
|---|---|---|---|---|---|
| 0.00 | | 0.00 | 0.00 | 0.00 | 0.00 |
| 5.00 | | 474.54 | 1504.56 | 0.00 | 0.00 |
| 10.00 | | 464.87 | 1476.62 | 0.00 | 0.00 |
| 15.00 | | 455.20 | 1448.67 | 0.00 | 0.00 |
| 20.00 | | 445.54 | 1420.73 | 0.00 | 0.00 |
| 25.00 | | 435.87 | 1392.78 | 0.00 | 0.00 |
| 30.00 | | 426.56 | 1364.84 | 0.00 | 0.00 |
| 35.00 | | 435.66 | 1336.89 | 0.00 | 0.00 |
| 38.75 | | 329.56 | 984.33 | 0.00 | 0.00 |
| 40.00 | | 111.54 | 581.95 | 0.00 | 0.00 |
| 45.00 | | 454.63 | 2295.06 | 0.00 | 0.00 |
| 50.00 | | 457.33 | 1134.46 | 0.00 | 0.00 |
| 55.00 | | 458.45 | 1110.01 | 0.00 | 0.00 |
| 60.00 | | 458.20 | 1085.56 | 0.00 | 0.00 |
| 65.00 | | 456.73 | 1061.11 | 0.00 | 0.00 |
| 70.00 | | 454.18 | 1036.66 | 0.00 | 0.00 |
| 75.00 | (1) attachments | 490.40 | 1021.20 | 0.00 | 0.00 |
| 78.75 | | 334.37 | 742.57 | 0.00 | 0.00 |
| 80.00 | | 112.10 | 396.19 | 0.00 | 0.00 |
| 83.75 | | 335.86 | 1172.86 | 0.00 | 0.00 |
| 85.00 | | 110.80 | 183.39 | 0.00 | 0.00 |
| 90.00 | | 442.22 | 722.66 | 0.00 | 0.00 |
| 95.00 | | 435.66 | 705.20 | 0.00 | 0.00 |
| 100.00 | | 428.45 | 687.73 | 0.00 | 0.00 |
| 105.00 | | 420.62 | 670.26 | 0.00 | 0.00 |
| 110.00 | (11) attachments | 3336.02 | 2793.00 | 0.00 | 0.00 |
| 115.00 | | 403.29 | 627.14 | 0.00 | 0.00 |
| 119.00 | | 315.47 | 489.14 | 0.00 | 0.00 |
| 120.00 | | 78.87 | 196.59 | 0.00 | 0.00 |
| 123.00 | | 234.81 | 582.21 | 0.00 | 0.00 |
| 125.00 | | 154.35 | 201.44 | 0.00 | 0.00 |
| 130.00 | | 379.94 | 493.82 | 0.00 | 0.00 |
| 135.00 | | 369.19 | 479.85 | 0.00 | 0.00 |
| 140.00 | (20) attachments | 5196.39 | 3881.91 | 0.00 | 0.00 |
| 145.00 | | 346.45 | 391.59 | 0.00 | 0.00 |
| 150.00 | | 334.50 | 377.62 | 0.00 | 0.00 |
| 155.00 | | 322.18 | 363.65 | 0.00 | 0.00 |
| 157.00 | (19) attachments | 5190.68 | 3679.18 | 0.00 | 0.00 |
| 160.00 | | 183.83 | 201.00 | 0.00 | 0.00 |
| 161.00 | (1) attachments | 345.40 | 249.64 | 0.00 | 0.00 |
| 165.00 | | 235.94 | 206.66 | 0.00 | 0.00 |
| 170.00 | | 283.16 | 248.90 | 0.00 | 0.00 |
| 175.00 | (24) attachments | 6519.89 | 3011.68 | 0.00 | 7922.71 |
| | **Totals:** | **33,659.74** | **44,011.30** | **0.00** | **7,922.71** |

*Copyright © 2022 by Tower Engineering Solutions, LLC. All rights reserved.*

# Calculated Forces

| | | | | | |
|---|---|---|---|---|---|
| **Structure:** | CT01915-S-SBA | **Code:** | TIA-222-G | 8/10/2022 | |
| **Site Name:** | South Brooklyn | **Exposure:** | B | | |
| **Height:** | 175.00 (ft) | **Crest Height:** | 0.00 | | |
| **Base Elev:** | 0.000 (ft) | **Site Class:** | D - Stiff Soil | | |
| **Gh:** | 1.1 **Topography:** 1 | **Struct Class:** | II | Page: 16 | |

Tower Engineering Solutions

**Load Case:** 0.9D + 1.6W 101 mph Wind

**Dead Load Factor** 0.90

**Wind Load Factor** 1.60

**Iterations** 26

| Seg Elev (ft) | Pu FY (-) (kips) | Vu FX (-) (kips) | Tu MY (-) (ft-kips) | Mu MZ (ft-kips) | Mu MX (ft-kips) | Resultant Moment (ft-kips) | phi Pn (kips) | phi Vn (kips) | phi Tn (ft-kips) | phi Mn (ft-kips) | Total Deflect (in) | Rotation Sway (deg) | Rotation Twist (deg) | Stress Ratio |
|---|---|---|---|---|---|---|---|---|---|---|---|---|---|---|
| 0.00 | -43.96 | -33.72 | 0.00 | -4299.6 | 0.00 | 4299.65 | 6411.04 | 3205.52 | 14877.2 | 7449.66 | 0.00 | 0.000 | 0.000 | 0.584 |
| 5.00 | -42.36 | -33.37 | 0.00 | -4131.0 | 0.00 | 4131.03 | 6318.35 | 3159.17 | 14361.2 | 7191.28 | 0.09 | -0.166 | 0.000 | 0.581 |
| 10.00 | -40.79 | -33.02 | 0.00 | -3964.1 | 0.00 | 3964.17 | 6224.09 | 3112.04 | 13850.5 | 6935.58 | 0.35 | -0.335 | 0.000 | 0.578 |
| 15.00 | -39.24 | -32.68 | 0.00 | -3799.0 | 0.00 | 3799.07 | 6128.26 | 3064.13 | 13345.4 | 6682.66 | 0.80 | -0.507 | 0.000 | 0.575 |
| 20.00 | -37.73 | -32.33 | 0.00 | -3635.6 | 0.00 | 3635.69 | 6030.87 | 3015.43 | 12846.2 | 6432.65 | 1.42 | -0.684 | 0.000 | 0.572 |
| 25.00 | -36.24 | -31.99 | 0.00 | -3474.0 | 0.00 | 3474.03 | 5931.91 | 2965.95 | 12352.9 | 6185.64 | 2.23 | -0.864 | 0.000 | 0.568 |
| 30.00 | -34.78 | -31.66 | 0.00 | -3314.0 | 0.00 | 3314.06 | 5831.38 | 2915.69 | 11865.8 | 5941.76 | 3.24 | -1.048 | 0.000 | 0.564 |
| 35.00 | -33.36 | -31.29 | 0.00 | -3155.7 | 0.00 | 3155.78 | 5715.88 | 2857.94 | 11358.6 | 5687.79 | 4.44 | -1.235 | 0.000 | 0.561 |
| 38.75 | -32.33 | -30.99 | 0.00 | -3038.4 | 0.00 | 3038.44 | 5614.19 | 2807.10 | 10956.1 | 5486.19 | 5.46 | -1.380 | 0.000 | 0.560 |
| 40.00 | -31.69 | -30.94 | 0.00 | -2999.6 | 0.00 | 2999.69 | 5580.30 | 2790.15 | 10823.5 | 5419.80 | 5.83 | -1.430 | 0.000 | 0.559 |
| 45.00 | -29.30 | -30.52 | 0.00 | -2845.0 | 0.00 | 2845.01 | 4741.11 | 2370.56 | 9166.15 | 4589.89 | 7.43 | -1.625 | 0.000 | 0.626 |
| 50.00 | -28.07 | -30.13 | 0.00 | -2692.4 | 0.00 | 2692.40 | 4656.71 | 2328.36 | 8781.22 | 4397.14 | 9.24 | -1.825 | 0.000 | 0.619 |
| 55.00 | -26.86 | -29.74 | 0.00 | -2541.7 | 0.00 | 2541.73 | 4570.75 | 2285.37 | 8401.44 | 4206.97 | 11.27 | -2.043 | 0.000 | 0.610 |
| 60.00 | -25.68 | -29.34 | 0.00 | -2393.0 | 0.00 | 2393.03 | 4483.21 | 2241.61 | 8027.05 | 4019.49 | 13.53 | -2.265 | 0.000 | 0.601 |
| 65.00 | -24.52 | -28.94 | 0.00 | -2246.3 | 0.00 | 2246.31 | 4386.28 | 2193.14 | 7644.63 | 3828.00 | 16.02 | -2.491 | 0.000 | 0.593 |
| 70.00 | -23.39 | -28.53 | 0.00 | -2101.6 | 0.00 | 2101.61 | 4267.64 | 2133.82 | 7234.64 | 3622.70 | 18.75 | -2.721 | 0.000 | 0.586 |
| 75.00 | -22.30 | -28.07 | 0.00 | -1958.9 | 0.00 | 1958.94 | 4149.01 | 2074.50 | 6835.94 | 3423.05 | 21.73 | -2.953 | 0.000 | 0.578 |
| 78.75 | -21.51 | -27.75 | 0.00 | -1853.6 | 0.00 | 1853.66 | 4060.03 | 2030.01 | 6544.34 | 3277.03 | 24.12 | -3.131 | 0.000 | 0.571 |
| 80.00 | -21.07 | -27.66 | 0.00 | -1818.9 | 0.00 | 1818.98 | 4030.37 | 2015.18 | 6448.55 | 3229.07 | 24.94 | -3.192 | 0.000 | 0.569 |
| 83.75 | -19.86 | -27.30 | 0.00 | -1715.2 | 0.00 | 1715.27 | 2677.54 | 1338.77 | 4285.17 | 2145.77 | 27.52 | -3.373 | 0.000 | 0.807 |
| 85.00 | -19.59 | -27.24 | 0.00 | -1681.1 | 0.00 | 1681.15 | 2664.37 | 1332.18 | 4232.36 | 2119.33 | 28.41 | -3.434 | 0.000 | 0.801 |
| 90.00 | -18.75 | -26.86 | 0.00 | -1544.9 | 0.00 | 1544.95 | 2610.69 | 1305.34 | 4022.76 | 2014.37 | 32.18 | -3.751 | 0.000 | 0.775 |
| 95.00 | -17.93 | -26.47 | 0.00 | -1410.6 | 0.00 | 1410.67 | 2555.44 | 1277.72 | 3815.94 | 1910.80 | 36.28 | -4.069 | 0.000 | 0.746 |
| 100.00 | -17.13 | -26.09 | 0.00 | -1278.3 | 0.00 | 1278.30 | 2498.62 | 1249.31 | 3612.11 | 1808.74 | 40.70 | -4.386 | 0.000 | 0.714 |
| 105.00 | -16.35 | -25.71 | 0.00 | -1147.8 | 0.00 | 1147.84 | 2440.24 | 1220.12 | 3411.50 | 1708.29 | 45.46 | -4.701 | 0.000 | 0.679 |
| 110.00 | -13.73 | -22.22 | 0.00 | -1019.3 | 0.00 | 1019.30 | 2380.29 | 1190.15 | 3214.34 | 1609.56 | 50.55 | -5.012 | 0.000 | 0.639 |
| 115.00 | -13.04 | -21.83 | 0.00 | -908.19 | 0.00 | 908.19 | 2318.78 | 1159.39 | 3020.85 | 1512.67 | 55.96 | -5.319 | 0.000 | 0.606 |
| 119.00 | -12.53 | -21.50 | 0.00 | -820.88 | 0.00 | 820.88 | 2268.44 | 1134.22 | 2868.85 | 1436.56 | 60.51 | -5.564 | 0.000 | 0.577 |
| 120.00 | -12.29 | -21.43 | 0.00 | -799.38 | 0.00 | 799.38 | 2255.69 | 1127.85 | 2831.25 | 1417.73 | 61.68 | -5.627 | 0.000 | 0.570 |
| 123.00 | -11.68 | -21.17 | 0.00 | -735.10 | 0.00 | 735.10 | 1577.63 | 788.82 | 1975.86 | 989.40 | 65.27 | -5.809 | 0.000 | 0.751 |
| 125.00 | -11.41 | -21.04 | 0.00 | -692.76 | 0.00 | 692.76 | 1561.09 | 780.55 | 1925.40 | 964.13 | 67.73 | -5.930 | 0.000 | 0.727 |
| 130.00 | -10.84 | -20.67 | 0.00 | -587.56 | 0.00 | 587.56 | 1518.76 | 759.38 | 1800.86 | 901.77 | 74.11 | -6.265 | 0.000 | 0.659 |
| 135.00 | -10.30 | -20.31 | 0.00 | -484.20 | 0.00 | 484.20 | 1475.03 | 737.52 | 1678.77 | 840.64 | 80.83 | -6.581 | 0.000 | 0.584 |
| 140.00 | -6.99 | -14.72 | 0.00 | -382.67 | 0.00 | 382.67 | 1429.92 | 714.96 | 1559.34 | 780.83 | 87.87 | -6.869 | 0.000 | 0.495 |
| 145.00 | -6.58 | -14.36 | 0.00 | -309.05 | 0.00 | 309.05 | 1383.42 | 691.71 | 1442.75 | 722.45 | 95.19 | -7.131 | 0.000 | 0.433 |
| 150.00 | -6.19 | -14.01 | 0.00 | -237.25 | 0.00 | 237.25 | 1321.23 | 660.61 | 1314.97 | 658.46 | 102.77 | -7.366 | 0.000 | 0.365 |
| 155.00 | -5.84 | -13.65 | 0.00 | -167.22 | 0.00 | 167.22 | 1258.65 | 629.32 | 1192.75 | 597.26 | 110.57 | -7.567 | 0.000 | 0.285 |
| 157.00 | -2.87 | -8.02 | 0.00 | -139.92 | 0.00 | 139.92 | 1233.62 | 616.81 | 1145.53 | 573.62 | 113.75 | -7.637 | 0.000 | 0.246 |
| 160.00 | -2.69 | -7.82 | 0.00 | -115.84 | 0.00 | 115.84 | 1196.07 | 598.03 | 1076.49 | 539.05 | 118.56 | -7.731 | 0.000 | 0.217 |
| 161.00 | -2.48 | -7.45 | 0.00 | -108.03 | 0.00 | 108.03 | 1183.55 | 591.78 | 1053.96 | 527.76 | 120.18 | -7.761 | 0.000 | 0.207 |
| 161.00 | -2.48 | -7.45 | 0.00 | -108.03 | 0.00 | 108.03 | 858.57 | 429.28 | 768.96 | 385.05 | 120.18 | -7.761 | 0.000 | 0.284 |
| 165.00 | -2.29 | -7.19 | 0.00 | -78.24 | 0.00 | 78.24 | 832.45 | 416.23 | 713.85 | 357.46 | 126.71 | -7.863 | 0.000 | 0.222 |
| 170.00 | -2.07 | -6.88 | 0.00 | -42.31 | 0.00 | 42.31 | 798.56 | 399.28 | 646.76 | 323.86 | 134.99 | -7.988 | 0.000 | 0.134 |
| 175.00 | 0.00 | -6.52 | 0.00 | -7.92 | 0.00 | 7.92 | 758.80 | 379.40 | 578.42 | 289.64 | 143.37 | -8.050 | 0.000 | 0.028 |

*Copyright © 2022 by Tower Engineering Solutions, LLC. All rights reserved.*

# Wind Loading - Shaft

| | | | | | |
|---|---|---|---|---|---|
| **Structure:** | CT01915-S-SBA | **Code:** | TIA-222-G | 8/10/2022 | |
| **Site Name:** | South Brooklyn | **Exposure:** | B | | |
| **Height:** | 175.00 (ft) | **Crest Height:** | 0.00 | | |
| **Base Elev:** | 0.000 (ft) | **Site Class:** | D - Stiff Soil | | |
| **Gh:** | 1.1 **Topography:** 1 | **Struct Class:** | II | Page: 17 | |

Tower Engineering Solutions

**Load Case:** 1.2D + 1.0Di + 1.0Wi 50 mph Wind

**Dead Load Factor** 1.20

**Wind Load Factor** 1.00

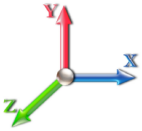


**Iterations** 26

| Elev (ft) | Description | Kzt | Kz | qz (psf) | qzGh (psf) | C (mph-ft) | Cf | Ice Thick (in) | Tributary (ft) | Aa (sf) | CfAa (sf) | Wind Force X (lb) | Dead Load Ice (lb) | Tot Dead Load (lb) |
|---|---|---|---|---|---|---|---|---|---|---|---|---|---|---|
| 0.00 | | 1.00 | 0.70 | 4.256 | 4.68 | 0.00 | 1.200 | 0.000 | 0.00 | 0.000 | 0.00 | 0.0 | 0.0 | 0.0 |
| 5.00 | | 1.00 | 0.70 | 4.256 | 4.68 | 0.00 | 1.200 | 1.656 | 5.00 | 25.266 | 30.32 | 141.9 | 596.8 | 2409.8 |
| 10.00 | | 1.00 | 0.70 | 4.256 | 4.68 | 0.00 | 1.200 | 1.775 | 5.00 | 24.878 | 29.85 | 139.8 | 628.2 | 2403.9 |
| 15.00 | | 1.00 | 0.70 | 4.256 | 4.68 | 0.00 | 1.200 | 1.848 | 5.00 | 24.453 | 29.34 | 137.4 | 641.7 | 2380.1 |
| 20.00 | | 1.00 | 0.70 | 4.256 | 4.68 | 0.00 | 1.200 | 1.902 | 5.00 | 24.011 | 28.81 | 134.9 | 647.4 | 2348.5 |
| 25.00 | | 1.00 | 0.70 | 4.256 | 4.68 | 0.00 | 1.200 | 1.945 | 5.00 | 23.561 | 28.27 | 132.4 | 648.5 | 2312.4 |
| 30.00 | | 1.00 | 0.70 | 4.260 | 4.69 | 0.00 | 1.200 | 1.981 | 5.00 | 23.104 | 27.72 | 129.9 | 646.6 | 2273.2 |
| 35.00 | | 1.00 | 0.73 | 4.451 | 4.90 | 0.00 | 1.200 | 2.012 | 5.00 | 22.643 | 27.17 | 133.0 | 642.5 | 2231.9 |
| 38.75 | Bot - Section 2 | 1.00 | 0.75 | 4.583 | 5.04 | 0.00 | 1.200 | 2.032 | 3.75 | 16.676 | 20.01 | 100.9 | 478.7 | 1646.3 |
| 40.00 | | 1.00 | 0.76 | 4.625 | 5.09 | 0.00 | 1.200 | 2.039 | 1.25 | 5.592 | 6.71 | 34.1 | 162.0 | 889.6 |
| 45.00 | Top - Section 1 | 1.00 | 0.79 | 4.783 | 5.26 | 0.00 | 1.200 | 2.063 | 5.00 | 22.083 | 26.50 | 139.4 | 641.1 | 3508.0 |
| 50.00 | | 1.00 | 0.81 | 4.929 | 5.42 | 0.00 | 1.200 | 2.085 | 5.00 | 21.614 | 25.94 | 140.6 | 633.1 | 1952.6 |
| 55.00 | | 1.00 | 0.83 | 5.065 | 5.57 | 0.00 | 1.200 | 2.105 | 5.00 | 21.144 | 25.37 | 141.4 | 624.3 | 1911.1 |
| 60.00 | | 1.00 | 0.85 | 5.193 | 5.71 | 0.00 | 1.200 | 2.123 | 5.00 | 20.673 | 24.81 | 141.7 | 614.7 | 1868.9 |
| 65.00 | | 1.00 | 0.87 | 5.313 | 5.84 | 0.00 | 1.200 | 2.140 | 5.00 | 20.201 | 24.24 | 141.7 | 604.4 | 1826.1 |
| 70.00 | | 1.00 | 0.89 | 5.426 | 5.97 | 0.00 | 1.200 | 2.156 | 5.00 | 19.728 | 23.67 | 141.3 | 593.6 | 1782.6 |
| 75.00 | Appurtenance(s) | 1.00 | 0.91 | 5.534 | 6.09 | 0.00 | 1.200 | 2.171 | 5.00 | 19.253 | 23.10 | 140.7 | 582.2 | 1738.7 |
| 78.75 | Bot - Section 3 | 1.00 | 0.92 | 5.612 | 6.17 | 0.00 | 1.200 | 2.182 | 3.75 | 14.127 | 16.95 | 104.7 | 430.1 | 1276.0 |
| 80.00 | | 1.00 | 0.93 | 5.637 | 6.20 | 0.00 | 1.200 | 2.185 | 1.25 | 4.715 | 5.66 | 35.1 | 144.7 | 625.0 |
| 83.75 | Top - Section 2 | 1.00 | 0.94 | 5.712 | 6.28 | 0.00 | 1.200 | 2.195 | 3.75 | 13.969 | 16.76 | 105.3 | 427.4 | 1847.1 |
| 85.00 | | 1.00 | 0.94 | 5.736 | 6.31 | 0.00 | 1.200 | 2.198 | 1.25 | 4.596 | 5.52 | 34.8 | 141.7 | 338.2 |
| 90.00 | | 1.00 | 0.96 | 5.830 | 6.41 | 0.00 | 1.200 | 2.211 | 5.00 | 18.092 | 21.71 | 139.2 | 554.3 | 1325.7 |
| 95.00 | | 1.00 | 0.97 | 5.921 | 6.51 | 0.00 | 1.200 | 2.223 | 5.00 | 17.615 | 21.14 | 137.7 | 541.5 | 1289.6 |
| 100.00 | | 1.00 | 0.99 | 6.008 | 6.61 | 0.00 | 1.200 | 2.234 | 5.00 | 17.138 | 20.57 | 135.9 | 528.3 | 1253.1 |
| 105.00 | | 1.00 | 1.00 | 6.093 | 6.70 | 0.00 | 1.200 | 2.245 | 5.00 | 16.660 | 19.99 | 134.0 | 514.9 | 1216.4 |
| 110.00 | Appurtenance(s) | 1.00 | 1.02 | 6.174 | 6.79 | 0.00 | 1.200 | 2.256 | 5.00 | 16.183 | 19.42 | 131.9 | 501.2 | 1179.4 |
| 115.00 | | 1.00 | 1.03 | 6.253 | 6.88 | 0.00 | 1.200 | 2.266 | 5.00 | 15.704 | 18.85 | 129.6 | 487.2 | 1142.2 |
| 119.00 | Bot - Section 4 | 1.00 | 1.04 | 6.315 | 6.95 | 0.00 | 1.200 | 2.274 | 4.00 | 12.218 | 14.66 | 101.8 | 380.7 | 887.9 |
| 120.00 | | 1.00 | 1.04 | 6.330 | 6.96 | 0.00 | 1.200 | 2.276 | 1.00 | 3.049 | 3.66 | 25.5 | 96.0 | 321.9 |
| 123.00 | Top - Section 3 | 1.00 | 1.05 | 6.375 | 7.01 | 0.00 | 1.200 | 2.281 | 3.00 | 9.032 | 10.84 | 76.0 | 282.9 | 950.5 |
| 125.00 | | 1.00 | 1.05 | 6.404 | 7.04 | 0.00 | 1.200 | 2.285 | 2.00 | 5.925 | 7.11 | 50.1 | 186.3 | 382.4 |
| 130.00 | | 1.00 | 1.07 | 6.476 | 7.12 | 0.00 | 1.200 | 2.294 | 5.00 | 14.480 | 17.38 | 123.8 | 451.2 | 928.4 |
| 135.00 | | 1.00 | 1.08 | 6.546 | 7.20 | 0.00 | 1.200 | 2.303 | 5.00 | 14.000 | 16.80 | 121.0 | 436.5 | 895.0 |
| 140.00 | Appurtenance(s) | 1.00 | 1.09 | 6.615 | 7.28 | 0.00 | 1.200 | 2.311 | 5.00 | 13.521 | 16.22 | 118.1 | 421.5 | 861.4 |
| 145.00 | | 1.00 | 1.10 | 6.681 | 7.35 | 0.00 | 1.200 | 2.319 | 5.00 | 13.041 | 15.65 | 115.0 | 406.4 | 827.7 |
| 150.00 | | 1.00 | 1.11 | 6.746 | 7.42 | 0.00 | 1.200 | 2.327 | 5.00 | 12.561 | 15.07 | 111.9 | 391.1 | 793.8 |
| 155.00 | | 1.00 | 1.12 | 6.810 | 7.49 | 0.00 | 1.200 | 2.335 | 5.00 | 12.081 | 14.50 | 108.6 | 375.7 | 759.7 |
| 157.00 | Appurtenance(s) | 1.00 | 1.12 | 6.835 | 7.52 | 0.00 | 1.200 | 2.338 | 2.00 | 4.697 | 5.64 | 42.4 | 147.8 | 296.2 |
| 160.00 | | 1.00 | 1.13 | 6.872 | 7.56 | 0.00 | 1.200 | 2.342 | 3.00 | 6.902 | 8.28 | 62.6 | 216.1 | 433.1 |
| 161.00 | Top - Section 4 | 1.00 | 1.13 | 6.884 | 7.57 | 0.00 | 1.200 | 2.343 | 1.00 | 2.262 | 2.71 | 20.6 | 71.4 | 142.2 |
| 165.00 | | 1.00 | 1.14 | 6.933 | 7.63 | 0.00 | 1.200 | 2.349 | 4.00 | 8.857 | 10.63 | 81.1 | 275.5 | 483.1 |
| 170.00 | | 1.00 | 1.15 | 6.992 | 7.69 | 0.00 | 1.200 | 2.356 | 5.00 | 10.639 | 12.77 | 98.2 | 328.5 | 575.4 |
| 175.00 | Appurtenance(s) | 1.00 | 1.16 | 7.050 | 7.76 | 0.00 | 1.200 | 2.363 | 5.00 | 10.158 | 12.19 | 94.5 | 312.6 | 545.5 |
| | | | | | | | | **Totals:** | **175.00** | | | **4,510.2** | | **55,060.6** |

*Copyright © 2022 by Tower Engineering Solutions, LLC. All rights reserved.*

# Discrete Appurtenance Forces

| | | | | | |
|---|---|---|---|---|---|
| **Structure:** | CT01915-S-SBA | | **Code:** | TIA-222-G | 8/10/2022 |
| **Site Name:** | South Brooklyn | | **Exposure:** | B | |
| **Height:** | 175.00 (ft) | | **Crest Height:** | 0.00 | |
| **Base Elev:** | 0.000 (ft) | | **Site Class:** | D - Stiff Soil | |
| **Gh:** | 1.1 | **Topography:** 1 | **Struct Class:** | II | Page: 18 |

Tower Engineering Solutions

**Load Case:** 1.2D + 1.0Di + 1.0Wi 50 mph Wind

**Dead Load Factor** 1.20

**Wind Load Factor** 1.00

**Iterations** 26

| No. | Elev (ft) | Description | Qty | qz (psf) | qzGh (psf) | Orient Factor x Ka | Ka | Total CaAa (sf) | Dead Load (lb) | Horiz Ecc (ft) | Vert Ecc (ft) | Wind FX (lb) | Mom Y (lb-ft) | Mom Z (lb-ft) |
|---|---|---|---|---|---|---|---|---|---|---|---|---|---|---|
| 1 | 175.00 | Samsung B5/B13 | 3 | 7.073 | 7.780 | 0.50 | 0.75 | 4.03 | 561.13 | 0.000 | 2.000 | 31.35 | 0.00 | 62.70 |
| 2 | 175.00 | Samsung MT6407-77A | 3 | 7.073 | 7.780 | 0.52 | 0.75 | 9.44 | 808.29 | 0.000 | 2.000 | 73.45 | 0.00 | 146.91 |
| 3 | 175.00 | Antel BXA-70080-6CF | 3 | 7.073 | 7.780 | 0.65 | 0.75 | 17.56 | 470.52 | 0.000 | 2.000 | 136.65 | 0.00 | 273.30 |
| 4 | 175.00 | JMA Wireless | 6 | 7.073 | 7.780 | 0.65 | 0.75 | 46.07 | 2636.36 | 0.000 | 2.000 | 358.48 | 0.00 | 716.96 |
| 5 | 175.00 | Samsung B2/B66A | 3 | 7.073 | 7.780 | 0.50 | 0.75 | 4.03 | 642.20 | 0.000 | 2.000 | 31.35 | 0.00 | 62.70 |
| 6 | 175.00 | MS-H1242 (Heavy Collar | 1 | 7.050 | 7.755 | 1.00 | 1.00 | 6.04 | 399.13 | 0.000 | 0.000 | 46.88 | 0.00 | 0.00 |
| 7 | 175.00 | RVZDC-6627-PF-48 | 1 | 7.073 | 7.780 | 0.75 | 0.75 | 3.88 | 167.46 | 0.000 | 2.000 | 30.19 | 0.00 | 60.37 |
| 8 | 175.00 | MS-KI22-5 (Kickers w/o | 1 | 7.050 | 7.755 | 1.00 | 1.00 | 12.89 | 387.21 | 0.000 | 0.000 | 99.94 | 0.00 | 0.00 |
| 9 | 175.00 | 6' Lightning rod | 1 | 7.050 | 7.755 | 1.00 | 1.00 | 1.85 | 51.65 | 0.000 | 0.000 | 14.37 | 0.00 | 0.00 |
| 10 | 175.00 | Low Profile Platform-flat | 1 | 7.050 | 7.755 | 1.00 | 1.00 | 78.97 | 2557.86 | 0.000 | 0.000 | 612.42 | 0.00 | 0.00 |
| 11 | 175.00 | MS-HRECP | 1 | 7.073 | 7.780 | 1.00 | 1.00 | 27.88 | 1956.75 | 0.000 | 2.000 | 216.92 | 0.00 | 433.84 |
| 12 | 161.00 | Bridge Stiffener | 1 | 6.884 | 7.573 | 1.00 | 1.00 | 11.18 | 640.56 | 0.000 | 0.000 | 84.65 | 0.00 | 0.00 |
| 13 | 157.00 | ALU - TD-RRH8x20-25 - | 3 | 6.835 | 7.518 | 0.50 | 0.75 | 7.79 | 727.95 | 0.000 | 0.000 | 58.57 | 0.00 | 0.00 |
| 14 | 157.00 | ALU - 800 MHz - RRU | 6 | 6.835 | 7.518 | 0.50 | 0.75 | 12.13 | 849.39 | 0.000 | 0.000 | 91.17 | 0.00 | 0.00 |
| 15 | 157.00 | ALU - 1900 MHz - RRU | 3 | 6.835 | 7.518 | 0.50 | 0.75 | 6.74 | 479.57 | 0.000 | 0.000 | 50.65 | 0.00 | 0.00 |
| 16 | 157.00 | NNVV-65B-R4 | 3 | 6.835 | 7.518 | 0.55 | 0.75 | 23.68 | 1385.10 | 0.000 | 0.000 | 178.01 | 0.00 | 0.00 |
| 17 | 157.00 | APXVTM14-C-I20 | 3 | 6.835 | 7.518 | 0.58 | 0.75 | 13.62 | 891.79 | 0.000 | 0.000 | 102.43 | 0.00 | 0.00 |
| 18 | 157.00 | Platform w/ Handrail + | 1 | 6.835 | 7.518 | 1.00 | 1.00 | 114.59 | 7932.63 | 0.000 | 0.000 | 861.54 | 0.00 | 0.00 |
| 19 | 140.00 | Ericsson AIR6449 B41 | 3 | 6.615 | 7.276 | 0.53 | 0.75 | 11.04 | 820.40 | 0.000 | 0.000 | 80.30 | 0.00 | 0.00 |
| 20 | 140.00 | APXVAARR24_43-U-NA2 | 3 | 6.615 | 7.276 | 0.52 | 0.75 | 35.89 | 2190.09 | 0.000 | 0.000 | 261.13 | 0.00 | 0.00 |
| 21 | 140.00 | MT-195-12 | 1 | 6.615 | 7.276 | 1.00 | 1.00 | 67.73 | 4573.15 | 0.000 | 0.000 | 492.83 | 0.00 | 0.00 |
| 22 | 140.00 | KRY 112 489/2 | 3 | 6.615 | 7.276 | 0.50 | 0.75 | 2.29 | 130.10 | 0.000 | 0.000 | 16.69 | 0.00 | 0.00 |
| 23 | 140.00 | Ericsson 4449 B71 + B85 | 3 | 6.615 | 7.276 | 0.50 | 0.75 | 4.11 | 335.22 | 0.000 | 0.000 | 29.88 | 0.00 | 0.00 |
| 24 | 140.00 | Ericsson 4460 B25 + B66 | 3 | 6.615 | 7.276 | 0.50 | 0.75 | 5.64 | 580.94 | 0.000 | 0.000 | 41.06 | 0.00 | 0.00 |
| 25 | 140.00 | Kathrein 782 11056 | 3 | 6.615 | 7.276 | 0.50 | 0.75 | 1.22 | 16.34 | 0.000 | 0.000 | 8.90 | 0.00 | 0.00 |
| 26 | 140.00 | MS-HRECP-35 | 1 | 6.615 | 7.276 | 1.00 | 1.00 | 28.10 | 616.80 | 0.000 | 0.000 | 204.48 | 0.00 | 0.00 |
| 27 | 110.00 | Raycap | 1 | 6.174 | 6.792 | 1.00 | 1.00 | 2.74 | 82.41 | 0.000 | 0.000 | 18.64 | 0.00 | 0.00 |
| 28 | 110.00 | Fujitsu TA08025-B604 | 3 | 6.174 | 6.792 | 0.50 | 0.75 | 4.05 | 390.07 | 0.000 | 0.000 | 27.49 | 0.00 | 0.00 |
| 29 | 110.00 | Fujitsu TA08025-B605 | 3 | 6.174 | 6.792 | 0.50 | 0.75 | 4.05 | 435.03 | 0.000 | 0.000 | 27.49 | 0.00 | 0.00 |
| 30 | 110.00 | MC-PK8-DSH | 1 | 6.174 | 6.792 | 1.00 | 1.00 | 98.65 | 3881.12 | 0.000 | 0.000 | 669.97 | 0.00 | 0.00 |
| 31 | 110.00 | Commscope | 3 | 6.174 | 6.792 | 0.55 | 0.75 | 23.56 | 1050.61 | 0.000 | 0.000 | 160.04 | 0.00 | 0.00 |
| 32 | 75.00 | GPS | 1 | 5.534 | 6.088 | 1.00 | 1.00 | 1.89 | 40.47 | 0.000 | 0.000 | 11.48 | 0.00 | 0.00 |
| | | | | | | | **Totals:** | | **38,688.30** | | | **5,129.42** | | |

*Copyright © 2022 by Tower Engineering Solutions, LLC. All rights reserved.*

# Total Applied Force Summary

| | | | | | |
|---|---|---|---|---|---|
| **Structure:** | CT01915-S-SBA | | **Code:** | TIA-222-G | 8/10/2022 |
| **Site Name:** | South Brooklyn | | **Exposure:** | B | |
| **Height:** | 175.00 (ft) | | **Crest Height:** | 0.00 | |
| **Base Elev:** | 0.000 (ft) | | **Site Class:** | D - Stiff Soil | |
| **Gh:** | 1.1 | **Topography:** 1 | **Struct Class:** | II | Page: 19 |

Tower Engineering Solutions

**Load Case:** 1.2D + 1.0Di + 1.0Wi 50 mph Wind

**Dead Load Factor** 1.20

**Wind Load Factor** 1.00

**Iterations** 26

| Elev (ft) | Description | Lateral FX (-) (lb) | Axial FY (-) (lb) | Torsion MY (lb-ft) | Moment MZ (lb-ft) |
|---|---|---|---|---|---|
| 0.00 | | 0.00 | 0.00 | 0.00 | 0.00 |
| 5.00 | | 141.94 | 2602.93 | 0.00 | 0.00 |
| 10.00 | | 139.76 | 2597.01 | 0.00 | 0.00 |
| 15.00 | | 137.37 | 2573.26 | 0.00 | 0.00 |
| 20.00 | | 134.89 | 2541.66 | 0.00 | 0.00 |
| 25.00 | | 132.36 | 2505.50 | 0.00 | 0.00 |
| 30.00 | | 129.91 | 2466.33 | 0.00 | 0.00 |
| 35.00 | | 133.05 | 2425.00 | 0.00 | 0.00 |
| 38.75 | | 100.88 | 1791.18 | 0.00 | 0.00 |
| 40.00 | | 34.13 | 937.92 | 0.00 | 0.00 |
| 45.00 | | 139.41 | 3701.15 | 0.00 | 0.00 |
| 50.00 | | 140.63 | 2145.73 | 0.00 | 0.00 |
| 55.00 | | 141.37 | 2104.28 | 0.00 | 0.00 |
| 60.00 | | 141.70 | 2062.07 | 0.00 | 0.00 |
| 65.00 | | 141.66 | 2019.21 | 0.00 | 0.00 |
| 70.00 | | 141.30 | 1975.77 | 0.00 | 0.00 |
| 75.00 | (1) attachments | 152.13 | 1972.31 | 0.00 | 0.00 |
| 78.75 | | 104.65 | 1420.16 | 0.00 | 0.00 |
| 80.00 | | 35.09 | 673.01 | 0.00 | 0.00 |
| 83.75 | | 105.32 | 1991.26 | 0.00 | 0.00 |
| 85.00 | | 34.80 | 386.24 | 0.00 | 0.00 |
| 90.00 | | 139.23 | 1517.89 | 0.00 | 0.00 |
| 95.00 | | 137.67 | 1481.75 | 0.00 | 0.00 |
| 100.00 | | 135.92 | 1445.31 | 0.00 | 0.00 |
| 105.00 | | 133.99 | 1408.57 | 0.00 | 0.00 |
| 110.00 | (11) attachments | 1035.52 | 7210.81 | 0.00 | 0.00 |
| 115.00 | | 129.63 | 1323.41 | 0.00 | 0.00 |
| 119.00 | | 101.84 | 1032.90 | 0.00 | 0.00 |
| 120.00 | | 25.47 | 358.15 | 0.00 | 0.00 |
| 123.00 | | 76.00 | 1059.22 | 0.00 | 0.00 |
| 125.00 | | 50.09 | 454.90 | 0.00 | 0.00 |
| 130.00 | | 123.78 | 1109.64 | 0.00 | 0.00 |
| 135.00 | | 120.98 | 1076.25 | 0.00 | 0.00 |
| 140.00 | (20) attachments | 1253.33 | 10305.73 | 0.00 | 0.00 |
| 145.00 | | 115.01 | 928.52 | 0.00 | 0.00 |
| 150.00 | | 111.86 | 894.61 | 0.00 | 0.00 |
| 155.00 | | 108.59 | 860.55 | 0.00 | 0.00 |
| 157.00 | (19) attachments | 1384.75 | 12602.93 | 0.00 | 0.00 |
| 160.00 | | 62.61 | 484.07 | 0.00 | 0.00 |
| 161.00 | (1) attachments | 105.21 | 799.80 | 0.00 | 0.00 |
| 165.00 | | 81.05 | 551.07 | 0.00 | 0.00 |
| 170.00 | | 98.19 | 660.41 | 0.00 | 0.00 |
| 175.00 | (24) attachments | 1746.53 | 11269.02 | 0.00 | 1756.78 |
| | **Totals:** | **9,639.63** | **99,727.49** | **0.00** | **1,756.78** |

*Copyright © 2022 by Tower Engineering Solutions, LLC. All rights reserved.*

# Calculated Forces

| | | | | | |
|---|---|---|---|---|---|
| **Structure:** | CT01915-S-SBA | **Code:** | TIA-222-G | 8/10/2022 | |
| **Site Name:** | South Brooklyn | **Exposure:** | B | | |
| **Height:** | 175.00 (ft) | **Crest Height:** | 0.00 | | |
| **Base Elev:** | 0.000 (ft) | **Site Class:** | D - Stiff Soil | | |
| **Gh:** | 1.1 **Topography:** 1 | **Struct Class:** | II | Page: 20 | |

Tower Engineering Solutions

**Load Case:** 1.2D + 1.0Di + 1.0Wi 50 mph Wind

**Dead Load Factor** 1.20

**Wind Load Factor** 1.00

**Iterations** 26

| Seg Elev (ft) | Pu FY (-) (kips) | Vu FX (-) (kips) | Tu MY (-) (ft-kips) | Mu MZ (ft-kips) | Mu MX (ft-kips) | Resultant Moment (ft-kips) | phi Pn (kips) | phi Vn (kips) | phi Tn (ft-kips) | phi Mn (ft-kips) | Total Deflect (in) | Rotation Sway (deg) | Rotation Twist (deg) | Stress Ratio |
|---|---|---|---|---|---|---|---|---|---|---|---|---|---|---|
| 0.00 | -99.72 | -9.68 | 0.00 | -1315.2 | 0.00 | 1315.27 | 6411.04 | 3205.52 | 14877.2 | 7449.66 | 0.00 | 0.000 | 0.000 | 0.192 |
| 5.00 | -97.11 | -9.63 | 0.00 | -1266.8 | 0.00 | 1266.85 | 6318.35 | 3159.17 | 14361.2 | 7191.28 | 0.03 | -0.051 | 0.000 | 0.192 |
| 10.00 | -94.51 | -9.57 | 0.00 | -1218.7 | 0.00 | 1218.71 | 6224.09 | 3112.04 | 13850.5 | 6935.58 | 0.11 | -0.103 | 0.000 | 0.191 |
| 15.00 | -91.92 | -9.51 | 0.00 | -1170.8 | 0.00 | 1170.85 | 6128.26 | 3064.13 | 13345.4 | 6682.66 | 0.24 | -0.156 | 0.000 | 0.190 |
| 20.00 | -89.37 | -9.46 | 0.00 | -1123.2 | 0.00 | 1123.28 | 6030.87 | 3015.43 | 12846.2 | 6432.65 | 0.44 | -0.210 | 0.000 | 0.189 |
| 25.00 | -86.86 | -9.40 | 0.00 | -1075.9 | 0.00 | 1075.99 | 5931.91 | 2965.95 | 12352.9 | 6185.64 | 0.69 | -0.266 | 0.000 | 0.189 |
| 30.00 | -84.38 | -9.34 | 0.00 | -1028.9 | 0.00 | 1028.99 | 5831.38 | 2915.69 | 11865.8 | 5941.76 | 1.00 | -0.323 | 0.000 | 0.188 |
| 35.00 | -81.95 | -9.27 | 0.00 | -982.28 | 0.00 | 982.28 | 5715.88 | 2857.94 | 11358.6 | 5687.79 | 1.36 | -0.381 | 0.000 | 0.187 |
| 38.75 | -80.16 | -9.20 | 0.00 | -947.52 | 0.00 | 947.52 | 5614.19 | 2807.10 | 10956.1 | 5486.19 | 1.68 | -0.426 | 0.000 | 0.187 |
| 40.00 | -79.21 | -9.21 | 0.00 | -936.02 | 0.00 | 936.02 | 5580.30 | 2790.15 | 10823.5 | 5419.80 | 1.80 | -0.442 | 0.000 | 0.187 |
| 45.00 | -75.50 | -9.12 | 0.00 | -889.98 | 0.00 | 889.98 | 4741.11 | 2370.56 | 9166.15 | 4589.89 | 2.29 | -0.503 | 0.000 | 0.210 |
| 50.00 | -73.35 | -9.04 | 0.00 | -844.38 | 0.00 | 844.38 | 4656.71 | 2328.36 | 8781.22 | 4397.14 | 2.85 | -0.565 | 0.000 | 0.208 |
| 55.00 | -71.24 | -8.97 | 0.00 | -799.16 | 0.00 | 799.16 | 4570.75 | 2285.37 | 8401.44 | 4206.97 | 3.48 | -0.634 | 0.000 | 0.206 |
| 60.00 | -69.16 | -8.89 | 0.00 | -754.32 | 0.00 | 754.32 | 4483.21 | 2241.61 | 8027.05 | 4019.49 | 4.18 | -0.704 | 0.000 | 0.203 |
| 65.00 | -67.14 | -8.80 | 0.00 | -709.89 | 0.00 | 709.89 | 4386.28 | 2193.14 | 7644.63 | 3828.00 | 4.96 | -0.775 | 0.000 | 0.201 |
| 70.00 | -65.15 | -8.72 | 0.00 | -665.88 | 0.00 | 665.88 | 4267.64 | 2133.82 | 7234.64 | 3622.70 | 5.81 | -0.848 | 0.000 | 0.199 |
| 75.00 | -63.17 | -8.61 | 0.00 | -622.29 | 0.00 | 622.29 | 4149.01 | 2074.50 | 6835.94 | 3423.05 | 6.74 | -0.922 | 0.000 | 0.197 |
| 78.75 | -61.75 | -8.52 | 0.00 | -590.02 | 0.00 | 590.02 | 4060.03 | 2030.01 | 6544.34 | 3277.03 | 7.48 | -0.978 | 0.000 | 0.195 |
| 80.00 | -61.07 | -8.51 | 0.00 | -579.37 | 0.00 | 579.37 | 4030.37 | 2015.18 | 6448.55 | 3229.07 | 7.74 | -0.998 | 0.000 | 0.195 |
| 83.75 | -59.08 | -8.41 | 0.00 | -547.45 | 0.00 | 547.45 | 2677.54 | 1338.77 | 4285.17 | 2145.77 | 8.55 | -1.055 | 0.000 | 0.277 |
| 85.00 | -58.68 | -8.43 | 0.00 | -536.93 | 0.00 | 536.93 | 2664.37 | 1332.18 | 4232.36 | 2119.33 | 8.83 | -1.075 | 0.000 | 0.275 |
| 90.00 | -57.15 | -8.37 | 0.00 | -494.77 | 0.00 | 494.77 | 2610.69 | 1305.34 | 4022.76 | 2014.37 | 10.01 | -1.176 | 0.000 | 0.268 |
| 95.00 | -55.66 | -8.29 | 0.00 | -452.95 | 0.00 | 452.95 | 2555.44 | 1277.72 | 3815.94 | 1910.80 | 11.29 | -1.278 | 0.000 | 0.259 |
| 100.00 | -54.20 | -8.22 | 0.00 | -411.47 | 0.00 | 411.47 | 2498.62 | 1249.31 | 3612.11 | 1808.74 | 12.69 | -1.380 | 0.000 | 0.249 |
| 105.00 | -52.78 | -8.15 | 0.00 | -370.37 | 0.00 | 370.37 | 2440.24 | 1220.12 | 3411.50 | 1708.29 | 14.19 | -1.482 | 0.000 | 0.238 |
| 110.00 | -45.59 | -7.00 | 0.00 | -329.64 | 0.00 | 329.64 | 2380.29 | 1190.15 | 3214.34 | 1609.56 | 15.79 | -1.582 | 0.000 | 0.224 |
| 115.00 | -44.26 | -6.90 | 0.00 | -294.65 | 0.00 | 294.65 | 2318.78 | 1159.39 | 3020.85 | 1512.67 | 17.50 | -1.681 | 0.000 | 0.214 |
| 119.00 | -43.23 | -6.80 | 0.00 | -267.06 | 0.00 | 267.06 | 2268.44 | 1134.22 | 2868.85 | 1436.56 | 18.95 | -1.761 | 0.000 | 0.205 |
| 120.00 | -42.86 | -6.80 | 0.00 | -260.26 | 0.00 | 260.26 | 2255.69 | 1127.85 | 2831.25 | 1417.73 | 19.32 | -1.781 | 0.000 | 0.203 |
| 123.00 | -41.80 | -6.72 | 0.00 | -239.87 | 0.00 | 239.87 | 1577.63 | 788.82 | 1975.86 | 989.40 | 20.46 | -1.841 | 0.000 | 0.269 |
| 125.00 | -41.34 | -6.71 | 0.00 | -226.42 | 0.00 | 226.42 | 1561.09 | 780.55 | 1925.40 | 964.13 | 21.24 | -1.880 | 0.000 | 0.261 |
| 130.00 | -40.22 | -6.63 | 0.00 | -192.86 | 0.00 | 192.86 | 1518.76 | 759.38 | 1800.86 | 901.77 | 23.26 | -1.990 | 0.000 | 0.240 |
| 135.00 | -39.14 | -6.54 | 0.00 | -159.72 | 0.00 | 159.72 | 1475.03 | 737.52 | 1678.77 | 840.64 | 25.40 | -2.094 | 0.000 | 0.217 |
| 140.00 | -28.88 | -4.94 | 0.00 | -127.04 | 0.00 | 127.04 | 1429.92 | 714.96 | 1559.34 | 780.83 | 27.65 | -2.189 | 0.000 | 0.183 |
| 145.00 | -27.95 | -4.83 | 0.00 | -102.33 | 0.00 | 102.33 | 1383.42 | 691.71 | 1442.75 | 722.45 | 29.99 | -2.276 | 0.000 | 0.162 |
| 150.00 | -27.05 | -4.72 | 0.00 | -78.16 | 0.00 | 78.16 | 1321.23 | 660.61 | 1314.97 | 658.46 | 32.42 | -2.354 | 0.000 | 0.139 |
| 155.00 | -26.20 | -4.59 | 0.00 | -54.57 | 0.00 | 54.57 | 1258.65 | 629.32 | 1192.75 | 597.26 | 34.92 | -2.420 | 0.000 | 0.112 |
| 157.00 | -13.66 | -2.68 | 0.00 | -45.38 | 0.00 | 45.38 | 1233.62 | 616.81 | 1145.53 | 573.62 | 35.94 | -2.443 | 0.000 | 0.090 |
| 160.00 | -13.18 | -2.60 | 0.00 | -37.33 | 0.00 | 37.33 | 1196.07 | 598.03 | 1076.49 | 539.05 | 37.48 | -2.473 | 0.000 | 0.080 |
| 161.00 | -12.38 | -2.47 | 0.00 | -34.73 | 0.00 | 34.73 | 1183.55 | 591.78 | 1053.96 | 527.76 | 38.00 | -2.482 | 0.000 | 0.076 |
| 161.00 | -12.38 | -2.47 | 0.00 | -34.73 | 0.00 | 34.73 | 858.57 | 429.28 | 768.96 | 385.05 | 38.00 | -2.482 | 0.000 | 0.105 |
| 165.00 | -11.84 | -2.37 | 0.00 | -24.86 | 0.00 | 24.86 | 832.45 | 416.23 | 713.85 | 357.46 | 40.09 | -2.515 | 0.000 | 0.084 |
| 170.00 | -11.18 | -2.25 | 0.00 | -13.00 | 0.00 | 13.00 | 798.56 | 399.28 | 646.76 | 323.86 | 42.75 | -2.555 | 0.000 | 0.054 |
| 175.00 | 0.00 | -1.75 | 0.00 | -1.76 | 0.00 | 1.76 | 758.80 | 379.40 | 578.42 | 289.64 | 45.44 | -2.573 | 0.000 | 0.006 |

*Copyright © 2022 by Tower Engineering Solutions, LLC. All rights reserved.*

# Seismic Segment Forces (Factored)

| | | | | | |
|---|---|---|---|---|---|
| **Structure:** | CT01915-S-SBA | | **Code:** | TIA-222-G | 8/10/2022 |
| **Site Name:** | South Brooklyn | | **Exposure:** | B | |
| **Height:** | 175.00 (ft) | | **Crest Height:** | 0.00 | |
| **Base Elev:** | 0.000 (ft) | | **Site Class:** | D - Stiff Soil | |
| **Gh:** | 1.1 | **Topography:** 1 | **Struct Class:** | II | Page: 21 |

Tower Engineering Solutions

| | | | | | | | |
|---|---|---|---|---|---|---|---|
| **Load Case:** | 1.2D + 1.0E | | | | | **Iterations** | 23 |
| **Gust Response Factor** | 1.10 | | | **Sds** | 0.18 | **Ss** | 0.17 |
| **Dead Load Factor** | 1.20 | **Seismic Load Factor** | 1.00 | **Sd1** | 0.10 | **S1** | 0.06 |
| **Wind Load Factor** | 0.00 | **Structure Frequency (f1)** | 0.30 | **SA** | 0.03 | **Seismic Importance Factor** | 1.00 |

| Top Elev (ft) | Description | Wz (lb) | a | b | c | Lateral Fs (lb) | R: 1.50 |
|---|---|---|---|---|---|---|---|
| 0.00 | | 0.00 | 0.00 | 0.00 | 0.00 | 0.00 | |
| 5.00 | | 1510.7 | 0.00 | 0.03 | 0.02 | 25.80 | |
| 10.00 | | 1479.7 | 0.01 | 0.05 | 0.03 | 37.22 | |
| 15.00 | | 1448.6 | 0.01 | 0.06 | 0.03 | 42.62 | |
| 20.00 | | 1417.6 | 0.02 | 0.07 | 0.04 | 45.02 | |
| 25.00 | | 1386.5 | 0.04 | 0.07 | 0.04 | 45.90 | |
| 30.00 | | 1355.5 | 0.06 | 0.07 | 0.04 | 46.08 | |
| 35.00 | | 1324.4 | 0.08 | 0.07 | 0.04 | 46.01 | |
| 38.75 | Bot - Section 2 | 972.99 | 0.09 | 0.07 | 0.04 | 34.32 | |
| 40.00 | | 606.38 | 0.10 | 0.07 | 0.04 | 21.50 | |
| 45.00 | Top - Section 1 | 2389.1 | 0.12 | 0.07 | 0.03 | 86.46 | |
| 50.00 | | 1099.5 | 0.15 | 0.07 | 0.03 | 40.49 | |
| 55.00 | | 1072.4 | 0.19 | 0.06 | 0.02 | 39.86 | |
| 60.00 | | 1045.2 | 0.22 | 0.06 | 0.02 | 38.57 | |
| 65.00 | | 1018.0 | 0.26 | 0.05 | 0.02 | 36.23 | |
| 70.00 | | 990.89 | 0.30 | 0.04 | 0.01 | 32.41 | |
| 75.00 | Appurtenance(s) | 973.73 | 0.35 | 0.03 | 0.01 | 26.96 | |
| 78.75 | Bot - Section 3 | 704.96 | 0.38 | 0.02 | 0.01 | 15.69 | |
| 80.00 | | 400.18 | 0.39 | 0.02 | 0.01 | 8.05 | |
| 83.75 | Top - Section 2 | 1183.0 | 0.43 | 0.01 | 0.01 | 15.08 | |
| 85.00 | | 163.74 | 0.45 | 0.00 | 0.01 | 1.64 | |
| 90.00 | | 642.81 | 0.50 | -0.02 | 0.01 | -1.23 | |
| 95.00 | | 623.41 | 0.56 | -0.04 | 0.01 | -8.85 | |
| 100.00 | | 604.00 | 0.62 | -0.06 | 0.02 | -15.17 | |
| 105.00 | | 584.59 | 0.68 | -0.08 | 0.03 | -19.45 | |
| 110.00 | Appurtenance(s) | 2943.1 | 0.75 | -0.10 | 0.04 | -111.65 | |
| 115.00 | | 545.78 | 0.82 | -0.11 | 0.06 | -21.21 | |
| 119.00 | Bot - Section 4 | 422.65 | 0.87 | -0.12 | 0.08 | -15.60 | |
| 120.00 | | 188.22 | 0.89 | -0.12 | 0.08 | -6.79 | |
| 123.00 | Top - Section 3 | 556.27 | 0.93 | -0.12 | 0.10 | -18.17 | |
| 125.00 | | 163.40 | 0.96 | -0.12 | 0.11 | -4.85 | |
| 130.00 | | 397.64 | 1.04 | -0.10 | 0.15 | -7.86 | |
| 135.00 | | 382.12 | 1.12 | -0.05 | 0.20 | -2.45 | |
| 140.00 | Appurtenance(s) | 4162.1 | 1.21 | 0.01 | 0.26 | 43.26 | |
| 145.00 | | 351.07 | 1.30 | 0.12 | 0.33 | 10.77 | |
| 150.00 | | 335.54 | 1.39 | 0.26 | 0.42 | 18.27 | |
| 155.00 | | 320.02 | 1.48 | 0.46 | 0.52 | 26.19 | |
| 157.00 | Appurtenance(s) | 4054.3 | 1.52 | 0.55 | 0.57 | 380.25 | |
| 160.00 | | 180.83 | 1.58 | 0.72 | 0.64 | 20.41 | |
| 161.00 | Top - Section 4 | 263.21 | 1.60 | 0.78 | 0.67 | 31.45 | |
| 165.00 | | 172.96 | 1.68 | 1.05 | 0.78 | 25.52 | |
| 170.00 | | 205.72 | 1.78 | 1.46 | 0.95 | 38.29 | |
| 175.00 | Appurtenance(s) | 3275.4 | 1.89 | 1.98 | 1.14 | 748.62 | |
| | **Totals:** | **43,919.3** | | | | **1,795.7** | **Total Wind:** **33,659.7** |

*Copyright © 2022 by Tower Engineering Solutions, LLC. All rights reserved.*

# Calculated Forces

| | | | | | |
|---|---|---|---|---|---|
| **Structure:** | CT01915-S-SBA | **Code:** | TIA-222-G | 8/10/2022 | |
| **Site Name:** | South Brooklyn | **Exposure:** | B | | |
| **Height:** | 175.00 (ft) | **Crest Height:** | 0.00 | | |
| **Base Elev:** | 0.000 (ft) | **Site Class:** | D - Stiff Soil | | |
| **Gh:** | 1.1 | **Topography:** 1 | **Struct Class:** | II | Page: 22 |

Tower Engineering Solutions

| | | | | | | | | | |
|---|---|---|---|---|---|---|---|---|---|
| **Load Case:** | 1.2D + 1.0E | | | | | | | **Iterations** | 23 |
| **Gust Response Factor** | 1.10 | | | **Sds** | 0.18 | | | **Ss** | 0.17 |
| **Dead Load Factor** | 1.20 | **Seismic Load Factor** | 1.00 | **Sd1** | 0.10 | | | **S1** | 0.06 |
| **Wind Load Factor** | 0.00 | **Structure Frequency (f1)** | 0.30 | **SA** | 0.03 | **Seismic Importance Factor** | | | 1.00 |

| Seg Elev (ft) | Pu FY (-) (kips) | Vu FX (-) (kips) | Tu MY (-) (ft-kips) | Mu MZ (ft-kips) | Mu MX (ft-kips) | Resultant Moment (ft-kips) | phi Pn (kips) | phi Vn (kips) | phi Tn (ft-kips) | phi Mn (ft-kips) | Total Deflect (in) | Rotation Sway (deg) | Rotation Twist (deg) | Stress Ratio |
|---|---|---|---|---|---|---|---|---|---|---|---|---|---|---|
| 0.00 | -58.68 | -2.03 | 0.00 | -268.50 | 0.00 | 268.50 | 6411.04 | 3205.52 | 14877.2 | 7449.66 | | 0.00 | 0.00 | 0.045 |
| 5.00 | -56.68 | -2.02 | 0.00 | -258.34 | 0.00 | 258.34 | 6318.35 | 3159.17 | 14361.2 | 7191.28 | | 0.01 | -0.01 | 0.045 |
| 10.00 | -54.71 | -1.99 | 0.00 | -248.25 | 0.00 | 248.25 | 6224.09 | 3112.04 | 13850.5 | 6935.58 | | 0.02 | -0.02 | 0.045 |
| 15.00 | -52.77 | -1.96 | 0.00 | -238.30 | 0.00 | 238.30 | 6128.26 | 3064.13 | 13345.4 | 6682.66 | | 0.05 | -0.03 | 0.044 |
| 20.00 | -50.88 | -1.92 | 0.00 | -228.51 | 0.00 | 228.51 | 6030.87 | 3015.43 | 12846.2 | 6432.65 | | 0.09 | -0.04 | 0.044 |
| 25.00 | -49.02 | -1.88 | 0.00 | -218.91 | 0.00 | 218.91 | 5931.91 | 2965.95 | 12352.9 | 6185.64 | | 0.14 | -0.05 | 0.044 |
| 30.00 | -47.20 | -1.84 | 0.00 | -209.50 | 0.00 | 209.50 | 5831.38 | 2915.69 | 11865.8 | 5941.76 | | 0.20 | -0.07 | 0.043 |
| 35.00 | -45.42 | -1.80 | 0.00 | -200.28 | 0.00 | 200.28 | 5715.88 | 2857.94 | 11358.6 | 5687.79 | | 0.28 | -0.08 | 0.043 |
| 38.75 | -44.11 | -1.77 | 0.00 | -193.51 | 0.00 | 193.51 | 5614.19 | 2807.10 | 10956.1 | 5486.19 | | 0.34 | -0.09 | 0.043 |
| 40.00 | -43.33 | -1.76 | 0.00 | -191.29 | 0.00 | 191.29 | 5580.30 | 2790.15 | 10823.5 | 5419.80 | | 0.37 | -0.09 | 0.043 |
| 45.00 | -40.27 | -1.67 | 0.00 | -182.51 | 0.00 | 182.51 | 4741.11 | 2370.56 | 9166.15 | 4589.89 | | 0.47 | -0.10 | 0.048 |
| 50.00 | -38.76 | -1.64 | 0.00 | -174.14 | 0.00 | 174.14 | 4656.71 | 2328.36 | 8781.22 | 4397.14 | | 0.58 | -0.12 | 0.048 |
| 55.00 | -37.28 | -1.61 | 0.00 | -165.95 | 0.00 | 165.95 | 4570.75 | 2285.37 | 8401.44 | 4206.97 | | 0.71 | -0.13 | 0.048 |
| 60.00 | -35.83 | -1.57 | 0.00 | -157.92 | 0.00 | 157.92 | 4483.21 | 2241.61 | 8027.05 | 4019.49 | | 0.85 | -0.14 | 0.047 |
| 65.00 | -34.41 | -1.54 | 0.00 | -150.05 | 0.00 | 150.05 | 4386.28 | 2193.14 | 7644.63 | 3828.00 | | 1.01 | -0.16 | 0.047 |
| 70.00 | -33.03 | -1.51 | 0.00 | -142.34 | 0.00 | 142.34 | 4267.64 | 2133.82 | 7234.64 | 3622.70 | | 1.19 | -0.17 | 0.047 |
| 75.00 | -31.67 | -1.49 | 0.00 | -134.77 | 0.00 | 134.77 | 4149.01 | 2074.50 | 6835.94 | 3423.05 | | 1.38 | -0.19 | 0.047 |
| 78.75 | -30.68 | -1.48 | 0.00 | -129.18 | 0.00 | 129.18 | 4060.03 | 2030.01 | 6544.34 | 3277.03 | | 1.53 | -0.20 | 0.047 |
| 80.00 | -30.15 | -1.47 | 0.00 | -127.33 | 0.00 | 127.33 | 4030.37 | 2015.18 | 6448.55 | 3229.07 | | 1.59 | -0.21 | 0.047 |
| 83.75 | -28.59 | -1.45 | 0.00 | -121.81 | 0.00 | 121.81 | 2677.54 | 1338.77 | 4285.17 | 2145.77 | | 1.75 | -0.22 | 0.067 |
| 85.00 | -28.34 | -1.46 | 0.00 | -120.00 | 0.00 | 120.00 | 2664.37 | 1332.18 | 4232.36 | 2119.33 | | 1.81 | -0.22 | 0.067 |
| 90.00 | -27.38 | -1.47 | 0.00 | -112.70 | 0.00 | 112.70 | 2610.69 | 1305.34 | 4022.76 | 2014.37 | | 2.06 | -0.25 | 0.066 |
| 95.00 | -26.44 | -1.47 | 0.00 | -105.37 | 0.00 | 105.37 | 2555.44 | 1277.72 | 3815.94 | 1910.80 | | 2.33 | -0.27 | 0.065 |
| 100.00 | -25.52 | -1.48 | 0.00 | -98.01 | 0.00 | 98.01 | 2498.62 | 1249.31 | 3612.11 | 1808.74 | | 2.63 | -0.29 | 0.064 |
| 105.00 | -24.63 | -1.48 | 0.00 | -90.61 | 0.00 | 90.61 | 2440.24 | 1220.12 | 3411.50 | 1708.29 | | 2.95 | -0.32 | 0.063 |
| 110.00 | -20.90 | -1.47 | 0.00 | -83.19 | 0.00 | 83.19 | 2380.29 | 1190.15 | 3214.34 | 1609.56 | | 3.30 | -0.34 | 0.060 |
| 115.00 | -20.06 | -1.48 | 0.00 | -75.83 | 0.00 | 75.83 | 2318.78 | 1159.39 | 3020.85 | 1512.67 | | 3.67 | -0.37 | 0.059 |
| 119.00 | -19.41 | -1.48 | 0.00 | -69.93 | 0.00 | 69.93 | 2268.44 | 1134.22 | 2868.85 | 1436.56 | | 3.99 | -0.39 | 0.057 |
| 120.00 | -19.15 | -1.48 | 0.00 | -68.45 | 0.00 | 68.45 | 2255.69 | 1127.85 | 2831.25 | 1417.73 | | 4.07 | -0.40 | 0.057 |
| 123.00 | -18.37 | -1.48 | 0.00 | -64.02 | 0.00 | 64.02 | 1577.63 | 788.82 | 1975.86 | 989.40 | | 4.32 | -0.41 | 0.076 |
| 125.00 | -18.10 | -1.48 | 0.00 | -61.07 | 0.00 | 61.07 | 1561.09 | 780.55 | 1925.40 | 964.13 | | 4.50 | -0.42 | 0.075 |
| 130.00 | -17.44 | -1.48 | 0.00 | -53.67 | 0.00 | 53.67 | 1518.76 | 759.38 | 1800.86 | 901.77 | | 4.95 | -0.45 | 0.071 |
| 135.00 | -16.80 | -1.49 | 0.00 | -46.24 | 0.00 | 46.24 | 1475.03 | 737.52 | 1678.77 | 840.64 | | 5.44 | -0.48 | 0.066 |
| 140.00 | -11.63 | -1.41 | 0.00 | -38.80 | 0.00 | 38.80 | 1429.92 | 714.96 | 1559.34 | 780.83 | | 5.96 | -0.51 | 0.058 |
| 145.00 | -11.10 | -1.39 | 0.00 | -31.78 | 0.00 | 31.78 | 1383.42 | 691.71 | 1442.75 | 722.45 | | 6.51 | -0.54 | 0.052 |
| 150.00 | -10.60 | -1.38 | 0.00 | -24.80 | 0.00 | 24.80 | 1321.23 | 660.61 | 1314.97 | 658.46 | | 7.09 | -0.56 | 0.046 |
| 155.00 | -10.12 | -1.35 | 0.00 | -17.92 | 0.00 | 17.92 | 1258.65 | 629.32 | 1192.75 | 597.26 | | 7.68 | -0.58 | 0.038 |
| 157.00 | -5.21 | -0.92 | 0.00 | -15.23 | 0.00 | 15.23 | 1233.62 | 616.81 | 1145.53 | 573.62 | | 7.93 | -0.59 | 0.031 |
| 160.00 | -4.95 | -0.90 | 0.00 | -12.47 | 0.00 | 12.47 | 1196.07 | 598.03 | 1076.49 | 539.05 | | 8.30 | -0.60 | 0.027 |
| 161.00 | -4.61 | -0.86 | 0.00 | -11.58 | 0.00 | 11.58 | 1183.55 | 591.78 | 1053.96 | 527.76 | | 8.43 | -0.60 | 0.026 |
| 161.00 | -4.61 | -0.86 | 0.00 | -11.58 | 0.00 | 11.58 | 858.57 | 429.28 | 768.96 | 385.05 | | 8.43 | -0.60 | 0.035 |
| 165.00 | -4.34 | -0.83 | 0.00 | -8.13 | 0.00 | 8.13 | 832.45 | 416.23 | 713.85 | 357.46 | | 8.94 | -0.61 | 0.028 |
| 170.00 | -4.01 | -0.79 | 0.00 | -3.96 | 0.00 | 3.96 | 798.56 | 399.28 | 646.76 | 323.86 | | 9.59 | -0.63 | 0.017 |
| 175.00 | 0.00 | -0.75 | 0.00 | 0.00 | 0.00 | 0.00 | 758.80 | 379.40 | 578.42 | 289.64 | | 10.25 | -0.63 | 0.000 |

*Copyright © 2022 by Tower Engineering Solutions, LLC. All rights reserved.*

# Seismic Segment Forces (Factored)

| | | | | | |
|---|---|---|---|---|---|
| **Structure:** | CT01915-S-SBA | | **Code:** | TIA-222-G | 8/10/2022 |
| **Site Name:** | South Brooklyn | | **Exposure:** | B | |
| **Height:** | 175.00 (ft) | | **Crest Height:** | 0.00 | |
| **Base Elev:** | 0.000 (ft) | | **Site Class:** | D - Stiff Soil | |
| **Gh:** | 1.1 | **Topography:** 1 | **Struct Class:** | II | Page: 23 |

Tower Engineering Solutions

| | | | | | | | |
|---|---|---|---|---|---|---|---|
| **Load Case:** | 0.9D + 1.0E | | | | | **Iterations** | 23 |
| **Gust Response Factor** | 1.10 | | | **Sds** | 0.18 | **Ss** | 0.17 |
| **Dead Load Factor** | 0.90 | **Seismic Load Factor** | 1.00 | **Sd1** | 0.10 | **S1** | 0.06 |
| **Wind Load Factor** | 0.00 | **Structure Frequency (f1)** | 0.30 | **SA** | 0.03 | **Seismic Importance Factor** | 1.00 |

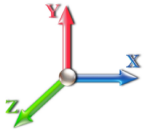


| Top Elev (ft) | Description | Wz (lb) | a | b | c | Lateral Fs (lb) | R: 1.50 |
|---|---|---|---|---|---|---|---|
| 0.00 | | 0.00 | 0.00 | 0.00 | 0.00 | 0.00 | |
| 5.00 | | 1510.7 | 0.00 | 0.03 | 0.02 | 25.80 | |
| 10.00 | | 1479.7 | 0.01 | 0.05 | 0.03 | 37.22 | |
| 15.00 | | 1448.6 | 0.01 | 0.06 | 0.03 | 42.62 | |
| 20.00 | | 1417.6 | 0.02 | 0.07 | 0.04 | 45.02 | |
| 25.00 | | 1386.5 | 0.04 | 0.07 | 0.04 | 45.90 | |
| 30.00 | | 1355.5 | 0.06 | 0.07 | 0.04 | 46.08 | |
| 35.00 | | 1324.4 | 0.08 | 0.07 | 0.04 | 46.01 | |
| 38.75 | Bot - Section 2 | 972.99 | 0.09 | 0.07 | 0.04 | 34.32 | |
| 40.00 | | 606.38 | 0.10 | 0.07 | 0.04 | 21.50 | |
| 45.00 | Top - Section 1 | 2389.1 | 0.12 | 0.07 | 0.03 | 86.46 | |
| 50.00 | | 1099.5 | 0.15 | 0.07 | 0.03 | 40.49 | |
| 55.00 | | 1072.4 | 0.19 | 0.06 | 0.02 | 39.86 | |
| 60.00 | | 1045.2 | 0.22 | 0.06 | 0.02 | 38.57 | |
| 65.00 | | 1018.0 | 0.26 | 0.05 | 0.02 | 36.23 | |
| 70.00 | | 990.89 | 0.30 | 0.04 | 0.01 | 32.41 | |
| 75.00 | Appurtenance(s) | 973.73 | 0.35 | 0.03 | 0.01 | 26.96 | |
| 78.75 | Bot - Section 3 | 704.96 | 0.38 | 0.02 | 0.01 | 15.69 | |
| 80.00 | | 400.18 | 0.39 | 0.02 | 0.01 | 8.05 | |
| 83.75 | Top - Section 2 | 1183.0 | 0.43 | 0.01 | 0.01 | 15.08 | |
| 85.00 | | 163.74 | 0.45 | 0.00 | 0.01 | 1.64 | |
| 90.00 | | 642.81 | 0.50 | -0.02 | 0.01 | -1.23 | |
| 95.00 | | 623.41 | 0.56 | -0.04 | 0.01 | -8.85 | |
| 100.00 | | 604.00 | 0.62 | -0.06 | 0.02 | -15.17 | |
| 105.00 | | 584.59 | 0.68 | -0.08 | 0.03 | -19.45 | |
| 110.00 | Appurtenance(s) | 2943.1 | 0.75 | -0.10 | 0.04 | -111.65 | |
| 115.00 | | 545.78 | 0.82 | -0.11 | 0.06 | -21.21 | |
| 119.00 | Bot - Section 4 | 422.65 | 0.87 | -0.12 | 0.08 | -15.60 | |
| 120.00 | | 188.22 | 0.89 | -0.12 | 0.08 | -6.79 | |
| 123.00 | Top - Section 3 | 556.27 | 0.93 | -0.12 | 0.10 | -18.17 | |
| 125.00 | | 163.40 | 0.96 | -0.12 | 0.11 | -4.85 | |
| 130.00 | | 397.64 | 1.04 | -0.10 | 0.15 | -7.86 | |
| 135.00 | | 382.12 | 1.12 | -0.05 | 0.20 | -2.45 | |
| 140.00 | Appurtenance(s) | 4162.1 | 1.21 | 0.01 | 0.26 | 43.26 | |
| 145.00 | | 351.07 | 1.30 | 0.12 | 0.33 | 10.77 | |
| 150.00 | | 335.54 | 1.39 | 0.26 | 0.42 | 18.27 | |
| 155.00 | | 320.02 | 1.48 | 0.46 | 0.52 | 26.19 | |
| 157.00 | Appurtenance(s) | 4054.3 | 1.52 | 0.55 | 0.57 | 380.25 | |
| 160.00 | | 180.83 | 1.58 | 0.72 | 0.64 | 20.41 | |
| 161.00 | Top - Section 4 | 263.21 | 1.60 | 0.78 | 0.67 | 31.45 | |
| 165.00 | | 172.96 | 1.68 | 1.05 | 0.78 | 25.52 | |
| 170.00 | | 205.72 | 1.78 | 1.46 | 0.95 | 38.29 | |
| 175.00 | Appurtenance(s) | 3275.4 | 1.89 | 1.98 | 1.14 | 748.62 | |
| | **Totals:** | **43,919.3** | | | | **1,795.7** | **Total Wind:** **33,659.7** |

*Copyright © 2022 by Tower Engineering Solutions, LLC. All rights reserved.*

# Calculated Forces

| | | | | | |
|---|---|---|---|---|---|
| **Structure:** | CT01915-S-SBA | **Code:** | TIA-222-G | 8/10/2022 | |
| **Site Name:** | South Brooklyn | **Exposure:** | B | | |
| **Height:** | 175.00 (ft) | **Crest Height:** | 0.00 | | |
| **Base Elev:** | 0.000 (ft) | **Site Class:** | D - Stiff Soil | | |
| **Gh:** | 1.1 | **Topography:** 1 | **Struct Class:** | II | Page: 24 |

Tower Engineering Solutions

| | | | | | | | | | |
|---|---|---|---|---|---|---|---|---|---|
| **Load Case:** | 0.9D + 1.0E | | | | | | | **Iterations** | 23 |
| **Gust Response Factor** | 1.10 | | | **Sds** | 0.18 | | | **Ss** | 0.17 |
| **Dead Load Factor** | 0.90 | **Seismic Load Factor** | 1.00 | **Sd1** | 0.10 | | | **S1** | 0.06 |
| **Wind Load Factor** | 0.00 | **Structure Frequency (f1)** | 0.30 | **SA** | 0.03 | **Seismic Importance Factor** | | | 1.00 |

| Seg Elev (ft) | Pu FY (-) (kips) | Vu FX (-) (kips) | Tu MY (-) (ft-kips) | Mu MZ (ft-kips) | Mu MX (ft-kips) | Resultant Moment (ft-kips) | phi Pn (kips) | phi Vn (kips) | phi Tn (ft-kips) | phi Mn (ft-kips) | Total Deflect (in) | Rotation Sway (deg) | Rotation Twist (deg) | Stress Ratio |
|---|---|---|---|---|---|---|---|---|---|---|---|---|---|---|
| 0.00 | -44.01 | -2.03 | 0.00 | -264.35 | 0.00 | 264.35 | 6411.04 | 3205.52 | 14877.2 | 7449.66 | | 0.00 | 0.00 | 0.042 |
| 5.00 | -42.51 | -2.01 | 0.00 | -254.19 | 0.00 | 254.19 | 6318.35 | 3159.17 | 14361.2 | 7191.28 | | 0.01 | -0.01 | 0.042 |
| 10.00 | -41.03 | -1.98 | 0.00 | -244.12 | 0.00 | 244.12 | 6224.09 | 3112.04 | 13850.5 | 6935.58 | | 0.02 | -0.02 | 0.042 |
| 15.00 | -39.58 | -1.95 | 0.00 | -234.20 | 0.00 | 234.20 | 6128.26 | 3064.13 | 13345.4 | 6682.66 | | 0.05 | -0.03 | 0.042 |
| 20.00 | -38.16 | -1.91 | 0.00 | -224.46 | 0.00 | 224.46 | 6030.87 | 3015.43 | 12846.2 | 6432.65 | | 0.09 | -0.04 | 0.041 |
| 25.00 | -36.77 | -1.87 | 0.00 | -214.92 | 0.00 | 214.92 | 5931.91 | 2965.95 | 12352.9 | 6185.64 | | 0.14 | -0.05 | 0.041 |
| 30.00 | -35.40 | -1.83 | 0.00 | -205.57 | 0.00 | 205.57 | 5831.38 | 2915.69 | 11865.8 | 5941.76 | | 0.20 | -0.06 | 0.041 |
| 35.00 | -34.06 | -1.79 | 0.00 | -196.42 | 0.00 | 196.42 | 5715.88 | 2857.94 | 11358.6 | 5687.79 | | 0.27 | -0.08 | 0.040 |
| 38.75 | -33.08 | -1.76 | 0.00 | -189.72 | 0.00 | 189.72 | 5614.19 | 2807.10 | 10956.1 | 5486.19 | | 0.34 | -0.09 | 0.040 |
| 40.00 | -32.50 | -1.74 | 0.00 | -187.53 | 0.00 | 187.53 | 5580.30 | 2790.15 | 10823.5 | 5419.80 | | 0.36 | -0.09 | 0.040 |
| 45.00 | -30.20 | -1.65 | 0.00 | -178.84 | 0.00 | 178.84 | 4741.11 | 2370.56 | 9166.15 | 4589.89 | | 0.46 | -0.10 | 0.045 |
| 50.00 | -29.07 | -1.62 | 0.00 | -170.57 | 0.00 | 170.57 | 4656.71 | 2328.36 | 8781.22 | 4397.14 | | 0.57 | -0.11 | 0.045 |
| 55.00 | -27.96 | -1.58 | 0.00 | -162.49 | 0.00 | 162.49 | 4570.75 | 2285.37 | 8401.44 | 4206.97 | | 0.70 | -0.13 | 0.045 |
| 60.00 | -26.87 | -1.55 | 0.00 | -154.57 | 0.00 | 154.57 | 4483.21 | 2241.61 | 8027.05 | 4019.49 | | 0.84 | -0.14 | 0.044 |
| 65.00 | -25.81 | -1.52 | 0.00 | -146.83 | 0.00 | 146.83 | 4386.28 | 2193.14 | 7644.63 | 3828.00 | | 0.99 | -0.16 | 0.044 |
| 70.00 | -24.77 | -1.49 | 0.00 | -139.25 | 0.00 | 139.25 | 4267.64 | 2133.82 | 7234.64 | 3622.70 | | 1.17 | -0.17 | 0.044 |
| 75.00 | -23.75 | -1.46 | 0.00 | -131.82 | 0.00 | 131.82 | 4149.01 | 2074.50 | 6835.94 | 3423.05 | | 1.35 | -0.19 | 0.044 |
| 78.75 | -23.01 | -1.45 | 0.00 | -126.34 | 0.00 | 126.34 | 4060.03 | 2030.01 | 6544.34 | 3277.03 | | 1.50 | -0.20 | 0.044 |
| 80.00 | -22.61 | -1.44 | 0.00 | -124.53 | 0.00 | 124.53 | 4030.37 | 2015.18 | 6448.55 | 3229.07 | | 1.56 | -0.20 | 0.044 |
| 83.75 | -21.44 | -1.43 | 0.00 | -119.12 | 0.00 | 119.12 | 2677.54 | 1338.77 | 4285.17 | 2145.77 | | 1.72 | -0.22 | 0.064 |
| 85.00 | -21.26 | -1.43 | 0.00 | -117.34 | 0.00 | 117.34 | 2664.37 | 1332.18 | 4232.36 | 2119.33 | | 1.78 | -0.22 | 0.063 |
| 90.00 | -20.53 | -1.43 | 0.00 | -110.20 | 0.00 | 110.20 | 2610.69 | 1305.34 | 4022.76 | 2014.37 | | 2.02 | -0.24 | 0.063 |
| 95.00 | -19.83 | -1.44 | 0.00 | -103.03 | 0.00 | 103.03 | 2555.44 | 1277.72 | 3815.94 | 1910.80 | | 2.29 | -0.26 | 0.062 |
| 100.00 | -19.14 | -1.44 | 0.00 | -95.84 | 0.00 | 95.84 | 2498.62 | 1249.31 | 3612.11 | 1808.74 | | 2.58 | -0.29 | 0.061 |
| 105.00 | -18.47 | -1.45 | 0.00 | -88.63 | 0.00 | 88.63 | 2440.24 | 1220.12 | 3411.50 | 1708.29 | | 2.89 | -0.31 | 0.059 |
| 110.00 | -15.67 | -1.44 | 0.00 | -81.39 | 0.00 | 81.39 | 2380.29 | 1190.15 | 3214.34 | 1609.56 | | 3.23 | -0.34 | 0.057 |
| 115.00 | -15.05 | -1.44 | 0.00 | -74.20 | 0.00 | 74.20 | 2318.78 | 1159.39 | 3020.85 | 1512.67 | | 3.60 | -0.36 | 0.056 |
| 119.00 | -14.56 | -1.44 | 0.00 | -68.44 | 0.00 | 68.44 | 2268.44 | 1134.22 | 2868.85 | 1436.56 | | 3.91 | -0.38 | 0.054 |
| 120.00 | -14.36 | -1.44 | 0.00 | -67.00 | 0.00 | 67.00 | 2255.69 | 1127.85 | 2831.25 | 1417.73 | | 3.99 | -0.39 | 0.054 |
| 123.00 | -13.78 | -1.44 | 0.00 | -62.68 | 0.00 | 62.68 | 1577.63 | 788.82 | 1975.86 | 989.40 | | 4.24 | -0.40 | 0.072 |
| 125.00 | -13.58 | -1.44 | 0.00 | -59.80 | 0.00 | 59.80 | 1561.09 | 780.55 | 1925.40 | 964.13 | | 4.41 | -0.41 | 0.071 |
| 130.00 | -13.08 | -1.45 | 0.00 | -52.58 | 0.00 | 52.58 | 1518.76 | 759.38 | 1800.86 | 901.77 | | 4.86 | -0.44 | 0.067 |
| 135.00 | -12.60 | -1.45 | 0.00 | -45.35 | 0.00 | 45.35 | 1475.03 | 737.52 | 1678.77 | 840.64 | | 5.34 | -0.47 | 0.062 |
| 140.00 | -8.72 | -1.38 | 0.00 | -38.10 | 0.00 | 38.10 | 1429.92 | 714.96 | 1559.34 | 780.83 | | 5.84 | -0.50 | 0.055 |
| 145.00 | -8.33 | -1.37 | 0.00 | -31.21 | 0.00 | 31.21 | 1383.42 | 691.71 | 1442.75 | 722.45 | | 6.38 | -0.52 | 0.049 |
| 150.00 | -7.95 | -1.35 | 0.00 | -24.38 | 0.00 | 24.38 | 1321.23 | 660.61 | 1314.97 | 658.46 | | 6.94 | -0.55 | 0.043 |
| 155.00 | -7.58 | -1.32 | 0.00 | -17.64 | 0.00 | 17.64 | 1258.65 | 629.32 | 1192.75 | 597.26 | | 7.53 | -0.57 | 0.036 |
| 157.00 | -3.91 | -0.90 | 0.00 | -15.00 | 0.00 | 15.00 | 1233.62 | 616.81 | 1145.53 | 573.62 | | 7.77 | -0.58 | 0.029 |
| 160.00 | -3.71 | -0.88 | 0.00 | -12.29 | 0.00 | 12.29 | 1196.07 | 598.03 | 1076.49 | 539.05 | | 8.14 | -0.59 | 0.026 |
| 161.00 | -3.46 | -0.85 | 0.00 | -11.40 | 0.00 | 11.40 | 1183.55 | 591.78 | 1053.96 | 527.76 | | 8.26 | -0.59 | 0.025 |
| 161.00 | -3.46 | -0.85 | 0.00 | -11.40 | 0.00 | 11.40 | 858.57 | 429.28 | 768.96 | 385.05 | | 8.26 | -0.59 | 0.034 |
| 165.00 | -3.25 | -0.82 | 0.00 | -8.01 | 0.00 | 8.01 | 832.45 | 416.23 | 713.85 | 357.46 | | 8.76 | -0.60 | 0.026 |
| 170.00 | -3.00 | -0.78 | 0.00 | -3.90 | 0.00 | 3.90 | 798.56 | 399.28 | 646.76 | 323.86 | | 9.40 | -0.61 | 0.016 |
| 175.00 | 0.00 | -0.75 | 0.00 | 0.00 | 0.00 | 0.00 | 758.80 | 379.40 | 578.42 | 289.64 | | 10.04 | -0.62 | 0.000 |

*Copyright © 2022 by Tower Engineering Solutions, LLC. All rights reserved.*

# Wind Loading - Shaft

| | | | | | |
|---|---|---|---|---|---|
| **Structure:** | CT01915-S-SBA | | **Code:** | TIA-222-G | 8/10/2022 |
| **Site Name:** | South Brooklyn | | **Exposure:** | B | |
| **Height:** | 175.00 (ft) | | **Crest Height:** | 0.00 | |
| **Base Elev:** | 0.000 (ft) | | **Site Class:** | D - Stiff Soil | |
| **Gh:** | 1.1 | **Topography:** 1 | **Struct Class:** | II | Page: 25 |

Tower Engineering Solutions

**Load Case:** 1.0D + 1.0W 60 mph Wind

**Dead Load Factor** 1.00

**Wind Load Factor** 1.00

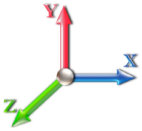


**Iterations** 24

| Elev (ft) | Description | Kzt | Kz | qz (psf) | qzGh (psf) | C (mph-ft) | Cf | Ice Thick (in) | Tributary (ft) | Aa (sf) | CfAa (sf) | Wind Force X (lb) | Dead Load Ice (lb) | Tot Dead Load (lb) |
|---|---|---|---|---|---|---|---|---|---|---|---|---|---|---|
| 0.00 | | 1.00 | 0.70 | 6.129 | 6.74 | 242.25 | 0.650 | 0.000 | 0.00 | 0.000 | 0.00 | 0.0 | 0.0 | 0.0 |
| 5.00 | | 1.00 | 0.70 | 6.129 | 6.74 | 237.37 | 0.650 | 0.000 | 5.00 | 23.886 | 15.53 | 104.7 | 0.0 | 1510.8 |
| 10.00 | | 1.00 | 0.70 | 6.129 | 6.74 | 232.48 | 0.650 | 0.000 | 5.00 | 23.399 | 15.21 | 102.5 | 0.0 | 1479.7 |
| 15.00 | | 1.00 | 0.70 | 6.129 | 6.74 | 227.60 | 0.650 | 0.000 | 5.00 | 22.913 | 14.89 | 100.4 | 0.0 | 1448.7 |
| 20.00 | | 1.00 | 0.70 | 6.129 | 6.74 | 222.71 | 0.650 | 0.000 | 5.00 | 22.426 | 14.58 | 98.3 | 0.0 | 1417.6 |
| 25.00 | | 1.00 | 0.70 | 6.129 | 6.74 | 217.83 | 0.650 | 0.000 | 5.00 | 21.940 | 14.26 | 96.1 | 0.0 | 1386.6 |
| 30.00 | | 1.00 | 0.70 | 6.134 | 6.75 | 213.03 | 0.650 | 0.000 | 5.00 | 21.453 | 13.94 | 94.1 | 0.0 | 1355.5 |
| 35.00 | | 1.00 | 0.73 | 6.410 | 7.05 | 212.78 | 0.650 | 0.000 | 5.00 | 20.966 | 13.63 | 96.1 | 0.0 | 1324.5 |
| 38.75 | Bot - Section 2 | 1.00 | 0.75 | 6.599 | 7.26 | 212.10 | 0.650 | 0.000 | 3.75 | 15.406 | 10.01 | 72.7 | 0.0 | 973.0 |
| 40.00 | | 1.00 | 0.76 | 6.659 | 7.33 | 211.79 | 0.650 | 0.000 | 1.25 | 5.167 | 3.36 | 24.6 | 0.0 | 606.4 |
| 45.00 | Top - Section 1 | 1.00 | 0.79 | 6.887 | 7.58 | 210.20 | 0.650 | 0.000 | 5.00 | 20.364 | 13.24 | 100.3 | 0.0 | 2389.1 |
| 50.00 | | 1.00 | 0.81 | 7.098 | 7.81 | 212.13 | 0.650 | 0.000 | 5.00 | 19.877 | 12.92 | 100.9 | 0.0 | 1099.6 |
| 55.00 | | 1.00 | 0.83 | 7.294 | 8.02 | 209.71 | 0.650 | 0.000 | 5.00 | 19.390 | 12.60 | 101.1 | 0.0 | 1072.4 |
| 60.00 | | 1.00 | 0.85 | 7.477 | 8.22 | 206.94 | 0.650 | 0.000 | 5.00 | 18.904 | 12.29 | 101.1 | 0.0 | 1045.2 |
| 65.00 | | 1.00 | 0.87 | 7.650 | 8.42 | 203.86 | 0.650 | 0.000 | 5.00 | 18.417 | 11.97 | 100.7 | 0.0 | 1018.1 |
| 70.00 | | 1.00 | 0.89 | 7.814 | 8.60 | 200.52 | 0.650 | 0.000 | 5.00 | 17.931 | 11.65 | 100.2 | 0.0 | 990.9 |
| 75.00 | Appurtenance(s) | 1.00 | 0.91 | 7.969 | 8.77 | 196.93 | 0.650 | 0.000 | 5.00 | 17.444 | 11.34 | 99.4 | 0.0 | 963.7 |
| 78.75 | Bot - Section 3 | 1.00 | 0.92 | 8.081 | 8.89 | 194.10 | 0.650 | 0.000 | 3.75 | 12.764 | 8.30 | 73.8 | 0.0 | 705.0 |
| 80.00 | | 1.00 | 0.93 | 8.118 | 8.93 | 193.13 | 0.650 | 0.000 | 1.25 | 4.260 | 2.77 | 24.7 | 0.0 | 400.2 |
| 83.75 | Top - Section 2 | 1.00 | 0.94 | 8.225 | 9.05 | 190.16 | 0.650 | 0.000 | 3.75 | 12.597 | 8.19 | 74.1 | 0.0 | 1183.1 |
| 85.00 | | 1.00 | 0.94 | 8.260 | 9.09 | 192.22 | 0.650 | 0.000 | 1.25 | 4.138 | 2.69 | 24.4 | 0.0 | 163.7 |
| 90.00 | | 1.00 | 0.96 | 8.396 | 9.24 | 188.08 | 0.650 | 0.000 | 5.00 | 16.249 | 10.56 | 97.5 | 0.0 | 642.8 |
| 95.00 | | 1.00 | 0.97 | 8.526 | 9.38 | 183.78 | 0.650 | 0.000 | 5.00 | 15.762 | 10.25 | 96.1 | 0.0 | 623.4 |
| 100.00 | | 1.00 | 0.99 | 8.652 | 9.52 | 179.33 | 0.650 | 0.000 | 5.00 | 15.276 | 9.93 | 94.5 | 0.0 | 604.0 |
| 105.00 | | 1.00 | 1.00 | 8.774 | 9.65 | 174.74 | 0.650 | 0.000 | 5.00 | 14.789 | 9.61 | 92.8 | 0.0 | 584.6 |
| 110.00 | Appurtenance(s) | 1.00 | 1.02 | 8.891 | 9.78 | 170.02 | 0.650 | 0.000 | 5.00 | 14.303 | 9.30 | 90.9 | 0.0 | 565.2 |
| 115.00 | | 1.00 | 1.03 | 9.005 | 9.91 | 165.18 | 0.650 | 0.000 | 5.00 | 13.816 | 8.98 | 89.0 | 0.0 | 545.8 |
| 119.00 | Bot - Section 4 | 1.00 | 1.04 | 9.093 | 10.00 | 161.23 | 0.650 | 0.000 | 4.00 | 10.703 | 6.96 | 69.6 | 0.0 | 422.7 |
| 120.00 | | 1.00 | 1.04 | 9.115 | 10.03 | 160.23 | 0.650 | 0.000 | 1.00 | 2.669 | 1.74 | 17.4 | 0.0 | 188.2 |
| 123.00 | Top - Section 3 | 1.00 | 1.05 | 9.179 | 10.10 | 157.21 | 0.650 | 0.000 | 3.00 | 7.891 | 5.13 | 51.8 | 0.0 | 556.3 |
| 125.00 | | 1.00 | 1.05 | 9.222 | 10.14 | 157.78 | 0.650 | 0.000 | 2.00 | 5.163 | 3.36 | 34.0 | 0.0 | 163.4 |
| 130.00 | | 1.00 | 1.07 | 9.326 | 10.26 | 152.64 | 0.650 | 0.000 | 5.00 | 12.568 | 8.17 | 83.8 | 0.0 | 397.6 |
| 135.00 | | 1.00 | 1.08 | 9.427 | 10.37 | 147.41 | 0.650 | 0.000 | 5.00 | 12.081 | 7.85 | 81.4 | 0.0 | 382.1 |
| 140.00 | Appurtenance(s) | 1.00 | 1.09 | 9.525 | 10.48 | 142.08 | 0.650 | 0.000 | 5.00 | 11.595 | 7.54 | 79.0 | 0.0 | 366.6 |
| 145.00 | | 1.00 | 1.10 | 9.621 | 10.58 | 136.68 | 0.650 | 0.000 | 5.00 | 11.108 | 7.22 | 76.4 | 0.0 | 351.1 |
| 150.00 | | 1.00 | 1.11 | 9.715 | 10.69 | 131.19 | 0.650 | 0.000 | 5.00 | 10.622 | 6.90 | 73.8 | 0.0 | 335.5 |
| 155.00 | | 1.00 | 1.12 | 9.806 | 10.79 | 125.63 | 0.650 | 0.000 | 5.00 | 10.135 | 6.59 | 71.1 | 0.0 | 320.0 |
| 157.00 | Appurtenance(s) | 1.00 | 1.12 | 9.842 | 10.83 | 123.38 | 0.650 | 0.000 | 2.00 | 3.918 | 2.55 | 27.6 | 0.0 | 123.7 |
| 160.00 | | 1.00 | 1.13 | 9.896 | 10.89 | 119.99 | 0.650 | 0.000 | 3.00 | 5.731 | 3.73 | 40.5 | 0.0 | 180.8 |
| 161.00 | Top - Section 4 | 1.00 | 1.13 | 9.913 | 10.90 | 118.85 | 0.650 | 0.000 | 1.00 | 1.871 | 1.22 | 13.3 | 0.0 | 59.0 |
| 165.00 | | 1.00 | 1.14 | 9.983 | 10.98 | 114.28 | 0.650 | 0.000 | 4.00 | 7.291 | 4.74 | 52.0 | 0.0 | 173.0 |
| 170.00 | | 1.00 | 1.15 | 10.069 | 11.08 | 108.51 | 0.650 | 0.000 | 5.00 | 8.676 | 5.64 | 62.5 | 0.0 | 205.7 |
| 175.00 | Appurtenance(s) | 1.00 | 1.16 | 10.152 | 11.17 | 102.67 | 0.650 | 0.000 | 5.00 | 8.189 | 5.32 | 59.4 | 0.0 | 194.1 |
| | | | | | | | | **Totals:** | **175.00** | | | **3,144.5** | | **30,519.4** |

*Copyright © 2022 by Tower Engineering Solutions, LLC. All rights reserved.*

# Discrete Appurtenance Forces

| | | | | | |
|---|---|---|---|---|---|
| **Structure:** | CT01915-S-SBA | | **Code:** | TIA-222-G | 8/10/2022 |
| **Site Name:** | South Brooklyn | | **Exposure:** | B | |
| **Height:** | 175.00 (ft) | | **Crest Height:** | 0.00 | |
| **Base Elev:** | 0.000 (ft) | | **Site Class:** | D - Stiff Soil | |
| **Gh:** | 1.1 | **Topography:** 1 | **Struct Class:** | II | Page: 26 |

Tower Engineering Solutions

**Load Case:** 1.0D + 1.0W 60 mph Wind

**Dead Load Factor** 1.00

**Wind Load Factor** 1.00

**Iterations** 24

| No. | Elev (ft) | Description | Qty | qz (psf) | qzGh (psf) | Orient Factor x Ka | Ka | Total CaAa (sf) | Dead Load (lb) | Horiz Ecc (ft) | Vert Ecc (ft) | Wind FX (lb) | Mom Y (lb-ft) | Mom Z (lb-ft) |
|---|---|---|---|---|---|---|---|---|---|---|---|---|---|---|
| 1 | 175.00 | Samsung B5/B13 | 3 | 10.185 | 11.204 | 0.50 | 0.75 | 2.82 | 210.90 | 0.000 | 2.000 | 31.58 | 0.00 | 63.17 |
| 2 | 175.00 | Samsung MT6407-77A | 3 | 10.185 | 11.204 | 0.52 | 0.75 | 7.39 | 238.20 | 0.000 | 2.000 | 82.76 | 0.00 | 165.52 |
| 3 | 175.00 | Antel BXA-70080-6CF | 3 | 10.185 | 11.204 | 0.65 | 0.75 | 11.28 | 54.00 | 0.000 | 2.000 | 126.33 | 0.00 | 252.65 |
| 4 | 175.00 | JMA Wireless | 6 | 10.185 | 11.204 | 0.65 | 0.75 | 38.64 | 276.00 | 0.000 | 2.000 | 432.93 | 0.00 | 865.86 |
| 5 | 175.00 | Samsung B2/B66A | 3 | 10.185 | 11.204 | 0.50 | 0.75 | 2.82 | 253.20 | 0.000 | 2.000 | 31.58 | 0.00 | 63.17 |
| 6 | 175.00 | MS-H1242 (Heavy Collar | 1 | 10.152 | 11.168 | 1.00 | 1.00 | 2.50 | 150.60 | 0.000 | 0.000 | 27.92 | 0.00 | 0.00 |
| 7 | 175.00 | RVZDC-6627-PF-48 | 1 | 10.185 | 11.204 | 0.75 | 0.75 | 3.04 | 32.00 | 0.000 | 2.000 | 34.12 | 0.00 | 68.23 |
| 8 | 175.00 | MS-KI22-5 (Kickers w/o | 1 | 10.152 | 11.168 | 1.00 | 1.00 | 5.33 | 146.00 | 0.000 | 0.000 | 59.52 | 0.00 | 0.00 |
| 9 | 175.00 | 6' Lightning rod | 1 | 10.152 | 11.168 | 1.00 | 1.00 | 0.38 | 6.50 | 0.000 | 0.000 | 4.24 | 0.00 | 0.00 |
| 10 | 175.00 | Low Profile Platform-flat | 1 | 10.152 | 11.168 | 1.00 | 1.00 | 37.00 | 1200.00 | 0.000 | 0.000 | 413.20 | 0.00 | 0.00 |
| 11 | 175.00 | MS-HRECP | 1 | 10.185 | 11.204 | 1.00 | 1.00 | 12.00 | 514.00 | 0.000 | 2.000 | 134.45 | 0.00 | 268.89 |
| 12 | 161.00 | Bridge Stiffener | 1 | 9.913 | 10.905 | 1.00 | 1.00 | 5.77 | 204.17 | 0.000 | 0.000 | 62.92 | 0.00 | 0.00 |
| 13 | 157.00 | ALU - TD-RRH8x20-25 - | 3 | 9.842 | 10.827 | 0.50 | 0.75 | 6.11 | 210.00 | 0.000 | 0.000 | 66.10 | 0.00 | 0.00 |
| 14 | 157.00 | ALU - 800 MHz - RRU | 6 | 9.842 | 10.827 | 0.50 | 0.75 | 7.51 | 318.00 | 0.000 | 0.000 | 81.28 | 0.00 | 0.00 |
| 15 | 157.00 | ALU - 1900 MHz - RRU | 3 | 9.842 | 10.827 | 0.50 | 0.75 | 4.18 | 180.00 | 0.000 | 0.000 | 45.21 | 0.00 | 0.00 |
| 16 | 157.00 | NNVV-65B-R4 | 3 | 9.842 | 10.827 | 0.55 | 0.75 | 20.43 | 254.10 | 0.000 | 0.000 | 221.18 | 0.00 | 0.00 |
| 17 | 157.00 | APXVTM14-C-I20 | 3 | 9.842 | 10.827 | 0.58 | 0.75 | 10.98 | 168.60 | 0.000 | 0.000 | 118.92 | 0.00 | 0.00 |
| 18 | 157.00 | Platform w/ Handrail + | 1 | 9.842 | 10.827 | 1.00 | 1.00 | 54.00 | 2800.00 | 0.000 | 0.000 | 584.63 | 0.00 | 0.00 |
| 19 | 140.00 | Ericsson AIR6449 B41 | 3 | 9.525 | 10.478 | 0.53 | 0.75 | 9.03 | 309.00 | 0.000 | 0.000 | 94.57 | 0.00 | 0.00 |
| 20 | 140.00 | APXVAARR24_43-U-NA2 | 3 | 9.525 | 10.478 | 0.52 | 0.75 | 31.88 | 384.00 | 0.000 | 0.000 | 334.01 | 0.00 | 0.00 |
| 21 | 140.00 | MT-195-12 | 1 | 9.525 | 10.478 | 1.00 | 1.00 | 40.00 | 2000.00 | 0.000 | 0.000 | 419.11 | 0.00 | 0.00 |
| 22 | 140.00 | KRY 112 489/2 | 3 | 9.525 | 10.478 | 0.50 | 0.75 | 1.01 | 46.20 | 0.000 | 0.000 | 10.58 | 0.00 | 0.00 |
| 23 | 140.00 | Ericsson 4449 B71 + B85 | 3 | 9.525 | 10.478 | 0.50 | 0.75 | 2.97 | 225.00 | 0.000 | 0.000 | 31.12 | 0.00 | 0.00 |
| 24 | 140.00 | Ericsson 4460 B25 + B66 | 3 | 9.525 | 10.478 | 0.50 | 0.75 | 4.30 | 312.00 | 0.000 | 0.000 | 45.02 | 0.00 | 0.00 |
| 25 | 140.00 | Kathrein 782 11056 | 3 | 9.525 | 10.478 | 0.50 | 0.75 | 0.42 | 5.40 | 0.000 | 0.000 | 4.42 | 0.00 | 0.00 |
| 26 | 140.00 | MS-HRECP-35 | 1 | 9.525 | 10.478 | 1.00 | 1.00 | 12.25 | 514.00 | 0.000 | 0.000 | 128.35 | 0.00 | 0.00 |
| 27 | 110.00 | Raycap | 1 | 8.891 | 9.780 | 1.00 | 1.00 | 2.01 | 21.90 | 0.000 | 0.000 | 19.66 | 0.00 | 0.00 |
| 28 | 110.00 | Fujitsu TA08025-B604 | 3 | 8.891 | 9.780 | 0.50 | 0.75 | 2.95 | 191.70 | 0.000 | 0.000 | 28.90 | 0.00 | 0.00 |
| 29 | 110.00 | Fujitsu TA08025-B605 | 3 | 8.891 | 9.780 | 0.50 | 0.75 | 2.95 | 225.00 | 0.000 | 0.000 | 28.90 | 0.00 | 0.00 |
| 30 | 110.00 | MC-PK8-DSH | 1 | 8.891 | 9.780 | 1.00 | 1.00 | 37.59 | 1727.00 | 0.000 | 0.000 | 367.63 | 0.00 | 0.00 |
| 31 | 110.00 | Commscope | 3 | 8.891 | 9.780 | 0.55 | 0.75 | 20.43 | 212.40 | 0.000 | 0.000 | 199.80 | 0.00 | 0.00 |
| 32 | 75.00 | GPS | 1 | 7.969 | 8.766 | 1.00 | 1.00 | 1.00 | 10.00 | 0.000 | 0.000 | 8.77 | 0.00 | 0.00 |
| | | | | | | | **Totals:** | | **13,399.87** | | | **4,279.70** | | |

*Copyright © 2022 by Tower Engineering Solutions, LLC. All rights reserved.*

# Total Applied Force Summary

| | | | | | |
|---|---|---|---|---|---|
| **Structure:** | CT01915-S-SBA | | **Code:** | TIA-222-G | 8/10/2022 |
| **Site Name:** | South Brooklyn | | **Exposure:** | B | |
| **Height:** | 175.00 (ft) | | **Crest Height:** | 0.00 | |
| **Base Elev:** | 0.000 (ft) | | **Site Class:** | D - Stiff Soil | |
| **Gh:** | 1.1 | **Topography:** 1 | **Struct Class:** | II | Page: 27 |

Tower Engineering Solutions

**Load Case:** 1.0D + 1.0W 60 mph Wind

**Dead Load Factor** 1.00

**Wind Load Factor** 1.00

**Iterations** 24

| Elev (ft) | Description | Lateral FX (-) (lb) | Axial FY (-) (lb) | Torsion MY (lb-ft) | Moment MZ (lb-ft) |
|---|---|---|---|---|---|
| 0.00 | | 0.00 | 0.00 | 0.00 | 0.00 |
| 5.00 | | 104.67 | 1671.73 | 0.00 | 0.00 |
| 10.00 | | 102.53 | 1640.68 | 0.00 | 0.00 |
| 15.00 | | 100.40 | 1609.63 | 0.00 | 0.00 |
| 20.00 | | 98.27 | 1578.58 | 0.00 | 0.00 |
| 25.00 | | 96.14 | 1547.53 | 0.00 | 0.00 |
| 30.00 | | 94.09 | 1516.48 | 0.00 | 0.00 |
| 35.00 | | 96.09 | 1485.43 | 0.00 | 0.00 |
| 38.75 | | 72.69 | 1093.70 | 0.00 | 0.00 |
| 40.00 | | 24.60 | 646.61 | 0.00 | 0.00 |
| 45.00 | | 100.28 | 2550.07 | 0.00 | 0.00 |
| 50.00 | | 100.87 | 1260.51 | 0.00 | 0.00 |
| 55.00 | | 101.12 | 1233.35 | 0.00 | 0.00 |
| 60.00 | | 101.06 | 1206.18 | 0.00 | 0.00 |
| 65.00 | | 100.74 | 1179.01 | 0.00 | 0.00 |
| 70.00 | | 100.18 | 1151.84 | 0.00 | 0.00 |
| 75.00 | (1) attachments | 108.17 | 1134.67 | 0.00 | 0.00 |
| 78.75 | | 73.75 | 825.07 | 0.00 | 0.00 |
| 80.00 | | 24.73 | 440.22 | 0.00 | 0.00 |
| 83.75 | | 74.08 | 1303.18 | 0.00 | 0.00 |
| 85.00 | | 24.44 | 203.77 | 0.00 | 0.00 |
| 90.00 | | 97.54 | 802.96 | 0.00 | 0.00 |
| 95.00 | | 96.09 | 783.55 | 0.00 | 0.00 |
| 100.00 | | 94.50 | 764.14 | 0.00 | 0.00 |
| 105.00 | | 92.78 | 744.74 | 0.00 | 0.00 |
| 110.00 | (11) attachments | 735.81 | 3103.33 | 0.00 | 0.00 |
| 115.00 | | 88.95 | 696.83 | 0.00 | 0.00 |
| 119.00 | | 69.58 | 543.49 | 0.00 | 0.00 |
| 120.00 | | 17.40 | 218.43 | 0.00 | 0.00 |
| 123.00 | | 51.79 | 646.90 | 0.00 | 0.00 |
| 125.00 | | 34.05 | 223.82 | 0.00 | 0.00 |
| 130.00 | | 83.80 | 548.69 | 0.00 | 0.00 |
| 135.00 | | 81.43 | 533.16 | 0.00 | 0.00 |
| 140.00 | (20) attachments | 1146.15 | 4313.24 | 0.00 | 0.00 |
| 145.00 | | 76.42 | 435.10 | 0.00 | 0.00 |
| 150.00 | | 73.78 | 419.58 | 0.00 | 0.00 |
| 155.00 | | 71.06 | 404.05 | 0.00 | 0.00 |
| 157.00 | (19) attachments | 1144.89 | 4087.97 | 0.00 | 0.00 |
| 160.00 | | 40.55 | 223.33 | 0.00 | 0.00 |
| 161.00 | (1) attachments | 76.18 | 277.37 | 0.00 | 0.00 |
| 165.00 | | 52.04 | 229.62 | 0.00 | 0.00 |
| 170.00 | | 62.46 | 276.55 | 0.00 | 0.00 |
| 175.00 | (24) attachments | 1438.07 | 3346.31 | 0.00 | 1747.49 |
| | **Totals:** | **7,424.21** | **48,901.44** | **0.00** | **1,747.49** |

*Copyright © 2022 by Tower Engineering Solutions, LLC. All rights reserved.*

# Calculated Forces

| | | | | | |
|---|---|---|---|---|---|
| **Structure:** | CT01915-S-SBA | **Code:** | TIA-222-G | 8/10/2022 | |
| **Site Name:** | South Brooklyn | **Exposure:** | B | | |
| **Height:** | 175.00 (ft) | **Crest Height:** | 0.00 | | |
| **Base Elev:** | 0.000 (ft) | **Site Class:** | D - Stiff Soil | | |
| **Gh:** | 1.1 **Topography:** 1 | **Struct Class:** | II | Page: 28 | |

Tower Engineering Solutions

**Load Case:** 1.0D + 1.0W 60 mph Wind

**Dead Load Factor** 1.00

**Wind Load Factor** 1.00

**Iterations** 24

| Seg Elev (ft) | Pu FY (-) (kips) | Vu FX (-) (kips) | Tu MY (-) (ft-kips) | Mu MZ (ft-kips) | Mu MX (ft-kips) | Resultant Moment (ft-kips) | phi Pn (kips) | phi Vn (kips) | phi Tn (ft-kips) | phi Mn (ft-kips) | Total Deflect (in) | Rotation Sway (deg) | Rotation Twist (deg) | Stress Ratio |
|---|---|---|---|---|---|---|---|---|---|---|---|---|---|---|
| 0.00 | -48.90 | -7.44 | 0.00 | -954.89 | 0.00 | 954.89 | 6411.04 | 3205.52 | 14877.2 | 7449.66 | 0.00 | 0.000 | 0.000 | 0.136 |
| 5.00 | -47.22 | -7.36 | 0.00 | -917.69 | 0.00 | 917.69 | 6318.35 | 3159.17 | 14361.2 | 7191.28 | 0.02 | -0.037 | 0.000 | 0.135 |
| 10.00 | -45.58 | -7.29 | 0.00 | -880.87 | 0.00 | 880.87 | 6224.09 | 3112.04 | 13850.5 | 6935.58 | 0.08 | -0.074 | 0.000 | 0.134 |
| 15.00 | -43.96 | -7.22 | 0.00 | -844.42 | 0.00 | 844.42 | 6128.26 | 3064.13 | 13345.4 | 6682.66 | 0.18 | -0.113 | 0.000 | 0.134 |
| 20.00 | -42.38 | -7.14 | 0.00 | -808.33 | 0.00 | 808.33 | 6030.87 | 3015.43 | 12846.2 | 6432.65 | 0.32 | -0.152 | 0.000 | 0.133 |
| 25.00 | -40.83 | -7.07 | 0.00 | -772.61 | 0.00 | 772.61 | 5931.91 | 2965.95 | 12352.9 | 6185.64 | 0.50 | -0.192 | 0.000 | 0.132 |
| 30.00 | -39.31 | -7.00 | 0.00 | -737.24 | 0.00 | 737.24 | 5831.38 | 2915.69 | 11865.8 | 5941.76 | 0.72 | -0.233 | 0.000 | 0.131 |
| 35.00 | -37.82 | -6.92 | 0.00 | -702.23 | 0.00 | 702.23 | 5715.88 | 2857.94 | 11358.6 | 5687.79 | 0.99 | -0.275 | 0.000 | 0.130 |
| 38.75 | -36.72 | -6.86 | 0.00 | -676.27 | 0.00 | 676.27 | 5614.19 | 2807.10 | 10956.1 | 5486.19 | 1.21 | -0.307 | 0.000 | 0.130 |
| 40.00 | -36.07 | -6.85 | 0.00 | -667.70 | 0.00 | 667.70 | 5580.30 | 2790.15 | 10823.5 | 5419.80 | 1.30 | -0.318 | 0.000 | 0.130 |
| 45.00 | -33.52 | -6.76 | 0.00 | -633.46 | 0.00 | 633.46 | 4741.11 | 2370.56 | 9166.15 | 4589.89 | 1.65 | -0.361 | 0.000 | 0.145 |
| 50.00 | -32.25 | -6.68 | 0.00 | -599.67 | 0.00 | 599.67 | 4656.71 | 2328.36 | 8781.22 | 4397.14 | 2.05 | -0.406 | 0.000 | 0.143 |
| 55.00 | -31.01 | -6.59 | 0.00 | -566.29 | 0.00 | 566.29 | 4570.75 | 2285.37 | 8401.44 | 4206.97 | 2.51 | -0.454 | 0.000 | 0.141 |
| 60.00 | -29.80 | -6.51 | 0.00 | -533.34 | 0.00 | 533.34 | 4483.21 | 2241.61 | 8027.05 | 4019.49 | 3.01 | -0.504 | 0.000 | 0.139 |
| 65.00 | -28.62 | -6.42 | 0.00 | -500.81 | 0.00 | 500.81 | 4386.28 | 2193.14 | 7644.63 | 3828.00 | 3.56 | -0.554 | 0.000 | 0.137 |
| 70.00 | -27.46 | -6.33 | 0.00 | -468.71 | 0.00 | 468.71 | 4267.64 | 2133.82 | 7234.64 | 3622.70 | 4.17 | -0.606 | 0.000 | 0.136 |
| 75.00 | -26.32 | -6.23 | 0.00 | -437.04 | 0.00 | 437.04 | 4149.01 | 2074.50 | 6835.94 | 3423.05 | 4.83 | -0.657 | 0.000 | 0.134 |
| 78.75 | -25.50 | -6.16 | 0.00 | -413.67 | 0.00 | 413.67 | 4060.03 | 2030.01 | 6544.34 | 3277.03 | 5.37 | -0.697 | 0.000 | 0.133 |
| 80.00 | -25.05 | -6.14 | 0.00 | -405.97 | 0.00 | 405.97 | 4030.37 | 2015.18 | 6448.55 | 3229.07 | 5.55 | -0.711 | 0.000 | 0.132 |
| 83.75 | -23.75 | -6.06 | 0.00 | -382.93 | 0.00 | 382.93 | 2677.54 | 1338.77 | 4285.17 | 2145.77 | 6.12 | -0.751 | 0.000 | 0.187 |
| 85.00 | -23.54 | -6.05 | 0.00 | -375.35 | 0.00 | 375.35 | 2664.37 | 1332.18 | 4232.36 | 2119.33 | 6.32 | -0.765 | 0.000 | 0.186 |
| 90.00 | -22.73 | -5.97 | 0.00 | -345.08 | 0.00 | 345.08 | 2610.69 | 1305.34 | 4022.76 | 2014.37 | 7.16 | -0.836 | 0.000 | 0.180 |
| 95.00 | -21.94 | -5.89 | 0.00 | -315.21 | 0.00 | 315.21 | 2555.44 | 1277.72 | 3815.94 | 1910.80 | 8.08 | -0.906 | 0.000 | 0.174 |
| 100.00 | -21.17 | -5.81 | 0.00 | -285.75 | 0.00 | 285.75 | 2498.62 | 1249.31 | 3612.11 | 1808.74 | 9.06 | -0.977 | 0.000 | 0.166 |
| 105.00 | -20.42 | -5.73 | 0.00 | -256.69 | 0.00 | 256.69 | 2440.24 | 1220.12 | 3411.50 | 1708.29 | 10.12 | -1.048 | 0.000 | 0.159 |
| 110.00 | -17.33 | -4.96 | 0.00 | -228.03 | 0.00 | 228.03 | 2380.29 | 1190.15 | 3214.34 | 1609.56 | 11.26 | -1.117 | 0.000 | 0.149 |
| 115.00 | -16.63 | -4.87 | 0.00 | -203.25 | 0.00 | 203.25 | 2318.78 | 1159.39 | 3020.85 | 1512.67 | 12.47 | -1.186 | 0.000 | 0.142 |
| 119.00 | -16.08 | -4.80 | 0.00 | -183.76 | 0.00 | 183.76 | 2268.44 | 1134.22 | 2868.85 | 1436.56 | 13.48 | -1.241 | 0.000 | 0.135 |
| 120.00 | -15.86 | -4.79 | 0.00 | -178.96 | 0.00 | 178.96 | 2255.69 | 1127.85 | 2831.25 | 1417.73 | 13.75 | -1.255 | 0.000 | 0.133 |
| 123.00 | -15.21 | -4.73 | 0.00 | -164.60 | 0.00 | 164.60 | 1577.63 | 788.82 | 1975.86 | 989.40 | 14.55 | -1.296 | 0.000 | 0.176 |
| 125.00 | -14.99 | -4.70 | 0.00 | -155.14 | 0.00 | 155.14 | 1561.09 | 780.55 | 1925.40 | 964.13 | 15.10 | -1.323 | 0.000 | 0.171 |
| 130.00 | -14.43 | -4.63 | 0.00 | -131.62 | 0.00 | 131.62 | 1518.76 | 759.38 | 1800.86 | 901.77 | 16.52 | -1.398 | 0.000 | 0.156 |
| 135.00 | -13.90 | -4.55 | 0.00 | -108.50 | 0.00 | 108.50 | 1475.03 | 737.52 | 1678.77 | 840.64 | 18.03 | -1.469 | 0.000 | 0.139 |
| 140.00 | -9.61 | -3.30 | 0.00 | -85.76 | 0.00 | 85.76 | 1429.92 | 714.96 | 1559.34 | 780.83 | 19.60 | -1.533 | 0.000 | 0.117 |
| 145.00 | -9.18 | -3.22 | 0.00 | -69.27 | 0.00 | 69.27 | 1383.42 | 691.71 | 1442.75 | 722.45 | 21.24 | -1.592 | 0.000 | 0.103 |
| 150.00 | -8.76 | -3.14 | 0.00 | -53.17 | 0.00 | 53.17 | 1321.23 | 660.61 | 1314.97 | 658.46 | 22.93 | -1.645 | 0.000 | 0.087 |
| 155.00 | -8.35 | -3.06 | 0.00 | -37.47 | 0.00 | 37.47 | 1258.65 | 629.32 | 1192.75 | 597.26 | 24.68 | -1.690 | 0.000 | 0.069 |
| 157.00 | -4.30 | -1.80 | 0.00 | -31.34 | 0.00 | 31.34 | 1233.62 | 616.81 | 1145.53 | 573.62 | 25.39 | -1.705 | 0.000 | 0.058 |
| 160.00 | -4.08 | -1.75 | 0.00 | -25.94 | 0.00 | 25.94 | 1196.07 | 598.03 | 1076.49 | 539.05 | 26.47 | -1.726 | 0.000 | 0.052 |
| 161.00 | -3.80 | -1.67 | 0.00 | -24.19 | 0.00 | 24.19 | 1183.55 | 591.78 | 1053.96 | 527.76 | 26.83 | -1.733 | 0.000 | 0.049 |
| 161.00 | -3.80 | -1.67 | 0.00 | -24.19 | 0.00 | 24.19 | 858.57 | 429.28 | 768.96 | 385.05 | 26.83 | -1.733 | 0.000 | 0.067 |
| 165.00 | -3.57 | -1.61 | 0.00 | -17.52 | 0.00 | 17.52 | 832.45 | 416.23 | 713.85 | 357.46 | 28.29 | -1.756 | 0.000 | 0.053 |
| 170.00 | -3.30 | -1.54 | 0.00 | -9.46 | 0.00 | 9.46 | 798.56 | 399.28 | 646.76 | 323.86 | 30.15 | -1.784 | 0.000 | 0.033 |
| 175.00 | 0.00 | -1.44 | 0.00 | -1.75 | 0.00 | 1.75 | 758.80 | 379.40 | 578.42 | 289.64 | 32.03 | -1.798 | 0.000 | 0.006 |

*Copyright © 2022 by Tower Engineering Solutions, LLC. All rights reserved.*

# Final Analysis Summary

| | | | | | |
|---|---|---|---|---|---|
| **Structure:** | CT01915-S-SBA | | **Code:** | TIA-222-G | 8/10/2022 |
| **Site Name:** | South Brooklyn | | **Exposure:** | B | |
| **Height:** | 175.00 (ft) | | **Crest Height:** | 0.00 | |
| **Base Elev:** | 0.000 (ft) | | **Site Class:** | D - Stiff Soil | |
| **Gh:** | 1.1 | **Topography:** 1 | **Struct Class:** | II | Page: 29 |

Tower Engineering Solutions

## Reactions

| Load Case | Shear FX (kips) | Shear FZ (kips) | Axial FY (kips) | Moment MX (ft-kips) | Moment MY (ft-kips) | Moment MZ (ft-kips) |
|---|---|---|---|---|---|---|
| 1.2D + 1.6W 101 mph Wind | 33.7 | 0.00 | 58.63 | 0.00 | 0.00 | 4361.43 |
| 0.9D + 1.6W 101 mph Wind | 33.7 | 0.00 | 43.96 | 0.00 | 0.00 | 4299.65 |
| 1.2D + 1.0Di + 1.0Wi 50 mph Wind | 9.7 | 0.00 | 99.72 | 0.00 | 0.00 | 1315.27 |
| 1.2D + 1.0E | 2.0 | 0.00 | 58.68 | 0.00 | 0.00 | 268.50 |
| 0.9D + 1.0E | 2.0 | 0.00 | 44.01 | 0.00 | 0.00 | 264.35 |
| 1.0D + 1.0W 60 mph Wind | 7.4 | 0.00 | 48.90 | 0.00 | 0.00 | 954.89 |

## Max Stresses

| Load Case | Pu FY (-) (kips) | Vu FX (-) (kips) | Tu MY (-) (ft-kips) | Mu MZ (ft-kips) | Mu MX (ft-kips) | Resultant Moment (ft-kips) | phi Pn (kips) | phi Vn (kips) | phi Tn (ft-kips) | phi Mn (ft-kips) | Elev (ft) | Stress Ratio |
|---|---|---|---|---|---|---|---|---|---|---|---|---|
| 1.2D + 1.6W 101 mph Wind | -26.96 | -27.75 | 0.00 | -1753.6 | 0.00 | -1753.6 | 2677.54 | 1338.7 | 4285.17 | 2145.77 | 83.75 | 0.828 |
| 0.9D + 1.6W 101 mph Wind | -19.86 | -27.30 | 0.00 | -1715.2 | 0.00 | -1715.2 | 2677.54 | 1338.7 | 4285.17 | 2145.77 | 83.75 | 0.807 |
| 1.2D + 1.0Di + 1.0Wi 50 mph Wind | -59.08 | -8.41 | 0.00 | -547.45 | 0.00 | -547.45 | 2677.54 | 1338.7 | 4285.17 | 2145.77 | 83.75 | 0.277 |
| 1.2D + 1.0E | -18.37 | -1.48 | 0.00 | -64.02 | 0.00 | -64.02 | 1577.63 | 788.82 | 1975.86 | 989.40 | 123.00 | 0.076 |
| 0.9D + 1.0E | -13.78 | -1.44 | 0.00 | -62.68 | 0.00 | -62.68 | 1577.63 | 788.82 | 1975.86 | 989.40 | 123.00 | 0.072 |
| 1.0D + 1.0W 60 mph Wind | -23.75 | -6.06 | 0.00 | -382.93 | 0.00 | -382.93 | 2677.54 | 1338.7 | 4285.17 | 2145.77 | 83.75 | 0.187 |

*Copyright © 2022 by Tower Engineering Solutions, LLC. All rights reserved.*

# Base Plate Summary

| | | | | | |
|---|---|---|---|---|---|
| **Structure:** | CT01915-S-SB | | **Code:** | TIA-222-G | 8/10/2022 |
| **Site Name:** | South Brooklyn | | **Exposure:** | B | |
| **Height:** | 175.00 (ft) | | **Crest Height:** | 0.00 | |
| **Base Elev:** | 0.000 (ft) | | **Site Class:** | D - Stiff Soil | |
| **Gh:** | 1.1 | **Topography:** 1 | **Struct Class:** | II | Page: 30 |

Tower Engineering Solutions

## Reactions

| Original Design | |
|---|---|
| **Moment (kip-ft):** | 3710.00 |
| **Axial (kip):** | 38.30 |
| **Shear (kip):** | 29.70 |

| Analysis (1.2D + 1.6W) | |
|---|---|
| **Moment (kip-ft):** | 4361.43 |
| **Axial (kip):** | 58.63 |
| **Shear (kip):** | 33.75 |

## Base Plate

| | |
|---|---|
| **Yield (ksi):** | 50.00 |
| **Width (in):** | 68.00 |
| **Style:** | Clipped |
| **Polygon Sides:** | 8.00 |
| **Clip Length (in):** | 18.50 |
| **Effective Len (in):** | 6.47 |
| **Moment (kip-in):** | 367.10 |
| **Allow Stress (ksi):** | 67.50 |
| **Applied Stress (ksi):** | 54.67 |
| **Stress Ratio:** | 0.81 |

## Anchor Bolts

| | |
|---|---|
| **Bolt Circle:** | 64.00 |
| **Number Bolts:** | 32.00 |
| **Bolt Type:** | 2.25" 18J |
| **Bolt Diameter (in):** | 2.25 |
| **Yield (ksi):** | 75.00 |
| **Ultimate (ksi):** | 100.00 |
| **Arrangement:** | Clustered |
| **Cluster Dist (in):** | 6.00 |
| **Start Angle (deg):** | 45.00 |

| Compression | |
|---|---|
| **Force (kip):** | 105.34 |
| **Allowable (kip):** | 260.00 |
| **Ratio:** | 0.41 |

| Tension | |
|---|---|
| **Force (kip):** | 99.10 |
| **Allowable (kip):** | 260.00 |
| **Ratio:** | 0.39 |

*Copyright © 2022 by Tower Engineering Solutions, LLC. All rights reserved.*

# Monopole Mat Foundation Design

| | | | |
|---|---|---|---|
| | | | Date |
| | | | 8/10/2022 |
| **Customer Name:** | Dish Wireless | **TIA Standard:** | TIA-222-G |
| **Site Name:** | | **Structure Height (Ft.):** | 175 |
| **Site Number:** | CT01915-S-SBA | **Engineer Name:** | M. Al Rubaye |
| **Engr. Number:** | 132616 | **Engineer Login ID:** | |

**Foundation Info Obtained from:** Drawings/Calculations

**Structure Type:** Monopole

**Analysis or Design?** Analysis

**Base Reactions (Factored):**

| | | | |
|---|---|---|---|
| Axial Load (Kips): | 58.6 | Shear Force (Kips): | 33.7 |
| Uplift Force (Kips): | 0.0 | Moment (Kips-ft): | 4361.4 |
| Allowable overstress %: | 5.0% | | |

**Foundation Geometries:**

| | | | |
|---|---|---|---|
| | | Mods required -Yes/No ?: | No |
| Diameter of Pier (ft.): | 7.0 | Depth of Base BG (ft.): | 7.0 |
| Pier Height A. G. (ft.): | 0.50 | Thickness of Pad (ft): | 3.50 |
| Length of Pad (ft.): | 25 | Width of Pad (ft.): | 25 |
| Final Length of pad (ft) | 25.0 | Final width of pad (ft): | 25.0 |

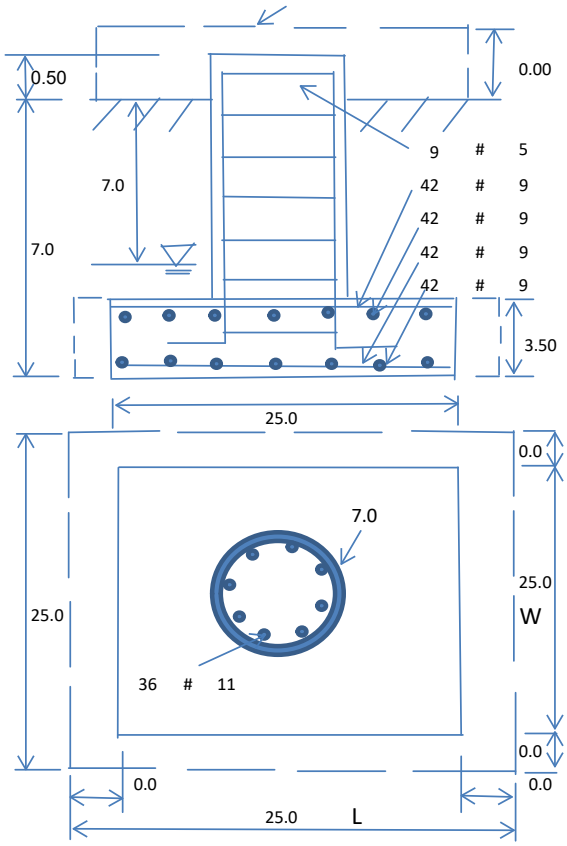


**Material Properties and Reabr Info:**

| | | | | |
|---|---|---|---|---|
| Concrete Strength (psi): | 3000 | Steel Elastic Modulus: | 29000 | ksi |
| Vertical bar yield (ksi) | 60 | Tie steel yield (ksi): | 60 | |
| Vertical Rebar Size #: | 11 | Tie / Stirrup Size #: | 5 | |
| Qty. of Vertical Rebars: | 36 | Tie Spacing (in): | 11.0 | |
| Pad Rebar Yield (Ksi): | 60 | Pad Steel Rebar Size (#): | 9 | |
| Concrete Cover (in.): | 3 | Unit Weight of Concrete: | 150.0 | pcf |

Rebar at the bottom of the concrete pad:

| | | | |
|---|---|---|---|
| Qty. of Rebar in Pad (L): | 42 | Qty. of Rebar in Pad (W): | 42 |

Rebar at the top of the concrete pad:

| | | | |
|---|---|---|---|
| Qty. of Rebar in Pad (L): | 42 | Qty. of Rebar in Pad (W): | 42 |
| Apply 1.35 factor for e/w Per G: | 1.35 | | |

**Soil Design Parameters:**

| | | | | | | |
|---|---|---|---|---|---|---|
| Soil Unit Weight (pcf): | 125.0 | Soil Buoyant Weight: | 50.0 | Pcf | | |
| Water Table B.G.S. (ft): | 7.0 | Unit Weight of Water: | 62.4 | pcf | Angle from Top of Pad: | 30 |
| Ultimate Bearing Pressure (psf): | 30000 | Ultimate Skin Friction: | 425 | Psf | Angle from Bottm of Pad: | 25 |
| Consider Friction for O.T.M. (Y/N): | No | Consider Friction for bearing (Y/N): | Yes | | Angle from Bottm of Pad: | 25 |
| Consider soil hor. resist. for OTM.: | Yes | Reduction factor on the maximum soil bearing pressure: | | | 1.00 | |

**Foundation Analysis and Design:** Uplift Strength Reduction Factor: 0.75 Compression Strength Reduction Factor: 0.75

| | | | |
|---|---|---|---|
| Total Dry Soil Volume (cu. Ft.): | 2052.80 | Total Dry Soil Weight (Kips): | 256.60 |
| Total Buoyant Soil Volume (cu. Ft.): | 0.00 | Total Buoyant Soil Weight (Kips): | 0.00 |
| Total Effective Soil Weight (Kips): | 256.60 | Weight from the Concrete Block at Top (K): | 0.00 |
| Total Dry Concrete Volume (cu. Ft.): | 2341.44 | Total Dry Concrete Weight (Kips): | 351.22 |
| Total Buoyant Concrete Volume (cu. Ft.): | 0.00 | Total Buoyant Concrete Weight (Kips): | 0.00 |
| Total Effective Concrete Weight (Kips): | 351.22 | Total Vertical Load on Base (Kips): | 666.42 |

**Check Soil Capacities:**

| | | | | | Load/ Capacity Ratio | |
|---|---|---|---|---|---|---|
| Calculated Maxium Net Soil Pressure under the base (psf): | 3119 | < | Allowable Factored Soil Bearing (psf): | 22500 | 0.14 | OK! |
| Allowable Foundation Overturning Resistance (kips-ft.): | 7570.4 | > | Design Factored Momont (kips-ft): | 4391 | 0.58 | OK! |
| Factor of Safety Against Overturning (O. R. Moment/Design Moment): | 1.72 | OK! | | | | |

**Check the capacities of Reinforceing Concrete:**

| | | | | | | |
|---|---|---|---|---|---|---|
| Strength reduction factor (Flexure and axial tension): | 0.90 | Strength reduction factor (Shear): | 0.75 | | | |
| Strength reduction factor (Axial compresion): | 0.65 | Wind Load Factor on Concrete Design: | 1.00 | | | |
| | | | | Load/ Capacity Ratio | | |
| (1) Concrete Pier: | | | | | | |
| Vertical Steel Rebar Area (sq. in./each): | 1.56 | | Tie / Stirrup Area (sq. in./each): | 0.31 | | |
| Calculated Moment Capacity (Mn,Kips-Ft): | 8832.5 | > | Design Factored Moment (Mu, Kips-F | 4496.2 | 0.51 | OK! |
| Calculated Shear Capacity (Kips): | 682.6 | > | Design Factored Shear (Kips): | 33.7 | 0.05 | OK! |
| Calculated Tension Capacity (Tn, Kips): | 3032.6 | > | Design Factored Tension (Tu Kips): | 0.0 | 0.00 | OK! |
| Calculated Compression Capacity (Pn, Kips): | 7273.9 | > | Design Factored Axial Load (Pu Kips): | 58.6 | 0.01 | OK! |
| Moment & Axial Strength Combination: | 0.51 | OK! | Check Tie Spacing (Design/Required): | | 0.9167 | OK! |
| Pier Reinforcement Ratio: | 0.010 | | Reinforcement Ratio is satisfied per ACI | | | |
| (2).Concrete Pad: | | | | | | |
| One-Way Design Shear Capacity (L-Direction, Kips): | 947.4 | > | One-Way Factored Shear (L-D. Kips): | 327.5 | 0.35 | OK! |
| One-Way Design Shear Capacity (W-Direction, Kips): | 947.4 | > | One-Way Factored Shear (W-D., Kips) | 327.5 | 0.35 | OK! |
| One-Way Design Shear Capacity (Corner-Corner. Kips): | 831.8 | > | One-Way Factored Shear (C-C, Kips): | 303.8 | 0.37 | OK! |
| Lower Steel Pad Reinforcement Ratio (L-Direct. ): | 0.0036 | OK! | Lower Steel Pad Reinf. Ratio (W-Direc | 0.0036 | | |
| Lower Steel Pad Moment Capacity (L-Direction. Kips-ft): | 6953.4 | > | Moment at Bottom ( L-Dir. K-Ft): | 1986.6 | 0.29 | OK! |
| Lower Steel Pad Moment Capacity (W-Direction. Kips-ft): | 6953.4 | > | Moment at Bottom ( W-Dir. K-Ft): | 1986.6 | 0.29 | OK! |
| Lower Steel Pad Moment Capacity (Corner-Corner,K-ft): | 9724.9 | > | Moment at Bottom ( C-C Dir. K-Ft): | 2809.5 | 0.29 | OK! |
| Upper Steel Pad Reinforcement Ratio (L-Direct. ): | 0.0036 | OK! | Upper Steel Reinf. Ratio (W-Dir. ): | 0.0036 | | |
| Upper Steel Pad Moment Capacity (L-Direc. Kips-ft): | 6953.4 | > | Moment at the top (L-Dir K-Ft): | 678.2 | 0.10 | OK! |
| Upper Steel Pad Moment Capacity (W-Direc. Kips-ft): | 6953.4 | > | Moment at the top (W-Dir K-Ft): | 678.2 | 0.10 | OK! |
| Upper Steel Pad Moment Capacity (Corner-Corner. K-ft): | 9724.9 | > | Moment at the top (C-C Dir. K-Ft): | 636.3 | 0.07 | OK! |
| (3).Check Punching Shear Capacity due to Moment in the Pier: | | | | | | |
| Moment transferred by punching shear: | 1744.6 | k-ft. | Max. factored shear stress $v_{u\_CD}$: | | 4.2 | Psi |
| Max. factored shear stress $v_{u\_AB}$: | 10.2 | Psi | Factored shear Strength $\phi v_n$: | | 164.3 | Psi |
| Max. factored shear stress $v_u$: | 10.2 | Psi | Check Usage of Punching Shear Capacity: | | 0.06 | OK! |

# Exhibit E

November 17, 2021

Sherri Knapik
SBA Network Services, LLC.
134 Flanders Road, Suite 125
Westborough, MA 01581
(508) 251-0720 x 3805

B+T Group
1717 S. Boulder, Suite 300
Tulsa, OK 74119
(918) 587-4630
btwo@btgrp.com

| | | |
|---|---|---|
| **Subject:** | **Appurtenance Mount Analysis Report** | |
| ***Carrier Designation:*** | ***Dish Wireless* Co-Locate** | |
| | **Site Number:** | BOBOS00046A |
| | **Site Name:** | SBA - Old Tatnic Hill Road |
| ***SBA Network Services Designation:*** | **Site Number:** | CT01915-S |
| | **Site Name:** | South Brooklyn |
| | **Application Number:** | 173263, v1 |
| ***Engineering Firm Designation:*** | **B+T Group Project Number:** | 149435.003.01 |
| ***Site Data:*** | **100 Old Tatnic Hill Road, Brooklyn, CT, 06234, Windham County**<br>**Latitude *41.76716*°, Longitude *-71.97194*°**<br>**Monopole**<br>**8 ft. Platform Mount** | |

Dear Ms. Knapik,

*B+T Group* is pleased to submit this **"Appurtenance Mount Analysis Report"** to determine the structural integrity of the antenna mount on the above-mentioned structure.

The purpose of the analysis is to determine acceptability of the mount's stress level. Based on our analysis we have determined the stress level for the mount under the following load case to be:

| | |
|---|---|
| Proposed Equipment<br>Note: See Table 1 for the final loading configuration | **Sufficient Capacity**<br>**(Passing at 48.7%)** |

This analysis utilizes an ultimate 3-second gust wind speed of 122 mph as required by the 2018 Connecticut State Building Code(2018 IBC). Applicable Standard references and design criteria are listed in Section 2 - Analysis Criteria.

All the equipment proposed in this report shall be installed in accordance with the drawings for the determined available structural capacity to be effective.

We at *B+T Group* appreciate the opportunity of providing our continuing professional services to you and *SBA Network Services, LLC*. If you have any questions or need further assistance on this or any other projects, please give us a call.

Mount structural analysis prepared by: Chris Guidry

Respectfully submitted by: B&T Engineering, Inc.
COA: PEC.0001564 Expires: 02/10/2022

Chad E. Tuttle, P.E.

11/17/21

## TABLE OF CONTENTS

**1) INTRODUCTION**

**2) ANALYSIS CRITERIA**
Table 1 - Proposed Equipment Information
Table 2 - Documents Provided

**3) ANALYSIS PROCEDURE**
3.1) Analysis Method
3.2) Assumptions

**4) ANALYSIS RESULTS**
Table 3 – Mount Component Stresses vs. Capacity

**5) RECOMMENDATIONS**

**6) APPENDIX A**
RISA-3D Output

**7) APPENDIX B**
Additional Calculations

## 1) INTRODUCTION

The appurtenance mount consists of Commscope platform mount (Part #MC-PK8-DSH) at 110 ft., attached to monopole at 100 Old Tatnic Hill Road, Brooklyn, CT, 06234, Windham County. The proposed antenna loading information was obtained from SBA Network Services, LLC. All information provided to B+T Group was assumed accurate and complete.

## 2) ANALYSIS CRITERIA

The structural analysis was performed for this mount in accordance with the ANSI/TIA-222-H-2017 Structural Standard for Antenna Supporting Structures and Antennas and Small Wind Turbine Support Structures using a 3-second gust wind speed of 122 mph with no ice and 50 mph with 1 inch escalated ice thickness Exposure category B & Topographic Category 1 and Risk Category II were used in the analysis. In addition, the platform mount has been analyzed for various live loading conditions consisting of a 250-lb man live load applied individually at the midpoint and cantilevered ends of horizontal members as well as a 500-pound man live load applied individually at mount pipe locations using a 3-second gust of 30mph. The mount was analyzed under 30º increments in the wind direction. The analyzed loading is detailed in Table 1.

**Table 1 – Proposed Equipment Information**

| Loading | RAD Center Elev. (ft.) | Position | Qty. | Description | Note |
|---|---|---|---|---|---|
| Proposed | 110 | 1 | 3 | Commscope FFVV-65B-R2 | 1 |
| | | | 3 | Fujitsu TA08025-B605 | 2 |
| | | | 3 | Fujitsu TA08025-B604 | |
| | | - | 1 | Raycap RDIDC-9181-PF-48 | 3 |

Note:
1) Proposed Antenna to be installed on the Proposed Mount Pipe.
2) Proposed Equipment to be installed directly behind the Antenna
3) Proposed Equipment to be installed on Mount.

**Table 2 - Documents Provided**

| Documents | Remarks | Reference | Source |
|---|---|---|---|
| SBA Application | Proposed Loading | Date: 11/15/2021 | SBA Network Services, LLC. |
| RFDS | | Date: 09/27/2021 | |

## 3) ANALYSIS PROCEDURE

### 3.1) Analysis Method

RISA-3D (Version 19.0.4), a commercially available analysis software package, was used to create a three-dimensional model of the mount and calculate member stresses and deflections for various loading cases. Selected output from the analysis is included in Appendix A.

Manufacturer's drawings were used to create the model.

### 3.2) Assumptions

1. The mount was built in accordance with the manufacturer's specifications.
2. The mount has been maintained in accordance with the manufacturer's specifications and is free of damage.
3. The configuration of antennas and other appurtenances are as specified in Table 1.
4. All mount components have been assumed to be in sufficient condition to carry their full design capacity for the analysis.
5. Mount areas and weights are determined from field measurements, standard material properties, and/or manufacturer product data.

6. Serviceability with respect to antenna twist, tilt, roll or lateral translation is not checked and is left to the carrier or tower owner to ensure conformance.
7. All prior structural modifications, if any are assumed to be correctly installed and fully effective.
8. All member connections are assumed to have been designed to meet or exceed the load carrying capacity of the connected member unless otherwise specified in this report.
9. The following material grades were assumed (Unless Noted Otherwise):
   a) Connection Bolts : ASTM A325
   b) Steel Pipe : ASTM A53 (GR. 35)
   c) HSS (Round) : ASTM 500 (GR. B-42)
   d) HSS (Rectangular) : ASTM 500 (GR. B-46)
   e) Channel : ASTM A36 (GR. 36)
   f) Steel Solid Rod : ASTM A36 (GR. 36)
   g) Steel Plate : ASTM A36 (GR. 36)
   h) Steel Angle : ASTM A36 (GR. 36)
   i) UNISTRUT : ASTM A570 (GR. 33)

This analysis may be affected if any assumptions are not valid or have been made in error. B+T Group should be notified to determine the effect on the structural integrity of the antenna mounting system.

## 4) ANALYSIS RESULTS

**Table 3 – Mount Component Stresses vs. Capacity**

| Notes | Component | Elevation (ft.) | % Capacity | Pass / Fail |
|---|---|---|---|---|
| - | Main Horizontals | 110 | 7.2 | Pass |
| - | Support Rails | 110 | 13.1 | Pass |
| - | Support Tubes | 110 | 48.7 | Pass |
| - | Support Channels | 110 | 33.9 | Pass |
| - | Support Angles | 110 | 34.2 | Pass |
| - | Mount Pipes | 110 | 14.5 | Pass |
| - | Connection Plates | 110 | 19.9 | Pass |
| - | Connection Angles | 110 | 21.9 | Pass |

## 5) RECOMMENDATIONS

The Commscope platform mount, Part #MC-PK8-DSH has sufficient capacity to carry the proposed loads and is in compliance with the ANSI/TIA-222-H standard for the proposed loading. (Refer to the RISA output for the specific members).

# APPENDIX A

(RISA-3D Output)

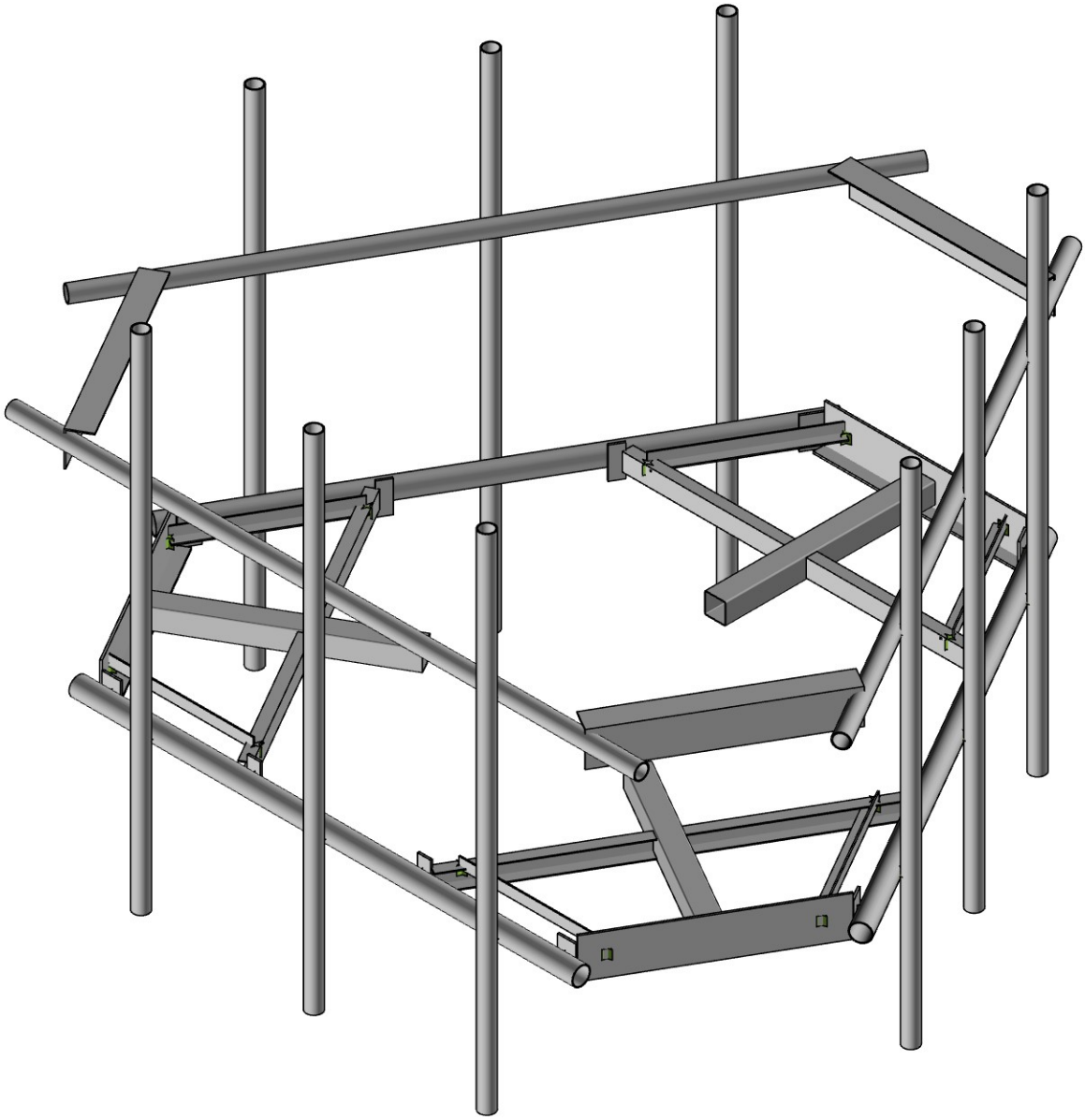


Envelope Only Solution

| | | |
|---|---|---|
| B+T Group | CT01915-S - South Brooklyn | SK-1 |
| AS | | Nov 17, 2021 |
| 149435.003.01 | | 149435_003_01_South Brooklyn_… |

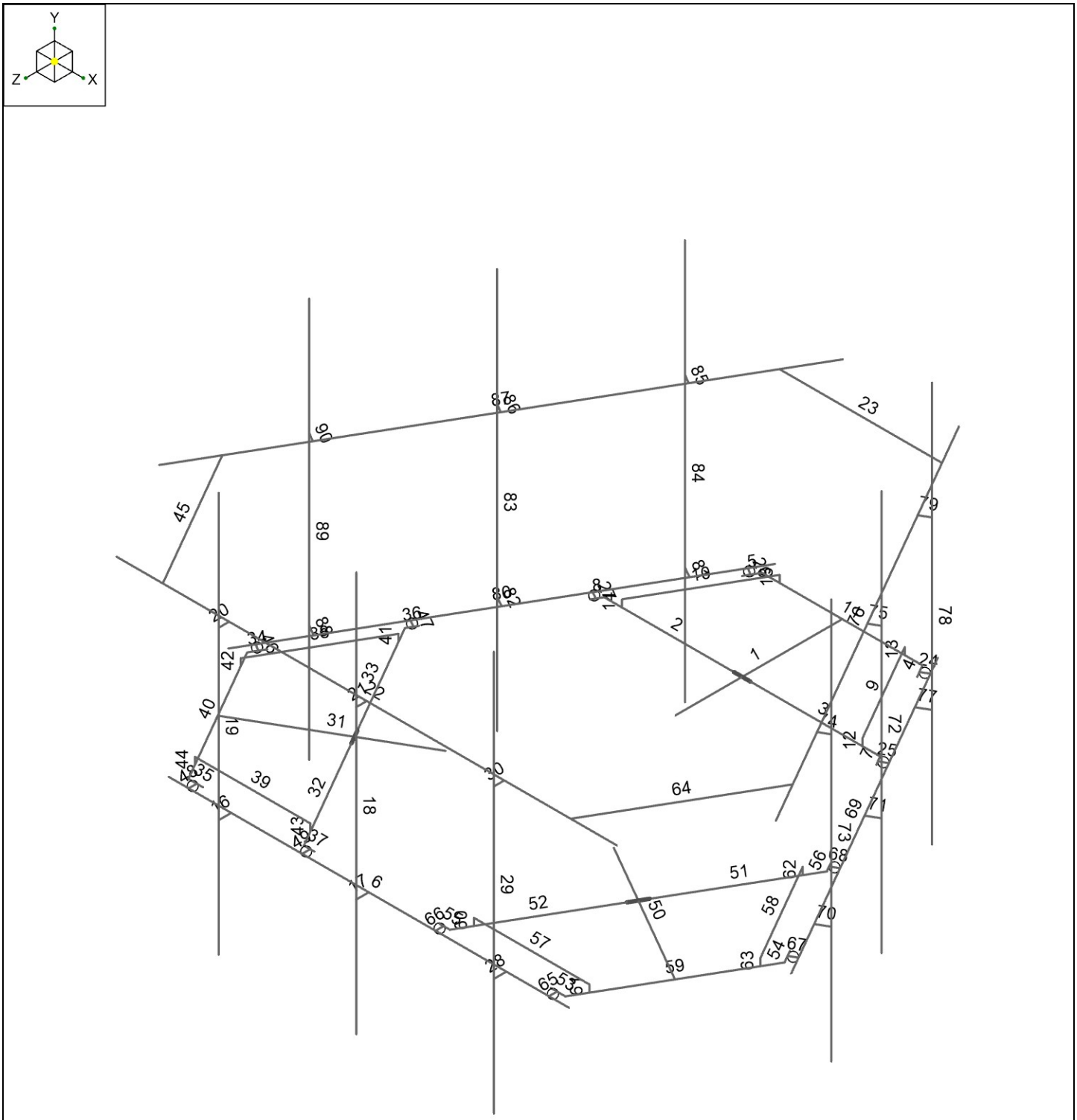


Envelope Only Solution

| | | |
|---|---|---|
| B+T Group | CT01915-S - South Brooklyn | SK-2 |
| AS | | Nov 17, 2021 |
| 149435.003.01 | | 149435_003_01_South Brooklyn_… |

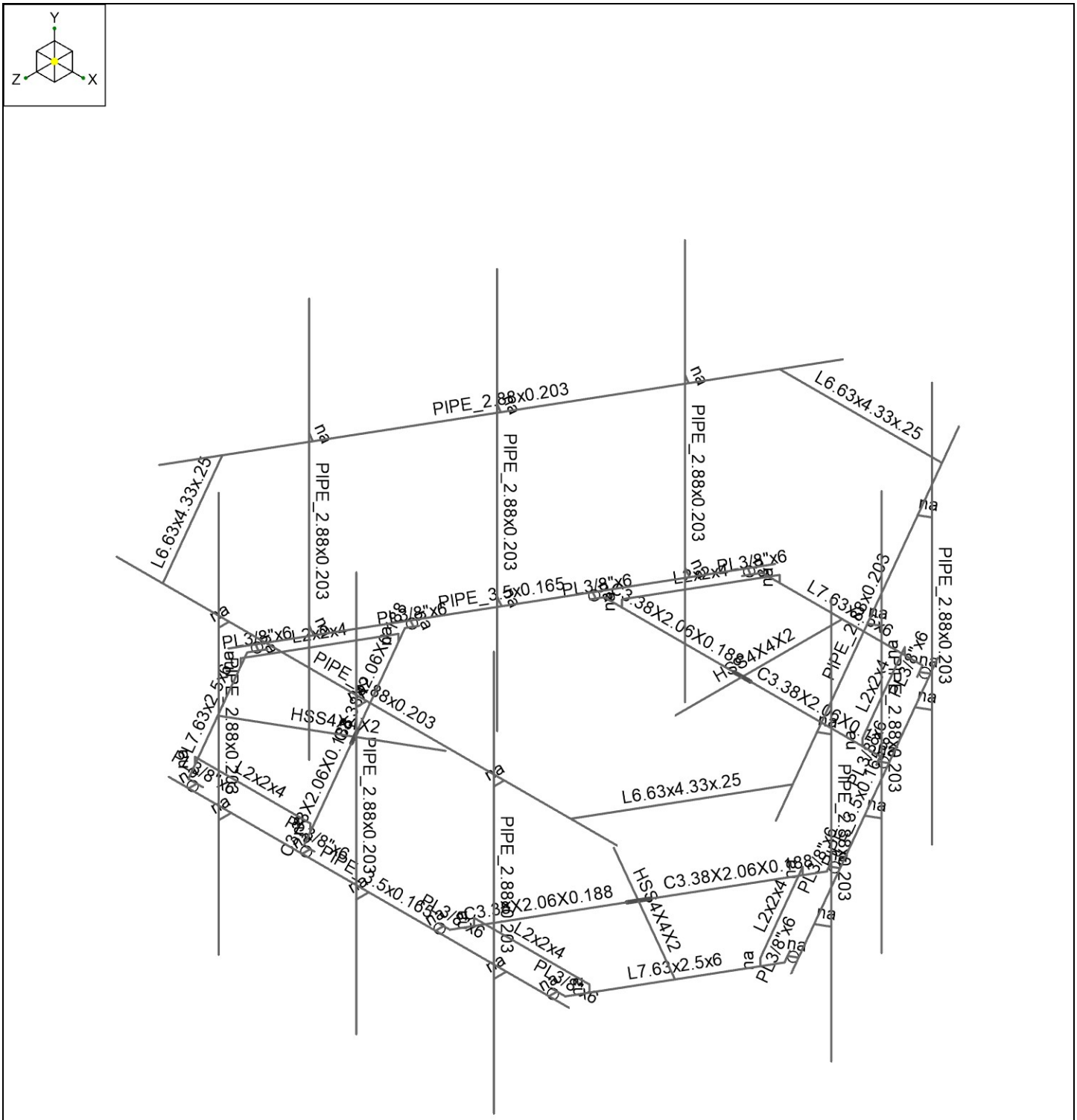


Envelope Only Solution

| | | |
|---|---|---|
| B+T Group | CT01915-S - South Brooklyn | SK-3 |
| AS | | Nov 17, 2021 |
| 149435.003.01 | | 149435_003_01_South Brooklyn_… |

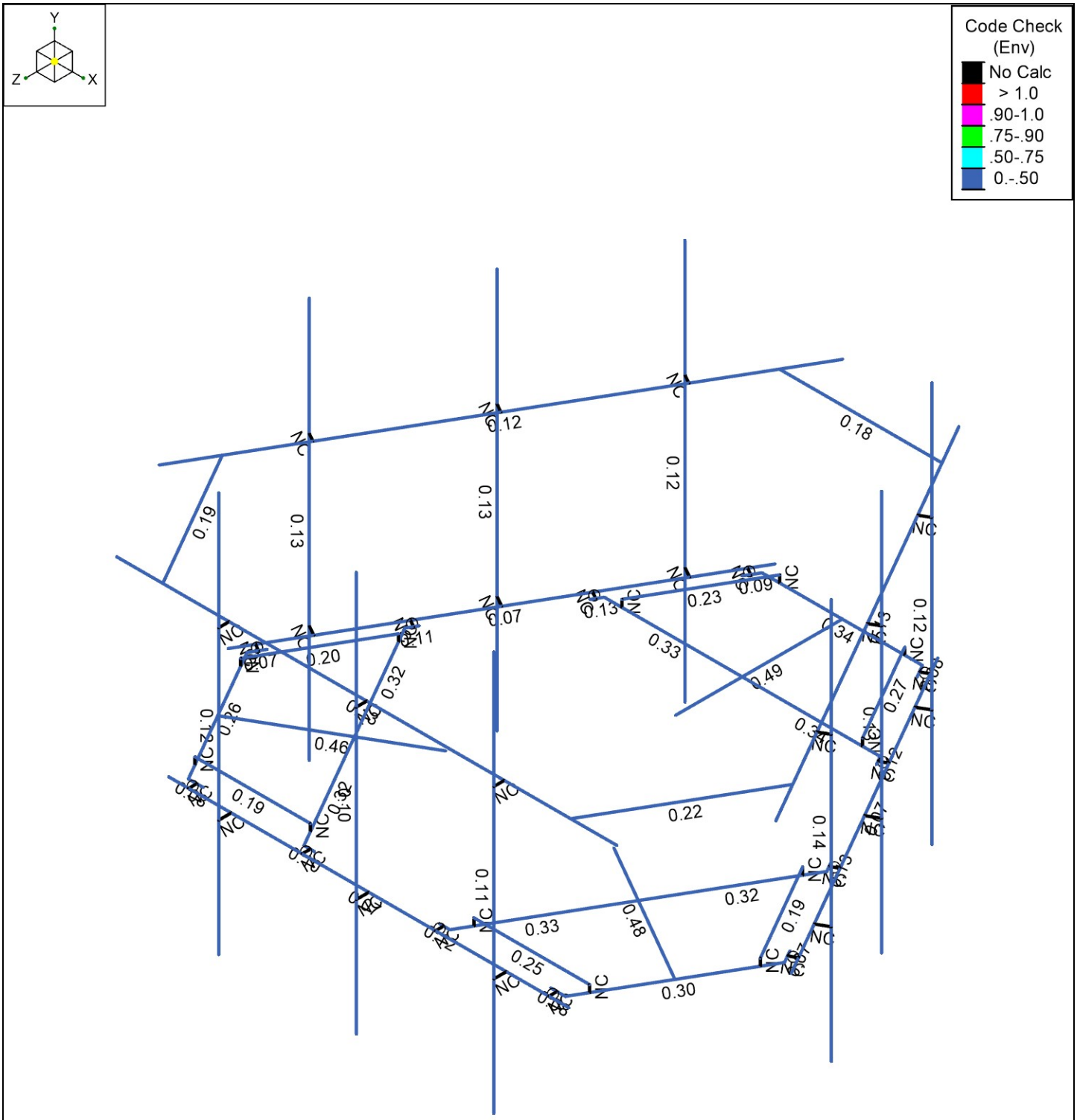


Member Code Checks Displayed (Enveloped)
Envelope Only Solution

| | | |
|---|---|---|
| B+T Group | CT01915-S - South Brooklyn | SK-4 |
| AS | | Nov 17, 2021 |
| 149435.003.01 | | 149435_003_01_South Brooklyn_… |

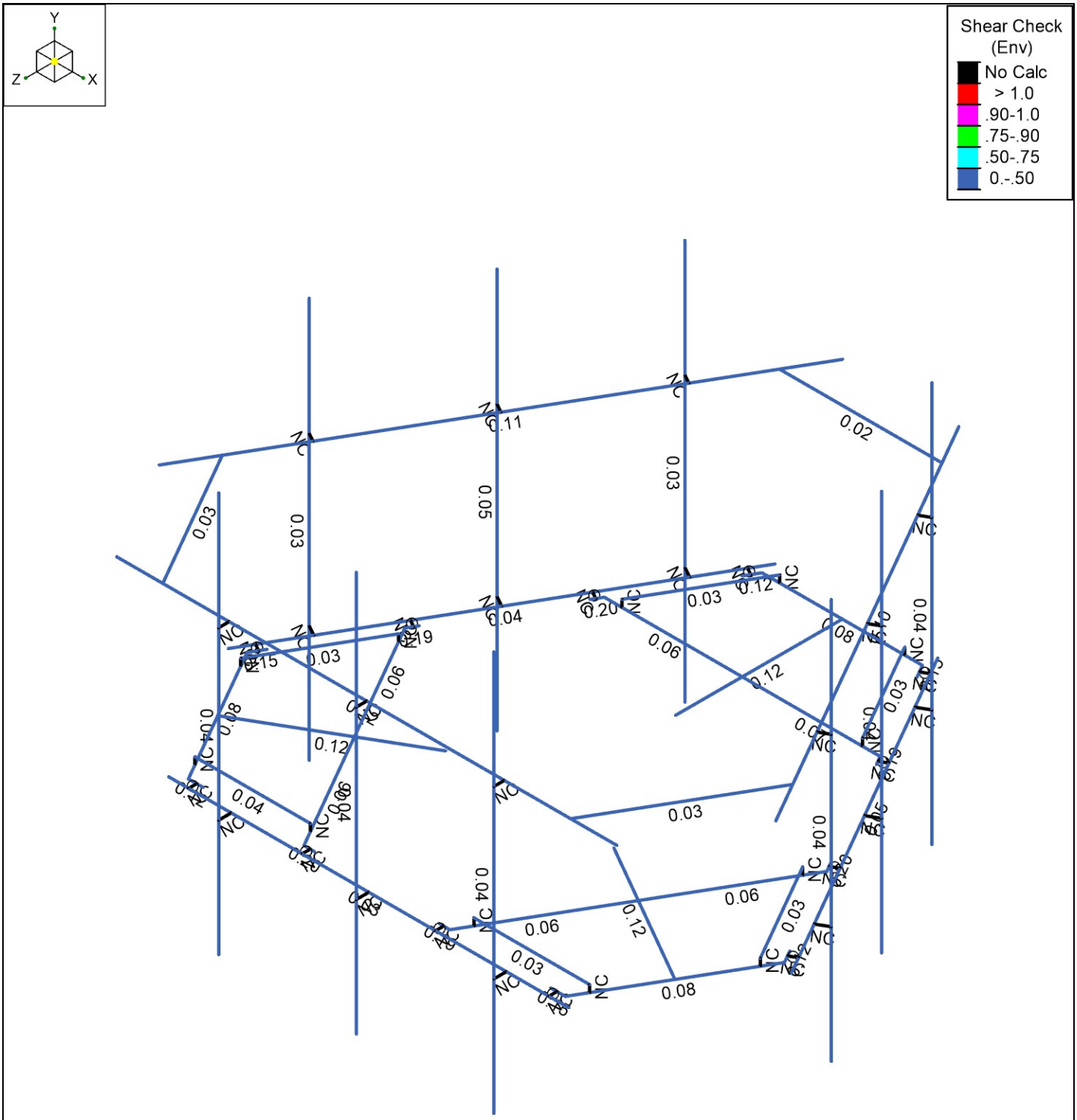


Member Shear Checks Displayed (Enveloped)
Envelope Only Solution

| | | |
|---|---|---|
| B+T Group | CT01915-S - South Brooklyn | SK-5 |
| AS | | Nov 17, 2021 |
| 149435.003.01 | | 149435_003_01_South Brooklyn_… |

***Node Coordinates***

| | Label | X [ft] | Y [ft] | Z [ft] | Detach From Diaphragm |
|---|---|---|---|---|---|
| 1 | 1 | 0 | 0 | -1.942965 | |
| 2 | 2 | 0 | 0 | -5.276298 | |
| 3 | 3 | 0 | 0 | -3.276298 | |
| 4 | 4 | 2.758333 | 0 | -3.276298 | |
| 5 | 5 | -2.758333 | 0 | -3.276298 | |
| 6 | 6 | -1.603633 | 0 | -5.276298 | |
| 7 | 7 | 1.603633 | 0 | -5.276298 | |
| 8 | 8 | 1.749466 | 0 | -5.023708 | |
| 9 | 9 | -1.749466 | 0 | -5.023708 | |
| 10 | 10 | 1.686966 | 0 | -5.131961 | |
| 11 | 11 | 1.826662 | 0 | -5.212614 | |
| 12 | 12 | -1.686966 | 0 | -5.131961 | |
| 13 | 13 | -1.826662 | 0 | -5.212614 | |
| 14 | 14 | -3.999998 | 0 | 4.188243 | |
| 15 | 15 | 3.999998 | 0 | 4.188243 | |
| 16 | 16 | 2.8625 | 0 | -3.095876 | |
| 17 | 17 | 2.820833 | 0 | -3.168046 | |
| 18 | 18 | 2.960529 | 0 | -3.248699 | |
| 19 | 19 | -2.8625 | 0 | -3.095876 | |
| 20 | 20 | -2.820833 | 0 | -3.168046 | |
| 21 | 21 | -2.960529 | 0 | -3.248699 | |
| 22 | 22 | -1.25 | 0.140833 | -5.276298 | |
| 23 | 23 | -2.404701 | 0.140833 | -3.276298 | |
| 24 | 24 | 2.404701 | 0.140833 | -3.276298 | |
| 25 | 25 | 1.25 | 0.140833 | -5.276298 | |
| 26 | 26 | -1.25 | 0 | -5.276298 | |
| 27 | 27 | -2.404701 | 0 | -3.276298 | |
| 28 | 28 | 2.404701 | 0 | -3.276298 | |
| 29 | 29 | 1.25 | 0 | -5.276298 | |
| 30 | 30 | -2.749998 | 0 | 4.188243 | |
| 31 | 31 | 0.000002 | 0 | 4.188243 | |
| 32 | 32 | -2.749998 | 0 | 4.438243 | |
| 33 | 33 | 0.000002 | 0 | 4.438243 | |
| 34 | 34 | -2.749998 | 5.666663 | 4.438243 | |
| 35 | 35 | 0.000002 | 5.666663 | 4.438243 | |
| 36 | 36 | -2.749998 | -2.333337 | 4.438243 | |
| 37 | 37 | 0.000002 | -2.333337 | 4.438243 | |
| 38 | 38 | -2.749998 | 3.33333 | 4.438243 | |
| 39 | 39 | 0.000002 | 3.33333 | 4.438243 | |
| 40 | 40 | -2.749998 | 3.33333 | 4.229909 | |
| 41 | 41 | 0.000002 | 3.33333 | 4.229909 | |
| 42 | 42 | -5 | 3.33333 | 4.229909 | |
| 43 | 43 | 5 | 3.33333 | 4.229909 | |
| 44 | 44 | 1.624827 | 3.33333 | -5.645537 | |
| 45 | 45 | -1.624827 | 3.33333 | -5.645537 | |
| 46 | 46 | 2.749998 | 0 | 4.188243 | |
| 47 | 47 | 2.749998 | 0 | 4.438243 | |
| 48 | 48 | 2.749998 | 5.666663 | 4.438243 | |
| 49 | 49 | 2.749998 | -2.333337 | 4.438243 | |
| 50 | 50 | 2.749998 | 3.33333 | 4.438243 | |
| 51 | 51 | 2.749998 | 3.33333 | 4.229909 | |
| 52 | 52 | 0 | 0 | 0 | |
| 53 | 53 | -1.682657 | 0 | 0.971482 | |
| 54 | 54 | -4.569408 | 0 | 2.638149 | |
| 55 | 55 | -2.837358 | 0 | 1.638149 | |

***Node Coordinates (Continued)***

| | Label | X [ft] | Y [ft] | Z [ft] | Detach From Diaphragm |
|---|---|---|---|---|---|
| 56 | 56 | -4.216524 | 0 | -0.750638 | |
| 57 | 57 | -1.458191 | 0 | 4.026936 | |
| 58 | 58 | -3.767592 | 0 | 4.026936 | |
| 59 | 59 | -5.371225 | 0 | 1.249362 | |
| 60 | 60 | -5.225391 | 0 | 0.996772 | |
| 61 | 61 | -3.475925 | 0 | 4.026936 | |
| 62 | 62 | -5.287891 | 0 | 1.105025 | |
| 63 | 63 | -5.427587 | 0 | 1.024371 | |
| 64 | 64 | -3.600925 | 0 | 4.026936 | |
| 65 | 65 | -3.600925 | 0 | 4.188243 | |
| 66 | 66 | -4.112358 | 0 | -0.93106 | |
| 67 | 67 | -4.154025 | 0 | -0.85889 | |
| 68 | 68 | -4.293721 | 0 | -0.939543 | |
| 69 | 69 | -1.249858 | 0 | 4.026936 | |
| 70 | 70 | -1.333192 | 0 | 4.026936 | |
| 71 | 71 | -1.333192 | 0 | 4.188243 | |
| 72 | 72 | -3.944408 | 0.140833 | 3.720681 | |
| 73 | 73 | -1.635007 | 0.140833 | 3.720681 | |
| 74 | 74 | -4.039708 | 0.140833 | -0.444383 | |
| 75 | 75 | -5.194408 | 0.140833 | 1.555617 | |
| 76 | 76 | -3.944408 | 0 | 3.720681 | |
| 77 | 77 | -1.635007 | 0 | 3.720681 | |
| 78 | 78 | -4.039708 | 0 | -0.444383 | |
| 79 | 79 | -5.194408 | 0 | 1.555617 | |
| 80 | 80 | -5.701591 | 3.33333 | 1.415627 | |
| 81 | 81 | -4.076765 | 3.33333 | 4.229909 | |
| 82 | 82 | 1.682657 | 0 | 0.971482 | |
| 83 | 83 | 4.569408 | 0 | 2.638149 | |
| 84 | 84 | 2.837358 | 0 | 1.638149 | |
| 85 | 85 | 1.458191 | 0 | 4.026936 | |
| 86 | 86 | 4.216524 | 0 | -0.750638 | |
| 87 | 87 | 5.371225 | 0 | 1.249362 | |
| 88 | 88 | 3.767592 | 0 | 4.026936 | |
| 89 | 89 | 3.475925 | 0 | 4.026936 | |
| 90 | 90 | 5.225391 | 0 | 0.996772 | |
| 91 | 91 | 3.600925 | 0 | 4.026936 | |
| 92 | 92 | 3.600925 | 0 | 4.188243 | |
| 93 | 93 | 5.287891 | 0 | 1.105025 | |
| 94 | 94 | 5.427587 | 0 | 1.024371 | |
| 95 | 95 | 1.249858 | 0 | 4.026936 | |
| 96 | 96 | 1.333192 | 0 | 4.026936 | |
| 97 | 97 | 1.333192 | 0 | 4.188243 | |
| 98 | 98 | 4.112358 | 0 | -0.93106 | |
| 99 | 99 | 4.154025 | 0 | -0.85889 | |
| 100 | 100 | 4.293721 | 0 | -0.939543 | |
| 101 | 101 | 5.194408 | 0.140833 | 1.555617 | |
| 102 | 102 | 4.039708 | 0.140833 | -0.444383 | |
| 103 | 103 | 1.635007 | 0.140833 | 3.720681 | |
| 104 | 104 | 3.944408 | 0.140833 | 3.720681 | |
| 105 | 105 | 5.194408 | 0 | 1.555617 | |
| 106 | 106 | 4.039708 | 0 | -0.444383 | |
| 107 | 107 | 1.635007 | 0 | 3.720681 | |
| 108 | 108 | 3.944408 | 0 | 3.720681 | |
| 109 | 109 | 4.076765 | 3.33333 | 4.229909 | |
| 110 | 110 | 5.701591 | 3.33333 | 1.415627 | |

***Node Coordinates (Continued)***

| | Label | X [ft] | Y [ft] | Z [ft] | Detach From Diaphragm |
|---|---|---|---|---|---|
| 111 | 111 | 5.627124 | 0 | 1.369979 | |
| 112 | 112 | 1.627126 | 0 | -5.558221 | |
| 113 | 113 | 5.002124 | 0 | 0.287447 | |
| 114 | 114 | 3.627124 | 0 | -2.094123 | |
| 115 | 115 | 5.21863 | 0 | 0.162447 | |
| 116 | 116 | 3.84363 | 0 | -2.219123 | |
| 117 | 117 | 5.21863 | 5.666663 | 0.162447 | |
| 118 | 118 | 3.84363 | 5.666663 | -2.219123 | |
| 119 | 119 | 5.21863 | -2.333337 | 0.162447 | |
| 120 | 120 | 3.84363 | -2.333337 | -2.219123 | |
| 121 | 121 | 5.21863 | 3.33333 | 0.162447 | |
| 122 | 122 | 3.84363 | 3.33333 | -2.219123 | |
| 123 | 123 | 5.038208 | 3.33333 | 0.266613 | |
| 124 | 124 | 3.663208 | 3.33333 | -2.114956 | |
| 125 | 125 | 6.163209 | 3.33333 | 2.215172 | |
| 126 | 126 | 1.163209 | 3.33333 | -6.445082 | |
| 127 | 127 | 2.252126 | 0 | -4.47569 | |
| 128 | 128 | 2.468632 | 0 | -4.60069 | |
| 129 | 129 | 2.468632 | 5.666663 | -4.60069 | |
| 130 | 130 | 2.468632 | -2.333337 | -4.60069 | |
| 131 | 131 | 2.468632 | 3.33333 | -4.60069 | |
| 132 | 132 | 2.28821 | 3.33333 | -4.496523 | |
| 133 | 133 | -1.627126 | 0 | -5.558221 | |
| 134 | 134 | -5.627124 | 0 | 1.369979 | |
| 135 | 135 | -2.252126 | 0 | -4.47569 | |
| 136 | 136 | -3.627126 | 0 | -2.09412 | |
| 137 | 137 | -2.468632 | 0 | -4.60069 | |
| 138 | 138 | -3.843632 | 0 | -2.21912 | |
| 139 | 139 | -2.468632 | 5.666663 | -4.60069 | |
| 140 | 140 | -3.843632 | 5.666663 | -2.21912 | |
| 141 | 141 | -2.468632 | -2.333337 | -4.60069 | |
| 142 | 142 | -3.843632 | -2.333337 | -2.21912 | |
| 143 | 143 | -2.468632 | 3.33333 | -4.60069 | |
| 144 | 144 | -3.843632 | 3.33333 | -2.21912 | |
| 145 | 145 | -2.28821 | 3.33333 | -4.496523 | |
| 146 | 146 | -3.66321 | 3.33333 | -2.114953 | |
| 147 | 147 | -1.163209 | 3.33333 | -6.445082 | |
| 148 | 148 | -6.163209 | 3.33333 | 2.215172 | |
| 149 | 149 | -5.002124 | 0 | 0.287447 | |
| 150 | 150 | -5.21863 | 0 | 0.162447 | |
| 151 | 151 | -5.21863 | 5.666663 | 0.162447 | |
| 152 | 152 | -5.21863 | -2.333337 | 0.162447 | |
| 153 | 153 | -5.21863 | 3.33333 | 0.162447 | |
| 154 | 154 | -5.038208 | 3.33333 | 0.266613 | |

***Node Boundary Conditions***

| | Node Label | X [k/in] | Y [k/in] | Z [k/in] | X Rot [k-ft/rad] | Y Rot [k-ft/rad] | Z Rot [k-ft/rad] |
|---|---|---|---|---|---|---|---|
| 1 | 1 | Reaction | Reaction | Reaction | Reaction | Reaction | Reaction |
| 2 | 2 | | | | | | |
| 3 | 3 | | | | | | |
| 4 | 4 | | | | | | |
| 5 | 5 | | | | | | |
| 6 | 16 | | | | | | |
| 7 | 17 | | | | | | |
| 8 | 19 | | | | | | |

### Node Boundary Conditions (Continued)

| | Node Label | X [k/in] | Y [k/in] | Z [k/in] | X Rot [k-ft/rad] | Y Rot [k-ft/rad] | Z Rot [k-ft/rad] |
|---|---|---|---|---|---|---|---|
| 9 | 20 | | | | | | |
| 10 | 22 | | | | | | |
| 11 | 25 | | | | | | |
| 12 | 26 | | | | | | |
| 13 | 29 | | | | | | |
| 14 | 53 | Reaction | Reaction | Reaction | Reaction | Reaction | Reaction |
| 15 | 54 | | | | | | |
| 16 | 55 | | | | | | |
| 17 | 56 | | | | | | |
| 18 | 57 | | | | | | |
| 19 | 66 | | | | | | |
| 20 | 67 | | | | | | |
| 21 | 69 | | | | | | |
| 22 | 70 | | | | | | |
| 23 | 72 | | | | | | |
| 24 | 75 | | | | | | |
| 25 | 76 | | | | | | |
| 26 | 79 | | | | | | |
| 27 | 82 | Reaction | Reaction | Reaction | Reaction | Reaction | Reaction |
| 28 | 83 | | | | | | |
| 29 | 84 | | | | | | |
| 30 | 85 | | | | | | |
| 31 | 86 | | | | | | |
| 32 | 95 | | | | | | |
| 33 | 96 | | | | | | |
| 34 | 98 | | | | | | |
| 35 | 99 | | | | | | |
| 36 | 101 | | | | | | |
| 37 | 104 | | | | | | |
| 38 | 105 | | | | | | |
| 39 | 108 | | | | | | |

### Hot Rolled Steel Properties

| | Label | E [ksi] | G [ksi] | Nu | Therm. Coeff. [1e⁵°F⁻¹] | Density [k/ft³] | Yield [ksi] | Ry | Fu [ksi] | Rt |
|---|---|---|---|---|---|---|---|---|---|---|
| 1 | A992 | 29000 | 11154 | 0.3 | 0.65 | 0.49 | 50 | 1.1 | 65 | 1.1 |
| 2 | A36 Gr.36 | 29000 | 11154 | 0.3 | 0.65 | 0.49 | 36 | 1.5 | 58 | 1.2 |
| 3 | A572 Gr.50 | 29000 | 11154 | 0.3 | 0.65 | 0.49 | 50 | 1.1 | 65 | 1.1 |
| 4 | A500 Gr.B RND | 29000 | 11154 | 0.3 | 0.65 | 0.527 | 42 | 1.4 | 58 | 1.3 |
| 5 | A500 Gr.B Rect | 29000 | 11154 | 0.3 | 0.65 | 0.527 | 46 | 1.4 | 58 | 1.3 |
| 6 | A53 Gr.B | 29000 | 11154 | 0.3 | 0.65 | 0.49 | 35 | 1.6 | 60 | 1.2 |
| 7 | A1085 | 29000 | 11154 | 0.3 | 0.65 | 0.49 | 50 | 1.4 | 65 | 1.3 |
| 8 | A500 Gr.C | 29000 | 11154 | 0.3 | 0.65 | 0.49 | 46 | 1.4 | 62 | 1.3 |

### Hot Rolled Steel Section Sets

| | Label | Shape | Type | Design List | Material | Design Rule | Area [in²] | Iyy [in⁴] | Izz [in⁴] | J [in⁴] |
|---|---|---|---|---|---|---|---|---|---|---|
| 1 | MF-H1 | PIPE_3.5x0.165 | Beam | Pipe | A500 Gr.C | Typical | 1.729 | 2.409 | 2.409 | 4.819 |
| 2 | MF-H2 | PIPE_2.88x0.203 | Beam | Pipe | A500 Gr.C | Typical | 1.707 | 1.538 | 1.538 | 3.076 |
| 3 | SF-H1 | HSS4X4X2 | Beam | Tube | A500 Gr.B Rect | Typical | 1.77 | 4.4 | 4.4 | 6.91 |
| 4 | SF-H2 | C3.38X2.06X0.188 | Beam | Channel | A36 Gr.36 | Typical | 1.339 | 0.562 | 2.4 | 0.015 |
| 5 | SF-H3 | L2x2x4 | Beam | Single Angle | A36 Gr.36 | Typical | 0.944 | 0.346 | 0.346 | 0.021 |
| 6 | SF-H4 | L7.63x2.5x6 | Beam | Single Angle | A36 Gr.36 | Typical | 3.658 | 1.307 | 22.092 | 0.163 |
| 7 | MF-P1 | PIPE_2.88x0.203 | Column | Pipe | A500 Gr.C | Typical | 1.707 | 1.538 | 1.538 | 3.076 |
| 8 | MF-CP1 | PL3/8"x6 | Beam | RECT | A36 Gr.36 | Typical | 2.25 | 0.026 | 6.75 | 0.101 |

***Hot Rolled Steel Section Sets (Continued)***

| | Label | Shape | Type | Design List | Material | Design Rule | Area [in²] | Iyy [in⁴] | Izz [in⁴] | J [in⁴] |
|---|---|---|---|---|---|---|---|---|---|---|
| 9 | MF-H3 | L6.63x4.33x.25 | Beam | Single Angle | A36 Gr.36 | Typical | 2.678 | 4.383 | 12.502 | 0.054 |

***Member Primary Data***

| | Label | I Node | J Node | Rotate(deg) | Section/Shape | Type | Design List | Material | Design Rule |
|---|---|---|---|---|---|---|---|---|---|
| 1 | 1 | 1 | 2 | | SF-H1 | Beam | Tube | A500 Gr.B Rect | Typical |
| 2 | 2 | 5 | 3 | 180 | SF-H2 | Beam | Channel | A36 Gr.36 | Typical |
| 3 | 3 | 3 | 4 | 180 | SF-H2 | Beam | Channel | A36 Gr.36 | Typical |
| 4 | 4 | 7 | 8 | | MF-CP1 | Beam | RECT | A36 Gr.36 | Typical |
| 5 | 5 | 6 | 9 | | MF-CP1 | Beam | RECT | A36 Gr.36 | Typical |
| 6 | 6 | 14 | 15 | | MF-H1 | Beam | Pipe | A500 Gr.C | Typical |
| 7 | 7 | 16 | 4 | | MF-CP1 | Beam | RECT | A36 Gr.36 | Typical |
| 8 | 8 | 5 | 19 | | MF-CP1 | Beam | RECT | A36 Gr.36 | Typical |
| 9 | 9 | 25 | 24 | | SF-H3 | Beam | Single Angle | A36 Gr.36 | Typical |
| 10 | 10 | 23 | 22 | | SF-H3 | Beam | Single Angle | A36 Gr.36 | Typical |
| 11 | 11 | 6 | 7 | | SF-H4 | Beam | Single Angle | A36 Gr.36 | Typical |
| 12 | 12 | 28 | 24 | | RIGID | None | None | RIGID | Typical |
| 13 | 13 | 29 | 25 | | RIGID | None | None | RIGID | Typical |
| 14 | 14 | 27 | 23 | | RIGID | None | None | RIGID | Typical |
| 15 | 15 | 26 | 22 | | RIGID | None | None | RIGID | Typical |
| 16 | 16 | 32 | 30 | | RIGID | None | None | RIGID | Typical |
| 17 | 17 | 33 | 31 | | RIGID | None | None | RIGID | Typical |
| 18 | 18 | 35 | 37 | | MF-P1 | Column | Pipe | A500 Gr.C | Typical |
| 19 | 19 | 34 | 36 | | MF-P1 | Column | Pipe | A500 Gr.C | Typical |
| 20 | 20 | 38 | 40 | | RIGID | None | None | RIGID | Typical |
| 21 | 21 | 39 | 41 | | RIGID | None | None | RIGID | Typical |
| 22 | 22 | 42 | 43 | | MF-H2 | Beam | Pipe | A500 Gr.C | Typical |
| 23 | 23 | 44 | 45 | 180 | MF-H3 | Beam | Single Angle | A36 Gr.36 | Typical |
| 24 | 24 | 11 | 10 | | RIGID | None | None | RIGID | Typical |
| 25 | 25 | 18 | 17 | | RIGID | None | None | RIGID | Typical |
| 26 | 26 | 13 | 12 | | RIGID | None | None | RIGID | Typical |
| 27 | 27 | 21 | 20 | | RIGID | None | None | RIGID | Typical |
| 28 | 28 | 47 | 46 | | RIGID | None | None | RIGID | Typical |
| 29 | 29 | 48 | 49 | | MF-P1 | Column | Pipe | A500 Gr.C | Typical |
| 30 | 30 | 50 | 51 | | RIGID | None | None | RIGID | Typical |
| 31 | 31 | 53 | 54 | | SF-H1 | Beam | Tube | A500 Gr.B Rect | Typical |
| 32 | 32 | 57 | 55 | 180 | SF-H2 | Beam | Channel | A36 Gr.36 | Typical |
| 33 | 33 | 55 | 56 | 180 | SF-H2 | Beam | Channel | A36 Gr.36 | Typical |
| 34 | 34 | 59 | 60 | | MF-CP1 | Beam | RECT | A36 Gr.36 | Typical |
| 35 | 35 | 58 | 61 | | MF-CP1 | Beam | RECT | A36 Gr.36 | Typical |
| 36 | 36 | 66 | 56 | | MF-CP1 | Beam | RECT | A36 Gr.36 | Typical |
| 37 | 37 | 57 | 69 | | MF-CP1 | Beam | RECT | A36 Gr.36 | Typical |
| 38 | 38 | 75 | 74 | | SF-H3 | Beam | Single Angle | A36 Gr.36 | Typical |
| 39 | 39 | 73 | 72 | | SF-H3 | Beam | Single Angle | A36 Gr.36 | Typical |
| 40 | 40 | 58 | 59 | | SF-H4 | Beam | Single Angle | A36 Gr.36 | Typical |
| 41 | 41 | 78 | 74 | | RIGID | None | None | RIGID | Typical |
| 42 | 42 | 79 | 75 | | RIGID | None | None | RIGID | Typical |
| 43 | 43 | 77 | 73 | | RIGID | None | None | RIGID | Typical |
| 44 | 44 | 76 | 72 | | RIGID | None | None | RIGID | Typical |
| 45 | 45 | 80 | 81 | 180 | MF-H3 | Beam | Single Angle | A36 Gr.36 | Typical |
| 46 | 46 | 63 | 62 | | RIGID | None | None | RIGID | Typical |
| 47 | 47 | 68 | 67 | | RIGID | None | None | RIGID | Typical |
| 48 | 48 | 65 | 64 | | RIGID | None | None | RIGID | Typical |
| 49 | 49 | 71 | 70 | | RIGID | None | None | RIGID | Typical |
| 50 | 50 | 82 | 83 | | SF-H1 | Beam | Tube | A500 Gr.B Rect | Typical |
| 51 | 51 | 86 | 84 | 180 | SF-H2 | Beam | Channel | A36 Gr.36 | Typical |

***Member Primary Data (Continued)***

| | Label | I Node | J Node | Rotate(deg) | Section/Shape | Type | Design List | Material | Design Rule |
|---|---|---|---|---|---|---|---|---|---|
| 52 | 52 | 84 | 85 | 180 | SF-H2 | Beam | Channel | A36 Gr.36 | Typical |
| 53 | 53 | 88 | 89 | | MF-CP1 | Beam | RECT | A36 Gr.36 | Typical |
| 54 | 54 | 87 | 90 | | MF-CP1 | Beam | RECT | A36 Gr.36 | Typical |
| 55 | 55 | 95 | 85 | | MF-CP1 | Beam | RECT | A36 Gr.36 | Typical |
| 56 | 56 | 86 | 98 | | MF-CP1 | Beam | RECT | A36 Gr.36 | Typical |
| 57 | 57 | 104 | 103 | | SF-H3 | Beam | Single Angle | A36 Gr.36 | Typical |
| 58 | 58 | 102 | 101 | | SF-H3 | Beam | Single Angle | A36 Gr.36 | Typical |
| 59 | 59 | 87 | 88 | | SF-H4 | Beam | Single Angle | A36 Gr.36 | Typical |
| 60 | 60 | 107 | 103 | | RIGID | None | None | RIGID | Typical |
| 61 | 61 | 108 | 104 | | RIGID | None | None | RIGID | Typical |
| 62 | 62 | 106 | 102 | | RIGID | None | None | RIGID | Typical |
| 63 | 63 | 105 | 101 | | RIGID | None | None | RIGID | Typical |
| 64 | 64 | 109 | 110 | 180 | MF-H3 | Beam | Single Angle | A36 Gr.36 | Typical |
| 65 | 65 | 92 | 91 | | RIGID | None | None | RIGID | Typical |
| 66 | 66 | 97 | 96 | | RIGID | None | None | RIGID | Typical |
| 67 | 67 | 94 | 93 | | RIGID | None | None | RIGID | Typical |
| 68 | 68 | 100 | 99 | | RIGID | None | None | RIGID | Typical |
| 69 | 69 | 111 | 112 | | MF-H1 | Beam | Pipe | A500 Gr.C | Typical |
| 70 | 70 | 115 | 113 | | RIGID | None | None | RIGID | Typical |
| 71 | 71 | 116 | 114 | | RIGID | None | None | RIGID | Typical |
| 72 | 72 | 118 | 120 | | MF-P1 | Column | Pipe | A500 Gr.C | Typical |
| 73 | 73 | 117 | 119 | | MF-P1 | Column | Pipe | A500 Gr.C | Typical |
| 74 | 74 | 121 | 123 | | RIGID | None | None | RIGID | Typical |
| 75 | 75 | 122 | 124 | | RIGID | None | None | RIGID | Typical |
| 76 | 76 | 125 | 126 | | MF-H2 | Beam | Pipe | A500 Gr.C | Typical |
| 77 | 77 | 128 | 127 | | RIGID | None | None | RIGID | Typical |
| 78 | 78 | 129 | 130 | | MF-P1 | Column | Pipe | A500 Gr.C | Typical |
| 79 | 79 | 131 | 132 | | RIGID | None | None | RIGID | Typical |
| 80 | 80 | 133 | 134 | | MF-H1 | Beam | Pipe | A500 Gr.C | Typical |
| 81 | 81 | 137 | 135 | | RIGID | None | None | RIGID | Typical |
| 82 | 82 | 138 | 136 | | RIGID | None | None | RIGID | Typical |
| 83 | 83 | 140 | 142 | | MF-P1 | Column | Pipe | A500 Gr.C | Typical |
| 84 | 84 | 139 | 141 | | MF-P1 | Column | Pipe | A500 Gr.C | Typical |
| 85 | 85 | 143 | 145 | | RIGID | None | None | RIGID | Typical |
| 86 | 86 | 144 | 146 | | RIGID | None | None | RIGID | Typical |
| 87 | 87 | 147 | 148 | | MF-H2 | Beam | Pipe | A500 Gr.C | Typical |
| 88 | 88 | 150 | 149 | | RIGID | None | None | RIGID | Typical |
| 89 | 89 | 151 | 152 | | MF-P1 | Column | Pipe | A500 Gr.C | Typical |
| 90 | 90 | 153 | 154 | | RIGID | None | None | RIGID | Typical |

***Member Advanced Data***

| | Label | I Release | I Offset [in] | J Offset [in] | Physical | Deflection Ratio Options | Seismic DR |
|---|---|---|---|---|---|---|---|
| 1 | 1 | | | | Yes | N/A | None |
| 2 | 2 | | | 2 | Yes | N/A | None |
| 3 | 3 | | 2 | | Yes | N/A | None |
| 4 | 4 | | | | Yes | Default | None |
| 5 | 5 | | | | Yes | Default | None |
| 6 | 6 | | | | Yes | N/A | None |
| 7 | 7 | | | | Yes | Default | None |
| 8 | 8 | | | | Yes | Default | None |
| 9 | 9 | | | | Yes | N/A | None |
| 10 | 10 | | | | Yes | N/A | None |
| 11 | 11 | | | | Yes | N/A | None |
| 12 | 12 | | | | Yes | ** NA ** | None |
| 13 | 13 | | | | Yes | ** NA ** | None |

***Member Advanced Data (Continued)***

| | Label | I Release | I Offset [in] | J Offset [in] | Physical | Deflection Ratio Options | Seismic DR |
|---|---|---|---|---|---|---|---|
| 14 | 14 | | | | Yes | ** NA ** | None |
| 15 | 15 | | | | Yes | ** NA ** | None |
| 16 | 16 | | | | Yes | ** NA ** | None |
| 17 | 17 | | | | Yes | ** NA ** | None |
| 18 | 18 | | | | Yes | ** NA ** | None |
| 19 | 19 | | | | Yes | ** NA ** | None |
| 20 | 20 | | | | Yes | ** NA ** | None |
| 21 | 21 | | | | Yes | ** NA ** | None |
| 22 | 22 | | | | Yes | N/A | None |
| 23 | 23 | | | | Yes | Default | None |
| 24 | 24 | OOOOOX | | | Yes | ** NA ** | None |
| 25 | 25 | OOOOOX | | | Yes | ** NA ** | None |
| 26 | 26 | OOOOOX | | | Yes | ** NA ** | None |
| 27 | 27 | OOOOOX | | | Yes | ** NA ** | None |
| 28 | 28 | | | | Yes | ** NA ** | None |
| 29 | 29 | | | | Yes | ** NA ** | None |
| 30 | 30 | | | | Yes | ** NA ** | None |
| 31 | 31 | | | | Yes | N/A | None |
| 32 | 32 | | | 2 | Yes | N/A | None |
| 33 | 33 | | 2 | | Yes | N/A | None |
| 34 | 34 | | | | Yes | Default | None |
| 35 | 35 | | | | Yes | Default | None |
| 36 | 36 | | | | Yes | Default | None |
| 37 | 37 | | | | Yes | Default | None |
| 38 | 38 | | | | Yes | N/A | None |
| 39 | 39 | | | | Yes | N/A | None |
| 40 | 40 | | | | Yes | N/A | None |
| 41 | 41 | | | | Yes | ** NA ** | None |
| 42 | 42 | | | | Yes | ** NA ** | None |
| 43 | 43 | | | | Yes | ** NA ** | None |
| 44 | 44 | | | | Yes | ** NA ** | None |
| 45 | 45 | | | | Yes | Default | None |
| 46 | 46 | OOOOOX | | | Yes | ** NA ** | None |
| 47 | 47 | OOOOOX | | | Yes | ** NA ** | None |
| 48 | 48 | OOOOOX | | | Yes | ** NA ** | None |
| 49 | 49 | OOOOOX | | | Yes | ** NA ** | None |
| 50 | 50 | | | | Yes | N/A | None |
| 51 | 51 | | | 2 | Yes | N/A | None |
| 52 | 52 | | 2 | | Yes | N/A | None |
| 53 | 53 | | | | Yes | Default | None |
| 54 | 54 | | | | Yes | Default | None |
| 55 | 55 | | | | Yes | Default | None |
| 56 | 56 | | | | Yes | Default | None |
| 57 | 57 | | | | Yes | N/A | None |
| 58 | 58 | | | | Yes | N/A | None |
| 59 | 59 | | | | Yes | N/A | None |
| 60 | 60 | | | | Yes | ** NA ** | None |
| 61 | 61 | | | | Yes | ** NA ** | None |
| 62 | 62 | | | | Yes | ** NA ** | None |
| 63 | 63 | | | | Yes | ** NA ** | None |
| 64 | 64 | | | | Yes | Default | None |
| 65 | 65 | OOOOOX | | | Yes | ** NA ** | None |
| 66 | 66 | OOOOOX | | | Yes | ** NA ** | None |
| 67 | 67 | OOOOOX | | | Yes | ** NA ** | None |
| 68 | 68 | OOOOOX | | | Yes | ** NA ** | None |

***Member Advanced Data (Continued)***

| | Label | I Release | I Offset [in] | J Offset [in] | Physical | Deflection Ratio Options | Seismic DR |
|---|---|---|---|---|---|---|---|
| 69 | 69 | | | | Yes | N/A | None |
| 70 | 70 | | | | Yes | ** NA ** | None |
| 71 | 71 | | | | Yes | ** NA ** | None |
| 72 | 72 | | | | Yes | ** NA ** | None |
| 73 | 73 | | | | Yes | ** NA ** | None |
| 74 | 74 | | | | Yes | ** NA ** | None |
| 75 | 75 | | | | Yes | ** NA ** | None |
| 76 | 76 | | | | Yes | N/A | None |
| 77 | 77 | | | | Yes | ** NA ** | None |
| 78 | 78 | | | | Yes | ** NA ** | None |
| 79 | 79 | | | | Yes | ** NA ** | None |
| 80 | 80 | | | | Yes | N/A | None |
| 81 | 81 | | | | Yes | ** NA ** | None |
| 82 | 82 | | | | Yes | ** NA ** | None |
| 83 | 83 | | | | Yes | ** NA ** | None |
| 84 | 84 | | | | Yes | ** NA ** | None |
| 85 | 85 | | | | Yes | ** NA ** | None |
| 86 | 86 | | | | Yes | ** NA ** | None |
| 87 | 87 | | | | Yes | N/A | None |
| 88 | 88 | | | | Yes | ** NA ** | None |
| 89 | 89 | | | | Yes | ** NA ** | None |
| 90 | 90 | | | | Yes | ** NA ** | None |

***Hot Rolled Steel Design Parameters***

| | Label | Shape | Length [ft] | Lcomp top [ft] | Function |
|---|---|---|---|---|---|
| 1 | 1 | SF-H1 | 3.333 | Lbyy | Lateral |
| 2 | 2 | SF-H2 | 2.758 | Lbyy | Lateral |
| 3 | 3 | SF-H2 | 2.758 | Lbyy | Lateral |
| 4 | 4 | MF-CP1 | 0.292 | Lbyy | Lateral |
| 5 | 5 | MF-CP1 | 0.292 | Lbyy | Lateral |
| 6 | 6 | MF-H1 | 8 | Lbyy | Lateral |
| 7 | 7 | MF-CP1 | 0.208 | Lbyy | Lateral |
| 8 | 8 | MF-CP1 | 0.208 | Lbyy | Lateral |
| 9 | 9 | SF-H3 | 2.309 | Lbyy | Lateral |
| 10 | 10 | SF-H3 | 2.309 | Lbyy | Lateral |
| 11 | 11 | SF-H4 | 3.207 | Lbyy | Lateral |
| 12 | 18 | MF-P1 | 8 | Lbyy | Lateral |
| 13 | 19 | MF-P1 | 8 | Lbyy | Lateral |
| 14 | 22 | MF-H2 | 10 | Lbyy | Lateral |
| 15 | 23 | MF-H3 | 3.25 | Lbyy | Lateral |
| 16 | 29 | MF-P1 | 8 | Lbyy | Lateral |
| 17 | 31 | SF-H1 | 3.333 | Lbyy | Lateral |
| 18 | 32 | SF-H2 | 2.758 | Lbyy | Lateral |
| 19 | 33 | SF-H2 | 2.758 | Lbyy | Lateral |
| 20 | 34 | MF-CP1 | 0.292 | Lbyy | Lateral |
| 21 | 35 | MF-CP1 | 0.292 | Lbyy | Lateral |
| 22 | 36 | MF-CP1 | 0.208 | Lbyy | Lateral |
| 23 | 37 | MF-CP1 | 0.208 | Lbyy | Lateral |
| 24 | 38 | SF-H3 | 2.309 | Lbyy | Lateral |
| 25 | 39 | SF-H3 | 2.309 | Lbyy | Lateral |
| 26 | 40 | SF-H4 | 3.207 | Lbyy | Lateral |
| 27 | 45 | MF-H3 | 3.25 | Lbyy | Lateral |
| 28 | 50 | SF-H1 | 3.333 | Lbyy | Lateral |
| 29 | 51 | SF-H2 | 2.758 | Lbyy | Lateral |
| 30 | 52 | SF-H2 | 2.758 | Lbyy | Lateral |

***Hot Rolled Steel Design Parameters (Continued)***

| | Label | Shape | Length [ft] | Lcomp top [ft] | Function |
|---|---|---|---|---|---|
| 31 | 53 | MF-CP1 | 0.292 | Lbyy | Lateral |
| 32 | 54 | MF-CP1 | 0.292 | Lbyy | Lateral |
| 33 | 55 | MF-CP1 | 0.208 | Lbyy | Lateral |
| 34 | 56 | MF-CP1 | 0.208 | Lbyy | Lateral |
| 35 | 57 | SF-H3 | 2.309 | Lbyy | Lateral |
| 36 | 58 | SF-H3 | 2.309 | Lbyy | Lateral |
| 37 | 59 | SF-H4 | 3.207 | Lbyy | Lateral |
| 38 | 64 | MF-H3 | 3.25 | Lbyy | Lateral |
| 39 | 69 | MF-H1 | 8 | Lbyy | Lateral |
| 40 | 72 | MF-P1 | 8 | Lbyy | Lateral |
| 41 | 73 | MF-P1 | 8 | Lbyy | Lateral |
| 42 | 76 | MF-H2 | 10 | Lbyy | Lateral |
| 43 | 78 | MF-P1 | 8 | Lbyy | Lateral |
| 44 | 80 | MF-H1 | 8 | Lbyy | Lateral |
| 45 | 83 | MF-P1 | 8 | Lbyy | Lateral |
| 46 | 84 | MF-P1 | 8 | Lbyy | Lateral |
| 47 | 87 | MF-H2 | 10 | Lbyy | Lateral |
| 48 | 89 | MF-P1 | 8 | Lbyy | Lateral |

***Member Point Loads (BLC 1 : Dead)***

| | Member Label | Direction | Magnitude [k, k-ft] | Location [(ft, %)] |
|---|---|---|---|---|
| 1 | 29 | Y | -0.035 | %15 |
| 2 | 29 | Y | -0.035 | %85 |
| 3 | 29 | Y | -0.075 | %20 |
| 4 | 29 | Y | -0.064 | %50 |
| 5 | 29 | Y | 0 | 0 |
| 6 | 89 | Y | -0.035 | %15 |
| 7 | 89 | Y | -0.035 | %85 |
| 8 | 89 | Y | -0.075 | %20 |
| 9 | 89 | Y | -0.064 | %50 |
| 10 | 89 | Y | 0 | 0 |
| 11 | 78 | Y | -0.035 | %15 |
| 12 | 78 | Y | -0.035 | %85 |
| 13 | 78 | Y | -0.075 | %20 |
| 14 | 78 | Y | -0.064 | %50 |
| 15 | 78 | Y | 0 | 0 |
| 16 | 31 | Y | -0.022 | %15 |
| 17 | 31 | Y | 0 | 0 |
| 18 | 31 | Y | 0 | 0 |
| 19 | 31 | Y | 0 | 0 |
| 20 | 31 | Y | 0 | 0 |

***Member Point Loads (BLC 2 : 0 Wind - No Ice)***

| | Member Label | Direction | Magnitude [k, k-ft] | Location [(ft, %)] |
|---|---|---|---|---|
| 1 | 29 | Z | -0.199 | %15 |
| 2 | 29 | Z | -0.199 | %85 |
| 3 | 29 | Z | -0.064 | %20 |
| 4 | 29 | Z | -0.064 | %50 |
| 5 | 29 | Z | 0 | 0 |
| 6 | 89 | Z | -0.199 | %15 |
| 7 | 89 | Z | -0.199 | %85 |
| 8 | 89 | Z | -0.064 | %20 |
| 9 | 89 | Z | -0.064 | %50 |

***Member Point Loads (BLC 2 : 0 Wind - No Ice) (Continued)***

| | Member Label | Direction | Magnitude [k, k-ft] | Location [(ft, %)] |
|---|---|---|---|---|
| 10 | 89 | Z | 0 | 0 |
| 11 | 78 | Z | -0.199 | %15 |
| 12 | 78 | Z | -0.199 | %85 |
| 13 | 78 | Z | -0.064 | %20 |
| 14 | 78 | Z | -0.064 | %50 |
| 15 | 78 | Z | 0 | 0 |
| 16 | 31 | Z | -0.065 | %15 |
| 17 | 31 | Z | 0 | 0 |
| 18 | 31 | Z | 0 | 0 |
| 19 | 31 | Z | 0 | 0 |
| 20 | 31 | Z | 0 | 0 |

***Member Point Loads (BLC 3 : 90 Wind - No Ice)***

| | Member Label | Direction | Magnitude [k, k-ft] | Location [(ft, %)] |
|---|---|---|---|---|
| 1 | 29 | X | -0.079 | %15 |
| 2 | 29 | X | -0.079 | %85 |
| 3 | 29 | X | -0.039 | %20 |
| 4 | 29 | X | -0.034 | %50 |
| 5 | 29 | X | 0 | 0 |
| 6 | 89 | X | -0.079 | %15 |
| 7 | 89 | X | -0.079 | %85 |
| 8 | 89 | X | -0.039 | %20 |
| 9 | 89 | X | -0.034 | %50 |
| 10 | 89 | X | 0 | 0 |
| 11 | 78 | X | -0.079 | %15 |
| 12 | 78 | X | -0.079 | %85 |
| 13 | 78 | X | -0.039 | %20 |
| 14 | 78 | X | -0.034 | %50 |
| 15 | 78 | X | 0 | 0 |
| 16 | 31 | X | -0.038 | %15 |
| 17 | 31 | X | 0 | 0 |
| 18 | 31 | X | 0 | 0 |
| 19 | 31 | X | 0 | 0 |
| 20 | 31 | X | 0 | 0 |

***Member Point Loads (BLC 4 : 0 Wind - Ice)***

| | Member Label | Direction | Magnitude [k, k-ft] | Location [(ft, %)] |
|---|---|---|---|---|
| 1 | 29 | Z | -0.034 | %15 |
| 2 | 29 | Z | -0.034 | %85 |
| 3 | 29 | Z | -0.011 | %20 |
| 4 | 29 | Z | -0.011 | %50 |
| 5 | 29 | Z | 0 | 0 |
| 6 | 89 | Z | -0.034 | %15 |
| 7 | 89 | Z | -0.034 | %85 |
| 8 | 89 | Z | -0.011 | %20 |
| 9 | 89 | Z | -0.011 | %50 |
| 10 | 89 | Z | 0 | 0 |
| 11 | 78 | Z | -0.034 | %15 |
| 12 | 78 | Z | -0.034 | %85 |
| 13 | 78 | Z | -0.011 | %20 |
| 14 | 78 | Z | -0.011 | %50 |
| 15 | 78 | Z | 0 | 0 |
| 16 | 31 | Z | -0.011 | %15 |

***Member Point Loads (BLC 4 : 0 Wind - Ice) (Continued)***

| | Member Label | Direction | Magnitude [k, k-ft] | Location [(ft, %)] |
|---|---|---|---|---|
| 17 | 31 | Z | 0 | 0 |
| 18 | 31 | Z | 0 | 0 |
| 19 | 31 | Z | 0 | 0 |
| 20 | 31 | Z | 0 | 0 |

***Member Point Loads (BLC 5 : 90 Wind - Ice)***

| | Member Label | Direction | Magnitude [k, k-ft] | Location [(ft, %)] |
|---|---|---|---|---|
| 1 | 29 | X | -0.013 | %15 |
| 2 | 29 | X | -0.013 | %85 |
| 3 | 29 | X | -0.007 | %20 |
| 4 | 29 | X | -0.006 | %50 |
| 5 | 29 | X | 0 | 0 |
| 6 | 89 | X | -0.013 | %15 |
| 7 | 89 | X | -0.013 | %85 |
| 8 | 89 | X | -0.007 | %20 |
| 9 | 89 | X | -0.006 | %50 |
| 10 | 89 | X | 0 | 0 |
| 11 | 78 | X | -0.013 | %15 |
| 12 | 78 | X | -0.013 | %85 |
| 13 | 78 | X | -0.007 | %20 |
| 14 | 78 | X | -0.006 | %50 |
| 15 | 78 | X | 0 | 0 |
| 16 | 31 | X | -0.006 | %15 |
| 17 | 31 | X | 0 | 0 |
| 18 | 31 | X | 0 | 0 |
| 19 | 31 | X | 0 | 0 |
| 20 | 31 | X | 0 | 0 |

***Member Point Loads (BLC 6 : 0 Wind - Service)***

| | Member Label | Direction | Magnitude [k, k-ft] | Location [(ft, %)] |
|---|---|---|---|---|
| 1 | 29 | Z | -0.012 | %15 |
| 2 | 29 | Z | -0.012 | %85 |
| 3 | 29 | Z | -0.004 | %20 |
| 4 | 29 | Z | -0.004 | %50 |
| 5 | 29 | Z | 0 | 0 |
| 6 | 89 | Z | -0.012 | %15 |
| 7 | 89 | Z | -0.012 | %85 |
| 8 | 89 | Z | -0.004 | %20 |
| 9 | 89 | Z | -0.004 | %50 |
| 10 | 89 | Z | 0 | 0 |
| 11 | 78 | Z | -0.012 | %15 |
| 12 | 78 | Z | -0.012 | %85 |
| 13 | 78 | Z | -0.004 | %20 |
| 14 | 78 | Z | -0.004 | %50 |
| 15 | 78 | Z | 0 | 0 |
| 16 | 31 | Z | -0.004 | %15 |
| 17 | 31 | Z | 0 | 0 |
| 18 | 31 | Z | 0 | 0 |
| 19 | 31 | Z | 0 | 0 |
| 20 | 31 | Z | 0 | 0 |

***Member Point Loads (BLC 7 : 90 Wind - Service)***

| | Member Label | Direction | Magnitude [k, k-ft] | Location [(ft, %)] |
|---|---|---|---|---|
| 1 | 29 | X | -0.005 | %15 |
| 2 | 29 | X | -0.005 | %85 |
| 3 | 29 | X | -0.002 | %20 |
| 4 | 29 | X | -0.002 | %50 |
| 5 | 29 | X | 0 | 0 |
| 6 | 89 | X | -0.005 | %15 |
| 7 | 89 | X | -0.005 | %85 |
| 8 | 89 | X | -0.002 | %20 |
| 9 | 89 | X | -0.002 | %50 |
| 10 | 89 | X | 0 | 0 |
| 11 | 78 | X | -0.005 | %15 |
| 12 | 78 | X | -0.005 | %85 |
| 13 | 78 | X | -0.002 | %20 |
| 14 | 78 | X | -0.002 | %50 |
| 15 | 78 | X | 0 | 0 |
| 16 | 31 | X | -0.002 | %15 |
| 17 | 31 | X | 0 | 0 |
| 18 | 31 | X | 0 | 0 |
| 19 | 31 | X | 0 | 0 |
| 20 | 31 | X | 0 | 0 |

***Member Point Loads (BLC 8 : Ice)***

| | Member Label | Direction | Magnitude [k, k-ft] | Location [(ft, %)] |
|---|---|---|---|---|
| 1 | 29 | Y | -0.092 | %15 |
| 2 | 29 | Y | -0.092 | %85 |
| 3 | 29 | Y | -0.034 | %20 |
| 4 | 29 | Y | -0.033 | %50 |
| 5 | 29 | Y | 0 | 0 |
| 6 | 89 | Y | -0.092 | %15 |
| 7 | 89 | Y | -0.092 | %85 |
| 8 | 89 | Y | -0.034 | %20 |
| 9 | 89 | Y | -0.033 | %50 |
| 10 | 89 | Y | 0 | 0 |
| 11 | 78 | Y | -0.092 | %15 |
| 12 | 78 | Y | -0.092 | %85 |
| 13 | 78 | Y | -0.034 | %20 |
| 14 | 78 | Y | -0.033 | %50 |
| 15 | 78 | Y | 0 | 0 |
| 16 | 31 | Y | -0.034 | %15 |
| 17 | 31 | Y | 0 | 0 |
| 18 | 31 | Y | 0 | 0 |
| 19 | 31 | Y | 0 | 0 |
| 20 | 31 | Y | 0 | 0 |

***Member Point Loads (BLC 9 : 0 Seismic)***

| | Member Label | Direction | Magnitude [k, k-ft] | Location [(ft, %)] |
|---|---|---|---|---|
| 1 | 29 | Z | -0.011 | %15 |
| 2 | 29 | Z | -0.011 | %85 |
| 3 | 29 | Z | -0.011 | %20 |
| 4 | 29 | Z | -0.01 | %50 |
| 5 | 29 | Z | 0 | 0 |
| 6 | 89 | Z | -0.011 | %15 |

***Member Point Loads (BLC 9 : 0 Seismic) (Continued)***

| | Member Label | Direction | Magnitude [k, k-ft] | Location [(ft, %)] |
|---|---|---|---|---|
| 7 | 89 | Z | -0.011 | %85 |
| 8 | 89 | Z | -0.011 | %20 |
| 9 | 89 | Z | -0.01 | %50 |
| 10 | 89 | Z | 0 | 0 |
| 11 | 78 | Z | -0.011 | %15 |
| 12 | 78 | Z | -0.011 | %85 |
| 13 | 78 | Z | -0.011 | %20 |
| 14 | 78 | Z | -0.01 | %50 |
| 15 | 78 | Z | 0 | 0 |
| 16 | 31 | Z | -0.003 | %15 |
| 17 | 31 | Z | 0 | 0 |
| 18 | 31 | Z | 0 | 0 |
| 19 | 31 | Z | 0 | 0 |
| 20 | 31 | Z | 0 | 0 |

***Member Point Loads (BLC 10 : 90 Seismic)***

| | Member Label | Direction | Magnitude [k, k-ft] | Location [(ft, %)] |
|---|---|---|---|---|
| 1 | 29 | X | -0.011 | %15 |
| 2 | 29 | X | -0.011 | %85 |
| 3 | 29 | X | -0.011 | %20 |
| 4 | 29 | X | -0.01 | %50 |
| 5 | 29 | X | 0 | 0 |
| 6 | 89 | X | -0.011 | %15 |
| 7 | 89 | X | -0.011 | %85 |
| 8 | 89 | X | -0.011 | %20 |
| 9 | 89 | X | -0.01 | %50 |
| 10 | 89 | X | 0 | 0 |
| 11 | 78 | X | -0.011 | %15 |
| 12 | 78 | X | -0.011 | %85 |
| 13 | 78 | X | -0.011 | %20 |
| 14 | 78 | X | -0.01 | %50 |
| 15 | 78 | X | 0 | 0 |
| 16 | 31 | X | -0.003 | %15 |
| 17 | 31 | X | 0 | 0 |
| 18 | 31 | X | 0 | 0 |
| 19 | 31 | X | 0 | 0 |
| 20 | 31 | X | 0 | 0 |

***Member Point Loads (BLC 15 : Maint LL 1)***

| | Member Label | Direction | Magnitude [k, k-ft] | Location [(ft, %)] |
|---|---|---|---|---|
| 1 | 22 | Y | -0.25 | %5 |

***Member Point Loads (BLC 16 : Maint LL 2)***

| | Member Label | Direction | Magnitude [k, k-ft] | Location [(ft, %)] |
|---|---|---|---|---|
| 1 | 6 | Y | -0.25 | %5 |

***Member Point Loads (BLC 17 : Maint LL 3)***

| | Member Label | Direction | Magnitude [k, k-ft] | Location [(ft, %)] |
|---|---|---|---|---|
| 1 | 76 | Y | -0.25 | %5 |

***Member Point Loads (BLC 18 : Maint LL 4)***

| | Member Label | Direction | Magnitude [k, k-ft] | Location [(ft, %)] |
|---|---|---|---|---|
| 1 | 69 | Y | -0.25 | %5 |

***Member Point Loads (BLC 19 : Maint LL 5)***

| | Member Label | Direction | Magnitude [k, k-ft] | Location [(ft, %)] |
|---|---|---|---|---|
| 1 | 87 | Y | -0.25 | %5 |

***Member Point Loads (BLC 20 : Maint LL 6)***

| | Member Label | Direction | Magnitude [k, k-ft] | Location [(ft, %)] |
|---|---|---|---|---|
| 1 | 80 | Y | -0.25 | %5 |

***Member Point Loads (BLC 21 : Maint LL 7)***

| | Member Label | Direction | Magnitude [k, k-ft] | Location [(ft, %)] |
|---|---|---|---|---|
| 1 | 22 | Y | -0.25 | %95 |

***Member Point Loads (BLC 22 : Maint LL 8)***

| | Member Label | Direction | Magnitude [k, k-ft] | Location [(ft, %)] |
|---|---|---|---|---|
| 1 | 6 | Y | -0.25 | %95 |

***Member Point Loads (BLC 23 : Maint LL 9)***

| | Member Label | Direction | Magnitude [k, k-ft] | Location [(ft, %)] |
|---|---|---|---|---|
| 1 | 76 | Y | -0.25 | %95 |

***Member Point Loads (BLC 24 : Maint LL 10)***

| | Member Label | Direction | Magnitude [k, k-ft] | Location [(ft, %)] |
|---|---|---|---|---|
| 1 | 69 | Y | -0.25 | %95 |

***Member Point Loads (BLC 25 : Maint LL 11)***

| | Member Label | Direction | Magnitude [k, k-ft] | Location [(ft, %)] |
|---|---|---|---|---|
| 1 | 87 | Y | -0.25 | %95 |

***Member Point Loads (BLC 26 : Maint LL 12)***

| | Member Label | Direction | Magnitude [k, k-ft] | Location [(ft, %)] |
|---|---|---|---|---|
| 1 | 80 | Y | -0.25 | %95 |

***Member Point Loads (BLC 27 : Maint LL 13)***

| | Member Label | Direction | Magnitude [k, k-ft] | Location [(ft, %)] |
|---|---|---|---|---|
| 1 | 31 | Y | -0.25 | %95 |

***Member Point Loads (BLC 28 : Maint LL 14)***

| | Member Label | Direction | Magnitude [k, k-ft] | Location [(ft, %)] |
|---|---|---|---|---|
| 1 | 50 | Y | -0.25 | %95 |

***Member Point Loads (BLC 29 : Maint LL 15)***

| | Member Label | Direction | Magnitude [k, k-ft] | Location [(ft, %)] |
|---|---|---|---|---|
| 1 | 1 | Y | -0.25 | %95 |

***Member Distributed Loads (BLC 2 : 0 Wind - No Ice)***

| | Member Label | Direction | Start Magnitude [k/ft, F, ksf, k-ft/ft] | End Magnitude [k/ft, F, ksf, k-ft/ft] | Start Location [(ft, %)] | End Location [(ft, %)] |
|---|---|---|---|---|---|---|
| 1 | 1 | Z | -0.016 | -0.016 | 0 | %100 |
| 2 | 2 | Z | -0.013 | -0.013 | 0 | %100 |
| 3 | 3 | Z | -0.013 | -0.013 | 0 | %100 |
| 4 | 4 | Z | -0.02 | -0.02 | 0 | %100 |
| 5 | 5 | Z | -0.02 | -0.02 | 0 | %100 |
| 6 | 6 | Z | -0.011 | -0.011 | 0 | %100 |
| 7 | 7 | Z | -0.02 | -0.02 | 0 | %100 |
| 8 | 8 | Z | -0.02 | -0.02 | 0 | %100 |
| 9 | 9 | Z | -0.009 | -0.009 | 0 | %100 |
| 10 | 10 | Z | -0.009 | -0.009 | 0 | %100 |
| 11 | 11 | Z | -0.027 | -0.027 | 0 | %100 |
| 12 | 18 | Z | -0.009 | -0.009 | 0 | %100 |
| 13 | 19 | Z | -0.009 | -0.009 | 0 | %100 |
| 14 | 22 | Z | -0.009 | -0.009 | 0 | %100 |
| 15 | 23 | Z | -0.024 | -0.024 | 0 | %100 |
| 16 | 29 | Z | -0.009 | -0.009 | 0 | %100 |
| 17 | 31 | Z | -0.016 | -0.016 | 0 | %100 |
| 18 | 32 | Z | -0.013 | -0.013 | 0 | %100 |
| 19 | 33 | Z | -0.013 | -0.013 | 0 | %100 |
| 20 | 34 | Z | -0.02 | -0.02 | 0 | %100 |
| 21 | 35 | Z | -0.02 | -0.02 | 0 | %100 |
| 22 | 36 | Z | -0.02 | -0.02 | 0 | %100 |
| 23 | 37 | Z | -0.02 | -0.02 | 0 | %100 |
| 24 | 38 | Z | -0.009 | -0.009 | 0 | %100 |
| 25 | 39 | Z | -0.009 | -0.009 | 0 | %100 |
| 26 | 40 | Z | -0.027 | -0.027 | 0 | %100 |
| 27 | 45 | Z | -0.024 | -0.024 | 0 | %100 |
| 28 | 50 | Z | -0.016 | -0.016 | 0 | %100 |
| 29 | 51 | Z | -0.013 | -0.013 | 0 | %100 |
| 30 | 52 | Z | -0.013 | -0.013 | 0 | %100 |
| 31 | 53 | Z | -0.02 | -0.02 | 0 | %100 |
| 32 | 54 | Z | -0.02 | -0.02 | 0 | %100 |
| 33 | 55 | Z | -0.02 | -0.02 | 0 | %100 |
| 34 | 56 | Z | -0.02 | -0.02 | 0 | %100 |
| 35 | 57 | Z | -0.009 | -0.009 | 0 | %100 |
| 36 | 58 | Z | -0.009 | -0.009 | 0 | %100 |
| 37 | 59 | Z | -0.027 | -0.027 | 0 | %100 |
| 38 | 64 | Z | -0.024 | -0.024 | 0 | %100 |
| 39 | 69 | Z | -0.011 | -0.011 | 0 | %100 |
| 40 | 72 | Z | -0.009 | -0.009 | 0 | %100 |
| 41 | 73 | Z | -0.009 | -0.009 | 0 | %100 |
| 42 | 76 | Z | -0.009 | -0.009 | 0 | %100 |
| 43 | 78 | Z | -0.009 | -0.009 | 0 | %100 |
| 44 | 80 | Z | -0.011 | -0.011 | 0 | %100 |

***Member Distributed Loads (BLC 2 : 0 Wind - No Ice) (Continued)***

| | Member Label | Direction | Start Magnitude [k/ft, F, ksf, k-ft/ft] | End Magnitude [k/ft, F, ksf, k-ft/ft] | Start Location [(ft, %)] | End Location [(ft, %)] |
|---|---|---|---|---|---|---|
| 45 | 83 | Z | -0.009 | -0.009 | 0 | %100 |
| 46 | 84 | Z | -0.009 | -0.009 | 0 | %100 |
| 47 | 87 | Z | -0.009 | -0.009 | 0 | %100 |
| 48 | 89 | Z | -0.009 | -0.009 | 0 | %100 |

***Member Distributed Loads (BLC 3 : 90 Wind - No Ice)***

| | Member Label | Direction | Start Magnitude [k/ft, F, ksf, k-ft/ft] | End Magnitude [k/ft, F, ksf, k-ft/ft] | Start Location [(ft, %)] | End Location [(ft, %)] |
|---|---|---|---|---|---|---|
| 1 | 1 | X | -0.016 | -0.016 | 0 | %100 |
| 2 | 2 | X | -0.013 | -0.013 | 0 | %100 |
| 3 | 3 | X | -0.013 | -0.013 | 0 | %100 |
| 4 | 4 | X | -0.02 | -0.02 | 0 | %100 |
| 5 | 5 | X | -0.02 | -0.02 | 0 | %100 |
| 6 | 6 | X | -0.011 | -0.011 | 0 | %100 |
| 7 | 7 | X | -0.02 | -0.02 | 0 | %100 |
| 8 | 8 | X | -0.02 | -0.02 | 0 | %100 |
| 9 | 9 | X | -0.009 | -0.009 | 0 | %100 |
| 10 | 10 | X | -0.009 | -0.009 | 0 | %100 |
| 11 | 11 | X | -0.027 | -0.027 | 0 | %100 |
| 12 | 18 | X | -0.009 | -0.009 | 0 | %100 |
| 13 | 19 | X | -0.009 | -0.009 | 0 | %100 |
| 14 | 22 | X | -0.009 | -0.009 | 0 | %100 |
| 15 | 23 | X | -0.024 | -0.024 | 0 | %100 |
| 16 | 29 | X | -0.009 | -0.009 | 0 | %100 |
| 17 | 31 | X | -0.016 | -0.016 | 0 | %100 |
| 18 | 32 | X | -0.013 | -0.013 | 0 | %100 |
| 19 | 33 | X | -0.013 | -0.013 | 0 | %100 |
| 20 | 34 | X | -0.02 | -0.02 | 0 | %100 |
| 21 | 35 | X | -0.02 | -0.02 | 0 | %100 |
| 22 | 36 | X | -0.02 | -0.02 | 0 | %100 |
| 23 | 37 | X | -0.02 | -0.02 | 0 | %100 |
| 24 | 38 | X | -0.009 | -0.009 | 0 | %100 |
| 25 | 39 | X | -0.009 | -0.009 | 0 | %100 |
| 26 | 40 | X | -0.027 | -0.027 | 0 | %100 |
| 27 | 45 | X | -0.024 | -0.024 | 0 | %100 |
| 28 | 50 | X | -0.016 | -0.016 | 0 | %100 |
| 29 | 51 | X | -0.013 | -0.013 | 0 | %100 |
| 30 | 52 | X | -0.013 | -0.013 | 0 | %100 |
| 31 | 53 | X | -0.02 | -0.02 | 0 | %100 |
| 32 | 54 | X | -0.02 | -0.02 | 0 | %100 |
| 33 | 55 | X | -0.02 | -0.02 | 0 | %100 |
| 34 | 56 | X | -0.02 | -0.02 | 0 | %100 |
| 35 | 57 | X | -0.009 | -0.009 | 0 | %100 |
| 36 | 58 | X | -0.009 | -0.009 | 0 | %100 |
| 37 | 59 | X | -0.027 | -0.027 | 0 | %100 |
| 38 | 64 | X | -0.024 | -0.024 | 0 | %100 |
| 39 | 69 | X | -0.011 | -0.011 | 0 | %100 |
| 40 | 72 | X | -0.009 | -0.009 | 0 | %100 |
| 41 | 73 | X | -0.009 | -0.009 | 0 | %100 |
| 42 | 76 | X | -0.009 | -0.009 | 0 | %100 |
| 43 | 78 | X | -0.009 | -0.009 | 0 | %100 |
| 44 | 80 | X | -0.011 | -0.011 | 0 | %100 |
| 45 | 83 | X | -0.009 | -0.009 | 0 | %100 |
| 46 | 84 | X | -0.009 | -0.009 | 0 | %100 |
| 47 | 87 | X | -0.009 | -0.009 | 0 | %100 |
| 48 | 89 | X | -0.009 | -0.009 | 0 | %100 |

***Member Distributed Loads (BLC 4 : 0 Wind - Ice)***

| | Member Label | Direction | Start Magnitude [k/ft, F, ksf, k-ft/ft] | End Magnitude [k/ft, F, ksf, k-ft/ft] | Start Location [(ft, %)] | End Location [(ft, %)] |
|---|---|---|---|---|---|---|
| 1 | 1 | Z | -0.004 | -0.004 | 0 | %100 |
| 2 | 2 | Z | -0.004 | -0.004 | 0 | %100 |
| 3 | 3 | Z | -0.004 | -0.004 | 0 | %100 |
| 4 | 4 | Z | -0.007 | -0.007 | 0 | %100 |
| 5 | 5 | Z | -0.007 | -0.007 | 0 | %100 |
| 6 | 6 | Z | -0.002 | -0.002 | 0 | %100 |
| 7 | 7 | Z | -0.009 | -0.009 | 0 | %100 |
| 8 | 8 | Z | -0.009 | -0.009 | 0 | %100 |
| 9 | 9 | Z | -0.003 | -0.003 | 0 | %100 |
| 10 | 10 | Z | -0.003 | -0.003 | 0 | %100 |
| 11 | 11 | Z | -0.006 | -0.006 | 0 | %100 |
| 12 | 18 | Z | -0.001 | -0.001 | 0 | %100 |
| 13 | 19 | Z | -0.001 | -0.001 | 0 | %100 |
| 14 | 22 | Z | -0.001 | -0.001 | 0 | %100 |
| 15 | 23 | Z | -0.006 | -0.006 | 0 | %100 |
| 16 | 29 | Z | -0.001 | -0.001 | 0 | %100 |
| 17 | 31 | Z | -0.004 | -0.004 | 0 | %100 |
| 18 | 32 | Z | -0.004 | -0.004 | 0 | %100 |
| 19 | 33 | Z | -0.004 | -0.004 | 0 | %100 |
| 20 | 34 | Z | -0.007 | -0.007 | 0 | %100 |
| 21 | 35 | Z | -0.007 | -0.007 | 0 | %100 |
| 22 | 36 | Z | -0.009 | -0.009 | 0 | %100 |
| 23 | 37 | Z | -0.009 | -0.009 | 0 | %100 |
| 24 | 38 | Z | -0.003 | -0.003 | 0 | %100 |
| 25 | 39 | Z | -0.003 | -0.003 | 0 | %100 |
| 26 | 40 | Z | -0.006 | -0.006 | 0 | %100 |
| 27 | 45 | Z | -0.006 | -0.006 | 0 | %100 |
| 28 | 50 | Z | -0.004 | -0.004 | 0 | %100 |
| 29 | 51 | Z | -0.004 | -0.004 | 0 | %100 |
| 30 | 52 | Z | -0.004 | -0.004 | 0 | %100 |
| 31 | 53 | Z | -0.007 | -0.007 | 0 | %100 |
| 32 | 54 | Z | -0.007 | -0.007 | 0 | %100 |
| 33 | 55 | Z | -0.009 | -0.009 | 0 | %100 |
| 34 | 56 | Z | -0.009 | -0.009 | 0 | %100 |
| 35 | 57 | Z | -0.003 | -0.003 | 0 | %100 |
| 36 | 58 | Z | -0.003 | -0.003 | 0 | %100 |
| 37 | 59 | Z | -0.006 | -0.006 | 0 | %100 |
| 38 | 64 | Z | -0.006 | -0.006 | 0 | %100 |
| 39 | 69 | Z | -0.002 | -0.002 | 0 | %100 |
| 40 | 72 | Z | -0.001 | -0.001 | 0 | %100 |
| 41 | 73 | Z | -0.001 | -0.001 | 0 | %100 |
| 42 | 76 | Z | -0.001 | -0.001 | 0 | %100 |
| 43 | 78 | Z | -0.001 | -0.001 | 0 | %100 |
| 44 | 80 | Z | -0.002 | -0.002 | 0 | %100 |
| 45 | 83 | Z | -0.001 | -0.001 | 0 | %100 |
| 46 | 84 | Z | -0.001 | -0.001 | 0 | %100 |
| 47 | 87 | Z | -0.001 | -0.001 | 0 | %100 |
| 48 | 89 | Z | -0.001 | -0.001 | 0 | %100 |

***Member Distributed Loads (BLC 5 : 90 Wind - Ice)***

| | Member Label | Direction | Start Magnitude [k/ft, F, ksf, k-ft/ft] | End Magnitude [k/ft, F, ksf, k-ft/ft] | Start Location [(ft, %)] | End Location [(ft, %)] |
|---|---|---|---|---|---|---|
| 1 | 1 | X | -0.004 | -0.004 | 0 | %100 |
| 2 | 2 | X | -0.004 | -0.004 | 0 | %100 |
| 3 | 3 | X | -0.004 | -0.004 | 0 | %100 |

***Member Distributed Loads (BLC 5 : 90 Wind - Ice) (Continued)***

| | Member Label | Direction | Start Magnitude [k/ft, F, ksf, k-ft/ft] | End Magnitude [k/ft, F, ksf, k-ft/ft] | Start Location [(ft, %)] | End Location [(ft, %)] |
|---|---|---|---|---|---|---|
| 4 | 4 | X | -0.007 | -0.007 | 0 | %100 |
| 5 | 5 | X | -0.007 | -0.007 | 0 | %100 |
| 6 | 6 | X | -0.002 | -0.002 | 0 | %100 |
| 7 | 7 | X | -0.009 | -0.009 | 0 | %100 |
| 8 | 8 | X | -0.009 | -0.009 | 0 | %100 |
| 9 | 9 | X | -0.003 | -0.003 | 0 | %100 |
| 10 | 10 | X | -0.003 | -0.003 | 0 | %100 |
| 11 | 11 | X | -0.006 | -0.006 | 0 | %100 |
| 12 | 18 | X | -0.001 | -0.001 | 0 | %100 |
| 13 | 19 | X | -0.001 | -0.001 | 0 | %100 |
| 14 | 22 | X | -0.001 | -0.001 | 0 | %100 |
| 15 | 23 | X | -0.006 | -0.006 | 0 | %100 |
| 16 | 29 | X | -0.001 | -0.001 | 0 | %100 |
| 17 | 31 | X | -0.004 | -0.004 | 0 | %100 |
| 18 | 32 | X | -0.004 | -0.004 | 0 | %100 |
| 19 | 33 | X | -0.004 | -0.004 | 0 | %100 |
| 20 | 34 | X | -0.007 | -0.007 | 0 | %100 |
| 21 | 35 | X | -0.007 | -0.007 | 0 | %100 |
| 22 | 36 | X | -0.009 | -0.009 | 0 | %100 |
| 23 | 37 | X | -0.009 | -0.009 | 0 | %100 |
| 24 | 38 | X | -0.003 | -0.003 | 0 | %100 |
| 25 | 39 | X | -0.003 | -0.003 | 0 | %100 |
| 26 | 40 | X | -0.006 | -0.006 | 0 | %100 |
| 27 | 45 | X | -0.006 | -0.006 | 0 | %100 |
| 28 | 50 | X | -0.004 | -0.004 | 0 | %100 |
| 29 | 51 | X | -0.004 | -0.004 | 0 | %100 |
| 30 | 52 | X | -0.004 | -0.004 | 0 | %100 |
| 31 | 53 | X | -0.007 | -0.007 | 0 | %100 |
| 32 | 54 | X | -0.007 | -0.007 | 0 | %100 |
| 33 | 55 | X | -0.009 | -0.009 | 0 | %100 |
| 34 | 56 | X | -0.009 | -0.009 | 0 | %100 |
| 35 | 57 | X | -0.003 | -0.003 | 0 | %100 |
| 36 | 58 | X | -0.003 | -0.003 | 0 | %100 |
| 37 | 59 | X | -0.006 | -0.006 | 0 | %100 |
| 38 | 64 | X | -0.006 | -0.006 | 0 | %100 |
| 39 | 69 | X | -0.002 | -0.002 | 0 | %100 |
| 40 | 72 | X | -0.001 | -0.001 | 0 | %100 |
| 41 | 73 | X | -0.001 | -0.001 | 0 | %100 |
| 42 | 76 | X | -0.001 | -0.001 | 0 | %100 |
| 43 | 78 | X | -0.001 | -0.001 | 0 | %100 |
| 44 | 80 | X | -0.002 | -0.002 | 0 | %100 |
| 45 | 83 | X | -0.001 | -0.001 | 0 | %100 |
| 46 | 84 | X | -0.001 | -0.001 | 0 | %100 |
| 47 | 87 | X | -0.001 | -0.001 | 0 | %100 |
| 48 | 89 | X | -0.001 | -0.001 | 0 | %100 |

***Member Distributed Loads (BLC 6 : 0 Wind - Service)***

| | Member Label | Direction | Start Magnitude [k/ft, F, ksf, k-ft/ft] | End Magnitude [k/ft, F, ksf, k-ft/ft] | Start Location [(ft, %)] | End Location [(ft, %)] |
|---|---|---|---|---|---|---|
| 1 | 1 | Z | -0.001 | -0.001 | 0 | %100 |
| 2 | 2 | Z | -0.0008 | -0.0008 | 0 | %100 |
| 3 | 3 | Z | -0.0008 | -0.0008 | 0 | %100 |
| 4 | 4 | Z | -0.001 | -0.001 | 0 | %100 |
| 5 | 5 | Z | -0.001 | -0.001 | 0 | %100 |
| 6 | 6 | Z | -0.0003 | -0.0003 | 0 | %100 |
| 7 | 7 | Z | -0.001 | -0.001 | 0 | %100 |

***Member Distributed Loads (BLC 6 : 0 Wind - Service) (Continued)***

| | Member Label | Direction | Start Magnitude [k/ft, F, ksf, k-ft/ft] | End Magnitude [k/ft, F, ksf, k-ft/ft] | Start Location [(ft, %)] | End Location [(ft, %)] |
|---|---|---|---|---|---|---|
| 8 | 8 | Z | -0.001 | -0.001 | 0 | %100 |
| 9 | 9 | Z | -0.0005 | -0.0005 | 0 | %100 |
| 10 | 10 | Z | -0.0005 | -0.0005 | 0 | %100 |
| 11 | 11 | Z | -0.002 | -0.002 | 0 | %100 |
| 12 | 18 | Z | -0.0003 | -0.0003 | 0 | %100 |
| 13 | 19 | Z | -0.0003 | -0.0003 | 0 | %100 |
| 14 | 22 | Z | -0.0003 | -0.0003 | 0 | %100 |
| 15 | 23 | Z | -0.001 | -0.001 | 0 | %100 |
| 16 | 29 | Z | -0.0003 | -0.0003 | 0 | %100 |
| 17 | 31 | Z | -0.001 | -0.001 | 0 | %100 |
| 18 | 32 | Z | -0.0008 | -0.0008 | 0 | %100 |
| 19 | 33 | Z | -0.0008 | -0.0008 | 0 | %100 |
| 20 | 34 | Z | -0.001 | -0.001 | 0 | %100 |
| 21 | 35 | Z | -0.001 | -0.001 | 0 | %100 |
| 22 | 36 | Z | -0.001 | -0.001 | 0 | %100 |
| 23 | 37 | Z | -0.001 | -0.001 | 0 | %100 |
| 24 | 38 | Z | -0.0005 | -0.0005 | 0 | %100 |
| 25 | 39 | Z | -0.0005 | -0.0005 | 0 | %100 |
| 26 | 40 | Z | -0.002 | -0.002 | 0 | %100 |
| 27 | 45 | Z | -0.001 | -0.001 | 0 | %100 |
| 28 | 50 | Z | -0.001 | -0.001 | 0 | %100 |
| 29 | 51 | Z | -0.0008 | -0.0008 | 0 | %100 |
| 30 | 52 | Z | -0.0008 | -0.0008 | 0 | %100 |
| 31 | 53 | Z | -0.001 | -0.001 | 0 | %100 |
| 32 | 54 | Z | -0.001 | -0.001 | 0 | %100 |
| 33 | 55 | Z | -0.001 | -0.001 | 0 | %100 |
| 34 | 56 | Z | -0.001 | -0.001 | 0 | %100 |
| 35 | 57 | Z | -0.0005 | -0.0005 | 0 | %100 |
| 36 | 58 | Z | -0.0005 | -0.0005 | 0 | %100 |
| 37 | 59 | Z | -0.002 | -0.002 | 0 | %100 |
| 38 | 64 | Z | -0.001 | -0.001 | 0 | %100 |
| 39 | 69 | Z | -0.0003 | -0.0003 | 0 | %100 |
| 40 | 72 | Z | -0.0003 | -0.0003 | 0 | %100 |
| 41 | 73 | Z | -0.0003 | -0.0003 | 0 | %100 |
| 42 | 76 | Z | -0.0003 | -0.0003 | 0 | %100 |
| 43 | 78 | Z | -0.0003 | -0.0003 | 0 | %100 |
| 44 | 80 | Z | -0.0003 | -0.0003 | 0 | %100 |
| 45 | 83 | Z | -0.0003 | -0.0003 | 0 | %100 |
| 46 | 84 | Z | -0.0003 | -0.0003 | 0 | %100 |
| 47 | 87 | Z | -0.0003 | -0.0003 | 0 | %100 |
| 48 | 89 | Z | -0.0003 | -0.0003 | 0 | %100 |

***Member Distributed Loads (BLC 7 : 90 Wind - Service)***

| | Member Label | Direction | Start Magnitude [k/ft, F, ksf, k-ft/ft] | End Magnitude [k/ft, F, ksf, k-ft/ft] | Start Location [(ft, %)] | End Location [(ft, %)] |
|---|---|---|---|---|---|---|
| 1 | 1 | X | -0.001 | -0.001 | 0 | %100 |
| 2 | 2 | X | -0.0008 | -0.0008 | 0 | %100 |
| 3 | 3 | X | -0.0008 | -0.0008 | 0 | %100 |
| 4 | 4 | X | -0.001 | -0.001 | 0 | %100 |
| 5 | 5 | X | -0.001 | -0.001 | 0 | %100 |
| 6 | 6 | X | -0.0003 | -0.0003 | 0 | %100 |
| 7 | 7 | X | -0.001 | -0.001 | 0 | %100 |
| 8 | 8 | X | -0.001 | -0.001 | 0 | %100 |
| 9 | 9 | X | -0.0005 | -0.0005 | 0 | %100 |
| 10 | 10 | X | -0.0005 | -0.0005 | 0 | %100 |
| 11 | 11 | X | -0.002 | -0.002 | 0 | %100 |

***Member Distributed Loads (BLC 7 : 90 Wind - Service) (Continued)***

| | Member Label | Direction | Start Magnitude [k/ft, F, ksf, k-ft/ft] | End Magnitude [k/ft, F, ksf, k-ft/ft] | Start Location [(ft, %)] | End Location [(ft, %)] |
|---|---|---|---|---|---|---|
| 12 | 18 | X | -0.0003 | -0.0003 | 0 | %100 |
| 13 | 19 | X | -0.0003 | -0.0003 | 0 | %100 |
| 14 | 22 | X | -0.0003 | -0.0003 | 0 | %100 |
| 15 | 23 | X | -0.001 | -0.001 | 0 | %100 |
| 16 | 29 | X | -0.0003 | -0.0003 | 0 | %100 |
| 17 | 31 | X | -0.001 | -0.001 | 0 | %100 |
| 18 | 32 | X | -0.0008 | -0.0008 | 0 | %100 |
| 19 | 33 | X | -0.0008 | -0.0008 | 0 | %100 |
| 20 | 34 | X | -0.001 | -0.001 | 0 | %100 |
| 21 | 35 | X | -0.001 | -0.001 | 0 | %100 |
| 22 | 36 | X | -0.001 | -0.001 | 0 | %100 |
| 23 | 37 | X | -0.001 | -0.001 | 0 | %100 |
| 24 | 38 | X | -0.0005 | -0.0005 | 0 | %100 |
| 25 | 39 | X | -0.0005 | -0.0005 | 0 | %100 |
| 26 | 40 | X | -0.002 | -0.002 | 0 | %100 |
| 27 | 45 | X | -0.001 | -0.001 | 0 | %100 |
| 28 | 50 | X | -0.001 | -0.001 | 0 | %100 |
| 29 | 51 | X | -0.0008 | -0.0008 | 0 | %100 |
| 30 | 52 | X | -0.0008 | -0.0008 | 0 | %100 |
| 31 | 53 | X | -0.001 | -0.001 | 0 | %100 |
| 32 | 54 | X | -0.001 | -0.001 | 0 | %100 |
| 33 | 55 | X | -0.001 | -0.001 | 0 | %100 |
| 34 | 56 | X | -0.001 | -0.001 | 0 | %100 |
| 35 | 57 | X | -0.0005 | -0.0005 | 0 | %100 |
| 36 | 58 | X | -0.0005 | -0.0005 | 0 | %100 |
| 37 | 59 | X | -0.002 | -0.002 | 0 | %100 |
| 38 | 64 | X | -0.001 | -0.001 | 0 | %100 |
| 39 | 69 | X | -0.0003 | -0.0003 | 0 | %100 |
| 40 | 72 | X | -0.0003 | -0.0003 | 0 | %100 |
| 41 | 73 | X | -0.0003 | -0.0003 | 0 | %100 |
| 42 | 76 | X | -0.0003 | -0.0003 | 0 | %100 |
| 43 | 78 | X | -0.0003 | -0.0003 | 0 | %100 |
| 44 | 80 | X | -0.0003 | -0.0003 | 0 | %100 |
| 45 | 83 | X | -0.0003 | -0.0003 | 0 | %100 |
| 46 | 84 | X | -0.0003 | -0.0003 | 0 | %100 |
| 47 | 87 | X | -0.0003 | -0.0003 | 0 | %100 |
| 48 | 89 | X | -0.0003 | -0.0003 | 0 | %100 |

***Member Distributed Loads (BLC 8 : Ice)***

| | Member Label | Direction | Start Magnitude [k/ft, F, ksf, k-ft/ft] | End Magnitude [k/ft, F, ksf, k-ft/ft] | Start Location [(ft, %)] | End Location [(ft, %)] |
|---|---|---|---|---|---|---|
| 1 | 1 | Y | -0.009 | -0.009 | 0 | %100 |
| 2 | 2 | Y | -0.007 | -0.007 | 0 | %100 |
| 3 | 3 | Y | -0.007 | -0.007 | 0 | %100 |
| 4 | 4 | Y | -0.01 | -0.01 | 0 | %100 |
| 5 | 5 | Y | -0.01 | -0.01 | 0 | %100 |
| 6 | 6 | Y | -0.006 | -0.006 | 0 | %100 |
| 7 | 7 | Y | -0.01 | -0.01 | 0 | %100 |
| 8 | 8 | Y | -0.01 | -0.01 | 0 | %100 |
| 9 | 9 | Y | -0.005 | -0.005 | 0 | %100 |
| 10 | 10 | Y | -0.005 | -0.005 | 0 | %100 |
| 11 | 11 | Y | -0.013 | -0.013 | 0 | %100 |
| 12 | 18 | Y | -0.006 | -0.006 | 0 | %100 |
| 13 | 19 | Y | -0.006 | -0.006 | 0 | %100 |
| 14 | 22 | Y | -0.006 | -0.006 | 0 | %100 |
| 15 | 23 | Y | -0.012 | -0.012 | 0 | %100 |

***Member Distributed Loads (BLC 8 : Ice) (Continued)***

| | Member Label | Direction | Start Magnitude [k/ft, F, ksf, k-ft/ft] | End Magnitude [k/ft, F, ksf, k-ft/ft] | Start Location [(ft, %)] | End Location [(ft, %)] |
|---|---|---|---|---|---|---|
| 16 | 29 | Y | -0.006 | -0.006 | 0 | %100 |
| 17 | 31 | Y | -0.009 | -0.009 | 0 | %100 |
| 18 | 32 | Y | -0.007 | -0.007 | 0 | %100 |
| 19 | 33 | Y | -0.007 | -0.007 | 0 | %100 |
| 20 | 34 | Y | -0.01 | -0.01 | 0 | %100 |
| 21 | 35 | Y | -0.01 | -0.01 | 0 | %100 |
| 22 | 36 | Y | -0.01 | -0.01 | 0 | %100 |
| 23 | 37 | Y | -0.01 | -0.01 | 0 | %100 |
| 24 | 38 | Y | -0.005 | -0.005 | 0 | %100 |
| 25 | 39 | Y | -0.005 | -0.005 | 0 | %100 |
| 26 | 40 | Y | -0.013 | -0.013 | 0 | %100 |
| 27 | 45 | Y | -0.012 | -0.012 | 0 | %100 |
| 28 | 50 | Y | -0.009 | -0.009 | 0 | %100 |
| 29 | 51 | Y | -0.007 | -0.007 | 0 | %100 |
| 30 | 52 | Y | -0.007 | -0.007 | 0 | %100 |
| 31 | 53 | Y | -0.01 | -0.01 | 0 | %100 |
| 32 | 54 | Y | -0.01 | -0.01 | 0 | %100 |
| 33 | 55 | Y | -0.01 | -0.01 | 0 | %100 |
| 34 | 56 | Y | -0.01 | -0.01 | 0 | %100 |
| 35 | 57 | Y | -0.005 | -0.005 | 0 | %100 |
| 36 | 58 | Y | -0.005 | -0.005 | 0 | %100 |
| 37 | 59 | Y | -0.013 | -0.013 | 0 | %100 |
| 38 | 64 | Y | -0.012 | -0.012 | 0 | %100 |
| 39 | 69 | Y | -0.006 | -0.006 | 0 | %100 |
| 40 | 72 | Y | -0.006 | -0.006 | 0 | %100 |
| 41 | 73 | Y | -0.006 | -0.006 | 0 | %100 |
| 42 | 76 | Y | -0.006 | -0.006 | 0 | %100 |
| 43 | 78 | Y | -0.006 | -0.006 | 0 | %100 |
| 44 | 80 | Y | -0.006 | -0.006 | 0 | %100 |
| 45 | 83 | Y | -0.006 | -0.006 | 0 | %100 |
| 46 | 84 | Y | -0.006 | -0.006 | 0 | %100 |
| 47 | 87 | Y | -0.006 | -0.006 | 0 | %100 |
| 48 | 89 | Y | -0.006 | -0.006 | 0 | %100 |

***Member Distributed Loads (BLC 9 : 0 Seismic)***

| | Member Label | Direction | Start Magnitude [k/ft, F, ksf, k-ft/ft] | End Magnitude [k/ft, F, ksf, k-ft/ft] | Start Location [(ft, %)] | End Location [(ft, %)] |
|---|---|---|---|---|---|---|
| 1 | 1 | Z | -0.001 | -0.001 | 0 | %100 |
| 2 | 2 | Z | -0.0007 | -0.0007 | 0 | %100 |
| 3 | 3 | Z | -0.0007 | -0.0007 | 0 | %100 |
| 4 | 4 | Z | -0.001 | -0.001 | 0 | %100 |
| 5 | 5 | Z | -0.001 | -0.001 | 0 | %100 |
| 6 | 6 | Z | -0.0009 | -0.0009 | 0 | %100 |
| 7 | 7 | Z | -0.001 | -0.001 | 0 | %100 |
| 8 | 8 | Z | -0.001 | -0.001 | 0 | %100 |
| 9 | 9 | Z | -0.0005 | -0.0005 | 0 | %100 |
| 10 | 10 | Z | -0.0005 | -0.0005 | 0 | %100 |
| 11 | 11 | Z | -0.002 | -0.002 | 0 | %100 |
| 12 | 18 | Z | -0.0009 | -0.0009 | 0 | %100 |
| 13 | 19 | Z | -0.0009 | -0.0009 | 0 | %100 |
| 14 | 22 | Z | -0.0009 | -0.0009 | 0 | %100 |
| 15 | 23 | Z | -0.001 | -0.001 | 0 | %100 |
| 16 | 29 | Z | -0.0009 | -0.0009 | 0 | %100 |
| 17 | 31 | Z | -0.001 | -0.001 | 0 | %100 |
| 18 | 32 | Z | -0.0007 | -0.0007 | 0 | %100 |
| 19 | 33 | Z | -0.0007 | -0.0007 | 0 | %100 |

***Member Distributed Loads (BLC 9 : 0 Seismic) (Continued)***

| | Member Label | Direction | Start Magnitude [k/ft, F, ksf, k-ft/ft] | End Magnitude [k/ft, F, ksf, k-ft/ft] | Start Location [(ft, %)] | End Location [(ft, %)] |
|---|---|---|---|---|---|---|
| 20 | 34 | Z | -0.001 | -0.001 | 0 | %100 |
| 21 | 35 | Z | -0.001 | -0.001 | 0 | %100 |
| 22 | 36 | Z | -0.001 | -0.001 | 0 | %100 |
| 23 | 37 | Z | -0.001 | -0.001 | 0 | %100 |
| 24 | 38 | Z | -0.0005 | -0.0005 | 0 | %100 |
| 25 | 39 | Z | -0.0005 | -0.0005 | 0 | %100 |
| 26 | 40 | Z | -0.002 | -0.002 | 0 | %100 |
| 27 | 45 | Z | -0.001 | -0.001 | 0 | %100 |
| 28 | 50 | Z | -0.001 | -0.001 | 0 | %100 |
| 29 | 51 | Z | -0.0007 | -0.0007 | 0 | %100 |
| 30 | 52 | Z | -0.0007 | -0.0007 | 0 | %100 |
| 31 | 53 | Z | -0.001 | -0.001 | 0 | %100 |
| 32 | 54 | Z | -0.001 | -0.001 | 0 | %100 |
| 33 | 55 | Z | -0.001 | -0.001 | 0 | %100 |
| 34 | 56 | Z | -0.001 | -0.001 | 0 | %100 |
| 35 | 57 | Z | -0.0005 | -0.0005 | 0 | %100 |
| 36 | 58 | Z | -0.0005 | -0.0005 | 0 | %100 |
| 37 | 59 | Z | -0.002 | -0.002 | 0 | %100 |
| 38 | 64 | Z | -0.001 | -0.001 | 0 | %100 |
| 39 | 69 | Z | -0.0009 | -0.0009 | 0 | %100 |
| 40 | 72 | Z | -0.0009 | -0.0009 | 0 | %100 |
| 41 | 73 | Z | -0.0009 | -0.0009 | 0 | %100 |
| 42 | 76 | Z | -0.0009 | -0.0009 | 0 | %100 |
| 43 | 78 | Z | -0.0009 | -0.0009 | 0 | %100 |
| 44 | 80 | Z | -0.0009 | -0.0009 | 0 | %100 |
| 45 | 83 | Z | -0.0009 | -0.0009 | 0 | %100 |
| 46 | 84 | Z | -0.0009 | -0.0009 | 0 | %100 |
| 47 | 87 | Z | -0.0009 | -0.0009 | 0 | %100 |
| 48 | 89 | Z | -0.0009 | -0.0009 | 0 | %100 |

***Member Distributed Loads (BLC 10 : 90 Seismic)***

| | Member Label | Direction | Start Magnitude [k/ft, F, ksf, k-ft/ft] | End Magnitude [k/ft, F, ksf, k-ft/ft] | Start Location [(ft, %)] | End Location [(ft, %)] |
|---|---|---|---|---|---|---|
| 1 | 1 | X | -0.001 | -0.001 | 0 | %100 |
| 2 | 2 | X | -0.0007 | -0.0007 | 0 | %100 |
| 3 | 3 | X | -0.0007 | -0.0007 | 0 | %100 |
| 4 | 4 | X | -0.001 | -0.001 | 0 | %100 |
| 5 | 5 | X | -0.001 | -0.001 | 0 | %100 |
| 6 | 6 | X | -0.0009 | -0.0009 | 0 | %100 |
| 7 | 7 | X | -0.001 | -0.001 | 0 | %100 |
| 8 | 8 | X | -0.001 | -0.001 | 0 | %100 |
| 9 | 9 | X | -0.0005 | -0.0005 | 0 | %100 |
| 10 | 10 | X | -0.0005 | -0.0005 | 0 | %100 |
| 11 | 11 | X | -0.002 | -0.002 | 0 | %100 |
| 12 | 18 | X | -0.0009 | -0.0009 | 0 | %100 |
| 13 | 19 | X | -0.0009 | -0.0009 | 0 | %100 |
| 14 | 22 | X | -0.0009 | -0.0009 | 0 | %100 |
| 15 | 23 | X | -0.001 | -0.001 | 0 | %100 |
| 16 | 29 | X | -0.0009 | -0.0009 | 0 | %100 |
| 17 | 31 | X | -0.001 | -0.001 | 0 | %100 |
| 18 | 32 | X | -0.0007 | -0.0007 | 0 | %100 |
| 19 | 33 | X | -0.0007 | -0.0007 | 0 | %100 |
| 20 | 34 | X | -0.001 | -0.001 | 0 | %100 |
| 21 | 35 | X | -0.001 | -0.001 | 0 | %100 |
| 22 | 36 | X | -0.001 | -0.001 | 0 | %100 |
| 23 | 37 | X | -0.001 | -0.001 | 0 | %100 |

***Member Distributed Loads (BLC 10 : 90 Seismic) (Continued)***

| | Member Label | Direction | Start Magnitude [k/ft, F, ksf, k-ft/ft] | End Magnitude [k/ft, F, ksf, k-ft/ft] | Start Location [(ft, %)] | End Location [(ft, %)] |
|---|---|---|---|---|---|---|
| 24 | 38 | X | -0.0005 | -0.0005 | 0 | %100 |
| 25 | 39 | X | -0.0005 | -0.0005 | 0 | %100 |
| 26 | 40 | X | -0.002 | -0.002 | 0 | %100 |
| 27 | 45 | X | -0.001 | -0.001 | 0 | %100 |
| 28 | 50 | X | -0.001 | -0.001 | 0 | %100 |
| 29 | 51 | X | -0.0007 | -0.0007 | 0 | %100 |
| 30 | 52 | X | -0.0007 | -0.0007 | 0 | %100 |
| 31 | 53 | X | -0.001 | -0.001 | 0 | %100 |
| 32 | 54 | X | -0.001 | -0.001 | 0 | %100 |
| 33 | 55 | X | -0.001 | -0.001 | 0 | %100 |
| 34 | 56 | X | -0.001 | -0.001 | 0 | %100 |
| 35 | 57 | X | -0.0005 | -0.0005 | 0 | %100 |
| 36 | 58 | X | -0.0005 | -0.0005 | 0 | %100 |
| 37 | 59 | X | -0.002 | -0.002 | 0 | %100 |
| 38 | 64 | X | -0.001 | -0.001 | 0 | %100 |
| 39 | 69 | X | -0.0009 | -0.0009 | 0 | %100 |
| 40 | 72 | X | -0.0009 | -0.0009 | 0 | %100 |
| 41 | 73 | X | -0.0009 | -0.0009 | 0 | %100 |
| 42 | 76 | X | -0.0009 | -0.0009 | 0 | %100 |
| 43 | 78 | X | -0.0009 | -0.0009 | 0 | %100 |
| 44 | 80 | X | -0.0009 | -0.0009 | 0 | %100 |
| 45 | 83 | X | -0.0009 | -0.0009 | 0 | %100 |
| 46 | 84 | X | -0.0009 | -0.0009 | 0 | %100 |
| 47 | 87 | X | -0.0009 | -0.0009 | 0 | %100 |
| 48 | 89 | X | -0.0009 | -0.0009 | 0 | %100 |

***Member Distributed Loads (BLC 30 : BLC 1 Transient Area Loads)***

| | Member Label | Direction | Start Magnitude [k/ft, F, ksf, k-ft/ft] | End Magnitude [k/ft, F, ksf, k-ft/ft] | Start Location [(ft, %)] | End Location [(ft, %)] |
|---|---|---|---|---|---|---|
| 1 | 10 | Y | -0.01 | -0.02 | 0.231 | 2.309 |
| 2 | 38 | Y | -0.035 | -0.016 | 0 | 1.155 |
| 3 | 38 | Y | -0.016 | 0.0006164 | 1.155 | 2.309 |
| 4 | 39 | Y | -0.018 | -0.016 | 0.231 | 2.309 |
| 5 | 57 | Y | -0.018 | -0.016 | 0 | 2.078 |
| 6 | 58 | Y | 0.0006163 | -0.016 | 0 | 1.155 |
| 7 | 58 | Y | -0.016 | -0.035 | 1.155 | 2.309 |
| 8 | 9 | Y | -0.026 | -0.02 | 0 | 1.039 |
| 9 | 9 | Y | -0.02 | -0.014 | 1.039 | 2.078 |

***Member Distributed Loads (BLC 31 : BLC 8 Transient Area Loads)***

| | Member Label | Direction | Start Magnitude [k/ft, F, ksf, k-ft/ft] | End Magnitude [k/ft, F, ksf, k-ft/ft] | Start Location [(ft, %)] | End Location [(ft, %)] |
|---|---|---|---|---|---|---|
| 1 | 9 | Y | -0.014 | -0.011 | 0 | 1.039 |
| 2 | 9 | Y | -0.011 | -0.008 | 1.039 | 2.078 |
| 3 | 10 | Y | -0.005 | -0.011 | 0.231 | 2.309 |
| 4 | 38 | Y | -0.017 | -0.008 | 0 | 1.155 |
| 5 | 38 | Y | -0.008 | 0.0003082 | 1.155 | 2.309 |
| 6 | 39 | Y | -0.009 | -0.008 | 0.231 | 2.309 |
| 7 | 57 | Y | -0.009 | -0.008 | 0 | 2.078 |
| 8 | 58 | Y | 0.0003082 | -0.008 | 0 | 1.155 |
| 9 | 58 | Y | -0.008 | -0.017 | 1.155 | 2.309 |

### Member Area Loads (BLC 1 : Dead)

| | Node A | Node B | Node C | Node D | Direction | Load Direction | Magnitude [ksf] |
|---|---|---|---|---|---|---|---|
| 1 | 22 | 23 | 24 | 25 | Y | Two Way | -0.01 |
| 2 | 72 | 73 | 74 | 75 | Y | Two Way | -0.01 |
| 3 | 101 | 102 | 103 | 104 | Y | Two Way | -0.01 |

### Member Area Loads (BLC 8 : Ice)

| | Node A | Node B | Node C | Node D | Direction | Load Direction | Magnitude [ksf] |
|---|---|---|---|---|---|---|---|
| 1 | 22 | 23 | 24 | 25 | Y | Two Way | -0.005 |
| 2 | 72 | 73 | 74 | 75 | Y | Two Way | -0.005 |
| 3 | 101 | 102 | 103 | 104 | Y | Two Way | -0.005 |

### Node Loads and Enforced Displacements (BLC 11 : Live Load a)

| | Node Label | L, D, M | Direction | Magnitude [(k, k-ft), (in, rad), (k*s²/ft, k*s²*ft)] |
|---|---|---|---|---|
| 1 | 30 | L | Y | -0.5 |
| 2 | 113 | L | Y | -0.5 |
| 3 | 135 | L | Y | -0.5 |

### Node Loads and Enforced Displacements (BLC 12 : Live Load b)

| | Node Label | L, D, M | Direction | Magnitude [(k, k-ft), (in, rad), (k*s²/ft, k*s²*ft)] |
|---|---|---|---|---|
| 1 | 31 | L | Y | -0.5 |
| 2 | 114 | L | Y | -0.5 |
| 3 | 136 | L | Y | -0.5 |

### Node Loads and Enforced Displacements (BLC 13 : Live Load c)

| | Node Label | L, D, M | Direction | Magnitude [(k, k-ft), (in, rad), (k*s²/ft, k*s²*ft)] |
|---|---|---|---|---|
| 1 | 46 | L | Y | -0.5 |
| 2 | 127 | L | Y | -0.5 |
| 3 | 149 | L | Y | -0.5 |

### Basic Load Cases

| | BLC Description | Category | Y Gravity | Nodal | Point | Distributed | Area(Member) |
|---|---|---|---|---|---|---|---|
| 1 | Dead | DL | -1 | | 20 | | 3 |
| 2 | 0 Wind - No Ice | WLZ | | | 20 | 48 | |
| 3 | 90 Wind - No Ice | WLX | | | 20 | 48 | |
| 4 | 0 Wind - Ice | WLZ | | | 20 | 48 | |
| 5 | 90 Wind - Ice | WLX | | | 20 | 48 | |
| 6 | 0 Wind - Service | WLZ | | | 20 | 48 | |
| 7 | 90 Wind - Service | WLX | | | 20 | 48 | |
| 8 | Ice | OL1 | | | 20 | 48 | 3 |
| 9 | 0 Seismic | ELZ | | | 20 | 48 | |
| 10 | 90 Seismic | ELX | | | 20 | 48 | |
| 11 | Live Load a | LL | | 3 | | | |
| 12 | Live Load b | LL | | 3 | | | |
| 13 | Live Load c | LL | | 3 | | | |
| 14 | Live Load d | LL | | | | | |
| 15 | Maint LL 1 | LL | | | 1 | | |
| 16 | Maint LL 2 | LL | | | 1 | | |
| 17 | Maint LL 3 | LL | | | 1 | | |
| 18 | Maint LL 4 | LL | | | 1 | | |

***Basic Load Cases (Continued)***

| | BLC Description | Category | Y Gravity | Nodal | Point | Distributed | Area(Member) |
|---|---|---|---|---|---|---|---|
| 19 | Maint LL 5 | LL | | | 1 | | |
| 20 | Maint LL 6 | LL | | | 1 | | |
| 21 | Maint LL 7 | LL | | | 1 | | |
| 22 | Maint LL 8 | LL | | | 1 | | |
| 23 | Maint LL 9 | LL | | | 1 | | |
| 24 | Maint LL 10 | LL | | | 1 | | |
| 25 | Maint LL 11 | LL | | | 1 | | |
| 26 | Maint LL 12 | LL | | | 1 | | |
| 27 | Maint LL 13 | LL | | | 1 | | |
| 28 | Maint LL 14 | LL | | | 1 | | |
| 29 | Maint LL 15 | LL | | | 1 | | |
| 30 | BLC 1 Transient Area Loads | None | | | | 9 | |
| 31 | BLC 8 Transient Area Loads | None | | | | 9 | |

***Load Combinations***

| | Description | Solve | P-Delta | BLC | Factor | BLC | Factor | BLC | Factor | BLC | Factor |
|---|---|---|---|---|---|---|---|---|---|---|---|
| 1 | 1.4 Dead | Yes | Y | 1 | 1.4 | | | | | | |
| 2 | 1.2 D + 1.0 - 0 W | Yes | Y | 1 | 1.2 | 2 | 1 | | | | |
| 3 | 1.2 D + 1.0 - 30 W | Yes | Y | 1 | 1.2 | 2 | 0.866 | 3 | 0.5 | | |
| 4 | 1.2 D + 1.0 - 60 W | Yes | Y | 1 | 1.2 | 3 | 0.866 | 2 | 0.5 | | |
| 5 | 1.2 D + 1.0 - 90 W | Yes | Y | 1 | 1.2 | 3 | 1 | | | | |
| 6 | 1.2 D + 1.0 - 120 W | Yes | Y | 1 | 1.2 | 3 | 0.866 | 2 | -0.5 | | |
| 7 | 1.2 D + 1.0 - 150 W | Yes | Y | 1 | 1.2 | 2 | -0.866 | 3 | 0.5 | | |
| 8 | 1.2 D + 1.0 - 180 W | Yes | Y | 1 | 1.2 | 2 | -1 | | | | |
| 9 | 1.2 D + 1.0 - 210 W | Yes | Y | 1 | 1.2 | 2 | -0.866 | 3 | -0.5 | | |
| 10 | 1.2 D + 1.0 - 240 W | Yes | Y | 1 | 1.2 | 3 | -0.866 | 2 | -0.5 | | |
| 11 | 1.2 D + 1.0 - 270 W | Yes | Y | 1 | 1.2 | 3 | -1 | | | | |
| 12 | 1.2 D + 1.0 - 300 W | Yes | Y | 1 | 1.2 | 3 | -0.866 | 2 | 0.5 | | |
| 13 | 1.2 D + 1.0 - 330 W | Yes | Y | 1 | 1.2 | 2 | 0.866 | 3 | -0.5 | | |
| 14 | 1.2 D + 1.0 - 0 W/Ice | Yes | Y | 1 | 1.2 | 4 | 1 | | | 8 | 1 |
| 15 | 1.2 D + 1.0 - 30 W/Ice | Yes | Y | 1 | 1.2 | 4 | 0.866 | 5 | 0.5 | 8 | 1 |
| 16 | 1.2 D + 1.0 - 60 W/Ice | Yes | Y | 1 | 1.2 | 5 | 0.866 | 4 | 0.5 | 8 | 1 |
| 17 | 1.2 D + 1.0 - 90 W/Ice | Yes | Y | 1 | 1.2 | 5 | 1 | | | 8 | 1 |
| 18 | 1.2 D + 1.0 - 120 W/Ice | Yes | Y | 1 | 1.2 | 5 | 0.866 | 4 | -0.5 | 8 | 1 |
| 19 | 1.2 D + 1.0 - 150 W/Ice | Yes | Y | 1 | 1.2 | 4 | -0.866 | 5 | 0.5 | 8 | 1 |
| 20 | 1.2 D + 1.0 - 180 W/Ice | Yes | Y | 1 | 1.2 | 4 | -1 | | | 8 | 1 |
| 21 | 1.2 D + 1.0 - 210 W/Ice | Yes | Y | 1 | 1.2 | 4 | -0.866 | 5 | -0.5 | 8 | 1 |
| 22 | 1.2 D + 1.0 - 240 W/Ice | Yes | Y | 1 | 1.2 | 5 | -0.866 | 4 | -0.5 | 8 | 1 |
| 23 | 1.2 D + 1.0 - 270 W/Ice | Yes | Y | 1 | 1.2 | 5 | -1 | | | 8 | 1 |
| 24 | 1.2 D + 1.0 - 300 W/Ice | Yes | Y | 1 | 1.2 | 5 | -0.866 | 4 | 0.5 | 8 | 1 |
| 25 | 1.2 D + 1.0 - 330 W/Ice | Yes | Y | 1 | 1.2 | 4 | 0.866 | 5 | -0.5 | 8 | 1 |
| 26 | 1.2 D + 1.0 E - 0 | Yes | Y | 1 | 1.2 | 9 | 1 | | | | |
| 27 | 1.2 D + 1.0 E - 30 | Yes | Y | 1 | 1.2 | 9 | 0.866 | 10 | 0.5 | | |
| 28 | 1.2 D + 1.0 E - 60 | Yes | Y | 1 | 1.2 | 10 | 0.866 | 9 | 0.5 | | |
| 29 | 1.2 D + 1.0 E - 90 | Yes | Y | 1 | 1.2 | 10 | 1 | | | | |
| 30 | 1.2 D + 1.0 E - 120 | Yes | Y | 1 | 1.2 | 10 | 0.866 | 9 | -0.5 | | |
| 31 | 1.2 D + 1.0 E - 150 | Yes | Y | 1 | 1.2 | 9 | -0.866 | 10 | 0.5 | | |
| 32 | 1.2 D + 1.0 E - 180 | Yes | Y | 1 | 1.2 | 9 | -1 | | | | |
| 33 | 1.2 D + 1.0 E - 210 | Yes | Y | 1 | 1.2 | 9 | -0.866 | 10 | -0.5 | | |
| 34 | 1.2 D + 1.0 E - 240 | Yes | Y | 1 | 1.2 | 10 | -0.866 | 9 | -0.5 | | |
| 35 | 1.2 D + 1.0 E - 270 | Yes | Y | 1 | 1.2 | 10 | -1 | | | | |
| 36 | 1.2 D + 1.0 E - 300 | Yes | Y | 1 | 1.2 | 10 | -0.866 | 9 | 0.5 | | |
| 37 | 1.2 D + 1.0 E - 330 | Yes | Y | 1 | 1.2 | 9 | 0.866 | 10 | -0.5 | | |
| 38 | 1.2 D + 1.5 LL a + Service - 0 W | Yes | Y | 1 | 1.2 | 6 | 1 | | | 11 | 1.5 |
| 39 | 1.2 D + 1.5 LL a + Service - 30 W | Yes | Y | 1 | 1.2 | 6 | 0.866 | 7 | 0.5 | 11 | 1.5 |

***Load Combinations (Continued)***

| | Description | Solve | P-Delta | BLC | Factor | BLC | Factor | BLC | Factor | BLC | Factor |
|---|---|---|---|---|---|---|---|---|---|---|---|
| 40 | 1.2 D + 1.5 LL a + Service - 60 W | Yes | Y | 1 | 1.2 | 7 | 0.866 | 6 | 0.5 | 11 | 1.5 |
| 41 | 1.2 D + 1.5 LL a + Service - 90 W | Yes | Y | 1 | 1.2 | 7 | 1 | | | 11 | 1.5 |
| 42 | 1.2 D + 1.5 LL a + Service - 120 W | Yes | Y | 1 | 1.2 | 7 | 0.866 | 6 | -0.5 | 11 | 1.5 |
| 43 | 1.2 D + 1.5 LL a + Service - 150 W | Yes | Y | 1 | 1.2 | 6 | -0.866 | 7 | 0.5 | 11 | 1.5 |
| 44 | 1.2 D + 1.5 LL a + Service - 180 W | Yes | Y | 1 | 1.2 | 6 | -1 | | | 11 | 1.5 |
| 45 | 1.2 D + 1.5 LL a + Service - 210 W | Yes | Y | 1 | 1.2 | 6 | -0.866 | 7 | -0.5 | 11 | 1.5 |
| 46 | 1.2 D + 1.5 LL a + Service - 240 W | Yes | Y | 1 | 1.2 | 7 | -0.866 | 6 | -0.5 | 11 | 1.5 |
| 47 | 1.2 D + 1.5 LL a + Service - 270 W | Yes | Y | 1 | 1.2 | 7 | -1 | | | 11 | 1.5 |
| 48 | 1.2 D + 1.5 LL a + Service - 300 W | Yes | Y | 1 | 1.2 | 7 | -0.866 | 6 | 0.5 | 11 | 1.5 |
| 49 | 1.2 D + 1.5 LL a + Service - 330 W | Yes | Y | 1 | 1.2 | 6 | 0.866 | 7 | -0.5 | 11 | 1.5 |
| 50 | 1.2 D + 1.5 LL b + Service - 0 W | Yes | Y | 1 | 1.2 | 6 | 1 | | | 12 | 1.5 |
| 51 | 1.2 D + 1.5 LL b + Service - 30 W | Yes | Y | 1 | 1.2 | 6 | 0.866 | 7 | 0.5 | 12 | 1.5 |
| 52 | 1.2 D + 1.5 LL b + Service - 60 W | Yes | Y | 1 | 1.2 | 7 | 0.866 | 6 | 0.5 | 12 | 1.5 |
| 53 | 1.2 D + 1.5 LL b + Service - 90 W | Yes | Y | 1 | 1.2 | 7 | 1 | | | 12 | 1.5 |
| 54 | 1.2 D + 1.5 LL b + Service - 120 W | Yes | Y | 1 | 1.2 | 7 | 0.866 | 6 | -0.5 | 12 | 1.5 |
| 55 | 1.2 D + 1.5 LL b + Service - 150 W | Yes | Y | 1 | 1.2 | 6 | -0.866 | 7 | 0.5 | 12 | 1.5 |
| 56 | 1.2 D + 1.5 LL b + Service - 180 W | Yes | Y | 1 | 1.2 | 6 | -1 | | | 12 | 1.5 |
| 57 | 1.2 D + 1.5 LL b + Service - 210 W | Yes | Y | 1 | 1.2 | 6 | -0.866 | 7 | -0.5 | 12 | 1.5 |
| 58 | 1.2 D + 1.5 LL b + Service - 240 W | Yes | Y | 1 | 1.2 | 7 | -0.866 | 6 | -0.5 | 12 | 1.5 |
| 59 | 1.2 D + 1.5 LL b + Service - 270 W | Yes | Y | 1 | 1.2 | 7 | -1 | | | 12 | 1.5 |
| 60 | 1.2 D + 1.5 LL b + Service - 300 W | Yes | Y | 1 | 1.2 | 7 | -0.866 | 6 | 0.5 | 12 | 1.5 |
| 61 | 1.2 D + 1.5 LL b + Service - 330 W | Yes | Y | 1 | 1.2 | 6 | 0.866 | 7 | -0.5 | 12 | 1.5 |
| 62 | 1.2 D + 1.5 LL c + Service - 0 W | Yes | Y | 1 | 1.2 | 6 | 1 | | | 13 | 1.5 |
| 63 | 1.2 D + 1.5 LL c + Service - 30 W | Yes | Y | 1 | 1.2 | 6 | 0.866 | 7 | 0.5 | 13 | 1.5 |
| 64 | 1.2 D + 1.5 LL c + Service - 60 W | Yes | Y | 1 | 1.2 | 7 | 0.866 | 6 | 0.5 | 13 | 1.5 |
| 65 | 1.2 D + 1.5 LL c + Service - 90 W | Yes | Y | 1 | 1.2 | 7 | 1 | | | 13 | 1.5 |
| 66 | 1.2 D + 1.5 LL c + Service - 120 W | Yes | Y | 1 | 1.2 | 7 | 0.866 | 6 | -0.5 | 13 | 1.5 |
| 67 | 1.2 D + 1.5 LL c + Service - 150 W | Yes | Y | 1 | 1.2 | 6 | -0.866 | 7 | 0.5 | 13 | 1.5 |
| 68 | 1.2 D + 1.5 LL c + Service - 180 W | Yes | Y | 1 | 1.2 | 6 | -1 | | | 13 | 1.5 |
| 69 | 1.2 D + 1.5 LL c + Service - 210 W | Yes | Y | 1 | 1.2 | 6 | -0.866 | 7 | -0.5 | 13 | 1.5 |
| 70 | 1.2 D + 1.5 LL c + Service - 240 W | Yes | Y | 1 | 1.2 | 7 | -0.866 | 6 | -0.5 | 13 | 1.5 |
| 71 | 1.2 D + 1.5 LL c + Service - 270 W | Yes | Y | 1 | 1.2 | 7 | -1 | | | 13 | 1.5 |
| 72 | 1.2 D + 1.5 LL c + Service - 300 W | Yes | Y | 1 | 1.2 | 7 | -0.866 | 6 | 0.5 | 13 | 1.5 |
| 73 | 1.2 D + 1.5 LL c + Service - 330 W | Yes | Y | 1 | 1.2 | 6 | 0.866 | 7 | -0.5 | 13 | 1.5 |
| 74 | 1.2 D + 1.5 LL d + Service - 0 W | Yes | Y | 1 | 1.2 | 6 | 1 | | | 14 | 1.5 |
| 75 | 1.2 D + 1.5 LL d + Service - 30 W | Yes | Y | 1 | 1.2 | 6 | 0.866 | 7 | 0.5 | 14 | 1.5 |
| 76 | 1.2 D + 1.5 LL d + Service - 60 W | Yes | Y | 1 | 1.2 | 7 | 0.866 | 6 | 0.5 | 14 | 1.5 |
| 77 | 1.2 D + 1.5 LL d + Service - 90 W | Yes | Y | 1 | 1.2 | 7 | 1 | | | 14 | 1.5 |
| 78 | 1.2 D + 1.5 LL d + Service - 120 W | Yes | Y | 1 | 1.2 | 7 | 0.866 | 6 | -0.5 | 14 | 1.5 |
| 79 | 1.2 D + 1.5 LL d + Service - 150 W | Yes | Y | 1 | 1.2 | 6 | -0.866 | 7 | 0.5 | 14 | 1.5 |
| 80 | 1.2 D + 1.5 LL d + Service - 180 W | Yes | Y | 1 | 1.2 | 6 | -1 | | | 14 | 1.5 |
| 81 | 1.2 D + 1.5 LL d + Service - 210 W | Yes | Y | 1 | 1.2 | 6 | -0.866 | 7 | -0.5 | 14 | 1.5 |
| 82 | 1.2 D + 1.5 LL d + Service - 240 W | Yes | Y | 1 | 1.2 | 7 | -0.866 | 6 | -0.5 | 14 | 1.5 |
| 83 | 1.2 D + 1.5 LL d + Service - 270 W | Yes | Y | 1 | 1.2 | 7 | -1 | | | 14 | 1.5 |
| 84 | 1.2 D + 1.5 LL d + Service - 300 W | Yes | Y | 1 | 1.2 | 7 | -0.866 | 6 | 0.5 | 14 | 1.5 |
| 85 | 1.2 D + 1.5 LL d + Service - 330 W | Yes | Y | 1 | 1.2 | 6 | 0.866 | 7 | -0.5 | 14 | 1.5 |
| 86 | 1.2 D + 1.5 LL Maint (1) | Yes | Y | 1 | 1.2 | | | | | 15 | 1.5 |
| 87 | 1.2 D + 1.5 LL Maint (2) | Yes | Y | 1 | 1.2 | | | | | 16 | 1.5 |
| 88 | 1.2 D + 1.5 LL Maint (3) | Yes | Y | 1 | 1.2 | | | | | 17 | 1.5 |
| 89 | 1.2 D + 1.5 LL Maint (4) | Yes | Y | 1 | 1.2 | | | | | 18 | 1.5 |
| 90 | 1.2 D + 1.5 LL Maint (5) | Yes | Y | 1 | 1.2 | | | | | 19 | 1.5 |
| 91 | 1.2 D + 1.5 LL Maint (6) | Yes | Y | 1 | 1.2 | | | | | 20 | 1.5 |
| 92 | 1.2 D + 1.5 LL Maint (7) | Yes | Y | 1 | 1.2 | | | | | 21 | 1.5 |
| 93 | 1.2 D + 1.5 LL Maint (8) | Yes | Y | 1 | 1.2 | | | | | 22 | 1.5 |
| 94 | 1.2 D + 1.5 LL Maint (9) | Yes | Y | 1 | 1.2 | | | | | 23 | 1.5 |

### Load Combinations (Continued)

| | Description | Solve | P-Delta | BLC | Factor | BLC | Factor | BLC | Factor | BLC | Factor |
|---|---|---|---|---|---|---|---|---|---|---|---|
| 95 | 1.2 D + 1.5 LL Maint (10) | Yes | Y | 1 | 1.2 | | | | | 24 | 1.5 |
| 96 | 1.2 D + 1.5 LL Maint (11) | Yes | Y | 1 | 1.2 | | | | | 25 | 1.5 |
| 97 | 1.2 D + 1.5 LL Maint (12) | Yes | Y | 1 | 1.2 | | | | | 26 | 1.5 |
| 98 | 1.2 D + 1.5 LL Maint (13) | Yes | Y | 1 | 1.2 | | | | | 27 | 1.5 |
| 99 | 1.2 D + 1.5 LL Maint (14) | Yes | Y | 1 | 1.2 | | | | | 28 | 1.5 |
| 100 | 1.2 D + 1.5 LL Maint (15) | Yes | Y | 1 | 1.2 | | | | | 29 | 1.5 |

### Envelope Node Reactions

| | Node Label | | X [k] | LC | Y [k] | LC | Z [k] | LC | MX [k-ft] | LC | MY [k-ft] | LC | MZ [k-ft] | LC |
|---|---|---|---|---|---|---|---|---|---|---|---|---|---|---|
| 1 | 1 | max | 0.969 | 5 | 1.659 | 14 | 1.226 | 2 | 3.641 | 2 | 0.983 | 11 | 0.368 | 95 |
| 2 | | min | -0.969 | 11 | -0.026 | 8 | -1.351 | 8 | -0.537 | 8 | -0.984 | 5 | -0.192 | 91 |
| 3 | 53 | max | 1.017 | 5 | 1.686 | 18 | 1.264 | 2 | 0.15 | 13 | 1.218 | 3 | 0.029 | 12 |
| 4 | | min | -1.125 | 11 | 0.173 | 12 | -1.2 | 8 | -1.733 | 43 | -1.217 | 9 | -2.91 | 18 |
| 5 | 82 | max | 0.998 | 5 | 1.632 | 22 | 1.406 | 2 | 0.11 | 3 | 1.24 | 7 | 2.821 | 46 |
| 6 | | min | -0.89 | 11 | 0.148 | 4 | -1.345 | 8 | -1.873 | 69 | -1.24 | 13 | -0.096 | 4 |
| 7 | Totals: | max | 2.984 | 5 | 4.669 | 53 | 3.897 | 2 | | | | | | |
| 8 | | min | -2.984 | 11 | 2.419 | 11 | -3.897 | 8 | | | | | | |

### Envelope AISC 15TH (360-16): LRFD Member Steel Code Checks

| | Member | Shape | Code Check | Loc[ft] | LC | Shear Check | Loc[ft] | Dir | LC | phi*Pnc [k] | phi*Pnt [k] | phi*Mn y-y [k-ft] | phi*Mn z-z [k-ft] | Cb | Eqn |
|---|---|---|---|---|---|---|---|---|---|---|---|---|---|---|---|
| 1 | 1 | HSS4X4X2 | 0.487 | 0 | 13 | 0.123 | 0 | y | 73 | 70.173 | 73.278 | 8.24 | 8.24 | 2.017 | H1-1b |
| 2 | 2 | C3.38X2.06X0.188 | 0.329 | 2.592 | 3 | 0.06 | 0.351 | y | 64 | 35.676 | 43.394 | 1.694 | 4.483 | 1.601 | H1-1b |
| 3 | 3 | C3.38X2.06X0.188 | 0.339 | 0 | 13 | 0.065 | 2.241 | z | 8 | 35.676 | 43.394 | 1.694 | 4.483 | 1.6 | H1-1b |
| 4 | 4 | PL3/8"x6 | 0.083 | 0 | 2 | 0.15 | 0 | y | 2 | 68.997 | 72.9 | 0.57 | 9.113 | 2.309 | H1-1b |
| 5 | 5 | PL3/8"x6 | 0.086 | 0 | 3 | 0.123 | 0 | y | 38 | 68.997 | 72.9 | 0.57 | 9.113 | 1.864 | H1-1b |
| 6 | 6 | PIPE_3.5x0.165 | 0.071 | 6.75 | 7 | 0.035 | 4 | | 4 | 45.872 | 71.57 | 6.336 | 6.336 | 1.997 | H1-1b |
| 7 | 7 | PL3/8"x6 | 0.125 | 0.208 | 8 | 0.193 | 0.208 | y | 50 | 70.882 | 72.9 | 0.57 | 9.113 | 1.537 | H1-1b |
| 8 | 8 | PL3/8"x6 | 0.128 | 0 | 13 | 0.199 | 0 | y | 50 | 70.882 | 72.9 | 0.57 | 9.113 | 2.927 | H1-1b |
| 9 | 9 | L2x2x4 | 0.267 | 0 | 8 | 0.031 | 2.309 | y | 48 | 23.349 | 30.586 | 0.691 | 1.577 | 1.5 | H2-1 |
| 10 | 10 | L2x2x4 | 0.227 | 2.309 | 8 | 0.035 | 0 | y | 64 | 23.349 | 30.586 | 0.691 | 1.577 | 1.5 | H2-1 |
| 11 | 11 | L7.63x2.5x6 | 0.342 | 1.604 | 8 | 0.079 | 0 | z | 62 | 75.414 | 118.523 | 1.798 | 13.857 | 1.266 | H2-1 |
| 12 | 18 | PIPE_2.88x0.203 | 0.102 | 5.667 | 5 | 0.038 | 5.667 | | 6 | 35.519 | 70.68 | 5.029 | 5.029 | 3 | H1-1b |
| 13 | 19 | PIPE_2.88x0.203 | 0.121 | 2.333 | 9 | 0.041 | 5.667 | | 9 | 35.519 | 70.68 | 5.029 | 5.029 | 3 | H1-1b |
| 14 | 22 | PIPE_2.88x0.203 | 0.131 | 7.812 | 13 | 0.121 | 9.062 | | 2 | 24.131 | 70.68 | 5.029 | 5.029 | 2.462 | H1-1b |
| 15 | 23 | L6.63x4.33x.25 | 0.176 | 3.25 | 6 | 0.022 | 3.25 | z | 12 | 51.795 | 86.751 | 2.311 | 6.976 | 1.5 | H2-1 |
| 16 | 29 | PIPE_2.88x0.203 | 0.109 | 2.333 | 7 | 0.043 | 2.333 | | 8 | 35.519 | 70.68 | 5.029 | 5.029 | 3 | H1-1b |
| 17 | 31 | HSS4X4X2 | 0.465 | 0 | 7 | 0.122 | 0 | y | 65 | 70.173 | 73.278 | 8.24 | 8.24 | 2.043 | H1-1b |
| 18 | 32 | C3.38X2.06X0.188 | 0.325 | 2.592 | 7 | 0.06 | 0.351 | y | 68 | 35.676 | 43.394 | 1.694 | 4.483 | 1.605 | H1-1b |
| 19 | 33 | C3.38X2.06X0.188 | 0.323 | 0 | 56 | 0.063 | 2.241 | y | 48 | 35.676 | 43.394 | 1.703 | 4.483 | 1.619 | H1-1b |
| 20 | 34 | PL3/8"x6 | 0.07 | 0 | 6 | 0.148 | 0 | y | 67 | 68.997 | 72.9 | 0.57 | 9.113 | 2.281 | H1-1b |
| 21 | 35 | PL3/8"x6 | 0.084 | 0 | 7 | 0.122 | 0 | y | 42 | 68.997 | 72.9 | 0.57 | 9.113 | 1.806 | H1-1b |
| 22 | 36 | PL3/8"x6 | 0.109 | 0.208 | 13 | 0.193 | 0.208 | y | 54 | 70.882 | 72.9 | 0.57 | 9.113 | 2.038 | H1-1b |
| 23 | 37 | PL3/8"x6 | 0.103 | 0 | 5 | 0.197 | 0 | y | 55 | 70.882 | 72.9 | 0.57 | 9.113 | 3 | H1-1b |
| 24 | 38 | L2x2x4 | 0.203 | 0 | 11 | 0.03 | 2.309 | y | 40 | 23.349 | 30.586 | 0.691 | 1.577 | 1.5 | H2-1 |
| 25 | 39 | L2x2x4 | 0.192 | 2.309 | 13 | 0.035 | 0 | y | 68 | 23.349 | 30.586 | 0.691 | 1.577 | 1.5 | H2-1 |
| 26 | 40 | L7.63x2.5x6 | 0.259 | 1.604 | 12 | 0.079 | 0 | z | 66 | 75.414 | 118.523 | 1.798 | 13.968 | 1.292 | H2-1 |
| 27 | 45 | L6.63x4.33x.25 | 0.189 | 0 | 2 | 0.025 | 3.25 | y | 9 | 51.795 | 86.751 | 2.311 | 6.976 | 1.5 | H2-1 |
| 28 | 50 | HSS4X4X2 | 0.485 | 0 | 9 | 0.122 | 0 | y | 69 | 70.173 | 73.278 | 8.24 | 8.24 | 2.021 | H1-1b |
| 29 | 51 | C3.38X2.06X0.188 | 0.325 | 2.592 | 56 | 0.06 | 0.351 | y | 73 | 35.676 | 43.394 | 1.703 | 4.483 | 1.618 | H1-1b |
| 30 | 52 | C3.38X2.06X0.188 | 0.334 | 0 | 9 | 0.063 | 2.241 | y | 39 | 35.676 | 43.394 | 1.694 | 4.483 | 1.6 | H1-1b |
| 31 | 53 | PL3/8"x6 | 0.082 | 0.164 | 3 | 0.15 | 0 | y | 70 | 68.997 | 72.9 | 0.57 | 9.113 | 1.776 | H1-1b |
| 32 | 54 | PL3/8"x6 | 0.068 | 0 | 11 | 0.121 | 0 | y | 45 | 68.997 | 72.9 | 0.57 | 9.113 | 1.79 | H1-1b |
| 33 | 55 | PL3/8"x6 | 0.117 | 0.085 | 2 | 0.193 | 0.208 | y | 57 | 70.882 | 72.9 | 0.57 | 9.113 | 1.781 | H1-1b |

***Envelope AISC 15TH (360-16): LRFD Member Steel Code Checks (Continued)***

| | Member | Shape | Code Check | Loc[ft] | LC | Shear Check | Loc[ft] | Dir | LC | phi*Pnc [k] | phi*Pnt [k] | phi*Mn y-y [k-ft] | phi*Mn z-z [k-ft] | Cb | Eqn |
|---|---|---|---|---|---|---|---|---|---|---|---|---|---|---|---|
| 34 | 56 | PL3/8"x6 | 0.13 | 0 | 9 | 0.198 | 0 | y | 59 | 70.882 | 72.9 | 0.57 | 9.113 | 2.951 | H1-1b |
| 35 | 57 | L2x2x4 | 0.255 | 0 | 3 | 0.031 | 2.309 | y | 44 | 23.349 | 30.586 | 0.691 | 1.577 | 1.5 | H2-1 |
| 36 | 58 | L2x2x4 | 0.192 | 2.309 | 4 | 0.035 | 0 | y | 72 | 23.349 | 30.586 | 0.691 | 1.577 | 1.5 | H2-1 |
| 37 | 59 | L7.63x2.5x6 | 0.302 | 1.604 | 3 | 0.078 | 0 | z | 70 | 75.414 | 118.523 | 1.798 | 14.319 | 1.376 | H2-1 |
| 38 | 64 | L6.63x4.33x.25 | 0.219 | 3.25 | 2 | 0.029 | 3.25 | z | 8 | 51.795 | 86.751 | 2.311 | 6.976 | 1.5 | H2-1 |
| 39 | 69 | PIPE_3.5x0.165 | 0.072 | 1.25 | 2 | 0.045 | 4 | | 8 | 45.872 | 71.57 | 6.336 | 6.336 | 1.829 | H1-1b |
| 40 | 72 | PIPE_2.88x0.203 | 0.129 | 5.667 | 9 | 0.044 | 5.667 | | 9 | 35.519 | 70.68 | 5.029 | 5.029 | 3 | H1-1b |
| 41 | 73 | PIPE_2.88x0.203 | 0.145 | 2.333 | 2 | 0.041 | 5.667 | | 13 | 35.519 | 70.68 | 5.029 | 5.029 | 3 | H1-1b |
| 42 | 76 | PIPE_2.88x0.203 | 0.128 | 2.188 | 13 | 0.099 | 2.188 | | 13 | 24.131 | 70.68 | 5.029 | 5.029 | 2.316 | H1-1b |
| 43 | 78 | PIPE_2.88x0.203 | 0.115 | 5.667 | 9 | 0.044 | 2.333 | | 13 | 35.519 | 70.68 | 5.029 | 5.029 | 3 | H1-1b |
| 44 | 80 | PIPE_3.5x0.165 | 0.069 | 6.75 | 63 | 0.043 | 2.667 | | 13 | 45.872 | 71.57 | 6.336 | 6.336 | 2.331 | H1-1b |
| 45 | 83 | PIPE_2.88x0.203 | 0.128 | 5.667 | 13 | 0.049 | 5.667 | | 13 | 35.519 | 70.68 | 5.029 | 5.029 | 3 | H1-1b |
| 46 | 84 | PIPE_2.88x0.203 | 0.117 | 2.333 | 6 | 0.031 | 5.667 | | 5 | 35.519 | 70.68 | 5.029 | 5.029 | 3 | H1-1b |
| 47 | 87 | PIPE_2.88x0.203 | 0.121 | 7.813 | 9 | 0.109 | 9.063 | | 9 | 24.131 | 70.68 | 5.029 | 5.029 | 2.552 | H1-1b |
| 48 | 89 | PIPE_2.88x0.203 | 0.133 | 5.667 | 2 | 0.031 | 5.667 | | 6 | 35.519 | 70.68 | 5.029 | 5.029 | 3 | H1-1b |

# APPENDIX B

(Additional Calculations)

# ASCE 7 Hazards Report

**Address:**
No Address at This Location

**Standard:** ASCE/SEI 7-16
**Risk Category:** II
**Soil Class:** D - Default (see Section 11.4.3)

**Elevation:** 522.9 ft (NAVD 88)
**Latitude:** 41.76716
**Longitude:** -71.971949

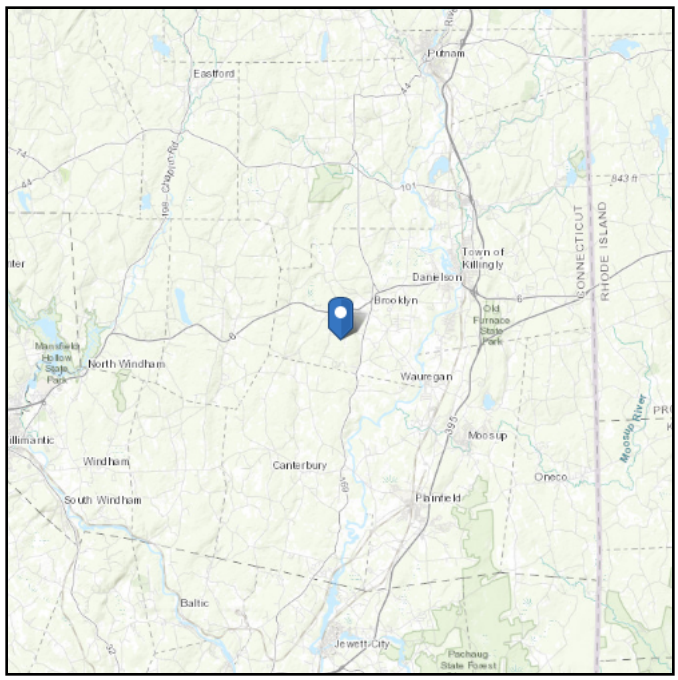


## Wind

**Results:**

| | |
|---|---|
| Wind Speed: | 122 Vmph |
| 10-year MRI | 75 Vmph |
| 25-year MRI | 85 Vmph |
| 50-year MRI | 94 Vmph |
| 100-year MRI | 100 Vmph |

| | |
|---|---|
| Data Source: | ASCE/SEI 7-16, Fig. 26.5-1B and Figs. CC.2-1–CC.2-4, and Section 26.5.2 |
| Date Accessed: | Wed Nov 17 2021 |

Value provided is 3-second gust wind speeds at 33 ft above ground for Exposure C Category, based on linear interpolation between contours. Wind speeds are interpolated in accordance with the 7-16 Standard. Wind speeds correspond to approximately a 7% probability of exceedance in 50 years (annual exceedance probability = 0.00143, MRI = 700 years).

Site is in a hurricane-prone region as defined in ASCE/SEI 7-16 Section 26.2. Glazed openings need not be protected against wind-borne debris.

# Seismic

**Site Soil Class:** D - Default (see Section 11.4.3)

**Results:**

| | | | |
|---|---|---|---|
| $S_S$ : | 0.185 | $S_{D1}$ : | 0.087 |
| $S_1$ : | 0.054 | $T_L$ : | 6 |
| $F_a$ : | 1.6 | PGA : | 0.1 |
| $F_v$ : | 2.4 | $PGA_M$ : | 0.16 |
| $S_{MS}$ : | 0.296 | $F_{PGA}$ : | 1.6 |
| $S_{M1}$ : | 0.13 | $I_e$ : | 1 |
| $S_{DS}$ : | 0.197 | $C_v$ : | 0.7 |

**Seismic Design Category** B

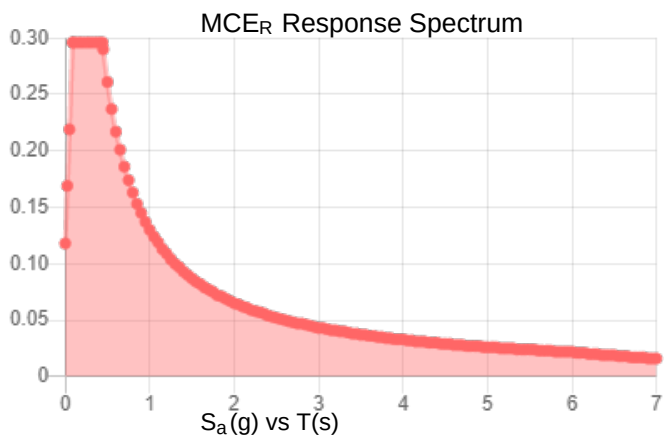


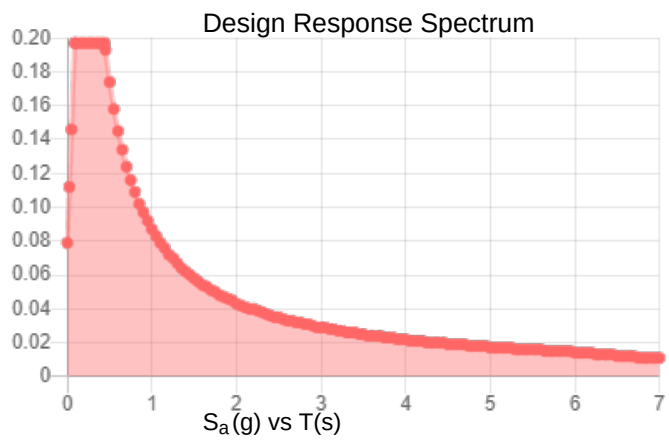


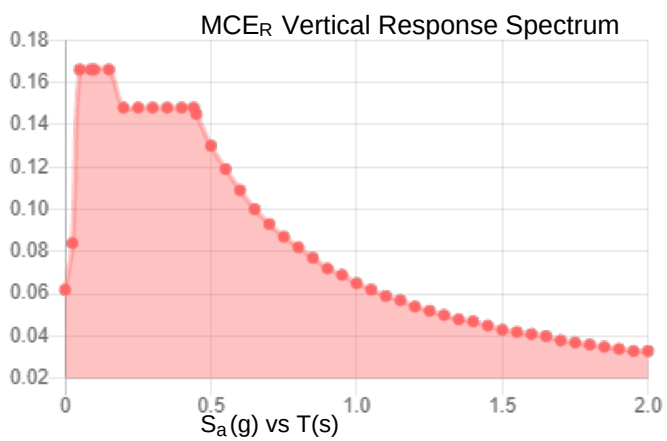


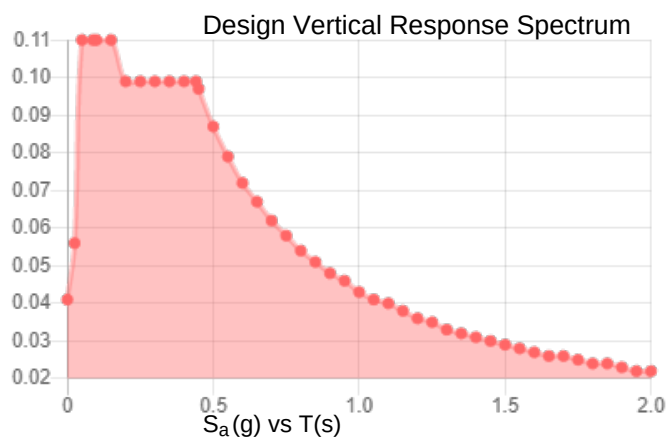


**Data Accessed:** Wed Nov 17 2021

**Date Source:** USGS Seismic Design Maps based on ASCE/SEI 7-16 and ASCE/SEI 7-16 Table 1.5-2. Additional data for site-specific ground motion procedures in accordance with ASCE/SEI 7-16 Ch. 21 are available from USGS.

# Ice

**Results:**

| | |
|---|---|
| Ice Thickness: | 1.00 in. |
| Concurrent Temperature: | 15 F |
| Gust Speed: | 50 mph |
| **Data Source:** | Standard ASCE/SEI 7-16, Figs. 10-2 through 10-8 |
| **Date Accessed:** | Wed Nov 17 2021 |

Ice thicknesses on structures in exposed locations at elevations higher than the surrounding terrain and in valleys and gorges may exceed the mapped values.

Values provided are equivalent radial ice thicknesses due to freezing rain with concurrent 3-second gust speeds, for a 500-year mean recurrence interval, and temperatures concurrent with ice thicknesses due to freezing rain. Thicknesses for ice accretions caused by other sources shall be obtained from local meteorological studies. Ice thicknesses in exposed locations at elevations higher than the surrounding terrain and in valleys and gorges may exceed the mapped values.

The ASCE 7 Hazard Tool is provided for your convenience, for informational purposes only, and is provided “as is” and without warranties of any kind. The location data included herein has been obtained from information developed, produced, and maintained by third party providers; or has been extrapolated from maps incorporated in the ASCE 7 standard. While ASCE has made every effort to use data obtained from reliable sources or methodologies, ASCE does not make any representations or warranties as to the accuracy, completeness, reliability, currency, or quality of any data provided herein. Any third-party links provided by this Tool should not be construed as an endorsement, affiliation, relationship, or sponsorship of such third-party content by or from ASCE.

ASCE does not intend, nor should anyone interpret, the results provided by this Tool to replace the sound judgment of a competent professional, having knowledge and experience in the appropriate field(s) of practice, nor to substitute for the standard of care required of such professionals in interpreting and applying the contents of this Tool or the ASCE 7 standard.

In using this Tool, you expressly assume all risks associated with your use. Under no circumstances shall ASCE or its officers, directors, employees, members, affiliates, or agents be liable to you or any other person for any direct, indirect, special, incidental, or consequential damages arising from or related to your use of, or reliance on, the Tool or any information obtained therein. To the fullest extent permitted by law, you agree to release and hold harmless ASCE from any and all liability of any nature arising out of or resulting from any use of data provided by the ASCE 7 Hazard Tool.

| PROJECT | 149435.003.01 - South Brooklyn, CT | | KSC |
|---|---|---|---|
| SUBJECT | Platform Mount Analysis | | |
| DATE | 11/17/21 | PAGE 1 OF 1 | |

**B+T Group**
1717 S. Boulder, Suite 300
Tulsa, OK 74119
(918) 587-4630

[REF: AISC 360-05]

## Reactions at Bolted Connection

| | | | |
|---|---|---|---|
| Tension | : | 1.29 | k |
| Vertical Shear | : | 1.715 | k |
| Horizontal Shear | : | 1.006 | k |
| Torsion | : | 0.361 | k.ft |
| Moment from Horizontal Forces | : | 1 | k.ft |
| Moment from Vertical Forces | : | 3.655 | k.ft |

## Bolt Parameters

| | | | |
|---|---|---|---|
| Bolt Grade | : | A325 | |
| Bolt Diameter | : | 0.625 | in |
| Nominal Bolt Area | : | 0.307 | $in^2$ |
| Bolt spacing, Horizontal | : | 6 | in |
| Bolt spacing, Vertical | : | 6 | in |
| Bolt edge distance, plate height | : | 1.5 | in |
| Bolt edge distance, plate width | : | 1.5 | in |
| Total Number of Bolts | : | 4 | bolts |

## Summary of Forces

| | | | |
|---|---|---|---|
| Shear Resultant Force | : | 1.99 | k |
| Force from Horz. Moment | : | 1.81 | k |
| Force from Vert. Moment | : | 6.62 | k |
| Shear Load / Bolt | : | 0.50 | k |
| Tension Load / Bolt | : | 0.32 | k |
| Resultant from Moments / Bolt | : | 3.43 | k |

## Bolt Checks

| | | | | |
|---|---|---|---|---|
| Nominal Tensile Stress, $F_{nt}$ | : | 90.00 | ksi | [AISC Table J3.2] |
| Available Tensile Stress, $\Phi R_{nt}$ | : | 20.72 | k/bolt | [Eq. J3-1] |
| Unity Check, Bolt Tension | : | **18.12%** | | **OKAY** |
| Nominal Shear Stress, $F_{nv}$ | : | 48.00 | ksi | [AISC Table J3.2] |
| Available Shear Stress, $\Phi R_{nv}$ | : | 11.05 | k/bolt | [Eq. J3-1] |
| Unity Check, Bolt Shear | : | **7.42%** | | **OKAY** |
| Unity Check, Combined | : | **25.53%** | | **OKAY** |
| Available Bearing Strength, $\Phi R_n$ | : | 34.66 | k/bolt | |
| Unity Check, Bolt Bearing | : | **1.43%** | | **OKAY** |

# Exhibit F

Fox Hill Telecom

# Radio Frequency Emissions Analysis Report

## Site ID: BOBOS00046A

SBA - Old Tatnic Hill Road
100 Old Tatnic Hill Road
Brooklyn, CT 06234

**May 20, 2022**

**Fox Hill Telecom Project Number: 221174**

| Site Compliance Summary | |
|---|---|
| Compliance Status: | **COMPLIANT** |
| Site total MPE% of FCC general population allowable limit: | **14.19 %** |

Fox Hill Telecom

May 20, 2022

Dish Wireless
5701 South Santa Fe Drive
Littleton, CO 80120

Emissions Analysis for Site: **BOBOS00046A – SBA - Old Tatnic Hill Road**

Fox Hill Telecom, Inc ("Fox Hill") was directed to analyze the proposed radio installation for Dish Wireless, LLC (Dish) facility located at **100 Old Tatnic Hill Road, Brooklyn, CT**, for the purpose of determining whether the emissions from the Proposed Dish radio and antenna installation located on this property are within specified federal limits.

All information used in this report was analyzed as a percentage of current Maximum Permissible Exposure (% MPE) as listed in the FCC OET Bulletin 65 Edition 97-01and ANSI/IEEE Std C95.1. The FCC regulates Maximum Permissible Exposure in units of microwatts per square centimeter (μW/cm2). The number of $\mu W/cm^2$ calculated at each sample point is called the power density. The exposure limit for power density varies depending upon the frequencies being utilized. Wireless Carriers and Paging Services use different frequency bands each with different exposure limits, therefore it is necessary to report results and limits in terms of percent MPE rather than power density.

All results were compared to the FCC (Federal Communications Commission) radio frequency exposure rules, 47 CFR 1.1307(b)(1) – (b)(3), to determine compliance with the Maximum Permissible Exposure (MPE) limits for General Population/Uncontrolled environments as defined below.

General population/uncontrolled exposure limits apply to situations in which the general population may be exposed or in which persons who are exposed as a consequence of their employment may not be made fully aware of the potential for exposure or cannot exercise control over their exposure. Therefore, members of the general population would always be considered under this category when exposure is not employment related, for example, in the case of a telecommunications tower that exposes persons in a nearby residential area.

Population exposure to radio frequencies is regulated and enforced in units of microwatts per square centimeter ($\mu W/cm^2$). The general population exposure limits for the 600 MHz & 700 MHz bands are approximately 400 $\mu W/cm^2$ and 467 $\mu W/cm^2$ respectively. The general population exposure limit for the 1900 MHz (PCS) and 2100 MHz (AWS / AWS-4) bands is 1000 $\mu W/cm^2$. Because each carrier will be using different frequency bands, and each frequency band has different exposure limits, it is necessary to report percent of MPE rather than power density.

Occupational/controlled exposure limits apply to situations in which persons are exposed as a consequence of their employment and in which those persons who are exposed have been made fully aware of the potential for exposure and can exercise control over their exposure. Occupational/controlled exposure limits also apply where exposure is of a transient nature as a result of incidental passage through a location where exposure levels may be above general population/uncontrolled limits (see below), as long as the exposed person has been made fully aware of the potential for exposure and can exercise control over his or her exposure by leaving the area or by some other appropriate means.

Additional details can be found in FCC OET 65.

## CALCULATIONS

Calculations were performed for the proposed radio system installation for **Dish** on the subject site located at **100 Old Tatnic Hill Road, Brooklyn, CT**, using the equipment information listed below. All calculations were performed per the specifications under FCC OET 65. Since **Dish** is proposing highly focused directional panel antennas, which project most of the emitted energy out toward the horizon, all calculations were performed assuming a lobe representing the maximum gain of the antenna per the antenna manufactures supplied specifications, minus 10 dB for directional panel antennas, was focused at the base of the tower. For this report the sample point is the top of a 6-foot person standing at the base of the tower.

Per FCC OET Bulletin No. 65 - Edition 97-01 recommendations to achieve the maximum anticipated value at each sample point, all power levels emitting from the proposed antenna installation are increased by a factor of 2.56 to account for possible in-phase reflections from the surrounding environment. All power values expressed and analyzed are maximum power levels expected to be used on all radios.

All emissions values for additional carriers were taken from the Connecticut Siting Council (CSC) active MPE database. Values in this database are provided by the individual carriers themselves

For each sector the following channel counts, frequency bands and power levels were utilized as shown in *Table 1*:

| Technology | Frequency Band | Channel Count | Transmit Power per Channel (W) |
|---|---|---|---|
| 5G | n71 (600 MHz) | 4 | 61.5 |
| 5G | n70 (AWS-4 / 1995-2020) | 4 | 40 |
| 5G | n66 (AWS-4 / 2180-2200) | 4 | 40 |

*Table 1: Channel Data Table*

The following antennas listed in *Table 2* were used in the modeling for transmission in the 600 MHz (n71) frequency band, and the 2100 MHz (AWS 4) frequency bands at 1995-2020 MHz (n70) and 2180-2200 MHz (n66). This is based on feedback from the carrier with regards to anticipated antenna selection. Maximum gain values for all antennas are listed in the Inventory and Power Data table below. The maximum gain of the antenna per the antenna manufactures supplied specifications, minus 10 dB for directional panel antennas, was used for all calculations. This value is a very conservative estimate as gain reductions for these particular antennas are typically much higher in this direction.

| Sector | Antenna Number | Antenna Make / Model | Antenna Centerline (ft) |
|---|---|---|---|
| A | 1 | Commscope FFVV-65B-R2 | 110 |
| B | 1 | Commscope FFVV-65B-R2 | 110 |
| C | 1 | Commscope FFVV-65B-R2 | 110 |

*Table 2: Antenna Data*

All calculations were done with respect to uncontrolled / general population threshold limits.

## RESULTS

Per the calculations completed for the proposed **Dish** configurations *Table 3* shows resulting emissions power levels and percentages of the FCC's allowable general population limit.

| Antenna ID | Antenna Make / Model | Frequency Bands | Antenna Gain (dBd) | Channel Count | Total TX Power (W) | ERP (W) | MPE % |
|---|---|---|---|---|---|---|---|
| Antenna A1 | Commscope FFVV-65B-R2 | n71 (600 MHz) / n70 (AWS-4 / 1995-2020) / n66 (AWS-4 / 2180-2200) | 12.15 / 15.95 / 16.25 | 12 | 566 | 17,079.80 | 7.68 |
| | | | | | | Sector A Composite MPE% | **7.68** |
| Antenna B1 | Commscope FFVV-65B-R2 | n71 (600 MHz) / n70 (AWS-4 / 1995-2020) / n66 (AWS-4 / 2180-2200) | 12.15 / 15.95 / 16.25 | 12 | 566 | 17,079.80 | 7.68 |
| | | | | | | Sector B Composite MPE% | **7.68** |
| Antenna C1 | Commscope FFVV-65B-R2 | n71 (600 MHz) / n70 (AWS-4 / 1995-2020) / n66 (AWS-4 / 2180-2200) | 12.15 / 15.95 / 16.25 | 12 | 566 | 17,079.80 | 7.68 |
| | | | | | | Sector C Composite MPE% | **7.68** |

*Table 3: Dish Emissions Levels*

The Following table (*table 4*) shows all additional carriers on site and their MPE% as recorded in the CSC active MPE database for this facility along with the newly calculated maximum **Dish** MPE contributions per this report. FCC OET 65 specifies that for carriers utilizing directional antennas that the highest recorded sector value be used for composite site MPE values due to their greatly reduced emissions contributions in the directions of the adjacent sectors. For this site, all three sectors have the same configuration yielding the same results on all three sectors. *Table 5* below shows a summary for each **Dish** Sector as well as the composite MPE value for the site.

| **Site Composite MPE%** | |
|---|---|
| **Carrier** | **MPE%** |
| Dish – Max Per Sector Value | **7.68 %** |
| Sprint | 2.42 % |
| Nextel | 0.26 % |
| Verizon Wireless | 1.72 % |
| T-Mobile | 2.11 % |
| **Site Total MPE %:** | **14.19 %** |

*Table 4: All Carrier MPE Contributions*

| | |
|---|---|
| Dish Sector A Total: | 7.68 % |
| Dish Sector B Total: | 7.68 % |
| Dish Sector C Total: | 7.68 % |
| | |
| Site Total: | 14.19 % |

*Table 5: Site MPE Summary*

FCC OET 65 specifies that for carriers utilizing directional antennas that the highest recorded sector value be used for composite site MPE values due to their greatly reduced emissions contributions in the directions of the adjacent sectors. *Table 6* below details a breakdown by frequency band and technology for the MPE power values for the maximum calculated **Dish** sector(s). For this site, all three sectors have the same configuration yielding the same results on all three sectors.

| Dish _ Frequency Band / Technology Max Power Values (Per Sector) | # Channels | Watts ERP (Per Channel) | Height (feet) | Total Power Density ($\mu W/cm^2$) | Frequency (MHz) | Allowable MPE ($\mu W/cm^2$) | Calculated % MPE |
|---|---|---|---|---|---|---|---|
| Dish n71 (600 MHz) 5G | 4 | 1,008.96 | 110 | 13.41 | n71 (600 MHz) | 400 | 3.35% |
| Dish n70 (AWS-4 / 1995-2020) 5G | 4 | 1,574.20 | 110 | 20.93 | n70 (AWS-4 / 1995-2020) | 1000 | 2.09% |
| Dish n66 (AWS-4 / 2180-2200) 5G | 4 | 1,686.79 | 110 | 22.43 | n66 (AWS-4 / 2180-2200) | 1000 | 2.24% |
| | | | | | | Total: | 7.68% |

*Table 6: Dish Maximum Sector MPE Power Values*

## Summary

All calculations performed for this analysis yielded results that were **within** the allowable limits for general population exposure to RF Emissions.

The anticipated maximum composite contributions from the Dish facility as well as the site composite emissions value with regards to compliance with FCC's allowable limits for general population exposure to RF Emissions are shown here:

| Dish Sector | Power Density Value (%) |
|---|---|
| Sector A: | 7.68 % |
| Sector B: | 7.68 % |
| Sector C: | 7.68 % |
| Dish Maximum Total (per sector): | 7.68 % |
| | |
| Site Total: | 14.19 % |
| | |
| Site Compliance Status: | **COMPLIANT** |

The anticipated composite MPE value for this site assuming all carriers present is **14.19 %** of the allowable FCC established general population limit sampled at the ground level. This is based upon values listed in the Connecticut Siting Council database for existing carrier emissions.

FCC guidelines state that if a site is found to be out of compliance (over allowable thresholds), that carriers over a 5% contribution to the composite value will require measures to bring the site into compliance. For this facility, the composite values calculated were well within the allowable 100% threshold standard per the federal government.

Scott Heffernan
Principal RF Engineer
**Fox Hill Telecom, Inc**
Holden, MA 01520
(978)660-3998

# Exhibit G

# SBA Letter of Authorization

CT - CONNECTICUT SITING COUNCIL
Melanie A. Bachman
Executive Director
Connecticut Siting Council
10 Franklin Square
New Britain, CT 06051

**Re: Tower Share Application**

SBA COMMUNICATIONS CORPORATION hereby authorizes DISH Wireless LLC, including their Agent, to act as our Agent in the processing of all zoning applications, building permits and approvals through the CONNECTICUT SITING COUNCIL for existing wireless communications towers.

Kri Pelletier
Site Development Manager
SBA COMMUNICATIONS CORPORATION
134 Flanders Road, Suite 125
Westboro, MA 01581

SBA
By: _____ Date: 3-30-22

# Exhibit H

UNITED STATES POSTAL SERVICE®

**Click-N-Ship®**

usps.com
**$8.95**
**US POSTAGE**
Flat Rate Env

9405 5036 9930 0324 3209 13 0089 5000 0010 6234

**U.S. POSTAGE PAID**
Click-N-Ship®

08/17/2022

Mailed from 01566

**PRIORITY MAIL®**

DEBORAH CHASE
NORTHEAST SITE SOLUTIONS
STE 1
420 MAIN ST
STURBRIDGE MA 01566-1359

Expected Delivery Date: 08/19/22
Ref#: BOBOS00046

**0000**

**R003**

AUSTIN TANNER, FIRST SELECTMAN
TOWN OF BROOKLYN
PO BOX 356
4 WOLF DEN RD
BROOKLYN CT 06234-1930

**USPS TRACKING #**

**9405 5036 9930 0324 3209 13**

Electronic Rate Approved #038555749

*Cut on dotted line.*

## Instructions

1. **Each Click-N-Ship® label is unique. Labels are to be used as printed and used only once. DO NOT PHOTO COPY OR ALTER LABEL.**
2. **Place your label so it does not wrap around the edge of the package.**
3. **Adhere your label to the package. A self-adhesive label is recommended. If tape or glue is used, DO NOT TAPE OVER BARCODE. Be sure all edges are secure.**
4. **To mail your package with PC Postage®, you may schedule a Package Pickup online, hand to your letter carrier, take to a Post Office™, or drop in a USPS collection box.**
5. **Mail your package on the "Ship Date" you selected when creating this label.**

## Click-N-Ship® Label Record

**USPS TRACKING # :**
**9405 5036 9930 0324 3209 13**

| | | | |
|---|---|---|---|
| Trans. #: | 569932744 | Priority Mail® Postage: | **$8.95** |
| Print Date: | 08/17/2022 | Total: | **$8.95** |
| Ship Date: | 08/17/2022 | | |
| Expected Delivery Date: | 08/19/2022 | | |

**From:** DEBORAH CHASE
NORTHEAST SITE SOLUTIONS
STE 1
420 MAIN ST
STURBRIDGE MA 01566-1359

Ref#: BOBOS00046

**To:** AUSTIN TANNER, FIRST SELECTMAN
TOWN OF BROOKLYN
PO BOX 356
4 WOLF DEN RD
BROOKLYN CT 06234-1930

* Retail Pricing Priority Mail rates apply. There is no fee for USPS Tracking® service on Priority Mail service with use of this electronic rate shipping label. Refunds for unused postage paid labels can be requested online 30 days from the print date.

UNITED STATES POSTAL SERVICE® *Thank you for shipping with the United States Postal Service!*
*Check the status of your shipment on the USPS Tracking® page at usps.com*

UNITED STATES POSTAL SERVICE®

**Click-N-Ship®**

usps.com
**$8.95**
**US POSTAGE**
Flat Rate Env

9405 5036 9930 0324 3209 37 0089 5000 0010 6234

**U.S. POSTAGE PAID**
Click-N-Ship®

08/17/2022

Mailed from 01566

**PRIORITY MAIL®**

DEBORAH CHASE
NORTHEAST SITE SOLUTIONS
STE 1
420 MAIN ST
STURBRIDGE MA 01566-1359

Expected Delivery Date: 08/19/22
Ref#: BOBOS00046

**0000**

**C001**

JANA BUTTS ROBERSON, DIRECTOR OF
TOWN OF BROOKLYN
STE 22
69 S MAIN ST
BROOKLYN CT 06234-3830

**USPS TRACKING #**

**9405 5036 9930 0324 3209 37**

Electronic Rate Approved #038555749

*Cut on dotted line.*

## Instructions

1. **Each Click-N-Ship® label is unique. Labels are to be used as printed and used only once. DO NOT PHOTO COPY OR ALTER LABEL.**
2. **Place your label so it does not wrap around the edge of the package.**
3. **Adhere your label to the package. A self-adhesive label is recommended. If tape or glue is used, DO NOT TAPE OVER BARCODE. Be sure all edges are secure.**
4. **To mail your package with PC Postage®, you may schedule a Package Pickup online, hand to your letter carrier, take to a Post Office™, or drop in a USPS collection box.**
5. **Mail your package on the "Ship Date" you selected when creating this label.**

## Click-N-Ship® Label Record

**USPS TRACKING # :**
**9405 5036 9930 0324 3209 37**

| | | | |
|---|---|---|---|
| Trans. #: | 569932744 | Priority Mail® Postage: | **$8.95** |
| Print Date: | 08/17/2022 | Total: | **$8.95** |
| Ship Date: | 08/17/2022 | | |
| Expected Delivery Date: | 08/19/2022 | | |

**From:** DEBORAH CHASE
NORTHEAST SITE SOLUTIONS
STE 1
420 MAIN ST
STURBRIDGE MA 01566-1359

Ref#: BOBOS00046

**To:** JANA BUTTS ROBERSON, DIRECTOR OF COMMUNITY DEVELOPMENT
TOWN OF BROOKLYN
STE 22
69 S MAIN ST
BROOKLYN CT 06234-3830

* Retail Pricing Priority Mail rates apply. There is no fee for USPS Tracking® service on Priority Mail service with use of this electronic rate shipping label. Refunds for unused postage paid labels can be requested online 30 days from the print date.

UNITED STATES POSTAL SERVICE® *Thank you for shipping with the United States Postal Service!*
*Check the status of your shipment on the USPS Tracking® page at usps.com*

UNITED STATES POSTAL SERVICE®

**Click-N-Ship®**

usps.com
**$8.95**
**US POSTAGE**
Flat Rate Env

9405 5036 9930 0324 3209 51 0089 5000 0063 3487

**U.S. POSTAGE PAID**
Click-N-Ship®

08/17/2022

Mailed from 01566

**P**

**PRIORITY MAIL®**

DEBORAH CHASE
NORTHEAST SITE SOLUTIONS
STE 1
420 MAIN ST
STURBRIDGE MA 01566-1359

Expected Delivery Date: 08/20/22
Ref#: BOBOS00046

**0000**

**C036**

BENJAMIN & SOPHIE DAVIDSON
C/O SBA TOWERS
8051 CONGRESS AVE
BOCA RATON FL 33487-1307

**USPS TRACKING #**

**9405 5036 9930 0324 3209 51**

Electronic Rate Approved #038555749

*Cut on dotted line.*

## Instructions

1. **Each Click-N-Ship® label is unique. Labels are to be used as printed and used only once. DO NOT PHOTO COPY OR ALTER LABEL.**
2. **Place your label so it does not wrap around the edge of the package.**
3. **Adhere your label to the package. A self-adhesive label is recommended. If tape or glue is used, DO NOT TAPE OVER BARCODE. Be sure all edges are secure.**
4. **To mail your package with PC Postage®, you may schedule a Package Pickup online, hand to your letter carrier, take to a Post Office™, or drop in a USPS collection box.**
5. **Mail your package on the "Ship Date" you selected when creating this label.**

## Click-N-Ship® Label Record

**USPS TRACKING # :**
**9405 5036 9930 0324 3209 51**

| | | | |
|---|---|---|---|
| Trans. #: | 569932744 | Priority Mail® Postage: | **$8.95** |
| Print Date: | 08/17/2022 | Total: | **$8.95** |
| Ship Date: | 08/17/2022 | | |
| Expected Delivery Date: | 08/20/2022 | | |

**From:** DEBORAH CHASE
NORTHEAST SITE SOLUTIONS
STE 1
420 MAIN ST
STURBRIDGE MA 01566-1359

Ref#: BOBOS00046

**To:** BENJAMIN & SOPHIE DAVIDSON
C/O SBA TOWERS
8051 CONGRESS AVE
BOCA RATON FL 33487-1307

* Retail Pricing Priority Mail rates apply. There is no fee for USPS Tracking® service on Priority Mail service with use of this electronic rate shipping label. Refunds for unused postage paid labels can be requested online 30 days from the print date.

UNITED STATES POSTAL SERVICE® *Thank you for shipping with the United States Postal Service!*
*Check the status of your shipment on the USPS Tracking® page at usps.com*

UNITED STATES POSTAL SERVICE®

**Click-N-Ship®**

usps.com
**$8.95**
**US POSTAGE**
Flat Rate Env

9405 5036 9930 0324 3210 19 0089 5000 0010 1581

**U.S. POSTAGE PAID**
Click-N-Ship®

08/17/2022

Mailed from 01566

**P**

**PRIORITY MAIL®**

DEBORAH CHASE
NORTHEAST SITE SOLUTIONS
STE 1
420 MAIN ST
STURBRIDGE MA 01566-1359

Expected Delivery Date: 08/18/22
Ref#: BOBOS00046

**0000**

**R005**

SBA COMMUNICATIONS CORPORATION
STE 125
13 FLANDERS RD
WESTBOROUGH MA 01581

**USPS TRACKING #**

**9405 5036 9930 0324 3210 19**

Electronic Rate Approved #038555749

*Cut on dotted line.*

## Instructions

1. **Each Click-N-Ship® label is unique. Labels are to be used as printed and used only once. DO NOT PHOTO COPY OR ALTER LABEL.**
2. **Place your label so it does not wrap around the edge of the package.**
3. **Adhere your label to the package. A self-adhesive label is recommended. If tape or glue is used, DO NOT TAPE OVER BARCODE. Be sure all edges are secure.**
4. **To mail your package with PC Postage®, you may schedule a Package Pickup online, hand to your letter carrier, take to a Post Office™, or drop in a USPS collection box.**
5. **Mail your package on the "Ship Date" you selected when creating this label.**

## Click-N-Ship® Label Record

**USPS TRACKING # :**
**9405 5036 9930 0324 3210 19**

| | | | |
|---|---|---|---|
| Trans. #: | 569932744 | Priority Mail® Postage: | **$8.95** |
| Print Date: | 08/17/2022 | Total: | **$8.95** |
| Ship Date: | 08/17/2022 | | |
| Expected Delivery Date: | 08/18/2022 | | |

**From:** DEBORAH CHASE
NORTHEAST SITE SOLUTIONS
STE 1
420 MAIN ST
STURBRIDGE MA 01566-1359

Ref#: BOBOS00046

**To:** SBA COMMUNICATIONS CORPORATION
STE 125
13 FLANDERS RD
WESTBOROUGH MA 01581

* Retail Pricing Priority Mail rates apply. There is no fee for USPS Tracking® service on Priority Mail service with use of this electronic rate shipping label. Refunds for unused postage paid labels can be requested online 30 days from the print date.

UNITED STATES POSTAL SERVICE® *Thank you for shipping with the United States Postal Service!*
*Check the status of your shipment on the USPS Tracking® page at usps.com*

B0B0S00046A · SBA
10152

UNITED STATES POSTAL SERVICE.

FARMINGTON
210 MAIN ST
FARMINGTON, CT 06032-9998
(800)275-8777

08/19/2022 04:11 PM

| Product | Qty | Unit Price | Price |
|---|---|---|---|
| Prepaid Mail<br>Brooklyn, CT 06234<br>Weight: 0 lb 11.80 oz<br>Acceptance Date:<br>Fri 08/19/2022<br>Tracking #:<br>9405 5036 9930 0324 3209 13 | 1 | | $0.00 |
| Prepaid Mail<br>Westborough, MA 01581<br>Weight: 0 lb 1.90 oz<br>Acceptance Date:<br>Fri 08/19/2022<br>Tracking #:<br>9405 5036 9930 0324 3210 19 | 1 | | $0.00 |
| Prepaid Mail<br>Brooklyn, CT 06234<br>Weight: 0 lb 11.90 oz<br>Acceptance Date:<br>Fri 08/19/2022<br>Tracking #:<br>9405 5036 9930 0324 3209 37 | 1 | | $0.00 |
| Prepaid Mail<br>Boca Raton, FL 33487<br>Weight: 0 lb 11.80 oz<br>Acceptance Date:<br>Fri 08/19/2022<br>Tracking #:<br>9405 5036 9930 0324 3209 51 | 1 | | $0.00 |
| Grand Total: | | | $0.00 |

**********
Every household in the U.S. is now
eligible to receive a third set
of 8 free test kits.
Go to www.covidtests.gov
**********

Preview your Mail
Track your Packages
Sign up for FREE @
https://informeddelivery.usps.com

All sales final on stamps and postage.
Refunds for guaranteed services only.
Thank you for your business.

Tell us about your experience.
Go to: https://postalexperience.com/Pos
or scan this code with your mobile device,