AMERICAN TOWER®
CORPORATION

# Structural Analysis Report

| | | |
|---|---|---|
| **Structure** | : | **120 ft Monopole** |
| **ATC Site Name** | : | **Brst - Bristol, CT** |
| **ATC Asset Number** | : | **302500** |
| **Engineering Number** | : | **OAA751417_C3_02** |
| **Proposed Carrier** | : | **AT&T MOBILITY** |
| **Carrier Site Name** | : | **Bristol Willis St.** |
| **Carrier Site Number** | : | **CTL01055** |
| **Site Location** | : | **790 Willis Street**<br>**Bristol, CT 06010-7269**<br>**41.649100,-72.948000** |
| **County** | : | **Hartford** |
| **Date** | : | **January 23, 2020** |
| **Max Usage** | : | **89%** |
| **Result** | : | **Pass** |

STATE OF CONNECTICUT
ESHA KAUSHAL MODI
32593
LICENSED
PROFESSIONAL ENGINEER

Prepared By:
Joseph DiVito
Engineer Intern

Joseph DiVito

Reviewed By:

Authorized by "EOR"
23 Jan 2020 05:18:56

cosign

**COA: PEC.0001553**

**Table of Contents**

Introduction ..... 1

Supporting Documents ..... 1

Analysis ..... 1

Conclusion ..... 1

Existing and Reserved Equipment ..... 2

Equipment to be Removed ..... 2

Proposed Equipment ..... 2

Structure Usages ..... 3

Foundations ..... 3

Deflection and Sway ..... 3

Standard Conditions ..... 4

Calculations ..... Attached

## Introduction

The purpose of this report is to summarize results of a structural analysis performed on the 120 ft monopole to reflect the change in loading by AT&T MOBILITY.

## Supporting Documents

| | |
|---|---|
| **Tower Drawings** | Valmont Drawing #DC1671Z, dated December 29, 1993 |
| **Foundation Drawing** | Mapping by FDH Project #01-0612, dated June 23, 2001 |
| **Geotechnical Report** | Johnson Soils Job #15220-B, dated May 21, 2002 |
| **Modifications** | Spectrasite Site #CT-0036, dated June 12, 2002<br>ATC Project #64490338, dated May 5, 2016 |

## Analysis

The tower was analyzed using American Tower Corporation's tower analysis software. This program considers an elastic three-dimensional model and second-order effects per ANSI/TIA-222.

| | |
|---|---|
| **Basic Wind Speed:** | 117 mph (3-Second Gust) |
| **Basic Wind Speed w/ Ice:** | 50 mph (3-Second Gust) w/ 1" radial ice concurrent |
| **Code:** | ANSI/TIA-222-H / 2015 IBC / 2018 Connecticut State Building Code |
| **Exposure Category:** | B |
| **Risk Category:** | II |
| **Topographic Factor Procedure:** | Method 2 |
| **Feature:** | Hill |
| **Crest Height (H):** | 198 ft |
| **Crest Length (L):** | 2957 ft |
| **Spectral Response:** | $Ss = 0.19$, $S_1 = 0.05$ |
| **Site Class:** | D - Stiff Soil |

## Conclusion

Based on the analysis results, the structure meets the requirements per the applicable codes listed above. The tower and foundation can support the equipment as described in this report.

If you have any questions or require additional information, please contact American Tower via email at Engineering@americantower.com. Please include the American Tower site name, site number, and engineering number in the subject line for any questions.

**Existing and Reserved Equipment**

| Elev.[1] (ft) | Qty | Antenna | Mount Type | Lines | Carrier |
|---|---|---|---|---|---|
| 124.0 | 6 | CCI TPX-070821 | Platform with Handrails | (2) 0.39" (10mm) Fiber Trunk (4) 0.78" (19.7mm) 8 AWG 6 (12) 1 1/4" Coax (1) 3" conduit (1) 7/8" Coax | AT&T MOBILITY |
| | 6 | Powerwave Allgon LGP21401 | | | |
| | 2 | Kathrein Scala 80010966 | | | |
| | 2 | CCI TPA-65R-LCUUUU-H8 | | | |
| | 1 | Quintel QS66512-3 (112 lbs.) | | | |
| | 3 | Powerwave Allgon 7770.00 | | | |
| | 1 | Generic 2' Std. Dish | | | |
| | 3 | Ericsson RRUS 32 B2 | | | |
| | 3 | Ericsson RRUS 32 (50.8 lbs) | | | |
| | 3 | Ericsson RRUS 4478 B14 | | | |
| | 3 | Ericsson RRUS A2 | | | |
| | 2 | Raycap DC6-48-60-18-8F | | | |
| 110.0 | 8 | Andrew DB844H90E-XY | T-Arm | (8) 1 1/4" Coax | SPRINT NEXTEL |
| 100.0 | 2 | Kathrein Scala 742 213 | Flush | (6) 1 5/8" Coax | METRO PCS INC |
| | 1 | RFS APXV18-206517S-C | | | |
| 90.0 | 2 | DragonWave Horizon Compact | Low Profile Platform | (4) 2" conduit (3) 1 5/8" (1.63"-41.3mm) Fiber (2) 1/2" Coax | CLEARWIRE CORPORATION |
| | 3 | Alcatel-Lucent 1900 MHz 4X45 RRH | | | |
| | 3 | Nokia 2.5G MAA - AAHC(64T64R) | | | |
| | 2 | DragonWave A-ANT-11G-2.5-C | | | |
| | 3 | Commscope NNVV-65B-R4 | | | |
| | 6 | Alcatel-Lucent RRH2x50-08 | | | |

**Equipment to be Removed**

| Elev.[1] (ft) | Qty | Antenna | Mount Type | Lines | Carrier |
|---|---|---|---|---|---|
| 124.0 | 3 | Ericsson RRUS-11 1900 MHz | - | - | AT&T MOBILITY |
| | 1 | Kathrein Scala 80010966 | | | |
| | 2 | Andrew SBNH-1D6565C (60.8 lbs) | | | |
| | 1 | KMW AM-X-CD-16-65-00T-RET | | | |

**Proposed Equipment**

| Elev.[1] (ft) | Qty | Antenna | Mount Type | Lines | Carrier |
|---|---|---|---|---|---|
| 124.0 | 6 | CCI TPX-070821 | Site Pro1 RMQP-496-HK | (4) 1.24" (31.6mm) 4 AWG 6 (1) 3" conduit | AT&T MOBILITY |
| | 2 | Raycap DC6-48-60-18-8F ("Squid") | | | |
| | 3 | Ericsson Radio 8843 - B2 + B66A | | | |
| | 3 | Ericsson RRUS 4449 B5, B12 | | | |
| | 1 | CCI DMP65R-BU6DA | | | |
| | 2 | CCI DMP65R-BU8D | | | |

[1] Contracted elevations are shown for appurtenances within contracted installation tolerances. Appurtenances outside of contract limits are shown at installed elevations.

Install proposed lines inside the pole shaft.

## Structure Usages

| Structural Component | Controlling Usage | Pass/Fail |
|---|---|---|
| Anchor Bolts | 37% | Pass |
| Shaft | 76% | Pass |
| Base Plate | 12% | Pass |
| Reinforcement | 89% | Pass |

## Foundations

| Reaction Component | Analysis Reactions | % of Usage |
|---|---|---|
| Moment (Kips-Ft) | 1,836.6 | 76% |
| Axial (Kips) | 35.46 | 34% |
| Shear (Kips) | 20.67 | 12% |

The structure base reactions resulting from this analysis were found to be acceptable through analysis based on geotechnical and foundation information, therefore no modification or reinforcement of the foundation will be required.

## Deflection and Sway*

| Antenna Elevation (ft) | Antenna | Carrier | Deflection (ft) | Sway (Rotation) (°) |
|---|---|---|---|---|
| 120.0 | CCI TPX-070821 | AT&T MOBILITY | 1.815 | 1.720 |
| | Raycap DC6-48-60-18-8F ("Squid") | | | |
| | Ericsson Radio 8843 - B2 + B66A | | | |
| | Ericsson RRUS 4449 B5, B12 | | | |
| | Generic 2' Std. Dish | | | |
| | CCI DMP65R-BU6DA | | | |
| | CCI DMP65R-BU8D | | | |
| 90.0 | DragonWave A-ANT-18G-2-C | CLEARWIRE CORPORATION | 1.033 | 1.260 |
| | DragonWave A-ANT-11G-2.5-C | | | |
| | DragonWave A-ANT-11G-2.5-C | | | |

***Deflection and Sway was evaluated considering a design wind speed of 60 mph (3-Second Gust) per ANSI/TIA-222-H**

AMERICAN TOWER®
CORPORATION

**Standard Conditions**

All engineering services performed by A.T. Engineering Service, PLLC are prepared on the basis that the information used is current and correct. This information may consist of, but is not limited to the following:

- Information supplied by the client regarding antenna, mounts and feed line loading
- Information from drawings, design and analysis documents, and field notes in the possession of A.T. Engineering Service, PLLC

It is the responsibility of the client to ensure that the information provided to A.T. Engineering Service, PLLC and used in the performance of our engineering services is correct and complete.

All assets of American Tower Corporation, its affiliates and subsidiaries (collectively "American Tower") are inspected at regular intervals. Based upon these inspections and in the absence of information to the contrary, American Tower assumes that all structures were constructed in accordance with the drawings and specifications.

Unless explicitly agreed by both the client and A.T. Engineering Service, PLLC, all services will be performed in accordance with the current revision of ANSI/TIA-222.

All services are performed, results obtained, and recommendations made in accordance with generally accepted engineering principles and practices. A.T. Engineering Service, PLLC is not responsible for the conclusions, opinions and recommendations made by others based on the information supplied herein.

© 2007 - 2020 by ATC IP LLC. All rights reserved.

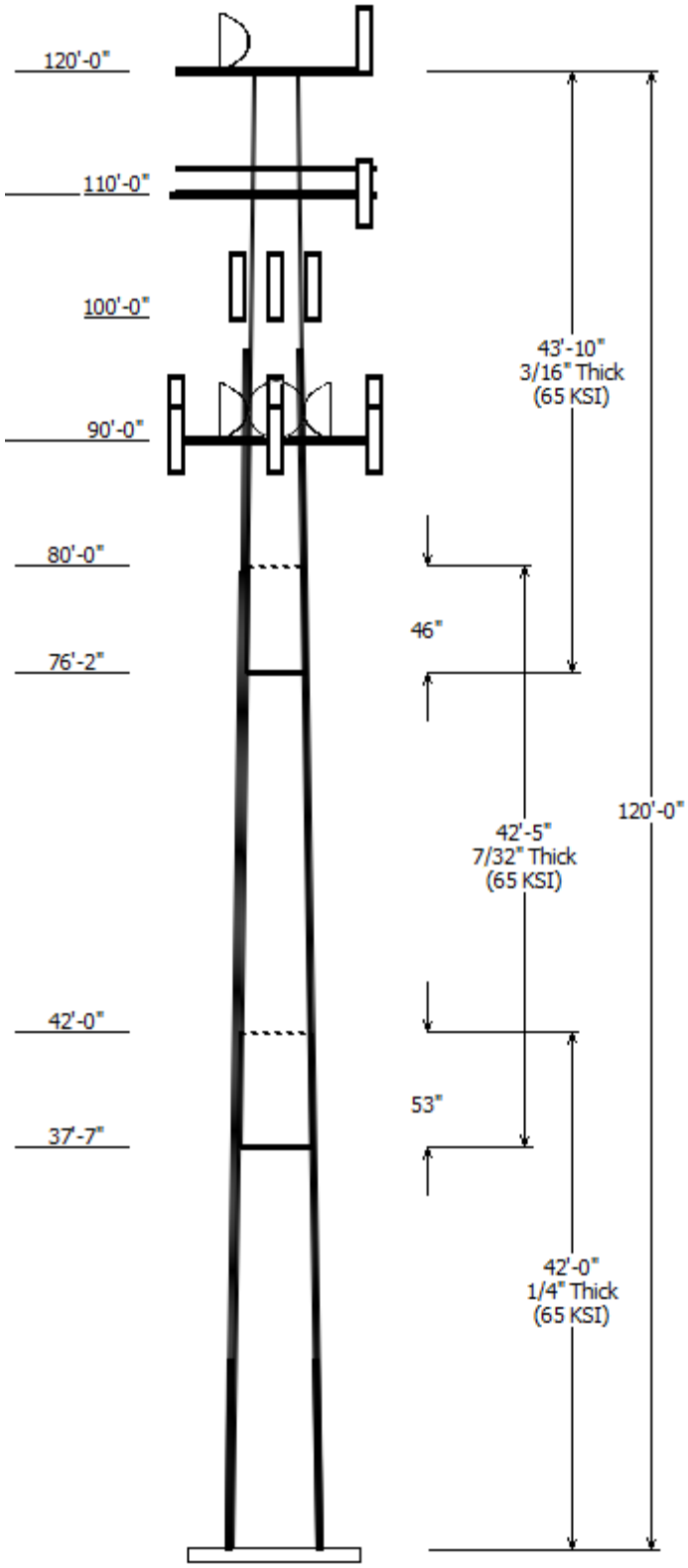


## Job Information

| | | | |
|---|---|---|---|
| Client : | AT&T MOBILITY | | |
| Pole : | 302500 | Code: | ANSI/TIA-222-H |
| Location : | Brst - Bristol, CT | | |
| Description : | 120' Valmont Monopole | Risk Category : | II |
| Shape : | 12 Sides | Exposure : | B |
| Height : | 120.00 (ft) | Topo Method : | Method 2 |
| Base Elev (ft): | 0.00 | Topographic Feature : | Hill |
| Taper: | 0.145021 (in/ft) | | |

## Sections Properties

| Shaft Section | Length (ft) | Diameter (in) Accross Flats Top | Bottom | Thick (in) | Joint Type | Overlap Length (in) | Shape | Steel Grade (ksi) |
|---|---|---|---|---|---|---|---|---|
| 1 | 42.000 | 24.90 | 31.00 | 0.250 | | 0.000 | 12 Sides | 65 |
| 2 | 42.417 | 19.83 | 25.98 | 0.219 | Slip Joint | 53.000 | 12 Sides | 65 |
| 3 | 43.833 | 14.41 | 20.76 | 0.188 | Slip Joint | 46.000 | 12 Sides | 65 |

## Discrete Appurtenance

| Attach Elev (ft) | Force Elev (ft) | Qty | Description |
|---|---|---|---|
| 120.000 | 120.000 | 1 | SitePro1 RMQP-496-HK |
| 120.000 | 124.000 | 2 | CCI DMP65R-BU8D |
| 120.000 | 124.000 | 2 | Kathrein Scala 80010966 |
| 120.000 | 124.000 | 2 | CCI TPA-65R-LCUUUU-H8 |
| 120.000 | 124.000 | 1 | CCI DMP65R-BU6DA |
| 120.000 | 124.000 | 1 | Quintel QS66512-3 (112 lbs.) |
| 120.000 | 124.000 | 3 | Powerwave Allgon 7770.00 |
| 120.000 | 124.000 | 1 | Generic 2' Std. Dish |
| 120.000 | 124.000 | 3 | Ericsson RRUS 32 B2 |
| 120.000 | 124.000 | 3 | Ericsson RRUS 32 (50.8 lbs) |
| 120.000 | 124.000 | 3 | Ericsson RRUS 4449 B5, B12 |
| 120.000 | 124.000 | 3 | Ericsson RRUS 4478 B14 |
| 120.000 | 124.000 | 3 | Ericsson Radio 8843 - B2 + B66 |
| 120.000 | 124.000 | 3 | Ericsson RRUS A2 |
| 120.000 | 124.000 | 2 | Raycap DC6-48-60-18-8F |
| 120.000 | 124.000 | 2 | Raycap DC6-48-60-18-8F |
| 120.000 | 124.000 | 6 | Powerwave Allgon LGP21401 |
| 120.000 | 124.000 | 6 | CCI TPX-070821 |
| 120.000 | 124.000 | 6 | CCI TPX-070821 |
| 110.000 | 110.000 | 1 | T-Arm w/ Working Platform |
| 110.000 | 110.000 | 2 | Round T-Arm |
| 110.000 | 110.000 | 8 | Andrew DB844H90E-XY |
| 100.000 | 101.000 | 1 | RFS APXV18-206517S-C |
| 100.000 | 101.000 | 2 | Kathrein Scala 742 213 |
| 90.000 | 90.000 | 1 | Generic Flat Low Profile Platf |
| 90.000 | 90.000 | 3 | Commscope NNVV-65B-R4 |
| 90.000 | 92.000 | 1 | DragonWave A-ANT-11G-2.5-C |
| 90.000 | 92.000 | 2 | DragonWave A-ANT-11G-2.5-C |
| 90.000 | 92.000 | 1 | DragonWave A-ANT-18G-2-C |
| 90.000 | 92.000 | 3 | Argus LLPX310R |
| 90.000 | 90.000 | 3 | Nokia 2.5G MAA - |
| 90.000 | 90.000 | 3 | Alcatel-Lucent 1900 MHz 4X45 |
| 90.000 | 90.000 | 6 | Alcatel-Lucent RRH2x50-08 |
| 90.000 | 92.000 | 2 | DragonWave Horizon Compact |

## Linear Appurtenance

| Elev (ft) From | To | Description | Exposed To Wind |
|---|---|---|---|
| 92.000 | 102.0 | #20 | Yes |
| 92.000 | 102.0 | #20 | Yes |
| 92.000 | 102.0 | #20 | Yes |
| 92.000 | 102.0 | #20 | Yes |

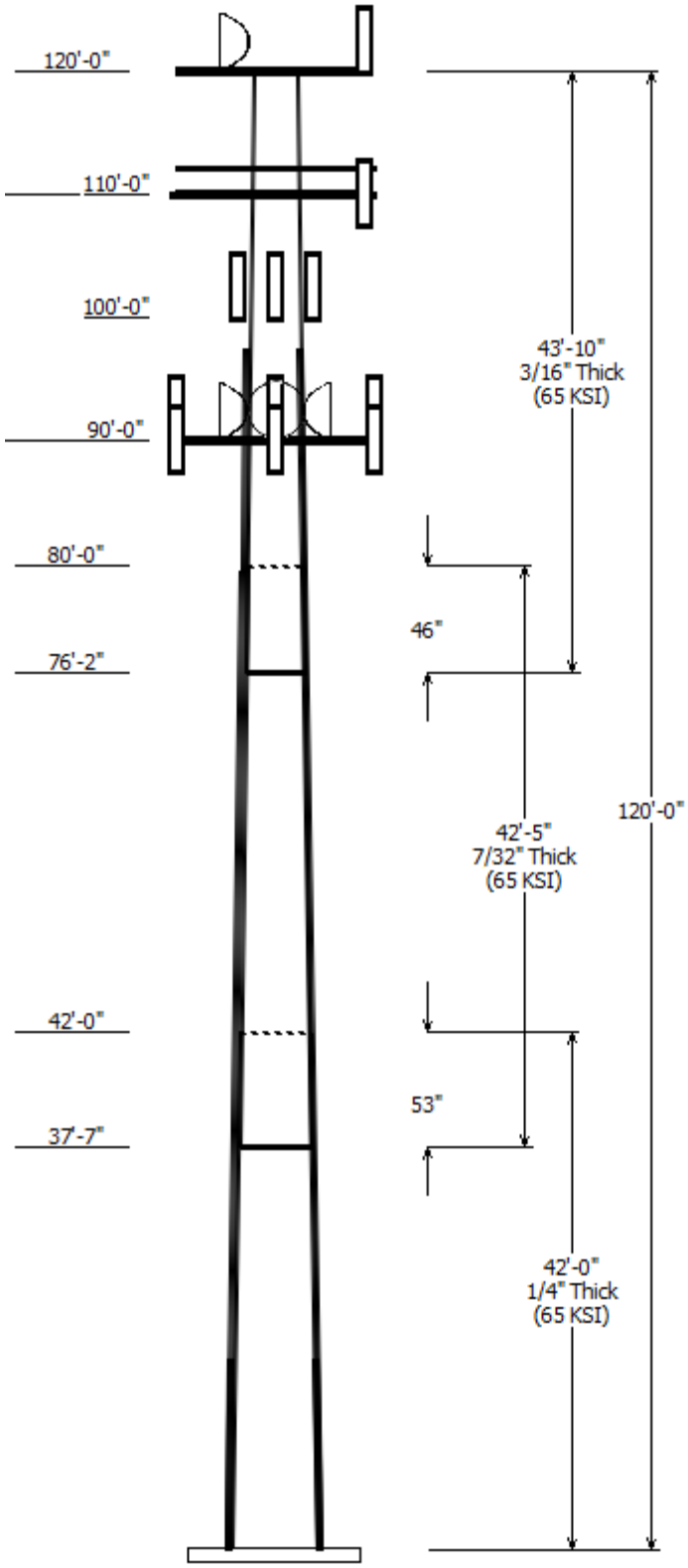


| | | | |
|---|---|---|---|
| 22.500 | 92.000 | #20 | Yes |
| 22.500 | 92.000 | #20 | Yes |
| 22.500 | 92.000 | #20 | Yes |
| 22.500 | 92.000 | #20 | Yes |
| 7.000 | 100.0 | 1 5/8" Coax | Yes |
| 7.000 | 110.0 | 1 1/4" Coax | No |
| 7.000 | 124.0 | 0.39" (10mm) | No |
| 7.000 | 124.0 | 0.78" (19.7mm) 8 | No |
| 7.000 | 124.0 | 1 1/4" Coax | No |
| 7.000 | 124.0 | 3" conduit | No |
| 7.000 | 124.0 | 3" conduit | No |
| 7.000 | 124.0 | 7/8" Coax | No |
| 7.000 | 90.000 | 1/2" Coax | Yes |
| 0.000 | 92.000 | 2" conduit | No |
| 0.000 | 124.0 | 1.24" (31.6mm) 4 | No |
| 0.000 | 22.500 | #20 | Yes |
| 0.000 | 22.500 | #20 | Yes |
| 0.000 | 22.500 | #20 | Yes |
| 0.000 | 22.500 | #20 | Yes |
| 0.000 | 22.500 | #20 | Yes |
| 0.000 | 22.500 | #20 | Yes |
| 0.000 | 22.500 | #20 | Yes |
| 0.000 | 22.500 | #20 | Yes |
| 0.000 | 90.000 | 1 5/8" (1.63"- | No |
| 0.000 | 90.000 | 2" conduit | Yes |

## Load Cases

| | |
|---|---|
| 1.2D + 1.0W | 117 mph with No Ice |
| 0.9D + 1.0W | 117 mph with No Ice (Reduced DL) |
| 1.2D + 1.0Di + 1.0Wi | 50 mph with 1.00 in Radial Ice |
| 1.2D + 1.0Ev + 1.0Eh | Seismic |
| 0.9D - 1.0Ev + 1.0Eh | Seismic (Reduced DL) |
| 1.0D + 1.0W | Serviceability 60 mph |

## Reactions

| Load Case | Moment (kip-ft) | Shear (kip) | Axial (kip) |
|---|---|---|---|
| 1.2D + 1.0W | 1836.61 | 20.67 | 35.46 |
| 0.9D + 1.0W | 1806.05 | 20.66 | 26.59 |
| 1.2D + 1.0Di + 1.0Wi | 454.00 | 4.48 | 58.49 |
| 1.2D + 1.0Ev + 1.0Eh | 93.14 | 0.89 | 35.93 |
| 0.9D - 1.0Ev + 1.0Eh | 91.16 | 0.89 | 24.90 |
| 1.0D + 1.0W | 428.15 | 4.86 | 29.57 |

## Dish Deflections

| Load Case | Attach Elev (ft) | Deflection (in) | Rotation (deg) |
|---|---|---|---|
| 1.0D + 1.0W | 90.00 | 12.394 | 1.260 |
| 1.0D + 1.0W | 90.00 | 12.394 | 1.260 |
| 1.0D + 1.0W | 90.00 | 12.394 | 1.260 |
| 1.0D + 1.0W | 120.00 | 21.778 | 1.720 |

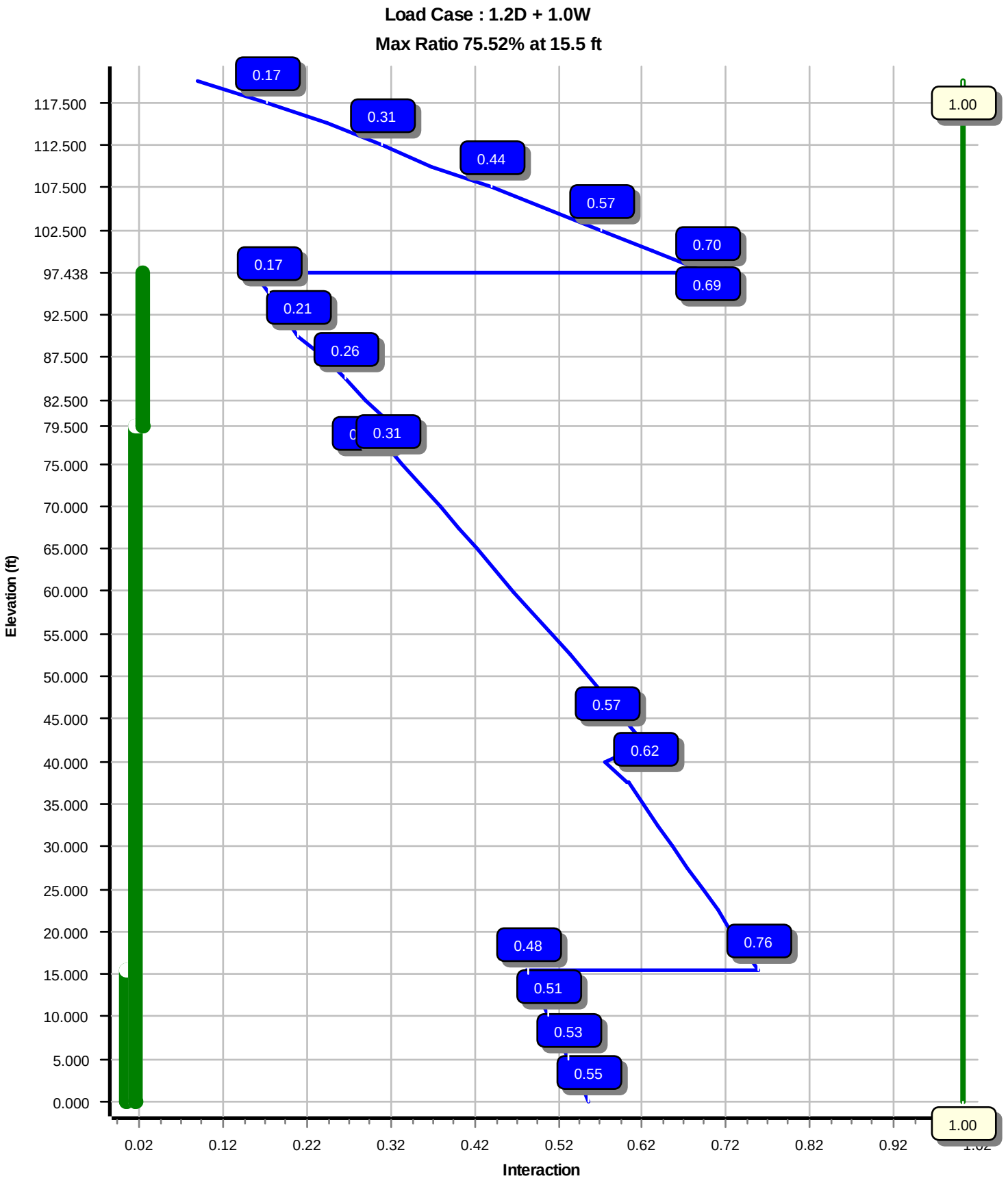
Load Case : 1.2D + 1.0W
Max Ratio 75.52% at 15.5 ft
Elevation (ft)
Interaction
117.500
112.500
107.500
102.500
97.438
92.500
87.500
82.500
79.500
75.000
70.000
65.000
60.000
55.000
50.000
45.000
40.000
35.000
30.000
25.000
20.000
15.000
10.000
5.000
0.000
0.02
0.12
0.22
0.32
0.42
0.52
0.62
0.72
0.82
0.92
0.17
0.31
0.44
0.57
0.70
0.17
0.69
0.21
0.26
0.31
0.57
0.62
0.76
0.48
0.51
0.53
0.55
1.00
1.00

| | | |
|---|---|---|
| **Site Number: 302500** | **Code: ANSI/TIA-222-H** | © 2007 - 2020 by ATC IP LLC. All rights reserved. |
| **Site Name: Brst - Bristol, CT** | **Engineering Number:OAA751417_C3_02** | **1/23/2020 3:51:30 PM** |
| **Customer: AT&T MOBILITY** | | |

## Analysis Parameters

| | | | |
|---|---|---|---|
| **Location :** | **Hartford County, CT** | **Height (ft) :** | **120** |
| **Code :** | **ANSI/TIA-222-H** | **Base Diameter (in) :** | **31.00** |
| **Shape :** | **12 Sides** | **Top Diameter (in) :** | **14.41** |
| **Pole Type :** | **Taper** | **Taper (in/ft) :** | **0.145** |
| **Pole Manfacturer :** | **Valmont** | **Rotation (deg) :** | **0.00** |
| **Kd (non-service) :** | **0.95** | **Ke :** | **0.96** |

## Ice & Wind Parameters

| | | | |
|---|---|---|---|
| **Exposure Category:** | **B** | **Design Wind Speed Without Ice:** | **117 mph** |
| **Risk Category:** | **II** | **Design Wind Speed With Ice:** | **50 mph** |
| **Topographic Factor Procedure:** | **Method 2** | **Operational Wind Speed:** | **60 mph** |
| **Feature:** | **Hill** | **Design Ice Thickness:** | **1.00 in** |
| **Crest Height (H):** | **198 ft** | **HMSL:** | **1034.00 ft** |
| **Crest Length (L):** | **2957 ft** | | |
| **Distance from Apex (x):** | **0 ft** | | |
| **Upwind / Downwind** | **Upwind** | | |

## Seismic Parameters

| | |
|---|---|
| **Analysis Method:** | **Equivalent Lateral Force Method** |
| **Site Class:** | **D - Stiff Soil** |
| **Period Based on Rayleigh Method (sec):** | **2.54** |

| | | | | | |
|---|---|---|---|---|---|
| **$T_L$ (sec):** | **6** | **p:** | **1** | **$C_s$:** | **0.030** |
| **$S_s$:** | **0.189** | **$S_1$:** | **0.054** | **$C_s$ Max:** | **0.030** |
| **$F_a$:** | **1.600** | **$F_v$ :** | **2.400** | **$C_s$ Min:** | **0.030** |
| **$S_{ds}$:** | **0.202** | **$S_{d1}$:** | **0.086** | | |

## Load Cases

| | |
|---|---|
| **1.2D + 1.0W** | **117 mph with No Ice** |
| **0.9D + 1.0W** | **117 mph with No Ice (Reduced DL)** |
| **1.2D + 1.0Di + 1.0Wi** | **50 mph with 1.00 in Radial Ice** |
| **1.2D + 1.0Ev + 1.0Eh** | **Seismic** |
| **0.9D - 1.0Ev + 1.0Eh** | **Seismic (Reduced DL)** |
| **1.0D + 1.0W** | **Serviceability 60 mph** |

 © 2007 - 2020 by ATC IP LLC. All rights reserved.


## Shaft Section Properties

| Sect Info | Length (ft) | Thick (in) | Fy (ksi) | Joint Type | Slip Joint Len (in) | Weight (lb) | Bottom Dia (in) | Bottom Elev (ft) | Bottom Area (in²) | Bottom Ix (in⁴) | Bottom W/t Ratio | Bottom D/t Ratio | Top Dia (in) | Top Elev (ft) | Top Area (in²) | Top Ix (in⁴) | Top W/t Ratio | Top D/t Ratio | Taper (in/ft) |
|---|---|---|---|---|---|---|---|---|---|---|---|---|---|---|---|---|---|---|---|
| 1-12 | 42.000 | 0.2500 | 65 | | 0.00 | 3,187 | 31.00 | 0.00 | 24.75 | 2987.6 | 30.55 | 124.00 | 24.90 | 42.00 | 19.85 | 1540.7 | 24.02 | 99.64 | 0.145021 |
| 2-12 | 42.417 | 0.2188 | 65 | Slip | 53.00 | 2,307 | 25.98 | 37.58 | 18.15 | 1538.3 | 29.15 | 118.80 | 19.83 | 80.00 | 13.82 | 678.7 | 21.62 | 90.68 | 0.145021 |
| 3-12 | 43.833 | 0.1875 | 65 | Slip | 46.00 | 1,567 | 20.76 | 76.17 | 12.42 | 671.6 | 27.00 | 110.76 | 14.41 | 120.00 | 8.59 | 221.7 | 17.91 | 76.85 | 0.145021 |
| | | | | Shaft Weight | | 7,061 | | | | | | | | | | | | | |

## Discrete Appurtenance Properties

| Attach Elev (ft) | Description | Qty | Ka | Vert Ecc (ft) | No Ice Weight (lb) | No Ice EPAa (sf) | No Ice Orientation Factor | Ice Weight (lb) | Ice EPAa (sf) | Ice Orientation Factor |
|---|---|---|---|---|---|---|---|---|---|---|
| 120.00 | CCI TPX-070821 | 6 | 0.75 | 4.000 | 7.50 | 0.469 | 0.50 | 15.41 | 0.782 | 0.50 |
| 120.00 | CCI TPX-070821 | 6 | 0.75 | 4.000 | 7.50 | 0.469 | 0.50 | 15.41 | 0.782 | 0.50 |
| 120.00 | Powerwave Allgon LGP21401 | 6 | 0.75 | 4.000 | 14.10 | 1.104 | 0.50 | 30.38 | 1.570 | 0.50 |
| 120.00 | Raycap DC6-48-60-18-8F | 2 | 0.75 | 4.000 | 20.00 | 1.260 | 1.00 | 54.36 | 1.690 | 1.00 |
| 120.00 | Raycap DC6-48-60-18-8F | 2 | 0.75 | 4.000 | 31.80 | 1.470 | 1.00 | 72.06 | 1.926 | 1.00 |
| 120.00 | Ericsson RRUS A2 | 3 | 0.75 | 4.000 | 15.00 | 1.600 | 0.50 | 38.69 | 2.146 | 0.50 |
| 120.00 | Ericsson Radio 8843 - B2 + B66A | 3 | 0.75 | 4.000 | 71.90 | 1.650 | 0.50 | 112.11 | 2.203 | 0.50 |
| 120.00 | Ericsson RRUS 4478 B14 | 3 | 0.75 | 4.000 | 59.90 | 1.842 | 0.50 | 95.98 | 2.427 | 0.50 |
| 120.00 | Ericsson RRUS 4449 B5, B12 | 3 | 0.75 | 4.000 | 71.00 | 1.969 | 0.50 | 113.06 | 2.578 | 0.50 |
| 120.00 | Ericsson RRUS 32 (50.8 lbs) | 3 | 0.75 | 4.000 | 50.80 | 2.692 | 0.67 | 97.48 | 3.446 | 0.67 |
| 120.00 | Ericsson RRUS 32 B2 | 3 | 0.75 | 4.000 | 53.00 | 2.743 | 0.67 | 101.00 | 3.506 | 0.67 |
| 120.00 | Generic 2' Std. Dish | 1 | 1.00 | 4.000 | 14.00 | 5.228 | 1.00 | 50.16 | 6.238 | 1.00 |
| 120.00 | Powerwave Allgon 7770.00 | 3 | 0.75 | 4.000 | 35.00 | 5.508 | 0.65 | 116.15 | 6.178 | 0.65 |
| 120.00 | Quintel QS66512-3 (112 lbs.) | 1 | 0.75 | 4.000 | 112.00 | 8.133 | 1.00 | 242.05 | 9.952 | 1.00 |
| 120.00 | CCI DMP65R-BU6DA | 1 | 0.75 | 4.000 | 79.40 | 12.709 | 1.00 | 247.51 | 14.529 | 1.00 |
| 120.00 | CCI TPA-65R-LCUUUU-H8 | 2 | 0.75 | 4.000 | 81.60 | 13.298 | 0.77 | 262.23 | 15.734 | 0.77 |
| 120.00 | Kathrein Scala 80010966 | 2 | 0.75 | 4.000 | 114.60 | 17.363 | 0.63 | 324.16 | 19.771 | 0.63 |
| 120.00 | CCI DMP65R-BU8D | 2 | 0.75 | 4.000 | 95.70 | 17.871 | 0.72 | 317.51 | 20.276 | 0.72 |
| 120.00 | SitePro1 RMQP-496-HK | 1 | 1.00 | 0.000 | 2,446.00 | 42.400 | 1.00 | 3,558.06 | 61.677 | 1.00 |
| 110.00 | Andrew DB844H90E-XY | 8 | 0.80 | 0.000 | 14.00 | 3.610 | 0.73 | 79.28 | 3.598 | 0.73 |
| 110.00 | Round T-Arm | 2 | 0.75 | 0.000 | 250.00 | 9.700 | 0.67 | 385.20 | 15.033 | 0.67 |
| 110.00 | T-Arm w/ Working Platform | 1 | 0.75 | 0.000 | 300.00 | 14.400 | 0.67 | 537.95 | 25.108 | 0.67 |
| 100.00 | Kathrein Scala 742 213 | 2 | 1.00 | 1.000 | 22.00 | 5.135 | 0.75 | 86.01 | 5.925 | 0.75 |
| 100.00 | RFS APXV18-206517S-C | 1 | 1.00 | 1.000 | 26.40 | 5.160 | 1.00 | 85.76 | 6.675 | 1.00 |
| 90.00 | DragonWave Horizon Compact | 2 | 0.80 | 2.000 | 10.60 | 0.721 | 0.50 | 24.85 | 1.082 | 0.50 |
| 90.00 | Alcatel-Lucent RRH2x50-08 | 6 | 0.80 | 0.000 | 52.90 | 1.701 | 0.50 | 90.46 | 2.248 | 0.50 |
| 90.00 | Alcatel-Lucent 1900 MHz 4X45 | 3 | 0.80 | 0.000 | 60.00 | 2.322 | 0.67 | 111.08 | 3.007 | 0.67 |
| 90.00 | Nokia 2.5G MAA - AAHC(64T64R) | 3 | 0.80 | 0.000 | 103.60 | 4.203 | 0.64 | 175.06 | 5.053 | 0.64 |
| 90.00 | Argus LLPX310R | 3 | 0.80 | 2.000 | 28.60 | 4.292 | 0.63 | 85.72 | 5.340 | 0.63 |
| 90.00 | DragonWave A-ANT-18G-2-C | 1 | 0.80 | 2.000 | 27.10 | 4.688 | 1.00 | 88.96 | 5.495 | 1.00 |
| 90.00 | DragonWave A-ANT-11G-2.5-C | 2 | 1.00 | 2.000 | 47.60 | 8.670 | 1.00 | 159.91 | 9.765 | 1.00 |
| 90.00 | DragonWave A-ANT-11G-2.5-C | 1 | 1.00 | 2.000 | 47.60 | 8.670 | 1.00 | 159.91 | 9.765 | 1.00 |
| 90.00 | Commscope NNVV-65B-R4 | 3 | 0.80 | 0.000 | 77.40 | 12.271 | 0.64 | 236.68 | 14.048 | 0.64 |
| 90.00 | Generic Flat Low Profile Platform | 1 | 1.00 | 0.000 | 1,875.00 | 26.100 | 1.00 | 2,388.36 | 38.202 | 1.00 |
| Totals | Num Loadings:34 | 92 | | | 8,757.90 | | | 16,124.63 | | |

## Linear Appurtenance Properties

Load Case Azimuth (deg) :

| Elev From (ft) | Elev To (ft) | Qty | Description | Coax Dia (in) | Coax Wt (lb/ft) | Flat | Max Coax / Row | Dist Between Rows (in) | Dist Between Cols (in) | Azimuth (deg) | Dist From Face (in) | Exposed To Wind | Carrier |
|---|---|---|---|---|---|---|---|---|---|---|---|---|---|
| 0.00 | 124.00 | 4 | 1.24" (31.6mm) 4 AWG | 1.24 | 1.17 | N | 0 | 0.00 | 0.00 | 0 | 0.00 | N | AT&T MOBILITY |
| 7.00 | 124.00 | 2 | 0.39" (10mm) Fiber | 0.39 | 0.06 | N | 0 | 0.00 | 0.00 | 0 | 0.00 | N | AT&T MOBILITY |
| 7.00 | 124.00 | 4 | 0.78" (19.7mm) 8 AWG | 0.78 | 0.59 | N | 0 | 0.00 | 0.00 | 0 | 0.00 | N | AT&T MOBILITY |
| 7.00 | 124.00 | 12 | 1 1/4" Coax | 1.55 | 0.63 | N | 0 | 0.00 | 0.00 | 0 | 0.00 | N | AT&T MOBILITY |

 © 2007 - 2020 by ATC IP LLC. All rights reserved.


| | | | | | | | | | | | | | |
|---|---|---|---|---|---|---|---|---|---|---|---|---|---|
| 7.00 | 124.00 | 1 | 3" conduit | 3.50 | 7.58 | N | 0 | 0.00 | 0.00 | 0 | 0.00 | N | AT&T MOBILITY |
| 7.00 | 124.00 | 1 | 3" conduit | 3.50 | 7.58 | N | 0 | 0.00 | 0.00 | 0 | 0.00 | N | AT&T MOBILITY |
| 7.00 | 124.00 | 1 | 7/8" Coax | 1.09 | 0.33 | N | 0 | 0.00 | 0.00 | 0 | 0.00 | N | AT&T MOBILITY |
| 7.00 | 110.00 | 8 | 1 1/4" Coax | 1.55 | 0.63 | N | 0 | 0.00 | 0.00 | 0 | 0.00 | N | SPRINT NEXTEL |
| 92.00 | 102.00 | 1 | #20 Reinforcement | 4.00 | 0.00 | N | 1 | 0.00 | 0.00 | 0 | 0.00 | Y | |
| 92.00 | 102.00 | 1 | #20 Reinforcement | 4.00 | 0.00 | N | 1 | 0.00 | 0.00 | 90 | 0.00 | Y | |
| 92.00 | 102.00 | 1 | #20 Reinforcement | 4.00 | 0.00 | N | 1 | 0.00 | 0.00 | 180 | 0.00 | Y | |
| 92.00 | 102.00 | 1 | #20 Reinforcement | 4.00 | 0.00 | N | 1 | 0.00 | 0.00 | 270 | 0.00 | Y | |
| 7.00 | 100.00 | 6 | 1 5/8" Coax | 1.98 | 0.82 | N | 6 | 1.00 | 1.00 | 160 | 0.50 | Y | METRO PCS INC |
| 0.00 | 92.00 | 2 | 2" conduit | 2.38 | 3.65 | N | 0 | 0.00 | 0.00 | 0 | 0.00 | N | CLEARWIRE |
| 22.50 | 92.00 | 1 | #20 Reinforcement | 4.00 | 0.00 | N | 1 | 0.00 | 0.00 | 0 | 0.00 | Y | |
| 22.50 | 92.00 | 1 | #20 Reinforcement | 4.00 | 0.00 | N | 1 | 0.00 | 0.00 | 90 | 0.00 | Y | |
| 22.50 | 92.00 | 1 | #20 Reinforcement | 4.00 | 0.00 | N | 1 | 0.00 | 0.00 | 180 | 0.00 | Y | |
| 22.50 | 92.00 | 1 | #20 Reinforcement | 4.00 | 0.00 | N | 1 | 0.00 | 0.00 | 270 | 0.00 | Y | |
| 0.00 | 90.00 | 3 | 1 5/8" (1.63"-41.3mm) | 1.63 | 1.61 | N | 0 | 0.00 | 0.00 | 0 | 0.00 | N | CLEARWIRE |
| 0.00 | 90.00 | 2 | 2" conduit | 2.38 | 3.65 | N | 2 | 1.00 | 0.00 | 60 | 0.50 | Y | CLEARWIRE |
| 7.00 | 90.00 | 2 | 1/2" Coax | 0.63 | 0.15 | N | 2 | 1.00 | 0.00 | 60 | 0.50 | Y | CLEARWIRE |
| 0.00 | 22.50 | 1 | #20 Reinforcement | 4.00 | 0.00 | N | 1 | 0.00 | 0.00 | 0 | 0.00 | Y | |
| 0.00 | 22.50 | 1 | #20 Reinforcement | 4.00 | 0.00 | N | 1 | 0.00 | 0.00 | 45 | 0.00 | Y | |
| 0.00 | 22.50 | 1 | #20 Reinforcement | 4.00 | 0.00 | N | 1 | 0.00 | 0.00 | 90 | 0.00 | Y | |
| 0.00 | 22.50 | 1 | #20 Reinforcement | 4.00 | 0.00 | N | 1 | 0.00 | 0.00 | 135 | 0.00 | Y | |
| 0.00 | 22.50 | 1 | #20 Reinforcement | 4.00 | 0.00 | N | 1 | 0.00 | 0.00 | 180 | 0.00 | Y | |
| 0.00 | 22.50 | 1 | #20 Reinforcement | 4.00 | 0.00 | N | 1 | 0.00 | 0.00 | 225 | 0.00 | Y | |
| 0.00 | 22.50 | 1 | #20 Reinforcement | 4.00 | 0.00 | N | 1 | 0.00 | 0.00 | 270 | 0.00 | Y | |
| 0.00 | 22.50 | 1 | #20 Reinforcement | 4.00 | 0.00 | N | 1 | 0.00 | 0.00 | 315 | 0.00 | Y | |

## Additional Steel

| Elev From (ft) | Elev To (ft) | Qty | Description | Fy (ksi) | Offset (in) | Intermediate Connections Description | Spacing (in) | Len (in) | Connectors | Continuation? |
|---|---|---|---|---|---|---|---|---|---|---|
| 0.00 | 15.48 | 4 | SOL #20 All Thread | 80 | 2.19 | 6" Angle Bracket | 30.0 | 3.31 | 5/8" A36 U-Bolt | No |
| 0.00 | 79.50 | 4 | SOL #20 All Thread | 80 | 2.19 | 6" Angle Bracket | 30.0 | 3.31 | 5/8" A36 U-Bolt | Yes |
| 79.50 | 97.44 | 4 | SOL #20 All Thread | 80 | 2.19 | 6" Angle Bracket | 30.0 | 3.31 | 5/8" A36 U-Bolt | Yes |

 © 2007 - 2020 by ATC IP LLC. All rights reserved.


## Segment Properties (Max Len : 2. ft)

| Seg Top Elev (ft) | Description | Thick (in) | Flat Dia (in) | Area ($in^2$) | Ix ($in^4$) | W/t Ratio | D/t Ratio | F'y (ksi) | S ($in^3$) | Z ($in^3$) | Weight (lb) | Additional Reinforcing Area ($in^2$) | Additional Reinforcing Ix ($in^4$) | Additional Reinforcing Weight (lb) |
|---|---|---|---|---|---|---|---|---|---|---|---|---|---|---|
| 0.00 | | 0.2500 | 31.000 | 24.754 | 2,987.6 | 30.55 | 124.00 | 71.4 | 186.2 | 0.0 | 0.0 | 39.28 | 7,139 | 0.0 |
| 2.50 | | 0.2500 | 30.637 | 24.462 | 2,883.1 | 30.16 | 122.55 | 71.8 | 181.8 | 0.0 | 209.3 | 39.28 | 7,001 | 334.0 |
| 5.00 | | 0.2500 | 30.275 | 24.170 | 2,781.2 | 29.77 | 121.10 | 72.2 | 177.5 | 0.0 | 206.9 | 39.28 | 6,865 | 334.0 |
| 7.50 | | 0.2500 | 29.912 | 23.878 | 2,681.6 | 29.38 | 119.65 | 72.7 | 173.2 | 0.0 | 204.4 | 39.28 | 6,731 | 334.0 |
| 10.00 | | 0.2500 | 29.550 | 23.586 | 2,584.5 | 28.99 | 118.20 | 73.1 | 169.0 | 0.0 | 201.9 | 39.28 | 6,597 | 334.0 |
| 12.50 | | 0.2500 | 29.187 | 23.294 | 2,489.7 | 28.60 | 116.75 | 73.5 | 164.8 | 0.0 | 199.4 | 39.28 | 6,465 | 334.0 |
| 15.00 | | 0.2500 | 28.825 | 23.003 | 2,397.3 | 28.21 | 115.30 | 73.9 | 160.7 | 0.0 | 196.9 | 39.28 | 6,335 | 334.0 |
| 15.48 | Reinf. Top | 0.2500 | 28.755 | 22.947 | 2,379.9 | 28.14 | 115.02 | 74.0 | 159.9 | 0.0 | 37.5 | 39.28 | 6,310 | 64.0 |
| 17.50 | | 0.2500 | 28.462 | 22.711 | 2,307.2 | 27.83 | 113.85 | 74.4 | 156.6 | 0.0 | 157.0 | 19.64 | 3,073 | 135.0 |
| 20.00 | | 0.2500 | 28.100 | 22.419 | 2,219.4 | 27.44 | 112.40 | 74.8 | 152.6 | 0.0 | 192.0 | 19.64 | 3,010 | 167.0 |
| 22.50 | | 0.2500 | 27.737 | 22.127 | 2,133.9 | 27.05 | 110.95 | 75.2 | 148.6 | 0.0 | 189.5 | 19.64 | 2,948 | 167.0 |
| 25.00 | | 0.2500 | 27.374 | 21.835 | 2,050.5 | 26.66 | 109.50 | 75.6 | 144.7 | 0.0 | 187.0 | 19.64 | 2,887 | 167.0 |
| 27.50 | | 0.2500 | 27.012 | 21.543 | 1,969.4 | 26.27 | 108.05 | 76.1 | 140.8 | 0.0 | 184.5 | 19.64 | 2,827 | 167.0 |
| 30.00 | | 0.2500 | 26.649 | 21.251 | 1,890.4 | 25.88 | 106.60 | 76.5 | 137.0 | 0.0 | 182.0 | 19.64 | 2,767 | 167.0 |
| 32.50 | | 0.2500 | 26.287 | 20.960 | 1,813.6 | 25.49 | 105.15 | 76.9 | 133.3 | 0.0 | 179.5 | 19.64 | 2,707 | 167.0 |
| 35.00 | | 0.2500 | 25.924 | 20.668 | 1,738.9 | 25.11 | 103.70 | 77.3 | 129.6 | 0.0 | 177.1 | 19.64 | 2,648 | 167.0 |
| 37.50 | | 0.2500 | 25.562 | 20.376 | 1,666.3 | 24.72 | 102.25 | 77.8 | 125.9 | 0.0 | 174.6 | 19.64 | 2,590 | 167.0 |
| 37.58 | Bot - Section 2 | 0.2500 | 25.550 | 20.366 | 1,663.9 | 24.70 | 102.20 | 77.8 | 125.8 | 0.0 | 5.8 | 19.64 | 2,588 | 5.6 |
| 40.00 | | 0.2500 | 25.199 | 20.084 | 1,595.7 | 24.33 | 100.80 | 78.2 | 122.3 | 0.0 | 314.6 | 19.64 | 2,602 | 161.4 |
| 42.00 | Top - Section 1 | 0.2188 | 25.347 | 17.699 | 1,426.5 | 28.37 | 115.87 | 73.8 | 108.7 | 0.0 | 257.0 | 19.64 | 2,556 | 133.6 |
| 42.50 | | 0.2188 | 25.274 | 17.648 | 1,414.1 | 28.28 | 115.54 | 73.9 | 108.1 | 0.0 | 30.1 | 19.64 | 2,545 | 33.4 |
| 45.00 | | 0.2188 | 24.912 | 17.393 | 1,353.6 | 27.83 | 113.88 | 74.4 | 105.0 | 0.0 | 149.0 | 19.64 | 2,488 | 167.0 |
| 47.50 | | 0.2188 | 24.549 | 17.138 | 1,294.9 | 27.39 | 112.22 | 74.8 | 101.9 | 0.0 | 146.9 | 19.64 | 2,432 | 167.0 |
| 50.00 | | 0.2188 | 24.186 | 16.882 | 1,237.9 | 26.95 | 110.57 | 75.3 | 98.9 | 0.0 | 144.7 | 19.64 | 2,376 | 167.0 |
| 52.50 | | 0.2188 | 23.824 | 16.627 | 1,182.5 | 26.50 | 108.91 | 75.8 | 95.9 | 0.0 | 142.5 | 19.64 | 2,321 | 167.0 |
| 55.00 | | 0.2188 | 23.461 | 16.372 | 1,128.9 | 26.06 | 107.25 | 76.3 | 93.0 | 0.0 | 140.4 | 19.64 | 2,267 | 167.0 |
| 57.50 | | 0.2188 | 23.099 | 16.116 | 1,076.9 | 25.61 | 105.59 | 76.8 | 90.1 | 0.0 | 138.2 | 19.64 | 2,213 | 167.0 |
| 60.00 | | 0.2188 | 22.736 | 15.861 | 1,026.5 | 25.17 | 103.94 | 77.3 | 87.2 | 0.0 | 136.0 | 19.64 | 2,160 | 167.0 |
| 62.50 | | 0.2188 | 22.374 | 15.605 | 977.7 | 24.73 | 102.28 | 77.7 | 84.4 | 0.0 | 133.8 | 19.64 | 2,108 | 167.0 |
| 65.00 | | 0.2188 | 22.011 | 15.350 | 930.5 | 24.28 | 100.62 | 78.2 | 81.7 | 0.0 | 131.7 | 19.64 | 2,056 | 167.0 |
| 67.50 | | 0.2188 | 21.649 | 15.095 | 884.8 | 23.84 | 98.97 | 78.7 | 79.0 | 0.0 | 129.5 | 19.64 | 2,005 | 167.0 |
| 70.00 | | 0.2188 | 21.286 | 14.839 | 840.7 | 23.39 | 97.31 | 79.2 | 76.3 | 0.0 | 127.3 | 19.64 | 1,954 | 167.0 |
| 72.50 | | 0.2188 | 20.923 | 14.584 | 798.0 | 22.95 | 95.65 | 79.7 | 73.7 | 0.0 | 125.2 | 19.64 | 1,904 | 167.0 |
| 75.00 | | 0.2188 | 20.561 | 14.329 | 756.8 | 22.51 | 93.99 | 80.2 | 71.1 | 0.0 | 123.0 | 19.64 | 1,855 | 167.0 |
| 76.17 | Bot - Section 3 | 0.2188 | 20.392 | 14.209 | 738.1 | 22.30 | 93.22 | 80.4 | 69.9 | 0.0 | 56.6 | 19.64 | 1,833 | 77.9 |
| 77.50 | | 0.2188 | 20.198 | 14.073 | 717.1 | 22.06 | 92.34 | 80.7 | 68.6 | 0.0 | 120.3 | 19.64 | 1,857 | 89.1 |
| 79.50 | Reinf. Top Reinf | 0.2188 | 19.908 | 13.869 | 686.3 | 21.71 | 91.01 | 81.0 | 66.6 | 0.0 | 178.2 | 19.64 | 1,818 | 133.6 |
| 80.00 | Top - Section 2 | 0.1875 | 20.211 | 12.089 | 618.7 | 26.20 | 107.79 | 76.1 | 59.1 | 0.0 | 44.2 | 19.64 | 1,808 | 33.4 |
| 82.50 | | 0.1875 | 19.848 | 11.870 | 585.7 | 25.68 | 105.86 | 76.7 | 57.0 | 0.0 | 101.9 | 19.64 | 1,761 | 167.0 |
| 85.00 | | 0.1875 | 19.486 | 11.651 | 553.9 | 25.17 | 103.92 | 77.3 | 54.9 | 0.0 | 100.0 | 19.64 | 1,713 | 167.0 |
| 87.50 | | 0.1875 | 19.123 | 11.432 | 523.2 | 24.65 | 101.99 | 77.8 | 52.9 | 0.0 | 98.2 | 19.64 | 1,667 | 167.0 |
| 90.00 | | 0.1875 | 18.761 | 11.214 | 493.7 | 24.13 | 100.06 | 78.4 | 50.8 | 0.0 | 96.3 | 19.64 | 1,621 | 167.0 |
| 92.50 | | 0.1875 | 18.398 | 10.995 | 465.4 | 23.61 | 98.12 | 79.0 | 48.9 | 0.0 | 94.5 | 19.64 | 1,575 | 167.0 |
| 95.00 | | 0.1875 | 18.036 | 10.776 | 438.1 | 23.09 | 96.19 | 79.5 | 46.9 | 0.0 | 92.6 | 19.64 | 1,531 | 167.0 |
| 97.44 | Reinf. Top | 0.1875 | 17.682 | 10.562 | 412.6 | 22.59 | 94.30 | 80.1 | 45.1 | 0.0 | 88.5 | 19.64 | 1,488 | 162.8 |
| 97.50 | | 0.1875 | 17.673 | 10.557 | 412.0 | 22.58 | 94.26 | 80.1 | 45.0 | 0.0 | 2.2 | | | |
| 100.0 | | 0.1875 | 17.310 | 10.338 | 386.9 | 22.06 | 92.32 | 80.7 | 43.2 | 0.0 | 88.9 | | | |
| 102.5 | | 0.1875 | 16.948 | 10.119 | 362.8 | 21.54 | 90.39 | 81.2 | 41.4 | 0.0 | 87.0 | | | |
| 105.0 | | 0.1875 | 16.585 | 9.900 | 339.8 | 21.02 | 88.46 | 81.8 | 39.6 | 0.0 | 85.2 | | | |
| 107.5 | | 0.1875 | 16.223 | 9.681 | 317.7 | 20.50 | 86.52 | 81.9 | 37.8 | 0.0 | 83.3 | | | |
| 110.0 | | 0.1875 | 15.860 | 9.462 | 296.7 | 19.99 | 84.59 | 81.9 | 36.1 | 0.0 | 81.4 | | | |
| 112.5 | | 0.1875 | 15.498 | 9.244 | 276.6 | 19.47 | 82.65 | 81.9 | 34.5 | 0.0 | 79.6 | | | |
| 115.0 | | 0.1875 | 15.135 | 9.025 | 257.4 | 18.95 | 80.72 | 81.9 | 32.9 | 0.0 | 77.7 | | | |
| 117.5 | | 0.1875 | 14.773 | 8.806 | 239.1 | 18.43 | 78.79 | 81.9 | 31.3 | 0.0 | 75.8 | | | |
| 120.0 | | 0.1875 | 14.410 | 8.587 | 221.7 | 17.91 | 76.85 | 81.9 | 29.7 | 0.0 | 74.0 | | | |
| | | | | | | | | | | | 7,061.4 | | | 7,542.8 |

© 2007 - 2020 by ATC IP LLC. All rights reserved.


**Load Case:** 1.2D + 1.0W 117 mph with No Ice 26 Iterations

Gust Response Factor :1.10
Dead Load Factor :1.20
Wind Load Factor :1.00

## Applied Segment Forces Summary

| | | Shaft Forces | | Discrete Forces | | | | Linear Forces | | Sum of Forces | | | |
|---|---|---|---|---|---|---|---|---|---|---|---|---|---|
| Seg Elev (ft) | Description | Wind FX (lb) | Dead Load (lb) | Wind FX (lb) | Torsion MY (lb-ft) | Moment MZ (lb-ft) | Dead Load (lb) | Wind FX (lb) | Dead Load (lb) | Wind FX (lb) | Dead Load (lb) | Torsion MY (lb-ft) | Moment MZ (lb) |
| 0.00 | | 98.5 | 0.0 | | | | | 0.0 | 0.0 | 98.5 | 0.0 | 0.0 | 0.0 |
| 2.50 | | 195.8 | 251.2 | | | | | 49.4 | 473.1 | 245.2 | 724.3 | 0.0 | 0.0 |
| 5.00 | | 193.5 | 248.2 | | | | | 49.4 | 473.1 | 242.9 | 721.4 | 0.0 | 0.0 |
| 7.50 | | 191.2 | 245.2 | | | | | 49.4 | 494.6 | 240.6 | 739.8 | 0.0 | 0.0 |
| 10.00 | | 188.9 | 242.3 | | | | | 49.4 | 580.5 | 238.2 | 822.8 | 0.0 | 0.0 |
| 12.50 | | 186.5 | 239.3 | | | | | 49.4 | 580.5 | 235.9 | 819.8 | 0.0 | 0.0 |
| 15.00 | | 110.3 | 236.3 | | | | | 49.4 | 580.5 | 159.7 | 816.8 | 0.0 | 0.0 |
| 15.48 | Reinf. Top | 91.5 | 45.0 | | | | | 9.5 | 111.3 | 101.0 | 156.2 | 0.0 | 0.0 |
| 17.50 | | 164.3 | 188.4 | | | | | 39.9 | 307.2 | 204.2 | 495.6 | 0.0 | 0.0 |
| 20.00 | | 179.6 | 230.3 | | | | | 49.4 | 380.1 | 229.0 | 610.4 | 0.0 | 0.0 |
| 22.50 | | 177.3 | 227.4 | | | | | 49.4 | 380.1 | 226.7 | 607.5 | 0.0 | 0.0 |
| 25.00 | | 174.9 | 224.4 | | | | | 49.4 | 380.1 | 224.3 | 604.5 | 0.0 | 0.0 |
| 27.50 | | 172.6 | 221.4 | | | | | 49.4 | 380.1 | 222.0 | 601.5 | 0.0 | 0.0 |
| 30.00 | | 171.4 | 218.4 | | | | | 49.4 | 380.1 | 220.8 | 598.5 | 0.0 | 0.0 |
| 32.50 | | 172.0 | 215.5 | | | | | 50.0 | 380.1 | 222.0 | 595.6 | 0.0 | 0.0 |
| 35.00 | | 173.3 | 212.5 | | | | | 51.1 | 380.1 | 224.4 | 592.6 | 0.0 | 0.0 |
| 37.50 | | 89.8 | 209.5 | | | | | 52.2 | 380.1 | 142.0 | 589.6 | 0.0 | 0.0 |
| 37.58 | Bot - Section 2 | 88.8 | 6.9 | | | | | 1.8 | 12.7 | 90.5 | 19.6 | 0.0 | 0.0 |
| 40.00 | | 157.2 | 377.5 | | | | | 51.4 | 367.4 | 208.6 | 744.9 | 0.0 | 0.0 |
| 42.00 | Top - Section 1 | 89.2 | 308.4 | | | | | 43.2 | 304.1 | 132.4 | 612.5 | 0.0 | 0.0 |
| 42.50 | | 107.2 | 36.1 | | | | | 10.9 | 76.0 | 118.1 | 112.1 | 0.0 | 0.0 |
| 45.00 | | 178.9 | 178.9 | | | | | 55.1 | 380.1 | 233.9 | 559.0 | 0.0 | 0.0 |
| 47.50 | | 179.0 | 176.3 | | | | | 55.9 | 380.1 | 235.0 | 556.3 | 0.0 | 0.0 |
| 50.00 | | 179.0 | 173.6 | | | | | 56.8 | 380.1 | 235.8 | 553.7 | 0.0 | 0.0 |
| 52.50 | | 178.8 | 171.0 | | | | | 57.6 | 380.1 | 236.4 | 551.1 | 0.0 | 0.0 |
| 55.00 | | 178.4 | 168.4 | | | | | 58.4 | 380.1 | 236.8 | 548.5 | 0.0 | 0.0 |
| 57.50 | | 177.9 | 165.8 | | | | | 59.2 | 380.1 | 237.1 | 545.9 | 0.0 | 0.0 |
| 60.00 | | 177.3 | 163.2 | | | | | 59.9 | 380.1 | 237.2 | 543.3 | 0.0 | 0.0 |
| 62.50 | | 176.5 | 160.6 | | | | | 60.6 | 380.1 | 237.1 | 540.7 | 0.0 | 0.0 |
| 65.00 | | 175.6 | 158.0 | | | | | 61.3 | 380.1 | 236.9 | 538.1 | 0.0 | 0.0 |
| 67.50 | | 174.6 | 155.4 | | | | | 62.0 | 380.1 | 236.5 | 535.5 | 0.0 | 0.0 |
| 70.00 | | 173.4 | 152.8 | | | | | 62.6 | 380.1 | 236.1 | 532.9 | 0.0 | 0.0 |
| 72.50 | | 172.2 | 150.2 | | | | | 63.3 | 380.1 | 235.5 | 530.3 | 0.0 | 0.0 |
| 75.00 | | 125.6 | 147.6 | | | | | 63.9 | 380.1 | 189.5 | 527.7 | 0.0 | 0.0 |
| 76.17 | Bot - Section 3 | 85.9 | 68.0 | | | | | 30.0 | 177.4 | 116.0 | 245.3 | 0.0 | 0.0 |
| 77.50 | | 114.9 | 144.3 | | | | | 34.5 | 202.7 | 149.4 | 347.1 | 0.0 | 0.0 |
| 79.50 | Reinf. Top Reinf | 85.9 | 213.9 | | | | | 52.0 | 304.1 | 138.0 | 518.0 | 0.0 | 0.0 |
| 80.00 | Top - Section 2 | 102.3 | 53.0 | | | | | 13.1 | 76.0 | 115.3 | 129.0 | 0.0 | 0.0 |
| 82.50 | | 169.5 | 122.3 | | | | | 65.7 | 380.1 | 235.2 | 502.4 | 0.0 | 0.0 |
| 85.00 | | 167.8 | 120.1 | | | | | 66.3 | 380.1 | 234.1 | 500.2 | 0.0 | 0.0 |
| 87.50 | | 166.1 | 117.8 | | | | | 66.8 | 380.1 | 232.9 | 497.9 | 0.0 | 0.0 |
| 90.00 | Appurtenance(s) | 164.2 | 115.6 | 3,256.8 | 0.0 | 2,507.1 | 3,830.8 | 67.4 | 380.1 | 3,488.4 | 4,326.4 | 0.0 | 0.0 |
| 92.50 | | 162.3 | 113.4 | | | | | 67.9 | 338.4 | 230.3 | 451.8 | 0.0 | 0.0 |
| 95.00 | | 158.4 | 111.1 | | | | | 68.4 | 320.9 | 226.8 | 432.0 | 0.0 | 0.0 |
| 97.44 | Reinf. Top | 79.7 | 106.2 | | | | | 67.2 | 312.9 | 146.9 | 419.1 | 0.0 | 0.0 |
| 97.50 | | 80.6 | 2.7 | | | | | 1.7 | 3.0 | 82.3 | 5.7 | 0.0 | 0.0 |
| 100.00 | Appurtenance(s) | 156.2 | 106.7 | 449.7 | 0.0 | 449.7 | 84.5 | 69.5 | 120.5 | 675.3 | 311.6 | 0.0 | 0.0 |
| 102.50 | | 138.1 | 104.4 | | | | | 70.0 | 105.8 | 208.0 | 210.2 | 0.0 | 0.0 |

© 2007 - 2020 by ATC IP LLC. All rights reserved.


**Load Case:** 1.2D + 1.0W 117 mph with No Ice 26 Iterations

Gust Response Factor :1.10
Dead Load Factor :1.20
Wind Load Factor :1.00

| | | | | | | | | | | | | | |
|---|---|---|---|---|---|---|---|---|---|---|---|---|---|
| 105.00 | | 120.1 | 102.2 | | | | | 0.0 | 105.8 | 120.1 | 207.9 | 0.0 | 0.0 |
| 107.50 | | 118.3 | 99.9 | | | | | 0.0 | 105.8 | 118.3 | 205.7 | 0.0 | 0.0 |
| 110.00 | Appurtenance(s) | 116.4 | 97.7 | 1,212.6 | 0.0 | 0.0 | 1,094.4 | 0.0 | 105.8 | 1,329.0 | 1,297.9 | 0.0 | 0.0 |
| 112.50 | | 114.5 | 95.5 | | | | | 0.0 | 90.6 | 114.5 | 186.1 | 0.0 | 0.0 |
| 115.00 | | 112.5 | 93.2 | | | | | 0.0 | 90.6 | 112.5 | 183.9 | 0.0 | 0.0 |
| 117.50 | | 110.5 | 91.0 | | | | | 0.0 | 90.6 | 110.5 | 181.6 | 0.0 | 0.0 |
| 120.00 | Appurtenance(s) | 54.7 | 88.8 | 5,442.4 | 0.0 | 15,541.1 | 5,499.8 | 0.0 | 90.6 | 5,497.1 | 5,679.2 | 0.0 | 0.0 |
| | | | | | | | | Totals: | | 20,731.5 | 35,488.1 | 0.00 | 0.00 |

 © 2007 - 2020 by ATC IP LLC. All rights reserved.


**Load Case:** 1.2D + 1.0W 117 mph with No Ice 26 Iterations

Gust Response Factor :1.10
Dead Load Factor :1.20
Wind Load Factor :1.00

## Calculated Forces

| Seg Elev (ft) | Pu FY (-) (kips) | Vu FX (-) (kips) | Tu MY (ft-kips) | Mu MZ (ft-kips) | Mu MX (ft-kips) | Resultant Moment (ft-kips) | phi Pn (kips) | phi Vn (kips) | phi Tn (ft-kips) | phi Mn (ft-kips) | Total Deflect (in) | Rotation (deg) | Ratio |
|---|---|---|---|---|---|---|---|---|---|---|---|---|---|
| 0.00 | -35.46 | -20.67 | 0.00 | -1,836.61 | 0.00 | 1,836.61 | 1,590.66 | 434.43 | 1,260.13 | 996.98 | 0.00 | 0.00 | 0.554 |
| 2.50 | -34.69 | -20.50 | 0.00 | -1,784.92 | 0.00 | 1,784.92 | 1,581.24 | 429.31 | 1,230.60 | 979.29 | 0.04 | -0.13 | 0.542 |
| 5.00 | -33.93 | -20.33 | 0.00 | -1,733.67 | 0.00 | 1,733.67 | 1,571.59 | 424.18 | 1,201.42 | 961.61 | 0.14 | -0.25 | 0.530 |
| 7.50 | -33.15 | -20.16 | 0.00 | -1,682.83 | 0.00 | 1,682.83 | 1,561.72 | 419.06 | 1,172.59 | 943.94 | 0.30 | -0.38 | 0.518 |
| 10.00 | -32.28 | -19.99 | 0.00 | -1,632.43 | 0.00 | 1,632.43 | 1,551.63 | 413.94 | 1,144.11 | 926.28 | 0.54 | -0.50 | 0.506 |
| 12.50 | -31.42 | -19.81 | 0.00 | -1,582.46 | 0.00 | 1,582.46 | 1,541.32 | 408.82 | 1,115.98 | 908.64 | 0.84 | -0.63 | 0.494 |
| 15.00 | -30.58 | -19.68 | 0.00 | -1,532.93 | 0.00 | 1,532.93 | 1,530.78 | 403.70 | 1,088.20 | 891.03 | 1.20 | -0.75 | 0.482 |
| 15.48 | -30.41 | -19.61 | 0.00 | -1,523.50 | 0.00 | 1,523.50 | 1,528.74 | 402.71 | 1,082.91 | 887.65 | 1.28 | -0.78 | 0.480 |
| 15.48 | -30.41 | -19.61 | 0.00 | -1,523.50 | 0.00 | 1,523.50 | 1,528.74 | 402.71 | 1,082.91 | 887.65 | 1.28 | -0.78 | 0.755 |
| 17.50 | -29.86 | -19.48 | 0.00 | -1,483.87 | 0.00 | 1,483.87 | 1,520.02 | 398.57 | 1,060.77 | 873.44 | 1.63 | -0.88 | 0.741 |
| 20.00 | -29.19 | -19.33 | 0.00 | -1,435.19 | 0.00 | 1,435.19 | 1,509.04 | 393.45 | 1,033.69 | 855.89 | 2.14 | -1.07 | 0.724 |
| 22.50 | -28.53 | -19.19 | 0.00 | -1,386.85 | 0.00 | 1,386.85 | 1,497.83 | 388.33 | 1,006.96 | 838.37 | 2.75 | -1.26 | 0.707 |
| 25.00 | -27.86 | -19.05 | 0.00 | -1,338.87 | 0.00 | 1,338.87 | 1,486.41 | 383.21 | 980.58 | 820.91 | 3.47 | -1.45 | 0.690 |
| 27.50 | -27.21 | -18.90 | 0.00 | -1,291.26 | 0.00 | 1,291.26 | 1,474.76 | 378.09 | 954.55 | 803.49 | 4.28 | -1.64 | 0.672 |
| 30.00 | -26.55 | -18.74 | 0.00 | -1,244.02 | 0.00 | 1,244.02 | 1,462.88 | 372.96 | 928.87 | 786.12 | 5.19 | -1.83 | 0.654 |
| 32.50 | -25.91 | -18.59 | 0.00 | -1,197.16 | 0.00 | 1,197.16 | 1,450.79 | 367.84 | 903.54 | 768.81 | 6.20 | -2.02 | 0.636 |
| 35.00 | -25.26 | -18.42 | 0.00 | -1,150.70 | 0.00 | 1,150.70 | 1,438.47 | 362.72 | 878.56 | 751.57 | 7.30 | -2.20 | 0.618 |
| 37.50 | -24.65 | -18.30 | 0.00 | -1,104.64 | 0.00 | 1,104.64 | 1,425.93 | 357.60 | 853.93 | 734.39 | 8.50 | -2.38 | 0.600 |
| 37.58 | -24.60 | -18.24 | 0.00 | -1,103.12 | 0.00 | 1,103.12 | 1,425.51 | 357.43 | 853.11 | 733.82 | 8.55 | -2.39 | 0.600 |
| 40.00 | -23.82 | -18.07 | 0.00 | -1,059.03 | 0.00 | 1,059.03 | 1,413.16 | 352.48 | 829.65 | 717.29 | 9.80 | -2.56 | 0.572 |
| 42.00 | -23.19 | -17.94 | 0.00 | -1,022.89 | 0.00 | 1,022.89 | 1,175.20 | 310.63 | 736.31 | 601.57 | 10.91 | -2.71 | 0.622 |
| 42.50 | -23.05 | -17.86 | 0.00 | -1,013.92 | 0.00 | 1,013.92 | 1,173.35 | 309.73 | 732.07 | 598.87 | 11.19 | -2.74 | 0.617 |
| 45.00 | -22.45 | -17.67 | 0.00 | -969.26 | 0.00 | 969.26 | 1,163.96 | 305.25 | 711.04 | 585.40 | 12.68 | -2.92 | 0.596 |
| 47.50 | -21.85 | -17.48 | 0.00 | -925.08 | 0.00 | 925.08 | 1,154.34 | 300.77 | 690.32 | 571.97 | 14.25 | -3.09 | 0.574 |
| 50.00 | -21.26 | -17.27 | 0.00 | -881.39 | 0.00 | 881.39 | 1,144.49 | 296.28 | 669.91 | 558.56 | 15.92 | -3.27 | 0.552 |
| 52.50 | -20.67 | -17.06 | 0.00 | -838.21 | 0.00 | 838.21 | 1,134.43 | 291.80 | 649.80 | 545.20 | 17.67 | -3.44 | 0.531 |
| 55.00 | -20.09 | -16.85 | 0.00 | -795.55 | 0.00 | 795.55 | 1,124.14 | 287.32 | 630.00 | 531.88 | 19.52 | -3.60 | 0.509 |
| 57.50 | -19.52 | -16.64 | 0.00 | -753.42 | 0.00 | 753.42 | 1,113.63 | 282.84 | 610.51 | 518.62 | 21.45 | -3.76 | 0.487 |
| 60.00 | -18.94 | -16.41 | 0.00 | -711.83 | 0.00 | 711.83 | 1,102.90 | 278.36 | 591.32 | 505.40 | 23.46 | -3.92 | 0.465 |
| 62.50 | -18.38 | -16.19 | 0.00 | -670.80 | 0.00 | 670.80 | 1,091.95 | 273.87 | 572.44 | 492.25 | 25.55 | -4.08 | 0.443 |
| 65.00 | -17.82 | -15.96 | 0.00 | -630.32 | 0.00 | 630.32 | 1,080.77 | 269.39 | 553.86 | 479.16 | 27.73 | -4.23 | 0.421 |
| 67.50 | -17.26 | -15.73 | 0.00 | -590.43 | 0.00 | 590.43 | 1,069.37 | 264.91 | 535.59 | 466.14 | 29.98 | -4.37 | 0.398 |
| 70.00 | -16.71 | -15.49 | 0.00 | -551.11 | 0.00 | 551.11 | 1,057.74 | 260.43 | 517.63 | 453.19 | 32.31 | -4.51 | 0.376 |
| 72.50 | -16.17 | -15.25 | 0.00 | -512.39 | 0.00 | 512.39 | 1,045.90 | 255.95 | 499.97 | 440.33 | 34.70 | -4.65 | 0.354 |
| 75.00 | -15.63 | -15.04 | 0.00 | -474.26 | 0.00 | 474.26 | 1,033.83 | 251.47 | 482.62 | 427.54 | 37.17 | -4.78 | 0.331 |
| 76.17 | -15.38 | -14.92 | 0.00 | -456.71 | 0.00 | 456.71 | 1,028.12 | 249.37 | 474.63 | 421.61 | 38.35 | -4.84 | 0.321 |
| 77.50 | -15.03 | -14.77 | 0.00 | -436.81 | 0.00 | 436.81 | 1,021.54 | 246.98 | 465.58 | 414.85 | 39.71 | -4.90 | 0.303 |
| 79.50 | -14.51 | -14.60 | 0.00 | -407.28 | 0.00 | 407.28 | 1,011.55 | 243.40 | 452.16 | 404.77 | 41.78 | -5.00 | 0.285 |
| 79.50 | -14.51 | -14.60 | 0.00 | -407.28 | 0.00 | 407.28 | 1,011.55 | 243.40 | 452.16 | 404.77 | 41.78 | -5.00 | 0.285 |
| 80.00 | -14.37 | -14.49 | 0.00 | -399.98 | 0.00 | 399.98 | 828.38 | 212.16 | 400.77 | 337.67 | 42.30 | -5.02 | 0.313 |
| 82.50 | -13.87 | -14.24 | 0.00 | -363.75 | 0.00 | 363.75 | 819.42 | 208.32 | 386.39 | 327.92 | 44.96 | -5.13 | 0.288 |
| 85.00 | -13.37 | -13.98 | 0.00 | -328.16 | 0.00 | 328.16 | 810.23 | 204.48 | 372.28 | 318.20 | 47.67 | -5.23 | 0.263 |
| 87.50 | -12.87 | -13.73 | 0.00 | -293.20 | 0.00 | 293.20 | 800.82 | 200.64 | 358.43 | 308.54 | 50.43 | -5.33 | 0.238 |

© 2007 - 2020 by ATC IP LLC. All rights reserved.


**Load Case:** 1.2D + 1.0W 117 mph with No Ice 26 Iterations

Gust Response Factor :1.10
Dead Load Factor :1.20
Wind Load Factor :1.00

| | | | | | | | | | | | | | |
|---|---|---|---|---|---|---|---|---|---|---|---|---|---|
| 90.00 | -8.87 | -9.86 | 0.00 | -256.38 | 0.00 | 256.38 | 791.19 | 196.80 | 344.84 | 298.94 | 53.25 | -5.42 | 0.207 |
| 92.50 | -8.43 | -9.60 | 0.00 | -231.73 | 0.00 | 231.73 | 781.34 | 192.96 | 331.51 | 289.40 | 56.10 | -5.50 | 0.189 |
| 95.00 | -8.01 | -9.34 | 0.00 | -207.73 | 0.00 | 207.73 | 771.27 | 189.11 | 318.45 | 279.92 | 59.00 | -5.58 | 0.171 |
| 97.44 | -7.60 | -9.16 | 0.00 | -184.95 | 0.00 | 184.95 | 761.23 | 185.37 | 305.96 | 270.75 | 61.86 | -5.65 | 0.154 |
| 97.44 | -7.60 | -9.16 | 0.00 | -184.95 | 0.00 | 184.95 | 761.23 | 185.37 | 305.96 | 270.75 | 61.86 | -5.65 | 0.696 |
| 97.50 | -7.58 | -9.10 | 0.00 | -184.38 | 0.00 | 184.38 | 760.97 | 185.27 | 305.65 | 270.51 | 61.94 | -5.65 | 0.694 |
| 100.00 | -7.30 | -8.43 | 0.00 | -161.18 | 0.00 | 161.18 | 750.45 | 181.43 | 293.11 | 261.18 | 64.97 | -5.95 | 0.629 |
| 102.50 | -7.07 | -8.24 | 0.00 | -140.11 | 0.00 | 140.11 | 739.70 | 177.59 | 280.83 | 251.93 | 68.16 | -6.22 | 0.568 |
| 105.00 | -6.85 | -8.12 | 0.00 | -119.52 | 0.00 | 119.52 | 728.74 | 173.75 | 268.82 | 242.77 | 71.48 | -6.48 | 0.504 |
| 107.50 | -6.63 | -8.01 | 0.00 | -99.21 | 0.00 | 99.21 | 713.61 | 169.91 | 257.07 | 232.42 | 74.93 | -6.71 | 0.438 |
| 110.00 | -5.47 | -6.55 | 0.00 | -79.20 | 0.00 | 79.20 | 697.47 | 166.07 | 245.58 | 221.97 | 78.49 | -6.91 | 0.366 |
| 112.50 | -5.29 | -6.43 | 0.00 | -62.82 | 0.00 | 62.82 | 681.34 | 162.22 | 234.35 | 211.76 | 82.14 | -7.08 | 0.306 |
| 115.00 | -5.10 | -6.30 | 0.00 | -46.75 | 0.00 | 46.75 | 665.20 | 158.38 | 223.39 | 201.79 | 85.88 | -7.22 | 0.241 |
| 117.50 | -4.93 | -6.18 | 0.00 | -30.99 | 0.00 | 30.99 | 649.07 | 154.54 | 212.69 | 192.06 | 89.68 | -7.33 | 0.171 |
| 120.00 | 0.00 | -5.50 | 0.00 | -15.54 | 0.00 | 15.54 | 632.94 | 150.70 | 202.25 | 182.57 | 93.53 | -7.40 | 0.086 |

 © 2007 - 2020 by ATC IP LLC. All rights reserved.


**Load Case:** 0.9D + 1.0W 117 mph with No Ice (Reduced DL) 26 Iterations

Gust Response Factor :1.10
Dead Load Factor :0.90
Wind Load Factor :1.00

## Applied Segment Forces Summary

| | | Shaft Forces | | Discrete Forces | | | | Linear Forces | | Sum of Forces | | | |
|---|---|---|---|---|---|---|---|---|---|---|---|---|---|
| Seg Elev (ft) | Description | Wind FX (lb) | Dead Load (lb) | Wind FX (lb) | Torsion MY (lb-ft) | Moment MZ (lb-ft) | Dead Load (lb) | Wind FX (lb) | Dead Load (lb) | Wind FX (lb) | Dead Load (lb) | Torsion MY (lb-ft) | Moment MZ (lb) |
| 0.00 | | 98.5 | 0.0 | | | | | 0.0 | 0.0 | 98.5 | 0.0 | 0.0 | 0.0 |
| 2.50 | | 195.8 | 188.4 | | | | | 49.4 | 354.8 | 245.2 | 543.2 | 0.0 | 0.0 |
| 5.00 | | 193.5 | 186.2 | | | | | 49.4 | 354.8 | 242.9 | 541.0 | 0.0 | 0.0 |
| 7.50 | | 191.2 | 183.9 | | | | | 49.4 | 371.0 | 240.6 | 554.9 | 0.0 | 0.0 |
| 10.00 | | 188.9 | 181.7 | | | | | 49.4 | 435.4 | 238.2 | 617.1 | 0.0 | 0.0 |
| 12.50 | | 186.5 | 179.5 | | | | | 49.4 | 435.4 | 235.9 | 614.8 | 0.0 | 0.0 |
| 15.00 | | 110.3 | 177.2 | | | | | 49.4 | 435.4 | 159.7 | 612.6 | 0.0 | 0.0 |
| 15.48 | Reinf. Top | 91.5 | 33.7 | | | | | 9.5 | 83.5 | 101.0 | 117.2 | 0.0 | 0.0 |
| 17.50 | | 164.3 | 141.3 | | | | | 39.9 | 230.4 | 204.2 | 371.7 | 0.0 | 0.0 |
| 20.00 | | 179.6 | 172.8 | | | | | 49.4 | 285.1 | 229.0 | 457.8 | 0.0 | 0.0 |
| 22.50 | | 177.3 | 170.5 | | | | | 49.4 | 285.1 | 226.7 | 455.6 | 0.0 | 0.0 |
| 25.00 | | 174.9 | 168.3 | | | | | 49.4 | 285.1 | 224.3 | 453.4 | 0.0 | 0.0 |
| 27.50 | | 172.6 | 166.1 | | | | | 49.4 | 285.1 | 222.0 | 451.1 | 0.0 | 0.0 |
| 30.00 | | 171.4 | 163.8 | | | | | 49.4 | 285.1 | 220.8 | 448.9 | 0.0 | 0.0 |
| 32.50 | | 172.0 | 161.6 | | | | | 50.0 | 285.1 | 222.0 | 446.7 | 0.0 | 0.0 |
| 35.00 | | 173.3 | 159.4 | | | | | 51.1 | 285.1 | 224.4 | 444.4 | 0.0 | 0.0 |
| 37.50 | | 89.8 | 157.1 | | | | | 52.2 | 285.1 | 142.0 | 442.2 | 0.0 | 0.0 |
| 37.58 | Bot - Section 2 | 88.8 | 5.2 | | | | | 1.8 | 9.5 | 90.5 | 14.7 | 0.0 | 0.0 |
| 40.00 | | 157.2 | 283.1 | | | | | 51.4 | 275.6 | 208.6 | 558.7 | 0.0 | 0.0 |
| 42.00 | Top - Section 1 | 89.2 | 231.3 | | | | | 43.2 | 228.1 | 132.4 | 459.4 | 0.0 | 0.0 |
| 42.50 | | 107.2 | 27.1 | | | | | 10.9 | 57.0 | 118.1 | 84.1 | 0.0 | 0.0 |
| 45.00 | | 178.9 | 134.1 | | | | | 55.1 | 285.1 | 233.9 | 419.2 | 0.0 | 0.0 |
| 47.50 | | 179.0 | 132.2 | | | | | 55.9 | 285.1 | 235.0 | 417.3 | 0.0 | 0.0 |
| 50.00 | | 179.0 | 130.2 | | | | | 56.8 | 285.1 | 235.8 | 415.3 | 0.0 | 0.0 |
| 52.50 | | 178.8 | 128.3 | | | | | 57.6 | 285.1 | 236.4 | 413.4 | 0.0 | 0.0 |
| 55.00 | | 178.4 | 126.3 | | | | | 58.4 | 285.1 | 236.8 | 411.4 | 0.0 | 0.0 |
| 57.50 | | 177.9 | 124.4 | | | | | 59.2 | 285.1 | 237.1 | 409.4 | 0.0 | 0.0 |
| 60.00 | | 177.3 | 122.4 | | | | | 59.9 | 285.1 | 237.2 | 407.5 | 0.0 | 0.0 |
| 62.50 | | 176.5 | 120.5 | | | | | 60.6 | 285.1 | 237.1 | 405.5 | 0.0 | 0.0 |
| 65.00 | | 175.6 | 118.5 | | | | | 61.3 | 285.1 | 236.9 | 403.6 | 0.0 | 0.0 |
| 67.50 | | 174.6 | 116.5 | | | | | 62.0 | 285.1 | 236.5 | 401.6 | 0.0 | 0.0 |
| 70.00 | | 173.4 | 114.6 | | | | | 62.6 | 285.1 | 236.1 | 399.7 | 0.0 | 0.0 |
| 72.50 | | 172.2 | 112.6 | | | | | 63.3 | 285.1 | 235.5 | 397.7 | 0.0 | 0.0 |
| 75.00 | | 125.6 | 110.7 | | | | | 63.9 | 285.1 | 189.5 | 395.8 | 0.0 | 0.0 |
| 76.17 | Bot - Section 3 | 85.9 | 51.0 | | | | | 30.0 | 133.0 | 116.0 | 184.0 | 0.0 | 0.0 |
| 77.50 | | 114.9 | 108.2 | | | | | 34.5 | 152.0 | 149.4 | 260.3 | 0.0 | 0.0 |
| 79.50 | Reinf. Top Reinf | 85.9 | 160.4 | | | | | 52.0 | 228.1 | 138.0 | 388.5 | 0.0 | 0.0 |
| 80.00 | Top - Section 2 | 102.3 | 39.7 | | | | | 13.1 | 57.0 | 115.3 | 96.7 | 0.0 | 0.0 |
| 82.50 | | 169.5 | 91.7 | | | | | 65.7 | 285.1 | 235.2 | 376.8 | 0.0 | 0.0 |
| 85.00 | | 167.8 | 90.0 | | | | | 66.3 | 285.1 | 234.1 | 375.1 | 0.0 | 0.0 |
| 87.50 | | 166.1 | 88.4 | | | | | 66.8 | 285.1 | 232.9 | 373.4 | 0.0 | 0.0 |
| 90.00 | Appurtenance(s) | 164.2 | 86.7 | 3,256.8 | 0.0 | 2,507.1 | 2,873.1 | 67.4 | 285.1 | 3,488.4 | 3,244.8 | 0.0 | 0.0 |
| 92.50 | | 162.3 | 85.0 | | | | | 67.9 | 253.8 | 230.3 | 338.8 | 0.0 | 0.0 |
| 95.00 | | 158.4 | 83.3 | | | | | 68.4 | 240.7 | 226.8 | 324.0 | 0.0 | 0.0 |
| 97.44 | Reinf. Top | 79.7 | 79.6 | | | | | 67.2 | 234.7 | 146.9 | 314.3 | 0.0 | 0.0 |
| 97.50 | | 80.6 | 2.0 | | | | | 1.7 | 2.3 | 82.3 | 4.3 | 0.0 | 0.0 |
| 100.00 | Appurtenance(s) | 156.2 | 80.0 | 449.7 | 0.0 | 449.7 | 63.4 | 69.5 | 90.4 | 675.3 | 233.7 | 0.0 | 0.0 |
| 102.50 | | 138.1 | 78.3 | | | | | 70.0 | 79.3 | 208.0 | 157.6 | 0.0 | 0.0 |

© 2007 - 2020 by ATC IP LLC. All rights reserved.


**Load Case:** 0.9D + 1.0W 117 mph with No Ice (Reduced DL) 26 Iterations

Gust Response Factor :1.10
Dead Load Factor :0.90
Wind Load Factor :1.00

| | | | | | | | | | | | | | |
|---|---|---|---|---|---|---|---|---|---|---|---|---|---|
| 105.00 | | 120.1 | 76.6 | | | | | 0.0 | 79.3 | 120.1 | 155.9 | 0.0 | 0.0 |
| 107.50 | | 118.3 | 75.0 | | | | | 0.0 | 79.3 | 118.3 | 154.3 | 0.0 | 0.0 |
| 110.00 | Appurtenance(s) | 116.4 | 73.3 | 1,212.6 | 0.0 | 0.0 | 820.8 | 0.0 | 79.3 | 1,329.0 | 973.4 | 0.0 | 0.0 |
| 112.50 | | 114.5 | 71.6 | | | | | 0.0 | 68.0 | 114.5 | 139.6 | 0.0 | 0.0 |
| 115.00 | | 112.5 | 69.9 | | | | | 0.0 | 68.0 | 112.5 | 137.9 | 0.0 | 0.0 |
| 117.50 | | 110.5 | 68.3 | | | | | 0.0 | 68.0 | 110.5 | 136.2 | 0.0 | 0.0 |
| 120.00 | Appurtenance(s) | 54.7 | 66.6 | 5,442.4 | 0.0 | 15,541.1 | 4,124.9 | 0.0 | 68.0 | 5,497.1 | 4,259.4 | 0.0 | 0.0 |
| | | | | | | | | Totals: | | 20,731.5 | 26,616.1 | 0.00 | 0.00 |

© 2007 - 2020 by ATC IP LLC. All rights reserved.


**Load Case:** 0.9D + 1.0W 117 mph with No Ice (Reduced DL) 26 Iterations

Gust Response Factor :1.10
Dead Load Factor :0.90
Wind Load Factor :1.00

## Calculated Forces

| Seg Elev (ft) | Pu FY (-) (kips) | Vu FX (-) (kips) | Tu MY (ft-kips) | Mu MZ (ft-kips) | Mu MX (ft-kips) | Resultant Moment (ft-kips) | phi Pn (kips) | phi Vn (kips) | phi Tn (ft-kips) | phi Mn (ft-kips) | Total Deflect (in) | Rotation (deg) | Ratio |
|---|---|---|---|---|---|---|---|---|---|---|---|---|---|
| 0.00 | -26.59 | -20.66 | 0.00 | -1,806.05 | 0.00 | 1,806.05 | 1,590.66 | 434.43 | 1,260.13 | 996.98 | 0.00 | 0.00 | 0.543 |
| 2.50 | -26.00 | -20.47 | 0.00 | -1,754.39 | 0.00 | 1,754.39 | 1,581.24 | 429.31 | 1,230.60 | 979.29 | 0.03 | -0.13 | 0.531 |
| 5.00 | -25.42 | -20.28 | 0.00 | -1,703.21 | 0.00 | 1,703.21 | 1,571.59 | 424.18 | 1,201.42 | 961.61 | 0.13 | -0.25 | 0.519 |
| 7.50 | -24.82 | -20.09 | 0.00 | -1,652.50 | 0.00 | 1,652.50 | 1,561.72 | 419.06 | 1,172.59 | 943.94 | 0.30 | -0.37 | 0.507 |
| 10.00 | -24.17 | -19.90 | 0.00 | -1,602.27 | 0.00 | 1,602.27 | 1,551.63 | 413.94 | 1,144.11 | 926.28 | 0.53 | -0.50 | 0.495 |
| 12.50 | -23.51 | -19.71 | 0.00 | -1,552.51 | 0.00 | 1,552.51 | 1,541.32 | 408.82 | 1,115.98 | 908.64 | 0.82 | -0.62 | 0.483 |
| 15.00 | -22.88 | -19.57 | 0.00 | -1,503.23 | 0.00 | 1,503.23 | 1,530.78 | 403.70 | 1,088.20 | 891.03 | 1.18 | -0.74 | 0.471 |
| 15.48 | -22.74 | -19.49 | 0.00 | -1,493.86 | 0.00 | 1,493.86 | 1,528.74 | 402.71 | 1,082.91 | 887.65 | 1.26 | -0.76 | 0.469 |
| 15.48 | -22.74 | -19.49 | 0.00 | -1,493.86 | 0.00 | 1,493.86 | 1,528.74 | 402.71 | 1,082.91 | 887.65 | 1.26 | -0.76 | 0.738 |
| 17.50 | -22.32 | -19.34 | 0.00 | -1,454.46 | 0.00 | 1,454.46 | 1,520.02 | 398.57 | 1,060.77 | 873.44 | 1.60 | -0.86 | 0.724 |
| 20.00 | -21.81 | -19.18 | 0.00 | -1,406.11 | 0.00 | 1,406.11 | 1,509.04 | 393.45 | 1,033.69 | 855.89 | 2.10 | -1.05 | 0.707 |
| 22.50 | -21.29 | -19.01 | 0.00 | -1,358.17 | 0.00 | 1,358.17 | 1,497.83 | 388.33 | 1,006.96 | 838.37 | 2.70 | -1.24 | 0.690 |
| 25.00 | -20.78 | -18.84 | 0.00 | -1,310.65 | 0.00 | 1,310.65 | 1,486.41 | 383.21 | 980.58 | 820.91 | 3.40 | -1.42 | 0.673 |
| 27.50 | -20.28 | -18.67 | 0.00 | -1,263.55 | 0.00 | 1,263.55 | 1,474.76 | 378.09 | 954.55 | 803.49 | 4.20 | -1.61 | 0.655 |
| 30.00 | -19.78 | -18.50 | 0.00 | -1,216.86 | 0.00 | 1,216.86 | 1,462.88 | 372.96 | 928.87 | 786.12 | 5.09 | -1.79 | 0.638 |
| 32.50 | -19.28 | -18.33 | 0.00 | -1,170.60 | 0.00 | 1,170.60 | 1,450.79 | 367.84 | 903.54 | 768.81 | 6.08 | -1.98 | 0.620 |
| 35.00 | -18.79 | -18.15 | 0.00 | -1,124.79 | 0.00 | 1,124.79 | 1,438.47 | 362.72 | 878.56 | 751.57 | 7.16 | -2.16 | 0.602 |
| 37.50 | -18.32 | -18.02 | 0.00 | -1,079.42 | 0.00 | 1,079.42 | 1,425.93 | 357.60 | 853.93 | 734.39 | 8.34 | -2.34 | 0.584 |
| 37.58 | -18.28 | -17.95 | 0.00 | -1,077.92 | 0.00 | 1,077.92 | 1,425.51 | 357.43 | 853.11 | 733.82 | 8.38 | -2.34 | 0.584 |
| 40.00 | -17.69 | -17.77 | 0.00 | -1,034.53 | 0.00 | 1,034.53 | 1,413.16 | 352.48 | 829.65 | 717.29 | 9.61 | -2.51 | 0.557 |
| 42.00 | -17.21 | -17.64 | 0.00 | -998.99 | 0.00 | 998.99 | 1,175.20 | 310.63 | 736.31 | 601.57 | 10.69 | -2.65 | 0.605 |
| 42.50 | -17.10 | -17.55 | 0.00 | -990.17 | 0.00 | 990.17 | 1,173.35 | 309.73 | 732.07 | 598.87 | 10.97 | -2.68 | 0.601 |
| 45.00 | -16.64 | -17.35 | 0.00 | -946.29 | 0.00 | 946.29 | 1,163.96 | 305.25 | 711.04 | 585.40 | 12.43 | -2.86 | 0.579 |
| 47.50 | -16.18 | -17.14 | 0.00 | -902.92 | 0.00 | 902.92 | 1,154.34 | 300.77 | 690.32 | 571.97 | 13.97 | -3.03 | 0.558 |
| 50.00 | -15.73 | -16.93 | 0.00 | -860.07 | 0.00 | 860.07 | 1,144.49 | 296.28 | 669.91 | 558.56 | 15.60 | -3.20 | 0.537 |
| 52.50 | -15.28 | -16.71 | 0.00 | -817.75 | 0.00 | 817.75 | 1,134.43 | 291.80 | 649.80 | 545.20 | 17.32 | -3.36 | 0.516 |
| 55.00 | -14.84 | -16.49 | 0.00 | -775.97 | 0.00 | 775.97 | 1,124.14 | 287.32 | 630.00 | 531.88 | 19.13 | -3.52 | 0.494 |
| 57.50 | -14.40 | -16.27 | 0.00 | -734.74 | 0.00 | 734.74 | 1,113.63 | 282.84 | 610.51 | 518.62 | 21.01 | -3.68 | 0.473 |
| 60.00 | -13.97 | -16.04 | 0.00 | -694.07 | 0.00 | 694.07 | 1,102.90 | 278.36 | 591.32 | 505.40 | 22.98 | -3.84 | 0.451 |
| 62.50 | -13.54 | -15.81 | 0.00 | -653.96 | 0.00 | 653.96 | 1,091.95 | 273.87 | 572.44 | 492.25 | 25.03 | -3.99 | 0.430 |
| 65.00 | -13.12 | -15.58 | 0.00 | -614.43 | 0.00 | 614.43 | 1,080.77 | 269.39 | 553.86 | 479.16 | 27.16 | -4.13 | 0.408 |
| 67.50 | -12.70 | -15.35 | 0.00 | -575.47 | 0.00 | 575.47 | 1,069.37 | 264.91 | 535.59 | 466.14 | 29.36 | -4.28 | 0.386 |
| 70.00 | -12.28 | -15.11 | 0.00 | -537.11 | 0.00 | 537.11 | 1,057.74 | 260.43 | 517.63 | 453.19 | 31.64 | -4.41 | 0.365 |
| 72.50 | -11.87 | -14.87 | 0.00 | -499.33 | 0.00 | 499.33 | 1,045.90 | 255.95 | 499.97 | 440.33 | 33.98 | -4.54 | 0.343 |
| 75.00 | -11.47 | -14.67 | 0.00 | -462.15 | 0.00 | 462.15 | 1,033.83 | 251.47 | 482.62 | 427.54 | 36.39 | -4.67 | 0.321 |
| 76.17 | -11.28 | -14.55 | 0.00 | -445.04 | 0.00 | 445.04 | 1,028.12 | 249.37 | 474.63 | 421.61 | 37.54 | -4.73 | 0.311 |
| 77.50 | -11.01 | -14.40 | 0.00 | -425.63 | 0.00 | 425.63 | 1,021.54 | 246.98 | 465.58 | 414.85 | 38.87 | -4.79 | 0.294 |
| 79.50 | -10.62 | -14.24 | 0.00 | -396.84 | 0.00 | 396.84 | 1,011.55 | 243.40 | 452.16 | 404.77 | 40.90 | -4.88 | 0.276 |
| 79.50 | -10.62 | -14.24 | 0.00 | -396.84 | 0.00 | 396.84 | 1,011.55 | 243.40 | 452.16 | 404.77 | 40.90 | -4.88 | 0.276 |
| 80.00 | -10.52 | -14.12 | 0.00 | -389.73 | 0.00 | 389.73 | 828.38 | 212.16 | 400.77 | 337.67 | 41.41 | -4.91 | 0.303 |
| 82.50 | -10.14 | -13.88 | 0.00 | -354.42 | 0.00 | 354.42 | 819.42 | 208.32 | 386.39 | 327.92 | 44.00 | -5.01 | 0.279 |
| 85.00 | -9.76 | -13.63 | 0.00 | -319.73 | 0.00 | 319.73 | 810.23 | 204.48 | 372.28 | 318.20 | 46.65 | -5.11 | 0.254 |
| 87.50 | -9.39 | -13.38 | 0.00 | -285.66 | 0.00 | 285.66 | 800.82 | 200.64 | 358.43 | 308.54 | 49.36 | -5.21 | 0.230 |

© 2007 - 2020 by ATC IP LLC. All rights reserved.


**Load Case:** 0.9D + 1.0W 117 mph with No Ice (Reduced DL) 26 Iterations

Gust Response Factor :1.10
Dead Load Factor :0.90
Wind Load Factor :1.00

| | | | | | | | | | | | | | |
|---|---|---|---|---|---|---|---|---|---|---|---|---|---|
| 90.00 | -6.46 | -9.61 | 0.00 | -249.71 | 0.00 | 249.71 | 791.19 | 196.80 | 344.84 | 298.94 | 52.11 | -5.30 | 0.200 |
| 92.50 | -6.13 | -9.36 | 0.00 | -225.68 | 0.00 | 225.68 | 781.34 | 192.96 | 331.51 | 289.40 | 54.90 | -5.38 | 0.183 |
| 95.00 | -5.82 | -9.11 | 0.00 | -202.27 | 0.00 | 202.27 | 771.27 | 189.11 | 318.45 | 279.92 | 57.73 | -5.45 | 0.166 |
| 97.44 | -5.52 | -8.94 | 0.00 | -180.06 | 0.00 | 180.06 | 761.23 | 185.37 | 305.96 | 270.75 | 60.53 | -5.52 | 0.149 |
| 97.44 | -5.52 | -8.94 | 0.00 | -180.06 | 0.00 | 180.06 | 761.23 | 185.37 | 305.96 | 270.75 | 60.53 | -5.52 | 0.675 |
| 97.50 | -5.50 | -8.87 | 0.00 | -179.50 | 0.00 | 179.50 | 760.97 | 185.27 | 305.65 | 270.51 | 60.60 | -5.52 | 0.673 |
| 100.00 | -5.29 | -8.20 | 0.00 | -156.88 | 0.00 | 156.88 | 750.45 | 181.43 | 293.11 | 261.18 | 63.56 | -5.81 | 0.610 |
| 102.50 | -5.12 | -8.00 | 0.00 | -136.37 | 0.00 | 136.37 | 739.70 | 177.59 | 280.83 | 251.93 | 66.68 | -6.08 | 0.550 |
| 105.00 | -4.95 | -7.89 | 0.00 | -116.36 | 0.00 | 116.36 | 728.74 | 173.75 | 268.82 | 242.77 | 69.92 | -6.33 | 0.488 |
| 107.50 | -4.78 | -7.77 | 0.00 | -96.65 | 0.00 | 96.65 | 713.61 | 169.91 | 257.07 | 232.42 | 73.29 | -6.55 | 0.425 |
| 110.00 | -3.95 | -6.35 | 0.00 | -77.22 | 0.00 | 77.22 | 697.47 | 166.07 | 245.58 | 221.97 | 76.77 | -6.75 | 0.355 |
| 112.50 | -3.80 | -6.23 | 0.00 | -61.35 | 0.00 | 61.35 | 681.34 | 162.22 | 234.35 | 211.76 | 80.34 | -6.91 | 0.297 |
| 115.00 | -3.67 | -6.11 | 0.00 | -45.78 | 0.00 | 45.78 | 665.20 | 158.38 | 223.39 | 201.79 | 83.98 | -7.05 | 0.234 |
| 117.50 | -3.54 | -5.99 | 0.00 | -30.51 | 0.00 | 30.51 | 649.07 | 154.54 | 212.69 | 192.06 | 87.70 | -7.15 | 0.166 |
| 120.00 | 0.00 | -5.50 | 0.00 | -15.54 | 0.00 | 15.54 | 632.94 | 150.70 | 202.25 | 182.57 | 91.45 | -7.22 | 0.086 |

© 2007 - 2020 by ATC IP LLC. All rights reserved.


**Load Case:** 1.2D + 1.0Di + 1.0Wi 50 mph with 1.00 in Radial Ice 25 Iterations

Gust Response Factor :1.10 Ice Dead Load Factor :1.00
Dead Load Factor :1.20 Ice Importance Factor :1.00
Wind Load Factor :1.00

## Applied Segment Forces Summary

| | | Shaft Forces | | Discrete Forces | | | | Linear Forces | | Sum of Forces | | | |
|---|---|---|---|---|---|---|---|---|---|---|---|---|---|
| Seg Elev (ft) | Description | Wind FX (lb) | Dead Load (lb) | Wind FX (lb) | Torsion MY (lb-ft) | Moment MZ (lb-ft) | Dead Load (lb) | Wind FX (lb) | Dead Load (lb) | Wind FX (lb) | Dead Load (lb) | Torsion MY (lb-ft) | Moment MZ (lb) |
| 0.00 | | 19.8 | 0.0 | | | | | 0.0 | 0.0 | 19.8 | 0.0 | 0.0 | 0.0 |
| 2.50 | | 39.4 | 324.4 | | | | | 0.0 | 521.6 | 39.4 | 846.0 | 0.0 | 0.0 |
| 5.00 | | 39.3 | 329.2 | | | | | 0.0 | 527.5 | 39.3 | 856.7 | 0.0 | 0.0 |
| 7.50 | | 39.0 | 329.6 | | | | | 0.0 | 559.3 | 39.0 | 888.9 | 0.0 | 0.0 |
| 10.00 | | 38.7 | 328.5 | | | | | 0.0 | 677.5 | 38.7 | 1,006.0 | 0.0 | 0.0 |
| 12.50 | | 38.5 | 326.8 | | | | | 0.0 | 679.8 | 38.5 | 1,006.5 | 0.0 | 0.0 |
| 15.00 | | 22.8 | 324.5 | | | | | 0.0 | 681.6 | 22.8 | 1,006.2 | 0.0 | 0.0 |
| 15.48 | Reinf. Top | 19.0 | 62.0 | | | | | 0.0 | 130.8 | 19.0 | 192.8 | 0.0 | 0.0 |
| 17.50 | | 34.2 | 260.1 | | | | | 0.0 | 390.4 | 34.2 | 650.5 | 0.0 | 0.0 |
| 20.00 | | 37.6 | 319.2 | | | | | 0.0 | 484.2 | 37.6 | 803.4 | 0.0 | 0.0 |
| 22.50 | | 37.3 | 316.3 | | | | | 0.0 | 485.5 | 37.3 | 801.7 | 0.0 | 0.0 |
| 25.00 | | 37.0 | 313.2 | | | | | 0.0 | 460.1 | 37.0 | 773.2 | 0.0 | 0.0 |
| 27.50 | | 36.6 | 310.0 | | | | | 0.0 | 460.8 | 36.6 | 770.7 | 0.0 | 0.0 |
| 30.00 | | 36.6 | 306.7 | | | | | 0.0 | 461.4 | 36.6 | 768.1 | 0.0 | 0.0 |
| 32.50 | | 36.9 | 303.3 | | | | | 0.0 | 462.0 | 36.9 | 765.3 | 0.0 | 0.0 |
| 35.00 | | 37.3 | 299.8 | | | | | 0.0 | 462.6 | 37.3 | 762.4 | 0.0 | 0.0 |
| 37.50 | | 19.4 | 296.3 | | | | | 0.0 | 463.2 | 19.4 | 759.5 | 0.0 | 0.0 |
| 37.58 | Bot - Section 2 | 19.3 | 9.8 | | | | | 0.0 | 15.4 | 19.3 | 25.3 | 0.0 | 0.0 |
| 40.00 | | 34.2 | 462.2 | | | | | 0.0 | 448.2 | 34.2 | 910.4 | 0.0 | 0.0 |
| 42.00 | Top - Section 1 | 19.4 | 378.2 | | | | | 0.0 | 371.3 | 19.4 | 749.5 | 0.0 | 0.0 |
| 42.50 | | 23.4 | 53.5 | | | | | 0.0 | 92.9 | 23.4 | 146.4 | 0.0 | 0.0 |
| 45.00 | | 39.2 | 265.2 | | | | | 0.0 | 464.6 | 39.2 | 729.8 | 0.0 | 0.0 |
| 47.50 | | 39.4 | 261.9 | | | | | 0.0 | 465.0 | 39.4 | 726.9 | 0.0 | 0.0 |
| 50.00 | | 39.6 | 258.5 | | | | | 0.0 | 465.4 | 39.6 | 724.0 | 0.0 | 0.0 |
| 52.50 | | 39.8 | 255.1 | | | | | 3.9 | 465.8 | 43.7 | 720.9 | 0.0 | 0.0 |
| 55.00 | | 40.0 | 251.7 | | | | | 5.6 | 466.2 | 45.6 | 717.9 | 0.0 | 0.0 |
| 57.50 | | 40.1 | 248.3 | | | | | 6.9 | 466.5 | 47.1 | 714.8 | 0.0 | 0.0 |
| 60.00 | | 40.2 | 244.8 | | | | | 8.1 | 466.9 | 48.3 | 711.7 | 0.0 | 0.0 |
| 62.50 | | 40.3 | 241.3 | | | | | 9.1 | 467.2 | 49.4 | 708.5 | 0.0 | 0.0 |
| 65.00 | | 40.4 | 237.8 | | | | | 10.0 | 467.5 | 50.4 | 705.3 | 0.0 | 0.0 |
| 67.50 | | 40.4 | 234.2 | | | | | 10.8 | 467.9 | 51.2 | 702.1 | 0.0 | 0.0 |
| 70.00 | | 40.4 | 230.7 | | | | | 11.6 | 468.2 | 52.0 | 698.8 | 0.0 | 0.0 |
| 72.50 | | 40.4 | 227.1 | | | | | 12.3 | 468.4 | 52.8 | 695.5 | 0.0 | 0.0 |
| 75.00 | | 29.7 | 223.5 | | | | | 13.0 | 468.7 | 42.7 | 692.2 | 0.0 | 0.0 |
| 76.17 | Bot - Section 3 | 20.4 | 103.2 | | | | | 6.3 | 218.8 | 26.7 | 322.0 | 0.0 | 0.0 |
| 77.50 | | 27.4 | 185.0 | | | | | 7.4 | 250.2 | 34.8 | 435.2 | 0.0 | 0.0 |
| 79.50 | Reinf. Top Reinf | 20.5 | 274.2 | | | | | 11.4 | 375.4 | 31.9 | 649.6 | 0.0 | 0.0 |
| 80.00 | Top - Section 2 | 24.5 | 68.0 | | | | | 2.9 | 93.9 | 27.4 | 161.9 | 0.0 | 0.0 |
| 82.50 | | 40.7 | 196.4 | | | | | 14.4 | 469.5 | 55.2 | 666.0 | 0.0 | 0.0 |
| 85.00 | | 40.7 | 193.1 | | | | | 15.0 | 469.8 | 55.7 | 662.9 | 0.0 | 0.0 |
| 87.50 | | 40.4 | 189.8 | | | | | 15.6 | 470.0 | 56.0 | 659.9 | 0.0 | 0.0 |
| 90.00 | Appurtenance(s) | 40.1 | 186.5 | 745.5 | 0.0 | 530.0 | 9,205.9 | 19.5 | 470.3 | 805.1 | 9,862.7 | 0.0 | 0.0 |
| 92.50 | | 39.7 | 183.2 | | | | | 16.6 | 408.6 | 56.3 | 591.8 | 0.0 | 0.0 |
| 95.00 | | 38.8 | 179.9 | | | | | 17.1 | 391.2 | 55.9 | 571.1 | 0.0 | 0.0 |
| 97.44 | Reinf. Top | 19.6 | 172.2 | | | | | 17.1 | 381.6 | 36.6 | 553.7 | 0.0 | 0.0 |
| 97.50 | | 19.8 | 4.4 | | | | | 0.4 | 4.8 | 20.3 | 9.2 | 0.0 | 0.0 |
| 100.00 | Appurtenance(s) | 38.5 | 173.2 | 99.4 | 0.0 | 99.4 | 298.3 | 18.0 | 191.1 | 155.8 | 662.5 | 0.0 | 0.0 |
| 102.50 | | 34.9 | 169.8 | | | | | 14.7 | 130.7 | 49.6 | 300.5 | 0.0 | 0.0 |

© 2007 - 2020 by ATC IP LLC. All rights reserved.


**Load Case:** 1.2D + 1.0Di + 1.0Wi 50 mph with 1.00 in Radial Ice 25 Iterations

Gust Response Factor :1.10 Ice Dead Load Factor :1.00
Dead Load Factor :1.20 Ice Importance Factor :1.00
Wind Load Factor :1.00

| | | | | | | | | | | | | | |
|---|---|---|---|---|---|---|---|---|---|---|---|---|---|
| 105.00 | | 31.3 | 166.4 | | | | | 0.0 | 105.8 | 31.3 | 272.1 | 0.0 | 0.0 |
| 107.50 | | 30.9 | 163.0 | | | | | 0.0 | 105.8 | 30.9 | 268.8 | 0.0 | 0.0 |
| 110.00 | Appurtenance(s) | 30.5 | 159.6 | 291.3 | 0.0 | 0.0 | 2,925.0 | 0.0 | 105.8 | 321.9 | 3,190.3 | 0.0 | 0.0 |
| 112.50 | | 30.1 | 156.2 | | | | | 0.0 | 90.6 | 30.1 | 246.8 | 0.0 | 0.0 |
| 115.00 | | 29.7 | 152.8 | | | | | 0.0 | 90.6 | 29.7 | 243.4 | 0.0 | 0.0 |
| 117.50 | | 29.3 | 149.3 | | | | | 0.0 | 90.6 | 29.3 | 240.0 | 0.0 | 0.0 |
| 120.00 | Appurtenance(s) | 14.5 | 145.9 | 1,265.8 | 0.0 | 3,408.4 | 13,944.0 | 0.0 | 90.6 | 1,280.3 | 14,180.5 | 0.0 | 0.0 |
| | | | | | | | | Totals: | | 4,487.91 | 58,488.9 | 0.00 | 0.00 |

 © 2007 - 2020 by ATC IP LLC. All rights reserved.


**Load Case:** 1.2D + 1.0Di + 1.0Wi 50 mph with 1.00 in Radial Ice 25 Iterations

Gust Response Factor :1.10 Ice Dead Load Factor :1.00
Dead Load Factor :1.20 Ice Importance Factor :1.00
Wind Load Factor :1.00

## Calculated Forces

| Seg Elev (ft) | Pu FY (-) (kips) | Vu FX (-) (kips) | Tu MY (ft-kips) | Mu MZ (ft-kips) | Mu MX (ft-kips) | Resultant Moment (ft-kips) | phi Pn (kips) | phi Vn (kips) | phi Tn (ft-kips) | phi Mn (ft-kips) | Total Deflect (in) | Rotation (deg) | Ratio |
|---|---|---|---|---|---|---|---|---|---|---|---|---|---|
| 0.00 | -58.49 | -4.48 | 0.00 | -454.00 | 0.00 | 454.00 | 1,590.66 | 434.43 | 1,260.13 | 996.98 | 0.00 | 0.00 | 0.149 |
| 2.50 | -57.64 | -4.48 | 0.00 | -442.79 | 0.00 | 442.79 | 1,581.24 | 429.31 | 1,230.60 | 979.29 | 0.01 | -0.03 | 0.146 |
| 5.00 | -56.78 | -4.47 | 0.00 | -431.60 | 0.00 | 431.60 | 1,571.59 | 424.18 | 1,201.42 | 961.61 | 0.03 | -0.06 | 0.143 |
| 7.50 | -55.89 | -4.46 | 0.00 | -420.44 | 0.00 | 420.44 | 1,561.72 | 419.06 | 1,172.59 | 943.94 | 0.08 | -0.09 | 0.141 |
| 10.00 | -54.88 | -4.45 | 0.00 | -409.30 | 0.00 | 409.30 | 1,551.63 | 413.94 | 1,144.11 | 926.28 | 0.13 | -0.13 | 0.138 |
| 12.50 | -53.87 | -4.43 | 0.00 | -398.18 | 0.00 | 398.18 | 1,541.32 | 408.82 | 1,115.98 | 908.64 | 0.21 | -0.16 | 0.135 |
| 15.00 | -52.86 | -4.43 | 0.00 | -387.10 | 0.00 | 387.10 | 1,530.78 | 403.70 | 1,088.20 | 891.03 | 0.30 | -0.19 | 0.132 |
| 15.48 | -52.67 | -4.42 | 0.00 | -384.97 | 0.00 | 384.97 | 1,528.74 | 402.71 | 1,082.91 | 887.65 | 0.32 | -0.19 | 0.132 |
| 15.48 | -52.67 | -4.42 | 0.00 | -384.97 | 0.00 | 384.97 | 1,528.74 | 402.71 | 1,082.91 | 887.65 | 0.32 | -0.19 | 0.206 |
| 17.50 | -52.02 | -4.42 | 0.00 | -376.04 | 0.00 | 376.04 | 1,520.02 | 398.57 | 1,060.77 | 873.44 | 0.41 | -0.22 | 0.203 |
| 20.00 | -51.21 | -4.42 | 0.00 | -365.00 | 0.00 | 365.00 | 1,509.04 | 393.45 | 1,033.69 | 855.89 | 0.53 | -0.27 | 0.199 |
| 22.50 | -50.40 | -4.42 | 0.00 | -353.95 | 0.00 | 353.95 | 1,497.83 | 388.33 | 1,006.96 | 838.37 | 0.69 | -0.32 | 0.195 |
| 25.00 | -49.63 | -4.42 | 0.00 | -342.89 | 0.00 | 342.89 | 1,486.41 | 383.21 | 980.58 | 820.91 | 0.87 | -0.37 | 0.191 |
| 27.50 | -48.85 | -4.42 | 0.00 | -331.84 | 0.00 | 331.84 | 1,474.76 | 378.09 | 954.55 | 803.49 | 1.07 | -0.41 | 0.187 |
| 30.00 | -48.08 | -4.42 | 0.00 | -320.78 | 0.00 | 320.78 | 1,462.88 | 372.96 | 928.87 | 786.12 | 1.30 | -0.46 | 0.183 |
| 32.50 | -47.31 | -4.42 | 0.00 | -309.73 | 0.00 | 309.73 | 1,450.79 | 367.84 | 903.54 | 768.81 | 1.56 | -0.51 | 0.179 |
| 35.00 | -46.55 | -4.41 | 0.00 | -298.69 | 0.00 | 298.69 | 1,438.47 | 362.72 | 878.56 | 751.57 | 1.84 | -0.56 | 0.174 |
| 37.50 | -45.79 | -4.40 | 0.00 | -287.67 | 0.00 | 287.67 | 1,425.93 | 357.60 | 853.93 | 734.39 | 2.14 | -0.61 | 0.170 |
| 37.58 | -45.76 | -4.40 | 0.00 | -287.30 | 0.00 | 287.30 | 1,425.51 | 357.43 | 853.11 | 733.82 | 2.15 | -0.61 | 0.170 |
| 40.00 | -44.85 | -4.39 | 0.00 | -276.66 | 0.00 | 276.66 | 1,413.16 | 352.48 | 829.65 | 717.29 | 2.47 | -0.65 | 0.163 |
| 42.00 | -44.10 | -4.38 | 0.00 | -267.88 | 0.00 | 267.88 | 1,175.20 | 310.63 | 736.31 | 601.57 | 2.76 | -0.69 | 0.177 |
| 42.50 | -43.95 | -4.38 | 0.00 | -265.69 | 0.00 | 265.69 | 1,173.35 | 309.73 | 732.07 | 598.87 | 2.83 | -0.70 | 0.176 |
| 45.00 | -43.21 | -4.36 | 0.00 | -254.75 | 0.00 | 254.75 | 1,163.96 | 305.25 | 711.04 | 585.40 | 3.21 | -0.75 | 0.171 |
| 47.50 | -42.48 | -4.35 | 0.00 | -243.84 | 0.00 | 243.84 | 1,154.34 | 300.77 | 690.32 | 571.97 | 3.61 | -0.79 | 0.165 |
| 50.00 | -41.76 | -4.33 | 0.00 | -232.97 | 0.00 | 232.97 | 1,144.49 | 296.28 | 669.91 | 558.56 | 4.04 | -0.84 | 0.160 |
| 52.50 | -41.03 | -4.31 | 0.00 | -222.15 | 0.00 | 222.15 | 1,134.43 | 291.80 | 649.80 | 545.20 | 4.49 | -0.88 | 0.154 |
| 55.00 | -40.31 | -4.28 | 0.00 | -211.38 | 0.00 | 211.38 | 1,124.14 | 287.32 | 630.00 | 531.88 | 4.97 | -0.93 | 0.149 |
| 57.50 | -39.60 | -4.25 | 0.00 | -200.67 | 0.00 | 200.67 | 1,113.63 | 282.84 | 610.51 | 518.62 | 5.46 | -0.97 | 0.143 |
| 60.00 | -38.88 | -4.22 | 0.00 | -190.04 | 0.00 | 190.04 | 1,102.90 | 278.36 | 591.32 | 505.40 | 5.98 | -1.01 | 0.137 |
| 62.50 | -38.17 | -4.19 | 0.00 | -179.49 | 0.00 | 179.49 | 1,091.95 | 273.87 | 572.44 | 492.25 | 6.52 | -1.05 | 0.131 |
| 65.00 | -37.47 | -4.15 | 0.00 | -169.03 | 0.00 | 169.03 | 1,080.77 | 269.39 | 553.86 | 479.16 | 7.09 | -1.09 | 0.125 |
| 67.50 | -36.76 | -4.11 | 0.00 | -158.66 | 0.00 | 158.66 | 1,069.37 | 264.91 | 535.59 | 466.14 | 7.67 | -1.13 | 0.119 |
| 70.00 | -36.06 | -4.06 | 0.00 | -148.39 | 0.00 | 148.39 | 1,057.74 | 260.43 | 517.63 | 453.19 | 8.27 | -1.17 | 0.113 |
| 72.50 | -35.37 | -4.02 | 0.00 | -138.23 | 0.00 | 138.23 | 1,045.90 | 255.95 | 499.97 | 440.33 | 8.90 | -1.21 | 0.107 |
| 75.00 | -34.67 | -3.98 | 0.00 | -128.18 | 0.00 | 128.18 | 1,033.83 | 251.47 | 482.62 | 427.54 | 9.54 | -1.24 | 0.101 |
| 76.17 | -34.35 | -3.95 | 0.00 | -123.54 | 0.00 | 123.54 | 1,028.12 | 249.37 | 474.63 | 421.61 | 9.84 | -1.26 | 0.098 |
| 77.50 | -33.91 | -3.92 | 0.00 | -118.27 | 0.00 | 118.27 | 1,021.54 | 246.98 | 465.58 | 414.85 | 10.20 | -1.28 | 0.094 |
| 79.50 | -33.26 | -3.89 | 0.00 | -110.43 | 0.00 | 110.43 | 1,011.55 | 243.40 | 452.16 | 404.77 | 10.74 | -1.30 | 0.089 |
| 79.50 | -33.26 | -3.89 | 0.00 | -110.43 | 0.00 | 110.43 | 1,011.55 | 243.40 | 452.16 | 404.77 | 10.74 | -1.30 | 0.089 |
| 80.00 | -33.10 | -3.86 | 0.00 | -108.48 | 0.00 | 108.48 | 828.38 | 212.16 | 400.77 | 337.67 | 10.88 | -1.31 | 0.097 |
| 82.50 | -32.44 | -3.81 | 0.00 | -98.82 | 0.00 | 98.82 | 819.42 | 208.32 | 386.39 | 327.92 | 11.57 | -1.34 | 0.090 |
| 85.00 | -31.77 | -3.75 | 0.00 | -89.30 | 0.00 | 89.30 | 810.23 | 204.48 | 372.28 | 318.20 | 12.28 | -1.37 | 0.083 |
| 87.50 | -31.11 | -3.70 | 0.00 | -79.91 | 0.00 | 79.91 | 800.82 | 200.64 | 358.43 | 308.54 | 13.00 | -1.39 | 0.076 |

© 2007 - 2020 by ATC IP LLC. All rights reserved.


**Load Case:** 1.2D + 1.0Di + 1.0Wi 50 mph with 1.00 in Radial Ice 25 Iterations

Gust Response Factor :1.10 Ice Dead Load Factor :1.00
Dead Load Factor :1.20 Ice Importance Factor :1.00
Wind Load Factor :1.00

| | | | | | | | | | | | | | |
|---|---|---|---|---|---|---|---|---|---|---|---|---|---|
| 90.00 | -21.27 | -2.66 | 0.00 | -70.14 | 0.00 | 70.14 | 791.19 | 196.80 | 344.84 | 298.94 | 13.74 | -1.42 | 0.065 |
| 92.50 | -20.68 | -2.60 | 0.00 | -63.49 | 0.00 | 63.49 | 781.34 | 192.96 | 331.51 | 289.40 | 14.48 | -1.44 | 0.060 |
| 95.00 | -20.11 | -2.53 | 0.00 | -57.01 | 0.00 | 57.01 | 771.27 | 189.11 | 318.45 | 279.92 | 15.24 | -1.46 | 0.055 |
| 97.44 | -19.56 | -2.48 | 0.00 | -50.83 | 0.00 | 50.83 | 761.23 | 185.37 | 305.96 | 270.75 | 15.99 | -1.48 | 0.050 |
| 97.44 | -19.56 | -2.48 | 0.00 | -50.83 | 0.00 | 50.83 | 761.23 | 185.37 | 305.96 | 270.75 | 15.99 | -1.48 | 0.214 |
| 97.50 | -19.55 | -2.48 | 0.00 | -50.68 | 0.00 | 50.68 | 760.97 | 185.27 | 305.65 | 270.51 | 16.01 | -1.48 | 0.213 |
| 100.00 | -18.88 | -2.33 | 0.00 | -44.38 | 0.00 | 44.38 | 750.45 | 181.43 | 293.11 | 261.18 | 16.81 | -1.56 | 0.195 |
| 102.50 | -18.58 | -2.30 | 0.00 | -38.56 | 0.00 | 38.56 | 739.70 | 177.59 | 280.83 | 251.93 | 17.65 | -1.64 | 0.178 |
| 105.00 | -18.31 | -2.28 | 0.00 | -32.81 | 0.00 | 32.81 | 728.74 | 173.75 | 268.82 | 242.77 | 18.52 | -1.71 | 0.160 |
| 107.50 | -18.04 | -2.26 | 0.00 | -27.12 | 0.00 | 27.12 | 713.61 | 169.91 | 257.07 | 232.42 | 19.44 | -1.77 | 0.142 |
| 110.00 | -14.86 | -1.85 | 0.00 | -21.47 | 0.00 | 21.47 | 697.47 | 166.07 | 245.58 | 221.97 | 20.38 | -1.82 | 0.118 |
| 112.50 | -14.61 | -1.82 | 0.00 | -16.85 | 0.00 | 16.85 | 681.34 | 162.22 | 234.35 | 211.76 | 21.35 | -1.87 | 0.101 |
| 115.00 | -14.37 | -1.79 | 0.00 | -12.29 | 0.00 | 12.29 | 665.20 | 158.38 | 223.39 | 201.79 | 22.34 | -1.91 | 0.083 |
| 117.50 | -14.13 | -1.76 | 0.00 | -7.81 | 0.00 | 7.81 | 649.07 | 154.54 | 212.69 | 192.06 | 23.34 | -1.94 | 0.063 |
| 120.00 | 0.00 | -1.28 | 0.00 | -3.41 | 0.00 | 3.41 | 632.94 | 150.70 | 202.25 | 182.57 | 24.36 | -1.95 | 0.019 |

Site Number: 302500 | Code: ANSI/TIA-222-H | © 2007 - 2020 by ATC IP LLC. All rights reserved.

Site Name: Brst - Bristol, CT | Engineering Number:OAA751417_C3_02 | 1/23/2020 3:51:50 PM

Customer: AT&T MOBILITY

**Load Case:** 1.0D + 1.0W | Serviceability 60 mph | 25 Iterations

Gust Response Factor :1.10
Dead Load Factor :1.00
Wind Load Factor :1.00

## Applied Segment Forces Summary

| | | Shaft Forces | | Discrete Forces | | | | Linear Forces | | Sum of Forces | | | |
|---|---|---|---|---|---|---|---|---|---|---|---|---|---|
| Seg Elev (ft) | Description | Wind FX (lb) | Dead Load (lb) | Wind FX (lb) | Torsion MY (lb-ft) | Moment MZ (lb-ft) | Dead Load (lb) | Wind FX (lb) | Dead Load (lb) | Wind FX (lb) | Dead Load (lb) | Torsion MY (lb-ft) | Moment MZ (lb) |
| 0.00 | | 23.2 | 0.0 | | | | | 0.0 | 0.0 | 23.2 | 0.0 | 0.0 | 0.0 |
| 2.50 | | 46.1 | 209.3 | | | | | 11.6 | 394.3 | 57.7 | 603.6 | 0.0 | 0.0 |
| 5.00 | | 45.5 | 206.9 | | | | | 11.6 | 394.3 | 57.1 | 601.1 | 0.0 | 0.0 |
| 7.50 | | 45.0 | 204.4 | | | | | 11.6 | 412.2 | 56.6 | 616.5 | 0.0 | 0.0 |
| 10.00 | | 44.4 | 201.9 | | | | | 11.6 | 483.7 | 56.1 | 685.6 | 0.0 | 0.0 |
| 12.50 | | 43.9 | 199.4 | | | | | 11.6 | 483.7 | 55.5 | 683.2 | 0.0 | 0.0 |
| 15.00 | | 26.0 | 196.9 | | | | | 11.6 | 483.7 | 37.6 | 680.7 | 0.0 | 0.0 |
| 15.48 | Reinf. Top | 21.5 | 37.5 | | | | | 2.2 | 92.7 | 23.8 | 130.2 | 0.0 | 0.0 |
| 17.50 | | 38.7 | 157.0 | | | | | 9.4 | 256.0 | 48.0 | 413.0 | 0.0 | 0.0 |
| 20.00 | | 42.3 | 192.0 | | | | | 11.6 | 316.7 | 53.9 | 508.7 | 0.0 | 0.0 |
| 22.50 | | 41.7 | 189.5 | | | | | 11.6 | 316.7 | 53.3 | 506.2 | 0.0 | 0.0 |
| 25.00 | | 41.2 | 187.0 | | | | | 11.6 | 316.7 | 52.8 | 503.7 | 0.0 | 0.0 |
| 27.50 | | 40.6 | 184.5 | | | | | 11.6 | 316.7 | 52.2 | 501.3 | 0.0 | 0.0 |
| 30.00 | | 40.3 | 182.0 | | | | | 11.6 | 316.7 | 51.9 | 498.8 | 0.0 | 0.0 |
| 32.50 | | 40.5 | 179.5 | | | | | 11.8 | 316.7 | 52.2 | 496.3 | 0.0 | 0.0 |
| 35.00 | | 40.8 | 177.1 | | | | | 12.0 | 316.7 | 52.8 | 493.8 | 0.0 | 0.0 |
| 37.50 | | 21.1 | 174.6 | | | | | 12.3 | 316.7 | 33.4 | 491.3 | 0.0 | 0.0 |
| 37.58 | Bot - Section 2 | 20.9 | 5.8 | | | | | 0.4 | 10.6 | 21.3 | 16.3 | 0.0 | 0.0 |
| 40.00 | | 37.0 | 314.6 | | | | | 12.1 | 306.2 | 49.1 | 620.8 | 0.0 | 0.0 |
| 42.00 | Top - Section 1 | 21.0 | 257.0 | | | | | 10.2 | 253.4 | 31.2 | 510.4 | 0.0 | 0.0 |
| 42.50 | | 25.2 | 30.1 | | | | | 2.6 | 63.3 | 27.8 | 93.4 | 0.0 | 0.0 |
| 45.00 | | 42.1 | 149.0 | | | | | 13.0 | 316.7 | 55.0 | 465.8 | 0.0 | 0.0 |
| 47.50 | | 42.1 | 146.9 | | | | | 13.2 | 316.7 | 55.3 | 463.6 | 0.0 | 0.0 |
| 50.00 | | 42.1 | 144.7 | | | | | 13.4 | 316.7 | 55.5 | 461.5 | 0.0 | 0.0 |
| 52.50 | | 42.1 | 142.5 | | | | | 13.6 | 316.7 | 55.6 | 459.3 | 0.0 | 0.0 |
| 55.00 | | 42.0 | 140.4 | | | | | 13.7 | 316.7 | 55.7 | 457.1 | 0.0 | 0.0 |
| 57.50 | | 41.9 | 138.2 | | | | | 13.9 | 316.7 | 55.8 | 454.9 | 0.0 | 0.0 |
| 60.00 | | 41.7 | 136.0 | | | | | 14.1 | 316.7 | 55.8 | 452.8 | 0.0 | 0.0 |
| 62.50 | | 41.5 | 133.8 | | | | | 14.3 | 316.7 | 55.8 | 450.6 | 0.0 | 0.0 |
| 65.00 | | 41.3 | 131.7 | | | | | 14.4 | 316.7 | 55.7 | 448.4 | 0.0 | 0.0 |
| 67.50 | | 41.1 | 129.5 | | | | | 14.6 | 316.7 | 55.7 | 446.2 | 0.0 | 0.0 |
| 70.00 | | 40.8 | 127.3 | | | | | 14.7 | 316.7 | 55.5 | 444.1 | 0.0 | 0.0 |
| 72.50 | | 40.5 | 125.2 | | | | | 14.9 | 316.7 | 55.4 | 441.9 | 0.0 | 0.0 |
| 75.00 | | 29.5 | 123.0 | | | | | 15.0 | 316.7 | 44.6 | 439.7 | 0.0 | 0.0 |
| 76.17 | Bot - Section 3 | 20.2 | 56.6 | | | | | 7.1 | 147.8 | 27.3 | 204.5 | 0.0 | 0.0 |
| 77.50 | | 27.0 | 120.3 | | | | | 8.1 | 168.9 | 35.2 | 289.2 | 0.0 | 0.0 |
| 79.50 | Reinf. Top Reinf | 20.2 | 178.2 | | | | | 12.2 | 253.4 | 32.5 | 431.6 | 0.0 | 0.0 |
| 80.00 | Top - Section 2 | 24.1 | 44.2 | | | | | 3.1 | 63.3 | 27.1 | 107.5 | 0.0 | 0.0 |
| 82.50 | | 39.9 | 101.9 | | | | | 15.5 | 316.8 | 55.3 | 418.7 | 0.0 | 0.0 |
| 85.00 | | 39.5 | 100.0 | | | | | 15.6 | 316.7 | 55.1 | 416.8 | 0.0 | 0.0 |
| 87.50 | | 39.1 | 98.2 | | | | | 15.7 | 316.7 | 54.8 | 414.9 | 0.0 | 0.0 |
| 90.00 | Appurtenance(s) | 38.6 | 96.3 | 766.3 | 0.0 | 589.9 | 3,192.3 | 15.9 | 316.7 | 820.8 | 3,605.4 | 0.0 | 0.0 |
| 92.50 | | 38.2 | 94.5 | | | | | 16.0 | 282.0 | 54.2 | 376.5 | 0.0 | 0.0 |
| 95.00 | | 37.3 | 92.6 | | | | | 16.1 | 267.4 | 53.4 | 360.0 | 0.0 | 0.0 |
| 97.44 | Reinf. Top | 18.7 | 88.5 | | | | | 15.8 | 260.7 | 34.6 | 349.2 | 0.0 | 0.0 |
| 97.50 | | 19.0 | 2.2 | | | | | 0.4 | 2.5 | 19.4 | 4.8 | 0.0 | 0.0 |
| 100.00 | Appurtenance(s) | 36.7 | 88.9 | 105.8 | 0.0 | 105.8 | 70.4 | 16.3 | 100.4 | 158.9 | 259.7 | 0.0 | 0.0 |
| 102.50 | | 32.5 | 87.0 | | | | | 16.5 | 88.1 | 49.0 | 175.1 | 0.0 | 0.0 |

© 2007 - 2020 by ATC IP LLC. All rights reserved.


**Load Case:** 1.0D + 1.0W Serviceability 60 mph 25 Iterations

Gust Response Factor :1.10
Dead Load Factor :1.00
Wind Load Factor :1.00

| | | | | | | | | | | | | | |
|---|---|---|---|---|---|---|---|---|---|---|---|---|---|
| 105.00 | | 28.3 | 85.2 | | | | | 0.0 | 88.1 | 28.3 | 173.3 | 0.0 | 0.0 |
| 107.50 | | 27.8 | 83.3 | | | | | 0.0 | 88.1 | 27.8 | 171.4 | 0.0 | 0.0 |
| 110.00 | Appurtenance(s) | 27.4 | 81.4 | 285.3 | 0.0 | 0.0 | 912.0 | 0.0 | 88.1 | 312.7 | 1,081.6 | 0.0 | 0.0 |
| 112.50 | | 26.9 | 79.6 | | | | | 0.0 | 75.5 | 26.9 | 155.1 | 0.0 | 0.0 |
| 115.00 | | 26.5 | 77.7 | | | | | 0.0 | 75.5 | 26.5 | 153.2 | 0.0 | 0.0 |
| 117.50 | | 26.2 | 75.8 | | | | | 0.0 | 75.5 | 26.2 | 151.4 | 0.0 | 0.0 |
| 120.00 | Appurtenance(s) | 13.0 | 74.0 | 1,280.6 | 0.0 | 3,656.9 | 4,583.2 | 0.0 | 75.5 | 1,293.6 | 4,732.7 | 0.0 | 0.0 |
| | | | | | | | | Totals: | | 4,878.50 | 29,573.4 | 0.00 | 0.00 |

 © 2007 - 2020 by ATC IP LLC. All rights reserved.


**Load Case:** 1.0D + 1.0W Serviceability 60 mph 25 Iterations

Gust Response Factor :1.10
Dead Load Factor :1.00
Wind Load Factor :1.00

## Calculated Forces

| Seg Elev (ft) | Pu FY (-) (kips) | Vu FX (-) (kips) | Tu MY (ft-kips) | Mu MZ (ft-kips) | Mu MX (ft-kips) | Resultant Moment (ft-kips) | phi Pn (kips) | phi Vn (kips) | phi Tn (ft-kips) | phi Mn (ft-kips) | Total Deflect (in) | Rotation (deg) | Ratio |
|---|---|---|---|---|---|---|---|---|---|---|---|---|---|
| 0.00 | -29.57 | -4.86 | 0.00 | -428.15 | 0.00 | 428.15 | 1,590.66 | 434.43 | 1,260.13 | 996.98 | 0.00 | 0.00 | 0.134 |
| 2.50 | -28.97 | -4.82 | 0.00 | -415.99 | 0.00 | 415.99 | 1,581.24 | 429.31 | 1,230.60 | 979.29 | 0.01 | -0.03 | 0.131 |
| 5.00 | -28.36 | -4.78 | 0.00 | -403.94 | 0.00 | 403.94 | 1,571.59 | 424.18 | 1,201.42 | 961.61 | 0.03 | -0.06 | 0.128 |
| 7.50 | -27.74 | -4.73 | 0.00 | -392.00 | 0.00 | 392.00 | 1,561.72 | 419.06 | 1,172.59 | 943.94 | 0.07 | -0.09 | 0.125 |
| 10.00 | -27.06 | -4.69 | 0.00 | -380.17 | 0.00 | 380.17 | 1,551.63 | 413.94 | 1,144.11 | 926.28 | 0.13 | -0.12 | 0.122 |
| 12.50 | -26.37 | -4.65 | 0.00 | -368.44 | 0.00 | 368.44 | 1,541.32 | 408.82 | 1,115.98 | 908.64 | 0.20 | -0.15 | 0.119 |
| 15.00 | -25.69 | -4.61 | 0.00 | -356.83 | 0.00 | 356.83 | 1,530.78 | 403.70 | 1,088.20 | 891.03 | 0.28 | -0.18 | 0.116 |
| 15.48 | -25.56 | -4.60 | 0.00 | -354.62 | 0.00 | 354.62 | 1,528.74 | 402.71 | 1,082.91 | 887.65 | 0.30 | -0.18 | 0.116 |
| 15.48 | -25.56 | -4.60 | 0.00 | -354.62 | 0.00 | 354.62 | 1,528.74 | 402.71 | 1,082.91 | 887.65 | 0.30 | -0.18 | 0.182 |
| 17.50 | -25.14 | -4.56 | 0.00 | -345.33 | 0.00 | 345.33 | 1,520.02 | 398.57 | 1,060.77 | 873.44 | 0.38 | -0.20 | 0.179 |
| 20.00 | -24.63 | -4.53 | 0.00 | -333.93 | 0.00 | 333.93 | 1,509.04 | 393.45 | 1,033.69 | 855.89 | 0.50 | -0.25 | 0.174 |
| 22.50 | -24.12 | -4.49 | 0.00 | -322.61 | 0.00 | 322.61 | 1,497.83 | 388.33 | 1,006.96 | 838.37 | 0.64 | -0.29 | 0.170 |
| 25.00 | -23.61 | -4.45 | 0.00 | -311.39 | 0.00 | 311.39 | 1,486.41 | 383.21 | 980.58 | 820.91 | 0.81 | -0.34 | 0.166 |
| 27.50 | -23.11 | -4.41 | 0.00 | -300.27 | 0.00 | 300.27 | 1,474.76 | 378.09 | 954.55 | 803.49 | 1.00 | -0.38 | 0.162 |
| 30.00 | -22.61 | -4.37 | 0.00 | -289.23 | 0.00 | 289.23 | 1,462.88 | 372.96 | 928.87 | 786.12 | 1.21 | -0.43 | 0.158 |
| 32.50 | -22.11 | -4.34 | 0.00 | -278.30 | 0.00 | 278.30 | 1,450.79 | 367.84 | 903.54 | 768.81 | 1.44 | -0.47 | 0.153 |
| 35.00 | -21.61 | -4.29 | 0.00 | -267.46 | 0.00 | 267.46 | 1,438.47 | 362.72 | 878.56 | 751.57 | 1.70 | -0.51 | 0.149 |
| 37.50 | -21.12 | -4.26 | 0.00 | -256.72 | 0.00 | 256.72 | 1,425.93 | 357.60 | 853.93 | 734.39 | 1.98 | -0.55 | 0.145 |
| 37.58 | -21.10 | -4.25 | 0.00 | -256.37 | 0.00 | 256.37 | 1,425.51 | 357.43 | 853.11 | 733.82 | 1.99 | -0.56 | 0.144 |
| 40.00 | -20.48 | -4.21 | 0.00 | -246.09 | 0.00 | 246.09 | 1,413.16 | 352.48 | 829.65 | 717.29 | 2.28 | -0.60 | 0.138 |
| 42.00 | -19.97 | -4.18 | 0.00 | -237.68 | 0.00 | 237.68 | 1,175.20 | 310.63 | 736.31 | 601.57 | 2.54 | -0.63 | 0.150 |
| 42.50 | -19.87 | -4.16 | 0.00 | -235.59 | 0.00 | 235.59 | 1,173.35 | 309.73 | 732.07 | 598.87 | 2.61 | -0.64 | 0.149 |
| 45.00 | -19.40 | -4.11 | 0.00 | -225.19 | 0.00 | 225.19 | 1,163.96 | 305.25 | 711.04 | 585.40 | 2.95 | -0.68 | 0.144 |
| 47.50 | -18.94 | -4.06 | 0.00 | -214.91 | 0.00 | 214.91 | 1,154.34 | 300.77 | 690.32 | 571.97 | 3.32 | -0.72 | 0.138 |
| 50.00 | -18.47 | -4.02 | 0.00 | -204.75 | 0.00 | 204.75 | 1,144.49 | 296.28 | 669.91 | 558.56 | 3.71 | -0.76 | 0.133 |
| 52.50 | -18.01 | -3.97 | 0.00 | -194.71 | 0.00 | 194.71 | 1,134.43 | 291.80 | 649.80 | 545.20 | 4.11 | -0.80 | 0.128 |
| 55.00 | -17.55 | -3.92 | 0.00 | -184.79 | 0.00 | 184.79 | 1,124.14 | 287.32 | 630.00 | 531.88 | 4.54 | -0.84 | 0.123 |
| 57.50 | -17.10 | -3.86 | 0.00 | -175.00 | 0.00 | 175.00 | 1,113.63 | 282.84 | 610.51 | 518.62 | 4.99 | -0.88 | 0.118 |
| 60.00 | -16.64 | -3.81 | 0.00 | -165.34 | 0.00 | 165.34 | 1,102.90 | 278.36 | 591.32 | 505.40 | 5.46 | -0.91 | 0.112 |
| 62.50 | -16.19 | -3.76 | 0.00 | -155.81 | 0.00 | 155.81 | 1,091.95 | 273.87 | 572.44 | 492.25 | 5.95 | -0.95 | 0.107 |
| 65.00 | -15.74 | -3.71 | 0.00 | -146.41 | 0.00 | 146.41 | 1,080.77 | 269.39 | 553.86 | 479.16 | 6.45 | -0.98 | 0.102 |
| 67.50 | -15.29 | -3.65 | 0.00 | -137.15 | 0.00 | 137.15 | 1,069.37 | 264.91 | 535.59 | 466.14 | 6.98 | -1.02 | 0.096 |
| 70.00 | -14.85 | -3.60 | 0.00 | -128.02 | 0.00 | 128.02 | 1,057.74 | 260.43 | 517.63 | 453.19 | 7.52 | -1.05 | 0.091 |
| 72.50 | -14.41 | -3.54 | 0.00 | -119.03 | 0.00 | 119.03 | 1,045.90 | 255.95 | 499.97 | 440.33 | 8.08 | -1.08 | 0.086 |
| 75.00 | -13.97 | -3.49 | 0.00 | -110.18 | 0.00 | 110.18 | 1,033.83 | 251.47 | 482.62 | 427.54 | 8.65 | -1.11 | 0.081 |
| 76.17 | -13.76 | -3.46 | 0.00 | -106.11 | 0.00 | 106.11 | 1,028.12 | 249.37 | 474.63 | 421.61 | 8.93 | -1.12 | 0.078 |
| 77.50 | -13.47 | -3.43 | 0.00 | -101.49 | 0.00 | 101.49 | 1,021.54 | 246.98 | 465.58 | 414.85 | 9.24 | -1.14 | 0.074 |
| 79.50 | -13.04 | -3.39 | 0.00 | -94.63 | 0.00 | 94.63 | 1,011.55 | 243.40 | 452.16 | 404.77 | 9.72 | -1.16 | 0.070 |
| 79.50 | -13.04 | -3.39 | 0.00 | -94.63 | 0.00 | 94.63 | 1,011.55 | 243.40 | 452.16 | 404.77 | 9.72 | -1.16 | 0.070 |
| 80.00 | -12.93 | -3.36 | 0.00 | -92.94 | 0.00 | 92.94 | 828.38 | 212.16 | 400.77 | 337.67 | 9.85 | -1.17 | 0.076 |
| 82.50 | -12.51 | -3.31 | 0.00 | -84.53 | 0.00 | 84.53 | 819.42 | 208.32 | 386.39 | 327.92 | 10.46 | -1.19 | 0.070 |
| 85.00 | -12.10 | -3.25 | 0.00 | -76.26 | 0.00 | 76.26 | 810.23 | 204.48 | 372.28 | 318.20 | 11.10 | -1.22 | 0.064 |
| 87.50 | -11.68 | -3.19 | 0.00 | -68.15 | 0.00 | 68.15 | 800.82 | 200.64 | 358.43 | 308.54 | 11.74 | -1.24 | 0.058 |

© 2007 - 2020 by ATC IP LLC. All rights reserved.


**Load Case:** 1.0D + 1.0W Serviceability 60 mph 25 Iterations

Gust Response Factor :1.10
Dead Load Factor :1.00
Wind Load Factor :1.00

| | | | | | | | | | | | | | |
|---|---|---|---|---|---|---|---|---|---|---|---|---|---|
| 90.00 | -8.10 | -2.29 | 0.00 | -59.59 | 0.00 | 59.59 | 791.19 | 196.80 | 344.84 | 298.94 | 12.39 | -1.26 | 0.050 |
| 92.50 | -7.72 | -2.23 | 0.00 | -53.86 | 0.00 | 53.86 | 781.34 | 192.96 | 331.51 | 289.40 | 13.06 | -1.28 | 0.046 |
| 95.00 | -7.36 | -2.17 | 0.00 | -48.28 | 0.00 | 48.28 | 771.27 | 189.11 | 318.45 | 279.92 | 13.73 | -1.30 | 0.042 |
| 97.44 | -7.01 | -2.13 | 0.00 | -42.99 | 0.00 | 42.99 | 761.23 | 185.37 | 305.96 | 270.75 | 14.40 | -1.31 | 0.038 |
| 97.44 | -7.01 | -2.13 | 0.00 | -42.99 | 0.00 | 42.99 | 761.23 | 185.37 | 305.96 | 270.75 | 14.40 | -1.31 | 0.168 |
| 97.50 | -7.01 | -2.12 | 0.00 | -42.86 | 0.00 | 42.86 | 760.97 | 185.27 | 305.65 | 270.51 | 14.42 | -1.31 | 0.168 |
| 100.00 | -6.75 | -1.96 | 0.00 | -37.46 | 0.00 | 37.46 | 750.45 | 181.43 | 293.11 | 261.18 | 15.12 | -1.38 | 0.153 |
| 102.50 | -6.57 | -1.91 | 0.00 | -32.57 | 0.00 | 32.57 | 739.70 | 177.59 | 280.83 | 251.93 | 15.87 | -1.45 | 0.138 |
| 105.00 | -6.40 | -1.89 | 0.00 | -27.79 | 0.00 | 27.79 | 728.74 | 173.75 | 268.82 | 242.77 | 16.64 | -1.51 | 0.123 |
| 107.50 | -6.22 | -1.86 | 0.00 | -23.08 | 0.00 | 23.08 | 713.61 | 169.91 | 257.07 | 232.42 | 17.44 | -1.56 | 0.108 |
| 110.00 | -5.15 | -1.52 | 0.00 | -18.43 | 0.00 | 18.43 | 697.47 | 166.07 | 245.58 | 221.97 | 18.27 | -1.61 | 0.091 |
| 112.50 | -5.00 | -1.49 | 0.00 | -14.63 | 0.00 | 14.63 | 681.34 | 162.22 | 234.35 | 211.76 | 19.12 | -1.65 | 0.077 |
| 115.00 | -4.84 | -1.46 | 0.00 | -10.90 | 0.00 | 10.90 | 665.20 | 158.38 | 223.39 | 201.79 | 19.99 | -1.68 | 0.061 |
| 117.50 | -4.69 | -1.43 | 0.00 | -7.24 | 0.00 | 7.24 | 649.07 | 154.54 | 212.69 | 192.06 | 20.88 | -1.70 | 0.045 |
| 120.00 | 0.00 | -1.29 | 0.00 | -3.66 | 0.00 | 3.66 | 632.94 | 150.70 | 202.25 | 182.57 | 21.78 | -1.72 | 0.020 |

 © 2007 - 2020 by ATC IP LLC. All rights reserved.


## Equivalent Lateral Forces Method Analysis

| | | |
|---|---|---|
| Spectral Response Acceleration for Short Period ($S_S$): | 0.19 | |
| Spectral Response Acceleration at 1.0 Second Period ($S_1$): | 0.05 | |
| Long-Period Transition Period ($T_L$): | 6 | |
| Importance Factor ($I_E$): | 1.00 | |
| Site Coefficient $F_a$: | 1.60 | |
| Site Coeffiecient $F_v$: | 2.40 | |
| Response Modification Coefficient (R): | 1.50 | |
| Design Spectral Response Acceleration at Short Period ($S_{ds}$): | 0.20 | |
| Design Spectral Response Acceleration at 1.0 Second Period ($S_{d1}$): | 0.09 | |
| Seismic Response Coefficient ($C_s$): | 0.03 | |
| Upper Limit $C_s$ | 0.03 | |
| Lower Limit $C_s$ | 0.03 | |
| Period based on Rayleigh Method (sec): | 2.54 | |
| Redundancy Factor (p): | 1.00 | |
| Seismic Force Distribution Exponent (k): | 2.00 | |
| Total Unfactored Dead Load: | 29.57 | k |
| Seismic Base Shear (E): | 0.89 | k |

**Load Case 1.2D + 1.0Ev + 1.0Eh** **Seismic**

| Segment | Height Above Base (ft) | Weight (lb) | $W_z$ (lb-ft) | $C_{vx}$ | Horizontal Force (lb) | Vertical Force (lb) |
|---|---|---|---|---|---|---|
| 54 | 118.75 | 150 | 2,108 | 0.012 | 11 | 185 |
| 53 | 116.25 | 151 | 2,046 | 0.012 | 10 | 188 |
| 52 | 113.75 | 153 | 1,983 | 0.011 | 10 | 190 |
| 51 | 111.25 | 155 | 1,919 | 0.011 | 10 | 192 |
| 50 | 108.75 | 170 | 2,005 | 0.011 | 10 | 210 |
| 49 | 106.25 | 171 | 1,935 | 0.011 | 10 | 213 |
| 48 | 103.75 | 173 | 1,865 | 0.011 | 9 | 215 |
| 47 | 101.25 | 175 | 1,795 | 0.010 | 9 | 217 |
| 46 | 98.75 | 189 | 1,846 | 0.011 | 9 | 235 |
| 45 | 97.47 | 5 | 45 | 0.000 | 0 | 6 |
| 44 | 96.22 | 349 | 3,233 | 0.018 | 16 | 433 |
| 43 | 93.75 | 360 | 3,164 | 0.018 | 16 | 447 |
| 42 | 91.25 | 376 | 3,135 | 0.018 | 16 | 467 |
| 41 | 88.75 | 413 | 3,254 | 0.019 | 16 | 512 |
| 40 | 86.25 | 415 | 3,087 | 0.018 | 16 | 515 |
| 39 | 83.75 | 417 | 2,923 | 0.017 | 15 | 517 |
| 38 | 81.25 | 419 | 2,764 | 0.016 | 14 | 519 |
| 37 | 79.75 | 107 | 684 | 0.004 | 3 | 133 |
| 36 | 78.50 | 432 | 2,660 | 0.015 | 13 | 535 |
| 35 | 76.83 | 289 | 1,707 | 0.010 | 9 | 359 |
| 34 | 75.58 | 204 | 1,168 | 0.007 | 6 | 254 |
| 33 | 73.75 | 440 | 2,392 | 0.014 | 12 | 545 |
| 32 | 71.25 | 442 | 2,243 | 0.013 | 11 | 548 |
| 31 | 68.75 | 444 | 2,099 | 0.012 | 11 | 551 |
| 30 | 66.25 | 446 | 1,959 | 0.011 | 10 | 553 |

© 2007 - 2020 by ATC IP LLC. All rights reserved.


| | | | | | | |
|---|---|---|---|---|---|---|
| 29 | 63.75 | 448 | 1,822 | 0.010 | 9 | 556 |
| 28 | 61.25 | 451 | 1,690 | 0.010 | 9 | 559 |
| 27 | 58.75 | 453 | 1,563 | 0.009 | 8 | 562 |
| 26 | 56.25 | 455 | 1,439 | 0.008 | 7 | 564 |
| 25 | 53.75 | 457 | 1,321 | 0.008 | 7 | 567 |
| 24 | 51.25 | 459 | 1,206 | 0.007 | 6 | 570 |
| 23 | 48.75 | 461 | 1,097 | 0.006 | 6 | 572 |
| 22 | 46.25 | 464 | 992 | 0.006 | 5 | 575 |
| 21 | 43.75 | 466 | 892 | 0.005 | 5 | 578 |
| 20 | 42.25 | 93 | 167 | 0.001 | 1 | 116 |
| 19 | 41.00 | 510 | 858 | 0.005 | 4 | 633 |
| 18 | 38.79 | 621 | 934 | 0.005 | 5 | 770 |
| 17 | 37.54 | 16 | 23 | 0.000 | 0 | 20 |
| 16 | 36.25 | 491 | 646 | 0.004 | 3 | 609 |
| 15 | 33.75 | 494 | 562 | 0.003 | 3 | 612 |
| 14 | 31.25 | 496 | 485 | 0.003 | 2 | 616 |
| 13 | 28.75 | 499 | 412 | 0.002 | 2 | 619 |
| 12 | 26.25 | 501 | 345 | 0.002 | 2 | 622 |
| 11 | 23.75 | 504 | 284 | 0.002 | 1 | 625 |
| 10 | 21.25 | 506 | 229 | 0.001 | 1 | 628 |
| 9 | 18.75 | 509 | 179 | 0.001 | 1 | 631 |
| 8 | 16.49 | 413 | 112 | 0.001 | 1 | 512 |
| 7 | 15.24 | 130 | 30 | 0.000 | 0 | 161 |
| 6 | 13.75 | 681 | 129 | 0.001 | 1 | 844 |
| 5 | 11.25 | 683 | 86 | 0.000 | 0 | 847 |
| 4 | 8.75 | 686 | 52 | 0.000 | 0 | 850 |
| 3 | 6.25 | 617 | 24 | 0.000 | 0 | 765 |
| 2 | 3.75 | 601 | 8 | 0.000 | 0 | 746 |
| 1 | 1.25 | 604 | 1 | 0.000 | 0 | 749 |
| CCI TPX-070821 | 120.00 | 45 | 648 | 0.004 | 3 | 56 |
| CCI TPX-070821 | 120.00 | 45 | 648 | 0.004 | 3 | 56 |
| Powerwave Allgon LGP | 120.00 | 85 | 1,218 | 0.007 | 6 | 105 |
| Raycap DC6-48-60-18- | 120.00 | 40 | 576 | 0.003 | 3 | 50 |
| Raycap DC6-48-60-18- | 120.00 | 64 | 916 | 0.005 | 5 | 79 |
| Ericsson RRUS A2 | 120.00 | 45 | 648 | 0.004 | 3 | 56 |
| Ericsson Radio 8843 | 120.00 | 216 | 3,106 | 0.018 | 16 | 268 |
| Ericsson RRUS 4478 B | 120.00 | 180 | 2,588 | 0.015 | 13 | 223 |
| Ericsson RRUS 4449 B | 120.00 | 213 | 3,067 | 0.018 | 16 | 264 |
| Ericsson RRUS 32 (50 | 120.00 | 152 | 2,195 | 0.013 | 11 | 189 |
| Ericsson RRUS 32 B2 | 120.00 | 159 | 2,290 | 0.013 | 12 | 197 |
| Generic 2' Std. Dish | 120.00 | 14 | 202 | 0.001 | 1 | 17 |
| Powerwave Allgon 777 | 120.00 | 105 | 1,512 | 0.009 | 8 | 130 |
| Quintel QS66512-3 (1 | 120.00 | 112 | 1,613 | 0.009 | 8 | 139 |
| CCI DMP65R-BU6DA | 120.00 | 79 | 1,143 | 0.007 | 6 | 98 |
| CCI TPA-65R-LCUUUU-H | 120.00 | 163 | 2,350 | 0.013 | 12 | 202 |
| Kathrein Scala 80010 | 120.00 | 229 | 3,300 | 0.019 | 17 | 284 |
| CCI DMP65R-BU8D | 120.00 | 191 | 2,756 | 0.016 | 14 | 237 |
| SitePro1 RMQP-496-HK | 120.00 | 2,446 | 35,222 | 0.201 | 178 | 3,034 |
| Andrew DB844H90E-XY | 110.00 | 112 | 1,355 | 0.008 | 7 | 139 |
| Round T-Arm | 110.00 | 500 | 6,050 | 0.035 | 31 | 620 |
| T-Arm w/ Working Pla | 110.00 | 300 | 3,630 | 0.021 | 18 | 372 |
| Kathrein Scala 742 2 | 100.00 | 44 | 440 | 0.003 | 2 | 55 |
| RFS APXV18-206517S-C | 100.00 | 26 | 264 | 0.002 | 1 | 33 |
| DragonWave Horizon C | 90.00 | 21 | 172 | 0.001 | 1 | 26 |
| Alcatel-Lucent RRH2x | 90.00 | 317 | 2,571 | 0.015 | 13 | 394 |
| Alcatel-Lucent 1900 | 90.00 | 180 | 1,458 | 0.008 | 7 | 223 |
| Nokia 2.5G MAA - AAH | 90.00 | 311 | 2,517 | 0.014 | 13 | 385 |
| Argus LLPX310R | 90.00 | 86 | 695 | 0.004 | 4 | 106 |
| DragonWave A-ANT-18G | 90.00 | 27 | 220 | 0.001 | 1 | 34 |
| DragonWave A-ANT-11G | 90.00 | 95 | 771 | 0.004 | 4 | 118 |
| DragonWave A-ANT-11G | 90.00 | 48 | 386 | 0.002 | 2 | 59 |
| Commscope NNVV-65B-R | 90.00 | 232 | 1,881 | 0.011 | 10 | 288 |
| Generic Flat Low Pro | 90.00 | 1,875 | 15,188 | 0.087 | 77 | 2,326 |

 © 2007 - 2020 by ATC IP LLC. All rights reserved.


| | | | | | | |
|---|---|---|---|---|---|---|
| | | 29,573 | 175,204 | 1.000 | 887 | 36,681 |

**Load Case 0.9D - 1.0Ev + 1.0Eh** **Seismic (Reduced DL)**

| Segment | Height Above Base (ft) | Weight (lb) | $W_z$ (lb-ft) | $C_{vx}$ | Horizontal Force (lb) | Vertical Force (lb) |
|---|---|---|---|---|---|---|
| 54 | 118.75 | 150 | 2,108 | 0.012 | 11 | 129 |
| 53 | 116.25 | 151 | 2,046 | 0.012 | 10 | 130 |
| 52 | 113.75 | 153 | 1,983 | 0.011 | 10 | 132 |
| 51 | 111.25 | 155 | 1,919 | 0.011 | 10 | 133 |
| 50 | 108.75 | 170 | 2,005 | 0.011 | 10 | 146 |
| 49 | 106.25 | 171 | 1,935 | 0.011 | 10 | 147 |
| 48 | 103.75 | 173 | 1,865 | 0.011 | 9 | 149 |
| 47 | 101.25 | 175 | 1,795 | 0.010 | 9 | 151 |
| 46 | 98.75 | 189 | 1,846 | 0.011 | 9 | 163 |
| 45 | 97.47 | 5 | 45 | 0.000 | 0 | 4 |
| 44 | 96.22 | 349 | 3,233 | 0.018 | 16 | 300 |
| 43 | 93.75 | 360 | 3,164 | 0.018 | 16 | 310 |
| 42 | 91.25 | 376 | 3,135 | 0.018 | 16 | 324 |
| 41 | 88.75 | 413 | 3,254 | 0.019 | 16 | 355 |
| 40 | 86.25 | 415 | 3,087 | 0.018 | 16 | 357 |
| 39 | 83.75 | 417 | 2,923 | 0.017 | 15 | 358 |
| 38 | 81.25 | 419 | 2,764 | 0.016 | 14 | 360 |
| 37 | 79.75 | 107 | 684 | 0.004 | 3 | 92 |
| 36 | 78.50 | 432 | 2,660 | 0.015 | 13 | 371 |
| 35 | 76.83 | 289 | 1,707 | 0.010 | 9 | 249 |
| 34 | 75.58 | 204 | 1,168 | 0.007 | 6 | 176 |
| 33 | 73.75 | 440 | 2,392 | 0.014 | 12 | 378 |
| 32 | 71.25 | 442 | 2,243 | 0.013 | 11 | 380 |
| 31 | 68.75 | 444 | 2,099 | 0.012 | 11 | 382 |
| 30 | 66.25 | 446 | 1,959 | 0.011 | 10 | 384 |
| 29 | 63.75 | 448 | 1,822 | 0.010 | 9 | 385 |
| 28 | 61.25 | 451 | 1,690 | 0.010 | 9 | 387 |
| 27 | 58.75 | 453 | 1,563 | 0.009 | 8 | 389 |
| 26 | 56.25 | 455 | 1,439 | 0.008 | 7 | 391 |
| 25 | 53.75 | 457 | 1,321 | 0.008 | 7 | 393 |
| 24 | 51.25 | 459 | 1,206 | 0.007 | 6 | 395 |
| 23 | 48.75 | 461 | 1,097 | 0.006 | 6 | 397 |
| 22 | 46.25 | 464 | 992 | 0.006 | 5 | 399 |
| 21 | 43.75 | 466 | 892 | 0.005 | 5 | 400 |
| 20 | 42.25 | 93 | 167 | 0.001 | 1 | 80 |
| 19 | 41.00 | 510 | 858 | 0.005 | 4 | 439 |
| 18 | 38.79 | 621 | 934 | 0.005 | 5 | 534 |
| 17 | 37.54 | 16 | 23 | 0.000 | 0 | 14 |
| 16 | 36.25 | 491 | 646 | 0.004 | 3 | 422 |
| 15 | 33.75 | 494 | 562 | 0.003 | 3 | 425 |
| 14 | 31.25 | 496 | 485 | 0.003 | 2 | 427 |
| 13 | 28.75 | 499 | 412 | 0.002 | 2 | 429 |
| 12 | 26.25 | 501 | 345 | 0.002 | 2 | 431 |
| 11 | 23.75 | 504 | 284 | 0.002 | 1 | 433 |
| 10 | 21.25 | 506 | 229 | 0.001 | 1 | 435 |
| 9 | 18.75 | 509 | 179 | 0.001 | 1 | 437 |
| 8 | 16.49 | 413 | 112 | 0.001 | 1 | 355 |
| 7 | 15.24 | 130 | 30 | 0.000 | 0 | 112 |
| 6 | 13.75 | 681 | 129 | 0.001 | 1 | 585 |
| 5 | 11.25 | 683 | 86 | 0.000 | 0 | 587 |
| 4 | 8.75 | 686 | 52 | 0.000 | 0 | 589 |
| 3 | 6.25 | 617 | 24 | 0.000 | 0 | 530 |
| 2 | 3.75 | 601 | 8 | 0.000 | 0 | 517 |
| 1 | 1.25 | 604 | 1 | 0.000 | 0 | 519 |
| CCI TPX-070821 | 120.00 | 45 | 648 | 0.004 | 3 | 39 |

© 2007 - 2020 by ATC IP LLC. All rights reserved.


| | | | | | | |
|---|---|---|---|---|---|---|
| CCI TPX-070821 | 120.00 | 45 | 648 | 0.004 | 3 | 39 |
| Powerwave Allgon LGP | 120.00 | 85 | 1,218 | 0.007 | 6 | 73 |
| Raycap DC6-48-60-18- | 120.00 | 40 | 576 | 0.003 | 3 | 34 |
| Raycap DC6-48-60-18- | 120.00 | 64 | 916 | 0.005 | 5 | 55 |
| Ericsson RRUS A2 | 120.00 | 45 | 648 | 0.004 | 3 | 39 |
| Ericsson Radio 8843 | 120.00 | 216 | 3,106 | 0.018 | 16 | 185 |
| Ericsson RRUS 4478 B | 120.00 | 180 | 2,588 | 0.015 | 13 | 154 |
| Ericsson RRUS 4449 B | 120.00 | 213 | 3,067 | 0.018 | 16 | 183 |
| Ericsson RRUS 32 (50 | 120.00 | 152 | 2,195 | 0.013 | 11 | 131 |
| Ericsson RRUS 32 B2 | 120.00 | 159 | 2,290 | 0.013 | 12 | 137 |
| Generic 2' Std. Dish | 120.00 | 14 | 202 | 0.001 | 1 | 12 |
| Powerwave Allgon 777 | 120.00 | 105 | 1,512 | 0.009 | 8 | 90 |
| Quintel QS66512-3 (1 | 120.00 | 112 | 1,613 | 0.009 | 8 | 96 |
| CCI DMP65R-BU6DA | 120.00 | 79 | 1,143 | 0.007 | 6 | 68 |
| CCI TPA-65R-LCUUUU-H | 120.00 | 163 | 2,350 | 0.013 | 12 | 140 |
| Kathrein Scala 80010 | 120.00 | 229 | 3,300 | 0.019 | 17 | 197 |
| CCI DMP65R-BU8D | 120.00 | 191 | 2,756 | 0.016 | 14 | 165 |
| SitePro1 RMQP-496-HK | 120.00 | 2,446 | 35,222 | 0.201 | 178 | 2,103 |
| Andrew DB844H90E-XY | 110.00 | 112 | 1,355 | 0.008 | 7 | 96 |
| Round T-Arm | 110.00 | 500 | 6,050 | 0.035 | 31 | 430 |
| T-Arm w/ Working Pla | 110.00 | 300 | 3,630 | 0.021 | 18 | 258 |
| Kathrein Scala 742 2 | 100.00 | 44 | 440 | 0.003 | 2 | 38 |
| RFS APXV18-206517S-C | 100.00 | 26 | 264 | 0.002 | 1 | 23 |
| DragonWave Horizon C | 90.00 | 21 | 172 | 0.001 | 1 | 18 |
| Alcatel-Lucent RRH2x | 90.00 | 317 | 2,571 | 0.015 | 13 | 273 |
| Alcatel-Lucent 1900 | 90.00 | 180 | 1,458 | 0.008 | 7 | 155 |
| Nokia 2.5G MAA - AAH | 90.00 | 311 | 2,517 | 0.014 | 13 | 267 |
| Argus LLPX310R | 90.00 | 86 | 695 | 0.004 | 4 | 74 |
| DragonWave A-ANT-18G | 90.00 | 27 | 220 | 0.001 | 1 | 23 |
| DragonWave A-ANT-11G | 90.00 | 95 | 771 | 0.004 | 4 | 82 |
| DragonWave A-ANT-11G | 90.00 | 48 | 386 | 0.002 | 2 | 41 |
| Commscope NNVV-65B-R | 90.00 | 232 | 1,881 | 0.011 | 10 | 200 |
| Generic Flat Low Pro | 90.00 | 1,875 | 15,188 | 0.087 | 77 | 1,612 |
| | | 29,573 | 175,204 | 1.000 | 887 | 25,424 |

 © 2007 - 2020 by ATC IP LLC. All rights reserved.


**Load Case 1.2D + 1.0Ev + 1.0Eh** **Seismic**

**Calculated Forces**

| Seg Elev (ft) | Pu FY (-) (kips) | Vu FX (-) (kips) | Tu MY (ft-kips) | Mu MZ (ft-kips) | Mu MX (ft-kips) | Resultant Moment (ft-kips) | phi Pn (kips) | phi Vn (kips) | phi Tn (ft-kips) | phi Mn (ft-kips) | Total Deflect (in) | Rotation (deg) | Ratio |
|---|---|---|---|---|---|---|---|---|---|---|---|---|---|
| 0.00 | -35.93 | -0.89 | 0.00 | -93.14 | 0.00 | 93.14 | 1,590.66 | 434.43 | 1,260.13 | 996.98 | 0.00 | 0.00 | 0.036 |
| 2.50 | -35.19 | -0.89 | 0.00 | -90.92 | 0.00 | 90.92 | 1,581.24 | 429.31 | 1,230.60 | 979.29 | 0.00 | -0.01 | 0.036 |
| 5.00 | -34.42 | -0.90 | 0.00 | -88.69 | 0.00 | 88.69 | 1,571.59 | 424.18 | 1,201.42 | 961.61 | 0.01 | -0.01 | 0.035 |
| 7.50 | -33.57 | -0.90 | 0.00 | -86.45 | 0.00 | 86.45 | 1,561.72 | 419.06 | 1,172.59 | 943.94 | 0.02 | -0.02 | 0.034 |
| 10.00 | -32.72 | -0.90 | 0.00 | -84.21 | 0.00 | 84.21 | 1,551.63 | 413.94 | 1,144.11 | 926.28 | 0.03 | -0.03 | 0.034 |
| 12.50 | -31.88 | -0.90 | 0.00 | -81.95 | 0.00 | 81.95 | 1,541.32 | 408.82 | 1,115.98 | 908.64 | 0.04 | -0.03 | 0.033 |
| 15.00 | -31.72 | -0.91 | 0.00 | -79.69 | 0.00 | 79.69 | 1,530.78 | 403.70 | 1,088.20 | 891.03 | 0.06 | -0.04 | 0.032 |
| 15.48 | -31.21 | -0.91 | 0.00 | -79.26 | 0.00 | 79.26 | 1,528.74 | 402.71 | 1,082.91 | 887.65 | 0.07 | -0.04 | 0.032 |
| 15.48 | -31.21 | -0.91 | 0.00 | -79.26 | 0.00 | 79.26 | 1,528.74 | 402.71 | 1,082.91 | 887.65 | 0.07 | -0.04 | 0.050 |
| 17.50 | -30.57 | -0.91 | 0.00 | -77.43 | 0.00 | 77.43 | 1,520.02 | 398.57 | 1,060.77 | 873.44 | 0.08 | -0.05 | 0.049 |
| 20.00 | -29.95 | -0.91 | 0.00 | -75.16 | 0.00 | 75.16 | 1,509.04 | 393.45 | 1,033.69 | 855.89 | 0.11 | -0.06 | 0.048 |
| 22.50 | -29.32 | -0.92 | 0.00 | -72.87 | 0.00 | 72.87 | 1,497.83 | 388.33 | 1,006.96 | 838.37 | 0.14 | -0.07 | 0.047 |
| 25.00 | -28.70 | -0.92 | 0.00 | -70.59 | 0.00 | 70.59 | 1,486.41 | 383.21 | 980.58 | 820.91 | 0.18 | -0.08 | 0.046 |
| 27.50 | -28.08 | -0.92 | 0.00 | -68.29 | 0.00 | 68.29 | 1,474.76 | 378.09 | 954.55 | 803.49 | 0.22 | -0.09 | 0.045 |
| 30.00 | -27.46 | -0.92 | 0.00 | -65.99 | 0.00 | 65.99 | 1,462.88 | 372.96 | 928.87 | 786.12 | 0.27 | -0.10 | 0.044 |
| 32.50 | -26.85 | -0.92 | 0.00 | -63.69 | 0.00 | 63.69 | 1,450.79 | 367.84 | 903.54 | 768.81 | 0.32 | -0.11 | 0.043 |
| 35.00 | -26.24 | -0.92 | 0.00 | -61.38 | 0.00 | 61.38 | 1,438.47 | 362.72 | 878.56 | 751.57 | 0.38 | -0.11 | 0.042 |
| 37.50 | -26.22 | -0.92 | 0.00 | -59.07 | 0.00 | 59.07 | 1,425.93 | 357.60 | 853.93 | 734.39 | 0.44 | -0.12 | 0.041 |
| 37.58 | -25.45 | -0.92 | 0.00 | -59.00 | 0.00 | 59.00 | 1,425.51 | 357.43 | 853.11 | 733.82 | 0.44 | -0.13 | 0.041 |
| 40.00 | -24.82 | -0.92 | 0.00 | -56.77 | 0.00 | 56.77 | 1,413.16 | 352.48 | 829.65 | 717.29 | 0.51 | -0.13 | 0.039 |
| 42.00 | -24.70 | -0.92 | 0.00 | -54.94 | 0.00 | 54.94 | 1,175.20 | 310.63 | 736.31 | 601.57 | 0.57 | -0.14 | 0.043 |
| 42.50 | -24.13 | -0.92 | 0.00 | -54.48 | 0.00 | 54.48 | 1,173.35 | 309.73 | 732.07 | 598.87 | 0.58 | -0.14 | 0.042 |
| 45.00 | -23.55 | -0.91 | 0.00 | -52.19 | 0.00 | 52.19 | 1,163.96 | 305.25 | 711.04 | 585.40 | 0.66 | -0.15 | 0.041 |
| 47.50 | -22.98 | -0.91 | 0.00 | -49.91 | 0.00 | 49.91 | 1,154.34 | 300.77 | 690.32 | 571.97 | 0.74 | -0.16 | 0.040 |
| 50.00 | -22.41 | -0.91 | 0.00 | -47.63 | 0.00 | 47.63 | 1,144.49 | 296.28 | 669.91 | 558.56 | 0.83 | -0.17 | 0.038 |
| 52.50 | -21.84 | -0.90 | 0.00 | -45.37 | 0.00 | 45.37 | 1,134.43 | 291.80 | 649.80 | 545.20 | 0.92 | -0.18 | 0.037 |
| 55.00 | -21.28 | -0.89 | 0.00 | -43.12 | 0.00 | 43.12 | 1,124.14 | 287.32 | 630.00 | 531.88 | 1.02 | -0.19 | 0.036 |
| 57.50 | -20.71 | -0.89 | 0.00 | -40.88 | 0.00 | 40.88 | 1,113.63 | 282.84 | 610.51 | 518.62 | 1.12 | -0.20 | 0.034 |
| 60.00 | -20.16 | -0.88 | 0.00 | -38.66 | 0.00 | 38.66 | 1,102.90 | 278.36 | 591.32 | 505.40 | 1.23 | -0.21 | 0.033 |
| 62.50 | -19.60 | -0.87 | 0.00 | -36.46 | 0.00 | 36.46 | 1,091.95 | 273.87 | 572.44 | 492.25 | 1.34 | -0.22 | 0.031 |
| 65.00 | -19.05 | -0.86 | 0.00 | -34.28 | 0.00 | 34.28 | 1,080.77 | 269.39 | 553.86 | 479.16 | 1.46 | -0.22 | 0.030 |
| 67.50 | -18.49 | -0.85 | 0.00 | -32.12 | 0.00 | 32.12 | 1,069.37 | 264.91 | 535.59 | 466.14 | 1.58 | -0.23 | 0.029 |
| 70.00 | -17.95 | -0.84 | 0.00 | -29.99 | 0.00 | 29.99 | 1,057.74 | 260.43 | 517.63 | 453.19 | 1.70 | -0.24 | 0.027 |
| 72.50 | -17.40 | -0.83 | 0.00 | -27.89 | 0.00 | 27.89 | 1,045.90 | 255.95 | 499.97 | 440.33 | 1.83 | -0.25 | 0.026 |
| 75.00 | -17.15 | -0.82 | 0.00 | -25.82 | 0.00 | 25.82 | 1,033.83 | 251.47 | 482.62 | 427.54 | 1.96 | -0.25 | 0.024 |
| 76.17 | -16.79 | -0.81 | 0.00 | -24.86 | 0.00 | 24.86 | 1,028.12 | 249.37 | 474.63 | 421.61 | 2.02 | -0.26 | 0.024 |
| 77.50 | -16.25 | -0.80 | 0.00 | -23.77 | 0.00 | 23.77 | 1,021.54 | 246.98 | 465.58 | 414.85 | 2.09 | -0.26 | 0.023 |
| 79.50 | -16.12 | -0.80 | 0.00 | -22.17 | 0.00 | 22.17 | 1,011.55 | 243.40 | 452.16 | 404.77 | 2.20 | -0.27 | 0.022 |
| 79.50 | -16.12 | -0.80 | 0.00 | -22.17 | 0.00 | 22.17 | 1,011.55 | 243.40 | 452.16 | 404.77 | 2.20 | -0.27 | 0.022 |
| 80.00 | -15.60 | -0.78 | 0.00 | -21.77 | 0.00 | 21.77 | 828.38 | 212.16 | 400.77 | 337.67 | 2.23 | -0.27 | 0.024 |
| 82.50 | -15.08 | -0.77 | 0.00 | -19.82 | 0.00 | 19.82 | 819.42 | 208.32 | 386.39 | 327.92 | 2.37 | -0.27 | 0.022 |
| 85.00 | -14.57 | -0.75 | 0.00 | -17.91 | 0.00 | 17.91 | 810.23 | 204.48 | 372.28 | 318.20 | 2.52 | -0.28 | 0.020 |
| 87.50 | -14.06 | -0.73 | 0.00 | -16.04 | 0.00 | 16.04 | 800.82 | 200.64 | 358.43 | 308.54 | 2.67 | -0.28 | 0.019 |
| 90.00 | -9.63 | -0.56 | 0.00 | -14.21 | 0.00 | 14.21 | 791.19 | 196.80 | 344.84 | 298.94 | 2.82 | -0.29 | 0.016 |
| 92.50 | -9.18 | -0.55 | 0.00 | -12.80 | 0.00 | 12.80 | 781.34 | 192.96 | 331.51 | 289.40 | 2.97 | -0.29 | 0.014 |
| 95.00 | -8.75 | -0.53 | 0.00 | -11.44 | 0.00 | 11.44 | 771.27 | 189.11 | 318.45 | 279.92 | 3.12 | -0.30 | 0.013 |
| 97.44 | -8.75 | -0.53 | 0.00 | -10.15 | 0.00 | 10.15 | 761.23 | 185.37 | 305.96 | 270.75 | 3.28 | -0.30 | 0.012 |

© 2007 - 2020 by ATC IP LLC. All rights reserved.


| | | | | | | | | | | | | | |
|---|---|---|---|---|---|---|---|---|---|---|---|---|---|
| 97.44 | -8.75 | -0.53 | 0.00 | -10.15 | 0.00 | 10.15 | 761.23 | 185.37 | 305.96 | 270.75 | 3.28 | -0.30 | 0.049 |
| 97.50 | -8.51 | -0.52 | 0.00 | -10.12 | 0.00 | 10.12 | 760.97 | 185.27 | 305.65 | 270.51 | 3.28 | -0.30 | 0.049 |
| 100.00 | -8.21 | -0.51 | 0.00 | -8.82 | 0.00 | 8.82 | 750.45 | 181.43 | 293.11 | 261.18 | 3.44 | -0.32 | 0.045 |
| 102.50 | -7.99 | -0.50 | 0.00 | -7.56 | 0.00 | 7.56 | 739.70 | 177.59 | 280.83 | 251.93 | 3.62 | -0.33 | 0.041 |
| 105.00 | -7.78 | -0.49 | 0.00 | -6.31 | 0.00 | 6.31 | 728.74 | 173.75 | 268.82 | 242.77 | 3.79 | -0.35 | 0.037 |
| 107.50 | -7.57 | -0.48 | 0.00 | -5.09 | 0.00 | 5.09 | 713.61 | 169.91 | 257.07 | 232.42 | 3.98 | -0.36 | 0.033 |
| 110.00 | -6.25 | -0.41 | 0.00 | -3.89 | 0.00 | 3.89 | 697.47 | 166.07 | 245.58 | 221.97 | 4.17 | -0.37 | 0.027 |
| 112.50 | -6.06 | -0.40 | 0.00 | -2.88 | 0.00 | 2.88 | 681.34 | 162.22 | 234.35 | 211.76 | 4.36 | -0.38 | 0.022 |
| 115.00 | -5.87 | -0.38 | 0.00 | -1.89 | 0.00 | 1.89 | 665.20 | 158.38 | 223.39 | 201.79 | 4.56 | -0.38 | 0.018 |
| 117.50 | -5.68 | -0.37 | 0.00 | -0.93 | 0.00 | 0.93 | 649.07 | 154.54 | 212.69 | 192.06 | 4.77 | -0.39 | 0.014 |
| 120.00 | 0.00 | -0.33 | 0.00 | 0.00 | 0.00 | 0.00 | 632.94 | 150.70 | 202.25 | 182.57 | 4.97 | -0.39 | 0.000 |

 © 2007 - 2020 by ATC IP LLC. All rights reserved.


**Load Case 0.9D - 1.0Ev + 1.0Eh** **Seismic (Reduced DL)**

**Calculated Forces**

| Seg Elev (ft) | Pu FY (-) (kips) | Vu FX (-) (kips) | Tu MY (ft-kips) | Mu MZ (ft-kips) | Mu MX (ft-kips) | Resultant Moment (ft-kips) | phi Pn (kips) | phi Vn (kips) | phi Tn (ft-kips) | phi Mn (ft-kips) | Total Deflect (in) | Rotation (deg) | Ratio |
|---|---|---|---|---|---|---|---|---|---|---|---|---|---|
| 0.00 | -24.90 | -0.89 | 0.00 | -91.16 | 0.00 | 91.16 | 1,590.66 | 434.43 | 1,260.13 | 996.98 | 0.00 | 0.00 | 0.033 |
| 2.50 | -24.39 | -0.89 | 0.00 | -88.94 | 0.00 | 88.94 | 1,581.24 | 429.31 | 1,230.60 | 979.29 | 0.00 | -0.01 | 0.032 |
| 5.00 | -23.86 | -0.89 | 0.00 | -86.72 | 0.00 | 86.72 | 1,571.59 | 424.18 | 1,201.42 | 961.61 | 0.01 | -0.01 | 0.032 |
| 7.50 | -23.27 | -0.89 | 0.00 | -84.49 | 0.00 | 84.49 | 1,561.72 | 419.06 | 1,172.59 | 943.94 | 0.02 | -0.02 | 0.031 |
| 10.00 | -22.68 | -0.90 | 0.00 | -82.25 | 0.00 | 82.25 | 1,551.63 | 413.94 | 1,144.11 | 926.28 | 0.03 | -0.03 | 0.030 |
| 12.50 | -22.10 | -0.90 | 0.00 | -80.01 | 0.00 | 80.01 | 1,541.32 | 408.82 | 1,115.98 | 908.64 | 0.04 | -0.03 | 0.030 |
| 15.00 | -21.98 | -0.90 | 0.00 | -77.77 | 0.00 | 77.77 | 1,530.78 | 403.70 | 1,088.20 | 891.03 | 0.06 | -0.04 | 0.029 |
| 15.48 | -21.63 | -0.90 | 0.00 | -77.34 | 0.00 | 77.34 | 1,528.74 | 402.71 | 1,082.91 | 887.65 | 0.06 | -0.04 | 0.029 |
| 15.48 | -21.63 | -0.90 | 0.00 | -77.34 | 0.00 | 77.34 | 1,528.74 | 402.71 | 1,082.91 | 887.65 | 0.06 | -0.04 | 0.045 |
| 17.50 | -21.19 | -0.90 | 0.00 | -75.52 | 0.00 | 75.52 | 1,520.02 | 398.57 | 1,060.77 | 873.44 | 0.08 | -0.04 | 0.045 |
| 20.00 | -20.76 | -0.90 | 0.00 | -73.27 | 0.00 | 73.27 | 1,509.04 | 393.45 | 1,033.69 | 855.89 | 0.11 | -0.05 | 0.044 |
| 22.50 | -20.32 | -0.90 | 0.00 | -71.01 | 0.00 | 71.01 | 1,497.83 | 388.33 | 1,006.96 | 838.37 | 0.14 | -0.06 | 0.043 |
| 25.00 | -19.89 | -0.91 | 0.00 | -68.75 | 0.00 | 68.75 | 1,486.41 | 383.21 | 980.58 | 820.91 | 0.17 | -0.07 | 0.042 |
| 27.50 | -19.46 | -0.91 | 0.00 | -66.49 | 0.00 | 66.49 | 1,474.76 | 378.09 | 954.55 | 803.49 | 0.22 | -0.08 | 0.041 |
| 30.00 | -19.04 | -0.91 | 0.00 | -64.22 | 0.00 | 64.22 | 1,462.88 | 372.96 | 928.87 | 786.12 | 0.26 | -0.09 | 0.040 |
| 32.50 | -18.61 | -0.91 | 0.00 | -61.96 | 0.00 | 61.96 | 1,450.79 | 367.84 | 903.54 | 768.81 | 0.31 | -0.10 | 0.039 |
| 35.00 | -18.19 | -0.90 | 0.00 | -59.69 | 0.00 | 59.69 | 1,438.47 | 362.72 | 878.56 | 751.57 | 0.37 | -0.11 | 0.038 |
| 37.50 | -18.17 | -0.91 | 0.00 | -57.43 | 0.00 | 57.43 | 1,425.93 | 357.60 | 853.93 | 734.39 | 0.43 | -0.12 | 0.037 |
| 37.58 | -17.64 | -0.90 | 0.00 | -57.36 | 0.00 | 57.36 | 1,425.51 | 357.43 | 853.11 | 733.82 | 0.43 | -0.12 | 0.037 |
| 40.00 | -17.20 | -0.90 | 0.00 | -55.18 | 0.00 | 55.18 | 1,413.16 | 352.48 | 829.65 | 717.29 | 0.50 | -0.13 | 0.035 |
| 42.00 | -17.12 | -0.90 | 0.00 | -53.38 | 0.00 | 53.38 | 1,175.20 | 310.63 | 736.31 | 601.57 | 0.55 | -0.14 | 0.039 |
| 42.50 | -16.72 | -0.90 | 0.00 | -52.93 | 0.00 | 52.93 | 1,173.35 | 309.73 | 732.07 | 598.87 | 0.57 | -0.14 | 0.038 |
| 45.00 | -16.32 | -0.89 | 0.00 | -50.69 | 0.00 | 50.69 | 1,163.96 | 305.25 | 711.04 | 585.40 | 0.64 | -0.15 | 0.037 |
| 47.50 | -15.93 | -0.89 | 0.00 | -48.46 | 0.00 | 48.46 | 1,154.34 | 300.77 | 690.32 | 571.97 | 0.72 | -0.16 | 0.036 |
| 50.00 | -15.53 | -0.88 | 0.00 | -46.24 | 0.00 | 46.24 | 1,144.49 | 296.28 | 669.91 | 558.56 | 0.81 | -0.17 | 0.035 |
| 52.50 | -15.14 | -0.88 | 0.00 | -44.03 | 0.00 | 44.03 | 1,134.43 | 291.80 | 649.80 | 545.20 | 0.90 | -0.18 | 0.033 |
| 55.00 | -14.75 | -0.87 | 0.00 | -41.84 | 0.00 | 41.84 | 1,124.14 | 287.32 | 630.00 | 531.88 | 1.00 | -0.19 | 0.032 |
| 57.50 | -14.36 | -0.86 | 0.00 | -39.66 | 0.00 | 39.66 | 1,113.63 | 282.84 | 610.51 | 518.62 | 1.09 | -0.19 | 0.031 |
| 60.00 | -13.97 | -0.86 | 0.00 | -37.50 | 0.00 | 37.50 | 1,102.90 | 278.36 | 591.32 | 505.40 | 1.20 | -0.20 | 0.030 |
| 62.50 | -13.58 | -0.85 | 0.00 | -35.36 | 0.00 | 35.36 | 1,091.95 | 273.87 | 572.44 | 492.25 | 1.31 | -0.21 | 0.028 |
| 65.00 | -13.20 | -0.84 | 0.00 | -33.24 | 0.00 | 33.24 | 1,080.77 | 269.39 | 553.86 | 479.16 | 1.42 | -0.22 | 0.027 |
| 67.50 | -12.82 | -0.83 | 0.00 | -31.15 | 0.00 | 31.15 | 1,069.37 | 264.91 | 535.59 | 466.14 | 1.54 | -0.23 | 0.026 |
| 70.00 | -12.44 | -0.82 | 0.00 | -29.08 | 0.00 | 29.08 | 1,057.74 | 260.43 | 517.63 | 453.19 | 1.66 | -0.23 | 0.024 |
| 72.50 | -12.06 | -0.80 | 0.00 | -27.04 | 0.00 | 27.04 | 1,045.90 | 255.95 | 499.97 | 440.33 | 1.78 | -0.24 | 0.023 |
| 75.00 | -11.88 | -0.80 | 0.00 | -25.02 | 0.00 | 25.02 | 1,033.83 | 251.47 | 482.62 | 427.54 | 1.91 | -0.25 | 0.022 |
| 76.17 | -11.64 | -0.79 | 0.00 | -24.09 | 0.00 | 24.09 | 1,028.12 | 249.37 | 474.63 | 421.61 | 1.97 | -0.25 | 0.021 |
| 77.50 | -11.26 | -0.78 | 0.00 | -23.04 | 0.00 | 23.04 | 1,021.54 | 246.98 | 465.58 | 414.85 | 2.04 | -0.25 | 0.020 |
| 79.50 | -11.17 | -0.77 | 0.00 | -21.49 | 0.00 | 21.49 | 1,011.55 | 243.40 | 452.16 | 404.77 | 2.15 | -0.26 | 0.019 |
| 79.50 | -11.17 | -0.77 | 0.00 | -21.49 | 0.00 | 21.49 | 1,011.55 | 243.40 | 452.16 | 404.77 | 2.15 | -0.26 | 0.019 |
| 80.00 | -10.81 | -0.76 | 0.00 | -21.10 | 0.00 | 21.10 | 828.38 | 212.16 | 400.77 | 337.67 | 2.17 | -0.26 | 0.021 |
| 82.50 | -10.45 | -0.74 | 0.00 | -19.21 | 0.00 | 19.21 | 819.42 | 208.32 | 386.39 | 327.92 | 2.31 | -0.27 | 0.019 |
| 85.00 | -10.10 | -0.73 | 0.00 | -17.35 | 0.00 | 17.35 | 810.23 | 204.48 | 372.28 | 318.20 | 2.45 | -0.27 | 0.018 |
| 87.50 | -9.74 | -0.71 | 0.00 | -15.54 | 0.00 | 15.54 | 800.82 | 200.64 | 358.43 | 308.54 | 2.60 | -0.28 | 0.017 |
| 90.00 | -6.67 | -0.55 | 0.00 | -13.77 | 0.00 | 13.77 | 791.19 | 196.80 | 344.84 | 298.94 | 2.74 | -0.28 | 0.014 |
| 92.50 | -6.37 | -0.53 | 0.00 | -12.40 | 0.00 | 12.40 | 781.34 | 192.96 | 331.51 | 289.40 | 2.89 | -0.29 | 0.013 |
| 95.00 | -6.07 | -0.51 | 0.00 | -11.08 | 0.00 | 11.08 | 771.27 | 189.11 | 318.45 | 279.92 | 3.04 | -0.29 | 0.012 |
| 97.44 | -6.06 | -0.51 | 0.00 | -9.83 | 0.00 | 9.83 | 761.23 | 185.37 | 305.96 | 270.75 | 3.19 | -0.29 | 0.011 |

© 2007 - 2020 by ATC IP LLC. All rights reserved.


| | | | | | | | | | | | | | |
|---|---|---|---|---|---|---|---|---|---|---|---|---|---|
| 97.44 | -6.06 | -0.51 | 0.00 | -9.83 | 0.00 | 9.83 | 761.23 | 185.37 | 305.96 | 270.75 | 3.19 | -0.29 | 0.044 |
| 97.50 | -5.90 | -0.50 | 0.00 | -9.80 | 0.00 | 9.80 | 760.97 | 185.27 | 305.65 | 270.51 | 3.19 | -0.29 | 0.044 |
| 100.00 | -5.69 | -0.49 | 0.00 | -8.54 | 0.00 | 8.54 | 750.45 | 181.43 | 293.11 | 261.18 | 3.35 | -0.31 | 0.040 |
| 102.50 | -5.54 | -0.48 | 0.00 | -7.31 | 0.00 | 7.31 | 739.70 | 177.59 | 280.83 | 251.93 | 3.52 | -0.32 | 0.037 |
| 105.00 | -5.39 | -0.47 | 0.00 | -6.10 | 0.00 | 6.10 | 728.74 | 173.75 | 268.82 | 242.77 | 3.69 | -0.34 | 0.033 |
| 107.50 | -5.25 | -0.46 | 0.00 | -4.92 | 0.00 | 4.92 | 713.61 | 169.91 | 257.07 | 232.42 | 3.87 | -0.35 | 0.029 |
| 110.00 | -4.33 | -0.39 | 0.00 | -3.76 | 0.00 | 3.76 | 697.47 | 166.07 | 245.58 | 221.97 | 4.06 | -0.36 | 0.023 |
| 112.50 | -4.20 | -0.38 | 0.00 | -2.78 | 0.00 | 2.78 | 681.34 | 162.22 | 234.35 | 211.76 | 4.25 | -0.37 | 0.019 |
| 115.00 | -4.07 | -0.37 | 0.00 | -1.83 | 0.00 | 1.83 | 665.20 | 158.38 | 223.39 | 201.79 | 4.44 | -0.37 | 0.015 |
| 117.50 | -3.94 | -0.36 | 0.00 | -0.90 | 0.00 | 0.90 | 649.07 | 154.54 | 212.69 | 192.06 | 4.64 | -0.38 | 0.011 |
| 120.00 | 0.00 | -0.33 | 0.00 | 0.00 | 0.00 | 0.00 | 632.94 | 150.70 | 202.25 | 182.57 | 4.83 | -0.38 | 0.000 |

© 2007 - 2020 by ATC IP LLC. All rights reserved.


## Analysis Summary

| Load Case | Reactions Shear FX (kips) | Shear FZ (kips) | Axial FY (kips) | Moment MX (ft-kips) | Moment MY (ft-kips) | Moment MZ (ft-kips) | Max Usage Elev (ft) | Interaction Ratio |
|---|---|---|---|---|---|---|---|---|
| 1.2D + 1.0W | 20.67 | 0.00 | 35.46 | 0.00 | 0.00 | 1836.61 | 15.48 | 0.76 |
| 0.9D + 1.0W | 20.66 | 0.00 | 26.59 | 0.00 | 0.00 | 1806.05 | 15.48 | 0.74 |
| 1.2D + 1.0Di + 1.0Wi | 4.48 | 0.00 | 58.49 | 0.00 | 0.00 | 454.00 | 97.44 | 0.21 |
| 1.2D + 1.0Ev + 1.0Eh | 0.89 | 0.00 | 35.93 | 0.00 | 0.00 | 93.14 | 15.48 | 0.05 |
| 0.9D - 1.0Ev + 1.0Eh | 0.89 | 0.00 | 24.90 | 0.00 | 0.00 | 91.16 | 15.48 | 0.05 |
| 1.0D + 1.0W | 4.86 | 0.00 | 29.57 | 0.00 | 0.00 | 428.15 | 15.48 | 0.18 |

© 2007 - 2020 by ATC IP LLC. All rights reserved.


## Additional Steel Summary

| Elev From (ft) | Elev To (ft) | Member | Intermediate Connectors VQ/I (lb/in) | Shear Applied (kips) | Shear phiVn (kips) | Ratio | Max Member Pu (kip) | phiPn (kip) | Ratio |
|---|---|---|---|---|---|---|---|---|---|
| 0.00 | 15.48 | (4) SOL-#20 All Thread Bar | 199.5 | 6.0 | 16.8 | 0.356 | 207.4 | 330.5 | 0.627 |
| 0.00 | 79.50 | (4) SOL-#20 All Thread Bar | 388.6 | 11.7 | 16.8 | 0.694 | 294.0 | 330.5 | 0.890 |
| 79.50 | 97.44 | (4) SOL-#20 All Thread Bar | 400.0 | 12.0 | 16.8 | 0.714 | 132.2 | 330.5 | 0.400 |

| Elev From (ft) | Elev To (ft) | Member | Upper Termination Connectors MQ/I (kips) | phiVn (kips) | Num Reqd | Num Actual | Ratio | Lower Termination Connectors MQ/I (kips) | phiVn (kips) | Num Reqd | Num Actual | Ratio |
|---|---|---|---|---|---|---|---|---|---|---|---|---|
| 0.00 | 15.48 | (4) SOL-#20 All Thread Bar | 185.8 | 12.0 | 16 | 20 | 0.774 | 0.0 | 12.0 | 0 | 0 | 0.000 |
| 0.00 | 79.50 | (4) SOL-#20 All Thread Bar | 0.0 | 12.0 | 0 | 12 | 0.000 | 0.0 | 12.0 | 0 | 0 | 0.000 |
| 79.50 | 97.44 | (4) SOL-#20 All Thread Bar | 70.4 | 12.0 | 6 | 12 | 0.489 | 0.0 | 12.0 | 0 | 0 | 0.000 |

**Site Name:** BRST-Bristol, CT
**Site Number:** 302500
**Tower Type:** MP
**Design Loads (Factored) - Analysis per TIA-222-H Standards**

# Monolithic Mat & Pier Foundation Analysis

| Foundation Analysis Parameters | | |
|---|---|---|
| Design / Analysis / Mapping: | Mapping | - |
| Compression/Leg: | 35.5 | k |
| Uplift/Leg: | 0.0 | k |
| Total Shear: | 20.7 | k |
| Moment: | 1,836.6 | k-ft |
| Tower + Appurtenance Weight: | 35.5 | k |
| Depth to Base of Foundation (l + t - h): | 6.5 | ft |
| Diameter of Pier (d): | 6 | ft |
| Length of Pier (l): | 6.7 | ft |
| Height of Pier above Ground (h): | 2.7 | ft |
| Width of Pad (W): | 17.5 | ft |
| Length of Pad (L): | 18.4 | ft |
| Thickness of Pad (t): | 2.5 | ft |
| Tower Leg Center to Center: | 0 | ft |
| Number of Tower Legs: | 1 | - |
| Tower Center from Mat Center: | 0 | ft |
| Depth Below Ground Surface to Water Table: | 99 | ft |
| Unit Weight of Concrete: | 150 | pcf |
| Unit Weight of Soil Above Water Table: | 115 | pcf |
| Unit Weight of Water: | 62.4 | pcf |
| Unit Weight of Soil Below Water Table: | 52.6 | pcf |
| Friction Angle of Uplift: | 15 | ° |
| Coefficient of Shear Friction: | 0.50 | - |
| Ultimate Compressive Bearing Pressure: | 32,000 | psf |
| Ultimate Passive Pressure on Pad Face: | 2,000 | psf |
| $f_{\text{Soil and Concrete Weight}}$: | 0.9 | - |
| $f_{\text{Soil}}$: | 0.75 | - |

| Overturning Moment Usage | | |
|---|---|---|
| Design OTM: | 2026.8 | k-ft |
| OTM Resistance: | 2675.2 | k-ft |
| Design OTM / OTM Resistance: | 76% | Pass |

| Soil Bearing Pressure Usage | | |
|---|---|---|
| Net Bearing Pressure: | 8089 | psf |
| Factored Nominal Bearing Pressure: | 24000 | psf |
| Factored Nominal (Net) Bearing Pressure: | 34% | Pass |
| Load Direction Controling Design Bearing Pressure: | *Diagonal to Pad Edge* | |

| Sliding Factor of Safety | | |
|---|---|---|
| Ultimate Friction Resistance: | 156.9 | k |
| Ultimate Passive Pressure Resistance: | 69.0 | k |
| Total Factored Sliding Resistance: | 169.4 | k |
| Sliding Design / Sliding Resistance: | 12% | Pass |

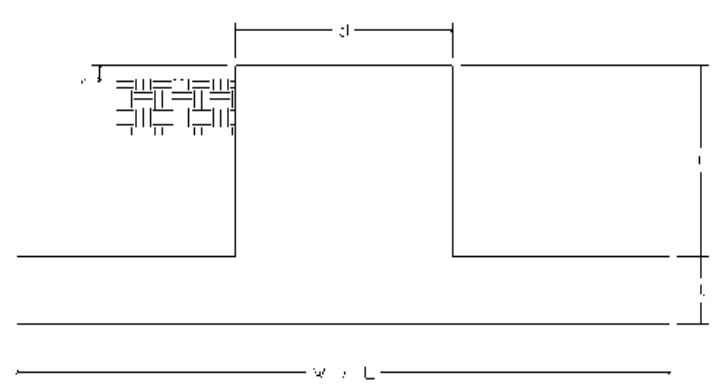

# Base Plate & Anchor Rod Analysis

| Pole Dimensions | | |
|---|---|---|
| Number of Sides | 12 | - |
| Diameter | 31 | in |
| Thickness | 0.25 | in |
| Orientation Offset | 0 | ° |

| Base Reactions | | |
|---|---|---|
| Moment, Mu | 1836.6 | k-ft |
| Axial, Pu | 35.5 | k |
| Shear, Vu | 20.7 | k |
| Neutral Axis | 270 | ° |

| Report Capacities | | |
|---|---|---|
| Component | Capacity | Result |
| Base Plate | 12% | Pass |
| Anchor Rods | 37% | Pass |
| Dwyidag | 53% | Pass |

| Base Plate | | |
|---|---|---|
| Shape | Round | - |
| Diameter, ø | 44.59 | in |
| Thickness | 2 1/8 | in |
| Grade | A633 Gr. E | |
| Yield Strength, Fy | 60 | ksi |
| Tensile Strength, Fu | 80 | ksi |
| Clip | N/A | in |
| Orientation Offset | 0 | ° |
| Anchor Rod Detail | c | η=0.55 |
| Clear Distance | N/A | in |
| Applied Moment, Mu | 224.1 | k |
| Bending Stress, ϕMn | 1894.4 | k |

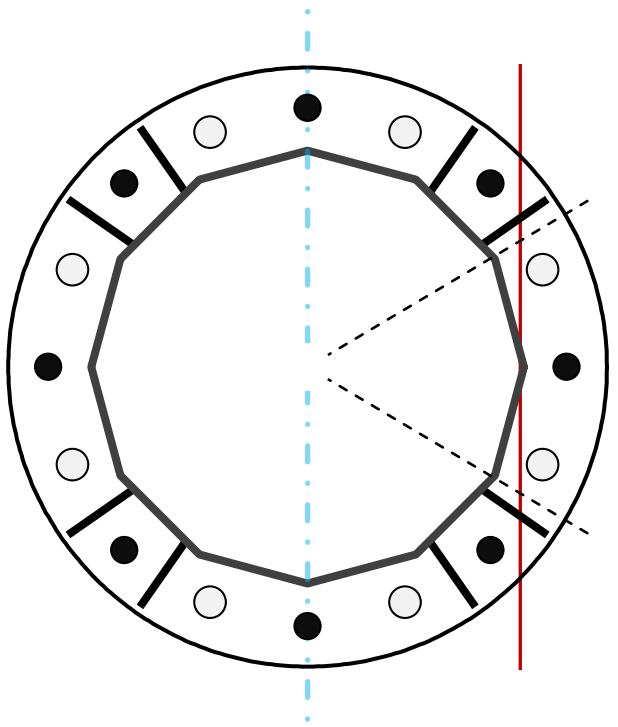

| Dywidag Reinforcement | | |
|---|---|---|
| Quantity | 8 | - |
| Bar Size | #20 | in |
| Diameter, ø | 2.5 | in |
| Bracket Type | Angle | - |
| Circle | 37.88 | in |
| Orientation Offset | 22.5 | ° |
| Applied Force, Pu | 194.7 | k |
| Dywidag Bar, ϕPn | 368.2 | k |

| Original Anchor Rods | | |
|---|---|---|
| Arrangement | Radial | - |
| Quantity | 8 | - |
| Diameter, ø | 2 1/4 | in |
| Bolt Circle | 38.59 | in |
| Grade | A615-75 | |
| Yield Strength, Fy | 75 | ksi |
| Tensile Strength, Fu | 100 | ksi |
| Spacing | 15.2 | in |
| Orientation Offset | 0 | ° |
| Applied Force, Pu | 88.0 | k |
| Anchor Rods, ϕPn | 243.6 | k |

| Stiffeners | | |
|---|---|---|
| Arrangement | Radial | - |
| Quantity | 8 | - |
| Height | 6 | in |
| Width | 6 | in |
| Effective Width | 6.000 | in |
| Thickness | 5/8 | in |
| Effective Thickness | 0.625 | in |
| Notch | 0.75 | in |
| Flat Edge | 0.5 | in |
| Grade | A572-50 | - |
| Yield Strength, Fy | 50 | ksi |
| Tensile Strength, Fu | 65 | ksi |
| Horizontal Weld | Fillet | |
| Horizontal Fillet Size | 3/16 | in |
| Bevel Depth | 0 | in |
| Vertical Weld | Fillet | |
| Vertical Fillet Size | 3/16 | in |
| Weld Strength | 70 | ksi |
| Electrode Coefficient | 1 | - |
| Orientation Offset | 0 | ° |
| Vertical Weld, ϕRn | 41.7 | k |
| Horz. Weld, ϕRn | 53.2 | k |
| Ten. Capacity, ϕTn | 144.0 | k |
| Comp. Capacity, ϕPn | 1861.9 | k |

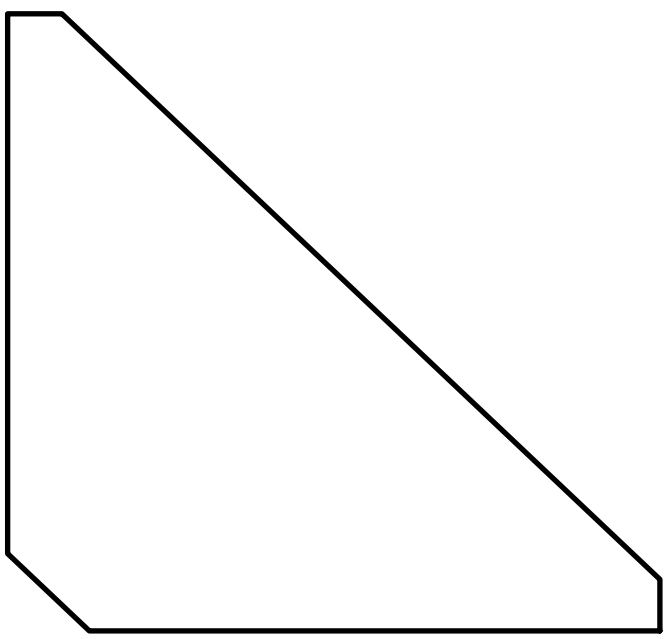

# Calculations for Monopole Base Plate & Anchor Rod Analysis

**Reaction Distribution**

| Reaction | Shear Vu | Moment Mu | Factor |
|---|---|---|---|
| - | k | k-ft | - |
| Base Forces | 20.7 | 524.6 | 0.29 |
| Anchor Rod Forces | 20.7 | 524.6 | 0.29 |
| Additional Bolt (Grp1) Forces | 0.0 | 0.0 | 0.00 |
| Additional Bolt (Grp2) Forces | 0.0 | 0.0 | 0.00 |
| Dywidag Forces | 0.0 | 1312.0 | 0.71 |
| Stiffener Forces | 12.2 | 310.3 | 0.17 |

**Geometric Properties**

| Section | Gross Area | Net Area | Individual Inertia | Threads per Inch | Moment of Inertia |
|---|---|---|---|---|---|
| - | $in^2$ | $in^2$ | $in^4$ | # | $in^4$ |
| Pole | 23.8761 | 1.9897 | 0.0416 | | 2822.54 |
| Bolt | 3.9761 | 3.2477 | 0.8393 | 4.5 | 4266.14 |
| Bolt1 | 0.0000 | 0.0000 | 0.0000 | 0 | 0.00 |
| Bolt2 | 0.0000 | 0.0000 | 0.0000 | 0 | 0.00 |
| Dywidag | 4.9087 | 4.9087 | 1.9175 | | 7058.86 |
| Stiffener | 3.2813 | 2.9531 | 45.0000 | | 4088.32 |

| Base Plate | | |
|---|---|---|
| Shape | Round | - |
| Diameter, D | 44.59 | in |
| Thickness, t | 2.125 | in |
| Yield Strength, Fy | 60 | ksi |
| Tensile Strength, Fu | 80 | ksi |
| Base Plate Chord | 32.051 | in |
| Detail Type | c | - |
| Detail Factor | 0.55 | - |
| Clear Distance | N/A | - |

| External Base Plate | | |
|---|---|---|
| Chord Length AA | 26.826 | in |
| Additional AA | 4.250 | in |
| Section Modulus, Z | 35.082 | $in^3$ |
| Applied Moment, Mu | 224.1 | k-ft |
| Bending Capacity, ϕMn | 1894.4 | k-ft |
| Capacity, Mu/ϕMn | 0.118 | OK |
| | | |
| Chord Length AB | 25.496 | in |
| Additional AB | 4.250 | in |
| Section Modulus, Z | 33.581 | $in^3$ |
| Applied Moment, Mu | 175.7 | k-ft |
| Bending Capacity, ϕMn | 1813.4 | k-ft |
| Capacity, Mu/ϕMn | 0.097 | OK |
| | | |
| Bend Line Length | 22.428 | in |
| Additional Bend Line | 24.091 | in |
| Section Modulus, Z | 52.515 | $in^3$ |
| Applied Moment, Mu | 224.1 | k-ft |
| Bending Capacity, ϕMn | 2835.8 | k-ft |
| Capacity, Mu/ϕMn | 0.079 | OK |

| Internal Base Plate | | |
|---|---|---|
| Arc Length | 0.000 | in |
| Section Modulus, Z | 0.000 | $in^3$ |
| Moment Arm | 0.000 | in |
| Applied Moment, Mu | 0.0 | k-ft |
| Bending Capacity, ϕMn | 0.0 | k-ft |
| Capacity, Mu/ϕMn | | |

| Anchor Rods | | |
|---|---|---|
| Anchor Rod Quantity, N | 8 | - |
| Rod Diameter, d | 2.25 | in |
| Bolt Circle, BC | 38.59 | in |
| Yield Strength, Fy | 75 | ksi |
| Tensile Strength, Fu | 100 | ksi |
| Applied Axial, Pu | 88.0 | k |
| Applied Shear, Vu | 0.8 | k |
| Compressive Capacity, ϕPn | 243.6 | k |
| Tensile Capacity, ϕRnt | 0.361 | OK |
| Interaction Capacity | 0.367 | OK |

| Dywidag Reinforcement | | |
|---|---|---|
| Dywidag Quantity, N | 8 | - |
| Dywidag Diameter, d | 2.5 | in |
| Bolt Circle, BC | 37.88 | in |
| Yield Strength, Fy | 80 | ksi |
| Tensile Strength, Fu | 100 | ksi |
| Applied Axial, Pu | 194.7 | k |
| Compressive Capacity, ϕPn | 368.2 | k |
| Capacity, Pu/ϕPn | 0.529 | OK |

| Base Plate Stiffeners | | |
|---|---|---|
| Applied Axial Force, Pu | 41.5 | k |
| Applied Horizontal Force, Vu | 0.76 | k |

| Vertical Weld | | |
|---|---|---|
| Vert.-to-Stiffener $a=e_x/l$ | 0.333 | - |
| Spacing Ratio, k | 0.104 | - |
| Weld Coefficient, C | 3.090 | - |
| Compressive Capacity, ϕPn | 41.7 | k |
| Vert.-to-Plate $a=e_x/l$ | 0.333 | - |
| Spacing Ratio, k | 0.104 | - |
| Weld Coefficient, C | 2.970 | - |
| Shear Capacity, ϕVn | 40.1 | k |
| $P_u/\phi_P P_n + V_u/\phi_V V_n$ | 1.014 | OK |

| Horizontal Weld | | |
|---|---|---|
| Horz.-to-Stiffener $a=e_x/l$ | 0.167 | - |
| Spacing Ratio, k | 0.104 | - |
| Weld Coefficient, C | 3.940 | - |
| Effective Fillet | 0.188 | in |
| Compressive Capacity, ϕPn | 53.2 | k |
| Horz.-to-Pole $a=e_x/l$ | 0.167 | - |
| Spacing Ratio, k | 0.104 | - |
| Weld Coefficient, C | 3.660 | - |
| Shear Capacity, ϕVn | 49.4 | k |
| $P_u/\phi_P P_n + V_u/\phi_V V_n$ | 0.796 | OK |

| Plate Tension | | |
|---|---|---|
| Gross Cross Section | 3.281 | $in^2$ |
| Net Cross Section | 2.953 | $in^2$ |
| Tensile Capacity, ϕTn | 144.0 | k |
| Capacity, Tu/ϕTn | 0.144 | OK |

| Plate Compression | | |
|---|---|---|
| Radius of Gyration | 0.180 | $in^3$ |
| kl/r | 19.95 | - |
| $4.71\sqrt{(E/Fy)}$ | 113.43 | - |
| Buckling Stress(Fe) | 718.9 | - |
| Crit. Buckling Stress(Fcr) | 630.5 | ksi |
| Compressive Capacity, ϕPn | 1861.9 | k |
| Capacity, Pu/ϕPn | 0.011 | OK |