10 Industrial Ave,
Suite 3
Mahwah NJ 07430

Phone: 201.684.0055
Fax: 201.684.0066

June 26, 2020

Members of the Siting Council
Connecticut Siting Council
Ten Franklin Square
New Britain, CT 06051

RE: Notice of Exempt Modification
130 Vernon Road, Bolton, CT 06043
Latitude: 41.80264800
Longitude: -72.44121300
T-Mobile Site#: CT11180C – Anchor

Dear Ms. Bachman:

T-Mobile currently maintains six (6) antennas at the 130-foot level of the existing 150-foot lattice tower at 130 Vernon Road in Bolton, CT. The 150-foot lattice tower and property are owned by Mountaintop Enterprises Inc. T-Mobile now intends to add three (3) new 2500 MHz antennas. The new antennas will be installed at the same 130-foot level of the tower.

Planned Modifications:
Tower:

Remove
(4) 1-5/8" coax

Remove and Replace:
N/A

Install New:
(3) AIR 6449 B41 2500 MHz
(3) Ericsson Radio 4415
(3) Commscope CBC1923Q-43 Diplexers
(3) 1-5/8" Hybrid

Existing to Remain:
(3) AIR 32 1900/2100 MHz
(3) APXVARR24_43 600/700/1900/2100 MHz
(3) Radio 4449 B71
(3) Radio 4415
(3) 1-5/8" Hybrid

Ground:
Install New:
(1) 6160 Cabinet
(1) B160 Battery Cabinet

This tower facility was originally approved by the Town of Bolton on September 4, 2001. A copy of this approval is attached. This approval did not come with conditions.

Please accept this letter as notification pursuant to Regulations of Connecticut State Agencies§ 16- SOj-73, for construction that constitutes an exempt modification pursuant to R.C.S.A. § 16-50j-72(b)(2). In accordance with R.C.SA. § 16-SOj-73, a copy of this letter is being sent to First Selectman -Sandra Pierog, Elected Official, and Jim Rupert, Zoning Enforcement Officer for the Town of Bolton, as well as the owner.

The planned modifications to the facility fall squarely within those activities explicitly provided for in R.C.S;A. § 16-50j-72(b)(2).

1. The proposed modifications will not result in an increase in the height of the existing structure.

2. The proposed modifications will not require the extension of the site boundary.

3. The proposed modifications will not increase noise levels at the facility by six decibels or more, or to levels that exceed state and local criteria.

4. The operation of the replacement antennas will not increase radio frequency emissions at the facility to a level at or above the Federal Communications Commission safety standard.

5. The proposed modifications will not cause a change or alteration in the physical or environmental characteristics of the site.

6. The existing structure and its foundation can support the proposed loading.

For the foregoing reasons, T-Mobile respectfully submits that the proposed modifications to the above referenced telecommunications facility constitute an exempt modification under R.C.S.A. § 16-50j-72(b)(2).

Sincerely,

Kyle Richers
Transcend Wireless
Cell: 908-447-4716
Email: krichers@transcendwireless.com

Attachments
cc: Sandra Pierog – First Selectman of Town of Bolton
Jim Rupert– Zoning Enforcement Officer for Town of Bolton
Mountaintop Enterprises Inc. – Owner

Exhibit A

Original Facility Approval

TOWN OF BOLTON

222 Bolton Center Rd, Bolton, CT 06043

LAND USE DEPARTMENT PERMIT APPLICATION

15-21-9

PLEASE CONTACT THE LAND USE DEPARTMENT AT 649-8066 TO SCHEDULE INSPECTIONS OR FOR FINAL INSPECTION UPON COMPLETION TO ISSUE CERTIFICATE

1. PERMIT TYPE -- BUILDING ✓ ELECTRICAL____ PLUMBING____ HEATING____
2. ADDRESS OF WORK 130 Vernon Road ZONE____
3. PROPERTY OWNER Mountaintop Enterprises Inc.
   ADDRESS PO Box 9219, Bolton, CT 06043 TELEPHONE # 860 647 7772
4. APPLICANT Milton R. Hathaway
   ADDRESS PO Box 9219, Bolton, CT 06043 TELEPHONE # 860 647 7772

I hereby agree to conform to all the requirements of the Laws of the State of CT, the Ordinances of the Town of Bolton, all stipulations of this application, and to notify the Building Official of any alteration in the plans or specifications of the building for which this permit is asked. And agree that this building is to be located the proper distance from all street lines, side yard lines and required distances from all other zones and is located in a zone in which this building and its use is allowed. This permit expires one (1) year from date of approval.

Milton R Hathaway 8-31-01
APPLICANT DATE

Proof of Workers Compensation Coverage
I as owner or sole proprietor claim exemption and intend to not act as a general contractor or principal employer.____

Ronald Barbara 9/4/01 N/A
PERMIT APPROVED - DATE PLAN APPROVED - DATE
BUILDING OFFICIAL HEALTH DISTRICT/SANITARIAN

5. OTHER REQUIRED PERMIT APPLICATION(S) - TYPE Town of Bolton Zoning Permit
6. FLOODPLAIN: N ✓ Y____ DESCRIPTION____
7. FEE SCHEDULE

ESTIMATED VALUE OF ALL WORK $ 90,000

Estimated Value	Fee
$ 1 - 1000	$20
each additional $1000 or fraction thereof	$12

(standard fees)

----- [redacted]
----- DRIVEWAY PERMIT FEE: $30
----- RETURNABLE DRIVEWAY PERMIT BOND: $1,000.00

SEP - 4 2001

TOTAL PERMIT FEE $ 1,088.00

150'

Exhibit B

Property card

130 VERNON RD

Location	130 VERNON RD	**Mblu**	02/ / 3/ /
Owner	MOUNTAINTOP ENTERPRISES INC	**Assessment**	$344,420
		Appraisal	$683,000
PID	1982	**Building Count**	1

Current Value

Appraisal	
Valuation Year	**Total**
2018	$683,000

Assessment	
Valuation Year	**Total**
2018	$344,420

Owner of Record

Owner	MOUNTAINTOP ENTERPRISES INC	**Sale Price**	$0
Co-Owner		**Certificate**	
Address	PO BOX 9219 BOLTON, CT 06043	**Book & Page**	166/656
		Sale Date	10/01/2014
		Instrument	24

Ownership History

Ownership History					
Owner	**Sale Price**	**Certificate**	**Book & Page**	**Instrument**	**Sale Date**
MOUNTAINTOP ENTERPRISES INC	$0		166/656	24	10/01/2014
MOUNTAINTOP ENTERPRISES INC	$0		0051/0920		01/30/1979

Building Information

Building 1 : Section 1

Year Built: 1980
Living Area: 1,920
Building Percent Good: 76

Building Attributes	
Field	**Description**

STYLE	Equipment Garage
MODEL	Comm/Ind
Grade	D
Stories:	1.5
Occupancy	1.00
Exterior Wall 1	Board & Batten
Exterior Wall 2	
Roof Structure	Gable
Roof Cover	Metal
Interior Wall 1	Minimum
Interior Wall 2	
Interior Floor 1	Minimum
Interior Floor 2	
Heating Fuel	None
Heating Type	None
% Central Air	0
Frame Type	WOOD FRAME
Fin. Bsmt. Area	
Wall Height	8.00

Building Photo

(PhotoHandler.ashx?pid=1982&bid=1982)

Building Layout

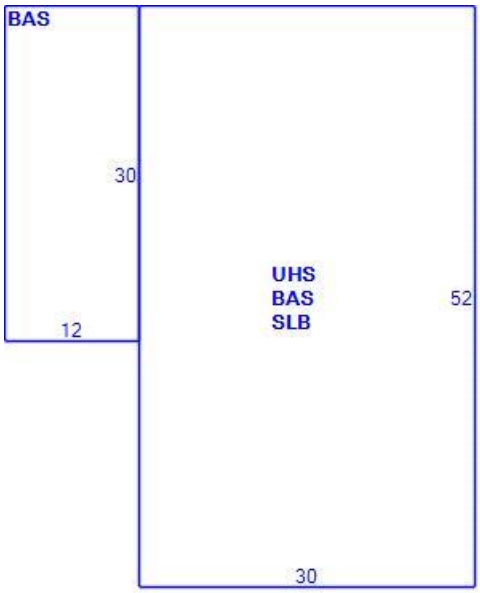

(ParcelSketch.ashx?pid=1982&bid=1982)

Building Sub-Areas (sq ft)			Legend
Code	**Description**	**Gross Area**	**Living Area**
BAS	First Floor	1,920	1,920
SLB	Slab	1,560	0
UHS	Unfinished Half Story	1,560	0
		5,040	1,920

Extra Features

Extra Features	Legend
No Data for Extra Features	

Land

Land Use

Zone R-3

Land Line Valuation

Size (Acres) 30.30
Depth
Assessed Value $297,220
Appraised Value $615,500

Outbuildings

Outbuildings					Legend
Code	**Description**	**Sub Code**	**Sub Description**	**Size**	**Bldg #**
SHD1	Shed	MS	Masonry	128.00 S.F.	1
SHD1	Shed	MS	Masonry	200.00 S.F.	1
BRN1	1 Story Barn	FR	Frame	4000.00 S.F.	1
CELL	Cell Tower			150.00 FEET	1
CELL	Cell Tower			200.00 FEET	1
SHD1	Shed	MS	Masonry	264.00 S.F.	1
SHD1	Shed	MS	Masonry	256.00 S.F.	1
SHD1	Shed	MS	Masonry	1144.00 S.F.	1

Valuation History

Appraisal	
Valuation Year	**Total**
2018	$683,000
2018	$683,000

Assessment	
Valuation Year	**Total**
2018	$344,420
2018	$344,420

(c) 2020 Vision Government Solutions, Inc. All rights reserved.

ArcGIS Web Map

N
W E
S

CRCOG CAPITOL REGION COUNCIL OF GOVERNMENTS
Working together for a better region.

CRCOG makes no claims and no warranties, expressed or implied, concerning the validity or accuracy of the GIS data presented on this map.

Scale
1:4,514
Created: 6/25/2020

Exhibit C

Construction Drawings

T-Mobile

WIRELESS COMMUNICATIONS FACILITY

BOLTON CT 1
SITE ID: CT11180C
130 VERNON RD
BOLTON, CT 06043

T-MOBILE RF CONFIGURATION

67D5997DB_2xAIR+1OP

GENERAL NOTES

1. ALL WORK SHALL BE IN ACCORDANCE WITH THE 2015 INTERNATIONAL BUILDING CODE AS MODIFIED BY THE 2018 CONNECTICUT SUPPLEMENT, INCLUDING THE TIA/EIA–222 REVISION "G" "STRUCTURAL STANDARDS FOR STEEL ANTENNA TOWERS AND SUPPORTING STRUCTURES." 2017 CONNECTICUT FIRE SAFETY CODE, NATIONAL ELECTRICAL CODE AND LOCAL CODES.
2. CONTRACTOR SHALL REVIEW ALL DRAWINGS AND SPECIFICATIONS IN THE CONTRACT DOCUMENT SET. CONTRACTOR SHALL COORDINATE ALL WORK SHOWN IN THE SET OF DRAWINGS. THE CONTRACTOR SHALL PROVIDE A COMPLETE SET OF DRAWINGS TO ALL SUBCONTRACTORS AND ALL RELATED PARTIES. THE SUBCONTRACTORS SHALL EXAMINE ALL THE DRAWINGS AND SPECIFICATIONS FOR THE INFORMATION THAT AFFECTS THEIR WORK.
3. CONTRACTOR SHALL PROVIDE A COMPLETE BUILD–OUT WITH ALL FINISHES, STRUCTURAL, MECHANICAL, AND ELECTRICAL COMPONENTS AND PROVIDE ALL ITEMS AS SHOWN OR INDICATED ON THE DRAWINGS OR IN THE WRITTEN SPECIFICATIONS.
4. CONTRACTOR SHALL FURNISH ALL MATERIAL, LABOR AND EQUIPMENT TO COMPLETE THE WORK AND FURNISH A COMPLETED JOB ALL IN ACCORDANCE WITH LOCAL AND STATE GOVERNING AUTHORITIES AND OTHER AUTHORITIES HAVING LAWFUL JURISDICTION OVER THE WORK.
5. CONTRACTOR SHALL SECURE AND PAY FOR ALL PERMITS AND ALL INSPECTIONS REQUIRED AND SHALL ALSO PAY FEES REQUIRED FOR THE GENERAL CONSTRUCTON, PLUMBING, ELECTRICAL, AND HVAC. PERMITS SHALL BE PAID FOR BY THE RESPECTIVE SUBCONTRACTORS.
6. CONTRACTOR SHALL MAINTAIN A CURRENT SET OF DRAWINGS AND SPECIFICATIONS ON SITE AT ALL TIMES AND INSURE DISTRIBUTION AND SPECIFICATIONS ON SITE AT ALL TIMES AND INSURE DISTRIBUTION OF NEW DRAWINGS TO SUBCONTRACTORS AND OTHER RELEVANT PARTIES AS SOON AS THEY ARE MADE AVAILABLE. ALL OLD DRAWINGS SHALL BE MARKED VOID AND REMOVED FROM THE CONTRACT AREA. THE CONTRACTOR SHALL FURNISH AN 'AS–BUILT' SET OF DRAWINGS TO OWNER UPON COMPLETION OF PROJECT.
7. LOCATION OF EQUIPMENT, AND WORK SUPPLIED BY OTHERS THAT IS DIAGRAMMATICALLY INDICATED ON THE DRAWINGS SHALL BE DETERMINED BY THE CONTRACTOR. THE CONTRACTOR SHALL DETERMINE LOCATIONS AND DIMENSIONS SUBJECT TO STRUCTURAL CONDITIONS AND WORK OF THE SUBCONTRACTORS.
8. THE CONTRACTOR IS SOLELY RESPONSIBLE TO DETERMINE CONSTRUCTION PROCEDURE AND SEQUENCE AND TO ENSURE THE SAFETY OF THE EXISTING STRUCTURES AND ITS COMPONENT PARTS DURING CONSTRUCTION. THIS INCLUDES THE ADDITION OF WHATEVER SHORING, BRACING, UNDERPINNING, ETC. THAT MAY BE NECESSARY.
9. DRAWINGS INDICATE THE MINIMUM STANDARDS, BUT IF ANY WORK SHOULD BE INDICATED TO BE SUBSTANDARD TO ANY ORDINANCES, LAWS, CODES, RULES, OR REGULATIONS BEARING ON THE WORK, THE CONTRACTOR SHALL INCLUDE IN HIS WORK AND SHALL EXECUTE THE WORK CORRECTLY IN ACCORDANCE WITH SUCH ORDINANCES, LAWS, CODES, RULES OR REGULATIONS WITH NO INCREASE IN COSTS.
10. ALL UTILITY WORK SHALL BE IN ACCORDANCE WITH LOCAL UTILITY COMPANY REQUIREMENTS AND SPECIFICATIONS.
11. ALL EQUIPMENT AND PRODUCTS PURCHASED ARE TO BE REVIEWED BY CONTRACTOR AND ALL APPLICABLE SUBCONTRACTORS FOR ANY CONDITION PER MANUFACTURER'S RECOMMENDATIONS. CONTRACTOR TO SUPPLY THESE ITEMS AT NO COST TO OWNER OR CONSTRUCTION MANAGER.
12. ANY AND ALL ERRORS, DISCREPANCIES, AND 'MISSED' ITEMS ARE TO BE BROUGHT TO THE ATTENTION OF THE T–MOBILE CONSTRUCTION MANAGER DURING THE BIDDING PROCESS BY THE CONTRACTOR. ALL THESE ITEMS ARE TO BE INCLUDED IN THE BID. NO 'EXTRA' WILL BE ALLOWED FOR MISSED ITEMS.
13. CONTRACTOR SHALL BE RESPONSIBLE FOR ALL ON–SITE SAFETY FROM THE TIME THE JOB IS AWARDED UNTIL ALL WORK IS COMPLETE AND ACCEPTED BY THE OWNER.
14. CONTRACTOR TO REVIEW ALL SHOP DRAWINGS AND SUBMIT COPY TO ENGINEER FOR APPROVAL. DRAWINGS MUST BEAR THE CHECKER'S INITIALS BEFORE SUBMITTING TO THE CONSTRUCTION MANAGER FOR REVIEW.
15. THE CONTRACTOR SHALL FIELD VERIFY ALL DIMENSIONS, ELEVATIONS, ANGLES AND EXISTING CONDITIONS AT THE SITE, PRIOR TO FABRICATION AND/OR INSTALLATION OF ANY WORK IN THE CONTRACT AREA.
16. COORDINATION, LAYOUT, FURNISHING AND INSTALLATION OF CONDUITS AND ALL APPURTENANCES REQUIRED FOR PROPER INSTALLATION OF ELECTRICAL AND TELECOMMUNICATION SERVICE SHALL BE THE SOLE RESPONSIBILITY OF THE CONTRACTOR.
17. ALL DAMAGE CAUSED TO ANY EXISTING STRUCTURE SHALL BE THE SOLE RESPONSIBILITY OF THE CONTRACTOR. THE CONTRACTOR WILL BE HELD LIABLE FOR ALL REPAIRS REQUIRED FOR EXISTING STRUCTURES IF DAMAGED DURING CONSTRUCTION ACTIVITIES.
18. THE CONTRACTOR SHALL CONTACT 'CALL BEFORE YOU DIG' AT LEAST 48 HOURS PRIOR TO ANY EXCAVATIONS AT 1–800–922–4455. ALL UTILITIES SHALL BE IDENTIFIED AND CLEARLY MARKED. CONTRACTOR SHALL MAINTAIN AND PROTECT MARKED UTILITIES THROUGHOUT PROJECT COMPLETION.
19. CONTRACTOR SHALL COMPLY WITH THE OWNER'S ENVIRONMENTAL ENGINEER ON ALL METHODS AND PROVISIONS FOR ALL EXCAVATION ACTIVITIES INCLUDING SOIL DISPOSAL. ALL BACKFILL MATERIALS TO BE PROVIDED BY THE CONTRACTOR.

SITE DIRECTIONS

FROM: 35 GRIFFIN ROAD SOUTH
BLOOMFIELD, CT 06002

TO: 130 VERNON RD
BOLTON, CT 06043

1.	HEAD NORTH ON GRIFFIN ROAD S. TOWARD HARTMAN RD.	0.21 MI.
2.	TAKE THE 2ND RIGHT ONTO DAY HILL RD.	0.14 MI.
3.	TAKE THE 1ST RIGHT ONTO BLUE HILLS AVENUE EXT/CT–187	1.89 MI.
4.	TURN LEFT ONTO CT–305/OLD WINDSOR RD.	2.32 MI.
5.	STAY STRAIGHT TO GO ONTO BLOOMFIELD AVE/CT–305.	0.01 MI.
6.	MERGE ONTO I–91 S TOWARD HARTFORD	2.37 MI.
7.	MERGE ONTO I–291 E via EXIT 35A TOWARD MANCHESTER	6.18 MI.
8.	TAKE THE EXIT TOWARD I–384/I–84 W/HARTFORD	0.35 MI.
9.	MERGE ONTO I–384 E via THE RAMP ON THE LEFT	8.85 MI.
10.	I–384 E BECOMES US–44 E/BOSTON TURNPIKE	0.90 MI.
11.	TURN LEFT ONTO VERNON RD	0.53 MI.
12.	130 VERNON RD IS ON THE LEFT	

SITE COORDINATES: LATITUDE: 41° 48' 7.36" N
LONGITUDE: 72° 26' 28.15" W
GROUND ELEVATION: ±815' AMSL

COORDINATES AND GROUND ELEVATION ARE REFERENCED FROM GOOGLE EARTH

VICINITY MAP

NORTH

PROJECT SUMMARY

THE PROPOSED SCOPE OF WORK CONSISTS OF A MODIFICATION TO THE EXISTING UNMANNED TELECOMMUNICATIONS FACILITY INCLUDING THE FOLLOWING:

A. AT EXISTING EQUIPMENT SLAB–ON–GRADE
1. ADD (1) ENCLOSURE 6160
2. ADD (1) BATTERY CABINET B160
3. ADD (3) BB6630 FOR L2500
4. ADD (1) BB6648 FOR L2500
5. REMOVE ALL 3X6 HCS
6. ADD (3) 6X12 HCS

B. AT EXISTING ANTENNA SECTORS
1. ADD (3) AIR6449 B41
2. ADD (3) PCS/AWS DIPLEXER
3. ADD (3) RADIO 4415 B25

PROJECT INFORMATION

SITE NAME:	BOLTON CT 1
SITE ID:	CT11180C
SITE ADDRESS:	130 VERNON RD BOLTON, CT 06043
APPLICANT:	T–MOBILE NORTHEAST, LLC 35 GRIFFIN ROAD SOUTH BLOOMFIELD, CT 06002
CONTACT PERSON:	DAN REID (PROJECT MANAGER) TRANSCEND WIRELESS, LLC (203) 592–8291
ENGINEER OF RECORD:	CENTEK ENGINEERING, INC. 63–2 NORTH BRANFORD RD. BRANFORD, CT 06405 CARLO F. CENTORE, PE (203) 488–0580 EXT. 122
PROJECT COORDINATES:	LATITUDE: 41°–48'–07.36" N LONGITUDE: 72°–26'–28.15" W GROUND ELEVATION: 815'± AMSL SITE COORDINATES AND GROUND ELEVATION REFERENCED FROM GOOGLE EARTH.

SHEET INDEX

SHT. NO.	DESCRIPTION	REV.
T–1	TITLE SHEET	0
N–1	GENERAL NOTES AND SPECIFICATIONS	0
C–1	SITE LOCATION PLAN	0
C–2	COMPOUND PLAN, EQUIPMENT PLAN, AND ELEVATION	0
C–3	ANTENNA PLANS	0
C–4	TYPICAL EQUIPMENT DETAILS	0
E–1	TYPICAL ELECTRICAL DETAILS	0

REV.	DATE	DRAWN BY	CHK'D BY	DESCRIPTION
0	06/25/20	ASC	TJR	CONSTRUCTION DRAWINGS – ISSUED FOR CONSTRUCTION

PROFESSIONAL ENGINEER SEAL

T-Mobile

Transcend Wireless

CENTEK engineering
Centered on Solutions™
(203) 488-0580
(203) 488-8587 Fax
63-2 North Branford Road
Branford, CT 06405
www.CentekEng.com

T–MOBILE NORTHEAST LLC
WIRELESS COMMUNICATIONS FACILITY
BOLTON CT 1
SITE ID: CT11180C
130 VERNON RD
BOLTON, CT 06043

DATE: 06/01/20
SCALE: AS NOTED
JOB NO. 20074.29

TITLE SHEET

T–1

Sheet No. 1 of 7

NOTES AND SPECIFICATIONS

DESIGN BASIS:

GOVERNING CODE: 2015 INTERNATIONAL BUILDING (IBC) AS MODIFIED BY THE 2018 CONNECTICUT STATE BUILDING CODE.

1. DESIGN CRITERIA:

- RISK CATEGORY II (BASED ON IBC TABLE 1604.5)
- NOMINAL DESIGN SPEED (OTHER STRUCTURE): 105 MPH (Vasd) (EXPOSURE C/ IMPORTANCE FACTOR 1.0 BASED ON ASCE 7–10).

SITE NOTES

1. THE CONTRACTOR SHALL CALL UTILITIES PRIOR TO THE START OF CONSTRUCTION.
2. ACTIVE EXISTING UTILITIES, WHERE ENCOUNTERED IN THE WORK, SHALL BE PROTECTED AT ALL TIMES. THE ENGINEER SHALL BE NOTIFIED IMMEDIATELY, PRIOR TO PROCEEDING, SHOULD ANY UNCOVERED EXISTING UTILITY PRECLUDE COMPLETION OF THE WORK IN ACCORDANCE WITH THE CONTRACT DOCUMENTS.
3. THE AREAS OF THE COMPOUND DISTURBED BY THE WORK SHALL BE RETURNED TO THEIR ORIGINAL CONDITION.
4. CONTRACTOR SHALL MINIMIZE DISTURBANCE TO EXISTING SITE DURING CONSTRUCTION. EROSION CONTROL MEASURES, SHALL BE IN CONFORMANCE WITH THE LOCAL GUIDELINES FOR EROSION AND SEDIMENT CONTROL.
5. IF ANY FIELD CONDITIONS EXIST WHICH PRECLUDE COMPLIANCE WITH THE DRAWINGS, THE CONTRACTOR SHALL IMMEDIATELY NOTIFY THE ENGINEER AND SHALL PROCEED WITH AFFECTED WORK AFTER CONFLICT IS SATISFACTORILY RESOLVED.

GENERAL NOTES

1. ALL WORK SHALL BE IN ACCORDANCE WITH THE 2015 INTERNATIONAL BUILDING CODE AS MODIFIED BY THE 2018 CONNECTICUT SUPPLEMENT, INCLUDING THE TIA/EIA–222 REVISION "G" "STRUCTURAL STANDARDS FOR STEEL ANTENNA TOWERS AND SUPPORTING STRUCTURES." 2017 CONNECTICUT FIRE SAFETY CODE, NATIONAL ELECTRICAL CODE AND LOCAL CODES.
2. CONTRACTOR SHALL REVIEW ALL DRAWINGS AND SPECIFICATIONS IN THE CONTRACT DOCUMENT SET. CONTRACTOR SHALL COORDINATE ALL WORK SHOWN IN THE SET OF DRAWINGS. THE CONTRACTOR SHALL PROVIDE A COMPLETE SET OF DRAWINGS TO ALL SUBCONTRACTORS AND ALL RELATED PARTIES. THE SUBCONTRACTORS SHALL EXAMINE ALL THE DRAWINGS AND SPECIFICATIONS FOR THE INFORMATION THAT AFFECTS THEIR WORK.
3. CONTRACTOR SHALL PROVIDE A COMPLETE BUILD–OUT WITH ALL FINISHES, STRUCTURAL, MECHANICAL, AND ELECTRICAL COMPONENTS AND PROVIDE ALL ITEMS AS SHOWN OR INDICATED ON THE DRAWINGS OR IN THE WRITTEN SPECIFICATIONS.
4. CONTRACTOR SHALL FURNISH ALL MATERIAL, LABOR AND EQUIPMENT TO COMPLETE THE WORK AND FURNISH A COMPLETED JOB ALL IN ACCORDANCE WITH LOCAL AND STATE GOVERNING AUTHORITIES AND OTHER AUTHORITIES HAVING LAWFUL JURISDICTION OVER THE WORK.
5. CONTRACTOR SHALL SECURE AND PAY FOR ALL PERMITS AND ALL INSPECTIONS REQUIRED AND SHALL ALSO PAY FEES REQUIRED FOR THE GENERAL CONSTRUCTION, PLUMBING, ELECTRICAL AND HVAC. PERMITS SHALL BE PAID FOR BY THE RESPECTIVE SUBCONTRACTORS.
6. CONTRACTOR SHALL MAINTAIN A CURRENT SET OF DRAWINGS AND SPECIFICATIONS ON SITE AT ALL TIMES AND INSURE DISTRIBUTION OF NEW DRAWINGS TO SUBCONTRACTORS AND OTHER RELEVANT PARTIES AS SOON AS THEY ARE MADE AVAILABLE. ALL OLD DRAWINGS SHALL BE MARKED VOID AND REMOVED FROM THE CONTRACT AREA. THE CONTRACTOR SHALL FURNISH AN 'AS–BUILT' SET OF DRAWINGS TO OWNER UPON COMPLETION OF PROJECT.
7. LOCATION OF EQUIPMENT AND WORK SUPPLIED BY OTHERS THAT IS DIAGRAMMATICALLY INDICATED ON THE DRAWINGS, SHALL BE DETERMINED BY THE CONTRACTOR. THE CONTRACTOR SHALL DETERMINE LOCATIONS AND DIMENSIONS SUBJECT TO STRUCTURAL CONDITIONS AND WORK OF THE SUBCONTRACTORS.
8. THE CONTRACTOR IS SOLELY RESPONSIBLE TO DETERMINE CONSTRUCTION PROCEDURE AND SEQUENCE, AND TO ENSURE THE SAFETY OF THE EXISTING STRUCTURES AND IT'S COMPONENT PARTS DURING CONSTRUCTION. THIS INCLUDES THE ADDITION OF WHATEVER SHORING, BRACING, UNDERPINNING, ETC. THAT MAY BE NECESSARY.
9. DRAWINGS INDICATE THE MINIMUM STANDARDS, BUT IF ANY WORK SHOULD BE INDICATED TO BE SUBSTANDARD TO ANY ORDINANCES, LAWS, CODES, RULES, OR REGULATIONS BEARING ON THE WORK, THE CONTRACTOR SHALL INCLUDE IN HIS WORK AND SHALL EXECUTE THE WORK CORRECTLY IN ACCORDANCE WITH SUCH ORDINANCES, LAWS, CODES, RULES OR REGULATIONS WITH NO INCREASE IN COSTS.
10. ALL UTILITY WORK SHALL BE IN ACCORDANCE WITH LOCAL UTILITY COMPANY REQUIREMENTS AND SPECIFICATIONS.
11. ALL EQUIPMENT AND PRODUCTS PURCHASED ARE TO BE REVIEWED BY CONTRACTOR AND ALL APPLICABLE SUBCONTRACTORS FOR ANY CONDITION PER MFR.'S RECOMMENDATIONS. CONTRACTOR TO SUPPLY THESE ITEMS AT NO COST TO OWNER OR CONSTRUCTION MANAGER.
12. ANY AND ALL ERRORS, DISCREPANCIES, AND "MISSED" ITEMS, ARE TO BE BROUGHT TO THE ATTENTION OF THE SITE OWNER'S CONSTRUCTION MANAGER DURING THE BIDDING PROCESS BY THE CONTRACTOR. ALL THESE ITEMS ARE TO BE INCLUDED IN THE BID. NO 'EXTRA' WILL BE ALLOWED FOR MISSED ITEMS.
13. CONTRACTOR SHALL BE RESPONSIBLE FOR ALL ON–SITE SAFETY FROM THE TIME THE JOB IS AWARDED UNTIL ALL WORK IS COMPLETE AND ACCEPTED BY THE OWNER.
14. CONTRACTOR TO REVIEW ALL SHOP DRAWINGS AND SUBMIT COPY TO ENGINEER FOR APPROVAL. DRAWINGS MUST BEAR THE CHECKER'S INITIALS BEFORE SUBMITTING TO THE CONSTRUCTION MANAGER FOR REVIEW.
15. THE CONTRACTOR SHALL FIELD VERIFY ALL DIMENSIONS, ELEVATIONS, ANGLES, AND EXISTING CONDITIONS AT THE SITE, PRIOR TO FABRICATION AND/OR INSTALLATION OF ANY WORK IN THE CONTRACT AREA.
16. COORDINATION, LAYOUT, FURNISHING AND INSTALLATION OF CONDUIT AND ALL APPURTENANCES REQUIRED FOR PROPER INSTALLATION OF ELECTRICAL AND TELECOMMUNICATION SERVICE SHALL BE THE SOLE RESPONSIBILITY OF THE CONTRACTOR.
17. ALL DAMAGE CAUSED TO ANY EXISTING STRUCTURE SHALL BE THE SOLE RESPONSIBILITY OF THE CONTRACTOR. THE CONTRACTOR WILL BE HELD LIABLE FOR ALL REPAIRS REQUIRED FOR EXISTING STRUCTURES IF DAMAGED DURING CONSTRUCTION ACTIVITIES.
18. THE CONTRACTOR SHALL CONTACT "DIG SAFE" (DIAL 811) AT LEAST 48 HOURS PRIOR TO ANY EXCAVATIONS. ALL UTILITIES SHALL BE IDENTIFIED AND CLEARLY MARKED. CONTRACTOR SHALL MAINTAIN AND PROTECT MARKED UTILITIES THROUGHOUT PROJECT COMPLETION.
19. CONTRACTOR SHALL COMPLY WITH OWNER'S ENVIRONMENTAL ENGINEER ON ALL METHODS AND PROVISIONS FOR ALL EXCAVATION ACTIVITIES INCLUDING SOIL DISPOSAL. ALL BACKFILL MATERIALS TO BE PROVIDED BY THE CONTRACTOR.
20. THE COUNTY/CITY/TOWN WILL MAKE PERIODIC FIELD OBSERVATION AND INSPECTIONS TO MONITOR THE INSTALLATION, MATERIALS, WORKMANSHIP AND EQUIPMENT INCORPORATED INTO THE PROJECT TO ENSURE COMPLIANCE WITH THE DESIGN PLANS, SPECIFICATIONS, CONTRACT DOCUMENTS AND APPROVED SHOP DRAWINGS.
21. THE COUNTY/CITY/TOWN MUST BE NOTIFIED (2) WORKING DAYS PRIOR TO CONCEALMENT/BURIAL OF ANY SYSTEM OR MATERIAL THAT WILL PREVENT THE DIRECT INSPECTION OF MATERIALS, METHODS OR WORKMANSHIP. EXAMPLES OF THESE PROCESSES ARE BACKFILLING A GROUND RING OR TOWER FOUNDATION, POURING TOWER FOUNDATIONS, BURYING GROUND RODS, PLATES OR GRIDS, ETC. THE CONTRACTOR MAY PROCEED WITH THE SCHEDULED PROCESS (2) WORKING DAYS AFTER PROVIDING NOTICE UNLESS NOTIFIED OTHERWISE BY THE COUNTY/CITY/TOWN.

REV.	DATE	DRAWN BY	CHK'D BY	DESCRIPTION
0	06/25/20	ASC	TJR	CONSTRUCTION DRAWINGS – ISSUED FOR CONSTRUCTION

PROFESSIONAL ENGINEER SEAL

T-Mobile

Transcend Wireless

CENTEK engineering
Centered on Solutions™
(203) 488-0580
(203) 488-8587 Fax
63-2 North Branford Road
Branford, CT 06405
www.CentekEng.com

T-MOBILE NORTHEAST LLC
WIRELESS COMMUNICATIONS FACILITY
BOLTON CT 1
SITE ID: CT11180C
130 VERNON RD
BOLTON, CT 06043

DATE: 06/01/20
SCALE: AS NOTED
JOB NO. 20074.29

GENERAL NOTES AND SPECIFICATIONS

N–1

Sheet No. 2 of 7

NOTE:
ALL COAX LENGTHS TO BE MEASURED
AND VERIFIED IN FIELD BEFORE ORDERING

ANTENNA SCHEDULE

SECTOR	EXISTING/PROPOSED	ANTENNA	SIZE (INCHES) (L x W x D)	ANTENNA ℄ HEIGHT	AZIMUTH	(E/P) RRU (QTY)	(E/P) TMA/DIPLEXER (QTY)	(QTY) PROPOSED COAX (LENGTH)
A1	EXISTING	ERICSSON (AIR32 KRD901146-1 B66A B2A)	56.6 x 12.9 x 8.7	130'	30°			(1) 6x12 HYBRID CABLE (±150')
A2	PROPOSED	ERICSSON (AIR6449 B41)	33.1 x 20.5 x 8.3	130'	30°			
A3	EXISTING	RFS (APXVAARR24-43-U-NA20)	95.9 x 24.0 x 8.7	130'	30°	(P) RADIO 4415 B25 (1), (E) RADIO 4449 B71+B85 (1), (E) RADIO 4415 B66A (1)	(P) COMMSCOPE CBC1923Q-43 (1)	
B1	EXISTING	ERICSSON (AIR32 KRD901146-1 B66A B2A)	56.6 x 12.9 x 8.7	130'	150°			(1) 6x12 HYBRID CABLE (±150')
B2	PROPOSED	ERICSSON (AIR6449 B41)	33.1 x 20.5 x 8.3	130'	150°			
B3	EXISTING	RFS (APXVAARR24-43-U-NA20)	95.9 x 24.0 x 8.7	130'	150°	(P) RADIO 4415 B25 (1), (E) RADIO 4449 B71+B85 (1), (E) RADIO 4415 B66A (1)	(P) COMMSCOPE CBC1923Q-43 (1)	
C1	EXISTING	ERICSSON (AIR32 KRD901146-1 B66A B2A)	56.6 x 12.9 x 8.7	130'	270°			(1) 6x12 HYBRID CABLE (±150')
C2	PROPOSED	ERICSSON (AIR6449 B41)	33.1 x 20.5 x 8.3	130'	270°			
C3	EXISTING	RFS (APXVAARR24-43-U-NA20)	95.9 x 24.0 x 8.7	130'	270°	(P) RADIO 4415 B25 (1), (E) RADIO 4449 B71+B85 (1), (E) RADIO 4415 B66A (1)	(P) COMMSCOPE CBC1923Q-43 (1)	

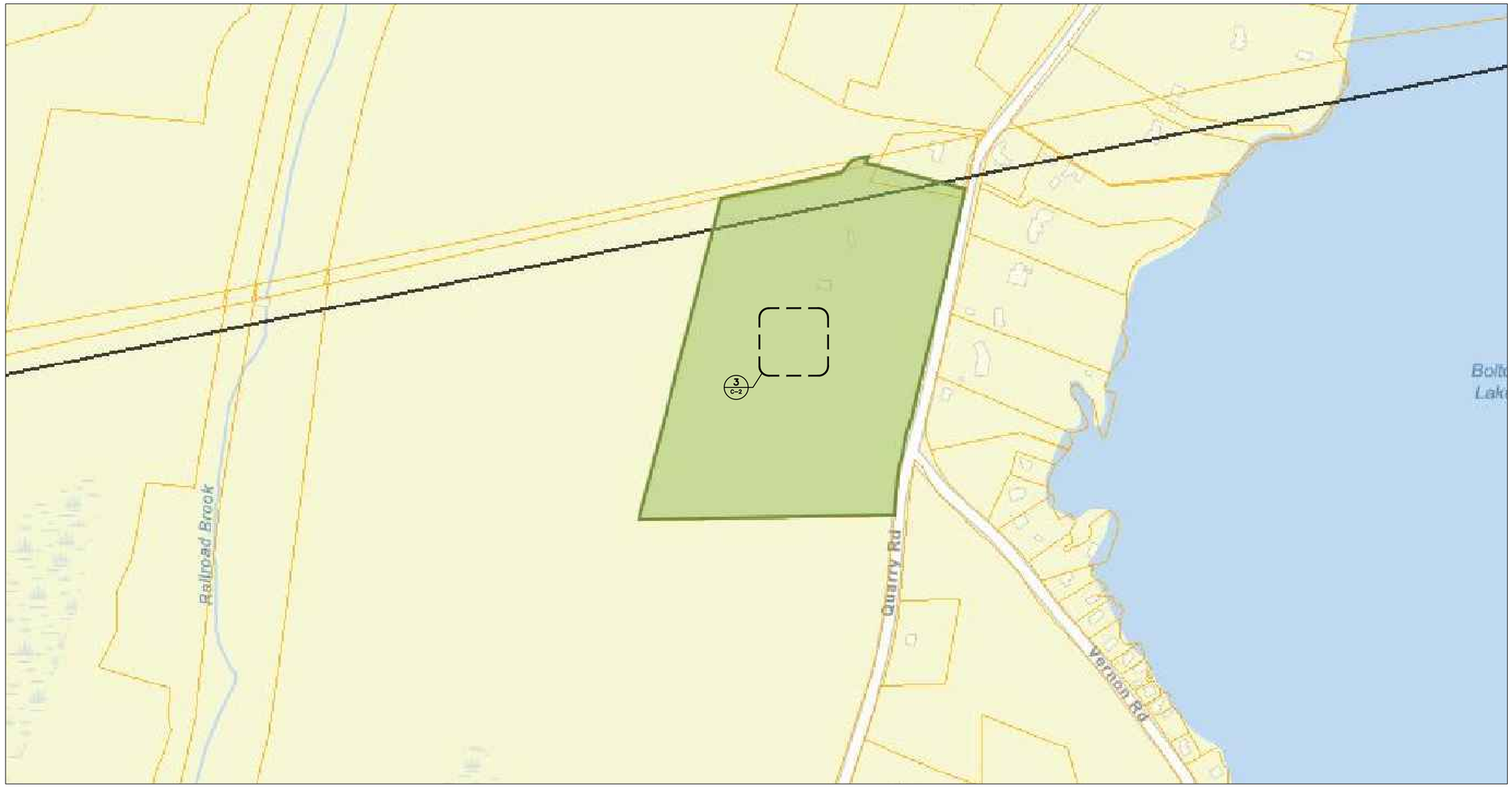

1 / C-1 SITE LOCATION PLAN
SCALE: NOT TO SCALE

TRUE NORTH

REV.	DATE	DRAWN BY	CHK'D BY	DESCRIPTION
0	06/25/20	ASC	TJR	CONSTRUCTION DRAWINGS – ISSUED FOR CONSTRUCTION

PROFESSIONAL ENGINEER SEAL

T-Mobile
Transcend Wireless

CENTEK engineering
Centered on Solutions
(203) 488-0580
(203) 488-8587 Fax
63-2 North Branford Road
Branford, CT 06405
www.CentekEng.com

T-MOBILE NORTHEAST LLC
WIRELESS COMMUNICATIONS FACILITY
BOLTON CT 1
SITE ID: CT11180C
130 VERNON RD
BOLTON, CT 06043

DATE: 06/01/20
SCALE: AS NOTED
JOB NO. 20074.29

SITE LOCATION PLAN

C-1

Sheet No. 3 of 7

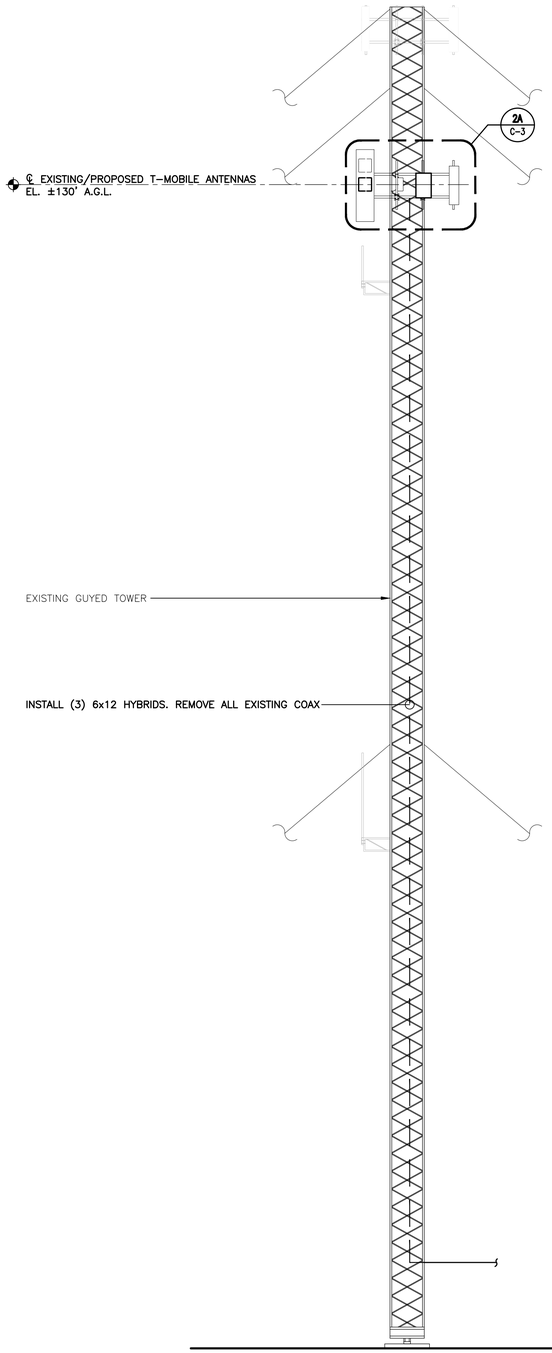

2 / C-2 TOWER ELEVATION - PROPOSED

SCALE: 1" = 8'

GRAPHIC SCALE

8 0 4 8 16 32

1" = 8'-0"

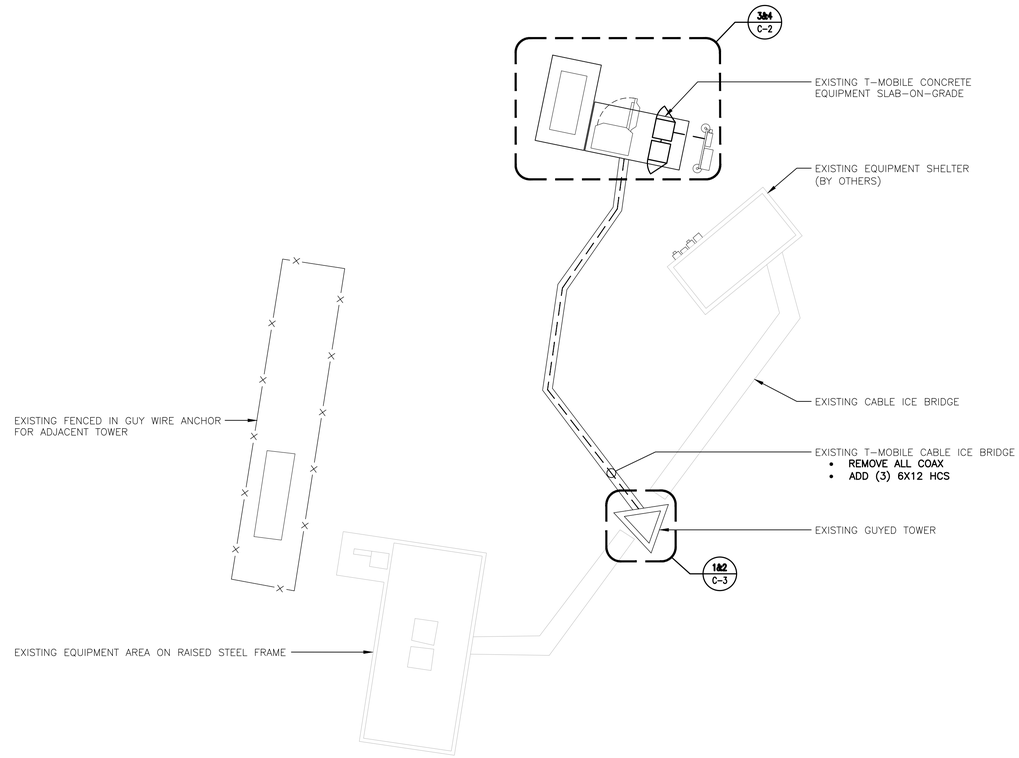

1 / C-2 PATIAL COMPOUND PLAN - PROPOSED

SCALE: 1" = 8'

APPROXIMATE NORTH

STRUCTURAL COMPLIANCE

ANTENNA MOUNTS

A STRUCTURAL ANALYSIS OF THE ANTENNA MOUNTS WAS PERFORMED FOR THE PROPOSED EQUIPMENT INSTALLATION AND THEY WERE FOUND TO BE STRUCTURALLY SUFFICIENT TO ACCOMMODATE THE PROPOSED LOADING.

REFER TO THE ANTENNA MOUNT ANALYSIS REPORT PREPARED BY CENTEK ENGINEERING (PROJECT # 20074.29) DATED 06/10/20 FOR ADDITIONAL INFORMATION AND REQUIREMENTS.

TOWER AND TOWER FOUNDATION

A STRUCTURAL ANALYSIS OF THE TOWER AND TOWER FOUNDATION WAS PERFORMED FOR THE PROPOSED EQUIPMENT INSTALLATION AND THEY WERE FOUND TO BE STRUCTURALLY SUFFICIENT TO ACCOMMODATE THE PROPOSED LOADING.

REFER TO THE STRUCTURAL ANALYSIS REPORT PREPARED BY CENTEK ENGINEERING (PROJECT # 20074.29) DATED 06/10/20 FOR ADDITIONAL INFORMATION AND REQUIREMENTS.

NOTE: NO EQUIPMENT SHALL BE INSTALLED ON THE HOSTING STRUCTURE WITHOUT A PASSING STRUCTURAL ANALYSIS REPORT AND CONTRACTOR PRIOR CONFIRMATION THAT ANY AND ALL REQUISITE MODIFICATIONS HAVE BEEN COMPLETED.

LEGEND

W.P. DENOTES WORKING POINT.

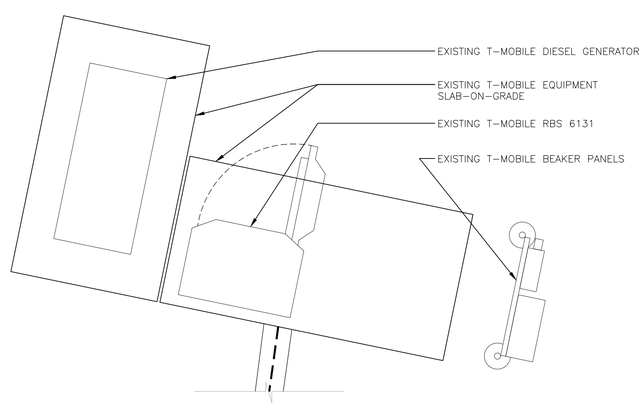

3 / C-2 EQUIPMENT PLAN - EXISTING

SCALE: 1/2" = 1'

APPROXIMATE NORTH

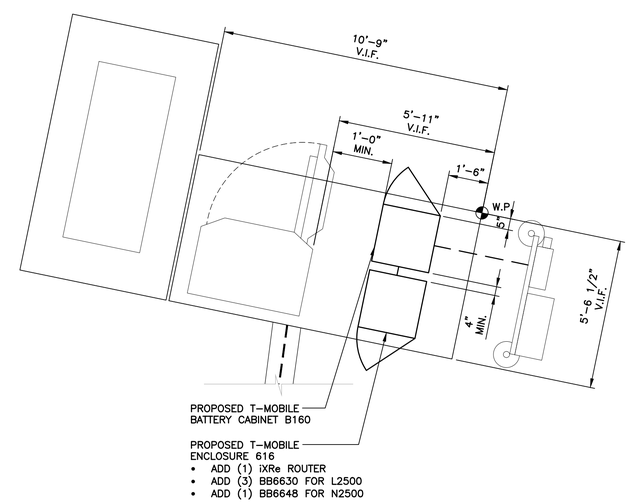

4 / C-2 EQUIPMENT PLAN - PROPOSED

SCALE: 1/2" = 1'

APPROXIMATE NORTH

REV.	DATE	DRAWN BY	CHK'D BY	DESCRIPTION
0	06/25/20	ASC	TJR	CONSTRUCTION DRAWINGS – ISSUED FOR CONSTRUCTION

PROFESSIONAL ENGINEER SEAL

CENTEK engineering
Centered on Solutions™
(203) 488-0580
(203) 488-8587 Fax
63-2 North Branford Road
Branford, CT 06405
www.CentekEng.com

T-MOBILE NORTHEAST LLC

WIRELESS COMMUNICATIONS FACILITY

BOLTON CT 1

SITE ID: CT11180C

130 VERNON RD

BOLTON, CT 06043

DATE:	06/01/20
SCALE:	AS NOTED
JOB NO.	20074.29

COMPOUND PLAN, EQUIPMENT PLAN, AND ELEVATION

C-2

Sheet No. 4 of 7

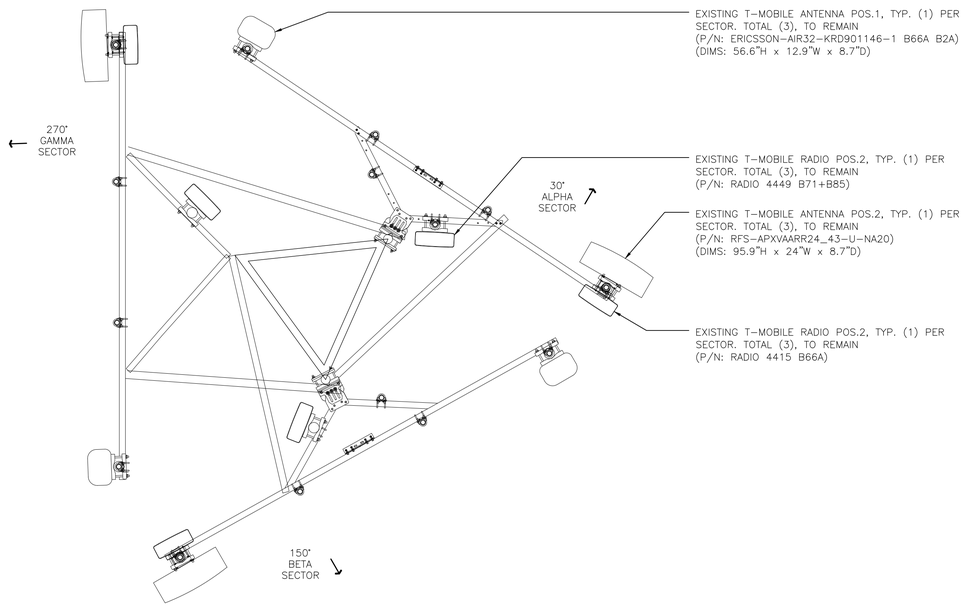

1 C-3 **EQUIPMENT AND ANTENNA PLAN - EXISTING**
SCALE: 1/2" = 1'

APPROXIMATE NORTH

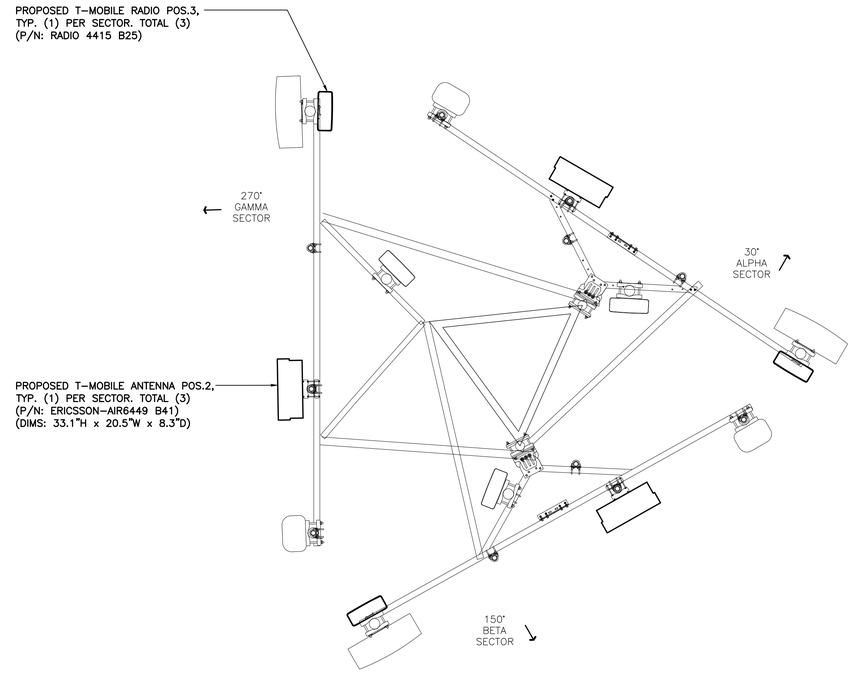

2 C-3 **EQUIPMENT AND ANTENNA PLAN - PROPOSED**
SCALE: 1/2" = 1'

APPROXIMATE NORTH

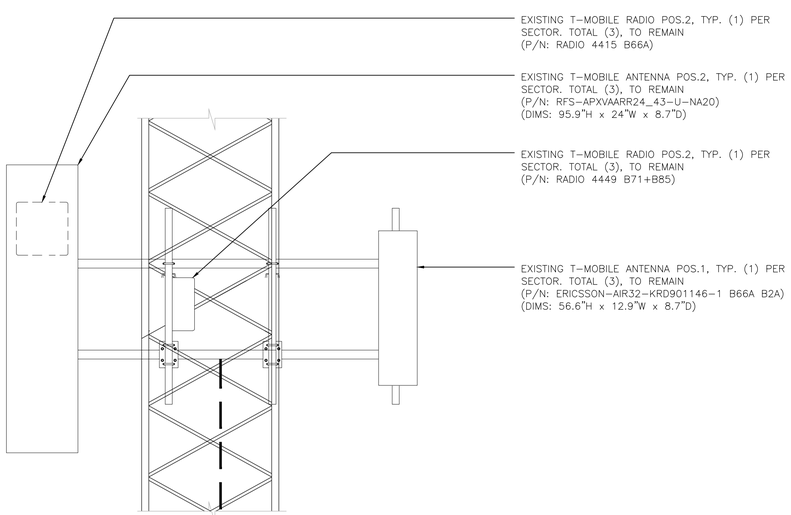

1A C-3 **ANTENNA ELEVATION - EXISTING**
SCALE: 1/2" = 1'

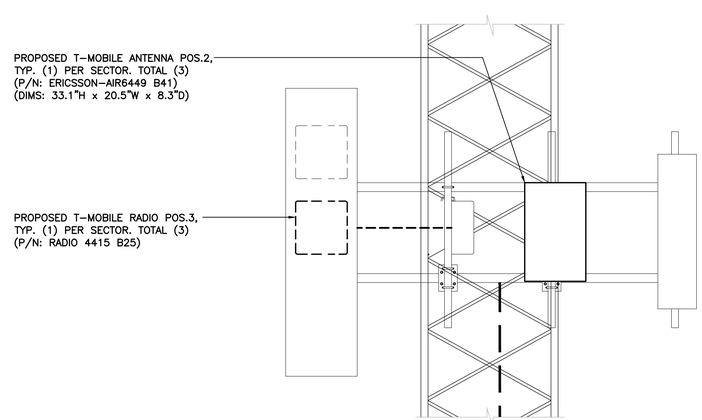

2A C-3 **ANTENNA ELEVATION - PROPOSED**
SCALE: 1/2" = 1'

REV.	DATE	DRAWN BY	CHK'D BY	DESCRIPTION
0	06/25/20	ASC	TJR	CONSTRUCTION DRAWINGS - ISSUED FOR CONSTRUCTION

PROFESSIONAL ENGINEER SEAL

T-Mobile
Transcend Wireless

CENTEK engineering
Centered on Solutions
(203) 488-0580
(203) 488-8587 Fax
63-2 North Branford Road
Branford, CT 06405
www.CentekEng.com

T-MOBILE NORTHEAST LLC
WIRELESS COMMUNICATIONS FACILITY
BOLTON CT 1
SITE ID: CT11180C
130 VERNON RD
BOLTON, CT 06043

DATE: 06/01/20
SCALE: AS NOTED
JOB NO. 20074.29

ANTENNA PLANS

C-3

Sheet No. 5 of 7

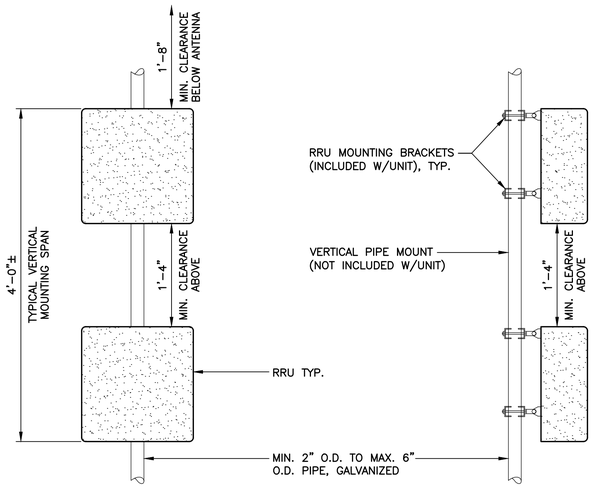

FRONT ELEVATION

SIDE ELEVATION

NOTES:

1. T-MOBILE SHALL SUPPLY RRU, AND RRU POLE-MOUNTING BRACKET. CONTRACTOR SHALL SUPPLY POLE/PIPE AND INSTALL ALL MOUNTING HARDWARE INCLUDING ERICSSON RRU POLE-MOUNTING BRACKET. CONTRACTOR SHALL INSTALLS RRU AND MAKES CABLE TERMINATIONS.
2. NO PAINTING OF THE RRU OR SOLAR SHIELD IS ALLOWED.

1 / C-4 TYPICAL RRUS MOUNTING DETAILS

SCALE: NOT TO SCALE

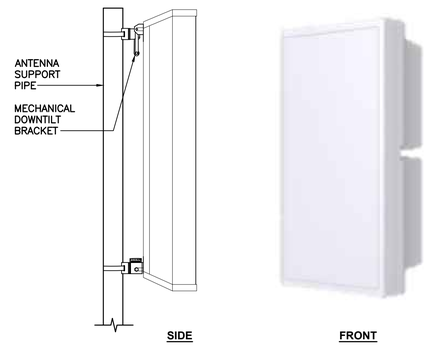

ALPHA/BETA/GAMMA ANTENNA		
EQUIPMENT	DIMENSIONS	WEIGHT
MAKE: ERICSSON MODEL: AIR6449 B41	33.1"L x 20.6"W x 8.6"D	±104 LBS.
NOTES: 1. CONTRACTOR TO COORDINATE FINAL EQUIPMENT MODEL SELECTION WITH T-MOBILE CONSTRUCTION MANAGER PRIOR TO ORDERING.		

2 / C-4 PROPOSED ANTENNA DETAIL

SCALE: NOT TO SCALE

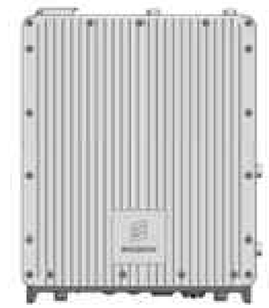

FRONT VIEW

RRU (REMOTE RADIO UNIT)			
EQUIPMENT	DIMENSIONS	WEIGHT	CLEARANCES
MAKE: ERICSSON MODEL: RADIO 4415 B25	14.9"L x 13.2"W x 5.4"D	±46 LBS.	BEHIND ANT.: 8" MIN. BELOW ANT.: 20" MIN. BELOW RRU: 16" MIN.
NOTES: 1. CONTRACTOR TO COORDINATE FINAL EQUIPMENT MODEL SELECTION WITH T-MOBILE CONSTRUCTION MANAGER PRIOR TO ORDERING.			

3 / C-4 PROPOSED RRU DETAIL

SCALE: NOT TO SCALE

EQUIPMENT CABINET		
EQUIPMENT	DIMENSIONS	WEIGHT
MAKE: ERICSSON MODEL: ENCLOSURE 6160	62.0"H x 26.0"W x 26.0"D	±1200 LBS

4 / C-4 ENCLOSURE 6160 (OUTDOOR)

SCALE: NOT TO SCALE

EQUIPMENT CABINET		
EQUIPMENT	DIMENSIONS	WEIGHT
MAKE: ERICSSON MODEL: BATTERY CABINET B160	62.0"H x 26.0"W x 26.0"D	±1883 LBS

5 / C-4 BATTERY CABINET DETAIL

NOT TO SCALE

REV.	DATE	DRAWN BY	CHK'D BY	DESCRIPTION
0	06/25/20	ASC	TJR	CONSTRUCTION DRAWINGS – ISSUED FOR CONSTRUCTION

PROFESSIONAL ENGINEER SEAL

STATE OF CONNECTICUT · TIMOTHY J. ROBERTS · 28192 · LICENSED PROFESSIONAL ENGINEER

T-Mobile · Transcend Wireless

CENTEK engineering
Centered on Solutions
(203) 488-0580
(203) 488-8587 Fax
63-2 North Branford Road
Branford, CT 06405
www.CentekEng.com

T-MOBILE NORTHEAST LLC
WIRELESS COMMUNICATIONS FACILITY
BOLTON CT 1
SITE ID: CT11180C
130 VERNON RD
BOLTON, CT 06043

DATE: 06/01/20
SCALE: AS NOTED
JOB NO. 20074.29

TYPICAL EQUIPMENT DETAILS

C-4

Sheet No. 6 of 7

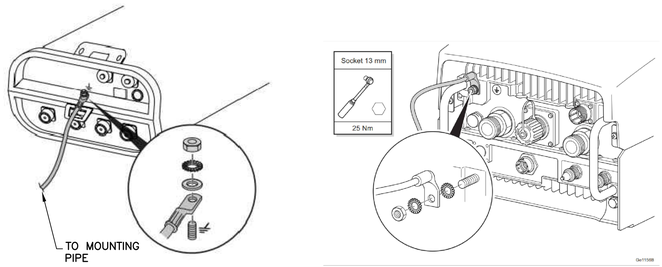

1 E-1 TYPICAL ANTENNA/RRU GROUNDING DETAILS

SCALE: NOT TO SCALE

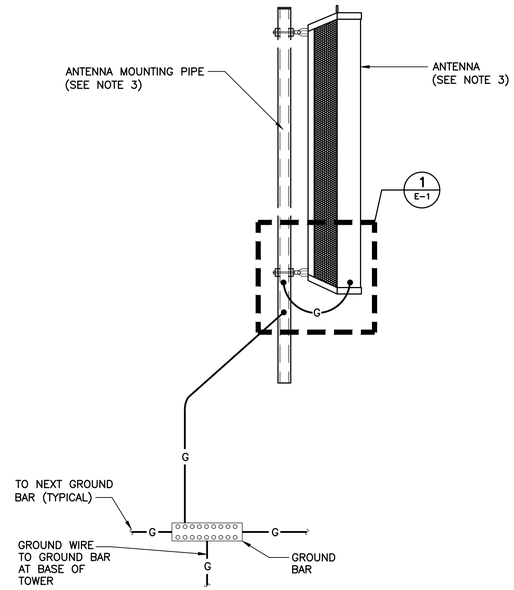

NOTES:

1. BOND COAXIAL CABLE GROUND KITS TO EACH OWNER'S GROUND BAR ALONG ENTIRE COAX RUN FROM ANTENNA TO SHELTER.
2. BOND ALL EQUIPMENT TO GROUND PER NEC AND MANUFACTURERS SPECIFICATIONS.
3. DETAIL IS TYPICAL FOR ALL ANTENNA SECTORS, INCLUDING GPS ANTENNA.

2 E-1 TYPICAL ANTENNA GROUNDING DETAIL

SCALE: NOT TO SCALE

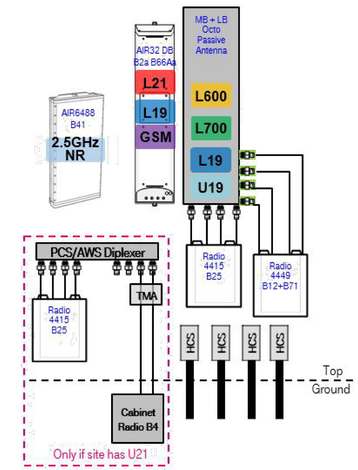

3 E-1 PROPOSED PLUMBING DIAGRAM

SCALE: NOT TO SCALE

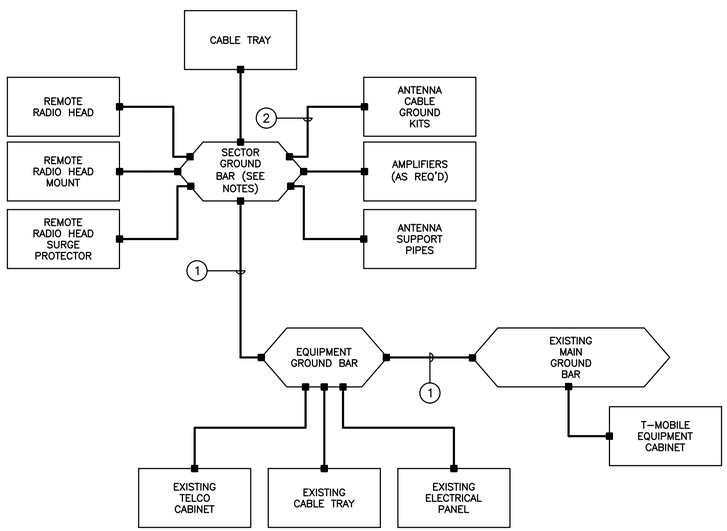

GROUNDING SCHEMATIC NOTES

1. #2 AWG
2. #6 AWG

GENERAL NOTES:

1. ALL SURGE SUPPRESSION EQUIPMENT SHALL BE BONDED TO GROUND PER MANUFACTURER'S SPECIFICATIONS
2. UNLESS OTHERWISE NOTED OR REQUIRED BY CODE, GROUND CONDUCTORS SHOWN SHALL BE #2 AWG (SOLID TINNED BCW – EXTERIOR; STRANDED GREEN INSULATED – INTERIOR).
3. ALL SECTOR GROUND BARS SHALL BE BONDED TOGETHER WITH #2 AWG SOLID TINNED BCW.
4. BOND ALL EQUIPMENT CABINETS AND BATTERY CABINETS TO GROUND PER MANUFACTURER'S SPECIFICATIONS.
5. COORDINATE ALL ROOF MOUNTED EQUIPMENT WITH OWNER.
6. ALL ROOF MOUNTED AMPLIFIERS AND ASSOCIATED EQUIPMENT SHALL BE BONDED TO THE SECTOR GROUND BAR PER MANUFACTURER'S SPECIFICATIONS.
7. ALL GROUNDING SHALL BE IN ACCORDANCE WITH NEC AND OWNER'S REQUIREMENTS.

4 E-1 TYPICAL GROUNDING SCHEMATIC DETAIL

SCALE: NOT TO SCALE

RISER DIAGRAM NOTES

1. EXISTING 200A, PPC CABINET TO REMAIN.
2. EXISTING CONDUITS AND CONDUCTORS TO REMAIN.
3. EXISTING EQUIPMENT CABINET TO REMAIN.
4. EXISTING 125A/2P CIRCUIT BREAKER SERVING EXISTING EQUIPMENT CABINET TO BE REMOVED AND REPLACED WITH NEW 100A/2P CIRCUIT BREAKER. COORDINATE CABINET DOWNGRADE WITH CONSTRUCTION MANAGER.
5. NEW 100A/2P CIRCUIT BREAKER TO SERVE NEW EQUIPMENT CABINET.
6. (3) #1 AWG, (1) #8 AWG GROUND, 1-1/4" CONDUIT.
7. NEW RADIO EQUIPMENT CABINET.
8. NEW BATTERY CABINET.
9. DC CONDUIT AND CONDUCTORS FOR BATTERY CABINET CONNECTION PER MANUFACTURERS SPECIFICATIONS.
10. 15 KW DC GENERATOR TO REMAIN.

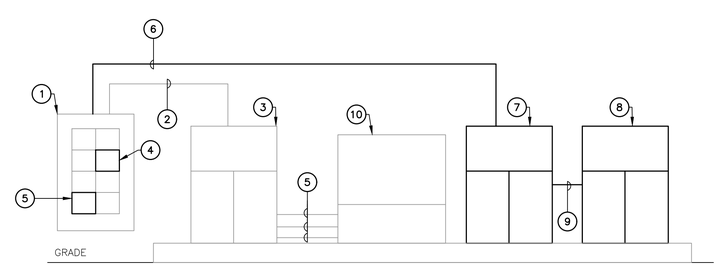

5 E-1 ELECTRICAL POWER RISER DIAGRAM

SCALE: NOT TO SCALE

REV.	DATE	DRAWN BY	CHK'D BY	DESCRIPTION
0	06/25/20	ASC	TJR	CONSTRUCTION DRAWINGS – ISSUED FOR CONSTRUCTION

PROFESSIONAL ENGINEER SEAL

T-Mobile

Transcend Wireless

CENTEK engineering
Centered on Solutions
(203) 488-0580
(203) 488-8587 Fax
63-2 North Branford Road
Branford, CT 06405
www.CentekEng.com

T-MOBILE NORTHEAST LLC
WIRELESS COMMUNICATIONS FACILITY
BOLTON CT 1
SITE ID: CT11180C
130 VERNON RD
BOLTON, CT 06043

DATE: 06/01/20
SCALE: AS NOTED
JOB NO. 20074.29

TYPICAL ELECTRICAL DETAILS

E-1

Sheet No. 7 of 7

Exhibit D

Structural Analysis Report

CENTEK engineering

Centered on Solutions℠

Structural Analysis Report

150' Existing Guyed Lattice Tower

Proposed T-Mobile
Antenna Upgrade

T-Mobile Site Ref: CT11180C

130 Vernon Road
Bolton, CT 06043

Centek Project No. 20074.29

Date: June 10, 2020

Max Stress Ratio = 57.9%

STATE OF CONNECTICUT
TIMOTHY J. LYNN
No. 29336
LICENSED
PROFESSIONAL ENGINEER

Prepared for:

T-Mobile USA
35 Griffin Road
Bloomfield, CT 06002

63-2 North Branford Road, Branford, CT 06405 203.488.0580 Fax 203.488.8587 www.CentekEng.com

Table of Contents

SECTION 1 – REPORT

- INTRODUCTION
- ANTENNA AND APPURTENANCE SUMMARY
- PRIMARY ASSUMPTIONS USED IN THE ANALYSIS
- ANALYSIS
- TOWER LOADING
- TOWER CAPACITY
- CONCLUSION AND RECOMMENDATIONS

SECTION 2 – CONDITIONS & SOFTWARE

- STANDARD ENGINEERING CONDITIONS
- GENERAL DESCRIPTION OF STRUCTURAL ANALYSIS PROGRAM

SECTION 3 – CALCULATIONS

- tnxTower INPUT/OUTPUT SUMMARY
- tnxTower FEED LINE PLAN
- tnxTower FEED LINE DISTRIBUTION
- tnxTower LEG COMPRESSION DIAGRAM
- tnxTower GLOBAL MAST SHEAR AND MOMENT DIAGRAMS
- tnxTower DEFLECTION DIAGRAMS
- tnxTower STRESS DISTRIBUTION
- tnxTower WIND PRESSURE AND ICE THICKNESS
- tnxTower DETAILED OUTPUT
- TOWER BASE FOUNDATION ANALYSIS
- GUY ANCHOR FOUNDATION ANALYSIS

SECTION 4 – REFERENCE MATERIALS

- RF DATA SHEET

Introduction

The purpose of this report is to summarize the results of the non-linear, P-Δ structural analysis of the antenna upgrade proposed by T-Mobile on the existing guyed lattice tower located in Bolton, CT.

The host tower is a 150-ft, three legged, guyed lattice tower. The original tower design documents were unavailable for use in this report. The tower geometry, structure member sizes and foundation information were obtained from a previous structural report prepared by Centek job no. 17012.45 dated April 20, 2017.

Antenna and appurtenance information were obtained from a previous structural report prepared by Ramaker & Associates job no. 23012 dated August 20, 2019. and a T-Mobile RF data sheet.

The tower consists of eight (8) straight and one (1) tapered base vertical sections consisting of solid round legs steel grade of ASTM A572-50. Diagonal and horizontal lateral support bracing consists of solid round steel grade of ASTM A572-50. The vertical tower sections are connected by bolted sleeves with the diagonal and horizontal bracing to legs consisting of welded connections. The width of the tower face is 3.75-ft throughout its length.

Antenna and Appurtenance Summary

The existing and proposed loads considered in the analysis consist of the following:

- SPRINT (EXISTING/RESERVED):
  Antennas: Three (3) RFS APXVSPP18 panel antennas, three (3) Commscope DT465B-2XR panel antennas, six (6) 800MHz RRHs, three (3) 1900MHz RRHs and three (3) TD-RRH8x20-25 remote radio heads mounted on three (3) 12-ft T-frames with a RAD center elevation of 148-ft above grade.
  Cables: Four (4) 1-1/4" ∅ fiber cables running on a leg/face of the existing tower as specified in Section 3 of this report.
- T-MOBILE (EXISTING TO REMAIN):
  Antennas: Three (3) Ericsson AIR32 panel antennas, three (3) RFS APXVAARR24_43 panel antennas, three (3) Ericsson 4449 B71 B12 remote radio units and three (3) Ericsson 4415 remote radio units mounted three (3) V-Frames with a RAD center elevation of 130-ft above the existing tower base.
  Cables: Three (3) 6x12 fiber cables running on the exterior of the existing tower.
- **T-MOBILE (EXISTING TO REMOVE):**
  Cables: Four (4) 1-5/8" ∅ coax cables running on a leg/face of the existing tower as specified in Section 3 of this report
- **T-MOBILE (Proposed):**
  Antennas: Three (3) Ericsson AIR6449 panel antennas, three (3) Ericsson 4415 remote radio units and three (3) Commscope CBC1923Q-43 diplexers mounted three (3) V-Frames with a RAD center elevation of 130-ft above the existing tower base.
  Cables: Three (3) 6x12 fiber cables running on the exterior of the existing tower.

Primary Assumptions Used in the Analysis

- The tower structure's theoretical capacity not including any assessment of the condition of the tower.
- The tower carries the horizontal and vertical loads due to the weight of antennas, ice load and wind.
- Tower is properly installed and maintained.
- Tower is in plumb condition.
- Tower loading for antennas and mounts as listed in this report.
- All bolts are appropriately tightened providing the necessary connection continuity.
- All welds are fabricated with ER-70S-6 electrodes.
- All members are assumed to be as specified in the original tower design documents.
- All members are "hot dipped" galvanized in accordance with ASTM A123 and ASTM A153 Standards.
- All member protective coatings are in good condition.
- All tower members were properly designed, detailed, fabricated, installed and have been properly maintained since erection.
- Any deviation from the analyzed antenna loading will require a new analysis for verification of structural adequacy.
- All coax cables routed as specified in Section 3 of this report.

Analysis

The existing tower was analyzed using a comprehensive computer program entitled tnxTower. The program analyzes the tower, considering the worst case loading condition. The tower is considered as loaded by concentric forces along the tower, and the model assumes that the tower members are subjected to bending, axial, and shear forces.

The existing tower was analyzed for the controlling basic wind speed (3-second gust) with no ice and the applicable wind and ice combination to determine stresses in members as per guidelines of TIA-222-G-2005 entitled "Structural Standard for Antenna Support Structures and Antennas", the American Institute of Steel Construction (AISC) and the Manual of Steel Construction; Load and Resistance Factor Design (LRFD).

The controlling wind speed is determined by evaluating the local available wind speed data as provided in Appendix N of the CSBC[1] and the wind speed data available in the TIA-222-G-2005 Standard.

Tower Loading

Tower loading was determined by the basic wind speed as applied to projected surface areas with modification factors per TIA-222-G-2005, gravity loads of the tower structure and its components, and the application of 1.00" radial ice on the tower structure and its components.

Basic Wind Speed:	Tolland County; v = 95-105 mph (3-second gust)	*[Annex B of TIA-222-G-2005]*
	Bolton; v = 97 mph (3 second gust)	*[Appendix N of the 2018 CT Building Code]*
Load Cases:	Load Case 1; 97 mph wind speed w/ no ice plus gravity load – used in calculation of tower stresses and rotation.	*[Appendix N of the 2018 CT Building Code]*
	Load Case 2; 50 mph wind speed w/ 1.00" radial ice plus gravity load – used in calculation of tower stresses.	*[Annex B of TIA-222-G-2005]*

[1] The 2015 International Building Code as amended by the 2018 Connecticut State Building Code (CSBC).

Tower Capacity

- Calculated stresses were found to be within allowable limits. This tower was found to be at **57.9%** of its total capacity.

Tower Section	Elevation	Stress Ratio (percentage of capacity)	Result
Leg (T3)	100'-0" - 120'-0"	28.9%	**PASS**
Diagonal (T2)	120'-0" - 140'-0"	54.5%	**PASS**
Bottom Girt (T8)	5'-0" - 20'-0"	42.3%	**PASS**
Guy C @ 210-ft radius (T2)	138-ft	57.9%	**PASS**

Foundations and Anchorage

The existing tower base foundation consists of a 2.5-ft diameter x 2.25-ft long reinforced concrete pier on a 7-ft square x 1.25-ft thick reinforced concrete pad bearing directly on the existing sub grade. Additionally, guy wire loading is transferred to three (3) concrete support blocks anchored to rock with (2) 1-3/8" diameter rock anchors per block. The sub-grade conditions used as the basis for the foundation analysis were derived from the aforementioned structural report.

- The worst case tower base and guy anchor reactions developed from the governing Load Case 1 were used in the verification of the anchorage foundations:

Tower Guy Reactions	
Vector	**Inner**
Horizontal (In Plane of GW)	29 kips
Horizontal (Out of Plane of GW)	1 kips
Vertical	18 kips
Resultant Force at end of Guy Wire	34 kips
Tower Base Reactions	
Vector	**Proposed Reaction**
Horizontal Shear	1.0 kips
Axial Compression	121.0 kips

Foundation	Design Limit	TIA-222-G Section 9.4 FS(1)	Proposed Loading (FS)(1)	Result
Reinf. Conc. Anchor Block w/ Rock Anchors	Steel Strength	1.0	3.9	**PASS**
	Bond Strength	1.0	10.9	**PASS**
		Ultimate Bearing	**Proposed**	
Base Foundation	Bearing	8.0 ksf	2.69 ksf	**PASS**

Note 1: FS denotes 'Factor of Safety'.

Conclusion

This analysis shows that the subject tower **is adequate** to support the proposed modified antenna configuration.

The analysis is based, in part, on the information provided to this office by T-Mobile. If the existing conditions are different than the information in this report, Centek Engineering, Inc. must be contacted for resolution of any potential issues.

Please feel free to call with any questions or comments.

Respectfully Submitted by:

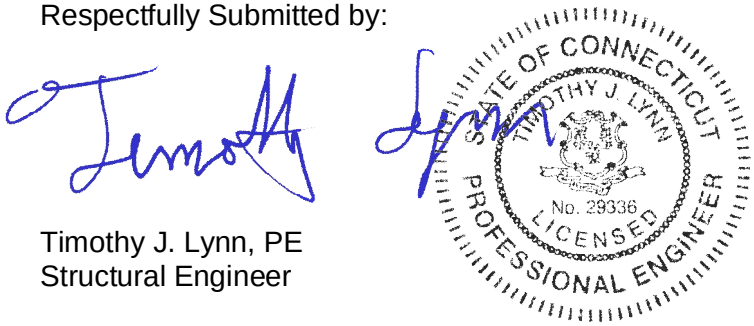

Timothy J. Lynn, PE
Structural Engineer

Standard Conditions for Furnishing of Professional Engineering Services on Existing Structures

All engineering services are performed on the basis that the information used is current and correct. This information may consist of, but is not necessarily limited to:

- Information supplied by the client regarding the structure itself, its foundations, the soil conditions, the antenna and feed line loading on the structure and its components, or other relevant information.
- Information from the field and/or drawings in the possession of Centek Engineering, Inc. or generated by field inspections or measurements of the structure.
- It is the responsibility of the client to ensure that the information provided to Centek Engineering, Inc. and used in the performance of our engineering services is correct and complete. In the absence of information to the contrary, we assume that all structures were constructed in accordance with the drawings and specifications and are in an un-corroded condition and have not deteriorated. It is therefore assumed that its capacity has not significantly changed from the “as new” condition.
- All services will be performed to the codes specified by the client, and we do not imply to meet any other codes or requirements unless explicitly agreed in writing. If wind and ice loads or other relevant parameters are to be different from the minimum values recommended by the codes, the client shall specify the exact requirement. In the absence of information to the contrary, all work will be performed in accordance with the latest revision of ANSI/ASCE10 & ANSI/EIA-222
- All services performed, results obtained, and recommendations made are in accordance with generally accepted engineering principles and practices. Centek Engineering, Inc. is not responsible for the conclusions, opinions and recommendations made by others based on the information we supply.

GENERAL DESCRIPTION OF STRUCTURAL ANALYSIS PROGRAM

tnxTower, is an integrated structural analysis and design software package for Designed specifically for the telecommunications industry, tnxTower, formerly ERITower, automates much of the tower analysis and design required by the TIA/EIA 222 Standard.

tnxTower Features:

- tnxTower can analyze and design 3- and 4-sided guyed towers, 3- and 4-sided self-supporting towers and either round or tapered ground mounted poles with or without guys.
- The program analyzes towers using the TIA-222-G (2005) standard or any of the previous TIA/EIA standards back to RS-222 (1959). Steel design is checked using the AISC ASD 9th Edition or the AISC LRFD specifications.
- Linear and non-linear (P-delta) analyses can be used in determining displacements and forces in the structure. Wind pressures and forces are automatically calculated.
- Extensive graphics plots include material take-off, shear-moment, leg compression, displacement, twist, feed line, guy anchor and stress plots.
- tnxTower contains unique features such as True Cable behavior, hog rod take-up, foundation stiffness and much more.

Section	T1	T2	T3	T4	T5	T6	T7	T8	T9
Legs		SR 2		SR 2 1/4				SR 2 1/2	
Leg Grade					A572-50				
Diagonals					SR 3/4				
Diagonal Grade					A572-50				
Top Girts					SR 3/4				N.A.
Bottom Girts					SR 3/4				
Horizontals					N.A.				4x1/2
Top Guy Pull-Offs	SR 1 1/4		N.A.		SR 1 1/4		N.A.		
Face Width (ft)	3.75								
# Panels @ (ft)	4 @ 2.25			48 @ 2.375				6 @ 2.41667	A
Weight (K)	0.6	2.1	1.0	1.2	1.2	1.2	1.2	1.0	0.4

9.7

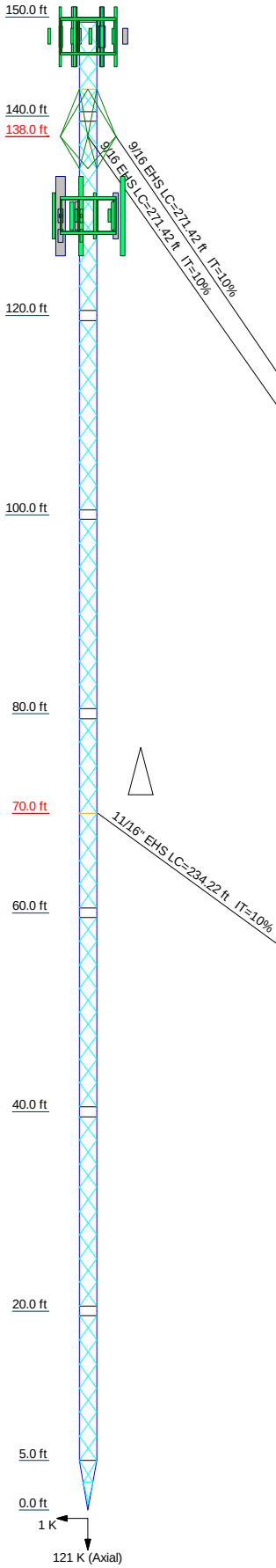

DESIGNED APPURTENANCE LOADING

TYPE	ELEVATION	TYPE	ELEVATION
APXVSPP18-C-A20 (Sprint)	148	4415 B25 (T-Mobile - Proposed)	130
APXVSPP18-C-A20 (Sprint)	148	CBC1923Q-43 Diplexer (T-Mobile - Proposed)	130
APXVSPP18-C-A20 (Sprint)	148	APXVAARR24-43 (T-Mobile)	130
DT465B-2XR (Sprint)	148	AIR32 (T-Mobile)	130
DT465B-2XR (Sprint)	148	AIR6449 (T-Mobile - Proposed)	130
DT465B-2XR (Sprint)	148	4449 B12,B71 (T-Mobile)	130
(2) FD-RRH 2x50 800 (Sprint)	148	4415 B25 (T-Mobile)	130
(2) FD-RRH 2x50 800 (Sprint)	148	4415 B25 (T-Mobile - Proposed)	130
(2) FD-RRH 2x50 800 (Sprint)	148	CBC1923Q-43 Diplexer (T-Mobile - Proposed)	130
FD-RRH 4x45 1900 (Sprint)	148	APXVAARR24-43 (T-Mobile)	130
FD-RRH 4x45 1900 (Sprint)	148	AIR32 (T-Mobile)	130
FD-RRH 4x45 1900 (Sprint)	148	AIR6449 (T-Mobile - Proposed)	130
TD-RRH8x20-25 (Sprint)	148	4449 B12,B71 (T-Mobile)	130
TD-RRH8x20-25 (Sprint)	148	4415 B25 (T-Mobile)	130
TD-RRH8x20-25 (Sprint)	148	4415 B25 (T-Mobile - Proposed)	130
PiROD 12' T-Frame (Sprint)	148	CBC1923Q-43 Diplexer (T-Mobile - Proposed)	130
PiROD 12' T-Frame (Sprint)	148	12' V-Frame (T-Mobile)	130
PiROD 12' T-Frame (Sprint)	148	12' V-Frame (T-Mobile)	130
APXVAARR24-43 (T-Mobile)	130	SitePro VFA12-HD (T-Mobile)	130
AIR32 (T-Mobile)	130		
AIR6449 (T-Mobile - Proposed)	130		
4449 B12,B71 (T-Mobile)	130		
4415 B25 (T-Mobile)	130		

SYMBOL LIST

MARK	SIZE	MARK	SIZE
A	2 @ 2.25		

MATERIAL STRENGTH

GRADE	Fy	Fu	GRADE	Fy	Fu
A572-50	50 ksi	65 ksi			

TOWER DESIGN NOTES

1. Tower designed for Exposure C to the TIA-222-G Standard.
2. Tower designed for a 97 mph basic wind in accordance with the TIA-222-G Standard.
3. Tower is also designed for a 50 mph basic wind with 1.00 in ice. Ice is considered to increase in thickness with height.
4. Deflections are based upon a 60 mph wind.
5. Tower Structure Class II.
6. Topographic Category 1 with Crest Height of 0.00 ft
7. TOWER RATING: 57.9%

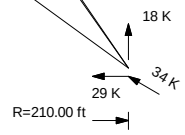

ALL REACTIONS ARE FACTORED

Centek Engineering Inc.
63-2 North Branford Rd.
Branford, CT 06405
Phone: (203) 488-0580
FAX: (203) 488-8587

Job: 20074.29 - CT11180C		
Project: 150' Guyed Tower - 130 Vernon Road Bolton, CT		
Client: T-Mobile	Drawn by: TJL	App'd:
Code: TIA-222-G	Date: 06/10/20	Scale: NTS
Path: J:\Jobs\20074\00 WI\29_CT11180C\05_Structural\Tower Analysis\Backup Documentation\Cal-c\ER\150-ft Guyed Tower - Bolton, CT.erl		Dwg No. E-1

Feed Line Plan

Round Flat App In Face App Out Face

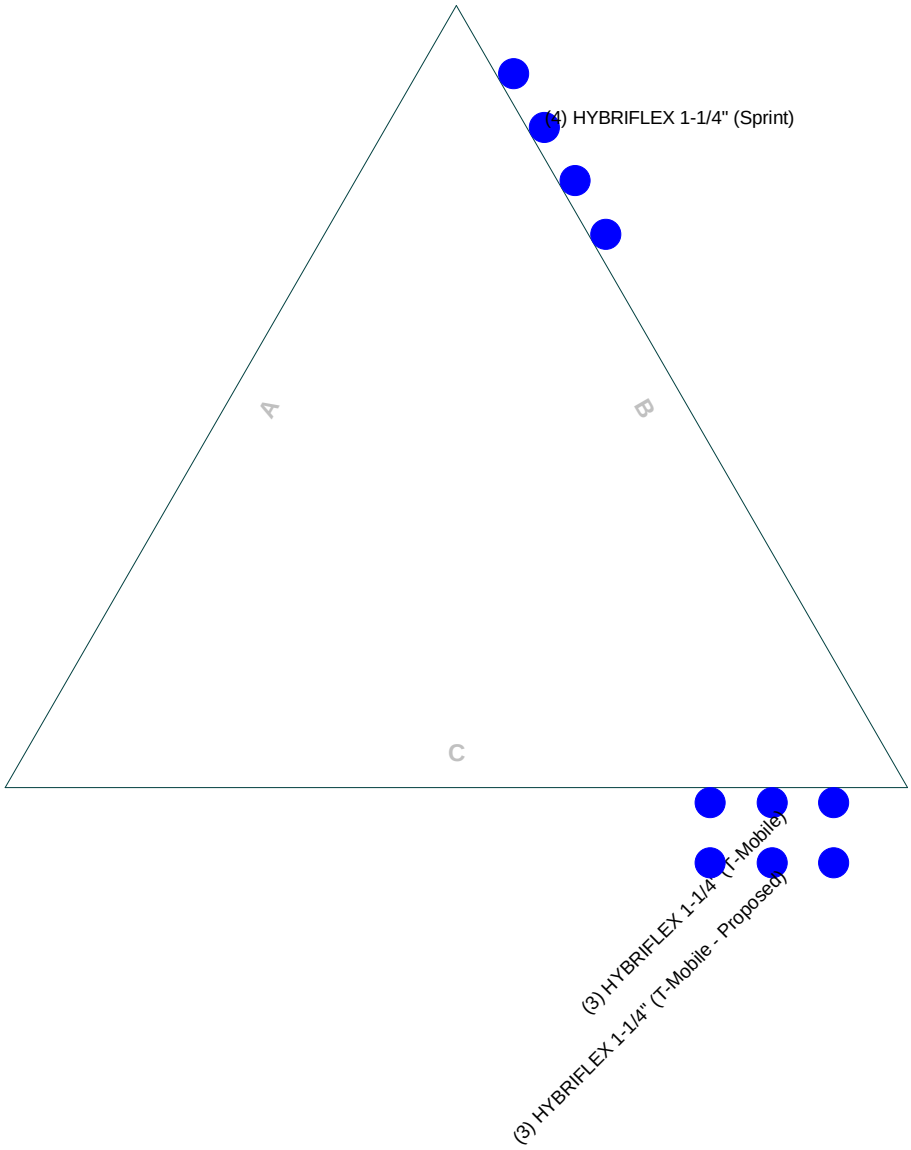

Centek Engineering Inc.
63-2 North Branford Rd.
Branford, CT 06405
Phone: (203) 488-0580
FAX: (203) 488-8587

Job: ***20074.29 - CT11180C***		
Project: ***150' Guyed Tower - 130 Vernon Road Bolton, CT***		
Client: T-Mobile	Drawn by: TJL	App'd:
Code: TIA-222-G	Date: 06/10/20	Scale: NTS
Path: J:\Jobs\2007\400.W\29_CT11180C\05_Structural\Tower Analysis\Backup Documentation\Cal-cs\ER\150-ft Guyed Tower - Bolton, CT.er		Dwg No. E-7

Feed Line Distribution Chart
5' - 150'

Round | Flat | App In Face | App Out Face | Truss Leg

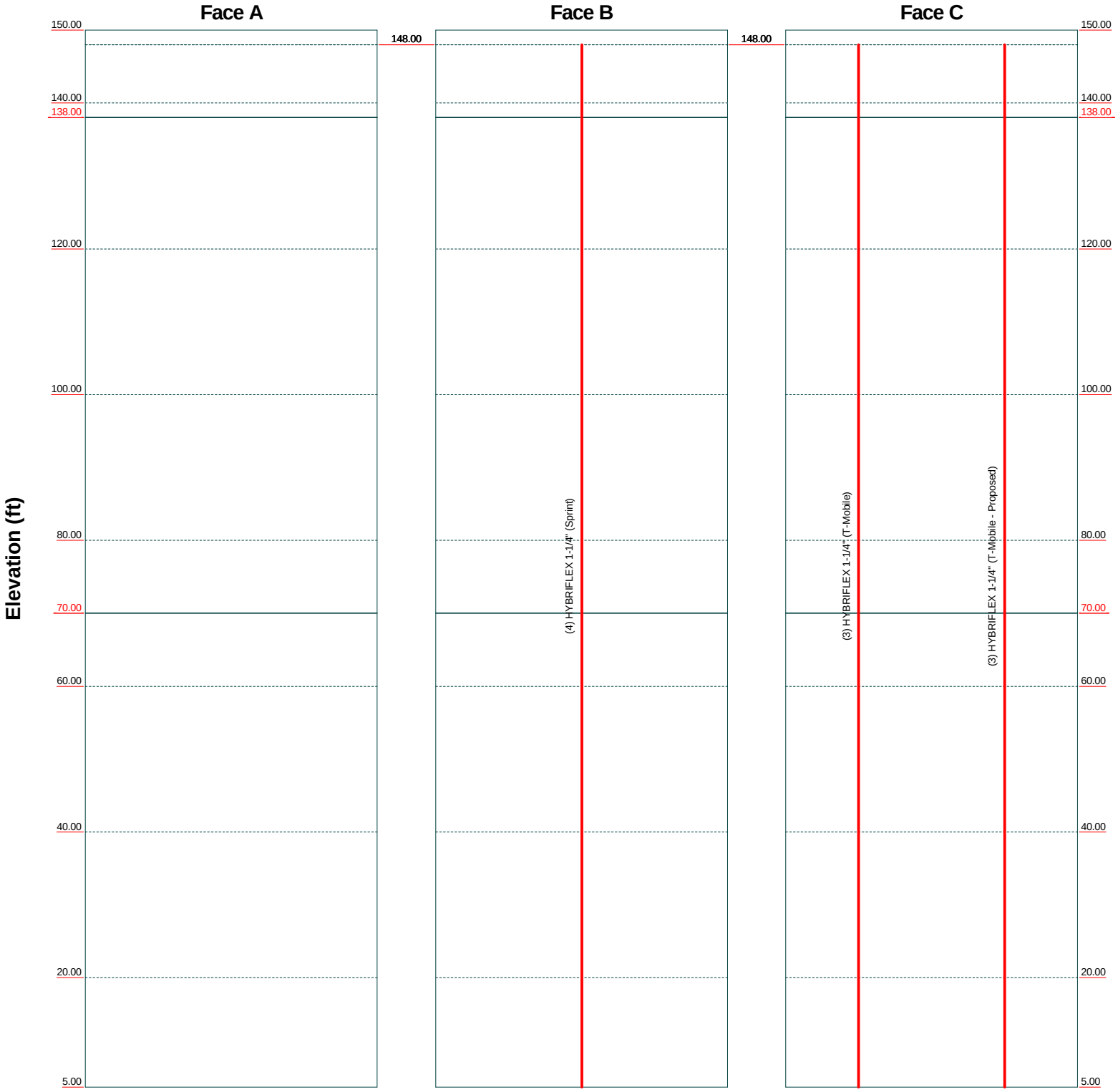

Centek Engineering Inc.
63-2 North Branford Rd.
Branford, CT 06405
Phone: (203) 488-0580
FAX: (203) 488-8587

Job:	***20074.29 - CT11180C***		
Project:	***150' Guyed Tower - 130 Vernon Road Bolton, CT***		
Client: T-Mobile	Drawn by: TJL	App'd:	
Code: TIA-222-G	Date: 06/10/20	Scale: NTS	
Path: J:\Jobs\2007\400.W\29_CT11180C\05_Structural\Tower Analysis\Backup Documentation\Cal-cs\ER\150-ft Guyed Tower - Bolton, CT.er		Dwg No. E-7	

TIA-222-G - 97 mph/50 mph 1.0000 in Ice Exposure C

Leg Capacity ——— **Leg Compression (K)**

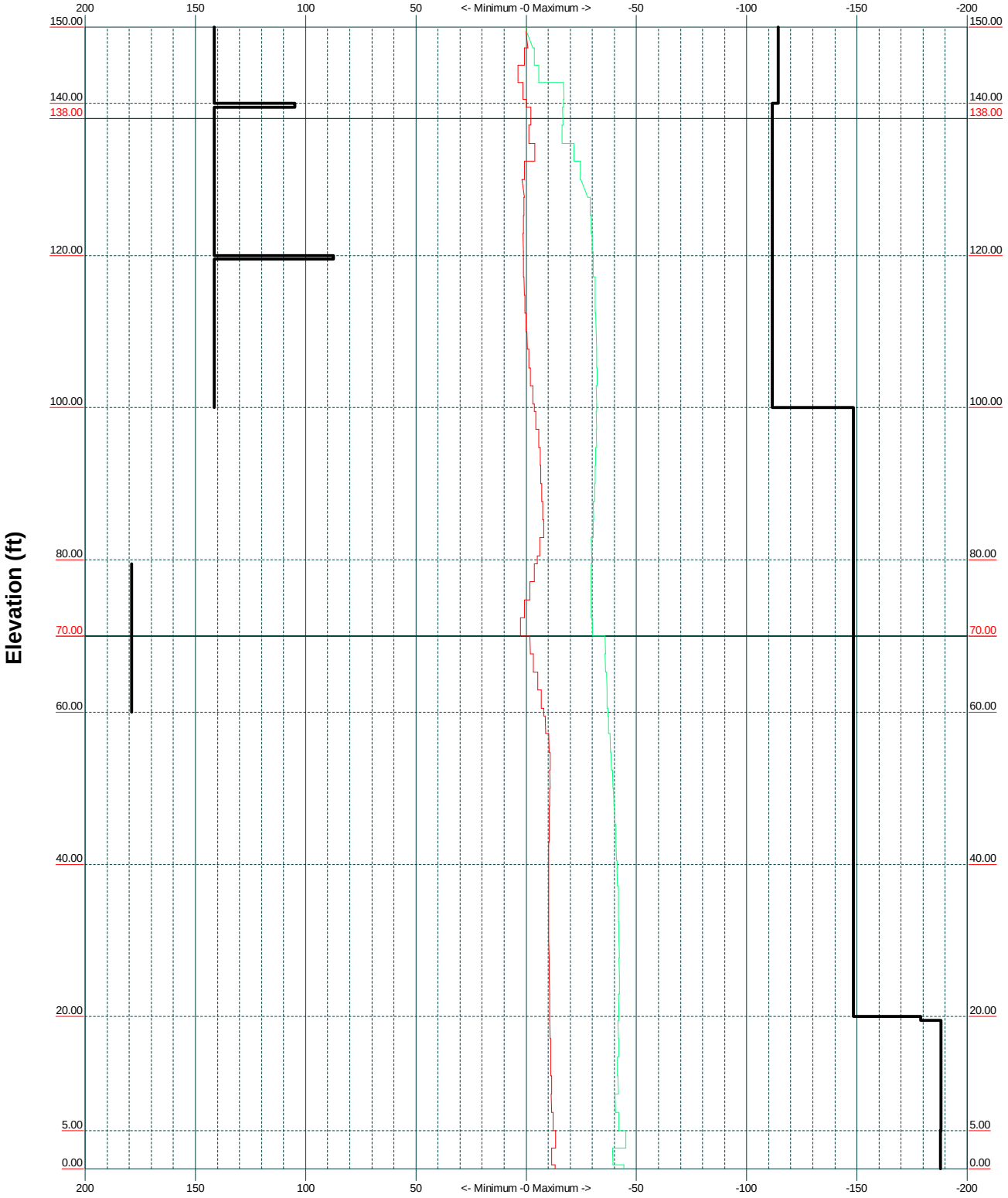

Centek Engineering Inc. 63-2 North Branford Rd. Branford, CT 06405 Phone: (203) 488-0580 FAX: (203) 488-8587	Job: ***20074.29 - CT11180C***		
	Project: ***150' Guyed Tower - 130 Vernon Road Bolton, CT***		
	Client: T-Mobile	Drawn by: TJL	App'd:
	Code: TIA-222-G	Date: 06/10/20	Scale: NTS
	Path: J:\Jobs\20074\00 WI\29_CT11180C\05_Structural\Tower Analysis\Backup Documentation\Cal-cs\ER\150-ft Guyed Tower - Bolton, CT.er		Dwg No. E-3

TIA-222-G - 97 mph/50 mph 1.0000 in Ice Exposure C

Vx Vz

Maximum Values

Mx Mz

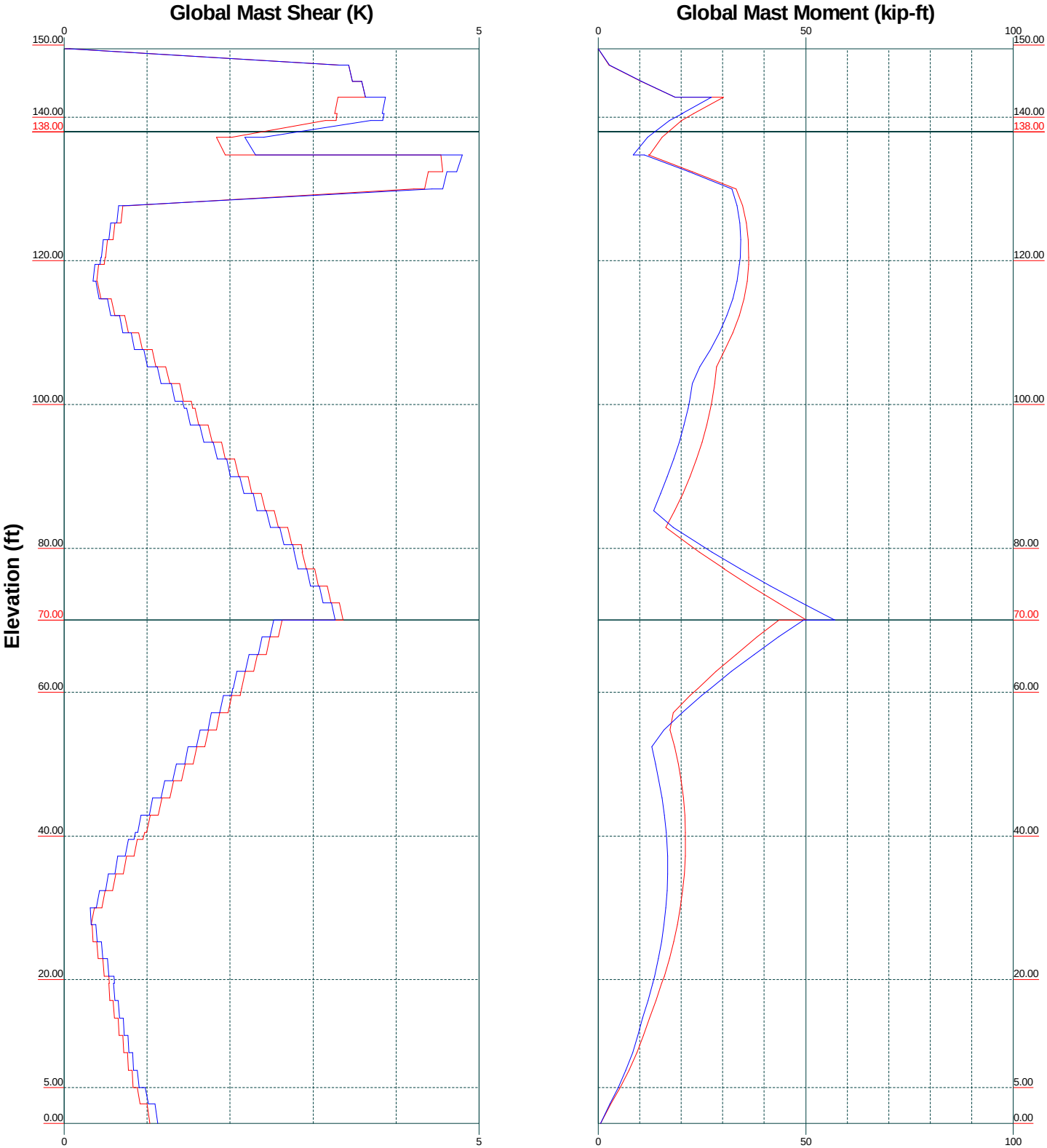

Centek Engineering Inc.
63-2 North Branford Rd.
Branford, CT 06405
Phone: (203) 488-0580
FAX: (203) 488-8587

Job: ***20074.29 - CT11180C***		
Project: ***150' Guyed Tower - 130 Vernon Road Bolton, CT***		
Client: T-Mobile	Drawn by: TJL	App'd:
Code: TIA-222-G	Date: 06/10/20	Scale: NTS
Path: J:\Jobs\20074\00.W\29_CT11180C\05_Structural\Tower Analysis\Backup Documentation\Cal-c\ER\150-ft Guyed Tower - Bolton, CT.er		Dwg No. E-4

TIA-222-G - Service - 60 mph

Maximum Values

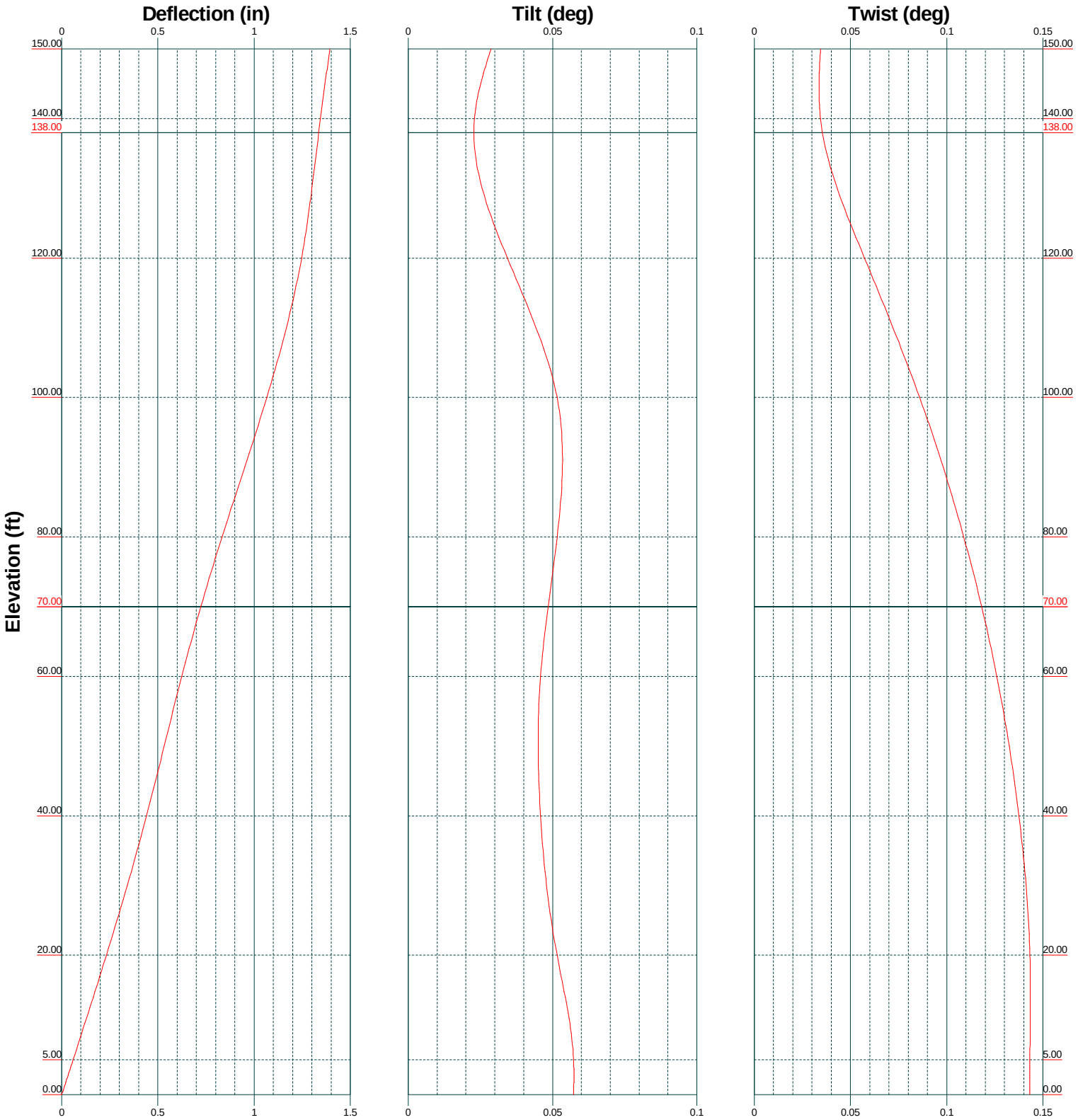

Centek Engineering Inc. 63-2 North Branford Rd. Branford, CT 06405 Phone: (203) 488-0580 FAX: (203) 488-8587	Job: ***20074.29 - CT11180C***		
	Project: ***150' Guyed Tower - 130 Vernon Road Bolton, CT***		
	Client: T-Mobile	Drawn by: TJL	App'd:
	Code: TIA-222-G	Date: 06/10/20	Scale: NTS
	Path: J:\Jobs\2007\400 W\29_CT11180C\05_Structural\Tower Analysis\Backup Documentation\Cai-cs\ER\150-ft Guyed Tower - Bolton, CT.eri		Dwg No. E-5

Stress Distribution Chart
0' - 150'

> 100% | 90%-100% | 75%-90% | 50%-75% | < 50% Overstress

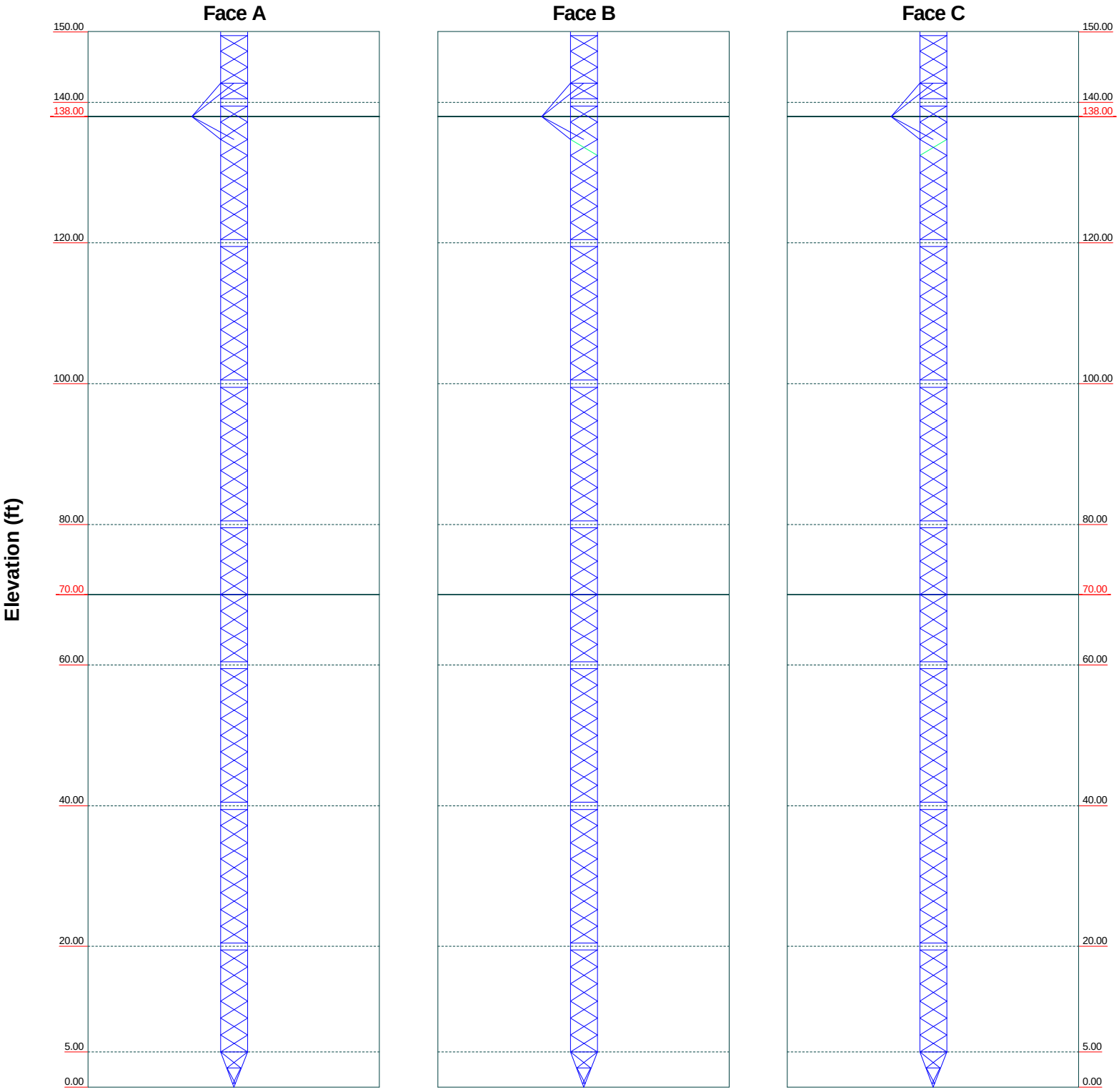

Centek Engineering Inc.
63-2 North Branford Rd.
Branford, CT 06405
Phone: (203) 488-0580
FAX: (203) 488-8587

Job:	***20074.29 - CT11180C***		
Project:	***150' Guyed Tower - 130 Vernon Road Bolton, CT***		
Client: T-Mobile	Drawn by: TJL	App'd:	
Code: TIA-222-G	Date: 06/10/20	Scale: NTS	
Path: J:\Jobs\2007\400 W\29_CT11180C\05_Structural\Tower Analysis\Backup Documentation\Cal-cs\ER\150-ft Guyed Tower - Bolton, CT.er		Dwg No. E-8	

Wind Pressures and Ice Thickness

TIA-222-G - 97 mph/50 mph 1.0000 in Ice Exposure C

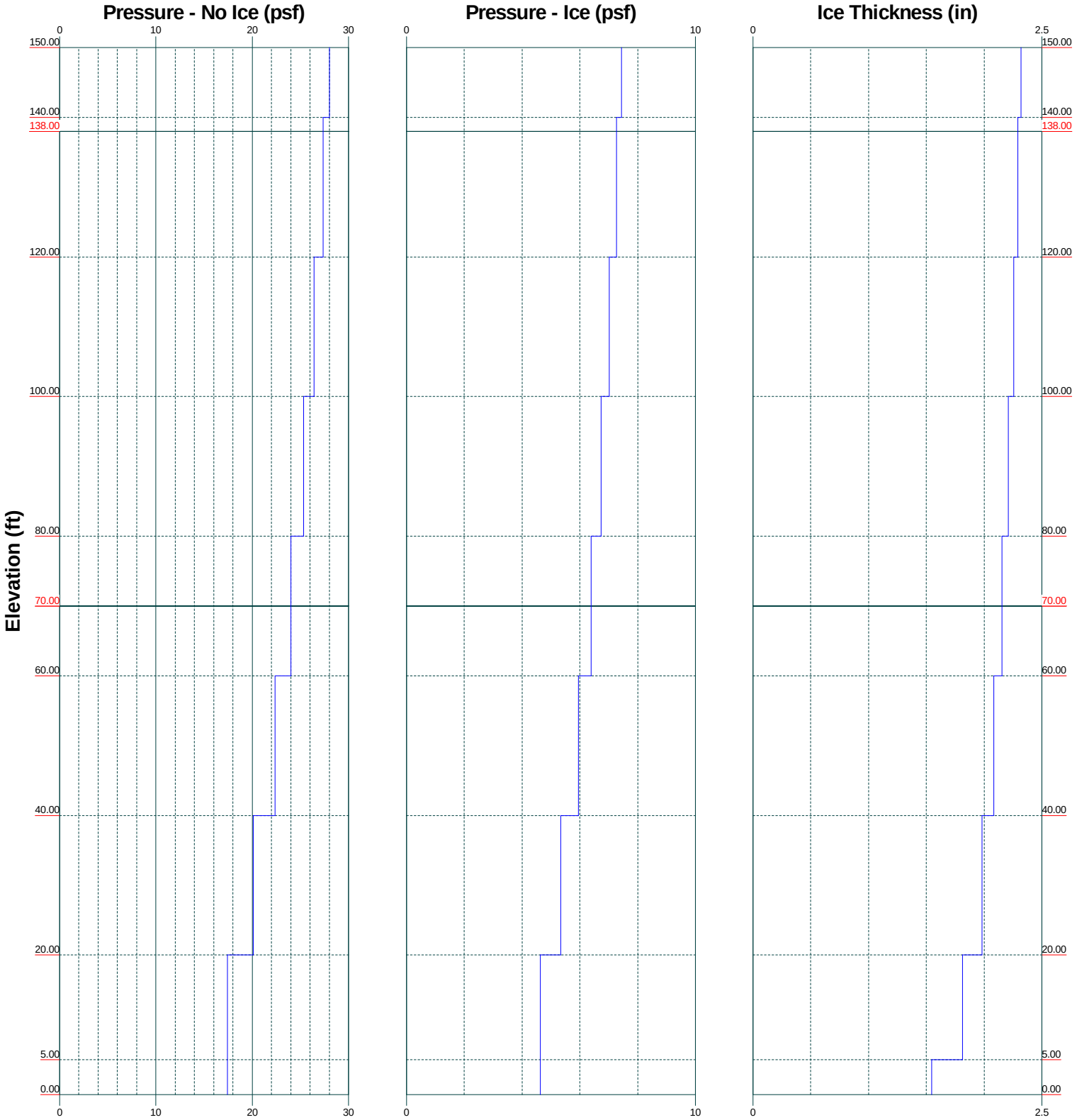

Centek Engineering Inc.
63-2 North Branford Rd.
Branford, CT 06405
Phone: (203) 488-0580
FAX: (203) 488-8587

Job:	***20074.29 - CT11180C***		
Project:	***150' Guyed Tower - 130 Vernon Road Bolton, CT***		
Client: T-Mobile	Drawn by: TJL	App'd:	
Code: TIA-222-G	Date: 06/10/20	Scale: NTS	
Path: J:\Jobs\2007\400 W\29_CT11180C\05_Structural\Tower Analysis\Backup Documentation\Calc\SER\150-ft Guyed Tower - Bolton, CT.eri		Dwg No. E-9	

Tower Input Data

The main tower is a 3x guyed tower with an overall height of 150.00 ft above the ground line.
The base of the tower is set at an elevation of 0.00 ft above the ground line.
The face width of the tower is 3.75 ft at the top and tapered at the base.
This tower is designed using the TIA-222-G standard.
The following design criteria apply:

Basic wind speed of 97 mph.
Structure Class II.
Exposure Category C.
Topographic Category 1.
Crest Height 0.00 ft.
Nominal ice thickness of 1.0000 in.
Ice thickness is considered to increase with height.
Ice density of 56 pcf.
A wind speed of 50 mph is used in combination with ice.
Temperature drop of 50 °F.
Deflections calculated using a wind speed of 60 mph.
Pressures are calculated at each section.
Safety factor used in guy design is 1.
Stress ratio used in tower member design is 1.
Local bending stresses due to climbing loads, feed line supports, and appurtenance mounts are not considered.

Options

Consider Moments - Legs
Consider Moments - Horizontals
Consider Moments - Diagonals
Use Moment Magnification
√ Use Code Stress Ratios
√ Use Code Safety Factors - Guys
Escalate Ice
Always Use Max Kz
Use Special Wind Profile
√ Include Bolts In Member Capacity
√ Leg Bolts Are At Top Of Section
Secondary Horizontal Braces Leg
Use Diamond Inner Bracing (4 Sided)
√ SR Members Have Cut Ends
SR Members Are Concentric

Distribute Leg Loads As Uniform
Assume Legs Pinned
√ Assume Rigid Index Plate
√ Use Clear Spans For Wind Area
√ Use Clear Spans For KL/r
√ Retension Guys To Initial Tension
Bypass Mast Stability Checks
√ Use Azimuth Dish Coefficients
√ Project Wind Area of Appurt.
√ Autocalc Torque Arm Areas
Add IBC .6D+W Combination
√ Sort Capacity Reports By Component
Triangulate Diamond Inner Bracing
Treat Feed Line Bundles As Cylinder
Ignore KL/ry For 60 Deg. Angle Legs

Use ASCE 10 X-Brace Ly Rules
Calculate Redundant Bracing Forces
Ignore Redundant Members in FEA
√ SR Leg Bolts Resist Compression
√ All Leg Panels Have Same Allowable
Offset Girt At Foundation
√ Consider Feed Line Torque
Include Angle Block Shear Check
Use TIA-222-G Bracing Resist. Exemption
Use TIA-222-G Tension Splice Exemption

Poles

Include Shear-Torsion Interaction
Always Use Sub-Critical Flow
Use Top Mounted Sockets
Pole Without Linear Attachments
Pole With Shroud Or No Appurtenances
Outside and Inside Corner Radii Are Known

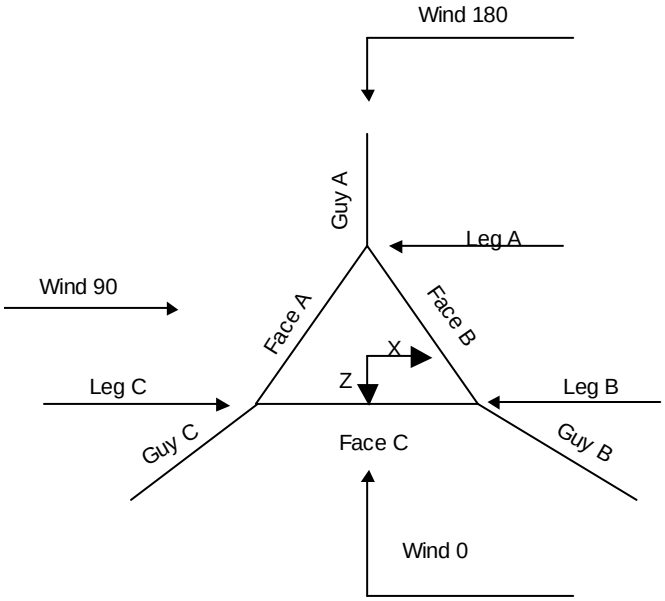

Corner & Starmount Guyed Tower

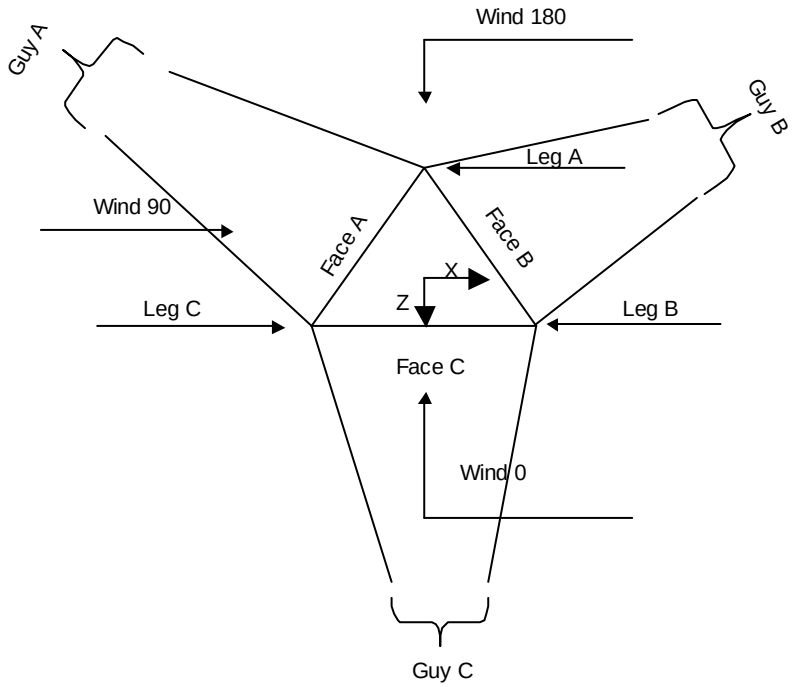

Face Guyed

Tower Section Geometry

Tower Section	Tower Elevation ft	Assembly Database	Description	Section Width ft	Number of Sections	Section Length ft
T1	150.00-140.00			3.75	1	10.00
T2	140.00-120.00			3.75	1	20.00
T3	120.00-100.00			3.75	1	20.00
T4	100.00-80.00			3.75	1	20.00
T5	80.00-60.00			3.75	1	20.00
T6	60.00-40.00			3.75	1	20.00
T7	40.00-20.00			3.75	1	20.00
T8	20.00-5.00			3.75	1	15.00
T9	5.00-0.00			3.75	1	5.00

Tower Section Geometry *(cont'd)*

Tower Section	Tower Elevation ft	Diagonal Spacing ft	Bracing Type	Has K Brace End Panels	Has Horizontals	Top Girt Offset in	Bottom Girt Offset in
T1	150.00-140.00	2.25	X Brace	No	Steps	6.0000	6.0000
T2	140.00-120.00	2.38	X Brace	No	Steps	6.0000	6.0000
T3	120.00-100.00	2.38	X Brace	No	Steps	6.0000	6.0000
T4	100.00-80.00	2.38	X Brace	No	Steps	6.0000	6.0000
T5	80.00-60.00	2.38	X Brace	No	Steps	6.0000	6.0000
T6	60.00-40.00	2.38	X Brace	No	Steps	6.0000	6.0000
T7	40.00-20.00	2.38	X Brace	No	Steps	6.0000	6.0000
T8	20.00-5.00	2.42	X Brace	No	Steps	6.0000	0.0000
T9	5.00-0.00	2.25	X Brace	No	Yes	0.0000	6.0000

Tower Section Geometry *(cont'd)*

Tower Elevation ft	Leg Type	Leg Size	Leg Grade	Diagonal Type	Diagonal Size	Diagonal Grade
T1 150.00-140.00	Solid Round	2	A572-50 (50 ksi)	Solid Round	3/4	A572-50 (50 ksi)
T2 140.00-120.00	Solid Round	2	A572-50 (50 ksi)	Solid Round	3/4	A572-50 (50 ksi)
T3 120.00-100.00	Solid Round	2	A572-50 (50 ksi)	Solid Round	3/4	A572-50 (50 ksi)
T4 100.00-80.00	Solid Round	2 1/4	A572-50 (50 ksi)	Solid Round	3/4	A572-50 (50 ksi)
T5 80.00-60.00	Solid Round	2 1/4	A572-50 (50 ksi)	Solid Round	3/4	A572-50 (50 ksi)
T6 60.00-40.00	Solid Round	2 1/4	A572-50 (50 ksi)	Solid Round	3/4	A572-50 (50 ksi)
T7 40.00-20.00	Solid Round	2 1/4	A572-50 (50 ksi)	Solid Round	3/4	A572-50 (50 ksi)
T8 20.00-5.00	Solid Round	2 1/2	A572-50 (50 ksi)	Solid Round	3/4	A572-50 (50 ksi)
T9 5.00-0.00	Solid Round	2 1/2	A572-50 (50 ksi)	Solid Round	3/4	A572-50 (50 ksi)

Tower Section Geometry *(cont'd)*

Tower Elevation ft	Top Girt Type	Top Girt Size	Top Girt Grade	Bottom Girt Type	Bottom Girt Size	Bottom Girt Grade
T1 150.00-140.00	Solid Round	3/4	A572-50 (50 ksi)	Solid Round	3/4	A572-50 (50 ksi)
T2 140.00-120.00	Solid Round	3/4	A572-50 (50 ksi)	Solid Round	3/4	A572-50 (50 ksi)
T3 120.00-100.00	Solid Round	3/4	A572-50 (50 ksi)	Solid Round	3/4	A572-50 (50 ksi)
T4 100.00-80.00	Solid Round	3/4	A572-50 (50 ksi)	Solid Round	3/4	A572-50 (50 ksi)
T5 80.00-60.00	Solid Round	3/4	A572-50 (50 ksi)	Solid Round	3/4	A572-50 (50 ksi)
T6 60.00-40.00	Solid Round	3/4	A572-50 (50 ksi)	Solid Round	3/4	A572-50 (50 ksi)
T7 40.00-20.00	Solid Round	3/4	A572-50	Solid Round	3/4	A572-50

Tower Elevation ft	Top Girt Type	Top Girt Size	Top Girt Grade	Bottom Girt Type	Bottom Girt Size	Bottom Girt Grade
T8 20.00-5.00	Solid Round	3/4	(50 ksi) A572-50 (50 ksi)	Solid Round	3/4	(50 ksi) A572-50 (50 ksi)
T9 5.00-0.00	Solid Round		A572-50 (50 ksi)	Solid Round	3/4	A572-50 (50 ksi)

Tower Section Geometry *(cont'd)*

Tower Elevation ft	No. of Mid Girts	Mid Girt Type	Mid Girt Size	Mid Girt Grade	Horizontal Type	Horizontal Size	Horizontal Grade
T9 5.00-0.00	None	Solid Round		A572-50 (50 ksi)	Flat Bar	4x1/2	A36 (36 ksi)

Tower Section Geometry *(cont'd)*

Tower Elevation ft	Gusset Area (per face) ft^2	Gusset Thickness in	Gusset Grade	Adjust. Factor A_f	Adjust. Factor A_r	Weight Mult.	Double Angle Stitch Bolt Spacing Diagonals in	Double Angle Stitch Bolt Spacing Horizontals in	Double Angle Stitch Bolt Spacing Redundants in
T1 150.00-140.00	0.00	0.0000	A36 (36 ksi)	1	1	1	36.0000	36.0000	36.0000
T2 140.00-120.00	0.00	0.0000	A36 (36 ksi)	1	1	1	36.0000	36.0000	36.0000
T3 120.00-100.00	0.00	0.0000	A36 (36 ksi)	1	1	1	36.0000	36.0000	36.0000
T4 100.00-80.00	0.00	0.0000	A36 (36 ksi)	1	1	1	36.0000	36.0000	36.0000
T5 80.00-60.00	0.00	0.0000	A36 (36 ksi)	1	1	1	36.0000	36.0000	36.0000
T6 60.00-40.00	0.00	0.0000	A36 (36 ksi)	1	1	1	36.0000	36.0000	36.0000
T7 40.00-20.00	0.00	0.0000	A36 (36 ksi)	1	1	1	36.0000	36.0000	36.0000
T8 20.00-5.00	0.00	0.0000	A36 (36 ksi)	1	1	1	36.0000	36.0000	36.0000
T9 5.00-0.00	0.00	0.0000	A36 (36 ksi)	1	1	1	36.0000	36.0000	36.0000

Tower Section Geometry *(cont'd)*

K Factors[1]

Tower Elevation ft	Calc K Single Angles	Calc K Solid Rounds	Legs	X Brace Diags X Y	K Brace Diags X Y	Single Diags X Y	Girts X Y	Horiz. X Y	Sec. Horiz. X Y	Inner Brace X Y
T1	Yes	Yes	1	1	1	1	1	1	1	1
150.00-140.00				1	1	1	1	1	1	1
T2	Yes	Yes	1	1	1	1	1	1	1	1
140.00-120.00				1	1	1	1	1	1	1
T3	Yes	Yes	1	1	1	1	1	1	1	1
120.00-100.00				1	1	1	1	1	1	1
T4	Yes	Yes	1	1	1	1	1	1	1	1
100.00-80.00				1	1	1	1	1	1	1
T5	Yes	Yes	1	1	1	1	1	1	1	1
80.00-60.00				1	1	1	1	1	1	1
T6	Yes	Yes	1	1	1	1	1	1	1	1
60.00-40.00				1	1	1	1	1	1	1
T7	Yes	Yes	1	1	1	1	1	1	1	1
40.00-20.00				1	1	1	1	1	1	1
T8 20.00-5.00	Yes	Yes	1	1	1	1	1	1	1	1
				1	1	1	1	1	1	1
T9 5.00-0.00	Yes	Yes	1	1	1	1	1	1	1	1
				1	1	1	1	1	1	1

[1]*Note: K factors are applied to member segment lengths. K-braces without inner supporting members will have the K factor in the out-of-plane direction applied to the overall length.*

Tower Section Geometry *(cont'd)*

Tower Elevation ft	Leg		Diagonal		Top Girt		Bottom Girt		Mid Girt		Long Horizontal		Short Horizontal	
	Net Width Deduct in	U	Net Width Deduct in	U	Net Width Deduct in	U	Net Width Deduct in	U	Net Width Deduct in	U	Net Width Deduct in	U	Net Width Deduct in	U
T1 150.00-140.00	0.0000	0.75	0.0000	0.75	0.0000	0.75	0.0000	0.75	0.0000	0.75	0.0000	0.75	0.0000	0.75
T2 140.00-120.00	0.0000	0.75	0.0000	0.75	0.0000	0.75	0.0000	0.75	0.0000	0.75	0.0000	0.75	0.0000	0.75
T3 120.00-100.00	0.0000	0.75	0.0000	0.75	0.0000	0.75	0.0000	0.75	0.0000	0.75	0.0000	0.75	0.0000	0.75
T4 100.00-80.00	0.0000	0.75	0.0000	0.75	0.0000	0.75	0.0000	0.75	0.0000	0.75	0.0000	0.75	0.0000	0.75
T5 80.00-60.00	0.0000	0.75	0.0000	0.75	0.0000	0.75	0.0000	0.75	0.0000	0.75	0.0000	0.75	0.0000	0.75
T6 60.00-40.00	0.0000	0.75	0.0000	0.75	0.0000	0.75	0.0000	0.75	0.0000	0.75	0.0000	0.75	0.0000	0.75
T7 40.00-20.00	0.0000	0.75	0.0000	0.75	0.0000	0.75	0.0000	0.75	0.0000	0.75	0.0000	0.75	0.0000	0.75
T8 20.00-5.00	0.0000	0.75	0.0000	0.75	0.0000	0.75	0.0000	0.75	0.0000	0.75	0.0000	0.75	0.0000	0.75
T9 5.00-0.00	0.0000	0.75	0.0000	0.75	0.0000	0.75	0.0000	0.75	0.0000	0.75	0.0000	0.75	0.0000	0.75

Tower Section Geometry *(cont'd)*

Tower Elevation ft	Leg Connection Type	Leg Bolt Size in	Leg No.	Diagonal Bolt Size in	Diagonal No.	Top Girt Bolt Size in	Top Girt No.	Bottom Girt Bolt Size in	Bottom Girt No.	Mid Girt Bolt Size in	Mid Girt No.	Long Horizontal Bolt Size in	Long Horizontal No.	Short Horizontal Bolt Size in	Short Horizontal No.
T1 150.00-140.00	Sleeve SS	0.0000 A325N	0	0.5000 A325N	0	0.5000 A325N	0	0.5000 A325N	0	0.6250 A325X	0	0.5000 A325N	0	0.6250 A325X	0
T2 140.00-120.00	Sleeve SS	0.6250 A325N	5	0.5000 A325N	0	0.5000 A325N	0	0.5000 A325N	0	0.6250 A325X	0	0.5000 A325N	0	0.6250 A325X	0
T3 120.00-100.00	Sleeve SS	0.6250 A325N	5	0.5000 A325N	0	0.5000 A325N	0	0.5000 A325N	0	0.6250 A325X	0	0.5000 A325N	0	0.6250 A325X	0
T4 100.00-80.00	Sleeve SS	0.7500 A325N	5	0.5000 A325N	0	0.5000 A325N	0	0.5000 A325N	0	0.6250 A325X	0	0.5000 A325N	0	0.6250 A325X	0
T5 80.00-60.00	Sleeve SS	0.7500 A325N	5	0.5000 A325N	0	0.5000 A325N	0	0.5000 A325N	0	0.6250 A325X	0	0.5000 A325N	0	0.6250 A325X	0
T6 60.00-40.00	Sleeve SS	0.7500 A325N	5	0.5000 A325N	0	0.5000 A325N	0	0.5000 A325N	0	0.6250 A325X	0	0.5000 A325N	0	0.6250 A325X	0
T7 40.00-20.00	Sleeve SS	0.7500 A325N	5	0.5000 A325N	0	0.5000 A325N	0	0.5000 A325N	0	0.6250 A325X	0	0.5000 A325N	0	0.6250 A325X	0
T8 20.00-5.00	Sleeve SS	0.7500 A325N	5	0.5000 A325N	0	0.5000 A325N	0	0.5000 A325N	0	0.6250 A325X	0	0.5000 A325N	0	0.6250 A325X	0
T9 5.00-0.00	Sleeve SS	0.0000 A325N	0	0.5000 A325N	0	0.5000 A325N	0	0.5000 A325N	0	0.6250 A325X	0	0.5000 A325N	0	0.6250 A325X	0

Guy Data

Guy Elevation ft	Guy Grade		Guy Size	Initial Tension K	%	Guy Modulus ksi	Guy Weight plf	L_u ft	Anchor Radius ft	Anchor Azimuth Adj. °	Anchor Elevation ft	End Fitting Efficiency %
138	EHS	A	9/16	3.50	10%	21000	0.671	256.30	210.00	0.0000	-14.00	100%
		B	9/16	3.50	10%	21000	0.671	268.63	210.00	0.0000	-34.00	100%
		C	9/16	3.50	10%	21000	0.671	271.20	210.00	0.0000	-38.00	100%
70	EHS	A	11/16"	5.00	10%	19000	1.000	223.97	210.00	0.0000	-14.00	100%
		B	11/16"	5.00	10%	19000	1.000	232.20	210.00	0.0000	-34.00	100%
		C	11/16"	5.00	10%	19000	1.000	234.02	210.00	0.0000	-38.00	100%

Guy Data *(cont'd)*

Guy Elevation ft	Mount Type	Torque-Arm Spread ft	Torque-Arm Leg Angle °	Torque-Arm Style	Torque-Arm Grade	Torque-Arm Type	Torque-Arm Size
138	Torque Arm	12.00	30.0000	Wing	A36 (36 ksi)	Double Angle	2L3x3x5/16
70	Corner						

Guy Data *(cont'd)*

Guy Elevation ft	Diagonal Grade	Diagonal Type	Upper Diagonal Size	Lower Diagonal Size	Is Strap.	Pull-Off Grade	Pull-Off Type	Pull-Off Size
138.00	A572-50 (50 ksi)	Solid Round			No	A572-50 (50 ksi)	Solid Round	1 1/4
70.00	A572-50 (50 ksi)	Solid Round			Yes	A572-50 (50 ksi)	Solid Round	1 1/4

Guy Data *(cont'd)*

Guy Elevation ft	Cable Weight A K	Cable Weight B K	Cable Weight C K	Cable Weight D K	Tower Intercept A ft	Tower Intercept B ft	Tower Intercept C ft	Tower Intercept D ft
138	0.17	0.18	0.18		6.21 4.3 sec/pulse	6.81 4.5 sec/pulse	6.94 4.5 sec/pulse	
70	0.22	0.23	0.23		4.98 3.9 sec/pulse	5.34 4.0 sec/pulse	5.42 4.0 sec/pulse	

Guy Data *(cont'd)*

Guy Elevation ft	Calc K Single Angles	Calc K Solid Rounds	Torque Arm K_x	Torque Arm K_y	Pull Off K_x	Pull Off K_y	Diagonal K_x	Diagonal K_y
138	No	No	1	1	1	1	1	1
70	No	No			1	1	1	1

Guy Data *(cont'd)*

Guy Elevation ft	Torque-Arm Bolt Size in	Torque-Arm Number	Torque-Arm Net Width Deduct in	Torque-Arm U	Pull Off Bolt Size in	Pull Off Number	Pull Off Net Width Deduct in	Pull Off U	Diagonal Bolt Size in	Diagonal Number	Diagonal Net Width Deduct in	Diagonal U
138	0.0000 A325N	0	0.0000	1	0.6250 A325N	0	0.0000	0.75	0.6250 A325N	0	0.0000	0.75
70	0.0000 A325N	0	0.0000	1	0.6250 A325N	0	0.0000	0.75	0.6250 A325N	0	0.0000	0.75

Guy Pressures

Guy Elevation ft	Guy Location	z ft	q_z psf	q_z Ice psf	Ice Thickness in
138	A	62.00	23	6	2.1302
	B	52.00	23	6	2.0930
	C	50.00	22	6	2.0849

Guy Elevation ft	Guy Location	z ft	q_z psf	q_z Ice psf	Ice Thickness in
70	A	28.00	20	5	1.9674
	B	18.00	18	5	1.8824
	C	16.00	18	5	1.8603

Guy-Tensioning Information

				Temperature At Time Of Tensioning													
				0 F		20 F		40 F		60 F		80 F		100 F		120 F	
Guy Elevation ft		H ft	V ft	Initial Tension K	Intercept ft	Initial Tension K	Intercept ft	Initial Tension K	Intercept ft	Initial Tension K	Intercept ft	Initial Tension K	Intercept ft	Initial Tension K	Intercept ft	Initial Tension K	Intercept ft
138	A	206.62	152.00	4.437	4.91	4.118	5.29	3.805	5.72	3.500	6.21	3.205	6.78	2.922	7.42	2.654	8.16
	B	206.62	172.00	4.351	5.49	4.062	5.88	3.778	6.32	3.500	6.81	3.231	7.37	2.971	8.00	2.724	8.72
	C	206.62	176.00	4.335	5.62	4.051	6.01	3.772	6.45	3.500	6.94	3.235	7.50	2.981	8.13	2.737	8.84
70	A	207.83	84.00	6.644	3.75	6.083	4.10	5.533	4.50	5.000	4.98	4.488	5.54	4.005	6.21	3.559	6.98
	B	207.83	104.00	6.527	4.10	6.006	4.45	5.496	4.86	5.000	5.34	4.523	5.90	4.070	6.55	3.647	7.30
	C	207.83	108.00	6.503	4.18	5.990	4.53	5.488	4.95	5.000	5.42	4.530	5.98	4.083	6.63	3.666	7.37

Feed Line/Linear Appurtenances - Entered As Round Or Flat

Description	Face or Leg	Allow Shield	Exclude From Torque Calculation	Component Type	Placement ft	Face Offset in	Lateral Offset (Frac FW)	#	# Per Row	Clear Spacing in	Width or Diameter in	Perimeter in	Weight plf
HYBRIFLEX 1-1/4" (Sprint)	B	No	No	Ar (CaAa)	148.00 - 0.00	0.0000	-0.3	4	4	1.5400	1.5400		1.30
HYBRIFLEX 1-1/4" (T-Mobile)	C	No	No	Ar (CaAa)	148.00 - 0.00	0.0000	-0.35	3	3	1.5400	1.5400		1.30
HYBRIFLEX 1-1/4" (T-Mobile - Proposed)	C	No	No	Ar (CaAa)	148.00 - 0.00	3.0000	-0.35	3	3	1.5400	1.5400		1.30

Feed Line/Linear Appurtenances Section Areas

Tower Section	Tower Elevation ft	Face	A_R ft^2	A_F ft^2	C_AA_A In Face ft^2	C_AA_A Out Face ft^2	Weight K
T1	150.00-140.00	A	0.000	0.000	0.000	0.000	0.00
		B	0.000	0.000	4.928	0.000	0.04
		C	0.000	0.000	7.392	0.000	0.06
T2	140.00-120.00	A	0.000	0.000	0.000	0.000	0.00
		B	0.000	0.000	12.320	0.000	0.10
		C	0.000	0.000	18.480	0.000	0.16
T3	120.00-100.00	A	0.000	0.000	0.000	0.000	0.00
		B	0.000	0.000	12.320	0.000	0.10
		C	0.000	0.000	18.480	0.000	0.16
T4	100.00-80.00	A	0.000	0.000	0.000	0.000	0.00
		B	0.000	0.000	12.320	0.000	0.10

Tower Section	Tower Elevation ft	Face	A_R ft^2	A_F ft^2	C_AA_A In Face ft^2	C_AA_A Out Face ft^2	Weight K
		C	0.000	0.000	18.480	0.000	0.16
T5	80.00-60.00	A	0.000	0.000	0.000	0.000	0.00
		B	0.000	0.000	12.320	0.000	0.10
		C	0.000	0.000	18.480	0.000	0.16
T6	60.00-40.00	A	0.000	0.000	0.000	0.000	0.00
		B	0.000	0.000	12.320	0.000	0.10
		C	0.000	0.000	18.480	0.000	0.16
T7	40.00-20.00	A	0.000	0.000	0.000	0.000	0.00
		B	0.000	0.000	12.320	0.000	0.10
		C	0.000	0.000	18.480	0.000	0.16
T8	20.00-5.00	A	0.000	0.000	0.000	0.000	0.00
		B	0.000	0.000	9.240	0.000	0.08
		C	0.000	0.000	13.860	0.000	0.12
T9	5.00-0.00	A	0.000	0.000	0.000	0.000	0.00
		B	0.000	0.000	3.080	0.000	0.03
		C	0.000	0.000	4.620	0.000	0.04

Feed Line/Linear Appurtenances Section Areas - With Ice

Tower Section	Tower Elevation ft	Face or Leg	Ice Thickness in	A_R ft^2	A_F ft^2	C_AA_A In Face ft^2	C_AA_A Out Face ft^2	Weight K
T1	150.00-140.00	A	2.319	0.000	0.000	0.000	0.000	0.00
		B		0.000	0.000	16.610	0.000	0.29
		C		0.000	0.000	27.597	0.000	0.45
T2	140.00-120.00	A	2.294	0.000	0.000	0.000	0.000	0.00
		B		0.000	0.000	41.361	0.000	0.72
		C		0.000	0.000	68.655	0.000	1.12
T3	120.00-100.00	A	2.256	0.000	0.000	0.000	0.000	0.00
		B		0.000	0.000	41.114	0.000	0.70
		C		0.000	0.000	68.145	0.000	1.10
T4	100.00-80.00	A	2.211	0.000	0.000	0.000	0.000	0.00
		B		0.000	0.000	40.824	0.000	0.69
		C		0.000	0.000	67.545	0.000	1.07
T5	80.00-60.00	A	2.156	0.000	0.000	0.000	0.000	0.00
		B		0.000	0.000	40.468	0.000	0.68
		C		0.000	0.000	66.811	0.000	1.05
T6	60.00-40.00	A	2.085	0.000	0.000	0.000	0.000	0.00
		B		0.000	0.000	40.007	0.000	0.66
		C		0.000	0.000	65.858	0.000	1.01
T7	40.00-20.00	A	1.981	0.000	0.000	0.000	0.000	0.00
		B		0.000	0.000	39.338	0.000	0.63
		C		0.000	0.000	64.474	0.000	0.97
T8	20.00-5.00	A	1.815	0.000	0.000	0.000	0.000	0.00
		B		0.000	0.000	28.705	0.000	0.44
		C		0.000	0.000	46.702	0.000	0.67
T9	5.00-0.00	A	1.545	0.000	0.000	0.000	0.000	0.00
		B		0.000	0.000	9.139	0.000	0.13
		C		0.000	0.000	14.677	0.000	0.19

Feed Line Center of Pressure

Section	Elevation ft	CP_X in	CP_Z in	CP_X Ice in	CP_Z Ice in
T1	150.00-140.00	4.9758	0.7464	2.5000	0.5412
T2	140.00-120.00	5.8395	0.8760	3.9995	0.8634
T3	120.00-100.00	5.8395	0.8760	4.0840	0.8779
T4	100.00-80.00	5.6734	0.8511	4.1113	0.8792
T5	80.00-60.00	5.6022	0.8404	3.9779	0.8452
T6	60.00-40.00	5.6734	0.8511	4.3842	0.9235
T7	40.00-20.00	5.6734	0.8511	4.6047	0.9571
T8	20.00-5.00	5.4885	0.8233	4.7251	0.9601
T9	5.00-0.00	3.7701	1.9218	1.6071	0.9011

Shielding Factor Ka

Tower Section	Feed Line Record No.	Description	Feed Line Segment Elev.	K_a No Ice	K_a Ice
T1	1	HYBRIFLEX 1-1/4"	140.00 - 148.00	0.6000	0.2784
T1	2	HYBRIFLEX 1-1/4"	140.00 - 148.00	0.6000	0.2784
T1	4	HYBRIFLEX 1-1/4"	140.00 - 148.00	0.6000	0.2784
T2	1	HYBRIFLEX 1-1/4"	120.00 - 140.00	0.6000	0.3564
T2	2	HYBRIFLEX 1-1/4"	120.00 - 140.00	0.6000	0.3564
T2	4	HYBRIFLEX 1-1/4"	120.00 - 140.00	0.6000	0.3564
T3	1	HYBRIFLEX 1-1/4"	100.00 - 120.00	0.6000	0.3640
T3	2	HYBRIFLEX 1-1/4"	100.00 - 120.00	0.6000	0.3640
T3	4	HYBRIFLEX 1-1/4"	100.00 - 120.00	0.6000	0.3640
T4	1	HYBRIFLEX 1-1/4"	80.00 - 100.00	0.6000	0.3684
T4	2	HYBRIFLEX 1-1/4"	80.00 - 100.00	0.6000	0.3684
T4	4	HYBRIFLEX 1-1/4"	80.00 - 100.00	0.6000	0.3684
T5	1	HYBRIFLEX 1-1/4"	60.00 - 80.00	0.6000	0.3601
T5	2	HYBRIFLEX 1-1/4"	60.00 - 80.00	0.6000	0.3601
T5	4	HYBRIFLEX 1-1/4"	60.00 - 80.00	0.6000	0.3601
T6	1	HYBRIFLEX 1-1/4"	40.00 - 60.00	0.6000	0.3934
T6	2	HYBRIFLEX 1-1/4"	40.00 - 60.00	0.6000	0.3934
T6	4	HYBRIFLEX 1-1/4"	40.00 - 60.00	0.6000	0.3934
T7	1	HYBRIFLEX 1-1/4"	20.00 - 40.00	0.6000	0.4142
T7	2	HYBRIFLEX 1-1/4"	20.00 - 40.00	0.6000	0.4142
T7	4	HYBRIFLEX 1-1/4"	20.00 - 40.00	0.6000	0.4142
T8	1	HYBRIFLEX 1-1/4"	5.00 - 20.00	0.6000	0.4310
T8	2	HYBRIFLEX 1-1/4"	5.00 - 20.00	0.6000	0.4310
T8	4	HYBRIFLEX 1-1/4"	5.00 - 20.00	0.6000	0.4310
T9	1	HYBRIFLEX 1-1/4"	0.00 - 5.00	0.6000	0.1711
T9	2	HYBRIFLEX 1-1/4"	0.00 - 5.00	0.6000	0.1711
T9	4	HYBRIFLEX 1-1/4"	0.00 - 5.00	0.6000	0.1711

Discrete Tower Loads

Description	Face or Leg	Offset Type	Offsets: Horz Lateral Vert ft ft ft	Azimuth Adjustment °	Placement ft		C_AA_A Front ft^2	C_AA_A Side ft^2	Weight K
APXVSPP18-C-A20	A	From Leg	3.00	0.0000	148.00	No Ice	8.02	5.28	0.06
(Sprint)			3.00			1/2" Ice	8.48	5.74	0.11
			0.00			1" Ice	8.94	6.20	0.16
APXVSPP18-C-A20	B	From Leg	3.00	0.0000	148.00	No Ice	8.02	5.28	0.06
(Sprint)			3.00			1/2" Ice	8.48	5.74	0.11
			0.00			1" Ice	8.94	6.20	0.16
APXVSPP18-C-A20	C	From Leg	3.00	0.0000	148.00	No Ice	8.02	5.28	0.06
(Sprint)			3.00			1/2" Ice	8.48	5.74	0.11
			0.00			1" Ice	8.94	6.20	0.16
DT465B-2XR	A	From Leg	3.00	0.0000	148.00	No Ice	9.10	5.97	0.06
(Sprint)			-3.00			1/2" Ice	9.56	6.43	0.12
			0.00			1" Ice	10.04	6.90	0.18
DT465B-2XR	B	From Leg	3.00	0.0000	148.00	No Ice	9.10	5.97	0.06
(Sprint)			-3.00			1/2" Ice	9.56	6.43	0.12
			0.00			1" Ice	10.04	6.90	0.18
DT465B-2XR	C	From Leg	3.00	0.0000	148.00	No Ice	9.10	5.97	0.06
(Sprint)			-3.00			1/2" Ice	9.56	6.43	0.12
			0.00			1" Ice	10.04	6.90	0.18
(2) FD-RRH 2x50 800	A	From Leg	3.00	0.0000	148.00	No Ice	2.06	1.93	0.06
(Sprint)			3.00			1/2" Ice	2.24	2.11	0.09
			0.00			1" Ice	2.43	2.29	0.11
(2) FD-RRH 2x50 800	B	From Leg	3.00	0.0000	148.00	No Ice	2.06	1.93	0.06
(Sprint)			3.00			1/2" Ice	2.24	2.11	0.09
			0.00			1" Ice	2.43	2.29	0.11
(2) FD-RRH 2x50 800	C	From Leg	3.00	0.0000	148.00	No Ice	2.06	1.93	0.06
(Sprint)			3.00			1/2" Ice	2.24	2.11	0.09
			0.00			1" Ice	2.43	2.29	0.11
FD-RRH 4x45 1900	A	From Leg	3.00	0.0000	148.00	No Ice	2.32	2.38	0.06
(Sprint)			3.00			1/2" Ice	2.52	2.59	0.08
			0.00			1" Ice	2.74	2.80	0.11
FD-RRH 4x45 1900	B	From Leg	3.00	0.0000	148.00	No Ice	2.32	2.38	0.06
(Sprint)			3.00			1/2" Ice	2.52	2.59	0.08
			0.00			1" Ice	2.74	2.80	0.11
FD-RRH 4x45 1900	C	From Leg	3.00	0.0000	148.00	No Ice	2.32	2.38	0.06
(Sprint)			3.00			1/2" Ice	2.52	2.59	0.08
			0.00			1" Ice	2.74	2.80	0.11
TD-RRH8x20-25	A	From Leg	3.00	0.0000	148.00	No Ice	4.05	1.53	0.07
(Sprint)			3.00			1/2" Ice	4.30	1.71	0.10
			0.00			1" Ice	4.56	1.90	0.13
TD-RRH8x20-25	B	From Leg	3.00	0.0000	148.00	No Ice	4.05	1.53	0.07
(Sprint)			3.00			1/2" Ice	4.30	1.71	0.10
			0.00			1" Ice	4.56	1.90	0.13
TD-RRH8x20-25	C	From Leg	3.00	0.0000	148.00	No Ice	4.05	1.53	0.07
(Sprint)			3.00			1/2" Ice	4.30	1.71	0.10
			0.00			1" Ice	4.56	1.90	0.13
PiROD 12' T-Frame	A	None		0.0000	148.00	No Ice	12.20	12.20	0.36
(Sprint)						1/2" Ice	17.60	17.60	0.49
						1" Ice	23.00	23.00	0.62
PiROD 12' T-Frame	B	None		0.0000	148.00	No Ice	12.20	12.20	0.36
(Sprint)						1/2" Ice	17.60	17.60	0.49
						1" Ice	23.00	23.00	0.62
PiROD 12' T-Frame	C	None		0.0000	148.00	No Ice	12.20	12.20	0.36

Description	Face or Leg	Offset Type	Offsets: Horz Lateral Vert ft ft ft	Azimuth Adjustment °	Placement ft		C_AA_A Front ft^2	C_AA_A Side ft^2	Weight K
(Sprint)						1/2" Ice	17.60	17.60	0.49
						1" Ice	23.00	23.00	0.62
APXVAARR24-43	A	From Leg	3.00	0.0000	130.00	No Ice	20.24	8.89	0.15
(T-Mobile)			-6.00			1/2" Ice	20.89	9.49	0.27
			0.00			1" Ice	21.54	10.09	0.39
AIR32	A	From Leg	3.00	0.0000	130.00	No Ice	6.51	4.71	0.13
(T-Mobile)			6.00			1/2" Ice	6.89	5.07	0.18
			0.00			1" Ice	7.27	5.43	0.23
AIR6449	A	From Leg	3.00	0.0000	130.00	No Ice	5.65	2.42	0.10
(T-Mobile - Proposed)			-2.00			1/2" Ice	5.96	2.64	0.14
			0.00			1" Ice	6.26	2.87	0.18
4449 B12,B71	A	From Leg	2.00	0.0000	130.00	No Ice	1.65	1.16	0.08
(T-Mobile)			-2.00			1/2" Ice	1.81	1.29	0.10
			0.00			1" Ice	1.98	1.44	0.11
4415 B25	A	From Leg	3.00	0.0000	130.00	No Ice	1.84	0.82	0.05
(T-Mobile)			-6.00			1/2" Ice	2.01	0.94	0.06
			-2.00			1" Ice	2.19	1.07	0.08
4415 B25	A	From Leg	3.00	0.0000	130.00	No Ice	1.84	0.82	0.05
(T-Mobile - Proposed)			-6.00			1/2" Ice	2.01	0.94	0.06
			0.00			1" Ice	2.19	1.07	0.08
CBC1923Q-43 Diplexer	A	From Leg	3.00	0.0000	130.00	No Ice	0.32	0.13	0.01
(T-Mobile - Proposed)			-6.00			1/2" Ice	0.40	0.17	0.01
			0.00			1" Ice	0.48	0.23	0.02
APXVAARR24-43	B	From Leg	3.00	0.0000	130.00	No Ice	20.24	8.89	0.15
(T-Mobile)			-6.00			1/2" Ice	20.89	9.49	0.27
			0.00			1" Ice	21.54	10.09	0.39
AIR32	B	From Leg	3.00	0.0000	130.00	No Ice	6.51	4.71	0.13
(T-Mobile)			6.00			1/2" Ice	6.89	5.07	0.18
			0.00			1" Ice	7.27	5.43	0.23
AIR6449	B	From Leg	3.00	0.0000	130.00	No Ice	5.65	2.42	0.10
(T-Mobile - Proposed)			-2.00			1/2" Ice	5.96	2.64	0.14
			0.00			1" Ice	6.26	2.87	0.18
4449 B12,B71	B	From Leg	2.00	0.0000	130.00	No Ice	1.65	1.16	0.08
(T-Mobile)			-2.00			1/2" Ice	1.81	1.29	0.10
			0.00			1" Ice	1.98	1.44	0.11
4415 B25	B	From Leg	3.00	0.0000	130.00	No Ice	1.84	0.82	0.05
(T-Mobile)			-6.00			1/2" Ice	2.01	0.94	0.06
			-2.00			1" Ice	2.19	1.07	0.08
4415 B25	B	From Leg	3.00	0.0000	130.00	No Ice	1.84	0.82	0.05
(T-Mobile - Proposed)			-6.00			1/2" Ice	2.01	0.94	0.06
			0.00			1" Ice	2.19	1.07	0.08
CBC1923Q-43 Diplexer	B	From Leg	3.00	0.0000	130.00	No Ice	0.32	0.13	0.01
(T-Mobile - Proposed)			-6.00			1/2" Ice	0.40	0.17	0.01
			0.00			1" Ice	0.48	0.23	0.02
APXVAARR24-43	C	From Leg	3.00	0.0000	130.00	No Ice	20.24	8.89	0.15
(T-Mobile)			-6.00			1/2" Ice	20.89	9.49	0.27
			0.00			1" Ice	21.54	10.09	0.39
AIR32	C	From Leg	3.00	0.0000	130.00	No Ice	6.51	4.71	0.13
(T-Mobile)			6.00			1/2" Ice	6.89	5.07	0.18
			0.00			1" Ice	7.27	5.43	0.23
AIR6449	C	From Leg	3.00	0.0000	130.00	No Ice	5.65	2.42	0.10
(T-Mobile - Proposed)			-2.00			1/2" Ice	5.96	2.64	0.14
			0.00			1" Ice	6.26	2.87	0.18
4449 B12,B71	C	From Leg	2.00	0.0000	130.00	No Ice	1.65	1.16	0.08
(T-Mobile)			-2.00			1/2" Ice	1.81	1.29	0.10
			0.00			1" Ice	1.98	1.44	0.11
4415 B25	C	From Leg	3.00	0.0000	130.00	No Ice	1.84	0.82	0.05

Description	Face or Leg	Offset Type	Offsets: Horz Lateral Vert ft ft ft	Azimuth Adjustment °	Placement ft		C_AA_A Front ft^2	C_AA_A Side ft^2	Weight K
(T-Mobile)			-6.00			1/2" Ice	2.01	0.94	0.06
			-2.00			1" Ice	2.19	1.07	0.08
4415 B25	C	From Leg	3.00	0.0000	130.00	No Ice	1.84	0.82	0.05
(T-Mobile - Proposed)			-6.00			1/2" Ice	2.01	0.94	0.06
			0.00			1" Ice	2.19	1.07	0.08
CBC1923Q-43 Diplexer	C	From Leg	3.00	0.0000	130.00	No Ice	0.32	0.13	0.01
(T-Mobile - Proposed)			-6.00			1/2" Ice	0.40	0.17	0.01
			0.00			1" Ice	0.48	0.23	0.02
12' V-Frame	A	None		0.0000	130.00	No Ice	9.22	12.97	0.30
(T-Mobile)						1/2" Ice	9.22	12.97	0.40
						1" Ice	9.22	12.97	0.50
12' V-Frame	B	None		0.0000	130.00	No Ice	9.22	12.97	0.30
(T-Mobile)						1/2" Ice	9.22	12.97	0.40
						1" Ice	9.22	12.97	0.50
SitePro VFA12-HD	C	None		0.0000	130.00	No Ice	16.00	16.00	0.75
(T-Mobile)						1/2" Ice	19.20	19.20	0.90
						1" Ice	22.40	22.40	1.05

Tower Pressures - No Ice

$G_H = 0.850$

Section Elevation ft	z ft	K_Z	q_z psf	A_G ft^2	Face	A_F ft^2	A_R ft^2	A_{leg} ft^2	Leg % 	C_AA_A In Face ft^2	C_AA_A Out Face ft^2
T1	145.00	1.369	28	39.167	A	0.000	6.244	3.333	53.39	0.000	0.000
150.00-140.00					B	0.000	6.244		53.39	4.928	0.000
					C	0.000	6.244		53.39	7.392	0.000
T2	130.00	1.337	27	78.333	A	0.000	11.356	6.667	58.71	0.000	0.000
140.00-120.00					B	0.000	11.356		58.71	12.320	0.000
					C	0.000	11.356		58.71	18.480	0.000
T3	110.00	1.291	26	78.333	A	0.000	11.356	6.667	58.71	0.000	0.000
120.00-100.00					B	0.000	11.356		58.71	12.320	0.000
					C	0.000	11.356		58.71	18.480	0.000
T4	90.00	1.238	25	78.750	A	0.000	12.162	7.500	61.67	0.000	0.000
100.00-80.00					B	0.000	12.162		61.67	12.320	0.000
					C	0.000	12.162		61.67	18.480	0.000
T5 80.00-60.00	70.00	1.174	24	78.750	A	0.000	12.533	7.500	59.84	0.000	0.000
					B	0.000	12.533		59.84	12.320	0.000
					C	0.000	12.533		59.84	18.480	0.000
T6 60.00-40.00	50.00	1.094	22	78.750	A	0.000	12.162	7.500	61.67	0.000	0.000
					B	0.000	12.162		61.67	12.320	0.000
					C	0.000	12.162		61.67	18.480	0.000
T7 40.00-20.00	30.00	0.982	20	78.750	A	0.000	12.162	7.500	61.67	0.000	0.000
					B	0.000	12.162		61.67	12.320	0.000
					C	0.000	12.162		61.67	18.480	0.000
T8 20.00-5.00	12.50	0.85	17	59.375	A	0.000	9.853	6.250	63.43	0.000	0.000
					B	0.000	9.853		63.43	9.240	0.000
					C	0.000	9.853		63.43	13.860	0.000

Section Elevation ft	z ft	K_Z	q_z psf	A_G ft²	Face	A_F ft²	A_R ft²	A_{leg} ft²	Leg %	C_AA_A In Face ft²	C_AA_A Out Face ft²
T9 5.00-0.00	2.50	0.85	17	10.488	A	0.618	2.985	2.270	63.00	0.000	0.000
					B	0.618	2.985		63.00	3.080	0.000
					C	0.618	2.985		63.00	4.620	0.000

Tower Pressure - With Ice

$G_H = 0.850$

Section Elevation ft	z ft	K_Z	q_z psf	t_Z in	A_G ft²	Face	A_F ft²	A_R ft²	A_{leg} ft²	Leg %	C_AA_A In Face ft²	C_AA_A Out Face ft²
T1	145.00	1.369	7	2.3191	43.032	A	0.000	31.051	11.064	35.63	0.000	0.000
150.00-140.00						B	0.000	31.051		35.63	16.610	0.000
						C	0.000	31.051		35.63	27.597	0.000
T2	130.00	1.337	7	2.2939	85.980	A	0.000	55.334	21.959	39.68	0.000	0.000
140.00-120.00						B	0.000	55.334		39.68	41.361	0.000
						C	0.000	55.334		39.68	68.655	0.000
T3	110.00	1.291	7	2.2559	85.853	A	0.000	54.606	21.706	39.75	0.000	0.000
120.00-100.00						B	0.000	54.606		39.75	41.114	0.000
						C	0.000	54.606		39.75	68.145	0.000
T4 100.00-80.00	90.00	1.238	7	2.2111	86.120	A	0.000	54.392	22.240	40.89	0.000	0.000
						B	0.000	54.392		40.89	40.824	0.000
						C	0.000	54.392		40.89	67.545	0.000
T5 80.00-60.00	70.00	1.174	6	2.1562	85.937	A	0.000	54.995	21.875	39.78	0.000	0.000
						B	0.000	54.995		39.78	40.468	0.000
						C	0.000	54.995		39.78	66.811	0.000
T6 60.00-40.00	50.00	1.094	6	2.0849	85.700	A	0.000	51.981	21.399	41.17	0.000	0.000
						B	0.000	51.981		41.17	40.007	0.000
						C	0.000	51.981		41.17	65.858	0.000
T7 40.00-20.00	30.00	0.982	5	1.9810	85.353	A	0.000	49.998	20.707	41.42	0.000	0.000
						B	0.000	49.998		41.42	39.338	0.000
						C	0.000	49.998		41.42	64.474	0.000
T8 20.00-5.00	12.50	0.85	5	1.8150	63.912	A	0.000	36.365	15.325	42.14	0.000	0.000
						B	0.000	36.365		42.14	28.705	0.000
						C	0.000	36.365		42.14	46.702	0.000
T9 5.00-0.00	2.50	0.85	5	1.5452	11.863	A	0.618	9.215	5.077	51.63	0.000	0.000
						B	0.618	9.215		51.63	9.139	0.000
						C	0.618	9.215		51.63	14.677	0.000

Tower Pressure - Service

$G_H = 0.850$

Section Elevation ft	z ft	K_Z	q_z psf	A_G ft²	Face	A_F ft²	A_R ft²	A_{leg} ft²	Leg %	C_AA_A In Face ft²	C_AA_A Out Face ft²
T1	145.00	1.369	11	39.167	A	0.000	6.244	3.333	53.39	0.000	0.000
150.00-140.00					B	0.000	6.244		53.39	4.928	0.000
					C	0.000	6.244		53.39	7.392	0.000
T2	130.00	1.337	10	78.333	A	0.000	11.356	6.667	58.71	0.000	0.000

Section Elevation ft	z ft	K_Z	q_z psf	A_G ft^2	Face	A_F ft^2	A_R ft^2	A_{leg} ft^2	Leg %	C_AA_A In Face ft^2	C_AA_A Out Face ft^2
140.00-120.00					B	0.000	11.356		58.71	12.320	0.000
					C	0.000	11.356		58.71	18.480	0.000
T3	110.00	1.291	10	78.333	A	0.000	11.356	6.667	58.71	0.000	0.000
120.00-100.00					B	0.000	11.356		58.71	12.320	0.000
					C	0.000	11.356		58.71	18.480	0.000
T4	90.00	1.238	10	78.750	A	0.000	12.162	7.500	61.67	0.000	0.000
100.00-80.00					B	0.000	12.162		61.67	12.320	0.000
					C	0.000	12.162		61.67	18.480	0.000
T5 80.00-60.00	70.00	1.174	9	78.750	A	0.000	12.533	7.500	59.84	0.000	0.000
					B	0.000	12.533		59.84	12.320	0.000
					C	0.000	12.533		59.84	18.480	0.000
T6 60.00-40.00	50.00	1.094	9	78.750	A	0.000	12.162	7.500	61.67	0.000	0.000
					B	0.000	12.162		61.67	12.320	0.000
					C	0.000	12.162		61.67	18.480	0.000
T7 40.00-20.00	30.00	0.982	8	78.750	A	0.000	12.162	7.500	61.67	0.000	0.000
					B	0.000	12.162		61.67	12.320	0.000
					C	0.000	12.162		61.67	18.480	0.000
T8 20.00-5.00	12.50	0.85	7	59.375	A	0.000	9.853	6.250	63.43	0.000	0.000
					B	0.000	9.853		63.43	9.240	0.000
					C	0.000	9.853		63.43	13.860	0.000
T9 5.00-0.00	2.50	0.85	7	10.488	A	0.618	2.985	2.270	63.00	0.000	0.000
					B	0.618	2.985		63.00	3.080	0.000
					C	0.618	2.985		63.00	4.620	0.000

Tower Forces - No Ice - Wind Normal To Face

Section Elevation ft	Add Weight K	Self Weight K	Face	e	C_F	q_z psf	D_F	D_R	A_E ft^2	F K	w plf	Ctrl. Face
T1	0.10	0.56	A	0.159	2.737	28	1	1	3.550	0.41	40.75	C
150.00-140.00			B	0.159	2.737		1	1	3.550			
			C	0.159	2.737		1	1	3.550			
T2	0.26	1.00	A	0.145	2.79	27	1	1	6.439	0.85	42.42	C
140.00-120.00		TA 1.07	B	0.145	2.79		1	1	6.439			
			C	0.145	2.79		1	1	6.439			
T3	0.26	1.00	A	0.145	2.79	26	1	1	6.439	0.82	40.95	C
120.00-100.00			B	0.145	2.79		1	1	6.439			
			C	0.145	2.79		1	1	6.439			
T4	0.26	1.17	A	0.154	2.755	25	1	1	6.908	0.81	40.41	C
100.00-80.00			B	0.154	2.755		1	1	6.908			
			C	0.154	2.755		1	1	6.908			
T5	0.26	1.21	A	0.159	2.738	24	1	1	7.126	0.78	38.81	C
80.00-60.00			B	0.159	2.738		1	1	7.126			
			C	0.159	2.738		1	1	7.126			
T6	0.26	1.17	A	0.154	2.755	22	1	1	6.908	0.71	35.70	C
60.00-40.00			B	0.154	2.755		1	1	6.908			
			C	0.154	2.755		1	1	6.908			
T7	0.26	1.17	A	0.154	2.755	20	1	1	6.908	0.64	32.06	C
40.00-20.00			B	0.154	2.755		1	1	6.908			
			C	0.154	2.755		1	1	6.908			
T8 20.00-5.00	0.20	1.03	A	0.166	2.714	17	1	1	5.610	0.43	28.68	C
			B	0.166	2.714		1	1	5.610			
			C	0.166	2.714		1	1	5.610			
T9 5.00-0.00	0.07	0.37	A	0.344	2.187	17	1	1	2.450	0.15	29.52	C
			B	0.344	2.187		1	1	2.450			
			C	0.344	2.187		1	1	2.450			

Section Elevation ft	Add Weight K	Self Weight K	Face	e	C_F	q_z psf	D_F	D_R	A_E ft^2	F K	w plf	Ctrl. Face
Sum Weight:	1.92	9.73								5.59		

Tower Forces - No Ice - Wind 45 To Face

Section Elevation ft	Add Weight K	Self Weight K	Face	e	C_F	q_z psf	D_F	D_R	A_E ft^2	F K	w plf	Ctrl. Face
T1	0.10	0.56	A	0.159	2.737	28	0.825	1	3.550	0.41	40.75	C
150.00-140.00			B	0.159	2.737		0.825	1	3.550			
			C	0.159	2.737		0.825	1	3.550			
T2	0.26	1.00	A	0.145	2.79	27	0.825	1	6.439	0.85	42.42	C
140.00-120.00		TA 1.07	B	0.145	2.79		0.825	1	6.439			
			C	0.145	2.79		0.825	1	6.439			
T3	0.26	1.00	A	0.145	2.79	26	0.825	1	6.439	0.82	40.95	C
120.00-100.00			B	0.145	2.79		0.825	1	6.439			
			C	0.145	2.79		0.825	1	6.439			
T4	0.26	1.17	A	0.154	2.755	25	0.825	1	6.908	0.81	40.41	C
100.00-80.00			B	0.154	2.755		0.825	1	6.908			
			C	0.154	2.755		0.825	1	6.908			
T5	0.26	1.21	A	0.159	2.738	24	0.825	1	7.126	0.78	38.81	C
80.00-60.00			B	0.159	2.738		0.825	1	7.126			
			C	0.159	2.738		0.825	1	7.126			
T6	0.26	1.17	A	0.154	2.755	22	0.825	1	6.908	0.71	35.70	C
60.00-40.00			B	0.154	2.755		0.825	1	6.908			
			C	0.154	2.755		0.825	1	6.908			
T7	0.26	1.17	A	0.154	2.755	20	0.825	1	6.908	0.64	32.06	C
40.00-20.00			B	0.154	2.755		0.825	1	6.908			
			C	0.154	2.755		0.825	1	6.908			
T8 20.00-5.00	0.20	1.03	A	0.166	2.714	17	0.825	1	5.610	0.43	28.68	C
			B	0.166	2.714		0.825	1	5.610			
			C	0.166	2.714		0.825	1	5.610			
T9 5.00-0.00	0.07	0.37	A	0.344	2.187	17	0.825	1	2.342	0.14	28.82	C
			B	0.344	2.187		0.825	1	2.342			
			C	0.344	2.187		0.825	1	2.342			
Sum Weight:	1.92	9.73								5.59		

Tower Forces - No Ice - Wind 60 To Face

Section Elevation ft	Add Weight K	Self Weight K	Face	e	C_F	q_z psf	D_F	D_R	A_E ft^2	F K	w plf	Ctrl. Face
T1	0.10	0.56	A	0.159	2.737	28	0.8	1	3.550	0.41	40.75	C
150.00-140.00			B	0.159	2.737		0.8	1	3.550			
			C	0.159	2.737		0.8	1	3.550			
T2	0.26	1.00	A	0.145	2.79	27	0.8	1	6.439	0.85	42.42	C
140.00-120.00		TA 1.07	B	0.145	2.79		0.8	1	6.439			
			C	0.145	2.79		0.8	1	6.439			

Section Elevation ft	Add Weight K	Self Weight K	Face	e	C_F	q_z psf	D_F	D_R	A_E ft^2	F K	w plf	Ctrl. Face
T3	0.26	1.00	A	0.145	2.79	26	0.8	1	6.439	0.82	40.95	C
120.00-100.00			B	0.145	2.79		0.8	1	6.439			
			C	0.145	2.79		0.8	1	6.439			
T4	0.26	1.17	A	0.154	2.755	25	0.8	1	6.908	0.81	40.41	C
100.00-80.00			B	0.154	2.755		0.8	1	6.908			
			C	0.154	2.755		0.8	1	6.908			
T5	0.26	1.21	A	0.159	2.738	24	0.8	1	7.126	0.78	38.81	C
80.00-60.00			B	0.159	2.738		0.8	1	7.126			
			C	0.159	2.738		0.8	1	7.126			
T6	0.26	1.17	A	0.154	2.755	22	0.8	1	6.908	0.71	35.70	C
60.00-40.00			B	0.154	2.755		0.8	1	6.908			
			C	0.154	2.755		0.8	1	6.908			
T7	0.26	1.17	A	0.154	2.755	20	0.8	1	6.908	0.64	32.06	C
40.00-20.00			B	0.154	2.755		0.8	1	6.908			
			C	0.154	2.755		0.8	1	6.908			
T8 20.00-5.00	0.20	1.03	A	0.166	2.714	17	0.8	1	5.610	0.43	28.68	C
			B	0.166	2.714		0.8	1	5.610			
			C	0.166	2.714		0.8	1	5.610			
T9 5.00-0.00	0.07	0.37	A	0.344	2.187	17	0.8	1	2.326	0.14	28.72	C
			B	0.344	2.187		0.8	1	2.326			
			C	0.344	2.187		0.8	1	2.326			
Sum Weight:	1.92	9.73								5.59		

Tower Forces - No Ice - Wind 90 To Face

Section Elevation ft	Add Weight K	Self Weight K	Face	e	C_F	q_z psf	D_F	D_R	A_E ft^2	F K	w plf	Ctrl. Face
T1	0.10	0.56	A	0.159	2.737	28	0.85	1	3.550	0.41	40.75	C
150.00-140.00			B	0.159	2.737		0.85	1	3.550			
			C	0.159	2.737		0.85	1	3.550			
T2	0.26	1.00	A	0.145	2.79	27	0.85	1	6.439	0.85	42.42	C
140.00-120.00		TA 1.07	B	0.145	2.79		0.85	1	6.439			
			C	0.145	2.79		0.85	1	6.439			
T3	0.26	1.00	A	0.145	2.79	26	0.85	1	6.439	0.82	40.95	C
120.00-100.00			B	0.145	2.79		0.85	1	6.439			
			C	0.145	2.79		0.85	1	6.439			
T4	0.26	1.17	A	0.154	2.755	25	0.85	1	6.908	0.81	40.41	C
100.00-80.00			B	0.154	2.755		0.85	1	6.908			
			C	0.154	2.755		0.85	1	6.908			
T5	0.26	1.21	A	0.159	2.738	24	0.85	1	7.126	0.78	38.81	C
80.00-60.00			B	0.159	2.738		0.85	1	7.126			
			C	0.159	2.738		0.85	1	7.126			
T6	0.26	1.17	A	0.154	2.755	22	0.85	1	6.908	0.71	35.70	C
60.00-40.00			B	0.154	2.755		0.85	1	6.908			
			C	0.154	2.755		0.85	1	6.908			
T7	0.26	1.17	A	0.154	2.755	20	0.85	1	6.908	0.64	32.06	C
40.00-20.00			B	0.154	2.755		0.85	1	6.908			
			C	0.154	2.755		0.85	1	6.908			
T8 20.00-5.00	0.20	1.03	A	0.166	2.714	17	0.85	1	5.610	0.43	28.68	C
			B	0.166	2.714		0.85	1	5.610			
			C	0.166	2.714		0.85	1	5.610			
T9 5.00-0.00	0.07	0.37	A	0.344	2.187	17	0.85	1	2.357	0.14	28.92	C

Section Elevation ft	Add Weight K	Self Weight K	Face	e	C_F	q_z psf	D_F	D_R	A_E ft^2	F K	w plf	Ctrl. Face
			B	0.344	2.187		0.85	1	2.357			
			C	0.344	2.187		0.85	1	2.357			
Sum Weight:	1.92	9.73								5.59		

Tower Forces - With Ice - Wind Normal To Face

Section Elevation ft	Add Weight K	Self Weight K	Face	e	C_F	q_z psf	D_F	D_R	A_E ft^2	F K	w plf	Ctrl. Face
T1	0.74	2.15	A	0.722	1.779	7	1	1	25.666	0.37	36.68	C
150.00-140.00			B	0.722	1.779		1	1	25.666			
			C	0.722	1.779		1	1	25.666			
T2	1.83	3.73	A	0.644	1.783	7	1	1	42.725	0.71	35.69	C
140.00-120.00		TA 3.12	B	0.644	1.783		1	1	42.725			
			C	0.644	1.783		1	1	42.725			
T3	1.80	3.65	A	0.636	1.786	7	1	1	41.889	0.68	34.21	C
120.00-100.00			B	0.636	1.786		1	1	41.889			
			C	0.636	1.786		1	1	41.889			
T4	1.77	3.77	A	0.632	1.788	7	1	1	41.564	0.65	32.69	C
100.00-80.00			B	0.632	1.788		1	1	41.564			
			C	0.632	1.788		1	1	41.564			
T5	1.72	3.81	A	0.64	1.785	6	1	1	42.330	0.62	30.99	C
80.00-60.00			B	0.64	1.785		1	1	42.330			
			C	0.64	1.785		1	1	42.330			
T6	1.67	3.53	A	0.607	1.8	6	1	1	38.878	0.56	28.23	C
60.00-40.00			B	0.607	1.8		1	1	38.878			
			C	0.607	1.8		1	1	38.878			
T7	1.59	3.34	A	0.586	1.814	5	1	1	36.741	0.50	24.90	C
40.00-20.00			B	0.586	1.814		1	1	36.741			
			C	0.586	1.814		1	1	36.741			
T8 20.00-5.00	1.10	2.50	A	0.569	1.827	5	1	1	26.348	0.32	21.13	C
			B	0.569	1.827		1	1	26.348			
			C	0.569	1.827		1	1	26.348			
T9 5.00-0.00	0.32	0.73	A	0.829	1.84	5	1	1	8.987	0.08	16.20	C
			B	0.829	1.84		1	1	8.987			
			C	0.829	1.84		1	1	8.987			
Sum Weight:	12.55	30.33								4.50		

Tower Forces - With Ice - Wind 45 To Face

Section Elevation ft	Add Weight K	Self Weight K	Face	e	C_F	q_z psf	D_F	D_R	A_E ft^2	F K	w plf	Ctrl. Face
T1	0.74	2.15	A	0.722	1.779	7	0.825	1	25.666	0.37	36.68	C
150.00-140.00			B	0.722	1.779		0.825	1	25.666			
			C	0.722	1.779		0.825	1	25.666			
T2	1.83	3.73	A	0.644	1.783	7	0.825	1	42.725	0.71	35.69	C

Section Elevation ft	Add Weight K	Self Weight K	Face	e	C_F	q_z psf	D_F	D_R	A_E ft^2	F K	w plf	Ctrl. Face
140.00-120.00		TA 3.12	B	0.644	1.783		0.825	1	42.725			
			C	0.644	1.783		0.825	1	42.725			
T3	1.80	3.65	A	0.636	1.786	7	0.825	1	41.889	0.68	34.21	C
120.00-100.00			B	0.636	1.786		0.825	1	41.889			
			C	0.636	1.786		0.825	1	41.889			
T4	1.77	3.77	A	0.632	1.788	7	0.825	1	41.564	0.65	32.69	C
100.00-80.00			B	0.632	1.788		0.825	1	41.564			
			C	0.632	1.788		0.825	1	41.564			
T5	1.72	3.81	A	0.64	1.785	6	0.825	1	42.330	0.62	30.99	C
80.00-60.00			B	0.64	1.785		0.825	1	42.330			
			C	0.64	1.785		0.825	1	42.330			
T6	1.67	3.53	A	0.607	1.8	6	0.825	1	38.878	0.56	28.23	C
60.00-40.00			B	0.607	1.8		0.825	1	38.878			
			C	0.607	1.8		0.825	1	38.878			
T7	1.59	3.34	A	0.586	1.814	5	0.825	1	36.741	0.50	24.90	C
40.00-20.00			B	0.586	1.814		0.825	1	36.741			
			C	0.586	1.814		0.825	1	36.741			
T8 20.00-5.00	1.10	2.50	A	0.569	1.827	5	0.825	1	26.348	0.32	21.13	C
			B	0.569	1.827		0.825	1	26.348			
			C	0.569	1.827		0.825	1	26.348			
T9 5.00-0.00	0.32	0.73	A	0.829	1.84	5	0.825	1	8.879	0.08	16.05	C
			B	0.829	1.84		0.825	1	8.879			
			C	0.829	1.84		0.825	1	8.879			
Sum Weight:	12.55	30.33								4.50		

Tower Forces - With Ice - Wind 60 To Face

Section Elevation ft	Add Weight K	Self Weight K	Face	e	C_F	q_z psf	D_F	D_R	A_E ft^2	F K	w plf	Ctrl. Face
T1	0.74	2.15	A	0.722	1.779	7	0.8	1	25.666	0.37	36.68	C
150.00-140.00			B	0.722	1.779		0.8	1	25.666			
			C	0.722	1.779		0.8	1	25.666			
T2	1.83	3.73	A	0.644	1.783	7	0.8	1	42.725	0.71	35.69	C
140.00-120.00		TA 3.12	B	0.644	1.783		0.8	1	42.725			
			C	0.644	1.783		0.8	1	42.725			
T3	1.80	3.65	A	0.636	1.786	7	0.8	1	41.889	0.68	34.21	C
120.00-100.00			B	0.636	1.786		0.8	1	41.889			
			C	0.636	1.786		0.8	1	41.889			
T4	1.77	3.77	A	0.632	1.788	7	0.8	1	41.564	0.65	32.69	C
100.00-80.00			B	0.632	1.788		0.8	1	41.564			
			C	0.632	1.788		0.8	1	41.564			
T5	1.72	3.81	A	0.64	1.785	6	0.8	1	42.330	0.62	30.99	C
80.00-60.00			B	0.64	1.785		0.8	1	42.330			
			C	0.64	1.785		0.8	1	42.330			
T6	1.67	3.53	A	0.607	1.8	6	0.8	1	38.878	0.56	28.23	C
60.00-40.00			B	0.607	1.8		0.8	1	38.878			
			C	0.607	1.8		0.8	1	38.878			
T7	1.59	3.34	A	0.586	1.814	5	0.8	1	36.741	0.50	24.90	C
40.00-20.00			B	0.586	1.814		0.8	1	36.741			
			C	0.586	1.814		0.8	1	36.741			
T8 20.00-5.00	1.10	2.50	A	0.569	1.827	5	0.8	1	26.348	0.32	21.13	C
			B	0.569	1.827		0.8	1	26.348			

Section Elevation ft	Add Weight K	Self Weight K	Face	e	C_F	q_z psf	D_F	D_R	A_E ft^2	F K	w plf	Ctrl. Face
			C	0.569	1.827		0.8	1	26.348			
T9 5.00-0.00	0.32	0.73	A	0.829	1.84	5	0.8	1	8.864	0.08	16.02	C
			B	0.829	1.84		0.8	1	8.864			
			C	0.829	1.84		0.8	1	8.864			
Sum Weight:	12.55	30.33								4.50		

Tower Forces - With Ice - Wind 90 To Face

Section Elevation ft	Add Weight K	Self Weight K	Face	e	C_F	q_z psf	D_F	D_R	A_E ft^2	F K	w plf	Ctrl. Face
T1	0.74	2.15	A	0.722	1.779	7	0.85	1	25.666	0.37	36.68	C
150.00-140.00			B	0.722	1.779		0.85	1	25.666			
			C	0.722	1.779		0.85	1	25.666			
T2	1.83	3.73	A	0.644	1.783	7	0.85	1	42.725	0.71	35.69	C
140.00-120.00		TA 3.12	B	0.644	1.783		0.85	1	42.725			
			C	0.644	1.783		0.85	1	42.725			
T3	1.80	3.65	A	0.636	1.786	7	0.85	1	41.889	0.68	34.21	C
120.00-100.00			B	0.636	1.786		0.85	1	41.889			
			C	0.636	1.786		0.85	1	41.889			
T4	1.77	3.77	A	0.632	1.788	7	0.85	1	41.564	0.65	32.69	C
100.00-80.00			B	0.632	1.788		0.85	1	41.564			
			C	0.632	1.788		0.85	1	41.564			
T5	1.72	3.81	A	0.64	1.785	6	0.85	1	42.330	0.62	30.99	C
80.00-60.00			B	0.64	1.785		0.85	1	42.330			
			C	0.64	1.785		0.85	1	42.330			
T6	1.67	3.53	A	0.607	1.8	6	0.85	1	38.878	0.56	28.23	C
60.00-40.00			B	0.607	1.8		0.85	1	38.878			
			C	0.607	1.8		0.85	1	38.878			
T7	1.59	3.34	A	0.586	1.814	5	0.85	1	36.741	0.50	24.90	C
40.00-20.00			B	0.586	1.814		0.85	1	36.741			
			C	0.586	1.814		0.85	1	36.741			
T8 20.00-5.00	1.10	2.50	A	0.569	1.827	5	0.85	1	26.348	0.32	21.13	C
			B	0.569	1.827		0.85	1	26.348			
			C	0.569	1.827		0.85	1	26.348			
T9 5.00-0.00	0.32	0.73	A	0.829	1.84	5	0.85	1	8.894	0.08	16.07	C
			B	0.829	1.84		0.85	1	8.894			
			C	0.829	1.84		0.85	1	8.894			
Sum Weight:	12.55	30.33								4.50		

Tower Forces - Service - Wind Normal To Face

Section Elevation ft	Add Weight K	Self Weight K	Face	e	C_F	q_z psf	D_F	D_R	A_E ft^2	F K	w plf	Ctrl. Face
T1	0.10	0.56	A	0.159	2.737	11	1	1	3.550	0.16	15.59	C
150.00-140.00			B	0.159	2.737		1	1	3.550			

Section Elevation ft	Add Weight K	Self Weight K	Face	e	C_F	q_z psf	D_F	D_R	A_E ft^2	F K	w plf	Ctrl. Face
			C	0.159	2.737		1	1	3.550			
T2	0.26	1.00	A	0.145	2.79	10	1	1	6.439	0.32	16.23	C
140.00-120.00		TA 1.07	B	0.145	2.79		1	1	6.439			
			C	0.145	2.79		1	1	6.439			
T3	0.26	1.00	A	0.145	2.79	10	1	1	6.439	0.31	15.67	C
120.00-100.00			B	0.145	2.79		1	1	6.439			
			C	0.145	2.79		1	1	6.439			
T4	0.26	1.17	A	0.154	2.755	10	1	1	6.908	0.31	15.46	C
100.00-80.00			B	0.154	2.755		1	1	6.908			
			C	0.154	2.755		1	1	6.908			
T5	0.26	1.21	A	0.159	2.738	9	1	1	7.126	0.30	14.85	C
80.00-60.00			B	0.159	2.738		1	1	7.126			
			C	0.159	2.738		1	1	7.126			
T6	0.26	1.17	A	0.154	2.755	9	1	1	6.908	0.27	13.66	C
60.00-40.00			B	0.154	2.755		1	1	6.908			
			C	0.154	2.755		1	1	6.908			
T7	0.26	1.17	A	0.154	2.755	8	1	1	6.908	0.25	12.27	C
40.00-20.00			B	0.154	2.755		1	1	6.908			
			C	0.154	2.755		1	1	6.908			
T8 20.00-5.00	0.20	1.03	A	0.166	2.714	7	1	1	5.610	0.16	10.97	C
			B	0.166	2.714		1	1	5.610			
			C	0.166	2.714		1	1	5.610			
T9 5.00-0.00	0.07	0.37	A	0.344	2.187	7	1	1	2.450	0.06	11.29	C
			B	0.344	2.187		1	1	2.450			
			C	0.344	2.187		1	1	2.450			
Sum Weight:	1.92	9.73								2.14		

Tower Forces - Service - Wind 45 To Face

Section Elevation ft	Add Weight K	Self Weight K	Face	e	C_F	q_z psf	D_F	D_R	A_E ft^2	F K	w plf	Ctrl. Face
T1	0.10	0.56	A	0.159	2.737	11	0.825	1	3.550	0.16	15.59	C
150.00-140.00			B	0.159	2.737		0.825	1	3.550			
			C	0.159	2.737		0.825	1	3.550			
T2	0.26	1.00	A	0.145	2.79	10	0.825	1	6.439	0.32	16.23	C
140.00-120.00		TA 1.07	B	0.145	2.79		0.825	1	6.439			
			C	0.145	2.79		0.825	1	6.439			
T3	0.26	1.00	A	0.145	2.79	10	0.825	1	6.439	0.31	15.67	C
120.00-100.00			B	0.145	2.79		0.825	1	6.439			
			C	0.145	2.79		0.825	1	6.439			
T4	0.26	1.17	A	0.154	2.755	10	0.825	1	6.908	0.31	15.46	C
100.00-80.00			B	0.154	2.755		0.825	1	6.908			
			C	0.154	2.755		0.825	1	6.908			
T5	0.26	1.21	A	0.159	2.738	9	0.825	1	7.126	0.30	14.85	C
80.00-60.00			B	0.159	2.738		0.825	1	7.126			
			C	0.159	2.738		0.825	1	7.126			
T6	0.26	1.17	A	0.154	2.755	9	0.825	1	6.908	0.27	13.66	C
60.00-40.00			B	0.154	2.755		0.825	1	6.908			
			C	0.154	2.755		0.825	1	6.908			
T7	0.26	1.17	A	0.154	2.755	8	0.825	1	6.908	0.25	12.27	C
40.00-20.00			B	0.154	2.755		0.825	1	6.908			
			C	0.154	2.755		0.825	1	6.908			

Section Elevation ft	Add Weight K	Self Weight K	Face	e	C_F	q_z psf	D_F	D_R	A_E ft^2	F K	w plf	Ctrl. Face
T8 20.00-5.00	0.20	1.03	A	0.166	2.714	7	0.825	1	5.610	0.16	10.97	C
			B	0.166	2.714		0.825	1	5.610			
			C	0.166	2.714		0.825	1	5.610			
T9 5.00-0.00	0.07	0.37	A	0.344	2.187	7	0.825	1	2.342	0.06	11.03	C
			B	0.344	2.187		0.825	1	2.342			
			C	0.344	2.187		0.825	1	2.342			
Sum Weight:	1.92	9.73								2.14		

Tower Forces - Service - Wind 60 To Face

Section Elevation ft	Add Weight K	Self Weight K	Face	e	C_F	q_z psf	D_F	D_R	A_E ft^2	F K	w plf	Ctrl. Face
T1	0.10	0.56	A	0.159	2.737	11	0.8	1	3.550	0.16	15.59	C
150.00-140.00			B	0.159	2.737		0.8	1	3.550			
			C	0.159	2.737		0.8	1	3.550			
T2	0.26	1.00	A	0.145	2.79	10	0.8	1	6.439	0.32	16.23	C
140.00-120.00		TA 1.07	B	0.145	2.79		0.8	1	6.439			
			C	0.145	2.79		0.8	1	6.439			
T3	0.26	1.00	A	0.145	2.79	10	0.8	1	6.439	0.31	15.67	C
120.00-100.00			B	0.145	2.79		0.8	1	6.439			
			C	0.145	2.79		0.8	1	6.439			
T4	0.26	1.17	A	0.154	2.755	10	0.8	1	6.908	0.31	15.46	C
100.00-80.00			B	0.154	2.755		0.8	1	6.908			
			C	0.154	2.755		0.8	1	6.908			
T5	0.26	1.21	A	0.159	2.738	9	0.8	1	7.126	0.30	14.85	C
80.00-60.00			B	0.159	2.738		0.8	1	7.126			
			C	0.159	2.738		0.8	1	7.126			
T6	0.26	1.17	A	0.154	2.755	9	0.8	1	6.908	0.27	13.66	C
60.00-40.00			B	0.154	2.755		0.8	1	6.908			
			C	0.154	2.755		0.8	1	6.908			
T7	0.26	1.17	A	0.154	2.755	8	0.8	1	6.908	0.25	12.27	C
40.00-20.00			B	0.154	2.755		0.8	1	6.908			
			C	0.154	2.755		0.8	1	6.908			
T8 20.00-5.00	0.20	1.03	A	0.166	2.714	7	0.8	1	5.610	0.16	10.97	C
			B	0.166	2.714		0.8	1	5.610			
			C	0.166	2.714		0.8	1	5.610			
T9 5.00-0.00	0.07	0.37	A	0.344	2.187	7	0.8	1	2.326	0.05	10.99	C
			B	0.344	2.187		0.8	1	2.326			
			C	0.344	2.187		0.8	1	2.326			
Sum Weight:	1.92	9.73								2.14		

Tower Forces - Service - Wind 90 To Face

Section Elevation ft	Add Weight K	Self Weight K	Face	e	C_F	q_z psf	D_F	D_R	A_E ft^2	F K	w plf	Ctrl. Face

Section Elevation ft	Add Weight K	Self Weight K	Face	e	C_F	q_z psf	D_F	D_R	A_E ft^2	F K	w plf	Ctrl. Face
T1	0.10	0.56	A	0.159	2.737	11	0.85	1	3.550	0.16	15.59	C
150.00-140.00			B	0.159	2.737		0.85	1	3.550			
			C	0.159	2.737		0.85	1	3.550			
T2	0.26	1.00	A	0.145	2.79	10	0.85	1	6.439	0.32	16.23	C
140.00-120.00		TA 1.07	B	0.145	2.79		0.85	1	6.439			
			C	0.145	2.79		0.85	1	6.439			
T3	0.26	1.00	A	0.145	2.79	10	0.85	1	6.439	0.31	15.67	C
120.00-100.00			B	0.145	2.79		0.85	1	6.439			
			C	0.145	2.79		0.85	1	6.439			
T4	0.26	1.17	A	0.154	2.755	10	0.85	1	6.908	0.31	15.46	C
100.00-80.00			B	0.154	2.755		0.85	1	6.908			
			C	0.154	2.755		0.85	1	6.908			
T5	0.26	1.21	A	0.159	2.738	9	0.85	1	7.126	0.30	14.85	C
80.00-60.00			B	0.159	2.738		0.85	1	7.126			
			C	0.159	2.738		0.85	1	7.126			
T6	0.26	1.17	A	0.154	2.755	9	0.85	1	6.908	0.27	13.66	C
60.00-40.00			B	0.154	2.755		0.85	1	6.908			
			C	0.154	2.755		0.85	1	6.908			
T7	0.26	1.17	A	0.154	2.755	8	0.85	1	6.908	0.25	12.27	C
40.00-20.00			B	0.154	2.755		0.85	1	6.908			
			C	0.154	2.755		0.85	1	6.908			
T8 20.00-5.00	0.20	1.03	A	0.166	2.714	7	0.85	1	5.610	0.16	10.97	C
			B	0.166	2.714		0.85	1	5.610			
			C	0.166	2.714		0.85	1	5.610			
T9 5.00-0.00	0.07	0.37	A	0.344	2.187	7	0.85	1	2.357	0.06	11.06	C
			B	0.344	2.187		0.85	1	2.357			
			C	0.344	2.187		0.85	1	2.357			
Sum Weight:	1.92	9.73								2.14		

Force Totals (Does not include forces on guys)

Load Case	Vertical Forces K	Sum of Forces X K	Sum of Forces Z K	Sum of Torques kip-ft
Leg Weight	5.88			
Bracing Weight	3.85			
Total Member Self-Weight	9.73			
Guy Weight	1.76			
Total Weight	18.65			
Wind 0 deg - No Ice		0.00	-10.69	2.61
Wind 30 deg - No Ice		5.34	-9.26	2.46
Wind 45 deg - No Ice		7.56	-7.56	2.13
Wind 60 deg - No Ice		9.26	-5.34	1.66
Wind 90 deg - No Ice		10.69	0.00	0.41
Wind 120 deg - No Ice		9.26	5.35	-0.95
Wind 135 deg - No Ice		7.56	7.56	-1.56
Wind 150 deg - No Ice		5.34	9.26	-2.06
Wind 180 deg - No Ice		0.00	10.69	-2.61
Wind 210 deg - No Ice		-5.34	9.26	-2.46
Wind 225 deg - No Ice		-7.56	7.56	-2.13
Wind 240 deg - No Ice		-9.26	5.35	-1.66
Wind 270 deg - No Ice		-10.69	0.00	-0.41
Wind 300 deg - No Ice		-9.26	-5.34	0.95

Load Case	Vertical Forces K	Sum of Forces X K	Sum of Forces Z K	Sum of Torques kip-ft
Wind 315 deg - No Ice		-7.56	-7.56	1.56
Wind 330 deg - No Ice		-5.34	-9.26	2.06
Member Ice	20.60			
Guy Ice	15.05			
Total Weight Ice	76.13			
Wind 0 deg - Ice		0.00	-6.67	1.51
Wind 30 deg - Ice		3.34	-5.78	1.47
Wind 45 deg - Ice		4.72	-4.72	1.30
Wind 60 deg - Ice		5.78	-3.34	1.04
Wind 90 deg - Ice		6.67	0.00	0.32
Wind 120 deg - Ice		5.78	3.34	-0.47
Wind 135 deg - Ice		4.72	4.72	-0.84
Wind 150 deg - Ice		3.34	5.78	-1.15
Wind 180 deg - Ice		0.00	6.67	-1.51
Wind 210 deg - Ice		-3.34	5.78	-1.47
Wind 225 deg - Ice		-4.72	4.72	-1.30
Wind 240 deg - Ice		-5.78	3.34	-1.04
Wind 270 deg - Ice		-6.67	0.00	-0.32
Wind 300 deg - Ice		-5.78	-3.34	0.47
Wind 315 deg - Ice		-4.72	-4.72	0.84
Wind 330 deg - Ice		-3.34	-5.78	1.15
Total Weight	18.65			
Wind 0 deg - Service		0.00	-4.09	1.00
Wind 30 deg - Service		2.04	-3.54	0.94
Wind 45 deg - Service		2.89	-2.89	0.82
Wind 60 deg - Service		3.54	-2.04	0.63
Wind 90 deg - Service		4.09	0.00	0.16
Wind 120 deg - Service		3.54	2.05	-0.36
Wind 135 deg - Service		2.89	2.89	-0.60
Wind 150 deg - Service		2.04	3.54	-0.79
Wind 180 deg - Service		0.00	4.09	-1.00
Wind 210 deg - Service		-2.04	3.54	-0.94
Wind 225 deg - Service		-2.89	2.89	-0.82
Wind 240 deg - Service		-3.54	2.05	-0.63
Wind 270 deg - Service		-4.09	0.00	-0.16
Wind 300 deg - Service		-3.54	-2.04	0.36
Wind 315 deg - Service		-2.89	-2.89	0.60
Wind 330 deg - Service		-2.04	-3.54	0.79

Load Combinations

Comb. No.	Description
1	Dead Only
2	1.2 Dead+1.6 Wind 0 deg - No Ice+1.0 Guy
3	1.2 Dead+1.6 Wind 30 deg - No Ice+1.0 Guy
4	1.2 Dead+1.6 Wind 45 deg - No Ice+1.0 Guy
5	1.2 Dead+1.6 Wind 60 deg - No Ice+1.0 Guy
6	1.2 Dead+1.6 Wind 90 deg - No Ice+1.0 Guy
7	1.2 Dead+1.6 Wind 120 deg - No Ice+1.0 Guy
8	1.2 Dead+1.6 Wind 135 deg - No Ice+1.0 Guy
9	1.2 Dead+1.6 Wind 150 deg - No Ice+1.0 Guy
10	1.2 Dead+1.6 Wind 180 deg - No Ice+1.0 Guy
11	1.2 Dead+1.6 Wind 210 deg - No Ice+1.0 Guy

Comb. No.	Description
12	1.2 Dead+1.6 Wind 225 deg - No Ice+1.0 Guy
13	1.2 Dead+1.6 Wind 240 deg - No Ice+1.0 Guy
14	1.2 Dead+1.6 Wind 270 deg - No Ice+1.0 Guy
15	1.2 Dead+1.6 Wind 300 deg - No Ice+1.0 Guy
16	1.2 Dead+1.6 Wind 315 deg - No Ice+1.0 Guy
17	1.2 Dead+1.6 Wind 330 deg - No Ice+1.0 Guy
18	1.2 Dead+1.0 Ice+1.0 Temp+Guy
19	1.2 Dead+1.0 Wind 0 deg+1.0 Ice+1.0 Temp+1.0 Guy
20	1.2 Dead+1.0 Wind 30 deg+1.0 Ice+1.0 Temp+1.0 Guy
21	1.2 Dead+1.0 Wind 45 deg+1.0 Ice+1.0 Temp+1.0 Guy
22	1.2 Dead+1.0 Wind 60 deg+1.0 Ice+1.0 Temp+1.0 Guy
23	1.2 Dead+1.0 Wind 90 deg+1.0 Ice+1.0 Temp+1.0 Guy
24	1.2 Dead+1.0 Wind 120 deg+1.0 Ice+1.0 Temp+1.0 Guy
25	1.2 Dead+1.0 Wind 135 deg+1.0 Ice+1.0 Temp+1.0 Guy
26	1.2 Dead+1.0 Wind 150 deg+1.0 Ice+1.0 Temp+1.0 Guy
27	1.2 Dead+1.0 Wind 180 deg+1.0 Ice+1.0 Temp+1.0 Guy
28	1.2 Dead+1.0 Wind 210 deg+1.0 Ice+1.0 Temp+1.0 Guy
29	1.2 Dead+1.0 Wind 225 deg+1.0 Ice+1.0 Temp+1.0 Guy
30	1.2 Dead+1.0 Wind 240 deg+1.0 Ice+1.0 Temp+1.0 Guy
31	1.2 Dead+1.0 Wind 270 deg+1.0 Ice+1.0 Temp+1.0 Guy
32	1.2 Dead+1.0 Wind 300 deg+1.0 Ice+1.0 Temp+1.0 Guy
33	1.2 Dead+1.0 Wind 315 deg+1.0 Ice+1.0 Temp+1.0 Guy
34	1.2 Dead+1.0 Wind 330 deg+1.0 Ice+1.0 Temp+1.0 Guy
35	Dead+Wind 0 deg - Service+Guy
36	Dead+Wind 30 deg - Service+Guy
37	Dead+Wind 45 deg - Service+Guy
38	Dead+Wind 60 deg - Service+Guy
39	Dead+Wind 90 deg - Service+Guy
40	Dead+Wind 120 deg - Service+Guy
41	Dead+Wind 135 deg - Service+Guy
42	Dead+Wind 150 deg - Service+Guy
43	Dead+Wind 180 deg - Service+Guy
44	Dead+Wind 210 deg - Service+Guy
45	Dead+Wind 225 deg - Service+Guy
46	Dead+Wind 240 deg - Service+Guy
47	Dead+Wind 270 deg - Service+Guy
48	Dead+Wind 300 deg - Service+Guy
49	Dead+Wind 315 deg - Service+Guy
50	Dead+Wind 330 deg - Service+Guy

Maximum Member Forces

Section No.	Elevation ft	Component Type	Condition	Gov. Load Comb.	Axial K	Major Axis Moment kip-ft	Minor Axis Moment kip-ft
T1	150 - 140	Leg	Max Tension	5	3.68	0.02	-0.01
			Max. Compression	24	-17.15	-0.26	-0.11
			Max. Mx	7	-12.73	-0.72	-0.39
			Max. My	2	-12.43	-0.00	0.85
			Max. Vy	7	-1.38	-0.72	-0.39
			Max. Vx	2	1.61	-0.00	0.85
		Diagonal	Max Tension	2	1.71	0.00	0.00
			Max. Compression	17	-1.71	0.00	0.00
			Max. Mx	22	-0.05	-0.01	0.00
			Max. My	8	-1.68	-0.00	0.00
			Max. Vy	22	0.01	-0.01	0.00
			Max. Vx	8	0.00	0.00	0.00
		Top Girt	Max Tension	15	0.05	0.00	0.00
			Max. Compression	11	-0.09	0.00	0.00

Section No.	Elevation ft	Component Type	Condition	Gov. Load Comb.	Axial K	Major Axis Moment kip-ft	Minor Axis Moment kip-ft
			Max. Mx	18	-0.06	0.02	0.00
			Max. My	3	-0.02	0.00	-0.00
			Max. Vy	18	0.02	0.00	0.00
			Max. Vx	3	0.00	0.00	0.00
		Bottom Girt	Max Tension	2	0.70	0.00	0.00
			Max. Compression	5	-0.39	0.00	0.00
			Max. Mx	18	0.14	0.02	0.00
			Max. My	3	0.04	0.00	-0.00
			Max. Vy	18	0.02	0.00	0.00
			Max. Vx	3	0.00	0.00	0.00
		Top Guy Pull-Off	Max Tension	10	5.18	0.00	0.00
			Max. Compression	2	-4.04	0.00	0.00
			Max. Mx	18	1.76	0.03	0.00
			Max. My	3	0.84	0.00	-0.00
			Max. Vy	18	-0.03	0.00	0.00
			Max. Vx	3	0.00	0.00	0.00
T2	140 - 120	Leg	Max Tension	2	2.04	0.00	-0.06
			Max. Compression	22	-30.36	0.04	-0.02
			Max. Mx	7	-12.74	0.65	0.35
			Max. My	2	-12.44	0.01	-0.76
			Max. Vy	7	-1.38	-0.04	-0.02
			Max. Vx	2	1.61	-0.00	0.04
		Diagonal	Max Tension	11	3.24	0.00	0.00
			Max. Compression	11	-3.64	0.00	0.00
			Max. Mx	19	-1.35	-0.01	0.00
			Max. My	2	-1.34	0.01	-0.11
			Max. Vy	19	0.01	-0.01	0.00
			Max. Vx	2	-0.05	0.00	0.00
		Top Girt	Max Tension	5	1.18	0.00	0.00
			Max. Compression	2	-1.13	0.00	0.00
			Max. Mx	18	-0.14	0.02	0.00
			Max. My	3	-0.10	0.00	-0.00
			Max. Vy	18	-0.02	0.00	0.00
			Max. Vx	3	0.00	0.00	0.00
		Bottom Girt	Max Tension	24	0.23	0.00	0.00
			Max. Compression	10	-0.02	0.00	0.00
			Max. Mx	21	0.00	0.02	0.00
			Max. My	3	0.06	0.00	-0.00
			Max. Vy	21	-0.02	0.00	0.00
			Max. Vx	3	0.00	0.00	0.00
		Guy A	Bottom Tension	27	10.33		
			Top Tension	27	11.49		
			Top Cable Vert	27	7.52		
			Top Cable Norm	27	8.68		
			Top Cable Tan	27	0.01		
			Bot Cable Vert	27	-5.37		
			Bot Cable Norm	27	8.82		
			Bot Cable Tan	27	0.00		
		Guy B	Bottom Tension	32	10.70		
			Top Tension	32	11.97		
			Top Cable Vert	32	8.34		
			Top Cable Norm	32	8.59		
			Top Cable Tan	32	0.01		
			Bot Cable Vert	32	-6.13		
			Bot Cable Norm	32	8.76		
			Bot Cable Tan	32	0.00		
		Guy C	Bottom Tension	22	10.86		
			Top Tension	22	12.16		
			Top Cable Vert	22	8.56		
			Top Cable Norm	22	8.64		
			Top Cable Tan	22	0.00		

Section No.	Elevation ft	Component Type	Condition	Gov. Load Comb.	Axial K	Major Axis Moment kip-ft	Minor Axis Moment kip-ft
			Bot Cable Vert	22	-6.34		
			Bot Cable Norm	22	8.82		
			Bot Cable Tan	22	0.01		
		Torque Arm Top	Max Tension	27	10.56	0.00	0.00
			Max. Compression	13	-1.06	0.00	0.00
			Max. Mx	21	9.59	0.22	0.00
			Max. My	3	7.86	0.00	0.00
			Max. Vy	21	-0.12	0.00	0.00
			Max. Vx	3	-0.00	0.00	0.00
		Torque Arm Bottom	Max Tension	17	5.21	0.00	0.00
			Max. Compression	16	-8.72	0.00	0.00
			Max. Mx	29	-4.53	0.20	0.00
			Max. My	28	-5.88	0.00	0.00
			Max. Vy	29	-0.12	0.00	0.00
			Max. Vx	28	-0.00	0.00	0.00
T3	120 - 100	Leg	Max Tension	2	1.29	0.00	0.00
			Max. Compression	32	-32.23	0.06	0.03
			Max. Mx	11	-17.99	0.26	0.03
			Max. My	3	-15.93	0.06	-0.33
			Max. Vy	12	-0.64	0.06	-0.01
			Max. Vx	3	-0.77	0.01	0.06
		Diagonal	Max Tension	3	1.14	0.00	0.00
			Max. Compression	3	-1.26	0.00	0.00
			Max. Mx	20	0.01	-0.01	-0.00
			Max. My	3	-1.26	-0.00	-0.00
			Max. Vy	20	0.01	-0.01	-0.00
			Max. Vx	3	-0.00	0.00	0.00
		Top Girt	Max Tension	27	0.16	0.00	0.00
			Max. Compression	14	-0.01	0.00	0.00
			Max. Mx	21	0.14	0.02	0.00
			Max. My	3	0.03	0.00	-0.00
			Max. Vy	21	-0.02	0.00	0.00
			Max. Vx	3	0.00	0.00	0.00
		Bottom Girt	Max Tension	5	0.27	0.00	0.00
			Max. Compression	13	-0.16	0.00	0.00
			Max. Mx	23	0.17	0.02	0.00
			Max. My	3	0.08	0.00	-0.00
			Max. Vy	23	-0.02	0.00	0.00
			Max. Vx	3	0.00	0.00	0.00
T4	100 - 80	Leg	Max Tension	1	0.00	0.00	0.00
			Max. Compression	32	-32.05	0.08	0.01
			Max. Mx	14	-6.25	-0.52	-0.07
			Max. My	2	-8.32	0.01	-0.54
			Max. Vy	14	-1.03	0.02	-0.01
			Max. Vx	2	-1.08	0.01	-0.00
		Diagonal	Max Tension	3	1.70	0.00	0.00
			Max. Compression	3	-1.82	0.00	0.00
			Max. Mx	19	-0.29	-0.01	-0.00
			Max. My	3	-1.82	-0.00	-0.00
			Max. Vy	19	0.01	-0.01	-0.00
			Max. Vx	3	-0.00	0.00	0.00
		Top Girt	Max Tension	13	0.34	0.00	0.00
			Max. Compression	5	-0.23	0.00	0.00
			Max. Mx	25	0.18	0.02	0.00
			Max. My	3	0.04	0.00	-0.00
			Max. Vy	25	-0.02	0.00	0.00
			Max. Vx	3	0.00	0.00	0.00
		Bottom Girt	Max Tension	5	0.52	0.00	0.00
			Max. Compression	13	-0.40	0.00	0.00
			Max. Mx	25	0.03	0.02	0.00
			Max. My	3	0.09	0.00	-0.00

Section No.	Elevation ft	Component Type	Condition	Gov. Load Comb.	Axial K	Major Axis Moment kip-ft	Minor Axis Moment kip-ft
			Max. Vy	25	-0.02	0.00	0.00
			Max. Vx	3	0.00	0.00	0.00
T5	80 - 60	Leg	Max Tension	5	2.70	0.04	-0.03
			Max. Compression	19	-37.22	-0.05	-0.03
			Max. Mx	14	-19.98	0.54	-0.10
			Max. My	2	-16.96	-0.13	0.56
			Max. Vy	14	-1.03	0.51	0.07
			Max. Vx	2	-1.08	0.00	0.53
		Diagonal	Max Tension	3	1.72	0.00	0.00
			Max. Compression	3	-1.90	0.00	0.00
			Max. Mx	28	0.08	-0.01	0.00
			Max. My	3	-1.90	-0.00	-0.00
			Max. Vy	28	0.01	-0.01	0.00
			Max. Vx	3	-0.00	0.00	0.00
		Top Girt	Max Tension	13	0.49	0.00	0.00
			Max. Compression	15	-0.35	0.00	0.00
			Max. Mx	25	0.30	0.02	0.00
			Max. My	3	0.05	0.00	-0.00
			Max. Vy	25	-0.02	0.00	0.00
			Max. Vx	3	0.00	0.00	0.00
		Bottom Girt	Max Tension	7	0.40	0.00	0.00
			Max. Compression	5	-0.21	0.00	0.00
			Max. Mx	31	0.10	0.02	0.00
			Max. My	20	0.23	0.00	-0.00
			Max. Vy	31	-0.02	0.00	0.00
			Max. Vx	20	0.00	0.00	0.00
		Guy A	Bottom Tension	27	11.93		
			Top Tension	27	12.55		
			Top Cable Vert	27	5.44		
			Top Cable Norm	27	11.31		
			Top Cable Tan	27	0.00		
			Bot Cable Vert	27	-3.72		
			Bot Cable Norm	27	11.33		
			Bot Cable Tan	27	0.00		
		Guy B	Bottom Tension	32	12.39		
			Top Tension	32	13.11		
			Top Cable Vert	32	6.54		
			Top Cable Norm	32	11.36		
			Top Cable Tan	32	0.00		
			Bot Cable Vert	32	-4.86		
			Bot Cable Norm	32	11.40		
			Bot Cable Tan	32	0.00		
		Guy C	Bottom Tension	22	12.49		
			Top Tension	22	13.23		
			Top Cable Vert	22	6.75		
			Top Cable Norm	22	11.37		
			Top Cable Tan	22	0.00		
			Bot Cable Vert	22	-5.09		
			Bot Cable Norm	22	11.41		
			Bot Cable Tan	22	0.00		
		Top Guy Pull-Off	Max Tension	19	5.95	0.00	0.00
			Max. Compression	1	0.00	0.00	0.00
			Max. Mx	25	5.89	0.02	0.00
			Max. My	3	2.80	0.00	-0.00
			Max. Vy	25	0.03	0.00	0.00
			Max. Vx	3	0.00	0.00	0.00
T6	60 - 40	Leg	Max Tension	1	0.00	0.00	0.00
			Max. Compression	32	-41.25	-0.05	-0.03
			Max. Mx	6	-8.52	0.40	-0.02
			Max. My	2	-11.36	-0.00	-0.41
			Max. Vy	6	-0.79	-0.03	-0.02

Section No.	Elevation ft	Component Type	Condition	Gov. Load Comb.	Axial K	Major Axis Moment kip-ft	Minor Axis Moment kip-ft
			Max. Vx	10	-0.81	-0.02	-0.01
		Diagonal	Max Tension	9	1.17	0.00	0.00
			Max. Compression	9	-1.33	0.00	0.00
			Max. Mx	20	0.00	-0.01	0.00
			Max. My	10	-1.21	-0.00	0.00
			Max. Vy	20	0.01	-0.01	0.00
			Max. Vx	10	0.00	0.00	0.00
		Top Girt	Max Tension	5	0.41	0.00	0.00
			Max. Compression	7	-0.28	0.00	0.00
			Max. Mx	31	0.25	0.02	0.00
			Max. My	20	0.14	0.00	-0.00
			Max. Vy	31	0.02	0.00	0.00
			Max. Vx	20	-0.00	0.00	0.00
		Bottom Girt	Max Tension	24	0.25	0.00	0.00
			Max. Compression	10	-0.07	0.00	0.00
			Max. Mx	29	0.23	0.02	0.00
			Max. My	20	0.22	0.00	-0.00
			Max. Vy	29	0.02	0.00	0.00
			Max. Vx	20	-0.00	0.00	0.00
T7	40 - 20	Leg	Max Tension	1	0.00	0.00	0.00
			Max. Compression	32	-42.42	0.08	0.05
			Max. Mx	6	-16.70	0.20	-0.01
			Max. My	2	-16.14	-0.00	-0.20
			Max. Vy	6	-0.36	-0.02	-0.01
			Max. Vx	10	-0.38	-0.02	-0.01
		Diagonal	Max Tension	9	0.50	0.00	0.00
			Max. Compression	9	-0.67	0.00	0.00
			Max. Mx	20	-0.19	-0.01	0.00
			Max. My	10	-0.61	-0.00	0.00
			Max. Vy	19	0.01	-0.01	-0.00
			Max. Vx	10	0.00	0.00	0.00
		Top Girt	Max Tension	19	0.20	0.00	0.00
			Max. Compression	8	-0.06	0.00	0.00
			Max. Mx	29	0.18	0.01	0.00
			Max. My	20	0.14	0.00	-0.00
			Max. Vy	29	-0.02	0.00	0.00
			Max. Vx	20	0.00	0.00	0.00
		Bottom Girt	Max Tension	32	0.27	0.00	0.00
			Max. Compression	1	0.00	0.00	0.00
			Max. Mx	25	0.18	0.01	0.00
			Max. My	20	0.24	0.00	-0.00
			Max. Vy	25	-0.02	0.00	0.00
			Max. Vx	20	0.00	0.00	0.00
T8	20 - 5	Leg	Max Tension	1	0.00	0.00	0.00
			Max. Compression	32	-42.13	0.05	0.03
			Max. Mx	20	-42.01	-0.49	0.28
			Max. My	28	-41.49	-0.00	-0.56
			Max. Vy	20	0.37	-0.49	0.28
			Max. Vx	28	0.42	-0.00	-0.56
		Diagonal	Max Tension	34	1.47	0.00	0.00
			Max. Compression	34	-0.99	0.00	0.00
			Max. Mx	20	-0.72	-0.01	0.00
			Max. My	22	-0.68	-0.01	-0.00
			Max. Vy	19	0.01	-0.01	-0.00
			Max. Vx	21	0.00	0.00	0.00
		Top Girt	Max Tension	19	0.30	0.00	0.00
			Max. Compression	1	0.00	0.00	0.00
			Max. Mx	25	0.26	0.01	0.00
			Max. My	20	0.16	0.00	-0.00
			Max. Vy	25	-0.01	0.00	0.00
			Max. Vx	20	0.00	0.00	0.00

Section No.	Elevation ft	Component Type	Condition	Gov. Load Comb.	Axial K	Major Axis Moment kip-ft	Minor Axis Moment kip-ft
		Bottom Girt	Max Tension	19	8.41	0.00	0.00
			Max. Compression	1	0.00	0.00	0.00
			Max. Mx	25	8.30	0.01	0.00
			Max. My	20	8.20	0.00	-0.00
			Max. Vy	25	-0.01	0.00	0.00
			Max. Vx	20	0.00	0.00	0.00
T9	5 - 0	Leg	Max Tension	1	0.00	0.00	0.00
			Max. Compression	34	-45.20	-0.36	0.00
			Max. Mx	20	-45.05	0.56	0.00
			Max. My	16	-14.92	0.09	0.03
			Max. Vy	19	1.31	-0.49	-0.00
			Max. Vx	3	-0.07	-0.23	0.01
		Diagonal	Max Tension	20	0.65	0.00	0.00
			Max. Compression	19	-3.04	-0.00	0.00
			Max. Mx	20	0.64	-0.01	-0.00
			Max. My	20	0.61	-0.01	0.00
			Max. Vy	20	0.01	0.00	0.00
			Max. Vx	20	-0.00	0.00	0.00
		Horizontal	Max Tension	19	0.26	0.00	0.00
			Max. Compression	1	0.00	0.00	0.00
			Max. Mx	27	0.22	0.01	0.00
			Max. My	19	0.23	0.00	0.00
			Max. Vy	27	0.02	0.00	0.00
			Max. Vx	19	-0.00	0.00	0.00
		Bottom Girt	Max Tension	19	1.43	0.00	0.00
			Max. Compression	1	0.00	0.00	0.00
			Max. Mx	25	1.40	0.00	0.00
			Max. Vy	25	-0.00	0.00	0.00

Maximum Reactions

Location	Condition	Gov. Load Comb.	Vertical K	Horizontal, X K	Horizontal, Z K
Mast	Max. Vert	19	120.57	0.09	0.60
	Max. H_x	14	48.16	0.88	0.11
	Max. H_z	2	48.36	0.01	0.96
	Max. M_x	1	0.00	0.01	0.02
	Max. M_z	1	0.00	0.01	0.02
	Max. Torsion	1	0.00	0.01	0.02
	Min. Vert	1	37.63	0.01	0.02
	Min. H_x	6	48.42	-0.84	0.11
	Min. H_z	10	47.60	0.02	-0.98
	Min. M_x	1	0.00	0.01	0.02
	Min. M_z	1	0.00	0.01	0.02
	Min. Torsion	1	0.00	0.01	0.02
Guy C @ 210 ft Elev -38 ft Azimuth 240 deg	Max. Vert	13	-0.99	-1.38	0.80
	Max. H_x	13	-0.99	-1.38	0.80
	Max. H_z	21	-17.63	-24.94	14.57
	Min. Vert	22	-17.73	-25.12	14.51
	Min. H_x	22	-17.73	-25.12	14.51
	Min. H_z	13	-0.99	-1.38	0.80
Guy B @ 210 ft Elev -34 ft Azimuth 120 deg	Max. Vert	7	-0.90	1.33	0.77

Location	Condition	Gov. Load Comb.	Vertical K	Horizontal, X K	Horizontal, Z K
	Max. H_x	32	-17.09	25.01	14.45
	Max. H_z	33	-16.99	24.83	14.51
	Min. Vert	32	-17.09	25.01	14.45
	Min. H_x	7	-0.90	1.33	0.77
	Min. H_z	7	-0.90	1.33	0.77
Guy A @ 210 ft Elev -14 ft Azimuth 0 deg	Max. Vert	2	-0.53	0.00	-1.31
	Max. H_x	31	-11.62	0.89	-23.80
	Max. H_z	2	-0.53	0.00	-1.31
	Min. Vert	10	-14.94	-0.01	-25.31
	Min. H_x	23	-11.62	-0.89	-23.80
	Min. H_z	27	-14.41	-0.00	-28.89

Tower Mast Reaction Summary

Load Combination	Vertical K	$Shear_x$ K	$Shear_z$ K	Overturning Moment, M_x kip-ft	Overturning Moment, M_z kip-ft	Torque kip-ft
Dead Only	37.63	-0.01	-0.02	0.00	0.00	0.00
1.2 Dead+1.6 Wind 0 deg - No Ice+1.0 Guy	48.36	-0.01	-0.96	0.00	0.00	0.00
1.2 Dead+1.6 Wind 30 deg - No Ice+1.0 Guy	48.91	0.49	-0.73	0.00	0.00	0.00
1.2 Dead+1.6 Wind 45 deg - No Ice+1.0 Guy	48.86	0.68	-0.63	0.00	0.00	0.00
1.2 Dead+1.6 Wind 60 deg - No Ice+1.0 Guy	48.78	0.80	-0.51	0.00	0.00	0.00
1.2 Dead+1.6 Wind 90 deg - No Ice+1.0 Guy	48.42	0.84	-0.11	0.00	0.00	0.00
1.2 Dead+1.6 Wind 120 deg - No Ice+1.0 Guy	47.42	0.77	0.45	0.00	0.00	0.00
1.2 Dead+1.6 Wind 135 deg - No Ice+1.0 Guy	47.50	0.57	0.66	0.00	0.00	0.00
1.2 Dead+1.6 Wind 150 deg - No Ice+1.0 Guy	47.57	0.35	0.81	0.00	0.00	0.00
1.2 Dead+1.6 Wind 180 deg - No Ice+1.0 Guy	47.60	-0.02	0.98	0.00	0.00	0.00
1.2 Dead+1.6 Wind 210 deg - No Ice+1.0 Guy	47.47	-0.38	0.82	0.00	0.00	0.00
1.2 Dead+1.6 Wind 225 deg - No Ice+1.0 Guy	47.33	-0.60	0.66	0.00	0.00	0.00
1.2 Dead+1.6 Wind 240 deg - No Ice+1.0 Guy	47.21	-0.80	0.45	0.00	0.00	0.00
1.2 Dead+1.6 Wind 270 deg - No Ice+1.0 Guy	48.16	-0.88	-0.11	0.00	0.00	0.00
1.2 Dead+1.6 Wind 300 deg - No Ice+1.0 Guy	48.57	-0.83	-0.51	0.00	0.00	0.00
1.2 Dead+1.6 Wind 315 deg - No Ice+1.0 Guy	48.68	-0.71	-0.63	0.00	0.00	0.00
1.2 Dead+1.6 Wind 330 deg - No Ice+1.0 Guy	48.77	-0.52	-0.73	0.00	0.00	0.00
1.2 Dead+1.0 Ice+1.0 Temp+Guy	118.48	-0.09	-0.01	0.00	0.00	0.00
1.2 Dead+1.0 Wind 0 deg+1.0 Ice+1.0 Temp+1.0 Guy	120.57	-0.09	-0.60	0.00	0.00	0.00
1.2 Dead+1.0 Wind 30 deg+1.0	119.94	0.13	-0.52	0.00	0.00	0.00

Load Combination	Vertical K	$Shear_x$ K	$Shear_z$ K	Overturning Moment, M_x kip-ft	Overturning Moment, M_z kip-ft	Torque kip-ft
Ice+1.0 Temp+1.0 Guy 1.2 Dead+1.0 Wind 45 deg+1.0	119.49	0.24	-0.41	0.00	0.00	0.00
Ice+1.0 Temp+1.0 Guy 1.2 Dead+1.0 Wind 60 deg+1.0	119.24	0.34	-0.26	0.00	0.00	0.00
Ice+1.0 Temp+1.0 Guy 1.2 Dead+1.0 Wind 90 deg+1.0	119.48	0.46	0.05	0.00	0.00	0.00
Ice+1.0 Temp+1.0 Guy 1.2 Dead+1.0 Wind 120 deg+1.0 Ice+1.0 Temp+1.0 Guy	119.74	0.43	0.29	0.00	0.00	0.00
1.2 Dead+1.0 Wind 135 deg+1.0 Ice+1.0 Temp+1.0 Guy	119.44	0.35	0.38	0.00	0.00	0.00
1.2 Dead+1.0 Wind 150 deg+1.0 Ice+1.0 Temp+1.0 Guy	118.95	0.24	0.44	0.00	0.00	0.00
1.2 Dead+1.0 Wind 180 deg+1.0 Ice+1.0 Temp+1.0 Guy	118.33	-0.09	0.50	0.00	0.00	0.00
1.2 Dead+1.0 Wind 210 deg+1.0 Ice+1.0 Temp+1.0 Guy	118.86	-0.43	0.44	0.00	0.00	0.00
1.2 Dead+1.0 Wind 225 deg+1.0 Ice+1.0 Temp+1.0 Guy	119.31	-0.54	0.38	0.00	0.00	0.00
1.2 Dead+1.0 Wind 240 deg+1.0 Ice+1.0 Temp+1.0 Guy	119.57	-0.62	0.29	0.00	0.00	0.00
1.2 Dead+1.0 Wind 270 deg+1.0 Ice+1.0 Temp+1.0 Guy	119.30	-0.65	0.05	0.00	0.00	0.00
1.2 Dead+1.0 Wind 300 deg+1.0 Ice+1.0 Temp+1.0 Guy	119.08	-0.53	-0.26	0.00	0.00	0.00
1.2 Dead+1.0 Wind 315 deg+1.0 Ice+1.0 Temp+1.0 Guy	119.35	-0.43	-0.41	0.00	0.00	0.00
1.2 Dead+1.0 Wind 330 deg+1.0 Ice+1.0 Temp+1.0 Guy	119.84	-0.32	-0.52	0.00	0.00	0.00
Dead+Wind 0 deg - Service+Guy	38.06	-0.01	-0.31	0.00	0.00	0.00
Dead+Wind 30 deg - Service+Guy	37.98	0.12	-0.27	0.00	0.00	0.00
Dead+Wind 45 deg - Service+Guy	37.94	0.18	-0.22	0.00	0.00	0.00
Dead+Wind 60 deg - Service+Guy	37.91	0.22	-0.15	0.00	0.00	0.00
Dead+Wind 90 deg - Service+Guy	37.90	0.27	-0.01	0.00	0.00	0.00
Dead+Wind 120 deg - Service+Guy	37.91	0.24	0.13	0.00	0.00	0.00
Dead+Wind 135 deg - Service+Guy	37.87	0.20	0.19	0.00	0.00	0.00
Dead+Wind 150 deg - Service+Guy	37.81	0.14	0.23	0.00	0.00	0.00
Dead+Wind 180 deg - Service+Guy	37.76	-0.01	0.26	0.00	0.00	0.00
Dead+Wind 210 deg - Service+Guy	37.80	-0.16	0.23	0.00	0.00	0.00
Dead+Wind 225 deg - Service+Guy	37.85	-0.22	0.19	0.00	0.00	0.00
Dead+Wind 240 deg - Service+Guy	37.88	-0.26	0.13	0.00	0.00	0.00
Dead+Wind 270 deg - Service+Guy	37.88	-0.29	-0.01	0.00	0.00	0.00
Dead+Wind 300 deg - Service+Guy	37.89	-0.25	-0.15	0.00	0.00	0.00
Dead+Wind 315 deg - Service+Guy	37.92	-0.20	-0.22	0.00	0.00	0.00
Dead+Wind 330 deg - Service+Guy	37.97	-0.14	-0.27	0.00	0.00	0.00

Solution Summary

	Sum of Applied Forces			Sum of Reactions			
Load Comb.	PX K	PY K	PZ K	PX K	PY K	PZ K	% Error
1	0.00	-18.65	0.00	0.00	18.65	-0.00	0.003%
2	0.01	-22.28	-19.34	-0.01	22.28	19.32	0.068%
3	9.69	-22.07	-16.74	-9.70	22.07	16.72	0.077%
4	13.72	-21.93	-13.67	-13.73	21.93	13.65	0.073%
5	16.81	-21.86	-9.67	-16.83	21.86	9.67	0.060%
6	19.42	-22.04	-0.00	-19.40	22.04	0.02	0.096%
7	16.81	-22.22	9.66	-16.80	22.22	-9.66	0.040%
8	13.72	-22.15	13.66	-13.71	22.15	-13.65	0.034%
9	9.68	-22.00	16.73	-9.65	22.00	-16.72	0.085%
10	-0.01	-21.78	19.34	0.01	21.78	-19.35	0.045%
11	-9.69	-21.99	16.74	9.67	21.99	-16.74	0.077%
12	-13.72	-22.14	13.67	13.71	22.14	-13.67	0.030%
13	-16.82	-22.21	9.67	16.81	22.21	-9.67	0.035%
14	-19.42	-22.03	0.00	19.40	22.03	0.01	0.084%
15	-16.81	-21.85	-9.66	16.83	21.85	9.65	0.070%
16	-13.71	-21.92	-13.65	13.72	21.92	13.63	0.070%
17	-9.68	-22.07	-16.73	9.68	22.07	16.71	0.074%
18	0.00	-79.50	0.00	0.00	79.50	-0.00	0.005%
19	0.01	-79.81	-9.62	-0.01	79.81	9.60	0.021%
20	4.85	-79.54	-8.33	-4.85	79.54	8.32	0.015%
21	6.88	-79.35	-6.80	-6.89	79.35	6.78	0.021%
22	8.44	-79.27	-4.81	-8.44	79.27	4.80	0.025%
23	9.75	-79.51	-0.01	-9.74	79.51	0.01	0.019%
24	8.43	-79.75	4.80	-8.42	79.75	-4.79	0.010%
25	6.87	-79.66	6.78	-6.86	79.66	-6.77	0.010%
26	4.83	-79.47	8.31	-4.82	79.47	-8.30	0.015%
27	-0.01	-79.19	9.62	0.01	79.19	-9.61	0.010%
28	-4.85	-79.46	8.33	4.84	79.46	-8.33	0.011%
29	-6.88	-79.65	6.80	6.88	79.65	-6.80	0.008%
30	-8.44	-79.74	4.82	8.44	79.74	-4.81	0.008%
31	-9.75	-79.50	0.01	9.74	79.50	-0.01	0.015%
32	-8.43	-79.26	-4.80	8.43	79.26	4.78	0.015%
33	-6.87	-79.35	-6.78	6.87	79.35	6.76	0.022%
34	-4.83	-79.54	-8.31	4.83	79.54	8.30	0.016%
35	0.00	-18.71	-4.63	-0.00	18.71	4.62	0.024%
36	2.32	-18.66	-4.00	-2.32	18.66	4.00	0.041%
37	3.28	-18.63	-3.27	-3.29	18.63	3.26	0.056%
38	4.02	-18.61	-2.31	-4.03	18.61	2.31	0.067%
39	4.64	-18.66	-0.00	-4.64	18.66	0.01	0.047%
40	4.02	-18.70	2.31	-4.01	18.70	-2.31	0.037%
41	3.28	-18.68	3.27	-3.27	18.68	-3.26	0.035%
42	2.31	-18.65	4.00	-2.31	18.65	-4.00	0.028%
43	-0.00	-18.59	4.62	0.00	18.59	-4.63	0.049%
44	-2.32	-18.64	4.00	2.31	18.64	-4.00	0.025%
45	-3.28	-18.68	3.27	3.28	18.68	-3.27	0.031%
46	-4.02	-18.70	2.31	4.02	18.70	-2.31	0.033%
47	-4.64	-18.65	0.00	4.64	18.65	0.01	0.042%
48	-4.02	-18.61	-2.31	4.03	18.61	2.30	0.047%
49	-3.28	-18.63	-3.27	3.28	18.63	3.26	0.028%
50	-2.31	-18.66	-4.00	2.32	18.66	3.99	0.041%

Non-Linear Convergence Results

Load Combination	*Converged?*	*Number of Cycles*	*Displacement Tolerance*	*Force Tolerance*
1	Yes	6	0.00000001	0.00006295
2	Yes	16	0.00108957	0.00141108
3	Yes	15	0.00112795	0.00104074
4	Yes	14	0.00106450	0.00087650
5	Yes	11	0.00073459	0.00088112
6	Yes	14	0.00136387	0.00135967
7	Yes	16	0.00067997	0.00132838
8	Yes	16	0.00063008	0.00132360
9	Yes	14	0.00133825	0.00121787
10	Yes	11	0.00052255	0.00098396
11	Yes	14	0.00117465	0.00107358
12	Yes	16	0.00060270	0.00137063
13	Yes	16	0.00061676	0.00135269
14	Yes	14	0.00121264	0.00121345
15	Yes	11	0.00087175	0.00097368
16	Yes	14	0.00104443	0.00086358
17	Yes	15	0.00113218	0.00108431
18	Yes	12	0.00081409	0.00012159
19	Yes	13	0.00130800	0.00050136
20	Yes	13	0.00092688	0.00036812
21	Yes	12	0.00121611	0.00046539
22	Yes	11	0.00136768	0.00049272
23	Yes	11	0.00120859	0.00040596
24	Yes	13	0.00089524	0.00025659
25	Yes	13	0.00095126	0.00024519
26	Yes	12	0.00148466	0.00034132
27	Yes	11	0.00087718	0.00022241
28	Yes	12	0.00116019	0.00025884
29	Yes	13	0.00084797	0.00019568
30	Yes	13	0.00082684	0.00020899
31	Yes	11	0.00104030	0.00034035
32	Yes	12	0.00091949	0.00032758
33	Yes	12	0.00140453	0.00049845
34	Yes	13	0.00101095	0.00038067
35	Yes	10	0.00072988	0.00046097
36	Yes	9	0.00112344	0.00060552
37	Yes	8	0.00139585	0.00059066
38	Yes	6	0.00131673	0.00041342
39	Yes	8	0.00124082	0.00050848
40	Yes	9	0.00118026	0.00055011
41	Yes	9	0.00118755	0.00051022
42	Yes	9	0.00098227	0.00039652
43	Yes	6	0.00130718	0.00039424
44	Yes	9	0.00088869	0.00035760
45	Yes	9	0.00110543	0.00046272
46	Yes	9	0.00111024	0.00049620
47	Yes	8	0.00115299	0.00044969
48	Yes	7	0.00112321	0.00034826
49	Yes	9	0.00078221	0.00039803
50	Yes	9	0.00117886	0.00060499

Maximum Tower Deflections - Service Wind

Section No.	Elevation ft	Horz. Deflection in	Gov. Load Comb.	Tilt °	Twist °
T1	150 - 140	1.394	38	0.0271	0.0331
T2	140 - 120	1.345	38	0.0244	0.0329
T3	120 - 100	1.247	38	0.0341	0.0566
T4	100 - 80	1.066	38	0.0499	0.0859
T5	80 - 60	0.833	38	0.0534	0.1077
T6	60 - 40	0.624	38	0.0457	0.1237
T7	40 - 20	0.441	38	0.0471	0.1349
T8	20 - 5	0.232	38	0.0530	0.1410
T9	5 - 0	0.059	38	0.0556	0.1428

Critical Deflections and Radius of Curvature - Service Wind

Elevation ft	Appurtenance	Gov. Load Comb.	Deflection in	Tilt °	Twist °	Radius of Curvature ft
148.00	APXVSPP18-C-A20	38	1.384	0.0264	0.0327	173264
138.00	Guy	38	1.337	0.0244	0.0340	125872
130.00	APXVAARR24-43	38	1.302	0.0272	0.0418	105618
70.00	Guy	38	0.724	0.0496	0.1163	109904

Maximum Tower Deflections - Design Wind

Section No.	Elevation ft	Horz. Deflection in	Gov. Load Comb.	Tilt °	Twist °
T1	150 - 140	7.758	6	0.2231	0.2207
T2	140 - 120	7.322	6	0.2133	0.2201
T3	120 - 100	6.457	6	0.2454	0.3162
T4	100 - 80	5.326	2	0.2947	0.4354
T5	80 - 60	4.086	2	0.2914	0.5232
T6	60 - 40	2.996	2	0.2363	0.5888
T7	40 - 20	2.069	2	0.2303	0.6356
T8	20 - 5	1.076	2	0.2485	0.6614
T9	5 - 0	0.272	2	0.2575	0.6687

Critical Deflections and Radius of Curvature - Design Wind

Elevation ft	Appurtenance	Gov. Load Comb.	Deflection in	Tilt °	Twist °	Radius of Curvature ft
148.00	APXVSPP18-C-A20	6	7.670	0.2204	0.2190	48486
138.00	Guy	6	7.238	0.2135	0.2242	37691
130.00	APXVAARR24-43	6	6.907	0.2222	0.2561	30825
70.00	Guy	2	3.514	0.2641	0.5583	18367

Bolt Design Data

Section No.	Elevation ft	Component Type	Bolt Grade	Bolt Size in	Number Of Bolts	Maximum Load per Bolt K	Allowable Load per Bolt K	Ratio Load / Allowable	Allowable Ratio	Criteria
T2	140	Leg	A325N	0.6250	5	3.39	24.85	0.136 ✓	1	Bolt DS
T3	120	Leg	A325N	0.6250	5	6.07	24.85	0.244 ✓	1	Bolt DS
T4	100	Leg	A325N	0.7500	5	6.41	35.78	0.179 ✓	1	Bolt DS
T5	80	Leg	A325N	0.7500	5	5.95	35.78	0.166 ✓	1	Bolt DS
T6	60	Leg	A325N	0.7500	5	7.45	35.78	0.208 ✓	1	Bolt DS
T7	40	Leg	A325N	0.7500	5	8.26	35.78	0.231 ✓	1	Bolt DS
T8	20	Leg	A325N	0.7500	5	8.43	35.78	0.235 ✓	1	Bolt DS

Guy Design Data

Section No.	Elevation ft	Size	Initial Tension K	Breaking Load K	Actual T_u K	Allowable ϕT_n K	Required S.F.	Actual S.F.
T2	138.00 (A) (457)	9/16 EHS	3.50	35.00	11.49	21.00	1.000	1.828 ✓
	138.00 (A) (458)	9/16 EHS	3.50	35.00	11.39	21.00	1.000	1.843 ✓
	138.00 (B) (451)	9/16 EHS	3.50	35.00	11.93	21.00	1.000	1.760 ✓
	138.00 (B) (452)	9/16 EHS	3.50	35.00	11.97	21.00	1.000	1.754 ✓
	138.00 (C) (442)	9/16 EHS	3.50	35.00	12.11	21.00	1.000	1.734 ✓
	138.00 (C) (443)	9/16 EHS	3.50	35.00	12.16	21.00	1.000	1.726 ✓
T5	70.00 (A) (468)	11/16" EHS	5.00	50.00	12.55	30.00	1.000	2.391 ✓
	70.00 (B) (467)	11/16" EHS	5.00	50.00	13.11	30.00	1.000	2.289 ✓
	70.00 (C) (463)	11/16" EHS	5.00	50.00	13.23	30.00	1.000	2.268 ✓

Compression Checks

Leg Design Data (Compression)

Section No.	Elevation ft	Size	L ft	L_u ft	Kl/r	A in^2	Mast Stability Index	P_u K	ϕP_n K	Ratio P_u / ϕP_n
T1	150 - 140	2	10.00	2.25	54.0 K=1.00	3.1416	1.00	-17.15	114.23	0.150 [1] ✓

Section No.	Elevation ft	Size	L ft	L_u ft	Kl/r	A in^2	Mast Stability Index	P_u K	ϕP_n K	Ratio $\frac{P_u}{\phi P_n}$
T2	140 - 120	2	20.00	2.38	57.0 K=1.00	3.1416	1.00	-30.36	111.48	0.272 [1] ✔
T3	120 - 100	2	20.00	2.38	57.0 K=1.00	3.1416	1.00	-32.23	111.48	0.289 [1] ✔
T4	100 - 80	2 1/4	20.00	2.38	50.7 K=1.00	3.9761	1.00	-32.05	148.30	0.216 [1] ✔
T5	80 - 60	2 1/4	20.00	2.38	50.7 K=1.00	3.9761	1.00	-37.22	148.30	0.251 [1] ✔
T6	60 - 40	2 1/4	20.00	2.38	50.7 K=1.00	3.9761	1.00	-41.25	148.30	0.278 [1] ✔
T7	40 - 20	2 1/4	20.00	2.38	50.7 K=1.00	3.9761	1.00	-42.42	148.30	0.286 [1] ✔
T8	20 - 5	2 1/2	15.00	2.42	46.4 K=1.00	4.9087	1.00	-42.13	188.16	0.224 [1] ✔
T9	5 - 0	2 1/2	5.45	2.45	47.1 K=1.00	4.9087	1.00	-45.20	187.85	0.241 [1] ✔

[1] P_u / ϕP_n controls

Diagonal Design Data (Compression)

Section No.	Elevation ft	Size	L ft	L_u ft	Kl/r	A in^2	P_u K	ϕP_n K	Ratio $\frac{P_u}{\phi P_n}$
T1	150 - 140	3/4	4.37	2.09	120.4 K=0.90	0.4418	-1.71	6.89	0.248 [1] ✔
T2	140 - 120	3/4	4.44	2.12	122.2 K=0.90	0.4418	-3.64	6.69	0.545 [1] ✔
T3	120 - 100	3/4	4.44	2.12	122.2 K=0.90	0.4418	-1.26	6.69	0.189 [1] ✔
T4	100 - 80	3/4	4.44	2.11	121.4 K=0.90	0.4418	-1.82	6.77	0.270 [1] ✔
T5	80 - 60	3/4	4.44	2.11	121.4 K=0.90	0.4418	-1.90	6.77	0.281 [1] ✔
T6	60 - 40	3/4	4.44	2.11	121.4 K=0.90	0.4418	-1.33	6.77	0.197 [1] ✔
T7	40 - 20	3/4	4.44	2.11	121.4 K=0.90	0.4418	-0.67	6.77	0.098 [1] ✔
T8	20 - 5	3/4	4.46	2.11	121.3 K=0.90	0.4418	-0.99	6.78	0.146 [1] ✔
T9	5 - 0	3/4	2.60	2.00	115.0 K=0.90	0.4418	-3.04	7.54	0.403 [1] ✔

[1] P_u / ϕP_n controls

Top Girt Design Data (Compression)

Section No.	Elevation ft	Size	L ft	L_u ft	Kl/r	A in^2	P_u K	ϕP_n K	Ratio $\frac{P_u}{\phi P_n}$
T1	150 - 140	3/4	3.75	3.58	160.5 K=0.70	0.4418	-0.09	3.87	0.022 [1] ✔
T2	140 - 120	3/4	3.75	3.58	160.5 K=0.70	0.4418	-1.13	3.87	0.292 [1] ✔
T3	120 - 100	3/4	3.75	3.58	160.5 K=0.70	0.4418	-0.01	3.87	0.003 [1] ✔
T4	100 - 80	3/4	3.75	3.56	159.6 K=0.70	0.4418	-0.23	3.92	0.060 [1] ✔
T5	80 - 60	3/4	3.75	3.56	159.6 K=0.70	0.4418	-0.35	3.92	0.091 [1] ✔
T6	60 - 40	3/4	3.75	3.56	159.6 K=0.70	0.4418	-0.28	3.92	0.071 [1] ✔
T7	40 - 20	3/4	3.75	3.56	159.6 K=0.70	0.4418	-0.06	3.92	0.016 [1] ✔

[1] P_u / ϕP_n controls

Bottom Girt Design Data (Compression)

Section No.	Elevation ft	Size	L ft	L_u ft	Kl/r	A in^2	P_u K	ϕP_n K	Ratio $\frac{P_u}{\phi P_n}$
T1	150 - 140	3/4	3.75	3.58	160.5 K=0.70	0.4418	-0.39	3.87	0.101 [1] ✔
T2	140 - 120	3/4	3.75	3.58	160.5 K=0.70	0.4418	-0.02	3.87	0.005 [1] ✔
T3	120 - 100	3/4	3.75	3.58	160.5 K=0.70	0.4418	-0.16	3.87	0.041 [1] ✔
T4	100 - 80	3/4	3.75	3.56	159.6 K=0.70	0.4418	-0.40	3.92	0.101 [1] ✔
T5	80 - 60	3/4	3.75	3.56	159.6 K=0.70	0.4418	-0.21	3.92	0.055 [1] ✔
T6	60 - 40	3/4	3.75	3.56	159.6 K=0.70	0.4418	-0.07	3.92	0.017 [1] ✔

[1] P_u / ϕP_n controls

Top Guy Pull-Off Design Data (Compression)

Section No.	Elevation ft	Size	L ft	L_u ft	Kl/r	A in^2	P_u K	ϕP_n K	Ratio $\frac{P_u}{\phi P_n}$
T1	150 - 140	1 1/4	3.75	3.58	137.6 K=1.00	1.2272	-4.04	14.64	0.276 [1] ✔

[1] P_u / ϕP_n controls

Torque-Arm Top Design Data

Section No.	Elevation ft	Size	L ft	L_u ft	Kl/r	A in^2	P_u K	ϕP_n K	Ratio $\frac{P_u}{\phi P_n}$
T2	140 - 120 (444)	2L3x3x5/16	7.76	7.66	99.7 K=1.00	3.5500	-0.75	68.19	0.011 [1] ✔
T2	140 - 120 (445)	2L3x3x5/16	7.76	7.66	99.7 K=1.00	3.5500	-1.06	68.19	0.016 [1] ✔
T2	140 - 120 (453)	2L3x3x5/16	7.76	7.66	99.7 K=1.00	3.5500	-0.31	68.19	0.005 [1] ✔
T2	140 - 120 (454)	2L3x3x5/16	7.76	7.66	99.7 K=1.00	3.5500	-0.42	68.19	0.006 [1] ✔
T2	140 - 120 (459)	2L3x3x5/16	7.76	7.66	99.7 K=1.00	3.5500	-0.55	68.19	0.008 [1] ✔
T2	140 - 120 (460)	2L3x3x5/16	7.76	7.66	99.7 K=1.00	3.5500	-1.00	68.19	0.015 [1] ✔

[1] P_u / ϕP_n controls

Torque-Arm Bottom Design Data

Section No.	Elevation ft	Size	L ft	L_u ft	Kl/r	A in^2	P_u K	ϕP_n K	Ratio $\frac{P_u}{\phi P_n}$
T2	140 - 120 (449)	2L3x3x5/16	6.95	6.85	89.2 K=1.00	3.5500	-8.35	75.67	0.110 [1] ✔
T2	140 - 120 (450)	2L3x3x5/16	6.95	6.85	89.2 K=1.00	3.5500	-7.58	75.67	0.100 [1] ✔
T2	140 - 120 (455)	2L3x3x5/16	6.95	6.85	89.2 K=1.00	3.5500	-8.46	75.67	0.112 [1] ✔
T2	140 - 120 (456)	2L3x3x5/16	6.95	6.85	89.2 K=1.00	3.5500	-8.58	75.67	0.113 [1] ✔
T2	140 - 120 (461)	2L3x3x5/16	6.95	6.85	89.2 K=1.00	3.5500	-8.72	75.67	0.115 [1] ✔
T2	140 - 120 (462)	2L3x3x5/16	6.95	6.85	89.2 K=1.00	3.5500	-8.14	75.67	0.108 [1] ✔

[1] P_u / ϕP_n controls

Tension Checks

Leg Design Data (Tension)

Section No.	Elevation ft	Size	L ft	L_u ft	Kl/r	A in^2	P_u K	ϕP_n K	Ratio $\frac{P_u}{\phi P_n}$
T1	150 - 140	2	10.00	2.25	54.0	3.1416	3.68	141.37	0.026 [1] ✔
T2	140 - 120	2	20.00	2.38	57.0	3.1416	1.37	141.37	0.010 [1] ✔
T3	120 - 100	2	20.00	2.38	57.0	1.7942	1.29	87.47	0.015 [1] ✔
T5	80 - 60	2 1/4	20.00	2.38	50.7	3.9761	2.70	178.92	0.015 [1] ✔

[1] P_u / ϕP_n controls

Diagonal Design Data (Tension)

Section No.	Elevation ft	Size	L ft	L_u ft	Kl/r	A in^2	P_u K	ϕP_n K	Ratio $\frac{P_u}{\phi P_n}$
T1	150 - 140	3/4	4.37	2.09	133.7	0.4418	1.71	19.88	0.086 [1] ✔
T2	140 - 120	3/4	4.44	2.12	135.7	0.4418	3.24	19.88	0.163 [1] ✔
T3	120 - 100	3/4	4.44	2.12	135.7	0.4418	1.14	19.88	0.057 [1] ✔
T4	100 - 80	3/4	4.44	2.11	134.9	0.4418	1.70	19.88	0.086 [1] ✔
T5	80 - 60	3/4	4.44	2.11	134.9	0.4418	1.72	19.88	0.087 [1] ✔
T6	60 - 40	3/4	4.44	2.11	134.9	0.4418	1.17	19.88	0.059 [1] ✔
T7	40 - 20	3/4	4.44	2.11	134.9	0.4418	0.50	19.88	0.025 [1] ✔
T8	20 - 5	3/4	4.46	2.11	134.8	0.4418	1.47	19.88	0.074 [1] ✔
T9	5 - 0	3/4	3.71	2.19	139.9	0.4418	0.65	19.88	0.033 [1] ✔

[1] P_u / ϕP_n controls

Horizontal Design Data (Tension)

Section No.	Elevation ft	Size	L ft	L_u ft	Kl/r	A in^2	P_u K	ϕP_n K	Ratio $\frac{P_u}{\phi P_n}$
T9	5 - 0	4x1/2	2.06	1.85	154.2	2.0000	0.26	64.80	0.004 [1] ✔

[1] P_u / ϕP_n controls

Top Girt Design Data (Tension)

Section No.	Elevation ft	Size	L ft	L_u ft	Kl/r	A in^2	P_u K	ϕP_n K	Ratio $\frac{P_u}{\phi P_n}$
T1	150 - 140	3/4	3.75	3.58	229.3	0.4418	0.05	19.88	0.002 [1] ✔
T2	140 - 120	3/4	3.75	3.58	229.3	0.4418	1.18	19.88	0.059 [1] ✔
T3	120 - 100	3/4	3.75	3.58	229.3	0.4418	0.16	19.88	0.008 [1] ✔
T4	100 - 80	3/4	3.75	3.56	228.0	0.4418	0.34	19.88	0.017 [1] ✔
T5	80 - 60	3/4	3.75	3.56	228.0	0.4418	0.49	19.88	0.025 [1] ✔
T6	60 - 40	3/4	3.75	3.56	228.0	0.4418	0.41	19.88	0.021 [1] ✔
T7	40 - 20	3/4	3.75	3.56	228.0	0.4418	0.20	19.88	0.010 [1] ✔
T8	20 - 5	3/4	3.75	3.54	226.7	0.4418	0.30	19.88	0.015 [1] ✔

[1] P_u / ϕP_n controls

Bottom Girt Design Data (Tension)

Section No.	Elevation ft	Size	L ft	L_u ft	Kl/r	A in^2	P_u K	ϕP_n K	Ratio $\frac{P_u}{\phi P_n}$
T1	150 - 140	3/4	3.75	3.58	229.3	0.4418	0.70	19.88	0.035 [1] ✔
T2	140 - 120	3/4	3.75	3.58	229.3	0.4418	0.23	19.88	0.011 [1] ✔
T3	120 - 100	3/4	3.75	3.58	229.3	0.4418	0.27	19.88	0.013 [1] ✔
T4	100 - 80	3/4	3.75	3.56	228.0	0.4418	0.52	19.88	0.026 [1] ✔
T5	80 - 60	3/4	3.75	3.56	228.0	0.4418	0.40	19.88	0.020 [1] ✔
T6	60 - 40	3/4	3.75	3.56	228.0	0.4418	0.25	19.88	0.013 [1] ✔
T7	40 - 20	3/4	3.75	3.56	228.0	0.4418	0.27	19.88	0.014 [1] ✔
T8	20 - 5	3/4	3.75	3.54	226.7	0.4418	8.41	19.88	0.423 [1] ✔
T9	5 - 0	3/4	0.38	0.17	10.7	0.4418	1.43	19.88	0.072 [1] ✔

Section No.	Elevation ft	Size	L ft	L_u ft	Kl/r	A in^2	P_u K	ϕP_n K	Ratio $\frac{P_u}{\phi P_n}$

[1] P_u / ϕP_n controls

Top Guy Pull-Off Design Data (Tension)

Section No.	Elevation ft	Size	L ft	L_u ft	Kl/r	A in^2	P_u K	ϕP_n K	Ratio $\frac{P_u}{\phi P_n}$
T1	150 - 140	1 1/4	3.75	3.58	137.6	1.2272	5.18	55.22	0.094 [1] ✔
T5	80 - 60	1 1/4	3.75	3.56	136.8	1.2272	5.95	55.22	0.108 [1] ✔

[1] P_u / ϕP_n controls

Torque-Arm Top Design Data

Section No.	Elevation ft	Size	L ft	L_u ft	Kl/r	A in^2	P_u K	ϕP_n K	Ratio $\frac{P_u}{\phi P_n}$
T2	140 - 120 (444)	2L3x3x5/16	7.76	7.66	99.7	3.5500	10.56	115.02	0.092 [1] ✔
T2	140 - 120 (445)	2L3x3x5/16	7.76	7.66	99.7	3.5500	9.77	115.02	0.085 [1] ✔
T2	140 - 120 (453)	2L3x3x5/16	7.76	7.66	99.7	3.5500	10.39	115.02	0.090 [1] ✔
T2	140 - 120 (454)	2L3x3x5/16	7.76	7.66	99.7	3.5500	10.48	115.02	0.091 [1] ✔
T2	140 - 120 (459)	2L3x3x5/16	7.76	7.66	99.7	3.5500	10.45	115.02	0.091 [1] ✔
T2	140 - 120 (460)	2L3x3x5/16	7.76	7.66	99.7	3.5500	9.77	115.02	0.085 [1] ✔

[1] P_u / ϕP_n controls

Torque-Arm Bottom Design Data

Section No.	Elevation ft	Size	L ft	L_u ft	Kl/r	A in^2	P_u K	ϕP_n K	Ratio $\frac{P_u}{\phi P_n}$
T2	140 - 120 (449)	2L3x3x5/16	6.95	6.85	89.2	3.5500	4.71	115.02	0.041 [1] ✔
T2	140 - 120 (450)	2L3x3x5/16	6.95	6.85	89.2	3.5500	4.77	115.02	0.041 [1]

Section No.	Elevation ft	Size	L ft	L_u ft	Kl/r	A in^2	P_u K	ϕP_n K	Ratio $\frac{P_u}{\phi P_n}$
T2	140 - 120 (455)	2L3x3x5/16	6.95	6.85	89.2	3.5500	4.99	115.02	0.043 [1]
T2	140 - 120 (456)	2L3x3x5/16	6.95	6.85	89.2	3.5500	4.97	115.02	0.043 [1]
T2	140 - 120 (461)	2L3x3x5/16	6.95	6.85	89.2	3.5500	5.21	115.02	0.045 [1]
T2	140 - 120 (462)	2L3x3x5/16	6.95	6.85	89.2	3.5500	5.21	115.02	0.045 [1]

[1] P_u / ϕP_n controls

Section Capacity Table

Section No.	Elevation ft	Component Type	Size	Critical Element	P K	ϕP_{allow} K	% Capacity	Pass Fail
T1	150 - 140	Leg	2	2	-17.15	114.23	15.0	Pass
T2	140 - 120	Leg	2	34	-30.36	111.48	27.2	Pass
T3	120 - 100	Leg	2	92	-32.23	111.48	28.9	Pass
T4	100 - 80	Leg	2 1/4	149	-32.05	148.30	21.6	Pass
T5	80 - 60	Leg	2 1/4	206	-37.22	148.30	25.1	Pass
T6	60 - 40	Leg	2 1/4	263	-41.25	148.30	27.8	Pass
T7	40 - 20	Leg	2 1/4	320	-42.42	148.30	28.6	Pass
T8	20 - 5	Leg	2 1/2	377	-42.13	188.16	22.4 23.5 (b)	Pass
T9	5 - 0	Leg	2 1/2	422	-45.20	187.85	24.1	Pass
T1	150 - 140	Diagonal	3/4	12	-1.71	6.89	24.8	Pass
T2	140 - 120	Diagonal	3/4	76	-3.64	6.69	54.5	Pass
T3	120 - 100	Diagonal	3/4	104	-1.26	6.69	18.9	Pass
T4	100 - 80	Diagonal	3/4	161	-1.82	6.77	27.0	Pass
T5	80 - 60	Diagonal	3/4	260	-1.90	6.77	28.1	Pass
T6	60 - 40	Diagonal	3/4	316	-1.33	6.77	19.7	Pass
T7	40 - 20	Diagonal	3/4	373	-0.67	6.77	9.8	Pass
T8	20 - 5	Diagonal	3/4	394	-0.99	6.78	14.6	Pass
T9	5 - 0	Diagonal	3/4	427	-3.04	7.54	40.3	Pass
T9	5 - 0	Horizontal	4x1/2	433	0.26	64.80	0.4	Pass
T1	150 - 140	Top Girt	3/4	5	-0.09	3.87	2.2	Pass
T2	140 - 120	Top Girt	3/4	37	-1.13	3.87	29.2	Pass
T3	120 - 100	Top Girt	3/4	94	0.16	19.88	0.8	Pass
T4	100 - 80	Top Girt	3/4	152	-0.23	3.92	6.0	Pass
T5	80 - 60	Top Girt	3/4	210	-0.35	3.92	9.1	Pass
T6	60 - 40	Top Girt	3/4	267	-0.28	3.92	7.1	Pass
T7	40 - 20	Top Girt	3/4	324	-0.06	3.92	1.6	Pass
T8	20 - 5	Top Girt	3/4	379	0.30	19.88	1.5	Pass
T1	150 - 140	Bottom Girt	3/4	8	-0.39	3.87	10.1	Pass
T2	140 - 120	Bottom Girt	3/4	42	0.23	19.88	1.1	Pass
T3	120 - 100	Bottom Girt	3/4	98	-0.16	3.87	4.1	Pass
T4	100 - 80	Bottom Girt	3/4	155	-0.40	3.92	10.1	Pass
T5	80 - 60	Bottom Girt	3/4	212	-0.21	3.92	5.5	Pass
T6	60 - 40	Bottom Girt	3/4	268	-0.07	3.92	1.7	Pass
T7	40 - 20	Bottom Girt	3/4	327	0.27	19.88	1.4	Pass
T8	20 - 5	Bottom Girt	3/4	382	8.41	19.88	42.3	Pass
T9	5 - 0	Bottom Girt	3/4	424	1.43	19.88	7.2	Pass
T2	140 - 120	Guy A@138	9/16	457	11.49	21.00	54.7	Pass

Section No.	Elevation ft	Component Type	Size	Critical Element	P K	$øP_{allow}$ K	% Capacity	Pass Fail
T5	80 - 60	Guy A@70	11/16"	468	12.55	30.00	41.8	Pass
T2	140 - 120	Guy B@138	9/16	452	11.97	21.00	57.0	Pass
T5	80 - 60	Guy B@70	11/16"	467	13.11	30.00	43.7	Pass
T2	140 - 120	Guy C@138	9/16	443	12.16	21.00	57.9	Pass
T5	80 - 60	Guy C@70	11/16"	463	13.23	30.00	44.1	Pass
T1	150 - 140	Top Guy Pull-Off@138	1 1/4	446	-4.04	14.64	27.6	Pass
T5	80 - 60	Top Guy Pull-Off@70	1 1/4	464	5.95	55.22	10.8	Pass
T2	140 - 120	Torque Arm Top@138	2L3x3x5/16	444	10.56	115.02	9.2	Pass
T2	140 - 120	Torque Arm Bottom@138	2L3x3x5/16	461	-8.72	75.67	11.5	Pass
							Summary	
						Leg (T3)	28.9	Pass
						Diagonal (T2)	54.5	Pass
						Horizontal (T9)	0.4	Pass
						Top Girt (T2)	29.2	Pass
						Bottom Girt (T8)	42.3	Pass
						Guy A (T2)	54.7	Pass
						Guy B (T2)	57.0	Pass
						Guy C (T2)	57.9	Pass
						Top Guy Pull-Off (T1)	27.6	Pass
						Torque Arm Top (T2)	9.2	Pass
						Torque Arm Bottom (T2)	11.5	Pass
						Bolt Checks	24.4	Pass
						RATING =	**57.9**	**Pass**

Guyed Tower Base Foundation:

Input Data:

Tower Data

Shear Force =	$Shear := 1 \cdot kip$	(User Input from tnxTower)	
Axial Force =	$Axial := 121 \cdot kip$	(User Input from tnxTower)	
Tower Height =	$H_t := 150 \cdot ft$	(User Input)	

Footing Data:

Overall Depth of Footing =	$D_f := 3.0 \cdot ft$	(User Input)	
Length of Pier =	$L_p := 2.25 \cdot ft$	(User Input)	
Extension of Pier Above Grade =	$L_{pag} := 0.5 \cdot ft$	(User Input)	
Diameter of Pier =	$D_p := 2.5 \cdot ft$	(User Input)	
Width of Pad =	$W_{pad} := 7 \cdot ft$	(User Input)	
Thickness of Pad =	$t_{pad} := 1.25 \cdot ft$	(User Input)	

Material Properties:

Concrete Compressive Strength =	$f_c := 3000 \cdot psi$	(User Input)	
Steel Reinforcment Yield Strength =	$f_y := 60000 \cdot psi$	(User Input)	
Internal Friction Angle of Soil =	$\Phi_s := 30 \cdot deg$	(User Input)	
Ultimate Soil Bearing Capacity =	$q_s := 8000 \cdot psf$	(User Input)	
Unit Weight of Soil =	$\gamma_{soil} := 120 \cdot pcf$	(User Input)	
Unit Weight of Concrete =	$\gamma_{conc} := 150 \cdot pcf$	(User Input)	
Foundation Bouyancy =	$Bouyancy := 0$	(User Input)	(Yes=1 / No=0)
Depth to Neglect =	$n := 0 \cdot ft$	(User Input)	
Cohesion of Clay Type Soil =	$c := 0 \cdot ksf$	(User Input)	(Use 0 for Sandy Soil)
Seismic Zone Factor =	$Z := 2$	(User Input)	
Coefficient of Friction Between Concrete =	$\mu := 0.45$	(User Input)	

Calculated Factors:

Coefficient of Lateral Soil Pressure =

$$K_p := \frac{1 + \sin(\Phi_s)}{1 - \sin(\Phi_s)} = 3$$

Load Factor =

$$LF := \begin{cases} 1.333 & \text{if } H_t \le 700 \cdot ft \\ 1.7 & \text{if } H_t \ge 1200 \cdot ft \\ 1.333 + \left(\frac{H_t - 700ft}{1200ft - 700ft}\right) \cdot 0.4 & \text{otherwise} \end{cases} = 1.333$$

Stability of Footing:

Adjusted Concrete Unit Weight = $\gamma_c := \text{if}\left(\text{Bouyancy} = 1, \gamma_{conc} - 62.4\text{pcf}, \gamma_{conc}\right) = 150 \cdot \text{pcf}$

Adjusted Soil Unit Weight = $\gamma_s := \text{if}\left(\text{Bouyancy} = 1, \gamma_{soil} - 62.4\text{pcf}, \gamma_{soil}\right) = 120 \cdot \text{pcf}$

Passive Pressure = $P_{top} := 0$

$P_{bot} := K_p \cdot \gamma_s \cdot D_f + c \cdot 2 \cdot \sqrt{K_p} = 1.08 \cdot \text{ksf}$

$P_{ave} := \dfrac{P_{top} + P_{bot}}{2} = 0.54 \cdot \text{ksf}$

$A_p := D_p \cdot L_p = 5.625$

Soil Shear Resistance = $Sl_1 := P_{ave} \cdot A_p = 3.04 \cdot \text{kip}$

Weight of Concrete = $WT_c := \left(\dfrac{1}{4} \cdot \pi \cdot D_p^{\,2} \cdot L_p + W_{pad}^{\,2} \cdot t_{pad}\right) \cdot \gamma_c = 10.84 \cdot \text{kip}$

Total Weight = $WT_{tot} := WT_c + \text{Axial} = 131.84 \cdot \text{kip}$

Soil/Concrete Friction Resistance = $Sl_2 := \mu \cdot WT_{tot} = 59.33 \cdot \text{kips}$

Total Sliding Resistance = $Sl_{tot} := Sl_1 + Sl_2 = 62.37 \cdot \text{kips}$

Sliding Resistance Ratio = $\text{Sliding_Resistance}_{ratio} := \dfrac{0.75 Sl_{tot}}{\text{Shear}} = 46.78$

$\text{Sliding_Resistance_Check} := \text{if}\left[\left(\dfrac{\text{Shear}}{0.75 Sl_{tot}} < 1.0\right), \text{"Okay"}, \text{"No Good"}\right]$

Sliding_Resistance_Check = "Okay"

Bearing Pressure Caused by Footing:

Maximum Pressure in Mat = $P_{max} := \dfrac{WT_{tot}}{W_{pad}^{\,2}} = 2.69 \cdot \text{ksf}$

$\text{Max_Pressure_Check} := \text{if}\left(P_{max} < 0.6 q_s, \text{"Okay"}, \text{"No Good"}\right)$

Max_Pressure_Check = "Okay"

Rock Anchor Foundation Analysis:

Input Data:

Max Pier Reactions:

Uplift =	$Uplift := 18 \cdot kips$	*user input*
Shear =	$Shear := 29 \cdot kips$	*user input*

Rock Anchor Properties:

Number of Anchors =	$N_{anchor} := 2$	*user input*
Hole Diameter =	$hole_d := 3.00in$	*user input*
Ultimate Bond Stress Between Rock and Grout =	$\sigma_{bond} := 60 \cdot psi$	*user input*
Rock Anchor Ultimate Strength =	$F_u := 150.0ksi$	*user input*
Rock Anchor Yield Strength =	$F_y := 127.7ksi$	*user input*
Rock Anchor Diameter =	$d_{ra} := 1.375in$	*user input*
Threads per Inch =	$n := 6$	*user input*
	$\eta := 0.55$	*user input*

Rock Anchor Tension/Shear Check:

NetArea of Bolt = $A_n := \frac{\pi}{4} \cdot \left(d_{ra} - \frac{0.9743 \cdot in}{n}\right)^2 = 1.155 \cdot in^2$

Maximum Tensile Force = $T_{Max} := \frac{Uplift}{N_{anchor}} = 9 \cdot kips$

Maximum Shear Force = $V_{Max} := \frac{Shear}{N_{anchor}} = 14.5 \cdot kips$

Design Tensile Strength = $\Phi R_{nt} := 0.8 \cdot F_u \cdot A_n = 138.586 \cdot k$

Bolt Steel FS = $\frac{1}{\frac{T_{Max} + \frac{V_{Max}}{\eta}}{\Phi R_{nt}}} = 3.9$

Condition1 = $Condition1 := if\left[\frac{\left(T_{Max} + \frac{V_{Max}}{\eta}\right)}{\Phi R_{nt}} \le 1.00, "OK", "Overstressed"\right]$

Condition1 = "OK"

Rock Anchor Req'd Development Length in Rock:

Rock/Grout Bond Length Provided = $L_{bprov} := 29 \cdot ft$

Required Rock/Grout Bond Length = $L_{breq} := \frac{T_{Max}}{0.5\pi \cdot hole_d \cdot \sigma_{bond}} = 2.65 ft$

Anchor Bond FS = $\frac{L_{bprov}}{L_{breq}} = 10.9$

$Bond_Length_Check := if\left(\frac{L_{breq}}{L_{bprov}} \le 1.00, "OK", "Increase Length"\right)$

Bond_Length_Check = "OK"

RAN Template:	A&L Template:
67D5A997DB	67D5997DB_2xAIR+1OP

CT11180C_Anchor_8_draft

Print Name: Preliminary (RFDS_for_scoping)
PORs: Anchor_Phase 3

Section 1 - Site Information

Site ID: CT11180C
Status: Draft
Version: 8
Project Type: Anchor
Approved: Not Approved
Approved By: Not Approved
Last Modified: 5/19/2020 6:4:04 PM
Last Modified By: Dominic.Kallas2@T-Mobile.com

Site Name: Bolton Ct.._1
Site Class: Self Support Tower
Site Type: Structure Non Building
Plan Year: 2020
Market: CONNECTICUT CT
Vendor: Ericsson
Landlord: Mountaintop Enterprises Inc.

Latitude: 41.80264800
Longitude: -72.44121300
Address: 130 Vernon Rd.
City, State: Bolton, CT
Region: NORTHEAST

RAN Template: 67D5A997DB			AL Template: 67D5997DB_2xAIR+1OP	
Sector Count: 3	**Antenna Count:** 9	**Coax Line Count:** 0	**TMA Count:** 0	**RRU Count:** 9

Section 2 - Existing Template Images

Capture.JPG

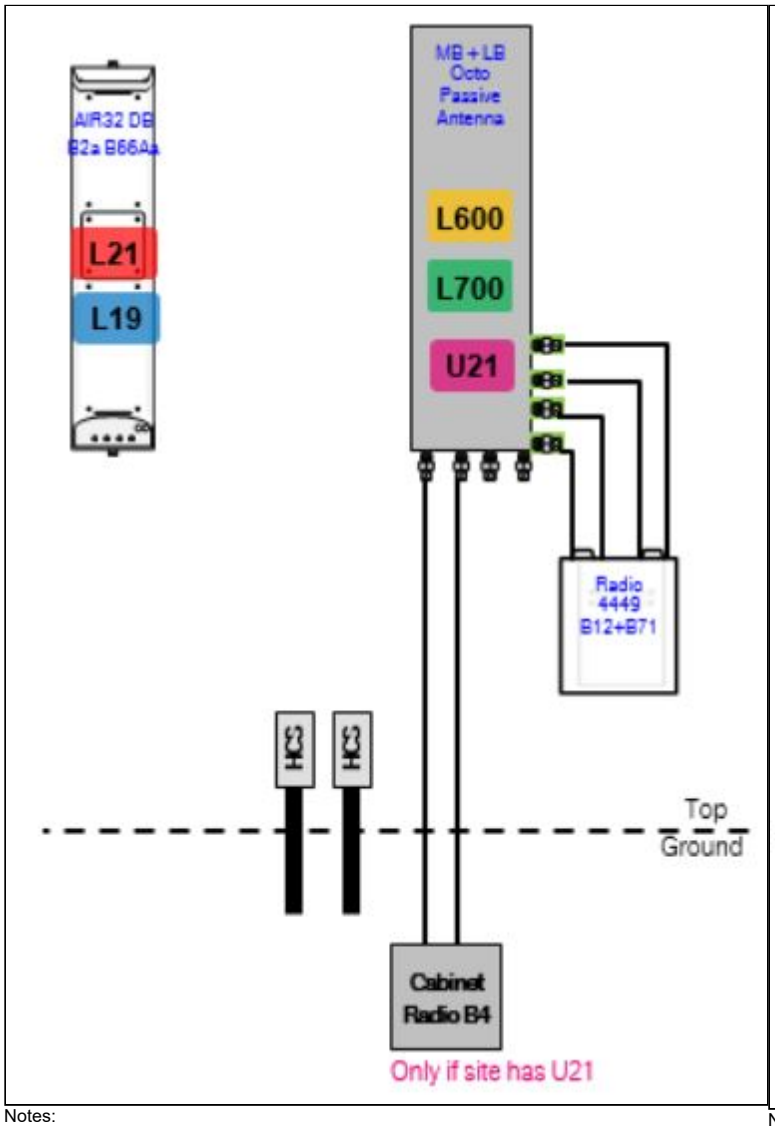

Notes:

Capture.JPG

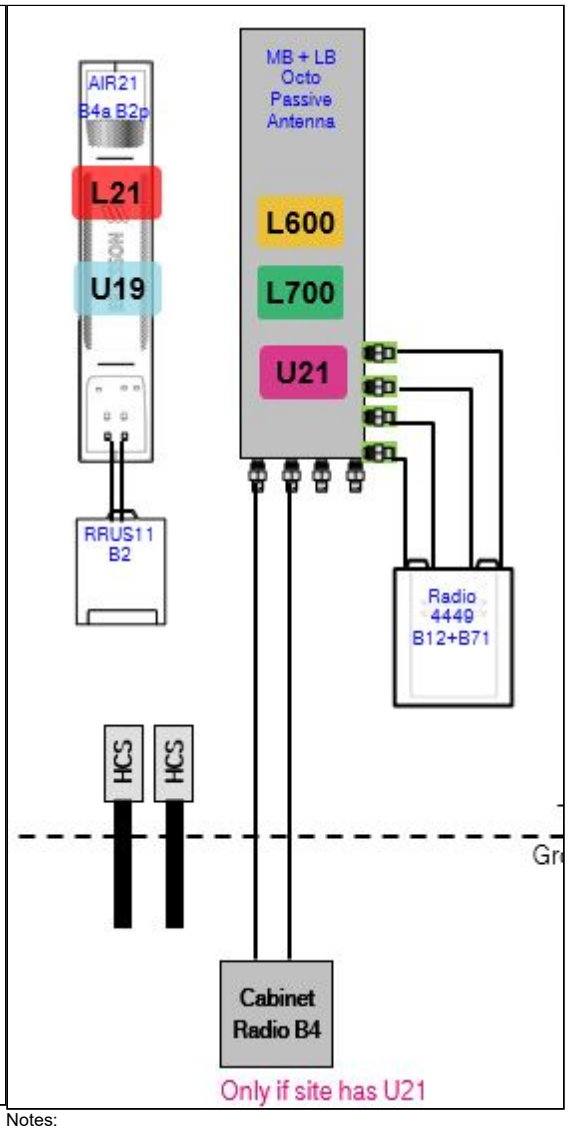

Notes:

Section 3 - Proposed Template Images

67D5997DB_2xAIR+1OP.JPG

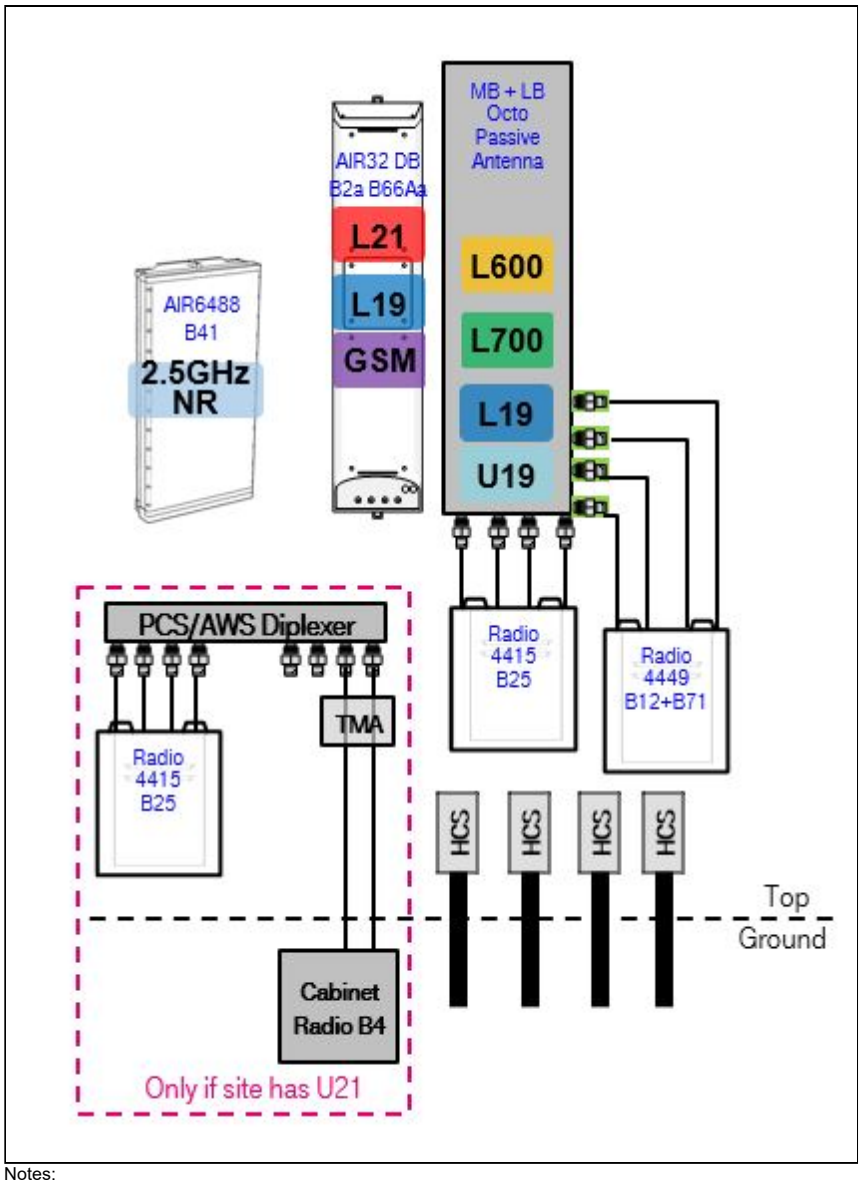

Notes:

Section 4 - Siteplan Images

----- This section is intentionally blank. -----

RAN Template:	A&L Template:
67D5A997DB	67D5997DB_2xAIR+1OP

CT11180C_Anchor_8_draft

Print Name: Preliminary (RFDS_for_scoping)
PORs: Anchor_Phase 3

Section 5 - RAN Equipment

Existing RAN Equipment

Template: 67D91DB

Enclosure	1
Enclosure Type	RBS 6131
Baseband	DUW30 U2100; BB 6630 N600; BB 6630 L2100 L1900 L700 L600
Hybrid Cable System	Ericsson 6x12 HCS *Select Length & AWG* **(x 3)**

Proposed RAN Equipment

Template: 67D5A997DB

Enclosure	1	2	3
Enclosure Type	RBS 6131	Enclosure 6160	B160
Baseband	DUW30 U2100; BB 6630 N600; BB 6630 L2100 L1900 L700 L600	BB 6630 **(x 3)** L2500; BB 6648 N2500	
Hybrid Cable System	Ericsson 6x12 HCS *Select Length & AWG* **(x 3)**	Ericsson 6x12 HCS *Select AWG & Length* **(x 3)**	

RAN Scope of Work:

Cabinet Locations to be determined.

Add (1) Enclosure 6160.

Add (1) Battery Cabinet B160.

Add (1) iXRe Router to new Enclosure 6160.

Add (3) BB6630 for L2500 to new Enclosure 6160.

Add (1) BB6648 for N2500 to new Enclosure 6160.

Existing: (4) 1 5/8" (2) 9 x 18.

Remove all existing coaxial lines.

Remove all 3X6 HCS.

Add (3) 6X12 HCS. Length of new HCS will match that of existing HCS.

RAN Template:	A&L Template:
67D5A997DB	67D5997DB_2xAIR+1OP

CT11180C_Anchor_8_draft

Print Name: Preliminary (RFDS_for_scoping)
PORs: Anchor_Phase 3

Section 6 - A&L Equipment

Existing Template: 67D91DB_1xAIR+1OP (U21 Market)
Proposed Template: 67D5997DB_2xAIR+1OP

Sector (Existing) view from behind

Coverage Type	A - Outdoor Macro							
Antenna	1				2			
Antenna Model	Ericsson - AIR32 KRD901146-1_B66A_B2A (Octo)				RFS - APXVAARR24_43-U-NA20 (Octo)			
Azimuth	30				30			
M. Tilt	0				0			
Height	130				130			
Ports	P1	P2	P3	P4	P5	P6	P7	P8
Active Tech.	L2100	L2100	L1900	L1900	L700 L600 N600	L700 L600 N600	U2100	
Dark Tech.								
Restricted Tech.								
Decomm. Tech.								
E. Tilt	2	2	2	2	2	2	2	
Cables					Coax Jumper **(x2)**	Coax Jumper **(x2)**	Coax Jumper **(x2)**	
TMAs								
Diplexers / Combiners								
Radio					Radio 4449 B71+B85 (At Antenna)	SHARED Radio 4449 B71+B85 (At Antenna)	Radio 4415 B66A (At Antenna)	
Sector Equipment								

Unconnected Equipment:

Cable: 1-5/8" Coax - 200 ft.
Cable: 1-5/8" Coax - 200 ft.

Scope of Work:

Replace (1) AIR21 B2P/B4A antenna with (1) AIR32 DB antenna, connect L2100 and L1900 fibers.
Replace (1) LB+MB Quad Port antenna with (1) LB+MB Octa Port 8' antenna. Replace (1) RRUS11 B12 with (1) Radio 4449 B71+B12 to LB ports. Add (1) Radio 4415 B66 for U2100 to MB ports

*A dashed border indicates shared equipment. Any connected equipment is denoted with the SHARED keyword.

RAN Template:	A&L Template:
67D5A997DB	67D5997DB_2xAIR+1OP

CT11180C_Anchor_8_draft

Print Name: Preliminary (RFDS_for_scoping)
PORs: Anchor_Phase 3

Sector (Proposed) view from behind

Coverage Type	A - Outdoor Macro									
Antenna	1				2		3			
Antenna Model	Ericsson - AIR32 KRD901146-1_B66A_B2A (Octo)				Ericsson - AIR6449 B41 (Active Antenna - Massive MIMO)		RFS - APXVAARR24_43-U-NA20 (Octo)			
Azimuth	30				30		30			
M. Tilt	0				0		0			
Height	130				130		130			
Ports	P1	P2	P3	P4	P5	P6	P7	P8	P9	P10
Active Tech.	L2100	L2100	L1900	L1900	L2500 N2500	L2500 N2500	L700 L600 N600	L700 L600 N600	U2100 L1900	L1900
Dark Tech.										
Restricted Tech.										
Decomm. Tech.										
E. Tilt	2	2	2	2			2	2	2	
Cables							Coax Jumper **(x2)**	Coax Jumper **(x2)**	Coax Jumper **(x2)**	Coax Jumper **(x2)**
TMAs										
Diplexers / Combiners									CommScope - CBC1923Q-43 (AtAntenna)	SHARED CommScope - CBC1923Q-43 (AtAntenna)
Radio							Radio 4449 B71+B85 (At Antenna)	SHARED Radio 4449 B71+B85 (At Antenna)	Radio 4415 B66A (At Antenna) Radio 4415 B25 (At Antenna)	SHARED Radio 4415 B25 (At Antenna)
Sector Equipment										

Unconnected Equipment:

Scope of Work:

Add (1) AIR6449 B41 for L2500 and N2500 to new Position 2.

Add (1) PCS/AWS 8:4 diplexer to Position 3 at antenna, and connect its four output ports to the Mid-Band Ports of the Octo antenna.

Add (1) Radio 4415 B25 for L1900 2nd Carrier to Position 3 at antenna, and connect its ports to the four PCS input ports of the diplexer.

Connect two ports of the Radio 4415 B66 for U2100 to two of the AWS input ports of the diplexer.

Make sure to place metal caps on the unused ports of the diplexer.

Ensure RET control is enabled for all technology layers according to the Design Documents.

*A dashed border indicates shared equipment. Any connected equipment is denoted with the SHARED keyword.

RAN Template:	A&L Template:
67D5A997DB	67D5997DB_2xAIR+1OP

CT11180C_Anchor_8_draft

Print Name: Preliminary (RFDS_for_scoping)
PORs: Anchor_Phase 3

Sector (Existing) view from behind

Coverage Type	A - Outdoor Macro							
Antenna	1				2			
Antenna Model	Ericsson - AIR32 KRD901146-1_B66A_B2A (Octo)				RFS - APXVAARR24_43-U-NA20 (Octo)			
Azimuth	150				150			
M. Tilt	0				0			
Height	130				130			
Ports	P1	P2	P3	P4	P5	P6	P7	P8
Active Tech.	L2100	L2100	L1900	L1900	L700 L600 N600	L700 L600 N600	U2100	
Dark Tech.								
Restricted Tech.								
Decomm. Tech.								
E. Tilt	2	2	2	2	2	2	2	
Cables					Coax Jumper **(x2)**	Coax Jumper **(x2)**	Coax Jumper **(x2)**	
TMAs								
Diplexers / Combiners								
Radio					Radio 4449 B71+B85 (At Antenna)	SHARED Radio 4449 B71+B85 (At Antenna)	Radio 4415 B66A (At Antenna)	
Sector Equipment								

Unconnected Equipment:

Cable: 1-5/8" Coax - 200 ft. | Cable: 1-5/8" Coax - 200 ft.

Scope of Work:

Replace (1) AIR21 B2P/B4A antenna with (1) AIR32 DB antenna, connect L2100 and L1900 fibers.
Replace (1) LB+MB Quad Port antenna with (1) LB+MB Octa Port 8' antenna. Replace (1) RRUS11 B12 with (1) Radio 4449 B71+B12 to LB ports. Add (1) Radio 4415 B66 for U2100 to MB ports

*A dashed border indicates shared equipment. Any connected equipment is denoted with the SHARED keyword.

RAN Template:	A&L Template:
67D5A997DB	67D5997DB_2xAIR+1OP

CT11180C_Anchor_8_draft

Print Name: Preliminary (RFDS_for_scoping)
PORs: Anchor_Phase 3

Sector (Proposed) view from behind

Coverage Type	A - Outdoor Macro									
Antenna	1				2		3			
Antenna Model	Ericsson - AIR32 KRD901146-1_B66A_B2A (Octo)				Ericsson - AIR6449 B41 (Active Antenna - Massive MIMO)		RFS - APXVAARR24_43-U-NA20 (Octo)			
Azimuth	150				150		150			
M. Tilt	0				0		0			
Height	130				130		130			
Ports	P1	P2	P3	P4	P5	P6	P7	P8	P9	P10
Active Tech.	L2100	L2100	L1900	L1900	L2500 N2500	L2500 N2500	L700 L600 N600	L700 L600 N600	U2100 L1900	L1900
Dark Tech.										
Restricted Tech.										
Decomm. Tech.										
E. Tilt	2	2	2	2			2	2	2	
Cables							Coax Jumper **(x2)**	Coax Jumper **(x2)**	Coax Jumper **(x2)**	Coax Jumper **(x2)**
TMAs										
Diplexers / Combiners									CommScope - CBC1923Q-43 (AtAntenna)	SHARED CommScope - CBC1923Q-43 (AtAntenna)
Radio							Radio 4449 B71+B85 (At Antenna)	SHARED Radio 4449 B71+B85 (At Antenna)	Radio 4415 B66A (At Antenna) Radio 4415 B25 (At Antenna)	SHARED Radio 4415 B25 (At Antenna)
Sector Equipment										

Unconnected Equipment:

Scope of Work:

Add (1) AIR6449 B41 for L2500 and N2500 to new Position 2.

Add (1) PCS/AWS 8:4 diplexer to Position 3 at antenna, and connect its four output ports to the Mid-Band Ports of the Octo antenna.

Add (1) Radio 4415 B25 for L1900 2nd Carrier to Position 3 at antenna, and connect its ports to the four PCS input ports of the diplexer.

Connect two ports of the Radio 4415 B66 for U2100 to two of the AWS input ports of the diplexer.

Make sure to place metal caps on the unused ports of the diplexer.

Ensure RET control is enabled for all technology layers according to the Design Documents.

*A dashed border indicates shared equipment. Any connected equipment is denoted with the SHARED keyword.

RAN Template:	A&L Template:
67D5A997DB	67D5997DB_2xAIR+1OP

CT11180C_Anchor_8_draft

Print Name: Preliminary (RFDS_for_scoping)
PORs: Anchor_Phase 3

Sector (Existing) view from behind

Coverage Type	A - Outdoor Macro							
Antenna	1				2			
Antenna Model	Ericsson - AIR32 KRD901146-1_B66A_B2A (Octo)				RFS - APXVAARR24_43-U-NA20 (Octo)			
Azimuth	270				270			
M. Tilt	0				0			
Height	130				130			
Ports	P1	P2	P3	P4	P5	P6	P7	P8
Active Tech.	L2100	L2100	L1900	L1900	L700 L600 N600	L700 L600 N600	U2100	
Dark Tech.								
Restricted Tech.								
Decomm. Tech.								
E. Tilt	2	2	2	2	2	2	2	
Cables					Coax Jumper **(x2)**	Coax Jumper **(x2)**	Coax Jumper **(x2)**	
TMAs								
Diplexers / Combiners								
Radio					Radio 4449 B71+B85 (At Antenna)	SHARED Radio 4449 B71+B85 (At Antenna)	Radio 4415 B66A (At Antenna)	
Sector Equipment								

Unconnected Equipment:

Scope of Work:

Additional Sector 3:
Add (1) AIR32 DB antenna, connect L2100 and L1900 fibers.
Add (1) LB+MB Octa Port 8' antenna.
Add (1) Radio 4449 B71+B12 to LB ports.
Add (1) Radio 4415 B66 for U2100 to MB ports

*A dashed border indicates shared equipment. Any connected equipment is denoted with the SHARED keyword.

RAN Template:	A&L Template:
67D5A997DB	67D5997DB_2xAIR+1OP

CT11180C_Anchor_8_draft

Print Name: Preliminary (RFDS_for_scoping)
PORs: Anchor_Phase 3

Sector (Proposed) view from behind

Coverage Type	A - Outdoor Macro									
Antenna	1				2		3			
Antenna Model	Ericsson - AIR32 KRD901146-1_B66A_B2A (Octo)				Ericsson - AIR6449 B41 (Active Antenna - Massive MIMO)		RFS - APXVAARR24_43-U-NA20 (Octo)			
Azimuth	270				270		270			
M. Tilt	0				0		0			
Height	130				130		130			
Ports	P1	P2	P3	P4	P5	P6	P7	P8	P9	P10
Active Tech.	L2100	L2100	L1900	L1900	L2500 N2500	L2500 N2500	L700 L600 N600	L700 L600 N600	U2100 L1900	L1900
Dark Tech.										
Restricted Tech.										
Decomm. Tech.										
E. Tilt	2	2	2	2			2	2	2	
Cables							Coax Jumper **(x2)**	Coax Jumper **(x2)**	Coax Jumper **(x2)**	Coax Jumper **(x2)**
TMAs										
Diplexers / Combiners									CommScope - CBC1923Q-43 (AtAntenna)	SHARED CommScope - CBC1923Q-43 (AtAntenna)
Radio							Radio 4449 B71+B85 (At Antenna)	SHARED Radio 4449 B71+B85 (At Antenna)	Radio 4415 B66A (At Antenna) Radio 4415 B25 (At Antenna)	SHARED Radio 4415 B25 (At Antenna)
Sector Equipment										

Unconnected Equipment:

Scope of Work:

Add (1) AIR6449 B41 for L2500 and N2500 to new Position 2.

Add (1) PCS/AWS 8:4 diplexer to Position 3 at antenna, and connect its four output ports to the Mid-Band Ports of the Octo antenna.

Add (1) Radio 4415 B25 for L1900 2nd Carrier to Position 3 at antenna, and connect its ports to the four PCS input ports of the diplexer.

Connect two ports of the Radio 4415 B66 for U2100 to two of the AWS input ports of the diplexer.

Make sure to place metal caps on the unused ports of the diplexer.

Ensure RET control is enabled for all technology layers according to the Design Documents.

*A dashed border indicates shared equipment. Any connected equipment is denoted with the SHARED keyword.

RAN Template:	A&L Template:
67D5A997DB	67D5997DB_2xAIR+1OP

CT11180C_Anchor_8_draft

Print Name: Preliminary (RFDS_for_scoping)
PORs: Anchor_Phase 3

Section 7 - Power Systems Equipment

Existing Power Systems Equipment

----- This section is intentionally blank. -----

Proposed Power Systems Equipment

Exhibit E

Mount Analysis

CENTEK engineering

Centered on Solutions℠

Structural Analysis Report

Antenna Mount Analysis

T-Mobile Site #: CT11180C

130 Vernon Road
Bolton, CT

Centek Project No. 20074.29

Date: June 10, 2020

Max Stress Ratio = 62.2%

STATE OF CONNECTICUT
TIMOTHY J. LYNN
No. 29336
LICENSED
PROFESSIONAL ENGINEER

Prepared for:

T-Mobile USA
35 Griffin Road
Bloomfield, CT 06002

Table of Contents

SECTION 1 – REPORT

- ANTENNA AND APPURTENANCE SUMMARY
- STRUCTURE LOADING
- CONCLUSION

SECTION 2 – CALCULATIONS

- WIND LOAD ON APPURTENANCES
- RISA3D OUTPUT REPORT

SECTION 3 – REFERENCE MATERIALS (NOT INCLUDED WITHIN REPORT)

- RF DATA SHEET, DATED 05/20/20

CENTEK engineering

Centered on Solutions℠

June 10, 2020

Mr. Dan Reid
Transcend Wireless
10 Industrial Ave
Mahwah, NJ 07430

Re: Structural Letter ~ Antenna Mount
T-Mobile – Site Ref: CT11180C
130 Vernon Road
Bolton, CT 06043

Centek Project No. 20074.29

Dear Mr. Reid,

Centek Engineering, Inc. has reviewed the T-Mobile antenna installation at the above referenced site. The purpose of the review is to determine the structural adequacy of the mount, consisting three (3) sector frames with stiff arms to support the proposed/existing equipment configuration. The review considered the effects of wind load, dead load and ice load in accordance with the 2015 International Building Code as modified by the 2018 Connecticut State Building Code (CTBC) including ASCE 7-10 and ANSI/TIA-222-G *Structural Standards for Steel Antenna Towers and Supporting Structures*.

The loads considered in this analysis consist of the following:

- T-Mobile:
  Sector Frames: Three (3) RFS APXVAARR24-43-NA20 panel antennas, three (3) RFS AIR32 panel antennas, three (3) Ericsson AIR6449 panel antennas, three (3) Ericsson 4449 B71_B12 remote radio units, six (6) Ericsson 4415 remote radio units and three (3) Commscope CBC1923Q-43 diplexers mounted on three (3) V-Frames with a RAD center elevation of 130-ft +/- AGL.

The antenna mount was analyzed per the requirements of the 2015 International Building Code as modified by the 2018 Connecticut State Building Code considering a nominal design wind speed of 97 mph for Bolton as required in Appendix N of the 2018 Connecticut State Building Code.

A structural analysis of tower and foundation needs to be completed prior to any work.

Based on our review of the installation, it is our opinion that the subject antenna frames have sufficient capacity to support the aforementioned antenna configuration. Please note all mount reinforcements per the previous design prepared by Destek Engineering; project number 1978009 dated July 10, 2019 must be completed prior to equipment upgrade. If there are any questions regarding this matter, please feel free to call.

Respectfully Submitted by:

STATE OF CONNECTICUT
TIMOTHY J. LYNN
No. 29336
LICENSED
PROFESSIONAL ENGINEER

Timothy J. Lynn, PE
Structural Engineer

Section 2 - Calculations

CENTEK engineering
Centered on Solutions™ www.centekeng.com
63-2 North Branford Road P: (203) 488-0580
Branford, CT 06405 F: (203) 488-8587

Subject: TIA-222-G Loads

Location: Bolton, CT

Rev. 0: 6/9/20

Prepared by: T.J.L. Checked by: C.F.C.
Job No. 20074.29

Development of Design Heights, Exposure Coefficients, and Velocity Pressures Per TIA-222-G

Wind Speeds

Basic Wind Speed $V := 97$ mph (User Input - 2018 CSBC Appendix N)

Basic Wind Speed with Ice $V_i := 50$ mph (User Input per Annex B of TIA-222-G)

Input

Structure Type = Structure_Type := Lattice (User Input)

Structure Category = $SC := II$ (User Input)

Exposure Category = $Exp := C$ (User Input)

Structure Height = $h := 150$ ft (User Input)

Height to Center of Antennas = $z_{Ant} := 130$ ft (User Input)

Radial Ice Thickness = $t_i := 1.00$ in (User Input per Annex B of TIA-222-G)

Radial Ice Density = $Id := 56.00$ pcf (User Input)

Topograpic Factor = $K_{zt} := 1.0$ (User Input)

$K_a := 1.0$ (User Input)

Gust Response Factor = $G_H = 0.85$ (User Input)

Output

Wind Direction Probability Factor =

$$K_d := \begin{cases} 0.95 & \text{if } Structure_Type = Pole \\ 0.85 & \text{if } Structure_Type = Lattice \end{cases} = 0.85$$

(Per Table 2-2 of TIA-222-G)

Importance Factors =

$$I_{Wind} := \begin{cases} 0.87 & \text{if } SC = 1 \\ 1.00 & \text{if } SC = 2 \\ 1.15 & \text{if } SC = 3 \end{cases} = 1$$

(Per Table 2-3 of TIA-222-G)

$$I_{Wind_w_Ice} := \begin{cases} 0 & \text{if } SC = 1 \\ 1.00 & \text{if } SC = 2 \\ 1.00 & \text{if } SC = 3 \end{cases} = 1$$

$$I_{ice} := \begin{cases} 0 & \text{if } SC = 1 \\ 1.00 & \text{if } SC = 2 \\ 1.25 & \text{if } SC = 3 \end{cases} = 1$$

$$K_{iz} := \left(\frac{z_{Ant}}{33}\right)^{0.1} = 1.147 \qquad t_{iz} := 2.0 \cdot t_i \cdot I_{ice} \cdot K_{iz} \cdot K_{zt}^{0.35} = 2.294$$

Velocity Pressure Coefficient Antennas =

$$Kz_{Ant} := 2.01\left(\left(\frac{z_{Ant}}{zg}\right)\right)^{\frac{2}{\alpha}} = 1.337$$

Velocity Pressure w/o Ice Antennas =

$$qz_{Ant} := 0.00256 \cdot K_d \cdot Kz_{Ant} \cdot V^2 \cdot I_{Wind} = 27.384$$

Velocity Pressure with Ice Antennas =

$$qz_{ice.Ant} := 0.00256 \cdot K_d \cdot Kz_{Ant} \cdot V_i^2 \cdot I_{Wind} = 7.276$$

Development of Wind & Ice Load on Antennas

Antenna Data:

Antenna Model =	RFSAPXVAARR24-43		
Antenna Shape =	Flat		(User Input)
Antenna Height =	$L_{ant} := 95.9$	in	(User Input)
Antenna Width =	$W_{ant} := 24$	in	(User Input)
Antenna Thickness =	$T_{ant} := 8.7$	in	(User Input)
Antenna Weight =	$WT_{ant} := 153$	lbs	(User Input)
Number of Antennas =	$N_{ant} := 1$		(User Input)
Antenna Aspect Ratio =	$Ar_{ant} := \frac{L_{ant}}{W_{ant}} = 4.0$		
Antenna Force Coefficient =	$Ca_{ant} = 1.27$		

Wind Load (without ice)

Surface Area for One Antenna = $SA_{antF} := \frac{L_{ant} \cdot W_{ant}}{144} = 16$ sf

Total Antenna Wind Force = $F_{ant} := qz_{Ant} \cdot G_H \cdot Ca_{ant} \cdot K_a \cdot SA_{antF} = 471$ lbs

Surface Area for One Antenna = $SA_{antS} := \frac{L_{ant} \cdot T_{ant}}{144} = 5.8$ sf

Total Antenna Wind Force = $F_{ant} := qz_{Ant} \cdot G_H \cdot Ca_{ant} \cdot K_a \cdot SA_{antS} = 171$ lbs

Wind Load (with ice)

Surface Area for One Antenna w/ Ice = $SA_{ICEantF} := \frac{(L_{ant} + 2 \cdot t_{iz}) \cdot (W_{ant} + 2 \cdot t_{iz})}{144} = 19.9$ sf

Total Antenna Wind Force w/ Ice = $Fi_{ant} := qz_{ice.Ant} \cdot G_H \cdot Ca_{ant} \cdot K_a \cdot SA_{ICEantF} = 156$ lbs

Surface Area for One Antenna w/ Ice = $SA_{ICEantS} := \frac{(L_{ant} + 2 \cdot t_{iz}) \cdot (T_{ant} + 2 \cdot t_{iz})}{144} = 9.3$ sf

Total Antenna Wind Force w/ Ice = $Fi_{ant} := qz_{ice.Ant} \cdot G_H \cdot Ca_{ant} \cdot K_a \cdot SA_{ICEantS} = 73$ lbs

Gravity Load (without ice)

Weight of All Antennas = $WT_{ant} \cdot N_{ant} = 153$ lbs

Gravity Loads (ice only)

Volume of Each Antenna = $V_{ant} := L_{ant} \cdot W_{ant} \cdot T_{ant} = 2 \times 10^4$ cu in

Volume of Ice on Each Antenna = $V_{ice} := (L_{ant} + 2 \cdot t_{iz})(W_{ant} + 2 \cdot t_{iz}) \cdot (T_{ant} + 2 \cdot t_{iz}) - V_{ant} = 2 \times 10^4$ cu in

Weight of Ice on Each Antenna = $W_{ICEant} := \frac{V_{ice}}{1728} \cdot Id = 588$ lbs

Weight of Ice on All Antennas = $W_{ICEant} \cdot N_{ant} = 588$ lbs

Development of Wind & Ice Load on Antennas

Antenna Data:

Antenna Model =	Ericsson AIR32		
Antenna Shape =	Flat		(User Input)
Antenna Height =	$L_{ant} := 56.6$	in	(User Input)
Antenna Width =	$W_{ant} := 12.9$	in	(User Input)
Antenna Thickness =	$T_{ant} := 8.7$	in	(User Input)
Antenna Weight =	$WT_{ant} := 132$	lbs	(User Input)
Number of Antennas =	$N_{ant} := 1$		(User Input)
Antenna Aspect Ratio =	$Ar_{ant} := \frac{L_{ant}}{W_{ant}} = 4.4$		
Antenna Force Coefficient =	$Ca_{ant} = 1.28$		

Wind Load (without ice)

Surface Area for One Antenna = $SA_{antF} := \frac{L_{ant} \cdot W_{ant}}{144} = 5.1$ sf

Total Antenna Wind Force = $F_{ant} := qz_{Ant} \cdot G_H \cdot Ca_{ant} \cdot K_a \cdot SA_{antF} = 152$ lbs

Surface Area for One Antenna = $SA_{antS} := \frac{L_{ant} \cdot T_{ant}}{144} = 3.4$ sf

Total Antenna Wind Force = $F_{ant} := qz_{Ant} \cdot G_H \cdot Ca_{ant} \cdot K_a \cdot SA_{antS} = 102$ lbs

Wind Load (with ice)

Surface Area for One Antenna w/ Ice = $SA_{ICEantF} := \frac{(L_{ant} + 2 \cdot t_{iz}) \cdot (W_{ant} + 2 \cdot t_{iz})}{144} = 7.4$ sf

Total Antenna Wind Force w/ Ice = $Fi_{ant} := qz_{ice.Ant} \cdot G_H \cdot Ca_{ant} \cdot K_a \cdot SA_{ICEantF} = 59$ lbs

Surface Area for One Antenna w/ Ice = $SA_{ICEantS} := \frac{(L_{ant} + 2 \cdot t_{iz}) \cdot (T_{ant} + 2 \cdot t_{iz})}{144} = 5.6$ sf

Total Antenna Wind Force w/ Ice = $Fi_{ant} := qz_{ice.Ant} \cdot G_H \cdot Ca_{ant} \cdot K_a \cdot SA_{ICEantS} = 45$ lbs

Gravity Load (without ice)

Weight of All Antennas = $WT_{ant} \cdot N_{ant} = 132$ lbs

Gravity Loads (ice only)

Volume of Each Antenna = $V_{ant} := L_{ant} \cdot W_{ant} \cdot T_{ant} = 6352$ cu in

Volume of Ice on Each Antenna = $V_{ice} := (L_{ant} + 2 \cdot t_{iz})(W_{ant} + 2 \cdot t_{iz}) \cdot (T_{ant} + 2 \cdot t_{iz}) - V_{ant} = 7866$ cu in

Weight of Ice on Each Antenna = $W_{ICEant} := \frac{V_{ice}}{1728} \cdot Id = 255$ lbs

Weight of Ice on All Antennas = $W_{ICEant} \cdot N_{ant} = 255$ lbs

Development of Wind & Ice Load on Antennas

Antenna Data:

Antenna Model =	Ericsson AIR6449		
Antenna Shape =	Flat		(User Input)
Antenna Height =	$L_{ant} := 33.1$	in	(User Input)
Antenna Width =	$W_{ant} := 20.5$	in	(User Input)
Antenna Thickness =	$T_{ant} := 8.3$	in	(User Input)
Antenna Weight =	$WT_{ant} := 103$	lbs	(User Input)
Number of Antennas =	$N_{ant} := 1$		(User Input)
Antenna Aspect Ratio =	$Ar_{ant} := \frac{L_{ant}}{W_{ant}} = 1.6$		
Antenna Force Coefficient =	$Ca_{ant} = 1.2$		

Wind Load (without ice)

Surface Area for One Antenna = $SA_{antF} := \frac{L_{ant} \cdot W_{ant}}{144} = 4.7$ sf

Total Antenna Wind Force = $F_{ant} := qz_{Ant} \cdot G_H \cdot Ca_{ant} \cdot K_a \cdot SA_{antF} = 132$ lbs

Surface Area for One Antenna = $SA_{antS} := \frac{L_{ant} \cdot T_{ant}}{144} = 1.9$ sf

Total Antenna Wind Force = $F_{ant} := qz_{Ant} \cdot G_H \cdot Ca_{ant} \cdot K_a \cdot SA_{antS} = 53$ lbs

Wind Load (with ice)

Surface Area for One Antenna w/ Ice = $SA_{ICEantF} := \frac{(L_{ant} + 2 \cdot t_{iz}) \cdot (W_{ant} + 2 \cdot t_{iz})}{144} = 6.6$ sf

Total Antenna Wind Force w/ Ice = $Fi_{ant} := qz_{ice.Ant} \cdot G_H \cdot Ca_{ant} \cdot K_a \cdot SA_{ICEantF} = 49$ lbs

Surface Area for One Antenna w/ Ice = $SA_{ICEantS} := \frac{(L_{ant} + 2 \cdot t_{iz}) \cdot (T_{ant} + 2 \cdot t_{iz})}{144} = 3.4$ sf

Total Antenna Wind Force w/ Ice = $Fi_{ant} := qz_{ice.Ant} \cdot G_H \cdot Ca_{ant} \cdot K_a \cdot SA_{ICEantS} = 25$ lbs

Gravity Load (without ice)

Weight of All Antennas = $WT_{ant} \cdot N_{ant} = 103$ lbs

Gravity Loads (ice only)

Volume of Each Antenna = $V_{ant} := L_{ant} \cdot W_{ant} \cdot T_{ant} = 5632$ cu in

Volume of Ice on Each Antenna = $V_{ice} := (L_{ant} + 2 \cdot t_{iz})(W_{ant} + 2 \cdot t_{iz}) \cdot (T_{ant} + 2 \cdot t_{iz}) - V_{ant} = 6553$ cu in

Weight of Ice on Each Antenna = $W_{ICEant} := \frac{V_{ice}}{1728} \cdot Id = 212$ lbs

Weight of Ice on All Antennas = $W_{ICEant} \cdot N_{ant} = 212$ lbs

Development of Wind & Ice Load on RRUS

RRUS Data:

RRUS Model =	Ericsson 4449 B71B12		
RRUS Shape =	Flat		(User Input)
RRUS Height =	$L_{RRUS} := 14.9$	in	(User Input)
RRUS Width =	$W_{RRUS} := 13.2$	in	(User Input)
RRUS Thickness =	$T_{RRUS} := 10.4$	in	(User Input)
RRUS Weight =	$WT_{RRUS} := 74$	lbs	(User Input)
Number of RRUS's =	$N_{RRUS} := 1$		(User Input)
RRUS Aspect Ratio =	$Ar_{RRUS} := \frac{L_{RRUS}}{W_{RRUS}} = 1.1$		
RRUS Force Coefficient =	$Ca_{RRUS} = 1.2$		

Wind Load (without ice)

Surface Area for One RRUS =	$SA_{RRUSF} := \frac{L_{RRUS} \cdot W_{RRUS}}{144} = 1.4$	sf
Total RRUS Wind Force =	$F_{RRUS} := qz_{Ant} \cdot G_H \cdot Ca_{RRUS} \cdot K_a \cdot SA_{RRUSF} = 38$	lbs
Surface Area for One RRUS =	$SA_{RRUSS} := \frac{L_{RRUS} \cdot T_{RRUS}}{144} = 1.1$	sf
Total RRUS Wind Force =	$F_{RRUS} := qz_{Ant} \cdot G_H \cdot Ca_{RRUS} \cdot K_a \cdot SA_{RRUSS} = 30$	lbs

Wind Load (with ice)

Surface Area for One RRUS w/ Ice =	$SA_{ICERRUSF} := \frac{(L_{RRUS} + 2 \cdot t_{iz}) \cdot (W_{RRUS} + 2 \cdot t_{iz})}{144} = 2.4$	sf
Total RRUS Wind Force w/ Ice =	$Fi_{RRUS} := qz_{ice.Ant} \cdot G_H \cdot Ca_{RRUS} \cdot K_a \cdot SA_{ICERRUSF} = 18$	lbs
Surface Area for One RRUS w/ Ice =	$SA_{ICERRUSS} := \frac{(L_{RRUS} + 2 \cdot t_{iz}) \cdot (T_{RRUS} + 2 \cdot t_{iz})}{144} = 2$	sf
Total RRUS Wind Force w/ Ice =	$Fi_{RRUS} := qz_{ice.Ant} \cdot G_H \cdot Ca_{RRUS} \cdot K_a \cdot SA_{ICERRUSS} = 15$	lbs

Gravity Load (without ice)

Weight of All RRUSs =	$WT_{RRUS} \cdot N_{RRUS} = 74$	lbs

Gravity Loads (ice only)

Volume of Each RRUS =	$V_{RRUS} := L_{RRUS} \cdot W_{RRUS} \cdot T_{RRUS} = 2045$	cu in
Volume of Ice on Each RRUS =	$V_{ice} := (L_{RRUS} + 2 \cdot t_{iz})(W_{RRUS} + 2 \cdot t_{iz}) \cdot (T_{RRUS} + 2 \cdot t_{iz}) - V_{RRUS} = 3150$	cu in
Weight of Ice on Each RRUS =	$W_{ICERRUS} := \frac{V_{ice}}{1728} \cdot Id = 102$	lbs
Weight of Ice on All RRUSs =	$W_{ICERRUS} \cdot N_{RRUS} = 102$	lbs

Development of Wind & Ice Load on RRUS

RRUS Data:

RRUS Model = Ericsson 4415 B25

RRUS Shape = Flat (User Input)

RRUS Height = $L_{RRUS} := 14.9$ in (User Input)

RRUS Width = $W_{RRUS} := 13.2$ in (User Input)

RRUS Thickness = $T_{RRUS} := 5.4$ in (User Input)

RRUS Weight = $WT_{RRUS} := 47$ lbs (User Input)

Number of RRUS's = $N_{RRUS} := 1$ (User Input)

RRUS Aspect Ratio = $Ar_{RRUS} := \frac{L_{RRUS}}{W_{RRUS}} = 1.1$

RRUS Force Coefficient = $Ca_{RRUS} = 1.2$

Wind Load (without ice)

Surface Area for One RRUS = $SA_{RRUSF} := \frac{L_{RRUS} \cdot W_{RRUS}}{144} = 1.4$ sf

Total RRUS Wind Force = $F_{RRUS} := qz_{Ant} \cdot G_H \cdot Ca_{RRUS} \cdot K_a \cdot SA_{RRUSF} = 38$ lbs

Surface Area for One RRUS = $SA_{RRUSS} := \frac{L_{RRUS} \cdot T_{RRUS}}{144} = 0.6$ sf

Total RRUS Wind Force = $F_{RRUS} := qz_{Ant} \cdot G_H \cdot Ca_{RRUS} \cdot K_a \cdot SA_{RRUSS} = 16$ lbs

Wind Load (with ice)

Surface Area for One RRUS w/ Ice = $SA_{ICERRUSF} := \frac{(L_{RRUS} + 2 \cdot t_{iz}) \cdot (W_{RRUS} + 2 \cdot t_{iz})}{144} = 2.4$ sf

Total RRUS Wind Force w/ Ice = $Fi_{RRUS} := qz_{ice.Ant} \cdot G_H \cdot Ca_{RRUS} \cdot K_a \cdot SA_{ICERRUSF} = 18$ lbs

Surface Area for One RRUS w/ Ice = $SA_{ICERRUSS} := \frac{(L_{RRUS} + 2 \cdot t_{iz}) \cdot (T_{RRUS} + 2 \cdot t_{iz})}{144} = 1.4$ sf

Total RRUS Wind Force w/ Ice = $Fi_{RRUS} := qz_{ice.Ant} \cdot G_H \cdot Ca_{RRUS} \cdot K_a \cdot SA_{ICERRUSS} = 10$ lbs

Gravity Load (without ice)

Weight of All RRUSs = $WT_{RRUS} \cdot N_{RRUS} = 47$ lbs

Gravity Loads (ice only)

Volume of Each RRUS = $V_{RRUS} := L_{RRUS} \cdot W_{RRUS} \cdot T_{RRUS} = 1062$ cu in

Volume of Ice on Each RRUS = $V_{ice} := (L_{RRUS} + 2 \cdot t_{iz})(W_{RRUS} + 2 \cdot t_{iz}) \cdot (T_{RRUS} + 2 \cdot t_{iz}) - V_{RRUS} = 2400$ cu in

Weight of Ice on Each RRUS = $W_{ICERRUS} := \frac{V_{ice}}{1728} \cdot Id = 78$ lbs

Weight of Ice on All RRUSs = $W_{ICERRUS} \cdot N_{RRUS} = 78$ lbs

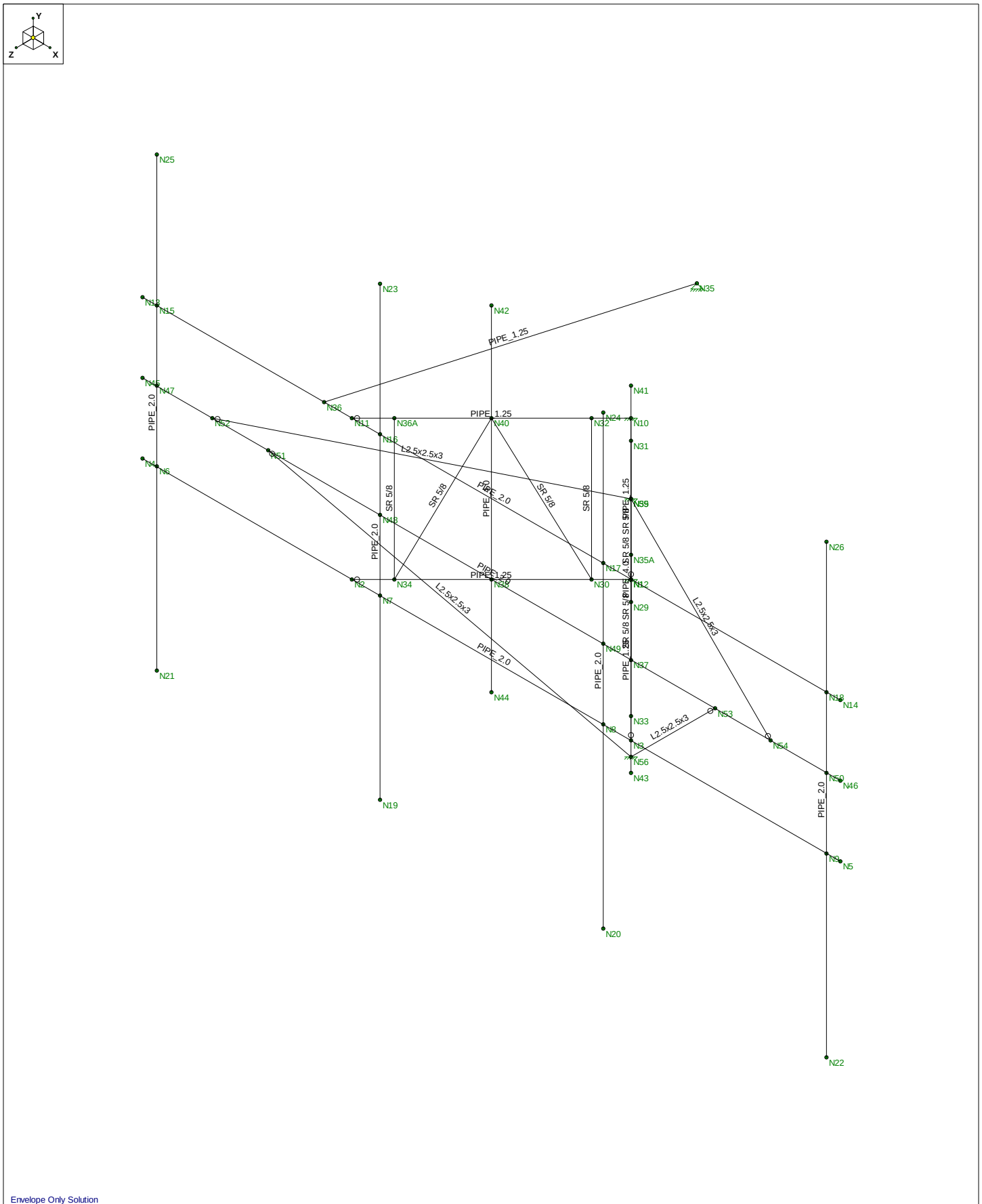

Envelope Only Solution

Centek		
TJL	CT11180C	June 10, 2020 at 10:33 AM
20074.29	Member Framing	Antenna Mount.r3d

(Global) Model Settings

Display Sections for Member Calcs	5
Max Internal Sections for Member Calcs	97
Include Shear Deformation?	Yes
Increase Nailing Capacity for Wind?	Yes
Include Warping?	Yes
Trans Load Btwn Intersecting Wood Wall?	Yes
Area Load Mesh (in^2)	144
Merge Tolerance (in)	.12
P-Delta Analysis Tolerance	0.50%
Include P-Delta for Walls?	Yes
Automatically Iterate Stiffness for Walls?	Yes
Max Iterations for Wall Stiffness	3
Gravity Acceleration (ft/sec^2)	32.2
Wall Mesh Size (in)	12
Eigensolution Convergence Tol. (1.E-)	4
Vertical Axis	Y
Global Member Orientation Plane	XZ
Static Solver	Sparse Accelerated
Dynamic Solver	Accelerated Solver

Hot Rolled Steel Code	AISC 14th(360-10): LRFD
Adjust Stiffness?	Yes(Iterative)
RISAConnection Code	AISC 14th(360-10): ASD
Cold Formed Steel Code	AISI S100-10: ASD
Wood Code	AWC NDS-12: ASD
Wood Temperature	< 100F
Concrete Code	ACI 318-11
Masonry Code	ACI 530-11: ASD
Aluminum Code	AA ADM1-10: ASD - Building
Stainless Steel Code	AISC 14th(360-10): ASD
Adjust Stiffness?	Yes(Iterative)

Number of Shear Regions	4
Region Spacing Increment (in)	4
Biaxial Column Method	Exact Integration
Parme Beta Factor (PCA)	.65
Concrete Stress Block	Rectangular
Use Cracked Sections?	Yes
Use Cracked Sections Slab?	No
Bad Framing Warnings?	No
Unused Force Warnings?	Yes
Min 1 Bar Diam. Spacing?	No
Concrete Rebar Set	REBAR_SET_ASTMA615
Min % Steel for Column	1
Max % Steel for Column	8

(Global) Model Settings, Continued

Seismic Code	ASCE 7-10
Seismic Base Elevation (ft)	Not Entered
Add Base Weight?	Yes
Ct X	.02
Ct Z	.02
T X (sec)	Not Entered
T Z (sec)	Not Entered
R X	3
R Z	3
Ct Exp. X	.75
Ct Exp. Z	.75
SD1	1
SDS	1
S1	1
TL (sec)	5
Risk Cat	I or II
Drift Cat	Other
Om Z	1
Om X	1
Cd Z	4
Cd X	4
Rho Z	1
Rho X	1
Footing Overturning Safety Factor	1
Optimize for OTM/Sliding	No
Check Concrete Bearing	No
Footing Concrete Weight (k/ft^3)	150.001
Footing Concrete f'c (ksi)	4
Footing Concrete Ec (ksi)	3644
Lambda	1
Footing Steel fy (ksi)	60
Minimum Steel	0.0018
Maximum Steel	0.0075
Footing Top Bar	#3
Footing Top Bar Cover (in)	2
Footing Bottom Bar	#3
Footing Bottom Bar Cover (in)	3.5
Pedestal Bar	#3
Pedestal Bar Cover (in)	1.5
Pedestal Ties	#3

Hot Rolled Steel Properties

	Label	E [ksi]	G [ksi]	Nu	Therm (\1...	Density[k/ft^3]	Yield[ksi]	Ry	Fu[ksi]	Rt
1	A36 Gr.36	29000	11154	.3	.65	.49	36	1.5	58	1.2
2	A572 Gr.50	29000	11154	.3	.65	.49	50	1.1	58	1.2
3	A992	29000	11154	.3	.65	.49	50	1.1	58	1.2
4	A500 Gr.42	29000	11154	.3	.65	.49	42	1.3	58	1.1
5	A500 Gr.46	29000	11154	.3	.65	.49	46	1.2	58	1.1
6	A53 Grade B	29000	11154	.3	.65	.49	35	1.5	58	1.2

Hot Rolled Steel Section Sets

	Label	Shape	Type	Design List	Material	Design Rul...	A [in2]	Iyy [in4]	Izz [in4]	J [in4]
1	Horz	PIPE 2.0	Beam	Pipe	A53 Grade B	Typical	1.02	.627	.627	1.25
2	Pipe 1.25	PIPE 1.25	Beam	Pipe	A53 Grade B	Typical	.625	.184	.184	.368
3	Antenna Mast Pipe	PIPE 2.0	Column	Pipe	A53 Grade B	Typical	1.02	.627	.627	1.25
4	SR5/8	SR 5/8	Column	Pipe	A36 Gr.36	Typical	.307	.007	.007	.015
5	Pipe 4.0	PIPE 4.0	Column	Pipe	A53 Grade B	Typical	2.96	6.82	6.82	13.6
6	Brace	L2.5x2.5x3	Column	Single Angle	A36 Gr.36	Typical	.901	.535	.535	.011

Hot Rolled Steel Design Parameters

	Label	Shape	Length[ft]	Lbyy[ft]	Lbzz[ft]	Lcomp top[...	Lcomp bot[...	L-torq...	Kyy	Kzz	Cb	Functi...
1	M1	Pipe 1.25	3.536			Lbyy						Lateral
2	M2	Pipe 1.25	3.536			Lbyy						Lateral
3	M3	Horz	12.5			Lbyy						Lateral
4	M4	Pipe 1.25	3.536			Lbyy						Lateral
5	M5	Pipe 1.25	3.536			Lbyy						Lateral
6	M6	Horz	12.5			Lbyy						Lateral
7	M7	Antenna Mast Pipe	8			Lbyy						Lateral
8	M8	Antenna Mast Pipe	8			Lbyy						Lateral
9	M9	Antenna Mast Pipe	8			Lbyy						Lateral
10	M10	Antenna Mast Pipe	8			Lbyy						Lateral
11	M17	Pipe 1.25	5.789			Lbyy						Lateral
12	M12	SR5/8	2.5			Lbyy						Lateral
13	M13	SR5/8	2.787			Lbyy						Lateral
14	M14	SR5/8	2.803			Lbyy						Lateral
15	M15	SR5/8	2.5			Lbyy						Lateral
16	M16	SR5/8	2.5			Lbyy						Lateral
17	M17A	SR5/8	2.803			Lbyy						Lateral
18	M18	SR5/8	2.787			Lbyy						Lateral
19	M19	SR5/8	2.5			Lbyy						Lateral
20	M20	Pipe 4.0	6			Lbyy						Lateral
21	M21	Pipe 4.0	6			Lbyy						Lateral
22	M22	Horz	12.5			Lbyy						Lateral
23	M23	Brace	5.59									Lateral
24	M24	Brace	5.59									Lateral
25	M25	Brace	6.185									Lateral
26	M26	Brace	6.185									Lateral

Member Primary Data

	Label	I Joint	J Joint	K Joint	Rotate(d...	Section/Shape	Type	Design List	Material	Design Rul...
1	M1	N1	N3		270	Pipe 1.25	Beam	Pipe	A53 Gra...	Typical
2	M2	N1	N2			Pipe 1.25	Beam	Pipe	A53 Gra...	Typical
3	M3	N4	N5		180	Horz	Beam	Pipe	A53 Gra...	Typical
4	M4	N10	N12		180	Pipe 1.25	Beam	Pipe	A53 Gra...	Typical
5	M5	N10	N11		90	Pipe 1.25	Beam	Pipe	A53 Gra...	Typical
6	M6	N13	N14		270	Horz	Beam	Pipe	A53 Gra...	Typical
7	M7	N25	N21			Antenna Mast Pipe	Column	Pipe	A53 Gra...	Typical
8	M8	N23	N19			Antenna Mast Pipe	Column	Pipe	A53 Gra...	Typical
9	M9	N20	N24			Antenna Mast Pipe	Column	Pipe	A53 Gra...	Typical
10	M10	N26	N22			Antenna Mast Pipe	Column	Pipe	A53 Gra...	Typical

Member Primary Data (Continued)

	Label	I Joint	J Joint	K Joint	Rotate(d...	Section/Shape	Type	Design List	Material	Design Rul...
11	M17	N36	N35			Pipe 1.25	Beam	Pipe	A53 Gra...	Typical
12	M12	N36A	N34			SR5/8	Column	Pipe	A36 Gr.36	Typical
13	M13	N34	N40			SR5/8	Column	Pipe	A36 Gr.36	Typical
14	M14	N40	N30			SR5/8	Column	Pipe	A36 Gr.36	Typical
15	M15	N30	N32			SR5/8	Column	Pipe	A36 Gr.36	Typical
16	M16	N29	N31			SR5/8	Column	Pipe	A36 Gr.36	Typical
17	M17A	N31	N37			SR5/8	Column	Pipe	A36 Gr.36	Typical
18	M18	N37	N35A			SR5/8	Column	Pipe	A36 Gr.36	Typical
19	M19	N35A	N33			SR5/8	Column	Pipe	A36 Gr.36	Typical
20	M20	N42	N44			Pipe 4.0	Column	Pipe	A53 Gra...	Typical
21	M21	N43	N41			Pipe 4.0	Column	Pipe	A53 Gra...	Typical
22	M22	N45	N46		180	Horz	Beam	Pipe	A53 Gra...	Typical
23	M23	N52	N55			Brace	Column	Single Angle	A36 Gr.36	Typical
24	M24	N55	N54			Brace	Column	Single Angle	A36 Gr.36	Typical
25	M25	N51	N56			Brace	Column	Single Angle	A36 Gr.36	Typical
26	M26	N56	N53			Brace	Column	Single Angle	A36 Gr.36	Typical

Joint Coordinates and Temperatures

	Label	X [ft]	Y [ft]	Z [ft]	Temp [F]	Detach From Dia...
1	N1	0	0	0	0	
2	N2	-2.5	0	2.5	0	
3	N3	2.5	0	2.5	0	
4	N4	-6.25	0	2.5	0	
5	N5	6.25	0	2.5	0	
6	N6	-6	0	2.5	0	
7	N7	-2	0	2.5	0	
8	N8	2	0	2.5	0	
9	N9	6	0	2.5	0	
10	N10	0	2.5	0	0	
11	N11	-2.5	2.5	2.5	0	
12	N12	2.5	2.5	2.5	0	
13	N13	-6.25	2.5	2.5	0	
14	N14	6.25	2.5	2.5	0	
15	N15	-6	2.5	2.5	0	
16	N16	-2	2.5	2.5	0	
17	N17	2	2.5	2.5	0	
18	N18	6	2.5	2.5	0	
19	N19	-2	-3.166	2.5	0	
20	N20	2	-3.166	2.5	0	
21	N21	-6	-3.166	2.5	0	
22	N22	6	-3.166	2.5	0	
23	N23	-2	4.834	2.5	0	
24	N24	2	4.834	2.5	0	
25	N25	-6	4.834	2.5	0	
26	N26	6	4.834	2.5	0	
27	N35	-2	2	-3.18	0	
28	N36	-3	2.5	2.5	0	
29	N29	0.353553	0	0.353553	0	
30	N30	-0.353553	0	0.353553	0	
31	N31	0.353553	2.5	0.353553	0	

Joint Coordinates and Temperatures (Continued)

	Label	X [ft]	Y [ft]	Z [ft]	Temp [F]	Detach From Dia...
32	N32	-0.353553	2.5	0.353553	0	
33	N33	2.12132	0	2.12132	0	
34	N34	-2.12132	0	2.12132	0	
35	N35A	2.12132	2.5	2.12132	0	
36	N36A	-2.12132	2.5	2.12132	0	
37	N37	1.25	0	1.25	0	
38	N38	-1.25	0	1.25	0	
39	N39	1.25	2.5	1.25	0	
40	N40	-1.25	2.5	1.25	0	
41	N41	1.25	4.25	1.25	0	
42	N42	-1.25	4.25	1.25	0	
43	N43	1.25	-1.75	1.25	0	
44	N44	-1.25	-1.75	1.25	0	
45	N45	-6.25	1.25	2.5	0	
46	N46	6.25	1.25	2.5	0	
47	N47	-6	1.25	2.5	0	
48	N48	-2	1.25	2.5	0	
49	N49	2	1.25	2.5	0	
50	N50	6	1.25	2.5	0	
51	N51	-4	1.25	2.5	0	
52	N52	-5	1.25	2.5	0	
53	N53	4	1.25	2.5	0	
54	N54	5	1.25	2.5	0	
55	N55	0	1.25	0	0	
56	N56	0	-2.75	0	0	

Joint Boundary Conditions

	Joint Label	X [k/in]	Y [k/in]	Z [k/in]	X Rot.[k-ft/rad]	Y Rot.[k-ft/rad]	Z Rot.[k-ft/rad]
1	N1	Reaction	Reaction	Reaction	Reaction	Reaction	Reaction
2	N10	Reaction	Reaction	Reaction	Reaction	Reaction	Reaction
3	N35	Reaction	Reaction	Reaction			
4	N55	Reaction	Reaction	Reaction	Reaction	Reaction	Reaction
5	N56	Reaction	Reaction	Reaction	Reaction	Reaction	Reaction

Member Point Loads (BLC 2 : Dead Load)

	Member Label	Direction	Magnitude[k,k-ft]	Location[ft,%]
1	M7	Y	-.077	.5
2	M7	Y	-.077	7.5
3	M10	Y	-.066	1.5
4	M10	Y	-.066	6.5
5	M8	Y	-.052	1.5
6	M8	Y	-.052	4.5
7	M20	Y	-.074	%50
8	M7	Y	-.047	4
9	M7	Y	-.047	6

Member Point Loads (BLC 3 : Ice Load)

Member Label	Direction	Magnitude[k,k-ft]	Location[ft,%]

Member Point Loads (BLC 3 : Ice Load) (Continued)

	Member Label	Direction	Magnitude[k,k-ft]	Location[ft,%]
1	M7	Y	-.294	.5
2	M7	Y	-.294	7.5
3	M10	Y	-.128	1.5
4	M10	Y	-.128	6.5
5	M8	Y	-.106	1.5
6	M8	Y	-.106	4.5
7	M20	Y	-.102	%50
8	M7	Y	-.078	4
9	M7	Y	-.078	6

Member Point Loads (BLC 4 : Wind with Ice X)

	Member Label	Direction	Magnitude[k,k-ft]	Location[ft,%]
1	M7	X	.037	.5
2	M7	X	.037	7.5
3	M10	X	.023	1.5
4	M10	X	.023	6.5
5	M8	X	.013	1.5
6	M8	X	.013	4.5
7	M20	X	.018	%50
8	M7	X	.01	4
9	M7	X	.01	6

Member Point Loads (BLC 5 : Wind X)

	Member Label	Direction	Magnitude[k,k-ft]	Location[ft,%]
1	M7	X	.086	.5
2	M7	X	.086	7.5
3	M10	X	.051	1.5
4	M10	X	.051	6.5
5	M8	X	.027	1.5
6	M8	X	.027	4.5
7	M20	X	.038	%50
8	M7	X	.016	4
9	M7	X	.016	6

Member Point Loads (BLC 6 : Wind with Ice Z)

	Member Label	Direction	Magnitude[k,k-ft]	Location[ft,%]
1	M7	Z	.078	.5
2	M7	Z	.078	7.5
3	M10	Z	.03	1.5
4	M10	Z	.03	6.5
5	M8	Z	.025	1.5
6	M8	Z	.025	4.5
7	M20	Z	.015	%50

Member Point Loads (BLC 7 : Wind Z)

	Member Label	Direction	Magnitude[k,k-ft]	Location[ft,%]
1	M7	Z	.236	.5
2	M7	Z	.236	7.5
3	M10	Z	.076	1.5
4	M10	Z	.076	6.5

Member Point Loads (BLC 7 : Wind Z) (Continued)

	Member Label	Direction	Magnitude[k,k-ft]	Location[ft,%]
5	M8	Z	.066	1.5
6	M8	Z	.066	4.5
7	M20	Z	.03	%50

Member Distributed Loads (BLC 4 : Wind with Ice X)

	Member Label	Direction	Start Magnitude[k/ft,...	End Magnitude[k/ft,F...	Start Location[ft,%]	End Location[ft,%]
1	M1	X	.002	.002	0	0
2	M2	X	.002	.002	0	0
3	M4	X	.002	.002	0	0
4	M5	X	.002	.002	0	0
5	M8	X	.002	.002	0	0
6	M9	X	.002	.002	0	0
7	M17	X	.002	.002	0	0
8	M10	X	.002	.002	0	0
9	M7	X	.002	.002	0	0
10	M8	X	.002	.002	0	0

Member Distributed Loads (BLC 5 : Wind X)

	Member Label	Direction	Start Magnitude[k/ft,...	End Magnitude[k/ft,F...	Start Location[ft,%]	End Location[ft,%]
1	M1	X	.009	.009	0	0
2	M2	X	.009	.009	0	0
3	M4	X	.009	.009	0	0
4	M5	X	.009	.009	0	0
5	M8	X	.009	.009	0	0
6	M9	X	.009	.009	0	0
7	M17	X	.009	.009	0	0
8	M10	X	.009	.009	0	0
9	M7	X	.009	.009	0	0
10	M8	X	.009	.009	0	0

Member Distributed Loads (BLC 6 : Wind with Ice Z)

	Member Label	Direction	Start Magnitude[k/ft,...	End Magnitude[k/ft,F...	Start Location[ft,%]	End Location[ft,%]
1	M6	Z	.002	.002	0	0
2	M3	Z	.002	.002	0	0
3	M2	Z	.002	.002	0	0
4	M5	Z	.002	.002	0	0
5	M4	Z	.002	.002	0	0
6	M1	Z	.002	.002	0	0
7	M8	Z	.002	.002	0	0
8	M9	Z	.002	.002	0	0
9	M7	Z	.002	.002	0	0
10	M22	Z	.002	.002	0	0

Member Distributed Loads (BLC 7 : Wind Z)

	Member Label	Direction	Start Magnitude[k/ft,...	End Magnitude[k/ft,F...	Start Location[ft,%]	End Location[ft,%]
1	M6	Z	.009	.009	0	0
2	M3	Z	.009	.009	0	0
3	M2	Z	.009	.009	0	0
4	M5	Z	.009	.009	0	0

Member Distributed Loads (BLC 7 : Wind Z) (Continued)

	Member Label	Direction	Start Magnitude[k/ft,...	End Magnitude[k/ft,F...	Start Location[ft,%]	End Location[ft,%]
5	M4	Z	.009	.009	0	0
6	M1	Z	.009	.009	0	0
7	M8	Z	.009	.009	0	0
8	M9	Z	.009	.009	0	0
9	M7	Z	.009	.009	0	0
10	M22	Z	.009	.009	0	0

Basic Load Cases

	BLC Description	Category	X Gra...	Y Gra...	Z Gra...	Joint	Point	Distrib..	Area(...	Surfa...
1	Self Weight	DL		-1						
2	Dead Load	None					9			
3	Ice Load	None					9			
4	Wind with Ice X	None					9	10		
5	Wind X	None					9	10		
6	Wind with Ice Z	None					7	10		
7	Wind Z	None					7	10		

Load Combinations

	Description	Solve	P...	S...	BLC	Fac..	BLC	Fac..	BLC	Fac..	BLC	Fac..	BLC	Fac..	BLC	Fac..	BLC	Fac..	BLC	Fac..	BLC	Fac..	BLC	Fac...
1	1.2D + 1.6W (X-direc...	Yes	Y		1	1.2	2	1.2	5	1.6														
2	0.9D + 1.6W (X-direc...	Yes	Y		1	.9	2	.9	5	1.6														
3	1.2D + 1.0Di + 1.0Wi...	Yes	Y		1	1.2	2	1.2	3	1	4	1												
4	1.2D + 1.6W (Z-direc...	Yes	Y		1	1.2	2	1.2	7	1.6														
5	0.9D + 1.6W (Z-direc...	Yes	Y		1	.9	2	.9	7	1.6														
6	1.2D + 1.0Di + 1.0Wi...	Yes	Y		1	1.2	2	1.2	3	1	6	1												

Envelope Joint Reactions

	Joint		X [k]	LC	Y [k]	LC	Z [k]	LC	MX [k-ft]	LC	MY [k-ft]	LC	MZ [k-ft]	LC
1	N1	max	-.044	5	.487	3	.364	3	-.054	5	-.075	6	-.048	5
2		min	-.474	1	.214	5	-.545	5	-.132	3	-.174	1	-.095	3
3	N10	max	.389	3	.397	3	.867	5	-.045	5	.006	6	-.032	5
4		min	-1.044	5	.169	5	-.633	3	-.111	3	-.075	2	-.058	3
5	N35	max	.264	5	-.007	3	-.184	3	0	6	0	6	0	6
6		min	.026	3	-.133	5	-1.506	5	0	1	0	1	0	1
7	N55	max	1.373	4	.047	6	-.018	2	-.021	5	-.09	6	-.077	6
8		min	.048	2	.024	2	-1.636	4	-.059	3	-.162	4	-.097	4
9	N56	max	-.411	2	1.685	6	1.028	6	.002	5	-.043	6	-.014	5
10		min	-.892	6	.545	2	.325	2	-.057	3	-.078	1	-.023	1
11	Totals:	max	0	6	2.582	6	0	3						
12		min	-1.5	1	.951	2	-2.347	4						

Envelope Joint Displacements

	Joint		X [in]	LC	Y [in]	LC	Z [in]	LC	X Rotation [rad]	LC	Y Rotatio...	LC	Z Rotatio...	LC
1	N1	max	0	6	0	6	0	6	0	6	0	6	0	6
2		min	0	1	0	1	0	1	0	1	0	1	0	1
3	N2	max	.065	1	-.006	5	.064	1	2.51e-04	3	4.458e-03	4	2.553e-03	3

Envelope Joint Displacements (Continued)

	Joint		X [in]	LC	Y [in]	LC	Z [in]	LC	X Rotation [rad]	LC	Y Rotatio...	LC	Z Rotatio...	LC
4		min	.032	6	-.029	3	.031	6	-5.087e-03	5	6.084e-04	3	7.223e-04	5
5	N3	max	.063	1	-.001	5	-.03	6	1.092e-03	1	1.893e-03	1	1.987e-04	5
6		min	.03	6	-.007	3	-.063	1	-7.607e-04	5	6.686e-04	6	-6.265e-04	6
7	N4	max	.066	1	-.049	5	.445	5	-6.686e-04	3	1.007e-02	5	2.852e-03	1
8		min	.033	6	-.186	3	.03	3	-1.78e-02	5	-7.457e-04	3	5.196e-04	5
9	N5	max	.064	1	.006	5	-.044	5	1.201e-03	1	1.255e-03	1	1.692e-03	1
10		min	.029	6	-.049	6	-.124	1	-2.606e-03	5	-8.753e-04	5	4.086e-04	6
11	N6	max	.066	1	-.048	5	.415	5	-6.686e-04	3	1.007e-02	5	2.852e-03	1
12		min	.033	6	-.181	3	.032	3	-1.78e-02	5	-7.457e-04	3	5.195e-04	5
13	N7	max	.064	1	-.002	5	.054	1	3.05e-04	3	3.014e-03	4	1.636e-03	3
14		min	.031	6	-.017	3	.025	6	-3.493e-03	5	8.835e-04	3	6.644e-04	5
15	N8	max	.064	1	-.003	5	-.025	6	1.103e-03	1	2.037e-03	1	8.483e-04	2
16		min	.03	6	-.006	1	-.051	4	-5.443e-04	5	7.417e-04	6	9.063e-05	6
17	N9	max	.064	1	.004	5	-.044	6	1.201e-03	1	1.255e-03	1	1.693e-03	1
18		min	.029	6	-.051	3	-.12	1	-2.606e-03	5	-8.75e-04	5	4.087e-04	6
19	N10	max	0	6	0	6	0	6	0	6	0	6	0	6
20		min	0	1	0	1	0	1	0	1	0	1	0	1
21	N11	max	.03	1	-.01	5	.026	1	1.918e-03	5	-9.627e-05	6	2.626e-03	3
22		min	.005	6	-.029	3	.006	6	-1.199e-03	1	-1.694e-03	1	1.282e-03	2
23	N12	max	.031	1	0	5	-.006	6	2.102e-03	5	1.577e-03	1	2.011e-04	5
24		min	.006	6	-.007	3	-.031	1	3.692e-04	3	3.661e-04	6	-6.202e-04	6
25	N13	max	.031	1	-.052	5	.246	5	4.26e-03	5	8.909e-03	5	1.404e-03	4
26		min	.004	6	-.183	3	0	3	-2.901e-03	1	-5.409e-04	3	-2.04e-04	2
27	N14	max	.032	1	.007	5	-.027	6	2.573e-03	4	1.335e-03	1	9.504e-04	5
28		min	.007	6	-.05	3	-.092	1	7.477e-04	3	-3.065e-04	5	1.825e-04	1
29	N15	max	.031	1	-.048	5	.219	5	4.26e-03	5	8.908e-03	5	1.404e-03	4
30		min	.004	6	-.18	3	.002	3	-2.901e-03	1	-5.409e-04	3	-2.041e-04	2
31	N16	max	.03	1	-.002	5	.032	1	1.809e-03	5	1.485e-04	6	1.51e-03	6
32		min	.005	6	-.017	3	.007	6	-1.321e-03	3	-4.186e-04	2	6.121e-04	2
33	N17	max	.031	1	-.003	5	-.004	6	2.115e-03	5	1.672e-03	1	6.496e-04	5
34		min	.006	6	-.006	1	-.021	2	2.876e-04	3	3.288e-04	6	1.275e-05	3
35	N18	max	.032	1	.004	5	-.025	6	2.573e-03	4	1.335e-03	1	9.505e-04	5
36		min	.007	6	-.051	3	-.088	1	7.477e-04	3	-3.062e-04	5	1.826e-04	1
37	N19	max	.161	1	-.002	5	.195	5	3.049e-04	3	3.014e-03	4	2.922e-03	1
38		min	.085	5	-.017	3	.017	3	-4.246e-03	5	8.835e-04	3	6.642e-04	5
39	N20	max	.117	1	-.003	5	-.008	5	1.103e-03	1	2.037e-03	1	1.602e-03	2
40		min	.033	6	-.006	1	-.093	1	-1.298e-03	5	7.417e-04	6	9.06e-05	6
41	N21	max	.334	1	-.048	5	1.476	5	-6.598e-04	3	1.007e-02	5	8.59e-03	1
42		min	.08	5	-.181	3	.058	3	-3.176e-02	5	-7.457e-04	3	5.18e-04	5
43	N22	max	.185	1	.004	5	.105	5	1.198e-03	1	1.255e-03	1	3.56e-03	1
44		min	.045	6	-.051	3	-.166	1	-4.269e-03	5	-8.75e-04	5	4.064e-04	6
45	N23	max	.03	2	-.002	5	.087	5	2.476e-03	5	1.485e-04	6	1.514e-03	6
46		min	-.037	6	-.017	3	-.027	3	-1.324e-03	3	-4.186e-04	2	-1.408e-04	2
47	N24	max	.031	1	-.003	5	.047	5	2.418e-03	5	1.672e-03	1	6.496e-04	5
48		min	.004	6	-.006	1	-.003	1	2.876e-04	3	3.288e-04	6	-5.e-05	1
49	N25	max	.091	2	-.048	5	.477	5	1.086e-02	5	8.908e-03	5	1.406e-03	4
50		min	-.034	6	-.181	3	-.047	1	-2.905e-03	1	-5.409e-04	3	-2.799e-03	2
51	N26	max	.04	1	.004	5	.039	5	2.995e-03	4	1.335e-03	1	9.514e-04	5
52		min	-.003	6	-.051	3	-.062	1	7.498e-04	3	-3.062e-04	5	-4.007e-04	1
53	N35	max	0	6	0	6	0	6	1.117e-03	1	3.737e-03	1	3.967e-03	3
54		min	0	1	0	1	0	1	-5.746e-04	5	5.174e-04	6	5.792e-04	5
55	N36	max	.03	1	-.017	5	.014	4	2.086e-03	5	2.026e-04	4	3.712e-03	3

Envelope Joint Displacements (Continued)

	Joint		X [in]	LC	Y [in]	LC	Z [in]	LC	X Rotation [rad]	LC	Y Rotatio...	LC	Z Rotatio...	LC
56		min	.005	6	-.049	3	.006	6	-1.39e-03	1	-1.705e-03	2	1.08e-03	5
57	N29	max	.002	1	0	5	0	6	1.977e-04	3	1.058e-03	1	6.495e-06	5
58		min	0	6	-.001	3	-.002	1	1.179e-04	5	3.575e-04	6	-1.16e-04	3
59	N30	max	.003	1	-.002	5	.003	4	5.778e-04	3	1.318e-03	1	7.518e-04	3
60		min	.002	6	-.005	3	.001	6	1.478e-04	5	6.659e-04	6	3.696e-04	5
61	N31	max	.001	1	0	5	0	6	2.272e-04	3	5.466e-04	1	3.096e-06	5
62		min	0	6	-.001	3	-.001	2	1.384e-04	5	6.438e-05	6	-1.464e-04	3
63	N32	max	.002	2	-.002	5	.001	1	4.696e-04	3	6.233e-04	2	6.512e-04	3
64		min	0	6	-.004	3	0	6	1.179e-04	5	-3.511e-05	6	3.155e-04	5
65	N33	max	.049	1	0	5	-.021	6	5.853e-04	1	3.49e-03	4	4.623e-04	2
66		min	.021	6	-.004	3	-.048	1	-9.047e-05	5	1.772e-03	6	-1.863e-04	4
67	N34	max	.051	1	-.003	5	.05	1	2.528e-04	3	2.888e-03	1	2.498e-03	4
68		min	.025	6	-.014	3	.024	6	-1.856e-03	5	1.509e-03	6	1.173e-03	2
69	N35A	max	.027	1	0	5	-.006	6	8.796e-04	4	1.187e-03	5	8.954e-04	5
70		min	.006	6	-.004	3	-.027	1	2.616e-04	3	4.478e-05	6	-2.962e-04	3
71	N36A	max	.028	1	-.003	5	.024	1	5.954e-04	4	5.587e-04	1	2.462e-03	3
72		min	.005	6	-.016	3	.006	6	-3.903e-04	2	9.355e-05	6	3.793e-04	5
73	N37	max	.021	1	0	5	-.007	6	2.418e-04	1	1.905e-03	1	2.352e-04	1
74		min	.007	6	-.003	3	-.021	1	1.4e-04	6	7.023e-04	6	1.32e-04	6
75	N38	max	.024	1	-.003	5	.024	1	-2.906e-04	3	1.956e-03	1	3.53e-04	4
76		min	.012	6	-.01	3	.011	6	-4.654e-04	4	7.88e-04	6	2.439e-04	2
77	N39	max	.014	1	0	5	-.003	6	2.435e-04	4	1.77e-03	1	2.578e-04	4
78		min	.003	6	-.003	3	-.014	1	1.354e-04	6	6.067e-04	6	1.37e-04	6
79	N40	max	.016	2	-.003	5	.014	1	-2.85e-04	3	1.798e-03	1	3.654e-04	3
80		min	.001	6	-.01	3	.003	6	-4.4e-04	4	6.647e-04	6	2.789e-04	5
81	N41	max	.009	1	0	5	0	6	2.435e-04	4	1.77e-03	1	2.578e-04	4
82		min	0	6	-.003	3	-.009	1	1.354e-04	6	6.067e-04	6	1.37e-04	6
83	N42	max	.009	2	-.003	5	.007	2	-2.85e-04	3	1.798e-03	1	3.654e-04	3
84		min	-.006	6	-.01	3	-.003	6	-4.4e-04	4	6.647e-04	6	2.789e-04	5
85	N43	max	.026	1	0	5	-.01	6	2.418e-04	1	1.905e-03	1	2.351e-04	1
86		min	.01	6	-.003	3	-.026	1	1.4e-04	6	7.023e-04	6	1.32e-04	6
87	N44	max	.03	4	-.003	5	.034	4	-2.906e-04	3	1.956e-03	1	3.53e-04	4
88		min	.019	6	-.01	3	.018	6	-4.654e-04	4	7.88e-04	6	2.439e-04	2
89	N45	max	.05	4	-.053	5	.257	5	-1.03e-03	3	9.862e-03	5	2.298e-03	6
90		min	.018	3	-.187	3	.016	3	-6.187e-03	4	-1.356e-03	3	1.463e-03	2
91	N46	max	.044	4	.007	5	-.04	6	1.087e-03	1	1.466e-03	1	9.494e-04	5
92		min	.017	6	-.05	3	-.107	1	2.23e-04	5	-1.125e-03	5	2.715e-04	6
93	N47	max	.05	4	-.048	5	.227	5	-1.03e-03	3	9.862e-03	5	2.298e-03	6
94		min	.018	3	-.18	3	.02	3	-6.187e-03	4	-1.356e-03	3	1.463e-03	2
95	N48	max	.048	4	-.002	5	.048	1	-6.407e-04	6	1.48e-03	1	6.685e-04	2
96		min	.018	3	-.017	3	.011	5	-7.55e-04	1	1.346e-03	5	1.051e-04	6
97	N49	max	.046	4	-.003	5	-.011	3	1.101e-03	4	1.63e-03	2	1.044e-03	4
98		min	.018	6	-.006	1	-.045	5	6.948e-04	6	2.668e-04	6	9.043e-04	2
99	N50	max	.044	4	.004	5	-.039	6	1.087e-03	1	1.466e-03	1	9.495e-04	5
100		min	.017	6	-.051	3	-.103	1	2.23e-04	5	-1.125e-03	5	2.716e-04	6
101	N51	max	.049	4	.006	5	.084	1	-8.434e-04	3	3.243e-03	5	4.45e-03	3
102		min	.017	3	-.034	3	.059	6	-3.457e-03	4	-5.875e-04	3	8.522e-04	5
103	N52	max	.05	4	-.018	5	.119	4	-9.336e-04	3	7.116e-03	5	7.272e-03	3
104		min	.018	3	-.114	3	.042	3	-4.818e-03	4	-2.249e-03	3	2.628e-03	2
105	N53	max	.045	4	.003	5	-.019	3	1.03e-03	1	1.395e-03	1	-2.588e-04	2
106		min	.018	6	-.01	3	-.076	5	6.458e-04	5	7.566e-04	6	-1.691e-03	6
107	N54	max	.044	4	0	5	-.031	6	1.058e-03	1	1.584e-03	1	-6.371e-05	2

Envelope Joint Displacements (Continued)

	Joint		X [in]	LC	Y [in]	LC	Z [in]	LC	X Rotation [rad]	LC	Y Rotatio...	LC	Z Rotatio...	LC
108		min	.017	6	-.036	3	-.084	1	4.342e-04	5	-5.073e-04	5	-2.171e-03	6
109	N55	max	0	6	0	6	0	6	0	6	0	6	0	6
110		min	0	1	0	1	0	1	0	1	0	1	0	1
111	N56	max	0	6	0	6	0	6	0	6	0	6	0	6
112		min	0	1	0	1	0	1	0	1	0	1	0	1

Envelope AISC 14th(360-10): LRFD Steel Code Checks

	Member	Shape	Code Check	Lo...	LC	She...	Lo.....		...	phi*P...	phi*P...	phi*...	phi*...	Cb	Eqn
1	M7	PIPE_2.0	.622	3....	4	.100	3....		3	14.916	32.13	1.872	1.872	2.5...	H1-...
2	M22	PIPE_2.0	.597	1....	4	.158	1....		4	6.295	32.13	1.872	1.872	3.2...	H1-...
3	M14	SR 5/8	.545	2....	3	.003	0		1	1.496	9.94	.104	.104	1.6...	H1-...
4	M6	PIPE_2.0	.314	3....	5	.158	3....		5	6.295	32.13	1.872	1.872	2.1...	H1-...
5	M3	PIPE_2.0	.287	3....	4	.227	3....		4	6.295	32.13	1.872	1.872	2.4...	H3-6
6	M25	L2.5x2.5x3	.275	6....	3	.007	6....	y	4	8.585	29.192	.873	1.791	1.9...	H2-1
7	M2	PIPE_1.25	.225	0	3	.103	3.02		4	14.397	19.688	.801	.801	2.4...	H1-...
8	M8	PIPE_2.0	.215	3....	5	.111	3....		4	14.916	32.13	1.872	1.872	4.1...	H1-...
9	M23	L2.5x2.5x3	.173	5.59	4	.011	5.59	y	4	10.509	29.192	.873	1.805	1.8...	H2-1
10	M10	PIPE_2.0	.166	3....	4	.062	2....		4	14.916	32.13	1.872	1.872	4.22	H1-...
11	M5	PIPE_1.25	.164	0	3	.084	3.02		3	14.397	19.688	.801	.801	1.4...	H1-...
12	M12	SR 5/8	.146	2.5	3	.016	0		4	1.88	9.94	.104	.104	2.2...	H1-...
13	M9	PIPE_2.0	.128	3....	1	.059	4....		1	14.916	32.13	1.872	1.872	2.8...	H1-...
14	M18	SR 5/8	.114	0	3	.004	2....		1	1.513	9.94	.104	.104	3.1...	H1-...
15	M1	PIPE_1.25	.103	0	1	.027	3....		4	14.397	19.688	.801	.801	1.7...	H1-...
16	M24	L2.5x2.5x3	.103	0	4	.003	5.59	y	1	10.509	29.192	.873	1.7	1.3...	H2-1
17	M17	PIPE_1.25	.092	3....	1	.008	0		1	8.508	19.688	.801	.801	1.13	H1-...
18	M26	L2.5x2.5x3	.087	0	6	.003	6....	y	1	8.585	29.192	.873	1.563	1.1...	H2-1
19	M4	PIPE_1.25	.066	0	1	.032	1....		5	14.397	19.688	.801	.801	2.5...	H1-...
20	M13	SR 5/8	.065	0	6	.005	0		1	1.513	9.94	.104	.104	2.4...	H1-...
21	M16	SR 5/8	.043	0	3	.003	0		4	1.88	9.94	.104	.104	2.26	H1-...
22	M15	SR 5/8	.038	0	3	.005	0		4	1.88	9.94	.104	.104	2.2...	H1-...
23	M19	SR 5/8	.025	0	3	.014	0		4	1.88	9.94	.104	.104	2.25	H1-...
24	M17A	SR 5/8	.017	2....	3	.007	2....		4	1.496	9.94	.104	.104	1.9...	H1-...
25	M20	PIPE_4.0	.005	4.25	4	.009	3		4	83.098	93.24	10.631	10.631	1.9...	H1-...
26	M21	PIPE_4.0	.002	1.75	4	.006	1.75		4	83.098	93.24	10.631	10.631	1.99	H1-...

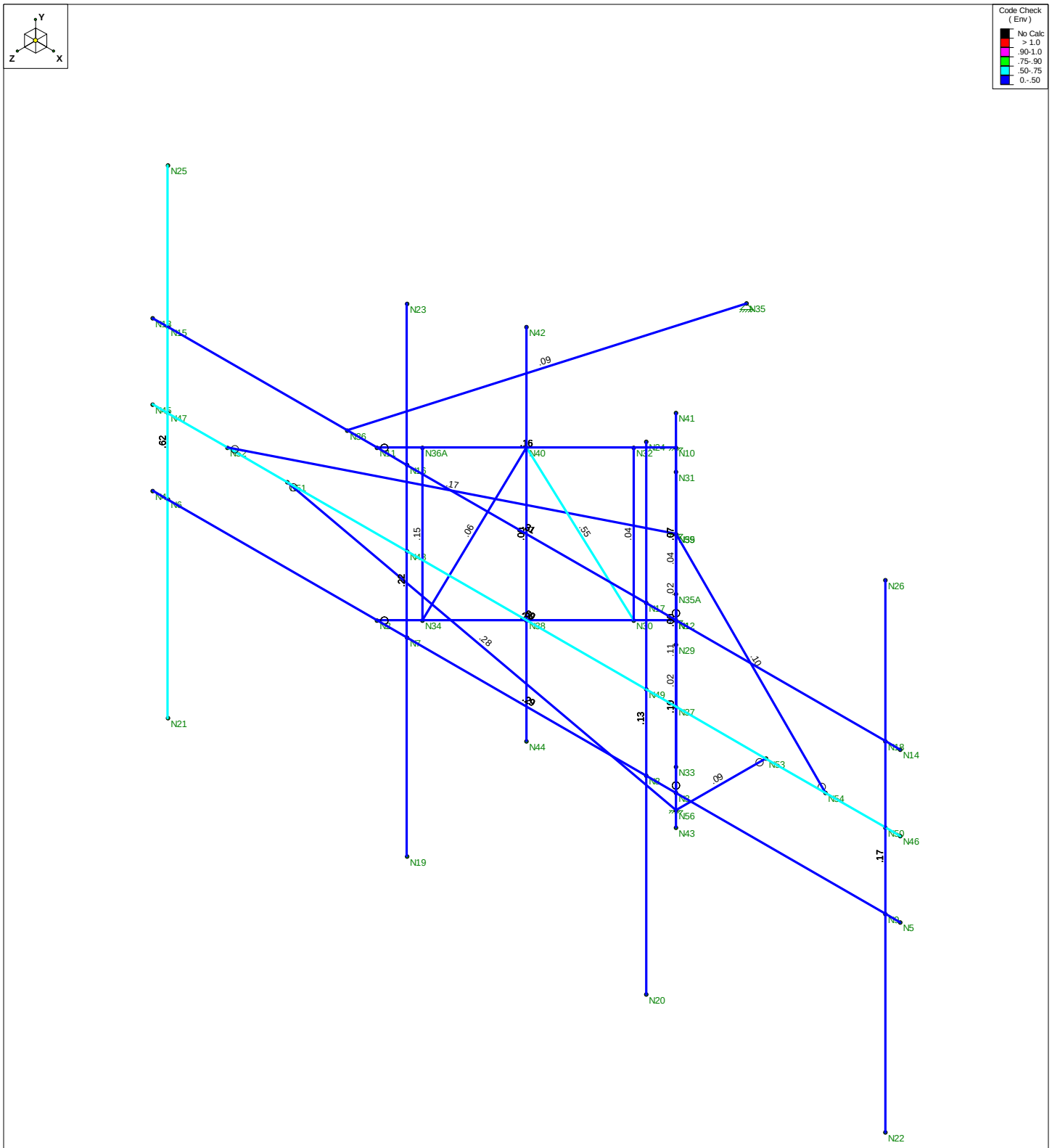

Member Code Checks Displayed (Enveloped)
Envelope Only Solution

Centek		
TJL	CT11180C	June 10, 2020 at 10:33 AM
20074.29	Unity Check	Antenna Mount.r3d

Exhibit F

Power Density/RF Emissions Report

EBI Consulting

environmental | engineering | due diligence

RADIO FREQUENCY EMISSIONS ANALYSIS REPORT
EVALUATION OF HUMAN EXPOSURE POTENTIAL TO NON-IONIZING EMISSIONS

T-Mobile Existing Facility

Site ID: CT11180C

Bolton Ct.._1
130 Vernon Road
Bolton, Connecticut 06043

June 23, 2020

EBI Project Number: 6220002638

Site Compliance Summary	
Compliance Status:	**COMPLIANT**
Site total MPE% of FCC general population allowable limit:	**24.29%**

21 B Street, Burlington, MA 01803 · Tel: (781) 273.2500 · Fax: (781) 273.3311

June 23, 2020

T-Mobile
Attn: Jason Overbey, RF Manager
35 Griffin Road South
Bloomfield, Connecticut 06002

Emissions Analysis for Site: CT11180C - Bolton Ct.._1

EBI Consulting was directed to analyze the proposed T-Mobile facility located at **130 Vernon Road** in **Bolton, Connecticut** for the purpose of determining whether the emissions from the Proposed T-Mobile Antenna Installation located on this property are within specified federal limits.

All information used in this report was analyzed as a percentage of current Maximum Permissible Exposure (% MPE) as listed in the FCC OET Bulletin 65 Edition 97-01and ANSI/IEEE Std C95.1. The FCC regulates Maximum Permissible Exposure in units of microwatts per square centimeter ($\mu W/cm^2$). The number of $\mu W/cm^2$ calculated at each sample point is called the power density. The exposure limit for power density varies depending upon the frequencies being utilized. Wireless Carriers and Paging Services use different frequency bands each with different exposure limits; therefore, it is necessary to report results and limits in terms of percent MPE rather than power density.

All results were compared to the FCC (Federal Communications Commission) radio frequency exposure rules, 47 CFR 1.1307(b)(1) – (b)(3), to determine compliance with the Maximum Permissible Exposure (MPE) limits for General Population/Uncontrolled environments as defined below.

General population/uncontrolled exposure limits apply to situations in which the general population may be exposed or in which persons who are exposed as a consequence of their employment may not be made fully aware of the potential for exposure or cannot exercise control over their exposure. Therefore, members of the general population would always be considered under this category when exposure is not employment related, for example, in the case of a telecommunications tower that exposes persons in a nearby residential area.

Public exposure to radio frequencies is regulated and enforced in units of microwatts per square centimeter ($\mu W/cm^2$). The general population exposure limits for the 600 MHz and 700 MHz frequency bands are approximately 400 $\mu W/cm^2$ and 467 $\mu W/cm^2$, respectively. The general population exposure limit for the 1900 MHz (PCS), 2100 MHz (AWS) and 11 GHz frequency bands is 1000 $\mu W/cm^2$. Because each carrier will be using different frequency bands, and each frequency band has different exposure limits, it is necessary to report percent of MPE rather than power density.

Occupational/controlled exposure limits apply to situations in which persons are exposed as a consequence of their employment and in which those persons who are exposed have been made fully aware of the potential for exposure and can exercise control over their exposure. Occupational/controlled exposure limits also apply where exposure is of a transient nature as a result of incidental passage through a location where exposure levels may be above general population/uncontrolled limits (see below), as long as the exposed person has been made fully aware of the potential for exposure and can exercise control over his or her exposure by leaving the area or by some other appropriate means.

Additional details can be found in FCC OET 65.

CALCULATIONS

Calculations were done for the proposed T-Mobile Wireless antenna facility located at 130 Vernon Road in Bolton, Connecticut using the equipment information listed below. All calculations were performed per the specifications under FCC OET 65. Since T-Mobile is proposing highly focused directional panel antennas, which project most of the emitted energy out toward the horizon, all calculations were performed assuming a lobe representing the maximum gain of the antenna per the antenna manufacturer's supplied specifications, minus 10 dB for directional panel antennas and 20 dB for highly focused parabolic microwave dishes, was focused at the base of the tower. For this report, the sample point is the top of a 6-foot person standing at the base of the tower.

For all calculations, all equipment was calculated using the following assumptions:

1) 2 LTE channels (600 MHz Band) were considered for each sector of the proposed installation. These Channels have a transmit power of 30 Watts per Channel.

2) 1 NR channel (600 MHz Band) was considered for each sector of the proposed installation. This Channel has a transmit power of 80 Watts.

3) 2 LTE channels (700 MHz Band) were considered for each sector of the proposed installation. These Channels have a transmit power of 30 Watts per Channel.

4) 2 LTE channels (PCS Band - 1900 MHz) were considered for each sector of the proposed installation. These Channels have a transmit power of 60 Watts per Channel.

5) 2 UMTS channels (AWS Band - 2100 MHz) were considered for each sector of the proposed installation. These Channels have a transmit power of 30 Watts per Channel.

6) 2 LTE channels (AWS Band – 2100 MHz) were considered for each sector of the proposed installation. These Channels have a transmit power of 60 Watts per Channel.

7) 2 LTE channels (BRS Band - 2500 MHz) were considered for each sector of the proposed installation. These Channels have a transmit power of 40 Watts per Channel.

8) 2 NR channels (BRS Band - 2500 MHz) were considered for each sector of the proposed installation. These Channels have a transmit power of 40 Watts per Channel.

9) All radios at the proposed installation were considered to be running at full power and were uncombined in their RF transmissions paths per carrier prescribed configuration. Per FCC OET Bulletin No. 65 - Edition 97-01 recommendations to achieve the maximum anticipated value at each sample point, all power levels emitting from the proposed antenna installation are increased by a factor of 2.56 to account for possible in-phase reflections from the surrounding environment. This is rarely the case, and if so, is never continuous.

10) For the following calculations, the sample point was the top of a 6-foot person standing at the base of the tower. The maximum gain of the antenna per the antenna manufacturer's supplied specifications, minus 10 dB for directional panel antennas and 20 dB for highly focused parabolic microwave dishes, was used in this direction. This value is a very conservative estimate as gain reductions for these particular antennas are typically much higher in this direction.

11) The antennas used in this modeling are the Ericsson AIR 32 for the 1900 MHz / 2100 MHz channel(s), the Ericsson AIR 6449 for the 2500 MHz / 2500 MHz channel(s), the RFS APXVAARR24_43-U-NA20 for the 600 MHz / 600 MHz / 700 MHz / 1900 MHz / 2100 MHz channel(s) in Sector A, the Ericsson AIR 32 for the 1900 MHz / 2100 MHz channel(s), the Ericsson AIR 6449 for the 2500 MHz / 2500 MHz channel(s), the RFS APXVAARR24_43-U-NA20 for the 600 MHz / 600 MHz / 700 MHz / 1900 MHz / 2100 MHz channel(s) in Sector B, the Ericsson AIR 32 for the 1900 MHz / 2100 MHz channel(s), the Ericsson AIR 6449 for the 2500 MHz / 2500 MHz channel(s), the RFS APXVAARR24_43-U-NA20 for the 600 MHz / 600 MHz / 700 MHz / 1900 MHz / 2100 MHz channel(s) in Sector C. This is based on feedback from the carrier with regard to anticipated antenna selection. All Antenna gain values and associated transmit power levels are shown in the Site Inventory and Power Data table below. The maximum gain of the antenna per the antenna manufacturer's supplied specifications, minus 10 dB for directional panel antennas and 20 dB for highly focused parabolic microwave dishes, was used for all calculations. This value is a very conservative estimate as gain reductions for these particular antennas are typically much higher in this direction.

12) The antenna mounting height centerline of the proposed antennas is 130 feet above ground level (AGL).

13) Emissions values for additional carriers were taken from the Connecticut Siting Council active database. Values in this database are provided by the individual carriers themselves.

14) All calculations were done with respect to uncontrolled / general population threshold limits.

T-Mobile Site Inventory and Power Data

Sector:	A	Sector:	B	Sector:	C
Antenna #:	**1**	Antenna #:	**1**	Antenna #:	**1**
Make / Model:	Ericsson AIR 32	Make / Model:	Ericsson AIR 32	Make / Model:	Ericsson AIR 32
Frequency Bands:	1900 MHz / 2100 MHz	Frequency Bands:	1900 MHz / 2100 MHz	Frequency Bands:	1900 MHz / 2100 MHz
Gain:	15.35 dBd / 15.85 dBd	Gain:	15.35 dBd / 15.85 dBd	Gain:	15.35 dBd / 15.85 dBd
Height (AGL):	130 feet	Height (AGL):	130 feet	Height (AGL):	130 feet
Channel Count:	4	Channel Count:	4	Channel Count:	4
Total TX Power (W):	240 Watts	Total TX Power (W):	240 Watts	Total TX Power (W):	240 Watts
ERP (W):	8,728.31	ERP (W):	8,728.31	ERP (W):	8,728.31
Antenna A1 MPE %:	**1.86%**	Antenna B1 MPE %:	**1.86%**	Antenna C1 MPE %:	**1.86%**
Antenna #:	**2**	Antenna #:	**2**	Antenna #:	**2**
Make / Model:	Ericsson AIR 6449	Make / Model:	Ericsson AIR 6449	Make / Model:	Ericsson AIR 6449
Frequency Bands:	2500 MHz / 2500 MHz	Frequency Bands:	2500 MHz / 2500 MHz	Frequency Bands:	2500 MHz / 2500 MHz
Gain:	22.05 dBd / 22.05 dBd	Gain:	22.05 dBd / 22.05 dBd	Gain:	22.05 dBd / 22.05 dBd
Height (AGL):	130 feet	Height (AGL):	130 feet	Height (AGL):	130 feet
Channel Count:	4	Channel Count:	4	Channel Count:	4
Total TX Power (W):	160 Watts	Total TX Power (W):	160 Watts	Total TX Power (W):	160 Watts
ERP (W):	25,651.93	ERP (W):	25,651.93	ERP (W):	25,651.93
Antenna A2 MPE %:	**5.46%**	Antenna B2 MPE %:	**5.46%**	Antenna C2 MPE %:	**5.46%**
Antenna #:	**3**	Antenna #:	**3**	Antenna #:	**3**
Make / Model:	RFS APXVAARR24_43-U-NA20	Make / Model:	RFS APXVAARR24_43-U-NA20	Make / Model:	RFS APXVAARR24_43-U-NA20
Frequency Bands:	600 MHz / 600 MHz / 700 MHz / 1900 MHz / 2100 MHz	Frequency Bands:	600 MHz / 600 MHz / 700 MHz / 1900 MHz / 2100 MHz	Frequency Bands:	600 MHz / 600 MHz / 700 MHz / 1900 MHz / 2100 MHz
Gain:	12.95 dBd / 12.95 dBd / 13.35 dBd / 15.65 dBd / 16.35 dBd	Gain:	12.95 dBd / 12.95 dBd / 13.35 dBd / 15.65 dBd / 16.35 dBd	Gain:	12.95 dBd / 12.95 dBd / 13.35 dBd / 15.65 dBd / 16.35 dBd
Height (AGL):	130 feet	Height (AGL):	130 feet	Height (AGL):	130 feet
Channel Count:	9	Channel Count:	9	Channel Count:	9
Total TX Power (W):	380 Watts	Total TX Power (W):	380 Watts	Total TX Power (W):	380 Watts
ERP (W):	11,055.53	ERP (W):	11,055.53	ERP (W):	11,055.53
Antenna A3 MPE %:	**3.55%**	Antenna B3 MPE %:	**3.55%**	Antenna C3 MPE %:	**3.55%**

Site Composite MPE %	
Carrier	**MPE %**
T-Mobile (Max at Sector A):	10.86%
AT&T	1.31%
Verizon	2.71%
Sprint/Nextel	2.95%
Bolton Radio Station	2.39504072604914E-05%
Commsite Internat'l	0.04%
Metrocall	0.12%
Pagemart	2.3%
AirTouch	0.63%
Conn. Radio	0.23%
Eversource	3.14%
Site Total MPE % :	24.29%

T-Mobile MPE % Per Sector	
T-Mobile Sector A Total:	10.86%
T-Mobile Sector B Total:	10.86%
T-Mobile Sector C Total:	10.86%
Site Total MPE % :	24.29%

T-Mobile Maximum MPE Power Values (Sector A)

T-Mobile Frequency Band / Technology (Sector A)	# Channels	Watts ERP (Per Channel)	Height (feet)	Total Power Density (μW/cm²)	Frequency (MHz)	Allowable MPE (μW/cm²)	Calculated % MPE
T-Mobile 1900 MHz LTE	2	2056.61	130.0	8.75	1900 MHz LTE	1000	0.88%
T-Mobile 2100 MHz LTE	2	2307.55	130.0	9.82	2100 MHz LTE	1000	0.98%
T-Mobile 2500 MHz LTE	2	6412.98	130.0	27.28	2500 MHz LTE	1000	2.73%
T-Mobile 2500 MHz NR	2	6412.98	130.0	27.28	2500 MHz NR	1000	2.73%
T-Mobile 600 MHz LTE	2	591.73	130.0	2.52	600 MHz LTE	400	0.63%
T-Mobile 600 MHz NR	1	1577.94	130.0	3.36	600 MHz NR	400	0.84%
T-Mobile 700 MHz LTE	2	648.82	130.0	2.76	700 MHz LTE	467	0.59%
T-Mobile 1900 MHz LTE	2	2203.69	130.0	9.38	1900 MHz LTE	1000	0.94%
T-Mobile 2100 MHz UMTS	2	1294.56	130.0	5.51	2100 MHz UMTS	1000	0.55%
						Total:	**10.86%**

• NOTE: Totals may vary by approximately 0.01% due to summation of remainders in calculations.

Summary

All calculations performed for this analysis yielded results that were **within** the allowable limits for general population exposure to RF Emissions.

The anticipated maximum composite contributions from the T-Mobile facility as well as the site composite emissions value with regards to compliance with FCC's allowable limits for general population exposure to RF Emissions are shown here:

T-Mobile Sector	Power Density Value (%)
Sector A:	10.86%
Sector B:	10.86%
Sector C:	10.86%
T-Mobile Maximum MPE % (Sector A):	10.86%
Site Total:	24.29%
Site Compliance Status:	**COMPLIANT**

The anticipated composite MPE value for this site assuming all carriers present is **24.29%** of the allowable FCC established general population limit sampled at the ground level. This is based upon values listed in the Connecticut Siting Council database for existing carrier emissions.

FCC guidelines state that if a site is found to be out of compliance (over allowable thresholds), that carriers over a 5% contribution to the composite value will require measures to bring the site into compliance. For this facility, the composite values calculated were well within the allowable 100% threshold standard per the federal government.

Exhibit G

Mailing Receipts/Proof of Notice

UPS Internet Shipping: View/Print Label

1. **Ensure there are no other shipping or tracking labels attached to your package.** Select the Print button on the print dialog box that appears. Note: If your browser does not support this function select Print from the File menu to print the label.

2. **Fold the printed label at the solid line below.** Place the label in a UPS Shipping Pouch. If you do not have a pouch, affix the folded label using clear plastic shipping tape over the entire label.

3. **GETTING YOUR SHIPMENT TO UPS**
   Customers with a Daily Pickup
   Your driver will pickup your shipment(s) as usual.

   Customers without a Daily Pickup
   Take your package to any location of The UPS Store®, UPS Access Point(TM) location, UPS Drop Box, UPS Customer Center, Staples® or Authorized Shipping Outlet near you. Items sent via UPS Return Services(SM) (including via Ground) are also accepted at Drop Boxes. To find the location nearest you, please visit the 'Find Locations' Quick link at ups.com.
   Schedule a same day or future day Pickup to have a UPS driver pickup all of your Internet Shipping packages.
   Hand the package to any UPS driver in your area.

UPS Access Point™
MICHAELS STORE # 7773
75 INTERSTATE SHOP CTR
RAMSEY ,NJ 07446

UPS Access Point™
THE UPS STORE
115 FRANKLIN TPKE
MAHWAH ,NJ 07430

UPS Access Point™
THE UPS STORE
120 E MAIN ST
RAMSEY ,NJ 07446

FOLD HERE

NEIL GUERRIERO
3473040176
TRANSCEND WIRELESS
10 INDUSTRIAL AVE
MAHWAH NJ 07430

1 LBS 1 OF 1

SHIP TO:
SANDRA W. PIEROG
TOWN OF BOLTON
222 BOLTON CENTER ROAD
BOLTON CT 06043-7636

CT 061 9-01

UPS GROUND
TRACKING #: 1Z V25 742 42 9479 2915

BILLING: P/P
SIGNATURE REQUIRED

Reference#1: CT11180C CSC EO

UIS 22.0.11. WNTNV50 28.0A 04/2020

UPS Internet Shipping: View/Print Label

1. **Ensure there are no other shipping or tracking labels attached to your package.** Select the Print button on the print dialog box that appears. Note: If your browser does not support this function select Print from the File menu to print the label.

2. **Fold the printed label at the solid line below.** Place the label in a UPS Shipping Pouch. If you do not have a pouch, affix the folded label using clear plastic shipping tape over the entire label.

3. **GETTING YOUR SHIPMENT TO UPS**
   Customers with a Daily Pickup
   Your driver will pickup your shipment(s) as usual.

   Customers without a Daily Pickup
   Take your package to any location of The UPS Store®, UPS Access Point(TM) location, UPS Drop Box, UPS Customer Center, Staples® or Authorized Shipping Outlet near you. Items sent via UPS Return Services(SM) (including via Ground) are also accepted at Drop Boxes. To find the location nearest you, please visit the 'Find Locations' Quick link at ups.com.
   Schedule a same day or future day Pickup to have a UPS driver pickup all of your Internet Shipping packages.
   Hand the package to any UPS driver in your area.

UPS Access Point™
MICHAELS STORE # 7773
75 INTERSTATE SHOP CTR
RAMSEY ,NJ 07446

UPS Access Point™
THE UPS STORE
115 FRANKLIN TPKE
MAHWAH ,NJ 07430

UPS Access Point™
THE UPS STORE
120 E MAIN ST
RAMSEY ,NJ 07446

FOLD HERE

NEIL GUERRIERO
3473040176
TRANSCEND WIRELESS
10 INDUSTRIAL AVE
MAHWAH NJ 07430

1 LBS 1 OF 1

SHIP TO:
JIM RUPERT
TOWN OF BOLTON
222 BOLTON CENTER ROAD
BOLTON CT 06043-7636

CT 061 9-01

UPS GROUND
TRACKING #: 1Z V25 742 42 9196 2924

BILLING: P/P
SIGNATURE REQUIRED

Reference#1: CT11180C CSC ZO

UIS 22.0.11. WNTNV50 28.0A 04/2020

UPS Internet Shipping: View/Print Label

1. **Ensure there are no other shipping or tracking labels attached to your package.** Select the Print button on the print dialog box that appears. Note: If your browser does not support this function select Print from the File menu to print the label.

2. **Fold the printed label at the solid line below.** Place the label in a UPS Shipping Pouch. If you do not have a pouch, affix the folded label using clear plastic shipping tape over the entire label.

3. **GETTING YOUR SHIPMENT TO UPS**
   Customers with a Daily Pickup
   Your driver will pickup your shipment(s) as usual.

   Customers without a Daily Pickup
   Take your package to any location of The UPS Store®, UPS Access Point(TM) location, UPS Drop Box, UPS Customer Center, Staples® or Authorized Shipping Outlet near you. Items sent via UPS Return Services(SM) (including via Ground) are also accepted at Drop Boxes. To find the location nearest you, please visit the 'Find Locations' Quick link at ups.com.
   Schedule a same day or future day Pickup to have a UPS driver pickup all of your Internet Shipping packages.
   Hand the package to any UPS driver in your area.

UPS Access Point™
MICHAELS STORE # 7773
75 INTERSTATE SHOP CTR
RAMSEY ,NJ 07446

UPS Access Point™
THE UPS STORE
115 FRANKLIN TPKE
MAHWAH ,NJ 07430

UPS Access Point™
THE UPS STORE
120 E MAIN ST
RAMSEY ,NJ 07446

FOLD HERE

NEIL GUERRIERO
3473040176
TRANSCEND WIRELESS
10 INDUSTRIAL AVE
MAHWAH NJ 07430

1 LBS

1 OF 1

SHIP TO:
MOUNTAINTOP ENTERPRISES INC.
SUITE C
10 QUARRY ROAD
BOLTON CT 06043-7315

CT 061 9-01

UPS GROUND
TRACKING #: 1Z V25 742 42 9213 6931

BILLING: P/P
SIGNATURE REQUIRED

Reference#1: CT11180C CSC Owner

UIS 22.0.11. WNTNV50 28.0A 04/2020