STATE OF CONNECTICUT
CONNECTICUT SITING COUNCIL
Ten Franklin Square, New Britain, CT 06051
Phone: (860) 827-2935 Fax: (860) 827-2950
E-Mail: siting.council@ct.gov
Web Site: www.ct.gov/csc

VIA ELECTRONIC MAIL

May 1, 2020

Moriah King
Site Acquisition Specialist
Empire Telecom USA, LLC
16 Esquire Road
Billerica, MA 01862

RE: **EM-AT&T-007-200311** – AT&T notice of intent to modify an existing telecommunications facility located at 260 Beckley Road, Berlin, Connecticut.

Dear Ms. King:

The Connecticut Siting Council (Council) is in receipt of your correspondence of April 30, 2020 submitted in response to the Council's March 16, 2020 notification of an incomplete request for exempt modification with regard to the above-referenced matter.

The submission renders the request for exempt modification complete and the Council will process the request in accordance with the Federal Communications Commission 60-day timeframe.

Thank you for your attention and cooperation.

Sincerely,

s/ Melanie A. Bachman

Melanie A. Bachman
Executive Director

MAB/IN/emr

From: Moriah King <moking@empiretelecomm.com>
Sent: Thursday, April 30, 2020 12:44 PM
To: Bachman, Melanie <Melanie.Bachman@ct.gov>; CSC-DL Siting Council <Siting.Council@ct.gov>
Subject: [WARNING: MESSAGE ENCRYPTED]EM-AT&T-007-20031/ 260 Beckley Road, Berlin / CT1014

Hi Melanie,

I hope you are well and staying safe. I left a voicemail for you regarding this matter earlier this week. Attached, please find prior CSC approval letters for 260 Beckley, Berlin CT; updated CDs, updated structural, and updated Exempt Modification Letter. Please confirm this is the information you need and I will submit hard copies by mail. If it is not, please return my call at 339- 234-8975.

Thank you,

Moriah King, JD
Site Acquisition Specialist
Empire Telecom USA LLC
16 Esquire Road | Billerica, MA 01862
Mobile: 339-234-8975
Email: moking@empiretelecomm.com
Website: www.EmpireTelecomm.com

Disclaimer: ***This E-Mail is intended only for the use of the individual or entity to which it is addressed, and may contain information that is privileged, confidential and exempt from disclosure under applicable law. If you have received this communication in error, please do not distribute it and delete the original message. Unless expressly stated in this e-mail, nothing in this message or any attachment should be construed as a digital or electronic signature.***

April 28th, 2020

Melanie A. Bachman
Executive Director
Connecticut Siting Council
10 Franklin Square
New Britain, CT 06051

EM-AT&T-007-200311 – AT&T notice of intent to modify an existing telecommunication facility located at 260 Beckley Road, Berlin, Connecticut / CT1014 (lat. 41° 37' 54.06" N, long. -72° 43' 47.56" W)

Dear Ms. Bachman:

AT&T currently maintains a wireless telecommunications facility on an existing 152-foot monopole at the above-referenced. Said monopole is owned by American Tower Corporation and the underlying property owners are Elaine & John C. Matulis.

AT&T desires to modify its existing telecommunications facility by adding: (3) CB-C23SR-43 Combiners, (3) SDARS Remote Radios, (1) Main Unit, (3) RR-FA3 Mounts, and ancillary equipment and cables. The centerline height of the existing antennas and ancillary tower-mounted equipment is and will remain at 152 feet.

Please accept this application as notification pursuant to R.C.S.A. §16-50j-73, for construction that constitutes an exempt modification pursuant to R.C.S.A. §16-50j-72 (b)(2). In accordance with R.C.S.A. §16-50j-73, a copy of this letter is being sent to the Mayor, Mark H. Kaczynski; the Zoning Enforcement Officer, Maureen Giusti; Tower Owners, American Tower Corporation; and property owners, Elaine & John C. Matulis.

This facility was originally approved by the Council. The planned modifications to AT&T's facility fall squarely within those activities explicitly provided for in R.C.S.A. §16-50j-72 (b)(2). Specifically:

1. The planned modification will not result in an increase in the height of the existing structure.

2. The proposed modifications will not involve any changes to AT&T's ground-space footprint, and therefore and therefore will not require an extension of the site boundary.

3. The proposed modification will not increase the noise level at the facility by six decibels or more, or to levels that exceed state and local criteria.

Moriah King • Empire Telecom USA, LLC • 16 Esquire Road, Billerica, MA 01862 • mokingl@empiretelecomm.com

4. The operation of the modified facility will not increase radio frequency (RF) emissions at the facility to a level at or above Federal Communications Commission (FCC) safety standard. An RF emissions calculation (enclosed) for AT&T's modified facility is herein provided.

5. The proposed modifications will not cause a change or alteration in the physical or environmental characteristics of the site.

6. The existing structure and its foundation can support AT&T's proposed modifications. Please see enclosed structural analysis completed by completed by Malouf Engineering Intl. Inc,, dated April 9th , 2020; stamped April 9th, 2020.

For the foregoing reasons, AT&T respectfully requests that the proposed installation be allowed within the exempt modifications under R.C.S.A. §16-50j-72 (b)(2).

Sincerely,

Moriah king

Moriah King
Site Acquisition Specialist
Empire Telecom USA, LLC
moking@empiretelecomm.com

Enclosures: Exhibit 1 – Field Card and GIS Map
Exhibit 2 – Construction Drawings
Exhibit 3 – Structural Analysis
Exhibit 4 – RF Emissions Analysis Report Evaluation

cc:
Mark H. Kaczynski – Mayor
187 Castlewood Drive
Berlin, CT 06037

Maureen Giusti
Zoning Enforcement Officer;
240 Kensington Rd.; Berlin, CT 06037

Elaine & John C. Matulis
260 Beckley Rd
Berlin, CT 06037

American Tower Corporation
10 Presidential Way
Woburn, MA 01801
ATTN: Ryan Tierney, Account Project Manager

STATE OF CONNECTICUT

CONNECTICUT SITING COUNCIL

Ten Franklin Square, New Britain, CT 06051

Phone: (860) 827-2935 Fax: (860) 827-2950

E-Mail: siting.council@ct.gov

www.ct.gov/csc

December 24, 2018

Julia Coughlin
Site Acquisition Specialist
Empire Telecom, USA
16 Esquire Road
Billerica, MA 01862

RE: **EM-AT&T-007-181205** – AT&T notice of intent to modify an existing telecommunications facility located at 260 Beckley Road, Berlin, Connecticut.

Dear Ms. Coughlin:

The Connecticut Siting Council (Council) hereby acknowledges your notice to modify this existing telecommunications facility, pursuant to Section 16-50j-73 of the Regulations of Connecticut State Agencies with the following conditions:

1. Prior to AT&T's antenna installation, the proposed modifications shall be installed in accordance with the Structural Analysis Report prepared by American Tower Corporation, dated November 1, 2018 and signed and stamped by Esha Kaushal Modi;

2. Within 45 days following completion of equipment installations, AT&T shall provide documentation certified by a Professional Engineer that its installation complied with the recommendations of the Structural Analysis Report;

3. Any deviation from the proposed modification as specified in this notice and supporting materials with the Council shall render this acknowledgement invalid;

4. Any material changes to this modification as proposed shall require the filing of a new notice with the Council;

5. Within 45 days after completion of construction, the Council shall be notified in writing that construction has been completed;

6. Any nonfunctioning antenna and associated antenna mounting equipment on this facility owned and operated by AT&T shall be removed within 60 days of the date the antenna ceased to function;

7. The validity of this action shall expire one year from the date of this letter; and

8. The applicant may file a request for an extension of time beyond the one year deadline provided that such request is submitted to the Council not less than 60 days prior to the expiration.

The proposed modifications including the placement of all necessary equipment and shelters within the tower compound are to be implemented as specified here and in your notice dated November 27, 2018. The modifications are in compliance with the exception criteria in Section 16-50j-72 (b) of the Regulations of Connecticut State Agencies as changes to an existing facility site that would not increase tower height, extend the boundaries of the tower site by any dimension, increase noise levels at the tower site boundary by six decibels or more, and increase the total radio frequencies electromagnetic radiation power density measured

at the tower site boundary to or above the standards adopted by the Federal Communications Commission pursuant to Section 704 of the Telecommunications Act of 1996 and by the state Department of Energy and Environmental Protection pursuant to Connecticut General Statutes § 22a-162. This facility has also been carefully modeled to ensure that radio frequency emissions are conservatively below state and federal standards applicable to the frequencies now used on this tower.

This decision is under the exclusive jurisdiction of the Council. Please be advised that the validity of this action shall expire one year from the date of this letter. Any additional change to this facility will require explicit notice to this agency pursuant to Regulations of Connecticut State Agencies Section 16-50j-73. Such notice shall include all relevant information regarding the proposed change with cumulative worst-case modeling of radio frequency exposure at the closest point of uncontrolled access to the tower base, consistent with Federal Communications Commission, Office of Engineering and Technology, Bulletin 65. Thank you for your attention and cooperation.

Sincerely,

Melanie A. Bachman
Executive Director

MAB/FOC/emr

c: The Honorable Mark H. Kaczynski, Mayor, Town of Berlin
Jack Healy, Town Manager, Town of Berlin
Maureen Giusti, Zoning Enforcement Officer, Town of Berlin
American Tower Corporation, Tower Owner
Elaine & John Matulis, Property Owners

STATE OF CONNECTICUT

CONNECTICUT SITING COUNCIL

Ten Franklin Square, New Britain, CT 06051

Phone: (860) 827-2935 Fax: (860) 827-2950

E-Mail: siting.council@ct.gov

www.ct.gov/csc

May 8, 2017

Sarah Snell
Empire Telecom
16 Esquire Road
Billerica, MA 01862

RE: **EM-AT&T-007-170417** – AT&T notice of intent to modify an existing telecommunications facility located at 260 Beckley Road, Berlin, Connecticut.

Dear Ms. Snell:

The Connecticut Siting Council (Council) hereby acknowledges your notice to modify this existing telecommunications facility, pursuant to Section 16-50j-73 of the Regulations of Connecticut State Agencies with the following conditions:

1. Prior to installation of AT&T's equipment, AT&T shall ensure that the prior tower modifications listed in the Structural Analysis prepared by American Tower, dated March 27, 2017 and stamped by Scott A. Wirgau, have been completed;

2. Any deviation from the proposed modification as specified in this notice and supporting materials with the Council shall render this acknowledgement invalid;

3. Any material changes to this modification as proposed shall require the filing of a new notice with the Council;

4. Within 45 days after completion of construction, the Council shall be notified in writing that construction has been completed;

5. Any nonfunctioning antenna and associated antenna mounting equipment on this facility owned and operated by AT&T shall be removed within 60 days of the date the antenna ceased to function;

6. The validity of this action shall expire one year from the date of this letter; and

7. The applicant may file a request for an extension of time beyond the one year deadline provided that such request is submitted to the Council not less than 60 days prior to the expiration.

The proposed modifications including the placement of all necessary equipment and shelters within the tower compound are to be implemented as specified here and in your notice dated April 14, 2017. The modifications are in compliance with the exception criteria in Section 16-50j-72 (b) of the Regulations of Connecticut State Agencies as changes to an existing facility site that would not increase tower height, extend the boundaries of the tower site by any dimension, increase noise levels at the tower site boundary by six decibels or more, and increase the total radio frequencies electromagnetic radiation power density measured at the tower site boundary to or above the standards adopted by the Federal Communications Commission pursuant to Section 704 of the Telecommunications Act of 1996 and by the state Department of Energy and Environmental Protection pursuant to Connecticut General Statutes § 22a-162. This facility has also been carefully modeled to ensure that radio frequency emissions are conservatively below state and federal standards applicable to the frequencies now used on this tower.

This decision is under the exclusive jurisdiction of the Council. Please be advised that the validity of this action shall expire one year from the date of this letter. Any additional change to this facility will require explicit notice to this agency pursuant to Regulations of Connecticut State Agencies Section 16-50j-73. Such notice shall include all relevant information regarding the proposed change with cumulative worst-case modeling of radio frequency exposure at the closest point of uncontrolled access to the tower base, consistent with Federal Communications Commission, Office of Engineering and Technology, Bulletin 65. Thank you for your attention and cooperation.

Very truly yours,

Melanie A. Bachman
Executive Director

MAB/RDM/bm

c: The Honorable Mark H. Kaczynski, Mayor, Town of Berlin
Jack Healy, Temporary Town Manager, Town of Berlin
Maureen Giusti, Zoning Enforcement Officer, Town of Berlin
ATC, Tower Owner
Elaine & John Matulis, Property Owners

PROJECT INFORMATION

SCOPE OF WORK	UNMANNED COMMUNICATIONS FACILITY MODIFICATIONS INCLUDING: -(P) SIRIUS-XM NEW COMMSCOPE ION-M23 SDARS REMOTE RADIO ON NEW RR-FA3 MOUNT (1/SECT., 3 TOT.) -(P) SIRIUS-XM NEW COMMSCOPE CBC23SR-43 COMBINER ON NEW RR-FA3 MOUNT (1/SECT., 3 TOT.) -(P) AT&T ALPHA/BETA/GAMMA LTEWCS RRUS-32 TxRx4 PORT TO BE CONNECTED TO NEW COMMSCOPE SXM/WCS DIPLEXER CBC23SR43 (1/SECT., 3 TOT.) -(P) AT&T NEW (1) DC6-48-60-0-8CEV ALONG WITH EXISTING (2) DC6-48-60-18-8F SURGE ARRESTOR (3 TOT.) -(P) AT&T PLATFORM REINFORCEMENT SEE DETAILS ON SHEETS 06, 07, 08 -(P) IN SHELTER: -SIRIUS-XM EQUIPMENT NEW CommScope RACK -ADD 2.5A BREAKER IN AT&T POWER PLANT FOR SIRIUS-XM EQUIPMENT -SIRIUS-XM DC CABLES BETWEEN AT&T POWER PLANT AND SIRIUS-XM EQUIPMENT
SITE NUMBER:	CT1014
SITE NAME:	BERLIN – NE
SITE ADDRESS:	260 BECKLEY ROAD BERLIN, CT 06037
TOWER OWNER:	AMERICAN TOWER CORP 116 HUNTINHTON AVE. 11th FLOOR BOSTON, MA 02116
APPLICANT:	AT&T 550 COCHITUATE RD SUITES 13 & 14 FRAMINGHAM, MA 01701
NOC CONTACT:	TEL 866-915-5600
COORDINATES	LAT. N41° 37' 54.17" LONG. W72° 43' 47.69"
GROUND LEVEL:	±187'
DEED REFERENCE:	N/A
SITE PARCEL NO.:	N/A
CURRENT ZONING:	N/A
HORIZONTAL DATUM:	(NAD) 1983

SITE NUMBER: CT1014 FA: 10034969
SITE NAME: BERLIN NE
PROJECT: RF MOD // IP REPEATER MRTCB037929

DRAWING INDEX

		REV
01	TITLE SHEET	2
02	NOTES	2
03	SITE PLAN & EQUIPMENT PLAN	2
04	ELEVATION VIEW & ANTENNA LAYOUT	2
05	GROUNDING DETAILS	2
06	PLATFORM REINFORCEMENT DETAILS I	2
07	PLATFORM REINFORCEMENT DETAILS II	2
08	PLATFORM REINFORCEMENT DETAILS III	2

CONNECTICUT ONE CALL SYSTEM, INC.
1-800-922-4455
STOP-CALL BEFORE YOU DIG!

CONNECTICUT LAW REQUIRES TWO WORKING DAYS NOTICE PRIOR TO ANY EARTH MOVING ACTIVITIES BY CALLING 800-922-4455 OR DIAL 811

CONTACT & UTILITY INFORMATION

CONTACT	CONTACT	COMPANY	PHONE NO.
ENGINEERING:	MIGUEL NOBRE	VRG	(508) 981-9590
SITE ACQUISITION:	DAVID COOPER	EMPIRE	(617) 639-4908
CONSTRUCTION:	GREG DORMAN	EMPIRE	(484) 683-1750
UTILITIES			
POWER:	WORK REQUEST GROUP	NATIONAL GRID	(800) 375-7405
TELCO:	.	VERIZON	(800) 941-9900

LOCATION MAP

DIRECTIONS: FROM ROCKY HILL, TAKE I-91 SOUTH. TAKE I-91 SOUTH EXIT 22N TOWARDS RT-9 WEST. TAKE RT-9 WEST EXIT 21 TOWARDS MILL ST. AT END OF OFF RAMP TURN LEFT ONTO MILL ST. TURN LEFT ONTO BECKLEY ROAD. TURN LEFT ONTO GRAVEL DRIVE RIGHT AFTER PASSING UNDER POWER LINES. SITE IS AT END OF GRAVEL DRIVE.

SITE ACCESS: LOCKED GATE

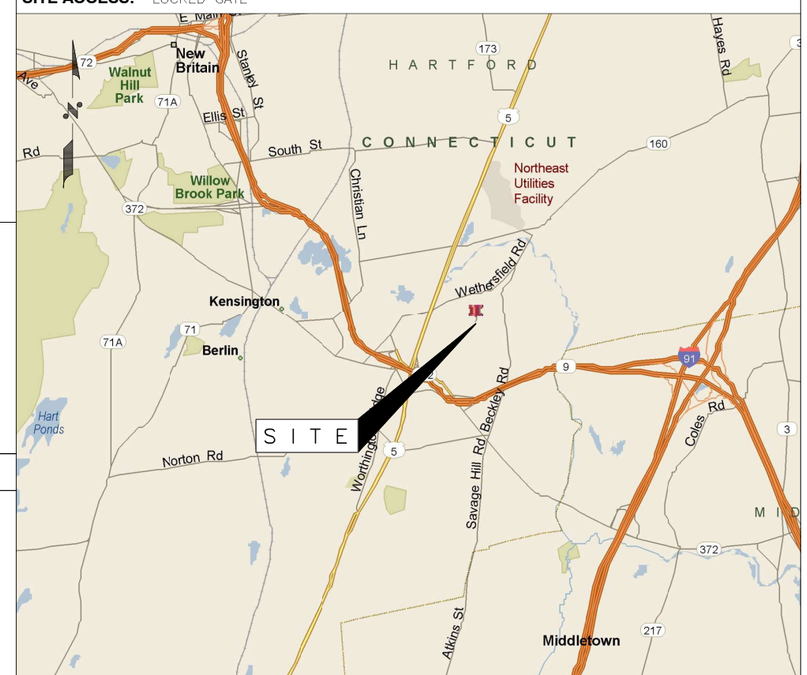

APPLICABLE BUILDING CODES AND STANDARDS

SUBCONTRACTOR'S WORK SHALL COMPLY WITH PROJECT STANDARDS AND SPECIFICATIONS. SUBCONTRACTOR WORK SHALL COMPLY WITH ALL APPLICABLE NATIONAL, STATE, AND LOCAL CODES AS ADOPTED BY THE LOCAL AUTHORITY HAVING JURISDICTION (AHJ) FOR THE LOCATION. THE EDITION OF THE AHJ ADOPTED CODES AND STANDARDS IN EFFECT ON THE DATE OF CONTRACT AWARD SHALL GOVERN THE DESIGN.

BUILDING CODE:
CONNECTICUT STATE BUILDING CODE

ELECTRICAL CODE:
NATIONAL ELECTRICAL CODE LATEST EDITION
SUBCONTRACTOR'S WORK SHALL COMPLY WITH THE LATEST EDITION OF THE FOLLOWING STANDARDS.
AMERICAN CONCRETE INSTITUTE (ACI) 318, BUILDING CODE REQUIREMENTS FOR STRUCTURAL CONCRETE
AMERICAN INSTITUTE OF STEEL CONSTRUCTION (AISC), MANUAL OF STEEL CONSTRUCTION, ASD, NINTH EDITION
AMERICAN NATIONAL STANDARDS INSTITUTE/TELECOMMUNICATIONS INDUSTRY ASSOCIATION (ANSI/TIA) 222-F OR G AS APPLICABLE, STRUCTURAL STANDARDS FOR STEEL ANTENNA TOWER AND ANTENNA SUPPORTING STRUCTURES:
TIA 607, COMMERCIAL BUILDING GROUNDING AND BONDING REQUIREMENTS FOR TELECOMMUNICATIONS

INSTITUTE FOR ELECTRICAL AND ELECTRONICS ENGINEERS (IEEE) 81, GUIDE FOR MEASURING EARTH RESISTIVITY, GROUND IMPEDANCE, AND EARTH SURFACE POTENTIALS OF A GROUND SYSTEM
IEEE 1100 (1999) RECOMMENDED PRACTICE FOR POWERING AND GROUNDING OF ELECTRONIC EQUIPMENT

IEEE C62.41, RECOMMENDED PRACTICES ON SURGE VOLTAGES IN LOW VOLTAGE AC POWER CIRCUITS (FOR LOCATION CATEGORY "C3" AND "HIGH SYSTEM EXPOSURE")

TELCORDIA GR-1503, COAXIAL CABLE CONNECTIONS

ANSI T1.311, FOR TELECOM – DC POWER SYSTEMS – TELECOM, ENVIRONMENTAL PROTECTION

FOR ANY CONFLICTS BETWEEN SECTIONS OF LISTED CODES AND STANDARDS REGARDING MATERIAL, METHODS OF CONSTRUCTION, OR OTHER REQUIREMENTS, THE MOST RESTRICTIVE REQUIREMENT SHALL GOVERN. WHERE THERE IS CONFLICT BETWEEN A GENERAL REQUIREMENT AND A SPECIFIC REQUIREMENT, THE SPECIFIC REQUIREMENT SHALL GOVERN.

VRG
VERTICAL RESOURCES GRP.
489 Washington Street
Auburn, MA 01501
Tel. (508) 981- 9590
Fax (508) 519 - 8939
mnobre@verticalresourcesgrp.com

EMPIRE telecom
EMPIRE TELECOM USA, LLC
16 ESQUIRE ROAD
BILLERICA, MA 01821

SITE NUMBER: CT1014
SITE NAME: BERLIN NE
PROJECT: RF MOD // IP
260 BECKLEY ROAD
BERLIN, CT 06037
HARTFORD COUNTY

at&t
550 COCHITUATE RD
SUITES 13 & 14
FRAMINGHAM, MA 01701

NO.	DATE	REVISION	BY	CHK	APP'D
2	04/16/20	ADDED PLATFORM UPGRADE	E.L.P.	G.A.M.	
1	09/23/19	GENERAL REVISIONS	E.L.P.	G.A.M.	
0	05/08/19	FOR CONSTRUCTION	E.L.P.	G.A.M.	

SCALE | DESIGNED BY: M.N. | DRAWN BY: G.A.M.

STATE OF CONNECTICUT
JAMES P. STRONE
No. 8657
REGISTERED PROFESSIONAL ENGINEER

AT&T MOBILITY

TITLE SHEET

JOB NUMBER	DRAWING NUMBER	REV.
CT1014-IPRepeater	01	2

GENERAL NOTES

1. FOR THE PURPOSE OF CONSTRUCTION DRAWING, THE FOLLOWING DEFINITIONS SHALL APPLY:

CONTRACTOR	–	PRIME CONTRACTOR
SUBCONTRACTOR	–	GENERAL CONTRACTOR (CONSTRUCTION)
OWNER	–	AT&T WIRELESS
OEM	–	ORIGINAL EQUIPMENT MANUFACTURER

2. PRIOR TO THE SUBMISSION OF BIDS, THE BIDDING SUBCONTRACTOR SHALL VISIT THE CELL SITE TO FAMILIARIZE WITH THE EXISTING CONDITIONS AND TO CONFIRM THAT THE WORK CAN BE ACCOMPLISHED AS SHOWN ON THE CONSTRUCTION DRAWINGS. ANY DISCREPANCY FOUND SHALL BE BROUGHT TO THE ATTENTION OF CONTRACTOR.

3. ALL MATERIALS FURNISHED AND INSTALLED SHALL BE IN STRICT ACCORDANCE WITH ALL APPLICABLE CODES, REGULATIONS, AND ORDINANCES. SUBCONTRACTOR SHALL ISSUE ALL APPROPRIATE NOTICES AND COMPLY WITH ALL LAWS, ORDINANCES, RULES, REGULATIONS, AND LAWFUL ORDERS OF ANY PUBLIC AUTHORITY REGARDING THE PERFORMANCE OF THE WORK.

ALL WORK CARRIED OUT SHALL COMPLY WITH ALL APPLICABLE MUNICIPAL AND UTILITY COMPANY SPECIFICATIONS AND LOCAL JURISDICTIONAL CODES, ORDINANCES AND APPLICABLE REGULATIONS.

4. DRAWINGS PROVIDED HERE ARE NOT TO SCALE UNLESS OTHERWISE NOTED AND ARE INTENDED TO SHOW OUTLINE ONLY.

5. UNLESS NOTED OTHERWISE, THE WORK SHALL INCLUDE FURNISHING MATERIALS, EQUIPMENT, APPURTENANCES, AND LABOR NECESSARY TO COMPLETE ALL INSTALLATIONS AS INDICATED ON THE DRAWINGS.

6. THE SUBCONTRACTOR SHALL INSTALL ALL EQUIPMENT AND MATERIALS IN ACCORDANCE WITH MANUFACTURER'S RECOMMENDATIONS UNLESS SPECIFICALLY STATED OTHERWISE.

7. IF THE SPECIFIED EQUIPMENT CANNOT BE INSTALLED AS SHOWN ON THESE DRAWINGS, THE SUBCONTRACTOR SHALL PROPOSE AN ALTERNATIVE INSTALLATION FOR APPROVAL BY THE CONTRACTOR.

8. SUBCONTRACTOR SHALL DETERMINE ACTUAL ROUTING OF CONDUIT, POWER AND T1 CABLES, GROUNDING CABLES AS SHOWN ON THE POWER, GROUNDING AND TELCO PLAN DRAWING. ROUTING OF CONDUIT FOR POWER AND TELCO SHALL BE APPROVED BY OWNER OF SITE.

9. THE SUBCONTRACTOR SHALL PROTECT EXISTING IMPROVEMENTS, PAVEMENTS, CURBS, LANDSCAPING AND STRUCTURES. ANY DAMAGED PART SHALL BE REPAIRED AT SUBCONTRACTOR'S EXPENSE TO THE SATISFACTION OF OWNER.

10. SUBCONTRACTOR SHALL LEGALLY AND PROPERLY DISPOSE OF ALL SCRAP MATERIALS SUCH AS COAXIAL CABLES AND OTHER ITEMS REMOVED FROM THE EXISTING FACILITY. ANTENNAS REMOVED SHALL BE RETURNED TO THE OWNER'S DESIGNATED LOCATION.

11. SUBCONTRACTOR SHALL LEAVE PREMISES IN CLEAN CONDITION.

SITE WORK GENERAL NOTES

1. THE SUBCONTRACTOR SHALL CONTACT UTILITY LOCATING SERVICES PRIOR TO THE START OF CONSTRUCTION.

2. ALL EXISTING ACTIVE SEWER, WATER, GAS, ELECTRIC, AND OTHER UTILITIES WHERE ENCOUNTERED IN THE WORK, SHALL BE PROTECTED AT ALL TIMES, AND WHERE REQUIRED FOR THE PROPER EXECUTION OF THE WORK, SHALL BE RELOCATED AS DIRECTED BY CONTRACTOR. EXTREME CAUTION SHOULD BE USED BY THE SUBCONTRACTOR WHEN EXCAVATING OR DRILLING PIERS AROUND OR NEAR UTILITIES. SUBCONTRACTOR SHALL PROVIDE SAFETY TRAINING FOR THE WORKING CREW. THIS WILL INCLUDE BUT NOT BE LIMITED TO A) FALL PROTECTION B) CONFINED SPACE C) ELECTRICAL SAFETY D) TRENCHING & EXCAVATION.

3. ALL SITE WORK SHALL BE AS INDICATED ON THE DRAWINGS AND PROJECT SPECIFICATIONS.

4. IF NECESSARY, RUBBISH, STUMPS, DEBRIS, STICKS, STONES, TOP SOIL AND OTHER REFUSE SHALL BE REMOVED FROM THE SITE AND DISPOSED OF LEGALLY.

5. ALL EXISTING INACTIVE SEWER, WATER, GAS, ELECTRIC AND OTHER UTILITIES, WHICH INTERFERE WITH THE EXECUTION OF THE WORK, SHALL BE REMOVED AND/OR CAPPED, PLUGGED OR OTHERWISE DISCONTINUED AT POINTS WHICH WILL NOT INTERFERE WITH THE EXECUTION OF THE WORK, SUBJECT TO THE APPROVAL OF CONTRACTOR, OWNER AND/OR LOCAL UTILITIES.

6. SUBCONTRACTOR SHALL MINIMIZE DISTURBANCE TO EXISTING SITE DURING CONSTRUCTION.

7. THE SUBCONTRACTOR SHALL PROVIDE SITE SIGNAGE IN ACCORDANCE WITH THE OWNER SPECIFICATION FOR SITE SIGNAGE.

8. THE SITE SHALL BE GRADED TO CAUSE SURFACE WATER TO FLOW AWAY FROM THE TRANSMISSION EQUIPMENT AND TOWER AREAS.

9. NO FILL OR EMBANKMENT MATERIAL SHALL BE PLACED ON FROZEN GROUND. FROZEN MATERIALS, SNOW OR ICE SHALL NOT BE PLACED IN ANY FILL OR EMBANKMENT.

10. THE SUB GRADE SHALL BE COMPACTED AND BROUGHT TO A SMOOTH UNIFORM GRADE PRIOR TO FINISHED SURFACE APPLICATION, SEE DETAIL 303.

11. THE AREAS OF THE OWNERS PROPERTY DISTURBED BY THE WORK AND NOT COVERED BY THE TOWER, EQUIPMENT OR DRIVEWAY, SHALL BE GRADED TO A UNIFORM SLOPE, AND STABILIZED TO PREVENT EROSION.

12. EROSION CONTROL MEASURES, IF REQUIRED DURING CONSTRUCTION, SHALL BE IN CONFORMANCE WITH THE LOCAL JURISDICTION'S GUIDELINES FOR EROSION AND SEDIMENT CONTROL.

13. ALL EARTH WORK SHALL BE PERFORMED IN ACCORDANCE WITH TECHNICAL SPECIFICATION FOR CONSTRUCTION OF RADIO ACCESS NETWORK SITES.

STRUCTURAL STEEL NOTES:

1. ALL STEEL WORK SHALL BE GALVANIZED IN ACCORDANCE WITH ASTM A123 (HOT-DIP) UNLESS NOTED OTHERWISE. STRUCTURAL STEEL SHALL BE ASTM-A-36 UNLESS OTHERWISE NOTED ON THE SITE SPECIFIC DRAWINGS. STEEL DESIGN, INSTALLATION AND BOLTING SHALL BE PERFORMED IN ACCORDANCE WITH THE AMERICAN INSTITUTE OF STEEL CONSTRUCTION (AISC) "MANUAL OF STEEL CONSTRUCTION".

2. ALL WELDING SHALL BE PERFORMED USING E70XX ELECTRODES AND WELDING SHALL CONFORM TO AISC. WHERE FILLET WELD SIZES ARE NOT SHOWN, PROVIDE THE MINIMUM SIZE PER TABLE J2.4 IN THE AISC "MANUAL OF STEEL CONSTRUCTION". PAINTED SURFACES SHALL BE TOUCHED UP.

3. BOLTED CONNECTIONS SHALL BE ASTM A325 BEARING TYPE (3/4"ø) CONNECTIONS AND SHALL HAVE MINIMUM OF TWO BOLTS UNLESS NOTED OTHERWISE. STEEL FASTENER HARDWARE SHALL BE GALVANIZED IN ACCORDANCE WITH ASTM A153 (HOT-DIP)

4. NON-STRUCTURAL CONNECTIONS FOR STEEL GRATING MAY USE 5/8" DIA. ASTM A 307 BOLTS UNLESS NOTED OTHERWISE.

5. INSTALLATION OF CONCRETE EXPANSION/WEDGE ANCHOR, SHALL BE PER MANUFACTURER'S WRITTEN RECOMMENDED PROCEDURE. THE ANCHOR BOLT, DOWEL OR ROD SHALL CONFORM TO MANUFACTURER'S RECOMMENDATION FOR EMBEDMENT DEPTH OR AS SHOWN ON THE DRAWINGS. NO REBAR SHALL BE CUT WITHOUT PRIOR CONTRACTOR APPROVAL WHEN DRILLING HOLES IN CONCRETE. SPECIAL INSPECTIONS, REQUIRED BY GOVERNING CODES, SHALL BE PERFORMED IN ORDER TO MAINTAIN MANUFACTURER'S MAXIMUM ALLOWABLE LOADS. ALL EXPANSION/WEDGE ANCHORS SHALL BE STAINLESS STEEL OR HOT DIPPED GALVANIZED. EXPANSION BOLTS SHALL BE PROVIDED BY RAMSET/REDHEAD, HILTI OR APPROVED EQUAL.

6. ALL STRUCTURAL STEEL SHALL BE SUPPLIED IN ACCORDANCE WITH TECHNICAL SPECIFICATION FOR CONSTRUCTION OF RADIO ACCESS NETWORK SITES.

CONCRETE AND REINFORCING STEEL NOTES:

1. ALL CONCRETE WORK SHALL BE IN ACCORDANCE WITH THE ACI 301, ACI 318, ACI 336, ASTM A184, ASTM A185 AND THE DESIGN AND CONSTRUCTION SPECIFICATION FOR CAST-IN-PLACE CONCRETE.

2. ALL CONCRETE SHALL HAVE A MINIMUM COMPRESSIVE STRENGTH OF 4000 PSI AT 28 DAYS, UNLESS NOTED OTHERWISE. A HIGHER STRENGTH (4000 PSI) MAY BE USED.

3. REINFORCING STEEL SHALL CONFORM TO ASTM A 615, GRADE 60, DEFORMED UNLESS NOTED OTHERWISE. WELDED WIRE FABRIC SHALL CONFORM TO ASTM A 185 WELDED STEEL WIRE FABRIC UNLESS NOTED OTHERWISE. SPLICES SHALL BE CLASS "B" AND ALL HOOKS SHALL BE STANDARD, UNO.

4. THE FOLLOWING MINIMUM CONCRETE COVER SHALL BE PROVIDED FOR REINFORCING STEEL UNLESS SHOWN OTHERWISE ON DRAWINGS:

CONCRETE CAST AGAINST EARTH.....3 IN.
CONCRETE EXPOSED TO EARTH OR WEATHER:

#6 AND LARGER .....2 INCH
#5 AND SMALLER & WWF.....1 1/2 INCH

CONCRETE NOT EXPOSED TO EARTH OR WEATHER OR NOT CAST AGAINST THE GROUND:

SLAB AND WALL .....3/4 INCH
BEAMS AND COLUMNS.....1 1/2 INCH

5. A 3/4" CHAMFER SHALL BE PROVIDED AT ALL EXPOSED EDGES OF CONCRETE, UNO, IN ACCORDANCE WITH ACI 301 SECTION 4.2.4.

6. INSTALLATION OF CONCRETE EXPANSION/WEDGE ANCHOR, SHALL BE PER MANUFACTURER'S WRITTEN RECOMMENDED PROCEDURE. THE ANCHOR BOLT, DOWEL OR ROD SHALL CONFORM TO MANUFACTURER'S RECOMMENDATION FOR EMBEDMENT DEPTH OR AS SHOWN ON THE DRAWINGS. NO REBAR SHALL BE CUT WITHOUT PRIOR CONTRACTOR APPROVAL WHEN DRILLING HOLES IN CONCRETE. SPECIAL INSPECTIONS, REQUIRED BY GOVERNING CODES, SHALL BE PERFORMED IN ORDER TO MAINTAIN MANUFACTURER'S MAXIMUM ALLOWABLE LOADS. ALL EXPANSION/WEDGE ANCHORS SHALL BE STAINLESS STEEL OR HOT DIPPED GALVANIZED. EXPANSION BOLTS SHALL BE PROVIDED BY RAMSET/REDHEAD HILTI OR APPROVED EQUAL.

7. CONCRETE CYLINDER TEST IS NOT REQUIRED FOR SLAB ON GRADE WHEN CONCRETE IS LESS THAN 50 CUBIC YARDS (IBC 1905.6.2.3) IN THAT EVENT THE FOLLOWING RECORDS SHALL BE PROVIDED BY THE CONCRETE SUPPLIER;
(A) RESULTS OF CONCRETE CYLINDER TESTS PERFORMED AT THE SUPPLIER'S PLANT,

(B) CERTIFICATION OF MINIMUM COMPRESSIVE STRENGTH FOR THE CONCRETE GRADE SUPPLIED.

FOR GREATER THAN 50 CUBIC YARDS THE GC SHALL PERFORM THE CONCRETE CYLINDER TEST.

8. AS AN ALTERNATIVE TO ITEM 7, TEST CYLINDERS SHALL BE TAKEN INITIALLY AND THEREAFTER FOR EVERY 50 YARDS OF CONCRETE FROM EACH DIFFERENT BATCH PLANT.

9. EQUIPMENT SHALL NOT BE PLACED ON NEW PADS FOR SEVEN DAYS AFTER PAD IS POURED, UNLESS IT IS VERIFIED BY TESTS THAT COMPRESSIVE STRENGTH HAS BEEN ATTAINED.

10. ALL CONCRETE SHALL BE SUPPLIED IN ACCORDANCE WITH TECHNICAL SPECIFICATION FOR CONSTRUCTION OF RADIO ACCESS NETWORK SITES.

SOIL COMPACTION NOTES FOR SLAB ON GRADE:

1. EXCAVATE AS REQUIRED TO REMOVE VEGETATION AND TOPSOIL, EXPOSE UNDISTURBED NATURAL SUBGRADE AND PLACE CRUSHED STONE AS REQUIRED.

2. COMPACTION CERTIFICATION: AN INSPECTION AND WRITTEN CERTIFICATION BY A QUALIFIED GEOTECHNICAL TECHNICIAN OR ENGINEER IS ACCEPTABLE.

3. AS AN ALTERNATIVE TO INSPECTION AND WRITTEN CERTIFICATION, THE "UNDISTURBED SOIL" BASE SHALL BE COMPACTED WITH "COMPACTION EQUIPMENT", LISTED BELOW, TO AT LEAST 90% MODIFIED PROCTOR MAXIMUM DENSITY PER ASTM D 1557 METHOD C.

4. COMPACTED SUBBASE SHALL BE UNIFORM AND LEVELED. PROVIDE 6" MINIMUM CRUSHED STONE OR GRAVEL COMPACTED IN 3" LIFTS ABOVE COMPACTED SOIL. GRAVEL SHALL BE NATURAL OR CRUSHED WITH 100% PASSING 1" SIEVE.

5. AS AN ALTERNATIVE TO ITEMS 2 AND 3 PROOF ROLL THE SUBGRADE SOILS WITH 5 PASSES OF A MEDIUM SIZED VIBRATORY PLATE COMPACTOR (SUCH AS BOMAG BPR 30/38) OR HAND-OPERATED SINGLE DRUM VIBRATORY ROLLER (SUCH AS BOMAG BW 55E). ANY SOFT AREAS THAT ARE ENCOUNTERED SHOULD BE REMOVED AND REPLACED WITH A WELL-GRADED GRANULAR FILL, AND COMPACTED AS STATED ABOVE.

6. COMPACTION CRITERIA FOR OTHER FILL AREAS ON SITE SHALL MEET THE SAME REQUIREMENTS AS NOTED ABOVE.

7. SOIL COMPACTION SHALL BE PERFORMED IN ACCORDANCE WITH TECHNICAL SPECIFICATION FOR CONSTRUCTION OF RADIO ACCESS NETWORK SITES.

COMPACTION EQUIPMENT:

HAND OPERATED DOUBLE DRUM, VIBRATORY ROLLER, VIBRATORY PLATE COMPACTOR OR JUMPING JACK COMPACTOR.

ELECTRICAL INSTALLATION NOTES

1. ALL ELECTRICAL WORK SHALL BE PERFORMED IN ACCORDANCE WITH THE PROJECT SPECIFICATIONS, NEC AND ALL APPLICABLE LOCAL CODES.

2. CONDUIT ROUTINGS ARE SCHEMATIC. SUBCONTRACTOR SHALL INSTALL CONDUITS SO THAT ACCESS TO EQUIPMENT IS NOT BLOCKED.

3. WIRING, RACEWAY AND SUPPORT METHODS AND MATERIALS SHALL COMPLY WITH THE REQUIREMENTS OF THE NEC AND TELCORDIA.

4. ALL CIRCUITS SHALL BE SEGREGATED AND MAINTAIN MINIMUM CABLE SEPARATION AS REQUIRED BY THE NEC AND TELCORDIA.

5. CABLES SHALL NOT BE ROUTED THROUGH LADDER-STYLE CABLE TRAY RUNGS.

6. EACH END OF EVERY POWER, POWER PHASE CONDUCTOR (I.E., HOTS), GROUNDING, AND T1 CONDUCTOR AND CABLE SHALL BE LABELED WITH COLOR-CODED INSULATION OR ELECTRICAL TAPE (3M BRAND, 1/2 INCH PLASTIC ELECTRICAL TAPE WITH UV PROTECTION, OR EQUAL). THE IDENTIFICATION METHOD SHALL CONFORM WITH NEC & OSHA.

7. ALL ELECTRICAL COMPONENTS SHALL BE CLEARLY LABELED WITH PERMANENT LABELS. ALL EQUIPMENT SHALL BE LABELED WITH THEIR VOLTAGE RATING, PHASE CONFIGURATION, WIRE CONFIGURATION, POWER OR AMPACITY RATING, AND BRANCH CIRCUIT ID NUMBERS (I.E., PANELBOARD AND CIRCUIT ID'S). NO HAND WRITTEN LABELS ALLOWED.

8. PANELBOARDS (ID NUMBERS) AND INTERNAL CIRCUIT BREAKERS (CIRCUIT ID NUMBERS) SHALL BE CLEARLY LABELED. NO HAND WRITTEN LABELS ALLOWED.

9. ALL TIE WRAPS SHALL BE CUT FLUSH WITH APPROVED CUTTING TOOL TO REMOVE SHARP EDGES.

10. POWER, CONTROL, AND EQUIPMENT GROUND WIRING IN TUBING OR CONDUIT SHALL BE SINGLE CONDUCTOR (SIZE 14 AWG OR LARGER), 600V, OIL RESISTANT THHN OR THWN-2, CLASS B STRANDED COPPER CABLE RATED FOR 90 °C (WET AND DRY) OPERATION; LISTED OR LABELED FOR THE LOCATION AND RACEWAY SYSTEM USED, UNLESS OTHERWISE SPECIFIED.

11. SUPPLEMENTAL EQUIPMENT GROUND WIRING LOCATED INDOORS SHALL BE SINGLE CONDUCTOR (SIZE 6 AWG OR LARGER), 600V, OIL RESISTANT THHN OR THWN-2 GREEN INSULATION, CLASS B STRANDED COPPER CABLE RATED FOR 90 °C (WET AND DRY) OPERATION; LISTED OR LABELED FOR THE LOCATION AND RACEWAY SYSTEM USED, UNLESS OTHERWISE SPECIFIED.

12. POWER AND CONTROL WIRING, NOT IN TUBING OR CONDUIT, SHALL BE MULTI-CONDUCTOR, TYPE TC CABLE (SIZE 14 AWG OR LARGER), 600V, OIL RESISTANT THHN OR THWN-2, CLASS B STRANDED COPPER CABLE RATED FOR 90 °C (WET AND DRY) OPERATION; WITH OUTER JACKET; LISTED OR LABELED FOR THE LOCATION USED, UNLESS OTHERWISE SPECIFIED.

13. ALL POWER AND POWER GROUNDING CONNECTIONS SHALL BE CRIMP-STYLE, COMPRESSION WIRE LUGS AND WIRENUTS BY THOMAS AND BETTS (OR EQUAL). LUGS AND WIRENUTS SHALL BE RATED FOR OPERATION AT NO LESS THAN 75°C (90°C IF AVAILABLE).

14. RACEWAY AND CABLE TRAY SHALL BE LISTED OR LABELED FOR ELECTRICAL USE IN ACCORDANCE WITH NEMA, UL, ANSI/IEEE, AND NEC.

ELECTRICAL INSTALLATION NOTES (cont.)

15. ELECTRICAL METALLIC TUBING (EMT) OR RIGID NONMETALLIC CONDUIT (I.E., RIGID PVC SCHEDULE 40, OR RIGID PVC SCHEDULE 80 FOR LOCATIONS SUBJECT TO PHYSICAL DAMAGE) SHALL BE USED FOR EXPOSED INDOOR LOCATIONS.

16. ELECTRICAL METALLIC TUBING (EMT), ELECTRICAL NONMETALLIC TUBING (ENT), OR RIGID NONMETALLIC CONDUIT (RIGID PVC, SCHEDULE 40) SHALL BE USED FOR CONCEALED INDOOR LOCATIONS.

17. GALVANIZED STEEL INTERMEDIATE METALLIC CONDUIT (IMC) SHALL BE USED FOR OUTDOOR LOCATIONS ABOVE GRADE.

18. RIGID NONMETALLIC CONDUIT (I.E., RIGID PVC SCHEDULE 40 OR RIGID PVC SCHEDULE 80) SHALL BE USED UNDERGROUND; DIRECT BURIED, IN AREAS OF OCCASIONAL LIGHT VEHICLE TRAFFIC OR ENCASED IN REINFORCED CONCRETE IN AREAS OF HEAVY VEHICLE TRAFFIC.

19. LIQUID-TIGHT FLEXIBLE METALLIC CONDUIT (LIQUID-TITE FLEX) SHALL BE USED INDOORS AND OUTDOORS, WHERE VIBRATION OCCURS OR FLEXIBILITY IS NEEDED.

20. CONDUIT AND TUBING FITTINGS SHALL BE THREADED OR COMPRESSION-TYPE AND APPROVED FOR THE LOCATION USED. SETSCREW FITTINGS ARE NOT ACCEPTABLE.

21. CABINETS, BOXES, AND WIREWAYS SHALL BE LISTED OR LABELED FOR ELECTRICAL USE IN ACCORDANCE WITH NEMA, UL, ANSI/IEEE, AND NEC.

22. WIREWAYS SHALL BE EPOXY-COATED (GRAY) AND INCLUDE A HINGED COVER, DESIGNED TO SWING OPEN DOWNWARD; SHALL BE PANDUIT TYPE E (OR EQUAL); AND RATED NEMA 1 (OR BETTER) INDOORS, OR NEMA 3R (OR BETTER) OUTDOORS.

23. EQUIPMENT CABINETS, TERMINAL BOXES, JUNCTION BOXES, AND PULL BOXES SHALL BE GALVANIZED OR EPOXY-COATED SHEET STEEL, SHALL MEET OR EXCEED UL 50, AND RATED NEMA 1 (OR BETTER) INDOORS, OR NEMA 3R (OR BETTER) OUTDOORS

24. METAL RECEPTACLE, SWITCH, AND DEVICE BOXES SHALL BE GALVANIZED, EPOXY-COATED, OR NON-CORRODING; SHALL MEET OR EXCEED UL 514A AND NEMA OS 1; AND RATED NEMA 1 (OR BETTER) INDOORS, OR WEATHER PROTECTED (WP OR BETTER) OUTDOORS.

25. NONMETALLIC RECEPTACLE, SWITCH, AND DEVICE BOXES SHALL MEET OR EXCEED NEMA OS 2; AND RATED NEMA 1 (OR BETTER) INDOORS, OR WEATHER PROTECTED (WP OR BETTER) OUTDOORS.

26. THE SUBCONTRACTOR SHALL NOTIFY AND OBTAIN NECESSARY AUTHORIZATION FROM THE CONTRACTOR BEFORE COMMENCING WORK ON THE AC POWER DISTRIBUTION PANELS.

27. THE SUBCONTRACTOR SHALL PROVIDE NECESSARY TAGGING ON THE BREAKERS, CABLES AND DISTRIBUTION PANELS IN ACCORDANCE WITH THE APPLICABLE CODES AND STANDARDS TO SAFEGUARD AGAINST LIFE AND PROPERTY.

VRG
VERTICAL RESOURCES GRP.
489 Washington Street
Auburn, MA 01501
Tel. (508) 981- 9590
Fax (508) 519 - 8939
mnobre@verticalresourcesgrp.com

EMPIRE telecom
EMPIRE TELECOM USA, LLC
16 ESQUIRE ROAD
BILLERICA, MA 01821

SITE NUMBER: CT1014
SITE NAME: BERLIN NE
PROJECT: RF MOD // IP
260 BECKLEY ROAD
BERLIN, CT 06037
HARTFORD COUNTY

at&t
550 COCHITUATE RD
SUITES 13 & 14
FRAMINGHAM, MA 01701

NO.	DATE	REVISION	BY	CHK	APP'D
2	04/16/20	ADDED PLATFORM UPGRADE	E.L.P.	G.A.M.	
1	09/23/19	GENERAL REVISIONS	E.L.P.	G.A.M.	
0	05/08/19	FOR CONSTRUCTION	E.L.P.	G.A.M.	

SCALE | DESIGNED BY: M.N. | DRAWN BY: G.A.M.

STATE OF CONNECTICUT
JAMES P. STROHE
No. 8657
REGISTERED PROFESSIONAL ENGINEER

AT&T MOBILITY

NOTES

JOB NUMBER	DRAWING NUMBER	REV.
CT1014-IPRepeater	02	2

GENERAL NOTES

1. THE CELLULAR INSTALLATION IS AN UNMANNED PRIVATE AND SECURED COMPOUND. IT IS ONLY ACCESSED BY TRAINED TECHNICIANS FOR PERIODIC ROUTINE MAINTENANCE AND THEREFORE DOES NOT REQUIRE ANY WATER OR SANITARY SEWER SERVICE. THE FACILITY IS NOT GOVERNED BY REGULATIONS REQUIRING PUBLIC ACCESS PER ADA REQUIREMENTS.
2. CONSTRUCTION, MAINTENANCE & OPERATION OF PROPOSED TOWER FACILITY WILL BE HELD IN ACCORDANCE WITH ALL APPLICABLE LOCAL, STATE & FEDERAL REGULATIONS AND GUIDELINES.

AT&T RF SYSTEM SCHEDULE

POSITION	SECTOR	STATUS	BAND	ANTENNA MAKE	ANTENNA MODEL	SIZE(INCHES) (LxWxH)	RAD CTR, FT. AGL	AZIMUTH	MA DIPLEXER COMBINER	REMOTE RADIOS	RADIO LOCATION	SIZE(INCHES) (LxWxH)	FEEDER TYPE	FEEDER LENGTH	RAYCAP
1	Gamma	EXISTING	UMTS850	POWERWAVE	7770	55.0x11.0x5.0	±152'	40°	1-POW LGP27401 2-KAT KRC118255 B	---		---	(E2) 1-1/4" COAX	(E2) 175'	(E2) DC6-48-60-18-8F (P1) DC6-48-60-0-8CEV
2	Alpha	EXISTING	LTE700bc/WCS/SIRIUSXM	CCI	OPA65RLCUUH6	72.0x14.8x7.4	±152'	40°	1-COM CBC235R43 T	RRUS-11 RRUS-32 ION23 SDARS	TOWER TOWER TOWER	19.7x17.0x7.2 27.2x12.1x7.0 32.7x 8.1x5.8	(E1) FIBER (E2) DC TRUNK		
3	Alpha	EXISTING	LTE700b14/B50/PCS/AWS	QUINTEL	QS665122	72.0x12.0x9.6	±152'	40°	2-CCI TPI4070821 T	RRUS-4426 RRUS-3262	TOWER TOWER	14.9x13.1x5.9 27.2x12.1x7.0			
4	Alpha														
1	Alpha	EXISTING	UMTS850	POWERWAVE	7770	55.0x11.0x5.0	±152'	150°	1-POW LGP27401 2-KAT KRC118255 B	---		---	(E2) 1-1/4" COAX	(E2) 175'	
2	Beta	EXISTING	LTE700bc/WCS/SIRIUSXM	CCI	OPA65RLCUUH6	72.0x14.8x7.4	±152'	150°	1-COM CBC235R43 T	RRUS-11 RRUS-32 ION23 SDARS	TOWER TOWER TOWER	19.7x17.0x7.2 27.2x12.1x7.0 32.7x 8.1x5.8	(E1) FIBER (E2) DC TRUNK		
3	Beta	EXISTING	LTE700b14/B50/PCS/AWS	QUINTEL	QS665122	72.0x12.0x9.6	±152'	150°	2-CCI TPI4070821 T	RRUS-4426 RRUS-3262	TOWER TOWER	14.9x13.1x5.9 27.2x12.1x7.0			
4	Beta														
1	Beta	EXISTING	UMTS850	POWERWAVE	7770	55.0x11.0x5.0	±152'	270°	1-POW LGP27401 2-KAT KRC118255 B	---		---	(E2) 1-1/4" COAX	(E2) 175'	
2	Gamma	EXISTING	LTE700bc/WCS/SIRIUSXM	CCI	OPA65RLCUUH6	72.0x14.8x7.4	±152'	270°	1-COM CBC235R43 T	RRUS-11 RRUS-32 ION23 SDARS	TOWER TOWER TOWER	19.7x17.0x7.2 27.2x12.1x7.0 32.7x 8.1x5.8	(P2) DC TRUNK		
3	Gamma	EXISTING	LTE700b14/B50/PCS/AWS	QUINTEL	QS665122	72.0x12.0x9.6	±152'	270°	2-CCI TPI4070821 T	RRUS-4426 RRUS-3262	TOWER TOWER	14.9x13.1x5.9 27.2x12.1x7.0			
4	Gamma														

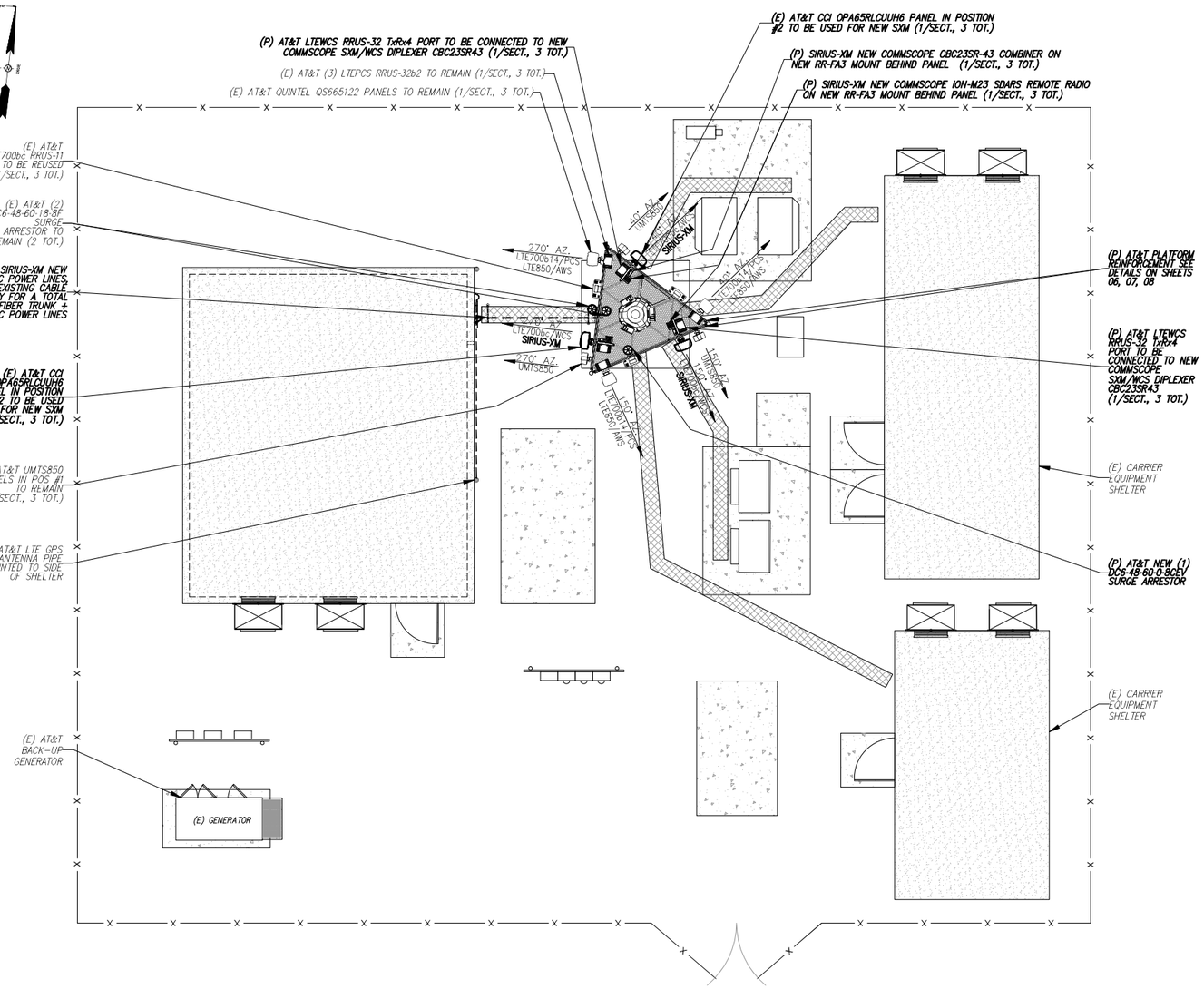

COMPOUND PLAN 1/03
SCALE: 1" = 6'

GRAPHIC SCALE
(IN FEET)
1 inch = 6 ft.

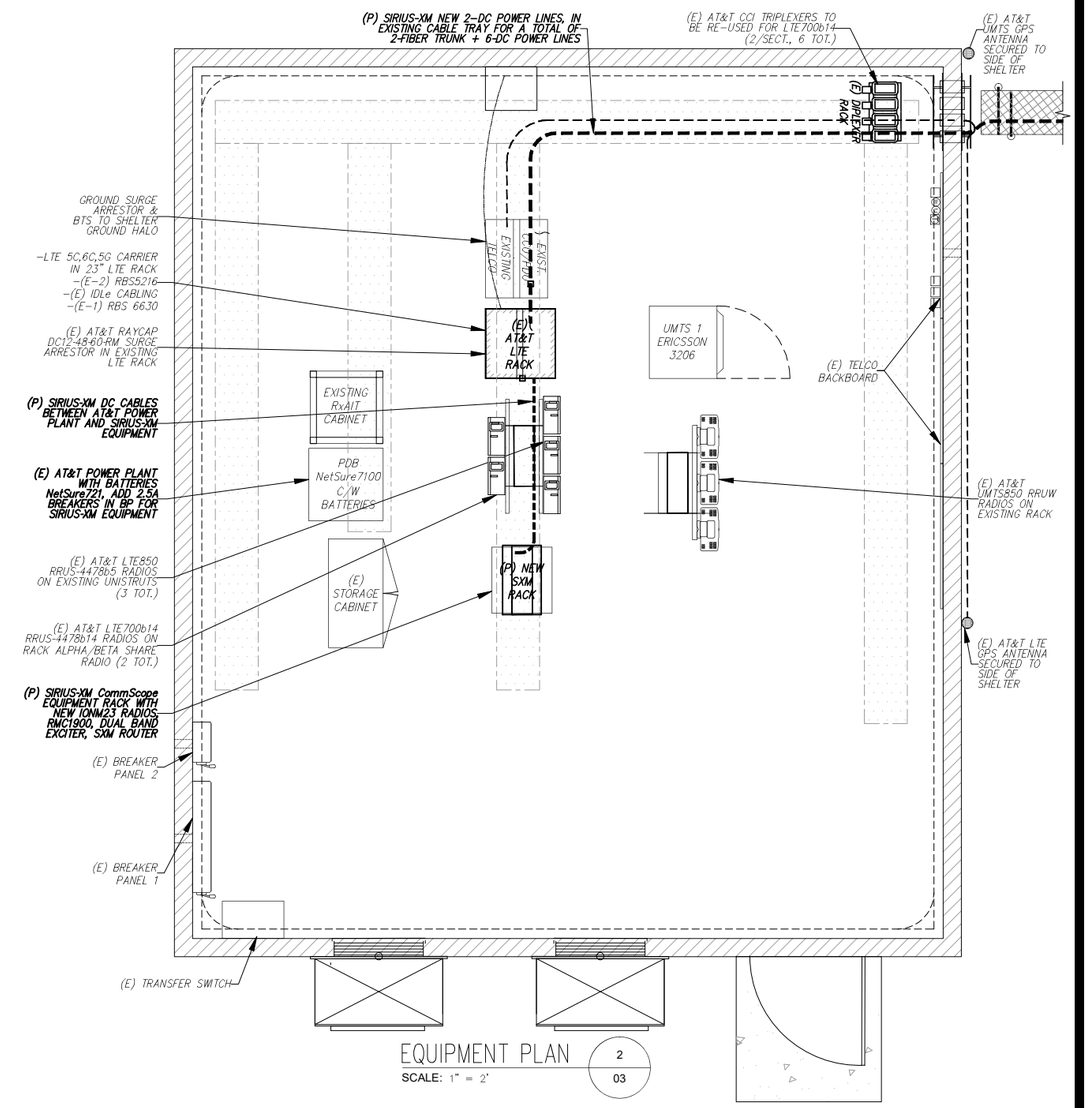

EQUIPMENT PLAN 2/03
SCALE: 1" = 2'

VRG
VERTICAL RESOURCES GRP.
489 Washington Street
Auburn, MA 01501
Tel. (508) 981- 9590
Fax (508) 519 - 8939
mnobre@verticalresourcesgrp.com

EMPIRE telecom
EMPIRE TELECOM USA, LLC
16 ESQUIRE ROAD
BILLERICA, MA 01821

SITE NUMBER: CT1014
SITE NAME: BERLIN NE
PROJECT: RF MOD // IP
260 BECKLEY ROAD
BERLIN, CT 06037
HARTFORD COUNTY

at&t
550 COCHITUATE RD
SUITES 13 & 14
FRAMINGHAM, MA 01701

NO.	DATE	REVISION	BY	CHK	APP'D
2	04/16/20	ADDED PLATFORM UPGRADE	E.L.P.	G.A.M.	
1	09/23/19	GENERAL REVISIONS	E.L.P.	G.A.M.	
0	05/08/19	FOR CONSTRUCTION	E.L.P.	G.A.M.	

SCALE | DESIGNED BY: M.N. | DRAWN BY: G.A.M.

STATE OF CONNECTICUT JAMES P. STROHE No. 8657 REGISTERED

AT&T MOBILITY

SITE PLAN & EQUIPMENT PLAN

JOB NUMBER	DRAWING NUMBER	REV
CT1014-IPRepeater	03	2

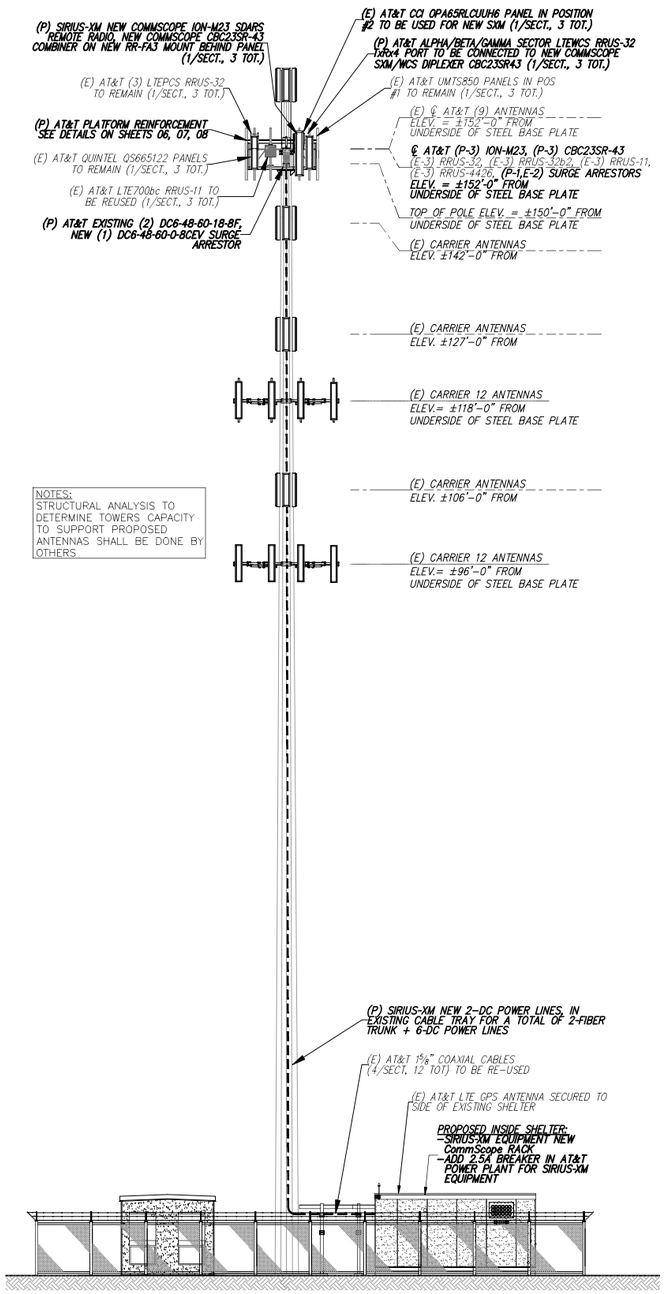

NOTES:
STRUCTURAL ANALYSIS TO DETERMINE TOWERS CAPACITY TO SUPPORT PROPOSED ANTENNAS SHALL BE DONE BY OTHERS

ELEVATION VIEW 1 / 04
SCALE: 1" = 10'

GRAPHIC SCALE
10 0 5 10 20 40
(IN FEET)
1 inch = 10 ft.

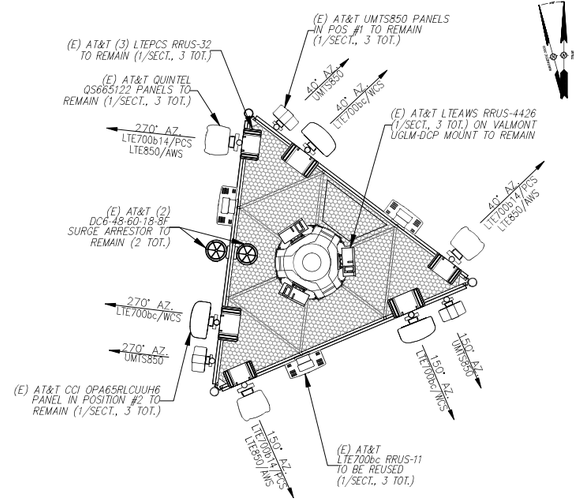

EXISTING

NOTES:
REFER TO FINAL RF DATA SHEET FOR FINAL ANTENNA SETTINGS AND CONFIGURATIONS

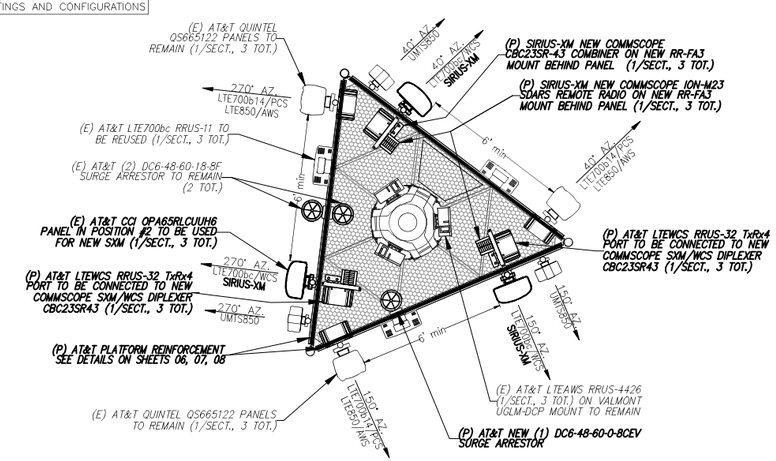

PROPOSED

ANTENNA MOUNTING PLAN VIEW 2 / 04
SCALE: N.T.S.

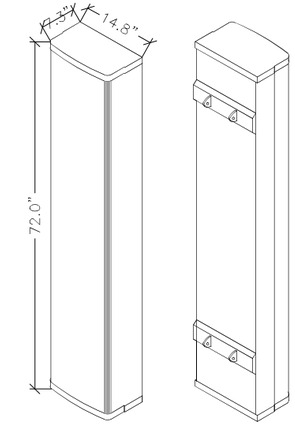

ISOMETRIC FRONT VIEW
ISOMETRIC REAR VIEW

(E) LTE700bc/WCS ANTENNA DETAIL 3 / 04
SCALE: N.T.S.

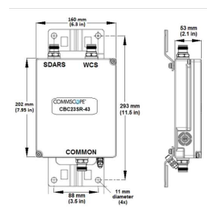

(P) LTEWCS/SDARS Commscope COMBINER 4 / 04
SCALE: N.T.S.

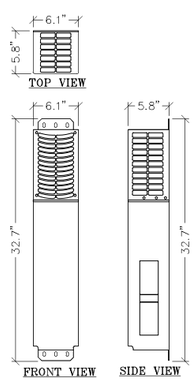

(P) SIRIUS-XM IONM23 SDARS RADIO 5 / 04
SCALE: N.T.S.

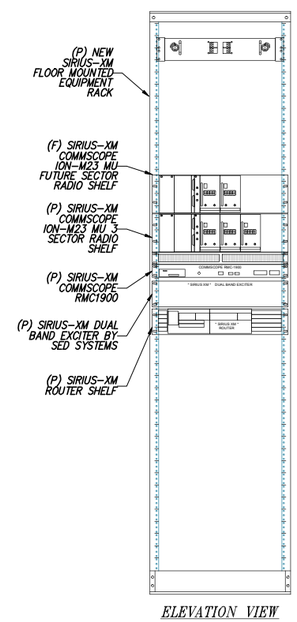

ELEVATION VIEW

(P) SIRIUS-XM EQUIPMENT RACK 6 / 04
SCALE: N.T.S.

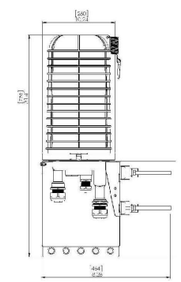

(P) RAYCAP SURGE SUPPRESSOR DC6486008CEV 7 / 04
SCALE: N.T.S.

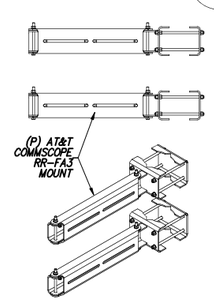

(P) AT&T SIRIUS-XM TRI-BRACKET MOUNT 8 / 04
SCALE: N.T.S.

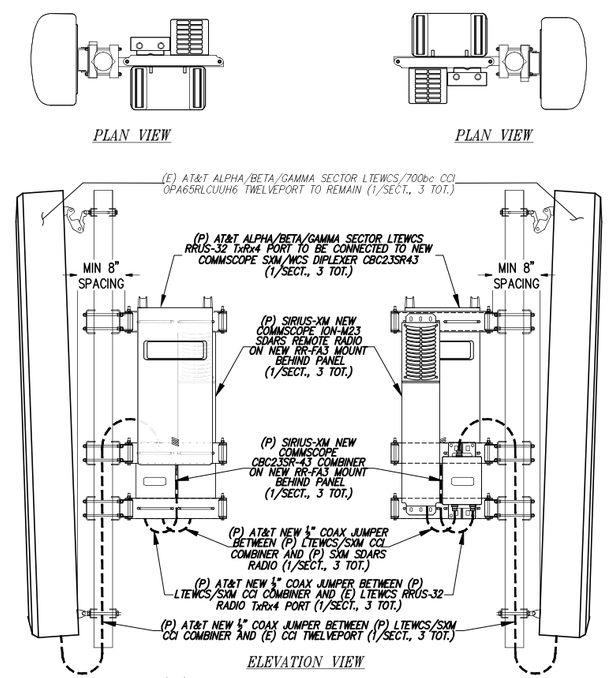

ELEVATION VIEW

(P) POS #2 LTEWCS SIRIUS-XM MOUNTING DETAIL 9 / 04
SCALE: N.T.S.

VRG
VERTICAL RESOURCES GRP.
489 Washington Street
Auburn, MA 01501
Tel. (508) 981- 9590
Fax (508) 519 - 8939
mnobre@verticalresourcesgrp.com

EMPIRE telecom
EMPIRE TELECOM USA, LLC
16 ESQUIRE ROAD
BILLERICA, MA 01821

SITE NUMBER: CT1014
SITE NAME: BERLIN NE
PROJECT: RF MOD // IP
260 BECKLEY ROAD
BERLIN, CT 06037
HARTFORD COUNTY

at&t
550 COCHITUATE RD
SUITES 13 & 14
FRAMINGHAM, MA 01701

NO.	DATE	REVISION	BY	CHK	APP'D
2	04/16/20	ADDED PLATFORM UPGRADE	E.L.P.	G.A.M.	
1	09/23/19	GENERAL REVISIONS	E.L.P.	G.A.M.	
0	05/08/19	FOR CONSTRUCTION	E.L.P.	G.A.M.	

SCALE | DESIGNED BY: M.N. | DRAWN BY: G.A.M.

STATE OF CONNECTICUT JAMES P. SPRAGUE No. 8657 REGISTERED PROFESSIONAL ENGINEER

AT&T MOBILITY

ELEVATION VIEW & ANTENNA LAYOUT

JOB NUMBER	DRAWING NUMBER	REV
CT1014-IPRepeater	04	2

NOTE:
DO NOT INSTALL CABLE GROUND KIT AT A BEND AND ALWAYS DIRECT GROUND WIRE DOWN TO CIGBE

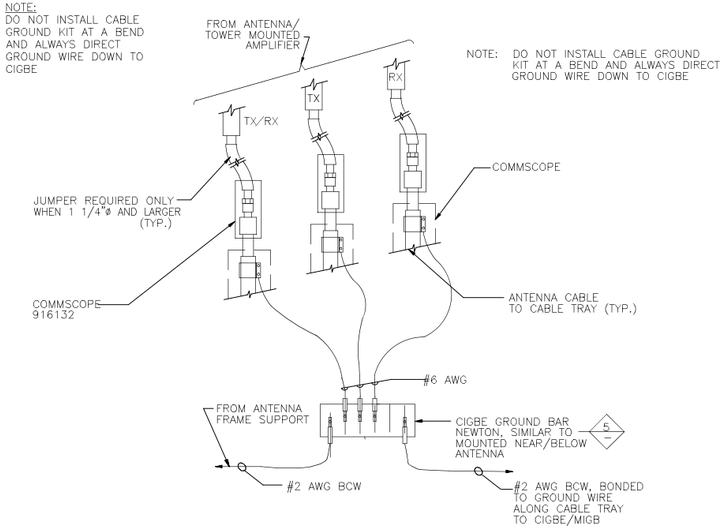

CONNECTION OF GROUND WIRES TO GROUNDING BAR (CIGBE)

1 / 05

SCALE: N.T.S.

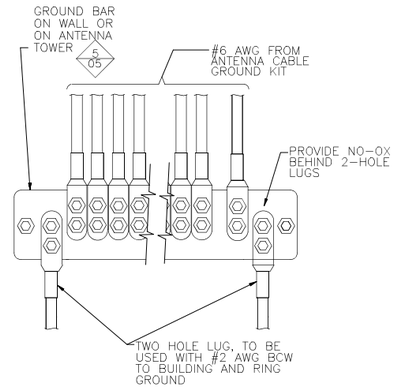

INSTALLATION OF GROUND WIRE TO GROUND BAR

2 / 05

SCALE: N.T.S.

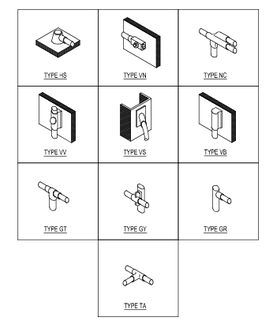

GROUNDING CONNECTION DETAIL

5 / 05

SCALE: N.T.S.

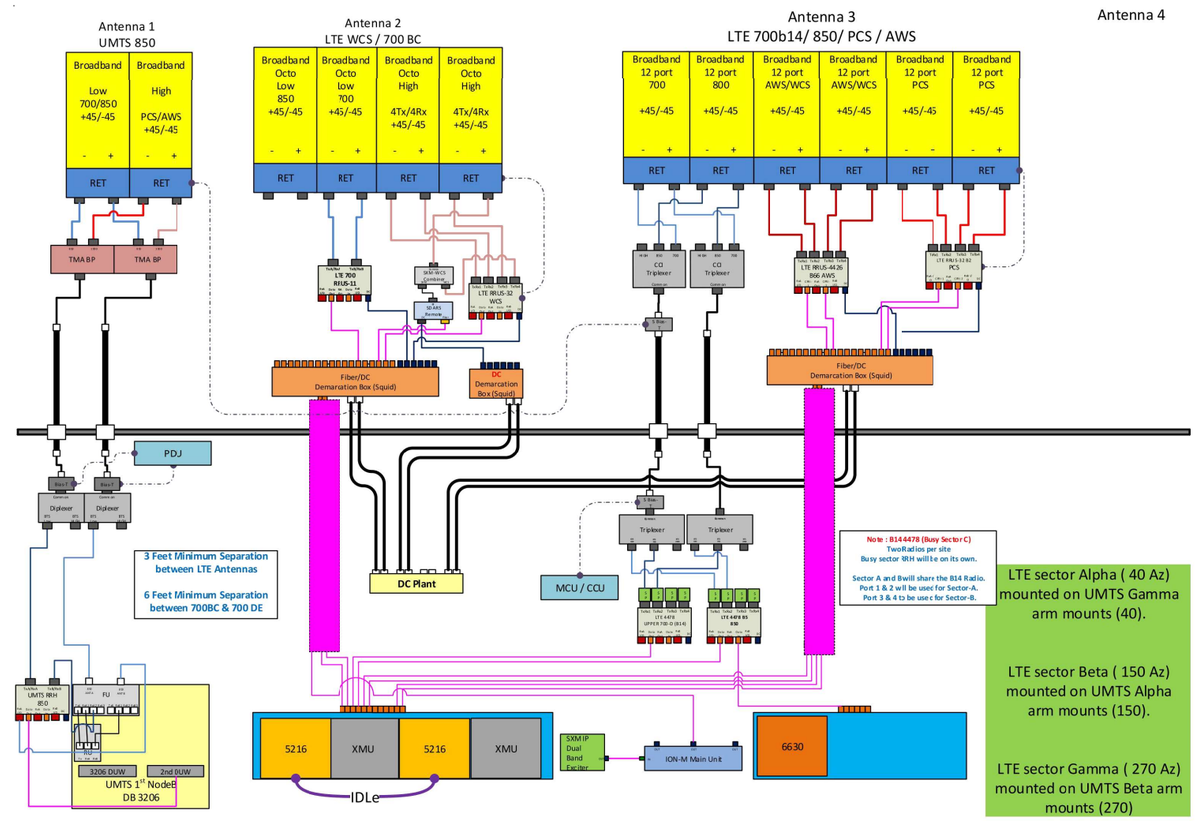

ALPHA/BETA/GAMMA SIRIUS-XM PLUMBING DIAGRAM

3 / 05

SCALE: N.T.S.

NOTE:
1. CONTRACTOR TO CONFIRM ALL PARTS
2. INSTALL ALL EQUIPMENT PER MANUFACTURERS RECOMMENDATIONS

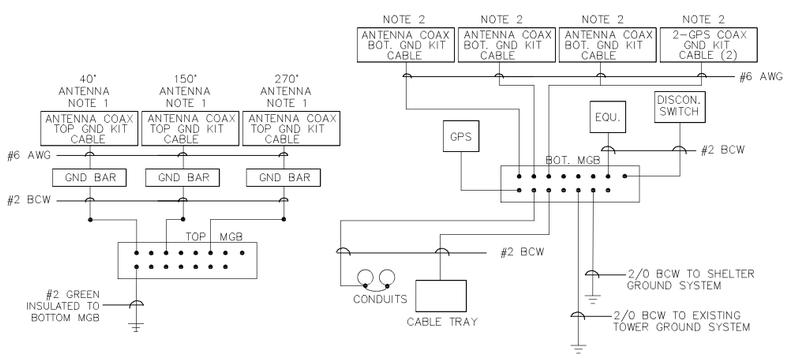

NOTE:
1. BOND ANTENNA GROUNDING KIT CABLE TO TOP CIGBE
2. BOND ANTENNA GROUNDING KIT CABLE TO BOTTOM CIGBE

SCHEMATIC GROUNDING DIAGRAM

4 / 05

SCALE: N.T.S.

NEWTON INSTRUMENT COMPANY, INC.
BUTNER, N.C. OR APPROVED EQUAL

ITEM	REQ.	PART NO.	DESCRIPTION
1	1	1/4"x4"x12"	PRE DRILLED GND. BAR
2	2	A-6056	WALL MTG. BRKT.
3	2	3061-4	INSULATORS
4	2	3012-13	5/8"-11x4" H.H.C.S.
5	4	3015-8	5/8 LOCKWASHER
6	2	3014-8	5/8"-11 HEX NUT

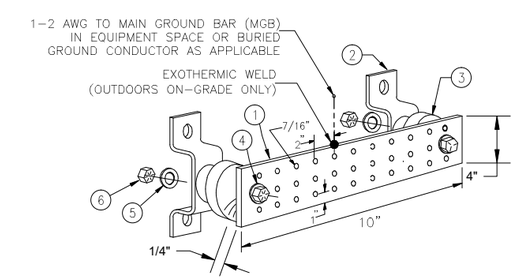

GROUND BAR DETAIL

6 / 05

SCALE: N.T.S.

VRG
VERTICAL RESOURCES GRP.
489 Washington Street
Auburn, MA 01501
Tel. (508) 981- 9590
Fax (508) 519 - 8939
mnobre@verticalresourcesgrp.com

EMPIRE telecom
EMPIRE TELECOM USA, LLC
16 ESQUIRE ROAD
BILLERICA, MA 01821

SITE NUMBER: CT1014
SITE NAME: BERLIN NE
PROJECT: RF MOD // IP
260 BECKLEY ROAD
BERLIN, CT 06037
HARTFORD COUNTY

at&t
550 COCHITUATE RD
SUITES 13 & 14
FRAMINGHAM, MA 01701

NO.	DATE	REVISION	BY	CHK	APP'D
2	04/16/20	ADDED PLATFORM UPGRADE	E.L.P.	G.A.M.	
1	09/23/19	GENERAL REVISIONS	E.L.P.	G.A.M.	
0	05/08/19	FOR CONSTRUCTION	E.L.P.	G.A.M.	

SCALE | DESIGNED BY: M.N. | DRAWN BY: G.A.M.

STATE OF CONNECTICUT JAMES P. STROHL No. 8657 REGISTERED PROFESSIONAL ENGINEER

AT&T MOBILITY

GROUNDING DETAILS

JOB NUMBER	DRAWING NUMBER	REV
CT1014-IPRepeater	05	2

ALL RIGHTS RESERVED. THIS DRAWING SHALL REMAIN THE PROPERTY OF MALOUF ENGINEERING INTERNATIONAL, INC. NO PART THEREOF SHALL BE REPRODUCED, COPIED, ADAPTED, DISCLOSED, OR DISTRIBUTED TO OTHERS WITHOUT WRITTEN PERMISSION OF MEI, INC.

BOLT TIGHTENING PROCEDURE

1. TIGHTEN BOLTS BY AISC "TURN OF THE NUT" METHOD USING THE CHART BELOW:

   BOLT LENGTHS UP TO AND INCLUDING FOUR DIAMETERS:
   + 1/3 TURN BEYOND SNUG TIGHT

   BOLT LENGTHS OVER FOUR AND UP TO EIGHT DIAMETERS:
   + 1/2 TURN BEYOND SNUG TIGHT

2. ALL ONE-SIDED BOLTS SHALL BE TIGHTENED IN ACCORDANCE WITH MANUFACTURER RECOMMENDATIONS

3. SPLICE BOLTS SUBJECT TO DIRECT TENSION SHALL BE INSTALLED AND TIGHTENED AS PER SECTION 8(D)(1) OF THE AISC MANUAL OF STEEL CONSTRUCTION. THE INSTALLATION PROCEDURE IS AS FOLLOWS:

   "FASTENERS SHALL BE INSTALLED IN PROPERLY ALIGNED HOLES AND BE TIGHTENED BY ONE OF THE METHODS DESCRIBED IN SUBSECTION 8(D)(1) THROUGH 8(D)(4).

   8(D)(1) TURN-OF-THE-NUT TIGHTENING:

   BOLTS SHALL BE INSTALLED IN ALL HOLES OF THE CONNECTION AND BROUGHT TO A SNUG TIGHT CONDITION. SNUG TIGHT IS DEFINED AS THE TIGHTNESS THAT EXISTS WHEN THE PLIES OF A JOINT ARE IN FIRM CONTACT. THIS MAY BE OBTAINED BY A FEW IMPACTS OF AN IMPACT WRENCH OR THE FULL EFFORT OF A MAN USING AN ORDINARY SPUD WRENCH. SNUG TIGHTENING SHALL PROGRESS SYSTEMATICALLY...UNTIL ALL THE BOLTS ARE SIMULTANEOUSLY SNUG TIGHT AND THE CONNECTION IS FULLY COMPACTED. FOLLOWING THIS INITIAL OPERATION, ALL BOLTS IN THE CONNECTION SHALL BE TIGHTENED FURTHER BY THE APPLICABLE AMOUNT OF ROTATION SPECIFIED ABOVE. DURING THE TIGHTENING OPERATION, THERE SHALL BE NO ROTATION OF THE PART NOT TURNED BY THE WRENCH. TIGHTENING SHALL PROGRESS SYSTEMATICALLY.

BEFORE 1/3 TURN

AFTER 1/3 TURN

ALLOWABLE ANGLE COPE

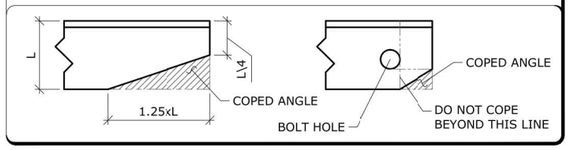

USUAL GAGES FOR ANGLES IN INCHES

LEG	8	7	6	5	4	3 1/2	3	2 1/2	2	1 3/4	1 1/2	1 3/8	1 1/4	1
G	4 1/2	4	3 1/2	3	2 1/2	2	1 3/4	1 3/8	1 1/8	1	7/8	7/8	3/4	5/8
G1	3	2 1/2	2 1/4	2										
G2	3	3	2 1/2	1 3/4										

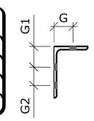

1. ALL DIMENSIONS REPRESENTED IN THE ABOVE TABLE ARE AISC MINIMUM REQUIREMENTS. CONTRACTOR SHALL VERIFY EXISTING CONDITIONS IN FIELD AND NOTIFY ENGINEER IF DISTANCES ARE LESS THAN THOSE PROVIDED.

2. THE DIMENSIONS PROVIDED ARE MINIMUM REQUIREMENTS. ACTUAL DIMENSIONS OR PROPOSED MEMBERS WITHIN THESE DRAWINGS MAY VARY FROM THE AISC MINIMUM REQUIREMENTS.

ELEV. (FT) C.L.	SECTOR	POSITION	ANT QTY.	APPURTENANCE MODEL	BEHIND PANEL / LOCATION
152.00				10.67FT. PLATFORM W/ RAILS	
152.00	ALPHA "X" SECTOR	1X	1	POWERWAVE 7770 PANEL ANTENNA	
152.00		1X	1	LGP21401 TMA BOX	YES
152.00		1X	1	LGP21401 TMA BOX	YES
152.00		2X	1	OPA-65R-LCUU-H6 PANEL ANTENNA	
152.00		2X	1	RRUS-32 BOX	YES
152.00		2X	1	ION-M23 SDARS RRU BOX	YES
152.00		2X	1	CBC23SR-43 DIPLEXER BOX	YES
152.00		3X	1	RRUS-11 BOX	(MOUNT FACE)
152.00		3X	1	RAYCAP DC6-48-60-18-8F OVP BOX	(MOUNT FACE)
152.00		4X	1	QS66512-2 PANEL ANTENNA	
152.00		4X	1	TPX-070821 TRIPLEXER BOX	YES
152.00		4X	1	TPX-070821 TRIPLEXER BOX	YES
152.00		4X	1	RRUS-32 B2 BOX	YES
152.00	BETA "Y" SECTOR	1Y	1	POWERWAVE 7770 PANEL ANTENNA	
152.00		1Y	1	LGP21401 TMA BOX	YES
152.00		1Y	1	LGP21401 TMA BOX	YES
152.00		2Y	1	OPA-65R-LCUU-H6 PANEL ANTENNA	
152.00		2Y	1	RRUS-32 BOX	YES
152.00		2Y	1	ION-M23 SDARS RRU BOX	YES
152.00		2Y	1	CBC23SR-43 DIPLEXER BOX	YES
152.00		3Y	1	RRUS-11 BOX	(MOUNT FACE)
152.00		3Y	1	RAYCAP DC6-48-60-18-8F OVP BOX	(MOUNT FACE)
152.00		3Y	1	RAYCAP DC6-48-60-0-8C-EV OVP BOX	(MOUNT FACE)
152.00		4Y	1	QS66512-2 PANEL ANTENNA	
152.00		4Y	1	TPX-070821 TRIPLEXER BOX	YES
152.00		4Y	1	TPX-070821 TRIPLEXER BOX	YES
152.00		4Y	1	RRUS-32 B2 BOX	YES
152.00	GAMMA "Z" SECTOR	1Z	1	POWERWAVE 7770 PANEL ANTENNA	
152.00		1Z	1	LGP21401 TMA BOX	YES
152.00		1Z	1	LGP21401 TMA BOX	YES
152.00		2Z	1	OPA-65R-LCUU-H6 PANEL ANTENNA	
152.00		2Z	1	RRUS-32 BOX	YES
152.00		2Z	1	ION-M23 SDARS RRU BOX	YES
152.00		2Z	1	CBC23SR-43 DIPLEXER BOX	YES
152.00		3Z	1	RRUS-11 BOX	(MOUNT FACE)
152.00		4Z	1	QS66512-2 PANEL ANTENNA	
152.00		4Z	1	TPX-070821 TRIPLEXER BOX	YES
152.00		4Z	1	TPX-070821 TRIPLEXER BOX	YES
152.00		4Z	1	RRUS-32 B2 BOX	YES

APPURTENANCES CONSIDERED

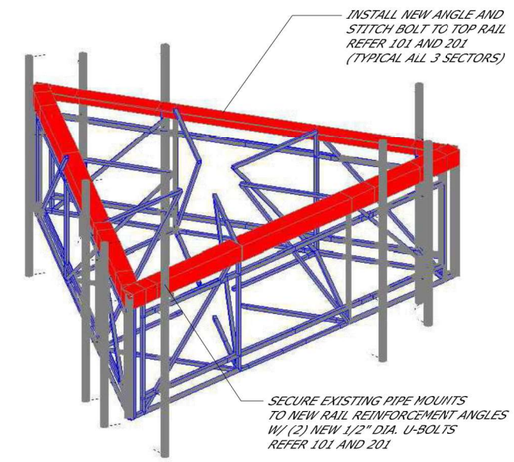

ISOMETRIC VIEW
SCALE: NOT TO SCALE

MALOUF ENGINEERING INTERNATIONAL, INC.
STRUCTURAL CONSULTANTS
17950 PRESTON ROAD SUITE 720
DALLAS, TEXAS 75252-5635
972-783-2578 (fax: 2583)
www.maloufengineering.com
© MEI, INC. 2020

CT1014 BERLIN NE / FA 10034969
10.67 FT± PLATFORM MOUNT
260 BECKLEY ROAD, BERLIN, CT 06037
LAT: 41-37-54.17 N - LON: 72-43-47.7 W

AT&T

NO.	DATE	REVISIONS	DRAWN	ENG'D	APP'D
0	04/09/20	ISSUED FOR CONSTRUCTION	BDB	MDG	MM

STATE OF CONNECTICUT · E. MARK MALOUF · No. 17715 · LICENSED PROFESSIONAL ENGINEER

APRIL 09, 2020

VERTICAL RESOURCES GROUP / AT&T

TECHNICAL SPECIFICATION NOTES CONT.

MEI PROJECT ID	SHEET NUMBER	REV.
CT06030M-20V1	T03	0

VRG
VERTICAL RESOURCES GRP.
489 Washington Street
Auburn, MA 01501
Tel. (508) 981- 9590
Fax (508) 519 - 8939
mnobre@verticalresourcesgrp.com

EMPIRE telecom
EMPIRE TELECOM USA, LLC
16 ESQUIRE ROAD
BILLERICA, MA 01821

SITE NUMBER: CT1014
SITE NAME: BERLIN NE
PROJECT: RF MOD // IP
260 BECKLEY ROAD
BERLIN, CT 06037
HARTFORD COUNTY

at&t
550 COCHITUATE RD
SUITES 13 & 14
FRAMINGHAM, MA 01701

NO.	DATE	REVISION	BY	CHK	APP'D
2	04/16/20	ADDED PLATFORM UPGRADE	E.L.P.	G.A.M.	
1	09/23/19	GENERAL REVISIONS	E.L.P.	G.A.M.	
0	05/08/19	FOR CONSTRUCTION	E.L.P.	G.A.M.	

SCALE | DESIGNED BY: M.N. | DRAWN BY: G.A.M.

AT&T MOBILITY

PLATFORM REINFORCEMENT DETAILS I

JOB NUMBER	DRAWING NUMBER	REV
CT1014-IPRepeater	06	2

ALL RIGHTS RESERVED. THIS DRAWING SHALL REMAIN THE PROPERTY OF MALOUF ENGINEERING INTERNATIONAL, INC. NO PART THEREOF SHALL BE REPRODUCED, COPIED, ADAPTED, DISCLOSED, OR DISTRIBUTED TO OTHERS WITHOUT WRITTEN PERMISSION OF MEI, INC.

NOTE:
ANTENNA INSTALLATION CONTRACTOR TO PROVIDE AND INSTALL ALL REQUIRED PLATFORM STRUCTURAL MODIFICATION HARDWARE REQUIRED

NOTE:
REFER TO RF DATA SHEET/ANTENNA KEY & MEI REPORT FOR APPURTENANCES, MODEL AND LOCATION, CONSIDERED ATTACHED TO MOUNT SHOWN.

REFER SHEET T02 - T03 FOR TECH. SPEC. NOTES

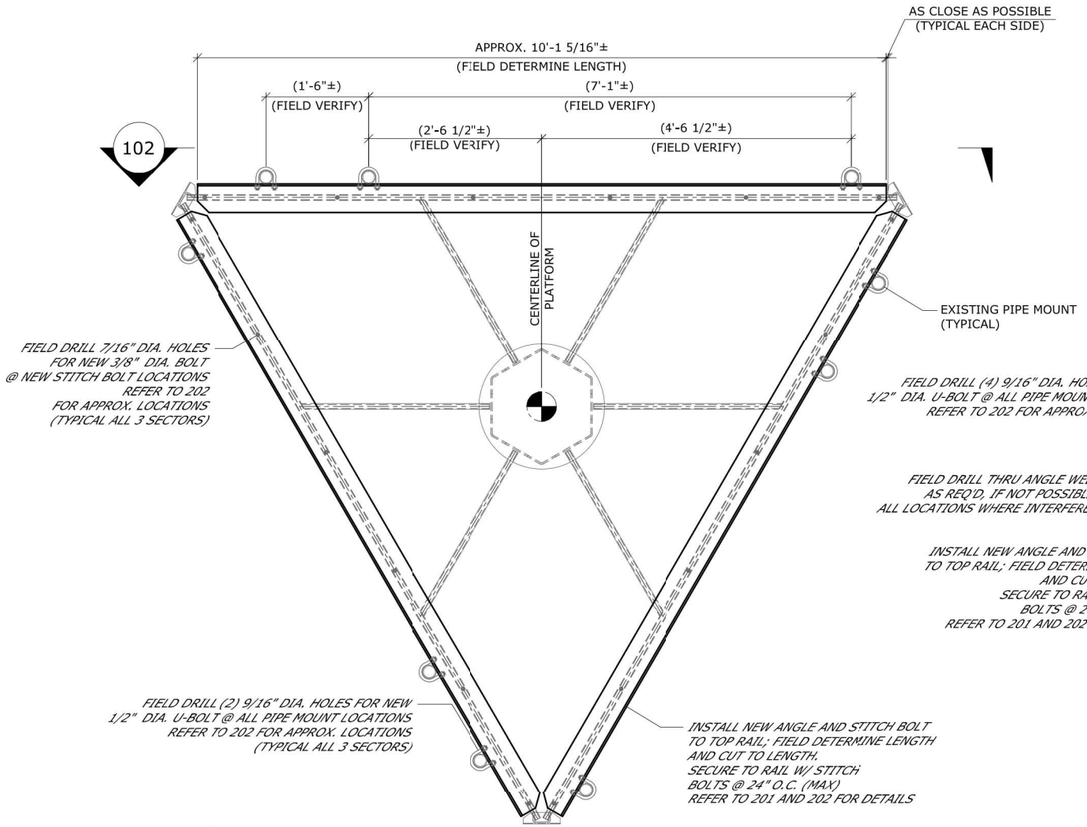

101 PLAN VIEW: PLATFORM FRAME REINFORCEMENT
SCALE: 1/2" = 1'-0" (@ TOP OF PLATFORM)

NOTE:
LAYOUTS WERE CREATED FROM LIMITED INFORMATION AND PHOTOS PROVIDED, FIELD VERIFICATION OF FIT FOR REINFORCEMENT ANGLES ARE RECOMMENDED PRIOR TO PURCHASE. IF ANY ISSUES ARE FOUND THAT INTERFERE WITH ANGLE INSTALLATION DURING VERIFICATION PROCESS PLEASE CONTACT ENGINEER AND SUPPLY APPLICABLE MOUNT INFORMATION.

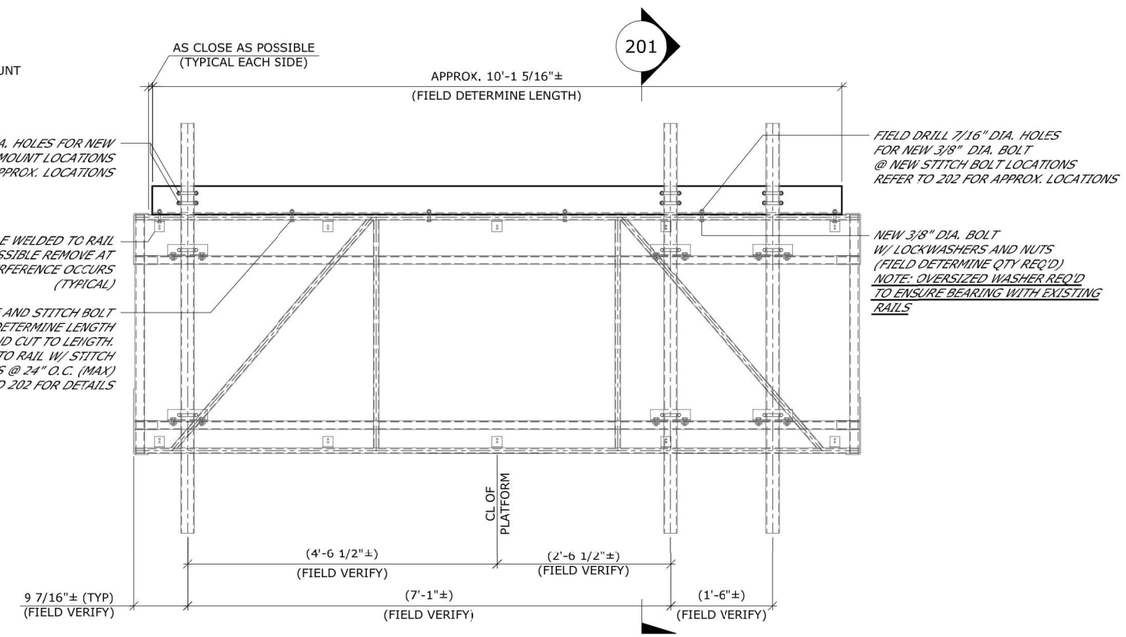

102 ELEVATION: PLATFORM FRAME REINFORCEMENT
SCALE: 1/2" = 1'-0" (@ EXTERIOR OF FRAME)

MALOUF ENGINEERING INTERNATIONAL, INC.
STRUCTURAL CONSULTANTS
17950 PRESTON ROAD SUITE 720
DALLAS, TEXAS 75252-5635
972-783-2578 (fax: 2583)
www.maloufengineering.com
© MEI, INC. 2020

CT1014 BERLIN NE / FA 10034969
10.67 FT± PLATFORM MOUNT
260 BECKLEY ROAD, BERLIN, CT 06037
LAT: 41-37-54.17 N - LON: 72-43-47.7 W

AT&T

NO.	DATE	REVISIONS	DRAWN	ENG'D.	APP'D.
0	04/09/20	ISSUED FOR CONSTRUCTION	BDB	MDG	MM

STATE OF CONNECTICUT
E. MARK MALOUF
No. 17715
LICENSED PROFESSIONAL ENGINEER
APRIL 09, 2020

VERTICAL RESOURCES GROUP / AT&T
PLATFORM REINFORCEMENT DETAILS

MEI PROJECT ID	SHEET NUMBER	REV.
CT06030M-20V1	**S01**	0

VRG
VERTICAL RESOURCES GRP.
489 Washington Street
Auburn, MA 01501
Tel. (508) 981- 9590
Fax (508) 519 - 8939
mnobre@verticalresourcesgrp.com

EMPIRE telecom
EMPIRE TELECOM USA, LLC
16 ESQUIRE ROAD
BILLERICA, MA 01821

SITE NUMBER: CT1014
SITE NAME: BERLIN NE
PROJECT: RF MOD // IP
260 BECKLEY ROAD
BERLIN, CT 06037
HARTFORD COUNTY

at&t
550 COCHITUATE RD
SUITES 13 & 14
FRAMINGHAM, MA 01701

NO.	DATE	REVISION	BY	CHK	APP'D
2	04/16/20	ADDED PLATFORM UPGRADE	E.L.P.	G.A.M.	
1	09/23/19	GENERAL REVISIONS	E.L.P.	G.A.M.	
0	05/08/19	FOR CONSTRUCTION	E.L.P.	G.A.M.	

SCALE | DESIGNED BY: M.N. | DRAWN BY: G.A.M.

AT&T MOBILITY
PLATFORM REINFORCEMENT DETAILS II

JOB NUMBER	DRAWING NUMBER	REV
CT1014-IPRepeater	07	2

ALL RIGHTS RESERVED. THIS DRAWING SHALL REMAIN THE PROPERTY OF MALOUF ENGINEERING INTERNATIONAL, INC. NO PART THEREOF SHALL BE REPRODUCED, COPIED, ADAPTED, DISCLOSED, OR DISTRIBUTED TO OTHERS WITHOUT WRITTEN PERMISSION OF MEI, INC.

NOTE:
ANTENNA INSTALLATION CONTRACTOR TO PROVIDE AND INSTALL ALL REQUIRED PLATFORM STRUCTURAL MODIFICATION HARDWARE REQUIRED

NOTE:
REFER TO RF DATA SHEET/ANTENNA KEY & MEI REPORT FOR APPURTENANCES, MODEL AND LOCATION, CONSIDERED ATTACHED TO MOUNT SHOWN.

REFER SHEET T02 - T03 FOR TECH. SPEC. NOTES

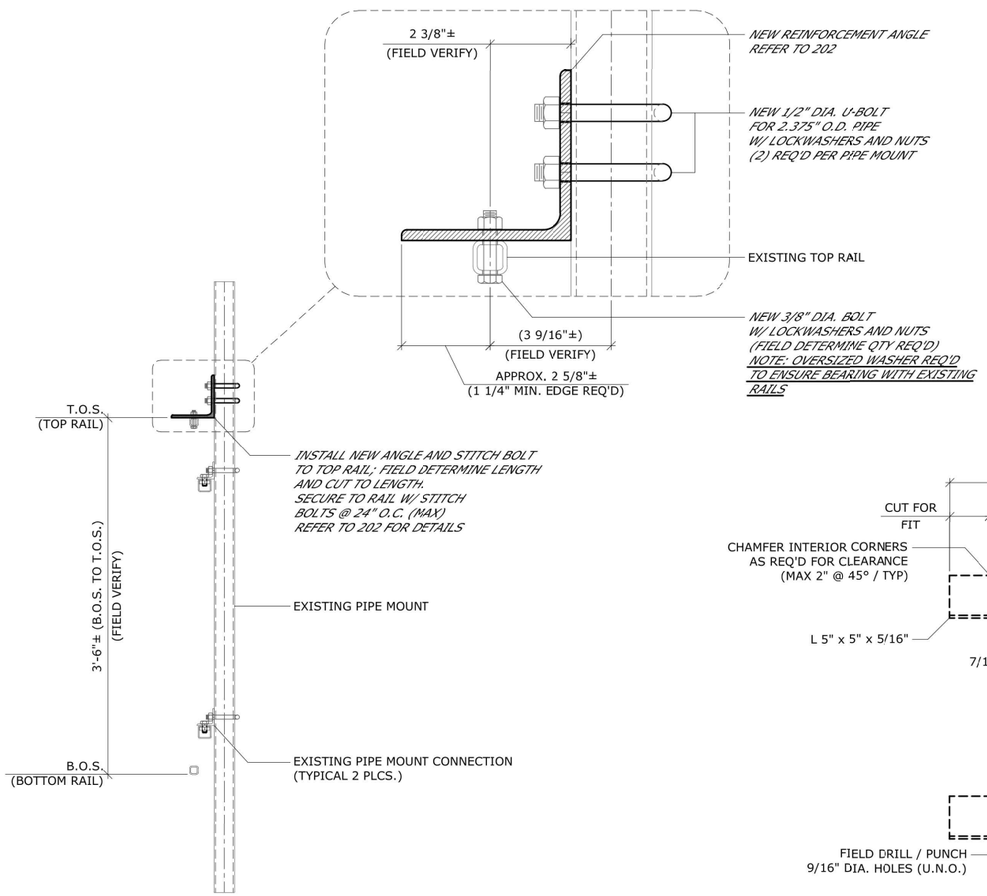

201 **ELEVATION: PLATFORM FRAME REINFORCEMENT**
SCALE: 3/8' = 1'-0" (@ EXTERIOR OF FRAME)

NOTE:
LAYOUTS WERE CREATED FROM LIMITED INFORMATION AND PHOTOS PROVIDED, FIELD VERIFICATION OF FIT FOR REINFORCEMENT ANGLES ARE RECOMMENDED PRIOR TO PURCHASE. IF ANY ISSUES ARE FOUND THAT INTERFERE WITH ANGLE INSTALLATION DURING VERIFICATION PROCESS PLEASE CONTACT ENGINEER AND SUPPLY APPLICABLE MOUNT INFORMATION.

(*) LENGTH APPROX. AND FOR BIDDING PURPOSE ONLY;
FIELD VERIFY / DETERMINE ACTUAL LENGTH PRIOR TO INSTALLATION.

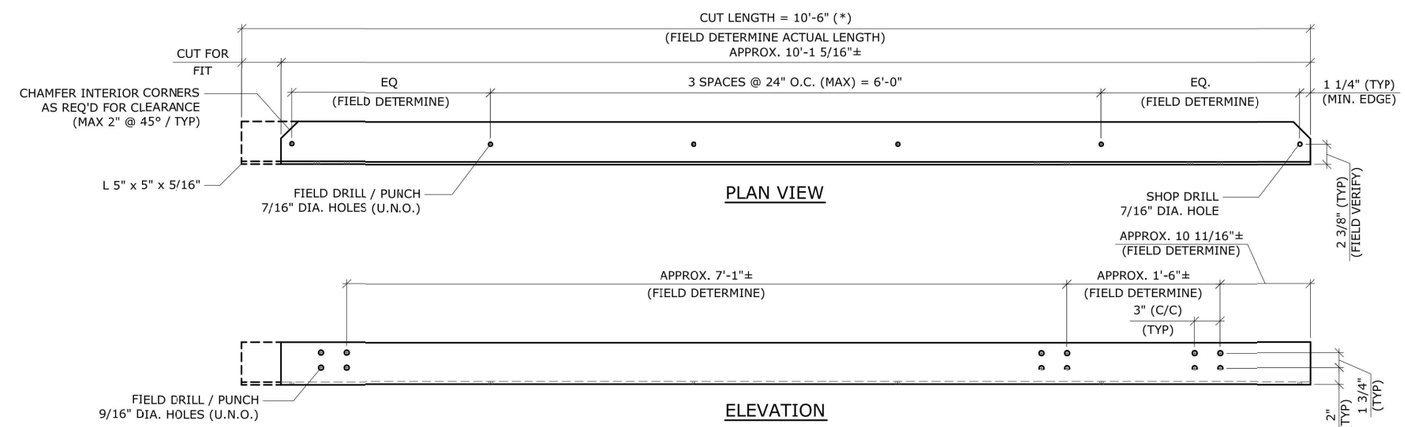

202 **DETAIL: TOP RAIL REINFORCEMENT ANGLE**
SCALE: 3/4" = 1'-0" (3 REQ'D TOTAL)

MALOUF ENGINEERING INTERNATIONAL, INC.
STRUCTURAL CONSULTANTS
17950 PRESTON ROAD SUITE 720
DALLAS, TEXAS 75252-5635
972-783-2578 (fax: 2583)
www.maloufengineering.com
© MEI, INC. 2020

CT1014 BERLIN NE / FA 10034969
10.67 FT± PLATFORM MOUNT
260 BECKLEY ROAD, BERLIN, CT 06037
LAT: 41-37-54.17 N - LON: 72-43-47.7 W

AT&T

NO.	DATE	REVISIONS	DRAWN	ENG'D	APP'D
0	04/09/20	ISSUED FOR CONSTRUCTION	BDB	MDG	MM

STATE OF CONNECTICUT · DEMARK MALOUF · 17715 · LICENSED PROFESSIONAL ENGINEER
APRIL 09, 2020

VERTICAL RESOURCES GROUP / AT&T
PLATFORM REINFORCEMENT DETAILS CONT.

MEI PROJECT ID	SHEET NUMBER	REV.
CT06030M-20V1	**S02**	0

VRG
VERTICAL RESOURCES GRP.
489 Washington Street
Auburn, MA 01501
Tel. (508) 981- 9590
Fax (508) 519 - 8939
mnobre@verticalresourcesgrp.com

EMPIRE telecom
EMPIRE TELECOM USA, LLC
16 ESQUIRE ROAD
BILLERICA, MA 01821

SITE NUMBER: CT1014
SITE NAME: BERLIN NE
PROJECT: RF MOD // IP
260 BECKLEY ROAD
BERLIN, CT 06037
HARTFORD COUNTY

at&t
550 COCHITUATE RD
SUITES 13 & 14
FRAMINGHAM, MA 01701

NO.	DATE	REVISION	BY	CHK	APP'D
2	04/16/20	ADDED PLATFORM UPGRADE	E.L.P.	G.A.M.	
1	09/23/19	GENERAL REVISIONS	E.L.P.	G.A.M.	
0	05/08/19	FOR CONSTRUCTION	E.L.P.	G.A.M.	

SCALE | DESIGNED BY: M.N. | DRAWN BY: G.A.M.

AT&T MOBILITY
PLATFORM REINFORCEMENT DETAILS III

JOB NUMBER	DRAWING NUMBER	REV
CT1014-IPRepeater	08	2