Post-Mod Structural Mount Analysis Report

PLATFORM MOUNT with RAILS

AT&T | CT1014 Berlin NE Site | FA 10034969

Berlin, Connecticut

April 9, 2020

MEI PROJECT ID: CT06030M-20V1

MALOUF ENGINEERING INTL., INC.
STRUCTURAL CONSULTANTS

17950 PRESTON ROAD, SUITE 720 ▪ DALLAS, TEXAS 75252 ▪ TEL. 972 -783-2578 FAX 972-783-2583
www.maloufengineering.com

MALOUF ENGINEERING INTL., INC.

STRUCTURAL CONSULTANTS

April 9, 2020

Mr. Miguel Nobre
Vertical Resources Group
Auburn, MA 01501

POST-MODIFICATIONS STRUCTURAL MOUNT ANALYSIS

Mount/Make/Model:	10.67 ft **Mount - Platform**		Not Known | Not Known	
Client/Site Name/#:	**AT&T**		**CT1014 Berlin NE | FA 10034969**	
MEI Project ID:	**CT06030M-20V1**			
Location:	260 Beckley Rd Berlin, CT 06037		Hartford County FCC N/A	
	LAT	41-37-54.17 N	LON	72-43-47.7 W

EXECUTIVE SUMMARY:

Malouf Engineering Int'l (MEI), as requested, has performed a structural analysis and modification design of the referenced mount to assess the impact of the appurtenances configuration as noted in Table 1.

Based on the stress analysis performed, the mount **is in conformance** with the Int'l Building Code (IBC) / ANSI/TIA-**222-H** Standard for the loading considered under the criteria listed and referenced in the report sections **after proper installation of the recommended structural strengthening modifications outlined**.

	Max. Demand-Ratio [CSR]	Findings
Existing Mount	120.0%	**FAIL**
Modified Mount	**72.3%**	**PASS**

The subject mount is structurally acceptable to support the appurtenances configuration as noted in Table 1 after proper installation of the proposed strengthening modifications. Refer to the mount modification drawings for details. The mount is to be properly supported to ensure its stability during the construction work.

MEI appreciates the opportunity of providing our continuing professional services to you. If you have any questions or need further assistance on this or other projects, please contact us.

Respectfully submitted,

MALOUF ENGINEERING INT'L, INC.

Analysis performed by:

Michael Garrett, PE
Project Engineer

Reviewed & Approved by:

STATE OF CONNECTICUT
E. MARK MALOUF
No. 17715
LICENSED
PROFESSIONAL ENGINEER

E. Mark Malouf, PE
Connecticut #17715
972-783-2578 ext. 106
mmalouf@maloufengineering.com

4/9/2020

TABLE OF CONTENTS

1. INTRODUCTION & SCOPE ***4***

2. SOURCE OF DATA ***4***

3. ANALYSIS CRITERIA ***4***

Appurtenances Configuration ---------- 5

4. ANALYSIS PROCEDURE ***7***

Analysis Program ---------- 7

Assumptions ---------- 7

5. ANALYSIS RESULTS ***8***

6. FINDINGS & RECOMMENDATIONS ***9***

7. REPORT DISCLAIMER ***10***

APPENDIX 1 – FEM ANALYSIS PRINTOUT ***11***

APPENDIX 2 – SOURCE / REFERENCE DOCUMENTS ***12***

Separate Attachment:

Mount Modification Design Drawings

This report is not to be reproduced or copied in whole or in part without MEI's written consent. **2020, MEI, Inc. ©**

1. INTRODUCTION & SCOPE

A mount structural analysis and modification design were performed by Malouf Engineering Int'l (MEI), as requested and authorized by Mr. Miguel Nobre, Vertical Resources Group, on behalf of AT&T, to determine whether the subject support mount will be in compliance with the referenced code/standard(s) when supporting the proposed appurtenances configuration loading. The different report sections detail the applicable information used in this analysis, relating to the mount data, the appurtenances configuration and the loading considered.

The different report sections detail the applicable information used in this evaluation, relating to the mount data, the appurtenances configuration and the wind and ice loading considered.

2. SOURCE OF DATA

The following information has been used in this evaluation as source data that accurately represent the mount and the related appurtenances:

	Source	Information	Reference
STRUCTURE			
Mount Information	Vertical Resources Group | Miquel Nobre	Platform Sketch | Mount Mapping	Dated 02/18/2020 Dated 06/18/2016
Tower Information	No Tower Data Available		
Material Grade	Assumed based on typical mount materials used for this type/manufacturer – Refer to Appendix.		
APPURTENANCES CONFIGURATION			
	Vertical Resources Group | Miquel Nobre	AT&T RFDS Email Instructions	Dated 01/09/2019 Dated 02/19/2020
PRIOR MOUNT STRUCTURAL MODIFICATIONS		Not Known	

3. ANALYSIS CRITERIA

The structural analysis performed used the following criteria:

CODE / STANDARD	2018 Int'l Building Code / ANSI/TIA-222-H Standard	
LOADING CASES	*Full Wind*:	118 Mph with No Radial Ice
	Iced Case:	50 Mph + 1.50" Radial Ice
	Service:	60 Mph
	Seismic:	S_s = 0.20 / S_1 = 0.055/ Site Class: D - Default Soil
STRUCTURE CRITERIA	*Risk Category*: Class II	
	Exposure Category: 'C' | Ground Elev. = 196.87 ft | *Topographic Category:* 1	

This report is not to be reproduced or copied in whole or in part without MEI's written consent. **2020, MEI, Inc. ©**

Appurtenances Configuration

The following appurtenances configuration is denoted by Tables 1A and 1B:

Table 1A: Appurtenances Configuration Considered – Sectors X and Y (Alpha and Beta)

Elev. (ft) C.L.	Sector	Position	Ant Qty.	Appurtenance Model	Behind Panel / Location
152.00				10.67ft. Platform w/ Rails	
152.00	X	1X	1	Powerwave 7770 Panel Antenna	
152.00		1X	1	LGP21401 TMA Box	Yes
152.00		1X	1	LGP21401 TMA Box	Yes
152.00		2X	1	OPA-65R-LCUU-H6 Panel Antenna	
152.00		2X	1	RRUS-32 Box	Yes
152.00		2X	1	ION-M23 SDARS RRU Box	Yes
152.00		2X	1	CBC23SR-43 Diplexer Box	Yes
152.00		3X	1	RRUS-11 Box	(Mount Face)
152.00		3X	1	Raycap DC6-48-60-18-8F OVP Box	(Mount Face)
152.00		4X	1	QS66512-2 Panel Antenna	
152.00		4X	1	TPX-070821 Triplexer Box	Yes
152.00		4X	1	TPX-070821 Triplexer Box	Yes
152.00		4X	1	RRUS-32 B2 Box	Yes
152.00	Y	1Y	1	Powerwave 7770 Panel Antenna	
152.00		1Y	1	LGP21401 TMA Box	Yes
152.00		1Y	1	LGP21401 TMA Box	Yes
152.00		2Y	1	OPA-65R-LCUU-H6 Panel Antenna	
152.00		2Y	1	RRUS-32 Box	Yes
152.00		2Y	1	ION-M23 SDARS RRU Box	Yes
152.00		2Y	1	CBC23SR-43 Diplexer Box	Yes
152.00		3Y	1	RRUS-11 Box	(Mount Face)
152.00		3Y	1	Raycap DC6-48-60-18-8F OVP Box	(Mount Face)
152.00		3Y	1	Raycap DC6-48-60-0-8C-EV OVP Box	(Mount Face)
152.00		4Y	1	QS66512-2 Panel Antenna	
152.00		4Y	1	TPX-070821 Triplexer Box	Yes
152.00		4Y	1	TPX-070821 Triplexer Box	Yes
152.00		4Y	1	RRUS-32 B2 Box	Yes

This report is not to be reproduced or copied in whole or in part without MEI's written consent. **2020, MEI, Inc. ©**

Table 1B: Appurtenances Configuration Considered – Sector Z (Gamma)

Elev. (ft) C.L.	Sector	Position	Ant Qty.	Appurtenance Model	Behind Panel / Location
152.00				10.67ft. Platform w/ Rails	
152.00	Z	1Z	1	Powerwave 7770 Panel Antenna	
152.00		1Z	1	LGP21401 TMA Box	Yes
152.00		1Z	1	LGP21401 TMA Box	Yes
152.00		2Z	1	OPA-65R-LCUU-H6 Panel Antenna	
152.00		2Z	1	RRUS-32 Box	Yes
152.00		2Z	1	ION-M23 SDARS RRU Box	Yes
152.00		2Z	1	CBC23SR-43 Diplexer Box	Yes
152.00		3Z	1	RRUS-11 Box	(Mount Face)
152.00		4Z	1	QS66512-2 Panel Antenna	
152.00		4Z	1	TPX-070821 Triplexer Box	Yes
152.00		4Z	1	TPX-070821 Triplexer Box	Yes
152.00		4Z	1	RRUS-32 B2 Box	Yes

Notes:

1. **Pipe Mount Positions above are labeled from right to left when looking from the front of the antennas.**
2. **Please refer to Appendix 2 for layout details provided.**
3. All elevations are measured from tower base.
4. The above appurtenances represent MEI's understanding of the appurtenances configuration. If different than above, the analysis is invalid. Please contact MEI if any discrepancies are found.

This report is not to be reproduced or copied in whole or in part without MEI's written consent. **2020, MEI, Inc. ©**

4. ANALYSIS PROCEDURE

The subject mount is analyzed for feasibility of the installation of the appurtenances configuration previously noted. The data records furnished were reviewed and a computer stress analysis was performed in accordance with the TIA-222 Standard provisions and with the agreed scope of work terms and the results of this analysis are reported.

Analysis Program

The computer program used to model the structure is STAADPro FEA Program (Connect ver. 22), a commercially available general purpose structural finite element program by Bentley Systems, Carlsbad, CA.

Assumptions

This engineering study is based on the theoretical capacity of the structural members and the available connections data and is not a condition assessment. This analysis is based on information available or obtained, and therefore, its results are based on and as accurate as that data.

- This mount is assumed to have been properly maintained and to be in good condition with no structural defects and with no deterioration to its member capacities.
- The member sizes and configuration are considered accurate as supplied. The material grade is as per data supplied and/or as assumed and as stated.
- The appurtenances configuration is as supplied and/or as stated in the report.
- All welds and connections are assumed to develop at least the member capacity, unless determined otherwise and explicitly stated in this report.
- Ring clamps and localized pole shaft or tower legs, as applicable, are not included in this scope.

If any of the above assumptions are not valid or have been made in error, this analysis results may be invalided, MEI should be contacted to review any contradictory information to determine its effect.

This report is not to be reproduced or copied in whole or in part without MEI's written consent. **2020, MEI, Inc. ©**

5. ANALYSIS RESULTS

The results of the structural stress analysis based on data available and with the previous listed criteria, indicated the following:

Note: The Wind loading controls over the Seismic loading as per TIA Section 2.7.

Table 2: Stress Analysis Results – AFTER PROPER INSTALLATION OF MODS

Support Description	Member Type	Max. Demand-Capacity Ratio	Pass/Fail	Comments
SUPPORTING OUTRIGGERS	MAIN	58.5%	**Pass**	Top horizontal outrigger
	BRACING	40.4%	**Pass**	Vertical diagonal
PLATFORM FRAME (FACE)	TOP RAIL	60.8%	**Pass**	
	BRACING	68.3%	**Pass**	Unistrut rails
	BASE PERIMETER	**72.3%**	**Pass**	**Bottom rail**
	PIPE SUPPORTS	14.9%	**Pass**	

Table 3: Mount Service Wind Deflection

	Maximum Value (in)	Comment
MAX. DEFLECTION	0.14	Top of pipe support (Sector Y, Position 3)

Notes:

1. The maximum demand-capacity is the percentage that the maximum load in the member is relative to the design strength as determined by the TIA-222 requirements.
2. Refer to the Appendix 1 for more details on the member loads.
3. A maximum demand-capacity ratio up to 105% is considered as "Pass" according to ANSI/TIA-222-H Standard.

This report is not to be reproduced or copied in whole or in part without MEI's written consent. **2020, MEI, Inc. ©**

6. FINDINGS & RECOMMENDATIONS

- Based on the stress analysis performed, the mount **is in conformance** with the Int'l Building Code / ANSI/TIA **222-H** Standard for the loading considered under the criteria listed and referenced in the report sections **after proper installation of the recommended structural strengthening modifications outlined**.
- ***The subject mount is structurally acceptable to support the appurtenances configuration as noted in Table 1 after proper installation of the proposed strengthening modifications.***
- **Refer to separate attachment of mount modification drawings for details.** The mount is to be properly supported to insure its stability during the construction work.
- *We recommend that all existing pipe mounts, brackets and all connections be inspected for any structural deficiencies, (i.e. any loose, bent and damaged members) and any damaged members should be replaced with equal member and/or part or better and any loose bolted connections should be tightened as required.*

Rigging and temporary supports required for the erection/modification shall be determined, documented, furnished and installed by the erector/contractor accounting for the loads imposed on the structure due to the proposed construction method.

This report is not to be reproduced or copied in whole or in part without MEI's written consent. **2020, MEI, Inc. ©**

7. REPORT DISCLAIMER

The engineering services rendered by **M**alouf **E**ngineering **I**nternational, Inc. *('MEI') in connection with this Structural Analysis are limited to a computer analysis of the structural component. MEI does not analyze the fabrication, including welding and connection capacities, except as included in this Report.*
The analysis performed, and the conclusions contained herein are based on the assumption listed.

Furthermore, the information and conclusions contained in this Report were determined by application of the current "state-of-the-art" engineering and analysis procedures and formulae. MALOUF ENGINEERING INTERNATIONAL, INC. assumes no obligation to revise any of the information or conclusions contained in this Report in the event that such engineering and analysis procedures and formulae are hereafter modified or revised. In addition, under no circumstances will MALOUF ENGINEERING INTERNATIONAL, INC. have any obligation or responsibility whatsoever for or on account of consequential or incidental damages sustained by any person, firm or organization as a result of any information or conclusions contained in the Report, and the maximum liability of MALOUF ENGINEERING INTERNATIONAL, INC., if any, pursuant to this Report shall be limited to the total funds actually received by MALOUF ENGINEERING INTERNATIONAL, INC. for preparation of this Report.

Customer has requested MALOUF ENGINEERING INTERNATIONAL, INC. to prepare and submit to Customer an engineering analysis with respect to the subject structural component and has further requested MALOUF ENGINEERING INTERNATIONAL, INC. to make appropriate recommendations regarding suggested structural modifications and changes. In making such request of MALOUF ENGINEERING INTERNATIONAL, INC., Customer has informed MALOUF ENGINEERING INTERNATIONAL, INC. that Customer will make a determination as to whether or not to implement any of the changes or modifications which may be suggested by MALOUF ENGINEERING INTERNATIONAL, INC. and that Customer will have any such changes or modifications made by riggers, erectors and other subcontractors of Customer's choice. MALOUF ENGINEERING INTERNATIONAL, INC. shall have the right to rely upon the accuracy of the information supplied by the customer and shall not be held responsible for the Customer's misrepresentation or omission of relevant fact whether intentional or otherwise.

Customer hereby agrees and acknowledges that MALOUF ENGINEERING INTERNATIONAL, INC. shall have no liability whatsoever to Customer or to others for any work or services performed by any persons other than MALOUF ENGINEERING INTERNATIONAL, INC. in connection with the implementation of services including but not limited to any services rendered for Customer or for others by riggers, erectors or other subcontractors. Customer acknowledges and agrees that any riggers, erectors or subcontractors retained or employed by Customer shall be solely responsible to Customer and to others for the quality of work performed by them and that MALOUF ENGINEERING INTERNATIONAL, INC. shall have no liability or responsibility whatsoever as a result of any negligence or breach of contract by any such rigger, erector or subcontractor and that Customer and rigger, erector, or subcontractor will provide MALOUF ENGINEERING INTERNATIONAL, INC. with a Certificate of Insurance naming MALOUF ENGINEERING INTERNATIONAL, INC. as additional insured.

This report is not to be reproduced or copied in whole or in part without MEI's written consent. **2020, MEI, Inc. ©**

APPENDIX 1 – FEM ANALYSIS PRINTOUT

AFTER NOTED MODIFICATIONS

This report is not to be reproduced or copied in whole or in part without MEI's written consent. **2020, MEI, Inc. ©**

MEI project ID # CT06030M-20V1 | Engineer MDG | Check LKN | App. MM | Date 4/9/2020

CT1014 Berlin NE Site

MODIFICATION: SECTORS X AND Y

Site Details

Structure classification (T2-1,T2-3)	2	
Exposure type (T2-4)	C	
Topographic Category (T2-5)	1	
County Design Ice thickness	1.50	*in.*
Design wind speed w/o Ice	118.00	*Mph*
Wind speed w/ Ice	50.00	*Mph*
Height of Crest above terrain	0.00	*ft.*
Mean Base Elevation (Zs)	196.87	*ft.*

Structure Details

Tower type (1=MNP, 2=SST , 3=GT)		1	
Tower shape (0=Other,3=Tri,4=Rect)		0	
Tower overall height		180.00	*ft.*
Wind direction Factor (T2-2)	**Kd**	0.95	*per TIA-222-H*
Gust Effect Factor	**Gh**	1.00	*per TIA-222-H*
Topographic Factor	**Kzt**	1.00	
Shielding Factor	**Ka**	0.90	
Ground Elevation Factor	**Ke**	0.99	

Mount / Platform

Centerline +/-		152.00	*ft.*
Ice Thickness @ Mount height	**tiz**	1.748	*in.*

No.	Elev. ft. (C.L.)	Position	Appurtenance Model	Appurtenance Mechanical Properties					Ca (No Ice)		No Ice	*Wind Force (No Ice)*		Iced	Ca (Iced)		*Wind Force (Iced)*	
	152.00		10.67ft. Platform w/ Rails	Ht (in.)	Wd. (in.)	Depth (in.)	Wt. (lb.)	Iced Wt. (lb)	Front	Side	qz*Gh*Ka(psf)	F_N	F_T	qz*Gh*Ka(psf)	Front	Side	F_{Ni}	F_{Ti}
1	152.00	1X	Powerwave 7770 Panel Antenna	55	11	5	17.8	151.2	1.31	1.53	41.83	230.4	122.5	7.51	1.27	1.39	56.1	36.2
2	152.00	1X	LGP21401 TMA	14.4	9	2.7	19	51.5	1.20	1.33	41.83	45.2	15.0	7.51	1.20	1.22	14.0	7.0
3	152.00	1X	LGP21401 TMA	14.4	9	2.7	19	51.5	1.20	1.33	41.83	45.2	15.0	7.51	1.20	1.22	14.0	7.0
4	152.00	2X	OPA-65R-LCUU-H6 Panel Antenna	72.3	14.4	7.3	66.9	292.2	1.31	1.50	41.83	396.8	229.5	7.51	1.28	1.40	90.3	59.8
5	152.00	2X	RRUS-32	29.9	13.3	9.5	77	187.0	1.20	1.23	41.83	138.6	101.4	7.51	1.20	1.20	35.1	27.2
6	152.00	2X	ION-M23 SDARS RRU	32.7	6.1	5.8	60	124.8	1.33	1.34	41.83	76.9	73.8	7.51	1.26	1.26	22.8	22.1
7	152.00	2X	CBC23SR-43 Diplexer	8	6.3	2.1	10	26.2	1.20	1.26	41.83	17.6	6.1	7.51	1.20	1.20	7.0	4.0
8	152.00	3X	RRUS-11	18.2	25	6.7	55	157.8	1.20	1.21	41.83	158.6	42.8	7.51	1.20	1.20	38.7	13.8
9	152.00	3X	Raycap DC6-48-60-18-8F	23.5	9.7	9.7	25	101.8	1.20	1.20	41.83	79.5	79.5	7.51	1.20	1.20	22.3	22.3
10	152.00	4X	QS66512-2 Panel Antenna	72	12	9.6	121	344.8	1.36	1.42	41.83	340.2	284.4	7.51	1.31	1.35	79.6	69.4
11	152.00	4X	TPX-070821 Triplexer	5.83	9.65	2.05	7.5	25.0	1.20	1.22	41.83	19.6	4.2	7.51	1.20	1.20	7.7	3.2
12	152.00	4X	TPX-070821 Triplexer	5.83	9.65	2.05	7.5	25.0	1.20	1.22	41.83	19.6	4.2	7.51	1.20	1.20	7.7	3.2
13	152.00	4X	RRUS-32 B2	27.1	12	7	52.9	137.6	1.20	1.26	41.83	113.4	69.5	7.51	1.20	1.22	29.7	20.4
14	152.00	1Y	Powerwave 7770 Panel Antenna	55	11	5	17.8	151.2	1.31	1.53	41.83	149.5	203.4	7.51	1.27	1.39	41.1	51.1
15	152.00	1Y	LGP21401 TMA	14.4	9	2.7	19	51.5	1.20	1.33	41.83	22.5	37.6	7.51	1.20	1.22	8.8	12.3
16	152.00	1Y	LGP21401 TMA	14.4	9	2.7	19	51.5	1.20	1.33	41.83	22.5	37.6	7.51	1.20	1.22	8.8	12.3
17	152.00	2Y	OPA-65R-LCUU-H6 Panel Antenna	72.3	14.4	7.3	66.9	292.2	1.31	1.50	41.83	271.3	354.9	7.51	1.28	1.40	67.4	82.7
18	152.00	2Y	RRUS-32	29.9	13.3	9.5	77	187.0	1.20	1.23	41.83	110.7	129.3	7.51	1.20	1.20	29.2	33.1
19	152.00	2Y	ION-M23 SDARS RRU	32.7	6.1	5.8	60	124.8	1.33	1.34	41.83	74.6	76.1	7.51	1.26	1.26	22.3	22.6
20	152.00	2Y	CBC23SR-43 Diplexer	8	6.3	2.1	10	26.2	1.20	1.26	41.83	9.0	14.7	7.51	1.20	1.20	4.8	6.3
21	152.00	3Y	RRUS-11	18.2	25	6.7	55	157.8	1.20	1.21	41.83	71.8	129.7	7.51	1.20	1.20	20.1	32.5
22	152.00	3Y	Raycap DC6-48-60-18-8F	23.5	9.7	9.7	25	101.8	1.20	1.20	41.83	79.5	79.5	7.51	1.20	1.20	22.3	22.3
23	152.00	3Y	Raycap DC6-48-60-0-8C-EV	31.4	18.28	10.24	26.2	169.9	1.20	1.23	41.83	135.8	178.7	7.51	1.20	1.20	34.4	43.2
24	152.00	4Y	QS66512-2 Panel Antenna	72	12	9.6	121	344.8	1.36	1.42	41.83	298.4	326.3	7.51	1.31	1.35	71.9	77.1
25	152.00	4Y	TPX-070821 Triplexer	5.83	9.65	2.05	7.5	25.0	1.20	1.22	41.83	8.1	15.8	7.51	1.20	1.20	4.3	6.6
26	152.00	4Y	TPX-070821 Triplexer	5.83	9.65	2.05	7.5	25.0	1.20	1.22	41.83	8.1	15.8	7.51	1.20	1.20	4.3	6.6
27	152.00	4Y	RRUS-32 B2	27.1	12	7	52.9	137.6	1.20	1.26	41.83	80.4	102.4	7.51	1.20	1.22	22.7	27.4
28																		
29																		
30	152.00	D	10.67ft. Platform w/ Rails								41.83			7.51				

MEI project ID # CT06030M-20V1 | Engineer MDG | Check LKN | App. MM | Date 4/9/2020

CT1014 Berlin NE Site

MODIFICATION: SECTOR Z

Site Details

Structure classification (T2-1,T2-3)	2	
Exposure type (T2-4)	C	
Topographic Category (T2-5)	1	
County Design Ice thickness	1.50	*in.*
Design wind speed w/o Ice	118.00	*Mph*
Wind speed w/ Ice	50.00	*Mph*
Height of Crest above terrain	0.00	*ft.*
Mean Base Elevation (Zs)	196.87	*ft.*

Structure Details

Tower type (1=MNP, 2=SST , 3=GT)		1	
Tower shape (0=Other,3=Tri,4=Rect)		0	
Tower overall height		180.00	*ft.*
Wind direction Factor (T2-2)	**Kd**	0.95	*per TIA-222-H*
Gust Effect Factor	**Gh**	1.00	*per TIA-222-H*
Topographic Factor	**Kzt**	1.00	
Shielding Factor	**Ka**	0.90	
Ground Elevation Factor	**Ke**	0.99	

Mount / Platform

Centerline +/-		152.00	*ft.*
Ice Thickness @ Mount height	**tiz**	1.748	*in.*

No.	Elev. ft. (C.L.)	Position	Appurtenance Model	Appurtenance Mechanical Properties					Ca (No Ice)		No Ice	*Wind Force (No Ice)*		Iced	Ca (Iced)		*Wind Force (Iced)*	
	152.00		10.67ft. Platform w/ Rails	Ht (in.)	Wd. (in.)	Depth (in.)	Wt. (lb.)	Iced Wt. (lb)	Front	Side	qz*Gh*Ka(psf)	F_N	F_T	qz*Gh*Ka(psf)	Front	Side	F_{Ni}	F_{Ti}
1	152.00	1Z	Powerwave 7770 Panel Antenna	55	11	5	17.8	151.2	1.31	1.53	41.83	230.4	122.5	7.51	1.27	1.39	56.1	36.2
2	152.00	1Z	LGP21401 TMA	14.4	9	2.7	19	51.5	1.20	1.33	41.83	45.2	15.0	7.51	1.20	1.22	14.0	7.0
3	152.00	1Z	LGP21401 TMA	14.4	9	2.7	19	51.5	1.20	1.33	41.83	45.2	15.0	7.51	1.20	1.22	14.0	7.0
4	152.00	2Z	OPA-65R-LCUU-H6 Panel Antenna	72.3	14.4	7.3	66.9	292.2	1.31	1.50	41.83	396.8	229.5	7.51	1.28	1.40	90.3	59.8
5	152.00	2Z	RRUS-32	29.9	13.3	9.5	77	187.0	1.20	1.23	41.83	138.6	101.4	7.51	1.20	1.20	35.1	27.2
6	152.00	2Z	ION-M23 SDARS RRU	32.7	6.1	5.8	60	124.8	1.33	1.34	41.83	76.9	73.8	7.51	1.26	1.26	22.8	22.1
7	152.00	2Z	CBC23SR-43 Diplexer	8	6.3	2.1	10	26.2	1.20	1.26	41.83	17.6	6.1	7.51	1.20	1.20	7.0	4.0
8	152.00	3Z	RRUS-11	18.2	25	6.7	55	157.8	1.20	1.21	41.83	158.6	42.8	7.51	1.20	1.20	38.7	13.8
9	152.00	4Z	QS66512-2 Panel Antenna	72	12	9.6	121	344.8	1.36	1.42	41.83	340.2	284.4	7.51	1.31	1.35	79.6	69.4
10	152.00	4Z	TPX-070821 Triplexer	5.83	9.65	2.05	7.5	25.0	1.20	1.22	41.83	19.6	4.2	7.51	1.20	1.20	7.7	3.2
11	152.00	4Z	TPX-070821 Triplexer	5.83	9.65	2.05	7.5	25.0	1.20	1.22	41.83	19.6	4.2	7.51	1.20	1.20	7.7	3.2
12	152.00	4Z	RRUS-32 B2	27.1	12	7	52.9	137.6	1.20	1.26	41.83	113.4	69.5	7.51	1.20	1.22	29.7	20.4
13																		
14																		
15																		
16																		
17																		
18																		
19																		
20																		
21																		
22																		
23																		
24																		
25																		
26																		
27																		
28																		
29																		
30	152.00	D	10.67ft. Platform w/ Rails								41.83			7.51				

Job Information

	Engineer	Checked	Approved
Name:	MDG	LKN	MM
Date:	4/9/2020	4/9/2020	4/9/2020

Project ID	
Project Name	

Comments

CT1014 Berlin NE Site - 10.67ft Platform Analysis
CHECKED PER 2018 IBC / TIA-222-H
118Mph (Ult) / 50Mph+1.5"Ice / Exp "C" / zs = 196.87ft. / Class 2
(60Mph Service Wind)

Structure Type	SPACE FRAME

Number of Nodes	183	Highest Node	269
Number of Elements	261	Highest Beam	3545

Number of Basic Load Cases	16
Number of Combination Load Cases	55

Included in this printout are data for:

All	The Whole Structure

Included in this printout are results for load cases:

Type	L/C	Name
Primary	1	MOUNT DEAD WT.
Primary	2	MOUNT ICED WT.
Primary	3	ANTENNA DEAD LOADS
Primary	4	ANTENNA ICE WEIGHT LOADS
Primary	5	FRONT WIND LOADS
Primary	6	BACK WIND LOADS
Primary	7	SIDE WIND LOADS 1
Primary	8	SIDE WIND LOADS 2
Primary	9	FRONT ICED WIND LOADS
Primary	10	BACK ICED WIND LOADS
Primary	11	SIDE ICED WIND LOADS 1
Primary	12	SIDE ICED WIND LOADS 2
Primary	13	MAN LV LOAD 1
Primary	14	MAN LV LOAD 2
Primary	15	MAN LM LOAD 1
Primary	16	MAN LM LOAD 2
Combination	17	GENERATED COMBO 1) 0 DEG(1.2D + 1
Combination	18	GENERATED COMBO 1) 30 DEG(1.2D +
Combination	19	GENERATED COMBO 1) 60 DEG(1.2D +

Job Information Cont...

Type	L/C	Name
Combination	23	GENERATED COMBO 1) 180 DEG(1.2D +
Combination	24	GENERATED COMBO 1) 210 DEG(1.2D +
Combination	25	GENERATED COMBO 1) 240 DEG(1.2D +
Combination	26	GENERATED COMBO 1) 270 DEG(1.2D +
Combination	27	GENERATED COMBO 1) 300 DEG(1.2D +
Combination	28	GENERATED COMBO 1) 330 DEG(1.2D +
Combination	29	GENERATED COMBO 2) 0 DEG(0.9D + 1
Combination	30	GENERATED COMBO 2) 30 DEG(0.9D +
Combination	31	GENERATED COMBO 2) 60 DEG(0.9D +
Combination	32	GENERATED COMBO 2) 90 DEG(0.9D +
Combination	33	GENERATED COMBO 2) 120 DEG(0.9D +
Combination	34	GENERATED COMBO 2) 150 DEG(0.9D +
Combination	35	GENERATED COMBO 2) 180 DEG(0.9D +
Combination	36	GENERATED COMBO 2) 210 DEG(0.9D +
Combination	37	GENERATED COMBO 2) 240 DEG(0.9D +
Combination	38	GENERATED COMBO 2) 270 DEG(0.9D +
Combination	39	GENERATED COMBO 2) 300 DEG(0.9D +
Combination	40	GENERATED COMBO 2) 330 DEG(0.9D +
Combination	41	GENERATED COMBO 3) 0 DEG(1.2D + 1
Combination	42	GENERATED COMBO 3) 30 DEG(1.2D +
Combination	43	GENERATED COMBO 3) 60 DEG(1.2D +
Combination	44	GENERATED COMBO 3) 90 DEG(1.2D +
Combination	45	GENERATED COMBO 3) 120 DEG(1.2D +
Combination	46	GENERATED COMBO 3) 150 DEG(1.2D +
Combination	47	GENERATED COMBO 3) 180 DEG(1.2D +
Combination	48	GENERATED COMBO 3) 210 DEG(1.2D +
Combination	49	GENERATED COMBO 3) 240 DEG(1.2D +
Combination	50	GENERATED COMBO 3) 270 DEG(1.2D +
Combination	51	GENERATED COMBO 3) 300 DEG(1.2D +
Combination	52	GENERATED COMBO 3) 330 DEG(1.2D +
Combination	53	MAINTENANCE DEAD LOAD CASE
Combination	54	MAINTENANCE LOAD LM CASE 1 (0 DE(
Combination	55	MAINTENANCE LOAD LM CASE 1 (180 D
Combination	56	MAINTENANCE LOAD LM CASE 2 (0 DE(
Combination	57	MAINTENANCE LOAD LM CASE 2 (180 D
Combination	58	MAINTENANCE LOAD LV CASE 1
Combination	59	MAINTENANCE LOAD LV CASE 2
Combination	60	SERVICE COMBO 7) 0 DEG(1.0D + 1.0 W
Combination	61	SERVICE COMBO 7) 30 DEG(1.0D + 1.0 \
Combination	62	SERVICE COMBO 7) 60 DEG(1.0D + 1.0 \
Combination	63	SERVICE COMBO 7) 90 DEG(1.0D + 1.0 \
Combination	64	SERVICE COMBO 7) 120 DEG(1.0D + 1.0
Combination	65	SERVICE COMBO 7) 150 DEG(1.0D + 1.0
Combination	66	SERVICE COMBO 7) 180 DEG(1.0D + 1.0
Combination	67	SERVICE COMBO 7) 210 DEG(1.0D + 1.0

Job Information Cont...

Type	L/C	Name
Combination	68	SERVICE COMBO 7) 240 DEG(1.0D + 1.0
Combination	69	SERVICE COMBO 7) 270 DEG(1.0D + 1.0
Combination	70	SERVICE COMBO 7) 300 DEG(1.0D + 1.0
Combination	71	SERVICE COMBO 7) 330 DEG(1.0D + 1.0

Section Properties

Prop	Section	Area (in^2)	I_{yy} (in^4)	I_{zz} (in^4)	J (in^4)	Material
1	HSS10102	0.438	0.057	0.057	0.084	STEEL
2	HSS10102	0.438	0.057	0.057	0.084	STEEL
3	PIPS20	1.020	0.627	0.627	1.254	STEEL
4	HSS10102	0.438	0.057	0.057	0.084	STEEL
5	HSS10102	0.438	0.057	0.057	0.084	STEEL
6	HSS10102	0.438	0.057	0.057	0.084	STEEL
7	HSS10102	0.438	0.057	0.057	0.084	STEEL
8	C2.875X2X0.25	1.594	0.622	2.007	0.033	STEEL
9	HSS10102	0.438	0.057	0.057	0.084	STEEL
10	A1000_UNISTRUT	0.312	0.065	0.087	0.001	STEEL

Materials

Mat	Name	E (kip/in^2)	ν	Density (kip/in^3)	α (/°F)
1	CONCRETE	3.15E+3	0.170	8.68e-05	5.5E -6
2	ALUMINUM	10E+3	0.330	9.8e-05	12.8E -6
3	STEEL_50_KSI	29E+3	0.300	0.000283	6.5E -6
4	STAINLESSSTEEL	28E+3	0.300	0.000283	9.9E -6
5	STEEL_36_KSI	29E+3	0.300	0.000283	6.5E -6
6	STEEL_275_NMM2	29.7E+3	0.300	0.000	6.67E -6
7	STEEL	29E+3	0.300	0.000283	6E -6
8	STEEL_355_NMM2	29.7E+3	0.300	0.000	6.67E -6

Primary Load Cases

Number	Name	Type
1	MOUNT DEAD WT.	Dead
2	MOUNT ICED WT.	Dead
3	ANTENNA DEAD LOADS	Dead
4	ANTENNA ICE WEIGHT LOADS	Dead
5	FRONT WIND LOADS	Wind
6	BACK WIND LOADS	Wind
7	SIDE WIND LOADS 1	Wind
8	SIDE WIND LOADS 2	Wind
9	FRONT ICED WIND LOADS	Wind
10	BACK ICED WIND LOADS	Wind
11	SIDE ICED WIND LOADS 1	Wind
12	SIDE ICED WIND LOADS 2	Wind
13	MAN LV LOAD 1	Wind
14	MAN LV LOAD 2	Wind
15	MAN LM LOAD 1	Wind
16	MAN LM LOAD 2	Wind

Node Displacement Summary

	Node	L/C	X (in)	Y (in)	Z (in)	Resultant (in)	rX (deg)	rY (deg)	rZ (deg)
Max X	142	7:SIDE WIND I	**0.514**	-0.008	0.022	0.515	0.051	-0.235	-0.186
Min X	142	38:GENERATE	**-0.519**	0.001	-0.024	0.520	-0.054	0.231	0.196
Max Y	98	6:BACK WIND	0.109	**0.092**	0.011	0.143	0.157	-0.065	0.008
Min Y	48	58:MAINTENAI	0.001	**-0.105**	-0.001	0.105	-0.055	0.002	0.185
Max Z	51	20:GENERATE	-0.101	-0.067	**0.325**	0.347	0.024	-0.553	-0.095
Min Z	51	8:SIDE WIND I	0.101	0.059	**-0.322**	0.343	-0.021	0.542	0.094
Max rX	23	17:GENERATE	0.062	0.006	-0.007	0.063	**0.328**	-0.097	-0.037
Min rX	23	6:BACK WIND	-0.063	-0.012	0.009	0.065	**-0.326**	0.101	0.038
Max rY	90	8:SIDE WIND I	-0.311	0.006	-0.117	0.332	-0.042	**0.633**	0.117
Min rY	90	20:GENERATE	0.317	-0.012	0.114	0.337	0.032	**-0.636**	-0.130
Max rZ	238	58:MAINTENAI	0.001	-0.019	-0.001	0.019	-0.033	0.005	**0.301**
Min rZ	169	58:MAINTENAI	0.001	-0.093	-0.000	0.093	-0.070	0.000	**-0.271**
Max Rst	142	38:GENERATE	-0.519	0.001	-0.024	**0.520**	-0.054	0.231	0.196

Reaction Summary

	Node	L/C	Horizontal FX (kip)	Vertical FY (kip)	Horizontal FZ (kip)	Moment MX (kip-in)	MY (kip-in)	MZ (kip-in)
Max FX	65	17:GENERATE	**2.042**	0.009	0.029	0.051	-0.504	0.133
Min FX	114	17:GENERATE	**-2.208**	0.010	-0.014	0.056	-0.361	-0.148
Max FY	3	47:GENERATE	0.882	**2.139**	-1.559	-1.374	-0.025	-0.842
Min FY	8	5:FRONT WINI	1.121	**-1.538**	1.894	-0.033	-0.019	-0.165
Max FZ	8	5:FRONT WINI	1.121	-1.538	**1.894**	-0.033	-0.019	-0.165
Min FZ	8	35:GENERATE	-1.302	1.951	**-2.202**	-0.03537	-0.012	0.197
Max MX	111	26:GENERATE	0.959	1.582	1.457	**0.632**	-2.059	0.252
Min MX	9	58:MAINTENAI	-0.249	0.255	0.429	**-1.488**	-0.009	-0.848
Max MY	63	20:GENERATE	-1.281	1.028	-0.139	0.351	**2.562**	0.128
Min MY	63	8:SIDE WIND I	0.943	-0.607	0.136	-0.341	**-2.518**	-0.042
Max MZ	64	26:GENERATE	0.684	-0.814	-1.005	-0.188	-1.947	**0.408**
Min MZ	9	41:GENERATE	-0.465	0.237	0.867	-1.388	0.192	**-0.855**

Utilization Ratio

Beam	Analysis Property	Design Property	Actual Ratio	Allowable Ratio	Ratio (Act./Allow.)	Clause	L/C	Ax (in^2)	Iz (in^4)	Iy (in^4)	Ix (in^4)
14	C2.875X2X0	C2.875X2X0	0.045	1.000	0.045	Eq.H1-1b	17	1.594	2.007	0.622	0.033
17	HSS10102	HSS10102	0.384	1.000	0.384	Eq.H1-1b	20	0.438	0.057	0.057	0.084
18	HSS10102	HSS10102	0.585	1.000	0.585	Eq.H1-1b	17	0.438	0.057	0.057	0.084
19	HSS10102	HSS10102	0.315	1.000	0.315	Eq.H1-1a	29	0.438	0.057	0.057	0.084
20	HSS10102	HSS10102	0.204	1.000	0.204	Eq.H1-1b	23	0.438	0.057	0.057	0.084
21	HSS10102	HSS10102	0.373	1.000	0.373	Eq.H1-1b	26	0.438	0.057	0.057	0.084
22	HSS10102	HSS10102	0.388	1.000	0.388	Eq.H1-1b	29	0.438	0.057	0.057	0.084
23	HSS10102	HSS10102	0.397	1.000	0.397	Eq.H1-1a	29	0.438	0.057	0.057	0.084
24	HSS10102	HSS10102	0.183	1.000	0.183	Eq.H1-1b	35	0.438	0.057	0.057	0.084
37	HSS10102	HSS10102	0.584	1.000	0.584	Eq.H1-1b	17	0.438	0.057	0.057	0.084
38	HSS10102	HSS10102	0.276	1.000	0.276	Eq.H1-1b	23	0.438	0.057	0.057	0.084
39	HSS10102	HSS10102	0.327	1.000	0.327	Eq.H1-1b	58	0.438	0.057	0.057	0.084
40	HSS10102	HSS10102	0.396	1.000	0.396	Eq.H1-1b	58	0.438	0.057	0.057	0.084
41	HSS10102	HSS10102	0.475	1.000	0.475	Eq.H1-1b	59	0.438	0.057	0.057	0.084
42	HSS10102	HSS10102	0.688	1.000	0.688	Eq.H1-1b	17	0.438	0.057	0.057	0.084
43	HSS10102	HSS10102	0.495	1.000	0.495	Eq.H1-1b	35	0.438	0.057	0.057	0.084
44	HSS10102	HSS10102	0.473	1.000	0.473	Eq.H1-1b	58	0.438	0.057	0.057	0.084
45	HSS10102	HSS10102	0.608	1.000	0.608	Eq.H1-1b	35	0.438	0.057	0.057	0.084
46	A1000_UNIS	A1000_UNIS	0.381	1.000	0.381	Eq.H1-1b	17	0.312	0.087	0.065	0.001
47	A1000_UNIS	A1000_UNIS	0.245	1.000	0.245	Eq.H1-1b	20	0.312	0.087	0.065	0.001
48	A1000_UNIS	A1000_UNIS	0.526	1.000	0.526	Eq.H1-1b	23	0.312	0.087	0.065	0.001
49	A1000_UNIS	A1000_UNIS	0.403	1.000	0.403	Eq.H1-1b	35	0.312	0.087	0.065	0.001
50	A1000_UNIS	A1000_UNIS	0.163	1.000	0.163	Eq.H1-1b	23	0.312	0.087	0.065	0.001
51	C2.875X2X0	C2.875X2X0	0.052	1.000	0.052	Eq.H1-1b	17	1.594	2.007	0.622	0.033
56	HSS10102	HSS10102	0.233	1.000	0.233	Eq.H1-1b	17	0.438	0.057	0.057	0.084
63	HSS10102	HSS10102	0.239	1.000	0.239	Eq.H1-1b	23	0.438	0.057	0.057	0.084

Utilization Ratio Cont...

Beam	Analysis Property	Design Property	Actual Ratio	Allowable Ratio	Ratio (Act./Allow.)	Clause	L/C	Ax (in^2)	Iz (in^4)	Iy (in^4)	Ix (in^4)
70	A1000_UNIS	A1000_UNIS	0.468	1.000	0.468	Eq.H1-1b	17	0.312	0.087	0.065	0.001
71	A1000_UNIS	A1000_UNIS	0.353	1.000	0.353	Eq.H1-1b	23	0.312	0.087	0.065	0.001
74	A1000_UNIS	A1000_UNIS	0.443	1.000	0.443	Eq.H1-1b	35	0.312	0.087	0.065	0.001
75	HSS10102	HSS10102	0.373	1.000	0.373	Eq.H1-1b	58	0.438	0.057	0.057	0.084
76	HSS10102	HSS10102	0.261	1.000	0.261	Eq.H1-1b	17	0.438	0.057	0.057	0.084
77	HSS10102	HSS10102	0.359	1.000	0.359	Eq.H1-1b	17	0.438	0.057	0.057	0.084
78	HSS10102	HSS10102	0.235	1.000	0.235	Eq.H1-1b	35	0.438	0.057	0.057	0.084
79	A1000_UNIS	A1000_UNIS	0.574	1.000	0.574	Eq.H1-1b	17	0.312	0.087	0.065	0.001
81	A1000_UNIS	A1000_UNIS	0.238	1.000	0.238	Eq.H1-1b	26	0.312	0.087	0.065	0.001
83	A1000_UNIS	A1000_UNIS	0.357	1.000	0.357	Eq.H1-1b	17	0.312	0.087	0.065	0.001
88	HSS10102	HSS10102	0.435	1.000	0.435	Eq.H1-1b	44	0.438	0.057	0.057	0.084
90	HSS10102	HSS10102	0.377	1.000	0.377	Eq.H1-1b	26	0.438	0.057	0.057	0.084
93	HSS10102	HSS10102	0.376	1.000	0.376	Eq.H1-1b	26	0.438	0.057	0.057	0.084
94	HSS10102	HSS10102	0.528	1.000	0.528	Eq.H1-1b	20	0.438	0.057	0.057	0.084
95	HSS10102	HSS10102	0.377	1.000	0.377	Eq.H1-1a	23	0.438	0.057	0.057	0.084
96	HSS10102	HSS10102	0.134	1.000	0.134	Eq.H1-1b	17	0.438	0.057	0.057	0.084
97	HSS10102	HSS10102	0.344	1.000	0.344	Eq.H1-1a	23	0.438	0.057	0.057	0.084
98	HSS10102	HSS10102	0.363	1.000	0.363	Eq.H1-1b	20	0.438	0.057	0.057	0.084
99	HSS10102	HSS10102	0.380	1.000	0.380	Eq.H1-1a	26	0.438	0.057	0.057	0.084
100	HSS10102	HSS10102	0.112	1.000	0.112	Eq.H1-1b	44	0.438	0.057	0.057	0.084
113	HSS10102	HSS10102	0.723	1.000	0.723	Eq.H1-1b	17	0.438	0.057	0.057	0.084
114	HSS10102	HSS10102	0.397	1.000	0.397	Eq.H1-1a	17	0.438	0.057	0.057	0.084
115	HSS10102	HSS10102	0.204	1.000	0.204	Eq.H1-1b	23	0.438	0.057	0.057	0.084
117	HSS10102	HSS10102	0.292	1.000	0.292	Eq.H1-1b	20	0.438	0.057	0.057	0.084
118	HSS10102	HSS10102	0.538	1.000	0.538	Eq.H1-1b	20	0.438	0.057	0.057	0.084
119	HSS10102	HSS10102	0.473	1.000	0.473	Eq.H1-1b	35	0.438	0.057	0.057	0.084
120	HSS10102	HSS10102	0.281	1.000	0.281	Eq.H1-1b	26	0.438	0.057	0.057	0.084
121	HSS10102	HSS10102	0.338	1.000	0.338	Eq.H1-1b	17	0.438	0.057	0.057	0.084
122	A1000_UNIS	A1000_UNIS	0.372	1.000	0.372	Eq.H1-1b	38	0.312	0.087	0.065	0.001
123	A1000_UNIS	A1000_UNIS	0.291	1.000	0.291	Eq.H1-1b	17	0.312	0.087	0.065	0.001
124	A1000_UNIS	A1000_UNIS	0.295	1.000	0.295	Eq.H1-1b	20	0.312	0.087	0.065	0.001
125	A1000_UNIS	A1000_UNIS	0.208	1.000	0.208	Eq.H1-1b	20	0.312	0.087	0.065	0.001
126	A1000_UNIS	A1000_UNIS	0.169	1.000	0.169	Eq.H1-1b	20	0.312	0.087	0.065	0.001
127	C2.875X2X0	C2.875X2X0	0.040	1.000	0.040	Eq.H1-1b	20	1.594	2.007	0.622	0.033
132	HSS10102	HSS10102	0.239	1.000	0.239	Eq.H1-1b	23	0.438	0.057	0.057	0.084
139	HSS10102	HSS10102	0.151	1.000	0.151	Eq.H1-1b	20	0.438	0.057	0.057	0.084
145	A1000_UNIS	A1000_UNIS	0.196	1.000	0.196	Eq.H1-1b	20	0.312	0.087	0.065	0.001
146	A1000_UNIS	A1000_UNIS	0.360	1.000	0.360	Eq.H1-1b	17	0.312	0.087	0.065	0.001
147	A1000_UNIS	A1000_UNIS	0.283	1.000	0.283	Eq.H1-1b	17	0.312	0.087	0.065	0.001
150	A1000_UNIS	A1000_UNIS	0.359	1.000	0.359	Eq.H1-1b	20	0.312	0.087	0.065	0.001
151	HSS10102	HSS10102	0.313	1.000	0.313	Eq.H1-1b	17	0.438	0.057	0.057	0.084
152	HSS10102	HSS10102	0.236	1.000	0.236	Eq.H1-1b	17	0.438	0.057	0.057	0.084
153	HSS10102	HSS10102	0.345	1.000	0.345	Eq.H1-1b	23	0.438	0.057	0.057	0.084
154	HSS10102	HSS10102	0.130	1.000	0.130	Eq.H1-1b	20	0.438	0.057	0.057	0.084
155	A1000_UNIS	A1000_UNIS	0.383	1.000	0.383	Eq.H1-1b	38	0.312	0.087	0.065	0.001

Utilization Ratio Cont...

Beam	Analysis Property	Design Property	Actual Ratio	Allowable Ratio	Ratio (Act./Allow.)	Clause	L/C	Ax (in^2)	Iz (in^4)	Iy (in^4)	Ix (in^4)
157	A1000_UNIS	A1000_UNIS	0.303	1.000	0.303	Eq.H1-1b	29	0.312	0.087	0.065	0.001
159	A1000_UNIS	A1000_UNIS	0.450	1.000	0.450	Eq.H1-1b	35	0.312	0.087	0.065	0.001
164	HSS10102	HSS10102	0.397	1.000	0.397	Eq.H1-1b	26	0.438	0.057	0.057	0.084
166	HSS10102	HSS10102	0.341	1.000	0.341	Eq.H1-1b	20	0.438	0.057	0.057	0.084
172	HSS10102	HSS10102	0.320	1.000	0.320	Eq.H1-1b	38	0.438	0.057	0.057	0.084
173	HSS10102	HSS10102	0.453	1.000	0.453	Eq.H1-1b	26	0.438	0.057	0.057	0.084
174	HSS10102	HSS10102	0.404	1.000	0.404	Eq.H1-1a	32	0.438	0.057	0.057	0.084
175	HSS10102	HSS10102	0.315	1.000	0.315	Eq.H1-1b	26	0.438	0.057	0.057	0.084
176	HSS10102	HSS10102	0.417	1.000	0.417	Eq.H1-1b	20	0.438	0.057	0.057	0.084
177	HSS10102	HSS10102	0.502	1.000	0.502	Eq.H1-1b	26	0.438	0.057	0.057	0.084
178	HSS10102	HSS10102	0.263	1.000	0.263	Eq.H1-1a	23	0.438	0.057	0.057	0.084
179	HSS10102	HSS10102	0.119	1.000	0.119	Eq.H1-1b	17	0.438	0.057	0.057	0.084
192	HSS10102	HSS10102	0.533	1.000	0.533	Eq.H1-1b	20	0.438	0.057	0.057	0.084
193	HSS10102	HSS10102	0.271	1.000	0.271	Eq.H1-1b	26	0.438	0.057	0.057	0.084
194	HSS10102	HSS10102	0.197	1.000	0.197	Eq.H1-1b	17	0.438	0.057	0.057	0.084
196	HSS10102	HSS10102	0.394	1.000	0.394	Eq.H1-1a	17	0.438	0.057	0.057	0.084
197	HSS10102	HSS10102	0.624	1.000	0.624	Eq.H1-1b	17	0.438	0.057	0.057	0.084
198	HSS10102	HSS10102	0.466	1.000	0.466	Eq.H1-1b	26	0.438	0.057	0.057	0.084
199	HSS10102	HSS10102	0.264	1.000	0.264	Eq.H1-1b	17	0.438	0.057	0.057	0.084
200	HSS10102	HSS10102	0.478	1.000	0.478	Eq.H1-1b	20	0.438	0.057	0.057	0.084
201	A1000_UNIS	A1000_UNIS	0.328	1.000	0.328	Eq.H1-1b	20	0.312	0.087	0.065	0.001
202	A1000_UNIS	A1000_UNIS	0.610	1.000	0.610	Eq.H1-1b	50	0.312	0.087	0.065	0.001
203	A1000_UNIS	A1000_UNIS	0.306	1.000	0.306	Eq.H1-1b	38	0.312	0.087	0.065	0.001
204	A1000_UNIS	A1000_UNIS	0.206	1.000	0.206	Eq.H1-1b	17	0.312	0.087	0.065	0.001
205	A1000_UNIS	A1000_UNIS	0.192	1.000	0.192	Eq.H1-1b	26	0.312	0.087	0.065	0.001
208	HSS10102	HSS10102	0.159	1.000	0.159	Eq.H1-1b	20	0.438	0.057	0.057	0.084
215	HSS10102	HSS10102	0.170	1.000	0.170	Eq.H1-1b	26	0.438	0.057	0.057	0.084
221	A1000_UNIS	A1000_UNIS	0.620	1.000	0.620	Eq.H1-1b	41	0.312	0.087	0.065	0.001
222	A1000_UNIS	A1000_UNIS	0.369	1.000	0.369	Eq.H1-1b	26	0.312	0.087	0.065	0.001
223	A1000_UNIS	A1000_UNIS	0.353	1.000	0.353	Eq.H1-1b	23	0.312	0.087	0.065	0.001
226	A1000_UNIS	A1000_UNIS	0.323	1.000	0.323	Eq.H1-1b	17	0.312	0.087	0.065	0.001
227	HSS10102	HSS10102	0.320	1.000	0.320	Eq.H1-1b	24	0.438	0.057	0.057	0.084
228	HSS10102	HSS10102	0.381	1.000	0.381	Eq.H1-1b	38	0.438	0.057	0.057	0.084
229	HSS10102	HSS10102	0.346	1.000	0.346	Eq.H1-1b	20	0.438	0.057	0.057	0.084
230	HSS10102	HSS10102	0.161	1.000	0.161	Eq.H1-1b	35	0.438	0.057	0.057	0.084
231	A1000_UNIS	A1000_UNIS	0.318	1.000	0.318	Eq.H1-1b	35	0.312	0.087	0.065	0.001
233	A1000_UNIS	A1000_UNIS	0.274	1.000	0.274	Eq.H1-1b	17	0.312	0.087	0.065	0.001
235	A1000_UNIS	A1000_UNIS	0.489	1.000	0.489	Eq.H1-1b	20	0.312	0.087	0.065	0.001
240	HSS10102	HSS10102	0.349	1.000	0.349	Eq.H1-1b	20	0.438	0.057	0.057	0.084
242	HSS10102	HSS10102	0.440	1.000	0.440	Eq.H1-1b	20	0.438	0.057	0.057	0.084
266	HSS10102	HSS10102	0.572	1.000	0.572	Eq.H1-1b	35	0.438	0.057	0.057	0.084
267	HSS10102	HSS10102	0.529	1.000	0.529	Eq.H1-1b	35	0.438	0.057	0.057	0.084
268	HSS10102	HSS10102	0.500	1.000	0.500	Eq.H1-1b	35	0.438	0.057	0.057	0.084
269	HSS10102	HSS10102	0.470	1.000	0.470	Eq.H1-1b	26	0.438	0.057	0.057	0.084
270	HSS10102	HSS10102	0.553	1.000	0.553	Eq.H1-1b	20	0.438	0.057	0.057	0.084

Utilization Ratio Cont...

Beam	Analysis Property	Design Property	Actual Ratio	Allowable Ratio	Ratio (Act./Allow.)	Clause	L/C	Ax (in^2)	Iz (in^4)	Iy (in^4)	Ix (in^4)
271	HSS10102	HSS10102	0.466	1.000	0.466	Eq.H1-1b	35	0.438	0.057	0.057	0.084
272	HSS10102	HSS10102	0.221	1.000	0.221	Eq.H1-1b	17	0.438	0.057	0.057	0.084
273	HSS10102	HSS10102	0.296	1.000	0.296	Eq.H1-1b	17	0.438	0.057	0.057	0.084
274	HSS10102	HSS10102	0.231	1.000	0.231	Eq.H1-1b	23	0.438	0.057	0.057	0.084
275	HSS10102	HSS10102	0.277	1.000	0.277	Eq.H1-1b	20	0.438	0.057	0.057	0.084
276	HSS10102	HSS10102	0.232	1.000	0.232	Eq.H1-1b	26	0.438	0.057	0.057	0.084
277	HSS10102	HSS10102	0.262	1.000	0.262	Eq.H1-1b	23	0.438	0.057	0.057	0.084
278	HSS10102	HSS10102	0.428	1.000	0.428	Eq.H1-1b	58	0.438	0.057	0.057	0.084
283	HSS10102	HSS10102	0.181	1.000	0.181	Eq.H1-1b	35	0.438	0.057	0.057	0.084
285	HSS10102	HSS10102	0.400	1.000	0.400	Eq.H1-1b	17	0.438	0.057	0.057	0.084
287	HSS10102	HSS10102	0.132	1.000	0.132	Eq.H1-1b	17	0.438	0.057	0.057	0.084
289	HSS10102	HSS10102	0.304	1.000	0.304	Eq.H1-1b	17	0.438	0.057	0.057	0.084
291	HSS10102	HSS10102	0.115	1.000	0.115	Eq.H1-1b	17	0.438	0.057	0.057	0.084
293	HSS10102	HSS10102	0.301	1.000	0.301	Eq.H1-1b	23	0.438	0.057	0.057	0.084
295	HSS10102	HSS10102	0.115	1.000	0.115	Eq.H1-1b	20	0.438	0.057	0.057	0.084
297	HSS10102	HSS10102	0.309	1.000	0.309	Eq.H1-1b	20	0.438	0.057	0.057	0.084
299	HSS10102	HSS10102	0.098	1.000	0.098	Eq.H1-1b	20	0.438	0.057	0.057	0.084
301	HSS10102	HSS10102	0.289	1.000	0.289	Eq.H1-1b	26	0.438	0.057	0.057	0.084
303	HSS10102	HSS10102	0.107	1.000	0.107	Eq.H1-1b	35	0.438	0.057	0.057	0.084
305	HSS10102	HSS10102	0.358	1.000	0.358	Eq.H1-1b	35	0.438	0.057	0.057	0.084
306	HSS10102	HSS10102	0.171	1.000	0.171	Eq.H1-1b	23	0.438	0.057	0.057	0.084
307	HSS10102	HSS10102	0.272	1.000	0.272	Eq.H1-1b	50	0.438	0.057	0.057	0.084
308	HSS10102	HSS10102	0.251	1.000	0.251	Eq.H1-1b	17	0.438	0.057	0.057	0.084
309	HSS10102	HSS10102	0.244	1.000	0.244	Eq.H1-1b	23	0.438	0.057	0.057	0.084
310	HSS10102	HSS10102	0.193	1.000	0.193	Eq.H1-1b	35	0.438	0.057	0.057	0.084
311	HSS10102	HSS10102	0.336	1.000	0.336	Eq.H1-1b	17	0.438	0.057	0.057	0.084
312	HSS10102	HSS10102	0.108	1.000	0.108	Eq.H1-1b	17	0.438	0.057	0.057	0.084
313	HSS10102	HSS10102	0.149	1.000	0.149	Eq.H1-1b	17	0.438	0.057	0.057	0.084
314	HSS10102	HSS10102	0.075	1.000	0.075	Eq.H1-1b	17	0.438	0.057	0.057	0.084
315	HSS10102	HSS10102	0.096	1.000	0.096	Eq.H1-1b	38	0.438	0.057	0.057	0.084
316	HSS10102	HSS10102	0.075	1.000	0.075	Eq.H1-1b	26	0.438	0.057	0.057	0.084
317	HSS10102	HSS10102	0.096	1.000	0.096	Eq.H1-1b	17	0.438	0.057	0.057	0.084
318	HSS10102	HSS10102	0.306	1.000	0.306	Eq.H1-1b	23	0.438	0.057	0.057	0.084
319	HSS10102	HSS10102	0.245	1.000	0.245	Eq.H1-1b	35	0.438	0.057	0.057	0.084
320	HSS10102	HSS10102	0.224	1.000	0.224	Eq.H1-1b	17	0.438	0.057	0.057	0.084
321	HSS10102	HSS10102	0.172	1.000	0.172	Eq.H1-1b	23	0.438	0.057	0.057	0.084
322	HSS10102	HSS10102	0.361	1.000	0.361	Eq.H1-1b	38	0.438	0.057	0.057	0.084
323	HSS10102	HSS10102	0.206	1.000	0.206	Eq.H1-1b	20	0.438	0.057	0.057	0.084
324	HSS10102	HSS10102	0.129	1.000	0.129	Eq.H1-1b	35	0.438	0.057	0.057	0.084
325	HSS10102	HSS10102	0.076	1.000	0.076	Eq.H1-1b	56	0.438	0.057	0.057	0.084
326	HSS10102	HSS10102	0.074	1.000	0.074	Eq.H1-1b	17	0.438	0.057	0.057	0.084
327	HSS10102	HSS10102	0.081	1.000	0.081	Eq.H1-1b	20	0.438	0.057	0.057	0.084
328	HSS10102	HSS10102	0.071	1.000	0.071	Eq.H1-1b	20	0.438	0.057	0.057	0.084
329	HSS10102	HSS10102	0.075	1.000	0.075	Eq.H1-1b	17	0.438	0.057	0.057	0.084
348	A1000_UNIS	A1000_UNIS	0.309	1.000	0.309	Eq.H1-1b	17	0.312	0.087	0.065	0.001

Utilization Ratio Cont...

Beam	Analysis Property	Design Property	Actual Ratio	Allowable Ratio	Ratio (Act./Allow.)	Clause	L/C	Ax (in^2)	Iz (in^4)	Iy (in^4)	Ix (in^4)
358	HSS10102	HSS10102	0.375	1.000	0.375	Eq.H1-1b	26	0.438	0.057	0.057	0.084
359	HSS10102	HSS10102	0.280	1.000	0.280	Eq.H1-1b	26	0.438	0.057	0.057	0.084
360	HSS10102	HSS10102	0.318	1.000	0.318	Eq.H1-1b	26	0.438	0.057	0.057	0.084
361	HSS10102	HSS10102	0.250	1.000	0.250	Eq.H1-1b	23	0.438	0.057	0.057	0.084
362	HSS10102	HSS10102	0.215	1.000	0.215	Eq.H1-1b	20	0.438	0.057	0.057	0.084
363	HSS10102	HSS10102	0.389	1.000	0.389	Eq.H1-1b	20	0.438	0.057	0.057	0.084
364	HSS10102	HSS10102	0.221	1.000	0.221	Eq.H1-1b	58	0.438	0.057	0.057	0.084
365	HSS10102	HSS10102	0.469	1.000	0.469	Eq.H1-1b	58	0.438	0.057	0.057	0.084
366	HSS10102	HSS10102	0.317	1.000	0.317	Eq.H1-1a	20	0.438	0.057	0.057	0.084
367	HSS10102	HSS10102	0.195	1.000	0.195	Eq.H1-1b	20	0.438	0.057	0.057	0.084
368	HSS10102	HSS10102	0.309	1.000	0.309	Eq.H1-1a	38	0.438	0.057	0.057	0.084
369	HSS10102	HSS10102	0.179	1.000	0.179	Eq.H1-1b	23	0.438	0.057	0.057	0.084
1100	PIPS20	PIPS20	0.060	1.000	0.060	Eq.H1-1b	17	1.020	0.627	0.627	1.254
1101	PIPS20	PIPS20	0.135	1.000	0.135	Eq.H1-1b	54	1.020	0.627	0.627	1.254
1102	PIPS20	PIPS20	0.064	1.000	0.064	Eq.H1-1b	54	1.020	0.627	0.627	1.254
1103	PIPS20	PIPS20	0.024	1.000	0.024	Cl.E3	55	1.020	0.627	0.627	1.254
1200	PIPS20	PIPS20	0.122	1.000	0.122	Eq.H1-1b	17	1.020	0.627	0.627	1.254
1201	PIPS20	PIPS20	0.149	1.000	0.149	Eq.H1-1b	47	1.020	0.627	0.627	1.254
1202	PIPS20	PIPS20	0.111	1.000	0.111	Eq.H1-1b	17	1.020	0.627	0.627	1.254
1203	PIPS20	PIPS20	0.117	1.000	0.117	Eq.H1-1b	17	1.020	0.627	0.627	1.254
1500	PIPS20	PIPS20	0.106	1.000	0.106	Eq.H1-1b	17	1.020	0.627	0.627	1.254
1501	PIPS20	PIPS20	0.129	1.000	0.129	Eq.H1-1b	56	1.020	0.627	0.627	1.254
1502	PIPS20	PIPS20	0.099	1.000	0.099	Eq.H1-1b	17	1.020	0.627	0.627	1.254
1503	PIPS20	PIPS20	0.112	1.000	0.112	Eq.H1-1b	17	1.020	0.627	0.627	1.254
2100	PIPS20	PIPS20	0.054	1.000	0.054	Eq.H1-1b	20	1.020	0.627	0.627	1.254
2101	PIPS20	PIPS20	0.070	1.000	0.070	Eq.H1-1b	47	1.020	0.627	0.627	1.254
2102	PIPS20	PIPS20	0.042	1.000	0.042	Eq.H1-1b	20	1.020	0.627	0.627	1.254
2103	PIPS20	PIPS20	0.021	1.000	0.021	Eq.H1-1b	20	1.020	0.627	0.627	1.254
2200	PIPS20	PIPS20	0.110	1.000	0.110	Eq.H1-1b	20	1.020	0.627	0.627	1.254
2201	PIPS20	PIPS20	0.146	1.000	0.146	Eq.H1-1b	17	1.020	0.627	0.627	1.254
2202	PIPS20	PIPS20	0.091	1.000	0.091	Eq.H1-1b	38	1.020	0.627	0.627	1.254
2203	PIPS20	PIPS20	0.108	1.000	0.108	Eq.H1-1b	20	1.020	0.627	0.627	1.254
2500	PIPS20	PIPS20	0.102	1.000	0.102	Eq.H1-1b	20	1.020	0.627	0.627	1.254
2501	PIPS20	PIPS20	0.111	1.000	0.111	Eq.H1-1b	47	1.020	0.627	0.627	1.254
2502	PIPS20	PIPS20	0.104	1.000	0.104	Eq.H1-1b	35	1.020	0.627	0.627	1.254
2503	PIPS20	PIPS20	0.105	1.000	0.105	Eq.H1-1b	20	1.020	0.627	0.627	1.254
3100	PIPS20	PIPS20	0.060	1.000	0.060	Eq.H1-1b	17	1.020	0.627	0.627	1.254
3101	PIPS20	PIPS20	0.059	1.000	0.059	Eq.H1-1b	47	1.020	0.627	0.627	1.254
3102	PIPS20	PIPS20	0.042	1.000	0.042	Eq.H1-1b	35	1.020	0.627	0.627	1.254
3103	PIPS20	PIPS20	0.023	1.000	0.023	Eq.H1-1b	17	1.020	0.627	0.627	1.254
3200	PIPS20	PIPS20	0.122	1.000	0.122	Eq.H1-1b	17	1.020	0.627	0.627	1.254
3201	PIPS20	PIPS20	0.128	1.000	0.128	Eq.H1-1b	47	1.020	0.627	0.627	1.254
3202	PIPS20	PIPS20	0.092	1.000	0.092	Eq.H1-1b	17	1.020	0.627	0.627	1.254
3203	PIPS20	PIPS20	0.117	1.000	0.117	Eq.H1-1b	17	1.020	0.627	0.627	1.254
3403	A1000_UNIS	A1000_UNIS	0.368	1.000	0.368	Eq.H1-1b	35	0.312	0.087	0.065	0.001

Utilization Ratio Cont...

Beam	Analysis Property	Design Property	Actual Ratio	Allowable Ratio	Ratio (Act./Allow.)	Clause	L/C	Ax (in^2)	Iz (in^4)	Iy (in^4)	Ix (in^4)
3404	A1000_UNIS	A1000_UNIS	0.683	1.000	0.683	Eq.H1-1b	35	0.312	0.087	0.065	0.001
3405	A1000_UNIS	A1000_UNIS	0.162	1.000	0.162	Eq.H1-1b	17	0.312	0.087	0.065	0.001
3406	A1000_UNIS	A1000_UNIS	0.275	1.000	0.275	Eq.H1-1b	23	0.312	0.087	0.065	0.001
3410	A1000_UNIS	A1000_UNIS	0.228	1.000	0.228	Eq.H1-1b	20	0.312	0.087	0.065	0.001
3411	A1000_UNIS	A1000_UNIS	0.283	1.000	0.283	Eq.H1-1b	20	0.312	0.087	0.065	0.001
3415	A1000_UNIS	A1000_UNIS	0.348	1.000	0.348	Eq.H1-1b	17	0.312	0.087	0.065	0.001
3416	A1000_UNIS	A1000_UNIS	0.281	1.000	0.281	Eq.H1-1b	26	0.312	0.087	0.065	0.001
3420	A1000_UNIS	A1000_UNIS	0.535	1.000	0.535	Eq.H1-1b	20	0.312	0.087	0.065	0.001
3421	A1000_UNIS	A1000_UNIS	0.475	1.000	0.475	Eq.H1-1b	41	0.312	0.087	0.065	0.001
3422	A1000_UNIS	A1000_UNIS	0.388	1.000	0.388	Eq.H1-1b	20	0.312	0.087	0.065	0.001
3423	A1000_UNIS	A1000_UNIS	0.491	1.000	0.491	Eq.H1-1b	44	0.312	0.087	0.065	0.001
3500	PIPS20	PIPS20	0.106	1.000	0.106	Eq.H1-1b	17	1.020	0.627	0.627	1.254
3501	PIPS20	PIPS20	0.127	1.000	0.127	Eq.H1-1b	47	1.020	0.627	0.627	1.254
3502	PIPS20	PIPS20	0.087	1.000	0.087	Eq.H1-1b	27	1.020	0.627	0.627	1.254
3503	PIPS20	PIPS20	0.112	1.000	0.112	Eq.H1-1b	17	1.020	0.627	0.627	1.254
3506	HSS10102	HSS10102	0.281	1.000	0.281	Eq.H1-1b	44	0.438	0.057	0.057	0.084
3507	HSS10102	HSS10102	0.414	1.000	0.414	Eq.H1-1b	23	0.438	0.057	0.057	0.084
3508	HSS10102	HSS10102	0.255	1.000	0.255	Eq.H1-1b	26	0.438	0.057	0.057	0.084
3509	HSS10102	HSS10102	0.315	1.000	0.315	Eq.H1-1a	20	0.438	0.057	0.057	0.084
3510	HSS10102	HSS10102	0.359	1.000	0.359	Eq.H1-1a	17	0.438	0.057	0.057	0.084
3511	A1000_UNIS	A1000_UNIS	0.187	1.000	0.187	Eq.H1-1b	17	0.312	0.087	0.065	0.001
3512	A1000_UNIS	A1000_UNIS	0.270	1.000	0.270	Eq.H1-1b	35	0.312	0.087	0.065	0.001
3513	HSS10102	HSS10102	0.176	1.000	0.176	Eq.H1-1b	17	0.438	0.057	0.057	0.084
3514	HSS10102	HSS10102	0.231	1.000	0.231	Eq.H1-1b	29	0.438	0.057	0.057	0.084
3515	HSS10102	HSS10102	0.144	1.000	0.144	Cl.D2	35	0.438	0.057	0.057	0.084
3516	HSS10102	HSS10102	0.385	1.000	0.385	Eq.H1-1a	29	0.438	0.057	0.057	0.084
3517	A1000_UNIS	A1000_UNIS	0.578	1.000	0.578	Eq.H1-1b	17	0.312	0.087	0.065	0.001
3518	A1000_UNIS	A1000_UNIS	0.620	1.000	0.620	Eq.H1-1b	54	0.312	0.087	0.065	0.001
3519	A1000_UNIS	A1000_UNIS	0.135	1.000	0.135	Eq.H1-1b	38	0.312	0.087	0.065	0.001
3520	A1000_UNIS	A1000_UNIS	0.340	1.000	0.340	Eq.H1-1b	38	0.312	0.087	0.065	0.001
3521	HSS10102	HSS10102	0.195	1.000	0.195	Eq.H1-1b	20	0.438	0.057	0.057	0.084
3522	HSS10102	HSS10102	0.291	1.000	0.291	Eq.H1-1a	35	0.438	0.057	0.057	0.084
3523	HSS10102	HSS10102	0.113	1.000	0.113	Eq.H1-1b	17	0.438	0.057	0.057	0.084
3524	HSS10102	HSS10102	0.191	1.000	0.191	Eq.H1-1b	38	0.438	0.057	0.057	0.084
3525	A1000_UNIS	A1000_UNIS	0.502	1.000	0.502	Eq.H1-1b	17	0.312	0.087	0.065	0.001
3526	A1000_UNIS	A1000_UNIS	0.383	1.000	0.383	Eq.H1-1b	20	0.312	0.087	0.065	0.001
3527	A1000_UNIS	A1000_UNIS	0.233	1.000	0.233	Eq.H1-1b	17	0.312	0.087	0.065	0.001
3528	A1000_UNIS	A1000_UNIS	0.411	1.000	0.411	Eq.H1-1b	35	0.312	0.087	0.065	0.001
3529	HSS10102	HSS10102	0.180	1.000	0.180	Eq.H1-1b	38	0.438	0.057	0.057	0.084
3530	HSS10102	HSS10102	0.191	1.000	0.191	Eq.H1-1b	32	0.438	0.057	0.057	0.084
3531	HSS10102	HSS10102	0.118	1.000	0.118	Cl.D2	17	0.438	0.057	0.057	0.084
3532	HSS10102	HSS10102	0.274	1.000	0.274	Eq.H1-1a	35	0.438	0.057	0.057	0.084
3533	A1000_UNIS	A1000_UNIS	0.521	1.000	0.521	Eq.H1-1b	38	0.312	0.087	0.065	0.001
3534	A1000_UNIS	A1000_UNIS	0.344	1.000	0.344	Eq.H1-1b	38	0.312	0.087	0.065	0.001
3535	A1000_UNIS	A1000_UNIS	0.603	1.000	0.603	Eq.H1-1b	35	0.312	0.087	0.065	0.001

Utilization Ratio Cont...

Beam	Analysis Property	Design Property	Actual Ratio	Allowable Ratio	Ratio (Act./Allow.)	Clause	L/C	Ax (in^2)	Iz (in^4)	Iy (in^4)	Ix (in^4)
3536	A1000_UNIS	A1000_UNIS	0.366	1.000	0.366	Eq.H1-1b	50	0.312	0.087	0.065	0.001
3537	HSS10102	HSS10102	0.363	1.000	0.363	Eq.H1-1b	59	0.438	0.057	0.057	0.084
3538	HSS10102	HSS10102	0.313	1.000	0.313	Eq.H1-1b	17	0.438	0.057	0.057	0.084
3539	HSS10102	HSS10102	0.277	1.000	0.277	Eq.H1-1b	38	0.438	0.057	0.057	0.084
3540	HSS10102	HSS10102	0.276	1.000	0.276	Eq.H1-1b	23	0.438	0.057	0.057	0.084
3541	HSS10102	HSS10102	0.249	1.000	0.249	Eq.H1-1b	35	0.438	0.057	0.057	0.084
3542	HSS10102	HSS10102	0.229	1.000	0.229	Eq.H1-1b	20	0.438	0.057	0.057	0.084
3543	HSS10102	HSS10102	0.306	1.000	0.306	Eq.H1-1b	17	0.438	0.057	0.057	0.084
3544	HSS10102	HSS10102	0.350	1.000	0.350	Eq.H1-1b	26	0.438	0.057	0.057	0.084
3545	HSS10102	HSS10102	0.310	1.000	0.310	Eq.H1-1b	23	0.438	0.057	0.057	0.084

Failed Members

There is no data of this type.

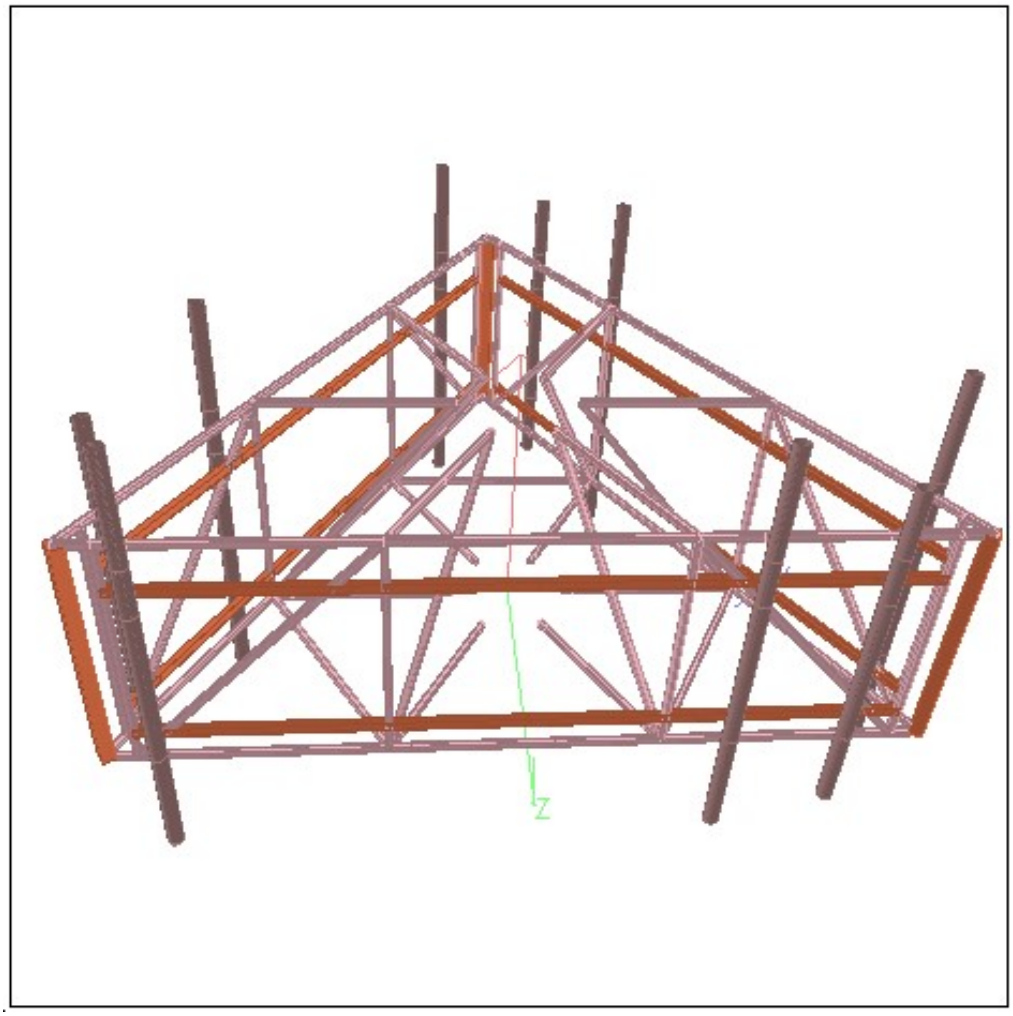

3D Rendered View

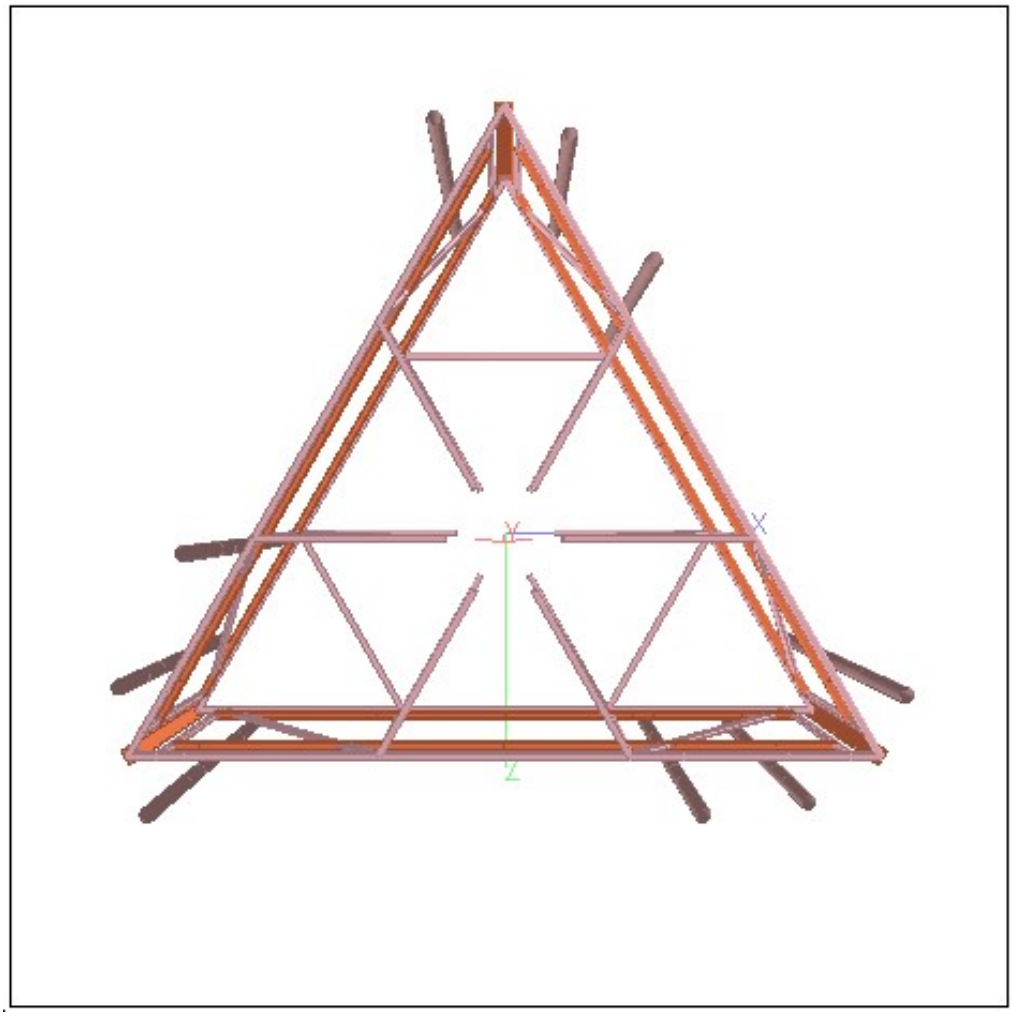

3D Rendered View

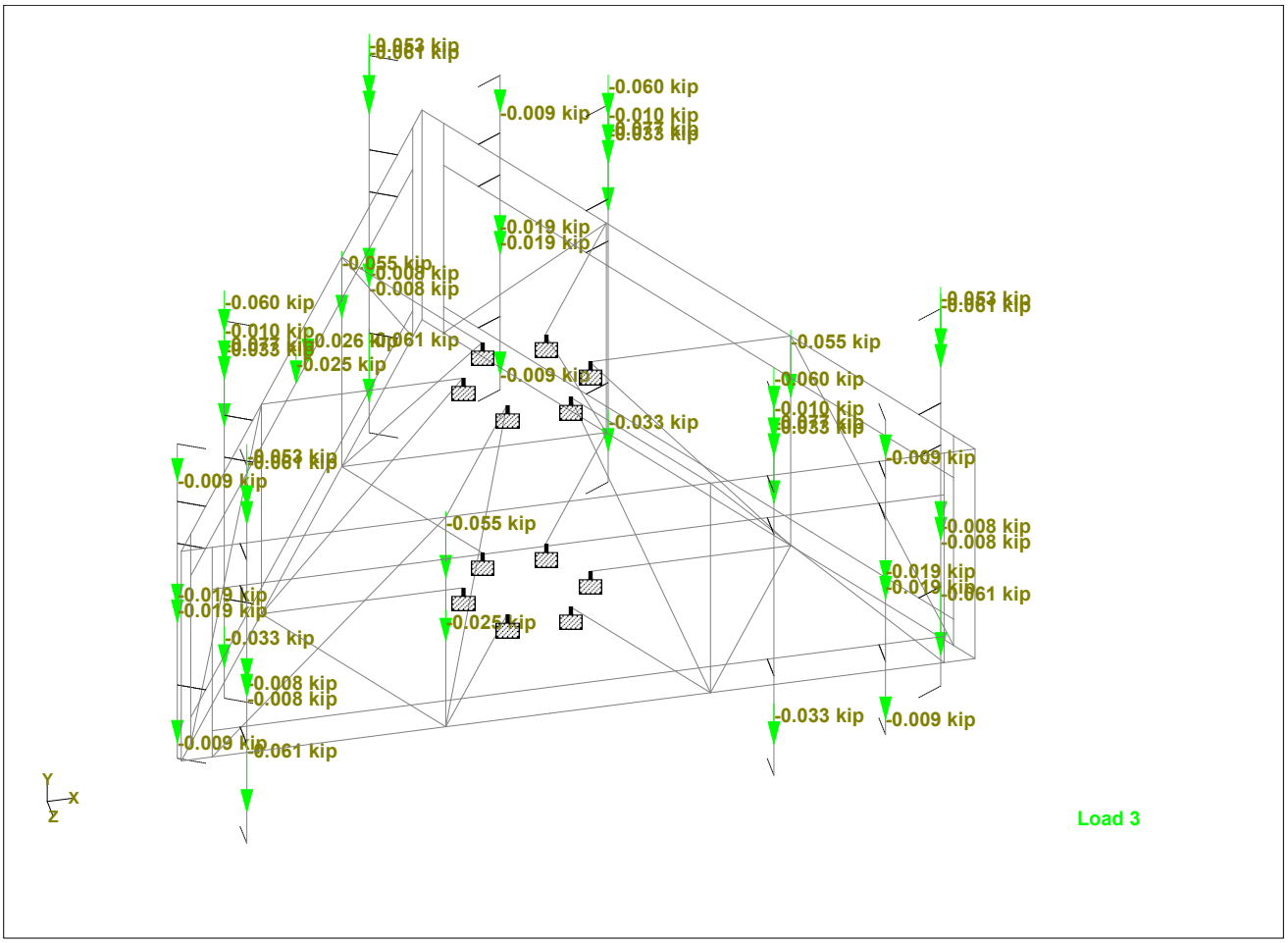

Whole Structure Loads 0.0043696kip:1in 3 ANTENNA DEAD LOADS

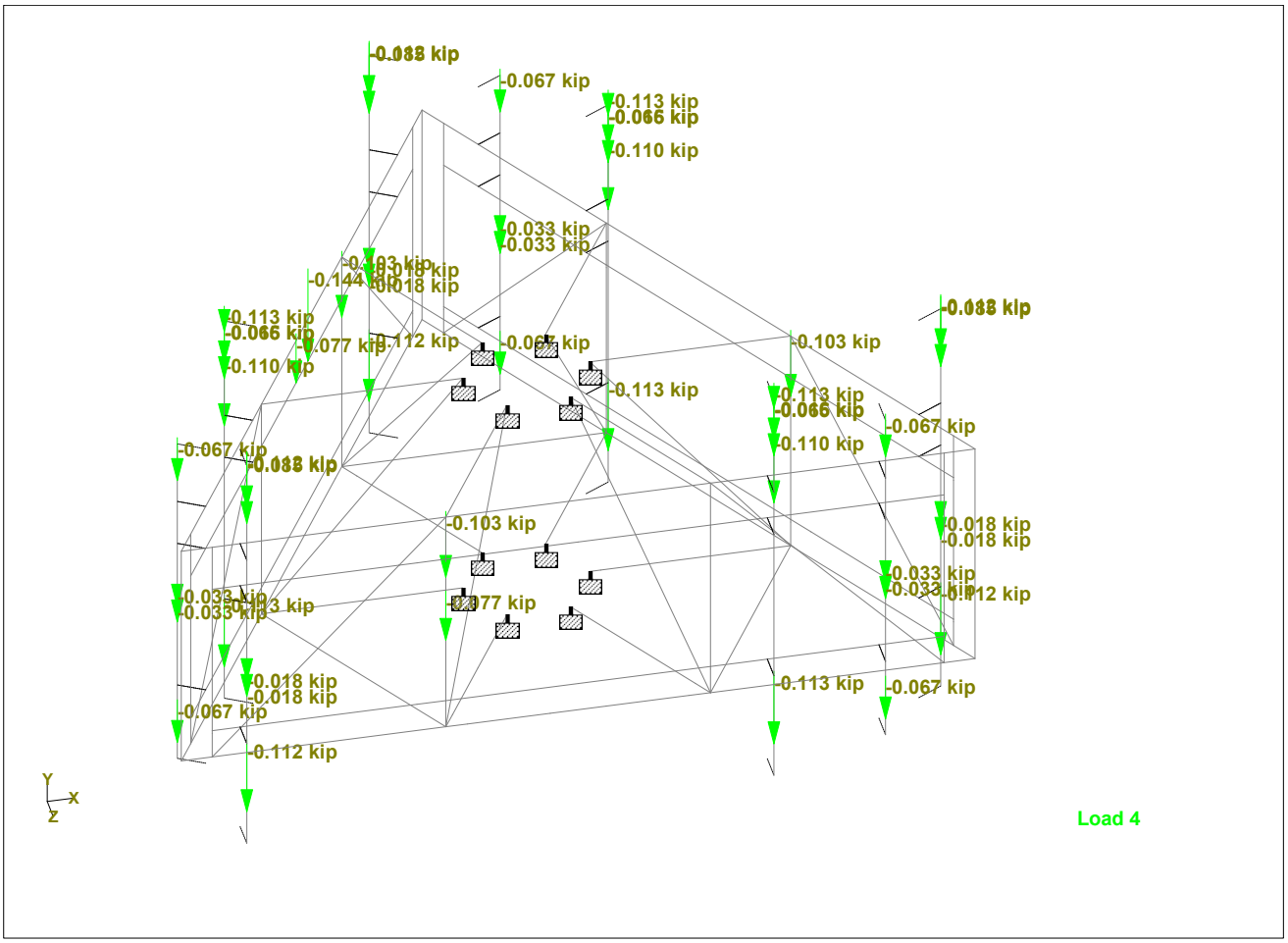

Whole Structure Loads 0.00815469kip:1in 4 ANTENNA ICE WEIGHT LOADS

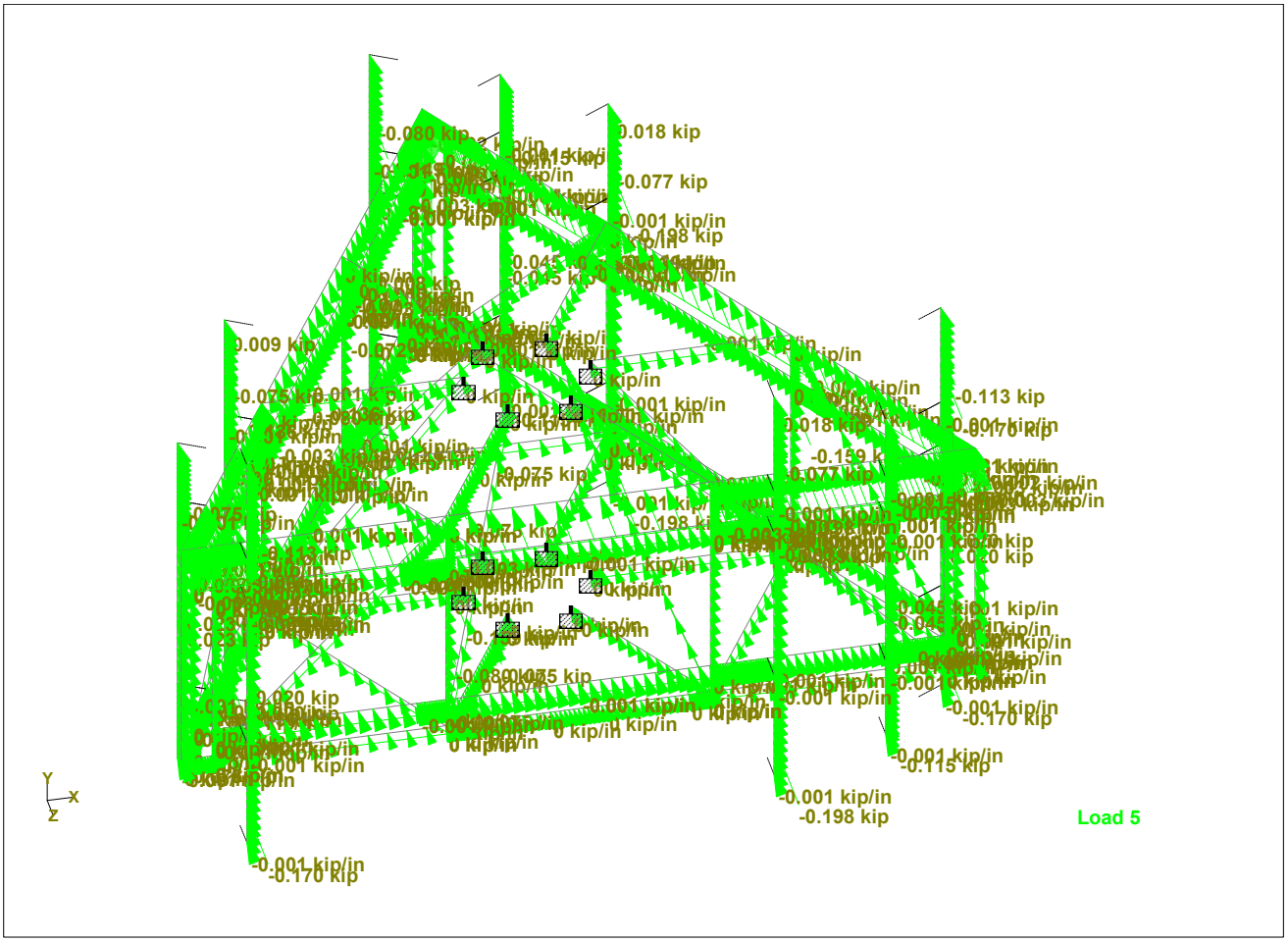

Whole Structure Loads 0.0112588kip:1in 5 FRONT WIND LOADS

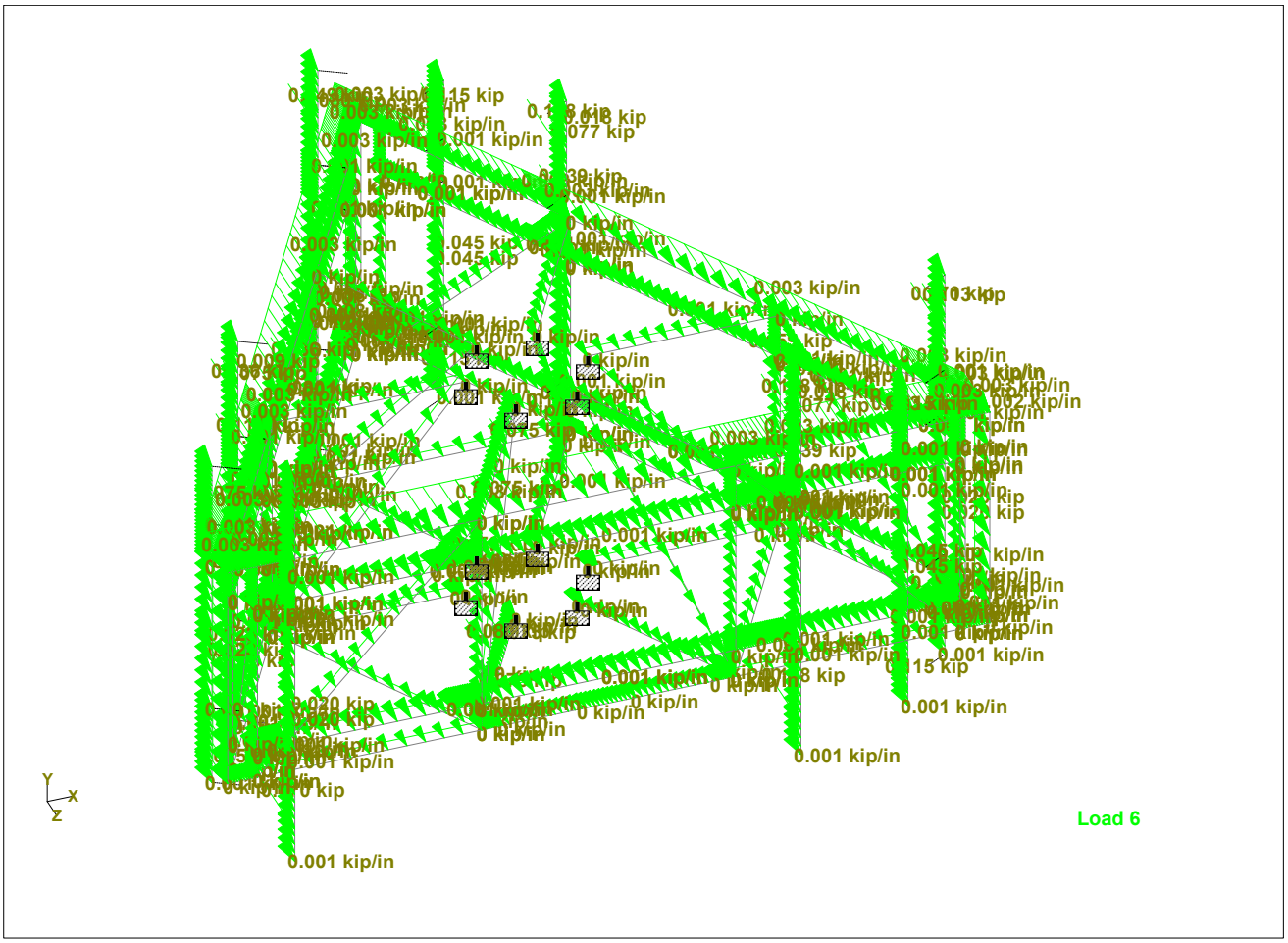

Whole Structure Loads 0.0112588kip:1in 6 BACK WIND LOADS

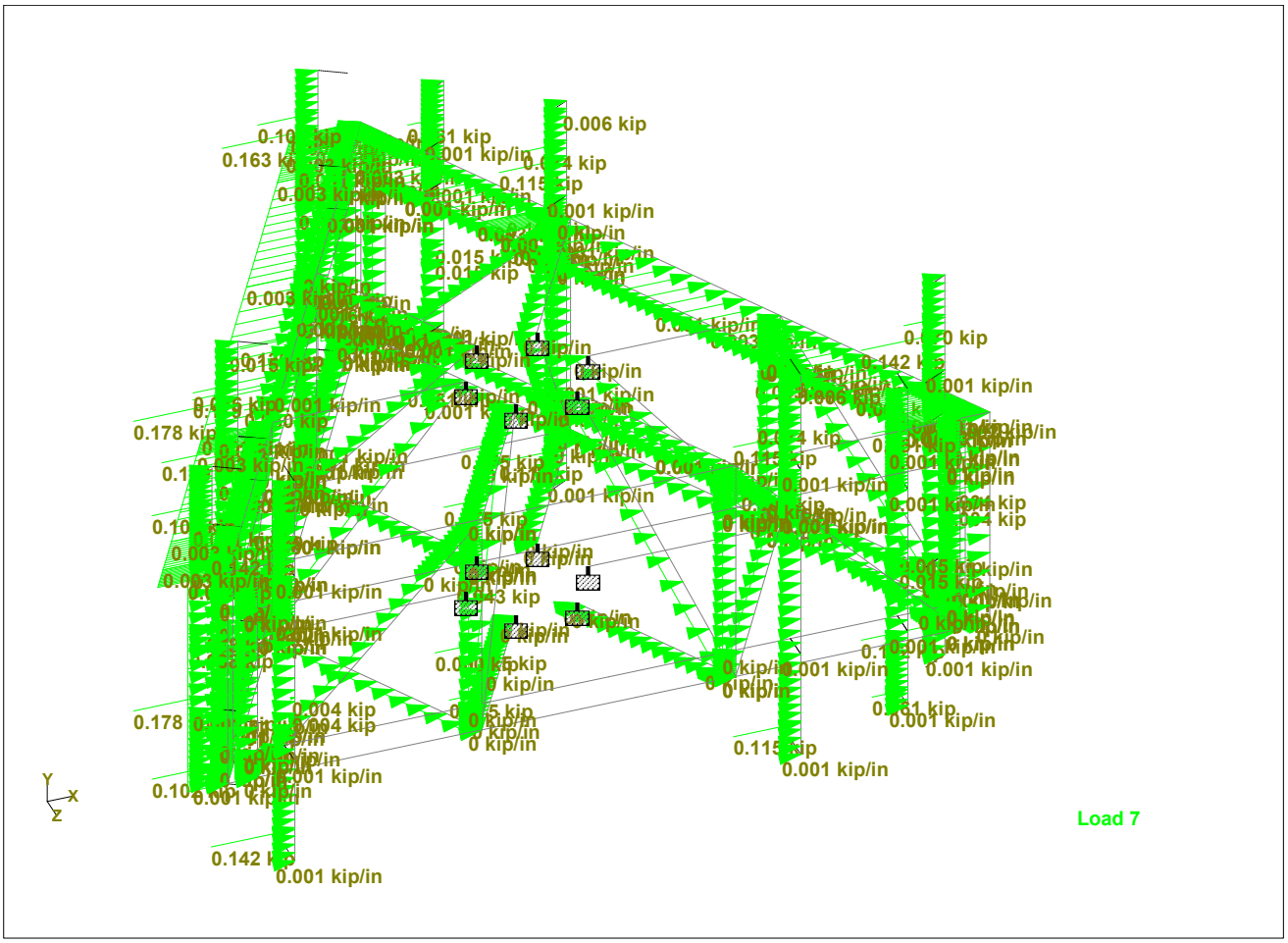

Whole Structure Loads 0.0101409kip:1in 7 SIDE WIND LOADS 1

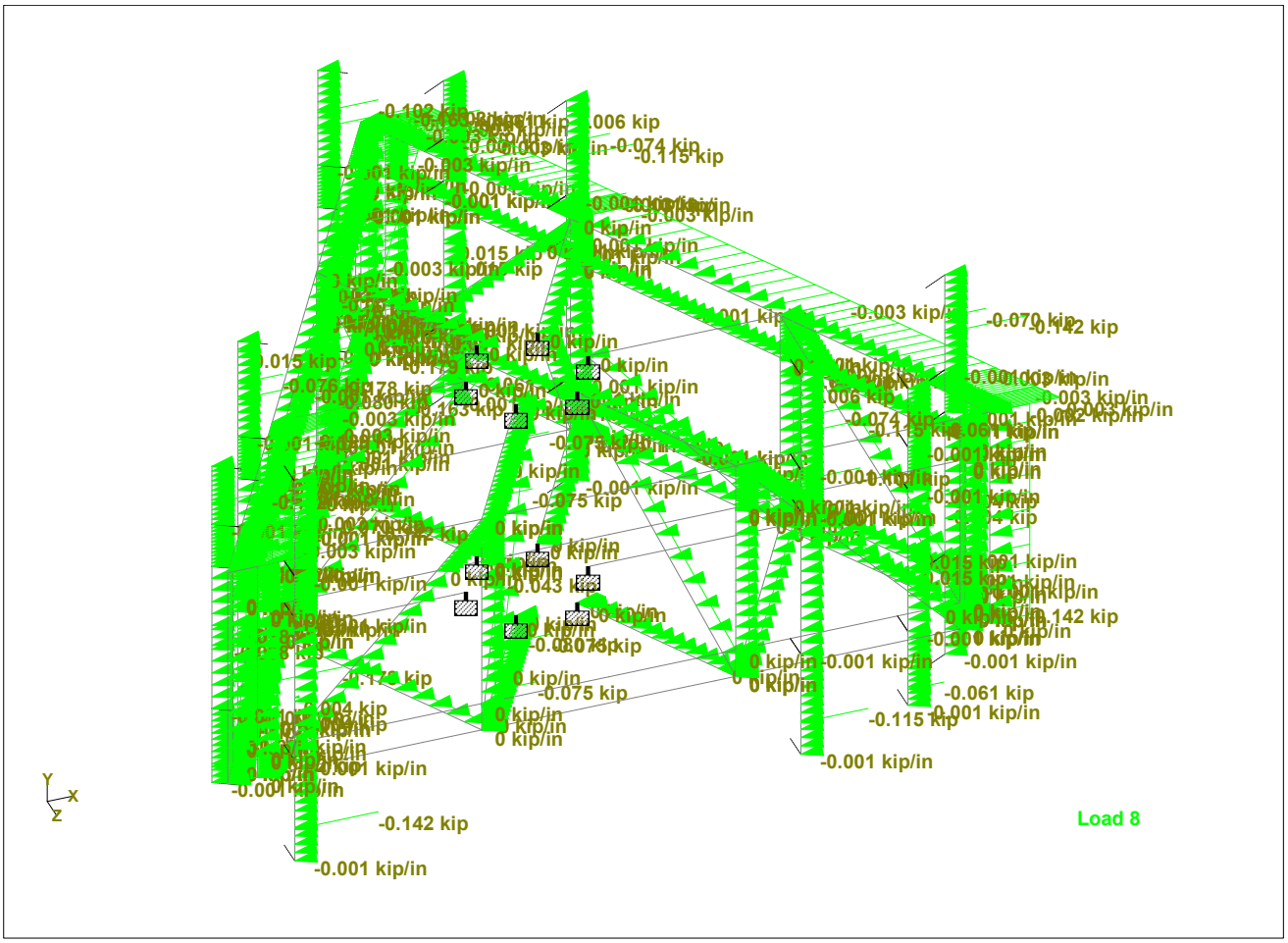

Whole Structure Loads 0.0101409kip:1in 8 SIDE WIND LOADS 2

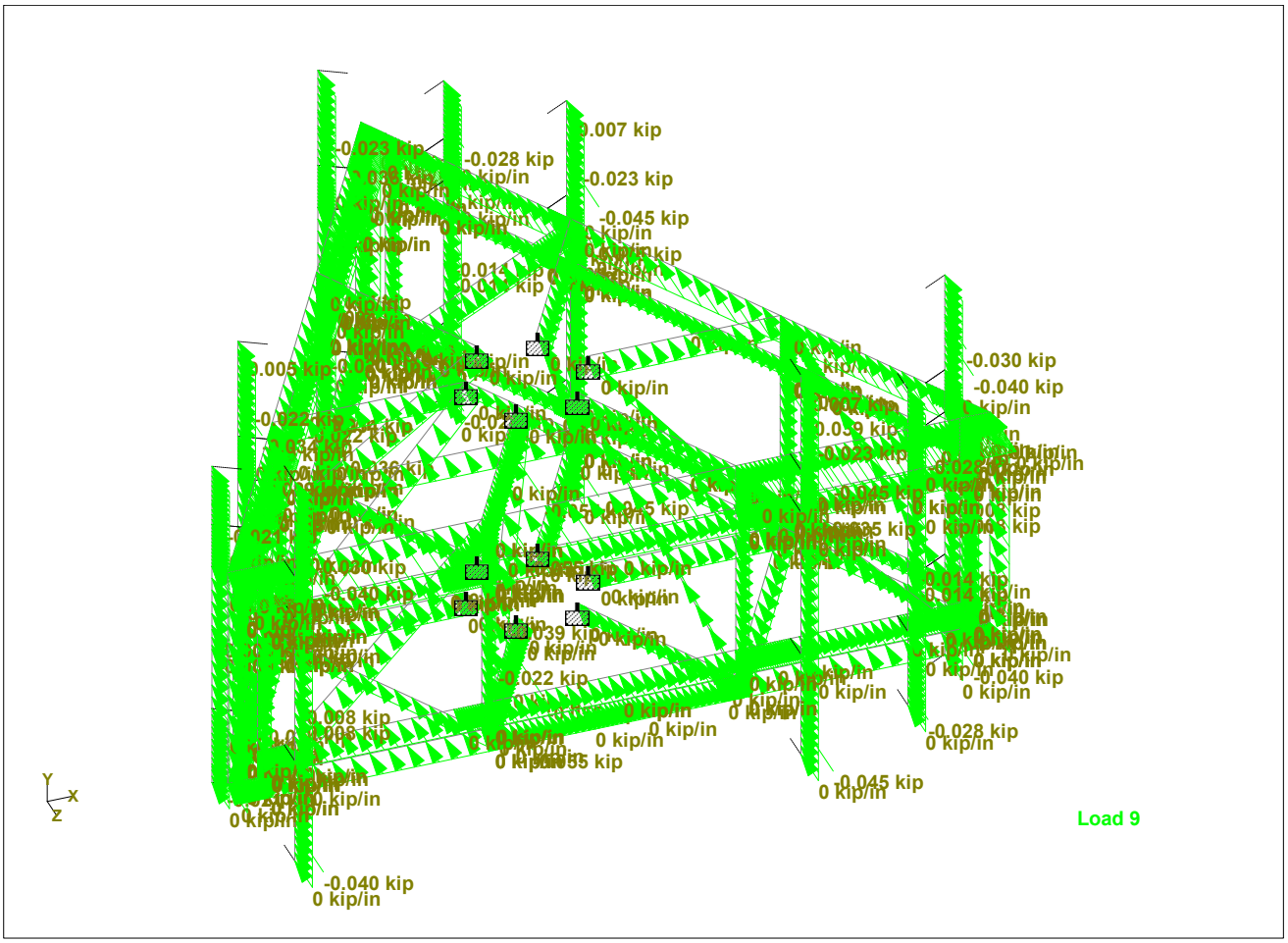

Whole Structure Loads 0.00312114kip:1in 9 FRONT ICED WIND LOADS

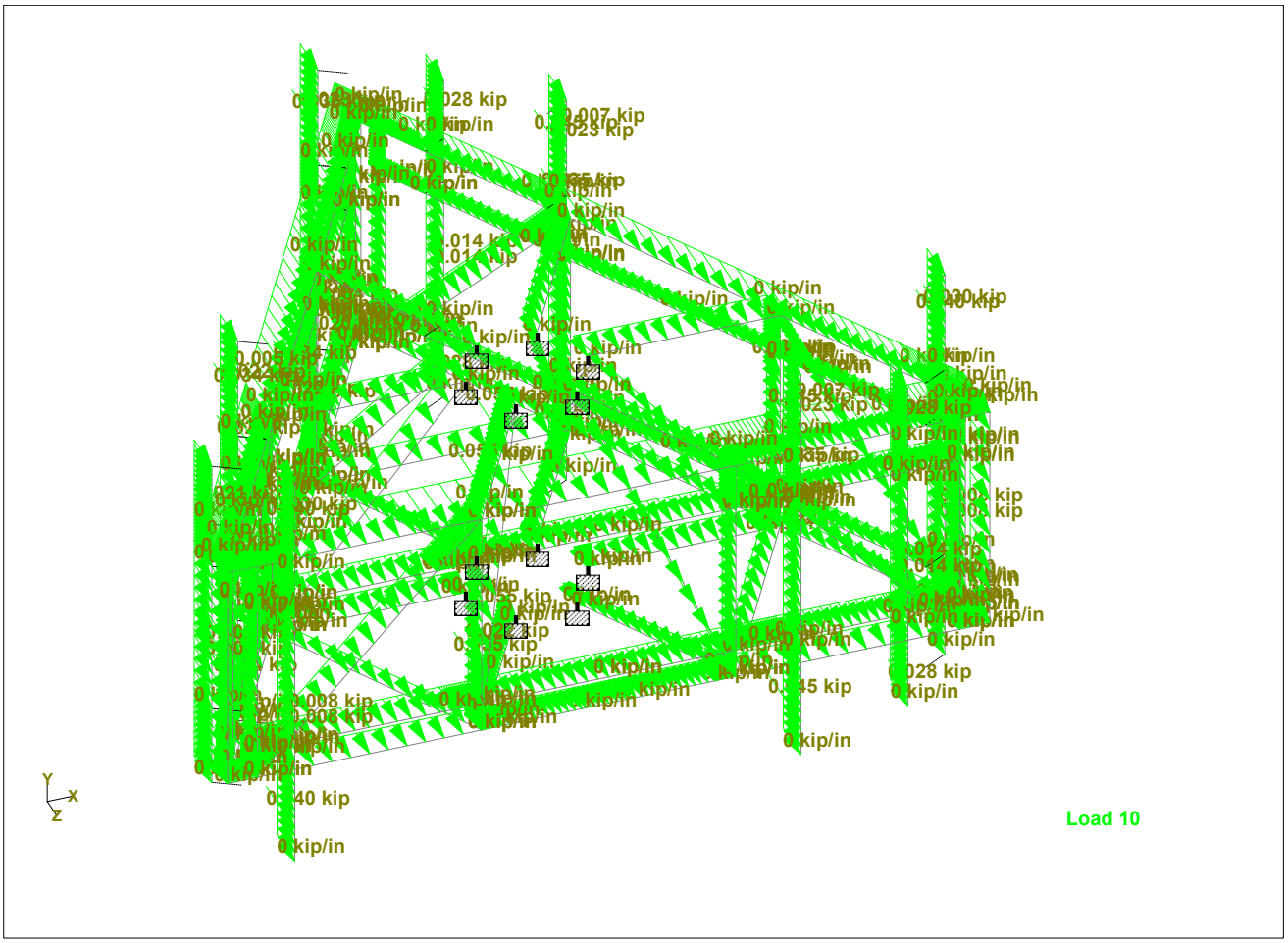

Whole Structure Loads 0.00312114kip:1in 10 BACK ICED WIND LOADS

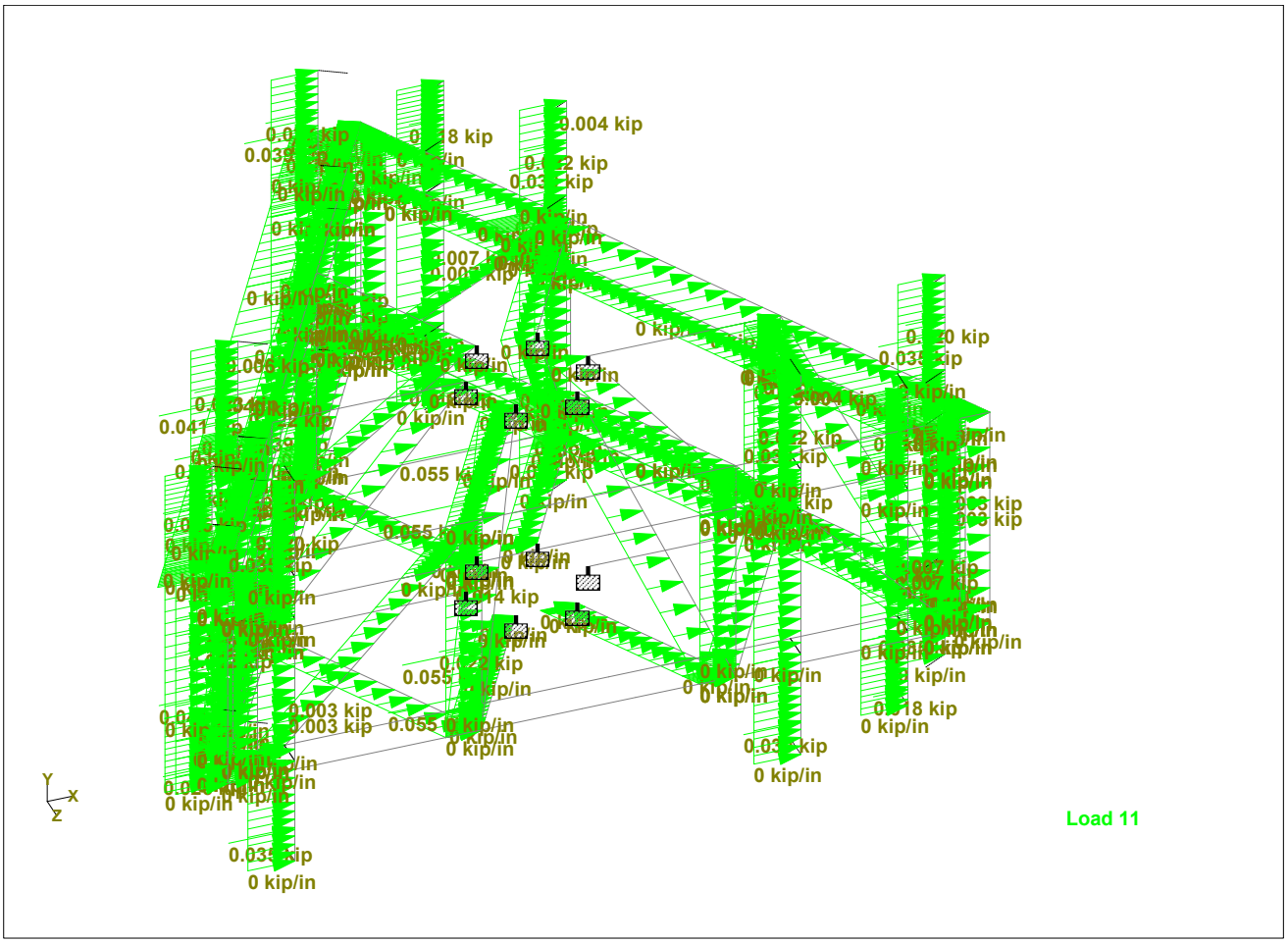

Whole Structure Loads 0.00312114kip:1in 11 SIDE ICED WIND LOADS 1

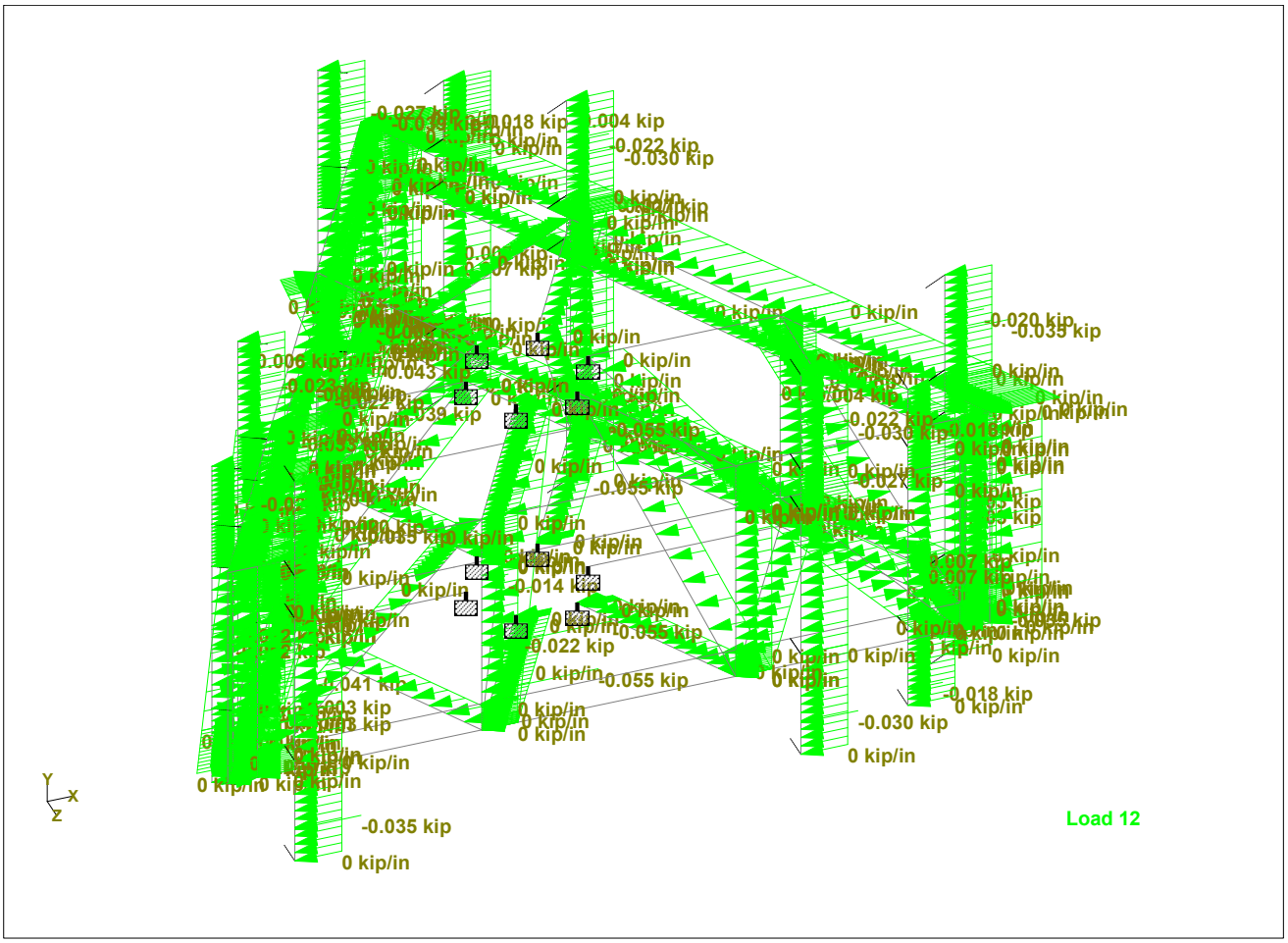

Whole Structure Loads 0.00312114kip:1in 12 SIDE ICED WIND LOADS 2

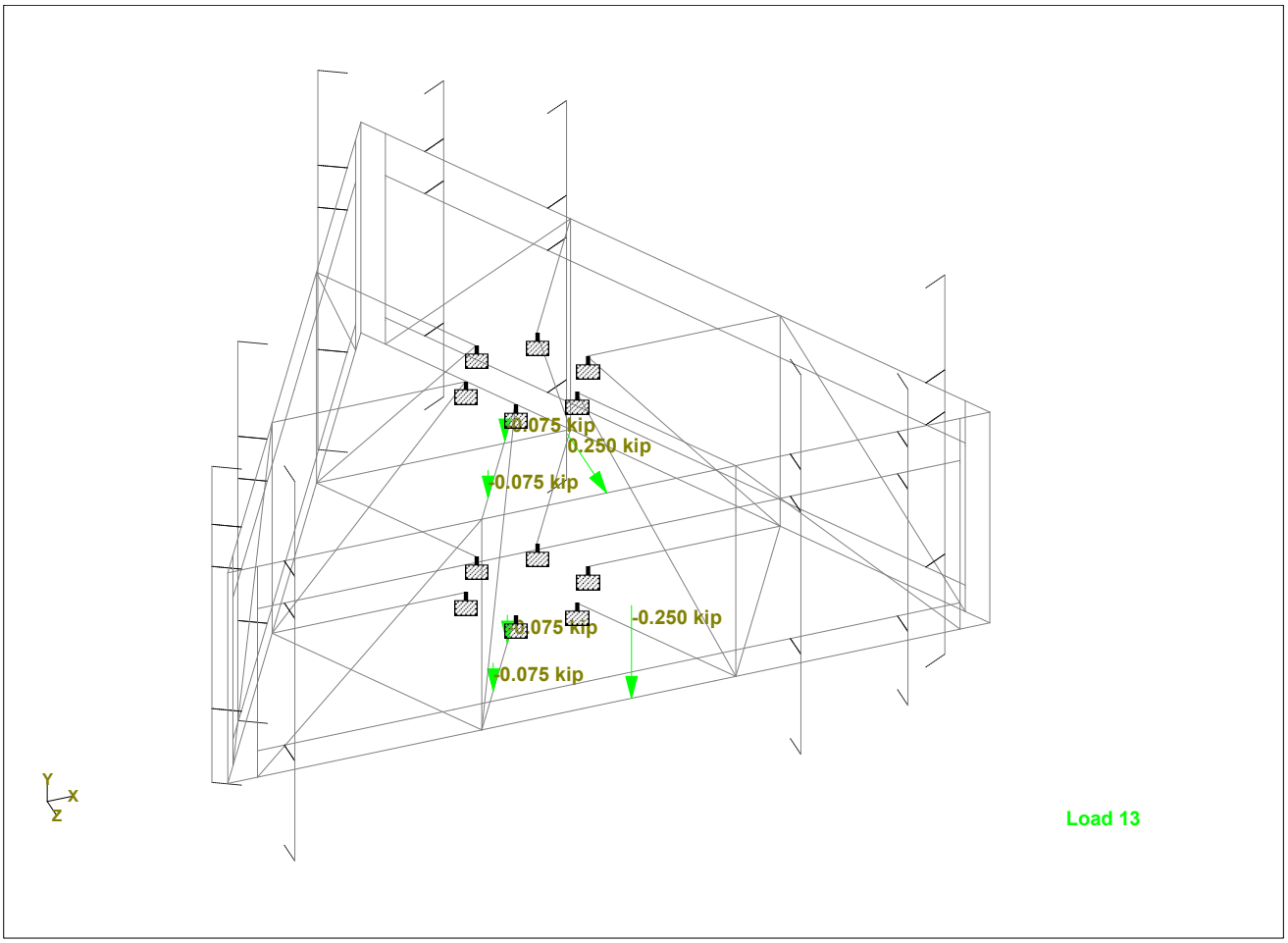

Whole Structure Loads 0.014187kip:1in 13 MAN LV LOAD 1

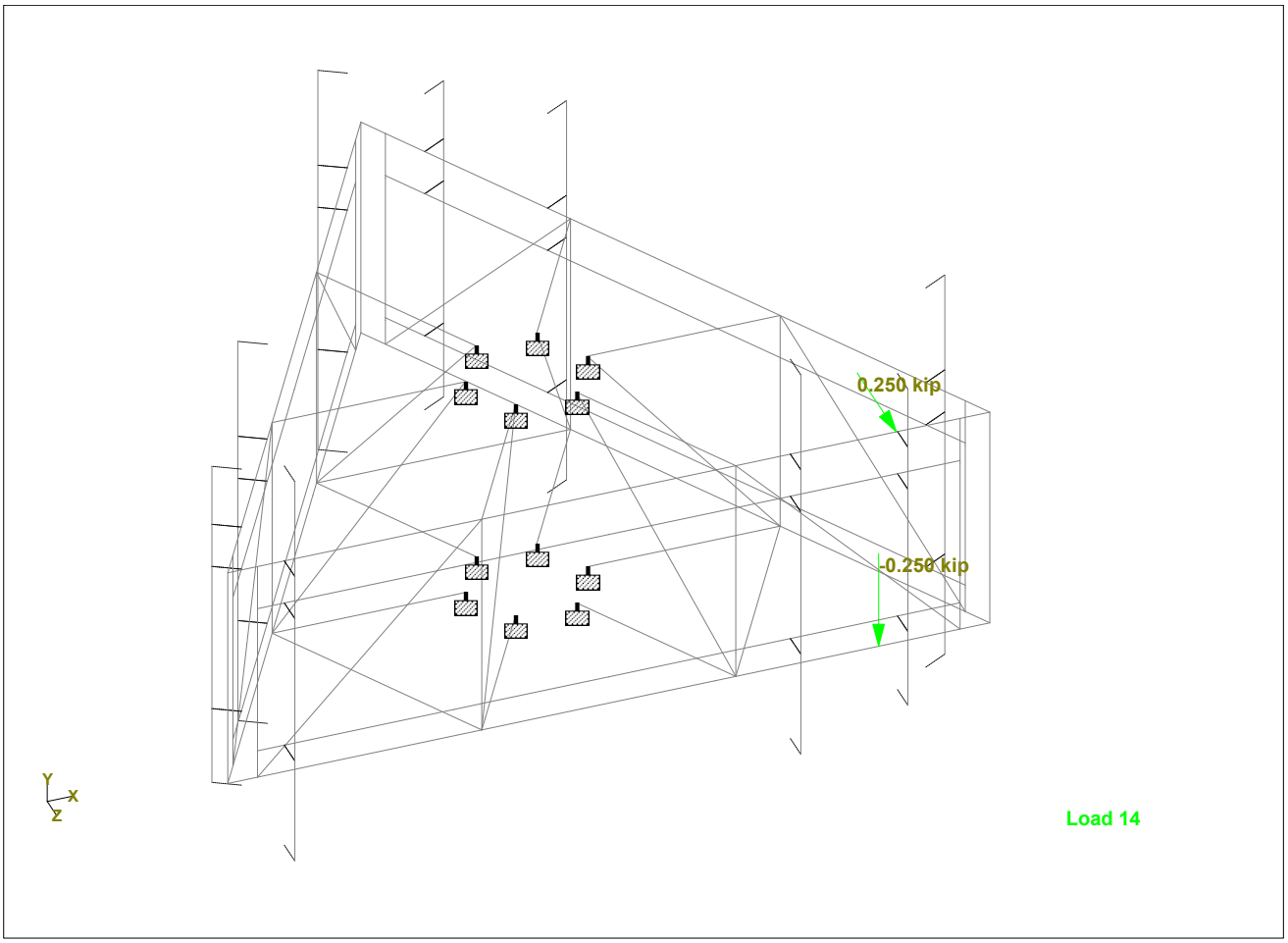

Whole Structure Loads 0.014187kip:1in 14 MAN LV LOAD 2

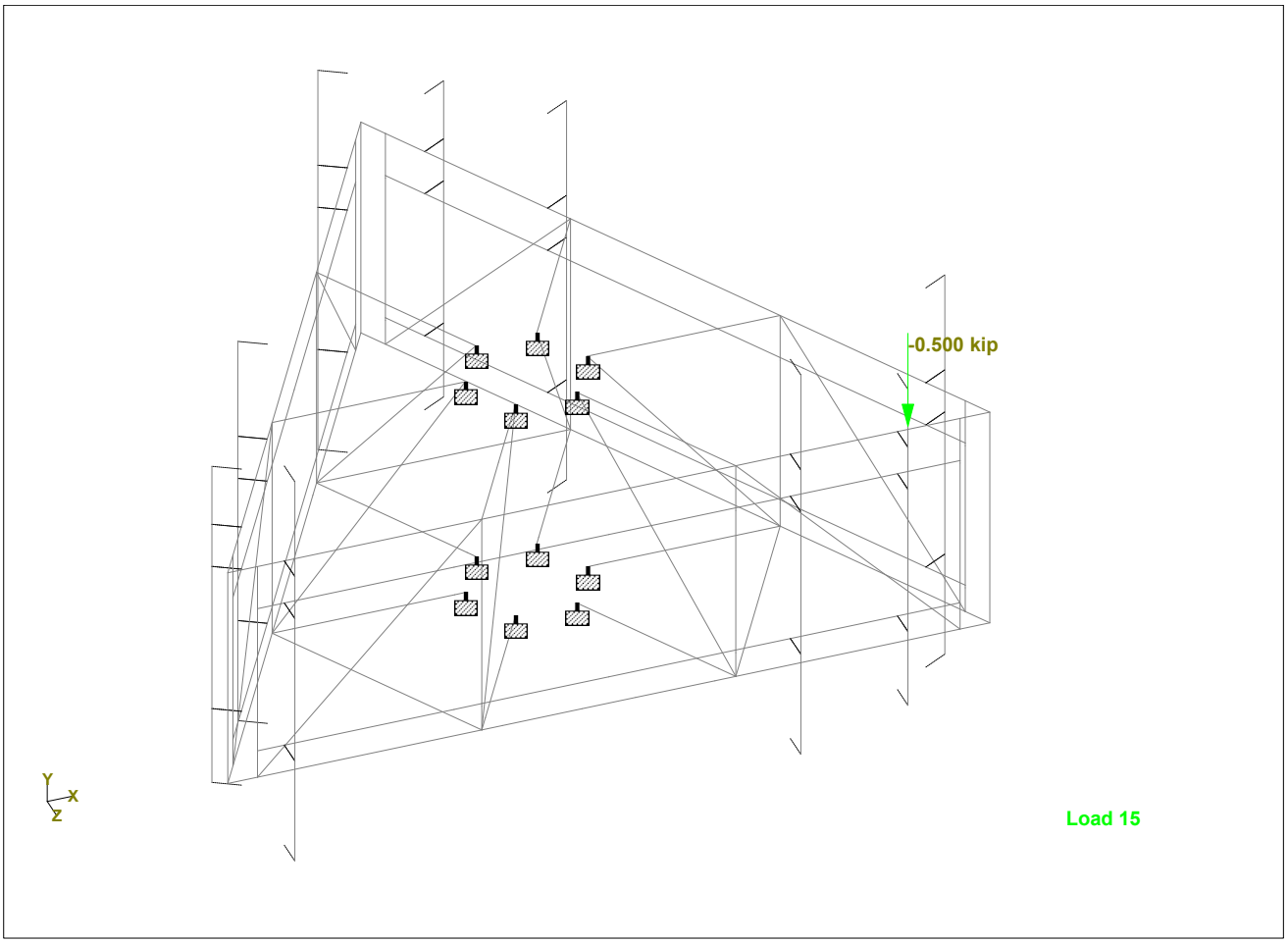

Whole Structure Loads 0.028374kip:1in 15 MAN LM LOAD 1

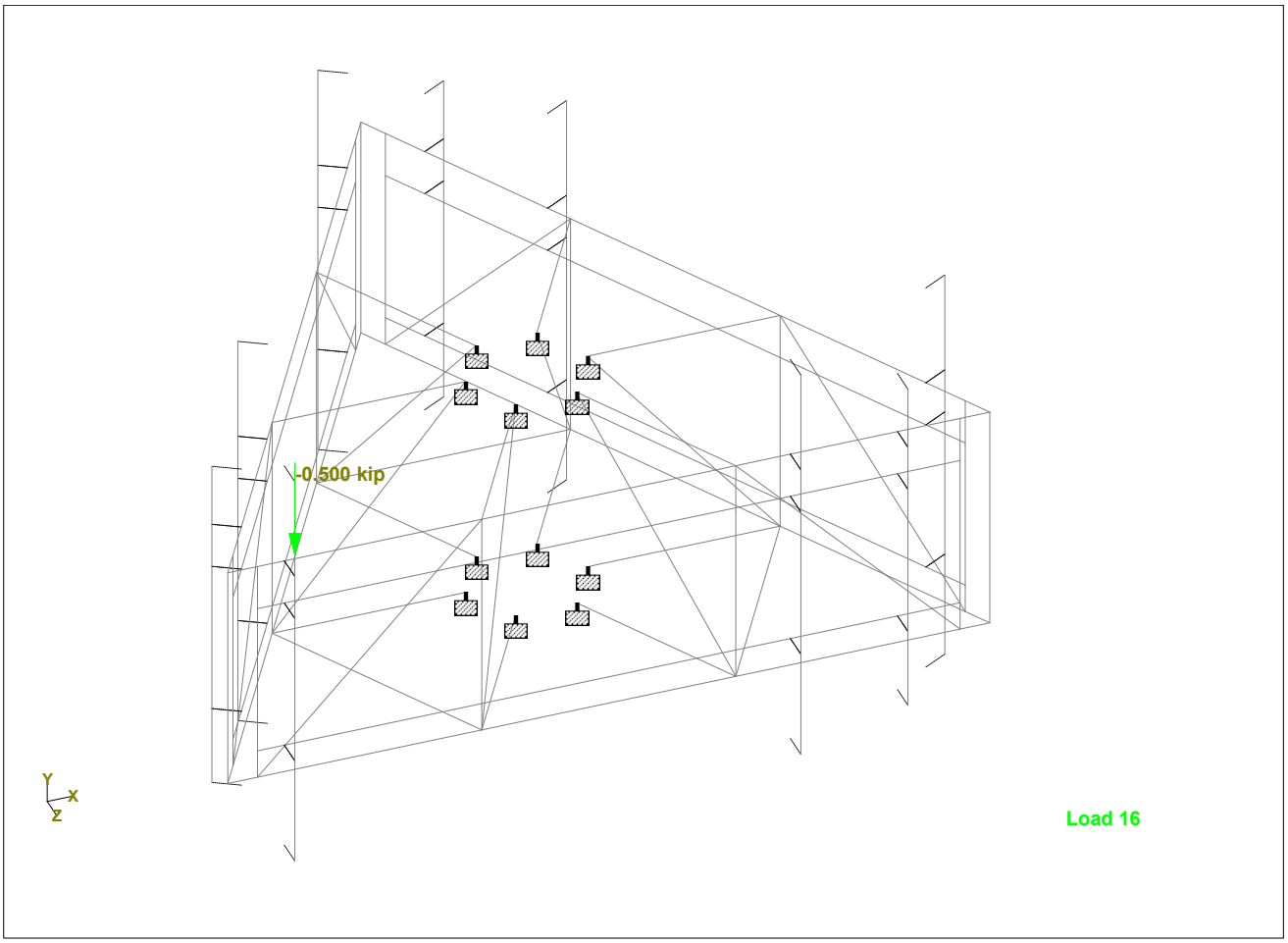

Whole Structure Loads 0.028374kip:1in 16 MAN LM LOAD 2

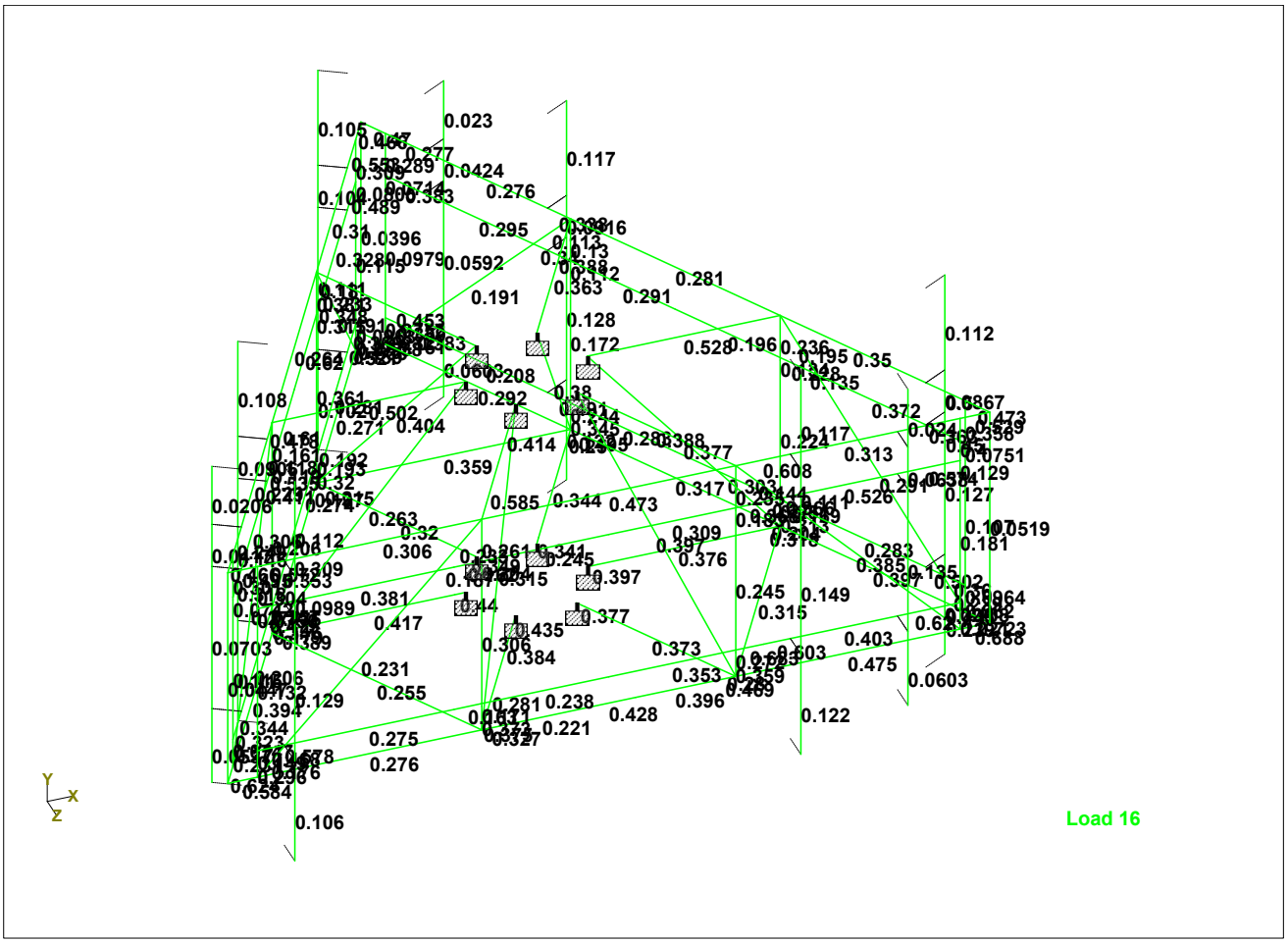

Max Stress Ratios - Max = 72.3% < 105% --> OK!

APPENDIX 2 – SOURCE / REFERENCE DOCUMENTS

This report is not to be reproduced or copied in whole or in part without MEI's written consent. 2020, MEI, Inc. ©

Attachments: CT1014_2019-Cell-Site-RF-Modifications_IP-Repeater---Type-1_om636a_PTN_10034969_25935_01-09-2019_Preliminary-Approved_v1.00.pdf; 10034969.CT1014.Platform.Sketch.02.18.2020.dwg; VRG-MEI PO#14-132 dated 02-19-2020.pdf

---

From: Vertical Resources Group <mnobre@verticalresourcesgrp.com>
Sent: Wednesday, February 19, 2020 11:05 AM
To: Mark Malouf <mmalouf@maloufengineering.com>; MEI Admin <execadmin@maloufengineering.com>
Subject: Request AT&T site CT1014 Berlin CT Platform Analysis

Hi Mark, new site CT1014 Berlin NE
In need of a Platform Analysis here.

https://www.dropbox.com/sh/t94ny2z1lt6ywv1/AACOudLoeSYTFQx_iOZ1Sexja?dl=0

Existing Loading:
Elev 152' (3) Powerwave 7770 (UMTS position #1 To Remain)
Elev 152' (3) CCI OPA65RLCUUH6 (LTE700bc/WCS position #2 To Remain)
Elev 152' (3) Quintel QS665122 (LTE700b14/850/PCS/AWS position #4 To Remain)
Elev 152' (6) Powerwave LGP21401 (UMTS position #1To Remain)
Elev 152' (6) CCI TPX070821 (LTE triplexer position #4 To Remain)
Elev 152' (3) Ericsson RRUS-11 mounted to platform face (LTE700 To Remain)
Elev 152' (3) Ericsson RRUS-32 mounted behind panel position #2 (LTEWCS To Remain)
Elev 152' (3) Ericsson RRUS-32b2 mounted behind panel position #4 (LTEPCS To Remain)
Elev 152' (3) Ericsson RRUS-4426 mounted to monopole shaft (LTEAWS To Remain)
Elev 152' (2) Raycap Surge Arrestor DC6-48-60-18-8F mounted to platform face (To Remain)
(2E) fiber trunk)
(4E) DC trunks

Final/Proposed Loading:
Elev 152' (3) Powerwave 7770 (UMTS position #1 To Remain)
Elev 152' (3) CCI OPA65RLCUUH6 (LTE700bc/WCS position #2 To Remain)
Elev 152' (3) Quintel QS665122 (LTE700b14/850/PCS/AWS position #4 To Remain)
Elev 152' (6) Powerwave LGP21401 (UMTS position #1To Remain)
Elev 152' (6) CCI TPX070821 (LTE triplexer position #4 To Remain)
Elev 152' (3) Ericsson RRUS-11 mounted to platform face (LTE700 To Remain)
Elev 152' (3) Ericsson RRUS-32 mounted behind panel position #2 (LTEWCS To Remain)
Elev 152' (3) Ericsson RRUS-32b2 mounted behind panel position #4 (LTEPCS To Remain)
Elev 152' (3) Ericsson ION M23 SDARS radio mounted behind panel position #2 (NEW)
Elev 152' (3) Ericsson CBC23SR-43 combiner mounted behind panel position #2 (NEW)
Elev 152' (3) Ericsson RRUS-4426 mounted to monopole shaft (LTEAWS To Remain)
Elev 152' (2) Raycap Surge Arrestor DC6-48-60-18-8F mounted to platform face (To Remain)
Elev 152' (1) Raycap Surge Arrestor DC6-48-60-0-8CEV mounted to platform face (NEW)
(2E) fiber trunk)
(4E+2P) DC trunks

Miguel Nobre
Vertical Resources Group
23 MidState Dr., #210
Auburn, MA 01501
P: 508-981-9590
F: 508-519-8939

Section 1 - RFDS GENERAL INFORMATION

RFDS NAME:	CTL01014	DATE:	01/09/2019	RF DESIGN ENG:	Omair Mohammed
ISSUE:	Bronze RRH	Approved? (Y/N):	Yes	RF DESIGN PHONE:	5105986983
REVISION:	Preliminary	RF MANAGER:	John Benedetto	RF DESIGN EMAIL:	om636a@att.com
INITIATIVE /PROJECT:	Cell Site RF Modifications || IP Repeater - Type 1				

RF PERF ENG:		RFDS PROGRAM TYPE:	2019 Cell Site RF Modifications		
RF PERF PHONE:		RFDS TECHNOLOGY:	IP Repeater - Type 1		
RF PERF EMAIL:		STATE/STATUS:	Preliminary/Approved		
RFDS VERSION:	1.00	RFDS ID:	2776104		
GSM FREQUENCY:		Created By:	om636a	Updated By:	om636a
UMTS FREQUENCY:	850	Date Created:	1/9/2019 10:58:41 AM	Date Updated:	1/17/2019 3:47:02 PM
LTE FREQUENCY:	700, 850, 1900, AWS, WCS				
5G FREQUENCY:	850				
I-PLAN JOB # 1:	NER-RCTB-18-09238	IPLAN PRD GRP || SUB GRP #1:	Cell Site RF Modifications || IP Repeater - Type 1		
I-PLAN JOB # 2:		IPLAN PRD GRP || SUB GRP #2:			
I-PLAN JOB # 3:		IPLAN PRD GRP || SUB GRP #3:			
I-PLAN JOB # 4:		IPLAN PRD GRP || SUB GRP #4:			
I-PLAN JOB # 5:		IPLAN PRD GRP || SUB GRP #5:			
I-PLAN JOB # 6:		IPLAN PRD GRP || SUB GRP #6:			
I-PLAN JOB # 7:		IPLAN PRD GRP || SUB GRP #7:			
I-PLAN JOB # 8:		IPLAN PRD GRP || SUB GRP #8:			

Section 2 - LOCATION INFORMATION

USID:	25935	FA LOCATION CODE:	10034969	LOCATION NAME:	BERLIN NE
REGION:	NORTHEAST	MARKET CLUSTER:	NEW ENGLAND	MARKET:	CONNECTICUT
ADDRESS:	260 BECKLEY ROAD	CITY:	BERLIN	STATE:	CT
ZIP CODE:	06037	COUNTY:	HARTFORD	LONG (DEC. DEG.):	-72.7299161
LATITUDE (D-M-S):	41d 37m54.17004s	LONGITUDE (D-M-S):	-72d -43m-47.69796s	LAT (DEC. DEG.):	41.6317139
DIRECTIONS, ACCESS AND EQUIPMENT LOCATION:	LEGACY ORANGE1014 BERLIN RT. 15 AT 1ST LIGHT AFTER FIREHOUSE TURN RIGHT ONTO MIDDLETOWN ROAD. FOLLOW TO LIGHT AT RT. 72 INTERSECTION APPROXIMATELY .8 MILES CONTINUE THRU LIGHT & TAKE 1ST LEFT BECKELY ROAD. ACCESS ROAD APPROXIMATELY 1.1 MILES ON LEFT, JUST PAST FAIR GROUNDS (NOT THE DRIVEWAY WITH MAILBOX 260) . I-91 TO RT. 72 WEST- FOLLOW TO THE RT.72 DINER, TURN RIGHT ONTO BERLIN STREET. ACCESS ROAD APPROXIMATELY 1.1 MILES ON LEFT.CONTACT:. AMERICAN TOWERPOWER COMPANY:EVERSOURCE ENERGYSHELTER:GROUND LEVEL CIPHER LOCK:3534				

ORACLE PTN # 1:		PACE JOB # 1:	MRCTB037929		
ORACLE PTN # 2:		PACE JOB # 2:			
ORACLE PTN # 3:		PACE JOB # 3:			
ORACLE PTN # 4:		PACE JOB # 4:			
ORACLE PTN # 5:		PACE JOB # 5:			
ORACLE PTN # 6:		PACE JOB # 6:			
ORACLE PTN # 7:		PACE JOB # 7:			
ORACLE PTN # 8:		PACE JOB # 8:			
BORDER CELL WITH CONTOUR COORD:		SEARCH RING NAME:			
AM STUDY REQ'D (Y/N):	No	SEARCH_RING_ID:			
FREQ COORD:		BTA:		MSA / RSA:	
OPS DISTRICT:	CT-North	LAC(GSM):			
OPS ZONE:	NE_CT_N_HRFR_SE_CS	LAC(UMTS):	05986		
RF DISTRICT:	NPO Triage	BSC(GSM):			
RF ZONE:	Hotseat	RNC(UMTS):	MDTWCTNICRBR06		
PARENT NAME(GSM):		MME POOL ID(LTE):	FF01		
PARENT NAME(UMTS):	MIDDLETOWN RNC06				

Section 3 - LICENSE COVERAGE/FILING INFORMATION

CGSA - NO FILING TRIGGERED (Yes/No):	No	CGSA LOSS:		PCS REDUCED - UPS ZIP:	
CGSA - MINOR FILING NEEDED (Yes/No)::	No	CGSA EXT AGMT NEEDED:		PCS POPS REDUCED:	
CGSA - MAJOR FILING NEEDED (Yes/No):	Yes	CGSA SCORECARD UPDATED:			

CGSA CALL SIGNS:	

Section 4 - TOWER/REGULATORY INFORMATION

STRUCTURE AT&T OWNED?:	No	GROUND ELEVATION (ft):		STRUCTURE TYPE:	MONOPOLE
ADDITIONAL REGULATORY?:	Yes	HEIGHT OVERALL (ft):	172.00	FCC ASR NUMBER:	NR
SUB-LEASE RIGHTS?:	No	STRUCTURE HEIGHT (ft):	152.00		
LIGHTING TYPE:	NOT REQUIRED				

MARKET LOCATION 700 MHz Band:			
MARKET LOCATION 850 MHz Band:			
MARKET LOCATION 1900 MHz Band:			
MARKET LOCATION AWS Band:			
MARKET LOCATION WCS Band:			
MARKET LOCATION Future Band:			

Section 5 - E-911 INFORMATION - existing

	PSAP NAME:	PSAP ID:	E911 PHASE:	MPC SVC PROVIDER:	LMU REQUIRED:	ESRN:	DATE LIVE PH1:	DATE LIVE PH2:		
SECTOR A E-911				INTRADO_MIAMI		0				
SECTOR B				INTRADO_MIAMI		0				
SECTOR C				INTRADO_MIAMI		0				
SECTOR D										
SECTOR E										
SECTOR F										
OMNI										

Section 5 - E-911 INFORMATION - final

	PSAP NAME:	PSAP ID:	E911 PHASE:	MPC SVC PROVIDER:	LMU REQUIRED:	ESRN:	DATE LIVE PH1:	DATE LIVE PH2:		
SECTOR A E-911				INTRADO_MIAMI		0				
SECTOR B				INTRADO_MIAMI		0				
SECTOR C				INTRADO_MIAMI		0				
SECTOR D										
SECTOR E										
SECTOR F										
OMNI										

Section 6 - RBS GENERAL INFORMATION - existing

	UMTS 1ST RBS	UMTS 2ND RBS	LTE 1ST RBS	LTE 2ND RBS	5G 1ST RBS							
RBS ID:	172489	246910	366787	578940								
CTS COMMON ID:	CTU1014	CTV1014	CTL01014	CTL00014R								
CELL ID / BCF:	CTU1014	CTU1014	CTL01014	CTL00014R								
BTA/TID:	184V	184U	184L	184L								
4-9 DIGIT SITE ID:	1014	1014	1014	0014								
COW OR TOY?:	No	No	No	No								
CELL SITE TYPE:	SECTORIZED	SECTORIZED	SECTORIZED	SECTORIZED								
SITE TYPE:	MACRO-CONVENTIONAL	MACRO-CONVENTIONAL	MACRO-CONVENTIONAL	MACRO-CONVENTIONAL								
BTS LOCATION ID:	INTERNAL	INTERNAL	INTERNAL	INTERNAL								
BASE STATION TYPE:	BASE	OVERLAY	BASE	OVERLAY								
EQUIPMENT NAME:	BERLIN NE	BERLIN	BERLIN NE	BERLIN NE								
DISASTER PRIORITY:	1	1	3	3								

Section 6 - RBS GENERAL INFORMATION - final

	UMTS 1ST RBS	UMTS 2ND RBS	LTE 1ST RBS	LTE 2ND RBS	5G 1ST RBS							
RBS ID:	172489	246910	366787	578940	RFDS_44615617							
CTS COMMON ID:	CTU1014	CTV1014	CTL01014	CTL00014R	CTCN001014							
CELL ID / BCF:	CTU1014	CTU1014	CTL01014	CTL00014R	CTCN001014							
BTA/TID:	184V	184W	184L	184L	184L							
4-9 DIGIT SITE ID:	1014	1014	1014	0014	1014							
COW OR TOY?:	No	No	No	No	No							
CELL SITE TYPE:	SECTORIZED	SECTORIZED	SECTORIZED	SECTORIZED	SECTORIZED							
SITE TYPE:	MACRO-CONVENTIONAL	MACRO-CONVENTIONAL	MACRO-CONVENTIONAL	MACRO-CONVENTIONAL	MACRO-CONVENTIONAL							
BTS LOCATION ID:	INTERNAL	INTERNAL	INTERNAL	INTERNAL	INTERNAL							
BASE STATION TYPE:	BASE	OVERLAY	BASE	OVERLAY	BASE							
EQUIPMENT NAME:	BERLIN NE	BERLIN	BERLIN NE	BERLIN NE	BERLIN NE							
DISASTER PRIORITY:	1	1	3	3	3							

Section 7 - RBS SPECIFIC INFORMATION - existing

	UMTS 1ST RBS	UMTS 2ND RBS	LTE 1ST RBS	LTE 2ND RBS	5G 1ST RBS							
RAC:												
EQUIPMENT VENDOR:	ERICSSON	ERICSSON	ERICSSON	ERICSSON								
EQUIPMENT TYPE:	3206 INDOOR	3206 INDOOR	6601 INDOOR MU	6601 INDOOR MU								
BASEBAND CONFIGURATION:			2x6601 / 1x5216 / 2xXMU03									
LOCATION:												
CABINET LOCATION:												
MARKET STATE CODE:			CT	CT								
AGPS:	Yes	Yes	Yes	Yes								
NODE B NUMBER:	0	0	1014	14								

Section 7 - RBS SPECIFIC INFORMATION - final

	UMTS 1ST RBS	UMTS 2ND RBS	LTE 1ST RBS	LTE 2ND RBS	5G 1ST RBS							
RAC:												
EQUIPMENT VENDOR:	ERICSSON	ERICSSON	ERICSSON	ERICSSON	ERICSSON							
EQUIPMENT TYPE:	3206 INDOOR	3206 INDOOR	6601 INDOOR MU	6601 INDOOR MU	BASEBAND 6630 5G							
BASEBAND CONFIGURATION:			2x6601 / 2x5216 / 2xXMU03 + IDLe		xxxxx / 1x6630 / xxxxx							
LOCATION:												
CABINET LOCATION:												
MARKET STATE CODE:			CT	CT	CT							
AGPS:	Yes	Yes	Yes	Yes	Yes							
NODE B NUMBER:	0	0	1014	14	1014							

Section 8 - RBS/SECTOR ASSOCIATION - existing

	UMTS 1ST RBS	UMTS 2ND RBS	LTE 1ST RBS	LTE 2ND RBS	5G 1ST RBS															
CTS Common ID	CTU1014	CTV1014	CTL01014	CTL00014R																
Soft Sector IDs	CTU10147	CTV10141	CTL01014_3A_1	CTL00014_2A_2																
	CTU10148	CTV10142	CTL01014_3B_1	CTL00014_2B_2																
	CTU10149	CTV10143	CTL01014_3C_1	CTL00014_2C_2																
		CTV1014A	CTL01014_7A_1	CTL00014_3C_1																
		CTV1014B	CTL01014_7B_1	CTL00014_7A_3_F																
		CTV1014C	CTL01014_7C_1	CTL00014_7B_3_F																
			CTL01014_8A_1	CTL00014_7C_3_F																
			CTL01014_8B_1	CTL00014_7C_1																
			CTL01014_8C_1	CTL00014_8A_1																
			CTL01014_9A_1	CTL00014_8B_1																
			CTL01014_9A_2	CTL00014_8C_1																
			CTL01014_9B_1	CTL00014_9C_1																
			CTL01014_9B_2																	
			CTL01014_9C_1																	
			CTL01014_9C_2																	

Section 8 - RBS/SECTOR ASSOCIATION - final

	UMTS 1ST RBS	UMTS 2ND RBS	LTE 1ST RBS	LTE 2ND RBS	5G 1ST RBS															
CTS Common ID	CTU1014	CTV1014	CTL01014	CTL00014R	CTCN001014															
Soft Sector IDs		CTV10141	CTL01014_3A_1	CTL00014_2A_2	CTCN001014_N005A_1															
		CTV10142	CTL01014_3B_1	CTL00014_2B_2	CTCN001014_N005B_1															
		CTV10143	CTL01014_3C_1	CTL00014_2C_2	CTCN001014_N005C_1															
			CTL01014_7A_1	CTL00014_7A_3_F																
			CTL01014_7B_1	CTL00014_7B_3_F																
			CTL01014_7C_1	CTL00014_7C_3_F																
			CTL01014_9A_1	CTL00014_8A_1																
			CTL01014_9A_2	CTL00014_8B_1																
			CTL01014_9B_1	CTL00014_8C_1																
			CTL01014_9B_2																	
			CTL01014_9C_1																	
			CTL01014_9C_2																	

Section 9 - SOFT SECTOR ID - existing

	UMTS 1ST 850	UMTS 1ST 1900	UMTS 2ND 850	LTE 1ST 700	LTE 1ST 850	LTE 1ST 1900	LTE 1ST AWS	LTE 1ST WCS	LTE 2ND 700	LTE 2ND 850	LTE 2ND 1900	LTE 2ND WCS	LTE 3RD 700	LTE 3RD 1900	5G 1ST 850											
USEID (excluding Hard Sector)	25935.850.3G.1	25935.1900.3G.1	25935.850.3G.2																							
SECTOR A SOFT SECTOR ID	CTV10141	CTU10147	CTV1014A	CTL01014_7A_1	CTL00014_8A_1	CTL01014_9A_1	CTL00014_2A_2	CTL01014_3A_1	CTL00014_7A_3_F	CTL01014_8A_1	CTL01014_9A_2															
SECTOR B	CTV10142	CTU10148	CTV1014B	CTL01014_7B_1	CTL00014_8B_1	CTL01014_9B_1	CTL00014_2B_2	CTL01014_3B_1	CTL00014_7B_3_F	CTL01014_8B_1	CTL01014_9B_2															
SECTOR C	CTV10143	CTU10149	CTV1014C	CTL01014_7C_1	CTL00014_8C_1	CTL01014_9C_1	CTL00014_2C_2	CTL01014_3C_1	CTL00014_7C_3_F	CTL01014_8C_1	CTL01014_9C_2	CTL00014_3C_1	CTL00014_7C_1	CTL00014_9C_1												
SECTOR D																										
SECTOR E																										
SECTOR F																										
OMNI																										

Section 9 - SOFT SECTOR ID - final

	UMTS 1ST 850	UMTS 1ST 1900	UMTS 2ND 850	LTE 1ST 700	LTE 1ST 850	LTE 1ST 1900	LTE 1ST AWS	LTE 1ST WCS	LTE 2ND 700	LTE 2ND 850	LTE 2ND 1900	LTE 2ND WCS	LTE 3RD 700	LTE 3RD 1900	5G 1ST 850											
USEID (excluding Hard Sector)	25935.850.3G.1																									
SECTOR A SOFT SECTOR ID	CTV10141			CTL01014_7A_1	CTL00014_8A_1	CTL01014_9A_1	CTL00014_2A_2	CTL01014_3A_1	CTL00014_7A_3_F		CTL01014_9A_2				CTCN001014_N005A_1											
SECTOR B	CTV10142			CTL01014_7B_1	CTL00014_8B_1	CTL01014_9B_1	CTL00014_2B_2	CTL01014_3B_1	CTL00014_7B_3_F		CTL01014_9B_2				CTCN001014_N005B_1											
SECTOR C	CTV10143			CTL01014_7C_1	CTL00014_8C_1	CTL01014_9C_1	CTL00014_2C_2	CTL01014_3C_1	CTL00014_7C_3_F		CTL01014_9C_2				CTCN001014_N005C_1											
SECTOR D																										
SECTOR E																										
SECTOR F																										
OMNI																										

Section 9 - Cell Number - existing

	UMTS 1ST 850	UMTS 1ST 1900	UMTS 2ND 850	LTE 1ST 700	LTE 1ST 850	LTE 1ST 1900	LTE 1ST AWS	LTE 1ST WCS	LTE 2ND 700	LTE 2ND 850	LTE 2ND 1900	LTE 2ND WCS	LTE 3RD 700	LTE 3RD 1900	5G 1ST 850											
USEID (excluding Hard Sector)	25935.850.3G.1	25935.1900.3G.1	25935.850.3G.2																							
SECTOR A CELL NUMBER				15	1	8	192	149	171	1	178															
SECTOR B				16	2	9	193	150	172	2	179															
SECTOR C				17	3	10	194	151	173	3	180	151	17	10												
SECTOR D																										
SECTOR E																										
SECTOR F																										
OMNI																										

Section 9 - Cell Number - final

	UMTS 1ST 850	UMTS 1ST 1900	UMTS 2ND 850	LTE 1ST 700	LTE 1ST 850	LTE 1ST 1900	LTE 1ST AWS	LTE 1ST WCS	LTE 2ND 700	LTE 2ND 850	LTE 2ND 1900	LTE 2ND WCS	LTE 3RD 700	LTE 3RD 1900	5G 1ST 850											
USEID (excluding Hard Sector)	25935.850.3G.1																									
SECTOR A CELL NUMBER				15	1	8	192	149	171		178				1											
SECTOR B				16	2	9	193	150	172		179				2											
SECTOR C				17	3	10	194	151	173		180				3											
SECTOR D																										
SECTOR E																										
SECTOR F																										
OMNI																										

Section 10 - CID/SAC - existing

	UMTS 1ST 850	UMTS 1ST 1900	UMTS 2ND 850	LTE 1ST 700	LTE 1ST 850	LTE 1ST 1900	LTE 1ST AWS	LTE 1ST WCS	LTE 2ND 700	LTE 2ND 850	LTE 2ND 1900	LTE 2ND WCS	LTE 3RD 700	LTE 3RD 1900	5G 1ST 850												
SECTOR A CID/SAC	10141	10147	00141																								
SECTOR B	10142	10148	00142																								
SECTOR C	10143	10149	00143																								
SECTOR D																											
SECTOR E																											
SECTOR F																											
OMNI																											

Section 10 - CID/SAC - final

	UMTS 1ST 850	UMTS 1ST 1900	UMTS 2ND 850	LTE 1ST 700	LTE 1ST 850	LTE 1ST 1900	LTE 1ST AWS	LTE 1ST WCS	LTE 2ND 700	LTE 2ND 850	LTE 2ND 1900	LTE 2ND WCS	LTE 3RD 700	LTE 3RD 1900	5G 1ST 850												
SECTOR A CID/SAC	10141																										
SECTOR B	10142																										
SECTOR C	10143																										
SECTOR D																											
SECTOR E																											
SECTOR F																											
OMNI																											

Section 15A - CURRENT TOWER CONFIGURATION - SECTOR A (OR OMNI)

ANTENNA POSITION is LEFT to RIGHT from BACK OF ANTENNA (unless otherwise specified)	ANTENNA POSITION 1		ANTENNA POSITION 2		ANTENNA POSITION 3		ANTENNA POSITION 4		ANTENNA POSITION 5		ANTENNA POSITION 6		ANTENNA POSITION 7	
ANTENNA MAKE - MODEL	7770		OPA-65R-LCUU-H6		QS66512-2									
ANTENNA VENDOR	POWERWAVE		CCI Products		Quintel									
ANTENNA SIZE (H x W x D)	55X11X5		72X14.8X7.4		72X12X9.6									
ANTENNA WEIGHT	35		73		111									
AZIMUTH	150		40		40									
MAGNETIC DECLINATION														
RADIATION CENTER (feet)	152		152		152									
ANTENNA TIP HEIGHT	154		155		155									
MECHANICAL DOWNTILT	0		0		0									
FEEDER AMOUNT	2				Fiber + 2 Coax									
VERTICAL SEPARATION from ANTENNA ABOVE (TIP to TIP)														
VERTICAL SEPARATION from ANTENNA BELOW (TIP to TIP)														
HORIZONTAL SEPARATION from CLOSEST ANTENNA to LEFT (CENTERLINE to CENTERLINE)														
HORIZONTAL SEPARATION from CLOSEST ANTENNA to RIGHT (CENTERLINE to CENTERLINE)														
HORIZONTAL SEPARATION from ANOTHER ANTENNA (which antenna # / # of inches)														
Antenna RET Motor (QTY/MODEL)	2	Powerwave 7020		Built in		Built in								
SURGE ARRESTOR (QTY/MODEL)			1	DC/Fiber Squid	9	DC Fiber Squid (1) + TSXDC-4310FM (8)								
DIPLEXER (QTY/MODEL)	2	Kathrein / 782-10250			4	CCI Triplexer -TPX-070821								
DUPLEXER (QTY/MODEL)														
Antenna RET CONTROL UNIT (QTY/MODEL)				LTE RRH		LTE RRH								
DC BLOCK (QTY/MODEL)														
TMA/LNA (QTY/MODEL)	2	Pwav LGP21401 Single 1900 w/ 850BP (850)												
CURRENT INJECTORS FOR TMA (QTY/MODEL)	2	Polyphaser/ 1000860												
PDU FOR TMAS (QTY/MODEL)	1	Powerwave LGP12104												
FILTER (QTY/MODEL)														
SQUID (QTY/MODEL)														
FIBER TRUNK (QTY/MODEL)														
DC TRUNK (QTY/MODEL)														
REPEATER (QTY/MODEL)														
RRH - 700 band (QTY/MODEL)			1	RRUS-11 (REUSE ONLY)	1	B14 4478								
RRH - 850 band (QTY/MODEL)					1	4478 B5								
RRH - 1900 band (QTY/MODEL)					1	RRUS-32 B2								
RRH - AWS band (QTY/MODEL)					1	4426 B66								
RRH - WCS band (QTY/MODEL)			1	RRUS-32										
Additional RRH #1 - any band (QTY/MODEL)														
Additional RRH #2 - any band (QTY/MODEL)														
Additional Component 1 (QTY/MODEL)					2	Pwav 1001983 (1) & 1001940 (1)								
Additional Component 2 (QTY/MODEL)														
Additional Component 3 (QTY/MODEL)														
Local Market Note 1														
Local Market Note 2														
Local Market Note 3														

PORT SPECIFIC FIELDS	PORT NUMBER	USEID (CSSng)	USEID (Atoll)	ATOLL TXID	ATOLL CELL ID	TX/RX ?	TECHNOLOGY/FREQUENCY	ANTENNA ATOLL	ANTENNA GAIN	ELECTRICAL AZIMUTH	ELECTRICAL TILT	RRH LOCATION (Top/Bottom/Integrated/None)	FEEDERS TYPE	FEEDER LENGTH (feet)	RXAIT KIT MODULE?	TRIPLEXER or LLC (QTY)	TRIPLEXER or LLC (MODEL)	SCPA/MCPA MODULE?	HATCHPLATE POWER (Watts)	ERP (Watts)	Antenna RET Name	CABLE NUMBER	CABLE ID (CSSNG)
ANTENNA POSITION 1	PORT 1		25935.A.850.3G.1	CTV10141	CTV10141		UMTS 850	7770.00.850.07	13.5	150	7	None	Commscope 1-1/4	175.04								1	
ANTENNA POSITION 2	PORT 1		25935.A.700.4G.1	CTL01014_7A_1	CTL01014_7A_1		LTE 700	OPA-65R-LCUU-H6_719MHz_09DT	13.5	40	9	Top	Fiber	0						1475.7065		3	
	PORT 3		25935.A.WCS.4G.1	CTL01014_3A_1	CTL01014_3A_1		LTE WCS	OPA-65R-LCUU-H6_2350MHz_06DT	17.8	40	6	Top	Fiber	0						1285.2866		4	
ANTENNA POSITION 3	PORT 1		25935.A.850.4G.1	CTL00014_8A_1	CTL00014_8A_1		LTE 850	QS66512-	13.5	40	9	Bottom	Commscope 1-1/4	175.04						1000		5	

								2_850MHz_09DT															
	PORT 2		25935.A.700.4G.5	CTL00014_7A_3_F	CTL00014_7A_3_F		LTE 700	QS66512-2_776MHz_09DT	13.7	40	9	Bottom	Commscope 1-1/4	175.04						2951.413		5	
	PORT 3		25935.A.1900.4G.1	CTL01014_9A_1	CTL01014_9A_1		LTE 1900	QS66512-2_1930MHz_06DT	15.9	40	6	Top	Fiber	0						3664.3757		6	
	PORT 4		25935.A.1900.4G.4	CTL01014_9A_2	CTL01014_9A_2		LTE 1900	QS66512-2_1930MHz_06DT	15.9	40	6	Top	Fiber	0						3664.3757		6	
	PORT 5		25935.A.850.5G.1	CTN0001014_8A_1	CTN0001014_8A_1		5G 850	QS66512-2_850MHz_09DT	13.5	40	9	Bottom	Commscope 1-1/4	175.04						1000		5	
	PORT 7		25935.A.AWS.4G.4	CTL00014_2A_2	CTL00014_2A_2		LTE AWS	QS66512-2_2170MHz_06DT	16.5	40	6	Top	Fiber	0						3837.0724		6	

Section 15B - CURRENT TOWER CONFIGURATION - SECTOR B

ANTENNA POSITION is LEFT to RIGHT from BACK OF ANTENNA (unless otherwise specified)	ANTENNA POSITION 1		ANTENNA POSITION 2		ANTENNA POSITION 3		ANTENNA POSITION 4		ANTENNA POSITION 5		ANTENNA POSITION 6		ANTENNA POSITION 7	
ANTENNA MAKE - MODEL	7770		OPA-65R-LCUU-H6		QS66512-2									
ANTENNA VENDOR	POWERWAVE		CCI Products		Quintel									
ANTENNA SIZE (H x W x D)	55X11X5		72X14.8X7.4		72X12X9.6									
ANTENNA WEIGHT	35		73		111									
AZIMUTH	270		150		150									
MAGNETIC DECLINATION														
RADIATION CENTER (feet)	152		152		152									
ANTENNA TIP HEIGHT	154		155		155									
MECHANICAL DOWNTILT	2		0		0									
FEEDER AMOUNT	2				Fiber + 2 Coax									
VERTICAL SEPARATION from ANTENNA ABOVE (TIP to TIP)														
VERTICAL SEPARATION from ANTENNA BELOW (TIP to TIP)														
HORIZONTAL SEPARATION from CLOSEST ANTENNA to LEFT (CENTERLINE to CENTERLINE)														
HORIZONTAL SEPARATION from CLOSEST ANTENNA to RIGHT (CENTERLINE to CENTERLINE)														
HORIZONTAL SEPARATION from ANOTHER ANTENNA (which antenna # / # of inches)														
Antenna RET Motor (QTY/MODEL)	2	Powerwave 7020		Built in		Built in								
SURGE ARRESTOR (QTY/MODEL)					4	TSXDC-4310FM								
DIPLEXER (QTY/MODEL)	2	Kathrein / 782-10250			4	CCI Triplexer -TPX-070821								
DUPLEXER (QTY/MODEL)														
Antenna RET CONTROL UNIT (QTY/MODEL)				LTE RRH		LTE RRH								
DC BLOCK (QTY/MODEL)														
TMA/LNA (QTY/MODEL)	2	Pwav LGP21401 Single 1900 w/ 850BP (850)												
CURRENT INJECTORS FOR TMA (QTY/MODEL)	2	Polyphaser/ 1000860												
PDU FOR TMAS (QTY/MODEL)														
FILTER (QTY/MODEL)														
SQUID (QTY/MODEL)														
FIBER TRUNK (QTY/MODEL)														
DC TRUNK (QTY/MODEL)														
REPEATER (QTY/MODEL)														
RRH - 700 band (QTY/MODEL)			1	RRUS-11 (REUSE ONLY)		RRH is shared with another sector								
RRH - 850 band (QTY/MODEL)					1	4478 B5								
RRH - 1900 band (QTY/MODEL)					1	RRUS-32 B2								
RRH - AWS band (QTY/MODEL)					1	4426 B66								
RRH - WCS band (QTY/MODEL)			1	RRUS-32										
Additional RRH #1 - any band (QTY/MODEL)														
Additional RRH #2 - any band (QTY/MODEL)														
Additional Component 1 (QTY/MODEL)					2	Pwav 1001983 (1) & 1001940 (1)								
Additional Component 2 (QTY/MODEL)														
Additional Component 3 (QTY/MODEL)														
Local Market Note 1														
Local Market Note 2														
Local Market Note 3														

PORT SPECIFIC FIELDS	PORT NUMBER	USEID (CSSng)	USEID (Atoll)	ATOLL TXID	ATOLL CELL ID	TX/RX ?	TECHNOLOGY/FREQUENCY	ANTENNA ATOLL	ANTENNA GAIN	ELECTRICAL AZIMUTH	ELECTRICAL TILT	RRH LOCATION (Top/Bottom/Integrated/None)	FEEDERS TYPE	FEEDER LENGTH (feet)	RXAIT KIT MODULE?	TRIPLEXER or LLC (QTY)	TRIPLEXER or LLC (MODEL)	SCPA/MCPA MODULE?	HATCHPLATE POWER (Watts)	ERP (Watts)	Antenna RET Name	CABLE NUMBER	CABLE ID (CSSNG)
ANTENNA POSITION 1	PORT 1		25935.B.850.3G.1	CTV10142	CTV10142		UMTS 850	7770.00.850.08	13.5	270	8	None	Commscope 1-1/4	175.04								9	
ANTENNA POSITION 2	PORT 1		25935.B.700.4G.1	CTL01014_7B_1	CTL01014_7B_1		LTE 700	OPA-65R-LCUU-H6_719MHz_06DT	13.7	150	6	Top	Fiber	0						1475.7065		11	
	PORT 3		25935.B.WCS.4G.1	CTL01014_3B_1	CTL01014_3B_1		LTE WCS	OPA-65R-LCUU-H6_2350MHz_05DT	17.8	150	5	Top	Fiber	0						1285.2866		12	
ANTENNA POSITION 3	PORT 1		25935.B.850.4G.1	CTL00014_8B_1	CTL00014_8B_1		LTE 850	QS66512-	13.4	150	6	Bottom	Commscope 1-1/4	175.04						1000		13	

								2_850MHz_06DT															
	PORT 2		25935.B.700.4G.5	CTL00014_7B_3_F	CTL00014_7B_3_F		LTE 700	QS66512-2_776MHz_06DT	13.5	150	6	Bottom	Commscope 1-1/4	175.04						2951.413		13	
	PORT 3		25935.B.1900.4G.1	CTL01014_9B_1	CTL01014_9B_1		LTE 1900	QS66512-2_1930MHz_05DT	15.6	150	5	Top	Fiber	0						3664.3757		14	
	PORT 4		25935.B.1900.4G.4	CTL01014_9B_2	CTL01014_9B_2		LTE 1900	QS66512-2_1930MHz_05DT	15.6	150	5	Top	Fiber	0						3664.3757		14	
	PORT 5		25935.B.850.5G.1	CTN0001014_8B_1	CTN0001014_8B_1		5G 850	QS66512-2_850MHz_06DT	13.4	150	6	Bottom	Commscope 1-1/4	175.04						1000		13	
	PORT 7		25935.B.AWS.4G.4	CTL00014_2B_2	CTL00014_2B_2		LTE AWS	QS66512-2_2170MHz_05DT	16.4	150	5	Top	Fiber	0						3837.0724		14	

Section 15C - CURRENT TOWER CONFIGURATION - SECTOR C

ANTENNA POSITION is LEFT to RIGHT from BACK OF ANTENNA (unless otherwise specified)	ANTENNA POSITION 1		ANTENNA POSITION 2		ANTENNA POSITION 3		ANTENNA POSITION 4		ANTENNA POSITION 5		ANTENNA POSITION 6		ANTENNA POSITION 7	
ANTENNA MAKE - MODEL	7770		OPA-65R-LCUU-H6		QS66512-2									
ANTENNA VENDOR	POWERWAVE		CCI Products		Quintel									
ANTENNA SIZE (H x W x D)	55X11X5		72X14.8X7.4		72X12X9.6									
ANTENNA WEIGHT	35		73		111									
AZIMUTH	40		270		270									
MAGNETIC DECLINATION														
RADIATION CENTER (feet)	152		152		152									
ANTENNA TIP HEIGHT	154		155		155									
MECHANICAL DOWNTILT	1		0		0									
FEEDER AMOUNT	2				Fiber + 2 Coax									
VERTICAL SEPARATION from ANTENNA ABOVE (TIP to TIP)														
VERTICAL SEPARATION from ANTENNA BELOW (TIP to TIP)														
HORIZONTAL SEPARATION from CLOSEST ANTENNA to LEFT (CENTERLINE to CENTERLINE)														
HORIZONTAL SEPARATION from CLOSEST ANTENNA to RIGHT (CENTERLINE to CENTERLINE)														
HORIZONTAL SEPARATION from ANOTHER ANTENNA (which antenna # / # of inches)														
Antenna RET Motor (QTY/MODEL)	2	Powerwave 7020		Built in		Built in								
SURGE ARRESTOR (QTY/MODEL)					8	TSXDC-4310FM								
DIPLEXER (QTY/MODEL)	2	Kathrein / 782-10250			4	CCI Triplexer -TPX-070821								
DUPLEXER (QTY/MODEL)														
Antenna RET CONTROL UNIT (QTY/MODEL)				LTE RRH		LTE RRH								
DC BLOCK (QTY/MODEL)														
TMA/LNA (QTY/MODEL)	2	Pwav LGP21401 Single 1900 w/ 850BP (850)												
CURRENT INJECTORS FOR TMA (QTY/MODEL)	2	Polyphaser/ 1000860												
PDU FOR TMAS (QTY/MODEL)														
FILTER (QTY/MODEL)														
SQUID (QTY/MODEL)														
FIBER TRUNK (QTY/MODEL)														
DC TRUNK (QTY/MODEL)														
REPEATER (QTY/MODEL)														
RRH - 700 band (QTY/MODEL)			1	RRUS-11 (REUSE ONLY)	1	B14 4478								
RRH - 850 band (QTY/MODEL)					1	4478 B5								
RRH - 1900 band (QTY/MODEL)					1	RRUS-32 B2								
RRH - AWS band (QTY/MODEL)					1	4426 B66								
RRH - WCS band (QTY/MODEL)			1	RRUS-32										
Additional RRH #1 - any band (QTY/MODEL)														
Additional RRH #2 - any band (QTY/MODEL)														
Additional Component 1 (QTY/MODEL)					2	Pwav 1001983 (1) & 1001940 (1)								
Additional Component 2 (QTY/MODEL)														
Additional Component 3 (QTY/MODEL)														
Local Market Note 1														
Local Market Note 2														
Local Market Note 3														

PORT SPECIFIC FIELDS	PORT NUMBER	USEID (CSSng)	USEID (Atoll)	ATOLL TXID	ATOLL CELL ID	TX/RX ?	TECHNOLOGY/FREQUENCY	ANTENNA ATOLL	ANTENNA GAIN	ELECTRICAL AZIMUTH	ELECTRICAL TILT	RRH LOCATION (Top/Bottom/Integrated/None)	FEEDERS TYPE	FEEDER LENGTH (feet)	RXAIT KIT MODULE?	TRIPLEXER or LLC (QTY)	TRIPLEXER or LLC (MODEL)	SCPA/MCPA MODULE?	HATCHPLATE POWER (Watts)	ERP (Watts)	Antenna RET Name	CABLE NUMBER	CABLE ID (CSSNG)
ANTENNA POSITION 1	PORT 1		25935.C.850.3G.1	CTV10143	CTV10143		UMTS 850	7770.00.850.06	13.5	40	6	None	Commscope 1-1/4	175.04								17	
ANTENNA POSITION 2	PORT 1		25935.C.700.4G.1	CTL01014_7C_1	CTL01014_7C_1		LTE 700	OPA-65R-LCUU-H6_719MHz_08DT	13.6	270	8	Top	Fiber	0						1475.7065		19	
	PORT 3		25935.C.WCS.4G.1	CTL01014_3C_1	CTL01014_3C_1		LTE WCS	OPA-65R-LCUU-H6_2350MHz_06DT	17.8	270	6	Top	Fiber	0						1285.2866		20	
ANTENNA POSITION 3	PORT 1		25935.C.850.4G.1	CTL00014_8C_1	CTL00014_8C_1		LTE 850	QS66512-2_850MHz_08DT	13.4	270	8	Bottom	Commscope 1-1/4	175.04						1000		21	

	PORT 2		25935.C.700.4G.5	CTL00014_7C_3_F	CTL00014_7C_3_F		LTE 700	QS66512-2_776MHz_08DT	13.6	270	8	Bottom	Commscope 1-1/4	175.04						2951.413		21	
	PORT 3		25935.C.1900.4G.1	CTL01014_9C_1	CTL01014_9C_1		LTE 1900	QS66512-2_1930MHz_06DT	15.9	270	6	Top	Fiber	0						3664.3757		22	
	PORT 4		25935.C.1900.4G.4	CTL01014_9C_2	CTL01014_9C_2		LTE 1900	QS66512-2_1930MHz_06DT	15.9	270	6	Top	Fiber	0						3664.3757		22	
	PORT 5		25935.C.850.5G.1	CTN0001014_8C_1	CTN0001014_8C_1		5G 850	QS66512-2_850MHz_08DT	13.4	270	8	Bottom	Commscope 1-1/4	175.04						1000		21	
	PORT 7		25935.C.AWS.4G.4	CTL00014_2C_2	CTL00014_2C_2		LTE AWS	QS66512-2_2170MHz_06DT	16.5	270	6	Top	Fiber	0						3837.0724		22	

Section 16A - PLANNED/PROPOSED TOWER CONFIGURATION - SECTOR A (OR OMNI)

ANTENNA POSITION is LEFT to RIGHT from BACK OF ANTENNA (unless otherwise specified)	ANTENNA POSITION 1		ANTENNA POSITION 2		ANTENNA POSITION 3		ANTENNA POSITION 4		ANTENNA POSITION 5		ANTENNA POSITION 6		ANTENNA POSITION 7	
Existing Antenna?			Yes											
ANTENNA MAKE - MODEL														
ANTENNA VENDOR														
ANTENNA SIZE (H x W x D)														
ANTENNA WEIGHT														
AZIMUTH														
MAGNETIC DECLINATION														
RADIATION CENTER (feet)														
ANTENNA TIP HEIGHT														
MECHANICAL DOWNTILT														
FEEDER AMOUNT														
VERTICAL SEPARATION from ANTENNA ABOVE (TIP to TIP)														
VERTICAL SEPARATION from ANTENNA BELOW (TIP to TIP)														
HORIZONTAL SEPARATION from CLOSEST ANTENNA to LEFT (CENTERLINE to CENTERLINE)														
HORIZONTAL SEPARATION from CLOSEST ANTENNA to RIGHT (CENTERLINE to CENTERLINE)														
HORIZONTAL SEPARATION from ANOTHER ANTENNA (which antenna # / # of inches)														
Antenna RET Motor (QTY/MODEL)														
SURGE ARRESTOR (QTY/MODEL)			1	DC Only Squid										
DIPLEXER (QTY/MODEL)			1	CBC23SR-43										
DUPLEXER (QTY/MODEL)														
Antenna RET CONTROL UNIT (QTY/MODEL)														
DC BLOCK (QTY/MODEL)														
TMA/LNA (QTY/MODEL)														
CURRENT INJECTORS FOR TMA (QTY/MODEL)														
PDU FOR TMAS (QTY/MODEL)														
FILTER (QTY/MODEL)														
SQUID (QTY/MODEL)														
FIBER TRUNK (QTY/MODEL)														
DC TRUNK (QTY/MODEL)														
REPEATER (QTY/MODEL)			1	SDARS remote										
RRH - 700 band (QTY/MODEL)														
RRH - 850 band (QTY/MODEL)														
RRH - 1900 band (QTY/MODEL)														
RRH - AWS band (QTY/MODEL)														
RRH - WCS band (QTY/MODEL)														
Additional RRH #1 - any band (QTY/MODEL)														
Additional RRH #2 - any band (QTY/MODEL)														
Additional Component 1 (QTY/MODEL)														
Additional Component 2 (QTY/MODEL)														
Additional Component 3 (QTY/MODEL)														
Local Market Note 1	- Add diplexer CBC23SR-43.- Add DC only Squid- Add SDARS remote 1 per sector.													
Local Market Note 2														
Local Market Note 3	2x6601 / 2x5216 / 2xXMU03 + IDLe +6630 || ION M23 Main Unit w/3 OTRX.													

PORT SPECIFIC FIELDS	PORT NUMBER	USEID (CSSng)	USEID (Atoll)	ATOLL TXID	ATOLL CELL ID	TX/RX ?	TECHNOLOGY/FREQUENCY	ANTENNA ATOLL	ANTENNA GAIN	ELECTRICAL AZIMUTH	ELECTRICAL TILT	RRH LOCATION (Top/Bottom/Integrated/None)	FEEDERS TYPE	FEEDER LENGTH (feet)	RXAIT KIT MODULE?	TRIPLEXER or LLC (QTY)	TRIPLEXER or LLC (MODEL)	SCPA/MCPA MODULE?	HATCHPLATE POWER (Watts)	ERP (Watts)	Antenna RET Name	CABLE NUMBER	CABLE ID (CSSNG)
ANTENNA POSITION 2	PORT 3		25935.A.WCS.4G.1	CTL01014_3A_1	CTL01014_3A_1		LTE WCS	OPA-65R-LCUU-H6_2350MHz_06DT	17.8	40	6	Top	Fiber	0						1285.2866		4	

Section 16B - PLANNED/PROPOSED TOWER CONFIGURATION - SECTOR B

ANTENNA POSITION is LEFT to RIGHT from BACK OF ANTENNA (unless otherwise specified)	ANTENNA POSITION 1		ANTENNA POSITION 2		ANTENNA POSITION 3		ANTENNA POSITION 4		ANTENNA POSITION 5		ANTENNA POSITION 6		ANTENNA POSITION 7	
Existing Antenna?			Yes											
ANTENNA MAKE - MODEL														
ANTENNA VENDOR														
ANTENNA SIZE (H x W x D)														
ANTENNA WEIGHT														
AZIMUTH														
MAGNETIC DECLINATION														
RADIATION CENTER (feet)														
ANTENNA TIP HEIGHT														
MECHANICAL DOWNTILT														
FEEDER AMOUNT														
VERTICAL SEPARATION from ANTENNA ABOVE (TIP to TIP)														
VERTICAL SEPARATION from ANTENNA BELOW (TIP to TIP)														
HORIZONTAL SEPARATION from CLOSEST ANTENNA to LEFT (CENTERLINE to CENTERLINE)														
HORIZONTAL SEPARATION from CLOSEST ANTENNA to RIGHT (CENTERLINE to CENTERLINE)														
HORIZONTAL SEPARATION from ANOTHER ANTENNA (which antenna # / # of inches)														
Antenna RET Motor (QTY/MODEL)														
SURGE ARRESTOR (QTY/MODEL)														
DIPLEXER (QTY/MODEL)			1	CBC23SR-43										
DUPLEXER (QTY/MODEL)														
Antenna RET CONTROL UNIT (QTY/MODEL)														
DC BLOCK (QTY/MODEL)														
TMA/LNA (QTY/MODEL)														
CURRENT INJECTORS FOR TMA (QTY/MODEL)														
PDU FOR TMAS (QTY/MODEL)														
FILTER (QTY/MODEL)														
SQUID (QTY/MODEL)														
FIBER TRUNK (QTY/MODEL)														
DC TRUNK (QTY/MODEL)														
REPEATER (QTY/MODEL)			1	SDARS remote										
RRH - 700 band (QTY/MODEL)														
RRH - 850 band (QTY/MODEL)														
RRH - 1900 band (QTY/MODEL)														
RRH - AWS band (QTY/MODEL)														
RRH - WCS band (QTY/MODEL)														
Additional RRH #1 - any band (QTY/MODEL)														
Additional RRH #2 - any band (QTY/MODEL)														
Additional Component 1 (QTY/MODEL)														
Additional Component 2 (QTY/MODEL)														
Additional Component 3 (QTY/MODEL)														
Local Market Note 1	- Add diplexer CBC23SR-43.- Add DC only Squid- Add SDARS remote 1 per sector.													
Local Market Note 2														
Local Market Note 3	2x6601 / 2x5216 / 2xXMU03 + IDLe +6630 || ION M23 Main Unit w/3 OTRX.													

PORT SPECIFIC FIELDS	PORT NUMBER	USEID (CSSng)	USEID (Atoll)	ATOLL TXID	ATOLL CELL ID	TX/RX ?	TECHNOLOGY/FREQUENCY	ANTENNA ATOLL	ANTENNA GAIN	ELECTRICAL AZIMUTH	ELECTRICAL TILT	RRH LOCATION (Top/Bottom/Integrated/None)	FEEDERS TYPE	FEEDER LENGTH (feet)	RXAIT KIT MODULE?	TRIPLEXER or LLC (QTY)	TRIPLEXER or LLC (MODEL)	SCPA/MCPA MODULE?	HATCHPLATE POWER (Watts)	ERP (Watts)	Antenna RET Name	CABLE NUMBER	CABLE ID (CSSNG)
ANTENNA POSITION 2	PORT 3		25935.B.WCS.4G.1	CTL01014_3B_1	CTL01014_3B_1		LTE WCS	OPA-65R-LCUU-H6_2350MHz_05DT	17.8	150	5	Top	Fiber	0						1285.2866		12	

Section 16C - PLANNED/PROPOSED TOWER CONFIGURATION - SECTOR C

ANTENNA POSITION is LEFT to RIGHT from BACK OF ANTENNA (unless otherwise specified)	ANTENNA POSITION 1		ANTENNA POSITION 2		ANTENNA POSITION 3		ANTENNA POSITION 4		ANTENNA POSITION 5		ANTENNA POSITION 6		ANTENNA POSITION 7	
Existing Antenna?			Yes											
ANTENNA MAKE - MODEL														
ANTENNA VENDOR														
ANTENNA SIZE (H x W x D)														
ANTENNA WEIGHT														
AZIMUTH														
MAGNETIC DECLINATION														
RADIATION CENTER (feet)														
ANTENNA TIP HEIGHT														
MECHANICAL DOWNTILT														
FEEDER AMOUNT														
VERTICAL SEPARATION from ANTENNA ABOVE (TIP to TIP)														
VERTICAL SEPARATION from ANTENNA BELOW (TIP to TIP)														
HORIZONTAL SEPARATION from CLOSEST ANTENNA to LEFT (CENTERLINE to CENTERLINE)														
HORIZONTAL SEPARATION from CLOSEST ANTENNA to RIGHT (CENTERLINE to CENTERLINE)														
HORIZONTAL SEPARATION from ANOTHER ANTENNA (which antenna # / # of inches)														
Antenna RET Motor (QTY/MODEL)														
SURGE ARRESTOR (QTY/MODEL)														
DIPLEXER (QTY/MODEL)			1	CBC23SR-43										
DUPLEXER (QTY/MODEL)														
Antenna RET CONTROL UNIT (QTY/MODEL)														
DC BLOCK (QTY/MODEL)														
TMA/LNA (QTY/MODEL)														
CURRENT INJECTORS FOR TMA (QTY/MODEL)														
PDU FOR TMAS (QTY/MODEL)														
FILTER (QTY/MODEL)														
SQUID (QTY/MODEL)														
FIBER TRUNK (QTY/MODEL)														
DC TRUNK (QTY/MODEL)														
REPEATER (QTY/MODEL)			1	SDARS remote										
RRH - 700 band (QTY/MODEL)														
RRH - 850 band (QTY/MODEL)														
RRH - 1900 band (QTY/MODEL)														
RRH - AWS band (QTY/MODEL)														
RRH - WCS band (QTY/MODEL)														
Additional RRH #1 - any band (QTY/MODEL)														
Additional RRH #2 - any band (QTY/MODEL)														
Additional Component 1 (QTY/MODEL)														
Additional Component 2 (QTY/MODEL)														
Additional Component 3 (QTY/MODEL)														
Local Market Note 1	- Add diplexer CBC23SR-43.- Add DC only Squid- Add SDARS remote 1 per sector.													
Local Market Note 2														
Local Market Note 3	2x6601 / 2x5216 / 2xXMU03 + IDLe +6630 || ION M23 Main Unit w/3 OTRX.													

PORT SPECIFIC FIELDS	PORT NUMBER	USEID (CSSng)	USEID (Atoll)	ATOLL TXID	ATOLL CELL ID	TX/RX ?	TECHNOLOGY/FREQUENCY	ANTENNA ATOLL	ANTENNA GAIN	ELECTRICAL AZIMUTH	ELECTRICAL TILT	RRH LOCATION (Top/Bottom/Integrated/None)	FEEDERS TYPE	FEEDER LENGTH (feet)	RXAIT KIT MODULE?	TRIPLEXER or LLC (QTY)	TRIPLEXER or LLC (MODEL)	SCPA/MCPA MODULE?	HATCHPLATE POWER (Watts)	ERP (Watts)	Antenna RET Name	CABLE NUMBER	CABLE ID (CSSNG)
ANTENNA POSITION 2	PORT 3		25935.C.WCS.4G.1	CTL01014_3C_1	CTL01014_3C_1		LTE WCS	OPA-65R-LCUU-H6_2350MHz_06DT	17.8	270	6	Top	Fiber	0						1285.2866		20	

Section 17A - FINAL TOWER CONFIGURATION - SECTOR A (OR OMNI)

ANTENNA POSITION is LEFT to RIGHT from BACK OF ANTENNA (unless otherwise specified)	ANTENNA POSITION 1		ANTENNA POSITION 2		ANTENNA POSITION 3		ANTENNA POSITION 4		ANTENNA POSITION 5		ANTENNA POSITION 6		ANTENNA POSITION 7	
ANTENNA MAKE - MODEL	7770		OPA-65R-LCUU-H6		QS66512-2									
ANTENNA VENDOR	POWERWAVE		CCI Products		Quintel									
ANTENNA SIZE (H x W x D)	55X11X5		72X14.8X7.4		72X12X9.6									
ANTENNA WEIGHT	35		73		111									
AZIMUTH	150		40		40									
MAGNETIC DECLINATION														
RADIATION CENTER (feet)	152		152		152									
ANTENNA TIP HEIGHT	154		155		155									
MECHANICAL DOWNTILT	0		0		0									
FEEDER AMOUNT	2				Fiber + 2 Coax									
VERTICAL SEPARATION from ANTENNA ABOVE (TIP to TIP)														
VERTICAL SEPARATION from ANTENNA BELOW (TIP to TIP)														
HORIZONTAL SEPARATION from CLOSEST ANTENNA to LEFT (CENTERLINE to CENTERLINE)														
HORIZONTAL SEPARATION from CLOSEST ANTENNA to RIGHT (CENTERLINE to CENTERLINE)														
HORIZONTAL SEPARATION from ANOTHER ANTENNA (which antenna # / # of inches)														
Antenna RET Motor (QTY/MODEL)	2	Powerwave 7020		Built in		Built in								
SURGE ARRESTOR (QTY/MODEL)			2	DC/Fiber Squid + DC Only Squid	9	DC Fiber Squid (1) + TSXDC-4310FM (8)								
DIPLEXER (QTY/MODEL)	2	Kathrein / 782-10250	1	CBC23SR-43	4	CCI Triplexer -TPX-070821								
DUPLEXER (QTY/MODEL)														
Antenna RET CONTROL UNIT (QTY/MODEL)				LTE RRH		LTE RRH								
DC BLOCK (QTY/MODEL)														
TMA/LNA (QTY/MODEL)	2	Pwav LGP21401 Single 1900 w/ 850BP (850)												
CURRENT INJECTORS FOR TMA (QTY/MODEL)	2	Polyphaser/ 1000860												
PDU FOR TMAS (QTY/MODEL)	1	Powerwave LGP12104												
FILTER (QTY/MODEL)														
SQUID (QTY/MODEL)														
FIBER TRUNK (QTY/MODEL)														
DC TRUNK (QTY/MODEL)														
REPEATER (QTY/MODEL)			1	SDARS remote										
RRH - 700 band (QTY/MODEL)			1	RRUS-11 (REUSE ONLY)	1	B14 4478								
RRH - 850 band (QTY/MODEL)					1	4478 B5								
RRH - 1900 band (QTY/MODEL)					1	RRUS-32 B2								
RRH - AWS band (QTY/MODEL)					1	4426 B66								
RRH - WCS band (QTY/MODEL)			1	RRUS-32										
Additional RRH #1 - any band (QTY/MODEL)														
Additional RRH #2 - any band (QTY/MODEL)														
Additional Component 1 (QTY/MODEL)					2	Pwav 1001983 (1) & 1001940 (1)								
Additional Component 2 (QTY/MODEL)														
Additional Component 3 (QTY/MODEL)														
Local Market Note 1	- Add diplexer CBC23SR-43.- Add DC only Squid- Add SDARS remote 1 per sector.													
Local Market Note 2														
Local Market Note 3	2x6601 / 2x5216 / 2xXMU03 + IDLe +6630 || ION M23 Main Unit w/3 OTRX.													

PORT SPECIFIC FIELDS	PORT NUMBER	USEID (CSSng)	USEID (Atoll)	ATOLL TXID	ATOLL CELL ID	TX/RX ?	TECHNOLOGY/FREQUENCY	ANTENNA ATOLL	ANTENNA GAIN	ELECTRICAL AZIMUTH	ELECTRICAL TILT	RRH LOCATION (Top/Bottom/Integrated/None)	FEEDERS TYPE	FEEDER LENGTH (feet)	RXAIT KIT MODULE?	TRIPLEXER or LLC (QTY)	TRIPLEXER or LLC (MODEL)	SCPA/MCPA MODULE?	HATCHPLATE POWER (Watts)	ERP (Watts)	Antenna RET Name	CABLE NUMBER	CABLE ID (CSSNG)
ANTENNA POSITION 1	PORT 1	25935.A.850.3G.1	25935.A.850.3G.1	CTV10141	CTV10141		UMTS 850	7770.00.850.07	13.5	150	7	None	Commscope 1-1/4	175.04								1	
ANTENNA POSITION 2	PORT 1	25935.A.700.4G.1	25935.A.700.4G.1	CTL01014_7A_1	CTL01014_7A_1		LTE 700	OPA-65R-LCUU-H6_719MHz_09DT	13.5	40	9	Top	Fiber	0						1475.7065		3	
	PORT 3	25935.A.WCS.4G.1	25935.A.WCS.4G.1	CTL01014_3A_1	CTL01014_3A_1		LTE WCS	OPA-65R-LCUU-H6_2350MHz_06DT	17.8	40	6	Top	Fiber	0						1285.2866		4	
ANTENNA POSITION 3	PORT 1	25935.A.850.4G.2	25935.A.850.4G.1	CTL00014_8A_1	CTL00014_8A_1		LTE 850	QS66512-	13.5	40	9	Bottom	Commscope 1-1/4	175.04						1000		5	

								2_850MHz_09DT															
	PORT 2	25935.A.700.4G.5	25935.A.700.4G.5	CTL00014_7A_3_F	CTL00014_7A_3_F		LTE 700	QS66512-2_776MHz_09DT	13.7	40	9	Bottom	Commscope 1-1/4	175.04						2951.413		5	
	PORT 3	25935.A.1900.4G.1	25935.A.1900.4G.1	CTL01014_9A_1	CTL01014_9A_1		LTE 1900	QS66512-2_1930MHz_06DT	15.9	40	6	Top	Fiber	0						3664.3757		6	
	PORT 4	25935.A.1900.4G.2	25935.A.1900.4G.4	CTL01014_9A_2	CTL01014_9A_2		LTE 1900	QS66512-2_1930MHz_06DT	15.9	40	6	Top	Fiber	0						3664.3757		6	
	PORT 5	25935.A.850.5G.tmp1	25935.A.850.5G.1	CTCN001014_N005A_1	CTCN001014_N005A_1		5G 850	QS66512-2_850MHz_09DT	13.5	40	9	Bottom	Commscope 1-1/4	175.04						1000		5	
	PORT 7	25935.A.AWS.4G.4	25935.A.AWS.4G.4	CTL00014_2A_2	CTL00014_2A_2		LTE AWS	QS66512-2_2170MHz_06DT	16.5	40	6	Top	Fiber	0						3837.0724		6	

Section 17B - FINAL TOWER CONFIGURATION - SECTOR B

ANTENNA POSITION is LEFT to RIGHT from BACK OF ANTENNA (unless otherwise specified)	ANTENNA POSITION 1		ANTENNA POSITION 2		ANTENNA POSITION 3		ANTENNA POSITION 4		ANTENNA POSITION 5		ANTENNA POSITION 6		ANTENNA POSITION 7	
ANTENNA MAKE - MODEL	7770		OPA-65R-LCUU-H6		QS66512-2									
ANTENNA VENDOR	POWERWAVE		CCI Products		Quintel									
ANTENNA SIZE (H x W x D)	55X11X5		72X14.8X7.4		72X12X9.6									
ANTENNA WEIGHT	35		73		111									
AZIMUTH	270		150		150									
MAGNETIC DECLINATION														
RADIATION CENTER (feet)	152		152		152									
ANTENNA TIP HEIGHT	154		155		155									
MECHANICAL DOWNTILT	2		0		0									
FEEDER AMOUNT	2				Fiber + 2 Coax									
VERTICAL SEPARATION from ANTENNA ABOVE (TIP to TIP)														
VERTICAL SEPARATION from ANTENNA BELOW (TIP to TIP)														
HORIZONTAL SEPARATION from CLOSEST ANTENNA to LEFT (CENTERLINE to CENTERLINE)														
HORIZONTAL SEPARATION from CLOSEST ANTENNA to RIGHT (CENTERLINE to CENTERLINE)														
HORIZONTAL SEPARATION from ANOTHER ANTENNA (which antenna # / # of inches)														
Antenna RET Motor (QTY/MODEL)	2	Powerwave 7020		Built in		Built in								
SURGE ARRESTOR (QTY/MODEL)					4	TSXDC-4310FM								
DIPLEXER (QTY/MODEL)	2	Kathrein / 782-10250	1	CBC23SR-43	4	CCI Triplexer -TPX-070821								
DUPLEXER (QTY/MODEL)														
Antenna RET CONTROL UNIT (QTY/MODEL)				LTE RRH		LTE RRH								
DC BLOCK (QTY/MODEL)														
TMA/LNA (QTY/MODEL)	2	Pwav LGP21401 Single 1900 w/ 850BP (850)												
CURRENT INJECTORS FOR TMA (QTY/MODEL)	2	Polyphaser/ 1000860												
PDU FOR TMAS (QTY/MODEL)														
FILTER (QTY/MODEL)														
SQUID (QTY/MODEL)														
FIBER TRUNK (QTY/MODEL)														
DC TRUNK (QTY/MODEL)														
REPEATER (QTY/MODEL)			1	SDARS remote										
RRH - 700 band (QTY/MODEL)			1	RRUS-11 (REUSE ONLY)		RRH is shared with another sector								
RRH - 850 band (QTY/MODEL)					1	4478 B5								
RRH - 1900 band (QTY/MODEL)					1	RRUS-32 B2								
RRH - AWS band (QTY/MODEL)					1	4426 B66								
RRH - WCS band (QTY/MODEL)			1	RRUS-32										
Additional RRH #1 - any band (QTY/MODEL)														
Additional RRH #2 - any band (QTY/MODEL)														
Additional Component 1 (QTY/MODEL)					2	Pwav 1001983 (1) & 1001940 (1)								
Additional Component 2 (QTY/MODEL)														
Additional Component 3 (QTY/MODEL)														
Local Market Note 1	- Add diplexer CBC23SR-43.- Add DC only Squid- Add SDARS remote 1 per sector.													
Local Market Note 2														
Local Market Note 3	2x6601 / 2x5216 / 2xXMU03 + IDLe +6630 || ION M23 Main Unit w/3 OTRX.													

PORT SPECIFIC FIELDS	PORT NUMBER	USEID (CSSng)	USEID (Atoll)	ATOLL TXID	ATOLL CELL ID	TX/RX ?	TECHNOLOGY/FREQUENCY	ANTENNA ATOLL	ANTENNA GAIN	ELECTRICAL AZIMUTH	ELECTRICAL TILT	RRH LOCATION (Top/Bottom/Integrated/None)	FEEDERS TYPE	FEEDER LENGTH (feet)	RXAIT KIT MODULE?	TRIPLEXER or LLC (QTY)	TRIPLEXER or LLC (MODEL)	SCPA/MCPA MODULE?	HATCHPLATE POWER (Watts)	ERP (Watts)	Antenna RET Name	CABLE NUMBER	CABLE ID (CSSNG)
ANTENNA POSITION 1	PORT 1	25935.B.850.3G.1	25935.B.850.3G.1	CTV10142	CTV10142		UMTS 850	7770.00.850.08	13.5	270	8	None	Commscope 1-1/4	175.04								9	
ANTENNA POSITION 2	PORT 1	25935.B.700.4G.1	25935.B.700.4G.1	CTL01014_7B_1	CTL01014_7B_1		LTE 700	OPA-65R-LCUU-H6_719MHz_06DT	13.7	150	6	Top	Fiber	0						1475.7065		11	
	PORT 3	25935.B.WCS.4G.1	25935.B.WCS.4G.1	CTL01014_3B_1	CTL01014_3B_1		LTE WCS	OPA-65R-LCUU-H6_2350MHz_05DT	17.8	150	5	Top	Fiber	0						1285.2866		12	
ANTENNA POSITION 3	PORT 1	25935.B.850.4G.2	25935.B.850.4G.1	CTL00014_8B_1	CTL00014_8B_1		LTE 850	QS66512-	13.4	150	6	Bottom	Commscope 1-1/4	175.04						1000		13	

								2_850MHz_06DT															
	PORT 2	25935.B.700.4G.5	25935.B.700.4G.5	CTL00014_7B_3_F	CTL00014_7B_3_F		LTE 700	QS66512-2_776MHz_06DT	13.5	150	6	Bottom	Commscope 1-1/4	175.04						2951.413		13	
	PORT 3	25935.B.1900.4G.1	25935.B.1900.4G.1	CTL01014_9B_1	CTL01014_9B_1		LTE 1900	QS66512-2_1930MHz_05DT	15.6	150	5	Top	Fiber	0						3664.3757		14	
	PORT 4	25935.B.1900.4G.2	25935.B.1900.4G.4	CTL01014_9B_2	CTL01014_9B_2		LTE 1900	QS66512-2_1930MHz_05DT	15.6	150	5	Top	Fiber	0						3664.3757		14	
	PORT 5	25935.B.850.5G.tmp1	25935.B.850.5G.1	CTCN001014_N005B_1	CTCN001014_N005B_1		5G 850	QS66512-2_850MHz_06DT	13.4	150	6	Bottom	Commscope 1-1/4	175.04						1000		13	
	PORT 7	25935.B.AWS.4G.4	25935.B.AWS.4G.4	CTL00014_2B_2	CTL00014_2B_2		LTE AWS	QS66512-2_2170MHz_05DT	16.4	150	5	Top	Fiber	0						3837.0724		14	

Section 17C - FINAL TOWER CONFIGURATION - SECTOR C

ANTENNA POSITION is LEFT to RIGHT from BACK OF ANTENNA (unless otherwise specified)	ANTENNA POSITION 1		ANTENNA POSITION 2		ANTENNA POSITION 3		ANTENNA POSITION 4		ANTENNA POSITION 5		ANTENNA POSITION 6		ANTENNA POSITION 7	
ANTENNA MAKE - MODEL	7770		OPA-65R-LCUU-H6		QS66512-2									
ANTENNA VENDOR	POWERWAVE		CCI Products		Quintel									
ANTENNA SIZE (H x W x D)	55X11X5		72X14.8X7.4		72X12X9.6									
ANTENNA WEIGHT	35		73		111									
AZIMUTH	40		270		270									
MAGNETIC DECLINATION														
RADIATION CENTER (feet)	152		152		152									
ANTENNA TIP HEIGHT	154		155		155									
MECHANICAL DOWNTILT	1		0		0									
FEEDER AMOUNT	2				Fiber + 2 Coax									
VERTICAL SEPARATION from ANTENNA ABOVE (TIP to TIP)														
VERTICAL SEPARATION from ANTENNA BELOW (TIP to TIP)														
HORIZONTAL SEPARATION from CLOSEST ANTENNA to LEFT (CENTERLINE to CENTERLINE)														
HORIZONTAL SEPARATION from CLOSEST ANTENNA to RIGHT (CENTERLINE to CENTERLINE)														
HORIZONTAL SEPARATION from ANOTHER ANTENNA (which antenna # / # of inches)														
Antenna RET Motor (QTY/MODEL)	2	Powerwave 7020		Built in		Built in								
SURGE ARRESTOR (QTY/MODEL)					8	TSXDC-4310FM								
DIPLEXER (QTY/MODEL)	2	Kathrein / 782-10250	1	CBC23SR-43	4	CCI Triplexer -TPX-070821								
DUPLEXER (QTY/MODEL)														
Antenna RET CONTROL UNIT (QTY/MODEL)				LTE RRH		LTE RRH								
DC BLOCK (QTY/MODEL)														
TMA/LNA (QTY/MODEL)	2	Pwav LGP21401 Single 1900 w/ 850BP (850)												
CURRENT INJECTORS FOR TMA (QTY/MODEL)	2	Polyphaser/ 1000860												
PDU FOR TMAS (QTY/MODEL)														
FILTER (QTY/MODEL)														
SQUID (QTY/MODEL)														
FIBER TRUNK (QTY/MODEL)														
DC TRUNK (QTY/MODEL)														
REPEATER (QTY/MODEL)			1	SDARS remote										
RRH - 700 band (QTY/MODEL)			1	RRUS-11 (REUSE ONLY)	1	B14 4478								
RRH - 850 band (QTY/MODEL)					1	4478 B5								
RRH - 1900 band (QTY/MODEL)					1	RRUS-32 B2								
RRH - AWS band (QTY/MODEL)					1	4426 B66								
RRH - WCS band (QTY/MODEL)			1	RRUS-32										
Additional RRH #1 - any band (QTY/MODEL)														
Additional RRH #2 - any band (QTY/MODEL)														
Additional Component 1 (QTY/MODEL)					2	Pwav 1001983 (1) & 1001940 (1)								
Additional Component 2 (QTY/MODEL)														
Additional Component 3 (QTY/MODEL)														
Local Market Note 1	- Add diplexer CBC23SR-43.- Add DC only Squid- Add SDARS remote 1 per sector.													
Local Market Note 2														
Local Market Note 3	2x6601 / 2x5216 / 2xXMU03 + IDLe +6630 || ION M23 Main Unit w/3 OTRX.													

PORT SPECIFIC FIELDS	PORT NUMBER	USEID (CSSng)	USEID (Atoll)	ATOLL TXID	ATOLL CELL ID	TX/RX ?	TECHNOLOGY/FREQUENCY	ANTENNA ATOLL	ANTENNA GAIN	ELECTRICAL AZIMUTH	ELECTRICAL TILT	RRH LOCATION (Top/Bottom/Integrated/None)	FEEDERS TYPE	FEEDER LENGTH (feet)	RXAIT KIT MODULE?	TRIPLEXER or LLC (QTY)	TRIPLEXER or LLC (MODEL)	SCPA/MCPA MODULE?	HATCHPLATE POWER (Watts)	ERP (Watts)	Antenna RET Name	CABLE NUMBER	CABLE ID (CSSNG)
ANTENNA POSITION 1	**PORT 1**	25935.C.850.3G.1	25935.C.850.3G.1	CTV10143	CTV10143		UMTS 850	7770.00.850.06	13.5	40	6	None	Commscope 1-1/4	175.04								17	
ANTENNA POSITION 2	**PORT 1**	25935.C.700.4G.1	25935.C.700.4G.1	CTL01014_7C_1	CTL01014_7C_1		LTE 700	OPA-65R-LCUU-H6_719MHz_08DT	13.6	270	8	Top	Fiber	0						1475.7065		19	
	PORT 3	25935.C.WCS.4G.1	25935.C.WCS.4G.1	CTL01014_3C_1	CTL01014_3C_1		LTE WCS	OPA-65R-LCUU-H6_2350MHz_06DT	17.8	270	6	Top	Fiber	0						1285.2866		20	
ANTENNA POSITION 3	**PORT 1**	25935.C.850.4G.2	25935.C.850.4G.1	CTL00014_8C_1	CTL00014_8C_1		LTE 850	QS66512-2_850MHz_08DT	13.4	270	8	Bottom	Commscope 1-1/4	175.04						1000		21	

	PORT 2	25935.C.700.4G.5	25935.C.700.4G.5	CTL00014_7C_3_F	CTL00014_7C_3_F		LTE 700	QS66512-2_776MHz_08DT	13.6	270	8	Bottom	Commscope 1-1/4	175.04						2951.413		21	
	PORT 3	25935.C.1900.4G.1	25935.C.1900.4G.1	CTL01014_9C_1	CTL01014_9C_1		LTE 1900	QS66512-2_1930MHz_06DT	15.9	270	6	Top	Fiber	0						3664.3757		22	
	PORT 4	25935.C.1900.4G.2	25935.C.1900.4G.4	CTL01014_9C_2	CTL01014_9C_2		LTE 1900	QS66512-2_1930MHz_06DT	15.9	270	6	Top	Fiber	0						3664.3757		22	
	PORT 5	25935.C.850.5G.tmp1	25935.C.850.5G.1	CTCN001014_N005C_1	CTCN001014_N005C_1		5G 850	QS66512-2_850MHz_08DT	13.4	270	8	Bottom	Commscope 1-1/4	175.04						1000		21	
	PORT 7	25935.C.AWS.4G.4	25935.C.AWS.4G.4	CTL00014_2C_2	CTL00014_2C_2		LTE AWS	QS66512-2_2170MHz_06DT	16.5	270	6	Top	Fiber	0						3837.0724		22	

Diagram - Sector A Diagram File Name - CT1014_A_B_C_SXM_Rev2.vsd

Atoll Site Name - CTL01014 Location Name - BERLIN NE Market - CONNECTICUT Market Cluster - NEW ENGLAND

Comments: "Important Note: For detailed radio to antenna wiring refer to the latest field notice - Antenna_Radio Connection Drawings Playbook v6.0_Ericsson "

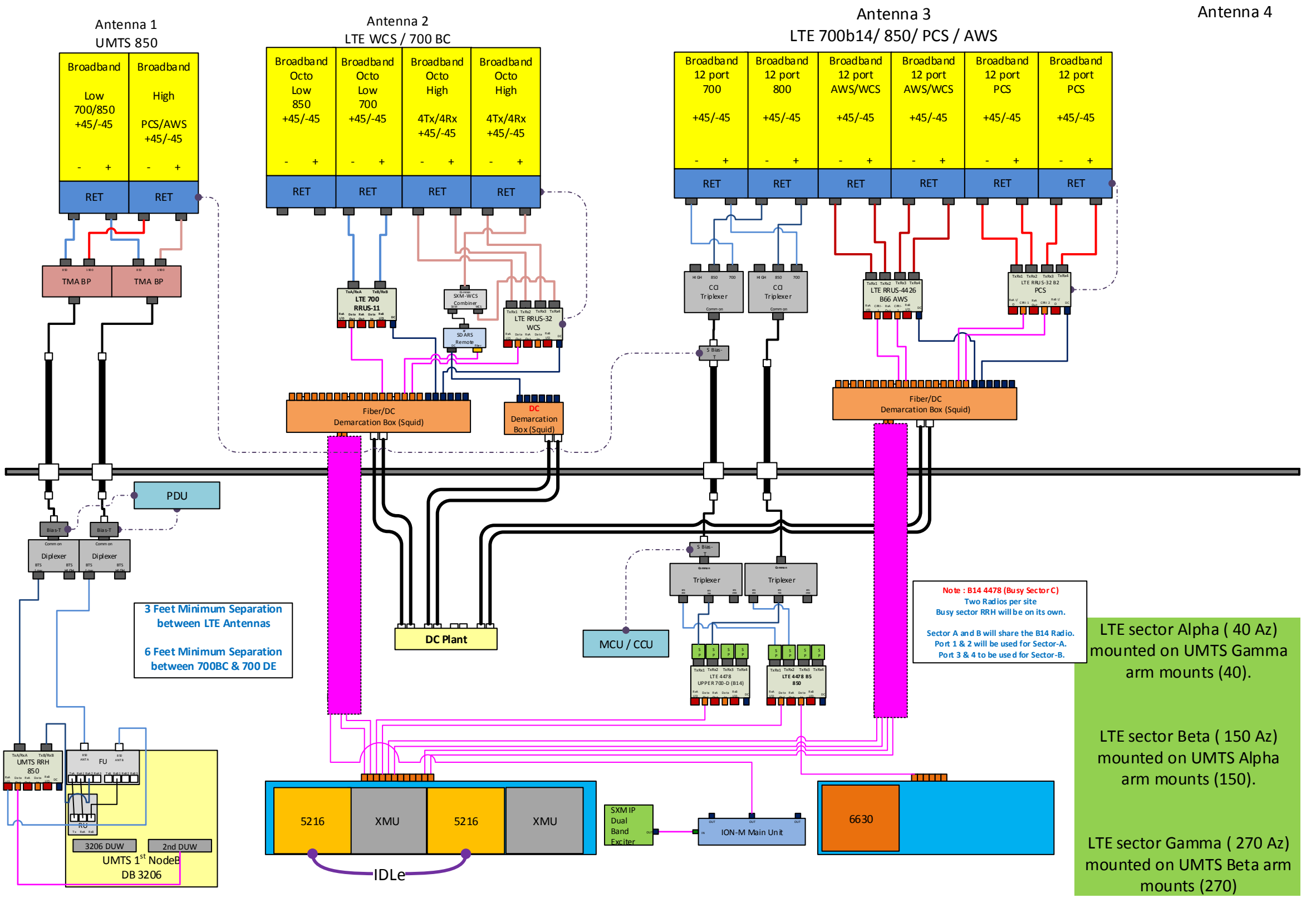

Diagram - Sector B Diagram File Name - CT1014_A_B_C_SXM_Rev2.vsd

Atoll Site Name - CTL01014 Location Name - BERLIN NE Market - CONNECTICUT Market Cluster - NEW ENGLAND

Comments: "Important Note: For detailed radio to antenna wiring refer to the latest field notice - Antenna_Radio Connection Drawings Playbook v6.0_Ericsson "

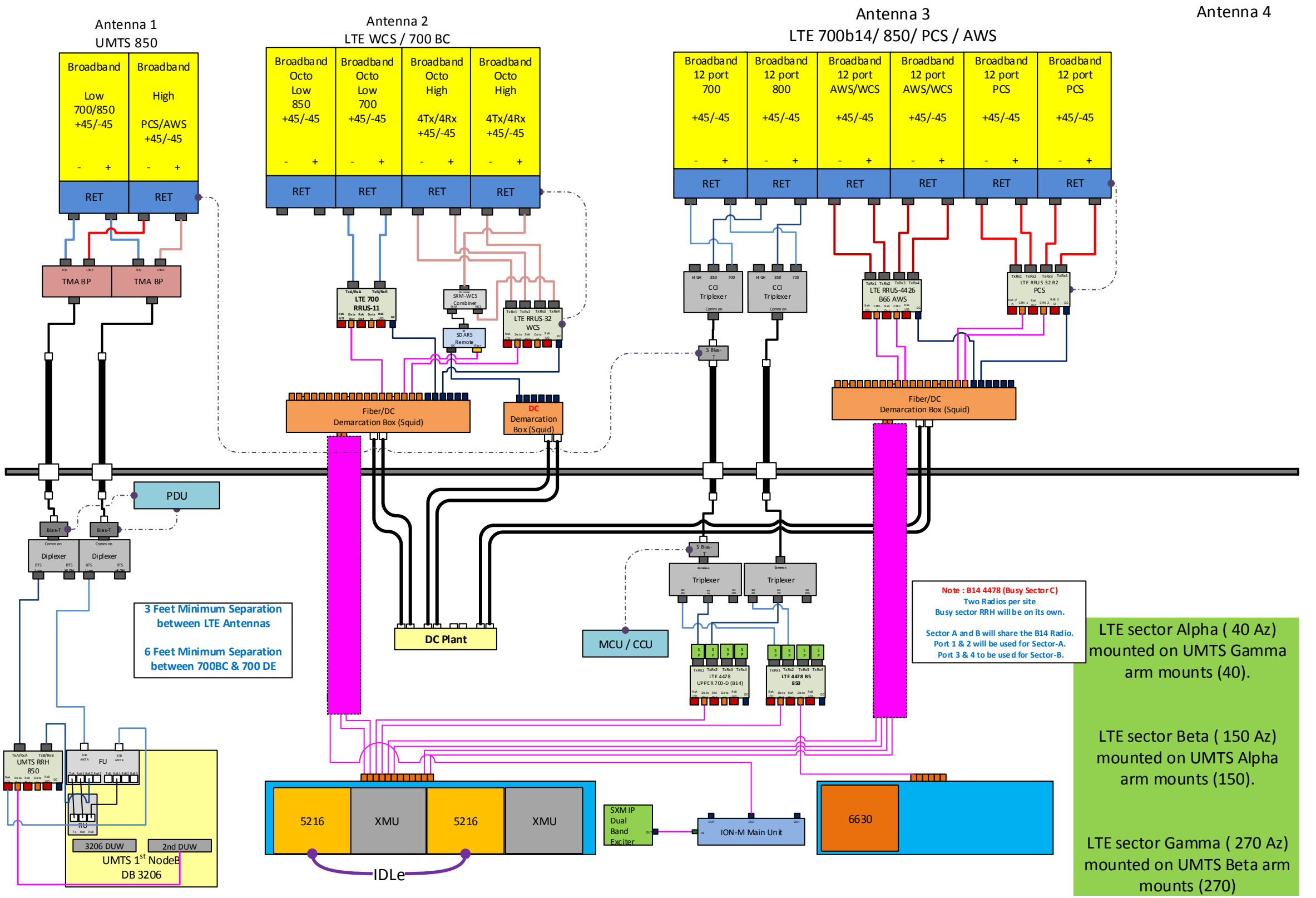

Diagram - Sector C Diagram File Name - CT1014_A_B_C_SXM_Rev2.vsd

Atoll Site Name - CTL01014 Location Name - BERLIN NE Market - CONNECTICUT Market Cluster - NEW ENGLAND
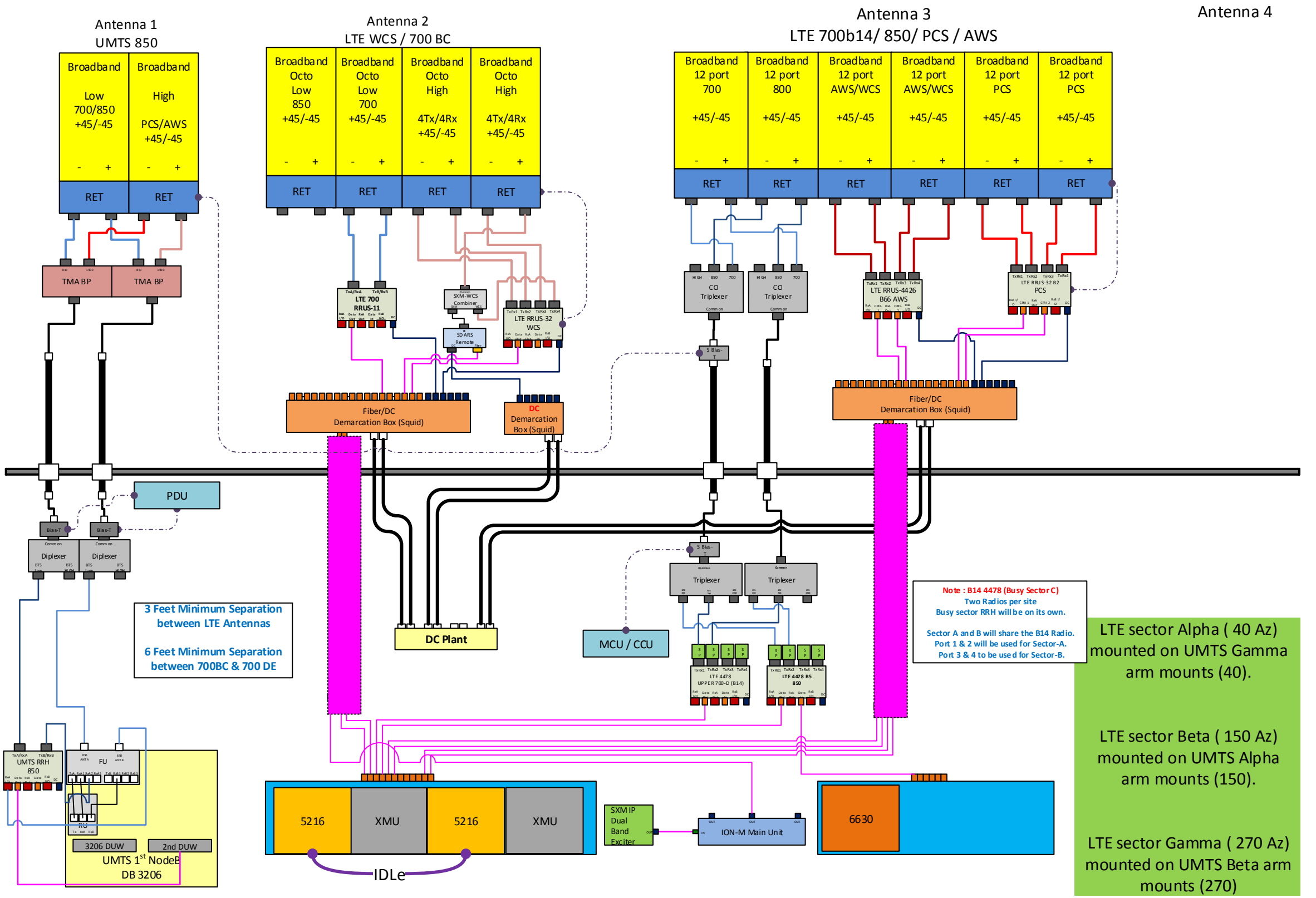
Comments: "Important Note: For detailed radio to antenna wiring refer to the latest field notice - Antenna_Radio Connection Drawings Playbook v6.0_Ericsson "