MJ Umali, Site Acquisition Consultant
c/o Cellco Partnership d/b/a Verizon Wireless
Centerline Communications, LLC
750 West Center Street, Floor 3
West Bridgewater, MA 02379
Mobile: (978) 568-7906
MUmali@centerlinecommunications.com

August 26, 2021

Melanie A. Bachman
Acting Executive Director
Connecticut Siting Council
10 Franklin Square
New Britain, CT 06051

RE: Notice of Exempt Modification // Site: ASHFORD NORTH (ATC: 414867)
174 Ashford Center Road, Ashford, CT 06278
N 41.8682 // W 72.1458

Dear Ms. Bachman,

Cellco Partnership d/b/a Verizon Wireless currently maintains 12 antennas at the 117-ft level on the existing 119-foot monopole tower, located at 174 Ashford Center Road, Ashford, CT. The tower is owned by American Tower. The property is also owned by P&G Realty LLC. The Council approved Verizon Wireless use of the existing tower in 2007. Verizon Wireless now intends install 1 mount modification with 3 new antennas for the LTE (3700 MHz) replacements for its 5G upgrade. Additionally, Verizon Wireless will remove 6 Remote Radio Heads (RRHs) and install with 6 new RRHs, remove 3 RRHs from ground, and install 3 new diplexers; altogether updating leased equipment rights, as reflected by the final configuration outlined in the structural analysis and proposed hereby.

Please accept this letter as notification pursuant to Regulations of Connecticut State Agencies §16-50j-73, for construction that constitutes an exempt modification pursuant to R.C.S.A. § 16-50j-72(b)(2). In accordance with R.C.S.A. § 16-50j-73, a copy of this letter is being sent to Cathryn E. Silver-Smith, First Selectman, its Zoning Enforcement Officer, Michael D'Amato, the tower owner, American Tower, and the property owner, P&G Realty LLC.

The planned modifications to the facility fall squarely within those activities explicitly provided for in R.C.S.A. § 16-50j-72(b)(2). Enclosed to accommodate this filing are construction drawings dated August 4, 2021, by Morrison Hershfield, a structural analysis dated July 2, 2021, by Tower Engineering Professionals, and a structural mount analysis by Maser Consulting Connecticut date June 16, 2021, and radio frequency (RF) analysis table showing worst-case RF emission calculation by Verizon Wireless RF Design Engineering.

1. The proposed modifications will not result in an increase in the height of the existing structure.

2. The proposed modifications will not require the extension of the site boundary.

3. The proposed modifications will not increase noise levels at the facility by six decibels or more, or to levels that exceed state and local criteria.

4. The operation of the new antennas will not increase radio frequency emissions at the facility to a level at or above the Federal Communications Commission safety standard.

5. The proposed modifications will not cause a change or alteration in the physical or environmental characteristics of the site.

6. The existing structure and its foundation can support the proposed loading, as shown in the attached structural analysis by Tower Engineering Professionals, dated July 2, 2021, and a structural mount analysis by Maser Consulting Connecticut, dated June 16, 2021, pursuant to certain conditions defined therein. Design and engineering are fully illustrated within final construction drawings, signed and stamped dated August 4, 2021.

For the foregoing reasons, Verizon Wireless respectfully submits that the proposed modifications to the above referenced telecommunications facility constitute an exempt modification under R.C.S.A. § 16-50j-72(b)(2).

Sincerely,

MJ Umali

MJ Umali, Site Acquisition Consultant
c/o Cellco Partnership d/b/a Verizon Wireless
Centerline Communications, LLC
750 West Center Street, Floor 3
West Bridgewater, MA 02379
Mobile: (978) 568-7906
MUmali@centerlinecommunications.com

Attachments

cc: Cathryn E. Silver-Smith, First Selectman – Chief Elected Official
Michael D'Amato, Zoning Enforcement Officer - as P&Z official
American Tower Corporation - as tower owner
P&G Realty LLC. - as ground owner

UPS CampusShip: View/Print Label

1. **Ensure there are no other shipping or tracking labels attached to your package.** Select the Print button on the print dialog box that appears. Note: If your browser does not support this function select Print from the File menu to print the label.

2. **Fold the printed label at the solid line below.** Place the label in a UPS Shipping Pouch. If you do not have a pouch, affix the folded label using clear plastic shipping tape over the entire label.

3. **GETTING YOUR SHIPMENT TO UPS**
   Customers with a Daily Pickup
   Your driver will pickup your shipment(s) as usual.

   Customers without a Daily Pickup
   Take your package to any location of The UPS Store®, UPS Access Point(TM) location, UPS Drop Box, UPS Customer Center, Staples® or Authorized Shipping Outlet near you. Items sent via UPS Return Services(SM) (including via Ground) are also accepted at Drop Boxes. To find the location nearest you, please visit the Resources area of CampusShip and select UPS Locations.
   Schedule a same day or future day Pickup to have a UPS driver pickup all your CampusShip packages.
   Hand the package to any UPS driver in your area.

UPS Access Point™
CVS STORE # 972
555 WASHINGTON ST
SOUTH EASTON ,MA 02375

UPS Access Point™
CVS STORE # 7232
689 DEPOT ST
NORTH EASTON ,MA 02356

UPS Access Point™
TOWN LINE GENERAL STORE
450 E CENTER ST
WEST BRIDGEWATER ,MA 02379

FOLD HERE

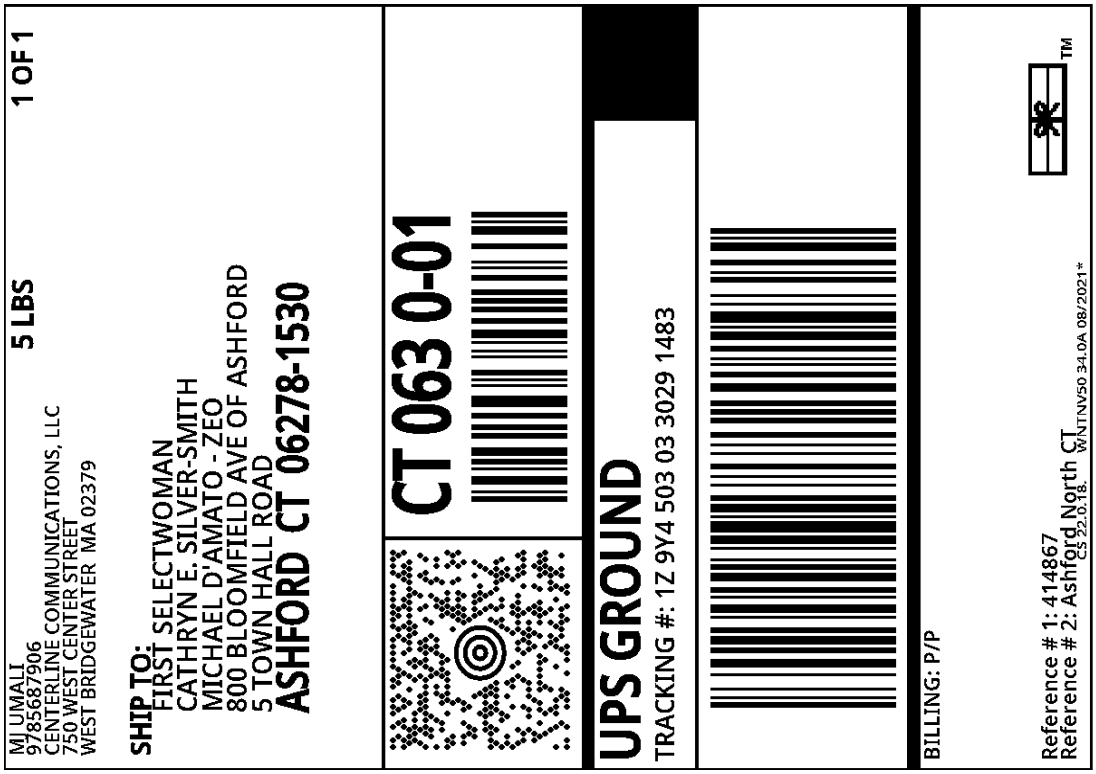

UPS CampusShip: View/Print Label

1. **Ensure there are no other shipping or tracking labels attached to your package.** Select the Print button on the print dialog box that appears. Note: If your browser does not support this function select Print from the File menu to print the label.

2. **Fold the printed label at the solid line below.** Place the label in a UPS Shipping Pouch. If you do not have a pouch, affix the folded label using clear plastic shipping tape over the entire label.

3. **GETTING YOUR SHIPMENT TO UPS**
   Customers with a Daily Pickup
   Your driver will pickup your shipment(s) as usual.

   Customers without a Daily Pickup
   Take your package to any location of The UPS Store®, UPS Access Point(TM) location, UPS Drop Box, UPS Customer Center, Staples® or Authorized Shipping Outlet near you. Items sent via UPS Return Services(SM) (including via Ground) are also accepted at Drop Boxes. To find the location nearest you, please visit the Resources area of CampusShip and select UPS Locations.
   Schedule a same day or future day Pickup to have a UPS driver pickup all your CampusShip packages.
   Hand the package to any UPS driver in your area.

UPS Access Point™
CVS STORE # 972
555 WASHINGTON ST
SOUTH EASTON ,MA 02375

UPS Access Point™
CVS STORE # 7232
689 DEPOT ST
NORTH EASTON ,MA 02356

UPS Access Point™
TOWN LINE GENERAL STORE
450 E CENTER ST
WEST BRIDGEWATER ,MA 02379

FOLD HERE

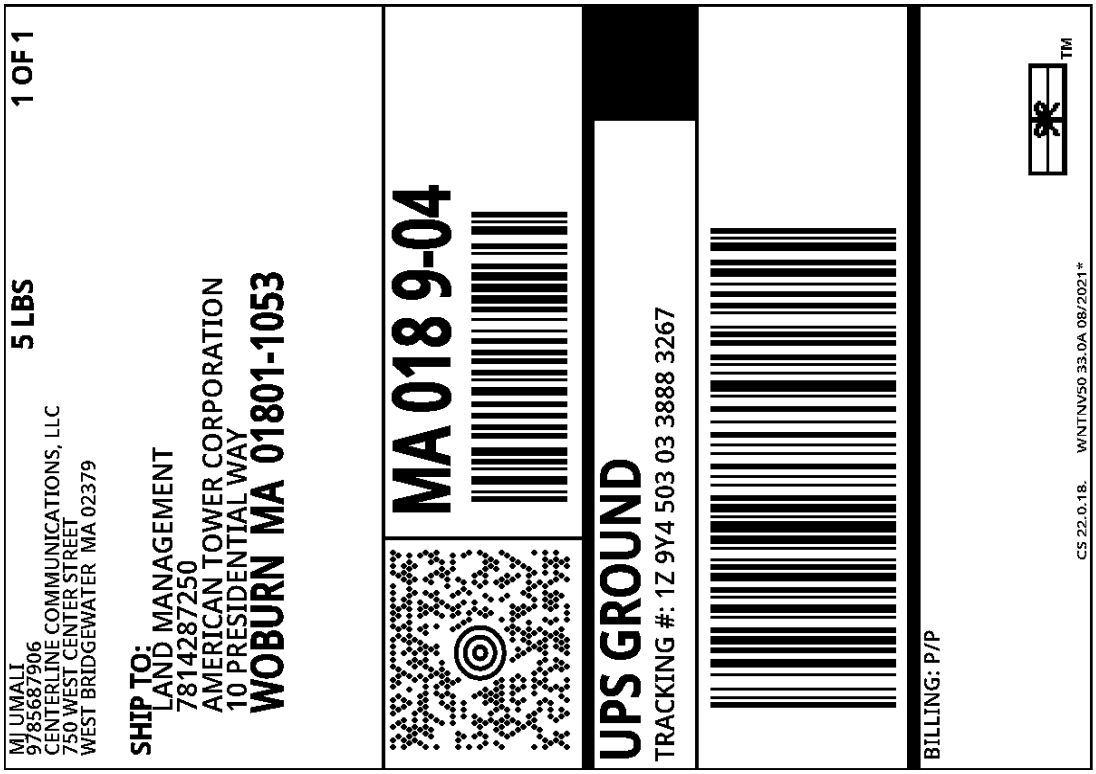

UPS CampusShip: View/Print Label

1. **Ensure there are no other shipping or tracking labels attached to your package.** Select the Print button on the print dialog box that appears. Note: If your browser does not support this function select Print from the File menu to print the label.

2. **Fold the printed label at the solid line below.** Place the label in a UPS Shipping Pouch. If you do not have a pouch, affix the folded label using clear plastic shipping tape over the entire label.

3. **GETTING YOUR SHIPMENT TO UPS**
   Customers with a Daily Pickup
   Your driver will pickup your shipment(s) as usual.

   Customers without a Daily Pickup
   Take your package to any location of The UPS Store®, UPS Access Point(TM) location, UPS Drop Box, UPS Customer Center, Staples® or Authorized Shipping Outlet near you. Items sent via UPS Return Services(SM) (including via Ground) are also accepted at Drop Boxes. To find the location nearest you, please visit the Resources area of CampusShip and select UPS Locations.
   Schedule a same day or future day Pickup to have a UPS driver pickup all your CampusShip packages.
   Hand the package to any UPS driver in your area.

UPS Access Point™
CVS STORE # 972
555 WASHINGTON ST
SOUTH EASTON ,MA 02375

UPS Access Point™
CVS STORE # 7232
689 DEPOT ST
NORTH EASTON ,MA 02356

UPS Access Point™
TOWN LINE GENERAL STORE
450 E CENTER ST
WEST BRIDGEWATER ,MA 02379

FOLD HERE

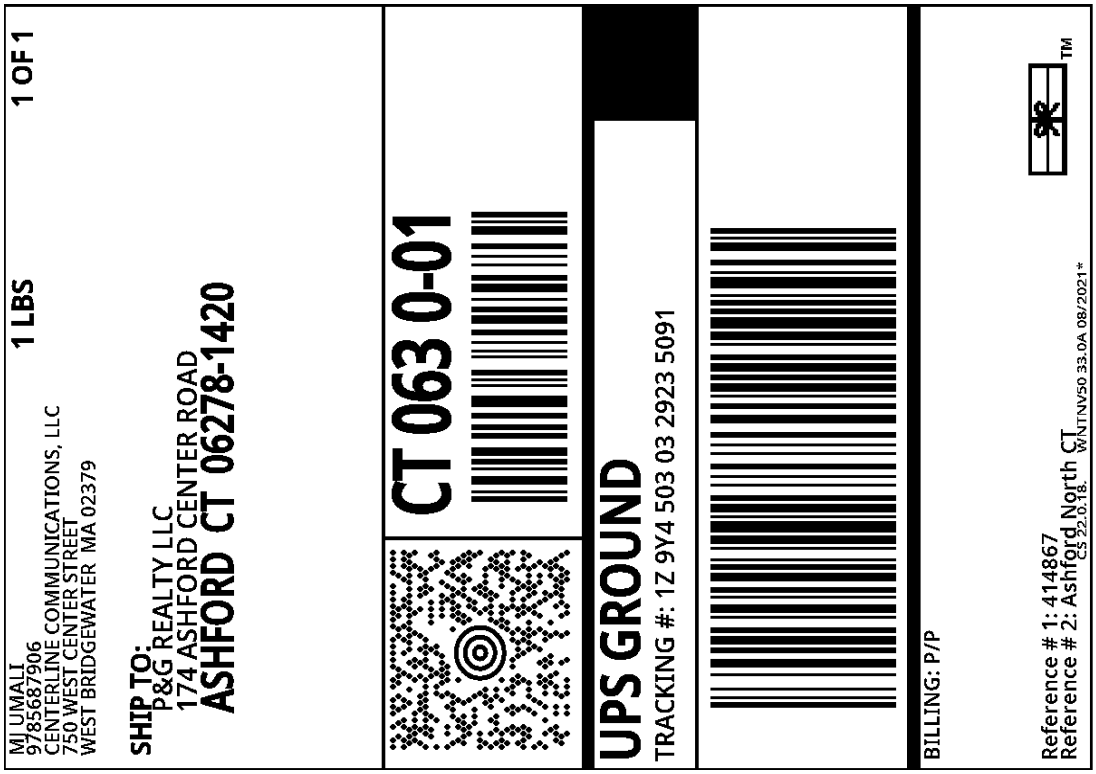

AMERICAN TOWER®
CORPORATION

This report was prepared for American Tower Corporation by

TOWER ENGINEERING PROFESSIONALS

Structural Analysis Report

Structure	:	**119 ft Monopole**
ATC Site Name	:	**Ashford North CT, CT**
ATC Asset Number	:	**414867**
Engineering Number	:	**13696208_C3_02**
Proposed Carrier	:	**VERIZON WIRELESS**
Carrier Site Name	:	**ASHFORD NORTH**
Carrier Site Number	:	**468148**
Site Location	:	**174 ASHFORD CENTER ROAD** **Ashford, CT 06278-1421** **41.868300,-72.145800**
County	:	**Windham**
Date	:	**July 2, 2021**
Max Usage	:	**25%**
Result	:	**Pass**

Prepared By:
Nolan Laird
TEP

Reviewed By:

STATE OF CONNECTICUT
AARON THOMAS RUCKER
32608
LICENSED
PROFESSIONAL ENGINEER

07/02/2021

COA: PEC.0001553

Table of Contents

Introduction 1

Supporting Documents 1

Analysis 1

Conclusion 1

Existing and Reserved Equipment 2

Equipment to be Removed 2

Proposed Equipment 2

Structure Usages 3

Foundations 3

Deflection, Twist, and Sway 3

Standard Conditions 4

Calculations ..... Attached

Introduction

The purpose of this report is to summarize results of a structural analysis performed on the 119 ft monopole to reflect the change in loading by VERIZON WIRELESS.

Supporting Documents

Tower Drawings	EEI Project #15269, dated February 14, 2008
Foundation Drawing	EEI Project #15269, dated February 8, 2008
Geotechnical Report	Dewberry Site: Ashford, Connecticut, dated January 2008
Mount Modification Drawings	Master Consulting Job# 21777482A, dated June 16, 2021

Analysis

The tower was analyzed using American Tower Corporation's tower analysis software. This program considers an elastic three-dimensional model and second-order effects per ANSI/TIA-222.

Basic Wind Speed:	119 mph (3-Second Gust)
Basic Wind Speed w/ Ice:	50 mph (3-Second Gust) w/ 1 1/2" radial ice concurrent
Code:	ANSI/TIA-222-H / 2015 IBC / 2018 Connecticut State Building Code
Exposure Category:	B
Risk Category:	II
Topographic Factor Procedure:	Method 1
Topographic Category:	1
Spectral Response:	Ss = 0.18, S_1 = 0.06
Site Class:	D - Stiff Soil

Conclusion

Based on the analysis results, the structure meets the requirements per the applicable codes listed above. The tower and foundation can support the equipment as described in this report.

If you have any questions or require additional information, please contact American Tower via email at Engineering@americantower.com. Please include the American Tower site name, site number, and engineering number in the subject line for any questions.

Existing and Reserved Equipment

Elev.[1] (ft)	Qty	Equipment	Mount Type	Lines	Carrier
117.0	1	VZW Unused Reserve (14576.19 sqin)	Low Profile Platform	(12) 1 5/8" Coax	VERIZON WIRELESS
	6	Commscope JAHH-65B-R3B (63.3 lb)			
	6	Antel LPA-80080/6CF ___			

Equipment to be Removed

Elev.[1] (ft)	Qty	Equipment	Mount Type	Lines	Carrier
117.0	3	Nokia AirScale RRH 4T4R B5 160W AHCA	-	(2) 1.25" (31.8mm) Hybrid	VERIZON WIRELESS
	2	RFS DB-T1-6Z-8AB-0Z			
	3	Alcatel-Lucent B66A RRH 4x45			
	3	Alcatel-Lucent B13 RRH4x30-4R			

Proposed Equipment

Elev.[1] (ft)	Qty	Equipment	Mount Type	Lines	Carrier
117.0	3	Commscope CBC78T-DS-43-2X	Low Profile Platform	(2) 1 5/8" (1.63"-41.3mm) Fiber (4) 1 5/8" Coax	VERIZON WIRELESS
	3	Samsung B5/B13 RRH-BR04C			
	3	Samsung B2/B66A RRH-BR049			
	2	Raycap RRFDC-3315-PF-48			
	3	Samsung MT6407-77A			

[1] Contracted elevations are shown for appurtenances within contracted installation tolerances. Appurtenances outside of contract limits are shown at installed elevations.

Install proposed lines inside the pole shaft.

Structure Usages

Structural Component	Controlling Usage	Pass/Fail
Anchor Bolts	13%	Pass
Shaft	16%	Pass
Base Plate	8%	Pass

Foundations

Reaction Component	Original Design Reactions	Analysis Reactions	% of Design
Moment (Kips-Ft)	6,803.2	1,323.8	19%
Shear (Kips)	65.1	16.1	25%

The structure base reactions resulting from this analysis are acceptable when compared to those shown on the original structure drawings, therefore no modification or reinforcement of the foundation will be required.

Deflection and Sway*

Antenna Elevation (ft)	Antenna	Carrier	Deflection (ft)	Sway (Rotation) (°)
117.0	Commscope CBC78T-DS-43-2X	VERIZON WIRELESS	0.223	0.200
	Samsung B5/B13 RRH-BR04C			
	Samsung B2/B66A RRH-BR049			
	Raycap RRFDC-3315-PF-48			
	Samsung MT6407-77A			

***Deflection and Sway was evaluated considering a design wind speed of 60 mph (3-Second Gust) per ANSI/TIA-222-H**

Standard Conditions

All engineering services performed by A.T. Engineering Service, PLLC are prepared on the basis that the information used is current and correct. This information may consist of, but is not limited to the following:

- Information supplied by the client regarding antenna, mounts and feed line loading
- Information from drawings, design and analysis documents, and field notes in the possession of A.T. Engineering Service, PLLC

It is the responsibility of the client to ensure that the information provided to A.T. Engineering Service, PLLC and used in the performance of our engineering services is correct and complete.

All assets of American Tower Corporation, its affiliates and subsidiaries (collectively "American Tower") are inspected at regular intervals. Based upon these inspections and in the absence of information to the contrary, American Tower assumes that all structures were constructed in accordance with the drawings and specifications.

Unless explicitly agreed by both the client and A.T. Engineering Service, PLLC, all services will be performed in accordance with the current revision of ANSI/TIA-222.

All services are performed, results obtained, and recommendations made in accordance with generally accepted engineering principles and practices. A.T. Engineering Service, PLLC is not responsible for the conclusions, opinions and recommendations made by others based on the information supplied herein.

© 2007 - 2021 by ATC IP LLC. All rights reserved.

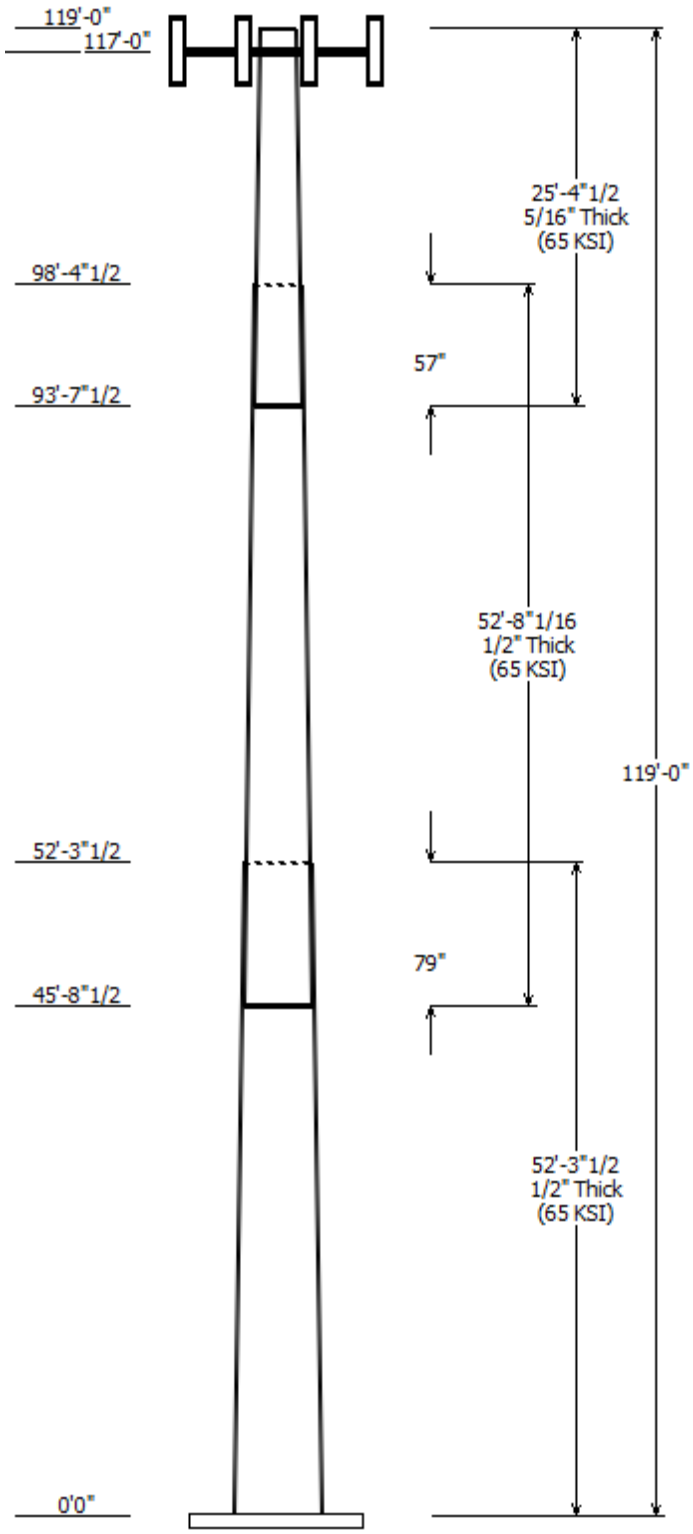

Job Information

Client : VERIZON WIRELESS
Pole : 414867
Code: ANSI/TIA-222-H
Location : Ashford North CT, CT
Description : 119 ft Monopole
Risk Category : II
Shape : 18 Sides
Exposure : B
Height : 119.00 (ft)
Topo Method : Method 1
Base Elev (ft): 0.00
Topographic Category : 1
Taper: 0.320723 (in/ft)

Sections Properties

Shaft Section	Length (ft)	Diameter (in) Accross Flats Top	Bottom	Thick (in)	Joint Type	Overlap Length (in)	Shape	Steel Grade (ksi)
1	52.290	45.22	62.00	0.500		0.000	18 Sides	65
2	52.670	31.44	48.34	0.500	Slip Joint	79.000	18 Sides	65
3	25.373	25.45	33.59	0.313	Slip Joint	57.000	18 Sides	65

Discrete Appurtenance

Attach Elev (ft)	Force Elev (ft)	Qty	Description
117.000	117.000	1	Flat Low Profile Platform
117.000	117.000	6	Commscope JAHH-65B-R3B
117.000	117.000	6	Antel LPA-80080/6CF ___
117.000	117.000	2	Raycap RRFDC-3315-PF-48
117.000	117.000	3	Samsung MT6407-77A
117.000	117.000	3	Samsung B2/B66A RRH-BR049
117.000	117.000	3	Samsung B5/B13 RRH-BR04C
117.000	117.000	3	Commscope CBC78T-DS-43-2X
117.000	117.000	1	VZW Unused Reserve

Linear Appurtenance

Elev (ft) From	To	Description	Exposed To Wind
0.000	117.0	1 5/8" (1.63"-	No
0.000	117.0	1 5/8" Coax	No
0.000	117.0	1 5/8" Coax	No

Load Cases

1.2D + 1.0W	119 mph with No Ice
0.9D + 1.0W	119 mph with No Ice (Reduced DL)
1.2D + 1.0Di + 1.0Wi	50 mph with 1.50 in Radial Ice
1.2D + 1.0Ev + 1.0Eh	Seismic
0.9D - 1.0Ev + 1.0Eh	Seismic (Reduced DL)
1.0D + 1.0W	Serviceability 60 mph

Reactions

Load Case	Moment (kip-ft)	Shear (kip)	Axial (kip)
1.2D + 1.0W	1323.77	16.05	41.53
0.9D + 1.0W	1320.08	16.05	31.15
1.2D + 1.0Di + 1.0Wi	370.92	4.62	55.75
1.2D + 1.0Ev + 1.0Eh	217.11	2.59	40.74
0.9D - 1.0Ev + 1.0Eh	216.44	2.59	28.34
1.0D + 1.0W	300.53	3.65	34.62

Dish Deflections

Load Case	Attach Elev (ft)	Deflection (in)	Rotation (deg)

0.00	0.000	0.000

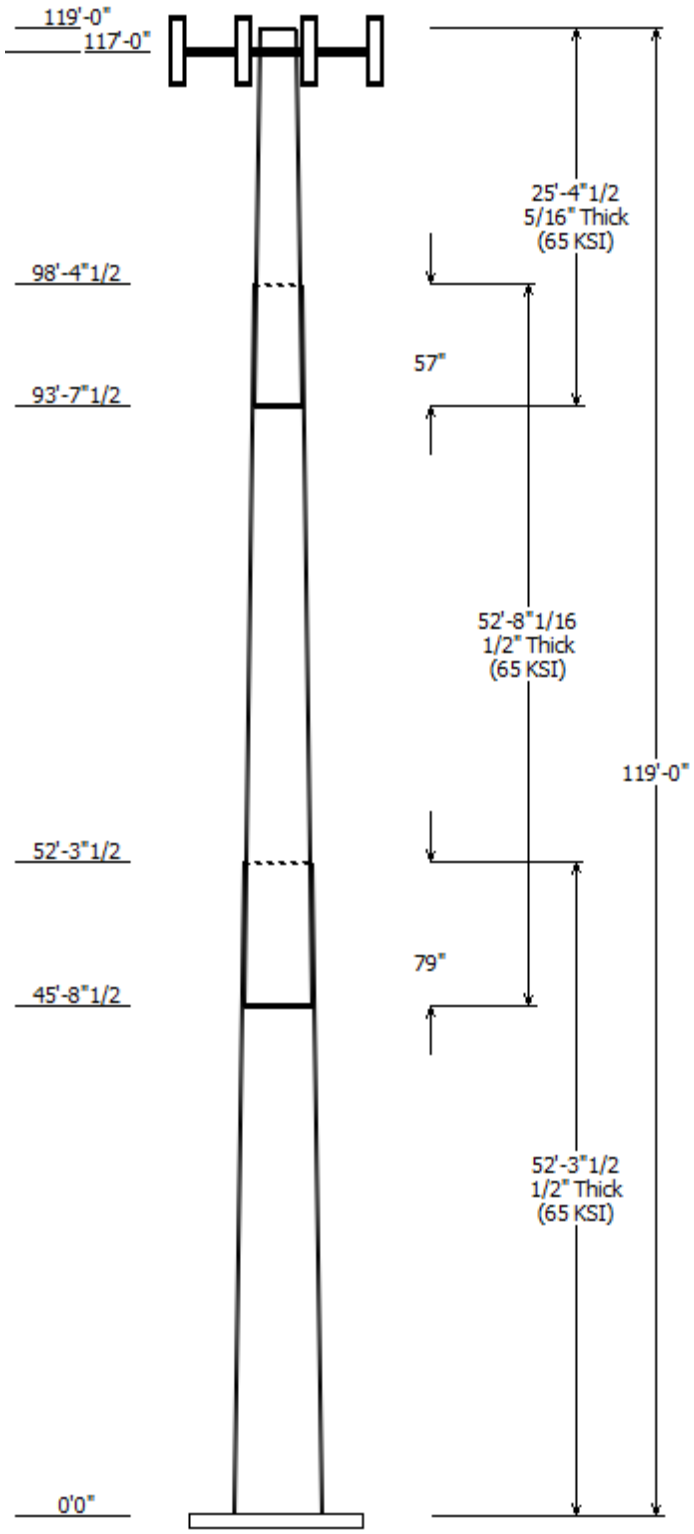

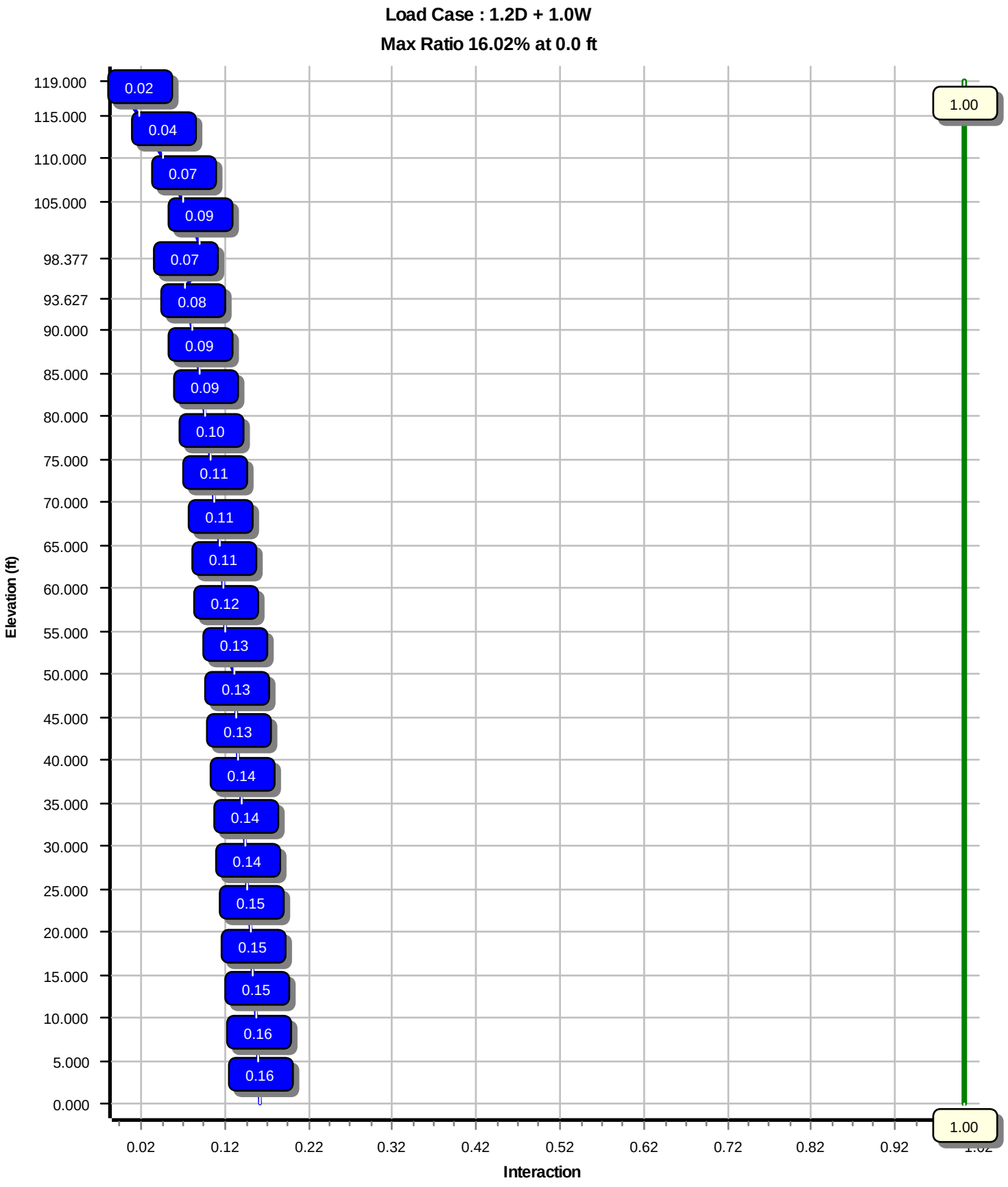
Load Case : 1.2D + 1.0W
Max Ratio 16.02% at 0.0 ft
Elevation (ft)
119.000
115.000
110.000
105.000
98.377
93.627
90.000
85.000
80.000
75.000
70.000
65.000
60.000
55.000
50.000
45.000
40.000
35.000
30.000
25.000
20.000
15.000
10.000
5.000
0.000
0.02
0.04
0.07
0.09
0.07
0.08
0.09
0.09
0.10
0.11
0.11
0.11
0.12
0.13
0.13
0.13
0.14
0.14
0.14
0.15
0.15
0.15
0.16
0.16
1.00
1.00
0.02
0.12
0.22
0.32
0.42
0.52
0.62
0.72
0.82
0.92
Interaction

Site Number: 414867	Code: ANSI/TIA-222-H	© 2007 - 2021 by ATC IP LLC. All rights reserved.
Site Name: Ashford North CT, CT	Engineering Number:13696208_C3_02	7/2/2021 2:50:02 PM
Customer: VERIZON WIRELESS		

Analysis Parameters

Location :	Windham County, CT	Height (ft) :	119
Code :	ANSI/TIA-222-H	Base Diameter (in) :	62.00
Shape :	18 Sides	Top Diameter (in) :	25.46
Pole Type :	Taper	Taper (in/ft) :	0.321
Pole Manfacturer :		Rotation (deg) :	0.00
Kd (non-service) :	0.95	Ke :	0.98

Ice & Wind Parameters

Exposure Category:	B	Design Wind Speed Without Ice:	119 mph
Risk Category:	II	Design Wind Speed With Ice:	50 mph
Topographic Factor Procedure:	Method 1	Operational Wind Speed:	60 mph
Topographic Category:	1	Design Ice Thickness:	1.50 in
Crest Height:	0 ft	HMSL:	582.29 ft

Seismic Parameters

Analysis Method:	Equivalent Lateral Force Method
Site Class:	D - Stiff Soil
Period Based on Rayleigh Method (sec):	1.02

T_L (sec):	6	p:	1.3	C_s:	0.057
S_s:	0.181	S_1:	0.055	C_s Max:	0.057
F_a:	1.600	F_v:	2.400	C_s Min:	0.030
S_{ds}:	0.193	S_{d1}:	0.088		

Load Cases

1.2D + 1.0W	119 mph with No Ice
0.9D + 1.0W	119 mph with No Ice (Reduced DL)
1.2D + 1.0Di + 1.0Wi	50 mph with 1.50 in Radial Ice
1.2D + 1.0Ev + 1.0Eh	Seismic
0.9D - 1.0Ev + 1.0Eh	Seismic (Reduced DL)
1.0D + 1.0W	Serviceability 60 mph

© 2007 - 2021 by ATC IP LLC. All rights reserved.

Shaft Section Properties

Sect Info	Length (ft)	Thick (in)	Fy (ksi)	Joint Type	Slip Joint Len (in)	Weight (lb)	Bottom Dia (in)	Bottom Elev (ft)	Bottom Area (in 2)	Bottom Ix (in4)	Bottom W/t Ratio	Bottom D/t Ratio	Top Dia (in)	Top Elev (ft)	Top Area (in2)	Top Ix (in4)	Top W/t Ratio	Top D/t Ratio	Taper (in/ft)
1-18	52.290	0.5000	65		0.00	14,998	62.00	0.00	97.60	46638.0	20.45	124.00	45.22	52.29	70.98	17942.9	14.54	90.46	0.320723
2-18	52.670	0.5000	65	Slip	79.00	11,205	48.34	45.71	75.92	21953.8	15.64	96.68	31.44	98.38	49.11	5943.3	9.68	62.90	0.320723
3-18	25.373	0.3125	65	Slip	57.00	2,502	33.59	93.63	33.01	4620.7	17.55	107.51	25.45	119.00	24.94	1992.6	12.95	81.47	0.320723
				Shaft Weight		28,704													

Discrete Appurtenance Properties

Attach Elev (ft)	Description	Qty	Ka	Vert Ecc (ft)	No Ice Weight (lb)	No Ice EPAa (sf)	No Ice Orientation Factor	Ice Weight (lb)	Ice EPAa (sf)	Ice Orientation Factor
117.00	Commscope CBC78T-DS-43-2X	3	0.80	0.000	20.70	0.552	0.50	42.28	1.048	0.50
117.00	Samsung B5/B13 RRH-BR04C	3	0.80	0.000	70.30	1.875	0.50	126.17	2.757	0.50
117.00	Samsung B2/B66A RRH-BR049	3	0.80	0.000	84.40	1.875	0.50	146.70	2.757	0.50
117.00	Raycap RRFDC-3315-PF-48	2	0.80	0.000	26.90	2.512	0.67	104.70	3.529	0.67
117.00	Samsung MT6407-77A	3	0.80	0.000	81.60	4.709	0.61	181.14	6.192	0.61
117.00	Antel LPA-80080/6CF ___	6	0.80	0.000	21.00	8.628	0.65	210.05	5.477	0.65
117.00	Commscope JAHH-65B-R3B	6	0.80	0.000	63.30	9.113	0.69	260.89	11.822	0.69
117.00	Flat Low Profile Platform	1	1.00	0.000	1,500.00	26.100	1.00	2,132.74	44.746	1.00
117.00	VZW Unused Reserve (14576.19	1	0.80	0.000	1,169.40	101.224	0.90	1,965.03	170.094	0.90
Totals	Num Loadings:9	28			4,000.00			8,621.70		

Linear Appurtenance Properties

Load Case Azimuth (deg) :

Elev From (ft)	Elev To (ft)	Qty	Description	Coax Dia (in)	Coax Wt (lb/ft)	Flat	Max Coax / Row	Dist Between Rows (in)	Dist Between Cols (in)	Azimuth (deg)	Dist From Face (in)	Exposed To Wind	Carrier
0.00	117.00	2	1 5/8" (1.63"-41.3mm)	1.63	1.61	N	0	0.00	0.00	0	0.00	N	VERIZON WIRELESS
0.00	117.00	12	1 5/8" Coax	1.98	0.82	N	0	0.00	0.00	0	0.00	N	VERIZON WIRELESS
0.00	117.00	4	1 5/8" Coax	1.98	0.82	N	0	0.00	0.00	0	0.00	N	VERIZON WIRELESS

© 2007 - 2021 by ATC IP LLC. All rights reserved.

Segment Properties (Max Len : 5. ft)

Seg Top Elev (ft)	Description	Thick (in)	Flat Dia (in)	Area (in^2)	Ix (in^4)	W/t Ratio	D/t Ratio	F'y (ksi)	S (in^3)	Z (in^3)	Weight (lb)
0.00		0.5000	62.000	97.597	46,638.0	20.45	124.00	77.3	1481.	0.0	0.0
5.00		0.5000	60.396	95.052	43,084.0	19.89	120.79	78.0	1405.	0.0	1,638.9
10.00		0.5000	58.793	92.507	39,715.3	19.32	117.59	78.7	1330.	0.0	1,595.6
15.00		0.5000	57.189	89.962	36,527.0	18.76	114.38	79.3	1258.	0.0	1,552.3
20.00		0.5000	55.586	87.418	33,514.1	18.19	111.17	80.0	1187.	0.0	1,509.0
25.00		0.5000	53.982	84.873	30,671.5	17.63	107.96	80.7	1119.	0.0	1,465.7
30.00		0.5000	52.378	82.328	27,994.4	17.06	104.76	81.3	1052.	0.0	1,422.4
35.00		0.5000	50.775	79.783	25,477.8	16.50	101.55	82.0	988.3	0.0	1,379.1
40.00		0.5000	49.171	77.238	23,116.8	15.93	98.34	82.6	926.0	0.0	1,335.8
45.00		0.5000	47.567	74.693	20,906.3	15.36	95.13	82.6	865.7	0.0	1,292.5
45.71	Bot - Section 2	0.5000	47.341	74.334	20,605.7	15.28	94.68	82.6	857.3	0.0	179.2
50.00		0.5000	45.964	72.149	18,841.4	14.80	91.93	82.6	807.4	0.0	2,163.2
52.29	Top - Section 1	0.5000	46.229	72.570	19,173.5	14.89	92.46	82.6	816.9	0.0	1,127.7
55.00		0.5000	45.360	71.191	18,100.8	14.59	90.72	82.6	786.0	0.0	662.8
60.00		0.5000	43.757	68.646	16,228.2	14.02	87.51	82.6	730.5	0.0	1,189.6
65.00		0.5000	42.153	66.101	14,489.5	13.45	84.31	82.6	677.0	0.0	1,146.3
70.00		0.5000	40.549	63.556	12,879.6	12.89	81.10	82.6	625.6	0.0	1,103.0
75.00		0.5000	38.946	61.011	11,393.6	12.32	77.89	82.6	576.2	0.0	1,059.7
80.00		0.5000	37.342	58.466	10,026.5	11.76	74.68	82.6	528.8	0.0	1,016.4
85.00		0.5000	35.739	55.922	8,773.4	11.19	71.48	82.6	483.5	0.0	973.1
90.00		0.5000	34.135	53.377	7,629.3	10.63	68.27	82.6	440.2	0.0	929.8
93.63	Bot - Section 3	0.5000	32.972	51.531	6,864.9	10.22	65.94	82.6	410.1	0.0	647.3
95.00		0.5000	32.531	50.832	6,589.3	10.06	65.06	82.6	398.9	0.0	392.4
98.38	Top - Section 2	0.3125	32.073	31.502	4,014.8	16.69	102.63	81.8	246.6	0.0	942.3
100.0		0.3125	31.553	30.985	3,820.6	16.39	100.97	82.1	238.5	0.0	172.6
105.0		0.3125	29.949	29.395	3,262.0	15.49	95.84	82.6	214.5	0.0	513.6
110.0		0.3125	28.345	27.804	2,760.6	14.58	90.71	82.6	191.8	0.0	486.6
115.0		0.3125	26.742	26.214	2,313.4	13.68	85.57	82.6	170.4	0.0	459.5
117.0		0.3125	26.100	25.577	2,149.0	13.32	83.52	82.6	162.2	0.0	176.2
119.0		0.3125	25.459	24.941	1,992.6	12.95	81.47	82.6	154.2	0.0	171.9
											28,704.2

© 2007 - 2021 by ATC IP LLC. All rights reserved.

Load Case: 1.2D + 1.0W 119 mph with No Ice 17 Iterations

Gust Response Factor :1.10
Dead Load Factor :1.20
Wind Load Factor :1.00

Applied Segment Forces Summary

		Shaft Forces		Discrete Forces				Linear Forces		Sum of Forces			
Seg Elev (ft)	Description	Wind FX (lb)	Dead Load (lb)	Wind FX (lb)	Torsion MY (lb-ft)	Moment MZ (lb-ft)	Dead Load (lb)	Wind FX (lb)	Dead Load (lb)	Wind FX (lb)	Dead Load (lb)	Torsion MY (lb-ft)	Moment MZ (lb)
0.00		245.4	0.0					0.0	0.0	245.4	0.0	0.0	0.0
5.00		484.4	1,966.6					0.0	98.0	484.4	2,064.7	0.0	0.0
10.00		471.5	1,914.7					0.0	98.0	471.5	2,012.7	0.0	0.0
15.00		458.6	1,862.7					0.0	98.0	458.6	1,960.8	0.0	0.0
20.00		445.8	1,810.8					0.0	98.0	445.8	1,908.8	0.0	0.0
25.00		432.9	1,758.8					0.0	98.0	432.9	1,856.8	0.0	0.0
30.00		425.0	1,706.8					0.0	98.0	425.0	1,804.9	0.0	0.0
35.00		425.5	1,654.9					0.0	98.0	425.5	1,752.9	0.0	0.0
40.00		428.2	1,602.9					0.0	98.0	428.2	1,701.0	0.0	0.0
45.00		244.7	1,551.0					0.0	98.0	244.7	1,649.0	0.0	0.0
45.71	Bot - Section 2	217.9	215.0					0.0	13.9	217.9	228.9	0.0	0.0
50.00		287.4	2,595.8					0.0	84.2	287.4	2,680.0	0.0	0.0
52.29	Top - Section 1	217.4	1,353.2					0.0	44.9	217.4	1,398.1	0.0	0.0
55.00		333.0	795.4					0.0	53.1	333.0	848.6	0.0	0.0
60.00		428.0	1,427.5					0.0	98.0	428.0	1,525.5	0.0	0.0
65.00		421.8	1,375.5					0.0	98.0	421.8	1,473.6	0.0	0.0
70.00		414.5	1,323.6					0.0	98.0	414.5	1,421.6	0.0	0.0
75.00		406.0	1,271.6					0.0	98.0	406.0	1,369.7	0.0	0.0
80.00		396.6	1,219.7					0.0	98.0	396.6	1,317.7	0.0	0.0
85.00		386.2	1,167.7					0.0	98.0	386.2	1,265.7	0.0	0.0
90.00		324.8	1,115.8					0.0	98.0	324.8	1,213.8	0.0	0.0
93.63	Bot - Section 3	185.5	776.8					0.0	71.1	185.5	847.9	0.0	0.0
95.00		174.5	470.9					0.0	26.9	174.5	497.8	0.0	0.0
98.38	Top - Section 2	181.8	1,130.8					0.0	66.2	181.8	1,197.0	0.0	0.0
100.00		233.6	207.1					0.0	31.8	233.6	238.9	0.0	0.0
105.00		343.8	616.4					0.0	98.0	343.8	714.4	0.0	0.0
110.00		329.7	583.9					0.0	98.0	329.7	681.9	0.0	0.0
115.00		223.7	551.4					0.0	98.0	223.7	649.5	0.0	0.0
117.00	Appurtenance(s)	115.2	211.5	6,549.5	0.0	0.0	4,800.0	0.0	39.2	6,664.7	5,050.7	0.0	0.0
119.00		52.8	206.3					0.0	0.0	52.8	206.3	0.0	0.0
								Totals:		16,285.5	41,539.2	0.00	0.00

© 2007 - 2021 by ATC IP LLC. All rights reserved.

Load Case: 1.2D + 1.0W 119 mph with No Ice 17 Iterations

Gust Response Factor :1.10
Dead Load Factor :1.20
Wind Load Factor :1.00

Calculated Forces

Seg Elev (ft)	Pu FY (-) (kips)	Vu FX (-) (kips)	Tu MY (ft-kips)	Mu MZ (ft-kips)	Mu MX (ft-kips)	Resultant Moment (ft-kips)	phi Pn (kips)	phi Vn (kips)	phi Tn (ft-kips)	phi Mn (ft-kips)	Total Deflect (in)	Rotation (deg)	Ratio
0.00	-41.53	-16.05	0.00	-1,323.77	0.00	1,323.77	6,793.61	1,712.83	9,514.56	8,594.34	0.00	0.00	0.160
5.00	-39.46	-15.60	0.00	-1,243.49	0.00	1,243.49	6,673.37	1,668.17	9,024.90	8,220.32	0.02	-0.04	0.157
10.00	-37.44	-15.15	0.00	-1,165.51	0.00	1,165.51	6,550.08	1,623.50	8,548.18	7,850.64	0.08	-0.08	0.154
15.00	-35.47	-14.71	0.00	-1,089.76	0.00	1,089.76	6,423.74	1,578.84	8,084.39	7,485.62	0.19	-0.12	0.151
20.00	-33.55	-14.29	0.00	-1,016.20	0.00	1,016.20	6,294.36	1,534.18	7,633.54	7,125.55	0.34	-0.16	0.148
25.00	-31.68	-13.87	0.00	-944.77	0.00	944.77	6,161.93	1,489.52	7,195.62	6,770.73	0.53	-0.20	0.145
30.00	-29.87	-13.46	0.00	-875.42	0.00	875.42	6,026.45	1,444.85	6,770.64	6,421.48	0.76	-0.24	0.141
35.00	-28.11	-13.05	0.00	-808.12	0.00	808.12	5,887.93	1,400.19	6,358.59	6,078.09	1.04	-0.29	0.138
40.00	-26.40	-12.63	0.00	-742.87	0.00	742.87	5,738.41	1,355.53	5,959.48	5,732.94	1.36	-0.33	0.134
45.00	-24.75	-12.39	0.00	-679.72	0.00	679.72	5,549.34	1,310.87	5,573.30	5,359.53	1.73	-0.37	0.131
45.71	-24.51	-12.18	0.00	-670.97	0.00	670.97	5,522.62	1,304.56	5,519.77	5,307.76	1.79	-0.38	0.131
50.00	-21.83	-11.88	0.00	-618.69	0.00	618.69	5,360.27	1,266.21	5,200.06	4,998.69	2.15	-0.42	0.128
52.29	-20.43	-11.66	0.00	-591.48	0.00	591.48	5,391.58	1,273.60	5,260.97	5,057.57	2.36	-0.44	0.121
55.00	-19.58	-11.33	0.00	-559.87	0.00	559.87	5,289.11	1,249.40	5,062.92	4,866.13	2.61	-0.46	0.119
60.00	-18.05	-10.91	0.00	-503.20	0.00	503.20	5,100.04	1,204.73	4,707.48	4,522.60	3.12	-0.51	0.115
65.00	-16.57	-10.48	0.00	-448.67	0.00	448.67	4,910.97	1,160.07	4,364.98	4,191.64	3.68	-0.55	0.110
70.00	-15.14	-10.07	0.00	-396.25	0.00	396.25	4,721.90	1,115.41	4,035.41	3,873.26	4.27	-0.59	0.106
75.00	-13.77	-9.65	0.00	-345.93	0.00	345.93	4,532.83	1,070.75	3,718.77	3,567.46	4.91	-0.63	0.100
80.00	-12.45	-9.25	0.00	-297.65	0.00	297.65	4,343.76	1,026.08	3,415.07	3,274.23	5.59	-0.67	0.094
85.00	-11.19	-8.86	0.00	-251.39	0.00	251.39	4,154.69	981.42	3,124.31	2,993.58	6.32	-0.71	0.087
90.00	-9.97	-8.52	0.00	-207.11	0.00	207.11	3,965.62	936.76	2,846.48	2,725.50	7.08	-0.75	0.079
93.63	-9.12	-8.33	0.00	-176.20	0.00	176.20	3,828.48	904.37	2,653.05	2,538.92	7.66	-0.77	0.072
95.00	-8.63	-8.15	0.00	-164.76	0.00	164.76	3,776.55	892.10	2,581.58	2,470.00	7.88	-0.78	0.069
98.38	-7.43	-7.95	0.00	-137.24	0.00	137.24	2,318.41	552.85	1,586.08	1,512.11	8.44	-0.80	0.094
100.00	-7.19	-7.72	0.00	-124.32	0.00	124.32	2,290.04	543.79	1,534.51	1,468.89	8.72	-0.81	0.088
105.00	-6.48	-7.37	0.00	-85.72	0.00	85.72	2,183.88	515.88	1,381.04	1,328.17	9.60	-0.85	0.068
110.00	-5.80	-7.03	0.00	-48.87	0.00	48.87	2,065.71	487.96	1,235.65	1,187.62	10.51	-0.88	0.044
115.00	-5.15	-6.80	0.00	-13.71	0.00	13.71	1,947.54	460.05	1,098.35	1,054.92	11.44	-0.90	0.016
117.00	-0.21	-0.06	0.00	-0.11	0.00	0.11	1,900.28	448.88	1,045.69	1,004.05	11.82	-0.90	0.000
119.00	0.00	-0.05	0.00	0.00	0.00	0.00	1,853.01	437.72	994.32	954.43	12.20	-0.90	0.000

© 2007 - 2021 by ATC IP LLC. All rights reserved.

Load Case: 0.9D + 1.0W 119 mph with No Ice (Reduced DL) 17 Iterations

Gust Response Factor :1.10
Dead Load Factor :0.90
Wind Load Factor :1.00

Applied Segment Forces Summary

		Shaft Forces		Discrete Forces				Linear Forces		Sum of Forces			
Seg Elev (ft)	Description	Wind FX (lb)	Dead Load (lb)	Wind FX (lb)	Torsion MY (lb-ft)	Moment MZ (lb-ft)	Dead Load (lb)	Wind FX (lb)	Dead Load (lb)	Wind FX (lb)	Dead Load (lb)	Torsion MY (lb-ft)	Moment MZ (lb)
0.00		245.4	0.0					0.0	0.0	245.4	0.0	0.0	0.0
5.00		484.4	1,475.0					0.0	73.5	484.4	1,548.5	0.0	0.0
10.00		471.5	1,436.0					0.0	73.5	471.5	1,509.5	0.0	0.0
15.00		458.6	1,397.0					0.0	73.5	458.6	1,470.6	0.0	0.0
20.00		445.8	1,358.1					0.0	73.5	445.8	1,431.6	0.0	0.0
25.00		432.9	1,319.1					0.0	73.5	432.9	1,392.6	0.0	0.0
30.00		425.0	1,280.1					0.0	73.5	425.0	1,353.7	0.0	0.0
35.00		425.5	1,241.2					0.0	73.5	425.5	1,314.7	0.0	0.0
40.00		428.2	1,202.2					0.0	73.5	428.2	1,275.7	0.0	0.0
45.00		244.7	1,163.2					0.0	73.5	244.7	1,236.8	0.0	0.0
45.71	Bot - Section 2	217.9	161.3					0.0	10.4	217.9	171.7	0.0	0.0
50.00		287.4	1,946.9					0.0	63.1	287.4	2,010.0	0.0	0.0
52.29	Top - Section 1	217.4	1,014.9					0.0	33.7	217.4	1,048.6	0.0	0.0
55.00		333.0	596.6					0.0	39.9	333.0	636.4	0.0	0.0
60.00		428.0	1,070.6					0.0	73.5	428.0	1,144.2	0.0	0.0
65.00		421.8	1,031.7					0.0	73.5	421.8	1,105.2	0.0	0.0
70.00		414.5	992.7					0.0	73.5	414.5	1,066.2	0.0	0.0
75.00		406.0	953.7					0.0	73.5	406.0	1,027.2	0.0	0.0
80.00		396.6	914.8					0.0	73.5	396.6	988.3	0.0	0.0
85.00		386.2	875.8					0.0	73.5	386.2	949.3	0.0	0.0
90.00		324.8	836.8					0.0	73.5	324.8	910.3	0.0	0.0
93.63	Bot - Section 3	185.5	582.6					0.0	53.3	185.5	635.9	0.0	0.0
95.00		174.5	353.2					0.0	20.2	174.5	373.4	0.0	0.0
98.38	Top - Section 2	181.8	848.1					0.0	49.7	181.8	897.7	0.0	0.0
100.00		233.6	155.3					0.0	23.9	233.6	179.2	0.0	0.0
105.00		343.8	462.3					0.0	73.5	343.8	535.8	0.0	0.0
110.00		329.7	437.9					0.0	73.5	329.7	511.5	0.0	0.0
115.00		223.7	413.6					0.0	73.5	223.7	487.1	0.0	0.0
117.00	Appurtenance(s)	115.2	158.6	6,549.5	0.0	0.0	3,600.0	0.0	29.4	6,664.7	3,788.0	0.0	0.0
119.00		52.8	154.7					0.0	0.0	52.8	154.7	0.0	0.0
									Totals:	16,285.5	31,154.4	0.00	0.00

© 2007 - 2021 by ATC IP LLC. All rights reserved.

Load Case: 0.9D + 1.0W 119 mph with No Ice (Reduced DL) 17 Iterations

Gust Response Factor :1.10
Dead Load Factor :0.90
Wind Load Factor :1.00

Calculated Forces

Seg Elev (ft)	Pu FY (-) (kips)	Vu FX (-) (kips)	Tu MY (ft-kips)	Mu MZ (ft-kips)	Mu MX (ft-kips)	Resultant Moment (ft-kips)	phi Pn (kips)	phi Vn (kips)	phi Tn (ft-kips)	phi Mn (ft-kips)	Total Deflect (in)	Rotation (deg)	Ratio
0.00	-31.15	-16.05	0.00	-1,320.08	0.00	1,320.08	6,793.61	1,712.83	9,514.56	8,594.34	0.00	0.00	0.158
5.00	-29.59	-15.59	0.00	-1,239.82	0.00	1,239.82	6,673.37	1,668.17	9,024.90	8,220.32	0.02	-0.04	0.155
10.00	-28.07	-15.13	0.00	-1,161.89	0.00	1,161.89	6,550.08	1,623.50	8,548.18	7,850.64	0.08	-0.08	0.152
15.00	-26.59	-14.69	0.00	-1,086.23	0.00	1,086.23	6,423.74	1,578.84	8,084.39	7,485.62	0.19	-0.12	0.149
20.00	-25.15	-14.26	0.00	-1,012.78	0.00	1,012.78	6,294.36	1,534.18	7,633.54	7,125.55	0.34	-0.16	0.146
25.00	-23.75	-13.84	0.00	-941.48	0.00	941.48	6,161.93	1,489.52	7,195.62	6,770.73	0.53	-0.20	0.143
30.00	-22.39	-13.43	0.00	-872.28	0.00	872.28	6,026.45	1,444.85	6,770.64	6,421.48	0.76	-0.24	0.140
35.00	-21.06	-13.01	0.00	-805.15	0.00	805.15	5,887.93	1,400.19	6,358.59	6,078.09	1.04	-0.29	0.136
40.00	-19.78	-12.59	0.00	-740.11	0.00	740.11	5,738.41	1,355.53	5,959.48	5,732.94	1.36	-0.33	0.133
45.00	-18.54	-12.35	0.00	-677.16	0.00	677.16	5,549.34	1,310.87	5,573.30	5,359.53	1.73	-0.37	0.130
45.71	-18.37	-12.13	0.00	-668.43	0.00	668.43	5,522.62	1,304.56	5,519.77	5,307.76	1.78	-0.38	0.129
50.00	-16.35	-11.84	0.00	-616.34	0.00	616.34	5,360.27	1,266.21	5,200.06	4,998.69	2.14	-0.42	0.126
52.29	-15.30	-11.62	0.00	-589.22	0.00	589.22	5,391.58	1,273.60	5,260.97	5,057.57	2.35	-0.44	0.119
55.00	-14.66	-11.29	0.00	-557.73	0.00	557.73	5,289.11	1,249.40	5,062.92	4,866.13	2.60	-0.46	0.117
60.00	-13.51	-10.86	0.00	-501.27	0.00	501.27	5,100.04	1,204.73	4,707.48	4,522.60	3.11	-0.50	0.114
65.00	-12.40	-10.44	0.00	-446.95	0.00	446.95	4,910.97	1,160.07	4,364.98	4,191.64	3.66	-0.55	0.109
70.00	-11.33	-10.02	0.00	-394.74	0.00	394.74	4,721.90	1,115.41	4,035.41	3,873.26	4.26	-0.59	0.104
75.00	-10.30	-9.61	0.00	-344.62	0.00	344.62	4,532.83	1,070.75	3,718.77	3,567.46	4.90	-0.63	0.099
80.00	-9.31	-9.21	0.00	-296.55	0.00	296.55	4,343.76	1,026.08	3,415.07	3,274.23	5.57	-0.67	0.093
85.00	-8.36	-8.82	0.00	-250.48	0.00	250.48	4,154.69	981.42	3,124.31	2,993.58	6.30	-0.71	0.086
90.00	-7.45	-8.49	0.00	-206.37	0.00	206.37	3,965.62	936.76	2,846.48	2,725.50	7.06	-0.74	0.078
93.63	-6.82	-8.30	0.00	-175.58	0.00	175.58	3,828.48	904.37	2,653.05	2,538.92	7.63	-0.77	0.071
95.00	-6.44	-8.12	0.00	-164.19	0.00	164.19	3,776.55	892.10	2,581.58	2,470.00	7.86	-0.78	0.068
98.38	-5.55	-7.93	0.00	-136.77	0.00	136.77	2,318.41	552.85	1,586.08	1,512.11	8.42	-0.80	0.093
100.00	-5.37	-7.69	0.00	-123.90	0.00	123.90	2,290.04	543.79	1,534.51	1,468.89	8.69	-0.81	0.087
105.00	-4.83	-7.34	0.00	-85.44	0.00	85.44	2,183.88	515.88	1,381.04	1,328.17	9.56	-0.85	0.067
110.00	-4.32	-7.01	0.00	-48.71	0.00	48.71	2,065.71	487.96	1,235.65	1,187.62	10.47	-0.88	0.043
115.00	-3.84	-6.78	0.00	-13.67	0.00	13.67	1,947.54	460.05	1,098.35	1,054.92	11.40	-0.90	0.015
117.00	-0.15	-0.06	0.00	-0.11	0.00	0.11	1,900.28	448.88	1,045.69	1,004.05	11.78	-0.90	0.000
119.00	0.00	-0.05	0.00	0.00	0.00	0.00	1,853.01	437.72	994.32	954.43	12.15	-0.90	0.000

© 2007 - 2021 by ATC IP LLC. All rights reserved.

Load Case: 1.2D + 1.0Di + 1.0Wi 50 mph with 1.50 in Radial Ice 16 Iterations

Gust Response Factor :1.10 Ice Dead Load Factor :1.00
Dead Load Factor :1.20 Ice Importance Factor :1.00
Wind Load Factor :1.00

Applied Segment Forces Summary

		Shaft Forces		Discrete Forces				Linear Forces		Sum of Forces			
Seg Elev (ft)	Description	Wind FX (lb)	Dead Load (lb)	Wind FX (lb)	Torsion MY (lb-ft)	Moment MZ (lb-ft)	Dead Load (lb)	Wind FX (lb)	Dead Load (lb)	Wind FX (lb)	Dead Load (lb)	Torsion MY (lb-ft)	Moment MZ (lb)
0.00		73.9	0.0					0.0	0.0	73.9	0.0	0.0	0.0
5.00		146.2	2,413.5					0.0	98.0	146.2	2,511.6	0.0	0.0
10.00		142.9	2,401.5					0.0	98.0	142.9	2,499.6	0.0	0.0
15.00		139.4	2,362.0					0.0	98.0	139.4	2,460.0	0.0	0.0
20.00		135.9	2,313.4					0.0	98.0	135.9	2,411.4	0.0	0.0
25.00		132.3	2,260.0					0.0	98.0	132.3	2,358.1	0.0	0.0
30.00		130.2	2,203.7					0.0	98.0	130.2	2,301.7	0.0	0.0
35.00		130.7	2,145.3					0.0	98.0	130.7	2,243.3	0.0	0.0
40.00		131.9	2,085.3					0.0	98.0	131.9	2,183.4	0.0	0.0
45.00		75.5	2,024.2					0.0	98.0	75.5	2,122.2	0.0	0.0
45.71	Bot - Section 2	67.3	282.0					0.0	13.9	67.3	295.9	0.0	0.0
50.00		88.8	3,002.1					0.0	84.2	88.8	3,086.3	0.0	0.0
52.29	Top - Section 1	67.3	1,568.1					0.0	44.9	67.3	1,613.0	0.0	0.0
55.00		103.3	1,046.3					0.0	53.1	103.3	1,099.5	0.0	0.0
60.00		133.1	1,877.8					0.0	98.0	133.1	1,975.8	0.0	0.0
65.00		131.6	1,813.7					0.0	98.0	131.6	1,911.7	0.0	0.0
70.00		129.7	1,749.0					0.0	98.0	129.7	1,847.1	0.0	0.0
75.00		127.5	1,683.9					0.0	98.0	127.5	1,782.0	0.0	0.0
80.00		125.0	1,618.4					0.0	98.0	125.0	1,716.5	0.0	0.0
85.00		122.3	1,552.6					0.0	98.0	122.3	1,650.6	0.0	0.0
90.00		103.2	1,486.4					0.0	98.0	103.2	1,584.4	0.0	0.0
93.63	Bot - Section 3	59.1	1,038.2					0.0	71.1	59.1	1,109.3	0.0	0.0
95.00		55.7	570.7					0.0	26.9	55.7	597.6	0.0	0.0
98.38	Top - Section 2	58.1	1,369.1					0.0	66.2	58.1	1,435.3	0.0	0.0
100.00		75.0	320.2					0.0	31.8	75.0	352.0	0.0	0.0
105.00		110.8	949.1					0.0	98.0	110.8	1,047.1	0.0	0.0
110.00		106.9	901.3					0.0	98.0	106.9	999.4	0.0	0.0
115.00		72.9	853.3					0.0	98.0	72.9	951.4	0.0	0.0
117.00	Appurtenance(s)	38.8	329.9	1,652.7	0.0	0.0	8,909.1	0.0	39.2	1,691.5	9,278.2	0.0	0.0
119.00		18.4	322.2					0.0	0.0	18.4	322.2	0.0	0.0
								Totals:		4,686.68	55,746.6	0.00	0.00

© 2007 - 2021 by ATC IP LLC. All rights reserved.

Load Case: 1.2D + 1.0Di + 1.0Wi 50 mph with 1.50 in Radial Ice 16 Iterations

Gust Response Factor :1.10 Ice Dead Load Factor :1.00
Dead Load Factor :1.20 Ice Importance Factor :1.00
Wind Load Factor :1.00

Calculated Forces

Seg Elev (ft)	Pu FY (-) (kips)	Vu FX (-) (kips)	Tu MY (ft-kips)	Mu MZ (ft-kips)	Mu MX (ft-kips)	Resultant Moment (ft-kips)	phi Pn (kips)	phi Vn (kips)	phi Tn (ft-kips)	phi Mn (ft-kips)	Total Deflect (in)	Rotation (deg)	Ratio
0.00	-55.75	-4.62	0.00	-370.92	0.00	370.92	6,793.61	1,712.83	9,514.56	8,594.34	0.00	0.00	0.051
5.00	-53.23	-4.48	0.00	-347.83	0.00	347.83	6,673.37	1,668.17	9,024.90	8,220.32	0.01	-0.01	0.050
10.00	-50.73	-4.35	0.00	-325.43	0.00	325.43	6,550.08	1,623.50	8,548.18	7,850.64	0.02	-0.02	0.049
15.00	-48.27	-4.22	0.00	-303.69	0.00	303.69	6,423.74	1,578.84	8,084.39	7,485.62	0.05	-0.03	0.048
20.00	-45.86	-4.09	0.00	-282.60	0.00	282.60	6,294.36	1,534.18	7,633.54	7,125.55	0.09	-0.04	0.047
25.00	-43.50	-3.96	0.00	-262.16	0.00	262.16	6,161.93	1,489.52	7,195.62	6,770.73	0.15	-0.06	0.046
30.00	-41.20	-3.84	0.00	-242.34	0.00	242.34	6,026.45	1,444.85	6,770.64	6,421.48	0.21	-0.07	0.045
35.00	-38.96	-3.71	0.00	-223.15	0.00	223.15	5,887.93	1,400.19	6,358.59	6,078.09	0.29	-0.08	0.043
40.00	-36.77	-3.59	0.00	-204.58	0.00	204.58	5,738.41	1,355.53	5,959.48	5,732.94	0.38	-0.09	0.042
45.00	-34.65	-3.51	0.00	-186.66	0.00	186.66	5,549.34	1,310.87	5,573.30	5,359.53	0.48	-0.10	0.041
45.71	-34.35	-3.45	0.00	-184.18	0.00	184.18	5,522.62	1,304.56	5,519.77	5,307.76	0.50	-0.11	0.041
50.00	-31.27	-3.36	0.00	-169.38	0.00	169.38	5,360.27	1,266.21	5,200.06	4,998.69	0.60	-0.12	0.040
52.29	-29.65	-3.29	0.00	-161.69	0.00	161.69	5,391.58	1,273.60	5,260.97	5,057.57	0.66	-0.12	0.037
55.00	-28.55	-3.19	0.00	-152.78	0.00	152.78	5,289.11	1,249.40	5,062.92	4,866.13	0.73	-0.13	0.037
60.00	-26.58	-3.06	0.00	-136.84	0.00	136.84	5,100.04	1,204.73	4,707.48	4,522.60	0.87	-0.14	0.035
65.00	-24.67	-2.92	0.00	-121.57	0.00	121.57	4,910.97	1,160.07	4,364.98	4,191.64	1.02	-0.15	0.034
70.00	-22.82	-2.79	0.00	-106.95	0.00	106.95	4,721.90	1,115.41	4,035.41	3,873.26	1.19	-0.16	0.032
75.00	-21.04	-2.66	0.00	-92.98	0.00	92.98	4,532.83	1,070.75	3,718.77	3,567.46	1.36	-0.17	0.031
80.00	-19.32	-2.54	0.00	-79.66	0.00	79.66	4,343.76	1,026.08	3,415.07	3,274.23	1.55	-0.18	0.029
85.00	-17.67	-2.41	0.00	-66.97	0.00	66.97	4,154.69	981.42	3,124.31	2,993.58	1.75	-0.19	0.027
90.00	-16.08	-2.31	0.00	-54.90	0.00	54.90	3,965.62	936.76	2,846.48	2,725.50	1.96	-0.20	0.024
93.63	-14.98	-2.24	0.00	-46.54	0.00	46.54	3,828.48	904.37	2,653.05	2,538.92	2.12	-0.21	0.022
95.00	-14.38	-2.19	0.00	-43.46	0.00	43.46	3,776.55	892.10	2,581.58	2,470.00	2.18	-0.21	0.021
98.38	-12.94	-2.13	0.00	-36.07	0.00	36.07	2,318.41	552.85	1,586.08	1,512.11	2.33	-0.22	0.029
100.00	-12.59	-2.05	0.00	-32.62	0.00	32.62	2,290.04	543.79	1,534.51	1,468.89	2.41	-0.22	0.028
105.00	-11.54	-1.94	0.00	-22.37	0.00	22.37	2,183.88	515.88	1,381.04	1,328.17	2.64	-0.23	0.022
110.00	-10.54	-1.83	0.00	-12.68	0.00	12.68	2,065.71	487.96	1,235.65	1,187.62	2.89	-0.24	0.016
115.00	-9.59	-1.75	0.00	-3.54	0.00	3.54	1,947.54	460.05	1,098.35	1,054.92	3.15	-0.24	0.008
117.00	-0.32	-0.02	0.00	-0.04	0.00	0.04	1,900.28	448.88	1,045.69	1,004.05	3.25	-0.24	0.000
119.00	0.00	-0.02	0.00	0.00	0.00	0.00	1,853.01	437.72	994.32	954.43	3.35	-0.24	0.000

© 2007 - 2021 by ATC IP LLC. All rights reserved.

Load Case: 1.0D + 1.0W Serviceability 60 mph 16 Iterations

Gust Response Factor :1.10
Dead Load Factor :1.00
Wind Load Factor :1.00

Applied Segment Forces Summary

		Shaft Forces		Discrete Forces				Linear Forces		Sum of Forces			
Seg Elev (ft)	Description	Wind FX (lb)	Dead Load (lb)	Wind FX (lb)	Torsion MY (lb-ft)	Moment MZ (lb-ft)	Dead Load (lb)	Wind FX (lb)	Dead Load (lb)	Wind FX (lb)	Dead Load (lb)	Torsion MY (lb-ft)	Moment MZ (lb)
0.00		55.8	0.0					0.0	0.0	55.8	0.0	0.0	0.0
5.00		110.2	1,638.9					0.0	81.7	110.2	1,720.6	0.0	0.0
10.00		107.2	1,595.6					0.0	81.7	107.2	1,677.3	0.0	0.0
15.00		104.3	1,552.3					0.0	81.7	104.3	1,634.0	0.0	0.0
20.00		101.4	1,509.0					0.0	81.7	101.4	1,590.7	0.0	0.0
25.00		98.5	1,465.7					0.0	81.7	98.5	1,547.4	0.0	0.0
30.00		96.7	1,422.4					0.0	81.7	96.7	1,504.1	0.0	0.0
35.00		96.8	1,379.1					0.0	81.7	96.8	1,460.8	0.0	0.0
40.00		97.4	1,335.8					0.0	81.7	97.4	1,417.5	0.0	0.0
45.00		55.7	1,292.5					0.0	81.7	55.7	1,374.2	0.0	0.0
45.71	Bot - Section 2	49.6	179.2					0.0	11.5	49.6	190.7	0.0	0.0
50.00		65.4	2,163.2					0.0	70.2	65.4	2,233.3	0.0	0.0
52.29	Top - Section 1	49.4	1,127.7					0.0	37.4	49.4	1,165.1	0.0	0.0
55.00		75.7	662.8					0.0	44.3	75.7	707.1	0.0	0.0
60.00		97.3	1,189.6					0.0	81.7	97.3	1,271.3	0.0	0.0
65.00		95.9	1,146.3					0.0	81.7	95.9	1,228.0	0.0	0.0
70.00		94.3	1,103.0					0.0	81.7	94.3	1,184.7	0.0	0.0
75.00		92.4	1,059.7					0.0	81.7	92.4	1,141.4	0.0	0.0
80.00		90.2	1,016.4					0.0	81.7	90.2	1,098.1	0.0	0.0
85.00		87.8	973.1					0.0	81.7	87.8	1,054.8	0.0	0.0
90.00		73.9	929.8					0.0	81.7	73.9	1,011.5	0.0	0.0
93.63	Bot - Section 3	42.2	647.3					0.0	59.3	42.2	706.6	0.0	0.0
95.00		39.7	392.4					0.0	22.4	39.7	414.9	0.0	0.0
98.38	Top - Section 2	41.4	942.3					0.0	55.2	41.4	997.5	0.0	0.0
100.00		53.1	172.6					0.0	26.5	53.1	199.1	0.0	0.0
105.00		78.2	513.6					0.0	81.7	78.2	595.3	0.0	0.0
110.00		75.0	486.6					0.0	81.7	75.0	568.3	0.0	0.0
115.00		50.9	459.5					0.0	81.7	50.9	541.2	0.0	0.0
117.00	Appurtenance(s)	26.2	176.2	1,489.7	0.0	0.0	4,000.0	0.0	32.7	1,515.9	4,208.9	0.0	0.0
119.00		12.0	171.9					0.0	0.0	12.0	171.9	0.0	0.0
									Totals:	3,704.31	34,616.0	0.00	0.00

© 2007 - 2021 by ATC IP LLC. All rights reserved.

Load Case: 1.0D + 1.0W Serviceability 60 mph 16 Iterations

Gust Response Factor :1.10
Dead Load Factor :1.00
Wind Load Factor :1.00

Calculated Forces

Seg Elev (ft)	Pu FY (-) (kips)	Vu FX (-) (kips)	Tu MY (ft-kips)	Mu MZ (ft-kips)	Mu MX (ft-kips)	Resultant Moment (ft-kips)	phi Pn (kips)	phi Vn (kips)	phi Tn (ft-kips)	phi Mn (ft-kips)	Total Deflect (in)	Rotation (deg)	Ratio
0.00	-34.62	-3.65	0.00	-300.53	0.00	300.53	6,793.61	1,712.83	9,514.56	8,594.34	0.00	0.00	0.040
5.00	-32.89	-3.55	0.00	-282.27	0.00	282.27	6,673.37	1,668.17	9,024.90	8,220.32	0.00	-0.01	0.039
10.00	-31.22	-3.44	0.00	-264.55	0.00	264.55	6,550.08	1,623.50	8,548.18	7,850.64	0.02	-0.02	0.038
15.00	-29.58	-3.34	0.00	-247.33	0.00	247.33	6,423.74	1,578.84	8,084.39	7,485.62	0.04	-0.03	0.038
20.00	-27.99	-3.25	0.00	-230.62	0.00	230.62	6,294.36	1,534.18	7,633.54	7,125.55	0.08	-0.04	0.037
25.00	-26.44	-3.15	0.00	-214.39	0.00	214.39	6,161.93	1,489.52	7,195.62	6,770.73	0.12	-0.05	0.036
30.00	-24.94	-3.06	0.00	-198.64	0.00	198.64	6,026.45	1,444.85	6,770.64	6,421.48	0.17	-0.06	0.035
35.00	-23.48	-2.96	0.00	-183.36	0.00	183.36	5,887.93	1,400.19	6,358.59	6,078.09	0.24	-0.07	0.034
40.00	-22.06	-2.87	0.00	-168.55	0.00	168.55	5,738.41	1,355.53	5,959.48	5,732.94	0.31	-0.07	0.033
45.00	-20.69	-2.81	0.00	-154.22	0.00	154.22	5,549.34	1,310.87	5,573.30	5,359.53	0.39	-0.08	0.033
45.71	-20.49	-2.76	0.00	-152.23	0.00	152.23	5,522.62	1,304.56	5,519.77	5,307.76	0.41	-0.09	0.032
50.00	-18.26	-2.70	0.00	-140.37	0.00	140.37	5,360.27	1,266.21	5,200.06	4,998.69	0.49	-0.10	0.031
52.29	-17.10	-2.65	0.00	-134.19	0.00	134.19	5,391.58	1,273.60	5,260.97	5,057.57	0.53	-0.10	0.030
55.00	-16.39	-2.57	0.00	-127.02	0.00	127.02	5,289.11	1,249.40	5,062.92	4,866.13	0.59	-0.11	0.029
60.00	-15.12	-2.47	0.00	-114.16	0.00	114.16	5,100.04	1,204.73	4,707.48	4,522.60	0.71	-0.11	0.028
65.00	-13.89	-2.38	0.00	-101.79	0.00	101.79	4,910.97	1,160.07	4,364.98	4,191.64	0.83	-0.12	0.027
70.00	-12.70	-2.28	0.00	-89.90	0.00	89.90	4,721.90	1,115.41	4,035.41	3,873.26	0.97	-0.13	0.026
75.00	-11.56	-2.19	0.00	-78.49	0.00	78.49	4,532.83	1,070.75	3,718.77	3,567.46	1.11	-0.14	0.025
80.00	-10.46	-2.10	0.00	-67.54	0.00	67.54	4,343.76	1,026.08	3,415.07	3,274.23	1.27	-0.15	0.023
85.00	-9.41	-2.01	0.00	-57.04	0.00	57.04	4,154.69	981.42	3,124.31	2,993.58	1.43	-0.16	0.021
90.00	-8.40	-1.93	0.00	-47.00	0.00	47.00	3,965.62	936.76	2,846.48	2,725.50	1.61	-0.17	0.019
93.63	-7.69	-1.89	0.00	-39.99	0.00	39.99	3,828.48	904.37	2,653.05	2,538.92	1.74	-0.18	0.018
95.00	-7.28	-1.85	0.00	-37.39	0.00	37.39	3,776.55	892.10	2,581.58	2,470.00	1.79	-0.18	0.017
98.38	-6.28	-1.81	0.00	-31.15	0.00	31.15	2,318.41	552.85	1,586.08	1,512.11	1.92	-0.18	0.023
100.00	-6.08	-1.75	0.00	-28.22	0.00	28.22	2,290.04	543.79	1,534.51	1,468.89	1.98	-0.18	0.022
105.00	-5.48	-1.67	0.00	-19.46	0.00	19.46	2,183.88	515.88	1,381.04	1,328.17	2.18	-0.19	0.017
110.00	-4.92	-1.60	0.00	-11.09	0.00	11.09	2,065.71	487.96	1,235.65	1,187.62	2.38	-0.20	0.012
115.00	-4.38	-1.54	0.00	-3.11	0.00	3.11	1,947.54	460.05	1,098.35	1,054.92	2.60	-0.20	0.005
117.00	-0.17	-0.01	0.00	-0.03	0.00	0.03	1,900.28	448.88	1,045.69	1,004.05	2.68	-0.20	0.000
119.00	0.00	-0.01	0.00	0.00	0.00	0.00	1,853.01	437.72	994.32	954.43	2.77	-0.20	0.000

© 2007 - 2021 by ATC IP LLC. All rights reserved.

Equivalent Lateral Forces Method Analysis

Spectral Response Acceleration for Short Period (S_S):	0.18	
Spectral Response Acceleration at 1.0 Second Period (S_1):	0.05	
Long-Period Transition Period (T_L):	6	
Importance Factor (I_E):	1.00	
Site Coefficient F_a:	1.60	
Site Coeffiecient F_v:	2.40	
Response Modification Coefficient (R):	1.50	
Design Spectral Response Acceleration at Short Period (S_{ds}):	0.19	
Design Spectral Response Acceleration at 1.0 Second Period (S_{d1}):	0.09	
Seismic Response Coefficient (C_s):	0.06	
Upper Limit C_s	0.06	
Lower Limit C_s	0.03	
Period based on Rayleigh Method (sec):	1.02	
Redundancy Factor (p):	1.30	
Seismic Force Distribution Exponent (k):	1.26	
Total Unfactored Dead Load:	34.62	k
Seismic Base Shear (E):	2.59	k

Load Case 1.2D + 1.0Ev + 1.0Eh Seismic

Segment	Height Above Base (ft)	Weight (lb)	W_z (lb-ft)	C_{vx}	Horizontal Force (lb)	Vertical Force (lb)
29	118.00	172	70	0.011	30	213
28	116.00	209	83	0.014	35	259
27	112.50	541	208	0.034	87	670
26	107.50	568	206	0.034	87	704
25	102.50	595	204	0.033	86	737
24	99.19	199	65	0.011	27	247
23	96.69	997	317	0.051	133	1,235
22	94.31	415	128	0.021	54	514
21	91.81	707	210	0.034	88	875
20	87.50	1,011	283	0.046	119	1,253
19	82.50	1,055	274	0.045	115	1,306
18	77.50	1,098	264	0.043	111	1,360
17	72.50	1,141	252	0.041	106	1,414
16	67.50	1,185	239	0.039	101	1,467
15	62.50	1,228	225	0.037	95	1,521
14	57.50	1,271	210	0.034	88	1,575
13	53.65	707	107	0.017	45	876
12	51.15	1,165	166	0.027	70	1,443
11	47.85	2,233	292	0.048	123	2,766
10	45.35	191	23	0.004	10	236
9	42.50	1,374	155	0.025	65	1,702
8	37.50	1,417	136	0.022	57	1,756
7	32.50	1,461	117	0.019	49	1,809
6	27.50	1,504	98	0.016	41	1,863
5	22.50	1,547	78	0.013	33	1,917

 © 2007 - 2021 by ATC IP LLC. All rights reserved.

4	17.50	1,591	59	0.010	25	1,970
3	12.50	1,634	39	0.006	17	2,024
2	7.50	1,677	21	0.003	9	2,077
1	2.50	1,721	5	0.001	2	2,131
Commscope CBC78T-DS-	117.00	62	25	0.004	11	77
Samsung B5/B13 RRH-B	117.00	211	85	0.014	36	261
Samsung B2/B66A RRH-	117.00	253	102	0.017	43	314
Raycap RRFDC-3315-PF	117.00	54	22	0.004	9	67
Samsung MT6407-77A	117.00	245	99	0.016	42	303
Antel LPA-80080/6CF	117.00	126	51	0.008	21	156
Commscope JAHH-65B-R	117.00	380	153	0.025	65	470
Flat Low Profile Pla	117.00	1,500	606	0.098	255	1,858
VZW Unused Reserve (	117.00	1,169	472	0.077	199	1,448
		34,616	6,154	1.000	2,587	42,876

Load Case 0.9D - 1.0Ev + 1.0Eh Seismic (Reduced DL)

Segment	Height Above Base (ft)	Weight (lb)	W_z (lb-ft)	C_{vx}	Horizontal Force (lb)	Vertical Force (lb)
29	118.00	172	70	0.011	30	148
28	116.00	209	83	0.014	35	180
27	112.50	541	208	0.034	87	466
26	107.50	568	206	0.034	87	490
25	102.50	595	204	0.033	86	513
24	99.19	199	65	0.011	27	172
23	96.69	997	317	0.051	133	859
22	94.31	415	128	0.021	54	357
21	91.81	707	210	0.034	88	609
20	87.50	1,011	283	0.046	119	871
19	82.50	1,055	274	0.045	115	909
18	77.50	1,098	264	0.043	111	946
17	72.50	1,141	252	0.041	106	983
16	67.50	1,185	239	0.039	101	1,020
15	62.50	1,228	225	0.037	95	1,058
14	57.50	1,271	210	0.034	88	1,095
13	53.65	707	107	0.017	45	609
12	51.15	1,165	166	0.027	70	1,004
11	47.85	2,233	292	0.048	123	1,924
10	45.35	191	23	0.004	10	164
9	42.50	1,374	155	0.025	65	1,184
8	37.50	1,417	136	0.022	57	1,221
7	32.50	1,461	117	0.019	49	1,258
6	27.50	1,504	98	0.016	41	1,296
5	22.50	1,547	78	0.013	33	1,333
4	17.50	1,591	59	0.010	25	1,370
3	12.50	1,634	39	0.006	17	1,407
2	7.50	1,677	21	0.003	9	1,445
1	2.50	1,721	5	0.001	2	1,482
Commscope CBC78T-DS-	117.00	62	25	0.004	11	53
Samsung B5/B13 RRH-B	117.00	211	85	0.014	36	182
Samsung B2/B66A RRH-	117.00	253	102	0.017	43	218
Raycap RRFDC-3315-PF	117.00	54	22	0.004	9	46
Samsung MT6407-77A	117.00	245	99	0.016	42	211
Antel LPA-80080/6CF	117.00	126	51	0.008	21	109
Commscope JAHH-65B-R	117.00	380	153	0.025	65	327
Flat Low Profile Pla	117.00	1,500	606	0.098	255	1,292
VZW Unused Reserve (	117.00	1,169	472	0.077	199	1,007
		34,616	6,154	1.000	2,587	29,818

© 2007 - 2021 by ATC IP LLC. All rights reserved.

© 2007 - 2021 by ATC IP LLC. All rights reserved.

Load Case 1.2D + 1.0Ev + 1.0Eh Seismic

Calculated Forces

Seg Elev (ft)	Pu FY (-) (kips)	Vu FX (-) (kips)	Tu MY (ft-kips)	Mu MZ (ft-kips)	Mu MX (ft-kips)	Resultant Moment (ft-kips)	phi Pn (kips)	phi Vn (kips)	phi Tn (ft-kips)	phi Mn (ft-kips)	Total Deflect (in)	Rotation (deg)	Ratio
0.00	-40.74	-2.59	0.00	-217.11	0.00	217.11	6,793.61	1,712.83	9,514.56	8,594.34	0.00	0.00	0.031
5.00	-38.67	-2.58	0.00	-204.18	0.00	204.18	6,673.37	1,668.17	9,024.90	8,220.32	0.00	-0.01	0.031
10.00	-36.64	-2.57	0.00	-191.27	0.00	191.27	6,550.08	1,623.50	8,548.18	7,850.64	0.01	-0.01	0.030
15.00	-34.67	-2.55	0.00	-178.43	0.00	178.43	6,423.74	1,578.84	8,084.39	7,485.62	0.03	-0.02	0.029
20.00	-32.76	-2.52	0.00	-165.69	0.00	165.69	6,294.36	1,534.18	7,633.54	7,125.55	0.06	-0.03	0.028
25.00	-30.89	-2.48	0.00	-153.10	0.00	153.10	6,161.93	1,489.52	7,195.62	6,770.73	0.09	-0.03	0.028
30.00	-29.08	-2.43	0.00	-140.70	0.00	140.70	6,026.45	1,444.85	6,770.64	6,421.48	0.12	-0.04	0.027
35.00	-27.33	-2.38	0.00	-128.54	0.00	128.54	5,887.93	1,400.19	6,358.59	6,078.09	0.17	-0.05	0.026
40.00	-25.62	-2.31	0.00	-116.65	0.00	116.65	5,738.41	1,355.53	5,959.48	5,732.94	0.22	-0.05	0.025
45.00	-25.39	-2.31	0.00	-105.09	0.00	105.09	5,549.34	1,310.87	5,573.30	5,359.53	0.28	-0.06	0.024
45.71	-22.62	-2.18	0.00	-103.46	0.00	103.46	5,522.62	1,304.56	5,519.77	5,307.76	0.29	-0.06	0.024
50.00	-21.18	-2.11	0.00	-94.10	0.00	94.10	5,360.27	1,266.21	5,200.06	4,998.69	0.35	-0.07	0.023
52.29	-20.30	-2.07	0.00	-89.26	0.00	89.26	5,391.58	1,273.60	5,260.97	5,057.57	0.38	-0.07	0.021
55.00	-18.73	-1.98	0.00	-83.66	0.00	83.66	5,289.11	1,249.40	5,062.92	4,866.13	0.42	-0.07	0.021
60.00	-17.21	-1.88	0.00	-73.77	0.00	73.77	5,100.04	1,204.73	4,707.48	4,522.60	0.50	-0.08	0.020
65.00	-15.74	-1.78	0.00	-64.36	0.00	64.36	4,910.97	1,160.07	4,364.98	4,191.64	0.59	-0.09	0.019
70.00	-14.33	-1.67	0.00	-55.45	0.00	55.45	4,721.90	1,115.41	4,035.41	3,873.26	0.69	-0.09	0.017
75.00	-12.97	-1.56	0.00	-47.08	0.00	47.08	4,532.83	1,070.75	3,718.77	3,567.46	0.79	-0.10	0.016
80.00	-11.66	-1.45	0.00	-39.26	0.00	39.26	4,343.76	1,026.08	3,415.07	3,274.23	0.89	-0.10	0.015
85.00	-10.41	-1.33	0.00	-32.03	0.00	32.03	4,154.69	981.42	3,124.31	2,993.58	1.00	-0.11	0.013
90.00	-9.53	-1.24	0.00	-25.40	0.00	25.40	3,965.62	936.76	2,846.48	2,725.50	1.12	-0.11	0.012
93.63	-9.02	-1.18	0.00	-20.92	0.00	20.92	3,828.48	904.37	2,653.05	2,538.92	1.21	-0.12	0.011
95.00	-7.78	-1.05	0.00	-19.29	0.00	19.29	3,776.55	892.10	2,581.58	2,470.00	1.24	-0.12	0.010
98.38	-7.54	-1.02	0.00	-15.76	0.00	15.76	2,318.41	552.85	1,586.08	1,512.11	1.32	-0.12	0.014
100.00	-6.80	-0.93	0.00	-14.11	0.00	14.11	2,290.04	543.79	1,534.51	1,468.89	1.36	-0.12	0.013
105.00	-6.09	-0.84	0.00	-9.44	0.00	9.44	2,183.88	515.88	1,381.04	1,328.17	1.49	-0.13	0.010
110.00	-5.42	-0.76	0.00	-5.22	0.00	5.22	2,065.71	487.96	1,235.65	1,187.62	1.63	-0.13	0.007
115.00	-5.17	-0.72	0.00	-1.44	0.00	1.44	1,947.54	460.05	1,098.35	1,054.92	1.76	-0.13	0.004
117.00	0.00	0.00	0.00	0.00	0.00	0.00	1,900.28	448.88	1,045.69	1,004.05	1.82	-0.13	0.000
119.00	0.00	0.00	0.00	0.00	0.00	0.00	1,853.01	437.72	994.32	954.43	1.87	-0.13	0.000

© 2007 - 2021 by ATC IP LLC. All rights reserved.

Load Case 0.9D - 1.0Ev + 1.0Eh Seismic (Reduced DL)

Calculated Forces

Seg Elev (ft)	Pu FY (-) (kips)	Vu FX (-) (kips)	Tu MY (ft-kips)	Mu MZ (ft-kips)	Mu MX (ft-kips)	Resultant Moment (ft-kips)	phi Pn (kips)	phi Vn (kips)	phi Tn (ft-kips)	phi Mn (ft-kips)	Total Deflect (in)	Rotation (deg)	Ratio
0.00	-28.34	-2.59	0.00	-216.44	0.00	216.44	6,793.61	1,712.83	9,514.56	8,594.34	0.00	0.00	0.029
5.00	-26.89	-2.58	0.00	-203.51	0.00	203.51	6,673.37	1,668.17	9,024.90	8,220.32	0.00	-0.01	0.029
10.00	-25.48	-2.57	0.00	-190.62	0.00	190.62	6,550.08	1,623.50	8,548.18	7,850.64	0.01	-0.01	0.028
15.00	-24.11	-2.54	0.00	-177.79	0.00	177.79	6,423.74	1,578.84	8,084.39	7,485.62	0.03	-0.02	0.028
20.00	-22.78	-2.51	0.00	-165.07	0.00	165.07	6,294.36	1,534.18	7,633.54	7,125.55	0.05	-0.03	0.027
25.00	-21.48	-2.47	0.00	-152.51	0.00	152.51	6,161.93	1,489.52	7,195.62	6,770.73	0.09	-0.03	0.026
30.00	-20.22	-2.43	0.00	-140.14	0.00	140.14	6,026.45	1,444.85	6,770.64	6,421.48	0.12	-0.04	0.025
35.00	-19.00	-2.37	0.00	-128.01	0.00	128.01	5,887.93	1,400.19	6,358.59	6,078.09	0.17	-0.05	0.024
40.00	-17.82	-2.31	0.00	-116.16	0.00	116.16	5,738.41	1,355.53	5,959.48	5,732.94	0.22	-0.05	0.023
45.00	-17.66	-2.30	0.00	-104.63	0.00	104.63	5,549.34	1,310.87	5,573.30	5,359.53	0.28	-0.06	0.023
45.71	-15.73	-2.17	0.00	-103.01	0.00	103.01	5,522.62	1,304.56	5,519.77	5,307.76	0.29	-0.06	0.022
50.00	-14.73	-2.10	0.00	-93.68	0.00	93.68	5,360.27	1,266.21	5,200.06	4,998.69	0.35	-0.07	0.021
52.29	-14.12	-2.06	0.00	-88.87	0.00	88.87	5,391.58	1,273.60	5,260.97	5,057.57	0.38	-0.07	0.020
55.00	-13.02	-1.97	0.00	-83.29	0.00	83.29	5,289.11	1,249.40	5,062.92	4,866.13	0.42	-0.07	0.020
60.00	-11.97	-1.88	0.00	-73.44	0.00	73.44	5,100.04	1,204.73	4,707.48	4,522.60	0.50	-0.08	0.019
65.00	-10.95	-1.77	0.00	-64.06	0.00	64.06	4,910.97	1,160.07	4,364.98	4,191.64	0.59	-0.09	0.018
70.00	-9.96	-1.67	0.00	-55.19	0.00	55.19	4,721.90	1,115.41	4,035.41	3,873.26	0.68	-0.09	0.016
75.00	-9.02	-1.56	0.00	-46.86	0.00	46.86	4,532.83	1,070.75	3,718.77	3,567.46	0.78	-0.10	0.015
80.00	-8.11	-1.44	0.00	-39.08	0.00	39.08	4,343.76	1,026.08	3,415.07	3,274.23	0.89	-0.10	0.014
85.00	-7.24	-1.32	0.00	-31.88	0.00	31.88	4,154.69	981.42	3,124.31	2,993.58	1.00	-0.11	0.012
90.00	-6.63	-1.23	0.00	-25.28	0.00	25.28	3,965.62	936.76	2,846.48	2,725.50	1.11	-0.11	0.011
93.63	-6.27	-1.18	0.00	-20.82	0.00	20.82	3,828.48	904.37	2,653.05	2,538.92	1.20	-0.12	0.010
95.00	-5.41	-1.04	0.00	-19.20	0.00	19.20	3,776.55	892.10	2,581.58	2,470.00	1.23	-0.12	0.009
98.38	-5.24	-1.01	0.00	-15.68	0.00	15.68	2,318.41	552.85	1,586.08	1,512.11	1.32	-0.12	0.013
100.00	-4.73	-0.93	0.00	-14.04	0.00	14.04	2,290.04	543.79	1,534.51	1,468.89	1.36	-0.12	0.012
105.00	-4.24	-0.84	0.00	-9.40	0.00	9.40	2,183.88	515.88	1,381.04	1,328.17	1.49	-0.12	0.009
110.00	-3.77	-0.75	0.00	-5.19	0.00	5.19	2,065.71	487.96	1,235.65	1,187.62	1.62	-0.13	0.006
115.00	-3.59	-0.72	0.00	-1.43	0.00	1.43	1,947.54	460.05	1,098.35	1,054.92	1.76	-0.13	0.003
117.00	0.00	0.00	0.00	0.00	0.00	0.00	1,900.28	448.88	1,045.69	1,004.05	1.81	-0.13	0.000
119.00	0.00	0.00	0.00	0.00	0.00	0.00	1,853.01	437.72	994.32	954.43	1.86	-0.13	0.000

© 2007 - 2021 by ATC IP LLC. All rights reserved.

Analysis Summary

Load Case	Reactions Shear FX (kips)	Shear FZ (kips)	Axial FY (kips)	Moment MX (ft-kips)	Moment MY (ft-kips)	Moment MZ (ft-kips)	Max Usage Elev (ft)	Interaction Ratio
1.2D + 1.0W	16.05	0.00	41.53	0.00	0.00	1323.77	0.00	0.16
0.9D + 1.0W	16.05	0.00	31.15	0.00	0.00	1320.08	0.00	0.16
1.2D + 1.0Di + 1.0Wi	4.62	0.00	55.75	0.00	0.00	370.92	0.00	0.05
1.2D + 1.0Ev + 1.0Eh	2.59	0.00	40.74	0.00	0.00	217.11	0.00	0.03
0.9D - 1.0Ev + 1.0Eh	2.59	0.00	28.34	0.00	0.00	216.44	0.00	0.03
1.0D + 1.0W	3.65	0.00	34.62	0.00	0.00	300.53	0.00	0.04

Base Plate & Anchor Rod Analysis

Pole Dimensions		
Number of Sides	18	-
Diameter	62	in
Thickness	1/2	in
Orientation Offset		°

Base Reactions		
Moment, Mu	1,323.8	k-ft
Axial, Pu	41.5	k
Shear, Vu	16.1	k
Neutral Axis	270	°

Report Capacities		
Component	Capacity	Result
Base Plate	8%	Pass
Anchor Rods	13%	Pass
Dwyidag	-	-

Base Plate		
Shape	Round	-
Diameter, ø	76	in
Thickness	3 1/4	in
Grade	A572-50	
Yield Strength, Fy	50	ksi
Tensile Strength, Fu	65	ksi
Clip	N/A	in
Orientation Offset		°
Anchor Rod Detail	d	η=0.5
Clear Distance	3	in
Applied Moment, Mu	210.6	k
Bending Stress, ϕMn	2633.4	k

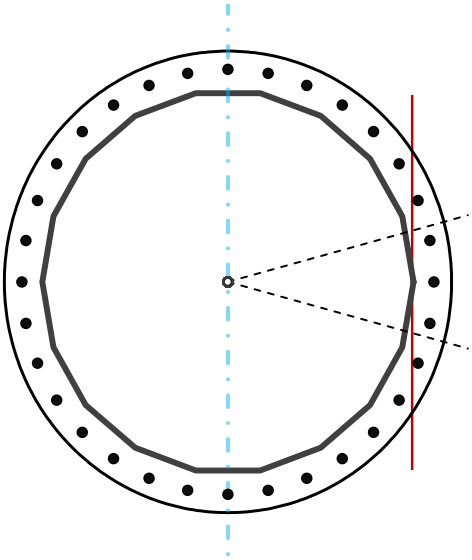

Original Anchor Rods		
Arrangement	Radial	-
Quantity	32	-
Diameter, ø	2 1/4	in
Bolt Circle	70	in
Grade	A615-75	
Yield Strength, Fy	75	ksi
Tensile Strength, Fu	100	ksi
Spacing	6.9	in
Orientation Offset		°
Applied Force, Pu	30.6	k
Anchor Rods, ϕPn	243.6	k

Calculations for Monopole Base Plate & Anchor Rod Analysis

Reaction Distribution

Reaction	Shear Vu	Moment Mu	Factor
-	k	k-ft	-
Base Forces	16.1	1323.8	1.00
Anchor Rod Forces	16.1	1323.8	1.00
Additional Bolt (Grp1) Forces	0.0	0.0	0.00
Additional Bolt (Grp2) Forces	0.0	0.0	0.00
Dywidag Forces	0.0	0.0	0.00
Stiffener Forces	0.0	0.0	0.00

Geometric Properties

Section	Gross Area	Net Area	Individual Inertia	Threads per Inch	Moment of Inertia
-	in^2	in^2	in^4	#	in^4
Pole	96.1143	5.3397	0.4468		45449.07
Bolt	3.9761	3.2477	0.8393	4.5	59435.42
Bolt1	0.0000	0.0000	0.0000	0	0.00
Bolt2	0.0000	0.0000	0.0000	0	0.00
Dywidag	0.0000	0.0000	0.0000		0.00
Stiffener	0.0000	0.0000	0.0000		0.00

Base Plate		
Shape	Round	-
Diameter, D	76	in
Thickness, t	3.25	in
Yield Strength, Fy	50	ksi
Tensile Strength, Fu	65	ksi
Base Plate Chord	43.955	in
Detail Type	d	-
Detail Factor	0.50	-
Clear Distance	3	-

Anchor Rods		
Anchor Rod Quantity, N	32	-
Rod Diameter, d	2.25	in
Bolt Circle, BC	70	in
Yield Strength, Fy	75	ksi
Tensile Strength, Fu	100	ksi
Applied Axial, Pu	30.6	k
Applied Shear, Vu	0.2	k
Compressive Capacity, ϕPn	243.6	k
Tensile Capacity, ϕRnt	0.126	OK
Interaction Capacity	0.127	OK

External Base Plate		
Chord Length AA	37.373	in
Additional AA	6.000	in
Section Modulus, Z	114.532	in^3
Applied Moment, Mu	220.7	k-ft
Bending Capacity, ϕMn	5153.9	k-ft
Capacity, Mu/ϕMn	0.043	OK
Chord Length AB	35.731	in
Additional AB	6.000	in
Section Modulus, Z	110.197	in^3
Applied Moment, Mu	167.1	k-ft
Bending Capacity, ϕMn	4958.9	k-ft
Capacity, Mu/ϕMn	0.034	OK
Bend Line Length	22.161	in
Additional Bend Line	0.000	in
Section Modulus, Z	58.519	in^3
Applied Moment, Mu	210.6	k-ft
Bending Capacity, ϕMn	2633.4	k-ft
Capacity, Mu/ϕMn	0.080	OK

Internal Base Plate		
Arc Length	0.000	in
Section Modulus, Z	0.000	in^3
Moment Arm	0.000	in
Applied Moment, Mu	0.0	k-ft
Bending Capacity, ϕMn	0.0	k-ft
Capacity, Mu/ϕMn		

Maser Consulting Connecticut
2000 Midlantic Drive, Suite 100
Mt. Laurel, NJ 08054
856.797.0412
Peter.Albano@colliersengineering.com

Post-Mod Antenna Mount Analysis Report and PMI Requirements

Mount Fix

SMART Tool Project #: 10068127
Maser Consulting Connecticut Project #: 21777482A

June 16, 2021

Site Information	*Site ID:*	*468148-VZW / ASHFORD NORTH CT*
	Site Name:	*ASHFORD NORTH CT*
	Carrier Name:	*Verizon Wireless*
	Address:	*174 Ashford Center Road* *Ashford, Connecticut 06278* *Windham County*
	Latitude:	*41.868272°*
	Longitude:	*-72.145844°*
Structure Information	*Tower Type:*	*120.00-Ft Self Support*
	Mount Type:	*13.33-Ft Platform*

FUZE ID # 16272036

Analysis Results

Platform: **87.2% Pass**

******Contractor PMI Requirements*:**
Included at the end of this MA report
Available & Submitted via portal at https://pmi.vzwsmart.com
Contractor - Please Review Specific Site PMI Requirements Upon Award
Requirements also Noted on Mount Modification Drawings
Requirements may also be Noted on A & E drawings

Report Prepared By: Selene Chen

STATE OF CONNECTICUT
DEREK R. HARTZELL
32710
LICENSED PROFESSIONAL ENGINEER

Digitally signed by Derek Hartzell
Date: 2021.06.16 12:10:30-07'00'

Executive Summary:

The objective of this report is to summarize the analysis results of the antenna support mount including the proposed modifications at the subject facility for the final wireless telecommunications configuration, per the applicable codes and standards.

This analysis is inclusive of the mount structure only and does not address the structural capacity of the supporting structure. This mounting frame was not analyzed as an anchor attachment point for fall protection. All climbing activities are required to have a fall protection plan completed by a competent person.

Sources of Information:

Document Type	Remarks
Radio Frequency Data Sheet (RFDS)	*Verizon RFDS Site ID: 323308, dated February 15, 2021*
Site Mapping Survey	*Northeast Union Inc., Site ID: Ashford North CT, dated September 14, 2017*
Construction Drawings	*Dewberry Engineers Inc., Project # 50095218, dated June 1, 2018*
Mount Analysis Report	*Maser Consulting Connecticut, Project #: 21777482A, dated April 30, 2021*
Mount Modification Drawings	*Maser Consulting Connecticut, Project #: 21777482A, dated June 16, 2021*

Analysis Criteria:

Codes and Standards:	ANSI/TIA-222-H	
Wind Parameters:	Basic Wind Speed (Ultimate 3-sec. Gust), V_{ULT}:	119 mph
	Ice Wind Speed (3-sec. Gust):	50 mph
	Design Ice Thickness:	1.50 in
	Risk Category:	II
	Exposure Category:	B
	Topographic Category:	1
	Topographic Feature Considered:	N/A
	Topographic Method:	N/A
	Ground Elevation Factor, K_e:	0.979
Seismic Parameters:	S_S:	0.181
	S_1:	0.055
Maintenance Parameters:	Wind Speed (3-sec. Gust):	30 mph
	Maintenance Live Load, Lv:	250 lbs.
	Maintenance Live Load, Lm:	500 lbs.
Analysis Software:	RISA-3D (V17)	

Final Loading Configuration:

The following equipment has been considered for the analysis of the mount:

Mount Elevation (ft)	Equipment Elevation (ft)	Quantity	Manufacturer	Model	Status
115.17	117.00	3	Samsung	MT6407-77A	Added
		3	Samsung	B2/B66A RRH-BR049	
		3	Samsung	B5/B13 RRH-BR04C	
		3	Commscope	CBC78T-DS-43-2X	
		2	RFS	DB-B1-6C-12AB-0Z	Retained
		6	Commscope	JAHH-65B-R3B	
		6	Antel	LPA-80080/6CF	

The recent mount mapping reported existing OVP units. It is acceptable to install up to any three (3) of the OVP model numbers listed below as required at any location other than the mount face without affecting the structural capacity of the mount. If OVP units are installed on the mount face, a mount re-analysis may be required unless replacing an existing OVP.

Model Number	Ports	AKA
DB-B1-6C-12AB-0Z	6	OVP-6
RVZDC-6627-PF-48	12	OVP-12

Standard Conditions:

1. All engineering services are performed on the basis that the information provided to Maser Consulting Connecticut and used in this analysis is current and correct. The existing equipment loading has been applied at locations determined from the supplied documentation. Any deviation from the loading locations specified in this report shall be communicated to Maser Consulting Connecticut to verify deviation will not adversely impact the analysis.

2. Mounts are assumed to have been properly fabricated, installed and maintained in good condition, twist free and plumb in accordance with its original design and manufacturer's specifications.

   Obvious safety and structural issues/deficiencies noticed at the time of the mount mapping and reported in the Mount Mapping Report are assumed to be corrected and documented as part of the PMI process and are not considered in the mount analysis.

   The mount analysis and the mount mapping are not a condition assessment of the mount. Proper maintenance and condition assessments are still required post analysis.

3. For mount analyses completed from other data sources (including new replacement mounts) and not specifically mapped by Maser Consulting Connecticut, the mounts are assumed to have been properly fabricated, installed and maintained in good condition, twist free and plumb in accordance with its original design and manufacturer's specifications.

4. All member connections are assumed to have been designed to meet or exceed the load carrying capacity of the connected member unless otherwise specified in this report.

5. The mount was checked up to, and including, the bolts that fasten it to the mount collar/attachment and threaded rod connections in collar members if applicable. Local deformation and interaction between the mount collar/attachment and the supporting tower structure are outside the scope of this analysis.

6. All services are performed, results obtained, and recommendations made in accordance with generally accepted engineering principles and practices. Maser Consulting Connecticut is not responsible for the conclusion, opinions, and recommendations made by others based on the information supplied.

7. Structural Steel Grades have been assumed as follows, if applicable, unless otherwise noted in this analysis:
   - Channel, Solid Round, Angle, Plate — ASTM A36 (Gr. 36)
   - HSS (Rectangular) — ASTM 500 (Gr. B-46)
   - Pipe — ASTM A53 (Gr. B-35)
   - Threaded Rod — F1554 (Gr. 36)
   - Bolts — ASTM A325

8. Any mount modifications listed under Sources of Information are assumed to have been installed per the design specifications.

Discrepancies between in-field conditions and the assumptions listed above may render this analysis invalid unless explicitly approved by Maser Consulting Connecticut.

Analysis Results:

Component	Utilization %	Pass/Fail
Mount Pipe	*45.1%*	*Pass*
Face Horizontal	*32.1%*	*Pass*
Standoff Horizontal	*39.0%*	*Pass*
Support Rail	*17.6%*	*Pass*
Support Rail Corner	*26.6%*	*Pass*
Kicker	*18.0%*	*Pass*
Connection Check	*87.2%*	*Pass*

Structure Rating – *(Controlling Utilization of all Components)*	**87.2%**

Recommendation:

The existing mounts will be **SUFFICIENT** for the final loading after the proposed modifications are successfully completed.

ANSI/ASSP rigging plan review services compliant with the requirements of ANSI/TIA 322 are available for a Construction Class IV site or other, if required. Separate review fees will apply.

Attachments:

1. Mount Photos
2. Mount Mapping Report (for reference only)
3. Mount Geometry Verification
4. Analysis Calculations
5. **Contractor Required PMI Report Deliverables**
6. Antenna Placement Diagrams
7. TIA Adoption and Wind Speed Usage Letter

Northeast Union Inc.
2424 State Rd. Unit 7
Bensalem, PA 19020
P. 215-676-8036 F. 215-754-4623

Site mapping survey

Prepared for: Dewberry 600 Parsippany Road

Suite 301 Parsippany, NJ 07054-3715

Site: Ashford North CT

Address: 174 Ashford Center Road, Ashford, CT

Date of survey: 9/14/2017

Tower site overview

Type: Monopole

Address: 174 Ashford Center Road, Ashford, CT

Latitude/Longitude: N/A

FCC: N/A

Owner: AT

Owner site ID: 414861 Climbable: Yes

Access Code: 4667

09.14.2017

09.14.2017

09.14.2017

09.14.2017

09.14.2017

09.14.2017

Mount Front View

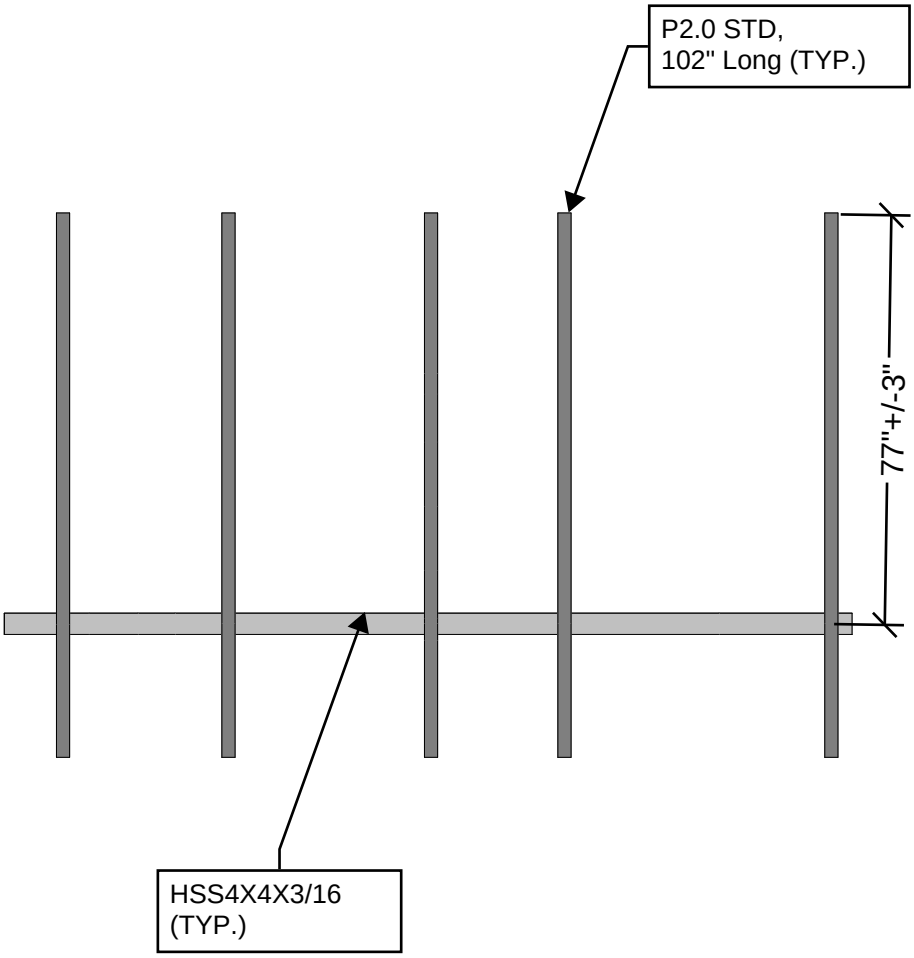

MOUNT GEOMETRY VERIFICATION

CONTRACTOR SHALL VERIFY ALL DIMENSIONS AND MEMBER SIZES SHOWN IN THIS SKETCH. DOCUMENT ALL VARIATIONS OR DEVIATIONS VIA PHOTOS AND SKETCHES AND PROVIDE TO THE EOR FOR EVALUATION

Mount Plan View

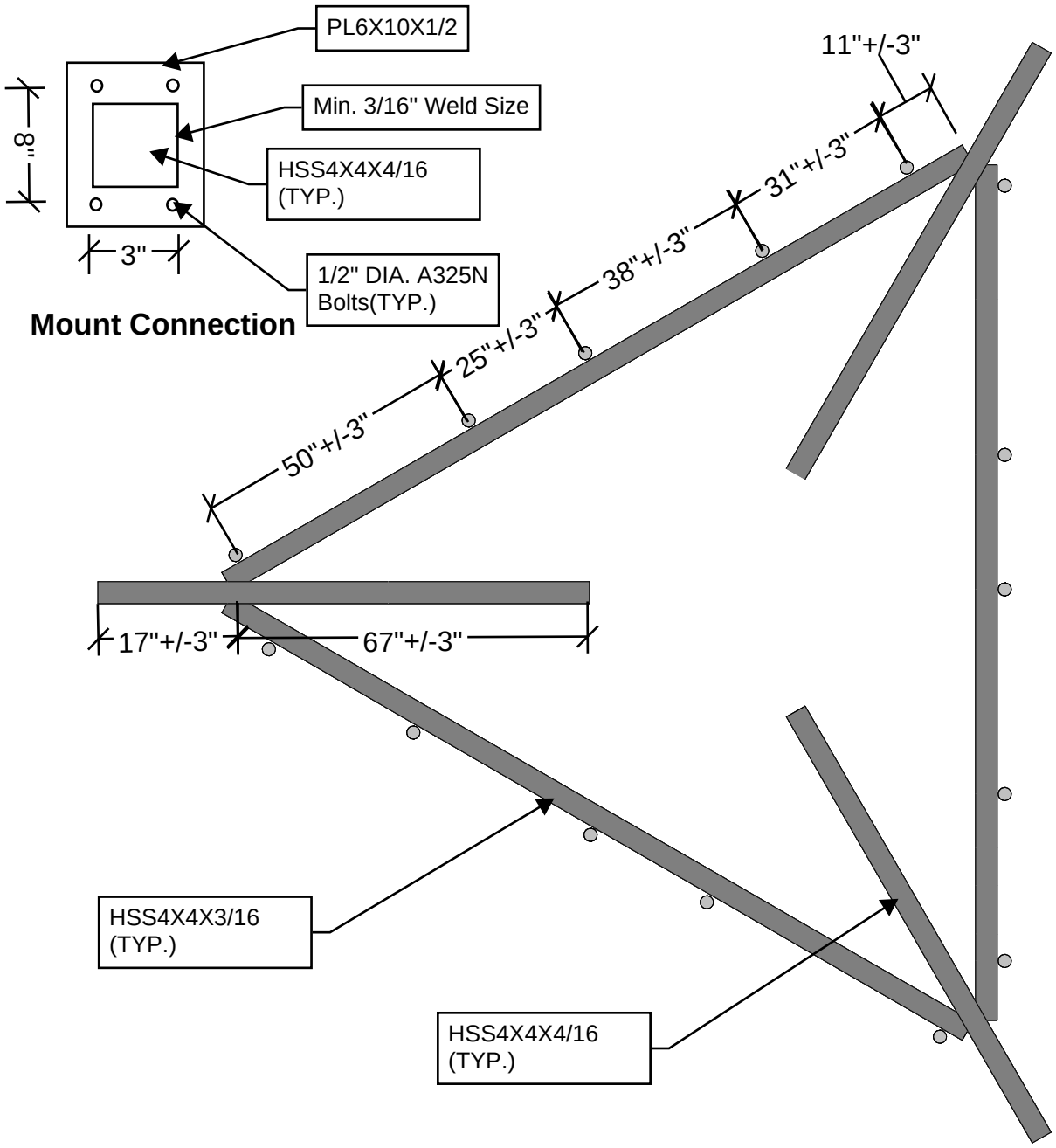

MOUNT GEOMETRY VERIFICATION

CONTRACTOR SHALL VERIFY ALL DIMENSIONS AND MEMBER SIZES SHOWN IN THIS SKETCH. DOCUMENT ALL VARIATIONS OR DEVIATIONS VIA PHOTOS AND SKETCHES AND PROVIDE TO THE EOR FOR EVALUATION

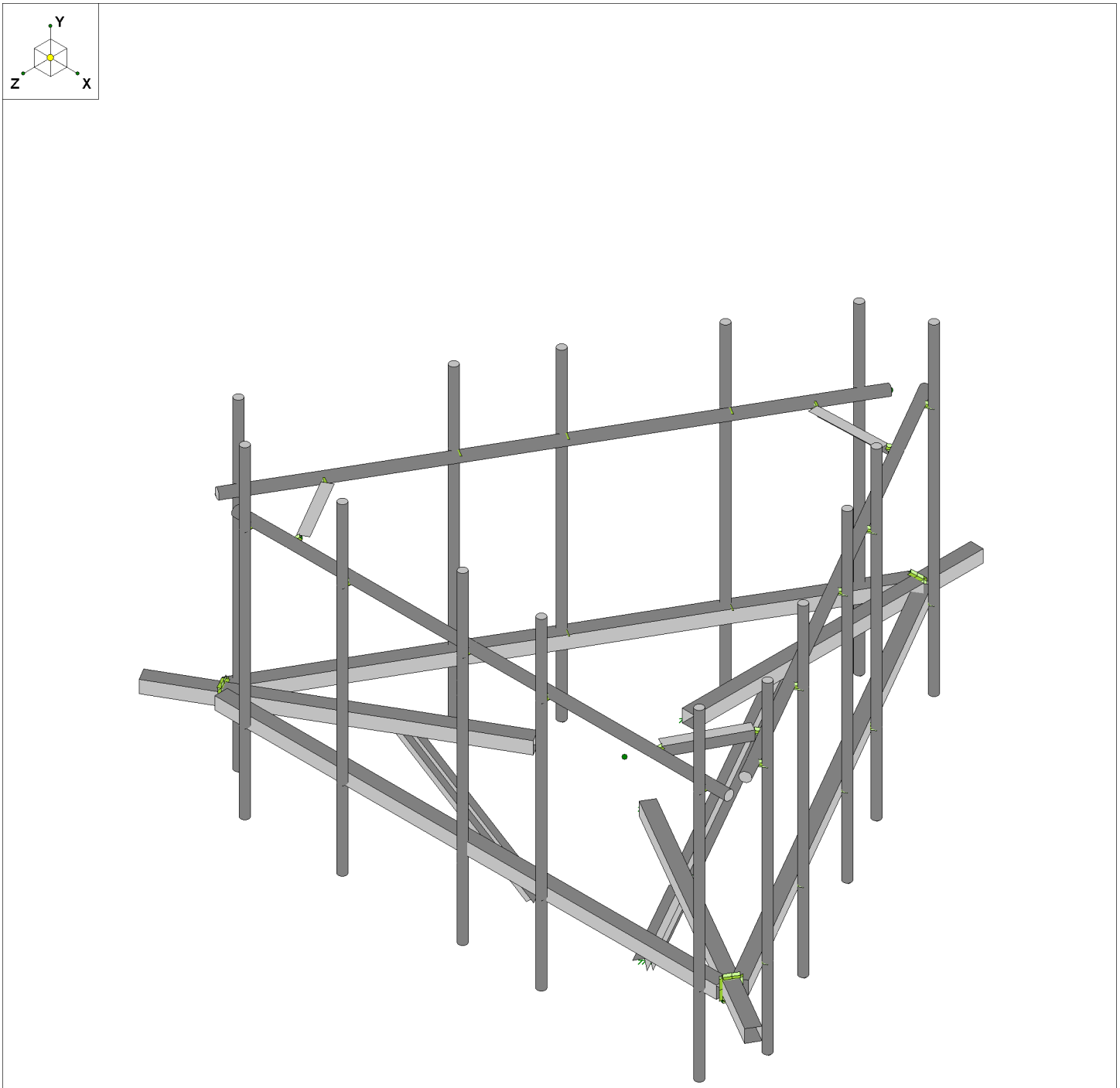

Envelope Only Solution

Maser Consulting	468148-VZW_MT_LO_H	SK - 1
		June 15, 2021 at 4:28 PM
		468148-VZW_MT_LO_H_LOADED.r...

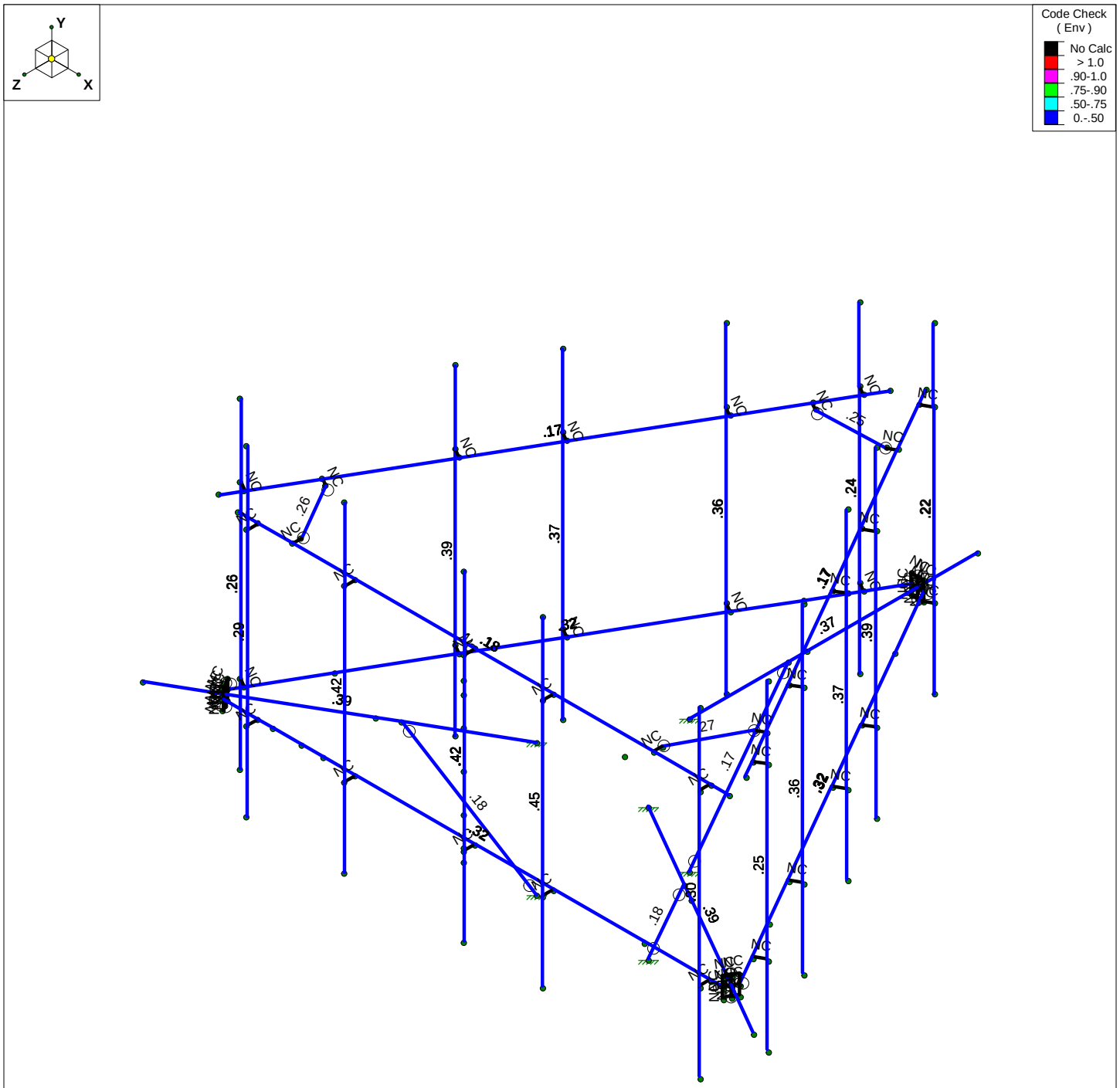

Member Code Checks Displayed (Enveloped)
Envelope Only Solution

Maser Consulting	468148-VZW_MT_LO_H	SK - 2
		June 15, 2021 at 4:28 PM
		468148-VZW_MT_LO_H_LOADED.r...

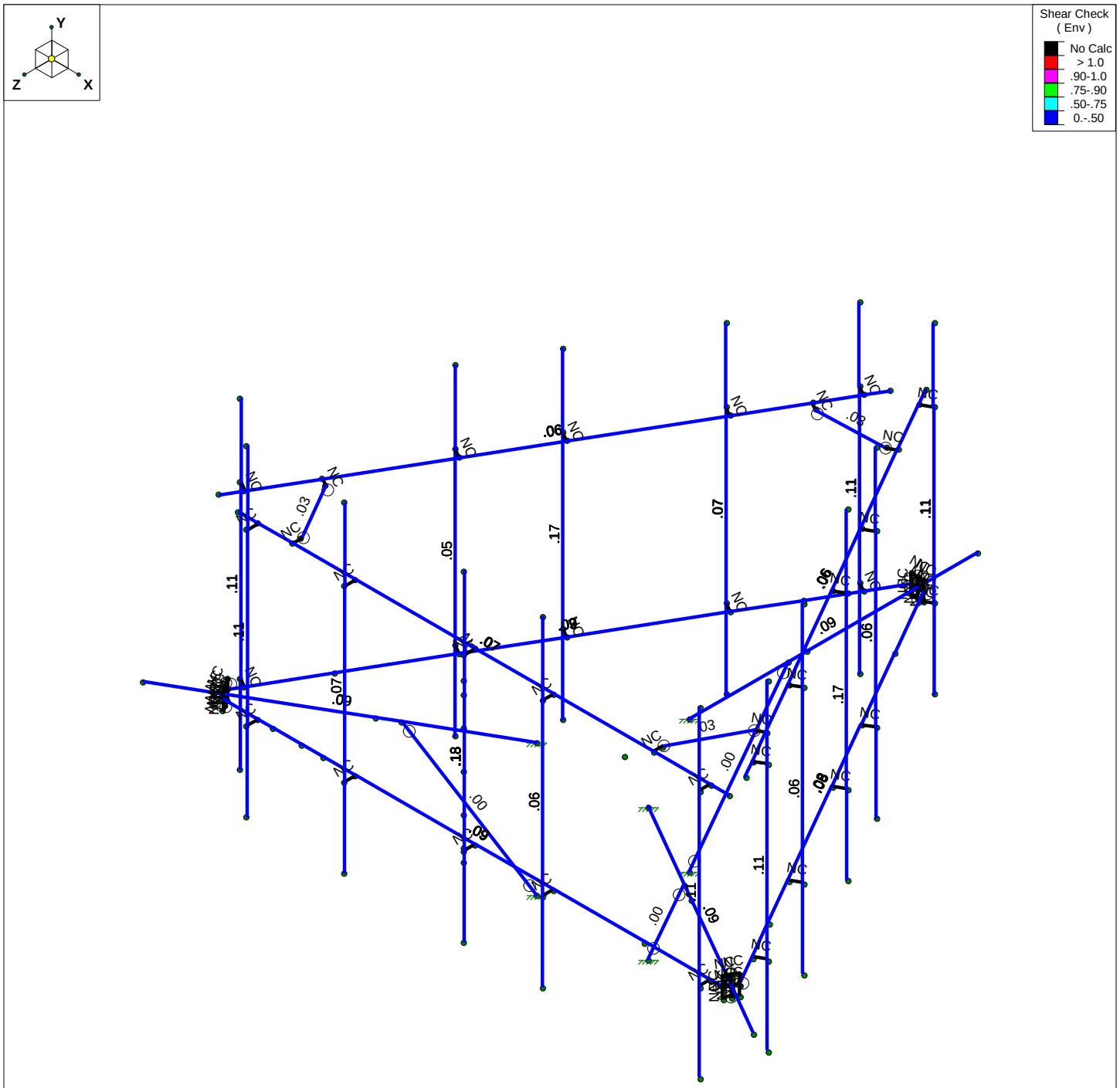

Member Shear Checks Displayed (Enveloped)
Envelope Only Solution

Maser Consulting	468148-VZW_MT_LO_H	SK - 3
		June 15, 2021 at 4:28 PM
		468148-VZW_MT_LO_H_LOADED.r...

Basic Load Cases

	BLC Description	Category	X Gravity	Y Gravity	Z Gravity	Joint	Point	Distributed	Area(Me...	Surface(P...
1	Antenna D	None					123			
2	Antenna Di	None					123			
3	Antenna Wo (0 Deg)	None					123			
4	Antenna Wo (30 Deg)	None					123			
5	Antenna Wo (60 Deg)	None					123			
6	Antenna Wo (90 Deg)	None					123			
7	Antenna Wo (120 Deg)	None					123			
8	Antenna Wo (150 Deg)	None					123			
9	Antenna Wo (180 Deg)	None					123			
10	Antenna Wo (210 Deg)	None					123			
11	Antenna Wo (240 Deg)	None					123			
12	Antenna Wo (270 Deg)	None					123			
13	Antenna Wo (300 Deg)	None					123			
14	Antenna Wo (330 Deg)	None					123			
15	Antenna Wi (0 Deg)	None					123			
16	Antenna Wi (30 Deg)	None					123			
17	Antenna Wi (60 Deg)	None					123			
18	Antenna Wi (90 Deg)	None					123			
19	Antenna Wi (120 Deg)	None					123			
20	Antenna Wi (150 Deg)	None					123			
21	Antenna Wi (180 Deg)	None					123			
22	Antenna Wi (210 Deg)	None					123			
23	Antenna Wi (240 Deg)	None					123			
24	Antenna Wi (270 Deg)	None					123			
25	Antenna Wi (300 Deg)	None					123			
26	Antenna Wi (330 Deg)	None					123			
27	Antenna Wm (0 Deg)	None					123			
28	Antenna Wm (30 Deg)	None					123			
29	Antenna Wm (60 Deg)	None					123			
30	Antenna Wm (90 Deg)	None					123			
31	Antenna Wm (120 De...	None					123			
32	Antenna Wm (150 De...	None					123			
33	Antenna Wm (180 De...	None					123			
34	Antenna Wm (210 De...	None					123			
35	Antenna Wm (240 De...	None					123			
36	Antenna Wm (270 De...	None					123			
37	Antenna Wm (300 De...	None					123			
38	Antenna Wm (330 De...	None					123			
39	Structure D	None		-1					3	
40	Structure Di	None						30	3	
41	Structure Wo (0 Deg)	None						60		
42	Structure Wo (30 Deg)	None						60		
43	Structure Wo (60 Deg)	None						60		
44	Structure Wo (90 Deg)	None						60		
45	Structure Wo (120 D...	None						60		
46	Structure Wo (150 D...	None						60		
47	Structure Wo (180 D...	None						60		
48	Structure Wo (210 D...	None						60		
49	Structure Wo (240 D...	None						60		
50	Structure Wo (270 D...	None						60		
51	Structure Wo (300 D...	None						60		

Basic Load Cases (Continued)

	BLC Description	Category	X Gravity	Y Gravity	Z Gravity	Joint	Point	Distributed	Area(Me...	Surface(P...
52	Structure Wo (330 D...	None						60		
53	Structure Wi (0 Deg)	None						60		
54	Structure Wi (30 Deg)	None						60		
55	Structure Wi (60 Deg)	None						60		
56	Structure Wi (90 Deg)	None						60		
57	Structure Wi (120 De...	None						60		
58	Structure Wi (150 De...	None						60		
59	Structure Wi (180 De...	None						60		
60	Structure Wi (210 De...	None						60		
61	Structure Wi (240 De...	None						60		
62	Structure Wi (270 De...	None						60		
63	Structure Wi (300 De...	None						60		
64	Structure Wi (330 De...	None						60		
65	Structure Wm (0 Deg)	None						60		
66	Structure Wm (30 D...	None						60		
67	Structure Wm (60 D...	None						60		
68	Structure Wm (90 D...	None						60		
69	Structure Wm (120 ...	None						60		
70	Structure Wm (150 ...	None						60		
71	Structure Wm (180 ...	None						60		
72	Structure Wm (210 ...	None						60		
73	Structure Wm (240 ...	None						60		
74	Structure Wm (270 ...	None						60		
75	Structure Wm (300 ...	None						60		
76	Structure Wm (330 ...	None						60		
77	Lm1	None					1			
78	Lm2	None					1			
79	Lv1	None					1			
80	Lv2	None					1			
81	BLC 39 Transient Are...	None						18		
82	BLC 40 Transient Are...	None						18		

Load Combinations

	Description	Solve	PDelta	S...	BLC	Fac...	BLC	Fac...	BLC	Fac...	BLC	Fac...	BLC	Fac...	BLC	Fac...	BLC	Fac...	BLC	Fac...	BLC	Fac...	BLC	Fac...
1	1.2D+1.0Wo (0...	Yes	Y		1	1.2	39	1.2	3	1	41	1												
2	1.2D+1.0Wo (3...	Yes	Y		1	1.2	39	1.2	4	1	42	1												
3	1.2D+1.0Wo (6...	Yes	Y		1	1.2	39	1.2	5	1	43	1												
4	1.2D+1.0Wo (9...	Yes	Y		1	1.2	39	1.2	6	1	44	1												
5	1.2D+1.0Wo (1...	Yes	Y		1	1.2	39	1.2	7	1	45	1												
6	1.2D+1.0Wo (1...	Yes	Y		1	1.2	39	1.2	8	1	46	1												
7	1.2D+1.0Wo (1...	Yes	Y		1	1.2	39	1.2	9	1	47	1												
8	1.2D+1.0Wo (2...	Yes	Y		1	1.2	39	1.2	10	1	48	1												
9	1.2D+1.0Wo (2...	Yes	Y		1	1.2	39	1.2	11	1	49	1												
10	1.2D+1.0Wo (2...	Yes	Y		1	1.2	39	1.2	12	1	50	1												
11	1.2D+1.0Wo (3...	Yes	Y		1	1.2	39	1.2	13	1	51	1												
12	1.2D+1.0Wo (3...	Yes	Y		1	1.2	39	1.2	14	1	52	1												
13	1.2D + 1.0Di + ...	Yes	Y		1	1.2	39	1.2	2	1	40	1	15	1	53	1								
14	1.2D + 1.0Di + ...	Yes	Y		1	1.2	39	1.2	2	1	40	1	16	1	54	1								
15	1.2D + 1.0Di + ...	Yes	Y		1	1.2	39	1.2	2	1	40	1	17	1	55	1								
16	1.2D + 1.0Di + ...	Yes	Y		1	1.2	39	1.2	2	1	40	1	18	1	56	1								

Load Combinations (Continued)

	Description	Solve	PDelta	S...	BLC	Fac...	BLC	Fac...	BLC	Fac...	BLC	Fac...	BLC	Fac...	BLC	Fac...	BLC	Fac...	BLC	Fac...	BLC	Fac...	BLC	Fac...
17	1.2D + 1.0Di + ...	Yes	Y		1	1.2	39	1.2	2	1	40	1	19	1	57	1								
18	1.2D + 1.0Di + ...	Yes	Y		1	1.2	39	1.2	2	1	40	1	20	1	58	1								
19	1.2D + 1.0Di + ...	Yes	Y		1	1.2	39	1.2	2	1	40	1	21	1	59	1								
20	1.2D + 1.0Di + ...	Yes	Y		1	1.2	39	1.2	2	1	40	1	22	1	60	1								
21	1.2D + 1.0Di + ...	Yes	Y		1	1.2	39	1.2	2	1	40	1	23	1	61	1								
22	1.2D + 1.0Di + ...	Yes	Y		1	1.2	39	1.2	2	1	40	1	24	1	62	1								
23	1.2D + 1.0Di + ...	Yes	Y		1	1.2	39	1.2	2	1	40	1	25	1	63	1								
24	1.2D + 1.0Di + ...	Yes	Y		1	1.2	39	1.2	2	1	40	1	26	1	64	1								
25	1.2D + 1.5Lm1 ...	Yes	Y		1	1.2	39	1.2	77	1.5	27	1	65	1										
26	1.2D + 1.5Lm1 ...	Yes	Y		1	1.2	39	1.2	77	1.5	28	1	66	1										
27	1.2D + 1.5Lm1 ...	Yes	Y		1	1.2	39	1.2	77	1.5	29	1	67	1										
28	1.2D + 1.5Lm1 ...	Yes	Y		1	1.2	39	1.2	77	1.5	30	1	68	1										
29	1.2D + 1.5Lm1 ...	Yes	Y		1	1.2	39	1.2	77	1.5	31	1	69	1										
30	1.2D + 1.5Lm1 ...	Yes	Y		1	1.2	39	1.2	77	1.5	32	1	70	1										
31	1.2D + 1.5Lm1 ...	Yes	Y		1	1.2	39	1.2	77	1.5	33	1	71	1										
32	1.2D + 1.5Lm1 ...	Yes	Y		1	1.2	39	1.2	77	1.5	34	1	72	1										
33	1.2D + 1.5Lm1 ...	Yes	Y		1	1.2	39	1.2	77	1.5	35	1	73	1										
34	1.2D + 1.5Lm1 ...	Yes	Y		1	1.2	39	1.2	77	1.5	36	1	74	1										
35	1.2D + 1.5Lm1 ...	Yes	Y		1	1.2	39	1.2	77	1.5	37	1	75	1										
36	1.2D + 1.5Lm1 ...	Yes	Y		1	1.2	39	1.2	77	1.5	38	1	76	1										
37	1.2D + 1.5Lm2 ...	Yes	Y		1	1.2	39	1.2	78	1.5	27	1	65	1										
38	1.2D + 1.5Lm2 ...	Yes	Y		1	1.2	39	1.2	78	1.5	28	1	66	1										
39	1.2D + 1.5Lm2 ...	Yes	Y		1	1.2	39	1.2	78	1.5	29	1	67	1										
40	1.2D + 1.5Lm2 ...	Yes	Y		1	1.2	39	1.2	78	1.5	30	1	68	1										
41	1.2D + 1.5Lm2 ...	Yes	Y		1	1.2	39	1.2	78	1.5	31	1	69	1										
42	1.2D + 1.5Lm2 ...	Yes	Y		1	1.2	39	1.2	78	1.5	32	1	70	1										
43	1.2D + 1.5Lm2 ...	Yes	Y		1	1.2	39	1.2	78	1.5	33	1	71	1										
44	1.2D + 1.5Lm2 ...	Yes	Y		1	1.2	39	1.2	78	1.5	34	1	72	1										
45	1.2D + 1.5Lm2 ...	Yes	Y		1	1.2	39	1.2	78	1.5	35	1	73	1										
46	1.2D + 1.5Lm2 ...	Yes	Y		1	1.2	39	1.2	78	1.5	36	1	74	1										
47	1.2D + 1.5Lm2 ...	Yes	Y		1	1.2	39	1.2	78	1.5	37	1	75	1										
48	1.2D + 1.5Lm2 ...	Yes	Y		1	1.2	39	1.2	78	1.5	38	1	76	1										
49	1.2D + 1.5Lv1	Yes	Y		1	1.2	39	1.2	79	1.5														
50	1.2D + 1.5Lv2	Yes	Y		1	1.2	39	1.2	80	1.5														
51	1.4D	Yes	Y		1	1.4	39	1.4																
52	Seismic Mass		Y		1	1	39	1																
53	1.2D + 1.0Ev + ...		Y		1	1.2	39	1.2	SX		SY	1	SZ	-1										
54	1.2D + 1.0Ev + ...		Y		1	1.2	39	1.2	SX	.5	SY	1	SZ	-.866										
55	1.2D + 1.0Ev + ...		Y		1	1.2	39	1.2	SX	.866	SY	1	SZ	-.5										
56	1.2D + 1.0Ev + ...		Y		1	1.2	39	1.2	SX	1	SY	1	SZ											
57	1.2D + 1.0Ev + ...		Y		1	1.2	39	1.2	SX	.866	SY	1	SZ	.5										
58	1.2D + 1.0Ev + ...		Y		1	1.2	39	1.2	SX	.5	SY	1	SZ	.866										
59	1.2D + 1.0Ev + ...		Y		1	1.2	39	1.2	SX		SY	1	SZ	1										
60	1.2D + 1.0Ev + ...		Y		1	1.2	39	1.2	SX	-.5	SY	1	SZ	.866										
61	1.2D + 1.0Ev + ...		Y		1	1.2	39	1.2	SX	-.866	SY	1	SZ	.5										
62	1.2D + 1.0Ev + ...		Y		1	1.2	39	1.2	SX	-1	SY	1	SZ											
63	1.2D + 1.0Ev + ...		Y		1	1.2	39	1.2	SX	-.866	SY	1	SZ	-.5										
64	1.2D + 1.0Ev + ...		Y		1	1.2	39	1.2	SX	-.5	SY	1	SZ	-.866										

Joint Coordinates and Temperatures

	Label	X [ft]	Y [ft]	Z [ft]	Temp [F]	Detach From Diap...
1	N3	0.	0	-1.708333	0	
2	N27	0.	0	-9.322917	0	
3	CP	0	0	0	0	
4	N5	0.	0	-7.739583	0	
5	N6	0.166667	0	-7.739583	0	
6	N7	-0.166667	0	-7.739583	0	
7	N8	0.	.25	-7.739583	0	
8	N9	0.166667	.25	-7.739583	0	
9	N10	-0.166667	.25	-7.739583	0	
10	N11	0.	-.25	-7.739583	0	
11	N12	0.166667	-.25	-7.739583	0	
12	N13	-0.166667	-.25	-7.739583	0	
13	N14	-1.47946	0	0.854167	0	
14	N15	-8.073883	0	4.661458	0	
15	N17	-6.702676	0	3.869792	0	
16	N18	-6.786009	0	3.725454	0	
17	N19	-6.619342	0	4.014129	0	
18	N20	-6.702676	.25	3.869792	0	
19	N21	-6.786009	.25	3.725454	0	
20	N22	-6.619342	.25	4.014129	0	
21	N23	-6.702676	-.25	3.869792	0	
22	N24	-6.786009	-.25	3.725454	0	
23	N25	-6.619342	-.25	4.014129	0	
24	N26	1.47946	0	0.854167	0	
25	N27A	8.073883	0	4.661458	0	
26	N29	6.702676	0	3.869792	0	
27	N30	6.619342	0	4.014129	0	
28	N31	6.786009	0	3.725454	0	
29	N32	6.702676	.25	3.869792	0	
30	N33	6.619342	.25	4.014129	0	
31	N34	6.786009	.25	3.725454	0	
32	N35	6.702676	-.25	3.869792	0	
33	N36	6.619342	-.25	4.014129	0	
34	N37	6.786009	-.25	3.725454	0	
35	N38	-5.702676	0	4.014129	0	
36	N42	-5.702676	0	4.305796	0	
37	N46	-5.702676	6.416667	4.305796	0	
38	N50	-5.702676	-2.083333	4.305796	0	
39	N47	0.047324	0	4.014129	0	
40	N48	0.047324	0	4.305796	0	
41	N49	0.047324	6.416667	4.305796	0	
42	N50A	0.047324	-2.083333	4.305796	0	
43	N51	6.297324	0	4.014129	0	
44	N52	6.297324	0	4.305796	0	
45	N53	6.297324	6.416667	4.305796	0	
46	N54	6.297324	-2.083333	4.305796	0	
47	N55	6.327676	0	2.931597	0	
48	N56	6.580267	0	2.785764	0	
49	N57	6.580267	6.416667	2.785764	0	
50	N58	6.580267	-2.083333	2.785764	0	
51	N63	3.452676	0	-2.048049	0	

Joint Coordinates and Temperatures (Continued)

	Label	X [ft]	Y [ft]	Z [ft]	Temp [F]	Detach From Diap...
52	N64	3.705267	0	-2.193882	0	
53	N65	3.705267	6.416667	-2.193882	0	
54	N66	3.705267	-2.083333	-2.193882	0	
55	N67	0.327676	0	-7.460707	0	
56	N68	0.580267	0	-7.606541	0	
57	N69	0.580267	6.416667	-7.606541	0	
58	N70	0.580267	-2.083333	-7.606541	0	
59	N71	-0.625	0	-6.945727	0	
60	N72	-0.877591	0	-7.09156	0	
61	N73	-0.877591	6.416667	-7.09156	0	
62	N74	-0.877591	-2.083333	-7.09156	0	
63	N79	-3.5	0	-1.966081	0	
64	N80	-3.752591	0	-2.111914	0	
65	N81	-3.752591	6.416667	-2.111914	0	
66	N82	-3.752591	-2.083333	-2.111914	0	
67	N83	-6.625	0	3.446578	0	
68	N84	-6.877591	0	3.300745	0	
69	N85	-6.877591	6.416667	3.300745	0	
70	N86	-6.877591	-2.083333	3.300745	0	
71	N90A	-3.956842	0	4.014129	0	
72	N91A	-5.290176	0	4.014129	0	
73	N81A	2.130658	0	4.014129	0	
74	N82A	2.130658	0	4.305796	0	
75	N83A	2.130658	6.416667	4.305796	0	
76	N84A	2.130658	-2.083333	4.305796	0	
77	N85A	-3.119342	0	4.014129	0	
78	N86A	-3.119342	0	4.305796	0	
79	N87	-3.119342	6.416667	4.305796	0	
80	N88	-3.119342	-2.083333	4.305796	0	
81	N98	2.411009	0	-3.852268	0	
82	N99	2.6636	0	-3.998102	0	
83	N100	2.6636	6.416667	-3.998102	0	
84	N101	2.6636	-2.083333	-3.998102	0	
85	N102	5.036009	0	0.694365	0	
86	N103	5.2886	0	0.548532	0	
87	N104	5.2886	6.416667	0.548532	0	
88	N105	5.2886	-2.083333	0.548532	0	
89	N115	-4.541667	0	-0.161861	0	
90	N116	-4.794257	0	-0.307694	0	
91	N117	-4.794257	6.416667	-0.307694	0	
92	N118	-4.794257	-2.083333	-0.307694	0	
93	N119	-1.916667	0	-4.708494	0	
94	N120	-2.169257	0	-4.854328	0	
95	N121	-2.169257	6.416667	-4.854328	0	
96	N122	-2.169257	-2.083333	-4.854328	0	
97	N113A	0.047324	3.916667	4.305796	0	
98	N114A	0.047324	-0.25	4.305796	0	
99	N115A	0.047324	1.833333	4.305796	0	
100	N116A	0.047324	3.583333	4.305796	0	
101	N117A	0.047324	0.083333	4.305796	0	
102	N106	0.047324	2.833333	4.305796	0	
103	N107	0.047324	0.833333	4.305796	0	

Joint Coordinates and Temperatures (Continued)

	Label	X [ft]	Y [ft]	Z [ft]	Temp [F]	Detach From Diap...
104	N108	0.	0	-4.822917	0	
105	N109	-4.176768	0	2.411458	0	
106	N110	4.176768	0	2.411458	0	
107	N111	-4.537612	0	4.014467	0	
108	N112A	4.537612	0	4.014467	0	
109	N115C	5.745436	0	1.922454	0	
110	N116B	1.207824	0	-5.936921	0	
111	N119A	-1.207824	0	-5.936921	0	
112	N120A	-5.745436	0	1.922454	0	
113	N113	0.	-3.5	-1.708333	0	
114	N114	-1.47946	-3.5	0.854167	0	
115	N115B	1.47946	-3.5	0.854167	0	
116	N116C	-3.743756	0	2.161458	0	
117	N120B	3.743756	0	2.161458	0	
118	N124	-0.	0	-4.322917	0	
119	N119B	0.083333	4.5	-7.883921	0	
120	N120C	6.583342	4.5	3.374425	0	
121	N121A	6.327676	4.5	2.931597	0	
122	N122A	6.580267	4.5	2.785764	0	
123	N123	3.452676	4.5	-2.048049	0	
124	N124A	3.705267	4.5	-2.193882	0	
125	N125	0.327676	4.5	-7.460707	0	
126	N126	0.580267	4.5	-7.606541	0	
127	N127	2.411009	4.5	-3.852268	0	
128	N128	2.6636	4.5	-3.998102	0	
129	N129	5.036009	4.5	0.694365	0	
130	N130	5.2886	4.5	0.548532	0	
131	N131	1.083333	4.5	-6.15187	0	
132	N132	5.833342	4.5	2.075387	0	
133	N133	5.634878	4.5	2.18997	0	
134	N135	0.884878	4.5	-6.037271	0	
135	N135A	-6.869342	4.5	3.869792	0	
136	N136	-0.369333	4.5	-7.388554	0	
137	N137	-0.625	4.5	-6.945727	0	
138	N138	-0.877591	4.5	-7.09156	0	
139	N139	-3.5	4.5	-1.966081	0	
140	N140	-3.752591	4.5	-2.111914	0	
141	N141	-6.625	4.5	3.446578	0	
142	N142	-6.877591	4.5	3.300745	0	
143	N143	-4.541667	4.5	-0.161861	0	
144	N144	-4.794257	4.5	-0.307694	0	
145	N145	-1.916667	4.5	-4.708494	0	
146	N146	-2.169257	4.5	-4.854328	0	
147	N147	-5.869342	4.5	2.137741	0	
148	N150	-5.670869	4.5	2.252308	0	
149	N151	6.786009	4.5	4.014129	0	
150	N152	-6.214009	4.5	4.014129	0	
151	N153	-5.702676	4.5	4.014129	0	
152	N154	-5.702676	4.5	4.305796	0	
153	N155	0.047324	4.5	4.014129	0	
154	N156	0.047324	4.5	4.305796	0	
155	N157	6.297324	4.5	4.014129	0	

Joint Coordinates and Temperatures (Continued)

	Label	X [ft]	Y [ft]	Z [ft]	Temp [F]	Detach From Diap...
156	N158	6.297324	4.5	4.305796	0	
157	N159	2.130658	4.5	4.014129	0	
158	N160	2.130658	4.5	4.305796	0	
159	N161	-3.119342	4.5	4.014129	0	
160	N162	-3.119342	4.5	4.305796	0	
161	N163	4.786009	4.5	4.014129	0	
162	N166	4.785991	4.5	3.784963	0	
163	N163A	-1.119333	4.5	-6.089516	0	
164	N164	-0.920869	4.5	-5.974933	0	
165	N168	-4.786009	4.5	4.014129	0	
166	N168A	-4.786009	4.5	3.784963	0	

Hot Rolled Steel Section Sets

	Label	Shape	Type	Design List	Material	Design Rul...	A [in2]	Iyy [in4]	Izz [in4]	J [in4]
1	Face Horizontal	HSS4X4X3	Beam	SquareTube	A500 Gr.B ...	Typical	2.58	6.21	6.21	10
2	Standoff Horizontal	HSS4X4X4	Beam	SquareTube	A500 Gr.B ...	Typical	3.37	7.8	7.8	12.8
3	Mount Pipe	PIPE_2.0	Column	Pipe	A53 Gr.B	Typical	1.02	.627	.627	1.25
4	Mod Support Rail	PIPE_2.5	Column	Pipe	A53 Gr.B	Typical	1.61	1.45	1.45	2.89
5	Mod Support Rail C...	L3X3X4	Column	Single Angle	A36 Gr.36	Typical	1.44	1.23	1.23	.031
6	Mod Kickers	LL3x3x3x6	Column	Double Angle (...	A36 Gr.36	Typical	2.18	4.97	1.9	.027

Hot Rolled Steel Properties

	Label	E [ksi]	G [ksi]	Nu	Therm (/1E...	Density[k/ft...	Yield[ksi]	Ry	Fu[ksi]	Rt
1	A992	29000	11154	.3	.65	.49	50	1.1	65	1.1
2	A36 Gr.36	29000	11154	.3	.65	.49	36	1.5	58	1.2
3	A572 Gr.50	29000	11154	.3	.65	.49	50	1.1	65	1.1
4	A500 Gr.B RND	29000	11154	.3	.65	.527	42	1.4	58	1.3
5	A500 Gr.B Rect	29000	11154	.3	.65	.527	46	1.4	58	1.3
6	A53 Gr.B	29000	11154	.3	.65	.49	35	1.6	60	1.2
7	A1085	29000	11154	.3	.65	.49	50	1.4	65	1.3
8	Q235	29000	11154	.3	.65	.49	35	1.5	58	1.2

Member Primary Data

	Label	I Joint	J Joint	K Joint	Rotate(deg)	Section/Shape	Type	Design List	Material	Design Rules
1	M4	N3	N27			Standoff Horiz...	Beam	SquareTube	A500 Gr.B...	Typical
2	M2	N7	N5			RIGID	None	None	RIGID	Typical
3	M3	N6	N5			RIGID	None	None	RIGID	Typical
4	M4A	N10	N8			RIGID	None	None	RIGID	Typical
5	M5	N9	N8			RIGID	None	None	RIGID	Typical
6	M6	N13	N11			RIGID	None	None	RIGID	Typical
7	M7	N12	N11			RIGID	None	None	RIGID	Typical
8	M8	N8	N5			RIGID	None	None	RIGID	Typical
9	M9	N11	N5			RIGID	None	None	RIGID	Typical
10	M10	N7	N10			RIGID	None	None	RIGID	Typical
11	M11	N6	N9			RIGID	None	None	RIGID	Typical
12	M12	N7	N13			RIGID	None	None	RIGID	Typical
13	M13	N6	N12			RIGID	None	None	RIGID	Typical

Member Primary Data (Continued)

	Label	I Joint	J Joint	K Joint	Rotate(deg)	Section/Shape	Type	Design List	Material	Design Rules
14	M14	N14	N15			Standoff Horiz...	Beam	SquareTube	A500 Gr.B...	Typical
15	M15	N19	N17			RIGID	None	None	RIGID	Typical
16	M16	N18	N17			RIGID	None	None	RIGID	Typical
17	M17	N22	N20			RIGID	None	None	RIGID	Typical
18	M18	N21	N20			RIGID	None	None	RIGID	Typical
19	M19	N25	N23			RIGID	None	None	RIGID	Typical
20	M20	N24	N23			RIGID	None	None	RIGID	Typical
21	M21	N20	N17			RIGID	None	None	RIGID	Typical
22	M22	N23	N17			RIGID	None	None	RIGID	Typical
23	M23	N19	N22			RIGID	None	None	RIGID	Typical
24	M24	N18	N21			RIGID	None	None	RIGID	Typical
25	M25	N19	N25			RIGID	None	None	RIGID	Typical
26	M26	N18	N24			RIGID	None	None	RIGID	Typical
27	M27	N26	N27A			Standoff Horiz...	Beam	SquareTube	A500 Gr.B...	Typical
28	M28	N31	N29			RIGID	None	None	RIGID	Typical
29	M29	N30	N29			RIGID	None	None	RIGID	Typical
30	M30	N34	N32			RIGID	None	None	RIGID	Typical
31	M31	N33	N32			RIGID	None	None	RIGID	Typical
32	M32	N37	N35			RIGID	None	None	RIGID	Typical
33	M33	N36	N35			RIGID	None	None	RIGID	Typical
34	M34	N32	N29			RIGID	None	None	RIGID	Typical
35	M35	N35	N29			RIGID	None	None	RIGID	Typical
36	M36	N31	N34			RIGID	None	None	RIGID	Typical
37	M37	N30	N33			RIGID	None	None	RIGID	Typical
38	M38	N31	N37			RIGID	None	None	RIGID	Typical
39	M39	N30	N36			RIGID	None	None	RIGID	Typical
40	M40	N18	N7			Face Horizontal	Beam	SquareTube	A500 Gr.B...	Typical
41	M41	N6	N31			Face Horizontal	Beam	SquareTube	A500 Gr.B...	Typical
42	M42	N19	N30			Face Horizontal	Beam	SquareTube	A500 Gr.B...	Typical
43	M43	N38	N42			RIGID	None	None	RIGID	Typical
44	MP5A	N46	N50			Mount Pipe	Column	Pipe	A53 Gr.B	Typical
45	M49	N47	N48			RIGID	None	None	RIGID	Typical
46	MP3A	N49	N50A			Mount Pipe	Column	Pipe	A53 Gr.B	Typical
47	M51	N51	N52			RIGID	None	None	RIGID	Typical
48	MP1A	N53	N54			Mount Pipe	Column	Pipe	A53 Gr.B	Typical
49	M53	N55	N56			RIGID	None	None	RIGID	Typical
50	MP5C	N57	N58		240	Mount Pipe	Column	Pipe	A53 Gr.B	Typical
51	M57	N63	N64			RIGID	None	None	RIGID	Typical
52	MP3C	N65	N66		240	Mount Pipe	Column	Pipe	A53 Gr.B	Typical
53	M59	N67	N68			RIGID	None	None	RIGID	Typical
54	MP1C	N69	N70		240	Mount Pipe	Column	Pipe	A53 Gr.B	Typical
55	M61	N71	N72			RIGID	None	None	RIGID	Typical
56	MP5B	N73	N74		120	Mount Pipe	Column	Pipe	A53 Gr.B	Typical
57	M65	N79	N80			RIGID	None	None	RIGID	Typical
58	MP3B	N81	N82		120	Mount Pipe	Column	Pipe	A53 Gr.B	Typical
59	M67	N83	N84			RIGID	None	None	RIGID	Typical
60	MP1B	N85	N86		120	Mount Pipe	Column	Pipe	A53 Gr.B	Typical
61	M65A	N81A	N82A			RIGID	None	None	RIGID	Typical
62	MP2A	N83A	N84A			Mount Pipe	Column	Pipe	A53 Gr.B	Typical
63	M67A	N85A	N86A			RIGID	None	None	RIGID	Typical
64	MP4A	N87	N88			Mount Pipe	Column	Pipe	A53 Gr.B	Typical
65	M73	N98	N99			RIGID	None	None	RIGID	Typical

Member Primary Data (Continued)

	Label	I Joint	J Joint	K Joint	Rotate(deg)	Section/Shape	Type	Design List	Material	Design Rules
66	MP2C	N100	N101		240	Mount Pipe	Column	Pipe	A53 Gr.B	Typical
67	M75	N102	N103			RIGID	None	None	RIGID	Typical
68	MP4C	N104	N105		240	Mount Pipe	Column	Pipe	A53 Gr.B	Typical
69	M81	N115	N116			RIGID	None	None	RIGID	Typical
70	MP2B	N117	N118		120	Mount Pipe	Column	Pipe	A53 Gr.B	Typical
71	M83	N119	N120			RIGID	None	None	RIGID	Typical
72	MP4B	N121	N122		120	Mount Pipe	Column	Pipe	A53 Gr.B	Typical
73	M77A	N116C	N114			Mod Kickers	Column	Double Angle (...	A36 Gr.36	Typical
74	M78A	N120B	N115B			Mod Kickers	Column	Double Angle (...	A36 Gr.36	Typical
75	M79	N124	N113			Mod Kickers	Column	Double Angle (...	A36 Gr.36	Typical
76	M80	N119B	N120C			Mod Support ...	Column	Pipe	A53 Gr.B	Typical
77	M81A	N121A	N122A			RIGID	None	None	RIGID	Typical
78	M82	N123	N124A			RIGID	None	None	RIGID	Typical
79	M83A	N125	N126			RIGID	None	None	RIGID	Typical
80	M85	N127	N128			RIGID	None	None	RIGID	Typical
81	M86	N129	N130			RIGID	None	None	RIGID	Typical
82	M87	N132	N133			RIGID	None	None	RIGID	Typical
83	M88	N131	N135			RIGID	None	None	RIGID	Typical
84	M89	N135A	N136			Mod Support ...	Column	Pipe	A53 Gr.B	Typical
85	M90	N137	N138			RIGID	None	None	RIGID	Typical
86	M91	N139	N140			RIGID	None	None	RIGID	Typical
87	M92	N141	N142			RIGID	None	None	RIGID	Typical
88	M94	N143	N144			RIGID	None	None	RIGID	Typical
89	M95	N145	N146			RIGID	None	None	RIGID	Typical
90	M97	N147	N150			RIGID	None	None	RIGID	Typical
91	M98	N151	N152			Mod Support ...	Column	Pipe	A53 Gr.B	Typical
92	M99	N153	N154			RIGID	None	None	RIGID	Typical
93	M100	N155	N156			RIGID	None	None	RIGID	Typical
94	M101	N157	N158			RIGID	None	None	RIGID	Typical
95	M103	N159	N160			RIGID	None	None	RIGID	Typical
96	M104	N161	N162			RIGID	None	None	RIGID	Typical
97	M106	N163	N166			RIGID	None	None	RIGID	Typical
98	M107	N133	N166		90	Mod Support ...	Column	Single Angle	A36 Gr.36	Typical
99	M106A	N163A	N164			RIGID	None	None	RIGID	Typical
100	M107A	N164	N135		90	Mod Support ...	Column	Single Angle	A36 Gr.36	Typical
101	M109	N168A	N150		90	Mod Support ...	Column	Single Angle	A36 Gr.36	Typical
102	M103A	N168	N168A			RIGID	None	None	RIGID	Typical

Member Advanced Data

	Label	I Release	J Release	I Offset[in]	J Offset[in]	T/C Only	Physical	Defl Rat...	Analysis ...	Inactive	Seismic...
1	M4						Yes				None
2	M2		BenPIN				Yes	** NA **			None
3	M3		BenPIN				Yes	** NA **			None
4	M4A						Yes	** NA **			None
5	M5						Yes	** NA **			None
6	M6						Yes	** NA **			None
7	M7						Yes	** NA **			None
8	M8		BenPIN				Yes	** NA **			None
9	M9		BenPIN				Yes	** NA **			None
10	M10						Yes	** NA **			None

Member Advanced Data (Continued)

	Label	I Release	J Release	I Offset[in]	J Offset[in]	T/C Only	Physical	Defl Rat...	Analysis ...	Inactive	Seismic...
11	M11						Yes	** NA **			None
12	M12						Yes	** NA **			None
13	M13						Yes	** NA **			None
14	M14						Yes				None
15	M15		BenPIN				Yes	** NA **			None
16	M16		BenPIN				Yes	** NA **			None
17	M17						Yes	** NA **			None
18	M18						Yes	** NA **			None
19	M19						Yes	** NA **			None
20	M20						Yes	** NA **			None
21	M21		BenPIN				Yes	** NA **			None
22	M22		BenPIN				Yes	** NA **			None
23	M23						Yes	** NA **			None
24	M24						Yes	** NA **			None
25	M25						Yes	** NA **			None
26	M26						Yes	** NA **			None
27	M27						Yes				None
28	M28		BenPIN				Yes	** NA **			None
29	M29		BenPIN				Yes	** NA **			None
30	M30						Yes	** NA **			None
31	M31						Yes	** NA **			None
32	M32						Yes	** NA **			None
33	M33						Yes	** NA **			None
34	M34		BenPIN				Yes	** NA **			None
35	M35		BenPIN				Yes	** NA **			None
36	M36						Yes	** NA **			None
37	M37						Yes	** NA **			None
38	M38						Yes	** NA **			None
39	M39						Yes	** NA **			None
40	M40						Yes				None
41	M41						Yes				None
42	M42						Yes				None
43	M43						Yes	** NA **			None
44	MP5A						Yes	** NA **			None
45	M49						Yes	** NA **			None
46	MP3A						Yes	** NA **			None
47	M51						Yes	** NA **			None
48	MP1A						Yes	** NA **			None
49	M53						Yes	** NA **			None
50	MP5C						Yes	** NA **			None
51	M57						Yes	** NA **			None
52	MP3C						Yes	** NA **			None
53	M59						Yes	** NA **			None
54	MP1C						Yes	** NA **			None
55	M61						Yes	** NA **			None
56	MP5B						Yes	** NA **			None
57	M65						Yes	** NA **			None
58	MP3B						Yes	** NA **			None
59	M67						Yes	** NA **			None
60	MP1B						Yes	** NA **			None
61	M65A						Yes	** NA **			None
62	MP2A						Yes	** NA **			None

Member Advanced Data (Continued)

	Label	I Release	J Release	I Offset[in]	J Offset[in]	T/C Only	Physical	Defl Rat...	Analysis ...	Inactive	Seismic...
63	M67A						Yes	** NA **			None
64	MP4A						Yes	** NA **			None
65	M73						Yes	** NA **			None
66	MP2C						Yes	** NA **			None
67	M75						Yes	** NA **			None
68	MP4C						Yes	** NA **			None
69	M81						Yes	** NA **			None
70	MP2B						Yes	** NA **			None
71	M83						Yes	** NA **			None
72	MP4B						Yes	** NA **			None
73	M77A	BenPIN	BenPIN				Yes	** NA **			None
74	M78A	BenPIN	BenPIN				Yes	** NA **			None
75	M79	BenPIN	BenPIN				Yes	** NA **			None
76	M80						Yes	** NA **			None
77	M81A						Yes	** NA **			None
78	M82						Yes	** NA **			None
79	M83A						Yes	** NA **			None
80	M85						Yes	** NA **			None
81	M86						Yes	** NA **			None
82	M87	OOOOOX					Yes	** NA **			None
83	M88	OOOOOX					Yes	** NA **			None
84	M89						Yes	** NA **			None
85	M90						Yes	** NA **			None
86	M91						Yes	** NA **			None
87	M92						Yes	** NA **			None
88	M94						Yes	** NA **			None
89	M95						Yes	** NA **			None
90	M97	OOOOOX					Yes	** NA **			None
91	M98						Yes	** NA **			None
92	M99						Yes	** NA **			None
93	M100						Yes	** NA **			None
94	M101						Yes	** NA **			None
95	M103						Yes	** NA **			None
96	M104						Yes	** NA **			None
97	M106	OOOOOX					Yes	** NA **			None
98	M107						Yes	** NA **			None
99	M106A	OOOOOX					Yes	** NA **			None
100	M107A						Yes	** NA **			None
101	M109						Yes	** NA **			None
102	M103A	OOOOOX					Yes	** NA **			None

Member Point Loads (BLC 1 : Antenna D)

	Member Label	Direction	Magnitude[lb,k-ft]	Location[ft,%]
1	MP3A	Y	-31.65	2.83
2	MP3A	My	-.024	2.83
3	MP3A	Mz	.024	2.83
4	MP3A	Y	-31.65	6.33
5	MP3A	My	-.024	6.33
6	MP3A	Mz	.024	6.33
7	MP3B	Y	-31.65	2.83

Member Point Loads (BLC 1 : Antenna D) (Continued)

	Member Label	Direction	Magnitude[lb,k-ft]	Location[ft,%]
8	MP3B	My	-.009	2.83
9	MP3B	Mz	-.032	2.83
10	MP3B	Y	-31.65	6.33
11	MP3B	My	-.009	6.33
12	MP3B	Mz	-.032	6.33
13	MP3C	Y	-31.65	2.83
14	MP3C	My	.032	2.83
15	MP3C	Mz	.009	2.83
16	MP3C	Y	-31.65	6.33
17	MP3C	My	.032	6.33
18	MP3C	Mz	.009	6.33
19	MP3A	Y	-31.65	2.83
20	MP3A	My	-.024	2.83
21	MP3A	Mz	-.024	2.83
22	MP3A	Y	-31.65	6.33
23	MP3A	My	-.024	6.33
24	MP3A	Mz	-.024	6.33
25	MP3B	Y	-31.65	2.83
26	MP3B	My	.032	2.83
27	MP3B	Mz	-.009	2.83
28	MP3B	Y	-31.65	6.33
29	MP3B	My	.032	6.33
30	MP3B	Mz	-.009	6.33
31	MP3C	Y	-31.65	2.83
32	MP3C	My	-.009	2.83
33	MP3C	Mz	.032	2.83
34	MP3C	Y	-31.65	6.33
35	MP3C	My	-.009	6.33
36	MP3C	Mz	.032	6.33
37	MP1A	Y	-10.5	2.5
38	MP1A	My	-.012	2.5
39	MP1A	Mz	0	2.5
40	MP1A	Y	-10.5	6.67
41	MP1A	My	-.012	6.67
42	MP1A	Mz	0	6.67
43	MP1B	Y	-10.5	2.5
44	MP1B	My	-.012	2.5
45	MP1B	Mz	0	2.5
46	MP1B	Y	-10.5	6.67
47	MP1B	My	-.012	6.67
48	MP1B	Mz	0	6.67
49	MP1C	Y	-10.5	2.5
50	MP1C	My	-.012	2.5
51	MP1C	Mz	0	2.5
52	MP1C	Y	-10.5	6.67
53	MP1C	My	-.012	6.67
54	MP1C	Mz	0	6.67
55	MP5A	Y	-10.5	2.5
56	MP5A	My	-.012	2.5
57	MP5A	Mz	0	2.5
58	MP5A	Y	-10.5	6.67
59	MP5A	My	-.012	6.67

Member Point Loads (BLC 1 : Antenna D) (Continued)

	Member Label	Direction	Magnitude[lb,k-ft]	Location[ft,%]
60	MP5A	Mz	0	6.67
61	MP5B	Y	-10.5	2.5
62	MP5B	My	-.012	2.5
63	MP5B	Mz	0	2.5
64	MP5B	Y	-10.5	6.67
65	MP5B	My	-.012	6.67
66	MP5B	Mz	0	6.67
67	MP5C	Y	-10.5	2.5
68	MP5C	My	-.012	2.5
69	MP5C	Mz	0	2.5
70	MP5C	Y	-10.5	6.67
71	MP5C	My	-.012	6.67
72	MP5C	Mz	0	6.67
73	MP2A	Y	-84.4	4.58
74	MP2A	My	.042	4.58
75	MP2A	Mz	0	4.58
76	MP2B	Y	-84.4	4.58
77	MP2B	My	-.021	4.58
78	MP2B	Mz	.037	4.58
79	MP2C	Y	-84.4	4.58
80	MP2C	My	-.021	4.58
81	MP2C	Mz	-.037	4.58
82	MP3A	Y	-70.3	4.58
83	MP3A	My	.035	4.58
84	MP3A	Mz	0	4.58
85	MP3B	Y	-70.3	4.58
86	MP3B	My	-.018	4.58
87	MP3B	Mz	.03	4.58
88	MP3C	Y	-70.3	4.58
89	MP3C	My	-.018	4.58
90	MP3C	Mz	-.03	4.58
91	MP3A	Y	-10.4	3.25
92	MP3A	My	.003	3.25
93	MP3A	Mz	0	3.25
94	MP3B	Y	-10.4	3.25
95	MP3B	My	-.002	3.25
96	MP3B	Mz	.003	3.25
97	MP3C	Y	-10.4	3.25
98	MP3C	My	-.002	3.25
99	MP3C	Mz	-.003	3.25
100	MP1A	Y	-32	4.58
101	MP1A	My	.016	4.58
102	MP1A	Mz	0	4.58
103	MP1B	Y	-32	4.58
104	MP1B	My	-.008	4.58
105	MP1B	Mz	.014	4.58
106	MP4A	Y	-43.55	3.58
107	MP4A	My	-.022	3.58
108	MP4A	Mz	0	3.58
109	MP4A	Y	-43.55	5.58
110	MP4A	My	-.022	5.58
111	MP4A	Mz	0	5.58

Member Point Loads (BLC 1 : Antenna D) (Continued)

	Member Label	Direction	Magnitude[lb,k-ft]	Location[ft,%]
112	MP4B	Y	-43.55	3.58
113	MP4B	My	.011	3.58
114	MP4B	Mz	-.019	3.58
115	MP4B	Y	-43.55	5.58
116	MP4B	My	.011	5.58
117	MP4B	Mz	-.019	5.58
118	MP4C	Y	-43.55	3.58
119	MP4C	My	.011	3.58
120	MP4C	Mz	.019	3.58
121	MP4C	Y	-43.55	5.58
122	MP4C	My	.011	5.58
123	MP4C	Mz	.019	5.58

Member Point Loads (BLC 2 : Antenna Di)

	Member Label	Direction	Magnitude[lb,k-ft]	Location[ft,%]
1	MP3A	Y	-107.642	2.83
2	MP3A	My	-.081	2.83
3	MP3A	Mz	.081	2.83
4	MP3A	Y	-107.642	6.33
5	MP3A	My	-.081	6.33
6	MP3A	Mz	.081	6.33
7	MP3B	Y	-107.642	2.83
8	MP3B	My	-.03	2.83
9	MP3B	Mz	-.11	2.83
10	MP3B	Y	-107.642	6.33
11	MP3B	My	-.03	6.33
12	MP3B	Mz	-.11	6.33
13	MP3C	Y	-107.642	2.83
14	MP3C	My	.11	2.83
15	MP3C	Mz	.03	2.83
16	MP3C	Y	-107.642	6.33
17	MP3C	My	.11	6.33
18	MP3C	Mz	.03	6.33
19	MP3A	Y	-107.642	2.83
20	MP3A	My	-.081	2.83
21	MP3A	Mz	-.081	2.83
22	MP3A	Y	-107.642	6.33
23	MP3A	My	-.081	6.33
24	MP3A	Mz	-.081	6.33
25	MP3B	Y	-107.642	2.83
26	MP3B	My	.11	2.83
27	MP3B	Mz	-.03	2.83
28	MP3B	Y	-107.642	6.33
29	MP3B	My	.11	6.33
30	MP3B	Mz	-.03	6.33
31	MP3C	Y	-107.642	2.83
32	MP3C	My	-.03	2.83
33	MP3C	Mz	.11	2.83
34	MP3C	Y	-107.642	6.33
35	MP3C	My	-.03	6.33
36	MP3C	Mz	.11	6.33

Member Point Loads (BLC 2 : Antenna Di) (Continued)

	Member Label	Direction	Magnitude[lb,k-ft]	Location[ft,%]
37	MP1A	Y	-90.54	2.5
38	MP1A	My	-.106	2.5
39	MP1A	Mz	0	2.5
40	MP1A	Y	-90.54	6.67
41	MP1A	My	-.106	6.67
42	MP1A	Mz	0	6.67
43	MP1B	Y	-90.54	2.5
44	MP1B	My	-.106	2.5
45	MP1B	Mz	0	2.5
46	MP1B	Y	-90.54	6.67
47	MP1B	My	-.106	6.67
48	MP1B	Mz	0	6.67
49	MP1C	Y	-90.54	2.5
50	MP1C	My	-.106	2.5
51	MP1C	Mz	0	2.5
52	MP1C	Y	-90.54	6.67
53	MP1C	My	-.106	6.67
54	MP1C	Mz	0	6.67
55	MP5A	Y	-90.54	2.5
56	MP5A	My	-.106	2.5
57	MP5A	Mz	0	2.5
58	MP5A	Y	-90.54	6.67
59	MP5A	My	-.106	6.67
60	MP5A	Mz	0	6.67
61	MP5B	Y	-90.54	2.5
62	MP5B	My	-.106	2.5
63	MP5B	Mz	0	2.5
64	MP5B	Y	-90.54	6.67
65	MP5B	My	-.106	6.67
66	MP5B	Mz	0	6.67
67	MP5C	Y	-90.54	2.5
68	MP5C	My	-.106	2.5
69	MP5C	Mz	0	2.5
70	MP5C	Y	-90.54	6.67
71	MP5C	My	-.106	6.67
72	MP5C	Mz	0	6.67
73	MP2A	Y	-70.269	4.58
74	MP2A	My	.035	4.58
75	MP2A	Mz	0	4.58
76	MP2B	Y	-70.269	4.58
77	MP2B	My	-.018	4.58
78	MP2B	Mz	.03	4.58
79	MP2C	Y	-70.269	4.58
80	MP2C	My	-.018	4.58
81	MP2C	Mz	-.03	4.58
82	MP3A	Y	-63.431	4.58
83	MP3A	My	.032	4.58
84	MP3A	Mz	0	4.58
85	MP3B	Y	-63.431	4.58
86	MP3B	My	-.016	4.58
87	MP3B	Mz	.027	4.58
88	MP3C	Y	-63.431	4.58

Member Point Loads (BLC 2 : Antenna Di) (Continued)

	Member Label	Direction	Magnitude[lb,k-ft]	Location[ft,%]
89	MP3C	My	-.016	4.58
90	MP3C	Mz	-.027	4.58
91	MP3A	Y	-17.888	3.25
92	MP3A	My	.006	3.25
93	MP3A	Mz	0	3.25
94	MP3B	Y	-17.888	3.25
95	MP3B	My	-.003	3.25
96	MP3B	Mz	.005	3.25
97	MP3C	Y	-17.888	3.25
98	MP3C	My	-.003	3.25
99	MP3C	Mz	-.005	3.25
100	MP1A	Y	-117.408	4.58
101	MP1A	My	.059	4.58
102	MP1A	Mz	0	4.58
103	MP1B	Y	-117.408	4.58
104	MP1B	My	-.029	4.58
105	MP1B	Mz	.051	4.58
106	MP4A	Y	-55.311	3.58
107	MP4A	My	-.028	3.58
108	MP4A	Mz	0	3.58
109	MP4A	Y	-55.311	5.58
110	MP4A	My	-.028	5.58
111	MP4A	Mz	0	5.58
112	MP4B	Y	-55.311	3.58
113	MP4B	My	.014	3.58
114	MP4B	Mz	-.024	3.58
115	MP4B	Y	-55.311	5.58
116	MP4B	My	.014	5.58
117	MP4B	Mz	-.024	5.58
118	MP4C	Y	-55.311	3.58
119	MP4C	My	.014	3.58
120	MP4C	Mz	.024	3.58
121	MP4C	Y	-55.311	5.58
122	MP4C	My	.014	5.58
123	MP4C	Mz	.024	5.58

Member Point Loads (BLC 3 : Antenna Wo (0 Deg))

	Member Label	Direction	Magnitude[lb,k-ft]	Location[ft,%]
1	MP3A	X	0	2.83
2	MP3A	Z	-142.239	2.83
3	MP3A	Mx	-.107	2.83
4	MP3A	X	0	6.33
5	MP3A	Z	-142.239	6.33
6	MP3A	Mx	-.107	6.33
7	MP3B	X	0	2.83
8	MP3B	Z	-105.625	2.83
9	MP3B	Mx	.108	2.83
10	MP3B	X	0	6.33
11	MP3B	Z	-105.625	6.33
12	MP3B	Mx	.108	6.33
13	MP3C	X	0	2.83

Member Point Loads (BLC 3 : Antenna Wo (0 Deg)) (Continued)

	Member Label	Direction	Magnitude[lb,k-ft]	Location[ft,%]
14	MP3C	Z	-105.625	2.83
15	MP3C	Mx	-.029	2.83
16	MP3C	X	0	6.33
17	MP3C	Z	-105.625	6.33
18	MP3C	Mx	-.029	6.33
19	MP3A	X	0	2.83
20	MP3A	Z	-142.239	2.83
21	MP3A	Mx	.107	2.83
22	MP3A	X	0	6.33
23	MP3A	Z	-142.239	6.33
24	MP3A	Mx	.107	6.33
25	MP3B	X	0	2.83
26	MP3B	Z	-105.625	2.83
27	MP3B	Mx	.029	2.83
28	MP3B	X	0	6.33
29	MP3B	Z	-105.625	6.33
30	MP3B	Mx	.029	6.33
31	MP3C	X	0	2.83
32	MP3C	Z	-105.625	2.83
33	MP3C	Mx	-.108	2.83
34	MP3C	X	0	6.33
35	MP3C	Z	-105.625	6.33
36	MP3C	Mx	-.108	6.33
37	MP1A	X	0	2.5
38	MP1A	Z	-67.607	2.5
39	MP1A	Mx	0	2.5
40	MP1A	X	0	6.67
41	MP1A	Z	-67.607	6.67
42	MP1A	Mx	0	6.67
43	MP1B	X	0	2.5
44	MP1B	Z	-67.607	2.5
45	MP1B	Mx	0	2.5
46	MP1B	X	0	6.67
47	MP1B	Z	-67.607	6.67
48	MP1B	Mx	0	6.67
49	MP1C	X	0	2.5
50	MP1C	Z	-67.607	2.5
51	MP1C	Mx	0	2.5
52	MP1C	X	0	6.67
53	MP1C	Z	-67.607	6.67
54	MP1C	Mx	0	6.67
55	MP5A	X	0	2.5
56	MP5A	Z	-67.607	2.5
57	MP5A	Mx	0	2.5
58	MP5A	X	0	6.67
59	MP5A	Z	-67.607	6.67
60	MP5A	Mx	0	6.67
61	MP5B	X	0	2.5
62	MP5B	Z	-67.607	2.5
63	MP5B	Mx	0	2.5
64	MP5B	X	0	6.67
65	MP5B	Z	-67.607	6.67

Member Point Loads (BLC 3 : Antenna Wo (0 Deg)) (Continued)

	Member Label	Direction	Magnitude[lb,k-ft]	Location[ft,%]
66	MP5B	Mx	0	6.67
67	MP5C	X	0	2.5
68	MP5C	Z	-67.607	2.5
69	MP5C	Mx	0	2.5
70	MP5C	X	0	6.67
71	MP5C	Z	-67.607	6.67
72	MP5C	Mx	0	6.67
73	MP2A	X	0	4.58
74	MP2A	Z	-58.395	4.58
75	MP2A	Mx	0	4.58
76	MP2B	X	0	4.58
77	MP2B	Z	-43.874	4.58
78	MP2B	Mx	-.019	4.58
79	MP2C	X	0	4.58
80	MP2C	Z	-43.874	4.58
81	MP2C	Mx	.019	4.58
82	MP3A	X	0	4.58
83	MP3A	Z	-58.395	4.58
84	MP3A	Mx	0	4.58
85	MP3B	X	0	4.58
86	MP3B	Z	-38.312	4.58
87	MP3B	Mx	-.017	4.58
88	MP3C	X	0	4.58
89	MP3C	Z	-38.312	4.58
90	MP3C	Mx	.017	4.58
91	MP3A	X	0	3.25
92	MP3A	Z	-11.554	3.25
93	MP3A	Mx	0	3.25
94	MP3B	X	0	3.25
95	MP3B	Z	-8.884	3.25
96	MP3B	Mx	-.003	3.25
97	MP3C	X	0	3.25
98	MP3C	Z	-8.884	3.25
99	MP3C	Mx	.003	3.25
100	MP1A	X	0	4.58
101	MP1A	Z	-118.35	4.58
102	MP1A	Mx	0	4.58
103	MP1B	X	0	4.58
104	MP1B	Z	-88.342	4.58
105	MP1B	Mx	-.038	4.58
106	MP4A	X	0	3.58
107	MP4A	Z	-73.384	3.58
108	MP4A	Mx	0	3.58
109	MP4A	X	0	5.58
110	MP4A	Z	-73.384	5.58
111	MP4A	Mx	0	5.58
112	MP4B	X	0	3.58
113	MP4B	Z	-39.893	3.58
114	MP4B	Mx	.017	3.58
115	MP4B	X	0	5.58
116	MP4B	Z	-39.893	5.58
117	MP4B	Mx	.017	5.58

Member Point Loads (BLC 3 : Antenna Wo (0 Deg)) (Continued)

	Member Label	Direction	Magnitude[lb,k-ft]	Location[ft,%]
118	MP4C	X	0	3.58
119	MP4C	Z	-39.893	3.58
120	MP4C	Mx	-.017	3.58
121	MP4C	X	0	5.58
122	MP4C	Z	-39.893	5.58
123	MP4C	Mx	-.017	5.58

Member Point Loads (BLC 4 : Antenna Wo (30 Deg))

	Member Label	Direction	Magnitude[lb,k-ft]	Location[ft,%]
1	MP3A	X	65.017	2.83
2	MP3A	Z	-112.613	2.83
3	MP3A	Mx	-.133	2.83
4	MP3A	X	65.017	6.33
5	MP3A	Z	-112.613	6.33
6	MP3A	Mx	-.133	6.33
7	MP3B	X	46.71	2.83
8	MP3B	Z	-80.905	2.83
9	MP3B	Mx	.07	2.83
10	MP3B	X	46.71	6.33
11	MP3B	Z	-80.905	6.33
12	MP3B	Mx	.07	6.33
13	MP3C	X	65.017	2.83
14	MP3C	Z	-112.613	2.83
15	MP3C	Mx	.036	2.83
16	MP3C	X	65.017	6.33
17	MP3C	Z	-112.613	6.33
18	MP3C	Mx	.036	6.33
19	MP3A	X	65.017	2.83
20	MP3A	Z	-112.613	2.83
21	MP3A	Mx	.036	2.83
22	MP3A	X	65.017	6.33
23	MP3A	Z	-112.613	6.33
24	MP3A	Mx	.036	6.33
25	MP3B	X	46.71	2.83
26	MP3B	Z	-80.905	2.83
27	MP3B	Mx	.07	2.83
28	MP3B	X	46.71	6.33
29	MP3B	Z	-80.905	6.33
30	MP3B	Mx	.07	6.33
31	MP3C	X	65.017	2.83
32	MP3C	Z	-112.613	2.83
33	MP3C	Mx	-.133	2.83
34	MP3C	X	65.017	6.33
35	MP3C	Z	-112.613	6.33
36	MP3C	Mx	-.133	6.33
37	MP1A	X	42.192	2.5
38	MP1A	Z	-73.079	2.5
39	MP1A	Mx	-.049	2.5
40	MP1A	X	42.192	6.67
41	MP1A	Z	-73.079	6.67
42	MP1A	Mx	-.049	6.67

Member Point Loads (BLC 4 : Antenna Wo (30 Deg)) (Continued)

	Member Label	Direction	Magnitude[lb,k-ft]	Location[ft,%]
43	MP1B	X	42.192	2.5
44	MP1B	Z	-73.079	2.5
45	MP1B	Mx	-.049	2.5
46	MP1B	X	42.192	6.67
47	MP1B	Z	-73.079	6.67
48	MP1B	Mx	-.049	6.67
49	MP1C	X	42.192	2.5
50	MP1C	Z	-73.079	2.5
51	MP1C	Mx	-.049	2.5
52	MP1C	X	42.192	6.67
53	MP1C	Z	-73.079	6.67
54	MP1C	Mx	-.049	6.67
55	MP5A	X	42.192	2.5
56	MP5A	Z	-73.079	2.5
57	MP5A	Mx	-.049	2.5
58	MP5A	X	42.192	6.67
59	MP5A	Z	-73.079	6.67
60	MP5A	Mx	-.049	6.67
61	MP5B	X	42.192	2.5
62	MP5B	Z	-73.079	2.5
63	MP5B	Mx	-.049	2.5
64	MP5B	X	42.192	6.67
65	MP5B	Z	-73.079	6.67
66	MP5B	Mx	-.049	6.67
67	MP5C	X	42.192	2.5
68	MP5C	Z	-73.079	2.5
69	MP5C	Mx	-.049	2.5
70	MP5C	X	42.192	6.67
71	MP5C	Z	-73.079	6.67
72	MP5C	Mx	-.049	6.67
73	MP2A	X	26.777	4.58
74	MP2A	Z	-46.379	4.58
75	MP2A	Mx	.013	4.58
76	MP2B	X	19.517	4.58
77	MP2B	Z	-33.804	4.58
78	MP2B	Mx	-.02	4.58
79	MP2C	X	26.777	4.58
80	MP2C	Z	-46.379	4.58
81	MP2C	Mx	.013	4.58
82	MP3A	X	25.85	4.58
83	MP3A	Z	-44.774	4.58
84	MP3A	Mx	.013	4.58
85	MP3B	X	15.809	4.58
86	MP3B	Z	-27.381	4.58
87	MP3B	Mx	-.016	4.58
88	MP3C	X	25.85	4.58
89	MP3C	Z	-44.774	4.58
90	MP3C	Mx	.013	4.58
91	MP3A	X	5.332	3.25
92	MP3A	Z	-9.235	3.25
93	MP3A	Mx	.002	3.25
94	MP3B	X	3.997	3.25

Member Point Loads (BLC 4 : Antenna Wo (30 Deg)) (Continued)

	Member Label	Direction	Magnitude[lb,k-ft]	Location[ft,%]
95	MP3B	Z	-6.923	3.25
96	MP3B	Mx	-.003	3.25
97	MP3C	X	5.332	3.25
98	MP3C	Z	-9.235	3.25
99	MP3C	Mx	.002	3.25
100	MP1A	X	54.174	4.58
101	MP1A	Z	-93.832	4.58
102	MP1A	Mx	.027	4.58
103	MP1B	X	39.169	4.58
104	MP1B	Z	-67.843	4.58
105	MP1B	Mx	-.039	4.58
106	MP4A	X	31.11	3.58
107	MP4A	Z	-53.884	3.58
108	MP4A	Mx	-.016	3.58
109	MP4A	X	31.11	5.58
110	MP4A	Z	-53.884	5.58
111	MP4A	Mx	-.016	5.58
112	MP4B	X	14.365	3.58
113	MP4B	Z	-24.88	3.58
114	MP4B	Mx	.014	3.58
115	MP4B	X	14.365	5.58
116	MP4B	Z	-24.88	5.58
117	MP4B	Mx	.014	5.58
118	MP4C	X	31.11	3.58
119	MP4C	Z	-53.884	3.58
120	MP4C	Mx	-.016	3.58
121	MP4C	X	31.11	5.58
122	MP4C	Z	-53.884	5.58
123	MP4C	Mx	-.016	5.58

Member Point Loads (BLC 5 : Antenna Wo (60 Deg))

	Member Label	Direction	Magnitude[lb,k-ft]	Location[ft,%]
1	MP3A	X	91.474	2.83
2	MP3A	Z	-52.813	2.83
3	MP3A	Mx	-.108	2.83
4	MP3A	X	91.474	6.33
5	MP3A	Z	-52.813	6.33
6	MP3A	Mx	-.108	6.33
7	MP3B	X	91.474	2.83
8	MP3B	Z	-52.813	2.83
9	MP3B	Mx	.029	2.83
10	MP3B	X	91.474	6.33
11	MP3B	Z	-52.813	6.33
12	MP3B	Mx	.029	6.33
13	MP3C	X	123.183	2.83
14	MP3C	Z	-71.12	2.83
15	MP3C	Mx	.107	2.83
16	MP3C	X	123.183	6.33
17	MP3C	Z	-71.12	6.33
18	MP3C	Mx	.107	6.33
19	MP3A	X	91.474	2.83

Member Point Loads (BLC 5 : Antenna Wo (60 Deg)) (Continued)

	Member Label	Direction	Magnitude[lb,k-ft]	Location[ft,%]
20	MP3A	Z	-52.813	2.83
21	MP3A	Mx	-.029	2.83
22	MP3A	X	91.474	6.33
23	MP3A	Z	-52.813	6.33
24	MP3A	Mx	-.029	6.33
25	MP3B	X	91.474	2.83
26	MP3B	Z	-52.813	2.83
27	MP3B	Mx	.108	2.83
28	MP3B	X	91.474	6.33
29	MP3B	Z	-52.813	6.33
30	MP3B	Mx	.108	6.33
31	MP3C	X	123.183	2.83
32	MP3C	Z	-71.12	2.83
33	MP3C	Mx	-.107	2.83
34	MP3C	X	123.183	6.33
35	MP3C	Z	-71.12	6.33
36	MP3C	Mx	-.107	6.33
37	MP1A	X	102.14	2.5
38	MP1A	Z	-58.97	2.5
39	MP1A	Mx	-.119	2.5
40	MP1A	X	102.14	6.67
41	MP1A	Z	-58.97	6.67
42	MP1A	Mx	-.119	6.67
43	MP1B	X	102.14	2.5
44	MP1B	Z	-58.97	2.5
45	MP1B	Mx	-.119	2.5
46	MP1B	X	102.14	6.67
47	MP1B	Z	-58.97	6.67
48	MP1B	Mx	-.119	6.67
49	MP1C	X	102.14	2.5
50	MP1C	Z	-58.97	2.5
51	MP1C	Mx	-.119	2.5
52	MP1C	X	102.14	6.67
53	MP1C	Z	-58.97	6.67
54	MP1C	Mx	-.119	6.67
55	MP5A	X	102.14	2.5
56	MP5A	Z	-58.97	2.5
57	MP5A	Mx	-.119	2.5
58	MP5A	X	102.14	6.67
59	MP5A	Z	-58.97	6.67
60	MP5A	Mx	-.119	6.67
61	MP5B	X	102.14	2.5
62	MP5B	Z	-58.97	2.5
63	MP5B	Mx	-.119	2.5
64	MP5B	X	102.14	6.67
65	MP5B	Z	-58.97	6.67
66	MP5B	Mx	-.119	6.67
67	MP5C	X	102.14	2.5
68	MP5C	Z	-58.97	2.5
69	MP5C	Mx	-.119	2.5
70	MP5C	X	102.14	6.67
71	MP5C	Z	-58.97	6.67

Member Point Loads (BLC 5 : Antenna Wo (60 Deg)) (Continued)

	Member Label	Direction	Magnitude[lb,k-ft]	Location[ft,%]
72	MP5C	Mx	-.119	6.67
73	MP2A	X	37.996	4.58
74	MP2A	Z	-21.937	4.58
75	MP2A	Mx	.019	4.58
76	MP2B	X	37.996	4.58
77	MP2B	Z	-21.937	4.58
78	MP2B	Mx	-.019	4.58
79	MP2C	X	50.571	4.58
80	MP2C	Z	-29.197	4.58
81	MP2C	Mx	0	4.58
82	MP3A	X	33.179	4.58
83	MP3A	Z	-19.156	4.58
84	MP3A	Mx	.017	4.58
85	MP3B	X	33.179	4.58
86	MP3B	Z	-19.156	4.58
87	MP3B	Mx	-.017	4.58
88	MP3C	X	50.571	4.58
89	MP3C	Z	-29.197	4.58
90	MP3C	Mx	0	4.58
91	MP3A	X	7.694	3.25
92	MP3A	Z	-4.442	3.25
93	MP3A	Mx	.003	3.25
94	MP3B	X	7.694	3.25
95	MP3B	Z	-4.442	3.25
96	MP3B	Mx	-.003	3.25
97	MP3C	X	10.006	3.25
98	MP3C	Z	-5.777	3.25
99	MP3C	Mx	0	3.25
100	MP1A	X	76.506	4.58
101	MP1A	Z	-44.171	4.58
102	MP1A	Mx	.038	4.58
103	MP1B	X	76.506	4.58
104	MP1B	Z	-44.171	4.58
105	MP1B	Mx	-.038	4.58
106	MP4A	X	34.548	3.58
107	MP4A	Z	-19.947	3.58
108	MP4A	Mx	-.017	3.58
109	MP4A	X	34.548	5.58
110	MP4A	Z	-19.947	5.58
111	MP4A	Mx	-.017	5.58
112	MP4B	X	34.548	3.58
113	MP4B	Z	-19.947	3.58
114	MP4B	Mx	.017	3.58
115	MP4B	X	34.548	5.58
116	MP4B	Z	-19.947	5.58
117	MP4B	Mx	.017	5.58
118	MP4C	X	63.552	3.58
119	MP4C	Z	-36.692	3.58
120	MP4C	Mx	0	3.58
121	MP4C	X	63.552	5.58
122	MP4C	Z	-36.692	5.58
123	MP4C	Mx	0	5.58

Member Point Loads (BLC 6 : Antenna Wo (90 Deg))

	Member Label	Direction	Magnitude[lb,k-ft]	Location[ft,%]
1	MP3A	X	93.421	2.83
2	MP3A	Z	0	2.83
3	MP3A	Mx	-.07	2.83
4	MP3A	X	93.421	6.33
5	MP3A	Z	0	6.33
6	MP3A	Mx	-.07	6.33
7	MP3B	X	130.035	2.83
8	MP3B	Z	0	2.83
9	MP3B	Mx	-.036	2.83
10	MP3B	X	130.035	6.33
11	MP3B	Z	0	6.33
12	MP3B	Mx	-.036	6.33
13	MP3C	X	130.035	2.83
14	MP3C	Z	0	2.83
15	MP3C	Mx	.133	2.83
16	MP3C	X	130.035	6.33
17	MP3C	Z	0	6.33
18	MP3C	Mx	.133	6.33
19	MP3A	X	93.421	2.83
20	MP3A	Z	0	2.83
21	MP3A	Mx	-.07	2.83
22	MP3A	X	93.421	6.33
23	MP3A	Z	0	6.33
24	MP3A	Mx	-.07	6.33
25	MP3B	X	130.035	2.83
26	MP3B	Z	0	2.83
27	MP3B	Mx	.133	2.83
28	MP3B	X	130.035	6.33
29	MP3B	Z	0	6.33
30	MP3B	Mx	.133	6.33
31	MP3C	X	130.035	2.83
32	MP3C	Z	0	2.83
33	MP3C	Mx	-.036	2.83
34	MP3C	X	130.035	6.33
35	MP3C	Z	0	6.33
36	MP3C	Mx	-.036	6.33
37	MP1A	X	134.719	2.5
38	MP1A	Z	0	2.5
39	MP1A	Mx	-.157	2.5
40	MP1A	X	134.719	6.67
41	MP1A	Z	0	6.67
42	MP1A	Mx	-.157	6.67
43	MP1B	X	134.719	2.5
44	MP1B	Z	0	2.5
45	MP1B	Mx	-.157	2.5
46	MP1B	X	134.719	6.67
47	MP1B	Z	0	6.67
48	MP1B	Mx	-.157	6.67
49	MP1C	X	134.719	2.5
50	MP1C	Z	0	2.5
51	MP1C	Mx	-.157	2.5
52	MP1C	X	134.719	6.67

Member Point Loads (BLC 6 : Antenna Wo (90 Deg)) (Continued)

	Member Label	Direction	Magnitude[lb,k-ft]	Location[ft,%]
53	MP1C	Z	0	6.67
54	MP1C	Mx	-.157	6.67
55	MP5A	X	134.719	2.5
56	MP5A	Z	0	2.5
57	MP5A	Mx	-.157	2.5
58	MP5A	X	134.719	6.67
59	MP5A	Z	0	6.67
60	MP5A	Mx	-.157	6.67
61	MP5B	X	134.719	2.5
62	MP5B	Z	0	2.5
63	MP5B	Mx	-.157	2.5
64	MP5B	X	134.719	6.67
65	MP5B	Z	0	6.67
66	MP5B	Mx	-.157	6.67
67	MP5C	X	134.719	2.5
68	MP5C	Z	0	2.5
69	MP5C	Mx	-.157	2.5
70	MP5C	X	134.719	6.67
71	MP5C	Z	0	6.67
72	MP5C	Mx	-.157	6.67
73	MP2A	X	39.034	4.58
74	MP2A	Z	0	4.58
75	MP2A	Mx	.02	4.58
76	MP2B	X	53.554	4.58
77	MP2B	Z	0	4.58
78	MP2B	Mx	-.013	4.58
79	MP2C	X	53.554	4.58
80	MP2C	Z	0	4.58
81	MP2C	Mx	-.013	4.58
82	MP3A	X	31.617	4.58
83	MP3A	Z	0	4.58
84	MP3A	Mx	.016	4.58
85	MP3B	X	51.7	4.58
86	MP3B	Z	0	4.58
87	MP3B	Mx	-.013	4.58
88	MP3C	X	51.7	4.58
89	MP3C	Z	0	4.58
90	MP3C	Mx	-.013	4.58
91	MP3A	X	7.994	3.25
92	MP3A	Z	0	3.25
93	MP3A	Mx	.003	3.25
94	MP3B	X	10.664	3.25
95	MP3B	Z	0	3.25
96	MP3B	Mx	-.002	3.25
97	MP3C	X	10.664	3.25
98	MP3C	Z	0	3.25
99	MP3C	Mx	-.002	3.25
100	MP1A	X	78.339	4.58
101	MP1A	Z	0	4.58
102	MP1A	Mx	.039	4.58
103	MP1B	X	108.347	4.58
104	MP1B	Z	0	4.58

Member Point Loads (BLC 6 : Antenna Wo (90 Deg)) (Continued)

	Member Label	Direction	Magnitude[lb,k-ft]	Location[ft,%]
105	MP1B	Mx	-.027	4.58
106	MP4A	X	28.73	3.58
107	MP4A	Z	0	3.58
108	MP4A	Mx	-.014	3.58
109	MP4A	X	28.73	5.58
110	MP4A	Z	0	5.58
111	MP4A	Mx	-.014	5.58
112	MP4B	X	62.22	3.58
113	MP4B	Z	0	3.58
114	MP4B	Mx	.016	3.58
115	MP4B	X	62.22	5.58
116	MP4B	Z	0	5.58
117	MP4B	Mx	.016	5.58
118	MP4C	X	62.22	3.58
119	MP4C	Z	0	3.58
120	MP4C	Mx	.016	3.58
121	MP4C	X	62.22	5.58
122	MP4C	Z	0	5.58
123	MP4C	Mx	.016	5.58

Member Point Loads (BLC 7 : Antenna Wo (120 Deg))

	Member Label	Direction	Magnitude[lb,k-ft]	Location[ft,%]
1	MP3A	X	91.474	2.83
2	MP3A	Z	52.813	2.83
3	MP3A	Mx	-.029	2.83
4	MP3A	X	91.474	6.33
5	MP3A	Z	52.813	6.33
6	MP3A	Mx	-.029	6.33
7	MP3B	X	123.183	2.83
8	MP3B	Z	71.12	2.83
9	MP3B	Mx	-.107	2.83
10	MP3B	X	123.183	6.33
11	MP3B	Z	71.12	6.33
12	MP3B	Mx	-.107	6.33
13	MP3C	X	91.474	2.83
14	MP3C	Z	52.813	2.83
15	MP3C	Mx	.108	2.83
16	MP3C	X	91.474	6.33
17	MP3C	Z	52.813	6.33
18	MP3C	Mx	.108	6.33
19	MP3A	X	91.474	2.83
20	MP3A	Z	52.813	2.83
21	MP3A	Mx	-.108	2.83
22	MP3A	X	91.474	6.33
23	MP3A	Z	52.813	6.33
24	MP3A	Mx	-.108	6.33
25	MP3B	X	123.183	2.83
26	MP3B	Z	71.12	2.83
27	MP3B	Mx	.107	2.83
28	MP3B	X	123.183	6.33
29	MP3B	Z	71.12	6.33

Member Point Loads (BLC 7 : Antenna Wo (120 Deg)) (Continued)

	Member Label	Direction	Magnitude[lb,k-ft]	Location[ft,%]
30	MP3B	Mx	.107	6.33
31	MP3C	X	91.474	2.83
32	MP3C	Z	52.813	2.83
33	MP3C	Mx	.029	2.83
34	MP3C	X	91.474	6.33
35	MP3C	Z	52.813	6.33
36	MP3C	Mx	.029	6.33
37	MP1A	X	102.14	2.5
38	MP1A	Z	58.97	2.5
39	MP1A	Mx	-.119	2.5
40	MP1A	X	102.14	6.67
41	MP1A	Z	58.97	6.67
42	MP1A	Mx	-.119	6.67
43	MP1B	X	102.14	2.5
44	MP1B	Z	58.97	2.5
45	MP1B	Mx	-.119	2.5
46	MP1B	X	102.14	6.67
47	MP1B	Z	58.97	6.67
48	MP1B	Mx	-.119	6.67
49	MP1C	X	102.14	2.5
50	MP1C	Z	58.97	2.5
51	MP1C	Mx	-.119	2.5
52	MP1C	X	102.14	6.67
53	MP1C	Z	58.97	6.67
54	MP1C	Mx	-.119	6.67
55	MP5A	X	102.14	2.5
56	MP5A	Z	58.97	2.5
57	MP5A	Mx	-.119	2.5
58	MP5A	X	102.14	6.67
59	MP5A	Z	58.97	6.67
60	MP5A	Mx	-.119	6.67
61	MP5B	X	102.14	2.5
62	MP5B	Z	58.97	2.5
63	MP5B	Mx	-.119	2.5
64	MP5B	X	102.14	6.67
65	MP5B	Z	58.97	6.67
66	MP5B	Mx	-.119	6.67
67	MP5C	X	102.14	2.5
68	MP5C	Z	58.97	2.5
69	MP5C	Mx	-.119	2.5
70	MP5C	X	102.14	6.67
71	MP5C	Z	58.97	6.67
72	MP5C	Mx	-.119	6.67
73	MP2A	X	37.996	4.58
74	MP2A	Z	21.937	4.58
75	MP2A	Mx	.019	4.58
76	MP2B	X	50.571	4.58
77	MP2B	Z	29.197	4.58
78	MP2B	Mx	0	4.58
79	MP2C	X	37.996	4.58
80	MP2C	Z	21.937	4.58
81	MP2C	Mx	-.019	4.58

Member Point Loads (BLC 7 : Antenna Wo (120 Deg)) (Continued)

	Member Label	Direction	Magnitude[lb,k-ft]	Location[ft,%]
82	MP3A	X	33.179	4.58
83	MP3A	Z	19.156	4.58
84	MP3A	Mx	.017	4.58
85	MP3B	X	50.571	4.58
86	MP3B	Z	29.197	4.58
87	MP3B	Mx	0	4.58
88	MP3C	X	33.179	4.58
89	MP3C	Z	19.156	4.58
90	MP3C	Mx	-.017	4.58
91	MP3A	X	7.694	3.25
92	MP3A	Z	4.442	3.25
93	MP3A	Mx	.003	3.25
94	MP3B	X	10.006	3.25
95	MP3B	Z	5.777	3.25
96	MP3B	Mx	0	3.25
97	MP3C	X	7.694	3.25
98	MP3C	Z	4.442	3.25
99	MP3C	Mx	-.003	3.25
100	MP1A	X	76.506	4.58
101	MP1A	Z	44.171	4.58
102	MP1A	Mx	.038	4.58
103	MP1B	X	102.494	4.58
104	MP1B	Z	59.175	4.58
105	MP1B	Mx	0	4.58
106	MP4A	X	34.548	3.58
107	MP4A	Z	19.947	3.58
108	MP4A	Mx	-.017	3.58
109	MP4A	X	34.548	5.58
110	MP4A	Z	19.947	5.58
111	MP4A	Mx	-.017	5.58
112	MP4B	X	63.552	3.58
113	MP4B	Z	36.692	3.58
114	MP4B	Mx	0	3.58
115	MP4B	X	63.552	5.58
116	MP4B	Z	36.692	5.58
117	MP4B	Mx	0	5.58
118	MP4C	X	34.548	3.58
119	MP4C	Z	19.947	3.58
120	MP4C	Mx	.017	3.58
121	MP4C	X	34.548	5.58
122	MP4C	Z	19.947	5.58
123	MP4C	Mx	.017	5.58

Member Point Loads (BLC 8 : Antenna Wo (150 Deg))

	Member Label	Direction	Magnitude[lb,k-ft]	Location[ft,%]
1	MP3A	X	65.017	2.83
2	MP3A	Z	112.613	2.83
3	MP3A	Mx	.036	2.83
4	MP3A	X	65.017	6.33
5	MP3A	Z	112.613	6.33
6	MP3A	Mx	.036	6.33

Member Point Loads (BLC 8 : Antenna Wo (150 Deg)) (Continued)

	Member Label	Direction	Magnitude[lb,k-ft]	Location[ft,%]
7	MP3B	X	65.017	2.83
8	MP3B	Z	112.613	2.83
9	MP3B	Mx	-.133	2.83
10	MP3B	X	65.017	6.33
11	MP3B	Z	112.613	6.33
12	MP3B	Mx	-.133	6.33
13	MP3C	X	46.71	2.83
14	MP3C	Z	80.905	2.83
15	MP3C	Mx	.07	2.83
16	MP3C	X	46.71	6.33
17	MP3C	Z	80.905	6.33
18	MP3C	Mx	.07	6.33
19	MP3A	X	65.017	2.83
20	MP3A	Z	112.613	2.83
21	MP3A	Mx	-.133	2.83
22	MP3A	X	65.017	6.33
23	MP3A	Z	112.613	6.33
24	MP3A	Mx	-.133	6.33
25	MP3B	X	65.017	2.83
26	MP3B	Z	112.613	2.83
27	MP3B	Mx	.036	2.83
28	MP3B	X	65.017	6.33
29	MP3B	Z	112.613	6.33
30	MP3B	Mx	.036	6.33
31	MP3C	X	46.71	2.83
32	MP3C	Z	80.905	2.83
33	MP3C	Mx	.07	2.83
34	MP3C	X	46.71	6.33
35	MP3C	Z	80.905	6.33
36	MP3C	Mx	.07	6.33
37	MP1A	X	42.192	2.5
38	MP1A	Z	73.079	2.5
39	MP1A	Mx	-.049	2.5
40	MP1A	X	42.192	6.67
41	MP1A	Z	73.079	6.67
42	MP1A	Mx	-.049	6.67
43	MP1B	X	42.192	2.5
44	MP1B	Z	73.079	2.5
45	MP1B	Mx	-.049	2.5
46	MP1B	X	42.192	6.67
47	MP1B	Z	73.079	6.67
48	MP1B	Mx	-.049	6.67
49	MP1C	X	42.192	2.5
50	MP1C	Z	73.079	2.5
51	MP1C	Mx	-.049	2.5
52	MP1C	X	42.192	6.67
53	MP1C	Z	73.079	6.67
54	MP1C	Mx	-.049	6.67
55	MP5A	X	42.192	2.5
56	MP5A	Z	73.079	2.5
57	MP5A	Mx	-.049	2.5
58	MP5A	X	42.192	6.67

Member Point Loads (BLC 8 : Antenna Wo (150 Deg)) (Continued)

	Member Label	Direction	Magnitude[lb,k-ft]	Location[ft,%]
59	MP5A	Z	73.079	6.67
60	MP5A	Mx	-.049	6.67
61	MP5B	X	42.192	2.5
62	MP5B	Z	73.079	2.5
63	MP5B	Mx	-.049	2.5
64	MP5B	X	42.192	6.67
65	MP5B	Z	73.079	6.67
66	MP5B	Mx	-.049	6.67
67	MP5C	X	42.192	2.5
68	MP5C	Z	73.079	2.5
69	MP5C	Mx	-.049	2.5
70	MP5C	X	42.192	6.67
71	MP5C	Z	73.079	6.67
72	MP5C	Mx	-.049	6.67
73	MP2A	X	26.777	4.58
74	MP2A	Z	46.379	4.58
75	MP2A	Mx	.013	4.58
76	MP2B	X	26.777	4.58
77	MP2B	Z	46.379	4.58
78	MP2B	Mx	.013	4.58
79	MP2C	X	19.517	4.58
80	MP2C	Z	33.804	4.58
81	MP2C	Mx	-.02	4.58
82	MP3A	X	25.85	4.58
83	MP3A	Z	44.774	4.58
84	MP3A	Mx	.013	4.58
85	MP3B	X	25.85	4.58
86	MP3B	Z	44.774	4.58
87	MP3B	Mx	.013	4.58
88	MP3C	X	15.809	4.58
89	MP3C	Z	27.381	4.58
90	MP3C	Mx	-.016	4.58
91	MP3A	X	5.332	3.25
92	MP3A	Z	9.235	3.25
93	MP3A	Mx	.002	3.25
94	MP3B	X	5.332	3.25
95	MP3B	Z	9.235	3.25
96	MP3B	Mx	.002	3.25
97	MP3C	X	3.997	3.25
98	MP3C	Z	6.923	3.25
99	MP3C	Mx	-.003	3.25
100	MP1A	X	54.174	4.58
101	MP1A	Z	93.832	4.58
102	MP1A	Mx	.027	4.58
103	MP1B	X	54.174	4.58
104	MP1B	Z	93.832	4.58
105	MP1B	Mx	.027	4.58
106	MP4A	X	31.11	3.58
107	MP4A	Z	53.884	3.58
108	MP4A	Mx	-.016	3.58
109	MP4A	X	31.11	5.58
110	MP4A	Z	53.884	5.58

Member Point Loads (BLC 8 : Antenna Wo (150 Deg)) (Continued)

	Member Label	Direction	Magnitude[lb,k-ft]	Location[ft,%]
111	MP4A	Mx	-.016	5.58
112	MP4B	X	31.11	3.58
113	MP4B	Z	53.884	3.58
114	MP4B	Mx	-.016	3.58
115	MP4B	X	31.11	5.58
116	MP4B	Z	53.884	5.58
117	MP4B	Mx	-.016	5.58
118	MP4C	X	14.365	3.58
119	MP4C	Z	24.88	3.58
120	MP4C	Mx	.014	3.58
121	MP4C	X	14.365	5.58
122	MP4C	Z	24.88	5.58
123	MP4C	Mx	.014	5.58

Member Point Loads (BLC 9 : Antenna Wo (180 Deg))

	Member Label	Direction	Magnitude[lb,k-ft]	Location[ft,%]
1	MP3A	X	0	2.83
2	MP3A	Z	142.239	2.83
3	MP3A	Mx	.107	2.83
4	MP3A	X	0	6.33
5	MP3A	Z	142.239	6.33
6	MP3A	Mx	.107	6.33
7	MP3B	X	0	2.83
8	MP3B	Z	105.625	2.83
9	MP3B	Mx	-.108	2.83
10	MP3B	X	0	6.33
11	MP3B	Z	105.625	6.33
12	MP3B	Mx	-.108	6.33
13	MP3C	X	0	2.83
14	MP3C	Z	105.625	2.83
15	MP3C	Mx	.029	2.83
16	MP3C	X	0	6.33
17	MP3C	Z	105.625	6.33
18	MP3C	Mx	.029	6.33
19	MP3A	X	0	2.83
20	MP3A	Z	142.239	2.83
21	MP3A	Mx	-.107	2.83
22	MP3A	X	0	6.33
23	MP3A	Z	142.239	6.33
24	MP3A	Mx	-.107	6.33
25	MP3B	X	0	2.83
26	MP3B	Z	105.625	2.83
27	MP3B	Mx	-.029	2.83
28	MP3B	X	0	6.33
29	MP3B	Z	105.625	6.33
30	MP3B	Mx	-.029	6.33
31	MP3C	X	0	2.83
32	MP3C	Z	105.625	2.83
33	MP3C	Mx	.108	2.83
34	MP3C	X	0	6.33
35	MP3C	Z	105.625	6.33

Member Point Loads (BLC 9 : Antenna Wo (180 Deg)) (Continued)

	Member Label	Direction	Magnitude[lb,k-ft]	Location[ft,%]
36	MP3C	Mx	.108	6.33
37	MP1A	X	0	2.5
38	MP1A	Z	67.607	2.5
39	MP1A	Mx	0	2.5
40	MP1A	X	0	6.67
41	MP1A	Z	67.607	6.67
42	MP1A	Mx	0	6.67
43	MP1B	X	0	2.5
44	MP1B	Z	67.607	2.5
45	MP1B	Mx	0	2.5
46	MP1B	X	0	6.67
47	MP1B	Z	67.607	6.67
48	MP1B	Mx	0	6.67
49	MP1C	X	0	2.5
50	MP1C	Z	67.607	2.5
51	MP1C	Mx	0	2.5
52	MP1C	X	0	6.67
53	MP1C	Z	67.607	6.67
54	MP1C	Mx	0	6.67
55	MP5A	X	0	2.5
56	MP5A	Z	67.607	2.5
57	MP5A	Mx	0	2.5
58	MP5A	X	0	6.67
59	MP5A	Z	67.607	6.67
60	MP5A	Mx	0	6.67
61	MP5B	X	0	2.5
62	MP5B	Z	67.607	2.5
63	MP5B	Mx	0	2.5
64	MP5B	X	0	6.67
65	MP5B	Z	67.607	6.67
66	MP5B	Mx	0	6.67
67	MP5C	X	0	2.5
68	MP5C	Z	67.607	2.5
69	MP5C	Mx	0	2.5
70	MP5C	X	0	6.67
71	MP5C	Z	67.607	6.67
72	MP5C	Mx	0	6.67
73	MP2A	X	0	4.58
74	MP2A	Z	58.395	4.58
75	MP2A	Mx	0	4.58
76	MP2B	X	0	4.58
77	MP2B	Z	43.874	4.58
78	MP2B	Mx	.019	4.58
79	MP2C	X	0	4.58
80	MP2C	Z	43.874	4.58
81	MP2C	Mx	-.019	4.58
82	MP3A	X	0	4.58
83	MP3A	Z	58.395	4.58
84	MP3A	Mx	0	4.58
85	MP3B	X	0	4.58
86	MP3B	Z	38.312	4.58
87	MP3B	Mx	.017	4.58

Member Point Loads (BLC 9 : Antenna Wo (180 Deg)) (Continued)

	Member Label	Direction	Magnitude[lb,k-ft]	Location[ft,%]
88	MP3C	X	0	4.58
89	MP3C	Z	38.312	4.58
90	MP3C	Mx	-.017	4.58
91	MP3A	X	0	3.25
92	MP3A	Z	11.554	3.25
93	MP3A	Mx	0	3.25
94	MP3B	X	0	3.25
95	MP3B	Z	8.884	3.25
96	MP3B	Mx	.003	3.25
97	MP3C	X	0	3.25
98	MP3C	Z	8.884	3.25
99	MP3C	Mx	-.003	3.25
100	MP1A	X	0	4.58
101	MP1A	Z	118.35	4.58
102	MP1A	Mx	0	4.58
103	MP1B	X	0	4.58
104	MP1B	Z	88.342	4.58
105	MP1B	Mx	.038	4.58
106	MP4A	X	0	3.58
107	MP4A	Z	73.384	3.58
108	MP4A	Mx	0	3.58
109	MP4A	X	0	5.58
110	MP4A	Z	73.384	5.58
111	MP4A	Mx	0	5.58
112	MP4B	X	0	3.58
113	MP4B	Z	39.893	3.58
114	MP4B	Mx	-.017	3.58
115	MP4B	X	0	5.58
116	MP4B	Z	39.893	5.58
117	MP4B	Mx	-.017	5.58
118	MP4C	X	0	3.58
119	MP4C	Z	39.893	3.58
120	MP4C	Mx	.017	3.58
121	MP4C	X	0	5.58
122	MP4C	Z	39.893	5.58
123	MP4C	Mx	.017	5.58

Member Point Loads (BLC 10 : Antenna Wo (210 Deg))

	Member Label	Direction	Magnitude[lb,k-ft]	Location[ft,%]
1	MP3A	X	-65.017	2.83
2	MP3A	Z	112.613	2.83
3	MP3A	Mx	.133	2.83
4	MP3A	X	-65.017	6.33
5	MP3A	Z	112.613	6.33
6	MP3A	Mx	.133	6.33
7	MP3B	X	-46.71	2.83
8	MP3B	Z	80.905	2.83
9	MP3B	Mx	-.07	2.83
10	MP3B	X	-46.71	6.33
11	MP3B	Z	80.905	6.33
12	MP3B	Mx	-.07	6.33

Member Point Loads (BLC 10 : Antenna Wo (210 Deg)) (Continued)

	Member Label	Direction	Magnitude[lb,k-ft]	Location[ft,%]
13	MP3C	X	-65.017	2.83
14	MP3C	Z	112.613	2.83
15	MP3C	Mx	-.036	2.83
16	MP3C	X	-65.017	6.33
17	MP3C	Z	112.613	6.33
18	MP3C	Mx	-.036	6.33
19	MP3A	X	-65.017	2.83
20	MP3A	Z	112.613	2.83
21	MP3A	Mx	-.036	2.83
22	MP3A	X	-65.017	6.33
23	MP3A	Z	112.613	6.33
24	MP3A	Mx	-.036	6.33
25	MP3B	X	-46.71	2.83
26	MP3B	Z	80.905	2.83
27	MP3B	Mx	-.07	2.83
28	MP3B	X	-46.71	6.33
29	MP3B	Z	80.905	6.33
30	MP3B	Mx	-.07	6.33
31	MP3C	X	-65.017	2.83
32	MP3C	Z	112.613	2.83
33	MP3C	Mx	.133	2.83
34	MP3C	X	-65.017	6.33
35	MP3C	Z	112.613	6.33
36	MP3C	Mx	.133	6.33
37	MP1A	X	-42.192	2.5
38	MP1A	Z	73.079	2.5
39	MP1A	Mx	.049	2.5
40	MP1A	X	-42.192	6.67
41	MP1A	Z	73.079	6.67
42	MP1A	Mx	.049	6.67
43	MP1B	X	-42.192	2.5
44	MP1B	Z	73.079	2.5
45	MP1B	Mx	.049	2.5
46	MP1B	X	-42.192	6.67
47	MP1B	Z	73.079	6.67
48	MP1B	Mx	.049	6.67
49	MP1C	X	-42.192	2.5
50	MP1C	Z	73.079	2.5
51	MP1C	Mx	.049	2.5
52	MP1C	X	-42.192	6.67
53	MP1C	Z	73.079	6.67
54	MP1C	Mx	.049	6.67
55	MP5A	X	-42.192	2.5
56	MP5A	Z	73.079	2.5
57	MP5A	Mx	.049	2.5
58	MP5A	X	-42.192	6.67
59	MP5A	Z	73.079	6.67
60	MP5A	Mx	.049	6.67
61	MP5B	X	-42.192	2.5
62	MP5B	Z	73.079	2.5
63	MP5B	Mx	.049	2.5
64	MP5B	X	-42.192	6.67

Member Point Loads (BLC 10 : Antenna Wo (210 Deg)) (Continued)

	Member Label	Direction	Magnitude[lb,k-ft]	Location[ft,%]
65	MP5B	Z	73.079	6.67
66	MP5B	Mx	.049	6.67
67	MP5C	X	-42.192	2.5
68	MP5C	Z	73.079	2.5
69	MP5C	Mx	.049	2.5
70	MP5C	X	-42.192	6.67
71	MP5C	Z	73.079	6.67
72	MP5C	Mx	.049	6.67
73	MP2A	X	-26.777	4.58
74	MP2A	Z	46.379	4.58
75	MP2A	Mx	-.013	4.58
76	MP2B	X	-19.517	4.58
77	MP2B	Z	33.804	4.58
78	MP2B	Mx	.02	4.58
79	MP2C	X	-26.777	4.58
80	MP2C	Z	46.379	4.58
81	MP2C	Mx	-.013	4.58
82	MP3A	X	-25.85	4.58
83	MP3A	Z	44.774	4.58
84	MP3A	Mx	-.013	4.58
85	MP3B	X	-15.809	4.58
86	MP3B	Z	27.381	4.58
87	MP3B	Mx	.016	4.58
88	MP3C	X	-25.85	4.58
89	MP3C	Z	44.774	4.58
90	MP3C	Mx	-.013	4.58
91	MP3A	X	-5.332	3.25
92	MP3A	Z	9.235	3.25
93	MP3A	Mx	-.002	3.25
94	MP3B	X	-3.997	3.25
95	MP3B	Z	6.923	3.25
96	MP3B	Mx	.003	3.25
97	MP3C	X	-5.332	3.25
98	MP3C	Z	9.235	3.25
99	MP3C	Mx	-.002	3.25
100	MP1A	X	-54.174	4.58
101	MP1A	Z	93.832	4.58
102	MP1A	Mx	-.027	4.58
103	MP1B	X	-39.169	4.58
104	MP1B	Z	67.843	4.58
105	MP1B	Mx	.039	4.58
106	MP4A	X	-31.11	3.58
107	MP4A	Z	53.884	3.58
108	MP4A	Mx	.016	3.58
109	MP4A	X	-31.11	5.58
110	MP4A	Z	53.884	5.58
111	MP4A	Mx	.016	5.58
112	MP4B	X	-14.365	3.58
113	MP4B	Z	24.88	3.58
114	MP4B	Mx	-.014	3.58
115	MP4B	X	-14.365	5.58
116	MP4B	Z	24.88	5.58

Member Point Loads (BLC 10 : Antenna Wo (210 Deg)) (Continued)

	Member Label	Direction	Magnitude[lb,k-ft]	Location[ft,%]
117	MP4B	Mx	-.014	5.58
118	MP4C	X	-31.11	3.58
119	MP4C	Z	53.884	3.58
120	MP4C	Mx	.016	3.58
121	MP4C	X	-31.11	5.58
122	MP4C	Z	53.884	5.58
123	MP4C	Mx	.016	5.58

Member Point Loads (BLC 11 : Antenna Wo (240 Deg))

	Member Label	Direction	Magnitude[lb,k-ft]	Location[ft,%]
1	MP3A	X	-91.474	2.83
2	MP3A	Z	52.813	2.83
3	MP3A	Mx	.108	2.83
4	MP3A	X	-91.474	6.33
5	MP3A	Z	52.813	6.33
6	MP3A	Mx	.108	6.33
7	MP3B	X	-91.474	2.83
8	MP3B	Z	52.813	2.83
9	MP3B	Mx	-.029	2.83
10	MP3B	X	-91.474	6.33
11	MP3B	Z	52.813	6.33
12	MP3B	Mx	-.029	6.33
13	MP3C	X	-123.183	2.83
14	MP3C	Z	71.12	2.83
15	MP3C	Mx	-.107	2.83
16	MP3C	X	-123.183	6.33
17	MP3C	Z	71.12	6.33
18	MP3C	Mx	-.107	6.33
19	MP3A	X	-91.474	2.83
20	MP3A	Z	52.813	2.83
21	MP3A	Mx	.029	2.83
22	MP3A	X	-91.474	6.33
23	MP3A	Z	52.813	6.33
24	MP3A	Mx	.029	6.33
25	MP3B	X	-91.474	2.83
26	MP3B	Z	52.813	2.83
27	MP3B	Mx	-.108	2.83
28	MP3B	X	-91.474	6.33
29	MP3B	Z	52.813	6.33
30	MP3B	Mx	-.108	6.33
31	MP3C	X	-123.183	2.83
32	MP3C	Z	71.12	2.83
33	MP3C	Mx	.107	2.83
34	MP3C	X	-123.183	6.33
35	MP3C	Z	71.12	6.33
36	MP3C	Mx	.107	6.33
37	MP1A	X	-102.14	2.5
38	MP1A	Z	58.97	2.5
39	MP1A	Mx	.119	2.5
40	MP1A	X	-102.14	6.67
41	MP1A	Z	58.97	6.67

Member Point Loads (BLC 11 : Antenna Wo (240 Deg)) (Continued)

	Member Label	Direction	Magnitude[lb,k-ft]	Location[ft,%]
42	MP1A	Mx	.119	6.67
43	MP1B	X	-102.14	2.5
44	MP1B	Z	58.97	2.5
45	MP1B	Mx	.119	2.5
46	MP1B	X	-102.14	6.67
47	MP1B	Z	58.97	6.67
48	MP1B	Mx	.119	6.67
49	MP1C	X	-102.14	2.5
50	MP1C	Z	58.97	2.5
51	MP1C	Mx	.119	2.5
52	MP1C	X	-102.14	6.67
53	MP1C	Z	58.97	6.67
54	MP1C	Mx	.119	6.67
55	MP5A	X	-102.14	2.5
56	MP5A	Z	58.97	2.5
57	MP5A	Mx	.119	2.5
58	MP5A	X	-102.14	6.67
59	MP5A	Z	58.97	6.67
60	MP5A	Mx	.119	6.67
61	MP5B	X	-102.14	2.5
62	MP5B	Z	58.97	2.5
63	MP5B	Mx	.119	2.5
64	MP5B	X	-102.14	6.67
65	MP5B	Z	58.97	6.67
66	MP5B	Mx	.119	6.67
67	MP5C	X	-102.14	2.5
68	MP5C	Z	58.97	2.5
69	MP5C	Mx	.119	2.5
70	MP5C	X	-102.14	6.67
71	MP5C	Z	58.97	6.67
72	MP5C	Mx	.119	6.67
73	MP2A	X	-37.996	4.58
74	MP2A	Z	21.937	4.58
75	MP2A	Mx	-.019	4.58
76	MP2B	X	-37.996	4.58
77	MP2B	Z	21.937	4.58
78	MP2B	Mx	.019	4.58
79	MP2C	X	-50.571	4.58
80	MP2C	Z	29.197	4.58
81	MP2C	Mx	0	4.58
82	MP3A	X	-33.179	4.58
83	MP3A	Z	19.156	4.58
84	MP3A	Mx	-.017	4.58
85	MP3B	X	-33.179	4.58
86	MP3B	Z	19.156	4.58
87	MP3B	Mx	.017	4.58
88	MP3C	X	-50.571	4.58
89	MP3C	Z	29.197	4.58
90	MP3C	Mx	0	4.58
91	MP3A	X	-7.694	3.25
92	MP3A	Z	4.442	3.25
93	MP3A	Mx	-.003	3.25

Member Point Loads (BLC 11 : Antenna Wo (240 Deg)) (Continued)

	Member Label	Direction	Magnitude[lb,k-ft]	Location[ft,%]
94	MP3B	X	-7.694	3.25
95	MP3B	Z	4.442	3.25
96	MP3B	Mx	.003	3.25
97	MP3C	X	-10.006	3.25
98	MP3C	Z	5.777	3.25
99	MP3C	Mx	0	3.25
100	MP1A	X	-76.506	4.58
101	MP1A	Z	44.171	4.58
102	MP1A	Mx	-.038	4.58
103	MP1B	X	-76.506	4.58
104	MP1B	Z	44.171	4.58
105	MP1B	Mx	.038	4.58
106	MP4A	X	-34.548	3.58
107	MP4A	Z	19.947	3.58
108	MP4A	Mx	.017	3.58
109	MP4A	X	-34.548	5.58
110	MP4A	Z	19.947	5.58
111	MP4A	Mx	.017	5.58
112	MP4B	X	-34.548	3.58
113	MP4B	Z	19.947	3.58
114	MP4B	Mx	-.017	3.58
115	MP4B	X	-34.548	5.58
116	MP4B	Z	19.947	5.58
117	MP4B	Mx	-.017	5.58
118	MP4C	X	-63.552	3.58
119	MP4C	Z	36.692	3.58
120	MP4C	Mx	0	3.58
121	MP4C	X	-63.552	5.58
122	MP4C	Z	36.692	5.58
123	MP4C	Mx	0	5.58

Member Point Loads (BLC 12 : Antenna Wo (270 Deg))

	Member Label	Direction	Magnitude[lb,k-ft]	Location[ft,%]
1	MP3A	X	-93.421	2.83
2	MP3A	Z	0	2.83
3	MP3A	Mx	.07	2.83
4	MP3A	X	-93.421	6.33
5	MP3A	Z	0	6.33
6	MP3A	Mx	.07	6.33
7	MP3B	X	-130.035	2.83
8	MP3B	Z	0	2.83
9	MP3B	Mx	.036	2.83
10	MP3B	X	-130.035	6.33
11	MP3B	Z	0	6.33
12	MP3B	Mx	.036	6.33
13	MP3C	X	-130.035	2.83
14	MP3C	Z	0	2.83
15	MP3C	Mx	-.133	2.83
16	MP3C	X	-130.035	6.33
17	MP3C	Z	0	6.33
18	MP3C	Mx	-.133	6.33

Member Point Loads (BLC 12 : Antenna Wo (270 Deg)) (Continued)

	Member Label	Direction	Magnitude[lb,k-ft]	Location[ft,%]
19	MP3A	X	-93.421	2.83
20	MP3A	Z	0	2.83
21	MP3A	Mx	.07	2.83
22	MP3A	X	-93.421	6.33
23	MP3A	Z	0	6.33
24	MP3A	Mx	.07	6.33
25	MP3B	X	-130.035	2.83
26	MP3B	Z	0	2.83
27	MP3B	Mx	-.133	2.83
28	MP3B	X	-130.035	6.33
29	MP3B	Z	0	6.33
30	MP3B	Mx	-.133	6.33
31	MP3C	X	-130.035	2.83
32	MP3C	Z	0	2.83
33	MP3C	Mx	.036	2.83
34	MP3C	X	-130.035	6.33
35	MP3C	Z	0	6.33
36	MP3C	Mx	.036	6.33
37	MP1A	X	-134.719	2.5
38	MP1A	Z	0	2.5
39	MP1A	Mx	.157	2.5
40	MP1A	X	-134.719	6.67
41	MP1A	Z	0	6.67
42	MP1A	Mx	.157	6.67
43	MP1B	X	-134.719	2.5
44	MP1B	Z	0	2.5
45	MP1B	Mx	.157	2.5
46	MP1B	X	-134.719	6.67
47	MP1B	Z	0	6.67
48	MP1B	Mx	.157	6.67
49	MP1C	X	-134.719	2.5
50	MP1C	Z	0	2.5
51	MP1C	Mx	.157	2.5
52	MP1C	X	-134.719	6.67
53	MP1C	Z	0	6.67
54	MP1C	Mx	.157	6.67
55	MP5A	X	-134.719	2.5
56	MP5A	Z	0	2.5
57	MP5A	Mx	.157	2.5
58	MP5A	X	-134.719	6.67
59	MP5A	Z	0	6.67
60	MP5A	Mx	.157	6.67
61	MP5B	X	-134.719	2.5
62	MP5B	Z	0	2.5
63	MP5B	Mx	.157	2.5
64	MP5B	X	-134.719	6.67
65	MP5B	Z	0	6.67
66	MP5B	Mx	.157	6.67
67	MP5C	X	-134.719	2.5
68	MP5C	Z	0	2.5
69	MP5C	Mx	.157	2.5
70	MP5C	X	-134.719	6.67

Member Point Loads (BLC 12 : Antenna Wo (270 Deg)) (Continued)

	Member Label	Direction	Magnitude[lb,k-ft]	Location[ft,%]
71	MP5C	Z	0	6.67
72	MP5C	Mx	.157	6.67
73	MP2A	X	-39.034	4.58
74	MP2A	Z	0	4.58
75	MP2A	Mx	-.02	4.58
76	MP2B	X	-53.554	4.58
77	MP2B	Z	0	4.58
78	MP2B	Mx	.013	4.58
79	MP2C	X	-53.554	4.58
80	MP2C	Z	0	4.58
81	MP2C	Mx	.013	4.58
82	MP3A	X	-31.617	4.58
83	MP3A	Z	0	4.58
84	MP3A	Mx	-.016	4.58
85	MP3B	X	-51.7	4.58
86	MP3B	Z	0	4.58
87	MP3B	Mx	.013	4.58
88	MP3C	X	-51.7	4.58
89	MP3C	Z	0	4.58
90	MP3C	Mx	.013	4.58
91	MP3A	X	-7.994	3.25
92	MP3A	Z	0	3.25
93	MP3A	Mx	-.003	3.25
94	MP3B	X	-10.664	3.25
95	MP3B	Z	0	3.25
96	MP3B	Mx	.002	3.25
97	MP3C	X	-10.664	3.25
98	MP3C	Z	0	3.25
99	MP3C	Mx	.002	3.25
100	MP1A	X	-78.339	4.58
101	MP1A	Z	0	4.58
102	MP1A	Mx	-.039	4.58
103	MP1B	X	-108.347	4.58
104	MP1B	Z	0	4.58
105	MP1B	Mx	.027	4.58
106	MP4A	X	-28.73	3.58
107	MP4A	Z	0	3.58
108	MP4A	Mx	.014	3.58
109	MP4A	X	-28.73	5.58
110	MP4A	Z	0	5.58
111	MP4A	Mx	.014	5.58
112	MP4B	X	-62.22	3.58
113	MP4B	Z	0	3.58
114	MP4B	Mx	-.016	3.58
115	MP4B	X	-62.22	5.58
116	MP4B	Z	0	5.58
117	MP4B	Mx	-.016	5.58
118	MP4C	X	-62.22	3.58
119	MP4C	Z	0	3.58
120	MP4C	Mx	-.016	3.58
121	MP4C	X	-62.22	5.58
122	MP4C	Z	0	5.58

Member Point Loads (BLC 12 : Antenna Wo (270 Deg)) (Continued)

	Member Label	Direction	Magnitude[lb,k-ft]	Location[ft,%]
123	MP4C	Mx	-.016	5.58

Member Point Loads (BLC 13 : Antenna Wo (300 Deg))

	Member Label	Direction	Magnitude[lb,k-ft]	Location[ft,%]
1	MP3A	X	-91.474	2.83
2	MP3A	Z	-52.813	2.83
3	MP3A	Mx	.029	2.83
4	MP3A	X	-91.474	6.33
5	MP3A	Z	-52.813	6.33
6	MP3A	Mx	.029	6.33
7	MP3B	X	-123.183	2.83
8	MP3B	Z	-71.12	2.83
9	MP3B	Mx	.107	2.83
10	MP3B	X	-123.183	6.33
11	MP3B	Z	-71.12	6.33
12	MP3B	Mx	.107	6.33
13	MP3C	X	-91.474	2.83
14	MP3C	Z	-52.813	2.83
15	MP3C	Mx	-.108	2.83
16	MP3C	X	-91.474	6.33
17	MP3C	Z	-52.813	6.33
18	MP3C	Mx	-.108	6.33
19	MP3A	X	-91.474	2.83
20	MP3A	Z	-52.813	2.83
21	MP3A	Mx	.108	2.83
22	MP3A	X	-91.474	6.33
23	MP3A	Z	-52.813	6.33
24	MP3A	Mx	.108	6.33
25	MP3B	X	-123.183	2.83
26	MP3B	Z	-71.12	2.83
27	MP3B	Mx	-.107	2.83
28	MP3B	X	-123.183	6.33
29	MP3B	Z	-71.12	6.33
30	MP3B	Mx	-.107	6.33
31	MP3C	X	-91.474	2.83
32	MP3C	Z	-52.813	2.83
33	MP3C	Mx	-.029	2.83
34	MP3C	X	-91.474	6.33
35	MP3C	Z	-52.813	6.33
36	MP3C	Mx	-.029	6.33
37	MP1A	X	-102.14	2.5
38	MP1A	Z	-58.97	2.5
39	MP1A	Mx	.119	2.5
40	MP1A	X	-102.14	6.67
41	MP1A	Z	-58.97	6.67
42	MP1A	Mx	.119	6.67
43	MP1B	X	-102.14	2.5
44	MP1B	Z	-58.97	2.5
45	MP1B	Mx	.119	2.5
46	MP1B	X	-102.14	6.67
47	MP1B	Z	-58.97	6.67

Member Point Loads (BLC 13 : Antenna Wo (300 Deg)) (Continued)

	Member Label	Direction	Magnitude[lb,k-ft]	Location[ft,%]
48	MP1B	Mx	.119	6.67
49	MP1C	X	-102.14	2.5
50	MP1C	Z	-58.97	2.5
51	MP1C	Mx	.119	2.5
52	MP1C	X	-102.14	6.67
53	MP1C	Z	-58.97	6.67
54	MP1C	Mx	.119	6.67
55	MP5A	X	-102.14	2.5
56	MP5A	Z	-58.97	2.5
57	MP5A	Mx	.119	2.5
58	MP5A	X	-102.14	6.67
59	MP5A	Z	-58.97	6.67
60	MP5A	Mx	.119	6.67
61	MP5B	X	-102.14	2.5
62	MP5B	Z	-58.97	2.5
63	MP5B	Mx	.119	2.5
64	MP5B	X	-102.14	6.67
65	MP5B	Z	-58.97	6.67
66	MP5B	Mx	.119	6.67
67	MP5C	X	-102.14	2.5
68	MP5C	Z	-58.97	2.5
69	MP5C	Mx	.119	2.5
70	MP5C	X	-102.14	6.67
71	MP5C	Z	-58.97	6.67
72	MP5C	Mx	.119	6.67
73	MP2A	X	-37.996	4.58
74	MP2A	Z	-21.937	4.58
75	MP2A	Mx	-.019	4.58
76	MP2B	X	-50.571	4.58
77	MP2B	Z	-29.197	4.58
78	MP2B	Mx	0	4.58
79	MP2C	X	-37.996	4.58
80	MP2C	Z	-21.937	4.58
81	MP2C	Mx	.019	4.58
82	MP3A	X	-33.179	4.58
83	MP3A	Z	-19.156	4.58
84	MP3A	Mx	-.017	4.58
85	MP3B	X	-50.571	4.58
86	MP3B	Z	-29.197	4.58
87	MP3B	Mx	0	4.58
88	MP3C	X	-33.179	4.58
89	MP3C	Z	-19.156	4.58
90	MP3C	Mx	.017	4.58
91	MP3A	X	-7.694	3.25
92	MP3A	Z	-4.442	3.25
93	MP3A	Mx	-.003	3.25
94	MP3B	X	-10.006	3.25
95	MP3B	Z	-5.777	3.25
96	MP3B	Mx	0	3.25
97	MP3C	X	-7.694	3.25
98	MP3C	Z	-4.442	3.25
99	MP3C	Mx	.003	3.25

Member Point Loads (BLC 13 : Antenna Wo (300 Deg)) (Continued)

	Member Label	Direction	Magnitude[lb,k-ft]	Location[ft,%]
100	MP1A	X	-76.506	4.58
101	MP1A	Z	-44.171	4.58
102	MP1A	Mx	-.038	4.58
103	MP1B	X	-102.494	4.58
104	MP1B	Z	-59.175	4.58
105	MP1B	Mx	0	4.58
106	MP4A	X	-34.548	3.58
107	MP4A	Z	-19.947	3.58
108	MP4A	Mx	.017	3.58
109	MP4A	X	-34.548	5.58
110	MP4A	Z	-19.947	5.58
111	MP4A	Mx	.017	5.58
112	MP4B	X	-63.552	3.58
113	MP4B	Z	-36.692	3.58
114	MP4B	Mx	0	3.58
115	MP4B	X	-63.552	5.58
116	MP4B	Z	-36.692	5.58
117	MP4B	Mx	0	5.58
118	MP4C	X	-34.548	3.58
119	MP4C	Z	-19.947	3.58
120	MP4C	Mx	-.017	3.58
121	MP4C	X	-34.548	5.58
122	MP4C	Z	-19.947	5.58
123	MP4C	Mx	-.017	5.58

Member Point Loads (BLC 14 : Antenna Wo (330 Deg))

	Member Label	Direction	Magnitude[lb,k-ft]	Location[ft,%]
1	MP3A	X	-65.017	2.83
2	MP3A	Z	-112.613	2.83
3	MP3A	Mx	-.036	2.83
4	MP3A	X	-65.017	6.33
5	MP3A	Z	-112.613	6.33
6	MP3A	Mx	-.036	6.33
7	MP3B	X	-65.017	2.83
8	MP3B	Z	-112.613	2.83
9	MP3B	Mx	.133	2.83
10	MP3B	X	-65.017	6.33
11	MP3B	Z	-112.613	6.33
12	MP3B	Mx	.133	6.33
13	MP3C	X	-46.71	2.83
14	MP3C	Z	-80.905	2.83
15	MP3C	Mx	-.07	2.83
16	MP3C	X	-46.71	6.33
17	MP3C	Z	-80.905	6.33
18	MP3C	Mx	-.07	6.33
19	MP3A	X	-65.017	2.83
20	MP3A	Z	-112.613	2.83
21	MP3A	Mx	.133	2.83
22	MP3A	X	-65.017	6.33
23	MP3A	Z	-112.613	6.33
24	MP3A	Mx	.133	6.33

Member Point Loads (BLC 14 : Antenna Wo (330 Deg)) (Continued)

	Member Label	Direction	Magnitude[lb,k-ft]	Location[ft,%]
25	MP3B	X	-65.017	2.83
26	MP3B	Z	-112.613	2.83
27	MP3B	Mx	-.036	2.83
28	MP3B	X	-65.017	6.33
29	MP3B	Z	-112.613	6.33
30	MP3B	Mx	-.036	6.33
31	MP3C	X	-46.71	2.83
32	MP3C	Z	-80.905	2.83
33	MP3C	Mx	-.07	2.83
34	MP3C	X	-46.71	6.33
35	MP3C	Z	-80.905	6.33
36	MP3C	Mx	-.07	6.33
37	MP1A	X	-42.192	2.5
38	MP1A	Z	-73.079	2.5
39	MP1A	Mx	.049	2.5
40	MP1A	X	-42.192	6.67
41	MP1A	Z	-73.079	6.67
42	MP1A	Mx	.049	6.67
43	MP1B	X	-42.192	2.5
44	MP1B	Z	-73.079	2.5
45	MP1B	Mx	.049	2.5
46	MP1B	X	-42.192	6.67
47	MP1B	Z	-73.079	6.67
48	MP1B	Mx	.049	6.67
49	MP1C	X	-42.192	2.5
50	MP1C	Z	-73.079	2.5
51	MP1C	Mx	.049	2.5
52	MP1C	X	-42.192	6.67
53	MP1C	Z	-73.079	6.67
54	MP1C	Mx	.049	6.67
55	MP5A	X	-42.192	2.5
56	MP5A	Z	-73.079	2.5
57	MP5A	Mx	.049	2.5
58	MP5A	X	-42.192	6.67
59	MP5A	Z	-73.079	6.67
60	MP5A	Mx	.049	6.67
61	MP5B	X	-42.192	2.5
62	MP5B	Z	-73.079	2.5
63	MP5B	Mx	.049	2.5
64	MP5B	X	-42.192	6.67
65	MP5B	Z	-73.079	6.67
66	MP5B	Mx	.049	6.67
67	MP5C	X	-42.192	2.5
68	MP5C	Z	-73.079	2.5
69	MP5C	Mx	.049	2.5
70	MP5C	X	-42.192	6.67
71	MP5C	Z	-73.079	6.67
72	MP5C	Mx	.049	6.67
73	MP2A	X	-26.777	4.58
74	MP2A	Z	-46.379	4.58
75	MP2A	Mx	-.013	4.58
76	MP2B	X	-26.777	4.58

Member Point Loads (BLC 14 : Antenna Wo (330 Deg)) (Continued)

	Member Label	Direction	Magnitude[lb,k-ft]	Location[ft,%]
77	MP2B	Z	-46.379	4.58
78	MP2B	Mx	-.013	4.58
79	MP2C	X	-19.517	4.58
80	MP2C	Z	-33.804	4.58
81	MP2C	Mx	.02	4.58
82	MP3A	X	-25.85	4.58
83	MP3A	Z	-44.774	4.58
84	MP3A	Mx	-.013	4.58
85	MP3B	X	-25.85	4.58
86	MP3B	Z	-44.774	4.58
87	MP3B	Mx	-.013	4.58
88	MP3C	X	-15.809	4.58
89	MP3C	Z	-27.381	4.58
90	MP3C	Mx	.016	4.58
91	MP3A	X	-5.332	3.25
92	MP3A	Z	-9.235	3.25
93	MP3A	Mx	-.002	3.25
94	MP3B	X	-5.332	3.25
95	MP3B	Z	-9.235	3.25
96	MP3B	Mx	-.002	3.25
97	MP3C	X	-3.997	3.25
98	MP3C	Z	-6.923	3.25
99	MP3C	Mx	.003	3.25
100	MP1A	X	-54.174	4.58
101	MP1A	Z	-93.832	4.58
102	MP1A	Mx	-.027	4.58
103	MP1B	X	-54.174	4.58
104	MP1B	Z	-93.832	4.58
105	MP1B	Mx	-.027	4.58
106	MP4A	X	-31.11	3.58
107	MP4A	Z	-53.884	3.58
108	MP4A	Mx	.016	3.58
109	MP4A	X	-31.11	5.58
110	MP4A	Z	-53.884	5.58
111	MP4A	Mx	.016	5.58
112	MP4B	X	-31.11	3.58
113	MP4B	Z	-53.884	3.58
114	MP4B	Mx	.016	3.58
115	MP4B	X	-31.11	5.58
116	MP4B	Z	-53.884	5.58
117	MP4B	Mx	.016	5.58
118	MP4C	X	-14.365	3.58
119	MP4C	Z	-24.88	3.58
120	MP4C	Mx	-.014	3.58
121	MP4C	X	-14.365	5.58
122	MP4C	Z	-24.88	5.58
123	MP4C	Mx	-.014	5.58

Member Point Loads (BLC 15 : Antenna Wi (0 Deg))

	Member Label	Direction	Magnitude[lb,k-ft]	Location[ft,%]
1	MP3A	X	0	2.83

Member Point Loads (BLC 15 : Antenna Wi (0 Deg)) (Continued)

	Member Label	Direction	Magnitude[lb,k-ft]	Location[ft,%]
2	MP3A	Z	-28.722	2.83
3	MP3A	Mx	-.022	2.83
4	MP3A	X	0	6.33
5	MP3A	Z	-28.722	6.33
6	MP3A	Mx	-.022	6.33
7	MP3B	X	0	2.83
8	MP3B	Z	-22.077	2.83
9	MP3B	Mx	.023	2.83
10	MP3B	X	0	6.33
11	MP3B	Z	-22.077	6.33
12	MP3B	Mx	.023	6.33
13	MP3C	X	0	2.83
14	MP3C	Z	-22.077	2.83
15	MP3C	Mx	-.006	2.83
16	MP3C	X	0	6.33
17	MP3C	Z	-22.077	6.33
18	MP3C	Mx	-.006	6.33
19	MP3A	X	0	2.83
20	MP3A	Z	-28.722	2.83
21	MP3A	Mx	.022	2.83
22	MP3A	X	0	6.33
23	MP3A	Z	-28.722	6.33
24	MP3A	Mx	.022	6.33
25	MP3B	X	0	2.83
26	MP3B	Z	-22.077	2.83
27	MP3B	Mx	.006	2.83
28	MP3B	X	0	6.33
29	MP3B	Z	-22.077	6.33
30	MP3B	Mx	.006	6.33
31	MP3C	X	0	2.83
32	MP3C	Z	-22.077	2.83
33	MP3C	Mx	-.023	2.83
34	MP3C	X	0	6.33
35	MP3C	Z	-22.077	6.33
36	MP3C	Mx	-.023	6.33
37	MP1A	X	0	2.5
38	MP1A	Z	-15.095	2.5
39	MP1A	Mx	0	2.5
40	MP1A	X	0	6.67
41	MP1A	Z	-15.095	6.67
42	MP1A	Mx	0	6.67
43	MP1B	X	0	2.5
44	MP1B	Z	-15.095	2.5
45	MP1B	Mx	0	2.5
46	MP1B	X	0	6.67
47	MP1B	Z	-15.095	6.67
48	MP1B	Mx	0	6.67
49	MP1C	X	0	2.5
50	MP1C	Z	-15.095	2.5
51	MP1C	Mx	0	2.5
52	MP1C	X	0	6.67
53	MP1C	Z	-15.095	6.67

Member Point Loads (BLC 15 : Antenna Wi (0 Deg)) (Continued)

	Member Label	Direction	Magnitude[lb,k-ft]	Location[ft,%]
54	MP1C	Mx	0	6.67
55	MP5A	X	0	2.5
56	MP5A	Z	-15.095	2.5
57	MP5A	Mx	0	2.5
58	MP5A	X	0	6.67
59	MP5A	Z	-15.095	6.67
60	MP5A	Mx	0	6.67
61	MP5B	X	0	2.5
62	MP5B	Z	-15.095	2.5
63	MP5B	Mx	0	2.5
64	MP5B	X	0	6.67
65	MP5B	Z	-15.095	6.67
66	MP5B	Mx	0	6.67
67	MP5C	X	0	2.5
68	MP5C	Z	-15.095	2.5
69	MP5C	Mx	0	2.5
70	MP5C	X	0	6.67
71	MP5C	Z	-15.095	6.67
72	MP5C	Mx	0	6.67
73	MP2A	X	0	4.58
74	MP2A	Z	-13.379	4.58
75	MP2A	Mx	0	4.58
76	MP2B	X	0	4.58
77	MP2B	Z	-10.454	4.58
78	MP2B	Mx	-.005	4.58
79	MP2C	X	0	4.58
80	MP2C	Z	-10.454	4.58
81	MP2C	Mx	.005	4.58
82	MP3A	X	0	4.58
83	MP3A	Z	-13.379	4.58
84	MP3A	Mx	0	4.58
85	MP3B	X	0	4.58
86	MP3B	Z	-9.342	4.58
87	MP3B	Mx	-.004	4.58
88	MP3C	X	0	4.58
89	MP3C	Z	-9.342	4.58
90	MP3C	Mx	.004	4.58
91	MP3A	X	0	3.25
92	MP3A	Z	-3.55	3.25
93	MP3A	Mx	0	3.25
94	MP3B	X	0	3.25
95	MP3B	Z	-2.943	3.25
96	MP3B	Mx	-.00085	3.25
97	MP3C	X	0	3.25
98	MP3C	Z	-2.943	3.25
99	MP3C	Mx	.00085	3.25
100	MP1A	X	0	4.58
101	MP1A	Z	-25.217	4.58
102	MP1A	Mx	0	4.58
103	MP1B	X	0	4.58
104	MP1B	Z	-19.471	4.58
105	MP1B	Mx	-.008	4.58

Member Point Loads (BLC 15 : Antenna Wi (0 Deg)) (Continued)

	Member Label	Direction	Magnitude[lb,k-ft]	Location[ft,%]
106	MP4A	X	0	3.58
107	MP4A	Z	-15.468	3.58
108	MP4A	Mx	0	3.58
109	MP4A	X	0	5.58
110	MP4A	Z	-15.468	5.58
111	MP4A	Mx	0	5.58
112	MP4B	X	0	3.58
113	MP4B	Z	-9.008	3.58
114	MP4B	Mx	.004	3.58
115	MP4B	X	0	5.58
116	MP4B	Z	-9.008	5.58
117	MP4B	Mx	.004	5.58
118	MP4C	X	0	3.58
119	MP4C	Z	-9.008	3.58
120	MP4C	Mx	-.004	3.58
121	MP4C	X	0	5.58
122	MP4C	Z	-9.008	5.58
123	MP4C	Mx	-.004	5.58

Member Point Loads (BLC 16 : Antenna Wi (30 Deg))

	Member Label	Direction	Magnitude[lb,k-ft]	Location[ft,%]
1	MP3A	X	13.253	2.83
2	MP3A	Z	-22.956	2.83
3	MP3A	Mx	-.027	2.83
4	MP3A	X	13.253	6.33
5	MP3A	Z	-22.956	6.33
6	MP3A	Mx	-.027	6.33
7	MP3B	X	9.931	2.83
8	MP3B	Z	-17.201	2.83
9	MP3B	Mx	.015	2.83
10	MP3B	X	9.931	6.33
11	MP3B	Z	-17.201	6.33
12	MP3B	Mx	.015	6.33
13	MP3C	X	13.253	2.83
14	MP3C	Z	-22.956	2.83
15	MP3C	Mx	.007	2.83
16	MP3C	X	13.253	6.33
17	MP3C	Z	-22.956	6.33
18	MP3C	Mx	.007	6.33
19	MP3A	X	13.253	2.83
20	MP3A	Z	-22.956	2.83
21	MP3A	Mx	.007	2.83
22	MP3A	X	13.253	6.33
23	MP3A	Z	-22.956	6.33
24	MP3A	Mx	.007	6.33
25	MP3B	X	9.931	2.83
26	MP3B	Z	-17.201	2.83
27	MP3B	Mx	.015	2.83
28	MP3B	X	9.931	6.33
29	MP3B	Z	-17.201	6.33
30	MP3B	Mx	.015	6.33

Member Point Loads (BLC 16 : Antenna Wi (30 Deg)) (Continued)

	Member Label	Direction	Magnitude[lb,k-ft]	Location[ft,%]
31	MP3C	X	13.253	2.83
32	MP3C	Z	-22.956	2.83
33	MP3C	Mx	-.027	2.83
34	MP3C	X	13.253	6.33
35	MP3C	Z	-22.956	6.33
36	MP3C	Mx	-.027	6.33
37	MP1A	X	9.074	2.5
38	MP1A	Z	-15.717	2.5
39	MP1A	Mx	-.011	2.5
40	MP1A	X	9.074	6.67
41	MP1A	Z	-15.717	6.67
42	MP1A	Mx	-.011	6.67
43	MP1B	X	9.074	2.5
44	MP1B	Z	-15.717	2.5
45	MP1B	Mx	-.011	2.5
46	MP1B	X	9.074	6.67
47	MP1B	Z	-15.717	6.67
48	MP1B	Mx	-.011	6.67
49	MP1C	X	9.074	2.5
50	MP1C	Z	-15.717	2.5
51	MP1C	Mx	-.011	2.5
52	MP1C	X	9.074	6.67
53	MP1C	Z	-15.717	6.67
54	MP1C	Mx	-.011	6.67
55	MP5A	X	9.074	2.5
56	MP5A	Z	-15.717	2.5
57	MP5A	Mx	-.011	2.5
58	MP5A	X	9.074	6.67
59	MP5A	Z	-15.717	6.67
60	MP5A	Mx	-.011	6.67
61	MP5B	X	9.074	2.5
62	MP5B	Z	-15.717	2.5
63	MP5B	Mx	-.011	2.5
64	MP5B	X	9.074	6.67
65	MP5B	Z	-15.717	6.67
66	MP5B	Mx	-.011	6.67
67	MP5C	X	9.074	2.5
68	MP5C	Z	-15.717	2.5
69	MP5C	Mx	-.011	2.5
70	MP5C	X	9.074	6.67
71	MP5C	Z	-15.717	6.67
72	MP5C	Mx	-.011	6.67
73	MP2A	X	6.202	4.58
74	MP2A	Z	-10.742	4.58
75	MP2A	Mx	.003	4.58
76	MP2B	X	4.739	4.58
77	MP2B	Z	-8.208	4.58
78	MP2B	Mx	-.005	4.58
79	MP2C	X	6.202	4.58
80	MP2C	Z	-10.742	4.58
81	MP2C	Mx	.003	4.58
82	MP3A	X	6.017	4.58

Member Point Loads (BLC 16 : Antenna Wi (30 Deg)) (Continued)

	Member Label	Direction	Magnitude[lb,k-ft]	Location[ft,%]
83	MP3A	Z	-10.421	4.58
84	MP3A	Mx	.003	4.58
85	MP3B	X	3.998	4.58
86	MP3B	Z	-6.925	4.58
87	MP3B	Mx	-.004	4.58
88	MP3C	X	6.017	4.58
89	MP3C	Z	-10.421	4.58
90	MP3C	Mx	.003	4.58
91	MP3A	X	1.674	3.25
92	MP3A	Z	-2.899	3.25
93	MP3A	Mx	.000558	3.25
94	MP3B	X	1.371	3.25
95	MP3B	Z	-2.374	3.25
96	MP3B	Mx	-.000914	3.25
97	MP3C	X	1.674	3.25
98	MP3C	Z	-2.899	3.25
99	MP3C	Mx	.000558	3.25
100	MP1A	X	11.651	4.58
101	MP1A	Z	-20.18	4.58
102	MP1A	Mx	.006	4.58
103	MP1B	X	8.778	4.58
104	MP1B	Z	-15.204	4.58
105	MP1B	Mx	-.009	4.58
106	MP4A	X	6.657	3.58
107	MP4A	Z	-11.531	3.58
108	MP4A	Mx	-.003	3.58
109	MP4A	X	6.657	5.58
110	MP4A	Z	-11.531	5.58
111	MP4A	Mx	-.003	5.58
112	MP4B	X	3.427	3.58
113	MP4B	Z	-5.936	3.58
114	MP4B	Mx	.003	3.58
115	MP4B	X	3.427	5.58
116	MP4B	Z	-5.936	5.58
117	MP4B	Mx	.003	5.58
118	MP4C	X	6.657	3.58
119	MP4C	Z	-11.531	3.58
120	MP4C	Mx	-.003	3.58
121	MP4C	X	6.657	5.58
122	MP4C	Z	-11.531	5.58
123	MP4C	Mx	-.003	5.58

Member Point Loads (BLC 17 : Antenna Wi (60 Deg))

	Member Label	Direction	Magnitude[lb,k-ft]	Location[ft,%]
1	MP3A	X	19.119	2.83
2	MP3A	Z	-11.039	2.83
3	MP3A	Mx	-.023	2.83
4	MP3A	X	19.119	6.33
5	MP3A	Z	-11.039	6.33
6	MP3A	Mx	-.023	6.33
7	MP3B	X	19.119	2.83

Member Point Loads (BLC 17 : Antenna Wi (60 Deg)) (Continued)

	Member Label	Direction	Magnitude[lb,k-ft]	Location[ft,%]
8	MP3B	Z	-11.039	2.83
9	MP3B	Mx	.006	2.83
10	MP3B	X	19.119	6.33
11	MP3B	Z	-11.039	6.33
12	MP3B	Mx	.006	6.33
13	MP3C	X	24.874	2.83
14	MP3C	Z	-14.361	2.83
15	MP3C	Mx	.022	2.83
16	MP3C	X	24.874	6.33
17	MP3C	Z	-14.361	6.33
18	MP3C	Mx	.022	6.33
19	MP3A	X	19.119	2.83
20	MP3A	Z	-11.039	2.83
21	MP3A	Mx	-.006	2.83
22	MP3A	X	19.119	6.33
23	MP3A	Z	-11.039	6.33
24	MP3A	Mx	-.006	6.33
25	MP3B	X	19.119	2.83
26	MP3B	Z	-11.039	2.83
27	MP3B	Mx	.023	2.83
28	MP3B	X	19.119	6.33
29	MP3B	Z	-11.039	6.33
30	MP3B	Mx	.023	6.33
31	MP3C	X	24.874	2.83
32	MP3C	Z	-14.361	2.83
33	MP3C	Mx	-.022	2.83
34	MP3C	X	24.874	6.33
35	MP3C	Z	-14.361	6.33
36	MP3C	Mx	-.022	6.33
37	MP1A	X	21.004	2.5
38	MP1A	Z	-12.127	2.5
39	MP1A	Mx	-.025	2.5
40	MP1A	X	21.004	6.67
41	MP1A	Z	-12.127	6.67
42	MP1A	Mx	-.025	6.67
43	MP1B	X	21.004	2.5
44	MP1B	Z	-12.127	2.5
45	MP1B	Mx	-.025	2.5
46	MP1B	X	21.004	6.67
47	MP1B	Z	-12.127	6.67
48	MP1B	Mx	-.025	6.67
49	MP1C	X	21.004	2.5
50	MP1C	Z	-12.127	2.5
51	MP1C	Mx	-.025	2.5
52	MP1C	X	21.004	6.67
53	MP1C	Z	-12.127	6.67
54	MP1C	Mx	-.025	6.67
55	MP5A	X	21.004	2.5
56	MP5A	Z	-12.127	2.5
57	MP5A	Mx	-.025	2.5
58	MP5A	X	21.004	6.67
59	MP5A	Z	-12.127	6.67

Member Point Loads (BLC 17 : Antenna Wi (60 Deg)) (Continued)

	Member Label	Direction	Magnitude[lb,k-ft]	Location[ft,%]
60	MP5A	Mx	-.025	6.67
61	MP5B	X	21.004	2.5
62	MP5B	Z	-12.127	2.5
63	MP5B	Mx	-.025	2.5
64	MP5B	X	21.004	6.67
65	MP5B	Z	-12.127	6.67
66	MP5B	Mx	-.025	6.67
67	MP5C	X	21.004	2.5
68	MP5C	Z	-12.127	2.5
69	MP5C	Mx	-.025	2.5
70	MP5C	X	21.004	6.67
71	MP5C	Z	-12.127	6.67
72	MP5C	Mx	-.025	6.67
73	MP2A	X	9.053	4.58
74	MP2A	Z	-5.227	4.58
75	MP2A	Mx	.005	4.58
76	MP2B	X	9.053	4.58
77	MP2B	Z	-5.227	4.58
78	MP2B	Mx	-.005	4.58
79	MP2C	X	11.587	4.58
80	MP2C	Z	-6.69	4.58
81	MP2C	Mx	0	4.58
82	MP3A	X	8.09	4.58
83	MP3A	Z	-4.671	4.58
84	MP3A	Mx	.004	4.58
85	MP3B	X	8.09	4.58
86	MP3B	Z	-4.671	4.58
87	MP3B	Mx	-.004	4.58
88	MP3C	X	11.587	4.58
89	MP3C	Z	-6.69	4.58
90	MP3C	Mx	0	4.58
91	MP3A	X	2.549	3.25
92	MP3A	Z	-1.472	3.25
93	MP3A	Mx	.00085	3.25
94	MP3B	X	2.549	3.25
95	MP3B	Z	-1.472	3.25
96	MP3B	Mx	-.00085	3.25
97	MP3C	X	3.074	3.25
98	MP3C	Z	-1.775	3.25
99	MP3C	Mx	0	3.25
100	MP1A	X	16.863	4.58
101	MP1A	Z	-9.736	4.58
102	MP1A	Mx	.008	4.58
103	MP1B	X	16.863	4.58
104	MP1B	Z	-9.736	4.58
105	MP1B	Mx	-.008	4.58
106	MP4A	X	7.801	3.58
107	MP4A	Z	-4.504	3.58
108	MP4A	Mx	-.004	3.58
109	MP4A	X	7.801	5.58
110	MP4A	Z	-4.504	5.58
111	MP4A	Mx	-.004	5.58

Member Point Loads (BLC 17 : Antenna Wi (60 Deg)) (Continued)

	Member Label	Direction	Magnitude[lb,k-ft]	Location[ft,%]
112	MP4B	X	7.801	3.58
113	MP4B	Z	-4.504	3.58
114	MP4B	Mx	.004	3.58
115	MP4B	X	7.801	5.58
116	MP4B	Z	-4.504	5.58
117	MP4B	Mx	.004	5.58
118	MP4C	X	13.395	3.58
119	MP4C	Z	-7.734	3.58
120	MP4C	Mx	0	3.58
121	MP4C	X	13.395	5.58
122	MP4C	Z	-7.734	5.58
123	MP4C	Mx	0	5.58

Member Point Loads (BLC 18 : Antenna Wi (90 Deg))

	Member Label	Direction	Magnitude[lb,k-ft]	Location[ft,%]
1	MP3A	X	19.862	2.83
2	MP3A	Z	0	2.83
3	MP3A	Mx	-.015	2.83
4	MP3A	X	19.862	6.33
5	MP3A	Z	0	6.33
6	MP3A	Mx	-.015	6.33
7	MP3B	X	26.507	2.83
8	MP3B	Z	0	2.83
9	MP3B	Mx	-.007	2.83
10	MP3B	X	26.507	6.33
11	MP3B	Z	0	6.33
12	MP3B	Mx	-.007	6.33
13	MP3C	X	26.507	2.83
14	MP3C	Z	0	2.83
15	MP3C	Mx	.027	2.83
16	MP3C	X	26.507	6.33
17	MP3C	Z	0	6.33
18	MP3C	Mx	.027	6.33
19	MP3A	X	19.862	2.83
20	MP3A	Z	0	2.83
21	MP3A	Mx	-.015	2.83
22	MP3A	X	19.862	6.33
23	MP3A	Z	0	6.33
24	MP3A	Mx	-.015	6.33
25	MP3B	X	26.507	2.83
26	MP3B	Z	0	2.83
27	MP3B	Mx	.027	2.83
28	MP3B	X	26.507	6.33
29	MP3B	Z	0	6.33
30	MP3B	Mx	.027	6.33
31	MP3C	X	26.507	2.83
32	MP3C	Z	0	2.83
33	MP3C	Mx	-.007	2.83
34	MP3C	X	26.507	6.33
35	MP3C	Z	0	6.33
36	MP3C	Mx	-.007	6.33

Member Point Loads (BLC 18 : Antenna Wi (90 Deg)) (Continued)

	Member Label	Direction	Magnitude[lb,k-ft]	Location[ft,%]
37	MP1A	X	27.306	2.5
38	MP1A	Z	0	2.5
39	MP1A	Mx	-.032	2.5
40	MP1A	X	27.306	6.67
41	MP1A	Z	0	6.67
42	MP1A	Mx	-.032	6.67
43	MP1B	X	27.306	2.5
44	MP1B	Z	0	2.5
45	MP1B	Mx	-.032	2.5
46	MP1B	X	27.306	6.67
47	MP1B	Z	0	6.67
48	MP1B	Mx	-.032	6.67
49	MP1C	X	27.306	2.5
50	MP1C	Z	0	2.5
51	MP1C	Mx	-.032	2.5
52	MP1C	X	27.306	6.67
53	MP1C	Z	0	6.67
54	MP1C	Mx	-.032	6.67
55	MP5A	X	27.306	2.5
56	MP5A	Z	0	2.5
57	MP5A	Mx	-.032	2.5
58	MP5A	X	27.306	6.67
59	MP5A	Z	0	6.67
60	MP5A	Mx	-.032	6.67
61	MP5B	X	27.306	2.5
62	MP5B	Z	0	2.5
63	MP5B	Mx	-.032	2.5
64	MP5B	X	27.306	6.67
65	MP5B	Z	0	6.67
66	MP5B	Mx	-.032	6.67
67	MP5C	X	27.306	2.5
68	MP5C	Z	0	2.5
69	MP5C	Mx	-.032	2.5
70	MP5C	X	27.306	6.67
71	MP5C	Z	0	6.67
72	MP5C	Mx	-.032	6.67
73	MP2A	X	9.478	4.58
74	MP2A	Z	0	4.58
75	MP2A	Mx	.005	4.58
76	MP2B	X	12.404	4.58
77	MP2B	Z	0	4.58
78	MP2B	Mx	-.003	4.58
79	MP2C	X	12.404	4.58
80	MP2C	Z	0	4.58
81	MP2C	Mx	-.003	4.58
82	MP3A	X	7.996	4.58
83	MP3A	Z	0	4.58
84	MP3A	Mx	.004	4.58
85	MP3B	X	12.033	4.58
86	MP3B	Z	0	4.58
87	MP3B	Mx	-.003	4.58
88	MP3C	X	12.033	4.58

Member Point Loads (BLC 18 : Antenna Wi (90 Deg)) (Continued)

	Member Label	Direction	Magnitude[lb,k-ft]	Location[ft,%]
89	MP3C	Z	0	4.58
90	MP3C	Mx	-.003	4.58
91	MP3A	X	2.741	3.25
92	MP3A	Z	0	3.25
93	MP3A	Mx	.000914	3.25
94	MP3B	X	3.348	3.25
95	MP3B	Z	0	3.25
96	MP3B	Mx	-.000558	3.25
97	MP3C	X	3.348	3.25
98	MP3C	Z	0	3.25
99	MP3C	Mx	-.000558	3.25
100	MP1A	X	17.556	4.58
101	MP1A	Z	0	4.58
102	MP1A	Mx	.009	4.58
103	MP1B	X	23.302	4.58
104	MP1B	Z	0	4.58
105	MP1B	Mx	-.006	4.58
106	MP4A	X	6.855	3.58
107	MP4A	Z	0	3.58
108	MP4A	Mx	-.003	3.58
109	MP4A	X	6.855	5.58
110	MP4A	Z	0	5.58
111	MP4A	Mx	-.003	5.58
112	MP4B	X	13.314	3.58
113	MP4B	Z	0	3.58
114	MP4B	Mx	.003	3.58
115	MP4B	X	13.314	5.58
116	MP4B	Z	0	5.58
117	MP4B	Mx	.003	5.58
118	MP4C	X	13.314	3.58
119	MP4C	Z	0	3.58
120	MP4C	Mx	.003	3.58
121	MP4C	X	13.314	5.58
122	MP4C	Z	0	5.58
123	MP4C	Mx	.003	5.58

Member Point Loads (BLC 19 : Antenna Wi (120 Deg))

	Member Label	Direction	Magnitude[lb,k-ft]	Location[ft,%]
1	MP3A	X	19.119	2.83
2	MP3A	Z	11.039	2.83
3	MP3A	Mx	-.006	2.83
4	MP3A	X	19.119	6.33
5	MP3A	Z	11.039	6.33
6	MP3A	Mx	-.006	6.33
7	MP3B	X	24.874	2.83
8	MP3B	Z	14.361	2.83
9	MP3B	Mx	-.022	2.83
10	MP3B	X	24.874	6.33
11	MP3B	Z	14.361	6.33
12	MP3B	Mx	-.022	6.33
13	MP3C	X	19.119	2.83

Member Point Loads (BLC 19 : Antenna Wi (120 Deg)) (Continued)

	Member Label	Direction	Magnitude[lb,k-ft]	Location[ft,%]
14	MP3C	Z	11.039	2.83
15	MP3C	Mx	.023	2.83
16	MP3C	X	19.119	6.33
17	MP3C	Z	11.039	6.33
18	MP3C	Mx	.023	6.33
19	MP3A	X	19.119	2.83
20	MP3A	Z	11.039	2.83
21	MP3A	Mx	-.023	2.83
22	MP3A	X	19.119	6.33
23	MP3A	Z	11.039	6.33
24	MP3A	Mx	-.023	6.33
25	MP3B	X	24.874	2.83
26	MP3B	Z	14.361	2.83
27	MP3B	Mx	.022	2.83
28	MP3B	X	24.874	6.33
29	MP3B	Z	14.361	6.33
30	MP3B	Mx	.022	6.33
31	MP3C	X	19.119	2.83
32	MP3C	Z	11.039	2.83
33	MP3C	Mx	.006	2.83
34	MP3C	X	19.119	6.33
35	MP3C	Z	11.039	6.33
36	MP3C	Mx	.006	6.33
37	MP1A	X	21.004	2.5
38	MP1A	Z	12.127	2.5
39	MP1A	Mx	-.025	2.5
40	MP1A	X	21.004	6.67
41	MP1A	Z	12.127	6.67
42	MP1A	Mx	-.025	6.67
43	MP1B	X	21.004	2.5
44	MP1B	Z	12.127	2.5
45	MP1B	Mx	-.025	2.5
46	MP1B	X	21.004	6.67
47	MP1B	Z	12.127	6.67
48	MP1B	Mx	-.025	6.67
49	MP1C	X	21.004	2.5
50	MP1C	Z	12.127	2.5
51	MP1C	Mx	-.025	2.5
52	MP1C	X	21.004	6.67
53	MP1C	Z	12.127	6.67
54	MP1C	Mx	-.025	6.67
55	MP5A	X	21.004	2.5
56	MP5A	Z	12.127	2.5
57	MP5A	Mx	-.025	2.5
58	MP5A	X	21.004	6.67
59	MP5A	Z	12.127	6.67
60	MP5A	Mx	-.025	6.67
61	MP5B	X	21.004	2.5
62	MP5B	Z	12.127	2.5
63	MP5B	Mx	-.025	2.5
64	MP5B	X	21.004	6.67
65	MP5B	Z	12.127	6.67

Member Point Loads (BLC 19 : Antenna Wi (120 Deg)) (Continued)

	Member Label	Direction	Magnitude[lb,k-ft]	Location[ft,%]
66	MP5B	Mx	-.025	6.67
67	MP5C	X	21.004	2.5
68	MP5C	Z	12.127	2.5
69	MP5C	Mx	-.025	2.5
70	MP5C	X	21.004	6.67
71	MP5C	Z	12.127	6.67
72	MP5C	Mx	-.025	6.67
73	MP2A	X	9.053	4.58
74	MP2A	Z	5.227	4.58
75	MP2A	Mx	.005	4.58
76	MP2B	X	11.587	4.58
77	MP2B	Z	6.69	4.58
78	MP2B	Mx	0	4.58
79	MP2C	X	9.053	4.58
80	MP2C	Z	5.227	4.58
81	MP2C	Mx	-.005	4.58
82	MP3A	X	8.09	4.58
83	MP3A	Z	4.671	4.58
84	MP3A	Mx	.004	4.58
85	MP3B	X	11.587	4.58
86	MP3B	Z	6.69	4.58
87	MP3B	Mx	0	4.58
88	MP3C	X	8.09	4.58
89	MP3C	Z	4.671	4.58
90	MP3C	Mx	-.004	4.58
91	MP3A	X	2.549	3.25
92	MP3A	Z	1.472	3.25
93	MP3A	Mx	.00085	3.25
94	MP3B	X	3.074	3.25
95	MP3B	Z	1.775	3.25
96	MP3B	Mx	0	3.25
97	MP3C	X	2.549	3.25
98	MP3C	Z	1.472	3.25
99	MP3C	Mx	-.00085	3.25
100	MP1A	X	16.863	4.58
101	MP1A	Z	9.736	4.58
102	MP1A	Mx	.008	4.58
103	MP1B	X	21.839	4.58
104	MP1B	Z	12.609	4.58
105	MP1B	Mx	0	4.58
106	MP4A	X	7.801	3.58
107	MP4A	Z	4.504	3.58
108	MP4A	Mx	-.004	3.58
109	MP4A	X	7.801	5.58
110	MP4A	Z	4.504	5.58
111	MP4A	Mx	-.004	5.58
112	MP4B	X	13.395	3.58
113	MP4B	Z	7.734	3.58
114	MP4B	Mx	0	3.58
115	MP4B	X	13.395	5.58
116	MP4B	Z	7.734	5.58
117	MP4B	Mx	0	5.58

Member Point Loads (BLC 19 : Antenna Wi (120 Deg)) (Continued)

	Member Label	Direction	Magnitude[lb,k-ft]	Location[ft,%]
118	MP4C	X	7.801	3.58
119	MP4C	Z	4.504	3.58
120	MP4C	Mx	.004	3.58
121	MP4C	X	7.801	5.58
122	MP4C	Z	4.504	5.58
123	MP4C	Mx	.004	5.58

Member Point Loads (BLC 20 : Antenna Wi (150 Deg))

	Member Label	Direction	Magnitude[lb,k-ft]	Location[ft,%]
1	MP3A	X	13.253	2.83
2	MP3A	Z	22.956	2.83
3	MP3A	Mx	.007	2.83
4	MP3A	X	13.253	6.33
5	MP3A	Z	22.956	6.33
6	MP3A	Mx	.007	6.33
7	MP3B	X	13.253	2.83
8	MP3B	Z	22.956	2.83
9	MP3B	Mx	-.027	2.83
10	MP3B	X	13.253	6.33
11	MP3B	Z	22.956	6.33
12	MP3B	Mx	-.027	6.33
13	MP3C	X	9.931	2.83
14	MP3C	Z	17.201	2.83
15	MP3C	Mx	.015	2.83
16	MP3C	X	9.931	6.33
17	MP3C	Z	17.201	6.33
18	MP3C	Mx	.015	6.33
19	MP3A	X	13.253	2.83
20	MP3A	Z	22.956	2.83
21	MP3A	Mx	-.027	2.83
22	MP3A	X	13.253	6.33
23	MP3A	Z	22.956	6.33
24	MP3A	Mx	-.027	6.33
25	MP3B	X	13.253	2.83
26	MP3B	Z	22.956	2.83
27	MP3B	Mx	.007	2.83
28	MP3B	X	13.253	6.33
29	MP3B	Z	22.956	6.33
30	MP3B	Mx	.007	6.33
31	MP3C	X	9.931	2.83
32	MP3C	Z	17.201	2.83
33	MP3C	Mx	.015	2.83
34	MP3C	X	9.931	6.33
35	MP3C	Z	17.201	6.33
36	MP3C	Mx	.015	6.33
37	MP1A	X	9.074	2.5
38	MP1A	Z	15.717	2.5
39	MP1A	Mx	-.011	2.5
40	MP1A	X	9.074	6.67
41	MP1A	Z	15.717	6.67
42	MP1A	Mx	-.011	6.67

Member Point Loads (BLC 20 : Antenna Wi (150 Deg)) (Continued)

	Member Label	Direction	Magnitude[lb,k-ft]	Location[ft,%]
43	MP1B	X	9.074	2.5
44	MP1B	Z	15.717	2.5
45	MP1B	Mx	-.011	2.5
46	MP1B	X	9.074	6.67
47	MP1B	Z	15.717	6.67
48	MP1B	Mx	-.011	6.67
49	MP1C	X	9.074	2.5
50	MP1C	Z	15.717	2.5
51	MP1C	Mx	-.011	2.5
52	MP1C	X	9.074	6.67
53	MP1C	Z	15.717	6.67
54	MP1C	Mx	-.011	6.67
55	MP5A	X	9.074	2.5
56	MP5A	Z	15.717	2.5
57	MP5A	Mx	-.011	2.5
58	MP5A	X	9.074	6.67
59	MP5A	Z	15.717	6.67
60	MP5A	Mx	-.011	6.67
61	MP5B	X	9.074	2.5
62	MP5B	Z	15.717	2.5
63	MP5B	Mx	-.011	2.5
64	MP5B	X	9.074	6.67
65	MP5B	Z	15.717	6.67
66	MP5B	Mx	-.011	6.67
67	MP5C	X	9.074	2.5
68	MP5C	Z	15.717	2.5
69	MP5C	Mx	-.011	2.5
70	MP5C	X	9.074	6.67
71	MP5C	Z	15.717	6.67
72	MP5C	Mx	-.011	6.67
73	MP2A	X	6.202	4.58
74	MP2A	Z	10.742	4.58
75	MP2A	Mx	.003	4.58
76	MP2B	X	6.202	4.58
77	MP2B	Z	10.742	4.58
78	MP2B	Mx	.003	4.58
79	MP2C	X	4.739	4.58
80	MP2C	Z	8.208	4.58
81	MP2C	Mx	-.005	4.58
82	MP3A	X	6.017	4.58
83	MP3A	Z	10.421	4.58
84	MP3A	Mx	.003	4.58
85	MP3B	X	6.017	4.58
86	MP3B	Z	10.421	4.58
87	MP3B	Mx	.003	4.58
88	MP3C	X	3.998	4.58
89	MP3C	Z	6.925	4.58
90	MP3C	Mx	-.004	4.58
91	MP3A	X	1.674	3.25
92	MP3A	Z	2.899	3.25
93	MP3A	Mx	.000558	3.25
94	MP3B	X	1.674	3.25

Member Point Loads (BLC 20 : Antenna Wi (150 Deg)) (Continued)

	Member Label	Direction	Magnitude[lb,k-ft]	Location[ft,%]
95	MP3B	Z	2.899	3.25
96	MP3B	Mx	.000558	3.25
97	MP3C	X	1.371	3.25
98	MP3C	Z	2.374	3.25
99	MP3C	Mx	-.000914	3.25
100	MP1A	X	11.651	4.58
101	MP1A	Z	20.18	4.58
102	MP1A	Mx	.006	4.58
103	MP1B	X	11.651	4.58
104	MP1B	Z	20.18	4.58
105	MP1B	Mx	.006	4.58
106	MP4A	X	6.657	3.58
107	MP4A	Z	11.531	3.58
108	MP4A	Mx	-.003	3.58
109	MP4A	X	6.657	5.58
110	MP4A	Z	11.531	5.58
111	MP4A	Mx	-.003	5.58
112	MP4B	X	6.657	3.58
113	MP4B	Z	11.531	3.58
114	MP4B	Mx	-.003	3.58
115	MP4B	X	6.657	5.58
116	MP4B	Z	11.531	5.58
117	MP4B	Mx	-.003	5.58
118	MP4C	X	3.427	3.58
119	MP4C	Z	5.936	3.58
120	MP4C	Mx	.003	3.58
121	MP4C	X	3.427	5.58
122	MP4C	Z	5.936	5.58
123	MP4C	Mx	.003	5.58

Member Point Loads (BLC 21 : Antenna Wi (180 Deg))

	Member Label	Direction	Magnitude[lb,k-ft]	Location[ft,%]
1	MP3A	X	0	2.83
2	MP3A	Z	28.722	2.83
3	MP3A	Mx	.022	2.83
4	MP3A	X	0	6.33
5	MP3A	Z	28.722	6.33
6	MP3A	Mx	.022	6.33
7	MP3B	X	0	2.83
8	MP3B	Z	22.077	2.83
9	MP3B	Mx	-.023	2.83
10	MP3B	X	0	6.33
11	MP3B	Z	22.077	6.33
12	MP3B	Mx	-.023	6.33
13	MP3C	X	0	2.83
14	MP3C	Z	22.077	2.83
15	MP3C	Mx	.006	2.83
16	MP3C	X	0	6.33
17	MP3C	Z	22.077	6.33
18	MP3C	Mx	.006	6.33
19	MP3A	X	0	2.83

Member Point Loads (BLC 21 : Antenna Wi (180 Deg)) (Continued)

	Member Label	Direction	Magnitude[lb,k-ft]	Location[ft,%]
20	MP3A	Z	28.722	2.83
21	MP3A	Mx	-.022	2.83
22	MP3A	X	0	6.33
23	MP3A	Z	28.722	6.33
24	MP3A	Mx	-.022	6.33
25	MP3B	X	0	2.83
26	MP3B	Z	22.077	2.83
27	MP3B	Mx	-.006	2.83
28	MP3B	X	0	6.33
29	MP3B	Z	22.077	6.33
30	MP3B	Mx	-.006	6.33
31	MP3C	X	0	2.83
32	MP3C	Z	22.077	2.83
33	MP3C	Mx	.023	2.83
34	MP3C	X	0	6.33
35	MP3C	Z	22.077	6.33
36	MP3C	Mx	.023	6.33
37	MP1A	X	0	2.5
38	MP1A	Z	15.095	2.5
39	MP1A	Mx	0	2.5
40	MP1A	X	0	6.67
41	MP1A	Z	15.095	6.67
42	MP1A	Mx	0	6.67
43	MP1B	X	0	2.5
44	MP1B	Z	15.095	2.5
45	MP1B	Mx	0	2.5
46	MP1B	X	0	6.67
47	MP1B	Z	15.095	6.67
48	MP1B	Mx	0	6.67
49	MP1C	X	0	2.5
50	MP1C	Z	15.095	2.5
51	MP1C	Mx	0	2.5
52	MP1C	X	0	6.67
53	MP1C	Z	15.095	6.67
54	MP1C	Mx	0	6.67
55	MP5A	X	0	2.5
56	MP5A	Z	15.095	2.5
57	MP5A	Mx	0	2.5
58	MP5A	X	0	6.67
59	MP5A	Z	15.095	6.67
60	MP5A	Mx	0	6.67
61	MP5B	X	0	2.5
62	MP5B	Z	15.095	2.5
63	MP5B	Mx	0	2.5
64	MP5B	X	0	6.67
65	MP5B	Z	15.095	6.67
66	MP5B	Mx	0	6.67
67	MP5C	X	0	2.5
68	MP5C	Z	15.095	2.5
69	MP5C	Mx	0	2.5
70	MP5C	X	0	6.67
71	MP5C	Z	15.095	6.67

Member Point Loads (BLC 21 : Antenna Wi (180 Deg)) (Continued)

	Member Label	Direction	Magnitude[lb,k-ft]	Location[ft,%]
72	MP5C	Mx	0	6.67
73	MP2A	X	0	4.58
74	MP2A	Z	13.379	4.58
75	MP2A	Mx	0	4.58
76	MP2B	X	0	4.58
77	MP2B	Z	10.454	4.58
78	MP2B	Mx	.005	4.58
79	MP2C	X	0	4.58
80	MP2C	Z	10.454	4.58
81	MP2C	Mx	-.005	4.58
82	MP3A	X	0	4.58
83	MP3A	Z	13.379	4.58
84	MP3A	Mx	0	4.58
85	MP3B	X	0	4.58
86	MP3B	Z	9.342	4.58
87	MP3B	Mx	.004	4.58
88	MP3C	X	0	4.58
89	MP3C	Z	9.342	4.58
90	MP3C	Mx	-.004	4.58
91	MP3A	X	0	3.25
92	MP3A	Z	3.55	3.25
93	MP3A	Mx	0	3.25
94	MP3B	X	0	3.25
95	MP3B	Z	2.943	3.25
96	MP3B	Mx	.00085	3.25
97	MP3C	X	0	3.25
98	MP3C	Z	2.943	3.25
99	MP3C	Mx	-.00085	3.25
100	MP1A	X	0	4.58
101	MP1A	Z	25.217	4.58
102	MP1A	Mx	0	4.58
103	MP1B	X	0	4.58
104	MP1B	Z	19.471	4.58
105	MP1B	Mx	.008	4.58
106	MP4A	X	0	3.58
107	MP4A	Z	15.468	3.58
108	MP4A	Mx	0	3.58
109	MP4A	X	0	5.58
110	MP4A	Z	15.468	5.58
111	MP4A	Mx	0	5.58
112	MP4B	X	0	3.58
113	MP4B	Z	9.008	3.58
114	MP4B	Mx	-.004	3.58
115	MP4B	X	0	5.58
116	MP4B	Z	9.008	5.58
117	MP4B	Mx	-.004	5.58
118	MP4C	X	0	3.58
119	MP4C	Z	9.008	3.58
120	MP4C	Mx	.004	3.58
121	MP4C	X	0	5.58
122	MP4C	Z	9.008	5.58
123	MP4C	Mx	.004	5.58

Member Point Loads (BLC 22 : Antenna Wi (210 Deg))

	Member Label	Direction	Magnitude[lb,k-ft]	Location[ft,%]
1	MP3A	X	-13.253	2.83
2	MP3A	Z	22.956	2.83
3	MP3A	Mx	.027	2.83
4	MP3A	X	-13.253	6.33
5	MP3A	Z	22.956	6.33
6	MP3A	Mx	.027	6.33
7	MP3B	X	-9.931	2.83
8	MP3B	Z	17.201	2.83
9	MP3B	Mx	-.015	2.83
10	MP3B	X	-9.931	6.33
11	MP3B	Z	17.201	6.33
12	MP3B	Mx	-.015	6.33
13	MP3C	X	-13.253	2.83
14	MP3C	Z	22.956	2.83
15	MP3C	Mx	-.007	2.83
16	MP3C	X	-13.253	6.33
17	MP3C	Z	22.956	6.33
18	MP3C	Mx	-.007	6.33
19	MP3A	X	-13.253	2.83
20	MP3A	Z	22.956	2.83
21	MP3A	Mx	-.007	2.83
22	MP3A	X	-13.253	6.33
23	MP3A	Z	22.956	6.33
24	MP3A	Mx	-.007	6.33
25	MP3B	X	-9.931	2.83
26	MP3B	Z	17.201	2.83
27	MP3B	Mx	-.015	2.83
28	MP3B	X	-9.931	6.33
29	MP3B	Z	17.201	6.33
30	MP3B	Mx	-.015	6.33
31	MP3C	X	-13.253	2.83
32	MP3C	Z	22.956	2.83
33	MP3C	Mx	.027	2.83
34	MP3C	X	-13.253	6.33
35	MP3C	Z	22.956	6.33
36	MP3C	Mx	.027	6.33
37	MP1A	X	-9.074	2.5
38	MP1A	Z	15.717	2.5
39	MP1A	Mx	.011	2.5
40	MP1A	X	-9.074	6.67
41	MP1A	Z	15.717	6.67
42	MP1A	Mx	.011	6.67
43	MP1B	X	-9.074	2.5
44	MP1B	Z	15.717	2.5
45	MP1B	Mx	.011	2.5
46	MP1B	X	-9.074	6.67
47	MP1B	Z	15.717	6.67
48	MP1B	Mx	.011	6.67
49	MP1C	X	-9.074	2.5
50	MP1C	Z	15.717	2.5
51	MP1C	Mx	.011	2.5
52	MP1C	X	-9.074	6.67

Member Point Loads (BLC 22 : Antenna Wi (210 Deg)) (Continued)

	Member Label	Direction	Magnitude[lb,k-ft]	Location[ft,%]
53	MP1C	Z	15.717	6.67
54	MP1C	Mx	.011	6.67
55	MP5A	X	-9.074	2.5
56	MP5A	Z	15.717	2.5
57	MP5A	Mx	.011	2.5
58	MP5A	X	-9.074	6.67
59	MP5A	Z	15.717	6.67
60	MP5A	Mx	.011	6.67
61	MP5B	X	-9.074	2.5
62	MP5B	Z	15.717	2.5
63	MP5B	Mx	.011	2.5
64	MP5B	X	-9.074	6.67
65	MP5B	Z	15.717	6.67
66	MP5B	Mx	.011	6.67
67	MP5C	X	-9.074	2.5
68	MP5C	Z	15.717	2.5
69	MP5C	Mx	.011	2.5
70	MP5C	X	-9.074	6.67
71	MP5C	Z	15.717	6.67
72	MP5C	Mx	.011	6.67
73	MP2A	X	-6.202	4.58
74	MP2A	Z	10.742	4.58
75	MP2A	Mx	-.003	4.58
76	MP2B	X	-4.739	4.58
77	MP2B	Z	8.208	4.58
78	MP2B	Mx	.005	4.58
79	MP2C	X	-6.202	4.58
80	MP2C	Z	10.742	4.58
81	MP2C	Mx	-.003	4.58
82	MP3A	X	-6.017	4.58
83	MP3A	Z	10.421	4.58
84	MP3A	Mx	-.003	4.58
85	MP3B	X	-3.998	4.58
86	MP3B	Z	6.925	4.58
87	MP3B	Mx	.004	4.58
88	MP3C	X	-6.017	4.58
89	MP3C	Z	10.421	4.58
90	MP3C	Mx	-.003	4.58
91	MP3A	X	-1.674	3.25
92	MP3A	Z	2.899	3.25
93	MP3A	Mx	-.000558	3.25
94	MP3B	X	-1.371	3.25
95	MP3B	Z	2.374	3.25
96	MP3B	Mx	.000914	3.25
97	MP3C	X	-1.674	3.25
98	MP3C	Z	2.899	3.25
99	MP3C	Mx	-.000558	3.25
100	MP1A	X	-11.651	4.58
101	MP1A	Z	20.18	4.58
102	MP1A	Mx	-.006	4.58
103	MP1B	X	-8.778	4.58
104	MP1B	Z	15.204	4.58

Member Point Loads (BLC 22 : Antenna Wi (210 Deg)) (Continued)

	Member Label	Direction	Magnitude[lb,k-ft]	Location[ft,%]
105	MP1B	Mx	.009	4.58
106	MP4A	X	-6.657	3.58
107	MP4A	Z	11.531	3.58
108	MP4A	Mx	.003	3.58
109	MP4A	X	-6.657	5.58
110	MP4A	Z	11.531	5.58
111	MP4A	Mx	.003	5.58
112	MP4B	X	-3.427	3.58
113	MP4B	Z	5.936	3.58
114	MP4B	Mx	-.003	3.58
115	MP4B	X	-3.427	5.58
116	MP4B	Z	5.936	5.58
117	MP4B	Mx	-.003	5.58
118	MP4C	X	-6.657	3.58
119	MP4C	Z	11.531	3.58
120	MP4C	Mx	.003	3.58
121	MP4C	X	-6.657	5.58
122	MP4C	Z	11.531	5.58
123	MP4C	Mx	.003	5.58

Member Point Loads (BLC 23 : Antenna Wi (240 Deg))

	Member Label	Direction	Magnitude[lb,k-ft]	Location[ft,%]
1	MP3A	X	-19.119	2.83
2	MP3A	Z	11.039	2.83
3	MP3A	Mx	.023	2.83
4	MP3A	X	-19.119	6.33
5	MP3A	Z	11.039	6.33
6	MP3A	Mx	.023	6.33
7	MP3B	X	-19.119	2.83
8	MP3B	Z	11.039	2.83
9	MP3B	Mx	-.006	2.83
10	MP3B	X	-19.119	6.33
11	MP3B	Z	11.039	6.33
12	MP3B	Mx	-.006	6.33
13	MP3C	X	-24.874	2.83
14	MP3C	Z	14.361	2.83
15	MP3C	Mx	-.022	2.83
16	MP3C	X	-24.874	6.33
17	MP3C	Z	14.361	6.33
18	MP3C	Mx	-.022	6.33
19	MP3A	X	-19.119	2.83
20	MP3A	Z	11.039	2.83
21	MP3A	Mx	.006	2.83
22	MP3A	X	-19.119	6.33
23	MP3A	Z	11.039	6.33
24	MP3A	Mx	.006	6.33
25	MP3B	X	-19.119	2.83
26	MP3B	Z	11.039	2.83
27	MP3B	Mx	-.023	2.83
28	MP3B	X	-19.119	6.33
29	MP3B	Z	11.039	6.33

Member Point Loads (BLC 23 : Antenna Wi (240 Deg)) (Continued)

	Member Label	Direction	Magnitude[lb,k-ft]	Location[ft,%]
30	MP3B	Mx	-.023	6.33
31	MP3C	X	-24.874	2.83
32	MP3C	Z	14.361	2.83
33	MP3C	Mx	.022	2.83
34	MP3C	X	-24.874	6.33
35	MP3C	Z	14.361	6.33
36	MP3C	Mx	.022	6.33
37	MP1A	X	-21.004	2.5
38	MP1A	Z	12.127	2.5
39	MP1A	Mx	.025	2.5
40	MP1A	X	-21.004	6.67
41	MP1A	Z	12.127	6.67
42	MP1A	Mx	.025	6.67
43	MP1B	X	-21.004	2.5
44	MP1B	Z	12.127	2.5
45	MP1B	Mx	.025	2.5
46	MP1B	X	-21.004	6.67
47	MP1B	Z	12.127	6.67
48	MP1B	Mx	.025	6.67
49	MP1C	X	-21.004	2.5
50	MP1C	Z	12.127	2.5
51	MP1C	Mx	.025	2.5
52	MP1C	X	-21.004	6.67
53	MP1C	Z	12.127	6.67
54	MP1C	Mx	.025	6.67
55	MP5A	X	-21.004	2.5
56	MP5A	Z	12.127	2.5
57	MP5A	Mx	.025	2.5
58	MP5A	X	-21.004	6.67
59	MP5A	Z	12.127	6.67
60	MP5A	Mx	.025	6.67
61	MP5B	X	-21.004	2.5
62	MP5B	Z	12.127	2.5
63	MP5B	Mx	.025	2.5
64	MP5B	X	-21.004	6.67
65	MP5B	Z	12.127	6.67
66	MP5B	Mx	.025	6.67
67	MP5C	X	-21.004	2.5
68	MP5C	Z	12.127	2.5
69	MP5C	Mx	.025	2.5
70	MP5C	X	-21.004	6.67
71	MP5C	Z	12.127	6.67
72	MP5C	Mx	.025	6.67
73	MP2A	X	-9.053	4.58
74	MP2A	Z	5.227	4.58
75	MP2A	Mx	-.005	4.58
76	MP2B	X	-9.053	4.58
77	MP2B	Z	5.227	4.58
78	MP2B	Mx	.005	4.58
79	MP2C	X	-11.587	4.58
80	MP2C	Z	6.69	4.58
81	MP2C	Mx	0	4.58

Member Point Loads (BLC 23 : Antenna Wi (240 Deg)) (Continued)

	Member Label	Direction	Magnitude[lb,k-ft]	Location[ft,%]
82	MP3A	X	-8.09	4.58
83	MP3A	Z	4.671	4.58
84	MP3A	Mx	-.004	4.58
85	MP3B	X	-8.09	4.58
86	MP3B	Z	4.671	4.58
87	MP3B	Mx	.004	4.58
88	MP3C	X	-11.587	4.58
89	MP3C	Z	6.69	4.58
90	MP3C	Mx	0	4.58
91	MP3A	X	-2.549	3.25
92	MP3A	Z	1.472	3.25
93	MP3A	Mx	-.00085	3.25
94	MP3B	X	-2.549	3.25
95	MP3B	Z	1.472	3.25
96	MP3B	Mx	.00085	3.25
97	MP3C	X	-3.074	3.25
98	MP3C	Z	1.775	3.25
99	MP3C	Mx	0	3.25
100	MP1A	X	-16.863	4.58
101	MP1A	Z	9.736	4.58
102	MP1A	Mx	-.008	4.58
103	MP1B	X	-16.863	4.58
104	MP1B	Z	9.736	4.58
105	MP1B	Mx	.008	4.58
106	MP4A	X	-7.801	3.58
107	MP4A	Z	4.504	3.58
108	MP4A	Mx	.004	3.58
109	MP4A	X	-7.801	5.58
110	MP4A	Z	4.504	5.58
111	MP4A	Mx	.004	5.58
112	MP4B	X	-7.801	3.58
113	MP4B	Z	4.504	3.58
114	MP4B	Mx	-.004	3.58
115	MP4B	X	-7.801	5.58
116	MP4B	Z	4.504	5.58
117	MP4B	Mx	-.004	5.58
118	MP4C	X	-13.395	3.58
119	MP4C	Z	7.734	3.58
120	MP4C	Mx	0	3.58
121	MP4C	X	-13.395	5.58
122	MP4C	Z	7.734	5.58
123	MP4C	Mx	0	5.58

Member Point Loads (BLC 24 : Antenna Wi (270 Deg))

	Member Label	Direction	Magnitude[lb,k-ft]	Location[ft,%]
1	MP3A	X	-19.862	2.83
2	MP3A	Z	0	2.83
3	MP3A	Mx	.015	2.83
4	MP3A	X	-19.862	6.33
5	MP3A	Z	0	6.33
6	MP3A	Mx	.015	6.33

Member Point Loads (BLC 24 : Antenna Wi (270 Deg)) (Continued)

	Member Label	Direction	Magnitude[lb,k-ft]	Location[ft,%]
7	MP3B	X	-26.507	2.83
8	MP3B	Z	0	2.83
9	MP3B	Mx	.007	2.83
10	MP3B	X	-26.507	6.33
11	MP3B	Z	0	6.33
12	MP3B	Mx	.007	6.33
13	MP3C	X	-26.507	2.83
14	MP3C	Z	0	2.83
15	MP3C	Mx	-.027	2.83
16	MP3C	X	-26.507	6.33
17	MP3C	Z	0	6.33
18	MP3C	Mx	-.027	6.33
19	MP3A	X	-19.862	2.83
20	MP3A	Z	0	2.83
21	MP3A	Mx	.015	2.83
22	MP3A	X	-19.862	6.33
23	MP3A	Z	0	6.33
24	MP3A	Mx	.015	6.33
25	MP3B	X	-26.507	2.83
26	MP3B	Z	0	2.83
27	MP3B	Mx	-.027	2.83
28	MP3B	X	-26.507	6.33
29	MP3B	Z	0	6.33
30	MP3B	Mx	-.027	6.33
31	MP3C	X	-26.507	2.83
32	MP3C	Z	0	2.83
33	MP3C	Mx	.007	2.83
34	MP3C	X	-26.507	6.33
35	MP3C	Z	0	6.33
36	MP3C	Mx	.007	6.33
37	MP1A	X	-27.306	2.5
38	MP1A	Z	0	2.5
39	MP1A	Mx	.032	2.5
40	MP1A	X	-27.306	6.67
41	MP1A	Z	0	6.67
42	MP1A	Mx	.032	6.67
43	MP1B	X	-27.306	2.5
44	MP1B	Z	0	2.5
45	MP1B	Mx	.032	2.5
46	MP1B	X	-27.306	6.67
47	MP1B	Z	0	6.67
48	MP1B	Mx	.032	6.67
49	MP1C	X	-27.306	2.5
50	MP1C	Z	0	2.5
51	MP1C	Mx	.032	2.5
52	MP1C	X	-27.306	6.67
53	MP1C	Z	0	6.67
54	MP1C	Mx	.032	6.67
55	MP5A	X	-27.306	2.5
56	MP5A	Z	0	2.5
57	MP5A	Mx	.032	2.5
58	MP5A	X	-27.306	6.67

Member Point Loads (BLC 24 : Antenna Wi (270 Deg)) (Continued)

	Member Label	Direction	Magnitude[lb,k-ft]	Location[ft,%]
59	MP5A	Z	0	6.67
60	MP5A	Mx	.032	6.67
61	MP5B	X	-27.306	2.5
62	MP5B	Z	0	2.5
63	MP5B	Mx	.032	2.5
64	MP5B	X	-27.306	6.67
65	MP5B	Z	0	6.67
66	MP5B	Mx	.032	6.67
67	MP5C	X	-27.306	2.5
68	MP5C	Z	0	2.5
69	MP5C	Mx	.032	2.5
70	MP5C	X	-27.306	6.67
71	MP5C	Z	0	6.67
72	MP5C	Mx	.032	6.67
73	MP2A	X	-9.478	4.58
74	MP2A	Z	0	4.58
75	MP2A	Mx	-.005	4.58
76	MP2B	X	-12.404	4.58
77	MP2B	Z	0	4.58
78	MP2B	Mx	.003	4.58
79	MP2C	X	-12.404	4.58
80	MP2C	Z	0	4.58
81	MP2C	Mx	.003	4.58
82	MP3A	X	-7.996	4.58
83	MP3A	Z	0	4.58
84	MP3A	Mx	-.004	4.58
85	MP3B	X	-12.033	4.58
86	MP3B	Z	0	4.58
87	MP3B	Mx	.003	4.58
88	MP3C	X	-12.033	4.58
89	MP3C	Z	0	4.58
90	MP3C	Mx	.003	4.58
91	MP3A	X	-2.741	3.25
92	MP3A	Z	0	3.25
93	MP3A	Mx	-.000914	3.25
94	MP3B	X	-3.348	3.25
95	MP3B	Z	0	3.25
96	MP3B	Mx	.000558	3.25
97	MP3C	X	-3.348	3.25
98	MP3C	Z	0	3.25
99	MP3C	Mx	.000558	3.25
100	MP1A	X	-17.556	4.58
101	MP1A	Z	0	4.58
102	MP1A	Mx	-.009	4.58
103	MP1B	X	-23.302	4.58
104	MP1B	Z	0	4.58
105	MP1B	Mx	.006	4.58
106	MP4A	X	-6.855	3.58
107	MP4A	Z	0	3.58
108	MP4A	Mx	.003	3.58
109	MP4A	X	-6.855	5.58
110	MP4A	Z	0	5.58

Member Point Loads (BLC 24 : Antenna Wi (270 Deg)) (Continued)

	Member Label	Direction	Magnitude[lb,k-ft]	Location[ft,%]
111	MP4A	Mx	.003	5.58
112	MP4B	X	-13.314	3.58
113	MP4B	Z	0	3.58
114	MP4B	Mx	-.003	3.58
115	MP4B	X	-13.314	5.58
116	MP4B	Z	0	5.58
117	MP4B	Mx	-.003	5.58
118	MP4C	X	-13.314	3.58
119	MP4C	Z	0	3.58
120	MP4C	Mx	-.003	3.58
121	MP4C	X	-13.314	5.58
122	MP4C	Z	0	5.58
123	MP4C	Mx	-.003	5.58

Member Point Loads (BLC 25 : Antenna Wi (300 Deg))

	Member Label	Direction	Magnitude[lb,k-ft]	Location[ft,%]
1	MP3A	X	-19.119	2.83
2	MP3A	Z	-11.039	2.83
3	MP3A	Mx	.006	2.83
4	MP3A	X	-19.119	6.33
5	MP3A	Z	-11.039	6.33
6	MP3A	Mx	.006	6.33
7	MP3B	X	-24.874	2.83
8	MP3B	Z	-14.361	2.83
9	MP3B	Mx	.022	2.83
10	MP3B	X	-24.874	6.33
11	MP3B	Z	-14.361	6.33
12	MP3B	Mx	.022	6.33
13	MP3C	X	-19.119	2.83
14	MP3C	Z	-11.039	2.83
15	MP3C	Mx	-.023	2.83
16	MP3C	X	-19.119	6.33
17	MP3C	Z	-11.039	6.33
18	MP3C	Mx	-.023	6.33
19	MP3A	X	-19.119	2.83
20	MP3A	Z	-11.039	2.83
21	MP3A	Mx	.023	2.83
22	MP3A	X	-19.119	6.33
23	MP3A	Z	-11.039	6.33
24	MP3A	Mx	.023	6.33
25	MP3B	X	-24.874	2.83
26	MP3B	Z	-14.361	2.83
27	MP3B	Mx	-.022	2.83
28	MP3B	X	-24.874	6.33
29	MP3B	Z	-14.361	6.33
30	MP3B	Mx	-.022	6.33
31	MP3C	X	-19.119	2.83
32	MP3C	Z	-11.039	2.83
33	MP3C	Mx	-.006	2.83
34	MP3C	X	-19.119	6.33
35	MP3C	Z	-11.039	6.33

Member Point Loads (BLC 25 : Antenna Wi (300 Deg)) (Continued)

	Member Label	Direction	Magnitude[lb,k-ft]	Location[ft,%]
36	MP3C	Mx	-.006	6.33
37	MP1A	X	-21.004	2.5
38	MP1A	Z	-12.127	2.5
39	MP1A	Mx	.025	2.5
40	MP1A	X	-21.004	6.67
41	MP1A	Z	-12.127	6.67
42	MP1A	Mx	.025	6.67
43	MP1B	X	-21.004	2.5
44	MP1B	Z	-12.127	2.5
45	MP1B	Mx	.025	2.5
46	MP1B	X	-21.004	6.67
47	MP1B	Z	-12.127	6.67
48	MP1B	Mx	.025	6.67
49	MP1C	X	-21.004	2.5
50	MP1C	Z	-12.127	2.5
51	MP1C	Mx	.025	2.5
52	MP1C	X	-21.004	6.67
53	MP1C	Z	-12.127	6.67
54	MP1C	Mx	.025	6.67
55	MP5A	X	-21.004	2.5
56	MP5A	Z	-12.127	2.5
57	MP5A	Mx	.025	2.5
58	MP5A	X	-21.004	6.67
59	MP5A	Z	-12.127	6.67
60	MP5A	Mx	.025	6.67
61	MP5B	X	-21.004	2.5
62	MP5B	Z	-12.127	2.5
63	MP5B	Mx	.025	2.5
64	MP5B	X	-21.004	6.67
65	MP5B	Z	-12.127	6.67
66	MP5B	Mx	.025	6.67
67	MP5C	X	-21.004	2.5
68	MP5C	Z	-12.127	2.5
69	MP5C	Mx	.025	2.5
70	MP5C	X	-21.004	6.67
71	MP5C	Z	-12.127	6.67
72	MP5C	Mx	.025	6.67
73	MP2A	X	-9.053	4.58
74	MP2A	Z	-5.227	4.58
75	MP2A	Mx	-.005	4.58
76	MP2B	X	-11.587	4.58
77	MP2B	Z	-6.69	4.58
78	MP2B	Mx	0	4.58
79	MP2C	X	-9.053	4.58
80	MP2C	Z	-5.227	4.58
81	MP2C	Mx	.005	4.58
82	MP3A	X	-8.09	4.58
83	MP3A	Z	-4.671	4.58
84	MP3A	Mx	-.004	4.58
85	MP3B	X	-11.587	4.58
86	MP3B	Z	-6.69	4.58
87	MP3B	Mx	0	4.58

Member Point Loads (BLC 25 : Antenna Wi (300 Deg)) (Continued)

	Member Label	Direction	Magnitude[lb,k-ft]	Location[ft,%]
88	MP3C	X	-8.09	4.58
89	MP3C	Z	-4.671	4.58
90	MP3C	Mx	.004	4.58
91	MP3A	X	-2.549	3.25
92	MP3A	Z	-1.472	3.25
93	MP3A	Mx	-.00085	3.25
94	MP3B	X	-3.074	3.25
95	MP3B	Z	-1.775	3.25
96	MP3B	Mx	0	3.25
97	MP3C	X	-2.549	3.25
98	MP3C	Z	-1.472	3.25
99	MP3C	Mx	.00085	3.25
100	MP1A	X	-16.863	4.58
101	MP1A	Z	-9.736	4.58
102	MP1A	Mx	-.008	4.58
103	MP1B	X	-21.839	4.58
104	MP1B	Z	-12.609	4.58
105	MP1B	Mx	0	4.58
106	MP4A	X	-7.801	3.58
107	MP4A	Z	-4.504	3.58
108	MP4A	Mx	.004	3.58
109	MP4A	X	-7.801	5.58
110	MP4A	Z	-4.504	5.58
111	MP4A	Mx	.004	5.58
112	MP4B	X	-13.395	3.58
113	MP4B	Z	-7.734	3.58
114	MP4B	Mx	0	3.58
115	MP4B	X	-13.395	5.58
116	MP4B	Z	-7.734	5.58
117	MP4B	Mx	0	5.58
118	MP4C	X	-7.801	3.58
119	MP4C	Z	-4.504	3.58
120	MP4C	Mx	-.004	3.58
121	MP4C	X	-7.801	5.58
122	MP4C	Z	-4.504	5.58
123	MP4C	Mx	-.004	5.58

Member Point Loads (BLC 26 : Antenna Wi (330 Deg))

	Member Label	Direction	Magnitude[lb,k-ft]	Location[ft,%]
1	MP3A	X	-13.253	2.83
2	MP3A	Z	-22.956	2.83
3	MP3A	Mx	-.007	2.83
4	MP3A	X	-13.253	6.33
5	MP3A	Z	-22.956	6.33
6	MP3A	Mx	-.007	6.33
7	MP3B	X	-13.253	2.83
8	MP3B	Z	-22.956	2.83
9	MP3B	Mx	.027	2.83
10	MP3B	X	-13.253	6.33
11	MP3B	Z	-22.956	6.33
12	MP3B	Mx	.027	6.33

Member Point Loads (BLC 26 : Antenna Wi (330 Deg)) (Continued)

	Member Label	Direction	Magnitude[lb,k-ft]	Location[ft,%]
13	MP3C	X	-9.931	2.83
14	MP3C	Z	-17.201	2.83
15	MP3C	Mx	-.015	2.83
16	MP3C	X	-9.931	6.33
17	MP3C	Z	-17.201	6.33
18	MP3C	Mx	-.015	6.33
19	MP3A	X	-13.253	2.83
20	MP3A	Z	-22.956	2.83
21	MP3A	Mx	.027	2.83
22	MP3A	X	-13.253	6.33
23	MP3A	Z	-22.956	6.33
24	MP3A	Mx	.027	6.33
25	MP3B	X	-13.253	2.83
26	MP3B	Z	-22.956	2.83
27	MP3B	Mx	-.007	2.83
28	MP3B	X	-13.253	6.33
29	MP3B	Z	-22.956	6.33
30	MP3B	Mx	-.007	6.33
31	MP3C	X	-9.931	2.83
32	MP3C	Z	-17.201	2.83
33	MP3C	Mx	-.015	2.83
34	MP3C	X	-9.931	6.33
35	MP3C	Z	-17.201	6.33
36	MP3C	Mx	-.015	6.33
37	MP1A	X	-9.074	2.5
38	MP1A	Z	-15.717	2.5
39	MP1A	Mx	.011	2.5
40	MP1A	X	-9.074	6.67
41	MP1A	Z	-15.717	6.67
42	MP1A	Mx	.011	6.67
43	MP1B	X	-9.074	2.5
44	MP1B	Z	-15.717	2.5
45	MP1B	Mx	.011	2.5
46	MP1B	X	-9.074	6.67
47	MP1B	Z	-15.717	6.67
48	MP1B	Mx	.011	6.67
49	MP1C	X	-9.074	2.5
50	MP1C	Z	-15.717	2.5
51	MP1C	Mx	.011	2.5
52	MP1C	X	-9.074	6.67
53	MP1C	Z	-15.717	6.67
54	MP1C	Mx	.011	6.67
55	MP5A	X	-9.074	2.5
56	MP5A	Z	-15.717	2.5
57	MP5A	Mx	.011	2.5
58	MP5A	X	-9.074	6.67
59	MP5A	Z	-15.717	6.67
60	MP5A	Mx	.011	6.67
61	MP5B	X	-9.074	2.5
62	MP5B	Z	-15.717	2.5
63	MP5B	Mx	.011	2.5
64	MP5B	X	-9.074	6.67

Member Point Loads (BLC 26 : Antenna Wi (330 Deg)) (Continued)

	Member Label	Direction	Magnitude[lb,k-ft]	Location[ft,%]
65	MP5B	Z	-15.717	6.67
66	MP5B	Mx	.011	6.67
67	MP5C	X	-9.074	2.5
68	MP5C	Z	-15.717	2.5
69	MP5C	Mx	.011	2.5
70	MP5C	X	-9.074	6.67
71	MP5C	Z	-15.717	6.67
72	MP5C	Mx	.011	6.67
73	MP2A	X	-6.202	4.58
74	MP2A	Z	-10.742	4.58
75	MP2A	Mx	-.003	4.58
76	MP2B	X	-6.202	4.58
77	MP2B	Z	-10.742	4.58
78	MP2B	Mx	-.003	4.58
79	MP2C	X	-4.739	4.58
80	MP2C	Z	-8.208	4.58
81	MP2C	Mx	.005	4.58
82	MP3A	X	-6.017	4.58
83	MP3A	Z	-10.421	4.58
84	MP3A	Mx	-.003	4.58
85	MP3B	X	-6.017	4.58
86	MP3B	Z	-10.421	4.58
87	MP3B	Mx	-.003	4.58
88	MP3C	X	-3.998	4.58
89	MP3C	Z	-6.925	4.58
90	MP3C	Mx	.004	4.58
91	MP3A	X	-1.674	3.25
92	MP3A	Z	-2.899	3.25
93	MP3A	Mx	-.000558	3.25
94	MP3B	X	-1.674	3.25
95	MP3B	Z	-2.899	3.25
96	MP3B	Mx	-.000558	3.25
97	MP3C	X	-1.371	3.25
98	MP3C	Z	-2.374	3.25
99	MP3C	Mx	.000914	3.25
100	MP1A	X	-11.651	4.58
101	MP1A	Z	-20.18	4.58
102	MP1A	Mx	-.006	4.58
103	MP1B	X	-11.651	4.58
104	MP1B	Z	-20.18	4.58
105	MP1B	Mx	-.006	4.58
106	MP4A	X	-6.657	3.58
107	MP4A	Z	-11.531	3.58
108	MP4A	Mx	.003	3.58
109	MP4A	X	-6.657	5.58
110	MP4A	Z	-11.531	5.58
111	MP4A	Mx	.003	5.58
112	MP4B	X	-6.657	3.58
113	MP4B	Z	-11.531	3.58
114	MP4B	Mx	.003	3.58
115	MP4B	X	-6.657	5.58
116	MP4B	Z	-11.531	5.58

Member Point Loads (BLC 26 : Antenna Wi (330 Deg)) (Continued)

	Member Label	Direction	Magnitude[lb,k-ft]	Location[ft,%]
117	MP4B	Mx	.003	5.58
118	MP4C	X	-3.427	3.58
119	MP4C	Z	-5.936	3.58
120	MP4C	Mx	-.003	3.58
121	MP4C	X	-3.427	5.58
122	MP4C	Z	-5.936	5.58
123	MP4C	Mx	-.003	5.58

Member Point Loads (BLC 27 : Antenna Wm (0 Deg))

	Member Label	Direction	Magnitude[lb,k-ft]	Location[ft,%]
1	MP3A	X	0	2.83
2	MP3A	Z	-9.04	2.83
3	MP3A	Mx	-.007	2.83
4	MP3A	X	0	6.33
5	MP3A	Z	-9.04	6.33
6	MP3A	Mx	-.007	6.33
7	MP3B	X	0	2.83
8	MP3B	Z	-6.713	2.83
9	MP3B	Mx	.007	2.83
10	MP3B	X	0	6.33
11	MP3B	Z	-6.713	6.33
12	MP3B	Mx	.007	6.33
13	MP3C	X	0	2.83
14	MP3C	Z	-6.713	2.83
15	MP3C	Mx	-.002	2.83
16	MP3C	X	0	6.33
17	MP3C	Z	-6.713	6.33
18	MP3C	Mx	-.002	6.33
19	MP3A	X	0	2.83
20	MP3A	Z	-9.04	2.83
21	MP3A	Mx	.007	2.83
22	MP3A	X	0	6.33
23	MP3A	Z	-9.04	6.33
24	MP3A	Mx	.007	6.33
25	MP3B	X	0	2.83
26	MP3B	Z	-6.713	2.83
27	MP3B	Mx	.002	2.83
28	MP3B	X	0	6.33
29	MP3B	Z	-6.713	6.33
30	MP3B	Mx	.002	6.33
31	MP3C	X	0	2.83
32	MP3C	Z	-6.713	2.83
33	MP3C	Mx	-.007	2.83
34	MP3C	X	0	6.33
35	MP3C	Z	-6.713	6.33
36	MP3C	Mx	-.007	6.33
37	MP1A	X	0	2.5
38	MP1A	Z	-4.297	2.5
39	MP1A	Mx	0	2.5
40	MP1A	X	0	6.67
41	MP1A	Z	-4.297	6.67

Member Point Loads (BLC 27 : Antenna Wm (0 Deg)) (Continued)

	Member Label	Direction	Magnitude[lb,k-ft]	Location[ft,%]
42	MP1A	Mx	0	6.67
43	MP1B	X	0	2.5
44	MP1B	Z	-4.297	2.5
45	MP1B	Mx	0	2.5
46	MP1B	X	0	6.67
47	MP1B	Z	-4.297	6.67
48	MP1B	Mx	0	6.67
49	MP1C	X	0	2.5
50	MP1C	Z	-4.297	2.5
51	MP1C	Mx	0	2.5
52	MP1C	X	0	6.67
53	MP1C	Z	-4.297	6.67
54	MP1C	Mx	0	6.67
55	MP5A	X	0	2.5
56	MP5A	Z	-4.297	2.5
57	MP5A	Mx	0	2.5
58	MP5A	X	0	6.67
59	MP5A	Z	-4.297	6.67
60	MP5A	Mx	0	6.67
61	MP5B	X	0	2.5
62	MP5B	Z	-4.297	2.5
63	MP5B	Mx	0	2.5
64	MP5B	X	0	6.67
65	MP5B	Z	-4.297	6.67
66	MP5B	Mx	0	6.67
67	MP5C	X	0	2.5
68	MP5C	Z	-4.297	2.5
69	MP5C	Mx	0	2.5
70	MP5C	X	0	6.67
71	MP5C	Z	-4.297	6.67
72	MP5C	Mx	0	6.67
73	MP2A	X	0	4.58
74	MP2A	Z	-3.711	4.58
75	MP2A	Mx	0	4.58
76	MP2B	X	0	4.58
77	MP2B	Z	-2.788	4.58
78	MP2B	Mx	-.001	4.58
79	MP2C	X	0	4.58
80	MP2C	Z	-2.788	4.58
81	MP2C	Mx	.001	4.58
82	MP3A	X	0	4.58
83	MP3A	Z	-3.711	4.58
84	MP3A	Mx	0	4.58
85	MP3B	X	0	4.58
86	MP3B	Z	-2.435	4.58
87	MP3B	Mx	-.001	4.58
88	MP3C	X	0	4.58
89	MP3C	Z	-2.435	4.58
90	MP3C	Mx	.001	4.58
91	MP3A	X	0	3.25
92	MP3A	Z	-.734	3.25
93	MP3A	Mx	0	3.25

Member Point Loads (BLC 27 : Antenna Wm (0 Deg)) (Continued)

	Member Label	Direction	Magnitude[lb,k-ft]	Location[ft,%]
94	MP3B	X	0	3.25
95	MP3B	Z	-.565	3.25
96	MP3B	Mx	-.000163	3.25
97	MP3C	X	0	3.25
98	MP3C	Z	-.565	3.25
99	MP3C	Mx	.000163	3.25
100	MP1A	X	0	4.58
101	MP1A	Z	-7.522	4.58
102	MP1A	Mx	0	4.58
103	MP1B	X	0	4.58
104	MP1B	Z	-5.615	4.58
105	MP1B	Mx	-.002	4.58
106	MP4A	X	0	3.58
107	MP4A	Z	-4.664	3.58
108	MP4A	Mx	0	3.58
109	MP4A	X	0	5.58
110	MP4A	Z	-4.664	5.58
111	MP4A	Mx	0	5.58
112	MP4B	X	0	3.58
113	MP4B	Z	-2.535	3.58
114	MP4B	Mx	.001	3.58
115	MP4B	X	0	5.58
116	MP4B	Z	-2.535	5.58
117	MP4B	Mx	.001	5.58
118	MP4C	X	0	3.58
119	MP4C	Z	-2.535	3.58
120	MP4C	Mx	-.001	3.58
121	MP4C	X	0	5.58
122	MP4C	Z	-2.535	5.58
123	MP4C	Mx	-.001	5.58

Member Point Loads (BLC 28 : Antenna Wm (30 Deg))

	Member Label	Direction	Magnitude[lb,k-ft]	Location[ft,%]
1	MP3A	X	4.132	2.83
2	MP3A	Z	-7.157	2.83
3	MP3A	Mx	-.008	2.83
4	MP3A	X	4.132	6.33
5	MP3A	Z	-7.157	6.33
6	MP3A	Mx	-.008	6.33
7	MP3B	X	2.969	2.83
8	MP3B	Z	-5.142	2.83
9	MP3B	Mx	.004	2.83
10	MP3B	X	2.969	6.33
11	MP3B	Z	-5.142	6.33
12	MP3B	Mx	.004	6.33
13	MP3C	X	4.132	2.83
14	MP3C	Z	-7.157	2.83
15	MP3C	Mx	.002	2.83
16	MP3C	X	4.132	6.33
17	MP3C	Z	-7.157	6.33
18	MP3C	Mx	.002	6.33

Member Point Loads (BLC 28 : Antenna Wm (30 Deg)) (Continued)

	Member Label	Direction	Magnitude[lb,k-ft]	Location[ft,%]
19	MP3A	X	4.132	2.83
20	MP3A	Z	-7.157	2.83
21	MP3A	Mx	.002	2.83
22	MP3A	X	4.132	6.33
23	MP3A	Z	-7.157	6.33
24	MP3A	Mx	.002	6.33
25	MP3B	X	2.969	2.83
26	MP3B	Z	-5.142	2.83
27	MP3B	Mx	.004	2.83
28	MP3B	X	2.969	6.33
29	MP3B	Z	-5.142	6.33
30	MP3B	Mx	.004	6.33
31	MP3C	X	4.132	2.83
32	MP3C	Z	-7.157	2.83
33	MP3C	Mx	-.008	2.83
34	MP3C	X	4.132	6.33
35	MP3C	Z	-7.157	6.33
36	MP3C	Mx	-.008	6.33
37	MP1A	X	2.682	2.5
38	MP1A	Z	-4.645	2.5
39	MP1A	Mx	-.003	2.5
40	MP1A	X	2.682	6.67
41	MP1A	Z	-4.645	6.67
42	MP1A	Mx	-.003	6.67
43	MP1B	X	2.682	2.5
44	MP1B	Z	-4.645	2.5
45	MP1B	Mx	-.003	2.5
46	MP1B	X	2.682	6.67
47	MP1B	Z	-4.645	6.67
48	MP1B	Mx	-.003	6.67
49	MP1C	X	2.682	2.5
50	MP1C	Z	-4.645	2.5
51	MP1C	Mx	-.003	2.5
52	MP1C	X	2.682	6.67
53	MP1C	Z	-4.645	6.67
54	MP1C	Mx	-.003	6.67
55	MP5A	X	2.682	2.5
56	MP5A	Z	-4.645	2.5
57	MP5A	Mx	-.003	2.5
58	MP5A	X	2.682	6.67
59	MP5A	Z	-4.645	6.67
60	MP5A	Mx	-.003	6.67
61	MP5B	X	2.682	2.5
62	MP5B	Z	-4.645	2.5
63	MP5B	Mx	-.003	2.5
64	MP5B	X	2.682	6.67
65	MP5B	Z	-4.645	6.67
66	MP5B	Mx	-.003	6.67
67	MP5C	X	2.682	2.5
68	MP5C	Z	-4.645	2.5
69	MP5C	Mx	-.003	2.5
70	MP5C	X	2.682	6.67

Member Point Loads (BLC 28 : Antenna Wm (30 Deg)) (Continued)

	Member Label	Direction	Magnitude[lb,k-ft]	Location[ft,%]
71	MP5C	Z	-4.645	6.67
72	MP5C	Mx	-.003	6.67
73	MP2A	X	1.702	4.58
74	MP2A	Z	-2.948	4.58
75	MP2A	Mx	.000851	4.58
76	MP2B	X	1.24	4.58
77	MP2B	Z	-2.148	4.58
78	MP2B	Mx	-.001	4.58
79	MP2C	X	1.702	4.58
80	MP2C	Z	-2.948	4.58
81	MP2C	Mx	.000851	4.58
82	MP3A	X	1.643	4.58
83	MP3A	Z	-2.846	4.58
84	MP3A	Mx	.000822	4.58
85	MP3B	X	1.005	4.58
86	MP3B	Z	-1.74	4.58
87	MP3B	Mx	-.001	4.58
88	MP3C	X	1.643	4.58
89	MP3C	Z	-2.846	4.58
90	MP3C	Mx	.000822	4.58
91	MP3A	X	.339	3.25
92	MP3A	Z	-.587	3.25
93	MP3A	Mx	.000113	3.25
94	MP3B	X	.254	3.25
95	MP3B	Z	-.44	3.25
96	MP3B	Mx	-.000169	3.25
97	MP3C	X	.339	3.25
98	MP3C	Z	-.587	3.25
99	MP3C	Mx	.000113	3.25
100	MP1A	X	3.443	4.58
101	MP1A	Z	-5.963	4.58
102	MP1A	Mx	.002	4.58
103	MP1B	X	2.489	4.58
104	MP1B	Z	-4.312	4.58
105	MP1B	Mx	-.002	4.58
106	MP4A	X	1.977	3.58
107	MP4A	Z	-3.425	3.58
108	MP4A	Mx	-.000988	3.58
109	MP4A	X	1.977	5.58
110	MP4A	Z	-3.425	5.58
111	MP4A	Mx	-.000988	5.58
112	MP4B	X	.913	3.58
113	MP4B	Z	-1.581	3.58
114	MP4B	Mx	.000913	3.58
115	MP4B	X	.913	5.58
116	MP4B	Z	-1.581	5.58
117	MP4B	Mx	.000913	5.58
118	MP4C	X	1.977	3.58
119	MP4C	Z	-3.425	3.58
120	MP4C	Mx	-.000989	3.58
121	MP4C	X	1.977	5.58
122	MP4C	Z	-3.425	5.58

Member Point Loads (BLC 28 : Antenna Wm (30 Deg)) (Continued)

	Member Label	Direction	Magnitude[lb,k-ft]	Location[ft,%]
123	MP4C	Mx	-.000989	5.58

Member Point Loads (BLC 29 : Antenna Wm (60 Deg))

	Member Label	Direction	Magnitude[lb,k-ft]	Location[ft,%]
1	MP3A	X	5.814	2.83
2	MP3A	Z	-3.357	2.83
3	MP3A	Mx	-.007	2.83
4	MP3A	X	5.814	6.33
5	MP3A	Z	-3.357	6.33
6	MP3A	Mx	-.007	6.33
7	MP3B	X	5.814	2.83
8	MP3B	Z	-3.357	2.83
9	MP3B	Mx	.002	2.83
10	MP3B	X	5.814	6.33
11	MP3B	Z	-3.357	6.33
12	MP3B	Mx	.002	6.33
13	MP3C	X	7.829	2.83
14	MP3C	Z	-4.52	2.83
15	MP3C	Mx	.007	2.83
16	MP3C	X	7.829	6.33
17	MP3C	Z	-4.52	6.33
18	MP3C	Mx	.007	6.33
19	MP3A	X	5.814	2.83
20	MP3A	Z	-3.357	2.83
21	MP3A	Mx	-.002	2.83
22	MP3A	X	5.814	6.33
23	MP3A	Z	-3.357	6.33
24	MP3A	Mx	-.002	6.33
25	MP3B	X	5.814	2.83
26	MP3B	Z	-3.357	2.83
27	MP3B	Mx	.007	2.83
28	MP3B	X	5.814	6.33
29	MP3B	Z	-3.357	6.33
30	MP3B	Mx	.007	6.33
31	MP3C	X	7.829	2.83
32	MP3C	Z	-4.52	2.83
33	MP3C	Mx	-.007	2.83
34	MP3C	X	7.829	6.33
35	MP3C	Z	-4.52	6.33
36	MP3C	Mx	-.007	6.33
37	MP1A	X	6.491	2.5
38	MP1A	Z	-3.748	2.5
39	MP1A	Mx	-.008	2.5
40	MP1A	X	6.491	6.67
41	MP1A	Z	-3.748	6.67
42	MP1A	Mx	-.008	6.67
43	MP1B	X	6.491	2.5
44	MP1B	Z	-3.748	2.5
45	MP1B	Mx	-.008	2.5
46	MP1B	X	6.491	6.67
47	MP1B	Z	-3.748	6.67

Member Point Loads (BLC 29 : Antenna Wm (60 Deg)) (Continued)

	Member Label	Direction	Magnitude[lb,k-ft]	Location[ft,%]
48	MP1B	Mx	-.008	6.67
49	MP1C	X	6.491	2.5
50	MP1C	Z	-3.748	2.5
51	MP1C	Mx	-.008	2.5
52	MP1C	X	6.491	6.67
53	MP1C	Z	-3.748	6.67
54	MP1C	Mx	-.008	6.67
55	MP5A	X	6.491	2.5
56	MP5A	Z	-3.748	2.5
57	MP5A	Mx	-.008	2.5
58	MP5A	X	6.491	6.67
59	MP5A	Z	-3.748	6.67
60	MP5A	Mx	-.008	6.67
61	MP5B	X	6.491	2.5
62	MP5B	Z	-3.748	2.5
63	MP5B	Mx	-.008	2.5
64	MP5B	X	6.491	6.67
65	MP5B	Z	-3.748	6.67
66	MP5B	Mx	-.008	6.67
67	MP5C	X	6.491	2.5
68	MP5C	Z	-3.748	2.5
69	MP5C	Mx	-.008	2.5
70	MP5C	X	6.491	6.67
71	MP5C	Z	-3.748	6.67
72	MP5C	Mx	-.008	6.67
73	MP2A	X	2.415	4.58
74	MP2A	Z	-1.394	4.58
75	MP2A	Mx	.001	4.58
76	MP2B	X	2.415	4.58
77	MP2B	Z	-1.394	4.58
78	MP2B	Mx	-.001	4.58
79	MP2C	X	3.214	4.58
80	MP2C	Z	-1.856	4.58
81	MP2C	Mx	0	4.58
82	MP3A	X	2.109	4.58
83	MP3A	Z	-1.217	4.58
84	MP3A	Mx	.001	4.58
85	MP3B	X	2.109	4.58
86	MP3B	Z	-1.217	4.58
87	MP3B	Mx	-.001	4.58
88	MP3C	X	3.214	4.58
89	MP3C	Z	-1.856	4.58
90	MP3C	Mx	0	4.58
91	MP3A	X	.489	3.25
92	MP3A	Z	-.282	3.25
93	MP3A	Mx	.000163	3.25
94	MP3B	X	.489	3.25
95	MP3B	Z	-.282	3.25
96	MP3B	Mx	-.000163	3.25
97	MP3C	X	.636	3.25
98	MP3C	Z	-.367	3.25
99	MP3C	Mx	0	3.25

Member Point Loads (BLC 29 : Antenna Wm (60 Deg)) (Continued)

	Member Label	Direction	Magnitude[lb,k-ft]	Location[ft,%]
100	MP1A	X	4.862	4.58
101	MP1A	Z	-2.807	4.58
102	MP1A	Mx	.002	4.58
103	MP1B	X	4.862	4.58
104	MP1B	Z	-2.807	4.58
105	MP1B	Mx	-.002	4.58
106	MP4A	X	2.196	3.58
107	MP4A	Z	-1.268	3.58
108	MP4A	Mx	-.001	3.58
109	MP4A	X	2.196	5.58
110	MP4A	Z	-1.268	5.58
111	MP4A	Mx	-.001	5.58
112	MP4B	X	2.196	3.58
113	MP4B	Z	-1.268	3.58
114	MP4B	Mx	.001	3.58
115	MP4B	X	2.196	5.58
116	MP4B	Z	-1.268	5.58
117	MP4B	Mx	.001	5.58
118	MP4C	X	4.039	3.58
119	MP4C	Z	-2.332	3.58
120	MP4C	Mx	0	3.58
121	MP4C	X	4.039	5.58
122	MP4C	Z	-2.332	5.58
123	MP4C	Mx	0	5.58

Member Point Loads (BLC 30 : Antenna Wm (90 Deg))

	Member Label	Direction	Magnitude[lb,k-ft]	Location[ft,%]
1	MP3A	X	5.937	2.83
2	MP3A	Z	0	2.83
3	MP3A	Mx	-.004	2.83
4	MP3A	X	5.937	6.33
5	MP3A	Z	0	6.33
6	MP3A	Mx	-.004	6.33
7	MP3B	X	8.264	2.83
8	MP3B	Z	0	2.83
9	MP3B	Mx	-.002	2.83
10	MP3B	X	8.264	6.33
11	MP3B	Z	0	6.33
12	MP3B	Mx	-.002	6.33
13	MP3C	X	8.264	2.83
14	MP3C	Z	0	2.83
15	MP3C	Mx	.008	2.83
16	MP3C	X	8.264	6.33
17	MP3C	Z	0	6.33
18	MP3C	Mx	.008	6.33
19	MP3A	X	5.937	2.83
20	MP3A	Z	0	2.83
21	MP3A	Mx	-.004	2.83
22	MP3A	X	5.937	6.33
23	MP3A	Z	0	6.33
24	MP3A	Mx	-.004	6.33

Member Point Loads (BLC 30 : Antenna Wm (90 Deg)) (Continued)

	Member Label	Direction	Magnitude[lb,k-ft]	Location[ft,%]
25	MP3B	X	8.264	2.83
26	MP3B	Z	0	2.83
27	MP3B	Mx	.008	2.83
28	MP3B	X	8.264	6.33
29	MP3B	Z	0	6.33
30	MP3B	Mx	.008	6.33
31	MP3C	X	8.264	2.83
32	MP3C	Z	0	2.83
33	MP3C	Mx	-.002	2.83
34	MP3C	X	8.264	6.33
35	MP3C	Z	0	6.33
36	MP3C	Mx	-.002	6.33
37	MP1A	X	8.562	2.5
38	MP1A	Z	0	2.5
39	MP1A	Mx	-.01	2.5
40	MP1A	X	8.562	6.67
41	MP1A	Z	0	6.67
42	MP1A	Mx	-.01	6.67
43	MP1B	X	8.562	2.5
44	MP1B	Z	0	2.5
45	MP1B	Mx	-.01	2.5
46	MP1B	X	8.562	6.67
47	MP1B	Z	0	6.67
48	MP1B	Mx	-.01	6.67
49	MP1C	X	8.562	2.5
50	MP1C	Z	0	2.5
51	MP1C	Mx	-.01	2.5
52	MP1C	X	8.562	6.67
53	MP1C	Z	0	6.67
54	MP1C	Mx	-.01	6.67
55	MP5A	X	8.562	2.5
56	MP5A	Z	0	2.5
57	MP5A	Mx	-.01	2.5
58	MP5A	X	8.562	6.67
59	MP5A	Z	0	6.67
60	MP5A	Mx	-.01	6.67
61	MP5B	X	8.562	2.5
62	MP5B	Z	0	2.5
63	MP5B	Mx	-.01	2.5
64	MP5B	X	8.562	6.67
65	MP5B	Z	0	6.67
66	MP5B	Mx	-.01	6.67
67	MP5C	X	8.562	2.5
68	MP5C	Z	0	2.5
69	MP5C	Mx	-.01	2.5
70	MP5C	X	8.562	6.67
71	MP5C	Z	0	6.67
72	MP5C	Mx	-.01	6.67
73	MP2A	X	2.481	4.58
74	MP2A	Z	0	4.58
75	MP2A	Mx	.001	4.58
76	MP2B	X	3.404	4.58

Member Point Loads (BLC 30 : Antenna Wm (90 Deg)) (Continued)

	Member Label	Direction	Magnitude[lb,k-ft]	Location[ft,%]
77	MP2B	Z	0	4.58
78	MP2B	Mx	-.000851	4.58
79	MP2C	X	3.404	4.58
80	MP2C	Z	0	4.58
81	MP2C	Mx	-.000851	4.58
82	MP3A	X	2.009	4.58
83	MP3A	Z	0	4.58
84	MP3A	Mx	.001	4.58
85	MP3B	X	3.286	4.58
86	MP3B	Z	0	4.58
87	MP3B	Mx	-.000822	4.58
88	MP3C	X	3.286	4.58
89	MP3C	Z	0	4.58
90	MP3C	Mx	-.000822	4.58
91	MP3A	X	.508	3.25
92	MP3A	Z	0	3.25
93	MP3A	Mx	.000169	3.25
94	MP3B	X	.678	3.25
95	MP3B	Z	0	3.25
96	MP3B	Mx	-.000113	3.25
97	MP3C	X	.678	3.25
98	MP3C	Z	0	3.25
99	MP3C	Mx	-.000113	3.25
100	MP1A	X	4.979	4.58
101	MP1A	Z	0	4.58
102	MP1A	Mx	.002	4.58
103	MP1B	X	6.886	4.58
104	MP1B	Z	0	4.58
105	MP1B	Mx	-.002	4.58
106	MP4A	X	1.826	3.58
107	MP4A	Z	0	3.58
108	MP4A	Mx	-.000913	3.58
109	MP4A	X	1.826	5.58
110	MP4A	Z	0	5.58
111	MP4A	Mx	-.000913	5.58
112	MP4B	X	3.954	3.58
113	MP4B	Z	0	3.58
114	MP4B	Mx	.000988	3.58
115	MP4B	X	3.954	5.58
116	MP4B	Z	0	5.58
117	MP4B	Mx	.000988	5.58
118	MP4C	X	3.954	3.58
119	MP4C	Z	0	3.58
120	MP4C	Mx	.000988	3.58
121	MP4C	X	3.954	5.58
122	MP4C	Z	0	5.58
123	MP4C	Mx	.000988	5.58

Member Point Loads (BLC 31 : Antenna Wm (120 Deg))

	Member Label	Direction	Magnitude[lb,k-ft]	Location[ft,%]
1	MP3A	X	5.814	2.83

Member Point Loads (BLC 31 : Antenna Wm (120 Deg)) (Continued)

	Member Label	Direction	Magnitude[lb,k-ft]	Location[ft,%]
2	MP3A	Z	3.357	2.83
3	MP3A	Mx	-.002	2.83
4	MP3A	X	5.814	6.33
5	MP3A	Z	3.357	6.33
6	MP3A	Mx	-.002	6.33
7	MP3B	X	7.829	2.83
8	MP3B	Z	4.52	2.83
9	MP3B	Mx	-.007	2.83
10	MP3B	X	7.829	6.33
11	MP3B	Z	4.52	6.33
12	MP3B	Mx	-.007	6.33
13	MP3C	X	5.814	2.83
14	MP3C	Z	3.357	2.83
15	MP3C	Mx	.007	2.83
16	MP3C	X	5.814	6.33
17	MP3C	Z	3.357	6.33
18	MP3C	Mx	.007	6.33
19	MP3A	X	5.814	2.83
20	MP3A	Z	3.357	2.83
21	MP3A	Mx	-.007	2.83
22	MP3A	X	5.814	6.33
23	MP3A	Z	3.357	6.33
24	MP3A	Mx	-.007	6.33
25	MP3B	X	7.829	2.83
26	MP3B	Z	4.52	2.83
27	MP3B	Mx	.007	2.83
28	MP3B	X	7.829	6.33
29	MP3B	Z	4.52	6.33
30	MP3B	Mx	.007	6.33
31	MP3C	X	5.814	2.83
32	MP3C	Z	3.357	2.83
33	MP3C	Mx	.002	2.83
34	MP3C	X	5.814	6.33
35	MP3C	Z	3.357	6.33
36	MP3C	Mx	.002	6.33
37	MP1A	X	6.491	2.5
38	MP1A	Z	3.748	2.5
39	MP1A	Mx	-.008	2.5
40	MP1A	X	6.491	6.67
41	MP1A	Z	3.748	6.67
42	MP1A	Mx	-.008	6.67
43	MP1B	X	6.491	2.5
44	MP1B	Z	3.748	2.5
45	MP1B	Mx	-.008	2.5
46	MP1B	X	6.491	6.67
47	MP1B	Z	3.748	6.67
48	MP1B	Mx	-.008	6.67
49	MP1C	X	6.491	2.5
50	MP1C	Z	3.748	2.5
51	MP1C	Mx	-.008	2.5
52	MP1C	X	6.491	6.67
53	MP1C	Z	3.748	6.67

Member Point Loads (BLC 31 : Antenna Wm (120 Deg)) (Continued)

	Member Label	Direction	Magnitude[lb,k-ft]	Location[ft,%]
54	MP1C	Mx	-.008	6.67
55	MP5A	X	6.491	2.5
56	MP5A	Z	3.748	2.5
57	MP5A	Mx	-.008	2.5
58	MP5A	X	6.491	6.67
59	MP5A	Z	3.748	6.67
60	MP5A	Mx	-.008	6.67
61	MP5B	X	6.491	2.5
62	MP5B	Z	3.748	2.5
63	MP5B	Mx	-.008	2.5
64	MP5B	X	6.491	6.67
65	MP5B	Z	3.748	6.67
66	MP5B	Mx	-.008	6.67
67	MP5C	X	6.491	2.5
68	MP5C	Z	3.748	2.5
69	MP5C	Mx	-.008	2.5
70	MP5C	X	6.491	6.67
71	MP5C	Z	3.748	6.67
72	MP5C	Mx	-.008	6.67
73	MP2A	X	2.415	4.58
74	MP2A	Z	1.394	4.58
75	MP2A	Mx	.001	4.58
76	MP2B	X	3.214	4.58
77	MP2B	Z	1.856	4.58
78	MP2B	Mx	0	4.58
79	MP2C	X	2.415	4.58
80	MP2C	Z	1.394	4.58
81	MP2C	Mx	-.001	4.58
82	MP3A	X	2.109	4.58
83	MP3A	Z	1.217	4.58
84	MP3A	Mx	.001	4.58
85	MP3B	X	3.214	4.58
86	MP3B	Z	1.856	4.58
87	MP3B	Mx	0	4.58
88	MP3C	X	2.109	4.58
89	MP3C	Z	1.217	4.58
90	MP3C	Mx	-.001	4.58
91	MP3A	X	.489	3.25
92	MP3A	Z	.282	3.25
93	MP3A	Mx	.000163	3.25
94	MP3B	X	.636	3.25
95	MP3B	Z	.367	3.25
96	MP3B	Mx	0	3.25
97	MP3C	X	.489	3.25
98	MP3C	Z	.282	3.25
99	MP3C	Mx	-.000163	3.25
100	MP1A	X	4.862	4.58
101	MP1A	Z	2.807	4.58
102	MP1A	Mx	.002	4.58
103	MP1B	X	6.514	4.58
104	MP1B	Z	3.761	4.58
105	MP1B	Mx	0	4.58

Member Point Loads (BLC 31 : Antenna Wm (120 Deg)) (Continued)

	Member Label	Direction	Magnitude[lb,k-ft]	Location[ft,%]
106	MP4A	X	2.196	3.58
107	MP4A	Z	1.268	3.58
108	MP4A	Mx	-.001	3.58
109	MP4A	X	2.196	5.58
110	MP4A	Z	1.268	5.58
111	MP4A	Mx	-.001	5.58
112	MP4B	X	4.039	3.58
113	MP4B	Z	2.332	3.58
114	MP4B	Mx	0	3.58
115	MP4B	X	4.039	5.58
116	MP4B	Z	2.332	5.58
117	MP4B	Mx	0	5.58
118	MP4C	X	2.196	3.58
119	MP4C	Z	1.268	3.58
120	MP4C	Mx	.001	3.58
121	MP4C	X	2.196	5.58
122	MP4C	Z	1.268	5.58
123	MP4C	Mx	.001	5.58

Member Point Loads (BLC 32 : Antenna Wm (150 Deg))

	Member Label	Direction	Magnitude[lb,k-ft]	Location[ft,%]
1	MP3A	X	4.132	2.83
2	MP3A	Z	7.157	2.83
3	MP3A	Mx	.002	2.83
4	MP3A	X	4.132	6.33
5	MP3A	Z	7.157	6.33
6	MP3A	Mx	.002	6.33
7	MP3B	X	4.132	2.83
8	MP3B	Z	7.157	2.83
9	MP3B	Mx	-.008	2.83
10	MP3B	X	4.132	6.33
11	MP3B	Z	7.157	6.33
12	MP3B	Mx	-.008	6.33
13	MP3C	X	2.969	2.83
14	MP3C	Z	5.142	2.83
15	MP3C	Mx	.004	2.83
16	MP3C	X	2.969	6.33
17	MP3C	Z	5.142	6.33
18	MP3C	Mx	.004	6.33
19	MP3A	X	4.132	2.83
20	MP3A	Z	7.157	2.83
21	MP3A	Mx	-.008	2.83
22	MP3A	X	4.132	6.33
23	MP3A	Z	7.157	6.33
24	MP3A	Mx	-.008	6.33
25	MP3B	X	4.132	2.83
26	MP3B	Z	7.157	2.83
27	MP3B	Mx	.002	2.83
28	MP3B	X	4.132	6.33
29	MP3B	Z	7.157	6.33
30	MP3B	Mx	.002	6.33

Member Point Loads (BLC 32 : Antenna Wm (150 Deg)) (Continued)

	Member Label	Direction	Magnitude[lb,k-ft]	Location[ft,%]
31	MP3C	X	2.969	2.83
32	MP3C	Z	5.142	2.83
33	MP3C	Mx	.004	2.83
34	MP3C	X	2.969	6.33
35	MP3C	Z	5.142	6.33
36	MP3C	Mx	.004	6.33
37	MP1A	X	2.682	2.5
38	MP1A	Z	4.645	2.5
39	MP1A	Mx	-.003	2.5
40	MP1A	X	2.682	6.67
41	MP1A	Z	4.645	6.67
42	MP1A	Mx	-.003	6.67
43	MP1B	X	2.682	2.5
44	MP1B	Z	4.645	2.5
45	MP1B	Mx	-.003	2.5
46	MP1B	X	2.682	6.67
47	MP1B	Z	4.645	6.67
48	MP1B	Mx	-.003	6.67
49	MP1C	X	2.682	2.5
50	MP1C	Z	4.645	2.5
51	MP1C	Mx	-.003	2.5
52	MP1C	X	2.682	6.67
53	MP1C	Z	4.645	6.67
54	MP1C	Mx	-.003	6.67
55	MP5A	X	2.682	2.5
56	MP5A	Z	4.645	2.5
57	MP5A	Mx	-.003	2.5
58	MP5A	X	2.682	6.67
59	MP5A	Z	4.645	6.67
60	MP5A	Mx	-.003	6.67
61	MP5B	X	2.682	2.5
62	MP5B	Z	4.645	2.5
63	MP5B	Mx	-.003	2.5
64	MP5B	X	2.682	6.67
65	MP5B	Z	4.645	6.67
66	MP5B	Mx	-.003	6.67
67	MP5C	X	2.682	2.5
68	MP5C	Z	4.645	2.5
69	MP5C	Mx	-.003	2.5
70	MP5C	X	2.682	6.67
71	MP5C	Z	4.645	6.67
72	MP5C	Mx	-.003	6.67
73	MP2A	X	1.702	4.58
74	MP2A	Z	2.948	4.58
75	MP2A	Mx	.000851	4.58
76	MP2B	X	1.702	4.58
77	MP2B	Z	2.948	4.58
78	MP2B	Mx	.000851	4.58
79	MP2C	X	1.24	4.58
80	MP2C	Z	2.148	4.58
81	MP2C	Mx	-.001	4.58
82	MP3A	X	1.643	4.58

Member Point Loads (BLC 32 : Antenna Wm (150 Deg)) (Continued)

	Member Label	Direction	Magnitude[lb,k-ft]	Location[ft,%]
83	MP3A	Z	2.846	4.58
84	MP3A	Mx	.000822	4.58
85	MP3B	X	1.643	4.58
86	MP3B	Z	2.846	4.58
87	MP3B	Mx	.000822	4.58
88	MP3C	X	1.005	4.58
89	MP3C	Z	1.74	4.58
90	MP3C	Mx	-.001	4.58
91	MP3A	X	.339	3.25
92	MP3A	Z	.587	3.25
93	MP3A	Mx	.000113	3.25
94	MP3B	X	.339	3.25
95	MP3B	Z	.587	3.25
96	MP3B	Mx	.000113	3.25
97	MP3C	X	.254	3.25
98	MP3C	Z	.44	3.25
99	MP3C	Mx	-.000169	3.25
100	MP1A	X	3.443	4.58
101	MP1A	Z	5.963	4.58
102	MP1A	Mx	.002	4.58
103	MP1B	X	3.443	4.58
104	MP1B	Z	5.963	4.58
105	MP1B	Mx	.002	4.58
106	MP4A	X	1.977	3.58
107	MP4A	Z	3.425	3.58
108	MP4A	Mx	-.000988	3.58
109	MP4A	X	1.977	5.58
110	MP4A	Z	3.425	5.58
111	MP4A	Mx	-.000988	5.58
112	MP4B	X	1.977	3.58
113	MP4B	Z	3.425	3.58
114	MP4B	Mx	-.000989	3.58
115	MP4B	X	1.977	5.58
116	MP4B	Z	3.425	5.58
117	MP4B	Mx	-.000989	5.58
118	MP4C	X	.913	3.58
119	MP4C	Z	1.581	3.58
120	MP4C	Mx	.000913	3.58
121	MP4C	X	.913	5.58
122	MP4C	Z	1.581	5.58
123	MP4C	Mx	.000913	5.58

Member Point Loads (BLC 33 : Antenna Wm (180 Deg))

	Member Label	Direction	Magnitude[lb,k-ft]	Location[ft,%]
1	MP3A	X	0	2.83
2	MP3A	Z	9.04	2.83
3	MP3A	Mx	.007	2.83
4	MP3A	X	0	6.33
5	MP3A	Z	9.04	6.33
6	MP3A	Mx	.007	6.33
7	MP3B	X	0	2.83

Member Point Loads (BLC 33 : Antenna Wm (180 Deg)) (Continued)

	Member Label	Direction	Magnitude[lb,k-ft]	Location[ft,%]
8	MP3B	Z	6.713	2.83
9	MP3B	Mx	-.007	2.83
10	MP3B	X	0	6.33
11	MP3B	Z	6.713	6.33
12	MP3B	Mx	-.007	6.33
13	MP3C	X	0	2.83
14	MP3C	Z	6.713	2.83
15	MP3C	Mx	.002	2.83
16	MP3C	X	0	6.33
17	MP3C	Z	6.713	6.33
18	MP3C	Mx	.002	6.33
19	MP3A	X	0	2.83
20	MP3A	Z	9.04	2.83
21	MP3A	Mx	-.007	2.83
22	MP3A	X	0	6.33
23	MP3A	Z	9.04	6.33
24	MP3A	Mx	-.007	6.33
25	MP3B	X	0	2.83
26	MP3B	Z	6.713	2.83
27	MP3B	Mx	-.002	2.83
28	MP3B	X	0	6.33
29	MP3B	Z	6.713	6.33
30	MP3B	Mx	-.002	6.33
31	MP3C	X	0	2.83
32	MP3C	Z	6.713	2.83
33	MP3C	Mx	.007	2.83
34	MP3C	X	0	6.33
35	MP3C	Z	6.713	6.33
36	MP3C	Mx	.007	6.33
37	MP1A	X	0	2.5
38	MP1A	Z	4.297	2.5
39	MP1A	Mx	0	2.5
40	MP1A	X	0	6.67
41	MP1A	Z	4.297	6.67
42	MP1A	Mx	0	6.67
43	MP1B	X	0	2.5
44	MP1B	Z	4.297	2.5
45	MP1B	Mx	0	2.5
46	MP1B	X	0	6.67
47	MP1B	Z	4.297	6.67
48	MP1B	Mx	0	6.67
49	MP1C	X	0	2.5
50	MP1C	Z	4.297	2.5
51	MP1C	Mx	0	2.5
52	MP1C	X	0	6.67
53	MP1C	Z	4.297	6.67
54	MP1C	Mx	0	6.67
55	MP5A	X	0	2.5
56	MP5A	Z	4.297	2.5
57	MP5A	Mx	0	2.5
58	MP5A	X	0	6.67
59	MP5A	Z	4.297	6.67

Member Point Loads (BLC 33 : Antenna Wm (180 Deg)) (Continued)

	Member Label	Direction	Magnitude[lb,k-ft]	Location[ft,%]
60	MP5A	Mx	0	6.67
61	MP5B	X	0	2.5
62	MP5B	Z	4.297	2.5
63	MP5B	Mx	0	2.5
64	MP5B	X	0	6.67
65	MP5B	Z	4.297	6.67
66	MP5B	Mx	0	6.67
67	MP5C	X	0	2.5
68	MP5C	Z	4.297	2.5
69	MP5C	Mx	0	2.5
70	MP5C	X	0	6.67
71	MP5C	Z	4.297	6.67
72	MP5C	Mx	0	6.67
73	MP2A	X	0	4.58
74	MP2A	Z	3.711	4.58
75	MP2A	Mx	0	4.58
76	MP2B	X	0	4.58
77	MP2B	Z	2.788	4.58
78	MP2B	Mx	.001	4.58
79	MP2C	X	0	4.58
80	MP2C	Z	2.788	4.58
81	MP2C	Mx	-.001	4.58
82	MP3A	X	0	4.58
83	MP3A	Z	3.711	4.58
84	MP3A	Mx	0	4.58
85	MP3B	X	0	4.58
86	MP3B	Z	2.435	4.58
87	MP3B	Mx	.001	4.58
88	MP3C	X	0	4.58
89	MP3C	Z	2.435	4.58
90	MP3C	Mx	-.001	4.58
91	MP3A	X	0	3.25
92	MP3A	Z	.734	3.25
93	MP3A	Mx	0	3.25
94	MP3B	X	0	3.25
95	MP3B	Z	.565	3.25
96	MP3B	Mx	.000163	3.25
97	MP3C	X	0	3.25
98	MP3C	Z	.565	3.25
99	MP3C	Mx	-.000163	3.25
100	MP1A	X	0	4.58
101	MP1A	Z	7.522	4.58
102	MP1A	Mx	0	4.58
103	MP1B	X	0	4.58
104	MP1B	Z	5.615	4.58
105	MP1B	Mx	.002	4.58
106	MP4A	X	0	3.58
107	MP4A	Z	4.664	3.58
108	MP4A	Mx	0	3.58
109	MP4A	X	0	5.58
110	MP4A	Z	4.664	5.58
111	MP4A	Mx	0	5.58

Member Point Loads (BLC 33 : Antenna Wm (180 Deg)) (Continued)

	Member Label	Direction	Magnitude[lb,k-ft]	Location[ft,%]
112	MP4B	X	0	3.58
113	MP4B	Z	2.535	3.58
114	MP4B	Mx	-.001	3.58
115	MP4B	X	0	5.58
116	MP4B	Z	2.535	5.58
117	MP4B	Mx	-.001	5.58
118	MP4C	X	0	3.58
119	MP4C	Z	2.535	3.58
120	MP4C	Mx	.001	3.58
121	MP4C	X	0	5.58
122	MP4C	Z	2.535	5.58
123	MP4C	Mx	.001	5.58

Member Point Loads (BLC 34 : Antenna Wm (210 Deg))

	Member Label	Direction	Magnitude[lb,k-ft]	Location[ft,%]
1	MP3A	X	-4.132	2.83
2	MP3A	Z	7.157	2.83
3	MP3A	Mx	.008	2.83
4	MP3A	X	-4.132	6.33
5	MP3A	Z	7.157	6.33
6	MP3A	Mx	.008	6.33
7	MP3B	X	-2.969	2.83
8	MP3B	Z	5.142	2.83
9	MP3B	Mx	-.004	2.83
10	MP3B	X	-2.969	6.33
11	MP3B	Z	5.142	6.33
12	MP3B	Mx	-.004	6.33
13	MP3C	X	-4.132	2.83
14	MP3C	Z	7.157	2.83
15	MP3C	Mx	-.002	2.83
16	MP3C	X	-4.132	6.33
17	MP3C	Z	7.157	6.33
18	MP3C	Mx	-.002	6.33
19	MP3A	X	-4.132	2.83
20	MP3A	Z	7.157	2.83
21	MP3A	Mx	-.002	2.83
22	MP3A	X	-4.132	6.33
23	MP3A	Z	7.157	6.33
24	MP3A	Mx	-.002	6.33
25	MP3B	X	-2.969	2.83
26	MP3B	Z	5.142	2.83
27	MP3B	Mx	-.004	2.83
28	MP3B	X	-2.969	6.33
29	MP3B	Z	5.142	6.33
30	MP3B	Mx	-.004	6.33
31	MP3C	X	-4.132	2.83
32	MP3C	Z	7.157	2.83
33	MP3C	Mx	.008	2.83
34	MP3C	X	-4.132	6.33
35	MP3C	Z	7.157	6.33
36	MP3C	Mx	.008	6.33

Member Point Loads (BLC 34 : Antenna Wm (210 Deg)) (Continued)

	Member Label	Direction	Magnitude[lb,k-ft]	Location[ft,%]
37	MP1A	X	-2.682	2.5
38	MP1A	Z	4.645	2.5
39	MP1A	Mx	.003	2.5
40	MP1A	X	-2.682	6.67
41	MP1A	Z	4.645	6.67
42	MP1A	Mx	.003	6.67
43	MP1B	X	-2.682	2.5
44	MP1B	Z	4.645	2.5
45	MP1B	Mx	.003	2.5
46	MP1B	X	-2.682	6.67
47	MP1B	Z	4.645	6.67
48	MP1B	Mx	.003	6.67
49	MP1C	X	-2.682	2.5
50	MP1C	Z	4.645	2.5
51	MP1C	Mx	.003	2.5
52	MP1C	X	-2.682	6.67
53	MP1C	Z	4.645	6.67
54	MP1C	Mx	.003	6.67
55	MP5A	X	-2.682	2.5
56	MP5A	Z	4.645	2.5
57	MP5A	Mx	.003	2.5
58	MP5A	X	-2.682	6.67
59	MP5A	Z	4.645	6.67
60	MP5A	Mx	.003	6.67
61	MP5B	X	-2.682	2.5
62	MP5B	Z	4.645	2.5
63	MP5B	Mx	.003	2.5
64	MP5B	X	-2.682	6.67
65	MP5B	Z	4.645	6.67
66	MP5B	Mx	.003	6.67
67	MP5C	X	-2.682	2.5
68	MP5C	Z	4.645	2.5
69	MP5C	Mx	.003	2.5
70	MP5C	X	-2.682	6.67
71	MP5C	Z	4.645	6.67
72	MP5C	Mx	.003	6.67
73	MP2A	X	-1.702	4.58
74	MP2A	Z	2.948	4.58
75	MP2A	Mx	-.000851	4.58
76	MP2B	X	-1.24	4.58
77	MP2B	Z	2.148	4.58
78	MP2B	Mx	.001	4.58
79	MP2C	X	-1.702	4.58
80	MP2C	Z	2.948	4.58
81	MP2C	Mx	-.000851	4.58
82	MP3A	X	-1.643	4.58
83	MP3A	Z	2.846	4.58
84	MP3A	Mx	-.000822	4.58
85	MP3B	X	-1.005	4.58
86	MP3B	Z	1.74	4.58
87	MP3B	Mx	.001	4.58
88	MP3C	X	-1.643	4.58

Member Point Loads (BLC 34 : Antenna Wm (210 Deg)) (Continued)

	Member Label	Direction	Magnitude[lb,k-ft]	Location[ft,%]
89	MP3C	Z	2.846	4.58
90	MP3C	Mx	-.000822	4.58
91	MP3A	X	-.339	3.25
92	MP3A	Z	.587	3.25
93	MP3A	Mx	-.000113	3.25
94	MP3B	X	-.254	3.25
95	MP3B	Z	.44	3.25
96	MP3B	Mx	.000169	3.25
97	MP3C	X	-.339	3.25
98	MP3C	Z	.587	3.25
99	MP3C	Mx	-.000113	3.25
100	MP1A	X	-3.443	4.58
101	MP1A	Z	5.963	4.58
102	MP1A	Mx	-.002	4.58
103	MP1B	X	-2.489	4.58
104	MP1B	Z	4.312	4.58
105	MP1B	Mx	.002	4.58
106	MP4A	X	-1.977	3.58
107	MP4A	Z	3.425	3.58
108	MP4A	Mx	.000988	3.58
109	MP4A	X	-1.977	5.58
110	MP4A	Z	3.425	5.58
111	MP4A	Mx	.000988	5.58
112	MP4B	X	-.913	3.58
113	MP4B	Z	1.581	3.58
114	MP4B	Mx	-.000913	3.58
115	MP4B	X	-.913	5.58
116	MP4B	Z	1.581	5.58
117	MP4B	Mx	-.000913	5.58
118	MP4C	X	-1.977	3.58
119	MP4C	Z	3.425	3.58
120	MP4C	Mx	.000989	3.58
121	MP4C	X	-1.977	5.58
122	MP4C	Z	3.425	5.58
123	MP4C	Mx	.000989	5.58

Member Point Loads (BLC 35 : Antenna Wm (240 Deg))

	Member Label	Direction	Magnitude[lb,k-ft]	Location[ft,%]
1	MP3A	X	-5.814	2.83
2	MP3A	Z	3.357	2.83
3	MP3A	Mx	.007	2.83
4	MP3A	X	-5.814	6.33
5	MP3A	Z	3.357	6.33
6	MP3A	Mx	.007	6.33
7	MP3B	X	-5.814	2.83
8	MP3B	Z	3.357	2.83
9	MP3B	Mx	-.002	2.83
10	MP3B	X	-5.814	6.33
11	MP3B	Z	3.357	6.33
12	MP3B	Mx	-.002	6.33
13	MP3C	X	-7.829	2.83

Member Point Loads (BLC 35 : Antenna Wm (240 Deg)) (Continued)

	Member Label	Direction	Magnitude[lb,k-ft]	Location[ft,%]
14	MP3C	Z	4.52	2.83
15	MP3C	Mx	-.007	2.83
16	MP3C	X	-7.829	6.33
17	MP3C	Z	4.52	6.33
18	MP3C	Mx	-.007	6.33
19	MP3A	X	-5.814	2.83
20	MP3A	Z	3.357	2.83
21	MP3A	Mx	.002	2.83
22	MP3A	X	-5.814	6.33
23	MP3A	Z	3.357	6.33
24	MP3A	Mx	.002	6.33
25	MP3B	X	-5.814	2.83
26	MP3B	Z	3.357	2.83
27	MP3B	Mx	-.007	2.83
28	MP3B	X	-5.814	6.33
29	MP3B	Z	3.357	6.33
30	MP3B	Mx	-.007	6.33
31	MP3C	X	-7.829	2.83
32	MP3C	Z	4.52	2.83
33	MP3C	Mx	.007	2.83
34	MP3C	X	-7.829	6.33
35	MP3C	Z	4.52	6.33
36	MP3C	Mx	.007	6.33
37	MP1A	X	-6.491	2.5
38	MP1A	Z	3.748	2.5
39	MP1A	Mx	.008	2.5
40	MP1A	X	-6.491	6.67
41	MP1A	Z	3.748	6.67
42	MP1A	Mx	.008	6.67
43	MP1B	X	-6.491	2.5
44	MP1B	Z	3.748	2.5
45	MP1B	Mx	.008	2.5
46	MP1B	X	-6.491	6.67
47	MP1B	Z	3.748	6.67
48	MP1B	Mx	.008	6.67
49	MP1C	X	-6.491	2.5
50	MP1C	Z	3.748	2.5
51	MP1C	Mx	.008	2.5
52	MP1C	X	-6.491	6.67
53	MP1C	Z	3.748	6.67
54	MP1C	Mx	.008	6.67
55	MP5A	X	-6.491	2.5
56	MP5A	Z	3.748	2.5
57	MP5A	Mx	.008	2.5
58	MP5A	X	-6.491	6.67
59	MP5A	Z	3.748	6.67
60	MP5A	Mx	.008	6.67
61	MP5B	X	-6.491	2.5
62	MP5B	Z	3.748	2.5
63	MP5B	Mx	.008	2.5
64	MP5B	X	-6.491	6.67
65	MP5B	Z	3.748	6.67

Member Point Loads (BLC 35 : Antenna Wm (240 Deg)) (Continued)

	Member Label	Direction	Magnitude[lb,k-ft]	Location[ft,%]
66	MP5B	Mx	.008	6.67
67	MP5C	X	-6.491	2.5
68	MP5C	Z	3.748	2.5
69	MP5C	Mx	.008	2.5
70	MP5C	X	-6.491	6.67
71	MP5C	Z	3.748	6.67
72	MP5C	Mx	.008	6.67
73	MP2A	X	-2.415	4.58
74	MP2A	Z	1.394	4.58
75	MP2A	Mx	-.001	4.58
76	MP2B	X	-2.415	4.58
77	MP2B	Z	1.394	4.58
78	MP2B	Mx	.001	4.58
79	MP2C	X	-3.214	4.58
80	MP2C	Z	1.856	4.58
81	MP2C	Mx	0	4.58
82	MP3A	X	-2.109	4.58
83	MP3A	Z	1.217	4.58
84	MP3A	Mx	-.001	4.58
85	MP3B	X	-2.109	4.58
86	MP3B	Z	1.217	4.58
87	MP3B	Mx	.001	4.58
88	MP3C	X	-3.214	4.58
89	MP3C	Z	1.856	4.58
90	MP3C	Mx	0	4.58
91	MP3A	X	-.489	3.25
92	MP3A	Z	.282	3.25
93	MP3A	Mx	-.000163	3.25
94	MP3B	X	-.489	3.25
95	MP3B	Z	.282	3.25
96	MP3B	Mx	.000163	3.25
97	MP3C	X	-.636	3.25
98	MP3C	Z	.367	3.25
99	MP3C	Mx	0	3.25
100	MP1A	X	-4.862	4.58
101	MP1A	Z	2.807	4.58
102	MP1A	Mx	-.002	4.58
103	MP1B	X	-4.862	4.58
104	MP1B	Z	2.807	4.58
105	MP1B	Mx	.002	4.58
106	MP4A	X	-2.196	3.58
107	MP4A	Z	1.268	3.58
108	MP4A	Mx	.001	3.58
109	MP4A	X	-2.196	5.58
110	MP4A	Z	1.268	5.58
111	MP4A	Mx	.001	5.58
112	MP4B	X	-2.196	3.58
113	MP4B	Z	1.268	3.58
114	MP4B	Mx	-.001	3.58
115	MP4B	X	-2.196	5.58
116	MP4B	Z	1.268	5.58
117	MP4B	Mx	-.001	5.58

Member Point Loads (BLC 35 : Antenna Wm (240 Deg)) (Continued)

	Member Label	Direction	Magnitude[lb,k-ft]	Location[ft,%]
118	MP4C	X	-4.039	3.58
119	MP4C	Z	2.332	3.58
120	MP4C	Mx	0	3.58
121	MP4C	X	-4.039	5.58
122	MP4C	Z	2.332	5.58
123	MP4C	Mx	0	5.58

Member Point Loads (BLC 36 : Antenna Wm (270 Deg))

	Member Label	Direction	Magnitude[lb,k-ft]	Location[ft,%]
1	MP3A	X	-5.937	2.83
2	MP3A	Z	0	2.83
3	MP3A	Mx	.004	2.83
4	MP3A	X	-5.937	6.33
5	MP3A	Z	0	6.33
6	MP3A	Mx	.004	6.33
7	MP3B	X	-8.264	2.83
8	MP3B	Z	0	2.83
9	MP3B	Mx	.002	2.83
10	MP3B	X	-8.264	6.33
11	MP3B	Z	0	6.33
12	MP3B	Mx	.002	6.33
13	MP3C	X	-8.264	2.83
14	MP3C	Z	0	2.83
15	MP3C	Mx	-.008	2.83
16	MP3C	X	-8.264	6.33
17	MP3C	Z	0	6.33
18	MP3C	Mx	-.008	6.33
19	MP3A	X	-5.937	2.83
20	MP3A	Z	0	2.83
21	MP3A	Mx	.004	2.83
22	MP3A	X	-5.937	6.33
23	MP3A	Z	0	6.33
24	MP3A	Mx	.004	6.33
25	MP3B	X	-8.264	2.83
26	MP3B	Z	0	2.83
27	MP3B	Mx	-.008	2.83
28	MP3B	X	-8.264	6.33
29	MP3B	Z	0	6.33
30	MP3B	Mx	-.008	6.33
31	MP3C	X	-8.264	2.83
32	MP3C	Z	0	2.83
33	MP3C	Mx	.002	2.83
34	MP3C	X	-8.264	6.33
35	MP3C	Z	0	6.33
36	MP3C	Mx	.002	6.33
37	MP1A	X	-8.562	2.5
38	MP1A	Z	0	2.5
39	MP1A	Mx	.01	2.5
40	MP1A	X	-8.562	6.67
41	MP1A	Z	0	6.67
42	MP1A	Mx	.01	6.67

Member Point Loads (BLC 36 : Antenna Wm (270 Deg)) (Continued)

	Member Label	Direction	Magnitude[lb,k-ft]	Location[ft,%]
43	MP1B	X	-8.562	2.5
44	MP1B	Z	0	2.5
45	MP1B	Mx	.01	2.5
46	MP1B	X	-8.562	6.67
47	MP1B	Z	0	6.67
48	MP1B	Mx	.01	6.67
49	MP1C	X	-8.562	2.5
50	MP1C	Z	0	2.5
51	MP1C	Mx	.01	2.5
52	MP1C	X	-8.562	6.67
53	MP1C	Z	0	6.67
54	MP1C	Mx	.01	6.67
55	MP5A	X	-8.562	2.5
56	MP5A	Z	0	2.5
57	MP5A	Mx	.01	2.5
58	MP5A	X	-8.562	6.67
59	MP5A	Z	0	6.67
60	MP5A	Mx	.01	6.67
61	MP5B	X	-8.562	2.5
62	MP5B	Z	0	2.5
63	MP5B	Mx	.01	2.5
64	MP5B	X	-8.562	6.67
65	MP5B	Z	0	6.67
66	MP5B	Mx	.01	6.67
67	MP5C	X	-8.562	2.5
68	MP5C	Z	0	2.5
69	MP5C	Mx	.01	2.5
70	MP5C	X	-8.562	6.67
71	MP5C	Z	0	6.67
72	MP5C	Mx	.01	6.67
73	MP2A	X	-2.481	4.58
74	MP2A	Z	0	4.58
75	MP2A	Mx	-.001	4.58
76	MP2B	X	-3.404	4.58
77	MP2B	Z	0	4.58
78	MP2B	Mx	.000851	4.58
79	MP2C	X	-3.404	4.58
80	MP2C	Z	0	4.58
81	MP2C	Mx	.000851	4.58
82	MP3A	X	-2.009	4.58
83	MP3A	Z	0	4.58
84	MP3A	Mx	-.001	4.58
85	MP3B	X	-3.286	4.58
86	MP3B	Z	0	4.58
87	MP3B	Mx	.000822	4.58
88	MP3C	X	-3.286	4.58
89	MP3C	Z	0	4.58
90	MP3C	Mx	.000822	4.58
91	MP3A	X	-.508	3.25
92	MP3A	Z	0	3.25
93	MP3A	Mx	-.000169	3.25
94	MP3B	X	-.678	3.25

Member Point Loads (BLC 36 : Antenna Wm (270 Deg)) (Continued)

	Member Label	Direction	Magnitude[lb,k-ft]	Location[ft,%]
95	MP3B	Z	0	3.25
96	MP3B	Mx	.000113	3.25
97	MP3C	X	-.678	3.25
98	MP3C	Z	0	3.25
99	MP3C	Mx	.000113	3.25
100	MP1A	X	-4.979	4.58
101	MP1A	Z	0	4.58
102	MP1A	Mx	-.002	4.58
103	MP1B	X	-6.886	4.58
104	MP1B	Z	0	4.58
105	MP1B	Mx	.002	4.58
106	MP4A	X	-1.826	3.58
107	MP4A	Z	0	3.58
108	MP4A	Mx	.000913	3.58
109	MP4A	X	-1.826	5.58
110	MP4A	Z	0	5.58
111	MP4A	Mx	.000913	5.58
112	MP4B	X	-3.954	3.58
113	MP4B	Z	0	3.58
114	MP4B	Mx	-.000988	3.58
115	MP4B	X	-3.954	5.58
116	MP4B	Z	0	5.58
117	MP4B	Mx	-.000988	5.58
118	MP4C	X	-3.954	3.58
119	MP4C	Z	0	3.58
120	MP4C	Mx	-.000988	3.58
121	MP4C	X	-3.954	5.58
122	MP4C	Z	0	5.58
123	MP4C	Mx	-.000988	5.58

Member Point Loads (BLC 37 : Antenna Wm (300 Deg))

	Member Label	Direction	Magnitude[lb,k-ft]	Location[ft,%]
1	MP3A	X	-5.814	2.83
2	MP3A	Z	-3.357	2.83
3	MP3A	Mx	.002	2.83
4	MP3A	X	-5.814	6.33
5	MP3A	Z	-3.357	6.33
6	MP3A	Mx	.002	6.33
7	MP3B	X	-7.829	2.83
8	MP3B	Z	-4.52	2.83
9	MP3B	Mx	.007	2.83
10	MP3B	X	-7.829	6.33
11	MP3B	Z	-4.52	6.33
12	MP3B	Mx	.007	6.33
13	MP3C	X	-5.814	2.83
14	MP3C	Z	-3.357	2.83
15	MP3C	Mx	-.007	2.83
16	MP3C	X	-5.814	6.33
17	MP3C	Z	-3.357	6.33
18	MP3C	Mx	-.007	6.33
19	MP3A	X	-5.814	2.83

Member Point Loads (BLC 37 : Antenna Wm (300 Deg)) (Continued)

	Member Label	Direction	Magnitude[lb,k-ft]	Location[ft,%]
20	MP3A	Z	-3.357	2.83
21	MP3A	Mx	.007	2.83
22	MP3A	X	-5.814	6.33
23	MP3A	Z	-3.357	6.33
24	MP3A	Mx	.007	6.33
25	MP3B	X	-7.829	2.83
26	MP3B	Z	-4.52	2.83
27	MP3B	Mx	-.007	2.83
28	MP3B	X	-7.829	6.33
29	MP3B	Z	-4.52	6.33
30	MP3B	Mx	-.007	6.33
31	MP3C	X	-5.814	2.83
32	MP3C	Z	-3.357	2.83
33	MP3C	Mx	-.002	2.83
34	MP3C	X	-5.814	6.33
35	MP3C	Z	-3.357	6.33
36	MP3C	Mx	-.002	6.33
37	MP1A	X	-6.491	2.5
38	MP1A	Z	-3.748	2.5
39	MP1A	Mx	.008	2.5
40	MP1A	X	-6.491	6.67
41	MP1A	Z	-3.748	6.67
42	MP1A	Mx	.008	6.67
43	MP1B	X	-6.491	2.5
44	MP1B	Z	-3.748	2.5
45	MP1B	Mx	.008	2.5
46	MP1B	X	-6.491	6.67
47	MP1B	Z	-3.748	6.67
48	MP1B	Mx	.008	6.67
49	MP1C	X	-6.491	2.5
50	MP1C	Z	-3.748	2.5
51	MP1C	Mx	.008	2.5
52	MP1C	X	-6.491	6.67
53	MP1C	Z	-3.748	6.67
54	MP1C	Mx	.008	6.67
55	MP5A	X	-6.491	2.5
56	MP5A	Z	-3.748	2.5
57	MP5A	Mx	.008	2.5
58	MP5A	X	-6.491	6.67
59	MP5A	Z	-3.748	6.67
60	MP5A	Mx	.008	6.67
61	MP5B	X	-6.491	2.5
62	MP5B	Z	-3.748	2.5
63	MP5B	Mx	.008	2.5
64	MP5B	X	-6.491	6.67
65	MP5B	Z	-3.748	6.67
66	MP5B	Mx	.008	6.67
67	MP5C	X	-6.491	2.5
68	MP5C	Z	-3.748	2.5
69	MP5C	Mx	.008	2.5
70	MP5C	X	-6.491	6.67
71	MP5C	Z	-3.748	6.67

Member Point Loads (BLC 37 : Antenna Wm (300 Deg)) (Continued)

	Member Label	Direction	Magnitude[lb,k-ft]	Location[ft,%]
72	MP5C	Mx	.008	6.67
73	MP2A	X	-2.415	4.58
74	MP2A	Z	-1.394	4.58
75	MP2A	Mx	-.001	4.58
76	MP2B	X	-3.214	4.58
77	MP2B	Z	-1.856	4.58
78	MP2B	Mx	0	4.58
79	MP2C	X	-2.415	4.58
80	MP2C	Z	-1.394	4.58
81	MP2C	Mx	.001	4.58
82	MP3A	X	-2.109	4.58
83	MP3A	Z	-1.217	4.58
84	MP3A	Mx	-.001	4.58
85	MP3B	X	-3.214	4.58
86	MP3B	Z	-1.856	4.58
87	MP3B	Mx	0	4.58
88	MP3C	X	-2.109	4.58
89	MP3C	Z	-1.217	4.58
90	MP3C	Mx	.001	4.58
91	MP3A	X	-.489	3.25
92	MP3A	Z	-.282	3.25
93	MP3A	Mx	-.000163	3.25
94	MP3B	X	-.636	3.25
95	MP3B	Z	-.367	3.25
96	MP3B	Mx	0	3.25
97	MP3C	X	-.489	3.25
98	MP3C	Z	-.282	3.25
99	MP3C	Mx	.000163	3.25
100	MP1A	X	-4.862	4.58
101	MP1A	Z	-2.807	4.58
102	MP1A	Mx	-.002	4.58
103	MP1B	X	-6.514	4.58
104	MP1B	Z	-3.761	4.58
105	MP1B	Mx	0	4.58
106	MP4A	X	-2.196	3.58
107	MP4A	Z	-1.268	3.58
108	MP4A	Mx	.001	3.58
109	MP4A	X	-2.196	5.58
110	MP4A	Z	-1.268	5.58
111	MP4A	Mx	.001	5.58
112	MP4B	X	-4.039	3.58
113	MP4B	Z	-2.332	3.58
114	MP4B	Mx	0	3.58
115	MP4B	X	-4.039	5.58
116	MP4B	Z	-2.332	5.58
117	MP4B	Mx	0	5.58
118	MP4C	X	-2.196	3.58
119	MP4C	Z	-1.268	3.58
120	MP4C	Mx	-.001	3.58
121	MP4C	X	-2.196	5.58
122	MP4C	Z	-1.268	5.58
123	MP4C	Mx	-.001	5.58

Member Point Loads (BLC 38 : Antenna Wm (330 Deg))

	Member Label	Direction	Magnitude[lb,k-ft]	Location[ft,%]
1	MP3A	X	-4.132	2.83
2	MP3A	Z	-7.157	2.83
3	MP3A	Mx	-.002	2.83
4	MP3A	X	-4.132	6.33
5	MP3A	Z	-7.157	6.33
6	MP3A	Mx	-.002	6.33
7	MP3B	X	-4.132	2.83
8	MP3B	Z	-7.157	2.83
9	MP3B	Mx	.008	2.83
10	MP3B	X	-4.132	6.33
11	MP3B	Z	-7.157	6.33
12	MP3B	Mx	.008	6.33
13	MP3C	X	-2.969	2.83
14	MP3C	Z	-5.142	2.83
15	MP3C	Mx	-.004	2.83
16	MP3C	X	-2.969	6.33
17	MP3C	Z	-5.142	6.33
18	MP3C	Mx	-.004	6.33
19	MP3A	X	-4.132	2.83
20	MP3A	Z	-7.157	2.83
21	MP3A	Mx	.008	2.83
22	MP3A	X	-4.132	6.33
23	MP3A	Z	-7.157	6.33
24	MP3A	Mx	.008	6.33
25	MP3B	X	-4.132	2.83
26	MP3B	Z	-7.157	2.83
27	MP3B	Mx	-.002	2.83
28	MP3B	X	-4.132	6.33
29	MP3B	Z	-7.157	6.33
30	MP3B	Mx	-.002	6.33
31	MP3C	X	-2.969	2.83
32	MP3C	Z	-5.142	2.83
33	MP3C	Mx	-.004	2.83
34	MP3C	X	-2.969	6.33
35	MP3C	Z	-5.142	6.33
36	MP3C	Mx	-.004	6.33
37	MP1A	X	-2.682	2.5
38	MP1A	Z	-4.645	2.5
39	MP1A	Mx	.003	2.5
40	MP1A	X	-2.682	6.67
41	MP1A	Z	-4.645	6.67
42	MP1A	Mx	.003	6.67
43	MP1B	X	-2.682	2.5
44	MP1B	Z	-4.645	2.5
45	MP1B	Mx	.003	2.5
46	MP1B	X	-2.682	6.67
47	MP1B	Z	-4.645	6.67
48	MP1B	Mx	.003	6.67
49	MP1C	X	-2.682	2.5
50	MP1C	Z	-4.645	2.5
51	MP1C	Mx	.003	2.5
52	MP1C	X	-2.682	6.67

Member Point Loads (BLC 38 : Antenna Wm (330 Deg)) (Continued)

	Member Label	Direction	Magnitude[lb,k-ft]	Location[ft,%]
53	MP1C	Z	-4.645	6.67
54	MP1C	Mx	.003	6.67
55	MP5A	X	-2.682	2.5
56	MP5A	Z	-4.645	2.5
57	MP5A	Mx	.003	2.5
58	MP5A	X	-2.682	6.67
59	MP5A	Z	-4.645	6.67
60	MP5A	Mx	.003	6.67
61	MP5B	X	-2.682	2.5
62	MP5B	Z	-4.645	2.5
63	MP5B	Mx	.003	2.5
64	MP5B	X	-2.682	6.67
65	MP5B	Z	-4.645	6.67
66	MP5B	Mx	.003	6.67
67	MP5C	X	-2.682	2.5
68	MP5C	Z	-4.645	2.5
69	MP5C	Mx	.003	2.5
70	MP5C	X	-2.682	6.67
71	MP5C	Z	-4.645	6.67
72	MP5C	Mx	.003	6.67
73	MP2A	X	-1.702	4.58
74	MP2A	Z	-2.948	4.58
75	MP2A	Mx	-.000851	4.58
76	MP2B	X	-1.702	4.58
77	MP2B	Z	-2.948	4.58
78	MP2B	Mx	-.000851	4.58
79	MP2C	X	-1.24	4.58
80	MP2C	Z	-2.148	4.58
81	MP2C	Mx	.001	4.58
82	MP3A	X	-1.643	4.58
83	MP3A	Z	-2.846	4.58
84	MP3A	Mx	-.000822	4.58
85	MP3B	X	-1.643	4.58
86	MP3B	Z	-2.846	4.58
87	MP3B	Mx	-.000822	4.58
88	MP3C	X	-1.005	4.58
89	MP3C	Z	-1.74	4.58
90	MP3C	Mx	.001	4.58
91	MP3A	X	-.339	3.25
92	MP3A	Z	-.587	3.25
93	MP3A	Mx	-.000113	3.25
94	MP3B	X	-.339	3.25
95	MP3B	Z	-.587	3.25
96	MP3B	Mx	-.000113	3.25
97	MP3C	X	-.254	3.25
98	MP3C	Z	-.44	3.25
99	MP3C	Mx	.000169	3.25
100	MP1A	X	-3.443	4.58
101	MP1A	Z	-5.963	4.58
102	MP1A	Mx	-.002	4.58
103	MP1B	X	-3.443	4.58
104	MP1B	Z	-5.963	4.58

Member Point Loads (BLC 38 : Antenna Wm (330 Deg)) (Continued)

	Member Label	Direction	Magnitude[lb,k-ft]	Location[ft,%]
105	MP1B	Mx	-.002	4.58
106	MP4A	X	-1.977	3.58
107	MP4A	Z	-3.425	3.58
108	MP4A	Mx	.000988	3.58
109	MP4A	X	-1.977	5.58
110	MP4A	Z	-3.425	5.58
111	MP4A	Mx	.000988	5.58
112	MP4B	X	-1.977	3.58
113	MP4B	Z	-3.425	3.58
114	MP4B	Mx	.000989	3.58
115	MP4B	X	-1.977	5.58
116	MP4B	Z	-3.425	5.58
117	MP4B	Mx	.000989	5.58
118	MP4C	X	-.913	3.58
119	MP4C	Z	-1.581	3.58
120	MP4C	Mx	-.000913	3.58
121	MP4C	X	-.913	5.58
122	MP4C	Z	-1.581	5.58
123	MP4C	Mx	-.000913	5.58

Member Point Loads (BLC 77 : Lm1)

	Member Label	Direction	Magnitude[lb,k-ft]	Location[ft,%]
1	M42	Y	-500	%26.437

Member Point Loads (BLC 78 : Lm2)

	Member Label	Direction	Magnitude[lb,k-ft]	Location[ft,%]
1	M42	Y	-500	%50.358

Member Point Loads (BLC 79 : Lv1)

	Member Label	Direction	Magnitude[lb,k-ft]	Location[ft,%]
1	M42	Y	-250	%50

Member Point Loads (BLC 80 : Lv2)

	Member Label	Direction	Magnitude[lb,k-ft]	Location[ft,%]
1	M42	Y	-250	%100

Member Distributed Loads (BLC 40 : Structure Di)

	Member Label	Direction	Start Magnitude[lb/ft,...	End Magnitude[lb/ft,F...	Start Location[ft,%]	End Location[ft,%]
1	M4	Y	-15.277	-15.277	0	%100
2	M14	Y	-15.277	-15.277	0	%100
3	M27	Y	-15.277	-15.277	0	%100
4	M40	Y	-15.277	-15.277	0	%100
5	M41	Y	-15.277	-15.277	0	%100
6	M42	Y	-15.277	-15.277	0	%100
7	MP5A	Y	-8.461	-8.461	0	%100
8	MP3A	Y	-8.461	-8.461	0	%100
9	MP1A	Y	-8.461	-8.461	0	%100
10	MP5C	Y	-8.461	-8.461	0	%100

Member Distributed Loads (BLC 40 : Structure Di) (Continued)

	Member Label	Direction	Start Magnitude[lb/ft,...	End Magnitude[lb/ft,F...	Start Location[ft,%]	End Location[ft,%]
11	MP3C	Y	-8.461	-8.461	0	%100
12	MP1C	Y	-8.461	-8.461	0	%100
13	MP5B	Y	-8.461	-8.461	0	%100
14	MP3B	Y	-8.461	-8.461	0	%100
15	MP1B	Y	-8.461	-8.461	0	%100
16	MP2A	Y	-8.461	-8.461	0	%100
17	MP4A	Y	-8.461	-8.461	0	%100
18	MP2C	Y	-8.461	-8.461	0	%100
19	MP4C	Y	-8.461	-8.461	0	%100
20	MP2B	Y	-8.461	-8.461	0	%100
21	MP4B	Y	-8.461	-8.461	0	%100
22	M77A	Y	-16.768	-16.768	0	%100
23	M78A	Y	-16.768	-16.768	0	%100
24	M79	Y	-16.768	-16.768	0	%100
25	M80	Y	-9.5	-9.5	0	%100
26	M89	Y	-9.5	-9.5	0	%100
27	M98	Y	-9.5	-9.5	0	%100
28	M107	Y	-12.34	-12.34	0	%100
29	M107A	Y	-12.34	-12.34	0	%100
30	M109	Y	-12.34	-12.34	0	%100

Member Distributed Loads (BLC 41 : Structure Wo (0 Deg))

	Member Label	Direction	Start Magnitude[lb/ft,...	End Magnitude[lb/ft,F...	Start Location[ft,%]	End Location[ft,%]
1	M4	X	0	0	0	%100
2	M4	Z	0	0	0	%100
3	M14	X	0	0	0	%100
4	M14	Z	-9.431	-9.431	0	%100
5	M27	X	0	0	0	%100
6	M27	Z	-9.431	-9.431	0	%100
7	M40	X	0	0	0	%100
8	M40	Z	-3.253	-3.253	0	%100
9	M41	X	0	0	0	%100
10	M41	Z	-3.253	-3.253	0	%100
11	M42	X	0	0	0	%100
12	M42	Z	-13.011	-13.011	0	%100
13	MP5A	X	0	0	0	%100
14	MP5A	Z	-7.416	-7.416	0	%100
15	MP3A	X	0	0	0	%100
16	MP3A	Z	-7.416	-7.416	0	%100
17	MP1A	X	0	0	0	%100
18	MP1A	Z	-7.416	-7.416	0	%100
19	MP5C	X	0	0	0	%100
20	MP5C	Z	-7.416	-7.416	0	%100
21	MP3C	X	0	0	0	%100
22	MP3C	Z	-7.416	-7.416	0	%100
23	MP1C	X	0	0	0	%100
24	MP1C	Z	-7.416	-7.416	0	%100
25	MP5B	X	0	0	0	%100
26	MP5B	Z	-7.416	-7.416	0	%100
27	MP3B	X	0	0	0	%100
28	MP3B	Z	-7.416	-7.416	0	%100

Member Distributed Loads (BLC 41 : Structure Wo (0 Deg)) (Continued)

	Member Label	Direction	Start Magnitude[lb/ft,...	End Magnitude[lb/ft,F...	Start Location[ft,%]	End Location[ft,%]
29	MP1B	X	0	0	0	%100
30	MP1B	Z	-7.416	-7.416	0	%100
31	MP2A	X	0	0	0	%100
32	MP2A	Z	-7.416	-7.416	0	%100
33	MP4A	X	0	0	0	%100
34	MP4A	Z	-7.416	-7.416	0	%100
35	MP2C	X	0	0	0	%100
36	MP2C	Z	-7.416	-7.416	0	%100
37	MP4C	X	0	0	0	%100
38	MP4C	Z	-7.416	-7.416	0	%100
39	MP2B	X	0	0	0	%100
40	MP2B	Z	-7.416	-7.416	0	%100
41	MP4B	X	0	0	0	%100
42	MP4B	Z	-7.416	-7.416	0	%100
43	M77A	X	0	0	0	%100
44	M77A	Z	-14.823	-14.823	0	%100
45	M78A	X	0	0	0	%100
46	M78A	Z	-14.823	-14.823	0	%100
47	M79	X	0	0	0	%100
48	M79	Z	-17.046	-17.046	0	%100
49	M80	X	0	0	0	%100
50	M80	Z	-2.244	-2.244	0	%100
51	M89	X	0	0	0	%100
52	M89	Z	-2.244	-2.244	0	%100
53	M98	X	0	0	0	%100
54	M98	Z	-8.978	-8.978	0	%100
55	M107	X	0	0	0	%100
56	M107	Z	-2.426	-2.426	0	%100
57	M107A	X	0	0	0	%100
58	M107A	Z	-10.976	-10.976	0	%100
59	M109	X	0	0	0	%100
60	M109	Z	-2.737	-2.737	0	%100

Member Distributed Loads (BLC 42 : Structure Wo (30 Deg))

	Member Label	Direction	Start Magnitude[lb/ft,...	End Magnitude[lb/ft,F...	Start Location[ft,%]	End Location[ft,%]
1	M4	X	1.572	1.572	0	%100
2	M4	Z	-2.723	-2.723	0	%100
3	M14	X	1.572	1.572	0	%100
4	M14	Z	-2.723	-2.723	0	%100
5	M27	X	6.287	6.287	0	%100
6	M27	Z	-10.89	-10.89	0	%100
7	M40	X	0	0	0	%100
8	M40	Z	0	0	0	%100
9	M41	X	4.879	4.879	0	%100
10	M41	Z	-8.451	-8.451	0	%100
11	M42	X	4.879	4.879	0	%100
12	M42	Z	-8.451	-8.451	0	%100
13	MP5A	X	3.708	3.708	0	%100
14	MP5A	Z	-6.423	-6.423	0	%100
15	MP3A	X	3.708	3.708	0	%100
16	MP3A	Z	-6.423	-6.423	0	%100

Member Distributed Loads (BLC 42 : Structure Wo (30 Deg)) (Continued)

	Member Label	Direction	Start Magnitude[lb/ft,...	End Magnitude[lb/ft,F...	Start Location[ft,%]	End Location[ft,%]
17	MP1A	X	3.708	3.708	0	%100
18	MP1A	Z	-6.423	-6.423	0	%100
19	MP5C	X	3.708	3.708	0	%100
20	MP5C	Z	-6.423	-6.423	0	%100
21	MP3C	X	3.708	3.708	0	%100
22	MP3C	Z	-6.423	-6.423	0	%100
23	MP1C	X	3.708	3.708	0	%100
24	MP1C	Z	-6.423	-6.423	0	%100
25	MP5B	X	3.708	3.708	0	%100
26	MP5B	Z	-6.423	-6.423	0	%100
27	MP3B	X	3.708	3.708	0	%100
28	MP3B	Z	-6.423	-6.423	0	%100
29	MP1B	X	3.708	3.708	0	%100
30	MP1B	Z	-6.423	-6.423	0	%100
31	MP2A	X	3.708	3.708	0	%100
32	MP2A	Z	-6.423	-6.423	0	%100
33	MP4A	X	3.708	3.708	0	%100
34	MP4A	Z	-6.423	-6.423	0	%100
35	MP2C	X	3.708	3.708	0	%100
36	MP2C	Z	-6.423	-6.423	0	%100
37	MP4C	X	3.708	3.708	0	%100
38	MP4C	Z	-6.423	-6.423	0	%100
39	MP2B	X	3.708	3.708	0	%100
40	MP2B	Z	-6.423	-6.423	0	%100
41	MP4B	X	3.708	3.708	0	%100
42	MP4B	Z	-6.423	-6.423	0	%100
43	M77A	X	8.152	8.152	0	%100
44	M77A	Z	-14.12	-14.12	0	%100
45	M78A	X	7.041	7.041	0	%100
46	M78A	Z	-12.195	-12.195	0	%100
47	M79	X	8.152	8.152	0	%100
48	M79	Z	-14.12	-14.12	0	%100
49	M80	X	3.367	3.367	0	%100
50	M80	Z	-5.831	-5.831	0	%100
51	M89	X	0	0	0	%100
52	M89	Z	0	0	0	%100
53	M98	X	3.367	3.367	0	%100
54	M98	Z	-5.831	-5.831	0	%100
55	M107	X	.007	.007	0	%100
56	M107	Z	-.011	-.011	0	%100
57	M107A	X	3.953	3.953	0	%100
58	M107A	Z	-6.847	-6.847	0	%100
59	M109	X	4.106	4.106	0	%100
60	M109	Z	-7.112	-7.112	0	%100

Member Distributed Loads (BLC 43 : Structure Wo (60 Deg))

	Member Label	Direction	Start Magnitude[lb/ft,...	End Magnitude[lb/ft,F...	Start Location[ft,%]	End Location[ft,%]
1	M4	X	8.168	8.168	0	%100
2	M4	Z	-4.716	-4.716	0	%100
3	M14	X	0	0	0	%100
4	M14	Z	0	0	0	%100

Member Distributed Loads (BLC 43 : Structure Wo (60 Deg)) (Continued)

	Member Label	Direction	Start Magnitude[lb/ft,...	End Magnitude[lb/ft,F...	Start Location[ft,%]	End Location[ft,%]
5	M27	X	8.168	8.168	0	%100
6	M27	Z	-4.716	-4.716	0	%100
7	M40	X	2.817	2.817	0	%100
8	M40	Z	-1.626	-1.626	0	%100
9	M41	X	11.268	11.268	0	%100
10	M41	Z	-6.506	-6.506	0	%100
11	M42	X	2.817	2.817	0	%100
12	M42	Z	-1.626	-1.626	0	%100
13	MP5A	X	6.423	6.423	0	%100
14	MP5A	Z	-3.708	-3.708	0	%100
15	MP3A	X	6.423	6.423	0	%100
16	MP3A	Z	-3.708	-3.708	0	%100
17	MP1A	X	6.423	6.423	0	%100
18	MP1A	Z	-3.708	-3.708	0	%100
19	MP5C	X	6.423	6.423	0	%100
20	MP5C	Z	-3.708	-3.708	0	%100
21	MP3C	X	6.423	6.423	0	%100
22	MP3C	Z	-3.708	-3.708	0	%100
23	MP1C	X	6.423	6.423	0	%100
24	MP1C	Z	-3.708	-3.708	0	%100
25	MP5B	X	6.423	6.423	0	%100
26	MP5B	Z	-3.708	-3.708	0	%100
27	MP3B	X	6.423	6.423	0	%100
28	MP3B	Z	-3.708	-3.708	0	%100
29	MP1B	X	6.423	6.423	0	%100
30	MP1B	Z	-3.708	-3.708	0	%100
31	MP2A	X	6.423	6.423	0	%100
32	MP2A	Z	-3.708	-3.708	0	%100
33	MP4A	X	6.423	6.423	0	%100
34	MP4A	Z	-3.708	-3.708	0	%100
35	MP2C	X	6.423	6.423	0	%100
36	MP2C	Z	-3.708	-3.708	0	%100
37	MP4C	X	6.423	6.423	0	%100
38	MP4C	Z	-3.708	-3.708	0	%100
39	MP2B	X	6.423	6.423	0	%100
40	MP2B	Z	-3.708	-3.708	0	%100
41	MP4B	X	6.423	6.423	0	%100
42	MP4B	Z	-3.708	-3.708	0	%100
43	M77A	X	14.762	14.762	0	%100
44	M77A	Z	-8.523	-8.523	0	%100
45	M78A	X	12.837	12.837	0	%100
46	M78A	Z	-7.411	-7.411	0	%100
47	M79	X	12.837	12.837	0	%100
48	M79	Z	-7.411	-7.411	0	%100
49	M80	X	7.775	7.775	0	%100
50	M80	Z	-4.489	-4.489	0	%100
51	M89	X	1.944	1.944	0	%100
52	M89	Z	-1.122	-1.122	0	%100
53	M98	X	1.944	1.944	0	%100
54	M98	Z	-1.122	-1.122	0	%100
55	M107	X	2.669	2.669	0	%100
56	M107	Z	-1.541	-1.541	0	%100

Member Distributed Loads (BLC 43 : Structure Wo (60 Deg)) (Continued)

	Member Label	Direction	Start Magnitude[lb/ft,...	End Magnitude[lb/ft,F...	Start Location[ft,%]	End Location[ft,%]
57	M107A	X	2.101	2.101	0	%100
58	M107A	Z	-1.213	-1.213	0	%100
59	M109	X	9.483	9.483	0	%100
60	M109	Z	-5.475	-5.475	0	%100

Member Distributed Loads (BLC 44 : Structure Wo (90 Deg))

	Member Label	Direction	Start Magnitude[lb/ft,...	End Magnitude[lb/ft,F...	Start Location[ft,%]	End Location[ft,%]
1	M4	X	12.575	12.575	0	%100
2	M4	Z	0	0	0	%100
3	M14	X	3.144	3.144	0	%100
4	M14	Z	0	0	0	%100
5	M27	X	3.144	3.144	0	%100
6	M27	Z	0	0	0	%100
7	M40	X	9.758	9.758	0	%100
8	M40	Z	0	0	0	%100
9	M41	X	9.758	9.758	0	%100
10	M41	Z	0	0	0	%100
11	M42	X	0	0	0	%100
12	M42	Z	0	0	0	%100
13	MP5A	X	7.416	7.416	0	%100
14	MP5A	Z	0	0	0	%100
15	MP3A	X	7.416	7.416	0	%100
16	MP3A	Z	0	0	0	%100
17	MP1A	X	7.416	7.416	0	%100
18	MP1A	Z	0	0	0	%100
19	MP5C	X	7.416	7.416	0	%100
20	MP5C	Z	0	0	0	%100
21	MP3C	X	7.416	7.416	0	%100
22	MP3C	Z	0	0	0	%100
23	MP1C	X	7.416	7.416	0	%100
24	MP1C	Z	0	0	0	%100
25	MP5B	X	7.416	7.416	0	%100
26	MP5B	Z	0	0	0	%100
27	MP3B	X	7.416	7.416	0	%100
28	MP3B	Z	0	0	0	%100
29	MP1B	X	7.416	7.416	0	%100
30	MP1B	Z	0	0	0	%100
31	MP2A	X	7.416	7.416	0	%100
32	MP2A	Z	0	0	0	%100
33	MP4A	X	7.416	7.416	0	%100
34	MP4A	Z	0	0	0	%100
35	MP2C	X	7.416	7.416	0	%100
36	MP2C	Z	0	0	0	%100
37	MP4C	X	7.416	7.416	0	%100
38	MP4C	Z	0	0	0	%100
39	MP2B	X	7.416	7.416	0	%100
40	MP2B	Z	0	0	0	%100
41	MP4B	X	7.416	7.416	0	%100
42	MP4B	Z	0	0	0	%100
43	M77A	X	16.305	16.305	0	%100
44	M77A	Z	0	0	0	%100

Member Distributed Loads (BLC 44 : Structure Wo (90 Deg)) (Continued)

	Member Label	Direction	Start Magnitude[lb/ft,...	End Magnitude[lb/ft,F...	Start Location[ft,%]	End Location[ft,%]
45	M78A	X	16.305	16.305	0	%100
46	M78A	Z	0	0	0	%100
47	M79	X	14.082	14.082	0	%100
48	M79	Z	0	0	0	%100
49	M80	X	6.733	6.733	0	%100
50	M80	Z	0	0	0	%100
51	M89	X	6.733	6.733	0	%100
52	M89	Z	0	0	0	%100
53	M98	X	0	0	0	%100
54	M98	Z	0	0	0	%100
55	M107	X	8.563	8.563	0	%100
56	M107	Z	0	0	0	%100
57	M107A	X	.013	.013	0	%100
58	M107A	Z	0	0	0	%100
59	M109	X	8.213	8.213	0	%100
60	M109	Z	0	0	0	%100

Member Distributed Loads (BLC 45 : Structure Wo (120 Deg))

	Member Label	Direction	Start Magnitude[lb/ft,...	End Magnitude[lb/ft,F...	Start Location[ft,%]	End Location[ft,%]
1	M4	X	8.168	8.168	0	%100
2	M4	Z	4.716	4.716	0	%100
3	M14	X	8.168	8.168	0	%100
4	M14	Z	4.716	4.716	0	%100
5	M27	X	0	0	0	%100
6	M27	Z	0	0	0	%100
7	M40	X	11.268	11.268	0	%100
8	M40	Z	6.506	6.506	0	%100
9	M41	X	2.817	2.817	0	%100
10	M41	Z	1.626	1.626	0	%100
11	M42	X	2.817	2.817	0	%100
12	M42	Z	1.626	1.626	0	%100
13	MP5A	X	6.423	6.423	0	%100
14	MP5A	Z	3.708	3.708	0	%100
15	MP3A	X	6.423	6.423	0	%100
16	MP3A	Z	3.708	3.708	0	%100
17	MP1A	X	6.423	6.423	0	%100
18	MP1A	Z	3.708	3.708	0	%100
19	MP5C	X	6.423	6.423	0	%100
20	MP5C	Z	3.708	3.708	0	%100
21	MP3C	X	6.423	6.423	0	%100
22	MP3C	Z	3.708	3.708	0	%100
23	MP1C	X	6.423	6.423	0	%100
24	MP1C	Z	3.708	3.708	0	%100
25	MP5B	X	6.423	6.423	0	%100
26	MP5B	Z	3.708	3.708	0	%100
27	MP3B	X	6.423	6.423	0	%100
28	MP3B	Z	3.708	3.708	0	%100
29	MP1B	X	6.423	6.423	0	%100
30	MP1B	Z	3.708	3.708	0	%100
31	MP2A	X	6.423	6.423	0	%100
32	MP2A	Z	3.708	3.708	0	%100

Member Distributed Loads (BLC 45 : Structure Wo (120 Deg)) (Continued)

	Member Label	Direction	Start Magnitude[lb/ft,...	End Magnitude[lb/ft,F...	Start Location[ft,%]	End Location[ft,%]
33	MP4A	X	6.423	6.423	0	%100
34	MP4A	Z	3.708	3.708	0	%100
35	MP2C	X	6.423	6.423	0	%100
36	MP2C	Z	3.708	3.708	0	%100
37	MP4C	X	6.423	6.423	0	%100
38	MP4C	Z	3.708	3.708	0	%100
39	MP2B	X	6.423	6.423	0	%100
40	MP2B	Z	3.708	3.708	0	%100
41	MP4B	X	6.423	6.423	0	%100
42	MP4B	Z	3.708	3.708	0	%100
43	M77A	X	12.837	12.837	0	%100
44	M77A	Z	7.411	7.411	0	%100
45	M78A	X	14.762	14.762	0	%100
46	M78A	Z	8.523	8.523	0	%100
47	M79	X	12.837	12.837	0	%100
48	M79	Z	7.411	7.411	0	%100
49	M80	X	1.944	1.944	0	%100
50	M80	Z	1.122	1.122	0	%100
51	M89	X	7.775	7.775	0	%100
52	M89	Z	4.489	4.489	0	%100
53	M98	X	1.944	1.944	0	%100
54	M98	Z	1.122	1.122	0	%100
55	M107	X	9.505	9.505	0	%100
56	M107	Z	5.488	5.488	0	%100
57	M107A	X	2.669	2.669	0	%100
58	M107A	Z	1.541	1.541	0	%100
59	M109	X	2.371	2.371	0	%100
60	M109	Z	1.369	1.369	0	%100

Member Distributed Loads (BLC 46 : Structure Wo (150 Deg))

	Member Label	Direction	Start Magnitude[lb/ft,...	End Magnitude[lb/ft,F...	Start Location[ft,%]	End Location[ft,%]
1	M4	X	1.572	1.572	0	%100
2	M4	Z	2.723	2.723	0	%100
3	M14	X	6.287	6.287	0	%100
4	M14	Z	10.89	10.89	0	%100
5	M27	X	1.572	1.572	0	%100
6	M27	Z	2.723	2.723	0	%100
7	M40	X	4.879	4.879	0	%100
8	M40	Z	8.451	8.451	0	%100
9	M41	X	0	0	0	%100
10	M41	Z	0	0	0	%100
11	M42	X	4.879	4.879	0	%100
12	M42	Z	8.451	8.451	0	%100
13	MP5A	X	3.708	3.708	0	%100
14	MP5A	Z	6.423	6.423	0	%100
15	MP3A	X	3.708	3.708	0	%100
16	MP3A	Z	6.423	6.423	0	%100
17	MP1A	X	3.708	3.708	0	%100
18	MP1A	Z	6.423	6.423	0	%100
19	MP5C	X	3.708	3.708	0	%100
20	MP5C	Z	6.423	6.423	0	%100

Member Distributed Loads (BLC 46 : Structure Wo (150 Deg)) (Continued)

	Member Label	Direction	Start Magnitude[lb/ft,...	End Magnitude[lb/ft,F...	Start Location[ft,%]	End Location[ft,%]
21	MP3C	X	3.708	3.708	0	%100
22	MP3C	Z	6.423	6.423	0	%100
23	MP1C	X	3.708	3.708	0	%100
24	MP1C	Z	6.423	6.423	0	%100
25	MP5B	X	3.708	3.708	0	%100
26	MP5B	Z	6.423	6.423	0	%100
27	MP3B	X	3.708	3.708	0	%100
28	MP3B	Z	6.423	6.423	0	%100
29	MP1B	X	3.708	3.708	0	%100
30	MP1B	Z	6.423	6.423	0	%100
31	MP2A	X	3.708	3.708	0	%100
32	MP2A	Z	6.423	6.423	0	%100
33	MP4A	X	3.708	3.708	0	%100
34	MP4A	Z	6.423	6.423	0	%100
35	MP2C	X	3.708	3.708	0	%100
36	MP2C	Z	6.423	6.423	0	%100
37	MP4C	X	3.708	3.708	0	%100
38	MP4C	Z	6.423	6.423	0	%100
39	MP2B	X	3.708	3.708	0	%100
40	MP2B	Z	6.423	6.423	0	%100
41	MP4B	X	3.708	3.708	0	%100
42	MP4B	Z	6.423	6.423	0	%100
43	M77A	X	7.041	7.041	0	%100
44	M77A	Z	12.195	12.195	0	%100
45	M78A	X	8.152	8.152	0	%100
46	M78A	Z	14.12	14.12	0	%100
47	M79	X	8.152	8.152	0	%100
48	M79	Z	14.12	14.12	0	%100
49	M80	X	0	0	0	%100
50	M80	Z	0	0	0	%100
51	M89	X	3.367	3.367	0	%100
52	M89	Z	5.831	5.831	0	%100
53	M98	X	3.367	3.367	0	%100
54	M98	Z	5.831	5.831	0	%100
55	M107	X	3.953	3.953	0	%100
56	M107	Z	6.847	6.847	0	%100
57	M107A	X	4.282	4.282	0	%100
58	M107A	Z	7.416	7.416	0	%100
59	M109	X	0	0	0	%100
60	M109	Z	0	0	0	%100

Member Distributed Loads (BLC 47 : Structure Wo (180 Deg))

	Member Label	Direction	Start Magnitude[lb/ft,...	End Magnitude[lb/ft,F...	Start Location[ft,%]	End Location[ft,%]
1	M4	X	0	0	0	%100
2	M4	Z	0	0	0	%100
3	M14	X	0	0	0	%100
4	M14	Z	9.431	9.431	0	%100
5	M27	X	0	0	0	%100
6	M27	Z	9.431	9.431	0	%100
7	M40	X	0	0	0	%100
8	M40	Z	3.253	3.253	0	%100

Member Distributed Loads (BLC 47 : Structure Wo (180 Deg)) (Continued)

	Member Label	Direction	Start Magnitude[lb/ft,...	End Magnitude[lb/ft,F...	Start Location[ft,%]	End Location[ft,%]
9	M41	X	0	0	0	%100
10	M41	Z	3.253	3.253	0	%100
11	M42	X	0	0	0	%100
12	M42	Z	13.011	13.011	0	%100
13	MP5A	X	0	0	0	%100
14	MP5A	Z	7.416	7.416	0	%100
15	MP3A	X	0	0	0	%100
16	MP3A	Z	7.416	7.416	0	%100
17	MP1A	X	0	0	0	%100
18	MP1A	Z	7.416	7.416	0	%100
19	MP5C	X	0	0	0	%100
20	MP5C	Z	7.416	7.416	0	%100
21	MP3C	X	0	0	0	%100
22	MP3C	Z	7.416	7.416	0	%100
23	MP1C	X	0	0	0	%100
24	MP1C	Z	7.416	7.416	0	%100
25	MP5B	X	0	0	0	%100
26	MP5B	Z	7.416	7.416	0	%100
27	MP3B	X	0	0	0	%100
28	MP3B	Z	7.416	7.416	0	%100
29	MP1B	X	0	0	0	%100
30	MP1B	Z	7.416	7.416	0	%100
31	MP2A	X	0	0	0	%100
32	MP2A	Z	7.416	7.416	0	%100
33	MP4A	X	0	0	0	%100
34	MP4A	Z	7.416	7.416	0	%100
35	MP2C	X	0	0	0	%100
36	MP2C	Z	7.416	7.416	0	%100
37	MP4C	X	0	0	0	%100
38	MP4C	Z	7.416	7.416	0	%100
39	MP2B	X	0	0	0	%100
40	MP2B	Z	7.416	7.416	0	%100
41	MP4B	X	0	0	0	%100
42	MP4B	Z	7.416	7.416	0	%100
43	M77A	X	0	0	0	%100
44	M77A	Z	14.823	14.823	0	%100
45	M78A	X	0	0	0	%100
46	M78A	Z	14.823	14.823	0	%100
47	M79	X	0	0	0	%100
48	M79	Z	17.046	17.046	0	%100
49	M80	X	0	0	0	%100
50	M80	Z	2.244	2.244	0	%100
51	M89	X	0	0	0	%100
52	M89	Z	2.244	2.244	0	%100
53	M98	X	0	0	0	%100
54	M98	Z	8.978	8.978	0	%100
55	M107	X	0	0	0	%100
56	M107	Z	2.426	2.426	0	%100
57	M107A	X	0	0	0	%100
58	M107A	Z	10.976	10.976	0	%100
59	M109	X	0	0	0	%100
60	M109	Z	2.737	2.737	0	%100

Member Distributed Loads (BLC 48 : Structure Wo (210 Deg))

	Member Label	Direction	Start Magnitude[lb/ft,...	End Magnitude[lb/ft,F...	Start Location[ft,%]	End Location[ft,%]
1	M4	X	-1.572	-1.572	0	%100
2	M4	Z	2.723	2.723	0	%100
3	M14	X	-1.572	-1.572	0	%100
4	M14	Z	2.723	2.723	0	%100
5	M27	X	-6.287	-6.287	0	%100
6	M27	Z	10.89	10.89	0	%100
7	M40	X	0	0	0	%100
8	M40	Z	0	0	0	%100
9	M41	X	-4.879	-4.879	0	%100
10	M41	Z	8.451	8.451	0	%100
11	M42	X	-4.879	-4.879	0	%100
12	M42	Z	8.451	8.451	0	%100
13	MP5A	X	-3.708	-3.708	0	%100
14	MP5A	Z	6.423	6.423	0	%100
15	MP3A	X	-3.708	-3.708	0	%100
16	MP3A	Z	6.423	6.423	0	%100
17	MP1A	X	-3.708	-3.708	0	%100
18	MP1A	Z	6.423	6.423	0	%100
19	MP5C	X	-3.708	-3.708	0	%100
20	MP5C	Z	6.423	6.423	0	%100
21	MP3C	X	-3.708	-3.708	0	%100
22	MP3C	Z	6.423	6.423	0	%100
23	MP1C	X	-3.708	-3.708	0	%100
24	MP1C	Z	6.423	6.423	0	%100
25	MP5B	X	-3.708	-3.708	0	%100
26	MP5B	Z	6.423	6.423	0	%100
27	MP3B	X	-3.708	-3.708	0	%100
28	MP3B	Z	6.423	6.423	0	%100
29	MP1B	X	-3.708	-3.708	0	%100
30	MP1B	Z	6.423	6.423	0	%100
31	MP2A	X	-3.708	-3.708	0	%100
32	MP2A	Z	6.423	6.423	0	%100
33	MP4A	X	-3.708	-3.708	0	%100
34	MP4A	Z	6.423	6.423	0	%100
35	MP2C	X	-3.708	-3.708	0	%100
36	MP2C	Z	6.423	6.423	0	%100
37	MP4C	X	-3.708	-3.708	0	%100
38	MP4C	Z	6.423	6.423	0	%100
39	MP2B	X	-3.708	-3.708	0	%100
40	MP2B	Z	6.423	6.423	0	%100
41	MP4B	X	-3.708	-3.708	0	%100
42	MP4B	Z	6.423	6.423	0	%100
43	M77A	X	-8.152	-8.152	0	%100
44	M77A	Z	14.12	14.12	0	%100
45	M78A	X	-7.041	-7.041	0	%100
46	M78A	Z	12.195	12.195	0	%100
47	M79	X	-8.152	-8.152	0	%100
48	M79	Z	14.12	14.12	0	%100
49	M80	X	-3.367	-3.367	0	%100
50	M80	Z	5.831	5.831	0	%100
51	M89	X	0	0	0	%100
52	M89	Z	0	0	0	%100

Member Distributed Loads (BLC 48 : Structure Wo (210 Deg)) (Continued)

	Member Label	Direction	Start Magnitude[lb/ft,...	End Magnitude[lb/ft,F...	Start Location[ft,%]	End Location[ft,%]
53	M98	X	-3.367	-3.367	0	%100
54	M98	Z	5.831	5.831	0	%100
55	M107	X	-.007	-.007	0	%100
56	M107	Z	.011	.011	0	%100
57	M107A	X	-3.953	-3.953	0	%100
58	M107A	Z	6.847	6.847	0	%100
59	M109	X	-4.106	-4.106	0	%100
60	M109	Z	7.112	7.112	0	%100

Member Distributed Loads (BLC 49 : Structure Wo (240 Deg))

	Member Label	Direction	Start Magnitude[lb/ft,...	End Magnitude[lb/ft,F...	Start Location[ft,%]	End Location[ft,%]
1	M4	X	-8.168	-8.168	0	%100
2	M4	Z	4.716	4.716	0	%100
3	M14	X	0	0	0	%100
4	M14	Z	0	0	0	%100
5	M27	X	-8.168	-8.168	0	%100
6	M27	Z	4.716	4.716	0	%100
7	M40	X	-2.817	-2.817	0	%100
8	M40	Z	1.626	1.626	0	%100
9	M41	X	-11.268	-11.268	0	%100
10	M41	Z	6.506	6.506	0	%100
11	M42	X	-2.817	-2.817	0	%100
12	M42	Z	1.626	1.626	0	%100
13	MP5A	X	-6.423	-6.423	0	%100
14	MP5A	Z	3.708	3.708	0	%100
15	MP3A	X	-6.423	-6.423	0	%100
16	MP3A	Z	3.708	3.708	0	%100
17	MP1A	X	-6.423	-6.423	0	%100
18	MP1A	Z	3.708	3.708	0	%100
19	MP5C	X	-6.423	-6.423	0	%100
20	MP5C	Z	3.708	3.708	0	%100
21	MP3C	X	-6.423	-6.423	0	%100
22	MP3C	Z	3.708	3.708	0	%100
23	MP1C	X	-6.423	-6.423	0	%100
24	MP1C	Z	3.708	3.708	0	%100
25	MP5B	X	-6.423	-6.423	0	%100
26	MP5B	Z	3.708	3.708	0	%100
27	MP3B	X	-6.423	-6.423	0	%100
28	MP3B	Z	3.708	3.708	0	%100
29	MP1B	X	-6.423	-6.423	0	%100
30	MP1B	Z	3.708	3.708	0	%100
31	MP2A	X	-6.423	-6.423	0	%100
32	MP2A	Z	3.708	3.708	0	%100
33	MP4A	X	-6.423	-6.423	0	%100
34	MP4A	Z	3.708	3.708	0	%100
35	MP2C	X	-6.423	-6.423	0	%100
36	MP2C	Z	3.708	3.708	0	%100
37	MP4C	X	-6.423	-6.423	0	%100
38	MP4C	Z	3.708	3.708	0	%100
39	MP2B	X	-6.423	-6.423	0	%100
40	MP2B	Z	3.708	3.708	0	%100

Member Distributed Loads (BLC 49 : Structure Wo (240 Deg)) (Continued)

	Member Label	Direction	Start Magnitude[lb/ft,...	End Magnitude[lb/ft,F...	Start Location[ft,%]	End Location[ft,%]
41	MP4B	X	-6.423	-6.423	0	%100
42	MP4B	Z	3.708	3.708	0	%100
43	M77A	X	-14.762	-14.762	0	%100
44	M77A	Z	8.523	8.523	0	%100
45	M78A	X	-12.837	-12.837	0	%100
46	M78A	Z	7.411	7.411	0	%100
47	M79	X	-12.837	-12.837	0	%100
48	M79	Z	7.411	7.411	0	%100
49	M80	X	-7.775	-7.775	0	%100
50	M80	Z	4.489	4.489	0	%100
51	M89	X	-1.944	-1.944	0	%100
52	M89	Z	1.122	1.122	0	%100
53	M98	X	-1.944	-1.944	0	%100
54	M98	Z	1.122	1.122	0	%100
55	M107	X	-2.669	-2.669	0	%100
56	M107	Z	1.541	1.541	0	%100
57	M107A	X	-2.101	-2.101	0	%100
58	M107A	Z	1.213	1.213	0	%100
59	M109	X	-9.483	-9.483	0	%100
60	M109	Z	5.475	5.475	0	%100

Member Distributed Loads (BLC 50 : Structure Wo (270 Deg))

	Member Label	Direction	Start Magnitude[lb/ft,...	End Magnitude[lb/ft,F...	Start Location[ft,%]	End Location[ft,%]
1	M4	X	-12.575	-12.575	0	%100
2	M4	Z	0	0	0	%100
3	M14	X	-3.144	-3.144	0	%100
4	M14	Z	0	0	0	%100
5	M27	X	-3.144	-3.144	0	%100
6	M27	Z	0	0	0	%100
7	M40	X	-9.758	-9.758	0	%100
8	M40	Z	0	0	0	%100
9	M41	X	-9.758	-9.758	0	%100
10	M41	Z	0	0	0	%100
11	M42	X	0	0	0	%100
12	M42	Z	0	0	0	%100
13	MP5A	X	-7.416	-7.416	0	%100
14	MP5A	Z	0	0	0	%100
15	MP3A	X	-7.416	-7.416	0	%100
16	MP3A	Z	0	0	0	%100
17	MP1A	X	-7.416	-7.416	0	%100
18	MP1A	Z	0	0	0	%100
19	MP5C	X	-7.416	-7.416	0	%100
20	MP5C	Z	0	0	0	%100
21	MP3C	X	-7.416	-7.416	0	%100
22	MP3C	Z	0	0	0	%100
23	MP1C	X	-7.416	-7.416	0	%100
24	MP1C	Z	0	0	0	%100
25	MP5B	X	-7.416	-7.416	0	%100
26	MP5B	Z	0	0	0	%100
27	MP3B	X	-7.416	-7.416	0	%100
28	MP3B	Z	0	0	0	%100

Member Distributed Loads (BLC 50 : Structure Wo (270 Deg)) (Continued)

	Member Label	Direction	Start Magnitude[lb/ft,...	End Magnitude[lb/ft,F...	Start Location[ft,%]	End Location[ft,%]
29	MP1B	X	-7.416	-7.416	0	%100
30	MP1B	Z	0	0	0	%100
31	MP2A	X	-7.416	-7.416	0	%100
32	MP2A	Z	0	0	0	%100
33	MP4A	X	-7.416	-7.416	0	%100
34	MP4A	Z	0	0	0	%100
35	MP2C	X	-7.416	-7.416	0	%100
36	MP2C	Z	0	0	0	%100
37	MP4C	X	-7.416	-7.416	0	%100
38	MP4C	Z	0	0	0	%100
39	MP2B	X	-7.416	-7.416	0	%100
40	MP2B	Z	0	0	0	%100
41	MP4B	X	-7.416	-7.416	0	%100
42	MP4B	Z	0	0	0	%100
43	M77A	X	-16.305	-16.305	0	%100
44	M77A	Z	0	0	0	%100
45	M78A	X	-16.305	-16.305	0	%100
46	M78A	Z	0	0	0	%100
47	M79	X	-14.082	-14.082	0	%100
48	M79	Z	0	0	0	%100
49	M80	X	-6.733	-6.733	0	%100
50	M80	Z	0	0	0	%100
51	M89	X	-6.733	-6.733	0	%100
52	M89	Z	0	0	0	%100
53	M98	X	0	0	0	%100
54	M98	Z	0	0	0	%100
55	M107	X	-8.563	-8.563	0	%100
56	M107	Z	0	0	0	%100
57	M107A	X	-.013	-.013	0	%100
58	M107A	Z	0	0	0	%100
59	M109	X	-8.213	-8.213	0	%100
60	M109	Z	0	0	0	%100

Member Distributed Loads (BLC 51 : Structure Wo (300 Deg))

	Member Label	Direction	Start Magnitude[lb/ft,...	End Magnitude[lb/ft,F...	Start Location[ft,%]	End Location[ft,%]
1	M4	X	-8.168	-8.168	0	%100
2	M4	Z	-4.716	-4.716	0	%100
3	M14	X	-8.168	-8.168	0	%100
4	M14	Z	-4.716	-4.716	0	%100
5	M27	X	0	0	0	%100
6	M27	Z	0	0	0	%100
7	M40	X	-11.268	-11.268	0	%100
8	M40	Z	-6.506	-6.506	0	%100
9	M41	X	-2.817	-2.817	0	%100
10	M41	Z	-1.626	-1.626	0	%100
11	M42	X	-2.817	-2.817	0	%100
12	M42	Z	-1.626	-1.626	0	%100
13	MP5A	X	-6.423	-6.423	0	%100
14	MP5A	Z	-3.708	-3.708	0	%100
15	MP3A	X	-6.423	-6.423	0	%100
16	MP3A	Z	-3.708	-3.708	0	%100

Member Distributed Loads (BLC 51 : Structure Wo (300 Deg)) (Continued)

	Member Label	Direction	Start Magnitude[lb/ft,...	End Magnitude[lb/ft,F...	Start Location[ft,%]	End Location[ft,%]
17	MP1A	X	-6.423	-6.423	0	%100
18	MP1A	Z	-3.708	-3.708	0	%100
19	MP5C	X	-6.423	-6.423	0	%100
20	MP5C	Z	-3.708	-3.708	0	%100
21	MP3C	X	-6.423	-6.423	0	%100
22	MP3C	Z	-3.708	-3.708	0	%100
23	MP1C	X	-6.423	-6.423	0	%100
24	MP1C	Z	-3.708	-3.708	0	%100
25	MP5B	X	-6.423	-6.423	0	%100
26	MP5B	Z	-3.708	-3.708	0	%100
27	MP3B	X	-6.423	-6.423	0	%100
28	MP3B	Z	-3.708	-3.708	0	%100
29	MP1B	X	-6.423	-6.423	0	%100
30	MP1B	Z	-3.708	-3.708	0	%100
31	MP2A	X	-6.423	-6.423	0	%100
32	MP2A	Z	-3.708	-3.708	0	%100
33	MP4A	X	-6.423	-6.423	0	%100
34	MP4A	Z	-3.708	-3.708	0	%100
35	MP2C	X	-6.423	-6.423	0	%100
36	MP2C	Z	-3.708	-3.708	0	%100
37	MP4C	X	-6.423	-6.423	0	%100
38	MP4C	Z	-3.708	-3.708	0	%100
39	MP2B	X	-6.423	-6.423	0	%100
40	MP2B	Z	-3.708	-3.708	0	%100
41	MP4B	X	-6.423	-6.423	0	%100
42	MP4B	Z	-3.708	-3.708	0	%100
43	M77A	X	-12.837	-12.837	0	%100
44	M77A	Z	-7.411	-7.411	0	%100
45	M78A	X	-14.762	-14.762	0	%100
46	M78A	Z	-8.523	-8.523	0	%100
47	M79	X	-12.837	-12.837	0	%100
48	M79	Z	-7.411	-7.411	0	%100
49	M80	X	-1.944	-1.944	0	%100
50	M80	Z	-1.122	-1.122	0	%100
51	M89	X	-7.775	-7.775	0	%100
52	M89	Z	-4.489	-4.489	0	%100
53	M98	X	-1.944	-1.944	0	%100
54	M98	Z	-1.122	-1.122	0	%100
55	M107	X	-9.505	-9.505	0	%100
56	M107	Z	-5.488	-5.488	0	%100
57	M107A	X	-2.669	-2.669	0	%100
58	M107A	Z	-1.541	-1.541	0	%100
59	M109	X	-2.371	-2.371	0	%100
60	M109	Z	-1.369	-1.369	0	%100

Member Distributed Loads (BLC 52 : Structure Wo (330 Deg))

	Member Label	Direction	Start Magnitude[lb/ft,...	End Magnitude[lb/ft,F...	Start Location[ft,%]	End Location[ft,%]
1	M4	X	-1.572	-1.572	0	%100
2	M4	Z	-2.723	-2.723	0	%100
3	M14	X	-6.287	-6.287	0	%100
4	M14	Z	-10.89	-10.89	0	%100

Member Distributed Loads (BLC 52 : Structure Wo (330 Deg)) (Continued)

	Member Label	Direction	Start Magnitude[lb/ft,...	End Magnitude[lb/ft,F...	Start Location[ft,%]	End Location[ft,%]
5	M27	X	-1.572	-1.572	0	%100
6	M27	Z	-2.723	-2.723	0	%100
7	M40	X	-4.879	-4.879	0	%100
8	M40	Z	-8.451	-8.451	0	%100
9	M41	X	0	0	0	%100
10	M41	Z	0	0	0	%100
11	M42	X	-4.879	-4.879	0	%100
12	M42	Z	-8.451	-8.451	0	%100
13	MP5A	X	-3.708	-3.708	0	%100
14	MP5A	Z	-6.423	-6.423	0	%100
15	MP3A	X	-3.708	-3.708	0	%100
16	MP3A	Z	-6.423	-6.423	0	%100
17	MP1A	X	-3.708	-3.708	0	%100
18	MP1A	Z	-6.423	-6.423	0	%100
19	MP5C	X	-3.708	-3.708	0	%100
20	MP5C	Z	-6.423	-6.423	0	%100
21	MP3C	X	-3.708	-3.708	0	%100
22	MP3C	Z	-6.423	-6.423	0	%100
23	MP1C	X	-3.708	-3.708	0	%100
24	MP1C	Z	-6.423	-6.423	0	%100
25	MP5B	X	-3.708	-3.708	0	%100
26	MP5B	Z	-6.423	-6.423	0	%100
27	MP3B	X	-3.708	-3.708	0	%100
28	MP3B	Z	-6.423	-6.423	0	%100
29	MP1B	X	-3.708	-3.708	0	%100
30	MP1B	Z	-6.423	-6.423	0	%100
31	MP2A	X	-3.708	-3.708	0	%100
32	MP2A	Z	-6.423	-6.423	0	%100
33	MP4A	X	-3.708	-3.708	0	%100
34	MP4A	Z	-6.423	-6.423	0	%100
35	MP2C	X	-3.708	-3.708	0	%100
36	MP2C	Z	-6.423	-6.423	0	%100
37	MP4C	X	-3.708	-3.708	0	%100
38	MP4C	Z	-6.423	-6.423	0	%100
39	MP2B	X	-3.708	-3.708	0	%100
40	MP2B	Z	-6.423	-6.423	0	%100
41	MP4B	X	-3.708	-3.708	0	%100
42	MP4B	Z	-6.423	-6.423	0	%100
43	M77A	X	-7.041	-7.041	0	%100
44	M77A	Z	-12.195	-12.195	0	%100
45	M78A	X	-8.152	-8.152	0	%100
46	M78A	Z	-14.12	-14.12	0	%100
47	M79	X	-8.152	-8.152	0	%100
48	M79	Z	-14.12	-14.12	0	%100
49	M80	X	0	0	0	%100
50	M80	Z	0	0	0	%100
51	M89	X	-3.367	-3.367	0	%100
52	M89	Z	-5.831	-5.831	0	%100
53	M98	X	-3.367	-3.367	0	%100
54	M98	Z	-5.831	-5.831	0	%100
55	M107	X	-3.953	-3.953	0	%100
56	M107	Z	-6.847	-6.847	0	%100

Member Distributed Loads (BLC 52 : Structure Wo (330 Deg)) (Continued)

	Member Label	Direction	Start Magnitude[lb/ft,...	End Magnitude[lb/ft,F...	Start Location[ft,%]	End Location[ft,%]
57	M107A	X	-4.282	-4.282	0	%100
58	M107A	Z	-7.416	-7.416	0	%100
59	M109	X	0	0	0	%100
60	M109	Z	0	0	0	%100

Member Distributed Loads (BLC 53 : Structure Wi (0 Deg))

	Member Label	Direction	Start Magnitude[lb/ft,...	End Magnitude[lb/ft,F...	Start Location[ft,%]	End Location[ft,%]
1	M4	X	0	0	0	%100
2	M4	Z	0	0	0	%100
3	M14	X	0	0	0	%100
4	M14	Z	-3.071	-3.071	0	%100
5	M27	X	0	0	0	%100
6	M27	Z	-3.071	-3.071	0	%100
7	M40	X	0	0	0	%100
8	M40	Z	-1.043	-1.043	0	%100
9	M41	X	0	0	0	%100
10	M41	Z	-1.043	-1.043	0	%100
11	M42	X	0	0	0	%100
12	M42	Z	-4.171	-4.171	0	%100
13	MP5A	X	0	0	0	%100
14	MP5A	Z	-3.183	-3.183	0	%100
15	MP3A	X	0	0	0	%100
16	MP3A	Z	-3.183	-3.183	0	%100
17	MP1A	X	0	0	0	%100
18	MP1A	Z	-3.183	-3.183	0	%100
19	MP5C	X	0	0	0	%100
20	MP5C	Z	-3.183	-3.183	0	%100
21	MP3C	X	0	0	0	%100
22	MP3C	Z	-3.183	-3.183	0	%100
23	MP1C	X	0	0	0	%100
24	MP1C	Z	-3.183	-3.183	0	%100
25	MP5B	X	0	0	0	%100
26	MP5B	Z	-3.183	-3.183	0	%100
27	MP3B	X	0	0	0	%100
28	MP3B	Z	-3.183	-3.183	0	%100
29	MP1B	X	0	0	0	%100
30	MP1B	Z	-3.183	-3.183	0	%100
31	MP2A	X	0	0	0	%100
32	MP2A	Z	-3.183	-3.183	0	%100
33	MP4A	X	0	0	0	%100
34	MP4A	Z	-3.183	-3.183	0	%100
35	MP2C	X	0	0	0	%100
36	MP2C	Z	-3.183	-3.183	0	%100
37	MP4C	X	0	0	0	%100
38	MP4C	Z	-3.183	-3.183	0	%100
39	MP2B	X	0	0	0	%100
40	MP2B	Z	-3.183	-3.183	0	%100
41	MP4B	X	0	0	0	%100
42	MP4B	Z	-3.183	-3.183	0	%100
43	M77A	X	0	0	0	%100
44	M77A	Z	-4.09	-4.09	0	%100

Member Distributed Loads (BLC 53 : Structure Wi (0 Deg)) (Continued)

	Member Label	Direction	Start Magnitude[lb/ft,...	End Magnitude[lb/ft,F...	Start Location[ft,%]	End Location[ft,%]
45	M78A	X	0	0	0	%100
46	M78A	Z	-4.09	-4.09	0	%100
47	M79	X	0	0	0	%100
48	M79	Z	-4.125	-4.125	0	%100
49	M80	X	0	0	0	%100
50	M80	Z	-.865	-.865	0	%100
51	M89	X	0	0	0	%100
52	M89	Z	-.865	-.865	0	%100
53	M98	X	0	0	0	%100
54	M98	Z	-3.459	-3.459	0	%100
55	M107	X	0	0	0	%100
56	M107	Z	-.699	-.699	0	%100
57	M107A	X	0	0	0	%100
58	M107A	Z	-3.164	-3.164	0	%100
59	M109	X	0	0	0	%100
60	M109	Z	-.789	-.789	0	%100

Member Distributed Loads (BLC 54 : Structure Wi (30 Deg))

	Member Label	Direction	Start Magnitude[lb/ft,...	End Magnitude[lb/ft,F...	Start Location[ft,%]	End Location[ft,%]
1	M4	X	.512	.512	0	%100
2	M4	Z	-.886	-.886	0	%100
3	M14	X	.512	.512	0	%100
4	M14	Z	-.886	-.886	0	%100
5	M27	X	2.047	2.047	0	%100
6	M27	Z	-3.546	-3.546	0	%100
7	M40	X	0	0	0	%100
8	M40	Z	0	0	0	%100
9	M41	X	1.564	1.564	0	%100
10	M41	Z	-2.709	-2.709	0	%100
11	M42	X	1.564	1.564	0	%100
12	M42	Z	-2.709	-2.709	0	%100
13	MP5A	X	1.592	1.592	0	%100
14	MP5A	Z	-2.757	-2.757	0	%100
15	MP3A	X	1.592	1.592	0	%100
16	MP3A	Z	-2.757	-2.757	0	%100
17	MP1A	X	1.592	1.592	0	%100
18	MP1A	Z	-2.757	-2.757	0	%100
19	MP5C	X	1.592	1.592	0	%100
20	MP5C	Z	-2.757	-2.757	0	%100
21	MP3C	X	1.592	1.592	0	%100
22	MP3C	Z	-2.757	-2.757	0	%100
23	MP1C	X	1.592	1.592	0	%100
24	MP1C	Z	-2.757	-2.757	0	%100
25	MP5B	X	1.592	1.592	0	%100
26	MP5B	Z	-2.757	-2.757	0	%100
27	MP3B	X	1.592	1.592	0	%100
28	MP3B	Z	-2.757	-2.757	0	%100
29	MP1B	X	1.592	1.592	0	%100
30	MP1B	Z	-2.757	-2.757	0	%100
31	MP2A	X	1.592	1.592	0	%100
32	MP2A	Z	-2.757	-2.757	0	%100

Member Distributed Loads (BLC 54 : Structure Wi (30 Deg)) (Continued)

	Member Label	Direction	Start Magnitude[lb/ft,...	End Magnitude[lb/ft,F...	Start Location[ft,%]	End Location[ft,%]
33	MP4A	X	1.592	1.592	0	%100
34	MP4A	Z	-2.757	-2.757	0	%100
35	MP2C	X	1.592	1.592	0	%100
36	MP2C	Z	-2.757	-2.757	0	%100
37	MP4C	X	1.592	1.592	0	%100
38	MP4C	Z	-2.757	-2.757	0	%100
39	MP2B	X	1.592	1.592	0	%100
40	MP2B	Z	-2.757	-2.757	0	%100
41	MP4B	X	1.592	1.592	0	%100
42	MP4B	Z	-2.757	-2.757	0	%100
43	M77A	X	2.056	2.056	0	%100
44	M77A	Z	-3.562	-3.562	0	%100
45	M78A	X	2.039	2.039	0	%100
46	M78A	Z	-3.532	-3.532	0	%100
47	M79	X	2.056	2.056	0	%100
48	M79	Z	-3.562	-3.562	0	%100
49	M80	X	1.297	1.297	0	%100
50	M80	Z	-2.247	-2.247	0	%100
51	M89	X	0	0	0	%100
52	M89	Z	0	0	0	%100
53	M98	X	1.297	1.297	0	%100
54	M98	Z	-2.247	-2.247	0	%100
55	M107	X	.002	.002	0	%100
56	M107	Z	-.003	-.003	0	%100
57	M107A	X	1.14	1.14	0	%100
58	M107A	Z	-1.974	-1.974	0	%100
59	M109	X	1.184	1.184	0	%100
60	M109	Z	-2.05	-2.05	0	%100

Member Distributed Loads (BLC 55 : Structure Wi (60 Deg))

	Member Label	Direction	Start Magnitude[lb/ft,...	End Magnitude[lb/ft,F...	Start Location[ft,%]	End Location[ft,%]
1	M4	X	2.659	2.659	0	%100
2	M4	Z	-1.535	-1.535	0	%100
3	M14	X	0	0	0	%100
4	M14	Z	0	0	0	%100
5	M27	X	2.659	2.659	0	%100
6	M27	Z	-1.535	-1.535	0	%100
7	M40	X	.903	.903	0	%100
8	M40	Z	-.521	-.521	0	%100
9	M41	X	3.612	3.612	0	%100
10	M41	Z	-2.086	-2.086	0	%100
11	M42	X	.903	.903	0	%100
12	M42	Z	-.521	-.521	0	%100
13	MP5A	X	2.757	2.757	0	%100
14	MP5A	Z	-1.592	-1.592	0	%100
15	MP3A	X	2.757	2.757	0	%100
16	MP3A	Z	-1.592	-1.592	0	%100
17	MP1A	X	2.757	2.757	0	%100
18	MP1A	Z	-1.592	-1.592	0	%100
19	MP5C	X	2.757	2.757	0	%100
20	MP5C	Z	-1.592	-1.592	0	%100

Member Distributed Loads (BLC 55 : Structure Wi (60 Deg)) (Continued)

	Member Label	Direction	Start Magnitude[lb/ft,...	End Magnitude[lb/ft,F...	Start Location[ft,%]	End Location[ft,%]
21	MP3C	X	2.757	2.757	0	%100
22	MP3C	Z	-1.592	-1.592	0	%100
23	MP1C	X	2.757	2.757	0	%100
24	MP1C	Z	-1.592	-1.592	0	%100
25	MP5B	X	2.757	2.757	0	%100
26	MP5B	Z	-1.592	-1.592	0	%100
27	MP3B	X	2.757	2.757	0	%100
28	MP3B	Z	-1.592	-1.592	0	%100
29	MP1B	X	2.757	2.757	0	%100
30	MP1B	Z	-1.592	-1.592	0	%100
31	MP2A	X	2.757	2.757	0	%100
32	MP2A	Z	-1.592	-1.592	0	%100
33	MP4A	X	2.757	2.757	0	%100
34	MP4A	Z	-1.592	-1.592	0	%100
35	MP2C	X	2.757	2.757	0	%100
36	MP2C	Z	-1.592	-1.592	0	%100
37	MP4C	X	2.757	2.757	0	%100
38	MP4C	Z	-1.592	-1.592	0	%100
39	MP2B	X	2.757	2.757	0	%100
40	MP2B	Z	-1.592	-1.592	0	%100
41	MP4B	X	2.757	2.757	0	%100
42	MP4B	Z	-1.592	-1.592	0	%100
43	M77A	X	3.572	3.572	0	%100
44	M77A	Z	-2.062	-2.062	0	%100
45	M78A	X	3.542	3.542	0	%100
46	M78A	Z	-2.045	-2.045	0	%100
47	M79	X	3.542	3.542	0	%100
48	M79	Z	-2.045	-2.045	0	%100
49	M80	X	2.996	2.996	0	%100
50	M80	Z	-1.729	-1.729	0	%100
51	M89	X	.749	.749	0	%100
52	M89	Z	-.432	-.432	0	%100
53	M98	X	.749	.749	0	%100
54	M98	Z	-.432	-.432	0	%100
55	M107	X	.769	.769	0	%100
56	M107	Z	-.444	-.444	0	%100
57	M107A	X	.606	.606	0	%100
58	M107A	Z	-.35	-.35	0	%100
59	M109	X	2.733	2.733	0	%100
60	M109	Z	-1.578	-1.578	0	%100

Member Distributed Loads (BLC 56 : Structure Wi (90 Deg))

	Member Label	Direction	Start Magnitude[lb/ft,...	End Magnitude[lb/ft,F...	Start Location[ft,%]	End Location[ft,%]
1	M4	X	4.094	4.094	0	%100
2	M4	Z	0	0	0	%100
3	M14	X	1.024	1.024	0	%100
4	M14	Z	0	0	0	%100
5	M27	X	1.024	1.024	0	%100
6	M27	Z	0	0	0	%100
7	M40	X	3.128	3.128	0	%100
8	M40	Z	0	0	0	%100

Member Distributed Loads (BLC 56 : Structure Wi (90 Deg)) (Continued)

	Member Label	Direction	Start Magnitude[lb/ft,...	End Magnitude[lb/ft,F...	Start Location[ft,%]	End Location[ft,%]
9	M41	X	3.128	3.128	0	%100
10	M41	Z	0	0	0	%100
11	M42	X	0	0	0	%100
12	M42	Z	0	0	0	%100
13	MP5A	X	3.183	3.183	0	%100
14	MP5A	Z	0	0	0	%100
15	MP3A	X	3.183	3.183	0	%100
16	MP3A	Z	0	0	0	%100
17	MP1A	X	3.183	3.183	0	%100
18	MP1A	Z	0	0	0	%100
19	MP5C	X	3.183	3.183	0	%100
20	MP5C	Z	0	0	0	%100
21	MP3C	X	3.183	3.183	0	%100
22	MP3C	Z	0	0	0	%100
23	MP1C	X	3.183	3.183	0	%100
24	MP1C	Z	0	0	0	%100
25	MP5B	X	3.183	3.183	0	%100
26	MP5B	Z	0	0	0	%100
27	MP3B	X	3.183	3.183	0	%100
28	MP3B	Z	0	0	0	%100
29	MP1B	X	3.183	3.183	0	%100
30	MP1B	Z	0	0	0	%100
31	MP2A	X	3.183	3.183	0	%100
32	MP2A	Z	0	0	0	%100
33	MP4A	X	3.183	3.183	0	%100
34	MP4A	Z	0	0	0	%100
35	MP2C	X	3.183	3.183	0	%100
36	MP2C	Z	0	0	0	%100
37	MP4C	X	3.183	3.183	0	%100
38	MP4C	Z	0	0	0	%100
39	MP2B	X	3.183	3.183	0	%100
40	MP2B	Z	0	0	0	%100
41	MP4B	X	3.183	3.183	0	%100
42	MP4B	Z	0	0	0	%100
43	M77A	X	4.113	4.113	0	%100
44	M77A	Z	0	0	0	%100
45	M78A	X	4.113	4.113	0	%100
46	M78A	Z	0	0	0	%100
47	M79	X	4.078	4.078	0	%100
48	M79	Z	0	0	0	%100
49	M80	X	2.594	2.594	0	%100
50	M80	Z	0	0	0	%100
51	M89	X	2.594	2.594	0	%100
52	M89	Z	0	0	0	%100
53	M98	X	0	0	0	%100
54	M98	Z	0	0	0	%100
55	M107	X	2.469	2.469	0	%100
56	M107	Z	0	0	0	%100
57	M107A	X	.004	.004	0	%100
58	M107A	Z	0	0	0	%100
59	M109	X	2.367	2.367	0	%100
60	M109	Z	0	0	0	%100

Member Distributed Loads (BLC 57 : Structure Wi (120 Deg))

	Member Label	Direction	Start Magnitude[lb/ft,...	End Magnitude[lb/ft,F...	Start Location[ft,%]	End Location[ft,%]
1	M4	X	2.659	2.659	0	%100
2	M4	Z	1.535	1.535	0	%100
3	M14	X	2.659	2.659	0	%100
4	M14	Z	1.535	1.535	0	%100
5	M27	X	0	0	0	%100
6	M27	Z	0	0	0	%100
7	M40	X	3.612	3.612	0	%100
8	M40	Z	2.086	2.086	0	%100
9	M41	X	.903	.903	0	%100
10	M41	Z	.521	.521	0	%100
11	M42	X	.903	.903	0	%100
12	M42	Z	.521	.521	0	%100
13	MP5A	X	2.757	2.757	0	%100
14	MP5A	Z	1.592	1.592	0	%100
15	MP3A	X	2.757	2.757	0	%100
16	MP3A	Z	1.592	1.592	0	%100
17	MP1A	X	2.757	2.757	0	%100
18	MP1A	Z	1.592	1.592	0	%100
19	MP5C	X	2.757	2.757	0	%100
20	MP5C	Z	1.592	1.592	0	%100
21	MP3C	X	2.757	2.757	0	%100
22	MP3C	Z	1.592	1.592	0	%100
23	MP1C	X	2.757	2.757	0	%100
24	MP1C	Z	1.592	1.592	0	%100
25	MP5B	X	2.757	2.757	0	%100
26	MP5B	Z	1.592	1.592	0	%100
27	MP3B	X	2.757	2.757	0	%100
28	MP3B	Z	1.592	1.592	0	%100
29	MP1B	X	2.757	2.757	0	%100
30	MP1B	Z	1.592	1.592	0	%100
31	MP2A	X	2.757	2.757	0	%100
32	MP2A	Z	1.592	1.592	0	%100
33	MP4A	X	2.757	2.757	0	%100
34	MP4A	Z	1.592	1.592	0	%100
35	MP2C	X	2.757	2.757	0	%100
36	MP2C	Z	1.592	1.592	0	%100
37	MP4C	X	2.757	2.757	0	%100
38	MP4C	Z	1.592	1.592	0	%100
39	MP2B	X	2.757	2.757	0	%100
40	MP2B	Z	1.592	1.592	0	%100
41	MP4B	X	2.757	2.757	0	%100
42	MP4B	Z	1.592	1.592	0	%100
43	M77A	X	3.542	3.542	0	%100
44	M77A	Z	2.045	2.045	0	%100
45	M78A	X	3.572	3.572	0	%100
46	M78A	Z	2.062	2.062	0	%100
47	M79	X	3.542	3.542	0	%100
48	M79	Z	2.045	2.045	0	%100
49	M80	X	.749	.749	0	%100
50	M80	Z	.432	.432	0	%100
51	M89	X	2.996	2.996	0	%100
52	M89	Z	1.729	1.729	0	%100

Member Distributed Loads (BLC 57 : Structure Wi (120 Deg)) (Continued)

	Member Label	Direction	Start Magnitude[lb/ft,...	End Magnitude[lb/ft,F...	Start Location[ft,%]	End Location[ft,%]
53	M98	X	.749	.749	0	%100
54	M98	Z	.432	.432	0	%100
55	M107	X	2.74	2.74	0	%100
56	M107	Z	1.582	1.582	0	%100
57	M107A	X	.769	.769	0	%100
58	M107A	Z	.444	.444	0	%100
59	M109	X	.683	.683	0	%100
60	M109	Z	.395	.395	0	%100

Member Distributed Loads (BLC 58 : Structure Wi (150 Deg))

	Member Label	Direction	Start Magnitude[lb/ft,...	End Magnitude[lb/ft,F...	Start Location[ft,%]	End Location[ft,%]
1	M4	X	.512	.512	0	%100
2	M4	Z	.886	.886	0	%100
3	M14	X	2.047	2.047	0	%100
4	M14	Z	3.546	3.546	0	%100
5	M27	X	.512	.512	0	%100
6	M27	Z	.886	.886	0	%100
7	M40	X	1.564	1.564	0	%100
8	M40	Z	2.709	2.709	0	%100
9	M41	X	0	0	0	%100
10	M41	Z	0	0	0	%100
11	M42	X	1.564	1.564	0	%100
12	M42	Z	2.709	2.709	0	%100
13	MP5A	X	1.592	1.592	0	%100
14	MP5A	Z	2.757	2.757	0	%100
15	MP3A	X	1.592	1.592	0	%100
16	MP3A	Z	2.757	2.757	0	%100
17	MP1A	X	1.592	1.592	0	%100
18	MP1A	Z	2.757	2.757	0	%100
19	MP5C	X	1.592	1.592	0	%100
20	MP5C	Z	2.757	2.757	0	%100
21	MP3C	X	1.592	1.592	0	%100
22	MP3C	Z	2.757	2.757	0	%100
23	MP1C	X	1.592	1.592	0	%100
24	MP1C	Z	2.757	2.757	0	%100
25	MP5B	X	1.592	1.592	0	%100
26	MP5B	Z	2.757	2.757	0	%100
27	MP3B	X	1.592	1.592	0	%100
28	MP3B	Z	2.757	2.757	0	%100
29	MP1B	X	1.592	1.592	0	%100
30	MP1B	Z	2.757	2.757	0	%100
31	MP2A	X	1.592	1.592	0	%100
32	MP2A	Z	2.757	2.757	0	%100
33	MP4A	X	1.592	1.592	0	%100
34	MP4A	Z	2.757	2.757	0	%100
35	MP2C	X	1.592	1.592	0	%100
36	MP2C	Z	2.757	2.757	0	%100
37	MP4C	X	1.592	1.592	0	%100
38	MP4C	Z	2.757	2.757	0	%100
39	MP2B	X	1.592	1.592	0	%100
40	MP2B	Z	2.757	2.757	0	%100

Member Distributed Loads (BLC 58 : Structure Wi (150 Deg)) (Continued)

	Member Label	Direction	Start Magnitude[lb/ft,...	End Magnitude[lb/ft,F...	Start Location[ft,%]	End Location[ft,%]
41	MP4B	X	1.592	1.592	0	%100
42	MP4B	Z	2.757	2.757	0	%100
43	M77A	X	2.039	2.039	0	%100
44	M77A	Z	3.532	3.532	0	%100
45	M78A	X	2.056	2.056	0	%100
46	M78A	Z	3.562	3.562	0	%100
47	M79	X	2.056	2.056	0	%100
48	M79	Z	3.562	3.562	0	%100
49	M80	X	0	0	0	%100
50	M80	Z	0	0	0	%100
51	M89	X	1.297	1.297	0	%100
52	M89	Z	2.247	2.247	0	%100
53	M98	X	1.297	1.297	0	%100
54	M98	Z	2.247	2.247	0	%100
55	M107	X	1.14	1.14	0	%100
56	M107	Z	1.974	1.974	0	%100
57	M107A	X	1.234	1.234	0	%100
58	M107A	Z	2.138	2.138	0	%100
59	M109	X	0	0	0	%100
60	M109	Z	0	0	0	%100

Member Distributed Loads (BLC 59 : Structure Wi (180 Deg))

	Member Label	Direction	Start Magnitude[lb/ft,...	End Magnitude[lb/ft,F...	Start Location[ft,%]	End Location[ft,%]
1	M4	X	0	0	0	%100
2	M4	Z	0	0	0	%100
3	M14	X	0	0	0	%100
4	M14	Z	3.071	3.071	0	%100
5	M27	X	0	0	0	%100
6	M27	Z	3.071	3.071	0	%100
7	M40	X	0	0	0	%100
8	M40	Z	1.043	1.043	0	%100
9	M41	X	0	0	0	%100
10	M41	Z	1.043	1.043	0	%100
11	M42	X	0	0	0	%100
12	M42	Z	4.171	4.171	0	%100
13	MP5A	X	0	0	0	%100
14	MP5A	Z	3.183	3.183	0	%100
15	MP3A	X	0	0	0	%100
16	MP3A	Z	3.183	3.183	0	%100
17	MP1A	X	0	0	0	%100
18	MP1A	Z	3.183	3.183	0	%100
19	MP5C	X	0	0	0	%100
20	MP5C	Z	3.183	3.183	0	%100
21	MP3C	X	0	0	0	%100
22	MP3C	Z	3.183	3.183	0	%100
23	MP1C	X	0	0	0	%100
24	MP1C	Z	3.183	3.183	0	%100
25	MP5B	X	0	0	0	%100
26	MP5B	Z	3.183	3.183	0	%100
27	MP3B	X	0	0	0	%100
28	MP3B	Z	3.183	3.183	0	%100

Member Distributed Loads (BLC 59 : Structure Wi (180 Deg)) (Continued)

	Member Label	Direction	Start Magnitude[lb/ft,...	End Magnitude[lb/ft,F...	Start Location[ft,%]	End Location[ft,%]
29	MP1B	X	0	0	0	%100
30	MP1B	Z	3.183	3.183	0	%100
31	MP2A	X	0	0	0	%100
32	MP2A	Z	3.183	3.183	0	%100
33	MP4A	X	0	0	0	%100
34	MP4A	Z	3.183	3.183	0	%100
35	MP2C	X	0	0	0	%100
36	MP2C	Z	3.183	3.183	0	%100
37	MP4C	X	0	0	0	%100
38	MP4C	Z	3.183	3.183	0	%100
39	MP2B	X	0	0	0	%100
40	MP2B	Z	3.183	3.183	0	%100
41	MP4B	X	0	0	0	%100
42	MP4B	Z	3.183	3.183	0	%100
43	M77A	X	0	0	0	%100
44	M77A	Z	4.09	4.09	0	%100
45	M78A	X	0	0	0	%100
46	M78A	Z	4.09	4.09	0	%100
47	M79	X	0	0	0	%100
48	M79	Z	4.125	4.125	0	%100
49	M80	X	0	0	0	%100
50	M80	Z	.865	.865	0	%100
51	M89	X	0	0	0	%100
52	M89	Z	.865	.865	0	%100
53	M98	X	0	0	0	%100
54	M98	Z	3.459	3.459	0	%100
55	M107	X	0	0	0	%100
56	M107	Z	.699	.699	0	%100
57	M107A	X	0	0	0	%100
58	M107A	Z	3.164	3.164	0	%100
59	M109	X	0	0	0	%100
60	M109	Z	.789	.789	0	%100

Member Distributed Loads (BLC 60 : Structure Wi (210 Deg))

	Member Label	Direction	Start Magnitude[lb/ft,...	End Magnitude[lb/ft,F...	Start Location[ft,%]	End Location[ft,%]
1	M4	X	-.512	-.512	0	%100
2	M4	Z	.886	.886	0	%100
3	M14	X	-.512	-.512	0	%100
4	M14	Z	.886	.886	0	%100
5	M27	X	-2.047	-2.047	0	%100
6	M27	Z	3.546	3.546	0	%100
7	M40	X	0	0	0	%100
8	M40	Z	0	0	0	%100
9	M41	X	-1.564	-1.564	0	%100
10	M41	Z	2.709	2.709	0	%100
11	M42	X	-1.564	-1.564	0	%100
12	M42	Z	2.709	2.709	0	%100
13	MP5A	X	-1.592	-1.592	0	%100
14	MP5A	Z	2.757	2.757	0	%100
15	MP3A	X	-1.592	-1.592	0	%100
16	MP3A	Z	2.757	2.757	0	%100

Member Distributed Loads (BLC 60 : Structure Wi (210 Deg)) (Continued)

	Member Label	Direction	Start Magnitude[lb/ft,...	End Magnitude[lb/ft,F...	Start Location[ft,%]	End Location[ft,%]
17	MP1A	X	-1.592	-1.592	0	%100
18	MP1A	Z	2.757	2.757	0	%100
19	MP5C	X	-1.592	-1.592	0	%100
20	MP5C	Z	2.757	2.757	0	%100
21	MP3C	X	-1.592	-1.592	0	%100
22	MP3C	Z	2.757	2.757	0	%100
23	MP1C	X	-1.592	-1.592	0	%100
24	MP1C	Z	2.757	2.757	0	%100
25	MP5B	X	-1.592	-1.592	0	%100
26	MP5B	Z	2.757	2.757	0	%100
27	MP3B	X	-1.592	-1.592	0	%100
28	MP3B	Z	2.757	2.757	0	%100
29	MP1B	X	-1.592	-1.592	0	%100
30	MP1B	Z	2.757	2.757	0	%100
31	MP2A	X	-1.592	-1.592	0	%100
32	MP2A	Z	2.757	2.757	0	%100
33	MP4A	X	-1.592	-1.592	0	%100
34	MP4A	Z	2.757	2.757	0	%100
35	MP2C	X	-1.592	-1.592	0	%100
36	MP2C	Z	2.757	2.757	0	%100
37	MP4C	X	-1.592	-1.592	0	%100
38	MP4C	Z	2.757	2.757	0	%100
39	MP2B	X	-1.592	-1.592	0	%100
40	MP2B	Z	2.757	2.757	0	%100
41	MP4B	X	-1.592	-1.592	0	%100
42	MP4B	Z	2.757	2.757	0	%100
43	M77A	X	-2.056	-2.056	0	%100
44	M77A	Z	3.562	3.562	0	%100
45	M78A	X	-2.039	-2.039	0	%100
46	M78A	Z	3.532	3.532	0	%100
47	M79	X	-2.056	-2.056	0	%100
48	M79	Z	3.562	3.562	0	%100
49	M80	X	-1.297	-1.297	0	%100
50	M80	Z	2.247	2.247	0	%100
51	M89	X	0	0	0	%100
52	M89	Z	0	0	0	%100
53	M98	X	-1.297	-1.297	0	%100
54	M98	Z	2.247	2.247	0	%100
55	M107	X	-.002	-.002	0	%100
56	M107	Z	.003	.003	0	%100
57	M107A	X	-1.14	-1.14	0	%100
58	M107A	Z	1.974	1.974	0	%100
59	M109	X	-1.184	-1.184	0	%100
60	M109	Z	2.05	2.05	0	%100

Member Distributed Loads (BLC 61 : Structure Wi (240 Deg))

	Member Label	Direction	Start Magnitude[lb/ft,...	End Magnitude[lb/ft,F...	Start Location[ft,%]	End Location[ft,%]
1	M4	X	-2.659	-2.659	0	%100
2	M4	Z	1.535	1.535	0	%100
3	M14	X	0	0	0	%100
4	M14	Z	0	0	0	%100

Member Distributed Loads (BLC 61 : Structure Wi (240 Deg)) (Continued)

	Member Label	Direction	Start Magnitude[lb/ft,...	End Magnitude[lb/ft,F...	Start Location[ft,%]	End Location[ft,%]
5	M27	X	-2.659	-2.659	0	%100
6	M27	Z	1.535	1.535	0	%100
7	M40	X	-.903	-.903	0	%100
8	M40	Z	.521	.521	0	%100
9	M41	X	-3.612	-3.612	0	%100
10	M41	Z	2.086	2.086	0	%100
11	M42	X	-.903	-.903	0	%100
12	M42	Z	.521	.521	0	%100
13	MP5A	X	-2.757	-2.757	0	%100
14	MP5A	Z	1.592	1.592	0	%100
15	MP3A	X	-2.757	-2.757	0	%100
16	MP3A	Z	1.592	1.592	0	%100
17	MP1A	X	-2.757	-2.757	0	%100
18	MP1A	Z	1.592	1.592	0	%100
19	MP5C	X	-2.757	-2.757	0	%100
20	MP5C	Z	1.592	1.592	0	%100
21	MP3C	X	-2.757	-2.757	0	%100
22	MP3C	Z	1.592	1.592	0	%100
23	MP1C	X	-2.757	-2.757	0	%100
24	MP1C	Z	1.592	1.592	0	%100
25	MP5B	X	-2.757	-2.757	0	%100
26	MP5B	Z	1.592	1.592	0	%100
27	MP3B	X	-2.757	-2.757	0	%100
28	MP3B	Z	1.592	1.592	0	%100
29	MP1B	X	-2.757	-2.757	0	%100
30	MP1B	Z	1.592	1.592	0	%100
31	MP2A	X	-2.757	-2.757	0	%100
32	MP2A	Z	1.592	1.592	0	%100
33	MP4A	X	-2.757	-2.757	0	%100
34	MP4A	Z	1.592	1.592	0	%100
35	MP2C	X	-2.757	-2.757	0	%100
36	MP2C	Z	1.592	1.592	0	%100
37	MP4C	X	-2.757	-2.757	0	%100
38	MP4C	Z	1.592	1.592	0	%100
39	MP2B	X	-2.757	-2.757	0	%100
40	MP2B	Z	1.592	1.592	0	%100
41	MP4B	X	-2.757	-2.757	0	%100
42	MP4B	Z	1.592	1.592	0	%100
43	M77A	X	-3.572	-3.572	0	%100
44	M77A	Z	2.062	2.062	0	%100
45	M78A	X	-3.542	-3.542	0	%100
46	M78A	Z	2.045	2.045	0	%100
47	M79	X	-3.542	-3.542	0	%100
48	M79	Z	2.045	2.045	0	%100
49	M80	X	-2.996	-2.996	0	%100
50	M80	Z	1.729	1.729	0	%100
51	M89	X	-.749	-.749	0	%100
52	M89	Z	.432	.432	0	%100
53	M98	X	-.749	-.749	0	%100
54	M98	Z	.432	.432	0	%100
55	M107	X	-.769	-.769	0	%100
56	M107	Z	.444	.444	0	%100

Member Distributed Loads (BLC 61 : Structure Wi (240 Deg)) (Continued)

	Member Label	Direction	Start Magnitude[lb/ft,...	End Magnitude[lb/ft,F...	Start Location[ft,%]	End Location[ft,%]
57	M107A	X	-.606	-.606	0	%100
58	M107A	Z	.35	.35	0	%100
59	M109	X	-2.733	-2.733	0	%100
60	M109	Z	1.578	1.578	0	%100

Member Distributed Loads (BLC 62 : Structure Wi (270 Deg))

	Member Label	Direction	Start Magnitude[lb/ft,...	End Magnitude[lb/ft,F...	Start Location[ft,%]	End Location[ft,%]
1	M4	X	-4.094	-4.094	0	%100
2	M4	Z	0	0	0	%100
3	M14	X	-1.024	-1.024	0	%100
4	M14	Z	0	0	0	%100
5	M27	X	-1.024	-1.024	0	%100
6	M27	Z	0	0	0	%100
7	M40	X	-3.128	-3.128	0	%100
8	M40	Z	0	0	0	%100
9	M41	X	-3.128	-3.128	0	%100
10	M41	Z	0	0	0	%100
11	M42	X	0	0	0	%100
12	M42	Z	0	0	0	%100
13	MP5A	X	-3.183	-3.183	0	%100
14	MP5A	Z	0	0	0	%100
15	MP3A	X	-3.183	-3.183	0	%100
16	MP3A	Z	0	0	0	%100
17	MP1A	X	-3.183	-3.183	0	%100
18	MP1A	Z	0	0	0	%100
19	MP5C	X	-3.183	-3.183	0	%100
20	MP5C	Z	0	0	0	%100
21	MP3C	X	-3.183	-3.183	0	%100
22	MP3C	Z	0	0	0	%100
23	MP1C	X	-3.183	-3.183	0	%100
24	MP1C	Z	0	0	0	%100
25	MP5B	X	-3.183	-3.183	0	%100
26	MP5B	Z	0	0	0	%100
27	MP3B	X	-3.183	-3.183	0	%100
28	MP3B	Z	0	0	0	%100
29	MP1B	X	-3.183	-3.183	0	%100
30	MP1B	Z	0	0	0	%100
31	MP2A	X	-3.183	-3.183	0	%100
32	MP2A	Z	0	0	0	%100
33	MP4A	X	-3.183	-3.183	0	%100
34	MP4A	Z	0	0	0	%100
35	MP2C	X	-3.183	-3.183	0	%100
36	MP2C	Z	0	0	0	%100
37	MP4C	X	-3.183	-3.183	0	%100
38	MP4C	Z	0	0	0	%100
39	MP2B	X	-3.183	-3.183	0	%100
40	MP2B	Z	0	0	0	%100
41	MP4B	X	-3.183	-3.183	0	%100
42	MP4B	Z	0	0	0	%100
43	M77A	X	-4.113	-4.113	0	%100
44	M77A	Z	0	0	0	%100

Member Distributed Loads (BLC 62 : Structure Wi (270 Deg)) (Continued)

	Member Label	Direction	Start Magnitude[lb/ft,...	End Magnitude[lb/ft,F...	Start Location[ft,%]	End Location[ft,%]
45	M78A	X	-4.113	-4.113	0	%100
46	M78A	Z	0	0	0	%100
47	M79	X	-4.078	-4.078	0	%100
48	M79	Z	0	0	0	%100
49	M80	X	-2.594	-2.594	0	%100
50	M80	Z	0	0	0	%100
51	M89	X	-2.594	-2.594	0	%100
52	M89	Z	0	0	0	%100
53	M98	X	0	0	0	%100
54	M98	Z	0	0	0	%100
55	M107	X	-2.469	-2.469	0	%100
56	M107	Z	0	0	0	%100
57	M107A	X	-.004	-.004	0	%100
58	M107A	Z	0	0	0	%100
59	M109	X	-2.367	-2.367	0	%100
60	M109	Z	0	0	0	%100

Member Distributed Loads (BLC 63 : Structure Wi (300 Deg))

	Member Label	Direction	Start Magnitude[lb/ft,...	End Magnitude[lb/ft,F...	Start Location[ft,%]	End Location[ft,%]
1	M4	X	-2.659	-2.659	0	%100
2	M4	Z	-1.535	-1.535	0	%100
3	M14	X	-2.659	-2.659	0	%100
4	M14	Z	-1.535	-1.535	0	%100
5	M27	X	0	0	0	%100
6	M27	Z	0	0	0	%100
7	M40	X	-3.612	-3.612	0	%100
8	M40	Z	-2.086	-2.086	0	%100
9	M41	X	-.903	-.903	0	%100
10	M41	Z	-.521	-.521	0	%100
11	M42	X	-.903	-.903	0	%100
12	M42	Z	-.521	-.521	0	%100
13	MP5A	X	-2.757	-2.757	0	%100
14	MP5A	Z	-1.592	-1.592	0	%100
15	MP3A	X	-2.757	-2.757	0	%100
16	MP3A	Z	-1.592	-1.592	0	%100
17	MP1A	X	-2.757	-2.757	0	%100
18	MP1A	Z	-1.592	-1.592	0	%100
19	MP5C	X	-2.757	-2.757	0	%100
20	MP5C	Z	-1.592	-1.592	0	%100
21	MP3C	X	-2.757	-2.757	0	%100
22	MP3C	Z	-1.592	-1.592	0	%100
23	MP1C	X	-2.757	-2.757	0	%100
24	MP1C	Z	-1.592	-1.592	0	%100
25	MP5B	X	-2.757	-2.757	0	%100
26	MP5B	Z	-1.592	-1.592	0	%100
27	MP3B	X	-2.757	-2.757	0	%100
28	MP3B	Z	-1.592	-1.592	0	%100
29	MP1B	X	-2.757	-2.757	0	%100
30	MP1B	Z	-1.592	-1.592	0	%100
31	MP2A	X	-2.757	-2.757	0	%100
32	MP2A	Z	-1.592	-1.592	0	%100

Member Distributed Loads (BLC 63 : Structure Wi (300 Deg)) (Continued)

	Member Label	Direction	Start Magnitude[lb/ft,...	End Magnitude[lb/ft,F...	Start Location[ft,%]	End Location[ft,%]
33	MP4A	X	-2.757	-2.757	0	%100
34	MP4A	Z	-1.592	-1.592	0	%100
35	MP2C	X	-2.757	-2.757	0	%100
36	MP2C	Z	-1.592	-1.592	0	%100
37	MP4C	X	-2.757	-2.757	0	%100
38	MP4C	Z	-1.592	-1.592	0	%100
39	MP2B	X	-2.757	-2.757	0	%100
40	MP2B	Z	-1.592	-1.592	0	%100
41	MP4B	X	-2.757	-2.757	0	%100
42	MP4B	Z	-1.592	-1.592	0	%100
43	M77A	X	-3.542	-3.542	0	%100
44	M77A	Z	-2.045	-2.045	0	%100
45	M78A	X	-3.572	-3.572	0	%100
46	M78A	Z	-2.062	-2.062	0	%100
47	M79	X	-3.542	-3.542	0	%100
48	M79	Z	-2.045	-2.045	0	%100
49	M80	X	-.749	-.749	0	%100
50	M80	Z	-.432	-.432	0	%100
51	M89	X	-2.996	-2.996	0	%100
52	M89	Z	-1.729	-1.729	0	%100
53	M98	X	-.749	-.749	0	%100
54	M98	Z	-.432	-.432	0	%100
55	M107	X	-2.74	-2.74	0	%100
56	M107	Z	-1.582	-1.582	0	%100
57	M107A	X	-.769	-.769	0	%100
58	M107A	Z	-.444	-.444	0	%100
59	M109	X	-.683	-.683	0	%100
60	M109	Z	-.395	-.395	0	%100

Member Distributed Loads (BLC 64 : Structure Wi (330 Deg))

	Member Label	Direction	Start Magnitude[lb/ft,...	End Magnitude[lb/ft,F...	Start Location[ft,%]	End Location[ft,%]
1	M4	X	-.512	-.512	0	%100
2	M4	Z	-.886	-.886	0	%100
3	M14	X	-2.047	-2.047	0	%100
4	M14	Z	-3.546	-3.546	0	%100
5	M27	X	-.512	-.512	0	%100
6	M27	Z	-.886	-.886	0	%100
7	M40	X	-1.564	-1.564	0	%100
8	M40	Z	-2.709	-2.709	0	%100
9	M41	X	0	0	0	%100
10	M41	Z	0	0	0	%100
11	M42	X	-1.564	-1.564	0	%100
12	M42	Z	-2.709	-2.709	0	%100
13	MP5A	X	-1.592	-1.592	0	%100
14	MP5A	Z	-2.757	-2.757	0	%100
15	MP3A	X	-1.592	-1.592	0	%100
16	MP3A	Z	-2.757	-2.757	0	%100
17	MP1A	X	-1.592	-1.592	0	%100
18	MP1A	Z	-2.757	-2.757	0	%100
19	MP5C	X	-1.592	-1.592	0	%100
20	MP5C	Z	-2.757	-2.757	0	%100

Member Distributed Loads (BLC 64 : Structure Wi (330 Deg)) (Continued)

	Member Label	Direction	Start Magnitude[lb/ft,...	End Magnitude[lb/ft,F...	Start Location[ft,%]	End Location[ft,%]
21	MP3C	X	-1.592	-1.592	0	%100
22	MP3C	Z	-2.757	-2.757	0	%100
23	MP1C	X	-1.592	-1.592	0	%100
24	MP1C	Z	-2.757	-2.757	0	%100
25	MP5B	X	-1.592	-1.592	0	%100
26	MP5B	Z	-2.757	-2.757	0	%100
27	MP3B	X	-1.592	-1.592	0	%100
28	MP3B	Z	-2.757	-2.757	0	%100
29	MP1B	X	-1.592	-1.592	0	%100
30	MP1B	Z	-2.757	-2.757	0	%100
31	MP2A	X	-1.592	-1.592	0	%100
32	MP2A	Z	-2.757	-2.757	0	%100
33	MP4A	X	-1.592	-1.592	0	%100
34	MP4A	Z	-2.757	-2.757	0	%100
35	MP2C	X	-1.592	-1.592	0	%100
36	MP2C	Z	-2.757	-2.757	0	%100
37	MP4C	X	-1.592	-1.592	0	%100
38	MP4C	Z	-2.757	-2.757	0	%100
39	MP2B	X	-1.592	-1.592	0	%100
40	MP2B	Z	-2.757	-2.757	0	%100
41	MP4B	X	-1.592	-1.592	0	%100
42	MP4B	Z	-2.757	-2.757	0	%100
43	M77A	X	-2.039	-2.039	0	%100
44	M77A	Z	-3.532	-3.532	0	%100
45	M78A	X	-2.056	-2.056	0	%100
46	M78A	Z	-3.562	-3.562	0	%100
47	M79	X	-2.056	-2.056	0	%100
48	M79	Z	-3.562	-3.562	0	%100
49	M80	X	0	0	0	%100
50	M80	Z	0	0	0	%100
51	M89	X	-1.297	-1.297	0	%100
52	M89	Z	-2.247	-2.247	0	%100
53	M98	X	-1.297	-1.297	0	%100
54	M98	Z	-2.247	-2.247	0	%100
55	M107	X	-1.14	-1.14	0	%100
56	M107	Z	-1.974	-1.974	0	%100
57	M107A	X	-1.234	-1.234	0	%100
58	M107A	Z	-2.138	-2.138	0	%100
59	M109	X	0	0	0	%100
60	M109	Z	0	0	0	%100

Member Distributed Loads (BLC 65 : Structure Wm (0 Deg))

	Member Label	Direction	Start Magnitude[lb/ft,...	End Magnitude[lb/ft,F...	Start Location[ft,%]	End Location[ft,%]
1	M4	X	0	0	0	%100
2	M4	Z	0	0	0	%100
3	M14	X	0	0	0	%100
4	M14	Z	-.599	-.599	0	%100
5	M27	X	0	0	0	%100
6	M27	Z	-.599	-.599	0	%100
7	M40	X	0	0	0	%100
8	M40	Z	-.207	-.207	0	%100

Member Distributed Loads (BLC 65 : Structure Wm (0 Deg)) (Continued)

	Member Label	Direction	Start Magnitude[lb/ft,...	End Magnitude[lb/ft,F...	Start Location[ft,%]	End Location[ft,%]
9	M41	X	0	0	0	%100
10	M41	Z	-.207	-.207	0	%100
11	M42	X	0	0	0	%100
12	M42	Z	-.827	-.827	0	%100
13	MP5A	X	0	0	0	%100
14	MP5A	Z	-.471	-.471	0	%100
15	MP3A	X	0	0	0	%100
16	MP3A	Z	-.471	-.471	0	%100
17	MP1A	X	0	0	0	%100
18	MP1A	Z	-.471	-.471	0	%100
19	MP5C	X	0	0	0	%100
20	MP5C	Z	-.471	-.471	0	%100
21	MP3C	X	0	0	0	%100
22	MP3C	Z	-.471	-.471	0	%100
23	MP1C	X	0	0	0	%100
24	MP1C	Z	-.471	-.471	0	%100
25	MP5B	X	0	0	0	%100
26	MP5B	Z	-.471	-.471	0	%100
27	MP3B	X	0	0	0	%100
28	MP3B	Z	-.471	-.471	0	%100
29	MP1B	X	0	0	0	%100
30	MP1B	Z	-.471	-.471	0	%100
31	MP2A	X	0	0	0	%100
32	MP2A	Z	-.471	-.471	0	%100
33	MP4A	X	0	0	0	%100
34	MP4A	Z	-.471	-.471	0	%100
35	MP2C	X	0	0	0	%100
36	MP2C	Z	-.471	-.471	0	%100
37	MP4C	X	0	0	0	%100
38	MP4C	Z	-.471	-.471	0	%100
39	MP2B	X	0	0	0	%100
40	MP2B	Z	-.471	-.471	0	%100
41	MP4B	X	0	0	0	%100
42	MP4B	Z	-.471	-.471	0	%100
43	M77A	X	0	0	0	%100
44	M77A	Z	-.942	-.942	0	%100
45	M78A	X	0	0	0	%100
46	M78A	Z	-.942	-.942	0	%100
47	M79	X	0	0	0	%100
48	M79	Z	-1.083	-1.083	0	%100
49	M80	X	0	0	0	%100
50	M80	Z	-.143	-.143	0	%100
51	M89	X	0	0	0	%100
52	M89	Z	-.143	-.143	0	%100
53	M98	X	0	0	0	%100
54	M98	Z	-.571	-.571	0	%100
55	M107	X	0	0	0	%100
56	M107	Z	-.154	-.154	0	%100
57	M107A	X	0	0	0	%100
58	M107A	Z	-.698	-.698	0	%100
59	M109	X	0	0	0	%100
60	M109	Z	-.174	-.174	0	%100

Member Distributed Loads (BLC 66 : Structure Wm (30 Deg))

	Member Label	Direction	Start Magnitude[lb/ft,...	End Magnitude[lb/ft,F...	Start Location[ft,%]	End Location[ft,%]
1	M4	X	.1	.1	0	%100
2	M4	Z	-.173	-.173	0	%100
3	M14	X	.1	.1	0	%100
4	M14	Z	-.173	-.173	0	%100
5	M27	X	.4	.4	0	%100
6	M27	Z	-.692	-.692	0	%100
7	M40	X	0	0	0	%100
8	M40	Z	0	0	0	%100
9	M41	X	.31	.31	0	%100
10	M41	Z	-.537	-.537	0	%100
11	M42	X	.31	.31	0	%100
12	M42	Z	-.537	-.537	0	%100
13	MP5A	X	.236	.236	0	%100
14	MP5A	Z	-.408	-.408	0	%100
15	MP3A	X	.236	.236	0	%100
16	MP3A	Z	-.408	-.408	0	%100
17	MP1A	X	.236	.236	0	%100
18	MP1A	Z	-.408	-.408	0	%100
19	MP5C	X	.236	.236	0	%100
20	MP5C	Z	-.408	-.408	0	%100
21	MP3C	X	.236	.236	0	%100
22	MP3C	Z	-.408	-.408	0	%100
23	MP1C	X	.236	.236	0	%100
24	MP1C	Z	-.408	-.408	0	%100
25	MP5B	X	.236	.236	0	%100
26	MP5B	Z	-.408	-.408	0	%100
27	MP3B	X	.236	.236	0	%100
28	MP3B	Z	-.408	-.408	0	%100
29	MP1B	X	.236	.236	0	%100
30	MP1B	Z	-.408	-.408	0	%100
31	MP2A	X	.236	.236	0	%100
32	MP2A	Z	-.408	-.408	0	%100
33	MP4A	X	.236	.236	0	%100
34	MP4A	Z	-.408	-.408	0	%100
35	MP2C	X	.236	.236	0	%100
36	MP2C	Z	-.408	-.408	0	%100
37	MP4C	X	.236	.236	0	%100
38	MP4C	Z	-.408	-.408	0	%100
39	MP2B	X	.236	.236	0	%100
40	MP2B	Z	-.408	-.408	0	%100
41	MP4B	X	.236	.236	0	%100
42	MP4B	Z	-.408	-.408	0	%100
43	M77A	X	.518	.518	0	%100
44	M77A	Z	-.897	-.897	0	%100
45	M78A	X	.447	.447	0	%100
46	M78A	Z	-.775	-.775	0	%100
47	M79	X	.518	.518	0	%100
48	M79	Z	-.897	-.897	0	%100
49	M80	X	.214	.214	0	%100
50	M80	Z	-.371	-.371	0	%100
51	M89	X	0	0	0	%100
52	M89	Z	0	0	0	%100

Member Distributed Loads (BLC 66 : Structure Wm (30 Deg)) (Continued)

	Member Label	Direction	Start Magnitude[lb/ft,...	End Magnitude[lb/ft,F...	Start Location[ft,%]	End Location[ft,%]
53	M98	X	.214	.214	0	%100
54	M98	Z	-.371	-.371	0	%100
55	M107	X	.000416	.000416	0	%100
56	M107	Z	-.00072	-.00072	0	%100
57	M107A	X	.251	.251	0	%100
58	M107A	Z	-.435	-.435	0	%100
59	M109	X	.261	.261	0	%100
60	M109	Z	-.452	-.452	0	%100

Member Distributed Loads (BLC 67 : Structure Wm (60 Deg))

	Member Label	Direction	Start Magnitude[lb/ft,...	End Magnitude[lb/ft,F...	Start Location[ft,%]	End Location[ft,%]
1	M4	X	.519	.519	0	%100
2	M4	Z	-.3	-.3	0	%100
3	M14	X	0	0	0	%100
4	M14	Z	0	0	0	%100
5	M27	X	.519	.519	0	%100
6	M27	Z	-.3	-.3	0	%100
7	M40	X	.179	.179	0	%100
8	M40	Z	-.103	-.103	0	%100
9	M41	X	.716	.716	0	%100
10	M41	Z	-.413	-.413	0	%100
11	M42	X	.179	.179	0	%100
12	M42	Z	-.103	-.103	0	%100
13	MP5A	X	.408	.408	0	%100
14	MP5A	Z	-.236	-.236	0	%100
15	MP3A	X	.408	.408	0	%100
16	MP3A	Z	-.236	-.236	0	%100
17	MP1A	X	.408	.408	0	%100
18	MP1A	Z	-.236	-.236	0	%100
19	MP5C	X	.408	.408	0	%100
20	MP5C	Z	-.236	-.236	0	%100
21	MP3C	X	.408	.408	0	%100
22	MP3C	Z	-.236	-.236	0	%100
23	MP1C	X	.408	.408	0	%100
24	MP1C	Z	-.236	-.236	0	%100
25	MP5B	X	.408	.408	0	%100
26	MP5B	Z	-.236	-.236	0	%100
27	MP3B	X	.408	.408	0	%100
28	MP3B	Z	-.236	-.236	0	%100
29	MP1B	X	.408	.408	0	%100
30	MP1B	Z	-.236	-.236	0	%100
31	MP2A	X	.408	.408	0	%100
32	MP2A	Z	-.236	-.236	0	%100
33	MP4A	X	.408	.408	0	%100
34	MP4A	Z	-.236	-.236	0	%100
35	MP2C	X	.408	.408	0	%100
36	MP2C	Z	-.236	-.236	0	%100
37	MP4C	X	.408	.408	0	%100
38	MP4C	Z	-.236	-.236	0	%100
39	MP2B	X	.408	.408	0	%100
40	MP2B	Z	-.236	-.236	0	%100

Member Distributed Loads (BLC 67 : Structure Wm (60 Deg)) (Continued)

	Member Label	Direction	Start Magnitude[lb/ft,...	End Magnitude[lb/ft,F...	Start Location[ft,%]	End Location[ft,%]
41	MP4B	X	.408	.408	0	%100
42	MP4B	Z	-.236	-.236	0	%100
43	M77A	X	.938	.938	0	%100
44	M77A	Z	-.542	-.542	0	%100
45	M78A	X	.816	.816	0	%100
46	M78A	Z	-.471	-.471	0	%100
47	M79	X	.816	.816	0	%100
48	M79	Z	-.471	-.471	0	%100
49	M80	X	.494	.494	0	%100
50	M80	Z	-.285	-.285	0	%100
51	M89	X	.124	.124	0	%100
52	M89	Z	-.071	-.071	0	%100
53	M98	X	.124	.124	0	%100
54	M98	Z	-.071	-.071	0	%100
55	M107	X	.17	.17	0	%100
56	M107	Z	-.098	-.098	0	%100
57	M107A	X	.134	.134	0	%100
58	M107A	Z	-.077	-.077	0	%100
59	M109	X	.603	.603	0	%100
60	M109	Z	-.348	-.348	0	%100

Member Distributed Loads (BLC 68 : Structure Wm (90 Deg))

	Member Label	Direction	Start Magnitude[lb/ft,...	End Magnitude[lb/ft,F...	Start Location[ft,%]	End Location[ft,%]
1	M4	X	.799	.799	0	%100
2	M4	Z	0	0	0	%100
3	M14	X	.2	.2	0	%100
4	M14	Z	0	0	0	%100
5	M27	X	.2	.2	0	%100
6	M27	Z	0	0	0	%100
7	M40	X	.62	.62	0	%100
8	M40	Z	0	0	0	%100
9	M41	X	.62	.62	0	%100
10	M41	Z	0	0	0	%100
11	M42	X	0	0	0	%100
12	M42	Z	0	0	0	%100
13	MP5A	X	.471	.471	0	%100
14	MP5A	Z	0	0	0	%100
15	MP3A	X	.471	.471	0	%100
16	MP3A	Z	0	0	0	%100
17	MP1A	X	.471	.471	0	%100
18	MP1A	Z	0	0	0	%100
19	MP5C	X	.471	.471	0	%100
20	MP5C	Z	0	0	0	%100
21	MP3C	X	.471	.471	0	%100
22	MP3C	Z	0	0	0	%100
23	MP1C	X	.471	.471	0	%100
24	MP1C	Z	0	0	0	%100
25	MP5B	X	.471	.471	0	%100
26	MP5B	Z	0	0	0	%100
27	MP3B	X	.471	.471	0	%100
28	MP3B	Z	0	0	0	%100

Member Distributed Loads (BLC 68 : Structure Wm (90 Deg)) (Continued)

	Member Label	Direction	Start Magnitude[lb/ft,...	End Magnitude[lb/ft,F...	Start Location[ft,%]	End Location[ft,%]
29	MP1B	X	.471	.471	0	%100
30	MP1B	Z	0	0	0	%100
31	MP2A	X	.471	.471	0	%100
32	MP2A	Z	0	0	0	%100
33	MP4A	X	.471	.471	0	%100
34	MP4A	Z	0	0	0	%100
35	MP2C	X	.471	.471	0	%100
36	MP2C	Z	0	0	0	%100
37	MP4C	X	.471	.471	0	%100
38	MP4C	Z	0	0	0	%100
39	MP2B	X	.471	.471	0	%100
40	MP2B	Z	0	0	0	%100
41	MP4B	X	.471	.471	0	%100
42	MP4B	Z	0	0	0	%100
43	M77A	X	1.036	1.036	0	%100
44	M77A	Z	0	0	0	%100
45	M78A	X	1.036	1.036	0	%100
46	M78A	Z	0	0	0	%100
47	M79	X	.895	.895	0	%100
48	M79	Z	0	0	0	%100
49	M80	X	.428	.428	0	%100
50	M80	Z	0	0	0	%100
51	M89	X	.428	.428	0	%100
52	M89	Z	0	0	0	%100
53	M98	X	0	0	0	%100
54	M98	Z	0	0	0	%100
55	M107	X	.544	.544	0	%100
56	M107	Z	0	0	0	%100
57	M107A	X	.000831	.000831	0	%100
58	M107A	Z	0	0	0	%100
59	M109	X	.522	.522	0	%100
60	M109	Z	0	0	0	%100

Member Distributed Loads (BLC 69 : Structure Wm (120 Deg))

	Member Label	Direction	Start Magnitude[lb/ft,...	End Magnitude[lb/ft,F...	Start Location[ft,%]	End Location[ft,%]
1	M4	X	.519	.519	0	%100
2	M4	Z	.3	.3	0	%100
3	M14	X	.519	.519	0	%100
4	M14	Z	.3	.3	0	%100
5	M27	X	0	0	0	%100
6	M27	Z	0	0	0	%100
7	M40	X	.716	.716	0	%100
8	M40	Z	.413	.413	0	%100
9	M41	X	.179	.179	0	%100
10	M41	Z	.103	.103	0	%100
11	M42	X	.179	.179	0	%100
12	M42	Z	.103	.103	0	%100
13	MP5A	X	.408	.408	0	%100
14	MP5A	Z	.236	.236	0	%100
15	MP3A	X	.408	.408	0	%100
16	MP3A	Z	.236	.236	0	%100

Member Distributed Loads (BLC 69 : Structure Wm (120 Deg)) (Continued)

	Member Label	Direction	Start Magnitude[lb/ft,...	End Magnitude[lb/ft,F...	Start Location[ft,%]	End Location[ft,%]
17	MP1A	X	.408	.408	0	%100
18	MP1A	Z	.236	.236	0	%100
19	MP5C	X	.408	.408	0	%100
20	MP5C	Z	.236	.236	0	%100
21	MP3C	X	.408	.408	0	%100
22	MP3C	Z	.236	.236	0	%100
23	MP1C	X	.408	.408	0	%100
24	MP1C	Z	.236	.236	0	%100
25	MP5B	X	.408	.408	0	%100
26	MP5B	Z	.236	.236	0	%100
27	MP3B	X	.408	.408	0	%100
28	MP3B	Z	.236	.236	0	%100
29	MP1B	X	.408	.408	0	%100
30	MP1B	Z	.236	.236	0	%100
31	MP2A	X	.408	.408	0	%100
32	MP2A	Z	.236	.236	0	%100
33	MP4A	X	.408	.408	0	%100
34	MP4A	Z	.236	.236	0	%100
35	MP2C	X	.408	.408	0	%100
36	MP2C	Z	.236	.236	0	%100
37	MP4C	X	.408	.408	0	%100
38	MP4C	Z	.236	.236	0	%100
39	MP2B	X	.408	.408	0	%100
40	MP2B	Z	.236	.236	0	%100
41	MP4B	X	.408	.408	0	%100
42	MP4B	Z	.236	.236	0	%100
43	M77A	X	.816	.816	0	%100
44	M77A	Z	.471	.471	0	%100
45	M78A	X	.938	.938	0	%100
46	M78A	Z	.542	.542	0	%100
47	M79	X	.816	.816	0	%100
48	M79	Z	.471	.471	0	%100
49	M80	X	.124	.124	0	%100
50	M80	Z	.071	.071	0	%100
51	M89	X	.494	.494	0	%100
52	M89	Z	.285	.285	0	%100
53	M98	X	.124	.124	0	%100
54	M98	Z	.071	.071	0	%100
55	M107	X	.604	.604	0	%100
56	M107	Z	.349	.349	0	%100
57	M107A	X	.17	.17	0	%100
58	M107A	Z	.098	.098	0	%100
59	M109	X	.151	.151	0	%100
60	M109	Z	.087	.087	0	%100

Member Distributed Loads (BLC 70 : Structure Wm (150 Deg))

	Member Label	Direction	Start Magnitude[lb/ft,...	End Magnitude[lb/ft,F...	Start Location[ft,%]	End Location[ft,%]
1	M4	X	.1	.1	0	%100
2	M4	Z	.173	.173	0	%100
3	M14	X	.4	.4	0	%100
4	M14	Z	.692	.692	0	%100

Member Distributed Loads (BLC 70 : Structure Wm (150 Deg)) (Continued)

	Member Label	Direction	Start Magnitude[lb/ft,...	End Magnitude[lb/ft,F...	Start Location[ft,%]	End Location[ft,%]
5	M27	X	.1	.1	0	%100
6	M27	Z	.173	.173	0	%100
7	M40	X	.31	.31	0	%100
8	M40	Z	.537	.537	0	%100
9	M41	X	0	0	0	%100
10	M41	Z	0	0	0	%100
11	M42	X	.31	.31	0	%100
12	M42	Z	.537	.537	0	%100
13	MP5A	X	.236	.236	0	%100
14	MP5A	Z	.408	.408	0	%100
15	MP3A	X	.236	.236	0	%100
16	MP3A	Z	.408	.408	0	%100
17	MP1A	X	.236	.236	0	%100
18	MP1A	Z	.408	.408	0	%100
19	MP5C	X	.236	.236	0	%100
20	MP5C	Z	.408	.408	0	%100
21	MP3C	X	.236	.236	0	%100
22	MP3C	Z	.408	.408	0	%100
23	MP1C	X	.236	.236	0	%100
24	MP1C	Z	.408	.408	0	%100
25	MP5B	X	.236	.236	0	%100
26	MP5B	Z	.408	.408	0	%100
27	MP3B	X	.236	.236	0	%100
28	MP3B	Z	.408	.408	0	%100
29	MP1B	X	.236	.236	0	%100
30	MP1B	Z	.408	.408	0	%100
31	MP2A	X	.236	.236	0	%100
32	MP2A	Z	.408	.408	0	%100
33	MP4A	X	.236	.236	0	%100
34	MP4A	Z	.408	.408	0	%100
35	MP2C	X	.236	.236	0	%100
36	MP2C	Z	.408	.408	0	%100
37	MP4C	X	.236	.236	0	%100
38	MP4C	Z	.408	.408	0	%100
39	MP2B	X	.236	.236	0	%100
40	MP2B	Z	.408	.408	0	%100
41	MP4B	X	.236	.236	0	%100
42	MP4B	Z	.408	.408	0	%100
43	M77A	X	.447	.447	0	%100
44	M77A	Z	.775	.775	0	%100
45	M78A	X	.518	.518	0	%100
46	M78A	Z	.897	.897	0	%100
47	M79	X	.518	.518	0	%100
48	M79	Z	.897	.897	0	%100
49	M80	X	0	0	0	%100
50	M80	Z	0	0	0	%100
51	M89	X	.214	.214	0	%100
52	M89	Z	.371	.371	0	%100
53	M98	X	.214	.214	0	%100
54	M98	Z	.371	.371	0	%100
55	M107	X	.251	.251	0	%100
56	M107	Z	.435	.435	0	%100

Member Distributed Loads (BLC 70 : Structure Wm (150 Deg)) (Continued)

	Member Label	Direction	Start Magnitude[lb/ft,...	End Magnitude[lb/ft,F...	Start Location[ft,%]	End Location[ft,%]
57	M107A	X	.272	.272	0	%100
58	M107A	Z	.471	.471	0	%100
59	M109	X	0	0	0	%100
60	M109	Z	0	0	0	%100

Member Distributed Loads (BLC 71 : Structure Wm (180 Deg))

	Member Label	Direction	Start Magnitude[lb/ft,...	End Magnitude[lb/ft,F...	Start Location[ft,%]	End Location[ft,%]
1	M4	X	0	0	0	%100
2	M4	Z	0	0	0	%100
3	M14	X	0	0	0	%100
4	M14	Z	.599	.599	0	%100
5	M27	X	0	0	0	%100
6	M27	Z	.599	.599	0	%100
7	M40	X	0	0	0	%100
8	M40	Z	.207	.207	0	%100
9	M41	X	0	0	0	%100
10	M41	Z	.207	.207	0	%100
11	M42	X	0	0	0	%100
12	M42	Z	.827	.827	0	%100
13	MP5A	X	0	0	0	%100
14	MP5A	Z	.471	.471	0	%100
15	MP3A	X	0	0	0	%100
16	MP3A	Z	.471	.471	0	%100
17	MP1A	X	0	0	0	%100
18	MP1A	Z	.471	.471	0	%100
19	MP5C	X	0	0	0	%100
20	MP5C	Z	.471	.471	0	%100
21	MP3C	X	0	0	0	%100
22	MP3C	Z	.471	.471	0	%100
23	MP1C	X	0	0	0	%100
24	MP1C	Z	.471	.471	0	%100
25	MP5B	X	0	0	0	%100
26	MP5B	Z	.471	.471	0	%100
27	MP3B	X	0	0	0	%100
28	MP3B	Z	.471	.471	0	%100
29	MP1B	X	0	0	0	%100
30	MP1B	Z	.471	.471	0	%100
31	MP2A	X	0	0	0	%100
32	MP2A	Z	.471	.471	0	%100
33	MP4A	X	0	0	0	%100
34	MP4A	Z	.471	.471	0	%100
35	MP2C	X	0	0	0	%100
36	MP2C	Z	.471	.471	0	%100
37	MP4C	X	0	0	0	%100
38	MP4C	Z	.471	.471	0	%100
39	MP2B	X	0	0	0	%100
40	MP2B	Z	.471	.471	0	%100
41	MP4B	X	0	0	0	%100
42	MP4B	Z	.471	.471	0	%100
43	M77A	X	0	0	0	%100
44	M77A	Z	.942	.942	0	%100

Member Distributed Loads (BLC 71 : Structure Wm (180 Deg)) (Continued)

	Member Label	Direction	Start Magnitude[lb/ft,...	End Magnitude[lb/ft,F...	Start Location[ft,%]	End Location[ft,%]
45	M78A	X	0	0	0	%100
46	M78A	Z	.942	.942	0	%100
47	M79	X	0	0	0	%100
48	M79	Z	1.083	1.083	0	%100
49	M80	X	0	0	0	%100
50	M80	Z	.143	.143	0	%100
51	M89	X	0	0	0	%100
52	M89	Z	.143	.143	0	%100
53	M98	X	0	0	0	%100
54	M98	Z	.571	.571	0	%100
55	M107	X	0	0	0	%100
56	M107	Z	.154	.154	0	%100
57	M107A	X	0	0	0	%100
58	M107A	Z	.698	.698	0	%100
59	M109	X	0	0	0	%100
60	M109	Z	.174	.174	0	%100

Member Distributed Loads (BLC 72 : Structure Wm (210 Deg))

	Member Label	Direction	Start Magnitude[lb/ft,...	End Magnitude[lb/ft,F...	Start Location[ft,%]	End Location[ft,%]
1	M4	X	-.1	-.1	0	%100
2	M4	Z	.173	.173	0	%100
3	M14	X	-.1	-.1	0	%100
4	M14	Z	.173	.173	0	%100
5	M27	X	-.4	-.4	0	%100
6	M27	Z	.692	.692	0	%100
7	M40	X	0	0	0	%100
8	M40	Z	0	0	0	%100
9	M41	X	-.31	-.31	0	%100
10	M41	Z	.537	.537	0	%100
11	M42	X	-.31	-.31	0	%100
12	M42	Z	.537	.537	0	%100
13	MP5A	X	-.236	-.236	0	%100
14	MP5A	Z	.408	.408	0	%100
15	MP3A	X	-.236	-.236	0	%100
16	MP3A	Z	.408	.408	0	%100
17	MP1A	X	-.236	-.236	0	%100
18	MP1A	Z	.408	.408	0	%100
19	MP5C	X	-.236	-.236	0	%100
20	MP5C	Z	.408	.408	0	%100
21	MP3C	X	-.236	-.236	0	%100
22	MP3C	Z	.408	.408	0	%100
23	MP1C	X	-.236	-.236	0	%100
24	MP1C	Z	.408	.408	0	%100
25	MP5B	X	-.236	-.236	0	%100
26	MP5B	Z	.408	.408	0	%100
27	MP3B	X	-.236	-.236	0	%100
28	MP3B	Z	.408	.408	0	%100
29	MP1B	X	-.236	-.236	0	%100
30	MP1B	Z	.408	.408	0	%100
31	MP2A	X	-.236	-.236	0	%100
32	MP2A	Z	.408	.408	0	%100

Member Distributed Loads (BLC 72 : Structure Wm (210 Deg)) (Continued)

	Member Label	Direction	Start Magnitude[lb/ft,...	End Magnitude[lb/ft,F...	Start Location[ft,%]	End Location[ft,%]
33	MP4A	X	-.236	-.236	0	%100
34	MP4A	Z	.408	.408	0	%100
35	MP2C	X	-.236	-.236	0	%100
36	MP2C	Z	.408	.408	0	%100
37	MP4C	X	-.236	-.236	0	%100
38	MP4C	Z	.408	.408	0	%100
39	MP2B	X	-.236	-.236	0	%100
40	MP2B	Z	.408	.408	0	%100
41	MP4B	X	-.236	-.236	0	%100
42	MP4B	Z	.408	.408	0	%100
43	M77A	X	-.518	-.518	0	%100
44	M77A	Z	.897	.897	0	%100
45	M78A	X	-.447	-.447	0	%100
46	M78A	Z	.775	.775	0	%100
47	M79	X	-.518	-.518	0	%100
48	M79	Z	.897	.897	0	%100
49	M80	X	-.214	-.214	0	%100
50	M80	Z	.371	.371	0	%100
51	M89	X	0	0	0	%100
52	M89	Z	0	0	0	%100
53	M98	X	-.214	-.214	0	%100
54	M98	Z	.371	.371	0	%100
55	M107	X	-.000416	-.000416	0	%100
56	M107	Z	.00072	.00072	0	%100
57	M107A	X	-.251	-.251	0	%100
58	M107A	Z	.435	.435	0	%100
59	M109	X	-.261	-.261	0	%100
60	M109	Z	.452	.452	0	%100

Member Distributed Loads (BLC 73 : Structure Wm (240 Deg))

	Member Label	Direction	Start Magnitude[lb/ft,...	End Magnitude[lb/ft,F...	Start Location[ft,%]	End Location[ft,%]
1	M4	X	-.519	-.519	0	%100
2	M4	Z	.3	.3	0	%100
3	M14	X	0	0	0	%100
4	M14	Z	0	0	0	%100
5	M27	X	-.519	-.519	0	%100
6	M27	Z	.3	.3	0	%100
7	M40	X	-.179	-.179	0	%100
8	M40	Z	.103	.103	0	%100
9	M41	X	-.716	-.716	0	%100
10	M41	Z	.413	.413	0	%100
11	M42	X	-.179	-.179	0	%100
12	M42	Z	.103	.103	0	%100
13	MP5A	X	-.408	-.408	0	%100
14	MP5A	Z	.236	.236	0	%100
15	MP3A	X	-.408	-.408	0	%100
16	MP3A	Z	.236	.236	0	%100
17	MP1A	X	-.408	-.408	0	%100
18	MP1A	Z	.236	.236	0	%100
19	MP5C	X	-.408	-.408	0	%100
20	MP5C	Z	.236	.236	0	%100

Member Distributed Loads (BLC 73 : Structure Wm (240 Deg)) (Continued)

	Member Label	Direction	Start Magnitude[lb/ft,...	End Magnitude[lb/ft,F...	Start Location[ft,%]	End Location[ft,%]
21	MP3C	X	-.408	-.408	0	%100
22	MP3C	Z	.236	.236	0	%100
23	MP1C	X	-.408	-.408	0	%100
24	MP1C	Z	.236	.236	0	%100
25	MP5B	X	-.408	-.408	0	%100
26	MP5B	Z	.236	.236	0	%100
27	MP3B	X	-.408	-.408	0	%100
28	MP3B	Z	.236	.236	0	%100
29	MP1B	X	-.408	-.408	0	%100
30	MP1B	Z	.236	.236	0	%100
31	MP2A	X	-.408	-.408	0	%100
32	MP2A	Z	.236	.236	0	%100
33	MP4A	X	-.408	-.408	0	%100
34	MP4A	Z	.236	.236	0	%100
35	MP2C	X	-.408	-.408	0	%100
36	MP2C	Z	.236	.236	0	%100
37	MP4C	X	-.408	-.408	0	%100
38	MP4C	Z	.236	.236	0	%100
39	MP2B	X	-.408	-.408	0	%100
40	MP2B	Z	.236	.236	0	%100
41	MP4B	X	-.408	-.408	0	%100
42	MP4B	Z	.236	.236	0	%100
43	M77A	X	-.938	-.938	0	%100
44	M77A	Z	.542	.542	0	%100
45	M78A	X	-.816	-.816	0	%100
46	M78A	Z	.471	.471	0	%100
47	M79	X	-.816	-.816	0	%100
48	M79	Z	.471	.471	0	%100
49	M80	X	-.494	-.494	0	%100
50	M80	Z	.285	.285	0	%100
51	M89	X	-.124	-.124	0	%100
52	M89	Z	.071	.071	0	%100
53	M98	X	-.124	-.124	0	%100
54	M98	Z	.071	.071	0	%100
55	M107	X	-.17	-.17	0	%100
56	M107	Z	.098	.098	0	%100
57	M107A	X	-.134	-.134	0	%100
58	M107A	Z	.077	.077	0	%100
59	M109	X	-.603	-.603	0	%100
60	M109	Z	.348	.348	0	%100

Member Distributed Loads (BLC 74 : Structure Wm (270 Deg))

	Member Label	Direction	Start Magnitude[lb/ft,...	End Magnitude[lb/ft,F...	Start Location[ft,%]	End Location[ft,%]
1	M4	X	-.799	-.799	0	%100
2	M4	Z	0	0	0	%100
3	M14	X	-.2	-.2	0	%100
4	M14	Z	0	0	0	%100
5	M27	X	-.2	-.2	0	%100
6	M27	Z	0	0	0	%100
7	M40	X	-.62	-.62	0	%100
8	M40	Z	0	0	0	%100

Member Distributed Loads (BLC 74 : Structure Wm (270 Deg)) (Continued)

	Member Label	Direction	Start Magnitude[lb/ft,...	End Magnitude[lb/ft,F...	Start Location[ft,%]	End Location[ft,%]
9	M41	X	-.62	-.62	0	%100
10	M41	Z	0	0	0	%100
11	M42	X	0	0	0	%100
12	M42	Z	0	0	0	%100
13	MP5A	X	-.471	-.471	0	%100
14	MP5A	Z	0	0	0	%100
15	MP3A	X	-.471	-.471	0	%100
16	MP3A	Z	0	0	0	%100
17	MP1A	X	-.471	-.471	0	%100
18	MP1A	Z	0	0	0	%100
19	MP5C	X	-.471	-.471	0	%100
20	MP5C	Z	0	0	0	%100
21	MP3C	X	-.471	-.471	0	%100
22	MP3C	Z	0	0	0	%100
23	MP1C	X	-.471	-.471	0	%100
24	MP1C	Z	0	0	0	%100
25	MP5B	X	-.471	-.471	0	%100
26	MP5B	Z	0	0	0	%100
27	MP3B	X	-.471	-.471	0	%100
28	MP3B	Z	0	0	0	%100
29	MP1B	X	-.471	-.471	0	%100
30	MP1B	Z	0	0	0	%100
31	MP2A	X	-.471	-.471	0	%100
32	MP2A	Z	0	0	0	%100
33	MP4A	X	-.471	-.471	0	%100
34	MP4A	Z	0	0	0	%100
35	MP2C	X	-.471	-.471	0	%100
36	MP2C	Z	0	0	0	%100
37	MP4C	X	-.471	-.471	0	%100
38	MP4C	Z	0	0	0	%100
39	MP2B	X	-.471	-.471	0	%100
40	MP2B	Z	0	0	0	%100
41	MP4B	X	-.471	-.471	0	%100
42	MP4B	Z	0	0	0	%100
43	M77A	X	-1.036	-1.036	0	%100
44	M77A	Z	0	0	0	%100
45	M78A	X	-1.036	-1.036	0	%100
46	M78A	Z	0	0	0	%100
47	M79	X	-.895	-.895	0	%100
48	M79	Z	0	0	0	%100
49	M80	X	-.428	-.428	0	%100
50	M80	Z	0	0	0	%100
51	M89	X	-.428	-.428	0	%100
52	M89	Z	0	0	0	%100
53	M98	X	0	0	0	%100
54	M98	Z	0	0	0	%100
55	M107	X	-.544	-.544	0	%100
56	M107	Z	0	0	0	%100
57	M107A	X	-.000831	-.000831	0	%100
58	M107A	Z	0	0	0	%100
59	M109	X	-.522	-.522	0	%100
60	M109	Z	0	0	0	%100

Member Distributed Loads (BLC 75 : Structure Wm (300 Deg))

	Member Label	Direction	Start Magnitude[lb/ft,...	End Magnitude[lb/ft,F...	Start Location[ft,%]	End Location[ft,%]
1	M4	X	-.519	-.519	0	%100
2	M4	Z	-.3	-.3	0	%100
3	M14	X	-.519	-.519	0	%100
4	M14	Z	-.3	-.3	0	%100
5	M27	X	0	0	0	%100
6	M27	Z	0	0	0	%100
7	M40	X	-.716	-.716	0	%100
8	M40	Z	-.413	-.413	0	%100
9	M41	X	-.179	-.179	0	%100
10	M41	Z	-.103	-.103	0	%100
11	M42	X	-.179	-.179	0	%100
12	M42	Z	-.103	-.103	0	%100
13	MP5A	X	-.408	-.408	0	%100
14	MP5A	Z	-.236	-.236	0	%100
15	MP3A	X	-.408	-.408	0	%100
16	MP3A	Z	-.236	-.236	0	%100
17	MP1A	X	-.408	-.408	0	%100
18	MP1A	Z	-.236	-.236	0	%100
19	MP5C	X	-.408	-.408	0	%100
20	MP5C	Z	-.236	-.236	0	%100
21	MP3C	X	-.408	-.408	0	%100
22	MP3C	Z	-.236	-.236	0	%100
23	MP1C	X	-.408	-.408	0	%100
24	MP1C	Z	-.236	-.236	0	%100
25	MP5B	X	-.408	-.408	0	%100
26	MP5B	Z	-.236	-.236	0	%100
27	MP3B	X	-.408	-.408	0	%100
28	MP3B	Z	-.236	-.236	0	%100
29	MP1B	X	-.408	-.408	0	%100
30	MP1B	Z	-.236	-.236	0	%100
31	MP2A	X	-.408	-.408	0	%100
32	MP2A	Z	-.236	-.236	0	%100
33	MP4A	X	-.408	-.408	0	%100
34	MP4A	Z	-.236	-.236	0	%100
35	MP2C	X	-.408	-.408	0	%100
36	MP2C	Z	-.236	-.236	0	%100
37	MP4C	X	-.408	-.408	0	%100
38	MP4C	Z	-.236	-.236	0	%100
39	MP2B	X	-.408	-.408	0	%100
40	MP2B	Z	-.236	-.236	0	%100
41	MP4B	X	-.408	-.408	0	%100
42	MP4B	Z	-.236	-.236	0	%100
43	M77A	X	-.816	-.816	0	%100
44	M77A	Z	-.471	-.471	0	%100
45	M78A	X	-.938	-.938	0	%100
46	M78A	Z	-.542	-.542	0	%100
47	M79	X	-.816	-.816	0	%100
48	M79	Z	-.471	-.471	0	%100
49	M80	X	-.124	-.124	0	%100
50	M80	Z	-.071	-.071	0	%100
51	M89	X	-.494	-.494	0	%100
52	M89	Z	-.285	-.285	0	%100

Member Distributed Loads (BLC 75 : Structure Wm (300 Deg)) (Continued)

	Member Label	Direction	Start Magnitude[lb/ft,...	End Magnitude[lb/ft,F...	Start Location[ft,%]	End Location[ft,%]
53	M98	X	-.124	-.124	0	%100
54	M98	Z	-.071	-.071	0	%100
55	M107	X	-.604	-.604	0	%100
56	M107	Z	-.349	-.349	0	%100
57	M107A	X	-.17	-.17	0	%100
58	M107A	Z	-.098	-.098	0	%100
59	M109	X	-.151	-.151	0	%100
60	M109	Z	-.087	-.087	0	%100

Member Distributed Loads (BLC 76 : Structure Wm (330 Deg))

	Member Label	Direction	Start Magnitude[lb/ft,...	End Magnitude[lb/ft,F...	Start Location[ft,%]	End Location[ft,%]
1	M4	X	-.1	-.1	0	%100
2	M4	Z	-.173	-.173	0	%100
3	M14	X	-.4	-.4	0	%100
4	M14	Z	-.692	-.692	0	%100
5	M27	X	-.1	-.1	0	%100
6	M27	Z	-.173	-.173	0	%100
7	M40	X	-.31	-.31	0	%100
8	M40	Z	-.537	-.537	0	%100
9	M41	X	0	0	0	%100
10	M41	Z	0	0	0	%100
11	M42	X	-.31	-.31	0	%100
12	M42	Z	-.537	-.537	0	%100
13	MP5A	X	-.236	-.236	0	%100
14	MP5A	Z	-.408	-.408	0	%100
15	MP3A	X	-.236	-.236	0	%100
16	MP3A	Z	-.408	-.408	0	%100
17	MP1A	X	-.236	-.236	0	%100
18	MP1A	Z	-.408	-.408	0	%100
19	MP5C	X	-.236	-.236	0	%100
20	MP5C	Z	-.408	-.408	0	%100
21	MP3C	X	-.236	-.236	0	%100
22	MP3C	Z	-.408	-.408	0	%100
23	MP1C	X	-.236	-.236	0	%100
24	MP1C	Z	-.408	-.408	0	%100
25	MP5B	X	-.236	-.236	0	%100
26	MP5B	Z	-.408	-.408	0	%100
27	MP3B	X	-.236	-.236	0	%100
28	MP3B	Z	-.408	-.408	0	%100
29	MP1B	X	-.236	-.236	0	%100
30	MP1B	Z	-.408	-.408	0	%100
31	MP2A	X	-.236	-.236	0	%100
32	MP2A	Z	-.408	-.408	0	%100
33	MP4A	X	-.236	-.236	0	%100
34	MP4A	Z	-.408	-.408	0	%100
35	MP2C	X	-.236	-.236	0	%100
36	MP2C	Z	-.408	-.408	0	%100
37	MP4C	X	-.236	-.236	0	%100
38	MP4C	Z	-.408	-.408	0	%100
39	MP2B	X	-.236	-.236	0	%100
40	MP2B	Z	-.408	-.408	0	%100

Member Distributed Loads (BLC 76 : Structure Wm (330 Deg)) (Continued)

	Member Label	Direction	Start Magnitude[lb/ft,...	End Magnitude[lb/ft,F...	Start Location[ft,%]	End Location[ft,%]
41	MP4B	X	-.236	-.236	0	%100
42	MP4B	Z	-.408	-.408	0	%100
43	M77A	X	-.447	-.447	0	%100
44	M77A	Z	-.775	-.775	0	%100
45	M78A	X	-.518	-.518	0	%100
46	M78A	Z	-.897	-.897	0	%100
47	M79	X	-.518	-.518	0	%100
48	M79	Z	-.897	-.897	0	%100
49	M80	X	0	0	0	%100
50	M80	Z	0	0	0	%100
51	M89	X	-.214	-.214	0	%100
52	M89	Z	-.371	-.371	0	%100
53	M98	X	-.214	-.214	0	%100
54	M98	Z	-.371	-.371	0	%100
55	M107	X	-.251	-.251	0	%100
56	M107	Z	-.435	-.435	0	%100
57	M107A	X	-.272	-.272	0	%100
58	M107A	Z	-.471	-.471	0	%100
59	M109	X	0	0	0	%100
60	M109	Z	0	0	0	%100

Member Distributed Loads (BLC 81 : BLC 39 Transient Area Loads)

	Member Label	Direction	Start Magnitude[lb/ft,...	End Magnitude[lb/ft,F...	Start Location[ft,%]	End Location[ft,%]
1	M4	Y	-9.629	-9.629	1.979	3.394
2	M14	Y	-9.629	-9.629	1.979	3.394
3	M40	Y	-1.773	-4.972	1.324	3.442
4	M40	Y	-4.972	-8.069	3.442	5.56
5	M40	Y	-8.069	-8.069	5.56	7.678
6	M40	Y	-8.069	-4.972	7.678	9.797
7	M40	Y	-4.972	-1.773	9.797	11.915
8	M27	Y	-9.629	-9.629	1.979	3.394
9	M41	Y	-1.773	-4.972	1.324	3.442
10	M41	Y	-4.972	-8.069	3.442	5.56
11	M41	Y	-8.069	-8.069	5.56	7.678
12	M41	Y	-8.069	-4.972	7.678	9.797
13	M41	Y	-4.972	-1.773	9.797	11.915
14	M42	Y	-1.766	-4.972	1.324	3.442
15	M42	Y	-4.972	-8.074	3.442	5.56
16	M42	Y	-8.074	-8.074	5.56	7.678
17	M42	Y	-8.074	-4.972	7.678	9.797
18	M42	Y	-4.972	-1.766	9.797	11.915

Member Distributed Loads (BLC 82 : BLC 40 Transient Area Loads)

	Member Label	Direction	Start Magnitude[lb/ft,...	End Magnitude[lb/ft,F...	Start Location[ft,%]	End Location[ft,%]
1	M4	Y	-23.329	-23.329	1.979	3.394
2	M14	Y	-23.329	-23.329	1.979	3.394
3	M40	Y	-4.295	-12.046	1.324	3.442
4	M40	Y	-12.046	-19.551	3.442	5.56
5	M40	Y	-19.551	-19.551	5.56	7.678
6	M40	Y	-19.551	-12.046	7.678	9.797
7	M40	Y	-12.046	-4.295	9.797	11.915

Member Distributed Loads (BLC 82 : BLC 40 Transient Area Loads) (Continued)

	Member Label	Direction	Start Magnitude[lb/ft,...	End Magnitude[lb/ft,F...	Start Location[ft,%]	End Location[ft,%]
8	M27	Y	-23.329	-23.329	1.979	3.394
9	M41	Y	-4.295	-12.046	1.324	3.442
10	M41	Y	-12.046	-19.551	3.442	5.56
11	M41	Y	-19.551	-19.551	5.56	7.678
12	M41	Y	-19.551	-12.046	7.678	9.797
13	M41	Y	-12.046	-4.295	9.797	11.915
14	M42	Y	-4.279	-12.046	1.324	3.442
15	M42	Y	-12.046	-19.562	3.442	5.56
16	M42	Y	-19.562	-19.563	5.56	7.678
17	M42	Y	-19.563	-12.046	7.678	9.797
18	M42	Y	-12.046	-4.278	9.797	11.915

Member Area Loads (BLC 39 : Structure D)

	Joint A	Joint B	Joint C	Joint D	Direction	Distribution	Magnitude[ksf]
1	N109	N120A	N119A	N108	Y	Two Way	-.005
2	N108	N116B	N115C	N110	Y	Two Way	-.005
3	N110	N112A	N111	N109	Y	Two Way	-.005

Member Area Loads (BLC 40 : Structure Di)

	Joint A	Joint B	Joint C	Joint D	Direction	Distribution	Magnitude[ksf]
1	N109	N120A	N119A	N108	Y	Two Way	-.013
2	N108	N116B	N115C	N110	Y	Two Way	-.013
3	N110	N112A	N111	N109	Y	Two Way	-.013

Envelope Joint Reactions

	Joint		X [lb]	LC	Y [lb]	LC	Z [lb]	LC	MX [k-ft]	LC	MY [k-ft]	LC	MZ [k-ft]	LC
1	N3	max	561.884	10	202.452	7	5121.442	1	.136	7	1.063	4	0	8
2		min	-560.154	4	-2732.046	13	-2814.427	7	-1.902	13	-1.066	10	0	2
3	N14	max	5038.352	9	281.361	3	1572.532	3	1.042	21	1.914	12	1.804	21
4		min	-2901.579	3	-2986.574	21	-2796.214	9	-.095	3	-1.905	6	-.164	3
5	N26	max	2940.753	11	292.324	11	1568.6	11	1.032	17	1.925	8	.17	11
6		min	-5061.219	5	-2959.003	17	-2784.059	5	-.098	11	-1.929	2	-1.788	17
7	N113	max	29.823	10	6264.356	13	-92.644	7	0	51	0	8	0	2
8		min	-29.822	4	93.623	7	-4630.239	13	0	1	0	2	0	8
9	N114	max	9.669	3	6724.595	21	2486.701	21	0	6	0	12	0	12
10		min	-4308.12	21	-45.364	3	-5.606	3	0	12	0	6	0	6
11	N115B	max	4271.867	17	6668.576	17	2465.739	17	0	8	0	8	0	8
12		min	-25.091	11	-69.212	11	-14.521	11	0	2	0	2	0	2
13	Totals:	max	5590.728	10	10195.657	21	4804.46	1						
14		min	-5590.728	4	3576.801	3	-4804.46	7						

Envelope AISC 15th(360-16): LRFD Steel Code Checks

	Member	Shape	Code C...	Loc[ft]	LC	Shear ...	Loc[ft]	Dir	LC	phi*Pnc [lb]	phi*Pnt [lb]	phi*Mn y-...	phi*Mn z-...	Cb	Eqn
1	M4	HSS4X4X4	.374	6.028	23	.087	2.618	y	13	109457.2...	139518	16.181	16.181	1....	H1-1b
2	M14	HSS4X4X4	.390	6.028	23	.092	2.618	y	21	109457.2...	139518	16.181	16.181	1....	H1-1b
3	M27	HSS4X4X4	.389	6.028	15	.092	2.618	y	17	109457.2...	139518	16.181	16.181	1....	H1-1b
4	M40	HSS4X4X3	.321	0	18	.089	0	z	11	52759.678	106812	12.662	12.662	3....	H1-1b

Envelope AISC 15th(360-16): LRFD Steel Code Checks (Continued)

	Member	Shape	Code C...	Loc[ft]	LC	Shear ...	Loc[ft]	Dir	LC	phi*Pnc [lb]	phi*Pnt [lb]	phi*Mn y-...	phi*Mn z-...	Cb	Eqn
5	M41	HSS4X4X3	.320	13.239	20	.084	13.239	z	3	52759.678	106812	12.662	12.662	3....	H1-1b
6	M42	HSS4X4X3	.319	0	24	.091	13.239	y	18	52759.678	106812	12.662	12.662	2....	H1-1b
7	MP5A	PIPE_2.0	.289	6.375	10	.110	6.464		4	13511.278	32130	1.872	1.872	1....	H1-1b
8	MP3A	PIPE_2.0	.416	6.375	10	.177	6.375		4	13511.278	32130	1.872	1.872	1....	H1-1b
9	MP1A	PIPE_2.0	.296	6.375	4	.110	6.464		4	13511.278	32130	1.872	1.872	1....	H1-1b
10	MP5C	PIPE_2.0	.248	6.375	5	.110	6.464		4	13511.278	32130	1.872	1.872	1....	H1-1b
11	MP3C	PIPE_2.0	.371	6.375	11	.170	6.375		6	13511.278	32130	1.872	1.872	1....	H1-1b
12	MP1C	PIPE_2.0	.215	6.375	12	.110	6.464		4	13511.278	32130	1.872	1.872	1....	H1-1b
13	MP5B	PIPE_2.0	.239	6.375	2	.110	6.464		10	13511.278	32130	1.872	1.872	1....	H1-1b
14	MP3B	PIPE_2.0	.369	6.375	2	.170	6.375		8	13511.278	32130	1.872	1.872	1....	H1-1b
15	MP1B	PIPE_2.0	.257	6.375	9	.110	6.464		10	13511.278	32130	1.872	1.872	1....	H1-1b
16	MP2A	PIPE_2.0	.451	6.375	4	.060	4.516		5	13511.278	32130	1.872	1.872	1....	H1-1b
17	MP4A	PIPE_2.0	.419	6.375	10	.069	6.375		9	13511.278	32130	1.872	1.872	1....	H1-1b
18	MP2C	PIPE_2.0	.391	6.375	12	.055	4.516		1	13511.278	32130	1.872	1.872	1....	H1-1b
19	MP4C	PIPE_2.0	.363	6.375	6	.064	6.375		4	13511.278	32130	1.872	1.872	1....	H1-1b
20	MP2B	PIPE_2.0	.394	6.375	8	.054	4.516		9	13511.278	32130	1.872	1.872	1....	H1-1b
21	MP4B	PIPE_2.0	.362	6.375	2	.065	6.375		12	13511.278	32130	1.872	1.872	1....	H1-1b
22	M77A	LL3x3x3x6	.180	4.369	21	.004	4.369	z	12	46521.412	70632	6.362	3.751	1	H1-1b*
23	M78A	LL3x3x3x6	.178	4.369	17	.004	0	z	2	46521.412	70632	6.362	3.751	1	H1-1b*
24	M79	LL3x3x3x6	.167	4.369	13	.003	4.369	y	2	46521.412	70632	6.362	3.751	1	H1-1b*
25	M80	PIPE_2.5	.173	6.635	3	.056	4.74		11	13460.384	50715	3.596	3.596	1....	H1-1b
26	M89	PIPE_2.5	.173	6.771	11	.055	4.74		8	13460.384	50715	3.596	3.596	1....	H1-1b
27	M98	PIPE_2.5	.176	6.771	7	.067	4.74		4	13460.384	50715	3.596	3.596	1....	H1-1b
28	M107	L3X3X4	.266	1.807	9	.026	1.807	y	9	43401.132	46656	1.688	3.756	2....	H2-1
29	M107A	L3X3X4	.252	1.807	5	.026	1.807	y	4	43401.132	46656	1.688	3.756	2....	H2-1
30	M109	L3X3X4	.256	0	11	.026	0	y	11	43528.804	46656	1.688	3.756	2....	H2-1

Client:	Verizon Wireless	Date:	6/15/2021
Site Name:	Ashford North CT		
Project No.	21777482A		
Title:	Antenna Mount Analysis	Page:	1

Version 3.1

I. Mount-to-Tower Connection Check

RISA Model Data

Nodes *(labeled per RISA)*	Orientation *(per graphic of typical platform)*
N3	270
N26	150
N14	30

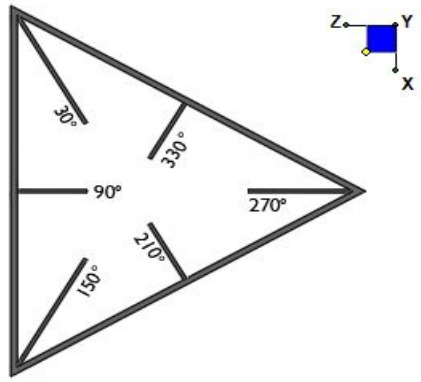

TYPICAL PLATFORM

Tower Connection Bolt Checks

Any moment resistance?:	yes
Bolt Quantity per Reaction:	4
d_x (in) *(Delta X of typ. bolt config. sketch)* :	3
d_y (in) *(Delta Y of typ. bolt config. sketch)* :	8
Bolt Type:	A325N
Bolt Diameter (in):	0.625
Required Tensile Strength (kips):	16.8
Required Shear Strength (kips):	3.0
Tensile Strength / bolt (kips):	20.7
Shear Strength / bolt (kips):	12.4
Tensile Capacity Overall:	**20.2%***
Shear Capacity Overall:	**6.0%**

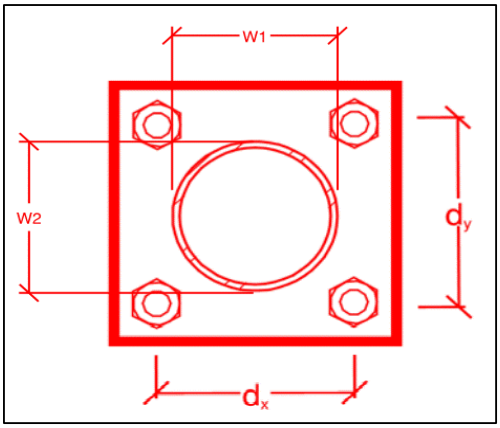

**Note: Tension reduction not required if tension or shear capacity < 30%*

Tower Connection Plate and Weld Check

Connecting Standoff Member Shape:	Rect
Plate Width (in):	6
Plate Height (in):	10
W1 (in):	4
W2 (in):	4
Fy (ksi, plate):	36
t_{Plate} (in):	0.5
Weld Size (1/16 in):	3
Phi*Rn (kip/in):	4.18
Required Weld Strength (kip/in):	1.49
Plate Bending Capacity:	**87.2%**
Weld Capacity:	**35.6%**

Max Plate Bending Strengths

Mu_{xx} *(kip-in)* :	10.8
$Phi*Mn_{xx}$ *(kip-in)* :	12.2
Mu_{yy} *(kip-in)* :	-0.3
$Phi*Mn_{yy}$ *(kip-in)* :	20.3

Mount Desktop – Post Modification Inspection (PMI) Report Requirements

Documents & Photos Required from Contractor – Mount Modification

Purpose – to provide Maser Consulting Connecticut the proper documentation in order to complete the required Mount Desktop review of the Post Modification Inspection Report.

- Contractor is responsible for making certain the photos provided as noted below provide confirmation that the modification was completed in accordance with the modification drawings.
- Contractor shall relay any data that can impact the performance of the mount or the mount modification, this includes safety issues.

Base Requirements:

- Any special photos outside of the standard requirements will be indicated on the drawings
- Provide "as built drawings" showing contractor's name, preparer's signature, and date. Any deviations from the drawings (proposed modification) must be shown.
- Notation that all hardware was properly installed, and the existing hardware was inspected for any issues.
- Verification that loading is as communicated in the modification drawings. NOTE If loading is different than what is conveyed in the modification drawing contact Maser Consulting Connecticut immediately.
- Each photo should be time and date stamped
- Photos should be high resolution and submitted in a Zip File and should be organized in the file structure as depicted in Schedule A attached.
- Contractor shall ensure that the safety climb wire rope is supported and not adversely impacted by the install of the modification components. This may involve the install of wire rope guides, or other items to protect the wire rope.
- The photos in the file structure should be uploaded **to** **https://pmi.vzwsmart.com** as depicted on the drawings

Photo Requirements:

- *Base and "During Installation Photos"*
  - Base pictures include
    - Photo of Gate Signs showing the tower owner, site name, and number
    - Photo of carrier shelter showing the carrier site name and number if available
    - Photos of the galvanizing compound and/or paint used (if applicable), clearly showing the label and name
  - "During Installation Photos if provided - must be placed only in this folder
- *Photos taken at ground level*
  - Overall tower structure before and after installation of the modifications
  - Photos of the appropriate mount before and after installation of the modifications; if the mounts are at different rad elevations, pictures must be provided for all elevations that the modifications were installed

- *Photos taken at Mount Elevation*
    - Photos showing each individual sector before and also after installation of modifications. Each entire sector must be in one photo to show in the inter-connection of members.
        - These photos should also certify that the placement and geometry of the equipment on the mount is as depicted on the sketch and table in the mount analysis
    - Close-up photos of each installed modification per the modification drawings; pictures should also include connection hardware (U-bolts, bolts, nuts, all-threaded rods, etc.)
    - Photos showing the measurements of the installed modification member sizes (i.e. lengths, widths, depths, diameters, thicknesses)
    - Photos showing the elevation or distances of the installed modifications from the appropriate reference locations shown in the modification drawings
    - Photos showing the installed modifications onto the tower with tape drop measurements (if applicable) (i.e. ring/collar mounts, tie-backs, V-bracing kits, etc.); if the existing mount elevation needs to be changed according to the modification drawings, a tape drop measurement shall be provided before the elevation change
    - Photos showing the safety climb wire rope above and below the mount prior to modification.
    - Photos showing the climbing facility and safety climb if present.

Material Certification:

- Materials utilized must be as per specification on the drawings or the equivalent as validated by Maser Consulting Connecticut.
    - If the drawings are as specified on the drawings
        - The contractor should provide the packing list or the materials utilized to perform the mount modification
    - If an equivalent is utilized
        - It is required that the Maser Consulting Connecticut certification of such is included in the contractor submission package. There may be an additional charge for this certification if the equivalent submission doesn't meet specifications as prescribed in the drawings.
- The contractor must certify that the materials meet these specifications by one of these methods.

☐ The Material utilized was as specified on the Maser Consulting Connecticut Mount Modification Drawings and included
in the Material certification folder is a packing list or invoice for these materials

☐ The material utilized was an "equivalent" and included as part of the contractor submission is the Maser Consulting Connecticut certification, invoices, or specifications validating accepted status

Certifying Individual: Company _____

Name _____

Signature _____

Antenna & equipment placement and Geometry Confirmation:

- The contractor must certify that the antenna & equipment placement and geometry is in accordance with the antenna placement diagrams as included in this mount analysis.

☐ The contractor certifies that the photos support and the equipment on the mount is as depicted on the antenna placement diagrams as included in this mount analysis.

☐ The contractor notes that the equipment on the mount is not in accordance with the antenna placement diagrams and has accordingly marked up the diagrams or provided a diagram outlining the differences.

Certifying Individual: Company _____

Name _____

Signature _____

Special Instructions / Validation as required from the MA or Mod Drawings:

Issue:

1. Contractor shall verify all dimensions and member sizes shown in the mount geometry verification requirements section of the mount analysis report. Contact EOR if these documents are not available to the general contractor.
2.Contractor to install safety climb cable guide in locations where wire rope is rubbing against mount to tower attachments. Contractor to provide photos of safety climb cable guide installation.

Response:

Schedule A – Photo & Document File Structure

- VzW Site Number / Name
  - Base & “During Installation” Photos
  - Pre-Installation Photos
    - Alpha
    - Beta
    - Gamma
    - Ground Level
    - Tape Drop
  - Post-Installation Photos
    - Alpha
    - Beta
    - Gamma
    - Ground Level
    - Tape Drop
    - Photos of climbing facility and safety climb – If Present
  - Certifications – Submission of this document including certifications
  - Specific Required Additional Photos

S r **A**

S r r T S S r

M E . P

Plan View

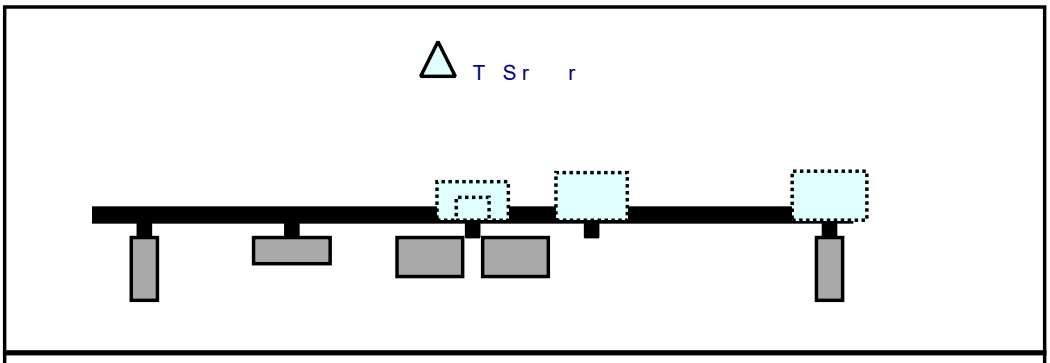

Front View

L Sr r

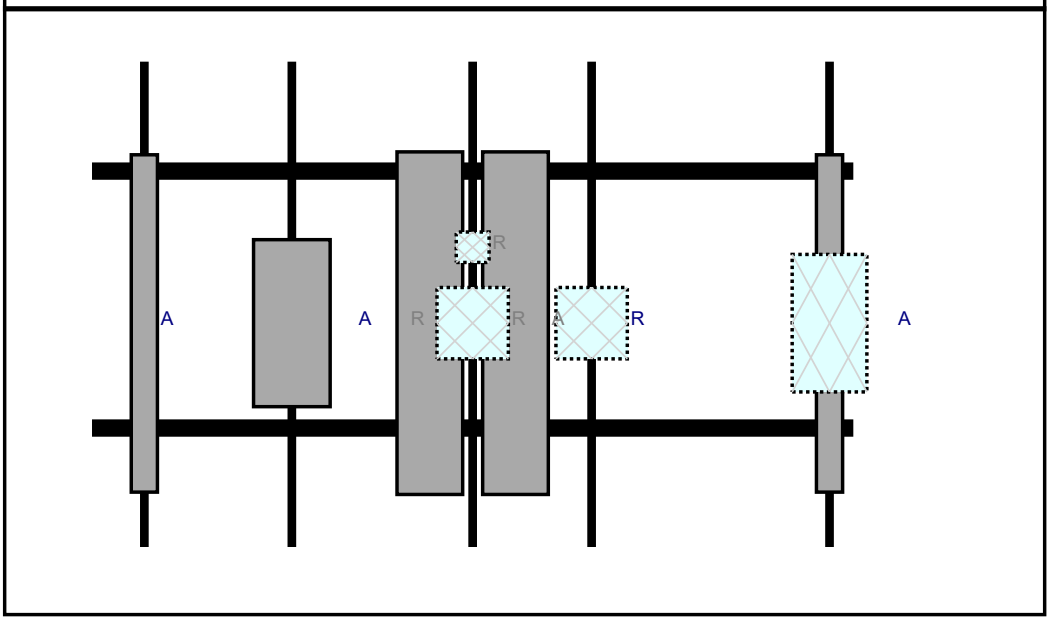

| R | M d | d | D | P | P | A | . A | A | | |

S r **B**

S r r T S S r

M E . P

Plan View

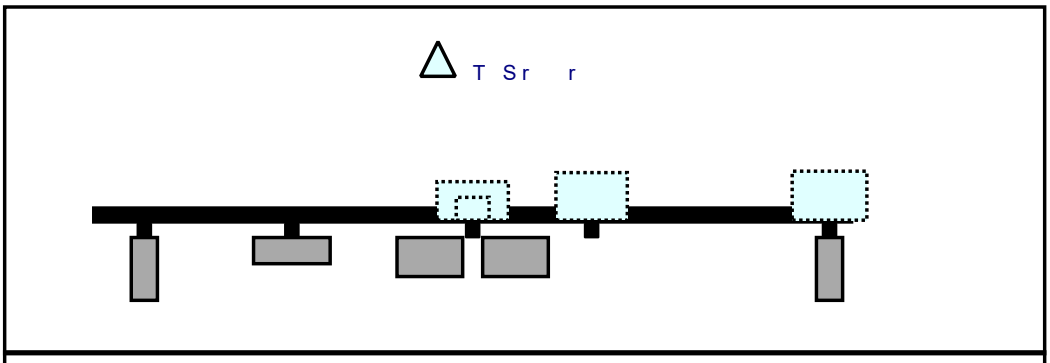

Front View

L Sr r

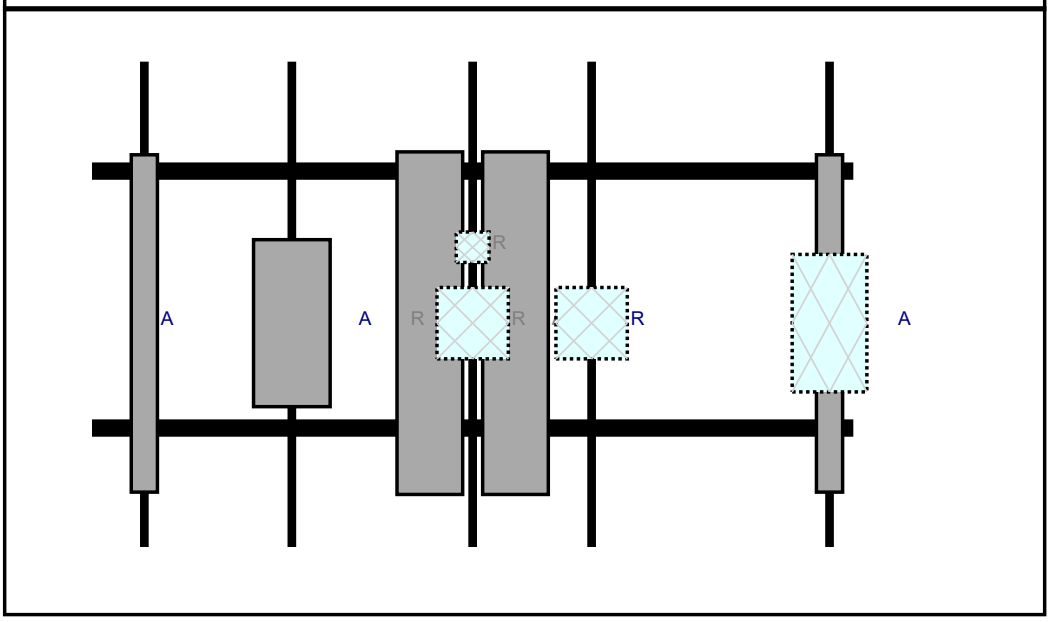

| R | M d | d | D | P | P | A | . A | A | | |

S r **C**

S r r T S S r

M E . P

Plan View

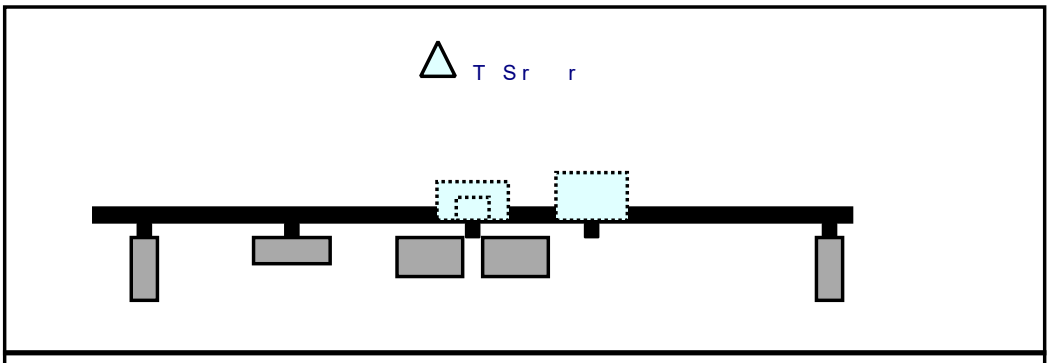

Front View

L Sr r

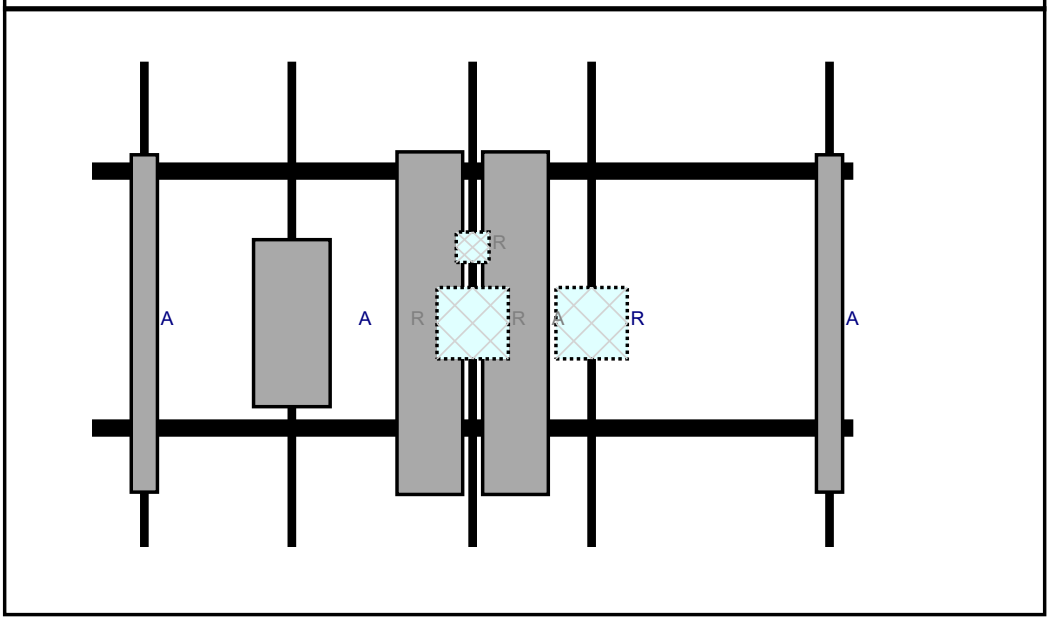

| R | M d | d | D | P | P | A | . A | A | | |

Maser Consulting Connecticut

MASER CONSULTING
CONNECTICUT

Subject		TIA-222-H Usage
Site Information	Site ID:	468148-VZW / ASHFORD NORTH CT
	Site Name:	ASHFORD NORTH CT
	Carrier Name:	Verizon Wireless
	Address:	174 Ashford Center Road Ashford, Connecticut 06278 Windham County
	Latitude:	41.868272°
	Longitude:	-72.145844°
Structure Information	Tower Type:	120.00-Ft Self Support
	Mount Type:	13.33-Ft Platform

To Whom It May Concern,

We respectfully submit the above referenced Antenna Mount Structural Analysis report in conformance with ANSI/TIA-222-H, Structural Standard for Antenna Supporting Structures and Antennas and Small Wind Turbine Support Structures.

The 2015 International Building Code states that, in Section 3108, telecommunication towers shall be designed and constructed in accordance with the provisions of TIA-222. The TIA-222-H is the latest revision of the TIA-222 Standard, effective as of January 01, 2018.

As with all ANSI standards and engineering best practice is to apply the most current revision of the standard. This ensures the engineer is applying all updates. As an example, the TIA-222-H standard includes updates to bring it in line with the latest AISC and ACI standards and it also incorporates the latest wind speed map by ASCE 7 based on updated studies of the wind data.

The TIA-222-H standard clarifies these specific requirements for the antenna mount analysis such as modeling method, seismic analysis, 30-degree increment wind direction and maintenance loading. Therefore, it is our opinion that TIA-222-H is the most appropriate standard for antenna mount structural analysis and is acceptable for use at this site to ensure the engineer is taking into account the most current engineering standard available.

Sincerely,

Derek Hartzell, PE
Technical Specialist

PROJECT NOTES

1. SEE MODIFICATION NOTES
2. THE CONTRACTOR SHALL COMPLY WITH ALL APPLICABLE CODES, ORDINANCES, LAWS AND REGULATIONS OF ALL MUNICIPALITIES, UTILITY COMPANIES OR OTHER PUBLIC/GOVERNING AUTHORITIES.
3. THE CONTRACTOR SHALL BE RESPONSIBLE FOR OBTAINING ALL PERMITS AND INSPECTIONS THAT MAY BE REQUIRED BY ANY FEDERAL, STATE, COUNTY OR MUNICIPAL AUTHORITIES.
4. THE CONTRACTOR SHALL NOTIFY THE CONSTRUCTION MANAGER, IN WRITING, OF ANY CONFLICTS, ERRORS OR OMISSIONS PRIOR TO THE SUBMISSION OF BIDS OR PERFORMANCE OF WORK.
5. THE CONTRACTOR SHALL BE RESPONSIBLE FOR PROTECTING ALL EXISTING SITE IMPROVEMENTS PRIOR TO COMMENCING CONSTRUCTION. THE CONTRACTOR SHALL REPAIR ANY DAMAGE AS A RESULT OF CONSTRUCTION OF THIS FACILITY AT THE CONTRACTOR'S EXPENSE TO THE SATISFACTION OF THE OWNER.
6. THE SCOPE OF WORK FOR THIS PROJECT SHALL INCLUDE PROVIDING ALL MATERIALS, EQUIPMENT AND LABOR REQUIRED TO COMPLETE THIS PROJECT. ALL EQUIPMENT SHALL BE INSTALLED IN ACCORDANCE WITH MANUFACTURER'S RECOMMENDATIONS.
7. THE CONTRACTOR SHALL VISIT THE PROJECT SITE PRIOR TO SUBMITTING THE BID TO VERIFY THAT THE PROJECT CAN BE CONSTRUCTED IN ACCORDANCE WITH THE CONTRACT DOCUMENTS AND CONSTRUCTION DRAWINGS.
8. THE CONTRACTOR SHALL VERIFY ALL EXISTING DIMENSIONS AND CONDITIONS PRIOR TO COMMENCING ANY WORK. ALL DIMENSIONS OF EXISTING CONSTRUCTION SHOWN ON THESE DRAWINGS MUST BE VERIFIED. THE CONTRACTOR SHALL NOTIFY THE CONSTRUCTION MANAGER OF ANY DISCREPANCIES PRIOR TO ORDERING MATERIAL OR PROCEEDING WITH CONSTRUCTION.
9. SINCE THE CELL SITE MAY BE ACTIVE, ALL SAFETY PRECAUTIONS MUST BE TAKEN WHEN WORKING AROUND HIGH LEVELS OF ELECTROMAGNETIC RADIATION. EQUIPMENT SHOULD BE SHUTDOWN PRIOR TO PERFORMING ANY WORK THAT COULD EXPOSE THE WORKERS TO DANGER. PERSONAL RF EXPOSURE MONITORS ARE REQUIRED TO BE WORN TO ALERT OF ANY POTENTIALLY DANGEROUS EXPOSURE LEVELS.
10. NO NOISE, SMOKE, DUST OR ODOR WILL RESULT FROM THIS FACILITY AS TO CAUSE A NUISANCE.
11. THE FACILITY IS UNMANNED AND NOT FOR HUMAN HABITATION (NO HANDICAP ACCESS IS REQUIRED).

COPYRIGHT ©2021
MASER CONSULTING CONNECTICUT
ALL RIGHTS RESERVED
THIS DRAWING AND ALL THE INFORMATION CONTAINED HEREIN IS AUTHORIZED FOR USE ONLY BY THE PARTY FOR WHOM THE WORK WAS CONTRACTED OR TO WHOM IT IS CERTIFIED. THIS DRAWING MAY NOT BE COPIED, REUSED, DISCLOSED, DISTRIBUTED OR RELIED UPON FOR ANY OTHER PURPOSE WITHOUT THE EXPRESS WRITTEN CONSENT OF MASER CONSULTING

verizon

MOUNT MODIFICATION DRAWINGS
EXISTING 13.33' PLATFORM

SITE NAME: ASHFORD NORTH CT
SITE NUMBER: 468148

174 ASHFORD CENTER ROAD
ASHFORD, CT 06278
WINDHAM COUNTY

PROJECT INFORMATION

SITE INFORMATION

LATITUDE: 41.868272° N
LONGITUDE: 72.145844° W
JURISDICTION: WINDHAM COUNTY

APPLICANT/LESSEE

COMPANY: VERIZON WIRELESS

CLIENT REPRESENTATIVE

COMPANY: VERIZON WIRELESS
ADDRESS: 118 FLANDERS ROAD, THIRD FLOOR
CITY, STATE, ZIP: WESTBOROUGH, MA 01581
CONTACT: ANDREW CANDIELLO
EMAIL: ANDREW.CANDIELLO@VERIZONWIRELESS.COM

PROJECT MANAGER

COMPANY: MASER CONSULTING CONNECTICUT
CONTACT: PETER ALBANO
PHONE: 856-797-0412
E-MAIL: PETER.ALBANO@COLLIERSENGINEERING.COM

SHEET INDEX

SHEET	DESCRIPTION
T-1	TITLE SHEET
S-1	BILL OF MATERIALS
S-2	MODIFICATION NOTES
S-3	MODIFICATION NOTES
S-4	MODIFICATION DETAILS
S-5	MODIFICATION DETAILS
S-6	MOUNT PHOTOS
	SPECIFICATION SHEETS

CONTRACTOR PMI REQUIREMENTS

PMI LOCATION: HTTPS://PMI.VZWSMART.COM
SMART TOOL PROJECT #: 10068127
VZW LOCATION CODE (PSLC): 468148
FUZE ID: 16272036

PMI REQUIREMENTS EMBEDDED WITHIN MOUNT MODIFICATION REPORT

REFERENCED DOCUMENTS

FAILING MOUNT ANALYSIS REPORT
SMART TOOL PROJECT #: 10050471
MASER CONSULTING PROJECT #: 21777482A
ANALYSIS DATE: 4/30/2021

MASER CONSULTING CONNECTICUT
WILL BE KNOWN AS COLLIERS ENGINEERING & DESIGN IN 2021
Customer Loyalty *through* Client Satisfaction
www.maserconsulting.com
Office Locations:
- NEW JERSEY
- NEW YORK
- PENNSYLVANIA
- VIRGINIA
- FLORIDA
- NORTH CAROLINA
- SOUTH CAROLINA
- NEW MEXICO
- MARYLAND
- GEORGIA
- TEXAS
- TENNESSEE
- COLORADO

Copyright © 2021. Maser Consulting All Rights Reserved. This drawing and all the information contained herein is authorized for use only by the party for whom the services were contracted or to whom it is certified. This drawing may not be copied, reused, disclosed, distributed or relied upon for any other purpose without the express written consent of Maser Consulting.

verizon

PROTECT YOURSELF
ALL STATES REQUIRE NOTIFICATION OF EXCAVATORS, DESIGNERS, OR ANY PERSON PREPARING TO DISTURB THE EARTH'S SURFACE ANYWHERE IN ANY STATE
811 Know what's below. Call before you dig.
FOR STATE SPECIFIC DIRECT PHONE NUMBERS VISIT: WWW.CALL811.COM

SCALE: AS SHOWN
JOB NUMBER: 21777482A

REV	DATE	DESCRIPTION	DRAWN BY	CHECKED BY
0	6/16/2021	ISSUED FOR CONSTRUCTION	FAC	DH

STATE OF CONNECTICUT · DEREK R. HARTZELL · 32710 · LICENSED PROFESSIONAL ENGINEER

Derek Hartzell
CONSULTING ENGINEER
LICENSE NUMBER: 32710
MASER CONSULTING
CT. C.O.A. #: PEC.0000131

Digitally signed by Derek R. Hartzell
Date: 2021.06.16 12:18:49-04'00'

IT IS A VIOLATION OF LAW FOR ANY PERSON, UNLESS THEY ARE ACTING UNDER THE DIRECTION OF THE RESPONSIBLE LICENSED PROFESSIONAL ENGINEER, TO ALTER THIS DOCUMENT.

SITE NAME:
ASHFORD NORTH CT
468148
174 ASHFORD CENTER ROAD
ASHFORD, CT 06278
WINDHAM COUNTY

MT. LAUREL OFFICE
2000 Midlantic Drive
Suite 100
Mount Laurel, NJ 08054
Phone: 856.797.0412
Fax: 856.722.1120

SHEET TITLE: TITLE SHEET

SHEET NUMBER: T-1

NOTE: DO NOT SCALE DRAWINGS FOR CONSTRUCTION.

MASAbdx - P:\MAS Templates\Mount\MOD.dwg\T-1 By: JCENTONE

BILL OF MATERIALS

VZWSMART KITS

QUANTITY	MANUFACTURER	PART NUMBER	DESCRIPTION	NOTES
3	VZWSMART	VZWSMART-PLK3	SUPPORT RAIL CORNER BRACKET	
15		VZWSMART-MSK1	CROSSOVER PLATE	
1		VZWSMART-PLK5	KICKER KIT	CONTRACTOR TO VERIFY THE LENGTH REQUIRED AND TRIM AS NECESSARY IN ACCORDANCE WITH THE 'STRUCTURAL STEEL' NOTES ON SHEET S-2
1		VZWSMART-PLK7	MONOPOLE COLLAR MOUNT ASSEMBLY	

OTHER REQUIRED PARTS

QUANTITY	MANUFACTURER	PART NUMBER	DESCRIPTION	NOTES
3	-	-	156" LONG, P2.5 STD	GALVANIZED
3	-	-	30" LONG, L3X3X1/4	GALVANIZED. CONTRACTOR TO VERIFY THE LENGTH REQUIRED AND TRIM AS NECESSARY IN ACCORDANCE WITH THE 'STRUCTURAL STEEL' NOTES ON SHEET S-2.

NOTE: ALL MATERIALS REQUIRED FOR THE DESIGNED MODIFICATIONS BUT NOT LISTED IN THIS SHEET ARE ASSUMED TO BE PROVIDED BY THE CONTRACTOR

VZWSMART KITS - APPROVED VENDORS

COMMSCOPE	
CONTACT	SALVADOR ANGUIANO
PHONE	(817) 304-7492
EMAIL	SALVADOR.ANGUIANO@COMMSCOPE.COM
WEBSITE	WWW.COMMSCOPE.COM
METROSITE FABRICATORS, LLC	
CONTACT	KENT RAMEY
PHONE	(706) 335-7045 (O), (706) 982-9788 (M)
EMAIL	KENT@METROSITELLC.COM
WEBSITE	METROSITEFABRICATORS.COM
PERFECTVISION	
CONTACT	WIRELESS SALES
PHONE	(844) 887-6723
EMAIL	WWW.PERFECT-VISION.COM
WEBSITE	WIRELESSSALES@PERFECT-VISION.COM
SABRE INDUSTRIES, INC.	
CONTACT	ANGIE WELCH
PHONE	(866) 428-6937
EMAIL	AKWELCH@SABREINDUSTRIES.COM
WEBSITE	WWW.SABRESITESOLUTIONS.COM
SITE PRO 1	
CONTACT	PAULA BOSWELL
PHONE	(972) 236-9843
EMAIL	PAULA.BOSWELL@VALMONT.COM
WEBSITE	WWW.SITEPRO1.COM

NOTE: WHEN SPECIFIED, VZWSMART KITS SHALL BE REQUIRED AND WILL BE VERIFIED DURING THE DESKTOP PMI

MASER CONSULTING CONNECTICUT
WILL BE KNOWN AS COLLIERS ENGINEERING & DESIGN IN 2021
Customer Loyalty *through* Client Satisfaction
www.maserconsulting.com
Office Locations:
- NEW JERSEY
- NEW YORK
- PENNSYLVANIA
- VIRGINIA
- FLORIDA
- NORTH CAROLINA
- SOUTH CAROLINA
- NEW MEXICO
- MARYLAND
- GEORGIA
- TEXAS
- TENNESSEE
- COLORADO

Copyright © 2021. Maser Consulting All Rights Reserved. This drawing and all the information contained herein is authorized for use only by the party for whom the services were contracted or to whom it is certified. This drawing may not be copied, reused, disclosed, distributed or relied upon for any other purpose without the express written consent of Maser Consulting.

verizon

PROTECT YOURSELF
ALL STATES REQUIRE NOTIFICATION OF EXCAVATORS, DESIGNERS, OR ANY PERSON PREPARING TO DISTURB THE EARTH'S SURFACE ANYWHERE IN ANY STATE

811 Know what's below. Call before you dig.

FOR STATE SPECIFIC DIRECT PHONE NUMBERS VISIT: WWW.CALL811.COM

SCALE: AS SHOWN
JOB NUMBER: 21777482A

REV	DATE	DESCRIPTION	DRAWN BY	CHECKED BY
0	6/16/2021	ISSUED FOR CONSTRUCTION	FAC	DH

STATE OF CONNECTICUT · DEREK R. HARTZELL · 32710 · LICENSED PROFESSIONAL ENGINEER

Derek Hartzell
CONSULTING ENGINEER
LICENSE NUMBER: 32710
MASER CONSULTING
CT. COA #: PEC.0000131

Digitally signed by Derek R. Hartzell
Date: 2021.06.16 12:19:09-04'00'

IT IS A VIOLATION OF LAW FOR ANY PERSON, UNLESS THEY ARE ACTING UNDER THE DIRECTION OF THE RESPONSIBLE LICENSED PROFESSIONAL ENGINEER, TO ALTER THIS DOCUMENT.

SITE NAME:

ASHFORD NORTH CT
468148

174 ASHFORD CENTER ROAD
ASHFORD, CT 06278
WINDHAM COUNTY

MT. LAUREL OFFICE
2000 Midlantic Drive
Suite 100
Mount Laurel, NJ 08054

Phone: 856.797.0412
Fax: 856.722.1120

SHEET TITLE: BILL OF MATERIALS

SHEET NUMBER: S-1

GENERAL NOTES

1. THESE MODIFICATIONS HAVE BEEN DESIGNED IN ACCORDANCE WITH THE GOVERNING PROVISIONS OF THE TELECOMMUNICATIONS INDUSTRY STANDARD TIA-222-H. MATERIALS AND SERVICES PROVIDED BY THE CONTRACTOR SHALL CONFORM TO THE ABOVE MENTIONED CODES.
2. CONTRACTOR SHALL TAKE ALL PRECAUTIONS NECESSARY TO PREVENT DAMAGE TO EXISTING STRUCTURES. ANY DAMAGE TO EXISTING STRUCTURES AS A RESULT OF THE CONTRACTOR'S WORK OR FROM DAMAGE DUE TO OTHER CAUSES SHALL BE REPAIRED AT THE CONTRACTOR'S EXPENSE TO THE SATISFACTION OF THE OWNER.
3. CONTRACTOR SHALL VERIFY ALL DIMENSIONS AND EXISTING CONDITIONS BEFORE BEGINNING WORK, ORDERING MATERIAL, AND PREPARING OF SHOP DRAWINGS. ANY DISCREPANCIES BETWEEN FIELD CONDITIONS AND THE CONTRACT DOCUMENTS SHALL BE BROUGHT TO THE IMMEDIATE ATTENTION OF THE ENGINEER. IF THE CONTRACTOR DISCOVERS ANY EXISTING CONDITIONS THAT ARE NOT REPRESENTED ON THESE DRAWINGS, OR ANY CONDITIONS THAT WOULD INTERFERE WITH THE INSTALLATION OF THE MODIFICATIONS, NOTIFY THE ENGINEER IMMEDIATELY.
4. IT IS ASSUMED THAT ANY STRUCTURAL MODIFICATION WORK SPECIFIED ON THESE PLANS WILL BE ACCOMPLISHED BY KNOWLEDGEABLE WORKMEN WITH TOWER CONSTRUCTION EXPERIENCE.
5. THE CONTRACTOR SHALL SUPERVISE AND DIRECT THE WORK AND SHALL BE SOLELY RESPONSIBLE FOR ALL CONSTRUCTION METHODS, MEANS, TECHNIQUES, SEQUENCES, AND PROCEDURES.
6. ALL CONSTRUCTION MEANS AND METHODS; INCLUDING BUT NOT LIMITED TO, ERECTION PLANS, RIGGING PLANS, CLIMBING PLANS, AND RESCUE PLANS SHALL BE THE RESPONSIBILITY OF THE GENERAL CONTRACTOR RESPONSIBLE FOR THE EXECUTION OF THE WORK CONTAINED HEREIN AND SHALL MEET ANSI/TIA-322 (LATEST EDITION), OSHA, AND GENERAL INDUSTRY STANDARDS. ALL RIGGING PLANS SHALL ADHERE TO ANSI/TIA-322 (LATEST EDITION) INCLUDING THE REQUIRED INVOLVEMENT OF A QUALIFIED ENGINEER FOR CLASS IV CONSTRUCTION.
7. THE CONTRACTOR IS SOLELY RESPONSIBLE FOR INITIATING, MAINTAINING, AND SUPERVISING ALL SAFETY PROGRAMS IN ACCORDANCE WITH APPLICABLE SAFETY CODES.
8. WORK SHALL ONLY BE PERFORMED DURING CALM DRY DAYS (WINDS LESS THAN 30-MPH). THE STRUCTURE SHOWN ON THE DRAWINGS IS STRUCTURALLY SOUND ONLY IN THE COMPLETED FORM. THE CONTRACTOR SHALL BE RESPONSIBLE FOR THE STRENGTH AND STABILITY OF THE STRUCTURE DURING ERECTION. CONTRACTOR SHALL PROVIDE TEMPORARY SUPPORT, SHORING, BRACING AND ANY OTHER STRUCTURAL SYSTEMS AS REQUIRED TO RESIST ALL FORCES THAT MAY OCCUR DURING HANDLING AND ERECTION UNTIL THE STRUCTURE IS FULLY COMPLETED. TEMPORARY SUPPORTS, BRACING AND OTHER STRUCTURAL SYSTEMS REQUIRED DURING CONSTRUCTION SHALL REMAIN THE CONTRACTOR'S PROPERTY AFTER THEIR USE.
9. ALL INSTALLATIONS PERFORMED ON THIS STRUCTURE SHALL BE COMPLETED IN ACCORDANCE WITH THE GOVERNING PROVISIONS OF THE STANDARD FOR INSTALLATION, ALTERATION AND MAINTENANCE OF ANTENNA SUPPORTING STRUCTURES AND ANTENNAS, ANSI/TIA-322.
10. CONTRACTOR SHALL SECURE SITE BACK TO EXISTING CONDITION UNDER SUPERVISION OF OWNER. ALL FENCE, STONE, GEOFABRIC, GROUNDING, AND SURROUNDING GRADE SHALL BE REPLACED AND REPAIRED AS REQUIRED TO ACHIEVE OWNER APPROVAL. POSITIVE DRAINAGE AWAY FROM TOWER SITE SHALL BE MAINTAINED.
11. CONNECTIONS BETWEEN ITEMS SUPPORTED BY THE STRUCTURE AND THE STRUCTURE NOT SPECIFICALLY DETAILED IN THE CONTRACT DOCUMENTS ARE THE RESPONSIBILITY OF THE CONTRACTOR. SUCH CONNECTIONS SHALL BE DESIGNED, COORDINATED AND INSPECTED BY A PROFESSIONAL STRUCTURAL ENGINEER LICENSED IN THE STATE OF THE PROJECT. SUBMIT SIGNED AND SEALED CALCULATIONS DURING SHOP DRAWING REVIEW.
12. DO NOT SCALE DRAWINGS.
13. DO NOT USE THESE DRAWINGS FOR ANY OTHER SITE.
14. ALL MATERIAL UTILIZED FOR THIS PROJECT MUST BE NEW AND FREE OF ANY DEFECTS. ANY MATERIAL SUBSTITUTIONS, INCLUDING BUT NOT LIMITED TO ALTERED SIZE AND/OR STRENGTHS, MUST BE APPROVED BY THE OWNER AND ENGINEER IN WRITING.
15. THE MOUNT UNDER NO CIRCUMSTANCES SHOULD BE USED AS A TIE OFF POINT.

DESIGN LOADS

WIND LOADS

a. BASIC WIND SPEED (3 SECOND GUST), V = 119 MPH

b. EXPOSURE CATEGORY B

c. TOPOGRAPHIC CATEGORY 1

d. MEAN BASE ELEVATION (AMSL) = 582.29'

ICE LOADS

a. ICE WIND SPEED (3 SECOND GUST), V = 50 MPH

b. ICE THICKNESS = 1.50 IN

SEISMIC LOADS

a. SEISMIC DESIGN CATEGORY B

b. SHORT TERM MCER GROUND MOTION, S_S = .181

c. LONG TERM MCER GROUND MOTION, S_1 = .055

STRUCTURAL STEEL

1. DESIGN, DETAILING, FABRICATION AND ERECTION OF STRUCTURAL STEEL SHALL CONFORM TO THE FOLLOWING PUBLICATIONS EXCEPT AS SPECIFICALLY INDICATED IN THE CONTRACT DOCUMENTS.
   a. AMERICAN INSTITUTE OF STEEL CONSTRUCTION (AISC) MANUAL OF STEEL CONSTRUCTION (15TH EDITION)
   b. SPECIFICATION FOR STRUCTURAL JOINTS USING ASTM A325 OR A490 BOLTS
   c. AISC CODE OF STANDARD PRACTICE
2. STRUCTURAL STEEL SHALL CONFORM TO THE FOLLOWING UNLESS OTHERWISE SHOWN:

CHANNELS, ANGLES, PLATES, ETC.	ASTM A36 (GR 36)
STEEL PIPE	ASTM A53 (GR 35)
BOLTS	ASTM A325
NUTS	ASTM A563
LOCK WASHERS	LOCKING STRUCTURAL GRADE

3. ALL SUBSTITUTIONS PROPOSED BY THE CONTRACTOR SHALL BE APPROVED IN WRITING BY THE ENGINEER. CONTRACTOR SHALL PROVIDE DOCUMENTATION TO ENGINEER FOR VERIFYING THE SUBSTITUTE IS SUITABLE FOR USE AND MEETS ORIGINAL DESIGN CRITERIA. DIFFERENCES FROM THE ORIGINAL DESIGN, INCLUDING MAINTENANCE, REPAIR AND REPLACEMENT, SHALL BE NOTED. ESTIMATES OF COSTS/CREDITS ASSOCIATED WITH THE SUBSTITUTION (INCLUDING RE-DESIGN COSTS AND COSTS TO SUB-CONTRACTORS) SHALL BE PROVIDED TO THE ENGINEER. CONTRACTOR SHALL PROVIDE ADDITIONAL DOCUMENTATION AND/OR SPECIFICATIONS TO THE ENGINEER AS REQUESTED.
4. PROVIDE STRUCTURAL STEEL SHOP DRAWINGS TO ENGINEER FOR APPROVAL PRIOR TO FABRICATION.
   a. SUBMIT SHOP DRAWINGS TO PETER.ALBANO@COLLIERSENGINEERING.COM
   b. PROVIDE MASER CONSULTING PROJECT # AND MASER CONSULTING PROJECT ENGINEER CONTACT IN THE BODY OF THE EMAIL.
5. DRILL NO HOLES IN ANY NEW OR EXISTING STRUCTURAL STEEL MEMBERS OTHER THAN THOSE SHOWN ON STRUCTURAL DRAWINGS WITHOUT THE APPROVAL OF THE ENGINEER OF RECORD.
6. GALVANIZED ASTM A325 BOLTS SHALL NOT BE REUSED.
7. ALL NEW STEEL SHALL BE HOT BE DIPPED GALVANIZED FOR FULL WEATHER PROTECTION. IN ADDITION ALL NEW STEEL SHALL BE PAINTED TO MATCH EXISTING STEEL. CONTRACTOR SHALL OBTAIN WRITTEN PERMISSION TO PROTECT STEEL BY ANY OTHER MEANS.
8. ALL BOLT ASSEMBLIES FOR STRUCTURAL MEMBERS REPRESENTED IN THIS DRAWING REQUIRE LOCKING DEVICES TO BE INSTALLED IN ACCORDANCE WITH TIA-222-H SECTION 4.9.2 REQUIREMENTS.
9. WHERE CONNECTIONS ARE NOT FULLY DETAILED ON THESE DRAWINGS, FABRICATOR SHALL DESIGN CONNECTIONS TO RESIST LOADS AND FORCES WHERE SHOWN ON DRAWINGS AND AS OUTLINED IN SPECIFICATIONS.
10. FOR MEMBERS BEING REPLACED, PROVIDE NEW BOLTS AND MATCH EXISTING SIZE AND GRADE. MAINTAIN AISC REQUIREMENTS FOR MINIMUM BOLT DISTANCE AND SPACING.
11. ALL PROPOSED AND/OR REPLACED BOLTS SHALL BE OF SUFFICIENT LENGTH SUCH THAT THE END OF THE BOLT IS AT LEAST FLUSH WITH THE FACE OF THE NUT. IT IS NOT PERMITTED FOR THE BOLT END TO BE BELOW THE FACE OF THE NUT AFTER TIGHTENING IS COMPLETED.
12. GALVANIZED ASTM A325 BOLTS SHALL NOT BE REUSED.
13. ALL NEW STEEL SHALL BE HOT BE DIPPED GALVANIZED FOR FULL WEATHER PROTECTION. CONTRACTOR SHALL OBTAIN WRITTEN PERMISSION TO PROTECT STEEL BY ANY OTHER MEANS.
14. ALL EXISTING PAINTED/GALVANIZED SURFACES DAMAGED DURING REHAB INCLUDING AREAS UNDER STIFFENER PLATES SHALL BE WIRE BRUSHED CLEAN, REPAIRED BY COLD GALVANIZING (ZINGA OR ZINC COTE), AND REPAINTED TO MATCH THE EXISTING FINISH (IF APPLICABLE).
15. ALL HOLES IN STEEL MEMBERS SHALL BE SIZED 1/16" LARGER THAN THE BOLT DIAMETER. STANDARD HOLES SHALL BE USED UNLESS NOTED OTHERWISE.

MASER CONSULTING CONNECTICUT
"WILL BE KNOWN AS COLLIERS ENGINEERING & DESIGN IN 2021"
Customer Loyalty *through* Client Satisfaction
www.maserconsulting.com
Office Locations:
- NEW JERSEY
- NEW YORK
- PENNSYLVANIA
- VIRGINIA
- FLORIDA
- NORTH CAROLINA
- SOUTH CAROLINA
- NEW MEXICO
- MARYLAND
- GEORGIA
- TEXAS
- TENNESSEE
- COLORADO

Copyright © 2021. Maser Consulting All Rights Reserved. This drawing and all the information contained herein is authorized for use only by the party for whom the services were contracted or to whom it is certified. This drawing may not be copied, reused, disclosed, distributed or relied upon for any other purpose without the express written consent of Maser Consulting.

verizon

PROTECT YOURSELF
ALL STATES REQUIRE NOTIFICATION OF EXCAVATORS, DESIGNERS, OR ANY PERSON PREPARING TO DISTURB THE EARTH'S SURFACE ANYWHERE IN ANY STATE

811 Know what's below. Call before you dig.

FOR STATE SPECIFIC DIRECT PHONE NUMBERS VISIT: WWW.CALL811.COM

SCALE: AS SHOWN
JOB NUMBER: 21777482A

REV	DATE	DESCRIPTION	DRAWN BY	CHECKED BY
.	.	.	.	.
.	.	.	.	.
.	.	.	.	.
0	6/16/2021	ISSUED FOR CONSTRUCTION	FAC	DH

STATE OF CONNECTICUT · DEREK R. HARTZELL · 32710 · LICENSED PROFESSIONAL ENGINEER

Derek Hartzell
CONSULTING ENGINEER
LICENSE NUMBER: 32710
MASER CONSULTING
CT. COA #: PEC.0000131

Digitally signed by Derek R. Hartzell
Date: 2021.06.16 12:19:09-04'00'

IT IS A VIOLATION OF LAW FOR ANY PERSON, UNLESS THEY ARE ACTING UNDER THE DIRECTION OF THE RESPONSIBLE LICENSED PROFESSIONAL ENGINEER, TO ALTER THIS DOCUMENT.

SITE NAME:

ASHFORD NORTH CT
468148

174 ASHFORD CENTER ROAD
ASHFORD, CT 06278
WINDHAM COUNTY

MT. LAUREL OFFICE
2000 Midlantic Drive
Suite 100
Mount Laurel, NJ 08054

Phone: 856.797.0412
Fax: 856.722.1120

SHEET TITLE:
MODIFICATION NOTES

SHEET NUMBER:
S-2

NOTE: DO NOT SCALE DRAWINGS FOR CONSTRUCTION.

AcAuto6 1996 Template Mode MODS.dwg 6.3 By: FCERTONE

MODIFICATION INSPECTION NOTES

MI CHECKLIST

CONSTRUCTION/ INSTALLATION INSPECTIONS AND TESTING REQUIRED (COMPLETED BY EOR)	REPORT ITEM
	PRE-CONSTRUCTION
X	MI CHECKLIST DRAWING
X	EOR APPROVED SHOP DRAWINGS
NA	FABRICATION INSPECTION
NA	FABRICATOR CERTIFIED WELD INSPECTION
X	MATERIAL TEST REPORT (MTR)
NA	FABRICATOR NDE INSPECTION
X	PACKING SLIPS
ADDITIONAL TESTING AND INSPECTIONS:	
	CONSTRUCTION
X	CONSTRUCTION INSPECTIONS
NA	CONTRACTOR'S CERTIFIED WELD INSPECTION AND NDE REPORTS
X	ON SITE COLD GALVANIZING VERIFICATION
X	GC AS-BUILT DOCUMENTS
ADDITIONAL TESTING AND INSPECTIONS:	
	POST-CONSTRUCTION
X	MI INSPECTOR REDLINE OR RECORD DRAWING(S)
X	VZW PMI DOCUMENTS
X	PHOTOGRAPHS
ADDITIONAL TESTING AND INSPECTIONS:	

NOTE: X DENOTES A DOCUMENT REQUIRED FOR THE MI REPORT
NA DENOTES A DOCUMENT THAT IS NOT REQUIRED FOR THE MI REPORT

THE MODIFICATION INSPECTION (MI) IS A VISUAL INSPECTION OF MODIFICATIONS AND A REVIEW OF CONSTRUCTION INSPECTIONS AND OTHER REPORTS TO ENSURE THE INSTALLATION WAS CONSTRUCTED IN ACCORDANCE WITH THE CONTRACT DOCUMENTS, NAMELY THE MODIFICATION DRAWINGS, AS DESIGNED BY THE ENGINEER OF RECORD (EOR).

THE MI IS TO CONFIRM INSTALLATION CONFIGURATION AND WORKMANSHIP ONLY AND IS NOT A REVIEW OF THE MODIFICATION DESIGN ITSELF, NOR DOES THE MI INSPECTOR TAKE OWNERSHIP OF THE MODIFICATION DESIGN. OWNERSHIP OF THE STRUCTURAL MODIFICATION DESIGN EFFECTIVENESS AND INTEGRITY RESIDES WITH THE EOR AT ALL TIMES.

TO ENSURE THAT THE REQUIREMENTS OF THE MI ARE MET, IT IS VITAL THAT THE GENERAL CONTRACTOR (GC) AND THE MI INSPECTOR BEGIN COMMUNICATING AND COORDINATING AS SOON AS A PURCHASE ORDER (PO) IS RECEIVED. IT IS EXPECTED THAT EACH PARTY WILL BE PROACTIVE IN REACHING OUT TO THE OTHER PARTY.

MI INSPECTOR

THE MI INSPECTOR IS REQUIRED TO CONTACT THE GC AS SOON AS RECEIVING A PO FOR THE MI TO, AT A MINIMUM:

- REVIEW THE REQUIREMENTS OF THE MI CHECKLIST
- WORK WITH THE GC TO DEVELOP A SCHEDULE TO CONDUCT ON-SITE INSPECTIONS

THE MI INSPECTOR IS RESPONSIBLE FOR COLLECTING ALL GC INSPECTION AND TEST REPORTS, REVIEWING THE DOCUMENTS FOR ADHERENCE TO THE CONTRACT DOCUMENTS, CONDUCTING THE IN-FIELD INSPECTIONS, AND SUBMITTING THE MI REPORT TO EOR.

GENERAL CONTRACTOR

THE GC IS REQUIRED TO CONTACT THE MI INSPECTOR AS SOON AS RECEIVING A PO FOR THE MODIFICATION INSTALLATION OR TURNKEY PROJECT TO, AT A MINIMUM:

- REVIEW THE REQUIREMENTS OF THE MI CHECKLIST
- WORK WITH THE MI INSPECTOR TO DEVELOP A SCHEDULE TO CONDUCT ON-SITE MI INSPECTIONS, INCLUDING FOUNDATION INSPECTIONS
- BETTER UNDERSTAND ALL INSPECTION AND TESTING REQUIREMENTS

THE GC SHALL PERFORM AND RECORD THE TEST AND INSPECTION RESULTS IN ACCORDANCE WITH THE REQUIREMENTS OF THE MI CHECKLIST.

RECOMMENDATIONS

THE FOLLOWING RECOMMENDATIONS AND SUGGESTIONS ARE OFFERED TO ENHANCE THE EFFICIENCY AND EFFECTIVENESS OF DELIVERING AN MI REPORT:

- IT IS SUGGESTED THAT THE GC PROVIDE A MINIMUM OF 5 BUSINESS DAYS NOTICE, PREFERABLY 10, TO THE MI INSPECTOR AS TO WHEN THE SITE WILL BE READY FOR THE MI TO BE CONDUCTED.
- THE GC AND MI INSPECTOR COORDINATE CLOSELY THROUGHOUT THE ENTIRE PROJECT.
- WHEN POSSIBLE, IT IS PREFERRED TO HAVE THE GC AND MI INSPECTOR ON-SITE SIMULTANEOUSLY FOR ANY GUY WIRE TENSIONING OR RE-TENSIONING OPERATIONS.
- IT MAY BE BENEFICIAL TO INSTALL ALL MODIFICATIONS PRIOR TO CONDUCTING THE FOUNDATION INSPECTIONS TO ALLOW THE FOUNDATION AND MI INSPECTION(S) TO COMMENCE WITH ONE SITE VISIT.
- WHEN POSSIBLE, IT IS PREFERRED TO HAVE THE GC AND MI INSPECTOR ON-SITE DURING THE MI TO HAVE ANY DEFICIENCIES CORRECTED DURING THE INITIAL MI. THEREFORE, THE GC MAY CHOOSE TO COORDINATE THE MI CAREFULLY TO ENSURE ALL CONSTRUCTION FACILITIES ARE AT THEIR DISPOSAL WHEN THE MI INSPECTOR IS ON SITE.

CORRECTION OF FAILING MI'S

IF THE MODIFICATION INSTALLATION WOULD FAIL THE MI ("FAILED MI"), THE GC SHALL WORK WITH THE OWNER TO COORDINATE A REMEDIATION PLAN:

- CORRECT FAILING ISSUES TO COMPLY WITH THE SPECIFICATIONS CONTAINED IN THE ORIGINAL CONTRACT DOCUMENTS AND COORDINATE A SUPPLEMENT MI.

REQUIRED PHOTOS

BETWEEN THE GC AND THE MI INSPECTOR THE FOLLOWING PHOTOGRAPHS, AT A MINIMUM, ARE TO BE TAKEN AND INCLUDED IN THE MI REPORT:

- PRE-CONSTRUCTION GENERAL SITE CONDITION
- PHOTOGRAPHS DURING THE REINFORCEMENT MODIFICATION CONSTRUCTION/ERECTION AND INSPECTION
  - RAW MATERIALS
  - PHOTOS OF ALL CRITICAL DETAILS
  - FOUNDATION MODIFICATIONS
  - WELD PREPARATION
  - BOLT INSTALLATION
  - FINAL INSTALLED CONDITION
  - SURFACE COATING REPAIR
- POST CONSTRUCTION PHOTOGRAPHS
  - FINAL INFIELD CONDITION

PHOTOS OF ELEVATED MODIFICATIONS TAKEN ONLY FROM THE GROUND SHALL BE CONSIDERED INADEQUATE.

ALLOWABLE COPING

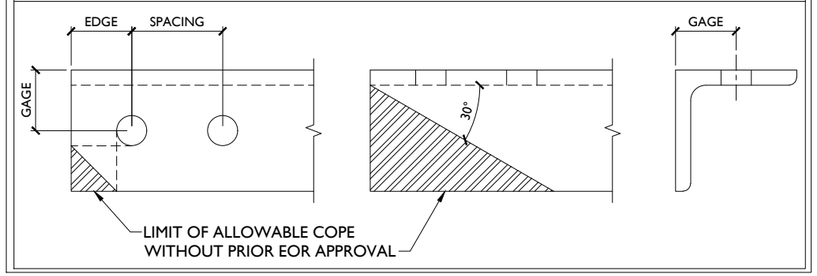

BOLT SCHEDULE (IN.)

BOLT DIAMETER	STANDARD HOLE	SHORT SLOT	MIN. EDGE DISTANCE	SPACING
1/2	9/16	9/16 x 11/16	7/8	1 1/2
5/8	11/16	11/16 x 7/8	1 1/8	1 7/8
3/4	13/16	13/16 x 1	1 1/4	2 1/4
7/8	15/16	15/16 x 1 1/8	1 1/2	2 5/8
1	1 1/16	1 1/16 x 1 5/16	1 3/4	3

WORKABLE GAGES (IN.)

LEG	GAGE
4	2 1/2
3 1/2	2
3	1 3/4
2 1/2	1 3/8
2	1 1/8

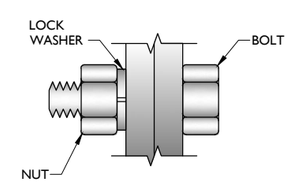

TYP. BOLT ASSEMBLY

NOTES:

1. ALL DIMENSIONS REPRESENTED IN THE ABOVE TABLES ARE AISC MINIMUM REQUIREMENTS. CONTRACTOR SHALL VERIFY EXISTING CONDITIONS IN FIELD AND NOTIFY ENGINEER IF DISTANCES ARE LESS THAN THOSE PROVIDED.
2. THE DIMENSIONS PROVIDED ARE MINIMUM REQUIREMENTS. ACTUAL DIMENSIONS OF PROPOSED MEMBERS WITHIN THESE DRAWINGS MAY VARY FROM THE AISC MINIMUM REQUIREMENTS.
3. SHORT SLOT HOLES SHALL ONLY BE USED WHEN DEPICTED IN THE DRAWINGS
4. MATCH EXISTING GAGES WHEN APPLICABLE, UNLESS MINIMUM EDGE DISTANCES ARE COMPROMISED.

MASER CONSULTING CONNECTICUT
"WILL BE KNOWN AS COLLIERS ENGINEERING & DESIGN IN 2021"
Customer Loyalty *through* Client Satisfaction
www.maserconsulting.com
Office Locations:
- NEW JERSEY
- NEW YORK
- PENNSYLVANIA
- VIRGINIA
- FLORIDA
- NORTH CAROLINA
- SOUTH CAROLINA
- NEW MEXICO
- MARYLAND
- GEORGIA
- TEXAS
- TENNESSEE
- COLORADO

Copyright © 2021. Maser Consulting All Rights Reserved. This drawing and all the information contained herein is authorized for use only by the party for whom the services were contracted or to whom it is certified. This drawing may not be copied, reused, disclosed, distributed or relied upon for any other purpose without the express written consent of Maser Consulting.

verizon

811 Know what's below. Call before you dig.

PROTECT YOURSELF
ALL STATES REQUIRE NOTIFICATION OF EXCAVATORS, DESIGNERS, OR ANY PERSON PREPARING TO DISTURB THE EARTH'S SURFACE ANYWHERE IN ANY STATE

FOR STATE SPECIFIC DIRECT PHONE NUMBERS VISIT: WWW.CALL811.COM

SCALE: AS SHOWN
JOB NUMBER: 21777482A

REV	DATE	DESCRIPTION	DRAWN BY	CHECKED BY
0	6/16/2021	ISSUED FOR CONSTRUCTION	FAC	DH

STATE OF CONNECTICUT
DEREK R. HARTZELL
32710
LICENSED PROFESSIONAL ENGINEER

Derek Hartzell
CONSULTING ENGINEER
LICENSE NUMBER: 32710
MASER CONSULTING
CT. COA. #PEC0000131

Digitally signed by Derek R. Hartzell
Date: 2021.06.16 12:19:10-04'00'

IT IS A VIOLATION OF LAW FOR ANY PERSON, UNLESS THEY ARE ACTING UNDER THE DIRECTION OF THE RESPONSIBLE LICENSED PROFESSIONAL ENGINEER, TO ALTER THIS DOCUMENT.

SITE NAME:

ASHFORD NORTH CT
468148

174 ASHFORD CENTER ROAD
ASHFORD, CT 06278
WINDHAM COUNTY

MT. LAUREL OFFICE
2000 Midlantic Drive
Suite 100
Mount Laurel, NJ 08054
Phone: 856.797.0412
Fax: 856.722.1120

SHEET TITLE: MODIFICATION NOTES

SHEET NUMBER: S-3

NOTE: DO NOT SCALE DRAWINGS FOR CONSTRUCTION.

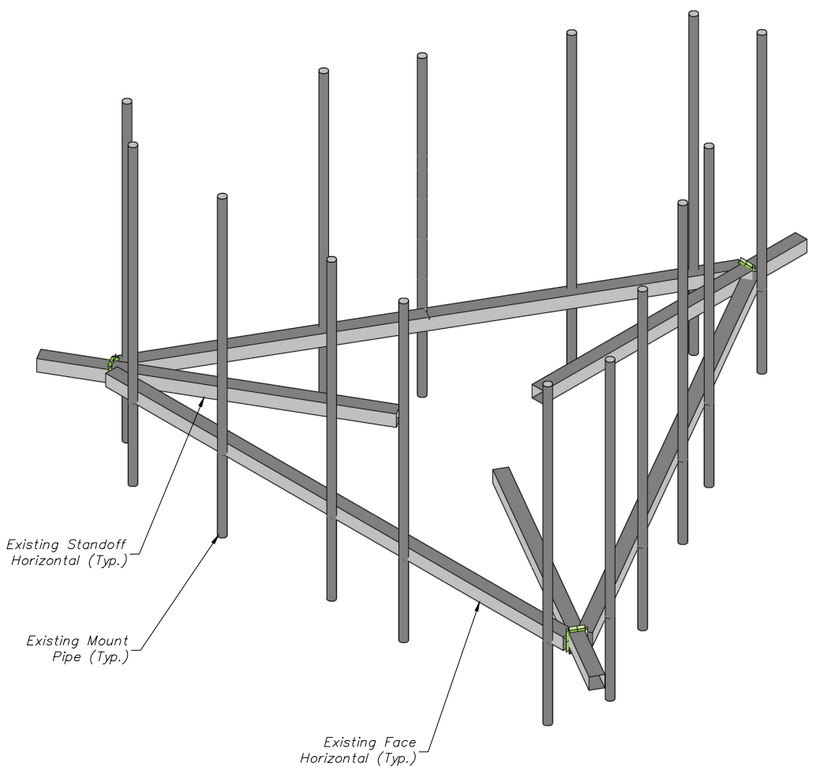

1 EXISTING PLATFORM ISOMETRIC VIEW

SCALE : N.T.S.

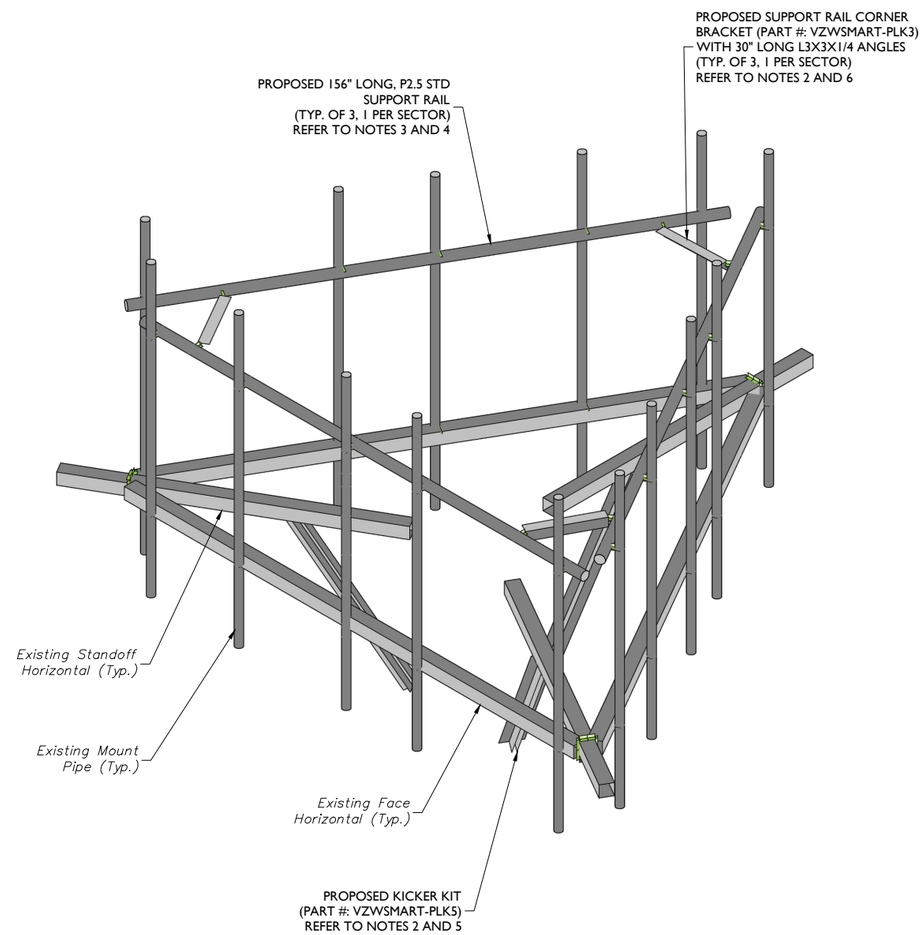

2 PROPOSED PLATFORM ISOMETRIC VIEW

SCALE : N.T.S.

STRUCTURAL NOTES:

1. CONTRACTOR TO INSPECT CLIMBING FACILITIES AT SITE AND ENSURE THAT THE SAFETY CLIMB IS IN GOOD CONDITION AND THAT THE WIRE ROPE DOES NOT OR WILL NOT INTERFERE WITH THE EXISTING OR PROPOSED MOUNT CONNECTIONS. CONTRACTOR SHALL INSTALL SAFETY CLIMB WIRE ROPE GUIDED AROUND MOUNT CONNECTIONS AS NEEDED.

2. INSTALL SHALL NOT CAUSE HARM TO THE STRUCTURE, CLIMBING FACILITY, SAFETY CLIMB, OR ANY SYSTEM INSTALLED ON THE STRUCTURE. TIMELY NOTICE AND DOCUMENTATION SHALL BE PROVIDED BY CONTRACTORS TO THE EOR (OF STRUCTURAL DESIGN) IF AN OBSTRUCTION WAS REQUIRED TO MEET THE RF SYSTEM DESIGN REQUIREMENTS AND PERFORMANCES.

MODIFICATION NOTES:

1. MOUNT MEMBERS NOT SHOWN FOR CLARITY U.N.O.

2. CONTRACTOR TO VERIFY THE LENGTH REQUIRED AND TRIM AS NECESSARY IN ACCORDANCE WITH THE 'STRUCTURAL STEEL' NOTES ON SHEET S-2.

3. RADIO AND/OR TME POSITIONS SHALL BE ADJUSTED VERTICALLY AS NEEDED IN ORDER TO ACHIEVE INSTALLATION OF HORIZONTAL AS SHOWN. EOR SHALL BE NOTIFIED IF EQUIPMENT NEEDS TO BE RELOCATED TO ANOTHER MOUNT PIPE.

4. CONNECT NEW SUPPORT RAIL TO ALL EXISTING VERTICAL MOUNT PIPES WITH CROSSOVER PLATES (PART #: VZWSMART-MSK1).

5. CONNECT OTHER END OF KICKER KIT TO MONOPOLE COLLAR MOUNT ASSEMBLY (PART #: VZWSMART-PLK7).

6. CONTRACTOR SHALL CONNECT PROPOSED L3X3X1/4 ANGLES TO CORNER BRACKETS USING THE PROVIDED (8) 5/8" DIA. BOLTS, (4) BOLTS PER CONNECTION.

MASER CONSULTING CONNECTICUT
WILL BE KNOWN AS COLLIERS ENGINEERING & DESIGN IN 2021
Customer Loyalty *through* Client Satisfaction
www.maserconsulting.com
Office Locations:
- NEW JERSEY
- NEW YORK
- PENNSYLVANIA
- VIRGINIA
- FLORIDA
- NORTH CAROLINA
- SOUTH CAROLINA
- NEW MEXICO
- MARYLAND
- GEORGIA
- TEXAS
- TENNESSEE
- COLORADO

Copyright © 2021. Maser Consulting All Rights Reserved. This drawing and all the information contained herein is authorized for use only by the party for whom the services were contracted or to whom it is certified. This drawing may not be copied, reused, disclosed, distributed or relied upon for any other purpose without the express written consent of Maser Consulting.

verizon

PROTECT YOURSELF
ALL STATES REQUIRE NOTIFICATION OF EXCAVATORS, DESIGNERS, OR ANY PERSON PREPARING TO DISTURB THE EARTH'S SURFACE ANYWHERE IN ANY STATE
811 Know what's below. Call before you dig.
FOR STATE SPECIFIC DIRECT PHONE NUMBERS VISIT: WWW.CALL811.COM

SCALE : AS SHOWN
JOB NUMBER : 21777482A

REV	DATE	DESCRIPTION	DRAWN BY	CHECKED BY
0	6/16/2021	ISSUED FOR CONSTRUCTION	FAC	DH

STATE OF CONNECTICUT DEREK R. HARTZELL 32710 LICENSED PROFESSIONAL ENGINEER

Derek Hartzell
CONSULTING ENGINEER
LICENSE NUMBER: 32710
MASER CONSULTING
CT. COA #: PEC.0000131

Digitally signed by Derek R. Hartzell
Date: 2021.06.16 12:19:10-04'00'

IT IS A VIOLATION OF LAW FOR ANY PERSON, UNLESS THEY ARE ACTING UNDER THE DIRECTION OF THE RESPONSIBLE LICENSED PROFESSIONAL ENGINEER, TO ALTER THIS DOCUMENT.

SITE NAME:
ASHFORD NORTH CT
468148
174 ASHFORD CENTER ROAD
ASHFORD, CT 06278
WINDHAM COUNTY

MT. LAUREL OFFICE
2000 Midlantic Drive
Suite 100
Mount Laurel, NJ 08054
Phone: 856.797.0412
Fax: 856.722.1120

SHEET TITLE :
MODIFICATION DETAILS

SHEET NUMBER :
S-4

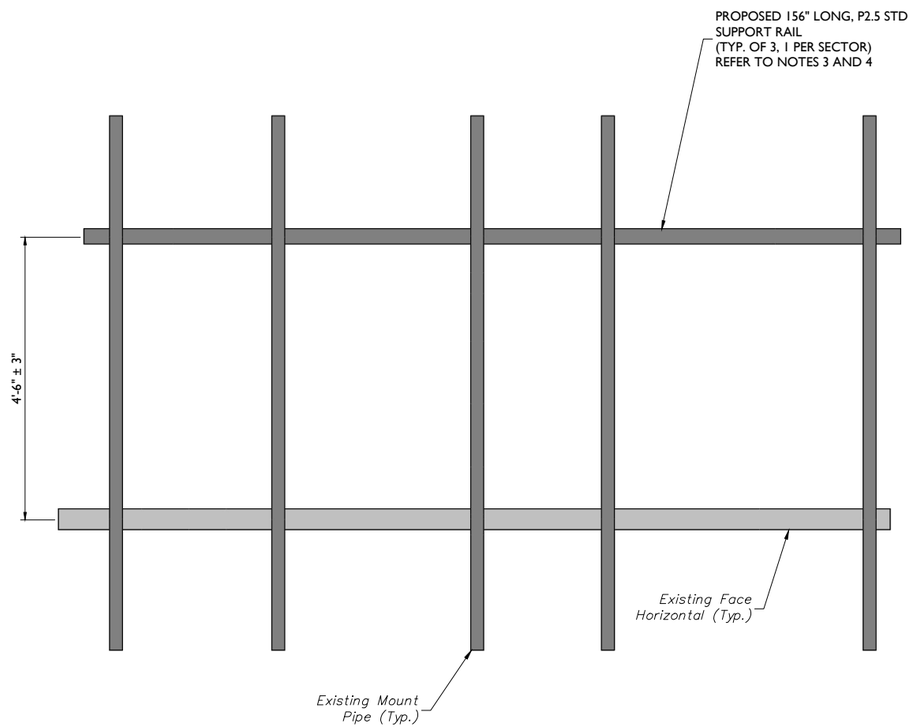

1 PROPOSED FRONT ELEVATION (TYP. ALL SECTORS)

SCALE : N.T.S.

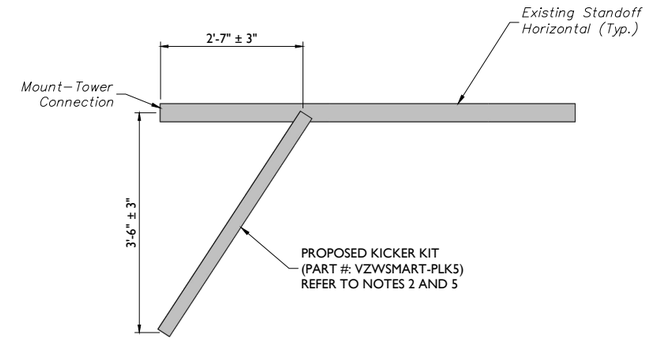

2 PROPOSED SIDE ELEVATION (TYP. ALL SECTORS)

SCALE : N.T.S.

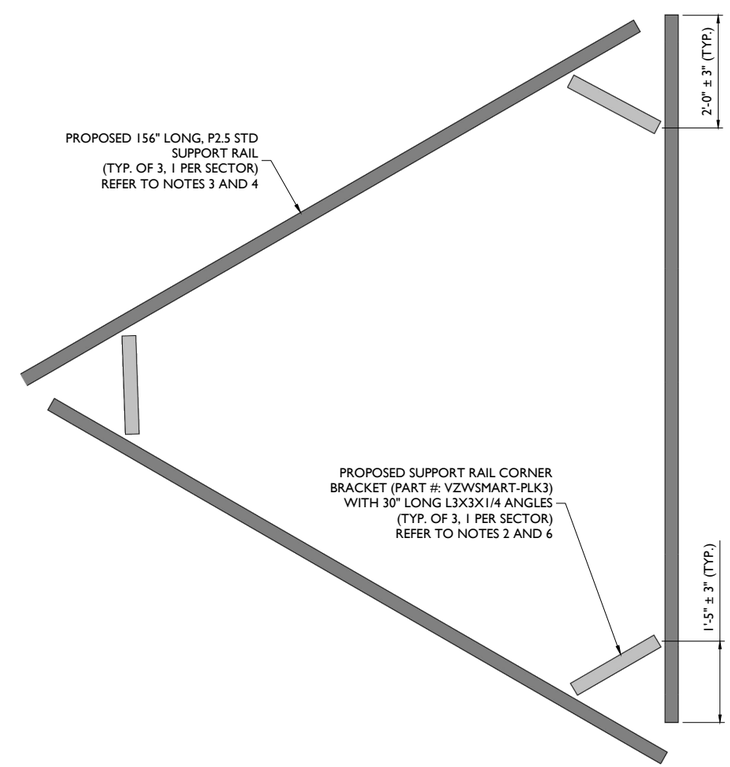

3 PROPOSED PLAN VIEW

SCALE : N.T.S.

MODIFICATION NOTES:

1. MOUNT MEMBERS NOT SHOWN FOR CLARITY U.N.O.
2. CONTRACTOR TO VERIFY THE LENGTH REQUIRED AND TRIM AS NECESSARY IN ACCORDANCE WITH THE 'STRUCTURAL STEEL' NOTES ON SHEET S-2.
3. RADIO AND/OR TME POSITIONS SHALL BE ADJUSTED VERTICALLY AS NEEDED IN ORDER TO ACHIEVE INSTALLATION OF HORIZONTAL AS SHOWN. EOR SHALL BE NOTIFIED IF EQUIPMENT NEEDS TO BE RELOCATED TO ANOTHER MOUNT PIPE.
4. CONNECT NEW SUPPORT RAIL TO ALL EXISTING VERTICAL MOUNT PIPES WITH CROSSOVER PLATES (PART #: VZWSMART-MSK1).
5. CONNECT OTHER END OF KICKER KIT TO MONOPOLE COLLAR MOUNT ASSEMBLY (PART #: VZWSMART-PLK7).
6. CONTRACTOR SHALL CONNECT PROPOSED L3X3X1/4 ANGLES TO CORNER BRACKETS USING THE PROVIDED (8) 5/8" DIA. BOLTS, (4) BOLTS PER CONNECTION.

MASER CONSULTING CONNECTICUT
WILL BE KNOWN AS COLLIERS ENGINEERING & DESIGN IN 2021
Customer Loyalty *through* Client Satisfaction
www.maserconsulting.com
Office Locations:
NEW JERSEY, NEW YORK, PENNSYLVANIA, VIRGINIA, FLORIDA, NORTH CAROLINA, SOUTH CAROLINA, NEW MEXICO, MARYLAND, GEORGIA, TEXAS, TENNESSEE, COLORADO
Copyright © 2021. Maser Consulting All Rights Reserved. This drawing and all the information contained herein is authorized for use only by the party for whom the services were contracted or to whom it is certified. This drawing may not be copied, reused, disclosed, distributed or relied upon for any other purpose without the express written consent of Maser Consulting.

verizon

PROTECT YOURSELF
ALL STATES REQUIRE NOTIFICATION OF EXCAVATORS, DESIGNERS, OR ANY PERSON PREPARING TO DISTURB THE EARTH'S SURFACE ANYWHERE IN ANY STATE
811 Know what's below. Call before you dig.
FOR STATE SPECIFIC DIRECT PHONE NUMBERS VISIT: WWW.CALL811.COM

SCALE : AS SHOWN
JOB NUMBER : 21777482A

REV	DATE	DESCRIPTION	DRAWN BY	CHECKED BY
0	6/16/2021	ISSUED FOR CONSTRUCTION	FAC	DH

STATE OF CONNECTICUT · DEREK R. HARTZELL · 32710 · LICENSED PROFESSIONAL ENGINEER

Derek Hartzell
LICENSE NUMBER: 32710
MASER CONSULTING
CT. COA #PEC0000131

Digitally signed by Derek R. Hartzell
Date: 2021.06.16 12:19:10-04'00'

IT IS A VIOLATION OF LAW FOR ANY PERSON, UNLESS THEY ARE ACTING UNDER THE DIRECTION OF THE RESPONSIBLE LICENSED PROFESSIONAL ENGINEER, TO ALTER THIS DOCUMENT.

SITE NAME:
ASHFORD NORTH CT
468148
174 ASHFORD CENTER ROAD
ASHFORD, CT 06278
WINDHAM COUNTY

MT. LAUREL OFFICE
2000 Midlantic Drive
Suite 100
Mount Laurel, NJ 08054
Phone: 856.797.0412
Fax: 856.722.1120

SHEET TITLE : MODIFICATION DETAILS

SHEET NUMBER : S-5

MOUNT PHOTO 1

MOUNT PHOTO 2

MOUNT PHOTO 3

MOUNT PHOTO 4

MASER CONSULTING CONNECTICUT

WILL BE KNOWN AS COLLIERS ENGINEERING & DESIGN IN 2021

Customer Loyalty *through* Client Satisfaction

www.maserconsulting.com

Office Locations:

- NEW JERSEY
- NEW YORK
- PENNSYLVANIA
- VIRGINIA
- FLORIDA
- NORTH CAROLINA
- SOUTH CAROLINA
- NEW MEXICO
- MARYLAND
- GEORGIA
- TEXAS
- TENNESSEE
- COLORADO

Copyright © 2021. Maser Consulting All Rights Reserved. This drawing and all the information contained herein is authorized for use only by the party for whom the services were contracted or to whom it is certified. This drawing may not be copied, reused, disclosed, distributed or relied upon for any other purpose without the express written consent of Maser Consulting.

verizon

811 Know what's below. Call before you dig.

PROTECT YOURSELF

ALL STATES REQUIRE NOTIFICATION OF EXCAVATORS, DESIGNERS, OR ANY PERSON PREPARING TO DISTURB THE EARTHS SURFACE ANYWHERE IN ANY STATE

FOR STATE SPECIFIC DIRECT PHONE NUMBERS VISIT: WWW.CALL811.COM

SCALE : AS SHOWN

JOB NUMBER : 21777482A

REV	DATE	DESCRIPTION	DRAWN BY	CHECKED BY
.	.	.	.	.
.	.	.	.	.
.	.	.	.	.
0	6/16/2021	ISSUED FOR CONSTRUCTION	FAC	DH

STATE OF CONNECTICUT · DEREK R. HARTZELL · 32710 · LICENSED PROFESSIONAL ENGINEER

Derek Hartzell

LICENSE NUMBER: 32710
MASER CONSULTING
CT. COA #PEN.0001131

Digitally signed by Derek R. Hartzell
Date: 2021.06.16 12:19:10-04'00'

IT IS A VIOLATION OF LAW FOR ANY PERSON, UNLESS THEY ARE ACTING UNDER THE DIRECTION OF THE RESPONSIBLE LICENSED PROFESSIONAL ENGINEER, TO ALTER THIS DOCUMENT.

SITE NAME:

ASHFORD NORTH CT
468148

174 ASHFORD CENTER ROAD
ASHFORD, CT 06278
WINDHAM COUNTY

MT. LAUREL OFFICE
2000 Midlantic Drive
Suite 100
Mount Laurel, NJ 08054

Phone: 856.797.0412
Fax: 856.722.1120

SHEET TITLE : MOUNT PHOTOS

SHEET NUMBER : S-6

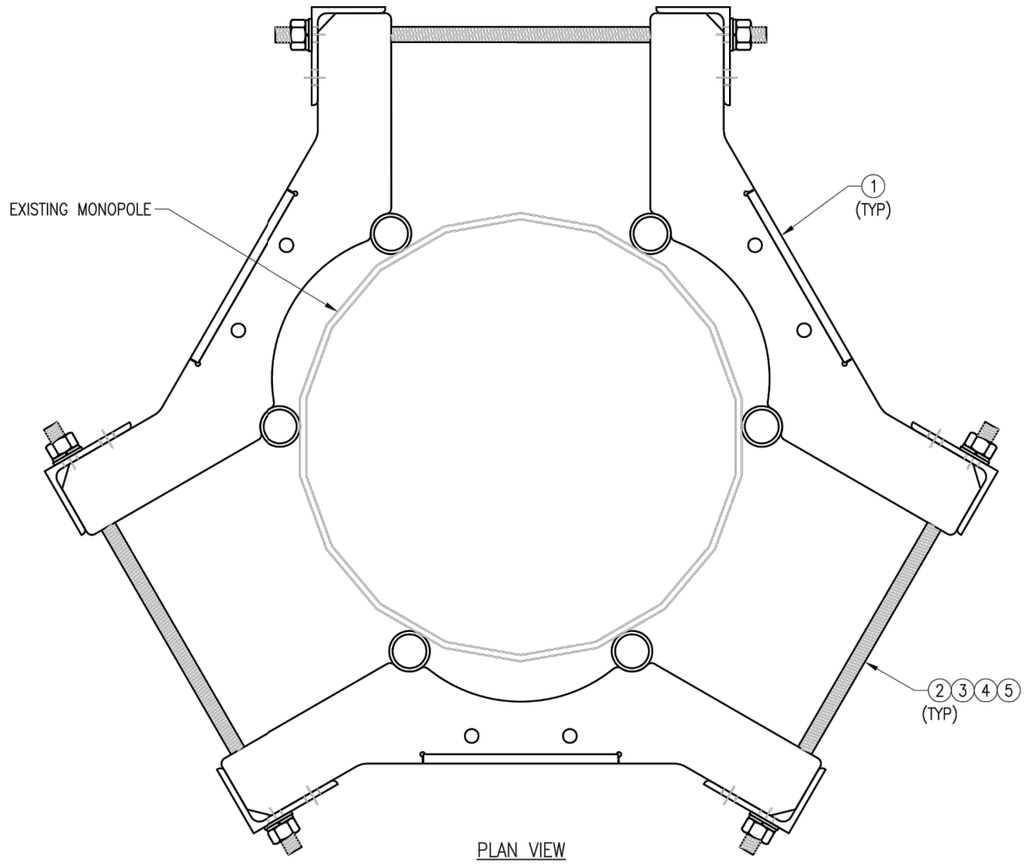

PLAN VIEW
MONOPOLE COLLAR MOUNT ASSEMBLY

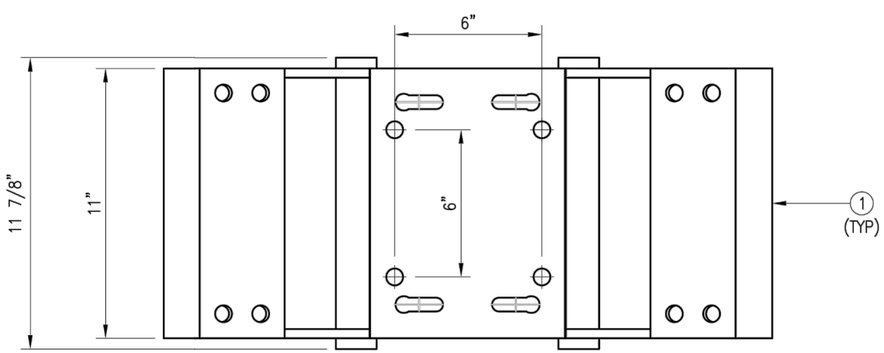

FRONT VIEW

NOTES:
1. FIT 12" TO 45" DIA MONOPOLE.
2. HOT-DIPPED GALVANIZED PER ASTM A123.

VZWSMART-PLK7 (MONOPOLE COLLAR MOUNT ASSEMBLY)

ITEM NO.	QTY.	PART NO.	DESCRIPTION	SHEET #	WT
1	3	CM-1245	COLLAR MOUNT ASSEMBLY	PLK7-F1	147
2	6	---	THREADED ROD 5/8" X 4'-0" A193-B7	---	
3	12	FW-625	5/8" HDG USS FLAT WASHER	---	1
4	12	LW-625	5/8" HDG LOCK WASHER	---	0
5	12	NUT-625	5/8" HDG HEX NUT	---	1
				GALVANIZED WT	150

VzW
SMART Tool©
Vendor

verizon

DRAWN BY: BT | CHECKED BY: HMA/KW

REV.	DESCRIPTION	BY	DATE
0	FIRST ISSUE	BT	05/11/20

SHEET TITLE:
VZWSMART-PLK7
MONOPOLE COLLAR
MOUNT ASSEMBLY

SHEET NUMBER: VZWSMART-PLK7

REV #: 0

NOTE:
THE LOCATION OF KICKER AND EXISTING ANTENNA MOUNT SHOWN ON THE DRAWING IS FOR REPRESENTATION PURPOSE ONLY. SEE INSTALLATION DRAWINGS FOR ACTUAL INSTALLATION OF DETAILS.

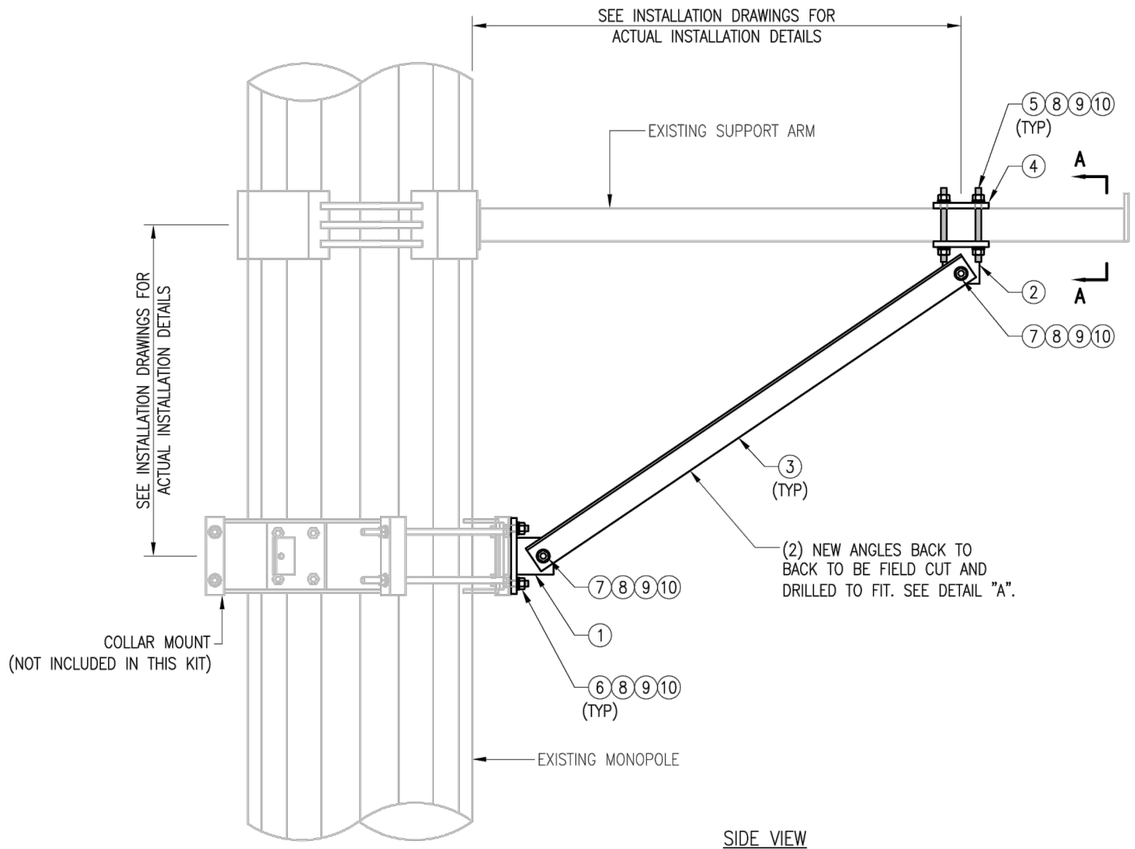

SIDE VIEW
KICKER KIT

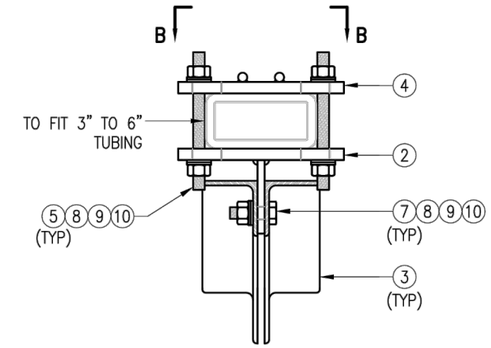

SECTION "A–A"
RECT. HSS MOUNTING

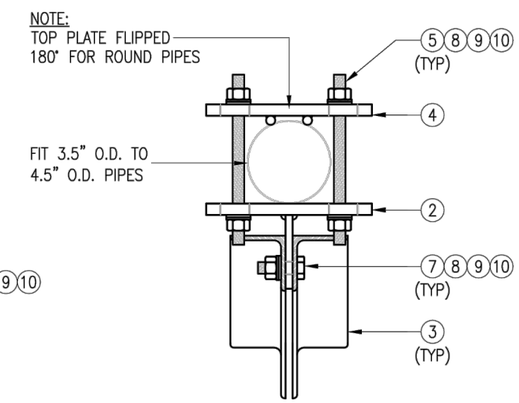

SECTION "A–A"
ROUND PIPE MOUNTING

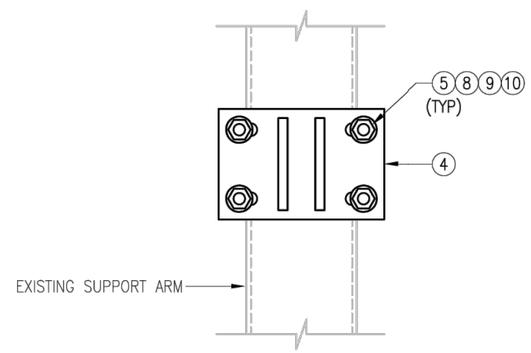

SECTION "B–B"

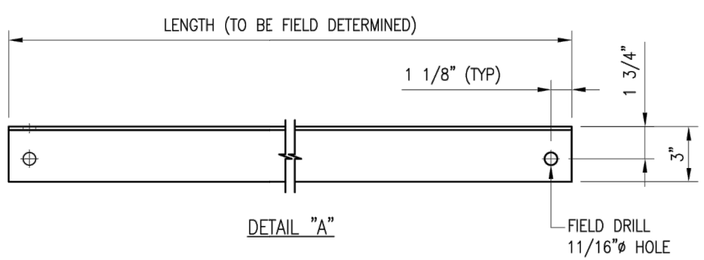

DETAIL "A"

NOTES:
1. ALL HOLES ARE 11/16" DIA. U.N.O
2. HOT–DIPPED GALVANIZED PER ASTM A123.
3. FIT UP TO 6" SQ. TUBING OR 4 1/2" O.D. PIPE

VZWSMART–PLK5 (KICKER KIT)

ITEM NO.	QTY.	PART NO.	DESCRIPTION	SHEET #	WT
1	3	BRKW–XXX	BRACKET WELDMENT A36	PLK5–F3	43.8
2	3	BRKW–XXXX	BRACKET WELDMENT A36	PLK5–F2	35.7
3	6	L331875–8	L 3" X 3" X 3/16" X 8'–0" A36	PLK5–F4	182.9
4	3	PL–KI	PL 5/8" X 6" X 9" A36	PLK5–F1	29.0
5	12	---	THREADED ROD 5/8" DIA. X 1'–0" F1554–36 HDG	---	--
6	6	---	BOLT 5/8" X 2" A325	---	--
7	12	---	BOLT 5/8" X 2 1/2" A325	---	--
8	42	FW–625	5/8" HDG USS FLAT WASHER	---	3
9	42	LW–625	5/8" HDG LOCK WASHER	---	1
10	42	NUT–625	5/8" HDG HEX NUT	---	5
				GALVANIZED WT	291

VzW
SMART Tool©
Vendor

verizon

DRAWN BY: MN | CHECKED BY: HMA/KW

REV.	DESCRIPTION	BY	DATE
0	FIRST ISSUE	MN	05/08/20

SHEET TITLE:
VZWSMART–PLK5
KICKER KIT

SHEET NUMBER: VZWSMART–PLK5
REV #: 0

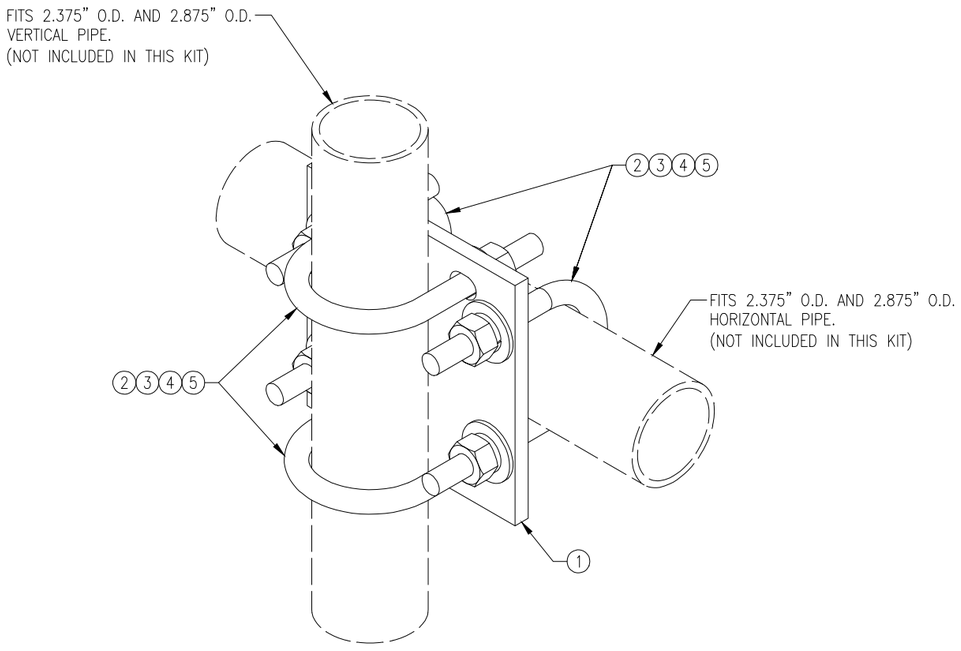

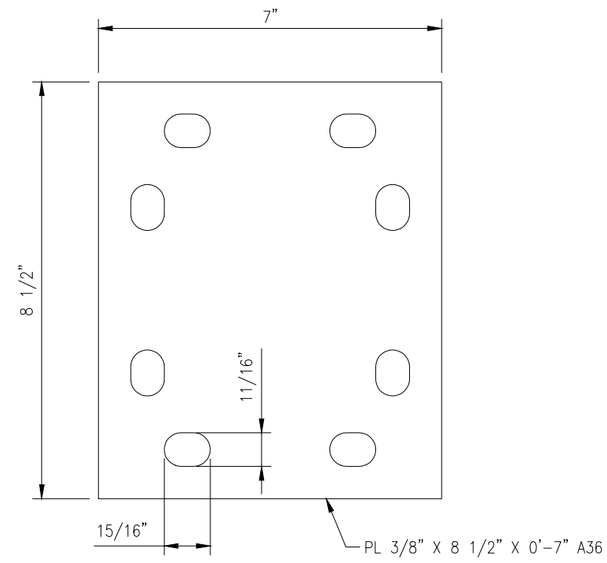

PL375-857

NOTES:
1. HOT-DIPPED GALVANIZED PER ASTM A123.

VZWSMART-MSK1 (CROSSOVER PLATE)

ITEM NO.	QTY.	PART NO.	DESCRIPTION	SHEET #	WT
1	1	PL375-857	PL 3/8" X 8 1/2" X 0'-7" A36	MSK1-F1	6
2	4	MS02-625-300-500	RU-BOLT 5/8" X 3" I.W. X 5" I.L. A36 (OR EQUIV.)	RBC-1	5
3	8	FW-625	5/8" HDG USS FLAT WASHER	---	1
4	8	LW-625	5/8" HDG LOCK WASHER	---	0
5	8	NUT-625	5/8" HDG HEX NUT	---	1
				GALVANIZED WT	14

VzW SMART Tool© Vendor

verizon

DRAWN BY: H.R | CHECKED BY: HMA

REV.	DESCRIPTION	BY	DATE
0	FIRST ISSUE	H.R	05/08/20

SHEET TITLE:

VZWSMART-MSK1 CROSSOVER PLATE

SHEET NUMBER: VZWSMART-MSK1

REV #: 0

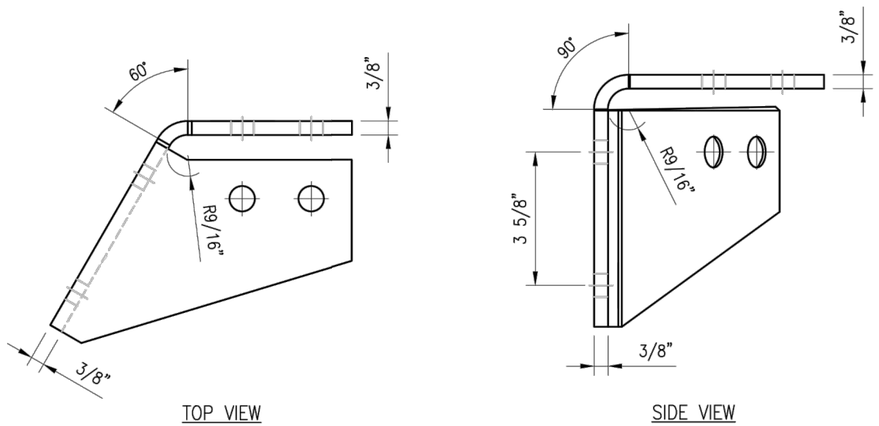

CBP–L

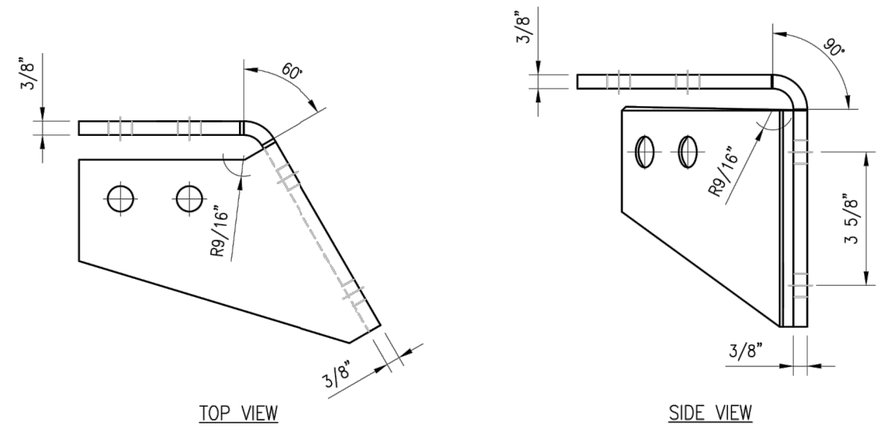

CBP–R

NOTES:
1. HOT–DIPPED GALVANIZED PER ASTM A123.

VZWSMART–PLK3 (SUPPORT RAIL CORNER BRACKET)

ITEM NO.	QTY.	PART NO.	DESCRIPTION	SHEET #	WT
1	1	CBP–L	CORNER BENT PLATE BRACKET	PLK3–F1	9
2	1	CBP–R	CORNER BENT PLATE BRACKET	PLK3–F1	9
3	4	MS02–625–300–500	RU–BOLT 5/8" X 3" I.W. X 5" I.L. A36 (OR EQUIV.)	RBC–1	5
4	8	---	BOLT 5/8" X 2" A325	---	3
5	16	FW–625	5/8" HDG USS FLAT WASHER	---	1
6	16	LW–625	5/8" HDG LOCK WASHER	---	0
7	16	NUT–625	5/8" HDG HEX NUT	---	2
				GALVANIZED WT	30

VzW
SMART Tool©
Vendor

verizon

DRAWN BY: H.R | CHECKED BY: HMA

REV.	DESCRIPTION	BY	DATE
0	FIRST ISSUE	H.R	05/08/20

SHEET TITLE:
VZWSMART–PLK3
SUPPORT RAIL CORNER
BRACKET

SHEET NUMBER: VZWSMART–PLK3

REV #: 0

Site Name: ***ASHFORD NORTH CT***
Cumulative Power Density

Operator	Operating Frequency	Number of Trans.	ERP Per Trans.	Total ERP	Distance to Target	Calculated Power Density	Maximum Permissible Exposure*	Fraction of MPE
	(MHz)		(watts)	(watts)	(feet)	(mW/cm^2)	(mW/cm^2)	(%)
VZW 700	751	4	621	2483	117	0.0065	0.5007	1.30%
VZW CDMA	877.26	2	465	929	117	0.0024	0.5848	0.42%
VZW Cellular	874	4	725	2902	117	0.0076	0.5827	1.31%
VZW PCS	1977.5	4	1580	6319	117	0.0166	1.0000	1.66%
VZW AWS	2120	4	1493	5973	117	0.0157	1.0000	1.57%
VZW CBAND	3730.08	4	6531	26125	117	0.0686	1.0000	6.86%
Total Percentage of Maximum Permissible Exposure								13.12%

*Guidelines adopted by the FCC on August 1, 1996, 47 CFR Part 1 based on NCRP Report 86, 1986 and generally on ANSI/IEEE C95.1-1992
**Calculation includes a -10 dB Off Beam Antenna Pattern Adjustment pursuant to Attachments B and C of the Siting Council's November 10, 2015 Memorandum for Exempt Modification filings

MHz = Megahertz
mW/cm^2 = milliwatts per square centimeter
ERP = Effective Radiated Power

Absolute worst case maximum values used.

Neccog GIS Site

Legend

- Town
- Buildings 2012
- Parcels

Notes

Enter Map Description

0.1 0 0.04 0.1 Miles

WGS_1984_Web_Mercator_Auxiliary_Sphere

© Latitude Geographics Group Ltd.

This map is a user generated static output from an Internet mapping site and is for reference only. Data layers that appear on this map may or may not be accurate, current, or otherwise reliable.

THIS MAP IS NOT TO BE USED FOR NAVIGATION

The Assessor's office is responsible for the maintenance of records on the ownership of properties. Assessments are computed at 70% of the estimated market value of real property at the time of the last revaluation which was 2016.

Ashford, Connecticut

Information on the Property Records for the Municipality of Ashford was last updated on 8/28/2021.

Parcel Information

Location:	174 ASHFORD CENTER RD	Property Use:	Office	Primary Use:	Commercial
Unique ID:	00125600	Map Block Lot:	35 C 7	Acres:	2.92
490 Acres:	0.00	Zone:	C	Volume / Page:	0141/0302
Developers Map / Lot:		Census:	8301000		

Value Information

	Appraised Value	Assessed Value
Land	104,600	73,200
Buildings	393,600	275,500
Detached Outbuildings	57,200	40,000

	Appraised Value	Assessed Value
Total	555,400	388,700

Owner's Information

Owner's Data
P & G REALTY LLC 619 HAZARD AVE ENFIELD CT 06082

Building 1

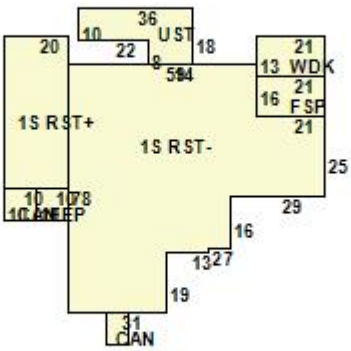

Category:	Restaurant	Use:	Restaurant Comm	GLA:	5,397

Stories:	1.00	Construction:	Masonry	Year Built:	1937
Heating:	Forced Hot Air	Fuel:	Natural Gas	Cooling Percent:	100
Siding:	Vinyl Siding/Stucco	Roof Material:	Asphalt	Beds/Units:	0

Special Features

Com FirePlace	1
Cooler	80
Cooler	108
Freezer Temps	1
Unfinished Basement	960

Attached Components

Type:	Year Built:	Area:
Canopy	1937	100
Canopy	1937	70
Wood Deck	1937	273
Enclosed Porch	1937	100
Screen Porch	1937	252
Utility Storage	1937	472

Detached Outbuildings

Type:	Year Built:	Length:	Width:	Area:
Light 1	2007	0.00	0.00	1
Paving	2007	0.00	0.00	46,738
Light Poles 2	2007	0.00	0.00	1

Owner History - Sales

Owner Name	Volume	Page	Sale Date	Deed Type	Sale Price
P & G REALTY LLC	0141	0302	01/26/2004		$0

Building Permits

Permit Number	Permit Type	Date Opened	Reason
16-14B	Roof	12/02/2015	REMOVE & REPLACE 17 SQ FT OF ROOFING ON BACK OF BUILDING 860-429-1932
14802	HVAC	09/29/2010	PELLET INSERT W/CHIMNEY LINER 429-1932
13674	Roof	10/13/2006	RMV 2 LAYERS & REROOF
000322	Miscellaneous	09/23/1992	

Information Published With Permission From The Assessor

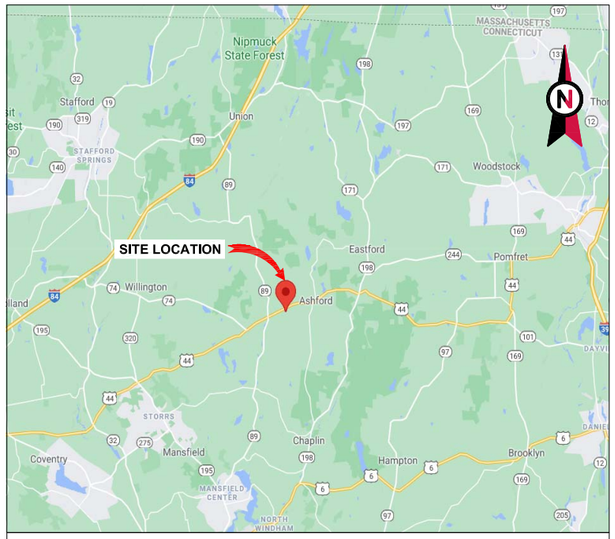

VICINITY MAP

AMERICAN TOWER®

ATC SITE NAME: ASHFORD NORTH CT
ATC SITE NUMBER: 414867
VERIZON SITE NAME: ASHFORD NORTH CT
VERIZON SITE NUMBER:468148
SITE ADDRESS: 174 ASHFORD CENTER ROAD
ASHFORD, CT 06278

LOCATION MAP

VERIZON
ANTENNA AMENDMENT DRAWINGS

COMPLIANCE CODE

ALL WORK SHALL BE PERFORMED AND MATERIALS INSTALLED IN ACCORDANCE WITH THE CURRENT EDITIONS OF THE FOLLOWING CODES AS ADOPTED BY THE LOCAL GOVERNMENT AUTHORITIES. NOTHING IN THESE PLANS IS TO BE CONSTRUED TO PERMIT WORK NOT CONFORMING TO THESE CODES.

1. 2015 INTERNATIONAL BUILDING CODE (IBC)
2. 2014 NATIONAL ELECTRIC CODE (NEC)
3. LOCAL BUILDING CODE
4. CITY/COUNTY ORDINANCES

UTILITY COMPANIES

POWER COMPANY: NORTHEAST UTILITY
PHONE: (800) 286-2000

TELEPHONE COMPANY: UNKNOWN
PHONE: (555) 555-5555

Know what's **below.**
Call before you dig.

PROJECT SUMMARY

SITE ADDRESS:

174 ASHFORD CENTER ROAD

ASHFORD, CT 06278

COUNTY: WINDHAM

GEOGRAPHIC COORDINATES:

LATITUDE: 41.868272

LONGITUDE: -72.145844

GROUND ELEVATION: 582' AMSL

ZONING INFORMATION:

JURISDICTION: WINDHAM COUNTY

PARCEL #: CT-003-35-C-7

PROJECT TEAM

TOWER OWNER:

AMERICAN TOWER
10 PRESIDENTIAL WAY
WOBURN, MA 01801

APPLICANT:

VERIZON WIRELESS

ENGINEER:

ROBERT J. LARA, AIA
2 S UNIVERSITY DR., UNIT 245
PLANTATION, FL 33324
(954) 577-4668
rlara@morrisonhershfield.com

PROPERTY OWNER:

P & G REALTY LLC
174 ASHFORD CENTER ROAD
ASHFORD, CT 06278

PROJECT DESCRIPTION

THE PROPOSED PROJECT INCLUDES MODIFYING GROUND BASED AND TOWER MOUNTED EQUIPMENT AS INDICATED PER BELOW:
TOWER WORK:
REMOVE (6) RRH(s)
INSTALL (1) MOUNT MODIFICATION, (3) ANTENNA(s), (6) RRH(s) AND (3) DIPLEXER(s)
EXISTING (12) ANTENNA(s), (2) OVP(s), 16 COAX CABLE(s) AND 2 HYBRID CABLE(s) TO REMAIN

GROUND WORK:
REMOVE (3) RRH(s)

THE PROPOSED PROJECT DOES NOT INCLUDE ELECTRICAL SCOPE

PROJECT NOTES

1. THE FACILITY IS UNMANNED.
2. A TECHNICIAN WILL VISIT THE SITE APPROXIMATELY ONCE A MONTH FOR ROUTINE INSPECTION AND MAINTENANCE.
3. THE PROJECT WILL NOT RESULT IN ANY SIGNIFICANT LAND DISTURBANCE OR EFFECT OF STORM WATER DRAINAGE.
4. NO SANITARY SEWER, POTABLE WATER OR TRASH DISPOSAL IS REQUIRED.
5. HANDICAP ACCESS IS NOT REQUIRED.
6. THE PROJECT DEPICTED IN THESE PLANS QUALIFIES AS AN ELIGIBLE FACILITIES REQUEST ENTITLED TO EXPEDITED REVIEW UNDER 47 U.S.C. § 1455(A) AS A MODIFICATION OF AN EXISTING WIRELESS TOWER THAT INVOLVES THE COLLOCATION, REMOVAL, AND/OR REPLACEMENT OF TRANSMISSION EQUIPMENT THAT IS NOT A SUBSTANTIAL CHANGE UNDER CFR § 1.61000 (B)(7).

PROJECT LOCATION DIRECTIONS

I-84 WEST TO EXIT 69. TAKE A RIGHT AT THE END OF THE RAMP ONTO RTE 74 EAST. FOLLOW UNTIL YOU REACH THE JUNCTION OF RTE 44. TAKE A LEFT ONTO RTE 44 EAST. FOLLOW RTE 44 FOR 1.8 MILES UNTIL YOU REACH THE MIDWAY RESTAURANT ON YOUR RIGHT. MONOPOLE IS LOCATED BEHIND THE RESTAURANT. GATE COMBO 4667. T1'S MOUNTED IN OUTDOOR HOFFMAN BOX.

SHEET INDEX

SHEET NO:	DESCRIPTION:	REV:	DATE:	BY:
G-001	TITLE SHEET	0	08/04/21	XL
G-002	GENERAL NOTES	0	08/04/21	XL
C-101	DETAILED COMPOUND PLAN	0	08/04/21	XL
C-201	TOWER ELEVATION	0	08/04/21	XL
C-401	ANTENNA INFORMATION & SCHEDULE	0	08/04/21	XL
C-501	CONSTRUCTION DETAILS	0	08/04/21	XL
E-501	GROUNDING DETAILS	0	08/04/21	XL
R-601	SUPPLEMENTAL			
R-602	SUPPLEMENTAL			
	(11) MOUNT MODIFICATION DRAWING SHEETS BY MASER CONSULTING DATED 06/16/21 ATTACHED TO THE END OF THE PLAN SET			

AMERICAN TOWER®

MORRISON HERSHFIELD
2 S UNIVERSITY DR., UNIT 245
PLANTATIONS, FL 33324
Tel: 954.577.4655
www.morrisonhershfield.com

DO NOT SCALE DRAWING. CONTRACTOR MUST VERIFY ALL DIMENSIONS AND ADVISE CONSULTANTS OF ANY ERRORS OR OMISSIONS. THE INFORMATION CONTAINED IN THIS SET OF DOCUMENTS IS PROPRIETARY BY NATURE. ANY USE OR DISCLOSURE OTHER THAN WHICH IS RELATED TO NAMED CLIENT IS STRICTLY PROHIBITED. NEITHER THE ARCHITECT NOR THE ENGINEER WILL BE PROVIDING ON-SITE CONSTRUCTION REVIEW OF THIS PROJECT. ALL PREVIOUS ISSUES OF THIS DRAWING ARE SUPERSEDED BY THE LATEST REVISION.

REV.	DESCRIPTION	BY	DATE
A	PRELIM	RM	07/02/21
0	FINAL	XL	08/04/21

ATC SITE NUMBER:
414867

ATC SITE NAME:
ASHFORD NORTH CT

VERIZON SITE NAME:
ASHFORD NORTH CT

SITE ADDRESS:
174 ASHFORD CENTER ROAD
ASHFORD, CT 06278

SEAL:

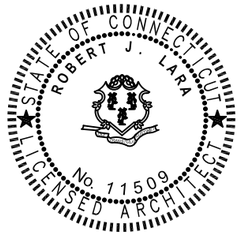

ROBERT JERRY LARA
REGISTERED ARCHITECT
STATE OF CONNECTICUT
11509

verizon

DATE DRAWN:	07/02/21
ATC JOB NO:	13696208
CUSTOMER ID:	ASHFORD NORTH CT
CUSTOMER #:	468148

TITLE SHEET

SHEET NUMBER: G-001

REVISION: 0

Copyright © 2021 ATC IP LLC, All Rights Reserved.

GENERAL CONSTRUCTION NOTES:

1. OWNER FURNISHED MATERIALS, VERIZON "THE COMPANY" WILL PROVIDE AND THE CONTRACTOR WILL INSTALL

   A. BTS EQUIPMENT FRAME (PLATFORM) AND ICEBRIDGE SHELTER (GROUND BUILD/CO-LOCATE ONLY)
   B. AC/TELCO INTERFACE BOX (PPC)
   C. ICE BRIDGE (CABLE TRAY WITH COVER) (GROUND BUILD/CO-LOCATE ONLY, GC TO FURNISH AND INSTALL FOR ROOFTOP INSTALLATION)
   D. TOWERS, MONOPOLES
   E. TOWER LIGHTING
   F. GENERATORS & LIQUID PROPANE TANK
   G. ANTENNA STANDARD BRACKETS, FRAMES AND PIPES FOR MOUNTING
   H. ANTENNAS (INSTALLED BY OTHERS)
   I. TRANSMISSION LINE
   J. TRANSMISSION LINE JUMPERS
   K. TRANSMISSION LINE CONNECTORS WITH WEATHERPROOFING KITS
   L. TRANSMISSION LINE GROUND KITS
   M. HANGERS
   N. HOISTING GRIPS
   O. BTS EQUIPMENT

2. THE CONTRACTOR IS RESPONSIBLE TO PROVIDE ALL OTHER MATERIALS FOR THE COMPLETE INSTALLATION OF THE SITE INCLUDING, BUT NOT LIMITED TO, SUCH MATERIALS AS FENCING, STRUCTURAL STEEL SUPPORTING SUB-FRAME FOR PLATFORM, ROOFING LABOR AND MATERIALS, GROUNDING RINGS, GROUNDING WIRES, COPPER-CLAD OR XIT CHEMICAL GROUND ROD(S), BUSS BARS, TRANSFORMERS AND DISCONNECT SWITCHES WHERE APPLICABLE, TEMPORARY ELECTRICAL POWER, CONDUIT, LANDSCAPING COMPOUND STONE, CRANES, CORE DRILLING, SLEEPERS AND RUBBER MATTING, REBAR, CONCRETE CAISSONS, PADS AND/OR AUGER MOUNTS, MISCELLANEOUS FASTENERS, CABLE TRAYS, NON-STANDARD ANTENNA FRAMES AND ALL OTHER MATERIAL AND LABOR REQUIRED TO COMPLETE THE JOB ACCORDING TO THE DRAWINGS AND SPECIFICATIONS. IT IS THE POSITION OF VERIZON TO APPLY FOR PERMITTING AND CONTRACTOR RESPONSIBLE FOR PICKUP AND PAYMENT OF REQUIRED PERMITS.

3. ALL WORK SHALL CONFORM TO ALL CURRENT APPLICABLE FEDERAL, STATE, AND LOCAL CODES, INCLUDING ANSI/EIA/TIA-222, AND COMPLY WITH ATC CONSTRUCTION SPECIFICATIONS.

4. CONTRACTOR SHALL CONTACT LOCAL 811 FOR IDENTIFICATION OF UNDERGROUND UTILITIES PRIOR TO START OF CONSTRUCTION.

5. CONTRACTOR SHALL BE RESPONSIBLE FOR COORDINATING ALL REQUIRED INSPECTIONS.

6. ALL DIMENSIONS TO, OF, AND ON EXISTING BUILDINGS, DRAINAGE STRUCTURES, AND SITE IMPROVEMENTS SHALL BE VERIFIED IN FIELD BY CONTRACTOR WITH ALL DISCREPANCIES REPORTED TO THE ENGINEER.

7. DO NOT CHANGE SIZE OR SPACING OF STRUCTURAL ELEMENTS.

8. DETAILS SHOWN ARE TYPICAL; SIMILAR DETAILS APPLY TO SIMILAR CONDITIONS UNLESS OTHERWISE NOTED.

9. THESE DRAWINGS DO NOT INCLUDE NECESSARY COMPONENTS FOR CONSTRUCTION SAFETY WHICH SHALL BE THE SOLE RESPONSIBILITY OF THE CONTRACTOR.

10. CONTRACTOR SHALL BRACE STRUCTURES UNTIL ALL STRUCTURAL ELEMENTS NEEDED FOR STABILITY ARE INSTALLED. THESE ELEMENTS ARE AS FOLLOWS: LATERAL BRACING, ANCHOR BOLTS, ETC.

11. CONTRACTOR SHALL DETERMINE EXACT LOCATION OF EXISTING UTILITIES, GROUNDS DRAINS, DRAIN PIPES, VENTS, ETC. BEFORE COMMENCING WORK.

12. INCORRECTLY FABRICATED, DAMAGED, OR OTHERWISE MISFITTING OR NONCONFORMING MATERIALS OR CONDITIONS SHALL BE REPORTED TO THE VERIZON REP PRIOR TO REMEDIAL OR CORRECTIVE ACTION. ANY SUCH REMEDIAL ACTION SHALL REQUIRE WRITTEN APPROVAL BY THE VERIZON REP PRIOR TO PROCEEDING.

13. EACH CONTRACTOR SHALL COOPERATE WITH THE VERIZON REP, AND COORDINATE HIS WORK WITH THE WORK OF OTHERS.

14. CONTRACTOR SHALL REPAIR ANY DAMAGE CAUSED BY CONSTRUCTION OF THIS PROJECT TO MATCH EXISTING PRE-CONSTRUCTION CONDITIONS TO THE SATISFACTION OF THE VERIZON CONSTRUCTION MANAGER.

15. ALL CABLE/CONDUIT ENTRY/EXIT PORTS SHALL BE WEATHERPROOFED DURING INSTALLATION USING A SILICONE SEALANT.

16. WHERE EXISTING CONDITIONS DO NOT MATCH THOSE SHOWN IN THIS PLAN SET, CONTRACTOR SHALL NOTIFY THE VERIZON REP AND ENGINEER OF RECORD IMMEDIATELY.

17. CONTRACTOR SHALL ENSURE ALL SUBCONTRACTORS ARE PROVIDED WITH A COMPLETE AND CURRENT SET OF DRAWINGS AND SPECIFICATIONS FOR THIS PROJECT.

18. CONTRACTOR SHALL REMOVE ALL RUBBISH AND DEBRIS FROM THE SITE AT THE END OF EACH DAY.

19. CONTRACTOR SHALL COORDINATE WORK SCHEDULE WITH AMERICAN TOWER CORPORATION (ATC) AND TAKE PRECAUTIONS TO MINIMIZE IMPACT AND DISRUPTION OF OTHER OCCUPANTS OF THE FACILITY.

20. CONTRACTOR SHALL FURNISH VERIZON AND AMERICAN TOWER CORPORATION (ATC) WITH A PDF MARKED UP AS-BUILT SET OF DRAWINGS UPON COMPLETION OF WORK.

21. PRIOR TO SUBMISSION OF BID, CONTRACTOR SHALL COORDINATE WITH VERIZON REP TO DETERMINE WHAT, IF ANY, ITEMS WILL BE PROVIDED. ALL ITEMS NOT PROVIDED SHALL BE PROVIDED AND INSTALLED BY THE CONTRACTOR. CONTRACTOR WILL INSTALL ALL ITEMS PROVIDED.

22. PRIOR TO SUBMISSION OF BID, CONTRACTOR SHALL COORDINATE WITH VERIZON REP TO DETERMINE IF ANY PERMITS WILL BE OBTAINED BY CONTRACTOR. ALL REQUIRED PERMITS NOT OBTAINED BY VERIZON MUST BE OBTAINED, AND PAID FOR, BY THE CONTRACTOR.

23. CONTRACTOR SHALL INSTALL ALL SITE SIGNAGE IN ACCORDANCE WITH VERIZON SPECIFICATIONS AND REQUIREMENTS.

24. CONTRACTOR SHALL SUBMIT ALL SHOP DRAWINGS TO VERIZON FOR REVIEW AND APPROVAL PRIOR TO FABRICATION.

25. ALL EQUIPMENT SHALL BE INSTALLED ACCORDING TO MANUFACTURER'S SPECIFICATIONS AND LOCATED ACCORDING TO VERIZON SPECIFICATIONS, AND AS SHOWN IN THESE PLANS.

26. THE CONTRACTOR SHALL SUPERVISE AND DIRECT THE PROJECT DESCRIBED HEREIN. THE CONTRACTOR SHALL BE SOLELY RESPONSIBLE FOR ALL THE CONSTRUCTION MEANS, METHODS, TECHNIQUES, SEQUENCES AND PROCEDURES AND FOR COORDINATING ALL PORTIONS OF THE WORK UNDER THE CONTRACT.

27. CONTRACTOR SHALL NOTIFY VERIZON REP A MINIMUM OF 48 HOURS IN ADVANCE OF POURING CONCRETE OR BACKFILLING ANY UNDERGROUND UTILITIES, FOUNDATIONS OR SEALING ANY WALL, FLOOR OR ROOF PENETRATIONS FOR ENGINEERING REVIEW AND APPROVAL.

28. CONTRACTOR SHALL BE RESPONSIBLE FOR SITE SAFETY INCLUDING COMPLIANCE WITH ALL APPLICABLE OSHA STANDARDS AND RECOMMENDATIONS AND SHALL PROVIDE ALL NECESSARY SAFETY DEVICES INCLUDING PPE AND PPM AND CONSTRUCTION DEVICES SUCH AS WELDING AND FIRE PREVENTION, TEMPORARY SHORING, SCAFFOLDING, TRENCH BOXES/SLOPING, BARRIERS, ETC.

29. THE CONTRACTOR SHALL PROTECT AT HIS OWN EXPENSE, ALL EXISTING FACILITIES AND SUCH OF HIS NEW WORK LIABLE TO INJURY DURING THE CONSTRUCTION PERIOD. ANY DAMAGE CAUSED BY NEGLECT ON THE PART OF THIS CONTRACTOR OR HIS REPRESENTATIVES, OR BY THE ELEMENTS DUE TO NEGLECT ON THE PART OF THIS CONTRACTOR OR HIS REPRESENTATIVES, EITHER TO THE EXISTING WORK, OR TO HIS WORK OR THE WORK OF ANY OTHER CONTRACTOR, SHALL BE REPAIRED AT HIS EXPENSE TO THE OWNER'S SATISFACTION.

30. ALL WORK SHALL BE INSTALLED IN A FIRST CLASS, NEAT AND WORKMANLIKE MANNER BY MECHANICS SKILLED IN THE TRADE INVOLVED. THE QUALITY OF WORKMANSHIP SHALL BE SUBJECT TO THE APPROVAL OF THE VERIZON REP. ANY WORK FOUND BY THE VERIZON REP TO BE OF INFERIOR QUALITY AND/OR WORKMANSHIP SHALL BE REPLACED AND/OR REWORKED AT CONTRACTOR EXPENSE UNTIL APPROVAL IS OBTAINED.

31. IN ORDER TO ESTABLISH STANDARDS OF QUALITY AND PERFORMANCE, ALL TYPES OF MATERIALS LISTED HEREINAFTER BY MANUFACTURER'S NAMES AND/OR MANUFACTURER'S CATALOG NUMBER SHALL BE PROVIDED BY THESE MANUFACTURERS AS SPECIFIED.

32. VERIZON FURNISHED EQUIPMENT SHALL BE PICKED-UP AT THE VERIZON WAREHOUSE, NO LATER THAN 48HR AFTER BEING NOTIFIED INSURED, STORED, UNCRATE, PROTECTED AND INSTALLED BY THE CONTRACTOR WITH ALL APPURTENANCES REQUIRED TO PLACE THE EQUIPMENT IN OPERATION, READY FOR USE. THE CONTRACTOR SHALL BE RESPONSIBLE FOR THE EQUIPMENT AFTER PICKING IT UP.

33. VERIZON OR HIS ARCHITECT/ENGINEER RESERVES THE RIGHT TO REJECT ANY EQUIPMENT OR MATERIALS WHICH, IN HIS OWN OPINION ARE NOT IN COMPLIANCE WITH THE CONTRACT DOCUMENTS, EITHER BEFORE OR AFTER INSTALLATION AND THE EQUIPMENT SHALL BE REPLACED WITH EQUIPMENT CONFORMING TO THE REQUIREMENTS OF THE CONTRACT DOCUMENTS BY THE CONTRACTOR AT NO COST TO VERIZON OR THEIR ARCHITECT/ENGINEER.

SPECIAL CONSTRUCTION ANTENNA INSTALLATION NOTES:

1. WORK INCLUDED:

   A. ANTENNA AND COAXIAL CABLES ARE FURNISHED BY VERIZON UNDER A SEPARATE CONTRACT. THE CONTRACTOR SHALL ASSIST ANTENNA INSTALLATION CONTRACTOR IN TERMS OD COORDINATION AND SITE ACCESS. ERECTION SUBCONTRACTOR SHALL BE RESPONSIBLE FOR THE PROTECTION OF PERSONNEL AND

   B. INSTALL ANTENNA AS INDICATE ON DRAWINGS AND VERIZON SPECIFICATIONS.

   C. INSTALL GALVANIZED STEEL ANTENNA MOUNTS AS INDICATED ON DRAWINGS

   D. INSTALL FURNISHED GALVANIZED STEEL OR ALUMINUM WAVEGUIDE.

   E. CONTRACTOR SHALL PROVIDE FOUR (4) SETS OF SWEEP TESTS USING ANRITZU-PACKARD 8713B RF SCALAR NETWORK ANALYZER. SUBMIT FREQUENCY DOMAIN REFLECTOMETER(FDR) TESTS RESULTS TO THE PROJECT MANAGER. SWEEP TESTS SHALL BE AS PER ATTACHED RFS "MINIMUM FIELD TESTING RECOMMENDED FOR ANTENNA AND HELIAX COAXIAL CABLE SYSTEMS" DATED 10/5/93. TESTING SHALL BE PERFORMED BY AN INDEPENDENT TESTING SERVICE AND BE BOUND AND SUBMITTED WITHIN ONE WEEK OF WORK COMPLETION.

   F. INSTALL COAXIAL CABLES AND TERMINATING BETWEEN ANTENNAS AND EQUIPMENT PER MANUFACTURER'S RECOMMENDATIONS. WEATHERPROOF ALL CONNECTIONS BETWEEN THE ANTENNA AND EQUIPMENT PER MANUFACTURER'S REQUIREMENTS. TERMINATE ALL COAXIAL CABLE THREE (3) FEET IN EXCESS OF ENTRY PORT LOCATION UNLESS OTHERWISE STATED.

   G. ANTENNA AND COAXIAL CABLE GROUNDING:

2. ALL EXTERIOR #6 GREED GROUND WIRE "DAISY CHAIN" CONNECTIONS ARE TO BE WEATHER SEALED WITH RFS CONNECTORS/SPLICE WEATHERPROOFING KIT #221213 OR EQUAL.

3. ALL COAXIAL CABLE GROUNDING KITS ARE TO BE INSTALLED ON STRAIGHT RUNS OF COAXIAL CABLE (NOT WITHIN BENDS)

ALL DISCREPANCIES FROM WHAT IS SHOWN ON THESE CONSTRUCTION DRAWINGS SHALL BE COMMUNICATED TO ATC ENGINEERING IMMEDIATELY FOR CORRECTION OR RE-DESIGN. FAILURE TO COMMUNICATE DIRECTLY WITH ATC ENGINEERING OR ANY CHANGES FROM THE DESIGN CONDUCTED WITHOUT PRIOR APPROVAL FROM ATC ENGINEERING SHALL BE THE SOLE RESPONSIBILITY OF THE GENERAL CONTRACTOR.

AMERICAN TOWER®

MORRISON HERSHFIELD
2 S UNIVERSITY DR., UNIT 245
PLANTATIONS, FL 33324
Tel: 954.577.4655
www.morrisonhershfield.com

DO NOT SCALE DRAWING. CONTRACTOR MUST VERIFY ALL DIMENSIONS AND ADVISE CONSULTANTS OF ANY ERRORS OR OMISSIONS. THE INFORMATION CONTAINED IN THIS SET OF DOCUMENTS IS PROPRIETARY BY NATURE. ANY USE OR DISCLOSURE OTHER THAN WHICH IS RELATED TO NAMED CLIENT IS STRICTLY PROHIBITED. NEITHER THE ARCHITECT NOR THE ENGINEER WILL BE PROVIDING ON-SITE CONSTRUCTION REVIEW OF THIS PROJECT. ALL PREVIOUS ISSUES OF THIS DRAWING ARE SUPERSEDED BY THE LATEST REVISION.

REV.	DESCRIPTION	BY	DATE
A	PRELIM	RM	07/02/21
0	FINAL	XL	08/04/21

ATC SITE NUMBER:
414867

ATC SITE NAME:
ASHFORD NORTH CT

VERIZON SITE NAME:
ASHFORD NORTH CT

SITE ADDRESS:
174 ASHFORD CENTER ROAD
ASHFORD, CT 06278

SEAL:

STATE OF CONNECTICUT
ROBERT J. LARA
No. 11509
LICENSED ARCHITECT

ROBERT JERRY LARA
REGISTERED ARCHITECT
STATE OF CONNECTICUT
11509

verizon

DATE DRAWN:	07/02/21
ATC JOB NO:	13696208
CUSTOMER ID:	ASHFORD NORTH CT
CUSTOMER #:	468148

GENERAL NOTES

SHEET NUMBER:	REVISION:
G-002	0

Copyright © 2021 ATC IP LLC, All Rights Reserved.

SITE PLAN NOTES:

1. THIS SITE PLAN REPRESENTS THE BEST PRESENT KNOWLEDGE AVAILABLE TO THE ENGINEER AT THE TIME OF THIS DESIGN. THE CONTRACTOR SHALL VISIT THE SITE PRIOR TO CONSTRUCTION AND VERIFY ALL EXISTING CONDITIONS RELATED TO THE SCOPE OF WORK FOR THIS PROJECT.

2. ICE BRIDGE, CABLE LADDER, COAX PORT, AND COAX CABLE ARE SHOWN FOR REFERENCE ONLY. CONTRACTOR SHALL CONFIRM THE EXACT LOCATION OF ALL PROPOSED AND EXISTING EQUIPMENT AND STRUCTURES DEPICTED ON THIS PLAN. BEFORE UTILIZING EXISTING CABLE SUPPORTS, COAX PORTS, INSTALLING NEW PORTS OR ANY OTHER EQUIPMENT, CONTRACTOR SHALL VERIFY ALL ASPECTS OF THE COMPONENTS MEET THE ATC SPECIFICATIONS.

3. THIS PROJECT INCLUDES NO INSTALL OR MODIFICATION AT GRADE.

LEGEND

⊗	GROUNDING TEST WELL
ATS	AUTOMATIC TRANSFER SWITCH
B	BOLLARD
CSC	CELL SITE CABINET
D	DISCONNECT
E	ELECTRICAL
F	FIBER
GEN	GENERATOR
G	GENERATOR RECEPTACAL
HH, V	HAND HOLE, VAULT
IB	ICE BRIDGE
K	KENTROX BOX
LC	LIGHTING CONTROL
M	METER
PB	PULL BOX
PP	POWER POLE
T	TELCO
TRN	TRANSFORMER
—— x ——	CHAINLINK FENCE

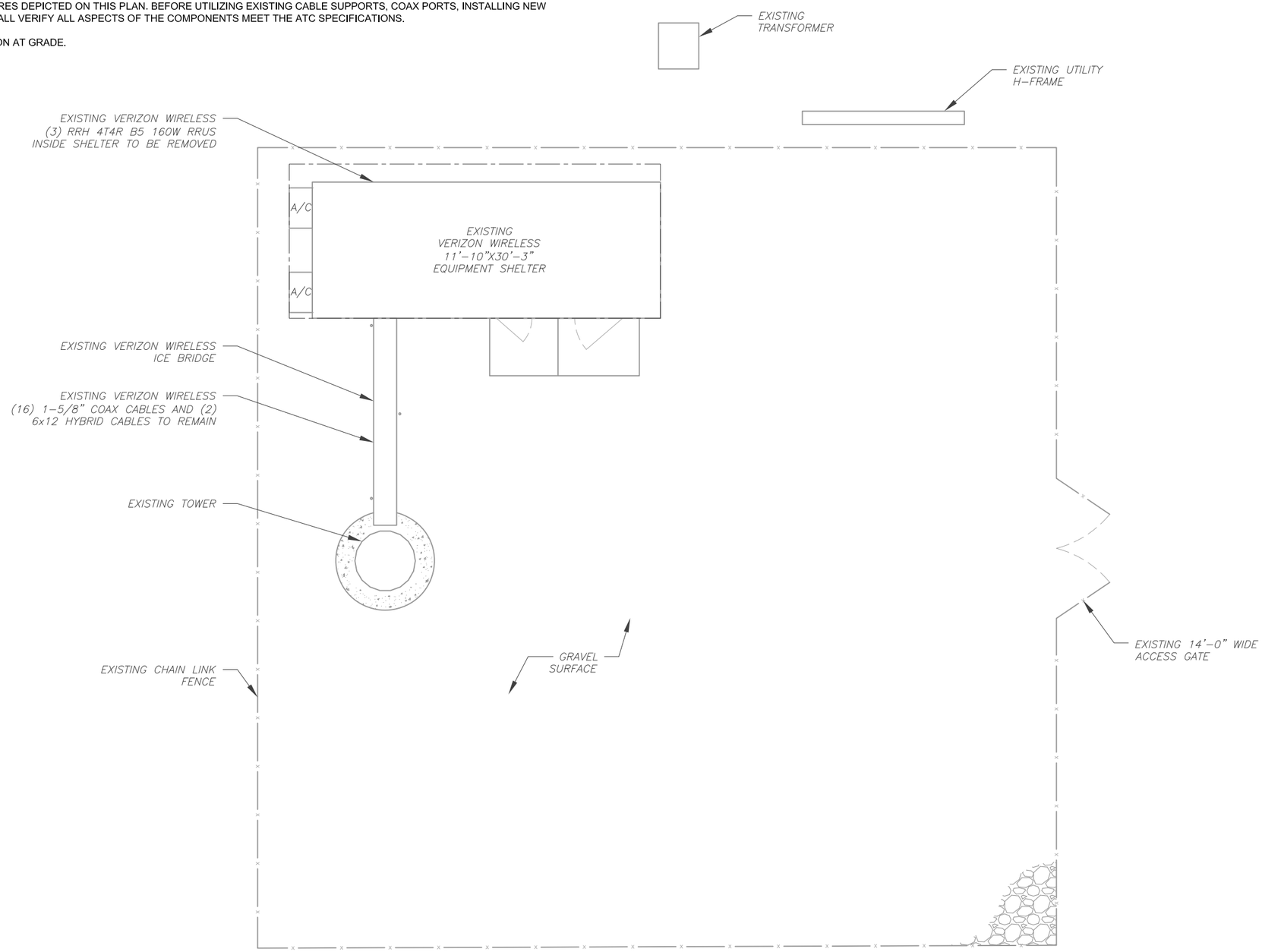

1 DETAILED COMPOUND PLAN

GRAPHIC SCALE

10 0 5 10

(IN FEET)
1 UNIT = 10 FEET

AMERICAN TOWER®

MORRISON HERSHFIELD
2 S UNIVERSITY DR., UNIT 245
PLANTATIONS, FL 33324
Tel: 954.577.4655
www.morrisonhershfield.com

DO NOT SCALE DRAWING. CONTRACTOR MUST VERIFY ALL DIMENSIONS AND ADVISE CONSULTANTS OF ANY ERRORS OR OMISSIONS. THE INFORMATION CONTAINED IN THIS SET OF DOCUMENTS IS PROPRIETARY BY NATURE. ANY USE OR DISCLOSURE OTHER THAN WHICH IS RELATED TO NAMED CLIENT IS STRICTLY PROHIBITED. NEITHER THE ARCHITECT NOR THE ENGINEER WILL BE PROVIDING ON-SITE CONSTRUCTION REVIEW OF THIS PROJECT. ALL PREVIOUS ISSUES OF THIS DRAWING ARE SUPERSEDED BY THE LATEST REVISION.

REV.	DESCRIPTION	BY	DATE
A	PRELIM	RM	07/02/21
0	FINAL	XL	08/04/21

ATC SITE NUMBER:
414867

ATC SITE NAME:
ASHFORD NORTH CT

VERIZON SITE NAME:
ASHFORD NORTH CT

SITE ADDRESS:
174 ASHFORD CENTER ROAD
ASHFORD, CT 06278

SEAL:

STATE OF CONNECTICUT
ROBERT J. LARA
No. 11509
LICENSED ARCHITECT

ROBERT JERRY LARA
REGISTERED ARCHITECT
STATE OF CONNECTICUT
11509

verizon

DATE DRAWN:	07/02/21
ATC JOB NO:	13696208
CUSTOMER ID:	ASHFORD NORTH CT
CUSTOMER #:	468148

DETAILED COMPOUND PLAN

SHEET NUMBER: C-101

REVISION: 0

Copyright © 2021 ATC IP LLC, All Rights Reserved.

PER MOUNT ANALYSIS COMPLETED BY MASER CONSULTING CONNECTICUT, DATED 06/16/2021, THE EXISTING MOUNT MUST BE MODIFIED TO ADEQUATELY SUPPORT THE PROPOSED LOADING. THE MOUNT MODIFICATION DETAILED AT THE END OF THIS PLAN SET, MUST BE INSTALLED PRIOR TO THE INSTALLATION OF THE PROPOSED ANTENNAS AND OTHER EQUIPMENT.

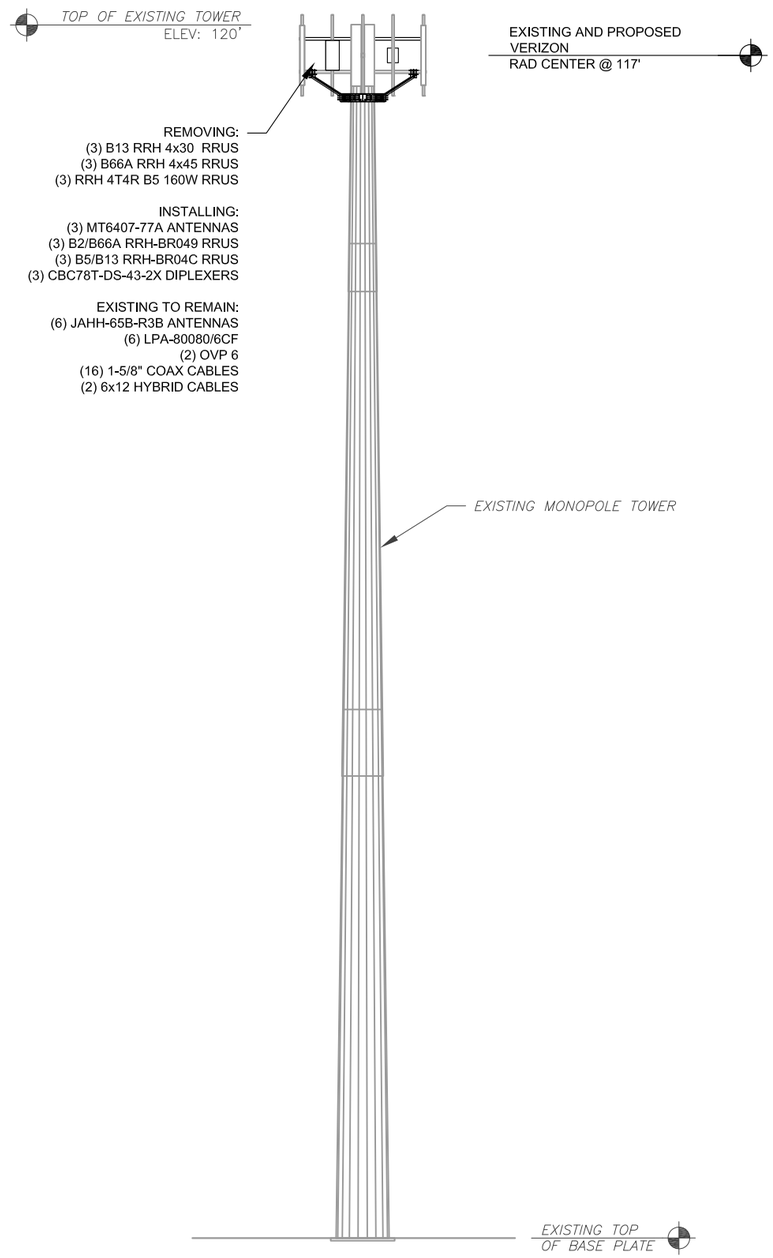

1 TOWER ELEVATION
SCALE: N.T.S.

TOWER NOTE:

1. IT IS THE CONTRACTOR'S RESPONSIBILITY TO CONFIRM WITH THE PROJECT MANAGER THAT THEY HAVE THE MOST RECENT VERSION OF THE STRUCTURAL ANALYSIS BEFORE COMMENCING WORK. EXISTING AND PROPOSED TOWER APPURTENANCES, MOUNTS, AND ANTENNAS ARE SHOWN BASED ON THE STRUCTURAL ANALYSIS.
2. WHERE APPLICABLE, ALL NEW ANTENNAS, EQUIPMENT, MOUNTS, CABLING, ETC. SHALL BE PAINTED/SOCKED TO MATCH EXISTING EQUIPMENT IN ACCORDANCE WITH FAA, JURISDICTION, AND/OR OTHER LOCAL REQUIREMENTS.
3. TOWER ELEVATIONS ARE MEASURED FROM TOP OF BASE PLATE TO MATCH STRUCTURAL ANALYSIS. ELEVATIONS DO NOT REFLECT TRUE ABOVE GROUND LEVEL (A.G.L.)
4. TOWER ELEVATION DEPICTION MAY NOT REFLECT ALL EQUIPMENT INCLUDED IN STRUCTURAL ANALYSIS. REFER TO STRUCTURAL ANALYSIS FOR FULL TOWER LOADING.

AMERICAN TOWER®

MORRISON HERSHFIELD
2 S UNIVERSITY DR., UNIT 245
PLANTATIONS, FL 33324
Tel: 954.577.4655
www.morrisonhershfield.com

DO NOT SCALE DRAWING. CONTRACTOR MUST VERIFY ALL DIMENSIONS AND ADVISE CONSULTANTS OF ANY ERRORS OR OMISSIONS. THE INFORMATION CONTAINED IN THIS SET OF DOCUMENTS IS PROPRIETARY BY NATURE. ANY USE OR DISCLOSURE OTHER THAN WHICH IS RELATED TO NAMED CLIENT IS STRICTLY PROHIBITED. NEITHER THE ARCHITECT NOR THE ENGINEER WILL BE PROVIDING ON-SITE CONSTRUCTION REVIEW OF THIS PROJECT. ALL PREVIOUS ISSUES OF THIS DRAWING ARE SUPERSEDED BY THE LATEST REVISION.

REV.	DESCRIPTION	BY	DATE
A	PRELIM	RM	07/02/21
0	FINAL	XL	08/04/21

ATC SITE NUMBER:
414867

ATC SITE NAME:
ASHFORD NORTH CT

VERIZON SITE NAME:
ASHFORD NORTH CT

SITE ADDRESS:
174 ASHFORD CENTER ROAD
ASHFORD, CT 06278

SEAL:

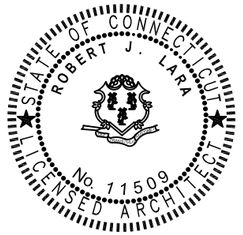

ROBERT JERRY LARA
REGISTERED ARCHITECT
STATE OF CONNECTICUT
11509

verizon

DATE DRAWN:	07/02/21
ATC JOB NO:	13696208
CUSTOMER ID:	ASHFORD NORTH CT
CUSTOMER #:	468148

TOWER ELEVATION

SHEET NUMBER:	REVISION:
C-201	0

Copyright © 2021 ATC IP LLC. All Rights Reserved.

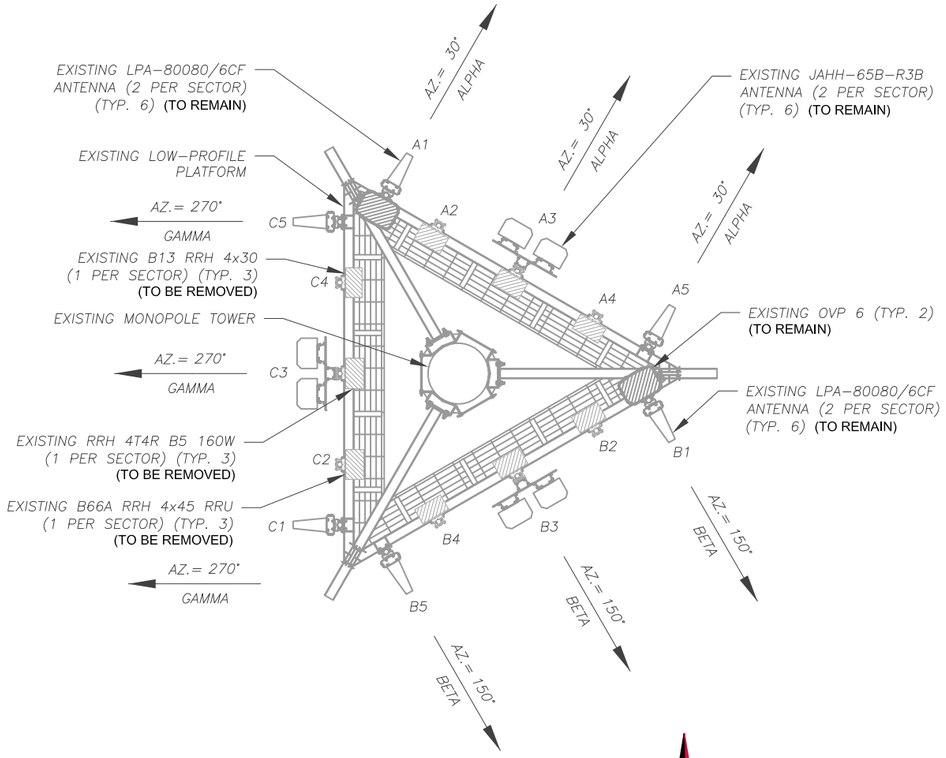

1 EXISTING ANTENNA PLAN

SCALE: N.T.S.

PER MOUNT ANALYSIS COMPLETED BY MASER CONSULTING CONNECTICUT, DATED 06/16/2021, THE EXISTING MOUNT MUST BE MODIFIED TO ADEQUATELY SUPPORT THE PROPOSED LOADING. THE MOUNT MODIFICATION PROPOSED IN THE MOUNT ANALYSIS, INCLUDED AT THE END OF THIS PLAN SET, MUST BE INSTALLED PRIOR TO THE INSTALLATION OF THE PROPOSED ANTENNAS AND OTHER EQUIPMENT.

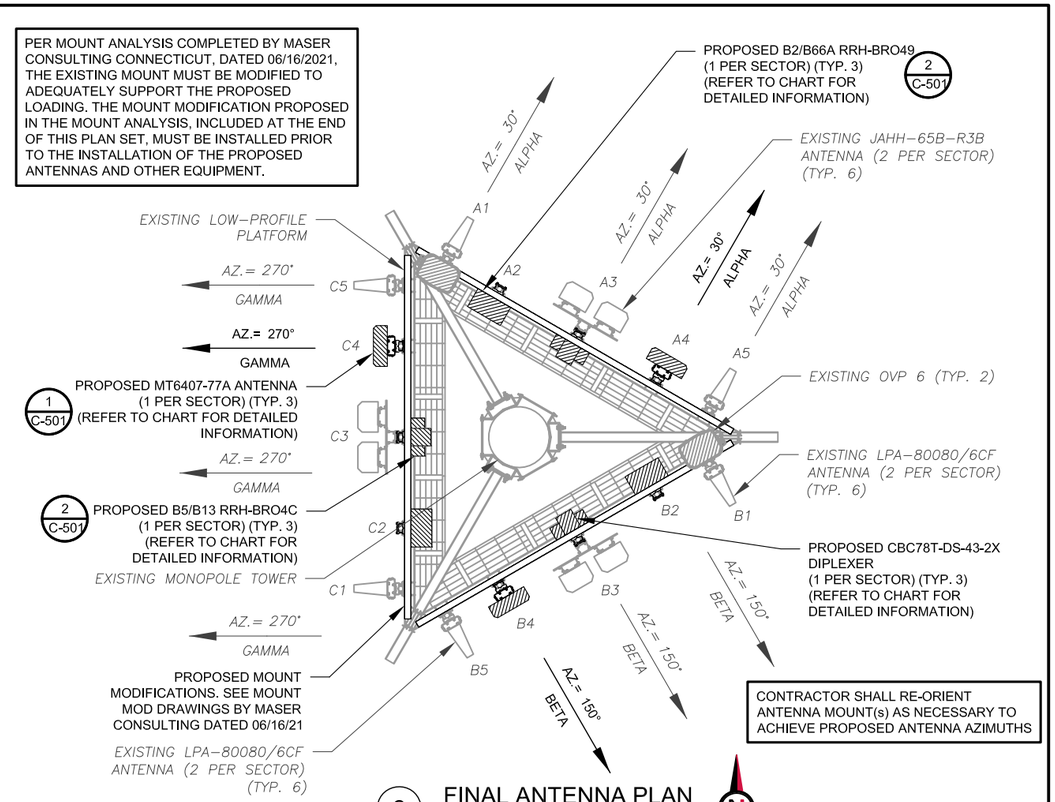

CONTRACTOR SHALL RE-ORIENT ANTENNA MOUNT(s) AS NECESSARY TO ACHIEVE PROPOSED ANTENNA AZIMUTHS

2 FINAL ANTENNA PLAN

SCALE: N.T.S.

EXISTING ANTENNA SCHEDULE

LOCATION			ANTENNA SUMMARY					NON ANTENNA SUMMARY	
SECTOR	RAD	AZ	POS	ANTENNA	BAND	MECH/ELEC D-TILT	STATUS	ADDITIONAL TOWER MOUNTED EQUIPMENT	STATUS
ALPHA	117'	30°	A1	LPA-80080/6CF	850 CDMA	0°/0°	RMN	–	–
			A2	–	–	–	–	B13 RRH 4X30	RMV
			A3	(2) JAHH-65B-R3B	700 LTE, 850 LTE 5G, 1900 LTE, AWS LTE	0°/6° 0°/2°	RMN	B66A RRH 4X45	RMV
			A4	–	–	–	–	RRH 4T4R B5 160W	RMV
			A5	LPA-80080/6CF	850 CDMA	0°/0°	RMN	–	–
BETA	117'	150°	B1	LPA-80080/6CF	850 CDMA	0°/0°	RMN	–	–
			B2	–	–	–	–	B13 RRH 4X30	RMV
			B3	(2) JAHH-65B-R3B	700 LTE, 850 LTE 5G, 1900 LTE, AWS LTE	0°/6° 0°/2°	RMN	B66A RRH 4X45	RMV
			B4	–	–	–	–	RRH 4T4R B5 160W	RMV
			B5	LPA-80080/6CF	850 CDMA	0°/0°	RMN	–	–
GAMMA	117'	270°	C1	LPA-80080/6CF	850 CDMA	2°/0°	RMN	–	–
			C2	–	–	–	–	B13 RRH 4X30	RMV
			C3	(2) JAHH-65B-R3B	700 LTE, 850 LTE 5G, 1900 LTE, AWS LTE	0°/6° 0°/2°	RMN	B66A RRH 4X45	RMV
			C4	–	–	–	–	RRH 4T4R B5 160W	RMV
			C5	LPA-80080/6CF	850 CDMA	2°/0°	RMN	–	–

NOTES

1. CONFIRM WITH VERIZON REP FOR APPLICABLE UPDATES/REVISIONS AND MOST RECENT RFDS FOR NSN CONFIGURATION (CONFIG). GC TO CAP ALL UNUSED PORTS.
2. CONFIRM SPACING OF PROPOSED EQUIP DOES NOT CAUSE TOWER CONFLICTS NOR IMPEDE TOWER CLIMBING PEGS.

STATUS ABBREVIATIONS

RMV: TO BE REMOVED
RMN: TO REMAIN
REL: TO BE RELOCATED
ADD: TO BE ADDED

CABLE LENGTHS FOR JUMPERS

JUNCTION BOX TO RRU: 15'
RRU TO ANTENNA: 10'

FINAL ANTENNA SCHEDULE

LOCATION			ANTENNA SUMMARY					NON ANTENNA SUMMARY	
SECTOR	RAD	AZ	POS	ANTENNA	BAND	MECH/ELEC D-TILT	STATUS	ADDITIONAL TOWER MOUNTED EQUIPMENT	STATUS
ALPHA	117'	30°	A1	LPA-80080/6CF	850 CDMA	0°/0°	RMN	-	-
			A2	-	-	-	-	B2/B66A RRH-BRO49	ADD
			A3	(2) JAHH-65B-R3B	700 LTE, 850 LTE 5G, 1900 LTE, AWS LTE	0°/6° 0°/2°	RMN	B5/B13 RRH-BRO4C CBC78T-DS-43-2X DIPLEXER	ADD
			A4	MT6407-77A	5G	0°/6°	ADD	-	-
			A5	LPA-80080/6CF	850 CDMA	0°/0°	RMN	-	-
BETA	117'	150°	B1	LPA-80080/6CF	850 CDMA	0°/0°	RMN	-	-
			B2	-	-	-	-	B2/B66A RRH-BRO49	ADD
			B3	(2) JAHH-65B-R3B	700 LTE, 850 LTE 5G, 1900 LTE, AWS LTE	0°/6° 0°/2°	RMN	B5/B13 RRH-BRO4C CBC78T-DS-43-2X DIPLEXER	ADD
			B4	MT6407-77A	5G	0°/6°	ADD	-	-
			B5	LPA-80080/6CF	850 CDMA	0°/0°	RMN	-	-
GAMMA	117'	270°	C1	LPA-80080/6CF	850 CDMA	2°/0°	RMN	-	-
			C2	-	-	-	-	B2/B66A RRH-BRO49	ADD
			C3	(2) JAHH-65B-R3B	700 LTE, 850 LTE 5G, 1900 LTE, AWS LTE	0°/6° 0°/2°	RMN	B5/B13 RRH-BRO4C CBC78T-DS-43-2X DIPLEXER	ADD
			C4	MT6407-77A	5G	0°/6°	ADD	-	-
			C5	LPA-80080/6CF	850 CDMA	2°/0°	RMN	-	-

EXISTING FIBER DISTRIBUTION/OVP BOX		EXISTING CABLING SUMMARY		
MODEL NUMBER	STATUS	COAX	HYBRID	STATUS
(2) OVP 6	RMN	(16) 1-5/8"	(2) 6x12	RMN

3 EQUIPMENT SCHEDULES

FINAL FIBER DISTRIBUTION/OVP BOX		FINAL CABLING SUMMARY		
MODEL NUMBER	STATUS	COAX	HYBRID	STATUS
(2) OVP 6	RMN	(16) 1-5/8"	(2) 6x12	RMN

AMERICAN TOWER®

MORRISON HERSHFIELD
2 S UNIVERSITY DR., UNIT 245
PLANTATIONS, FL 33324
Tel: 954.577.4655
www.morrisonhershfield.com

DO NOT SCALE DRAWING. CONTRACTOR MUST VERIFY ALL DIMENSIONS AND ADVISE CONSULTANTS OF ANY ERRORS OR OMISSIONS. THE INFORMATION CONTAINED IN THIS SET OF DOCUMENTS IS PROPRIETARY BY NATURE. ANY USE OR DISCLOSURE OTHER THAN WHICH IS RELATED TO NAMED CLIENT IS STRICTLY PROHIBITED. NEITHER THE ARCHITECT NOR THE ENGINEER WILL BE PROVIDING ON-SITE CONSTRUCTION REVIEW OF THIS PROJECT. ALL PREVIOUS ISSUES OF THIS DRAWING ARE SUPERSEDED BY THE LATEST REVISION.

REV.	DESCRIPTION	BY	DATE
A	PRELIM	RM	07/02/21
0	FINAL	XL	08/04/21

ATC SITE NUMBER:
414867

ATC SITE NAME:
ASHFORD NORTH CT

VERIZON SITE NAME:
ASHFORD NORTH CT

SITE ADDRESS:
174 ASHFORD CENTER ROAD
ASHFORD, CT 06278

SEAL:

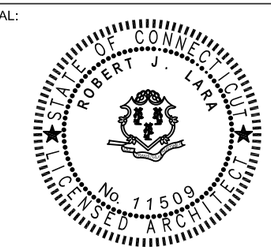

ROBERT JERRY LARA
REGISTERED ARCHITECT
STATE OF CONNECTICUT
11509

verizon

DATE DRAWN:	07/02/21
ATC JOB NO:	13696208
CUSTOMER ID:	ASHFORD NORTH CT
CUSTOMER #:	468148

ANTENNA INFORMATION & SCHEDULE

SHEET NUMBER:	REVISION:
C-401	0

Copyright © 2021 ATC IP LLC. All Rights Reserved.

PER MOUNT ANALYSIS COMPLETED BY MASER CONSULTING CONNECTICUT, DATED 06/16/2021, THE EXISTING MOUNT MUST BE MODIFIED TO ADEQUATELY SUPPORT THE PROPOSED LOADING. THE MOUNT MODIFICATION PROPOSED IN THE MOUNT ANALYSIS, INCLUDED AT THE END OF THIS PLAN SET, MUST BE INSTALLED PRIOR TO THE INSTALLATION OF THE PROPOSED ANTENNAS AND OTHER EQUIPMENT.

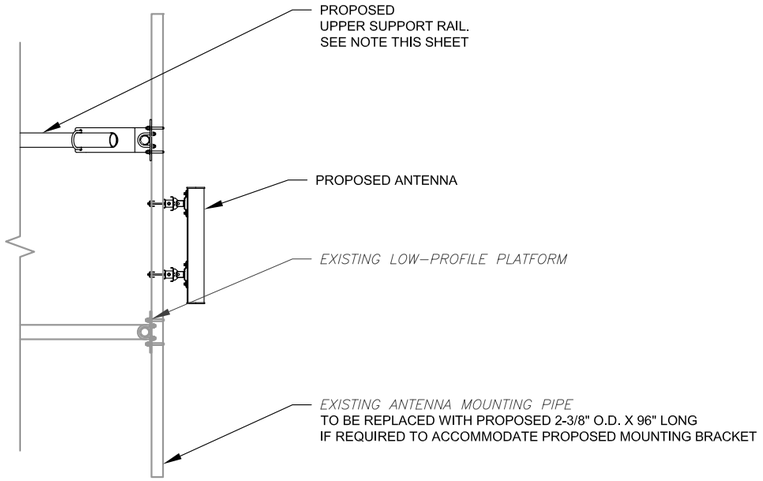

1 PROPOSED 5G ANTENNA MOUNTING DETAIL - TYPICAL

SCALE: N.T.S.

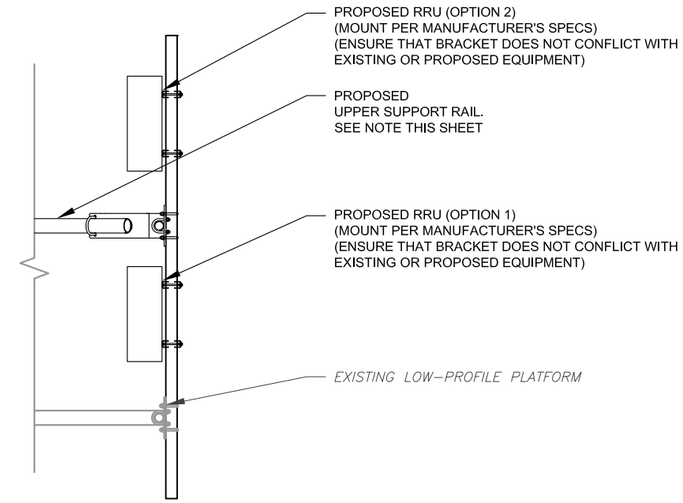

2 PROPOSED RRU MOUNTING DETAIL - TYPICAL

SCALE: N.T.S.

AMERICAN TOWER®

MORRISON HERSHFIELD
2 S UNIVERSITY DR., UNIT 245
PLANTATIONS, FL 33324
Tel: 954.577.4655
www.morrisonhershfield.com

DO NOT SCALE DRAWING. CONTRACTOR MUST VERIFY ALL DIMENSIONS AND ADVISE CONSULTANTS OF ANY ERRORS OR OMISSIONS. THE INFORMATION CONTAINED IN THIS SET OF DOCUMENTS IS PROPRIETARY BY NATURE. ANY USE OR DISCLOSURE OTHER THAN WHICH IS RELATED TO NAMED CLIENT IS STRICTLY PROHIBITED. NEITHER THE ARCHITECT NOR THE ENGINEER WILL BE PROVIDING ON-SITE CONSTRUCTION REVIEW OF THIS PROJECT. ALL PREVIOUS ISSUES OF THIS DRAWING ARE SUPERSEDED BY THE LATEST REVISION.

REV.	DESCRIPTION	BY	DATE
A	PRELIM	RM	07/02/21
0	FINAL	XL	08/04/21

ATC SITE NUMBER:
414867

ATC SITE NAME:
ASHFORD NORTH CT

VERIZON SITE NAME:
ASHFORD NORTH CT

SITE ADDRESS:
174 ASHFORD CENTER ROAD
ASHFORD, CT 06278

SEAL:

STATE OF CONNECTICUT
ROBERT J. LARA
No. 11509
LICENSED ARCHITECT

ROBERT JERRY LARA
REGISTERED ARCHITECT
STATE OF CONNECTICUT
11509

verizon

DATE DRAWN:	07/02/21
ATC JOB NO:	13696208
CUSTOMER ID:	ASHFORD NORTH CT
CUSTOMER #:	468148

CONSTRUCTION DETAILS

SHEET NUMBER: C-501

REVISION: 0

Copyright © 2021 ATC IP LLC, All Rights Reserved.

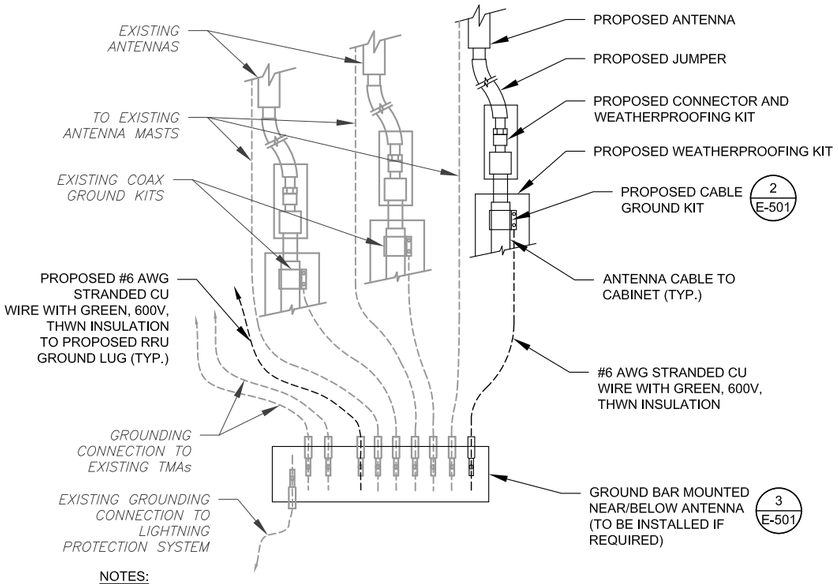

NOTES:

1. THIS DETAIL IS INTENDED TO SHOW THE GENERAL GROUNDING REQUIREMENTS. SLIGHT ADJUSTMENTS MAY BE REQUIRED BASED ON EXISTING SITE CONDITIONS. THE CONTRACTOR SHALL MAKE FIELD ADJUSTMENTS AS NEEDED AND INFORM THE CONSTRUCTION MANAGER OF ANY CONFLICTS.
2. SITE GROUNDING SHALL COMPLY WITH VERIZON GROUNDING STANDARDS, LATEST EDITION, AND COMPLY WITH VERIZON GROUNDING CHECKLIST, LATEST VERSION. WHEN NATIONAL AND LOCAL GROUNDING CODES ARE MORE STRINGENT THEY SHALL GOVERN.

1 TYPICAL ANTENNA GROUNDING DIAGRAM

SCALE: N.T.S.

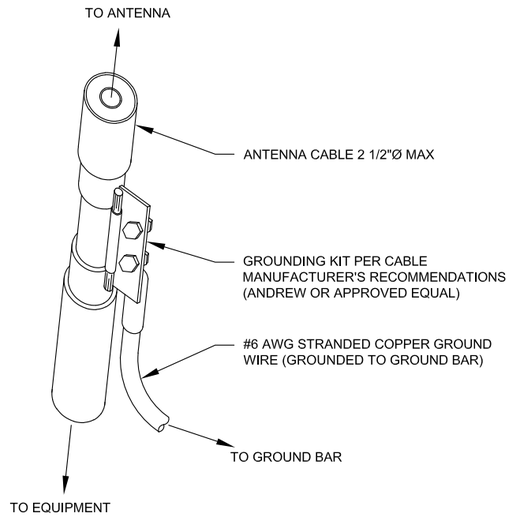

GROUND KIT NOTES:

1. DO NOT INSTALL CABLE GROUND KIT AT A BEND AND ALWAYS DIRECT GROUND WIRE DOWN TO GROUND BAR.
2. CONTRACTOR SHALL PROVIDE WEATHERPROOFING KIT (ANDREW PART NUMBER 221213) AND INSTALL/TAPE PER MANUFACTURER'S SPECIFICATIONS.

2 CABLE GROUND KIT CONNECTION DETAIL

SCALE: N.T.S.

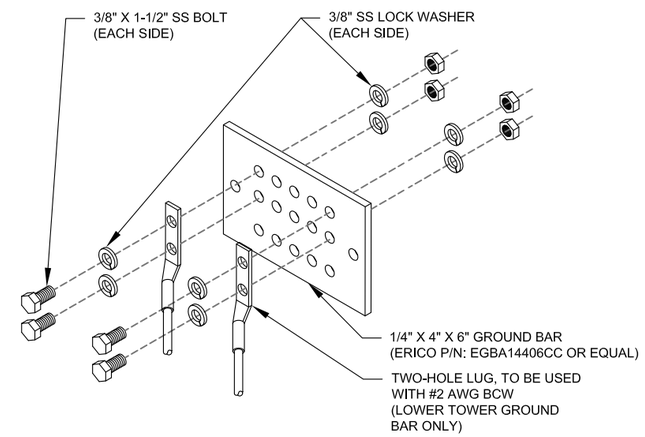

GROUND BAR NOTES:

1. GROUND BAR KITS COME WITH ALL HARDWARE, NUTS, BOLTS, WASHERS, ETC. EXCEPT THE STRUCTURAL MOUNTING MEMBER(S).
2. GROUND BAR TO BE BONDED DIRECTLY TO TOWER.

3 TOWER GROUND BAR DETAIL

SCALE: N.T.S.

AMERICAN TOWER®

MORRISON HERSHFIELD
2 S UNIVERSITY DR., UNIT 245
PLANTATIONS, FL 33324
Tel: 954.577.4655
www.morrisonhershfield.com

DO NOT SCALE DRAWING. CONTRACTOR MUST VERIFY ALL DIMENSIONS AND ADVISE CONSULTANTS OF ANY ERRORS OR OMISSIONS. THE INFORMATION CONTAINED IN THIS SET OF DOCUMENTS IS PROPRIETARY BY NATURE. ANY USE OR DISCLOSURE OTHER THAN WHICH IS RELATED TO NAMED CLIENT IS STRICTLY PROHIBITED. NEITHER THE ARCHITECT NOR THE ENGINEER WILL BE PROVIDING ON-SITE CONSTRUCTION REVIEW OF THIS PROJECT. ALL PREVIOUS ISSUES OF THIS DRAWING ARE SUPERSEDED BY THE LATEST REVISION.

REV.	DESCRIPTION	BY	DATE
A	PRELIM	RM	07/02/21
0	FINAL	XL	08/04/21

ATC SITE NUMBER:
414867

ATC SITE NAME:
ASHFORD NORTH CT

VERIZON SITE NAME:
ASHFORD NORTH CT

SITE ADDRESS:
174 ASHFORD CENTER ROAD
ASHFORD, CT 06278

SEAL:

STATE OF CONNECTICUT
ROBERT J. LARA
No. 11509
LICENSED ARCHITECT

ROBERT JERRY LARA
REGISTERED ARCHITECT
STATE OF CONNECTICUT
11509

verizon

DATE DRAWN:	07/02/21
ATC JOB NO:	13696208
CUSTOMER ID:	ASHFORD NORTH CT
CUSTOMER #:	468148

GROUNDING DETAILS

SHEET NUMBER:	REVISION:
E-501	0

Copyright © 2021 ATC IP LLC, All Rights Reserved.

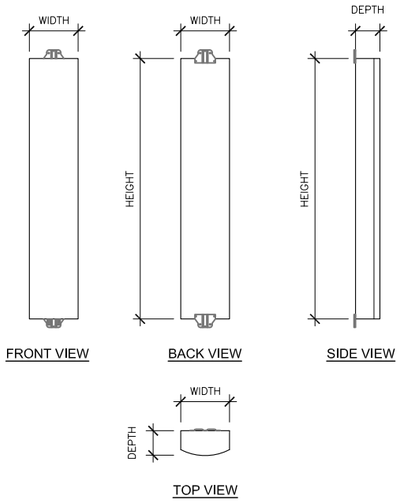

SAMSUNG MT6407-77A

SIZE AND WEIGHT TABLE

HEIGHT	WIDTH	DEPTH	WEIGHT
35.1"	16.1"	5.5"	81.6 LBS

1 ANTENNA SPECIFICATIONS

SCALE: N.T.S.

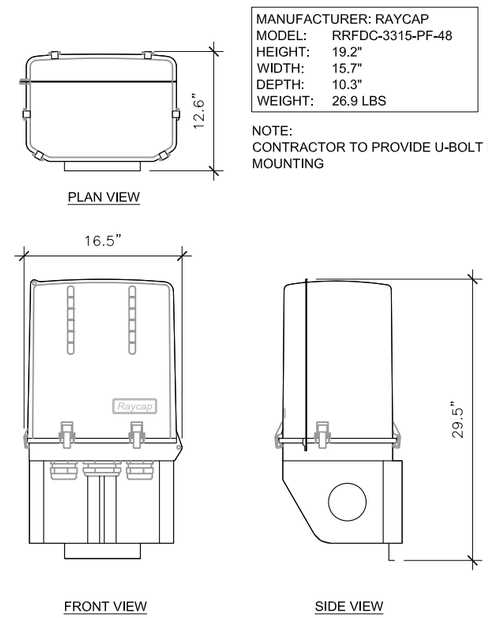

MANUFACTURER: RAYCAP	
MODEL:	RRFDC-3315-PF-48
HEIGHT:	19.2"
WIDTH:	15.7"
DEPTH:	10.3"
WEIGHT:	26.9 LBS

NOTE:
CONTRACTOR TO PROVIDE U-BOLT FOR PIPE MOUNTING

3 OVP SPECIFICATIONS

SCALE: N.T.S.

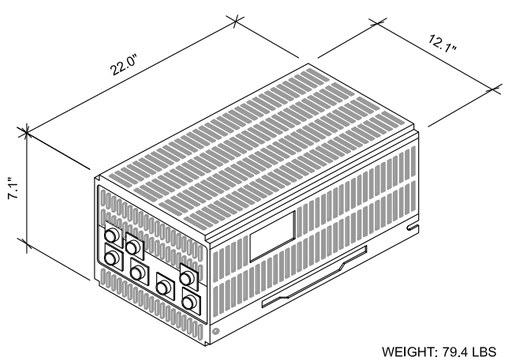

WEIGHT: 79.4 LBS

2 AHFIC AIRSCALE B2/B66A 320W RRU

SCALE: N.T.S.

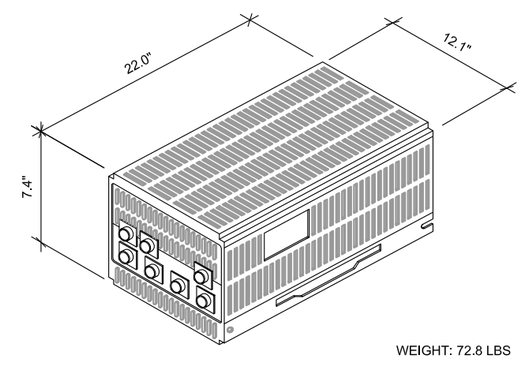

WEIGHT: 72.8 LBS

4 AHBCC AIRSCALE B5/B13 320W RRU

SCALE: N.T.S.

SUPPLEMENTAL

SHEET NUMBER:	REVISION:
R-601	0

Copyright © 2021 ATC IP LLC. All Rights Reserved.

Maser Consulting Connecticut
2000 Midlantic Drive, Suite 100
Mt. Laurel, NJ 08054
856.797.0412
Peter.Albano@colliersengineering.com

Post-Mod Antenna Mount Analysis Report and PMI Requirements

Mount Fix

SMART Tool Project #: 10068127
Maser Consulting Connecticut Project #: 21777482A

June 16, 2021

Site Information	*Site ID:*	*468148-VZW / ASHFORD NORTH CT*
	Site Name:	*ASHFORD NORTH CT*
	Carrier Name:	*Verizon Wireless*
	Address:	*174 Ashford Center Road*
		Ashford, Connecticut 06278
		Windham County
	Latitude:	*41.868272°*
	Longitude:	*-72.145844°*
Structure Information	*Tower Type:*	*120.00-Ft Self Support*
	Mount Type:	*13.33-Ft Platform*

FUZE ID # 16272036

Analysis Results

Platform: **87.2% Pass**

******Contractor PMI Requirements:***
Included at the end of this MA report
Available & Submitted via portal at https://pmi.vzwsmart.com
Contractor - Please Review Specific Site PMI Requirements Upon Award
Requirements also Noted on Mount Modification Drawings
Requirements may also be Noted on A & E drawings

Report Prepared By: Selene Chen

STATE OF CONNECTICUT · DEREK R. HARTZELL · 32710 · LICENSED PROFESSIONAL ENGINEER

Digitally signed by Derek Hartzell
Date: 2021.06.16 12:10:30-0700'

6. All services are performed, results obtained, and recommendations made in accordance with generally accepted engineering principles and practices. Maser Consulting Connecticut is not responsible for the conclusion, opinions, and recommendations made by others based on the information supplied.

7. Structural Steel Grades have been assumed as follows, if applicable, unless otherwise noted in this analysis:
   - Channel, Solid Round, Angle, Plate — ASTM A36 (Gr. 36)
   - HSS (Rectangular) — ASTM 500 (Gr. B-46)
   - Pipe — ASTM A53 (Gr. B-35)
   - Threaded Rod — F1554 (Gr. 36)
   - Bolts — ASTM A325

8. Any mount modifications listed under Sources of Information are assumed to have been installed per the design specifications.

Discrepancies between in-field conditions and the assumptions listed above may render this analysis invalid unless explicitly approved by Maser Consulting Connecticut.

Analysis Results:

Component	Utilization %	Pass/Fail
Mount Pipe	*45.1%*	*Pass*
Face Horizontal	*32.1%*	*Pass*
Standoff Horizontal	*39.0%*	*Pass*
Support Rail	*17.6%*	*Pass*
Support Rail Corner	*26.6%*	*Pass*
Kicker	*18.0%*	*Pass*
Connection Check	*87.2%*	*Pass*

Structure Rating – *(Controlling Utilization of all Components)*	**87.2%**

Recommendation:

The existing mounts will be **SUFFICIENT** for the final loading after the proposed modifications are successfully completed.

ANSI/ASSP rigging plan review services compliant with the requirements of ANSI/TIA 322 are available for a Construction Class IV site or other, if required. Separate review fees will apply.

Attachments:

1. Mount Photos
2. Mount Mapping Report (for reference only)
3. Mount Geometry Verification
4. Analysis Calculations
5. **Contractor Required PMI Report Deliverables**
6. Antenna Placement Diagrams
7. TIA Adoption and Wind Speed Usage Letter

SUPPLEMENTAL

SHEET NUMBER:	REVISION:
R-602	0

Copyright © 2021 ATC IP LLC. All Rights Reserved.

PROJECT NOTES

1. SEE MODIFICATION NOTES
2. THE CONTRACTOR SHALL COMPLY WITH ALL APPLICABLE CODES, ORDINANCES, LAWS AND REGULATIONS OF ALL MUNICIPALITIES, UTILITY COMPANIES OR OTHER PUBLIC/GOVERNING AUTHORITIES.
3. THE CONTRACTOR SHALL BE RESPONSIBLE FOR OBTAINING ALL PERMITS AND INSPECTIONS THAT MAY BE REQUIRED BY ANY FEDERAL, STATE, COUNTY OR MUNICIPAL AUTHORITIES.
4. THE CONTRACTOR SHALL NOTIFY THE CONSTRUCTION MANAGER, IN WRITING, OF ANY CONFLICTS, ERRORS OR OMISSIONS PRIOR TO THE SUBMISSION OF BIDS OR PERFORMANCE OF WORK.
5. THE CONTRACTOR SHALL BE RESPONSIBLE FOR PROTECTING ALL EXISTING SITE IMPROVEMENTS PRIOR TO COMMENCING CONSTRUCTION. THE CONTRACTOR SHALL REPAIR ANY DAMAGE AS A RESULT OF CONSTRUCTION OF THIS FACILITY AT THE CONTRACTOR'S EXPENSE TO THE SATISFACTION OF THE OWNER.
6. THE SCOPE OF WORK FOR THIS PROJECT SHALL INCLUDE PROVIDING ALL MATERIALS, EQUIPMENT AND LABOR REQUIRED TO COMPLETE THIS PROJECT. ALL EQUIPMENT SHALL BE INSTALLED IN ACCORDANCE WITH MANUFACTURER'S RECOMMENDATIONS.
7. THE CONTRACTOR SHALL VISIT THE PROJECT SITE PRIOR TO SUBMITTING THE BID TO VERIFY THAT THE PROJECT CAN BE CONSTRUCTED IN ACCORDANCE WITH THE CONTRACT DOCUMENTS AND CONSTRUCTION DRAWINGS.
8. THE CONTRACTOR SHALL VERIFY ALL EXISTING DIMENSIONS AND CONDITIONS PRIOR TO COMMENCING ANY WORK. ALL DIMENSIONS OF EXISTING CONSTRUCTION SHOWN ON THESE DRAWINGS MUST BE VERIFIED. THE CONTRACTOR SHALL NOTIFY THE CONSTRUCTION MANAGER OF ANY DISCREPANCIES PRIOR TO ORDERING MATERIAL OR PROCEEDING WITH CONSTRUCTION.
9. SINCE THE CELL SITE MAY BE ACTIVE, ALL SAFETY PRECAUTIONS MUST BE TAKEN WHEN WORKING AROUND HIGH LEVELS OF ELECTROMAGNETIC RADIATION. EQUIPMENT SHOULD BE SHUTDOWN PRIOR TO PERFORMING ANY WORK THAT COULD EXPOSE THE WORKERS TO DANGER. PERSONAL RF EXPOSURE MONITORS ARE REQUIRED TO BE WORN TO ALERT OF ANY POTENTIALLY DANGEROUS EXPOSURE LEVELS.
10. NO NOISE, SMOKE, DUST OR ODOR WILL RESULT FROM THIS FACILITY AS TO CAUSE A NUISANCE.
11. THE FACILITY IS UNMANNED AND NOT FOR HUMAN HABITATION (NO HANDICAP ACCESS IS REQUIRED).

COPYRIGHT ©2021
MASER CONSULTING CONNECTICUT
ALL RIGHTS RESERVED
THIS DRAWING AND ALL THE INFORMATION CONTAINED HEREIN IS AUTHORIZED FOR USE ONLY BY THE PARTY FOR WHOM THE WORK WAS CONTRACTED OR TO WHOM IT IS CERTIFIED. THIS DRAWING MAY NOT BE COPIED, REUSED, DISCLOSED, DISTRIBUTED OR RELIED UPON FOR ANY OTHER PURPOSE WITHOUT THE EXPRESS WRITTEN CONSENT OF MASER CONSULTING

verizon

MOUNT MODIFICATION DRAWINGS
EXISTING 13.33' PLATFORM

SITE NAME: ASHFORD NORTH CT
SITE NUMBER: 468148

174 ASHFORD CENTER ROAD
ASHFORD, CT 06278
WINDHAM COUNTY

PROJECT INFORMATION

SITE INFORMATION

LATITUDE: 41.868272° N
LONGITUDE: 72.145844° W
JURISDICTION: WINDHAM COUNTY

APPLICANT/LESSEE

COMPANY: VERIZON WIRELESS

CLIENT REPRESENTATIVE

COMPANY: VERIZON WIRELESS
ADDRESS: 118 FLANDERS ROAD, THIRD FLOOR
CITY, STATE, ZIP: WESTBOROUGH, MA 01581
CONTACT: ANDREW CANDIELLO
EMAIL: ANDREW.CANDIELLO@VERIZONWIRELESS.COM

PROJECT MANAGER

COMPANY: MASER CONSULTING CONNECTICUT
CONTACT: PETER ALBANO
PHONE: 856-797-0412
E-MAIL: PETER.ALBANO@COLLIERSENGINEERING.COM

SHEET INDEX

SHEET	DESCRIPTION
T-1	TITLE SHEET
S-1	BILL OF MATERIALS
S-2	MODIFICATION NOTES
S-3	MODIFICATION NOTES
S-4	MODIFICATION DETAILS
S-5	MODIFICATION DETAILS
S-6	MOUNT PHOTOS
	SPECIFICATION SHEETS

CONTRACTOR PMI REQUIREMENTS

PMI LOCATION: HTTPS://PMI.VZWSMART.COM
SMART TOOL PROJECT #: 10068127
VZW LOCATION CODE (PSLC): 468148
FUZE ID: 16272036

PMI REQUIREMENTS EMBEDDED WITHIN MOUNT MODIFICATION REPORT

REFERENCED DOCUMENTS

FAILING MOUNT ANALYSIS REPORT
SMART TOOL PROJECT #: 10050471
MASER CONSULTING PROJECT #: 21777482A
ANALYSIS DATE: 4/30/2021

MASER CONSULTING CONNECTICUT
WILL BE KNOWN AS COLLIERS ENGINEERING & DESIGN IN 2021
Customer Loyalty *through* Client Satisfaction
www.maserconsulting.com
Office Locations:
- NEW JERSEY
- NEW YORK
- PENNSYLVANIA
- VIRGINIA
- FLORIDA
- NORTH CAROLINA
- SOUTH CAROLINA
- NEW MEXICO
- MARYLAND
- GEORGIA
- TEXAS
- TENNESSEE
- COLORADO

Copyright © 2021. Maser Consulting All Rights Reserved. This drawing and all the information contained herein is authorized for use only by the party for whom the services were contracted or to whom it is certified. This drawing may not be copied, reused, disclosed, distributed or relied upon for any other purpose without the express written consent of Maser Consulting.

verizon

PROTECT YOURSELF
ALL STATES REQUIRE NOTIFICATION OF EXCAVATORS, DESIGNERS, OR ANY PERSON PREPARING TO DISTURB THE EARTH'S SURFACE ANYWHERE IN ANY STATE
811 Know what's below. Call before you dig.
FOR STATE SPECIFIC DIRECT PHONE NUMBERS VISIT: WWW.CALL811.COM

SCALE: AS SHOWN
JOB NUMBER: 21777482A

REV	DATE	DESCRIPTION	DRAWN BY	CHECKED BY
0	6/16/2021	ISSUED FOR CONSTRUCTION	FAC	DH

STATE OF CONNECTICUT · DEREK R. HARTZELL · 32710 · LICENSED PROFESSIONAL ENGINEER

Derek Hartzell
CONNECTICUT PROFESSIONAL ENGINEER
LICENSE NUMBER: 32710
MASER CONSULTING
CT. C.O.A. #: PEC.0000131

Digitally signed by Derek R. Hartzell
Date: 2021.06.16 12:18:49-04'00'

IT IS A VIOLATION OF LAW FOR ANY PERSON, UNLESS THEY ARE ACTING UNDER THE DIRECTION OF THE RESPONSIBLE LICENSED PROFESSIONAL ENGINEER, TO ALTER THIS DOCUMENT.

SITE NAME:
ASHFORD NORTH CT
468148
174 ASHFORD CENTER ROAD
ASHFORD, CT 06278
WINDHAM COUNTY

MT. LAUREL OFFICE
2000 Midlantic Drive
Suite 100
Mount Laurel, NJ 08054
Phone: 856.797.0412
Fax: 856.722.1120

SHEET TITLE: TITLE SHEET

SHEET NUMBER: T-1

NOTE: DO NOT SCALE DRAWINGS FOR CONSTRUCTION.

MASAbdx - P:\MAS Templates\Mount\MOD.dwg\T-1 By: JCENTONE

BILL OF MATERIALS

VZWSMART KITS

QUANTITY	MANUFACTURER	PART NUMBER	DESCRIPTION	NOTES
3	VZWSMART	VZWSMART-PLK3	SUPPORT RAIL CORNER BRACKET	
15		VZWSMART-MSK1	CROSSOVER PLATE	
1		VZWSMART-PLK5	KICKER KIT	CONTRACTOR TO VERIFY THE LENGTH REQUIRED AND TRIM AS NECESSARY IN ACCORDANCE WITH THE 'STRUCTURAL STEEL' NOTES ON SHEET S-2
1		VZWSMART-PLK7	MONOPOLE COLLAR MOUNT ASSEMBLY	

OTHER REQUIRED PARTS

QUANTITY	MANUFACTURER	PART NUMBER	DESCRIPTION	NOTES
3	-	-	156" LONG, P2.5 STD	GALVANIZED
3	-	-	30" LONG, L3X3X1/4	GALVANIZED. CONTRACTOR TO VERIFY THE LENGTH REQUIRED AND TRIM AS NECESSARY IN ACCORDANCE WITH THE 'STRUCTURAL STEEL' NOTES ON SHEET S-2.

NOTE: ALL MATERIALS REQUIRED FOR THE DESIGNED MODIFICATIONS BUT NOT LISTED IN THIS SHEET ARE ASSUMED TO BE PROVIDED BY THE CONTRACTOR

VZWSMART KITS - APPROVED VENDORS

COMMSCOPE	
CONTACT	SALVADOR ANGUIANO
PHONE	(817) 304-7492
EMAIL	SALVADOR.ANGUIANO@COMMSCOPE.COM
WEBSITE	WWW.COMMSCOPE.COM
METROSITE FABRICATORS, LLC	
CONTACT	KENT RAMEY
PHONE	(706) 335-7045 (O), (706) 982-9788 (M)
EMAIL	KENT@METROSITELLC.COM
WEBSITE	METROSITEFABRICATORS.COM
PERFECTVISION	
CONTACT	WIRELESS SALES
PHONE	(844) 887-6723
EMAIL	WWW.PERFECT-VISION.COM
WEBSITE	WIRELESSSALES@PERFECT-VISION.COM
SABRE INDUSTRIES, INC.	
CONTACT	ANGIE WELCH
PHONE	(866) 428-6937
EMAIL	AKWELCH@SABREINDUSTRIES.COM
WEBSITE	WWW.SABRESITESOLUTIONS.COM
SITE PRO 1	
CONTACT	PAULA BOSWELL
PHONE	(972) 236-9843
EMAIL	PAULA.BOSWELL@VALMONT.COM
WEBSITE	WWW.SITEPRO1.COM

NOTE: WHEN SPECIFIED, VZWSMART KITS SHALL BE REQUIRED AND WILL BE VERIFIED DURING THE DESKTOP PMI

MASER CONSULTING CONNECTICUT
WILL BE KNOWN AS COLLIERS ENGINEERING & DESIGN IN 2021
Customer Loyalty *through* Client Satisfaction
www.maserconsulting.com
Office Locations:
- NEW JERSEY
- NEW YORK
- PENNSYLVANIA
- VIRGINIA
- FLORIDA
- NORTH CAROLINA
- SOUTH CAROLINA
- NEW MEXICO
- MARYLAND
- GEORGIA
- TEXAS
- TENNESSEE
- COLORADO

Copyright © 2021. Maser Consulting All Rights Reserved. This drawing and all the information contained herein is authorized for use only by the party for whom the services were contracted or to whom it is certified. This drawing may not be copied, reused, disclosed, distributed or relied upon for any other purpose without the express written consent of Maser Consulting.

verizon

PROTECT YOURSELF
ALL STATES REQUIRE NOTIFICATION OF EXCAVATORS, DESIGNERS, OR ANY PERSON PREPARING TO DISTURB THE EARTH'S SURFACE ANYWHERE IN ANY STATE

811 Know what's below. Call before you dig.

FOR STATE SPECIFIC DIRECT PHONE NUMBERS VISIT: WWW.CALL811.COM

SCALE: AS SHOWN
JOB NUMBER: 21777482A

REV	DATE	DESCRIPTION	DRAWN BY	CHECKED BY
0	6/16/2021	ISSUED FOR CONSTRUCTION	FAC	DH

STATE OF CONNECTICUT · DEREK R. HARTZELL · 32710 · LICENSED PROFESSIONAL ENGINEER

Derek Hartzell
CONSULTING ENGINEER
LICENSE NUMBER: 32710
MASER CONSULTING
CT. COA #: PEC.0000131

Digitally signed by Derek R. Hartzell
Date: 2021.06.16 12:19:09-04'00'

IT IS A VIOLATION OF LAW FOR ANY PERSON, UNLESS THEY ARE ACTING UNDER THE DIRECTION OF THE RESPONSIBLE LICENSED PROFESSIONAL ENGINEER, TO ALTER THIS DOCUMENT.

SITE NAME:

ASHFORD NORTH CT
468148

174 ASHFORD CENTER ROAD
ASHFORD, CT 06278
WINDHAM COUNTY

MT. LAUREL OFFICE
2000 Midlantic Drive
Suite 100
Mount Laurel, NJ 08054

Phone: 856.797.0412
Fax: 856.722.1120

SHEET TITLE: BILL OF MATERIALS

SHEET NUMBER: S-1

GENERAL NOTES

1. THESE MODIFICATIONS HAVE BEEN DESIGNED IN ACCORDANCE WITH THE GOVERNING PROVISIONS OF THE TELECOMMUNICATIONS INDUSTRY STANDARD TIA-222-H. MATERIALS AND SERVICES PROVIDED BY THE CONTRACTOR SHALL CONFORM TO THE ABOVE MENTIONED CODES.
2. CONTRACTOR SHALL TAKE ALL PRECAUTIONS NECESSARY TO PREVENT DAMAGE TO EXISTING STRUCTURES. ANY DAMAGE TO EXISTING STRUCTURES AS A RESULT OF THE CONTRACTOR'S WORK OR FROM DAMAGE DUE TO OTHER CAUSES SHALL BE REPAIRED AT THE CONTRACTOR'S EXPENSE TO THE SATISFACTION OF THE OWNER.
3. CONTRACTOR SHALL VERIFY ALL DIMENSIONS AND EXISTING CONDITIONS BEFORE BEGINNING WORK, ORDERING MATERIAL, AND PREPARING OF SHOP DRAWINGS. ANY DISCREPANCIES BETWEEN FIELD CONDITIONS AND THE CONTRACT DOCUMENTS SHALL BE BROUGHT TO THE IMMEDIATE ATTENTION OF THE ENGINEER. IF THE CONTRACTOR DISCOVERS ANY EXISTING CONDITIONS THAT ARE NOT REPRESENTED ON THESE DRAWINGS, OR ANY CONDITIONS THAT WOULD INTERFERE WITH THE INSTALLATION OF THE MODIFICATIONS, NOTIFY THE ENGINEER IMMEDIATELY.
4. IT IS ASSUMED THAT ANY STRUCTURAL MODIFICATION WORK SPECIFIED ON THESE PLANS WILL BE ACCOMPLISHED BY KNOWLEDGEABLE WORKMEN WITH TOWER CONSTRUCTION EXPERIENCE.
5. THE CONTRACTOR SHALL SUPERVISE AND DIRECT THE WORK AND SHALL BE SOLELY RESPONSIBLE FOR ALL CONSTRUCTION METHODS, MEANS, TECHNIQUES, SEQUENCES, AND PROCEDURES.
6. ALL CONSTRUCTION MEANS AND METHODS; INCLUDING BUT NOT LIMITED TO, ERECTION PLANS, RIGGING PLANS, CLIMBING PLANS, AND RESCUE PLANS SHALL BE THE RESPONSIBILITY OF THE GENERAL CONTRACTOR RESPONSIBLE FOR THE EXECUTION OF THE WORK CONTAINED HEREIN AND SHALL MEET ANSI/TIA-322 (LATEST EDITION), OSHA, AND GENERAL INDUSTRY STANDARDS. ALL RIGGING PLANS SHALL ADHERE TO ANSI/TIA-322 (LATEST EDITION) INCLUDING THE REQUIRED INVOLVEMENT OF A QUALIFIED ENGINEER FOR CLASS IV CONSTRUCTION.
7. THE CONTRACTOR IS SOLELY RESPONSIBLE FOR INITIATING, MAINTAINING, AND SUPERVISING ALL SAFETY PROGRAMS IN ACCORDANCE WITH APPLICABLE SAFETY CODES.
8. WORK SHALL ONLY BE PERFORMED DURING CALM DRY DAYS (WINDS LESS THAN 30-MPH). THE STRUCTURE SHOWN ON THE DRAWINGS IS STRUCTURALLY SOUND ONLY IN THE COMPLETED FORM. THE CONTRACTOR SHALL BE RESPONSIBLE FOR THE STRENGTH AND STABILITY OF THE STRUCTURE DURING ERECTION. CONTRACTOR SHALL PROVIDE TEMPORARY SUPPORT, SHORING, BRACING AND ANY OTHER STRUCTURAL SYSTEMS AS REQUIRED TO RESIST ALL FORCES THAT MAY OCCUR DURING HANDLING AND ERECTION UNTIL THE STRUCTURE IS FULLY COMPLETED. TEMPORARY SUPPORTS, BRACING AND OTHER STRUCTURAL SYSTEMS REQUIRED DURING CONSTRUCTION SHALL REMAIN THE CONTRACTOR'S PROPERTY AFTER THEIR USE.
9. ALL INSTALLATIONS PERFORMED ON THIS STRUCTURE SHALL BE COMPLETED IN ACCORDANCE WITH THE GOVERNING PROVISIONS OF THE STANDARD FOR INSTALLATION, ALTERATION AND MAINTENANCE OF ANTENNA SUPPORTING STRUCTURES AND ANTENNAS, ANSI/TIA-322.
10. CONTRACTOR SHALL SECURE SITE BACK TO EXISTING CONDITION UNDER SUPERVISION OF OWNER. ALL FENCE, STONE, GEOFABRIC, GROUNDING, AND SURROUNDING GRADE SHALL BE REPLACED AND REPAIRED AS REQUIRED TO ACHIEVE OWNER APPROVAL. POSITIVE DRAINAGE AWAY FROM TOWER SITE SHALL BE MAINTAINED.
11. CONNECTIONS BETWEEN ITEMS SUPPORTED BY THE STRUCTURE AND THE STRUCTURE NOT SPECIFICALLY DETAILED IN THE CONTRACT DOCUMENTS ARE THE RESPONSIBILITY OF THE CONTRACTOR. SUCH CONNECTIONS SHALL BE DESIGNED, COORDINATED AND INSPECTED BY A PROFESSIONAL STRUCTURAL ENGINEER LICENSED IN THE STATE OF THE PROJECT. SUBMIT SIGNED AND SEALED CALCULATIONS DURING SHOP DRAWING REVIEW.
12. DO NOT SCALE DRAWINGS.
13. DO NOT USE THESE DRAWINGS FOR ANY OTHER SITE.
14. ALL MATERIAL UTILIZED FOR THIS PROJECT MUST BE NEW AND FREE OF ANY DEFECTS. ANY MATERIAL SUBSTITUTIONS, INCLUDING BUT NOT LIMITED TO ALTERED SIZE AND/OR STRENGTHS, MUST BE APPROVED BY THE OWNER AND ENGINEER IN WRITING.
15. THE MOUNT UNDER NO CIRCUMSTANCES SHOULD BE USED AS A TIE OFF POINT.

DESIGN LOADS

WIND LOADS

a. BASIC WIND SPEED (3 SECOND GUST), V = 119 MPH

b. EXPOSURE CATEGORY B

c. TOPOGRAPHIC CATEGORY 1

d. MEAN BASE ELEVATION (AMSL) = 582.29'

ICE LOADS

a. ICE WIND SPEED (3 SECOND GUST), V = 50 MPH

b. ICE THICKNESS = 1.50 IN

SEISMIC LOADS

a. SEISMIC DESIGN CATEGORY B

b. SHORT TERM MCER GROUND MOTION, S_S = .181

c. LONG TERM MCER GROUND MOTION, S_1 = .055

STRUCTURAL STEEL

1. DESIGN, DETAILING, FABRICATION AND ERECTION OF STRUCTURAL STEEL SHALL CONFORM TO THE FOLLOWING PUBLICATIONS EXCEPT AS SPECIFICALLY INDICATED IN THE CONTRACT DOCUMENTS.
   a. AMERICAN INSTITUTE OF STEEL CONSTRUCTION (AISC) MANUAL OF STEEL CONSTRUCTION (15TH EDITION)
   b. SPECIFICATION FOR STRUCTURAL JOINTS USING ASTM A325 OR A490 BOLTS
   c. AISC CODE OF STANDARD PRACTICE
2. STRUCTURAL STEEL SHALL CONFORM TO THE FOLLOWING UNLESS OTHERWISE SHOWN:

CHANNELS, ANGLES, PLATES, ETC.	ASTM A36 (GR 36)
STEEL PIPE	ASTM A53 (GR 35)
BOLTS	ASTM A325
NUTS	ASTM A563
LOCK WASHERS	LOCKING STRUCTURAL GRADE

3. ALL SUBSTITUTIONS PROPOSED BY THE CONTRACTOR SHALL BE APPROVED IN WRITING BY THE ENGINEER. CONTRACTOR SHALL PROVIDE DOCUMENTATION TO ENGINEER FOR VERIFYING THE SUBSTITUTE IS SUITABLE FOR USE AND MEETS ORIGINAL DESIGN CRITERIA. DIFFERENCES FROM THE ORIGINAL DESIGN, INCLUDING MAINTENANCE, REPAIR AND REPLACEMENT, SHALL BE NOTED. ESTIMATES OF COSTS/CREDITS ASSOCIATED WITH THE SUBSTITUTION (INCLUDING RE-DESIGN COSTS AND COSTS TO SUB-CONTRACTORS) SHALL BE PROVIDED TO THE ENGINEER. CONTRACTOR SHALL PROVIDE ADDITIONAL DOCUMENTATION AND/OR SPECIFICATIONS TO THE ENGINEER AS REQUESTED.
4. PROVIDE STRUCTURAL STEEL SHOP DRAWINGS TO ENGINEER FOR APPROVAL PRIOR TO FABRICATION.
   a. SUBMIT SHOP DRAWINGS TO PETER.ALBANO@COLLIERSENGINEERING.COM
   b. PROVIDE MASER CONSULTING PROJECT # AND MASER CONSULTING PROJECT ENGINEER CONTACT IN THE BODY OF THE EMAIL.
5. DRILL NO HOLES IN ANY NEW OR EXISTING STRUCTURAL STEEL MEMBERS OTHER THAN THOSE SHOWN ON STRUCTURAL DRAWINGS WITHOUT THE APPROVAL OF THE ENGINEER OF RECORD.
6. GALVANIZED ASTM A325 BOLTS SHALL NOT BE REUSED.
7. ALL NEW STEEL SHALL BE HOT BE DIPPED GALVANIZED FOR FULL WEATHER PROTECTION. IN ADDITION ALL NEW STEEL SHALL BE PAINTED TO MATCH EXISTING STEEL. CONTRACTOR SHALL OBTAIN WRITTEN PERMISSION TO PROTECT STEEL BY ANY OTHER MEANS.
8. ALL BOLT ASSEMBLIES FOR STRUCTURAL MEMBERS REPRESENTED IN THIS DRAWING REQUIRE LOCKING DEVICES TO BE INSTALLED IN ACCORDANCE WITH TIA-222-H SECTION 4.9.2 REQUIREMENTS.
9. WHERE CONNECTIONS ARE NOT FULLY DETAILED ON THESE DRAWINGS, FABRICATOR SHALL DESIGN CONNECTIONS TO RESIST LOADS AND FORCES WHERE SHOWN ON DRAWINGS AND AS OUTLINED IN SPECIFICATIONS.
10. FOR MEMBERS BEING REPLACED, PROVIDE NEW BOLTS AND MATCH EXISTING SIZE AND GRADE. MAINTAIN AISC REQUIREMENTS FOR MINIMUM BOLT DISTANCE AND SPACING.
11. ALL PROPOSED AND/OR REPLACED BOLTS SHALL BE OF SUFFICIENT LENGTH SUCH THAT THE END OF THE BOLT IS AT LEAST FLUSH WITH THE FACE OF THE NUT. IT IS NOT PERMITTED FOR THE BOLT END TO BE BELOW THE FACE OF THE NUT AFTER TIGHTENING IS COMPLETED.
12. GALVANIZED ASTM A325 BOLTS SHALL NOT BE REUSED.
13. ALL NEW STEEL SHALL BE HOT BE DIPPED GALVANIZED FOR FULL WEATHER PROTECTION. CONTRACTOR SHALL OBTAIN WRITTEN PERMISSION TO PROTECT STEEL BY ANY OTHER MEANS.
14. ALL EXISTING PAINTED/GALVANIZED SURFACES DAMAGED DURING REHAB INCLUDING AREAS UNDER STIFFENER PLATES SHALL BE WIRE BRUSHED CLEAN, REPAIRED BY COLD GALVANIZING (ZINGA OR ZINC COTE), AND REPAINTED TO MATCH THE EXISTING FINISH (IF APPLICABLE).
15. ALL HOLES IN STEEL MEMBERS SHALL BE SIZED 1/16" LARGER THAN THE BOLT DIAMETER. STANDARD HOLES SHALL BE USED UNLESS NOTED OTHERWISE.

MASER CONSULTING CONNECTICUT
"WILL BE KNOWN AS COLLIERS ENGINEERING & DESIGN IN 2021"
Customer Loyalty *through* Client Satisfaction
www.maserconsulting.com
Office Locations:
- NEW JERSEY
- NEW YORK
- PENNSYLVANIA
- VIRGINIA
- FLORIDA
- NORTH CAROLINA
- SOUTH CAROLINA
- NEW MEXICO
- MARYLAND
- GEORGIA
- TEXAS
- TENNESSEE
- COLORADO

Copyright © 2021. Maser Consulting All Rights Reserved. This drawing and all the information contained herein is authorized for use only by the party for whom the services were contracted or to whom it is certified. This drawing may not be copied, reused, disclosed, distributed or relied upon for any other purpose without the express written consent of Maser Consulting.

verizon

PROTECT YOURSELF
ALL STATES REQUIRE NOTIFICATION OF EXCAVATORS, DESIGNERS, OR ANY PERSON PREPARING TO DISTURB THE EARTH'S SURFACE ANYWHERE IN ANY STATE
811 Know what's below. Call before you dig.
FOR STATE SPECIFIC DIRECT PHONE NUMBERS VISIT: WWW.CALL811.COM

SCALE :	JOB NUMBER :
AS SHOWN	21777482A

REV	DATE	DESCRIPTION	DRAWN BY	CHECKED BY
.	.	.	.	.
.	.	.	.	.
.	.	.	.	.
0	6/16/2021	ISSUED FOR CONSTRUCTION	FAC	DH

STATE OF CONNECTICUT · DEREK R. HARTZELL · 32710 · LICENSED PROFESSIONAL ENGINEER

Derek Hartzell
CONSULTING ENGINEER
LICENSE NUMBER: 32710
MASER CONSULTING
CT. COA. NUMBER: PEC.0.0131

Digitally signed by Derek R. Hartzell
Date: 2021.06.16 12:19:09-04'00'

IT IS A VIOLATION OF LAW FOR ANY PERSON, UNLESS THEY ARE ACTING UNDER THE DIRECTION OF THE RESPONSIBLE LICENSED PROFESSIONAL ENGINEER, TO ALTER THIS DOCUMENT.

SITE NAME:

ASHFORD NORTH CT
468148

174 ASHFORD CENTER ROAD
ASHFORD, CT 06278
WINDHAM COUNTY

MT. LAUREL OFFICE
2000 Midlantic Drive
Suite 100
Mount Laurel, NJ 08054
Phone: 856.797.0412
Fax: 856.722.1120

SHEET TITLE :
MODIFICATION NOTES

SHEET NUMBER :
S-2

NOTE: DO NOT SCALE DRAWINGS FOR CONSTRUCTION.

AcAuto, 1984 Tempo Moon MOD.dwg\S-2 By: FCERTONE

MODIFICATION INSPECTION NOTES

MI CHECKLIST

CONSTRUCTION/ INSTALLATION INSPECTIONS AND TESTING REQUIRED (COMPLETED BY EOR)	REPORT ITEM
	PRE-CONSTRUCTION
X	MI CHECKLIST DRAWING
X	EOR APPROVED SHOP DRAWINGS
NA	FABRICATION INSPECTION
NA	FABRICATOR CERTIFIED WELD INSPECTION
X	MATERIAL TEST REPORT (MTR)
NA	FABRICATOR NDE INSPECTION
X	PACKING SLIPS
ADDITIONAL TESTING AND INSPECTIONS:	
	CONSTRUCTION
X	CONSTRUCTION INSPECTIONS
NA	CONTRACTOR'S CERTIFIED WELD INSPECTION AND NDE REPORTS
X	ON SITE COLD GALVANIZING VERIFICATION
X	GC AS-BUILT DOCUMENTS
ADDITIONAL TESTING AND INSPECTIONS:	
	POST-CONSTRUCTION
X	MI INSPECTOR REDLINE OR RECORD DRAWING(S)
X	VZW PMI DOCUMENTS
X	PHOTOGRAPHS
ADDITIONAL TESTING AND INSPECTIONS:	

NOTE: X DENOTES A DOCUMENT REQUIRED FOR THE MI REPORT
NA DENOTES A DOCUMENT THAT IS NOT REQUIRED FOR THE MI REPORT

THE MODIFICATION INSPECTION (MI) IS A VISUAL INSPECTION OF MODIFICATIONS AND A REVIEW OF CONSTRUCTION INSPECTIONS AND OTHER REPORTS TO ENSURE THE INSTALLATION WAS CONSTRUCTED IN ACCORDANCE WITH THE CONTRACT DOCUMENTS, NAMELY THE MODIFICATION DRAWINGS, AS DESIGNED BY THE ENGINEER OF RECORD (EOR).

THE MI IS TO CONFIRM INSTALLATION CONFIGURATION AND WORKMANSHIP ONLY AND IS NOT A REVIEW OF THE MODIFICATION DESIGN ITSELF, NOR DOES THE MI INSPECTOR TAKE OWNERSHIP OF THE MODIFICATION DESIGN. OWNERSHIP OF THE STRUCTURAL MODIFICATION DESIGN EFFECTIVENESS AND INTEGRITY RESIDES WITH THE EOR AT ALL TIMES.

TO ENSURE THAT THE REQUIREMENTS OF THE MI ARE MET, IT IS VITAL THAT THE GENERAL CONTRACTOR (GC) AND THE MI INSPECTOR BEGIN COMMUNICATING AND COORDINATING AS SOON AS A PURCHASE ORDER (PO) IS RECEIVED. IT IS EXPECTED THAT EACH PARTY WILL BE PROACTIVE IN REACHING OUT TO THE OTHER PARTY.

MI INSPECTOR

THE MI INSPECTOR IS REQUIRED TO CONTACT THE GC AS SOON AS RECEIVING A PO FOR THE MI TO, AT A MINIMUM:

- REVIEW THE REQUIREMENTS OF THE MI CHECKLIST
- WORK WITH THE GC TO DEVELOP A SCHEDULE TO CONDUCT ON-SITE INSPECTIONS

THE MI INSPECTOR IS RESPONSIBLE FOR COLLECTING ALL GC INSPECTION AND TEST REPORTS, REVIEWING THE DOCUMENTS FOR ADHERENCE TO THE CONTRACT DOCUMENTS, CONDUCTING THE IN-FIELD INSPECTIONS, AND SUBMITTING THE MI REPORT TO EOR.

GENERAL CONTRACTOR

THE GC IS REQUIRED TO CONTACT THE MI INSPECTOR AS SOON AS RECEIVING A PO FOR THE MODIFICATION INSTALLATION OR TURNKEY PROJECT TO, AT A MINIMUM:

- REVIEW THE REQUIREMENTS OF THE MI CHECKLIST
- WORK WITH THE MI INSPECTOR TO DEVELOP A SCHEDULE TO CONDUCT ON-SITE MI INSPECTIONS, INCLUDING FOUNDATION INSPECTIONS
- BETTER UNDERSTAND ALL INSPECTION AND TESTING REQUIREMENTS

THE GC SHALL PERFORM AND RECORD THE TEST AND INSPECTION RESULTS IN ACCORDANCE WITH THE REQUIREMENTS OF THE MI CHECKLIST.

RECOMMENDATIONS

THE FOLLOWING RECOMMENDATIONS AND SUGGESTIONS ARE OFFERED TO ENHANCE THE EFFICIENCY AND EFFECTIVENESS OF DELIVERING AN MI REPORT:

- IT IS SUGGESTED THAT THE GC PROVIDE A MINIMUM OF 5 BUSINESS DAYS NOTICE, PREFERABLY 10, TO THE MI INSPECTOR AS TO WHEN THE SITE WILL BE READY FOR THE MI TO BE CONDUCTED.
- THE GC AND MI INSPECTOR COORDINATE CLOSELY THROUGHOUT THE ENTIRE PROJECT.
- WHEN POSSIBLE, IT IS PREFERRED TO HAVE THE GC AND MI INSPECTOR ON-SITE SIMULTANEOUSLY FOR ANY GUY WIRE TENSIONING OR RE-TENSIONING OPERATIONS.
- IT MAY BE BENEFICIAL TO INSTALL ALL MODIFICATIONS PRIOR TO CONDUCTING THE FOUNDATION INSPECTIONS TO ALLOW THE FOUNDATION AND MI INSPECTION(S) TO COMMENCE WITH ONE SITE VISIT.
- WHEN POSSIBLE, IT IS PREFERRED TO HAVE THE GC AND MI INSPECTOR ON-SITE DURING THE MI TO HAVE ANY DEFICIENCIES CORRECTED DURING THE INITIAL MI. THEREFORE, THE GC MAY CHOOSE TO COORDINATE THE MI CAREFULLY TO ENSURE ALL CONSTRUCTION FACILITIES ARE AT THEIR DISPOSAL WHEN THE MI INSPECTOR IS ON SITE.

CORRECTION OF FAILING MI'S

IF THE MODIFICATION INSTALLATION WOULD FAIL THE MI ("FAILED MI"), THE GC SHALL WORK WITH THE OWNER TO COORDINATE A REMEDIATION PLAN:

- CORRECT FAILING ISSUES TO COMPLY WITH THE SPECIFICATIONS CONTAINED IN THE ORIGINAL CONTRACT DOCUMENTS AND COORDINATE A SUPPLEMENT MI.

REQUIRED PHOTOS

BETWEEN THE GC AND THE MI INSPECTOR THE FOLLOWING PHOTOGRAPHS, AT A MINIMUM, ARE TO BE TAKEN AND INCLUDED IN THE MI REPORT:

- PRE-CONSTRUCTION GENERAL SITE CONDITION
- PHOTOGRAPHS DURING THE REINFORCEMENT MODIFICATION CONSTRUCTION/ERECTION AND INSPECTION
  - RAW MATERIALS
  - PHOTOS OF ALL CRITICAL DETAILS
  - FOUNDATION MODIFICATIONS
  - WELD PREPARATION
  - BOLT INSTALLATION
  - FINAL INSTALLED CONDITION
  - SURFACE COATING REPAIR
- POST CONSTRUCTION PHOTOGRAPHS
  - FINAL INFIELD CONDITION

PHOTOS OF ELEVATED MODIFICATIONS TAKEN ONLY FROM THE GROUND SHALL BE CONSIDERED INADEQUATE.

ALLOWABLE COPING

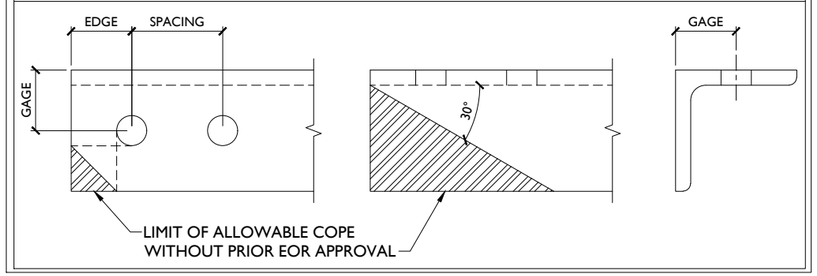

BOLT SCHEDULE (IN.)

BOLT DIAMETER	STANDARD HOLE	SHORT SLOT	MIN. EDGE DISTANCE	SPACING
1/2	9/16	9/16 x 11/16	7/8	1 1/2
5/8	11/16	11/16 x 7/8	1 1/8	1 7/8
3/4	13/16	13/16 x 1	1 1/4	2 1/4
7/8	15/16	15/16 x 1 1/8	1 1/2	2 5/8
1	1 1/16	1 1/16 x 1 5/16	1 3/4	3

WORKABLE GAGES (IN.)

LEG	GAGE
4	2 1/2
3 1/2	2
3	1 3/4
2 1/2	1 3/8
2	1 1/8

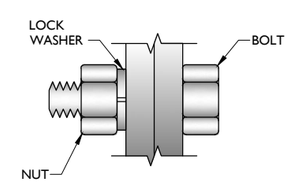

TYP. BOLT ASSEMBLY

NOTES:

1. ALL DIMENSIONS REPRESENTED IN THE ABOVE TABLES ARE AISC MINIMUM REQUIREMENTS. CONTRACTOR SHALL VERIFY EXISTING CONDITIONS IN FIELD AND NOTIFY ENGINEER IF DISTANCES ARE LESS THAN THOSE PROVIDED.
2. THE DIMENSIONS PROVIDED ARE MINIMUM REQUIREMENTS. ACTUAL DIMENSIONS OF PROPOSED MEMBERS WITHIN THESE DRAWINGS MAY VARY FROM THE AISC MINIMUM REQUIREMENTS.
3. SHORT SLOT HOLES SHALL ONLY BE USED WHEN DEPICTED IN THE DRAWINGS
4. MATCH EXISTING GAGES WHEN APPLICABLE, UNLESS MINIMUM EDGE DISTANCES ARE COMPROMISED.

MASER CONSULTING CONNECTICUT
"WILL BE KNOWN AS COLLIERS ENGINEERING & DESIGN IN 2021"
Customer Loyalty *through* Client Satisfaction
www.maserconsulting.com
Office Locations:
- NEW JERSEY
- NEW YORK
- PENNSYLVANIA
- VIRGINIA
- FLORIDA
- NORTH CAROLINA
- SOUTH CAROLINA
- NEW MEXICO
- MARYLAND
- GEORGIA
- TEXAS
- TENNESSEE
- COLORADO

Copyright © 2021. Maser Consulting All Rights Reserved. This drawing and all the information contained herein is authorized for use only by the party for whom the services were contracted or to whom it is certified. This drawing may not be copied, reused, disclosed, distributed or relied upon for any other purpose without the express written consent of Maser Consulting.

verizon

811 Know what's below. Call before you dig.

PROTECT YOURSELF
ALL STATES REQUIRE NOTIFICATION OF EXCAVATORS, DESIGNERS, OR ANY PERSON PREPARING TO DISTURB THE EARTH'S SURFACE ANYWHERE IN ANY STATE

FOR STATE SPECIFIC DIRECT PHONE NUMBERS VISIT: WWW.CALL811.COM

SCALE: AS SHOWN
JOB NUMBER: 21777482A

REV	DATE	DESCRIPTION	DRAWN BY	CHECKED BY
0	6/16/2021	ISSUED FOR CONSTRUCTION	FAC	DH

STATE OF CONNECTICUT
DEREK R. HARTZELL
32710
LICENSED PROFESSIONAL ENGINEER

Derek Hartzell
SENIOR PROJECT MANAGER / ENGINEER
LICENSE NUMBER: 32710
MASER CONSULTING
CT. COA #: PEC.0.0131

Digitally signed by Derek R. Hartzell
Date: 2021.06.16 12:19:10-04'00'

IT IS A VIOLATION OF LAW FOR ANY PERSON, UNLESS THEY ARE ACTING UNDER THE DIRECTION OF THE RESPONSIBLE LICENSED PROFESSIONAL ENGINEER, TO ALTER THIS DOCUMENT.

SITE NAME:

ASHFORD NORTH CT
468148

174 ASHFORD CENTER ROAD
ASHFORD, CT 06278
WINDHAM COUNTY

MT. LAUREL OFFICE
2000 Midlantic Drive
Suite 100
Mount Laurel, NJ 08054
Phone: 856.797.0412
Fax: 856.722.1120

SHEET TITLE: MODIFICATION NOTES

SHEET NUMBER: S-3

NOTE: DO NOT SCALE DRAWINGS FOR CONSTRUCTION.

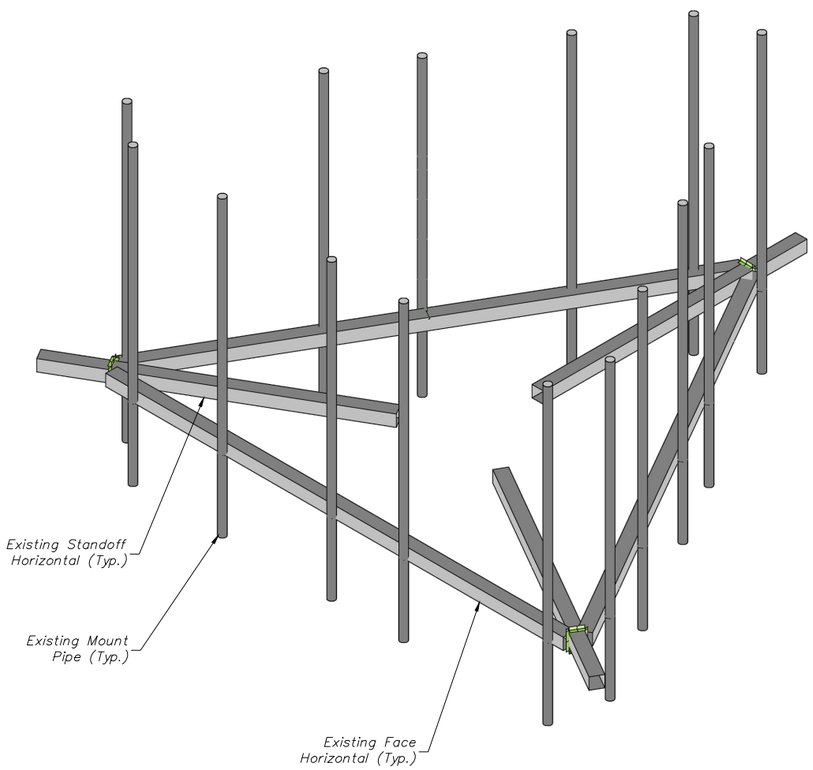

1 EXISTING PLATFORM ISOMETRIC VIEW

SCALE : N.T.S.

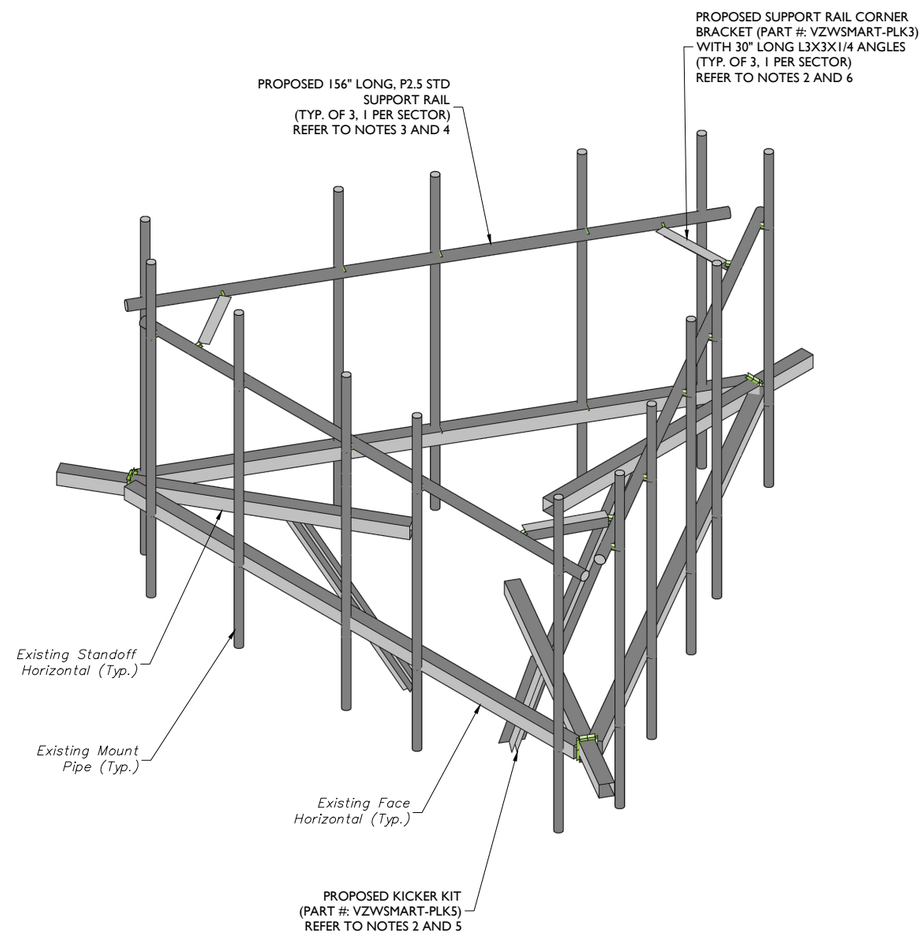

2 PROPOSED PLATFORM ISOMETRIC VIEW

SCALE : N.T.S.

STRUCTURAL NOTES:

1. CONTRACTOR TO INSPECT CLIMBING FACILITIES AT SITE AND ENSURE THAT THE SAFETY CLIMB IS IN GOOD CONDITION AND THAT THE WIRE ROPE DOES NOT OR WILL NOT INTERFERE WITH THE EXISTING OR PROPOSED MOUNT CONNECTIONS. CONTRACTOR SHALL INSTALL SAFETY CLIMB WIRE ROPE GUIDED AROUND MOUNT CONNECTIONS AS NEEDED.

2. INSTALL SHALL NOT CAUSE HARM TO THE STRUCTURE, CLIMBING FACILITY, SAFETY CLIMB, OR ANY SYSTEM INSTALLED ON THE STRUCTURE. TIMELY NOTICE AND DOCUMENTATION SHALL BE PROVIDED BY CONTRACTORS TO THE EOR (OF STRUCTURAL DESIGN) IF AN OBSTRUCTION WAS REQUIRED TO MEET THE RF SYSTEM DESIGN REQUIREMENTS AND PERFORMANCES.

MODIFICATION NOTES:

1. MOUNT MEMBERS NOT SHOWN FOR CLARITY U.N.O.

2. CONTRACTOR TO VERIFY THE LENGTH REQUIRED AND TRIM AS NECESSARY IN ACCORDANCE WITH THE 'STRUCTURAL STEEL' NOTES ON SHEET S-2.

3. RADIO AND/OR TME POSITIONS SHALL BE ADJUSTED VERTICALLY AS NEEDED IN ORDER TO ACHIEVE INSTALLATION OF HORIZONTAL AS SHOWN. EOR SHALL BE NOTIFIED IF EQUIPMENT NEEDS TO BE RELOCATED TO ANOTHER MOUNT PIPE.

4. CONNECT NEW SUPPORT RAIL TO ALL EXISTING VERTICAL MOUNT PIPES WITH CROSSOVER PLATES (PART #: VZWSMART-MSK1).

5. CONNECT OTHER END OF KICKER KIT TO MONOPOLE COLLAR MOUNT ASSEMBLY (PART #: VZWSMART-PLK7).

6. CONTRACTOR SHALL CONNECT PROPOSED L3X3X1/4 ANGLES TO CORNER BRACKETS USING THE PROVIDED (8) 5/8" DIA. BOLTS, (4) BOLTS PER CONNECTION.

MASER CONSULTING CONNECTICUT
WILL BE KNOWN AS COLLIERS ENGINEERING & DESIGN IN 2021
Customer Loyalty *through* Client Satisfaction
www.maserconsulting.com
Office Locations:
- NEW JERSEY
- NEW YORK
- PENNSYLVANIA
- VIRGINIA
- FLORIDA
- NORTH CAROLINA
- SOUTH CAROLINA
- NEW MEXICO
- MARYLAND
- GEORGIA
- TEXAS
- TENNESSEE
- COLORADO

Copyright © 2021. Maser Consulting All Rights Reserved. This drawing and all the information contained herein is authorized for use only by the party for whom the services were contracted or to whom it is certified. This drawing may not be copied, reused, disclosed, distributed or relied upon for any other purpose without the express written consent of Maser Consulting.

verizon

PROTECT YOURSELF
ALL STATES REQUIRE NOTIFICATION OF EXCAVATORS, DESIGNERS, OR ANY PERSON PREPARING TO DISTURB THE EARTH'S SURFACE ANYWHERE IN ANY STATE
811 Know what's below. Call before you dig.
FOR STATE SPECIFIC DIRECT PHONE NUMBERS VISIT: WWW.CALL811.COM

SCALE : AS SHOWN
JOB NUMBER : 21777482A

REV	DATE	DESCRIPTION	DRAWN BY	CHECKED BY
0	6/16/2021	ISSUED FOR CONSTRUCTION	FAC	DH

STATE OF CONNECTICUT DEREK R. HARTZELL 32710 LICENSED PROFESSIONAL ENGINEER

Derek Hartzell
CONSULTING ENGINEER
LICENSE NUMBER: 32710
MASER CONSULTING
CT. COA #: PEC.0000131

Digitally signed by Derek R. Hartzell
Date: 2021.06.16 12:19:10-04'00'

IT IS A VIOLATION OF LAW FOR ANY PERSON, UNLESS THEY ARE ACTING UNDER THE DIRECTION OF THE RESPONSIBLE LICENSED PROFESSIONAL ENGINEER, TO ALTER THIS DOCUMENT.

SITE NAME:
ASHFORD NORTH CT
468148
174 ASHFORD CENTER ROAD
ASHFORD, CT 06278
WINDHAM COUNTY

MT. LAUREL OFFICE
2000 Midlantic Drive
Suite 100
Mount Laurel, NJ 08054
Phone: 856.797.0412
Fax: 856.722.1120

SHEET TITLE : MODIFICATION DETAILS

SHEET NUMBER : S-4

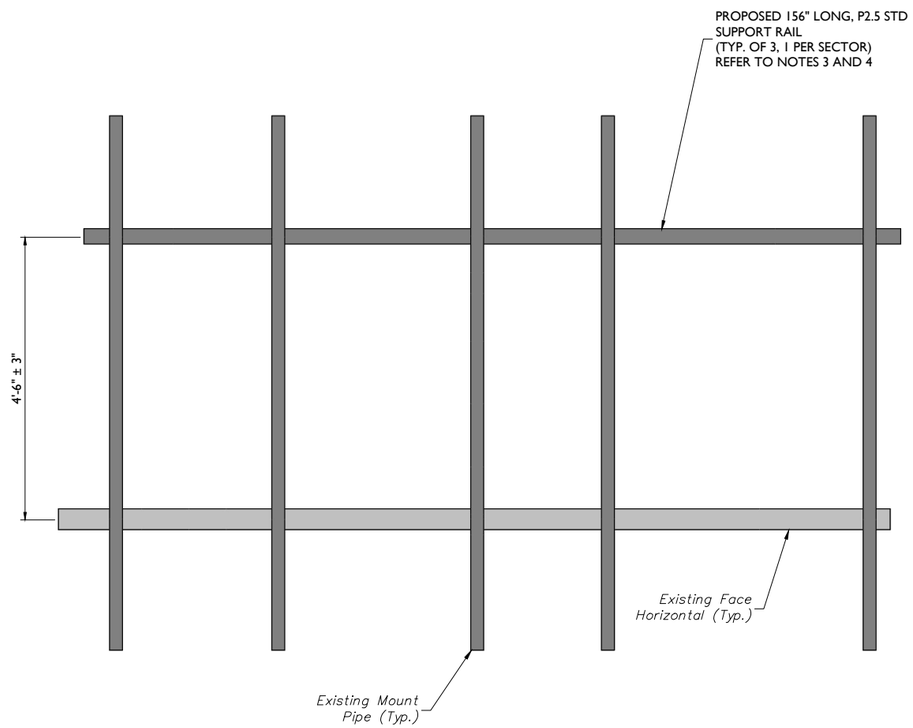

1 PROPOSED FRONT ELEVATION (TYP. ALL SECTORS)

SCALE : N.T.S.

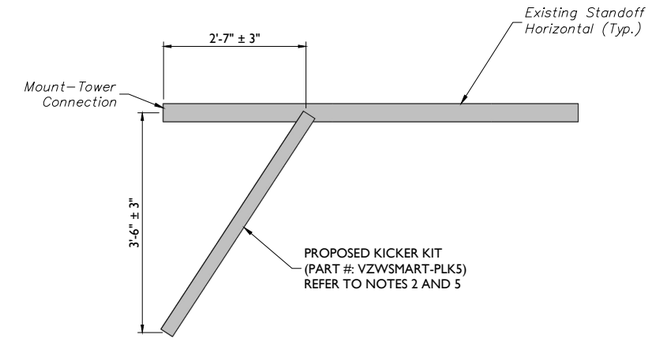

2 PROPOSED SIDE ELEVATION (TYP. ALL SECTORS)

SCALE : N.T.S.

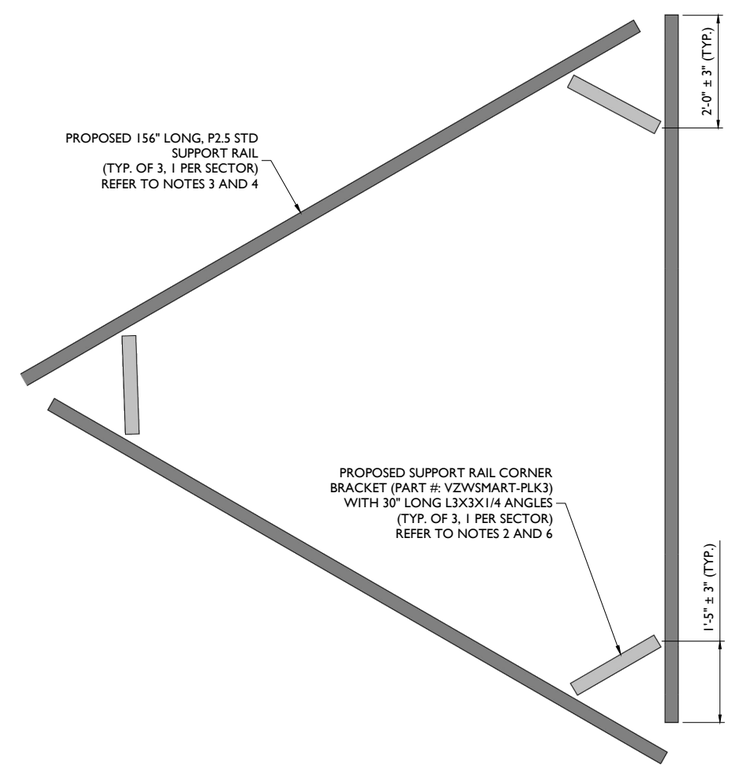

3 PROPOSED PLAN VIEW

SCALE : N.T.S.

MODIFICATION NOTES:

1. MOUNT MEMBERS NOT SHOWN FOR CLARITY U.N.O.
2. CONTRACTOR TO VERIFY THE LENGTH REQUIRED AND TRIM AS NECESSARY IN ACCORDANCE WITH THE 'STRUCTURAL STEEL' NOTES ON SHEET S-2.
3. RADIO AND/OR TME POSITIONS SHALL BE ADJUSTED VERTICALLY AS NEEDED IN ORDER TO ACHIEVE INSTALLATION OF HORIZONTAL AS SHOWN. EOR SHALL BE NOTIFIED IF EQUIPMENT NEEDS TO BE RELOCATED TO ANOTHER MOUNT PIPE.
4. CONNECT NEW SUPPORT RAIL TO ALL EXISTING VERTICAL MOUNT PIPES WITH CROSSOVER PLATES (PART #: VZWSMART-MSK1).
5. CONNECT OTHER END OF KICKER KIT TO MONOPOLE COLLAR MOUNT ASSEMBLY (PART #: VZWSMART-PLK7).
6. CONTRACTOR SHALL CONNECT PROPOSED L3X3X1/4 ANGLES TO CORNER BRACKETS USING THE PROVIDED (8) 5/8" DIA. BOLTS, (4) BOLTS PER CONNECTION.

MASER CONSULTING CONNECTICUT
WILL BE KNOWN AS COLLIERS ENGINEERING & DESIGN IN 2021
Customer Loyalty *through* Client Satisfaction
www.maserconsulting.com
Office Locations:
- NEW JERSEY
- NEW YORK
- PENNSYLVANIA
- VIRGINIA
- FLORIDA
- NORTH CAROLINA
- SOUTH CAROLINA
- NEW MEXICO
- MARYLAND
- GEORGIA
- TEXAS
- TENNESSEE
- COLORADO

Copyright © 2021. Maser Consulting All Rights Reserved. This drawing and all the information contained herein is authorized for use only by the party for whom the services were contracted or to whom it is certified. This drawing may not be copied, reused, disclosed, distributed or relied upon for any other purpose without the express written consent of Maser Consulting.

verizon

811 Know what's below. Call before you dig.

PROTECT YOURSELF
ALL STATES REQUIRE NOTIFICATION OF EXCAVATORS, DESIGNERS, OR ANY PERSON PREPARING TO DISTURB THE EARTH'S SURFACE ANYWHERE IN ANY STATE

FOR STATE SPECIFIC DIRECT PHONE NUMBERS VISIT:
WWW.CALL811.COM

SCALE : AS SHOWN
JOB NUMBER : 21777482A

REV	DATE	DESCRIPTION	DRAWN BY	CHECKED BY
0	6/16/2021	ISSUED FOR CONSTRUCTION	FAC	DH

STATE OF CONNECTICUT
DEREK R. HARTZELL
32710
LICENSED PROFESSIONAL ENGINEER

Derek Hartzell
CONSULTING ENGINEER
LICENSE NUMBER: 32710
MASER CONSULTING
CT. COA #: PEC.0000131

Digitally signed by Derek R. Hartzell
Date: 2021.06.16 12:19:10-04'00'

IT IS A VIOLATION OF LAW FOR ANY PERSON, UNLESS THEY ARE ACTING UNDER THE DIRECTION OF THE RESPONSIBLE LICENSED PROFESSIONAL ENGINEER, TO ALTER THIS DOCUMENT.

SITE NAME:

ASHFORD NORTH CT
468148

174 ASHFORD CENTER ROAD
ASHFORD, CT 06278
WINDHAM COUNTY

MT. LAUREL OFFICE
2000 Midlantic Drive
Suite 100
Mount Laurel, NJ 08054

Phone: 856.797.0412
Fax: 856.722.1120

SHEET TITLE :
MODIFICATION DETAILS

SHEET NUMBER :
S-5

MOUNT PHOTO 1

MOUNT PHOTO 2

MOUNT PHOTO 3

MOUNT PHOTO 4

MASER CONSULTING CONNECTICUT

WILL BE KNOWN AS COLLIERS ENGINEERING & DESIGN IN 2021

Customer Loyalty *through* Client Satisfaction

www.maserconsulting.com

Office Locations:

- NEW JERSEY
- NEW YORK
- PENNSYLVANIA
- VIRGINIA
- FLORIDA
- NORTH CAROLINA
- SOUTH CAROLINA
- NEW MEXICO
- MARYLAND
- GEORGIA
- TEXAS
- TENNESSEE
- COLORADO

Copyright © 2021. Maser Consulting All Rights Reserved. This drawing and all the information contained herein is authorized for use only by the party for whom the services were contracted or to whom it is certified. This drawing may not be copied, reused, disclosed, distributed or relied upon for any other purpose without the express written consent of Maser Consulting.

verizon

PROTECT YOURSELF

ALL STATES REQUIRE NOTIFICATION OF EXCAVATORS, DESIGNERS, OR ANY PERSON PREPARING TO DISTURB THE EARTH'S SURFACE ANYWHERE IN ANY STATE

811 Know what's below. Call before you dig.

FOR STATE SPECIFIC DIRECT PHONE NUMBERS VISIT: WWW.CALL811.COM

SCALE : AS SHOWN

JOB NUMBER : 21777482A

REV	DATE	DESCRIPTION	DRAWN BY	CHECKED BY
.	.	.	.	.
.	.	.	.	.
.	.	.	.	.
0	6/16/2021	ISSUED FOR CONSTRUCTION	FAC	DH

STATE OF CONNECTICUT · DEREK R. HARTZELL · 32710 · LICENSED PROFESSIONAL ENGINEER

Derek Hartzell

LICENSE NUMBER: 32710

MASER CONSULTING

CT. C.O.A. #PEC.0000131

Digitally signed by Derek R. Hartzell
Date: 2021.06.16 12:19:10-04'00'

IT IS A VIOLATION OF LAW FOR ANY PERSON, UNLESS THEY ARE ACTING UNDER THE DIRECTION OF THE RESPONSIBLE LICENSED PROFESSIONAL ENGINEER, TO ALTER THIS DOCUMENT.

SITE NAME:

ASHFORD NORTH CT
468148

174 ASHFORD CENTER ROAD
ASHFORD, CT 06278
WINDHAM COUNTY

MT. LAUREL OFFICE
2000 Midlantic Drive
Suite 100
Mount Laurel, NJ 08054

Phone: 856.797.0412
Fax: 856.722.1120

SHEET TITLE : MOUNT PHOTOS

SHEET NUMBER : S-6

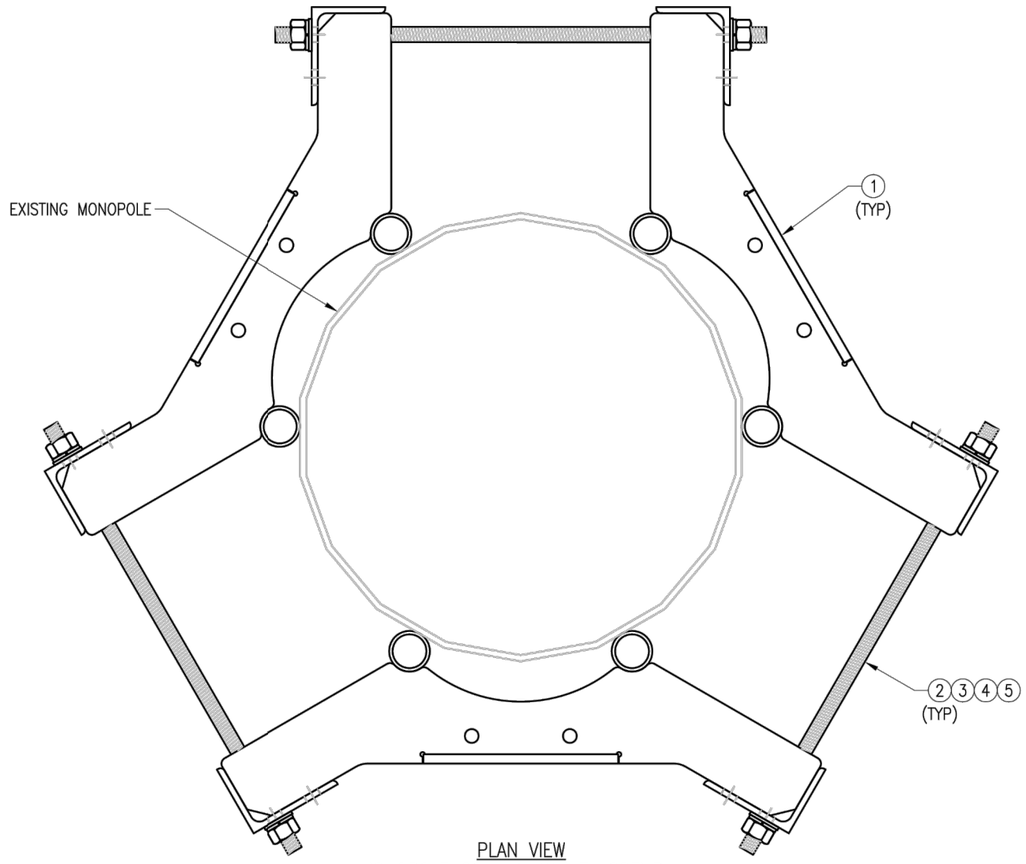

PLAN VIEW
MONOPOLE COLLAR MOUNT ASSEMBLY

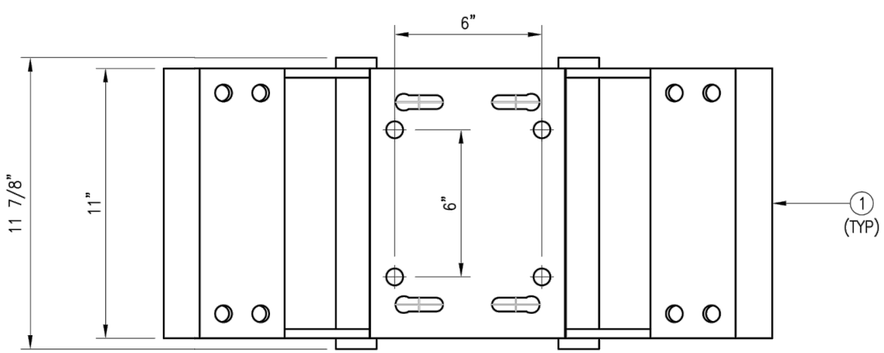

FRONT VIEW

NOTES:
1. FIT 12" TO 45" DIA MONOPOLE.
2. HOT-DIPPED GALVANIZED PER ASTM A123.

VZWSMART-PLK7 (MONOPOLE COLLAR MOUNT ASSEMBLY)

ITEM NO.	QTY.	PART NO.	DESCRIPTION	SHEET #	WT
1	3	CM-1245	COLLAR MOUNT ASSEMBLY	PLK7-F1	147
2	6	---	THREADED ROD 5/8" X 4'-0" A193-B7	---	
3	12	FW-625	5/8" HDG USS FLAT WASHER	---	1
4	12	LW-625	5/8" HDG LOCK WASHER	---	0
5	12	NUT-625	5/8" HDG HEX NUT	---	1
				GALVANIZED WT	150

VzW
SMART Tool©
Vendor

verizon

DRAWN BY: BT | CHECKED BY: HMA/KW

REV.	DESCRIPTION	BY	DATE
0	FIRST ISSUE	BT	05/11/20

SHEET TITLE:
VZWSMART-PLK7
MONOPOLE COLLAR
MOUNT ASSEMBLY

SHEET NUMBER: VZWSMART-PLK7

REV #: 0

NOTE:
THE LOCATION OF KICKER AND EXISTING ANTENNA MOUNT SHOWN ON THE DRAWING IS FOR REPRESENTATION PURPOSE ONLY. SEE INSTALLATION DRAWINGS FOR ACTUAL INSTALLATION OF DETAILS.

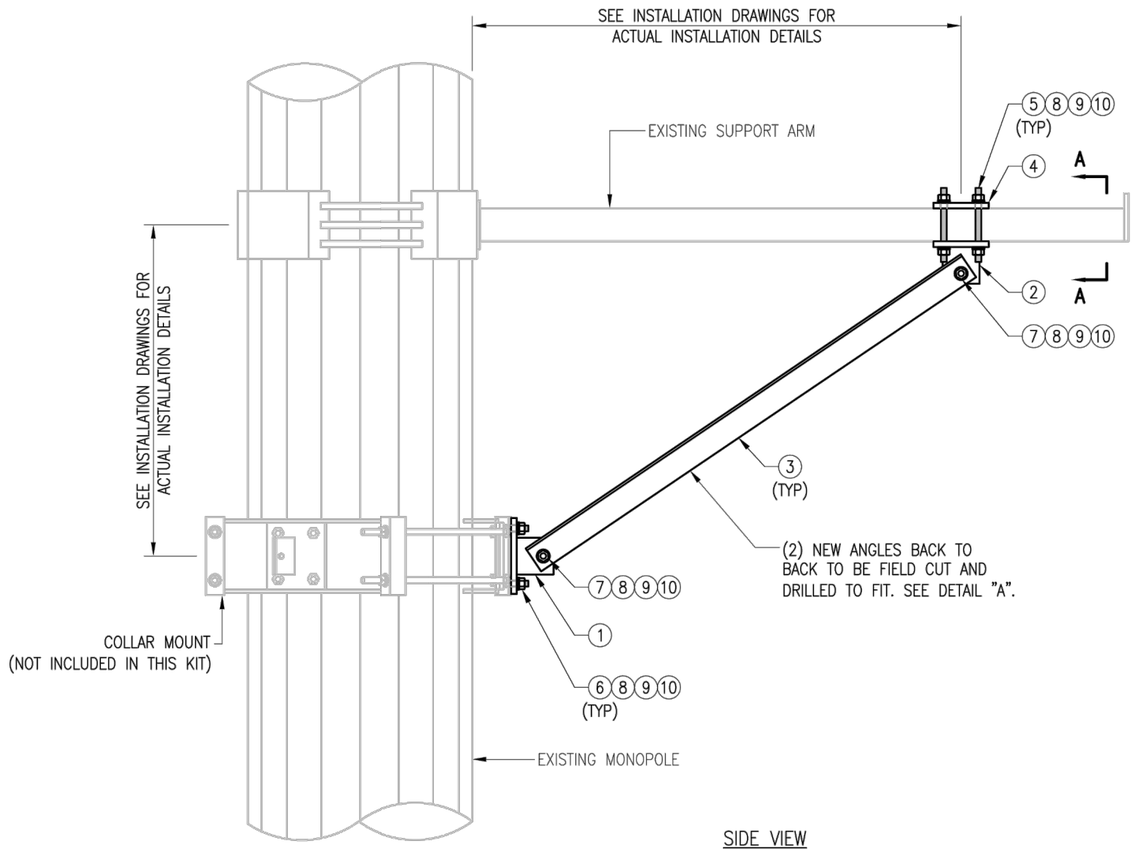

SIDE VIEW
KICKER KIT

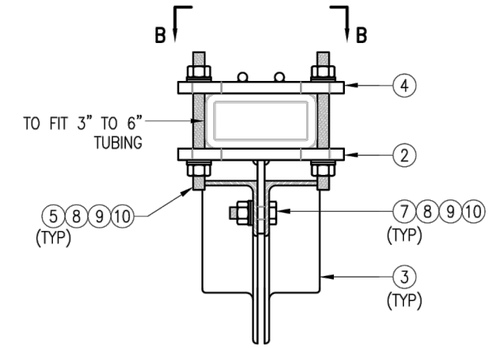

SECTION "A–A"
RECT. HSS MOUNTING

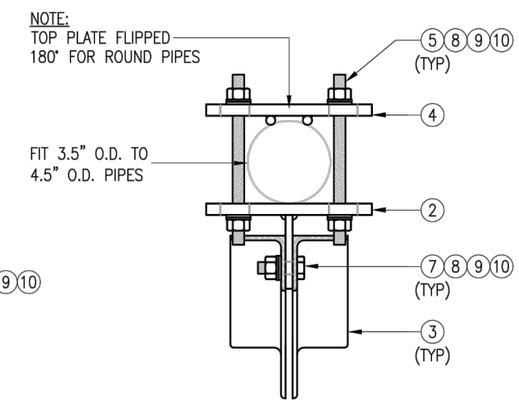

SECTION "A–A"
ROUND PIPE MOUNTING

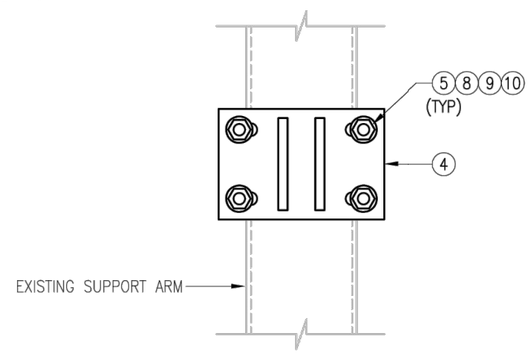

SECTION "B–B"

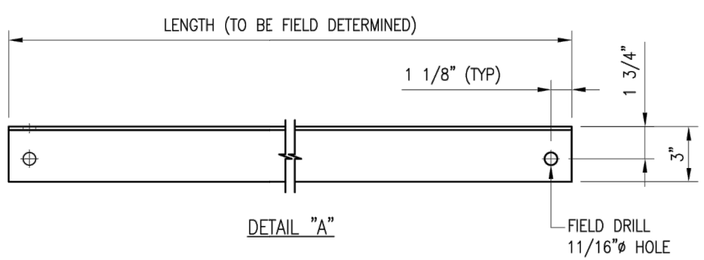

DETAIL "A"

NOTES:
1. ALL HOLES ARE 11/16" DIA. U.N.O
2. HOT–DIPPED GALVANIZED PER ASTM A123.
3. FIT UP TO 6" SQ. TUBING OR 4 1/2" O.D. PIPE

VZWSMART–PLK5 (KICKER KIT)

ITEM NO.	QTY.	PART NO.	DESCRIPTION	SHEET #	WT
1	3	BRKW–XXX	BRACKET WELDMENT A36	PLK5–F3	43.8
2	3	BRKW–XXXX	BRACKET WELDMENT A36	PLK5–F2	35.7
3	6	L331875–8	L 3" X 3" X 3/16" X 8'–0" A36	PLK5–F4	182.9
4	3	PL–KI	PL 5/8" X 6" X 9" A36	PLK5–F1	29.0
5	12	---	THREADED ROD 5/8" DIA. X 1'–0" F1554–36 HDG	---	--
6	6	---	BOLT 5/8" X 2" A325	---	--
7	12	---	BOLT 5/8" X 2 1/2" A325	---	--
8	42	FW–625	5/8" HDG USS FLAT WASHER	---	3
9	42	LW–625	5/8" HDG LOCK WASHER	---	1
10	42	NUT–625	5/8" HDG HEX NUT	---	5
				GALVANIZED WT	291

VzW
SMART Tool©
Vendor

verizon

DRAWN BY: MN | CHECKED BY: HMA/KW

REV.	DESCRIPTION	BY	DATE
0	FIRST ISSUE	MN	05/08/20

SHEET TITLE:
VZWSMART–PLK5
KICKER KIT

SHEET NUMBER: VZWSMART–PLK5
REV #: 0

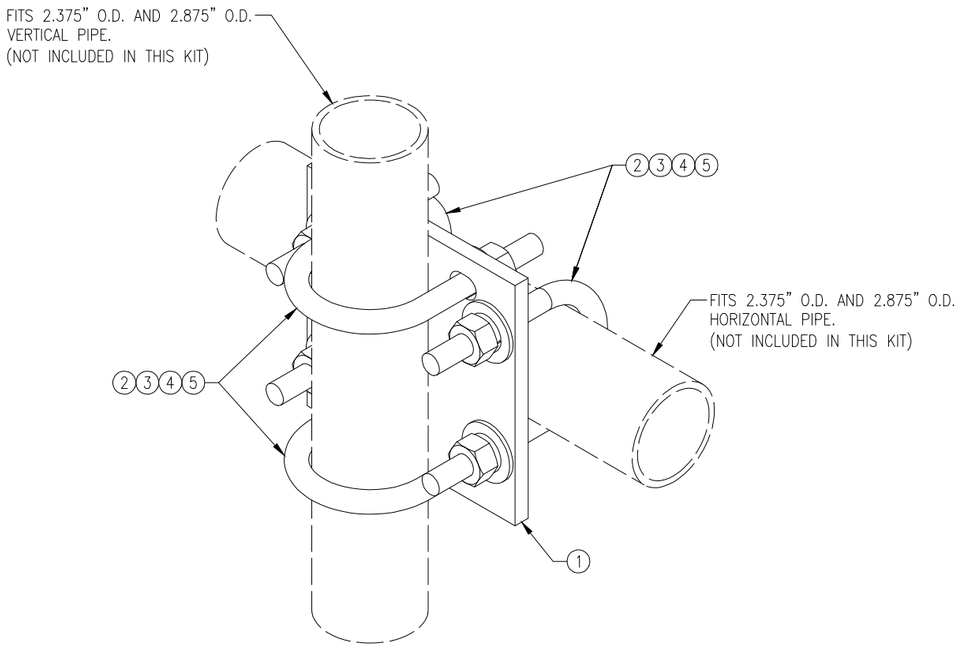

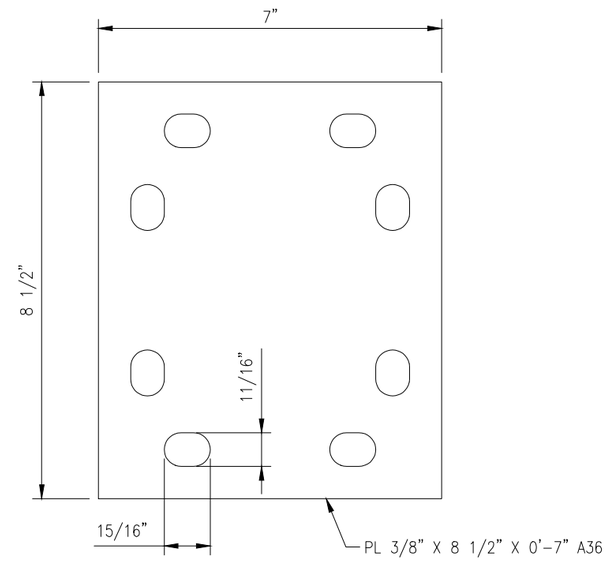

PL375-857

NOTES:
1. HOT-DIPPED GALVANIZED PER ASTM A123.

VZWSMART-MSK1 (CROSSOVER PLATE)

ITEM NO.	QTY.	PART NO.	DESCRIPTION	SHEET #	WT
1	1	PL375-857	PL 3/8" X 8 1/2" X 0'-7" A36	MSK1-F1	6
2	4	MS02-625-300-500	RU-BOLT 5/8" X 3" I.W. X 5" I.L. A36 (OR EQUIV.)	RBC-1	5
3	8	FW-625	5/8" HDG USS FLAT WASHER	---	1
4	8	LW-625	5/8" HDG LOCK WASHER	---	0
5	8	NUT-625	5/8" HDG HEX NUT	---	1
				GALVANIZED WT	14

VzW SMART Tool© Vendor

verizon

DRAWN BY: H.R | CHECKED BY: HMA

REV.	DESCRIPTION	BY	DATE
0	FIRST ISSUE	H.R	05/08/20

SHEET TITLE:

VZWSMART-MSK1 CROSSOVER PLATE

SHEET NUMBER: VZWSMART-MSK1

REV #: 0

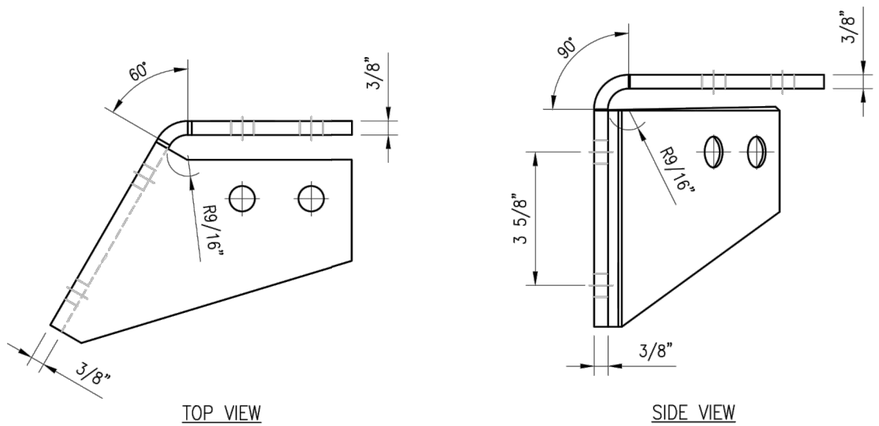

CBP–L

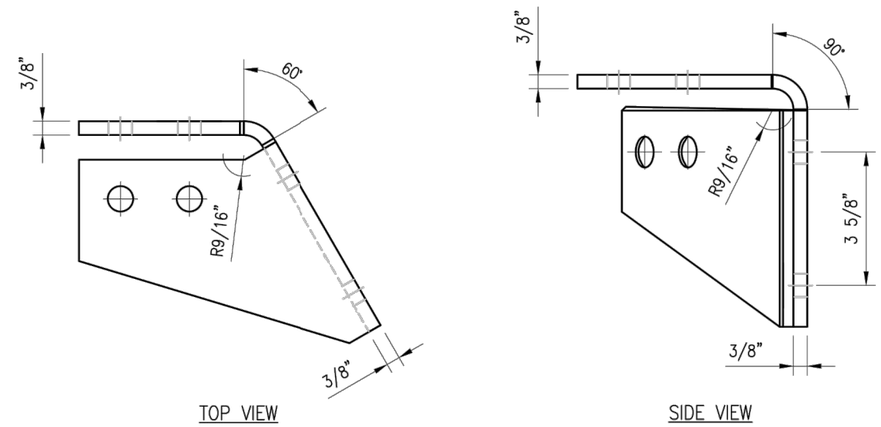

CBP–R

NOTES:
1. HOT–DIPPED GALVANIZED PER ASTM A123.

VZWSMART–PLK3 (SUPPORT RAIL CORNER BRACKET)

ITEM NO.	QTY.	PART NO.	DESCRIPTION	SHEET #	WT
1	1	CBP–L	CORNER BENT PLATE BRACKET	PLK3–F1	9
2	1	CBP–R	CORNER BENT PLATE BRACKET	PLK3–F1	9
3	4	MS02–625–300–500	RU–BOLT 5/8" X 3" I.W. X 5" I.L. A36 (OR EQUIV.)	RBC–1	5
4	8	---	BOLT 5/8" X 2" A325	---	3
5	16	FW–625	5/8" HDG USS FLAT WASHER	---	1
6	16	LW–625	5/8" HDG LOCK WASHER	---	0
7	16	NUT–625	5/8" HDG HEX NUT	---	2
				GALVANIZED WT	30

VzW
SMART Tool©
Vendor

verizon

DRAWN BY: H.R | CHECKED BY: HMA

REV.	DESCRIPTION	BY	DATE
0	FIRST ISSUE	H.R	05/08/20

SHEET TITLE:
VZWSMART–PLK3
SUPPORT RAIL CORNER
BRACKET

SHEET NUMBER: VZWSMART–PLK3

REV #: 0