Crown Castle
3 Corporate Park Drive, Suite 101
Clifton Park, NY 12065

June 17, 2021

Melanie A. Bachman
Executive Director
Connecticut Siting Council
10 Franklin Square
New Britain, CT 06051

RE: **Notice of Exempt Modification for AT&T: 842856**
122 Jonathan Trumbull Highway (Route 6), Andover, CT 06232
Latitude: 41° 45′ 0.46″ / Longitude: -72° 24′ 9.63″

Dear Ms. Bachman:

AT&T currently maintains 6 total antennas at the 140-foot mount on the existing 149-foot Monopole Tower, located at 122 Jonathan Trumbull Highway (Route 6), in Andover, CT. The tower is owned by Crown Castle and the property is owned by ASC Real Estate Inc. AT&T now proposes to replace six (6) existing antennas with three (3) new 1900/2100 MHz antennas and three (3) new 850 MHz antennas. These new antennas are 5G capable. AT&T is also proposing tower structural modifications and reinforcements pursuant to Appendix D of the enclosed Structural Analysis Report. AT&T is also proposing a mount replacement, though same is conditioned upon the Council's review and decision upon the Motion to Reopen Docket No. 242 submitted in conjunction with this application.

The facility was approved by the Connecticut Siting Council on October 14, 2003 in Docket No. 242. This approval included the condition that all carriers be flush mounted. AT&T is in compliance with all other conditions of Docket No. 242.

Please accept this letter as notification pursuant to Regulations of Connecticut State Agencies §16-50j-73, for construction that constitutes an exempt modification pursuant to R.C.S.A. § 16-50j-72(b)(2). In accordance with R.C.S.A. § 16-50j-73, a copy of this letter is being sent to Jeffrey J. Maguire, First Selectman for the Town of Andover, Jim Hallisey, Zoning Agent, Crown Castle, the tower owner, and ASC Real Estate Inc., the property owner.

1. The proposed modifications will not result in an increase in the height of the existing tower.

2. The proposed modifications will not require the extension of the site boundary.

3. The proposed modification will not increase noise levels at the facility by six decibels or more, or to levels that exceed state and local criteria.

4. The operation of the replacement antennas will not increase radio frequency emissions at the facility to a level at or above the Federal Communication Commission safety standard.

5. The proposed modifications will not cause a change or alteration in the physical or environmental characteristics of the site.

6. The existing structure and its foundation can support the proposed loading.

For the foregoing reasons, AT&T respectfully submits that the proposed modifications to the above-reference telecommunications facility constitutes an exempt modification under R.C.S.A. § 16-50j-72(b)(2). Please send approval/rejection letter to Attn: Anne Marie Zsamba.

Sincerely,

Anne Marie Zsamba
Project Manager - Site Acquisition
Crown Castle
Agent for Applicant, AT&T
(201) 236-9224
AnneMarie.Zsamba@crowncastle.com

Attachments

cc:

Jeffrey J. Maguire, First Selectman
Town of Andover
Town Hall
17 School Road
Andover, CT 06232
860.742.7305

Jim Hallisey, Zoning Agent
Town of Andover
Town Hall
17 School Road
Andover, CT 06232
860.742.7305

ASC Real Estate Inc, Property Owner
C/O Andover Sportsmans Club, Co-Owner
122 Route 6
Andover, CT 06232
860-742-6223

Exhibit A

Original Facility Approval

DOCKET NO. 242 - AT&T Wireless PCS, LLC d/b/a AT&T Wireless application for a Certificate of Environmental Compatibility and Public Need for the construction, maintenance and operation of a wireless telecommunications facility at one of two sites at 122 Route 6 (Andover Sportsmen Club), Andover, Connecticut.	}	Connecticut
	}	Siting
	}	Council
		October 14, 2003

Decision and Order

Pursuant to the foregoing Findings of Fact and Opinion, the Connecticut Siting Council (Council) finds that the effects associated with the construction, operation, and maintenance of a telecommunications facility including effects on the natural environment; ecological integrity and balance; public health and safety; scenic, historic, and recreational values; forests and parks; air and water purity; and fish and wildlife are not disproportionate either alone or cumulatively with other effects when compared to need, are not in conflict with the policies of the State concerning such effects, and are not sufficient reason to deny the application and therefore directs that a Certificate of Environmental Compatibility and Public Need, as provided by General Statutes **§** 16-50k, be issued to AT&T Wireless PCS d/b/a AT&T Wireless for the construction, maintenance and operation of a wireless telecommunications facility at Site A at the Andover Sportsmen Club, 122 Route 6, Andover, Connecticut. The Council denies certification of Site B, also located at 122 Route 6, Andover, Connecticut.

The facility shall be constructed, operated, and maintained substantially as specified in the Council's record in this matter, and subject to the following conditions:

1. The tower shall be constructed as a monopole, no taller than necessary to provide the proposed telecommunications services, sufficient to accommodate the antennas of AT&T Wireless PCS, LLC and Omnipoint Holdings, Inc. d/b/a T-Mobile and other entities, both public and private, but such tower shall not exceed a height of 150 feet above ground level.

2. Panel antennas shall be installed on the monopole using a flush mount design.

3. Site preparation and construction activities shall occur during the time period of November 1 through March 31 to reduce potential impacts to populations of the Wood Turtle *(Clemmys insculpta)*, a State Species of Special Concern.

4. The Certificate Holder shall prepare a Development and Management (D&M) Plan for this site in compliance with Sections 16-50j-75 through 16-50j-77 of the Regulations of Connecticut State Agencies. The D&M Plan shall be submitted to and approved by the Council prior to the commencement of facility construction and shall include:

    a. a detailed site development plan that depicts the location of the access road, compound, tower, utility line, erosion and sedimentation control features, and landscaping;

    b. specifications for the tower, tower foundation, antennas, equipment building, and security fence; and

    c. construction plans for site clearing, water drainage, and erosion and sedimentation control consistent with the 2002 Connecticut Guidelines for Soil Erosion and Sediment Control, as amended.

5. The Certificate Holder shall, prior to the commencement of operation, provide the Council worst-case modeling of electromagnetic radio frequency power density of all proposed entities' antennas at the closest point of uncontrolled access to the tower base, consistent with Federal Communications Commission, Office of Engineering and Technology, Bulletin No. 65, August 1997. The Certificate Holder shall ensure a recalculated report of electromagnetic radio frequency power density is submitted to the

Council if and when circumstances in operation cause a change in power density above the levels calculated and provided pursuant to this Decision and Order.

6. Upon the establishment of any new State or federal radio frequency standards applicable to frequencies of this facility, the facility granted herein shall be brought into compliance with such standards.

7. The Certificate Holder shall permit public or private entities to share space on the proposed tower for fair consideration, or shall provide any requesting entity with specific legal, technical, environmental, or economic reasons precluding such tower sharing. The Certificate Holder shall provide space on the tower for no compensation for any municipal antennas, provided such antennas are compatible with the structural integrity of the tower.

8. If the facility does not initially provide wireless services within one year of completion of construction or ceases to provide wireless services for a period of one year, this Decision and Order shall be void, and the Certificate Holder shall dismantle the tower and remove all associated equipment or reapply for any continued or new use to the Council before any such use is made.

9. Any antenna that becomes obsolete and ceases to function shall be removed within 60 days after such antennas become obsolete and ceases to function.

10. Unless otherwise approved by the Council, this Decision and Order shall be void if the facility authorized herein is not operational within one year of the effective date of this Decision and Order or within one year after all appeals to this Decision and Order have been resolved.

Pursuant to General Statutes **§** 16-50p, we hereby direct that a copy of the Findings of Fact, Opinion, and Decision and Order be served on each person listed below, and notice of issuance shall be published in The Hartford Courant, Rivereast News Bulletin, and the Journal Inquirer.

By this Decision and Order, the Council disposes of the legal rights, duties, and privileges of each party named or admitted to the proceeding in accordance with Section 16-50j-17 of the Regulations of Connecticut State Agencies.

The parties and intervenors to this proceeding are:

Applicant	**Its Representative**
AT&T Wireless PCS, LLC d/b/a AT&T Wireless	Christopher B. Fisher, Esq. Cuddy & Feder LLP 90 Maple Avenue White Plains, New York 10601 (914) 761-1300

Party	**Its Representative**
Tower Ventures II, LLC	Julie Donaldson Kohler, Esq. Hurwitz & Sagarin, LLC 147 N. Broad Street Milford, CT 06460 (203) 877-8000

Party	**Its Representative**
Town of Andover	First Selectman Andover Town Office Building 17 School Road, P.O. Box 328

Andover, CT 06232-0328
(860) 742-7305

Intervenor

Omnipoint Holdings, Inc.
d/b/a T-Mobile

Its Representative

Stephen J. Humes, Esq.
Diane W. Whitney, Esq.
LeBoeuf, Lamb, Greene & MacRae
Goodwin Square
225 Asylum Street
Hartford, CT 06103

Content Last Modified on 10/17/2003 4:34:53 PM

Exhibit B

Property Card

122 ROUTE 6

Location	122 ROUTE 6	**Mblu**	28/ 5/ 4/ /
Acct#	530	**Owner**	ASC REAL ESTATE INC
Assessment	$361,340	**Appraisal**	$586,800
PID	530	**Building Count**	2

Current Value

Appraisal			
Valuation Year	**Improvements**	**Land**	**Total**
2016	$239,100	$347,700	$586,800
Assessment			
Valuation Year	**Improvements**	**Land**	**Total**
2016	$167,500	$193,840	$361,340

Owner of Record

Owner	ASC REAL ESTATE INC	**Sale Price**	$0
Co-Owner	ANDOVER SPORTSMANS CLUB	**Certificate**	
Address	P O BOX 122 ANDOVER, CT 06232	**Book & Page**	0020/0572
		Sale Date	

Ownership History

Ownership History				
Owner	**Sale Price**	**Certificate**	**Book & Page**	**Sale Date**
ASC REAL ESTATE INC	$0		0020/0572	

Building Information

Building 1 : Section 1

Year Built:	1970
Living Area:	1,040
Replacement Cost:	$154,971
Building Percent Good:	79
Replacement Cost Less Depreciation:	$122,400

Building Attributes	
Field	**Description**
STYLE	Clubs/Lodges
MODEL	Commercial

Building Photo

Grade	C
Stories:	1
Occupancy	1
Exterior Wall 1	Vinyl Siding
Exterior Wall 2	
Roof Structure	Gable/Hip
Roof Cover	Asph/F Gls/Cmp
Interior Wall 1	Drywall/Sheet
Interior Wall 2	
Interior Floor 1	Vinyl/Asphalt
Interior Floor 2	
Heating Fuel	Oil
Heating Type	Hot Air-no Duc
AC Type	Central
Bldg Use	Fratnl Org
Total Rooms	
Total Bedrms	00
Total Baths	0
1st Floor Use:	3530
Heat/AC	NONE
Frame Type	WOOD FRAME
Baths/Plumbing	AVERAGE
Ceiling/Wall	CEIL & WALLS
Rooms/Prtns	AVERAGE
Wall Height	8
% Comn Wall	0

(http://images.vgsi.com/photos2/AndoverCTPhotos//default.jp

Building Layout

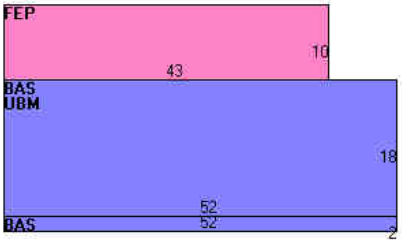

(http://images.vgsi.com/photos2/AndoverCTPhotos//Sketches/

Building Sub-Areas (sq ft)			Legend
Code	**Description**	**Gross Area**	**Living Area**
BAS	First Floor	1,040	1,040
FEP	Porch, Enclosed, Finished	430	0
UBM	Basement, Unfinished	936	0
		2,406	1,040

Building 2 : Section 1

Year Built: 1970
Living Area: 896
Replacement Cost: $132,799
Building Percent Good: 71
Replacement Cost Less Depreciation: $94,300

Building Attributes : Bldg 2 of 2	
Field	**Description**
STYLE	Clubs/Lodges
MODEL	Commercial
Grade	C
Stories:	1
Occupancy	

Building Photo

(http://images.vgsi.com/photos2/AndoverCTPhotos//default.jp

Exterior Wall 1	Vinyl Siding
Exterior Wall 2	
Roof Structure	Gable/Hip
Roof Cover	Asph/F Gls/Cmp
Interior Wall 1	Drywall/Sheet
Interior Wall 2	
Interior Floor 1	Carpet
Interior Floor 2	
Heating Fuel	Coal or Wood
Heating Type	None
AC Type	None
Bldg Use	Fratnl Org
Total Rooms	
Total Bedrms	00
Total Baths	0
1st Floor Use:	
Heat/AC	NONE
Frame Type	WOOD FRAME
Baths/Plumbing	AVERAGE
Ceiling/Wall	CEIL & WALLS
Rooms/Prtns	AVERAGE
Wall Height	8
% Comn Wall	

Building Layout

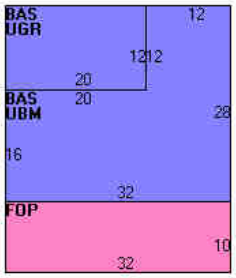

(http://images.vgsi.com/photos2/AndoverCTPhotos//Sketches/53

Building Sub-Areas (sq ft)			Legend
Code	Description	Gross Area	Living Area
BAS	First Floor	896	896
FOP	Porch, Open, Finished	320	0
UBM	Basement, Unfinished	656	0
UGR	Garage, Unfinished	240	0
		2,112	896

Extra Features

Extra Features	Legend
No Data for Extra Features	

Land

Land Use

Use Code	3530
Description	Fratnl Org
Zone	R-40
Neighborhood	C1
Alt Land Appr	No
Category	

Land Line Valuation

Size (Acres)	67.13
Frontage	0
Depth	0
Assessed Value	$193,840
Appraised Value	$347,700

Outbuildings

Outbuildings						Legend
Code	Description	Sub Code	Sub Description	Size	Value	Bldg #
FN3	Fence-6' Chain			290 L.F.	$2,000	1

SHD5	Shed			384 S.F.	$6,500	2
LT4	Lights (4)			2 UNITS	$1,300	2
SHD5	Shed			91 S.F.	$1,300	1
LT1	Lights (1)			10 UNITS	$2,000	2
PAV1	Paving-Asphalt			1344 S.F.	$600	1
SHD1	Shed Frame			180 S.F.	$1,100	1
SHD1	Shed Frame			180 S.F.	$1,100	2
PAT1	Patio Av			360 S.F.	$500	2
SHD1	Shed Frame			180 S.F.	$1,100	1
SHD1	Shed Frame			144 S.F.	$900	1
PAV1	Paving-Asphalt			840 S.F.	$400	1
SHD1	Shed Frame			120 S.F.	$700	1
SHD1	Shed Frame			240 S.F.	$2,900	1

Valuation History

Appraisal			
Valuation Year	**Improvements**	**Land**	**Total**
2015	$107,800	$334,000	$441,800
2011	$222,400	$334,000	$556,400
2010	$124,700	$239,200	$363,900

Assessment			
Valuation Year	**Improvements**	**Land**	**Total**
2015	$138,200	$171,050	$309,250
2011	$155,700	$171,050	$326,750
2010	$87,300	$102,280	$189,580

(c) 2019 Vision Government Solutions, Inc. All rights reserved.

Exhibit C

Construction Drawings

AT&T

AT&T SITE NUMBER:	**CTL05860**
AT&T SITE NAME:	**ANDOVER NORTH**
AT&T FA CODE:	**10070910**
AT&T PACE NUMBER:	**MRCTB047251, MRCTB047238, MRCTB047170, MRCTB048185, MRCTB048187**
AT&T PROJECT:	**LTE 2C, 4TX4RX SOFTWARE RETROFIT, 5G NR 1DR-1, LTE 3C, LTE 4C**
BUSINESS UNIT #:	**842856**
SITE ADDRESS:	**122 JONATHAN TRUMBULL HIGHWAY (ROUTE 6) ANDOVER, CT 06232**
COUNTY:	**TOLLAND**
SITE TYPE:	**MONOPOLE**
TOWER HEIGHT:	**149'-0"**

SITE INFORMATION

CROWN CASTLE USA INC. SITE NAME:	ANDOVER NORTH
SITE ADDRESS:	122 JONATHAN TRUMBULL HIGHWAY (ROUTE 6 ANDOVER, CT 06232
COUNTY:	TOLLAND
MAP/PARCEL #:	ANDO-000028-000005-000004
AREA OF CONSTRUCTION:	EXISTING
LATITUDE:	41.750128°
LONGITUDE:	-72.402675°
LAT/LONG TYPE:	NAD83
GROUND ELEVATION:	496 FT
CURRENT ZONING:	ARRD
JURISDICTION:	ANDOVER LEPC
OCCUPANCY CLASSIFICATION:	U
TYPE OF CONSTRUCTION:	IIB
A.D.A. COMPLIANCE:	FACILITY IS UNMANNED AND NOT FOR HUMAN HABITATION
PROPERTY OWNER:	ASC REAL ESTATE INC P O BOX 122 ANDOVER, CT 06232
TOWER OWNER:	CROWN CASTLE USA INC 2000 CORPORATE DRIVE CANONSBURG, PA 15317
CARRIER/APPLICANT:	AT&T TOWER ASSET GROUP 575 MOROSGO DRIVE ATLANTA, GA 30324-3300
ELECTRIC PROVIDER:	NORTHEAST UTILITIES
TELCO PROVIDER:	AT&T

DRAWING INDEX

SHEET #	SHEET DESCRIPTION
T-1	TITLE SHEET
T-2	GENERAL NOTES
C-1.1	SITE PLAN
C-1.2	EXISTING & FINAL EQUIPMENT PLANS
C-2	FINAL ELEVATION & ANTENNA PLANS
C-3	FINAL EQUIPMENT SCHEDULE
C-4	EQUIPMENT MOUNTING DETAILS
C-5	EQUIPMENT SPECS
C-6	MOUNT SPECS
C-7	CABINET SPECS
G-1	GROUNDING SCHEMATIC
G-2	GROUNDING DETAILS
ATTACHED	PLUMBING DIAGRAM

ALL DRAWINGS CONTAINED HEREIN ARE FORMATTED FOR ----. CONTRACTOR SHALL VERIFY ALL PLANS AND EXISTING DIMENSIONS AND CONDITIONS ON THE JOB SITE AND SHALL IMMEDIATELY NOTIFY THE ENGINEER IN WRITING OF ANY DISCREPANCIES BEFORE PROCEEDING WITH THE WORK OR BE RESPONSIBLE FOR SAME.

CALL CONNECTICUT ONE CALL
(800) 922-4455 CBYD.COM
CALL 2 WORKING DAYS
BEFORE YOU DIG!

LOCATION MAP

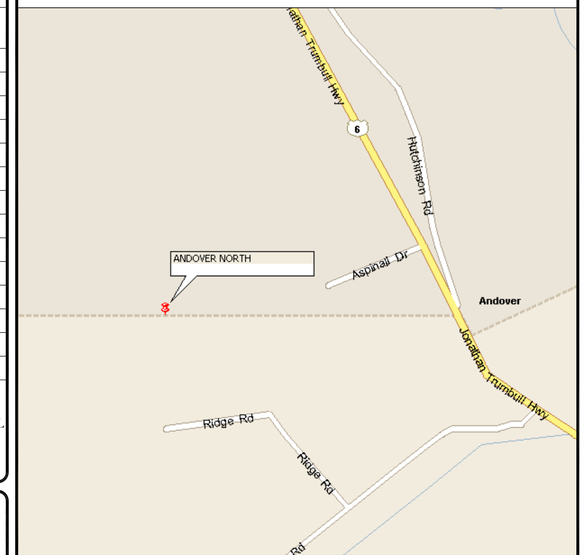

NO SCALE

SITE PHOTO

PROJECT TEAM

A&E FIRM:	B+T GROUP 1717 S BOULDER AVE, SUITE 300 TULSA, OK 74119 JENNY PAUL jpaul@btgrp.com
CROWN CASTLE USA INC. DISTRICT CONTACTS:	3530 TORINGDON WAY, SUITE 300 CHARLOTTE, NC 28277

NOTE:
PRIOR TO ACCESSING/ENTERING THE SITE YOU MUST CONTACT THE CROWN NOC AT (800) 788-7011 & CROWN CONSTRUCTION MANAGER.

PROJECT DESCRIPTION

THE PURPOSE OF THIS PROJECT IS TO ENHANCE BROADBAND CONNECTIVITY AND CAPACITY TO THE EXISTING ELIGIBLE WIRELESS FACILITY.

TOWER SCOPE OF WORK:
- REMOVE (3) POWERWAVE - 7770 ANTENNAS
- REMOVE (3) KMW - M-X-CD-16-65-00T-RET ANTENNAS
- REMOVE (6) POWERWAVE - LGP 21401 (DUAL BAND - 850 BYPASS) TMAS
- REMOVE (3) ERICSSON - RRUS-11 B12 RADIOS
- REMOVE (2) WR-VG66ST-BRD POWER CABLES (7/8")
- REPLACE EXISTING MOUNT PER MOUNT REPLACEMENT ANALYSIS BY POWER OF DESIGN GROUP DATED 4/13/21
- INSTALL (3) CCI - HPA65R-BU6A ANTENNAS
- INSTALL (3) CCI - DMP65R-BU6DA ANTENNAS
- INSTALL (3) ERICSSON - 4449 B5/B12 RADIOS
- INSTALL (3) ERICSSON - 8843 B2 B66A RADIOS
- INSTALL (2) WR-VG66STBRD_CCIV2 POWER CABLES (7/8")
- INSTALL (6) Y CABLES

GROUND SCOPE OF WORK:
- REMOVE (6) POWERWAVE - LGP 21901 DIPLEXERS
- INSTALL (3) DBCT108F1V92-1 DIPLEXERS
- INSTALL (2) 4478 B14 RRU
- INSTALL (2) 6630 + IDLE
- INSTALL (1) FLEX16 CABINET W/ (1) DOOR UPGRADE KIT
- INSTALL (1) BREAKER PANEL
- INSTALL (8) APTDC-BDFDM-DB SURGE ARRESTORS

NOTE:
THE POWER DESIGN FOR ANY AC ELECTRICAL POWER CHANGES IS TO BE PERFORMED BY OTHERS AND IS SHOWN HERE FOR REFERENCE PURPOSES ONLY. AT&T IS SOLELY RESPONSIBLE FOR THE ELECTRICAL POWER DESIGN.

APPLICABLE CODES/REFERENCE DOCUMENTS

ALL WORK SHALL BE PERFORMED AND MATERIALS INSTALLED IN ACCORDANCE WITH THE CURRENT EDITIONS OF THE FOLLOWING CODES AS ADOPTED BY THE LOCAL GOVERNING AUTHORITIES. NOTHING IN THESE PLANS IS TO BE CONSTRUED TO PERMIT WORK NOT CONFORMING TO THESE CODES:

CODE TYPE	CODE
BUILDING	2015 IBC/2018 CONNECTICUT STATE BUILDING CODE
MECHANICAL	2015 IMC
ELECTRICAL	2017 NEC

REFERENCE DOCUMENTS:

STRUCTURAL ANALYSIS:	CROWN CASTLE
DATED:	1/15/21
MOUNT ANALYSIS:	POWER OF DESIGN GROUP
DATED:	4/13/21
AC ELECTRICAL POWER DESIGN:	N/A
DATED:	N/A
RFDS REVISION:	3
DATED:	12/21/20
ORDER ID:	517084
REVISION:	4

AT&T
575 MOROSGO DRIVE
ATLANTA, GA 30324-3300

CROWN CASTLE
3530 TORINGDON WAY, SUITE 300
CHARLOTTE, NC 28277

B+T GRP
1717 S. BOULDER
SUITE 300
TULSA, OK 74119
PH: (918) 587-4630
www.btgrp.com

AT&T SITE NUMBER: **CTL05860**

BU #: **842856**
ANDOVER NORTH

122 JONATHAN TRUMBULL HIGHWAY (ROUTE 6)
ANDOVER, CT 06232

EXISTING
149'-0" MONOPOLE

ISSUED FOR:

REV	DATE	DRWN	DESCRIPTION	DES./QA
A	3/26/21	JTS	PRELIMINARY REVIEW	MTJ
B	4/1/21	RPA	PRELIMINARY REVIEW	AY
C	4/16/21	GEH	PRELIMINARY REVIEW	MTJ
0	5/3/21	JJD	CONSTRUCTION	MTJ

STATE OF CONNECTICUT
JENNY PAUL
No. 23924
LICENSED
PROFESSIONAL ENGINEER
5/3/21

B&T ENGINEERING, INC.
PEC.0001564
Expires 2/10/22

IT IS A VIOLATION OF LAW FOR ANY PERSON, UNLESS THEY ARE ACTING UNDER THE DIRECTION OF A LICENSED PROFESSIONAL ENGINEER, TO ALTER THIS DOCUMENT.

SHEET NUMBER:	REVISION:
T-1	0

135726.004.01 Andover North.dwg – Sheet:T-1 – User: mjones – May 03, 2021 – 9:19am

CROWN CASTLE USA INC. SITE ACTIVITY REQUIREMENTS:

1. NOTICE TO PROCEED– NO WORK SHALL COMMENCE PRIOR TO CROWN CASTLE USA INC. WRITTEN NOTICE TO PROCEED (NTP) AND THE ISSUANCE OF A PURCHASE ORDER. PRIOR TO ACCESSING/ENTERING THE SITE YOU MUST CONTACT THE CROWN CASTLE USA INC. NOC AT 800–788–7011 & THE CROWN CASTLE USA INC. CONSTRUCTION MANAGER.
2. "LOOK UP" – CROWN CASTLE USA INC. SAFETY CLIMB REQUIREMENT:
   THE INTEGRITY OF THE SAFETY CLIMB AND ALL COMPONENTS OF THE CLIMBING FACILITY SHALL BE CONSIDERED DURING ALL STAGES OF DESIGN, INSTALLATION, AND INSPECTION. TOWER MODIFICATION, MOUNT REINFORCEMENTS, AND/OR EQUIPMENT INSTALLATIONS SHALL NOT COMPROMISE THE INTEGRITY OR FUNCTIONAL USE OF THE SAFETY CLIMB OR ANY COMPONENTS OF THE CLIMBING FACILITY ON THE STRUCTURE. THIS SHALL INCLUDE, BUT NOT BE LIMITED TO: PINCHING OF THE WIRE ROPE, BENDING OF THE WIRE ROPE FROM ITS SUPPORTS, DIRECT CONTACT OR CLOSE PROXIMITY TO THE WIRE ROPE WHICH MAY CAUSE FRICTIONAL WEAR, IMPACT TO THE ANCHORAGE POINTS IN ANY WAY, OR TO IMPEDE/BLOCK ITS INTENDED USE. ANY COMPROMISED SAFETY CLIMB, INCLUDING EXISTING CONDITIONS MUST BE TAGGED OUT AND REPORTED TO YOUR CROWN CASTLE USA INC. POC OR CALL THE NOC TO GENERATE A SAFETY CLIMB MAINTENANCE AND CONTRACTOR NOTICE TICKET.
3. PRIOR TO THE START OF CONSTRUCTION, ALL REQUIRED JURISDICTIONAL PERMITS SHALL BE OBTAINED. THIS INCLUDES, BUT IS NOT LIMITED TO, BUILDING, ELECTRICAL, MECHANICAL, FIRE, FLOOD ZONE, ENVIRONMENTAL, AND ZONING. AFTER ONSITE ACTIVITIES AND CONSTRUCTION ARE COMPLETED, ALL REQUIRED PERMITS SHALL BE SATISFIED AND CLOSED OUT ACCORDING TO LOCAL JURISDICTIONAL REQUIREMENTS.
4. ALL CONSTRUCTION MEANS AND METHODS; INCLUDING BUT NOT LIMITED TO, ERECTION PLANS, RIGGING PLANS, CLIMBING PLANS, AND RESCUE PLANS SHALL BE THE RESPONSIBILITY OF THE GENERAL CONTRACTOR RESPONSIBLE FOR THE EXECUTION OF THE WORK CONTAINED HEREIN, AND SHALL MEET ANSI/ASSE A10.48 (LATEST EDITION); FEDERAL, STATE, AND LOCAL REGULATIONS; AND ANY APPLICABLE INDUSTRY CONSENSUS STANDARDS RELATED TO THE CONSTRUCTION ACTIVITIES BEING PERFORMED. ALL RIGGING PLANS SHALL ADHERE TO ANSI/ASSE A10.48 (LATEST EDITION) AND CROWN CASTLE USA INC. STANDARD CED–STD–10253, INCLUDING THE REQUIRED INVOLVEMENT OF A QUALIFIED ENGINEER FOR CLASS IV CONSTRUCTION, TO CERTIFY THE SUPPORTING STRUCTURE(S) IN ACCORDANCE WITH ANSI/TIA–322 (LATEST EDITION).
5. ALL SITE WORK TO COMPLY WITH QAS–STD–10068 "INSTALLATION STANDARDS FOR CONSTRUCTION ACTIVITIES ON CROWN CASTLE USA INC. TOWER SITE," CED–STD–10294 "STANDARD FOR INSTALLATION OF MOUNTS AND APPURTENANCES," AND LATEST VERSION OF ANSI/TIA–1019–A–2012 "STANDARD FOR INSTALLATION, ALTERATION, AND MAINTENANCE OF ANTENNA SUPPORTING STRUCTURES AND ANTENNAS."
6. IF THE SPECIFIED EQUIPMENT CAN NOT BE INSTALLED AS SHOWN ON THESE DRAWINGS, THE CONTRACTOR SHALL PROPOSE AN ALTERNATIVE INSTALLATION FOR APPROVAL BY CROWN CASTLE USA INC. PRIOR TO PROCEEDING WITH ANY SUCH CHANGE OF INSTALLATION.
7. ALL MATERIALS FURNISHED AND INSTALLED SHALL BE IN STRICT ACCORDANCE WITH ALL APPLICABLE CODES, REGULATIONS AND ORDINANCES. CONTRACTOR SHALL ISSUE ALL APPROPRIATE NOTICES AND COMPLY WITH ALL LAWS, ORDINANCES, RULES, REGULATIONS AND LAWFUL ORDERS OF ANY PUBLIC AUTHORITY REGARDING THE PERFORMANCE OF THE WORK. ALL WORK CARRIED OUT SHALL COMPLY WITH ALL APPLICABLE MUNICIPAL AND UTILITY COMPANY SPECIFICATIONS AND LOCAL JURISDICTIONAL CODES, ORDINANCES AND APPLICABLE REGULATIONS.
8. THE CONTRACTOR SHALL INSTALL ALL EQUIPMENT AND MATERIALS IN ACCORDANCE WITH MANUFACTURER'S RECOMMENDATIONS UNLESS SPECIFICALLY STATED OTHERWISE.
9. THE CONTRACTOR SHALL CONTACT UTILITY LOCATING SERVICES PRIOR TO THE START OF CONSTRUCTION.
10. ALL EXISTING ACTIVE SEWER, WATER, GAS, ELECTRIC AND OTHER UTILITIES WHERE ENCOUNTERED IN THE WORK, SHALL BE PROTECTED AT ALL TIMES AND WHERE REQUIRED FOR THE PROPER EXECUTION OF THE WORK, SHALL BE RELOCATED AS DIRECTED BY CONTRACTOR. EXTREME CAUTION SHOULD BE USED BY THE CONTRACTOR WHEN EXCAVATING OR DRILLING PIERS AROUND OR NEAR UTILITIES. CONTRACTOR SHALL PROVIDE SAFETY TRAINING FOR THE WORKING CREW. THIS WILL INCLUDE BUT NOT BE LIMITED TO A) FALL PROTECTION B) CONFINED SPACE C) ELECTRICAL SAFETY D) TRENCHING AND EXCAVATION E) CONSTRUCTION SAFETY PROCEDURES.
11. ALL SITE WORK SHALL BE AS INDICATED ON THE STAMPED CONSTRUCTION DRAWINGS AND PROJECT SPECIFICATIONS, LATEST APPROVED REVISION.
12. CONTRACTOR SHALL KEEP THE SITE FREE FROM ACCUMULATING WASTE MATERIAL, DEBRIS, AND TRASH AT THE COMPLETION OF THE WORK. IF NECESSARY, RUBBISH, STUMPS, DEBRIS, STICKS, STONES AND OTHER REFUSE SHALL BE REMOVED FROM THE SITE AND DISPOSED OF LEGALLY.
13. ALL EXISTING INACTIVE SEWER, WATER, GAS, ELECTRIC AND OTHER UTILITIES, WHICH INTERFERE WITH THE EXECUTION OF THE WORK, SHALL BE REMOVED AND/OR CAPPED, PLUGGED OR OTHERWISE DISCONTINUED AT POINTS WHICH WILL NOT INTERFERE WITH THE EXECUTION OF THE WORK, SUBJECT TO THE APPROVAL OF CONTRACTOR, TOWER OWNER, CROWN CASTLE USA INC., AND/OR LOCAL UTILITIES.
14. THE CONTRACTOR SHALL PROVIDE SITE SIGNAGE IN ACCORDANCE WITH THE TECHNICAL SPECIFICATION FOR SITE SIGNAGE REQUIRED BY LOCAL JURISDICTION AND SIGNAGE REQUIRED ON INDIVIDUAL PIECES OF EQUIPMENT, ROOMS, AND SHELTERS.
15. THE SITE SHALL BE GRADED TO CAUSE SURFACE WATER TO FLOW AWAY FROM THE CARRIER'S EQUIPMENT AND TOWER AREAS.
16. THE SUB GRADE SHALL BE COMPACTED AND BROUGHT TO A SMOOTH UNIFORM GRADE PRIOR TO FINISHED SURFACE APPLICATION.
17. THE AREAS OF THE OWNERS PROPERTY DISTURBED BY THE WORK AND NOT COVERED BY THE TOWER, EQUIPMENT OR DRIVEWAY, SHALL BE GRADED TO A UNIFORM SLOPE, AND STABILIZED TO PREVENT EROSION AS SPECIFIED ON THE CONSTRUCTION DRAWINGS AND/OR PROJECT SPECIFICATIONS.
18. CONTRACTOR SHALL MINIMIZE DISTURBANCE TO EXISTING SITE DURING CONSTRUCTION. EROSION CONTROL MEASURES, IF REQUIRED DURING CONSTRUCTION, SHALL BE IN CONFORMANCE WITH THE LOCAL GUIDELINES FOR EROSION AND SEDIMENT CONTROL.
19. THE CONTRACTOR SHALL PROTECT EXISTING IMPROVEMENTS, PAVEMENTS, CURBS, LANDSCAPING AND STRUCTURES. ANY DAMAGED PART SHALL BE REPAIRED AT CONTRACTOR'S EXPENSE TO THE SATISFACTION OF OWNER.
20. CONTRACTOR SHALL LEGALLY AND PROPERLY DISPOSE OF ALL SCRAP MATERIALS SUCH AS COAXIAL CABLES AND OTHER ITEMS REMOVED FROM THE EXISTING FACILITY. ANTENNAS REMOVED SHALL BE RETURNED TO THE OWNER'S DESIGNATED LOCATION.
21. CONTRACTOR SHALL LEAVE PREMISES IN CLEAN CONDITION. TRASH AND DEBRIS SHOULD BE REMOVED FROM SITE ON A DAILY BASIS.
22. NO FILL OR EMBANKMENT MATERIAL SHALL BE PLACED ON FROZEN GROUND. FROZEN MATERIALS, SNOW OR ICE SHALL NOT BE PLACED IN ANY FILL OR EMBANKMENT.

GENERAL NOTES:

1. FOR THE PURPOSE OF CONSTRUCTION DRAWING, THE FOLLOWING DEFINITIONS SHALL APPLY:
   CONTRACTOR: GENERAL CONTRACTOR RESPONSIBLE FOR CONSTRUCTION
   CARRIER: AT&T
   TOWER OWNER: CROWN CASTLE USA INC.
2. THESE DRAWINGS HAVE BEEN PREPARED USING STANDARDS OF PROFESSIONAL CARE AND COMPLETENESS NORMALLY EXERCISED UNDER SIMILAR CIRCUMSTANCES BY REPUTABLE ENGINEERS IN THIS OR SIMILAR LOCALITIES. IT IS ASSUMED THAT THE WORK DEPICTED WILL BE PERFORMED BY AN EXPERIENCED CONTRACTOR AND/OR WORKPEOPLE WHO HAVE A WORKING KNOWLEDGE OF THE APPLICABLE CODE STANDARDS AND REQUIREMENTS AND OF INDUSTRY ACCEPTED STANDARD GOOD PRACTICE. AS NOT EVERY CONDITION OR ELEMENT IS (OR CAN BE) EXPLICITLY SHOWN ON THESE DRAWINGS, THE CONTRACTOR SHALL USE INDUSTRY ACCEPTED STANDARD GOOD PRACTICE FOR MISCELLANEOUS WORK NOT EXPLICITLY SHOWN.
3. THESE DRAWINGS REPRESENT THE FINISHED STRUCTURE. THEY DO NOT INDICATE THE MEANS OR METHODS OF CONSTRUCTION. THE CONTRACTOR SHALL BE SOLELY RESPONSIBLE FOR THE CONSTRUCTION MEANS, METHODS, TECHNIQUES, SEQUENCES, AND PROCEDURES. THE CONTRACTOR SHALL PROVIDE ALL MEASURES NECESSARY FOR PROTECTION OF LIFE AND PROPERTY DURING CONSTRUCTION. SUCH MEASURES SHALL INCLUDE, BUT NOT BE LIMITED TO, BRACING, FORMWORK, SHORING, ETC. SITE VISITS BY THE ENGINEER OR HIS REPRESENTATIVE WILL NOT INCLUDE INSPECTION OF THESE ITEMS AND IS FOR STRUCTURAL OBSERVATION OF THE FINISHED STRUCTURE ONLY.
4. NOTES AND DETAILS IN THE CONSTRUCTION DRAWINGS SHALL TAKE PRECEDENCE OVER GENERAL NOTES AND TYPICAL DETAILS. WHERE NO DETAILS ARE SHOWN, CONSTRUCTION SHALL CONFORM TO SIMILAR WORK ON THE PROJECT, AND/OR AS PROVIDED FOR IN THE CONTRACT DOCUMENTS. WHERE DISCREPANCIES OCCUR BETWEEN PLANS, DETAILS, GENERAL NOTES, AND SPECIFICATIONS, THE GREATER, MORE STRICT REQUIREMENTS, SHALL GOVERN. IF FURTHER CLARIFICATION IS REQUIRED CONTACT THE ENGINEER OF RECORD.
5. SUBSTANTIAL EFFORT HAS BEEN MADE TO PROVIDE ACCURATE DIMENSIONS AND MEASUREMENTS ON THE DRAWINGS TO ASSIST IN THE FABRICATION AND/OR PLACEMENT OF CONSTRUCTION ELEMENTS BUT IT IS THE SOLE RESPONSIBILITY OF THE CONTRACTOR TO FIELD VERIFY THE DIMENSIONS, MEASUREMENTS, AND/OR CLEARANCES SHOWN IN THE CONSTRUCTION DRAWINGS PRIOR TO FABRICATION OR CUTTING OF ANY NEW OR EXISTING CONSTRUCTION ELEMENTS. IF IT IS DETERMINED THAT THERE ARE DISCREPANCIES AND/OR CONFLICTS WITH THE CONSTRUCTION DRAWINGS THE ENGINEER OF RECORD IS TO BE NOTIFIED AS SOON AS POSSIBLE.
6. PRIOR TO THE SUBMISSION OF BIDS, THE BIDDING CONTRACTOR SHALL VISIT THE CELL SITE TO FAMILIARIZE WITH THE EXISTING CONDITIONS AND TO CONFIRM THAT THE WORK CAN BE ACCOMPLISHED AS SHOWN ON THE CONSTRUCTION DRAWINGS. ANY DISCREPANCY FOUND SHALL BE BROUGHT TO THE ATTENTION OF CROWN CASTLE.
7. ALL MATERIALS FURNISHED AND INSTALLED SHALL BE IN STRICT ACCORDANCE WITH ALL APPLICABLE CODES, REGULATIONS AND ORDINANCES. CONTRACTOR SHALL ISSUE ALL APPROPRIATE NOTICES AND COMPLY WITH ALL LAWS, ORDINANCES, RULES, REGULATIONS AND LAWFUL ORDERS OF ANY PUBLIC AUTHORITY REGARDING THE PERFORMANCE OF THE WORK. ALL WORK CARRIED OUT SHALL COMPLY WITH ALL APPLICABLE MUNICIPAL AND UTILITY COMPANY SPECIFICATIONS AND LOCAL JURISDICTIONAL CODES, ORDINANCES AND APPLICABLE REGULATIONS.
8. UNLESS NOTED OTHERWISE, THE WORK SHALL INCLUDE FURNISHING MATERIALS, EQUIPMENT, APPURTENANCES AND LABOR NECESSARY TO COMPLETE ALL INSTALLATIONS AS INDICATED ON THE DRAWINGS.
9. THE CONTRACTOR SHALL INSTALL ALL EQUIPMENT AND MATERIALS IN ACCORDANCE WITH MANUFACTURER'S RECOMMENDATIONS UNLESS SPECIFICALLY STATED OTHERWISE.
10. IF THE SPECIFIED EQUIPMENT CAN NOT BE INSTALLED AS SHOWN ON THESE DRAWINGS, THE CONTRACTOR SHALL PROPOSE AN ALTERNATIVE INSTALLATION FOR APPROVAL BY THE CARRIER AND CROWN CASTLE PRIOR TO PROCEEDING WITH ANY SUCH CHANGE OF INSTALLATION.
11. CONTRACTOR IS TO PERFORM A SITE INVESTIGATION AND IS TO DETERMINE THE BEST ROUTING OF ALL CONDUITS FOR POWER, AND TELCO AND FOR GROUNDING CABLES AS SHOWN IN THE POWER, TELCO, AND GROUNDING PLAN DRAWINGS.
12. THE CONTRACTOR SHALL PROTECT EXISTING IMPROVEMENTS, PAVEMENTS, CURBS, LANDSCAPING AND STRUCTURES. ANY DAMAGED PART SHALL BE REPAIRED AT CONTRACTOR'S EXPENSE TO THE SATISFACTION OF CROWN CASTLE USA INC.
13. CONTRACTOR SHALL LEGALLY AND PROPERLY DISPOSE OF ALL SCRAP MATERIALS SUCH AS COAXIAL CABLES AND OTHER ITEMS REMOVED FROM THE EXISTING FACILITY. ANTENNAS REMOVED SHALL BE RETURNED TO THE OWNER'S DESIGNATED LOCATION.
14. CONTRACTOR SHALL LEAVE PREMISES IN CLEAN CONDITION. TRASH AND DEBRIS SHOULD BE REMOVED FROM SITE ON A DAILY BASIS.

CONCRETE, FOUNDATIONS, AND REINFORCING STEEL:

1. ALL CONCRETE WORK SHALL BE IN ACCORDANCE WITH THE ACI 301, ACI 318, ACI 336, ASTM A184, ASTM A185 AND THE DESIGN AND CONSTRUCTION SPECIFICATION FOR CAST–IN–PLACE CONCRETE.
2. UNLESS NOTED OTHERWISE, SOIL BEARING PRESSURE USED FOR DESIGN OF SLABS AND FOUNDATIONS IS ASSUMED TO BE 1000 psf.
3. ALL CONCRETE SHALL HAVE A MINIMUM COMPRESSIVE STRENGTH (f'c) OF 3000 psi AT 28 DAYS, UNLESS NOTED OTHERWISE. NO MORE THAN 90 MINUTES SHALL ELAPSE FROM BATCH TIME TO TIME OF PLACEMENT UNLESS APPROVED BY THE ENGINEER OF RECORD. TEMPERATURE OF CONCRETE SHALL NOT EXCEED 90°f AT TIME OF PLACEMENT.
4. CONCRETE EXPOSED TO FREEZE–THAW CYCLES SHALL CONTAIN AIR ENTRAINING ADMIXTURES. AMOUNT OF AIR ENTRAINMENT TO BE BASED ON SIZE OF AGGREGATE AND F3 CLASS EXPOSURE (VERY SEVERE). CEMENT USED TO BE TYPE II PORTLAND CEMENT WITH A MAXIMUM WATER–TO–CEMENT RATIO (W/C) OF 0.45.
5. ALL STEEL REINFORCING SHALL CONFORM TO ASTM A615. ALL WELDED WIRE FABRIC (WWF) SHALL CONFORM TO ASTM A185. ALL SPLICES SHALL BE CLASS "B" TENSION SPLICES, UNLESS NOTED OTHERWISE. ALL HOOKS SHALL BE STANDARD 90 DEGREE HOOKS, UNLESS NOTED OTHERWISE. YIELD STRENGTH (Fy) OF STANDARD DEFORMED BARS ARE AS FOLLOWS:
   #4 BARS AND SMALLER.....40 ksi
   #5 BARS AND LARGER.....60 ksi
6. THE FOLLOWING MINIMUM CONCRETE COVER SHALL BE PROVIDED FOR REINFORCING STEEL UNLESS SHOWN OTHERWISE ON DRAWINGS:
   CONCRETE CAST AGAINST AND PERMANENTLY EXPOSED TO EARTH.....3"
   CONCRETE EXPOSED TO EARTH OR WEATHER:
   #6 BARS AND LARGER.....2"
   #5 BARS AND SMALLER.....1–1/2"
   CONCRETE NOT EXPOSED TO EARTH OR WEATHER:
   SLAB AND WALLS.....3/4"
   BEAMS AND COLUMNS.....1–1/2"
7. A TOOLED EDGE OR A 3/4" CHAMFER SHALL BE PROVIDED AT ALL EXPOSED EDGES OF CONCRETE, UNLESS NOTED OTHERWISE, IN ACCORDANCE WITH ACI 301 SECTION 4.2.4.

GREENFIELD GROUNDING NOTES:

1. ALL GROUND ELECTRODE SYSTEMS (INCLUDING TELECOMMUNICATION, RADIO, LIGHTNING PROTECTION AND AC POWER GES'S) SHALL BE BONDED TOGETHER AT OR BELOW GRADE, BY TWO OR MORE COPPER BONDING CONDUCTORS IN ACCORDANCE WITH THE NEC.
2. THE CONTRACTOR SHALL PERFORM IEEE FALL–OF–POTENTAL RESISTANCE TO EARTH TESTING (PER IEEE 1100 AND 81) FOR GROUND ELECTRODE SYSTEMS, THE CONTRACTOR SHALL FURNISH AND INSTALL SUPPLEMENTAL GROUND ELECTRODES AS NEEDED TO ACHIEVE A TEST RESULT OF 5 OHMS OR LESS.
3. THE CONTRACTOR IS RESPONSIBLE FOR PROPERLY SEQUENCING GROUNDING AND UNDERGROUND CONDUIT INSTALLATION AS TO PREVENT ANY LOSS OF CONTINUITY IN THE GROUNDING SYSTEM OR DAMAGE TO THE CONDUIT AND PROVIDE TESTING RESULTS.
4. METAL CONDUIT AND TRAY SHALL BE GROUNDED AND MADE ELECTRICALLY CONTINUOUS WITH LISTED BONDING FITTINGS OR BY BONDING ACROSS THE DISCONTINUITY WITH #6 COPPER WIRE UL APPROVED GROUNDING TYPE CONDUIT CLAMPS.
5. METAL RACEWAY SHALL NOT BE USED AS THE NEC REQUIRED EQUIPMENT GROUND CONDUCTOR. STRANDED COPPER CONDUCTORS WITH GREEN INSULATION, SIZED IN ACCORDANCE WITH THE NEC, SHALL BE FURNISHED AND INSTALLED WITH THE POWER CIRCUITS TO BTS EQUIPMENT.
6. EACH CABINET FRAME SHALL BE DIRECTLY CONNECTED TO THE MASTER GROUND BAR WITH GREEN INSULATED SUPPLEMENTAL EQUIPMENT GROUND WIRES, #6 STRANDED COPPER OR LARGER FOR INDOOR BTS; #2 BARE SOLID TINNED COPPER FOR OUTDOOR BTS.
7. CONNECTIONS TO THE GROUND BUS SHALL NOT BE DOUBLED UP OR STACKED BACK TO BACK CONNECTIONS ON OPPOSITE SIDE OF THE GROUND BUS ARE PERMITTED.
8. ALL EXTERIOR GROUND CONDUCTORS BETWEEN EQUIPMENT/GROUND BARS AND THE GROUND RING SHALL BE #2 SOLID TINNED COPPER UNLESS OTHERWISE INDICATED.
9. ALUMINUM CONDUCTOR OR COPPER CLAD STEEL CONDUCTOR SHALL NOT BE USED FOR GROUNDING CONNECTIONS.
10. USE OF 90° BENDS IN THE PROTECTION GROUNDING CONDUCTORS SHALL BE AVOIDED WHEN 45° BENDS CAN BE ADEQUATELY SUPPORTED.
11. EXOTHERMIC WELDS SHALL BE USED FOR ALL GROUNDING CONNECTIONS BELOW GRADE.
12. ALL GROUND CONNECTIONS ABOVE GRADE (INTERIOR AND EXTERIOR) SHALL BE FORMED USING HIGH PRESS CRIMPS.
13. COMPRESSION GROUND CONNECTIONS MAY BE REPLACED BY EXOTHERMIC WELD CONNECTIONS.
14. ICE BRIDGE BONDING CONDUCTORS SHALL BE EXOTHERMICALLY BONDED OR BOLTED TO THE BRIDGE AND THE TOWER GROUND BAR.
15. APPROVED ANTIOXIDANT COATINGS (i.e. CONDUCTIVE GEL OR PASTE) SHALL BE USED ON ALL COMPRESSION AND BOLTED GROUND CONNECTIONS.
16. ALL EXTERIOR GROUND CONNECTIONS SHALL BE COATED WITH A CORROSION RESISTANT MATERIAL.
17. MISCELLANEOUS ELECTRICAL AND NON–ELECTRICAL METAL BOXES, FRAMES AND SUPPORTS SHALL BE BONDED TO THE GROUND RING, IN ACCORDANCE WITH THE NEC.
18. BOND ALL METALLIC OBJECTS WITHIN 6 ft OF MAIN GROUND RING WITH (1) #2 BARE SOLID TINNED COPPER GROUND CONDUCTOR.
19. GROUND CONDUCTORS USED FOR THE FACILITY GROUNDING AND LIGHTNING PROTECTION SYSTEMS SHALL NOT BE ROUTED THROUGH METALLIC OBJECTS THAT FORM A RING AROUND THE CONDUCTOR, SUCH AS METALLIC CONDUITS, METAL SUPPORT CLIPS OR SLEEVES THROUGH WALLS OR FLOORS. WHEN IT IS REQUIRED TO BE HOUSED IN CONDUIT TO MEET CODE REQUIREMENTS OR LOCAL CONDITIONS, NON–METALLIC MATERIAL SUCH AS PVC CONDUIT SHALL BE USED. WHERE USE OF METAL CONDUIT IS UNAVOIDABLE (i.e., NONMETALLIC CONDUIT PROHIBITED BY LOCAL CODE) THE GROUND CONDUCTOR SHALL BE BONDED TO EACH END OF THE METAL CONDUIT.
20. ALL GROUNDS THAT TRANSITION FROM BELOW GRADE TO ABOVE GRADE MUST BE #2 BARE SOLID TINNED COPPER IN 3/4" NON–METALLIC, FLEXIBLE CONDUIT FROM 24" BELOW GRADE TO WITHIN 3" TO 6" OF CAD–WELD TERMINATION POINT. THE EXPOSED END OF THE CONDUIT MUST BE SEALED WITH SILICONE CAULK. (ADD TRANSITIONING GROUND STANDARD DETAIL AS WELL).
21. BUILDINGS WHERE THE MAIN GROUNDING CONDUCTORS ARE REQUIRED TO BE ROUTED TO GRADE, THE CONTRACTOR SHALL ROUTE TWO GROUNDING CONDUCTORS FROM THE ROOFTOP, TOWERS, AND WATER TOWERS GROUNDING RING, TO THE EXISTING GROUNDING SYSTEM, THE GROUNDING CONDUCTORS SHALL NOT BE SMALLER THAN 2/0 COPPER. ROOFTOP GROUNDING RING SHALL BE BONDED TO THE EXISTING GROUNDING SYSTEM, THE BUILDING STEEL COLUMNS, LIGHTNING PROTECTION SYSTEM, AND BUILDING MAIN WATER LINE (FERROUS OR NONFERROUS METAL PIPING ONLY).

ELECTRICAL INSTALLATION NOTES:

1. ALL ELECTRICAL WORK SHALL BE PERFORMED IN ACCORDANCE WITH THE PROJECT SPECIFICATIONS, NEC AND ALL APPLICABLE FEDERAL, STATE, AND LOCAL CODES/ORDINANCES.
2. CONDUIT ROUTINGS ARE SCHEMATIC. CONTRACTOR SHALL INSTALL CONDUITS SO THAT ACCESS TO EQUIPMENT IS NOT BLOCKED AND TRIP HAZARDS ARE ELIMINATED.
3. WIRING, RACEWAY AND SUPPORT METHODS AND MATERIALS SHALL COMPLY WITH THE REQUIREMENTS OF THE NEC.
4. ALL CIRCUITS SHALL BE SEGREGATED AND MAINTAIN MINIMUM CABLE SEPARATION AS REQUIRED BY THE NEC.
   4.1. ALL EQUIPMENT SHALL BEAR THE UNDERWRITERS LABORATORIES' LABEL OF APPROVAL, AND SHALL CONFORM TO REQUIREMENT OF THE NATIONAL ELECTRICAL CODE.
   4.2. ALL OVERCURRENT DEVICES SHALL HAVE AN INTERRUPTING CURRENT RATING THAT SHALL BE GREATER THAN THE SHORT CIRCUIT CURRENT TO WHICH THEY ARE SUBJECTED. 22,000 AIC MINIMUM. VERYIFY AVAILABLE SHORT CIRCUIT CURRENT DOES NOT EXCEED THE RATING OF ELECTRICAL EQUIPMENT IN ACCORDANCE WITH ARTICLE 110.24 NEC OR THE MOST CURRENT ADOPTED CODE PRE THE GOVERNING JURISDICTION.
5. EACH END OF EVERY POWER PHASE CONDUCTOR, GROUNDING CONDUCTOR, AND TELCO CONDUCTOR OR CABLE SHALL BE LABELED WITH COLOR–CODED INSULATION OR ELECTRICAL TAPE (3M BRAND, 1/2" PLASTIC ELECTRICAL TAPE WITH UV PROTECTION, OR EQUAL). THE IDENTIFICATION METHOD SHALL CONFORM WITH NEC AND OSHA.
6. ALL ELECTRICAL COMPONENTS SHALL BE CLEARLY LABELED WITH LAMICOID TAGS SHOWING THEIR RATED VOLTAGE, PHASE CONFIGURATION, WIRE CONFIGURATION, POWER OR AMPACITY RATING AND BRANCH CIRCUIT ID NUMBERS (i.e. PANEL BOARD AND CIRCUIT ID'S).
7. PANEL BOARDS (ID NUMBERS) SHALL BE CLEARLY LABELED WITH PLASTIC LABELS.
8. ALL TIE WRAPS SHALL BE CUT FLUSH WITH APPROVED CUTTING TOOL TO REMOVE SHARP EDGES.
9. ALL POWER AND EQUIPMENT GROUND WIRING IN TUBING OR CONDUIT SHALL BE SINGLE COPPER CONDUCTOR (#14 OR LARGER) WITH TYPE THHW, THWN, THWN–2, XHHW, XHHW–2, THW, THW–2, RHW, OR RHW–2 INSULATION UNLESS OTHERWISE SPECIFIED.
10. SUPPLEMENTAL EQUIPMENT GROUND WIRING LOCATED INDOORS SHALL BE SINGLE COPPER CONDUCTOR (#6 OR LARGER) WITH TYPE THHW, THWN, THWN–2, XHHW, XHHW–2, THW, THW–2, RHW, OR RHW–2 INSULATION UNLESS OTHERWISE SPECIFIED.
11. POWER AND CONTROL WIRING IN FLEXIBLE CORD SHALL BE MULTI–CONDUCTOR, TYPE SOOW CORD (#14 OR LARGER) UNLESS OTHERWISE SPECIFIED.
12. POWER AND CONTROL WIRING FOR USE IN CABLE TRAY SHALL BE MULTI–CONDUCTOR, TYPE TC CABLE (#14 OR LARGER), WITH TYPE THHW, THWN, THWN–2, XHHW, XHHW–2, THW, THW–2, RHW, OR RHW–2 INSULATION UNLESS OTHERWISE SPECIFIED.
13. ALL POWER AND GROUNDING CONNECTIONS SHALL BE CRIMP–STYLE, COMPRESSION WIRE LUGS AND WIRE NUTS BY THOMAS AND BETTS (OR EQUAL). LUGS AND WIRE NUTS SHALL BE RATED FOR OPERATION NOT LESS THAN 75° C (90° C IF AVAILABLE).
14. RACEWAY AND CABLE TRAY SHALL BE LISTED OR LABELED FOR ELECTRICAL USE IN ACCORDANCE WITH NEMA, UL, ANSI/IEEE AND NEC.
15. ELECTRICAL METALLIC TUBING (EMT), INTERMEDIATE METAL CONDUIT (IMC), OR RIGID METAL CONDUIT (RMC) SHALL BE USED FOR EXPOSED INDOOR LOCATIONS.
16. ELECTRICAL METALLIC TUBING (EMT) OR METAL–CLAD CABLE (MC) SHALL BE USED FOR CONCEALED INDOOR LOCATIONS.
17. SCHEDULE 40 PVC UNDERGROUND ON STRAIGHTS AND SCHEDULE 80 PVC FOR ALL ELBOWS/90s AND ALL APPROVED ABOVE GRADE PVC CONDUIT.
18. LIQUID–TIGHT FLEXIBLE METALLIC CONDUIT (LIQUID–TITE FLEX) SHALL BE USED INDOORS AND OUTDOORS, WHERE VIBRATION OCCURS OR FLEXIBILITY IS NEEDED.
19. CONDUIT AND TUBING FITTINGS SHALL BE THREADED OR COMPRESSION–TYPE AND APPROVED FOR THE LOCATION USED. SET SCREW FITTINGS ARE NOT ACCEPTABLE.
20. CABINETS, BOXES AND WIRE WAYS SHALL BE LABELED FOR ELECTRICAL USE IN ACCORDANCE WITH NEMA, UL, ANSI/IEEE AND THE NEC.
21. WIREWAYS SHALL BE METAL WITH AN ENAMEL FINISH AND INCLUDE A HINGED COVER, DESIGNED TO SWING OPEN DOWNWARDS (WIREMOLD SPECMATE WIREWAY).
22. SLOTTED WIRING DUCT SHALL BE PVC AND INCLUDE COVER (PANDUIT TYPE E OR EQUAL).
23. CONDUITS SHALL BE FASTENED SECURELY IN PLACE WITH APPROVED NON–PERFORATED STRAPS AND HANGERS. EXPLOSIVE DEVICES (i.e. POWDER–ACTUATED) FOR ATTACHING HANGERS TO STRUCTURE WILL NOT BE PERMITTED. CLOSELY FOLLOW THE LINES OF THE STRUCTURE, MAINTAIN CLOSE PROXIMITY TO THE STRUCTURE AND KEEP CONDUITS IN TIGHT ENVELOPES. CHANGES IN DIRECTION TO ROUTE AROUND OBSTACLES SHALL BE MADE WITH CONDUIT OUTLET BODIES. CONDUIT SHALL BE INSTALLED IN A NEAT AND WORKMANLIKE MANNER. PARALLEL AND PERPENDICULAR TO STRUCTURE WALL AND CEILING LINES. ALL CONDUIT SHALL BE FISHED TO CLEAR OBSTRUCTIONS. ENDS OF CONDUITS SHALL BE TEMPORARILY CAPPED FLUSH TO FINISH GRADE TO PREVENT CONCRETE, PLASTER OR DIRT FROM ENTERING. CONDUITS SHALL BE RIGIDLY CLAMPED TO BOXES BY GALVANIZED MALLEABLE IRON BUSHING ON INSIDE AND GALVANIZED MALLEABLE IRON LOCKNUT ON OUTSIDE AND INSIDE.
24. EQUIPMENT CABINETS, TERMINAL BOXES, JUNCTION BOXES AND PULL BOXES SHALL BE GALVANIZED OR EPOXY–COATED SHEET STEEL. SHALL MEET OR EXCEED UL 50 AND BE RATED NEMA 1 (OR BETTER) FOR INTERIOR LOCATIONS AND NEMA 3R (OR BETTER) FOR EXTERIOR LOCATIONS.
25. METAL RECEPTACLE, SWITCH AND DEVICE BOXES SHALL BE GALVANIZED, EPOXY–COATED OR NON–CORRODING; SHALL MEET OR EXCEED UL 514A AND NEMA OS 1 AND BE RATED NEMA 1 (OR BETTER) FOR INTERIOR LOCATIONS AND WEATHER PROTECTED (WP OR BETTER) FOR EXTERIOR LOCATIONS.
26. NONMETALLIC RECEPTACLE, SWITCH AND DEVICE BOXES SHALL MEET OR EXCEED NEMA OS 2 (NEWEST REVISION) AND BE RATED NEMA 1 (OR BETTER) FOR INTERIOR LOCATIONS AND WEATHER PROTECTED (WP OR BETTER) FOR EXTERIOR LOCATIONS.
27. THE CONTRACTOR SHALL NOTIFY AND OBTAIN NECESSARY AUTHORIZATION FROM THE CARRIER AND/OR CROWN CASTLE USA INC. BEFORE COMMENCING WORK ON THE AC POWER DISTRIBUTION PANELS.
28. THE CONTRACTOR SHALL PROVIDE NECESSARY TAGGING ON THE BREAKERS, CABLES AND DISTRIBUTION PANELS IN ACCORDANCE WITH THE APPLICABLE CODES AND STANDARDS TO SAFEGUARD LIFE AND PROPERTY.
29. INSTALL LAMICOID LABEL ON THE METER CENTER TO SHOW "AT&T".
30. ALL EMPTY/SPARE CONDUITS THAT ARE INSTALLED ARE TO HAVE A METERED MULE TAPE PULL CORD INSTALLED.

CONDUCTOR COLOR CODE

SYSTEM	CONDUCTOR	COLOR
120/240V, 1Ø	A PHASE	BLACK
	B PHASE	RED
	NEUTRAL	WHITE
	GROUND	GREEN
120/208V, 3Ø	A PHASE	BLACK
	B PHASE	RED
	C PHASE	BLUE
	NEUTRAL	WHITE
	GROUND	GREEN
277/480V, 3Ø	A PHASE	BROWN
	B PHASE	ORANGE OR PURPLE
	C PHASE	YELLOW
	NEUTRAL	GREY
	GROUND	GREEN
DC VOLTAGE	POS (+)	RED**
	NEG (–)	BLACK**

* SEE NEC 210.5(C)(1) AND (2)
** POLARITY MARKED AT TERMINATION

APWA UNIFORM COLOR CODE:

WHITE	PROPOSED EXCAVATION
PINK	TEMPORARY SURVEY MARKINGS
RED	ELECTRIC POWER LINES, CABLES, CONDUIT, AND LIGHTING CABLES
YELLOW	GAS, OIL, STEAM, PETROLEUM

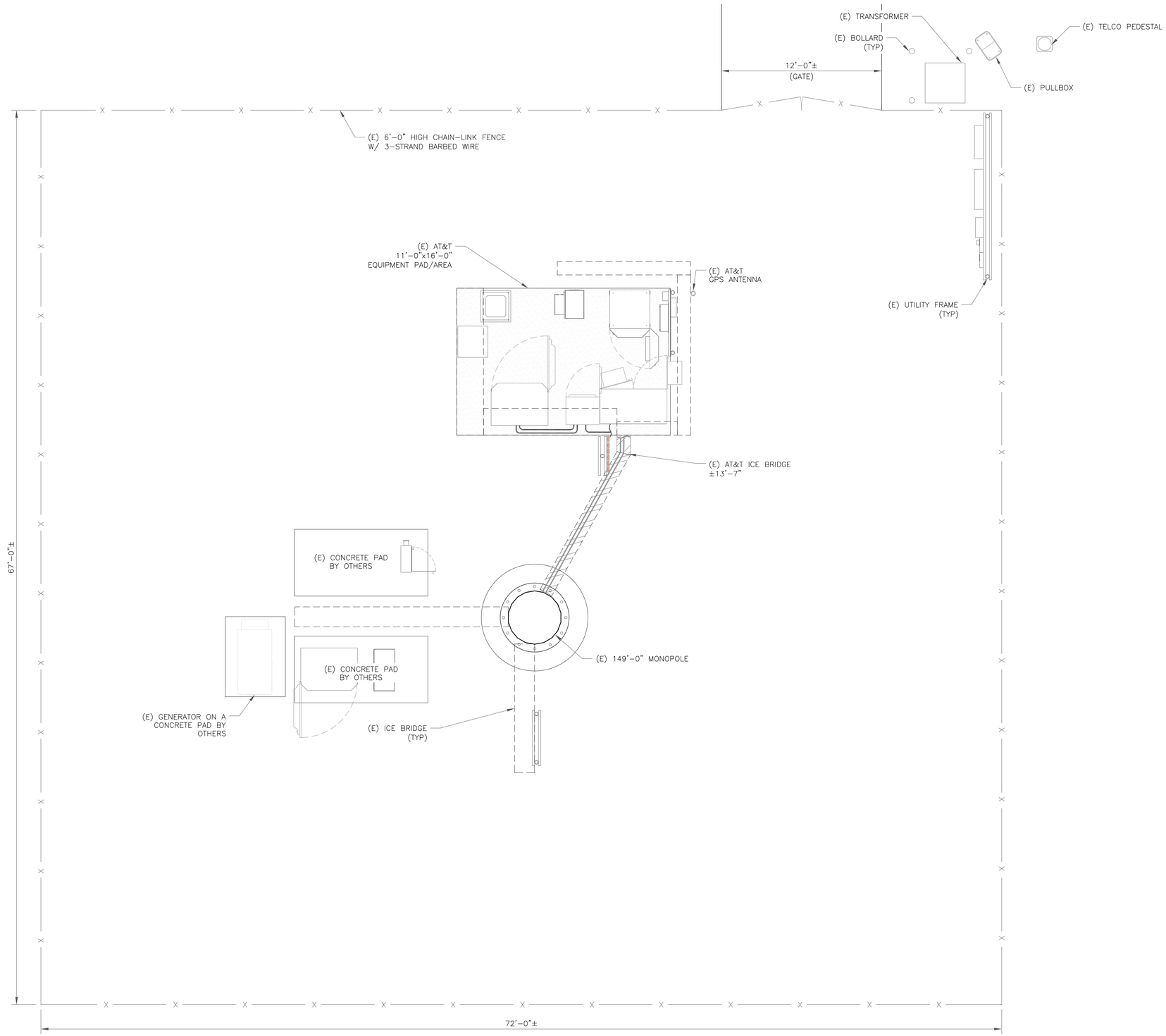

1 SITE PLAN

SCALE: 4' 3' 2' 1' 0 4'

1/4"=1'-0" (FULL SIZE)
1/8"=1'-0" (11x17)

N

AT&T
575 MOROSGO DRIVE
ATLANTA, GA 30324-3300

CROWN CASTLE
3530 TORINGDON WAY, SUITE 300
CHARLOTTE, NC 28277

B+T GRP
1717 S. BOULDER
SUITE 300
TULSA, OK 74119
PH: (918) 587-4630
www.btgrp.com

AT&T SITE NUMBER: **CTL05860**

BU #: **842856**
ANDOVER NORTH

122 JONATHAN TRUMBULL HIGHWAY (ROUTE 6)
ANDOVER, CT 06232

EXISTING
149'-0" MONOPOLE

ISSUED FOR:

REV	DATE	DRWN	DESCRIPTION	DES./QA
A	3/26/21	JTS	PRELIMINARY REVIEW	MTJ
B	4/1/21	RPA	PRELIMINARY REVIEW	AY
C	4/16/21	GEH	PRELIMINARY REVIEW	MTJ
0	5/3/21	JJD	CONSTRUCTION	MTJ

STEVEN C. GRAVES
CONNECTICUT
No. 23924
LICENSED
PROFESSIONAL ENGINEER
5/3/21

B&T ENGINEERING, INC.
PEC.0001564
Expires 2/10/22

IT IS A VIOLATION OF LAW FOR ANY PERSON, UNLESS THEY ARE ACTING UNDER THE DIRECTION OF A LICENSED PROFESSIONAL ENGINEER, TO ALTER THIS DOCUMENT.

SHEET NUMBER: C-1.1

REVISION: 0

135726.004.01 Andover North.dwg – Sheet:C-1.1 – User: mjones – May 03, 2021 – 9:21am

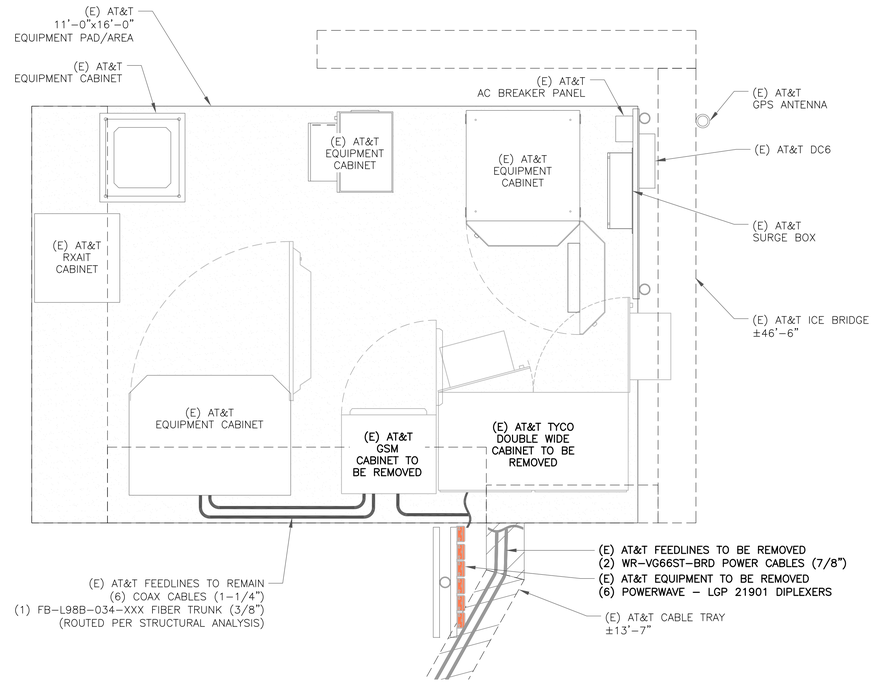

1 EXISTING EQUIPMENT PLAN

SCALE: 2' 1' 0 2' 1/2"=1'-0" (FULL SIZE) 1/4"=1'-0" (11x17)

N

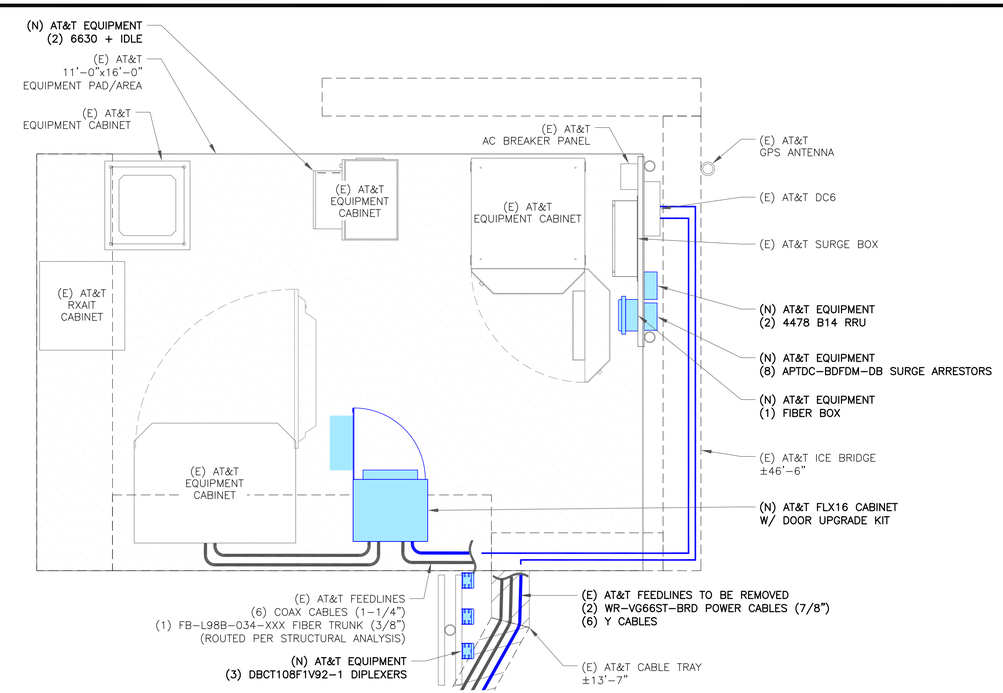

2 FINAL EQUIPMENT PLAN

SCALE: 2' 1' 0 2' 1/2"=1'-0" (FULL SIZE) 1/4"=1'-0" (11x17)

N

GROUND SCOPE OF WORK:

- INSTALL (3) DBCT108F1V92-1 DIPLEXERS
- INSTALL (2) 4478 B14 RRU
- INSTALL (2) 6630 + IDLE
- INSTALL (1) FIBER BOX

NOTE:

THE POWER DESIGN FOR ANY AC ELECTRICAL POWER CHANGES IS TO BE PERFORMED BY OTHERS AND IS SHOWN HERE FOR REFERENCE PURPOSES ONLY. AT&T IS SOLELY RESPONSIBLE FOR THE ELECTRICAL POWER DESIGN.

AT&T
575 MOROSGO DRIVE
ATLANTA, GA 30324-3300

CROWN CASTLE
3530 TORINGDON WAY, SUITE 300
CHARLOTTE, NC 28277

B+T GRP
1717 S. BOULDER
SUITE 300
TULSA, OK 74119
PH: (918) 587-4630
www.btgrp.com

AT&T SITE NUMBER: **CTL05860**

BU #: **842856**
ANDOVER NORTH

122 JONATHAN TRUMBULL HIGHWAY (ROUTE 6)
ANDOVER, CT 06232

EXISTING
149'-0" MONOPOLE

ISSUED FOR:

REV	DATE	DRWN	DESCRIPTION	DES./QA
A	3/26/21	JTS	PRELIMINARY REVIEW	MTJ
B	4/1/21	RPA	PRELIMINARY REVIEW	AY
C	4/16/21	GEH	PRELIMINARY REVIEW	MTJ
0	5/3/21	JJD	CONSTRUCTION	MTJ

STATE OF CONNECTICUT
MICHAEL T. JONES
No. 23924
LICENSED
PROFESSIONAL ENGINEER
5/3/21

B&T ENGINEERING, INC.
PEC.0001564
Expires 2/10/22

IT IS A VIOLATION OF LAW FOR ANY PERSON, UNLESS THEY ARE ACTING UNDER THE DIRECTION OF A LICENSED PROFESSIONAL ENGINEER, TO ALTER THIS DOCUMENT.

SHEET NUMBER: C-1.2

REVISION: 0

135726.004.01 Andover North.dwg - Sheet:C-1.2 - User: mjones - May 03, 2021 - 9:21am

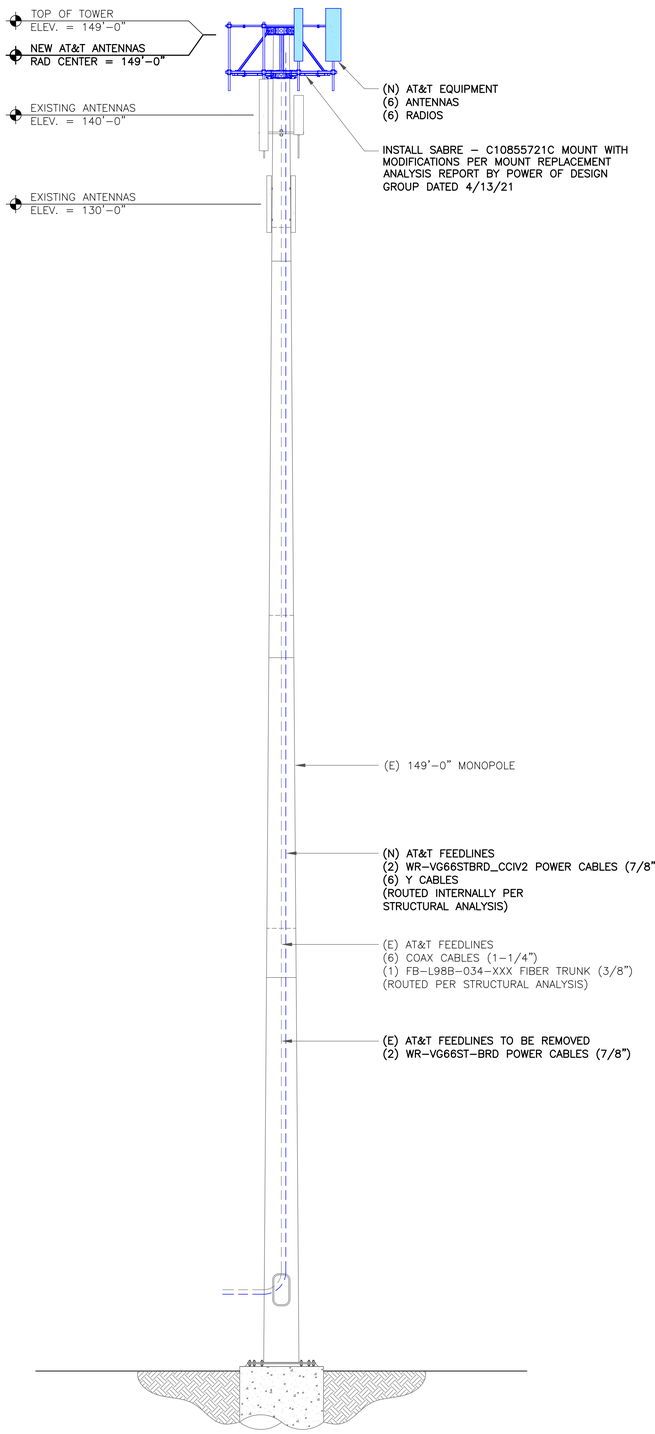

1 FINAL ELEVATION
SCALE: NOT TO SCALE

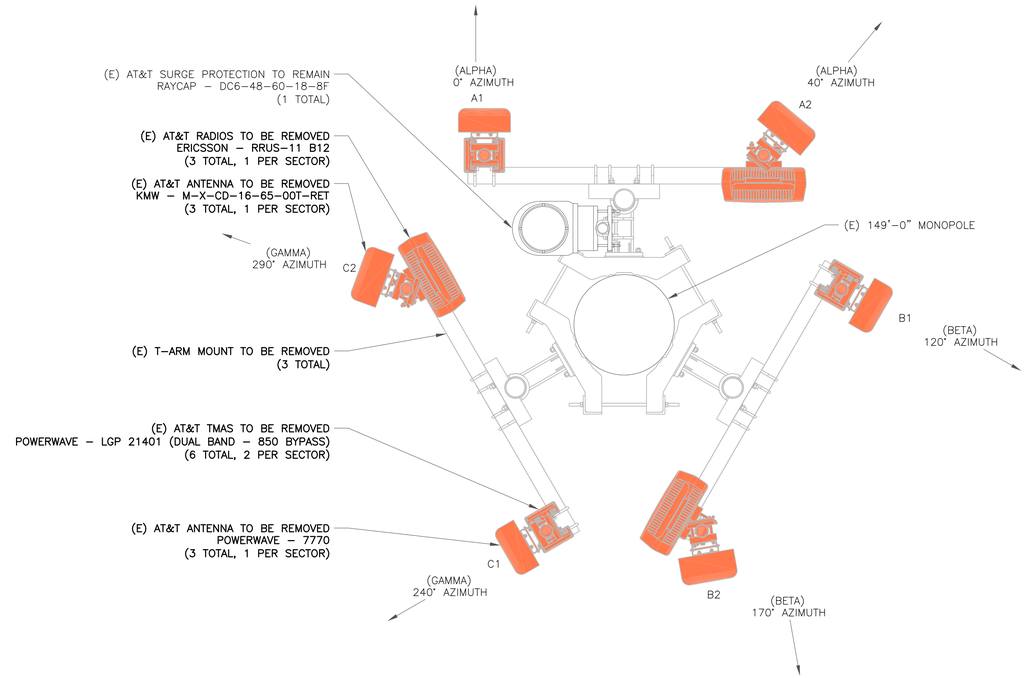

2 EXISTING ANTENNA PLAN
SCALE: 1' 6" 0 1' — 3/4"=1'-0" (FULL SIZE) 3/8"=1'-0" (11x17)

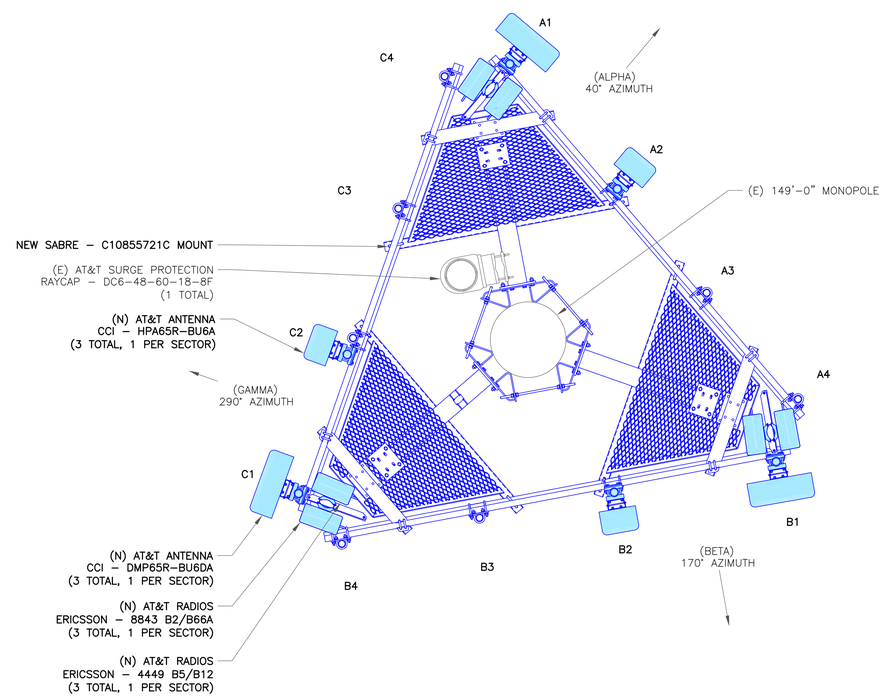

3 FINAL ANTENNA PLAN
SCALE: 2' 1' 0 2' — 1/2"=1'-0" (FULL SIZE) 1/4"=1'-0" (11x17)

"LOOK UP" – CROWN CASTLE USA INC.
SAFETY CLIMB REQUIREMENT:

THE INTEGRITY OF THE SAFETY CLIMB AND ALL COMPONENTS OF THE CLIMBING FACILITY SHALL BE CONSIDERED DURING ALL STAGES OF DESIGN, INSTALLATION, AND INSPECTION. TOWER MODIFICATION, MOUNT REINFORCEMENTS, AND/OR EQUIPMENT INSTALLATIONS SHALL NOT COMPROMISE THE INTEGRITY OR FUNCTIONAL USE OF THE SAFETY CLIMB OR ANY COMPONENTS OF THE CLIMBING FACILITY ON THE STRUCTURE. THIS SHALL INCLUDE, BUT NOT BE LIMITED TO: PINCHING OF THE WIRE ROPE, BENDING OF THE WIRE ROPE FROM ITS SUPPORTS, DIRECT CONTACT OR CLOSE PROXIMITY TO THE WIRE ROPE WHICH MAY CAUSE FRICTIONAL WEAR, IMPACT TO THE ANCHORAGE POINTS IN ANY WAY, OR TO IMPEDE/BLOCK ITS INTENDED USE. ANY COMPROMISED SAFETY CLIMB, INCLUDING EXISTING CONDITIONS MUST BE TAGGED OUT AND REPORTED TO YOUR CROWN CASTLE USA INC. POC OR CALL THE NOC TO GENERATE A SAFETY CLIMB MAINTENANCE AND CONTRACTOR NOTICE TICKET.

INSTALLER NOTES:

1. REFERENCE C-3 FOR FINAL EQUIPMENT SCHEDULE.
2. REFERENCE C-4 FOR NEW EQUIPMENT SPECIFICATIONS.
3. CONTRACTOR TO VERIFY ALL ANTENNA TIP HEIGHTS DO NOT EXCEED BEACON BASE HEIGHT.
4. 3'-0" MINIMUM DISTANCE REQUIRED BETWEEN LTE ANTENNAS ON SAME SECTOR.
5. 6'-0" MINIMUM DISTANCE REQUIRED BETWEEN 700BC & 700DE ANTENNAS ON SAME SECTOR.
6. 4'-0" MINIMUM DISTANCE REQUIRED BETWEEN LTE 700 ANTENNAS ON OPPOSING SECTORS.
7. ALL ANTENNA MEASUREMENT DISTANCES MUST BE EDGE TO EDGE (RELOCATE ANTENNAS AS NEEDED).
8. 8" MINIMUM DISTANCE REQUIRED BETWEEN ANTENNA & RADIO. SEE GENERIC EXAMPLE DETAIL ON SHEET C-4.
9. RRU TO BE INSTALLED USING Y-CABLES

AT&T
575 MOROSGO DRIVE
ATLANTA, GA 30324-3300

CROWN CASTLE
3530 TORINGDON WAY, SUITE 300
CHARLOTTE, NC 28277

B+T GRP
1717 S. BOULDER
SUITE 300
TULSA, OK 74119
PH: (918) 587-4630
www.btgrp.com

AT&T SITE NUMBER: **CTL05860**

BU #: **842856**
ANDOVER NORTH

122 JONATHAN TRUMBULL HIGHWAY (ROUTE 6)
ANDOVER, CT 06232

EXISTING
149'-0" MONOPOLE

ISSUED FOR:

REV	DATE	DRWN	DESCRIPTION	DES./QA
A	3/26/21	JTS	PRELIMINARY REVIEW	MTJ
B	4/1/21	RPA	PRELIMINARY REVIEW	AY
C	4/16/21	GEH	PRELIMINARY REVIEW	MTJ
0	5/3/21	JJD	CONSTRUCTION	MTJ

STATE OF CONNECTICUT
GARRETT E. HOLT
No. 23924
LICENSED
PROFESSIONAL ENGINEER
5/3/21

B&T ENGINEERING, INC.
PEC.0001564
Expires 2/10/22

IT IS A VIOLATION OF LAW FOR ANY PERSON, UNLESS THEY ARE ACTING UNDER THE DIRECTION OF A LICENSED PROFESSIONAL ENGINEER, TO ALTER THIS DOCUMENT.

SHEET NUMBER: C-2
REVISION: 0

135726.004.01 Andover North.dwg – Sheet:C-2 – User: mjones – May 03, 2021 – 9:21am

FINAL ANTENNA AND FEEDLINE SCHEDULE

POS.	TECH	STATUS	AZIMUTH	ANTENNA TYPE	ANTENNA RAD CENTER	MECHANICAL DOWNTILT	ELECTRICAL DOWNTILT	MAIN COAX SIZE	MAIN COAX LENGTH	COAX QTY	TMA QTY AND MODEL	SURGE PROTECTION	DC/FIBER CABLES	RRHs QTY & MODEL ON TOWER	LOCATION	DIPLEXER ON TOWER	DIPLEXER ON GROUND	RET CABLE
ALPHA SECTOR																		
A1	LTE 700/LTE 850/LTE 1900/5G 850	NEW	40°	CCI DMP65R-BU6DA	149'-0"	0°	8°/8°/2°/2°/8°	–	–	–	–	DC6-48-60-18-8F	(1) 3/8" FIBER	(1) 4449 B5/B12 (1) 8843 B2/B66A	TOWER	N	N	N
A2	UMTS 850/ LTE 700/LTE AWS	NEW	40°	CCI HPA65R-BU6A	149'-0"	0°	8°/4°/2°	1 1/4"	201'-0"	2	–			–	TOWER	N	Y	N
A3	–	–	–	EMPTY MOUNT	–	–	–	–	–	–	–			–	TOWER	N	N	N
A4	–	–	–	EMPTY MOUNT	–	–	–	–	–	–	–			–	TOWER	N	N	N
BETA SECTOR																		
B1	LTE 700/LTE 850/LTE 1900/5G 850	NEW	40°	CCI DMP65R-BU6DA	149'-0"	0°	8°/8°/2°/2°/8°	–	–	–	–	–	(2) 7/8" POWER CABLES	(1) 4449 B5/B12 (1) 8843 B2/B66A	TOWER	N	N	N
B2	UMTS 850/ LTE 700/LTE AWS	NEW	40°	CCI HPA65R-BU6A	149'-0"	0°	8°/4°/2°	1 1/4"	201'-0"	2	–			–	TOWER	N	Y	N
B3	–	–	–	EMPTY MOUNT	–	–	–	–	–	–	–			–	TOWER	N	N	N
B4	–	–	–	EMPTY MOUNT	–	–	–	–	–	–	–			–	TOWER	N	N	N
GAMMA SECTOR																		
C1	LTE 700/LTE 850/LTE 1900/5G 850	NEW	40°	CCI DMP65R-BU6DA	149'-0"	0°	8°/8°/2°/2°/8°	–	–	–	–	–	–	(1) 4449 B5/B12 (1) 8843 B2/B66A	TOWER	N	N	N
C2	UMTS 850/ LTE 700/LTE AWS	NEW	40°	CCI HPA65R-BU6A	149'-0"	0°	8°/4°/2°	1 1/4"	201'-0"	2	–			–	TOWER	N	Y	N
C3	–	–	–	EMPTY MOUNT	–	–	–	–	–	–	–			–	TOWER	N	N	N
C4	–	–	–	EMPTY MOUNT	–	–	–	–	–	–	–			–	TOWER	N	N	N

NOTE: BOLD DENOTES NEW EQUIPMENT

1 FINAL ANTENNA AND FEEDLINE SCHEDULE
SCALE: NOT TO SCALE

AT&T
575 MOROSGO DRIVE
ATLANTA, GA 30324-3300

CROWN CASTLE
3530 TORINGDON WAY, SUITE 300
CHARLOTTE, NC 28277

B+T GRP
1717 S. BOULDER
SUITE 300
TULSA, OK 74119
PH: (918) 587-4630
www.btgrp.com

AT&T SITE NUMBER: **CTL05860**

BU #: **842856**
ANDOVER NORTH

122 JONATHAN TRUMBULL HIGHWAY (ROUTE 6)
ANDOVER, CT 06232

EXISTING
149'-0" MONOPOLE

ISSUED FOR:

REV	DATE	DRWN	DESCRIPTION	DES./QA
A	3/26/21	JTS	PRELIMINARY REVIEW	MTJ
B	4/1/21	RPA	PRELIMINARY REVIEW	AY
C	4/16/21	GEH	PRELIMINARY REVIEW	MTJ
0	5/3/21	JJD	CONSTRUCTION	MTJ

STATE OF CONNECTICUT
CHRISTOPHER M. GRAVELINE
No. 23924
LICENSED
PROFESSIONAL ENGINEER
5/3/21

B&T ENGINEERING, INC.
PEC.0001564
Expires 2/10/22

IT IS A VIOLATION OF LAW FOR ANY PERSON, UNLESS THEY ARE ACTING UNDER THE DIRECTION OF A LICENSED PROFESSIONAL ENGINEER, TO ALTER THIS DOCUMENT.

SHEET NUMBER: C-3

REVISION: 0

135726.004.01 Andover North.dwg – Sheet:C-3 – User: mjones – May 03, 2021 – 9:21am

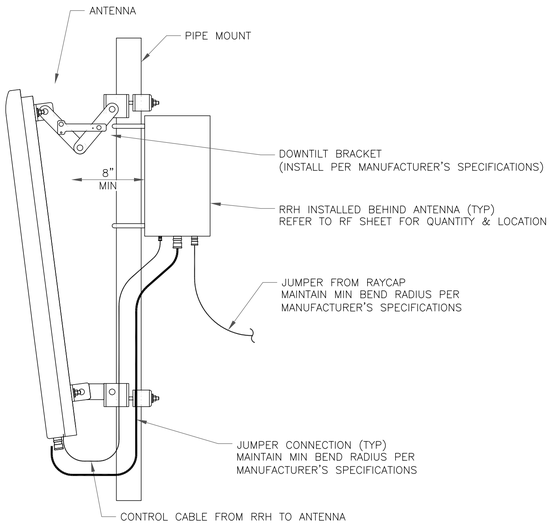

1 GENERIC ANTENNA MOUNTING ELEVATION
SCALE: NOT TO SCALE

NOTE:

COMPLY WITH MANUFACTURERS INSTRUCTIONS TO ENSURE THAT ALL RRH'S RECEIVE ELECTRICAL POWER WITHIN 24 HOURS OF BEING REMOVED FROM THE MANUFACTURER'S PACKAGING.
DO NOT OPEN RRH PACKAGES IN THE RAIN.

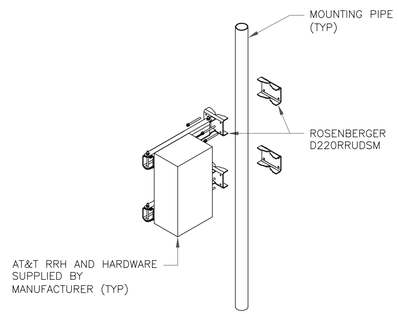

2 RRH DUAL BRACKET MOUNT DETAIL
SCALE: N.T.S.

3 NOT USED
SCALE: NOT TO SCALE

4 NOT USED
SCALE: NOT TO SCALE

INSTALLER NOTES:

1. COMPLY WITH MANUFACTURERS INSTRUCTIONS TO ENSURE THAT ALL RRHs RECEIVE ELECTRICAL POWER WITHIN 24 HOURS OF BEING REMOVED FROM THE MANUFACTURER'S PACKAGING.
2. DO NOT OPEN RRH PACKAGES IN THE RAIN.
3. ALL PIPES, BRACKETS, AND MISCELLANEOUS HARDWARE TO BE GALVANIZED UNLESS NOTED OTHERWISE.

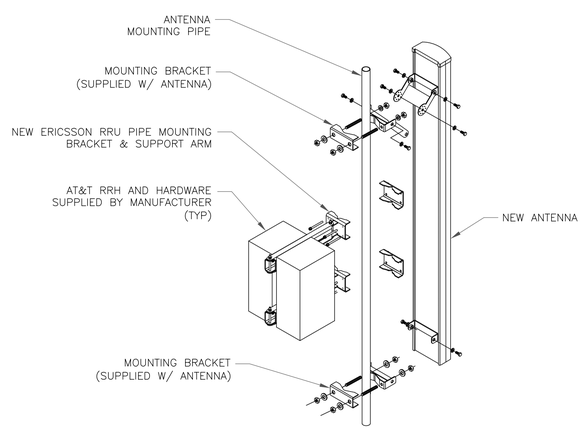

5 ANTENNA WITH DUAL RRH MOUNTING DETAIL
SCALE: NOT TO SCALE

6 NOT USED
SCALE: NOT TO SCALE

AT&T
575 MOROSGO DRIVE
ATLANTA, GA 30324-3300

CROWN CASTLE
3530 TORINGDON WAY, SUITE 300
CHARLOTTE, NC 28277

B+T GRP
1717 S. BOULDER
SUITE 300
TULSA, OK 74119
PH: (918) 587-4630
www.btgrp.com

AT&T SITE NUMBER: **CTL05860**

BU #: **842856**
ANDOVER NORTH

122 JONATHAN TRUMBULL
HIGHWAY (ROUTE 6)
ANDOVER, CT 06232

EXISTING
149'-0" MONOPOLE

ISSUED FOR:

REV	DATE	DRWN	DESCRIPTION	DES./QA
A	3/26/21	JTS	PRELIMINARY REVIEW	MTJ
B	4/1/21	RPA	PRELIMINARY REVIEW	AY
C	4/16/21	GEH	PRELIMINARY REVIEW	MTJ
0	5/3/21	JJD	CONSTRUCTION	MTJ

B&T ENGINEERING, INC.
PEC.0001564
Expires 2/10/22

IT IS A VIOLATION OF LAW FOR ANY PERSON, UNLESS THEY ARE ACTING UNDER THE DIRECTION OF A LICENSED PROFESSIONAL ENGINEER, TO ALTER THIS DOCUMENT.

SHEET NUMBER: C-4
REVISION: 0

135726.004.01 Andover North.dwg – Sheet:C-4 – User: mjones – May 03, 2021 – 9:21am

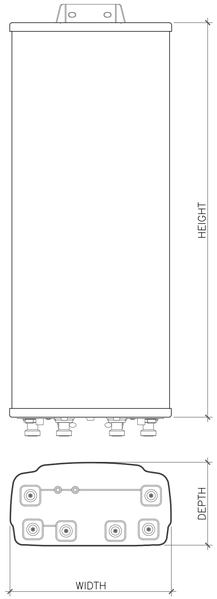

ANTENNA DIMENSIONS (INCHES)				
MODEL	HEIGHT	WIDTH	DEPTH	WEIGHT
DMP65R-BU6D	71.2"	20.7"	7.7"	89.3 lbs

1 ANTENNA DETAIL
SCALE: NOT TO SCALE

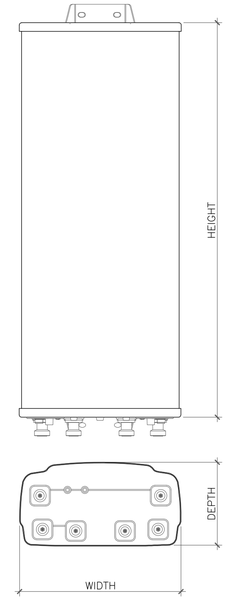

ANTENNA DIMENSIONS (INCHES)				
MODEL	HEIGHT	WIDTH	DEPTH	WEIGHT
HPA65R-BU6A	71.1"	11.7"	7.6"	54.5 lbs

2 ANTENNA DETAIL
SCALE: NOT TO SCALE

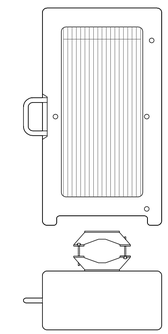

ERICSSON – 4449 B5/B12
WEIGHT (FULLY EQUIPPED): 71.0 LBS
SIZE (HxWxD): 17.9x13.2x9.44 IN.
CONNECTOR TYPE: 4.3–10 FEMALE (4 TOTAL PORTS)
TO BE INSTALLED USING Y-CABLES

3 ERICSSON – 4449 B5/B12
SCALE: NOT TO SCALE

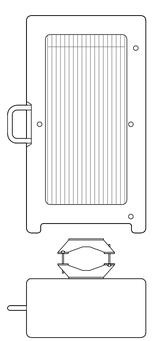

ERICSSON – 8843 B2/B66A
WEIGHT (FULLY EQUIPPED): 72.0 LBS
SIZE (HxWxD): 14.9x13.2x10.9 IN.
CONNECTOR TYPE: 4.3–10 FEMALE (4 TOTAL PORTS)
TO BE INSTALLED USING Y-CABLES

4 ERICSSON – 8843 B2/B66A
SCALE: NOT TO SCALE

AT&T
575 MOROSGO DRIVE
ATLANTA, GA 30324-3300

CROWN CASTLE
3530 TORINGDON WAY, SUITE 300
CHARLOTTE, NC 28277

B+T GRP
1717 S. BOULDER
SUITE 300
TULSA, OK 74119
PH: (918) 587-4630
www.btgrp.com

AT&T SITE NUMBER: **CTL05860**

BU #: **842856**
ANDOVER NORTH

122 JONATHAN TRUMBULL
HIGHWAY (ROUTE 6)
ANDOVER, CT 06232

EXISTING
149'-0" MONOPOLE

ISSUED FOR:

REV	DATE	DRWN	DESCRIPTION	DES./QA
A	3/26/21	JTS	PRELIMINARY REVIEW	MTJ
B	4/1/21	RPA	PRELIMINARY REVIEW	AY
C	4/16/21	GEH	PRELIMINARY REVIEW	MTJ
0	5/3/21	JJD	CONSTRUCTION	MTJ

B&T ENGINEERING, INC.
PEC.0001564
Expires 2/10/22

IT IS A VIOLATION OF LAW FOR ANY PERSON, UNLESS THEY ARE ACTING UNDER THE DIRECTION OF A LICENSED PROFESSIONAL ENGINEER, TO ALTER THIS DOCUMENT.

SHEET NUMBER: C-5
REVISION: 0

135726.004.01 Andover North.dwg – Sheet:C-5 – User: mjones – May 03, 2021 – 9:21am

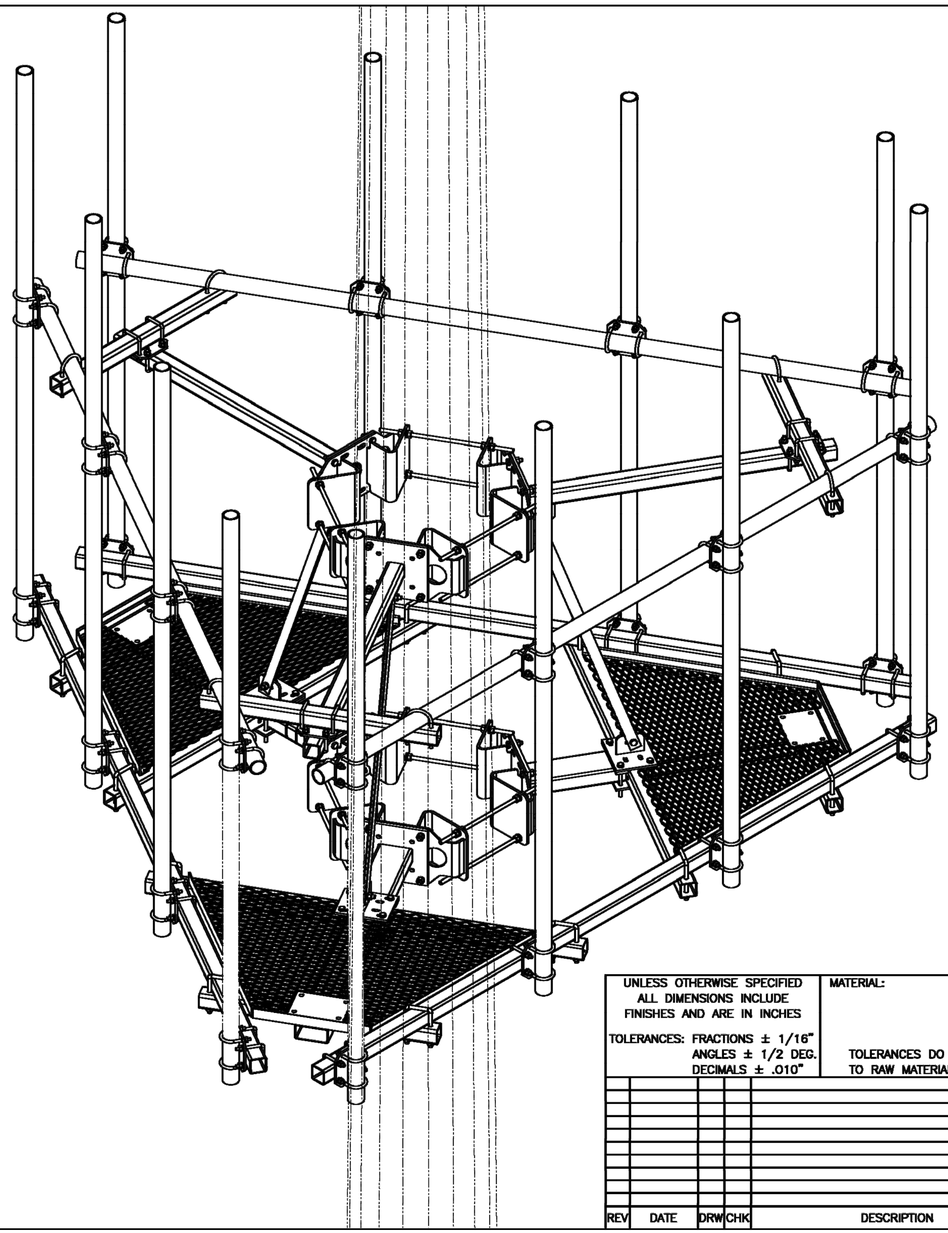

C10855721C SABRE 12' HD TENSION PLATFORM W/(12) 2 7/8" O.D. X 10' MTG PIPES				
ITEM	QTY.	PART NO.	DESCRIPTION	WEIGHT
1.	1	C10855111C	12' HC PLATFORM ASSEMBLY	913
2.	1	C10112377	TRI-COLLAR BRACKET ASSEMBLY	208
3.	1	C10851301	SUPPORT RAIL/TENSION BRACKET 12'	900
4.	12	C10902025	CROSSOVER PLATE KIT 2 7/8"ø TO 2 7/8"ø PIPES	108
5.	12	C10902502	CROSSOVER PLATE KIT 3" SQ. TUBE TO 2 7/8"ø PIPES	108
6.	12	C10901329	PIPE, 2 7/8" O.D. X .203 X 10'-0	722
			TOTAL WEIGHT	2959

ISOMETRIC VIEW

SEE PAGES 2 & 3
FOR ADDITIONAL DETAILS

Patent Pending

UNLESS OTHERWISE SPECIFIED
ALL DIMENSIONS INCLUDE
FINISHES AND ARE IN INCHES

TOLERANCES: FRACTIONS ± 1/16"
ANGLES ± 1/2 DEG.
DECIMALS ± .010"

MATERIAL:

TOLERANCES DO NOT APPLY
TO RAW MATERIAL

REV	DATE	DRW	CHK	DESCRIPTION

Sabre Industries™
Towers and Poles

CONFIDENTIAL
This document and the information contained herein is the confidential trade secret property of Sabre Communications Corporation ("Sabre") and must not be reproduced, copied or used, in whole or in part, for any purpose without the prior written consent of Sabre.
© 2016 Sabre Communications Corporation. All rights reserved.

12' HD M.O.V.E. PLATFORM
W/(12) 2 7/8" O.D. X 10' MOUNTING PIPES

		SIZE	DRAWING NO.	REV
DATE	10/18/17	B	C10855721C	0
DRAWN BY	WRF		SCALE	PAGE
CHECKED BY	WMN		None	1 OF 3

1 SABRE C10855721C MOUNT DETAIL
SCALE: NOT TO SCALE

AT&T
575 MOROSGO DRIVE
ATLANTA, GA 30324-3300

CROWN CASTLE
3530 TORINGDON WAY, SUITE 300
CHARLOTTE, NC 28277

B+T GRP
1717 S. BOULDER
SUITE 300
TULSA, OK 74119
PH: (918) 587-4630
www.btgrp.com

AT&T SITE NUMBER: **CTL05860**

BU #: **842856**
ANDOVER NORTH

122 JONATHAN TRUMBULL
HIGHWAY (ROUTE 6)
ANDOVER, CT 06232

EXISTING
149'-0" MONOPOLE

ISSUED FOR:

REV	DATE	DRWN	DESCRIPTION	DES./QA
A	3/26/21	JTS	PRELIMINARY REVIEW	MTJ
B	4/1/21	RPA	PRELIMINARY REVIEW	AY
C	4/16/21	GEH	PRELIMINARY REVIEW	MTJ
0	5/3/21	JJD	CONSTRUCTION	MTJ

STATE OF CONNECTICUT
No. 23924
LICENSED
PROFESSIONAL ENGINEER
5/3/21

B&T ENGINEERING, INC.
PEC.0001564
Expires 2/10/22

IT IS A VIOLATION OF LAW FOR ANY PERSON, UNLESS THEY ARE ACTING UNDER THE DIRECTION OF A LICENSED PROFESSIONAL ENGINEER, TO ALTER THIS DOCUMENT.

SHEET NUMBER: C-6
REVISION: 0

135726.004.01 Andover North.dwg – Sheet:C-6 – User: mjones – May 03, 2021 – 9:21am

LTE Solution - FLX16WS

FLX16WS with 81W/C HEX Solution

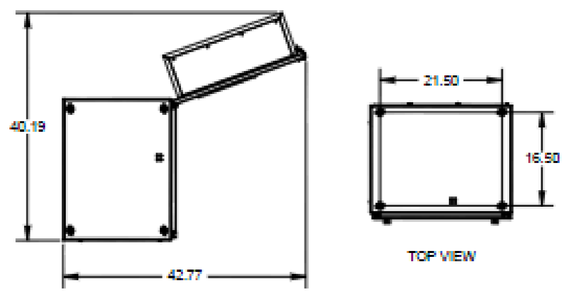

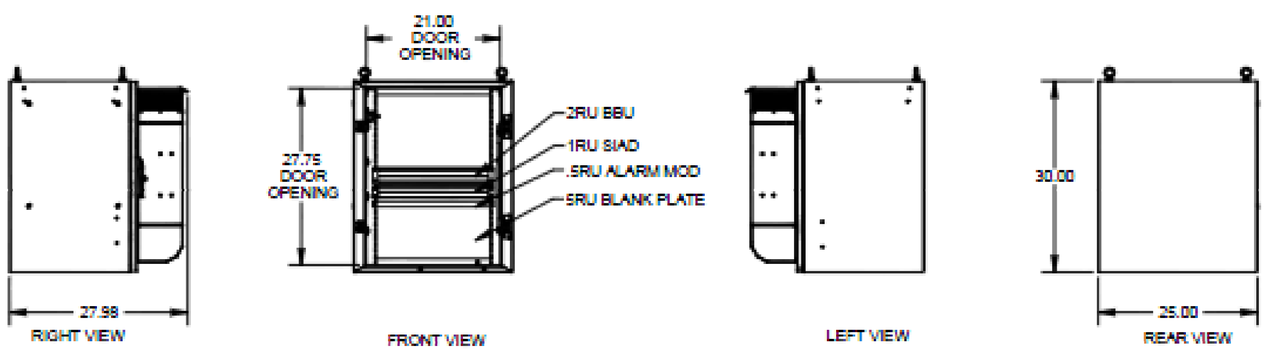

"Proprietary & Confidential - Property of Purcell Systems, Inc."

1 PURCELL FLX16 DETAILS
SCALE: NOT TO SCALE

AT&T
575 MOROSGO DRIVE
ATLANTA, GA 30324-3300

CROWN CASTLE
3530 TORINGDON WAY, SUITE 300
CHARLOTTE, NC 28277

B+T GRP
1717 S. BOULDER
SUITE 300
TULSA, OK 74119
PH: (918) 587-4630
www.btgrp.com

AT&T SITE NUMBER: **CTL05860**

BU #: **842856**
ANDOVER NORTH

122 JONATHAN TRUMBULL
HIGHWAY (ROUTE 6)
ANDOVER, CT 06232

EXISTING
149'-0" MONOPOLE

ISSUED FOR:

REV	DATE	DRWN	DESCRIPTION	DES./QA
A	3/26/21	JTS	PRELIMINARY REVIEW	MTJ
B	4/1/21	RPA	PRELIMINARY REVIEW	AY
C	4/16/21	GEH	PRELIMINARY REVIEW	MTJ
0	5/3/21	JJD	CONSTRUCTION	MTJ

STATE OF CONNECTICUT
JOHN J. DOHERTY III
No. 23924
LICENSED
PROFESSIONAL ENGINEER
5/3/21

B&T ENGINEERING, INC.
PEC.0001564
Expires 2/10/22

IT IS A VIOLATION OF LAW FOR ANY PERSON, UNLESS THEY ARE ACTING UNDER THE DIRECTION OF A LICENSED PROFESSIONAL ENGINEER, TO ALTER THIS DOCUMENT.

SHEET NUMBER: C-7

REVISION: 0

135726.004.01 Andover North.dwg – Sheet:C-7 – User: mjones – May 03, 2021 – 9:31am

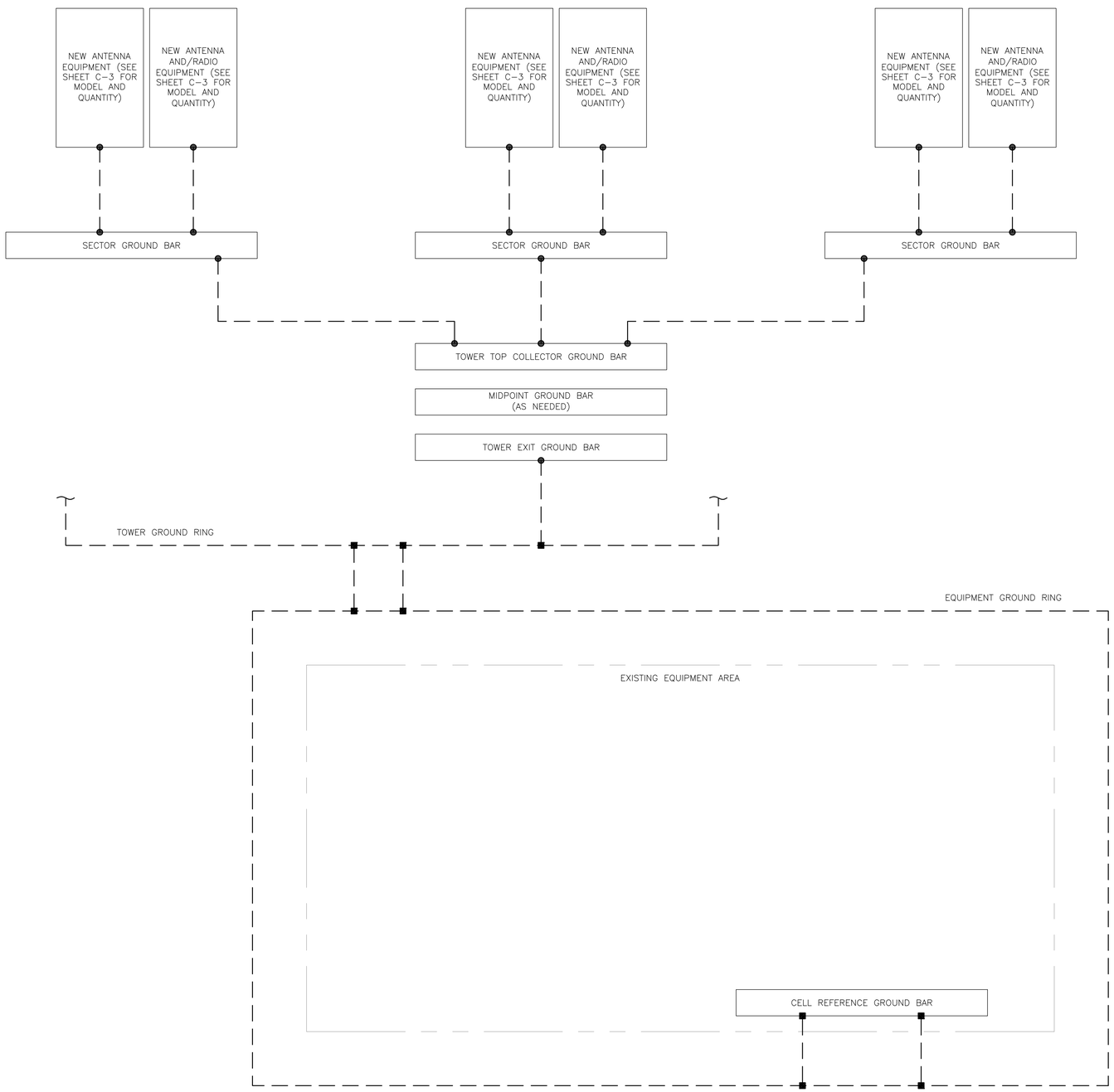

1 GROUNDING SCHEMATIC
SCALE: NOT TO SCALE

GROUNDING PLAN LEGEND:

- --- GROUND WIRE
- ■ EXOTHERMIC WELD
- ● MECHANICAL CONNECTION
- COPPER GROUND ROD
- GROUND ROD W/ TEST WELL

CELL REFERENCE GROUND BAR: POINT OF GROUND REFERENCE FOR ALL COMMUNICATIONS EQUIPMENT FRAMES. ALL BONDS ARE MADE WITH #2 STRANDED GREEN INSULATED COPPER CONDUCTORS. BOND TO GROUND RING WITH (2) #2 SOLID TINNED COPPER CONDUITS (ATT-TP-76416 7.6.7).

HATCH PLATE GROUND BAR: BOND TO THE INTERIOR GROUND RING WITH (2) #2 STRANDED GREEN INSULATED COPPER CONDUCTORS. WHEN A HATCH-PLATE AND A CELL REFERENCE GROUND BAR ARE BOTH PRESENT, THE CELL SITE REFERENCE GROUND BAR MUST BE CONNECTED TO THE HATCH-PLATE AND TO THE INTERIOR GROUND RING USING (2) #2 STRANDED GREEN INSULATED COPPER CONDUCTORS.

EXTERIOR CABLE ENTRY PORT GROUND BARS: LOCATED AT THE ENTRANCE TO THE CELL SITE BUILDING. BOND TO GROUND RING WITH A #2 SOLID TINNED COPPER CONDUCTORS WITH AN EXOTHERMIC WELD AND INSPECTION SLEEVE (ATT-TP-76416 7.6.7.2).

DURING ALL DC POWER SYSTEM CHANGES INCLUDING DC SYSTEM CHANGE OUTS, RECTIFIER REPLACEMENTS OR ADDITIONS, BREAKER DISTRIBUTION CHANGES, BATTERY ADDITIONS, BATTERY REPLACEMENTS AND INSTALLATIONS OR CHANGES TO DC CONVERTER SYSTEMS IT SHALL BE REQUIRED THAT SERVICES CONTRACTORS VERIFY ALL DC POWER SYSTEMS ARE EQUIPPED WITH MASTER DC SYSTEM RETURN GROUND CONDUCTOR FROM THE DC POWER SYSTEM COMMON RETURN BUS DIRECTLY CONNECTED TO THE CELL SITE REFERENCE GROUND BAR PER TP76300 SECTION H 6 AND TP76416 FIGURE 7-11 REQUIREMENTS.

AT&T
575 MOROSGO DRIVE
ATLANTA, GA 30324-3300

CROWN CASTLE
3530 TORINGDON WAY, SUITE 300
CHARLOTTE, NC 28277

B+T GRP
1717 S. BOULDER
SUITE 300
TULSA, OK 74119
PH: (918) 587-4630
www.btgrp.com

AT&T SITE NUMBER: **CTL05860**

BU #: **842856**
ANDOVER NORTH

122 JONATHAN TRUMBULL HIGHWAY (ROUTE 6)
ANDOVER, CT 06232

EXISTING
149'-0" MONOPOLE

ISSUED FOR:

REV	DATE	DRWN	DESCRIPTION	DES./QA
A	3/26/21	JTS	PRELIMINARY REVIEW	MTJ
B	4/1/21	RPA	PRELIMINARY REVIEW	AY
C	4/16/21	GEH	PRELIMINARY REVIEW	MTJ
0	5/3/21	JJD	CONSTRUCTION	MTJ

5/3/21

B&T ENGINEERING, INC.
PEC.0001564
Expires 2/10/22

IT IS A VIOLATION OF LAW FOR ANY PERSON, UNLESS THEY ARE ACTING UNDER THE DIRECTION OF A LICENSED PROFESSIONAL ENGINEER, TO ALTER THIS DOCUMENT.

SHEET NUMBER: G-1
REVISION: 0

135726.004.01 Andover North.dwg – Sheet:G-1 – User: mjones – May 03, 2021 – 9:39am

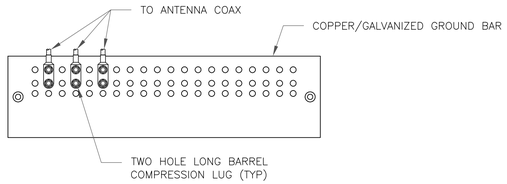

NOTES:

1. DOUBLING UP "OR STACKING" OF CONNECTIONS IS NOT PERMITTED.
2. EXTERIOR ANTIOXIDANT JOINT COMPOUND TO BE USED ON ALL EXTERIOR CONNECTIONS.
3. GROUND BAR SHALL NOT BE ISOLATED FROM TOWER. MOUNT DIRECTLY TO ANTENNA MOUNT STEEL.

1 ANTENNA SECTOR GROUND BAR DETAIL
SCALE: NOT TO SCALE

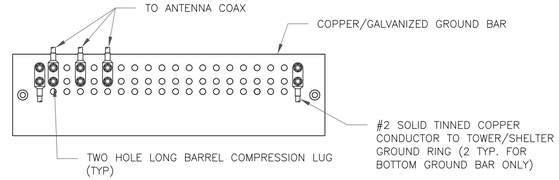

NOTES:

1. EXTERIOR ANTIOXIDANT JOINT COMPOUND TO BE USED ON ALL EXTERIOR CONNECTIONS.
2. GROUND BAR SHALL NOT BE ISOLATED FROM TOWER. MOUNT DIRECTLY TO TOWER STEEL (TOWER ONLY).
3. GROUND BAR SHALL BE ISOLATED FROM BUILDING OR SHELTER.

2 TOWER/SHELTER GROUND BAR DETAIL
SCALE: NOT TO SCALE

WIRE SIZE	BURNDY LUG	BOLT SIZE
#6 GREEN INSULATED	YA6C-2TC38	3/8" - 16 NC SS 2 BOLT
#2 SOLID TINNED	YA3C-2TC38	3/8" - 16 NC SS 2 BOLT
#2 STRANDED	YA2C-2TC38	3/8" - 16 NC SS 2 BOLT
#2/0 STRANDED	YA26-2TC38	3/8" - 16 NC SS 2 BOLT
#4/0 STRANDED	YA28-2N	1/2" - 16 NC SS 2 BOLT

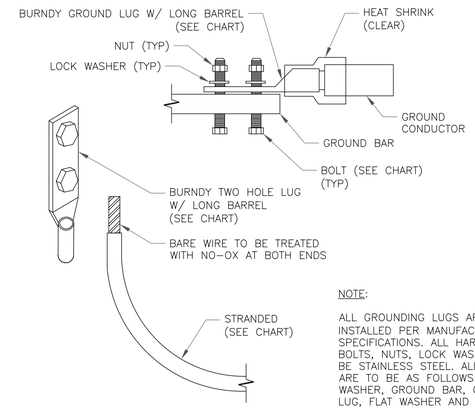

NOTE:

ALL GROUNDING LUGS ARE TO BE INSTALLED PER MANUFACTURER'S SPECIFICATIONS. ALL HARDWARE BOLTS, NUTS, LOCK WASHERS SHALL BE STAINLESS STEEL. ALL HARDWARE ARE TO BE AS FOLLOWS: BOLT, FLAT WASHER, GROUND BAR, GROUND LUG, FLAT WASHER AND NUT.

3 MECHANICAL LUG CONNECTION
SCALE: NOT TO SCALE

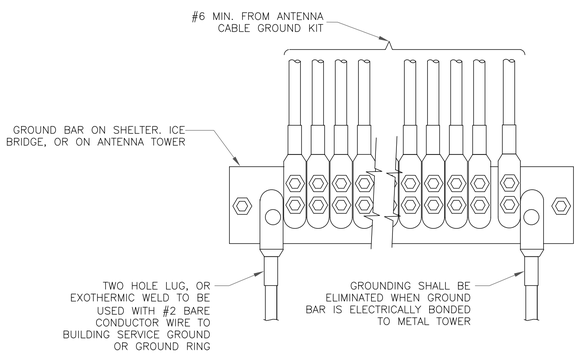

4 GROUNDWIRE INSTALLATION
SCALE: NOT TO SCALE

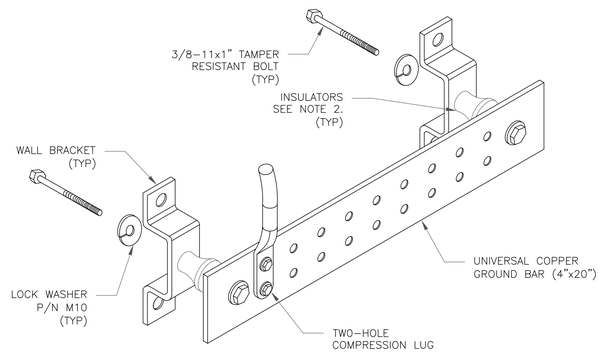

NOTES:

1. DOWN LEAD (HOME RUN) CONDUCTORS ARE NOT TO BE INSTALLED ON CROWN CASTLE USA INC. TOWER, PER THE GROUNDING DOWN CONDUCTOR POLICY QAS-STD-10091. NO MODIFICATION OR DRILLING TO TOWER STEEL IS ALLOWED IN ANY FORM OR FASHION, CAD-WELDING ON THE TOWER AND/OR IN THE AIR ARE NOT PERMITTED.

2. OMIT INSULATOR WHEN MOUNTING TO TOWER STEEL OR PLATFORM STEEL USE INSULATORS WHEN ATTACHING TO BUILDING OR SHELTERS.

5 GROUND BAR DETAIL
SCALE: NOT TO SCALE

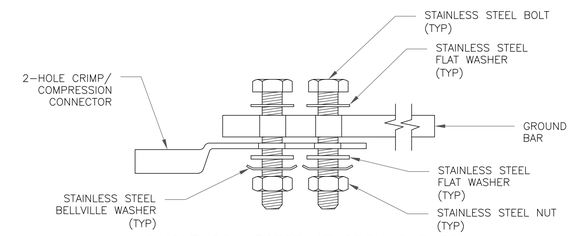

SINGLE CONNECTOR AT GROUND BARS

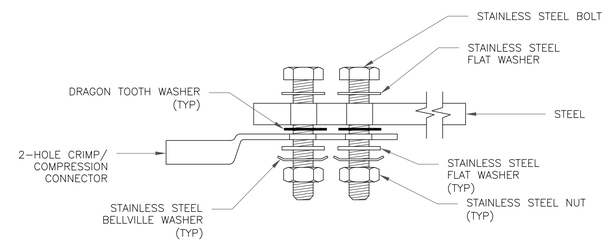

SINGLE CONNECTOR AT STEEL OBJECTS

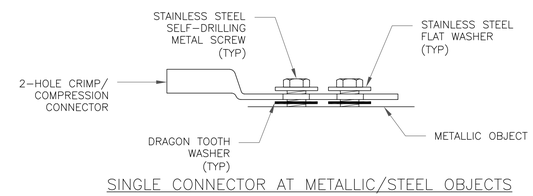

SINGLE CONNECTOR AT METALLIC/STEEL OBJECTS

8 HARDWARE DETAIL FOR EXTERIOR CONNECTIONS
SCALE: NOT TO SCALE

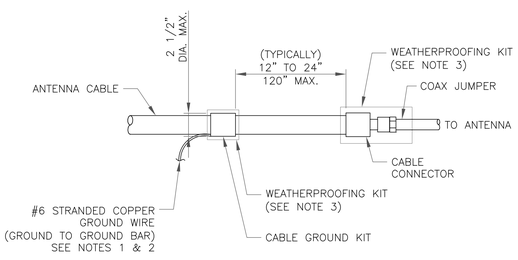

NOTES:

1. DO NOT INSTALL CABLE GROUND KIT AT A BEND AND ALWAYS DIRECT GROUND WIRE DOWN TO GROUND BAR.
2. GROUNDING KIT SHALL BE TYPE AND PART NUMBER AS SUPPLIED OR RECOMMENDED BY CABLE MANUFACTURER.
3. WEATHER PROOFING SHALL BE TWO-PART TAPE KIT, COLD SHRINK SHALL NOT BE USED.

6 CABLE GROUND KIT CONNECTION
SCALE: NOT TO SCALE

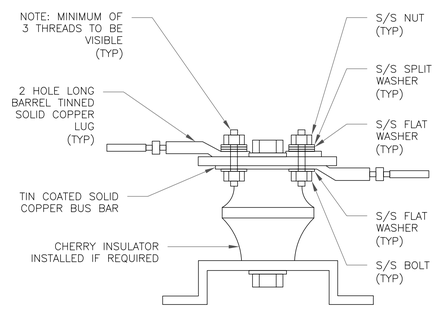

7 LUG DETAIL
SCALE: NOT TO SCALE

AT&T
575 MOROSGO DRIVE
ATLANTA, GA 30324-3300

CROWN CASTLE
3530 TORINGDON WAY, SUITE 300
CHARLOTTE, NC 28277

B+T GRP
1717 S. BOULDER
SUITE 300
TULSA, OK 74119
PH: (918) 587-4630
www.btgrp.com

AT&T SITE NUMBER: **CTL05860**

BU #: **842856**
ANDOVER NORTH

122 JONATHAN TRUMBULL HIGHWAY (ROUTE 6)
ANDOVER, CT 06232

EXISTING
149'-0" MONOPOLE

ISSUED FOR:

REV	DATE	DRWN	DESCRIPTION	DES./QA
A	3/26/21	JTS	PRELIMINARY REVIEW	MTJ
B	4/1/21	RPA	PRELIMINARY REVIEW	AY
C	4/16/21	GEH	PRELIMINARY REVIEW	MTJ
0	5/3/21	JJD	CONSTRUCTION	MTJ

B&T ENGINEERING, INC.
PEC.0001564
Expires 2/10/22

IT IS A VIOLATION OF LAW FOR ANY PERSON, UNLESS THEY ARE ACTING UNDER THE DIRECTION OF A LICENSED PROFESSIONAL ENGINEER, TO ALTER THIS DOCUMENT.

SHEET NUMBER: G-2

REVISION: 0

135726.004.01 Andover North.dwg - Sheet:G-2 - User: mjones - May 03, 2021 - 9:39am

Diagram - Sector	A	Diagram File Name - CT5860_LTE_3C_A_B_C_Rev4.vsd					
Atoll Site Name -	CT5860	Location Name -	Andover North	Market -	CONNECTICUT	Market Cluster -	NEW ENGLAND

Comments: Important Note: For detailed radio to antenna wiring refer to the latest field notice - Antenna_Radio Connection Drawings Playbook v6.0_Ericsson

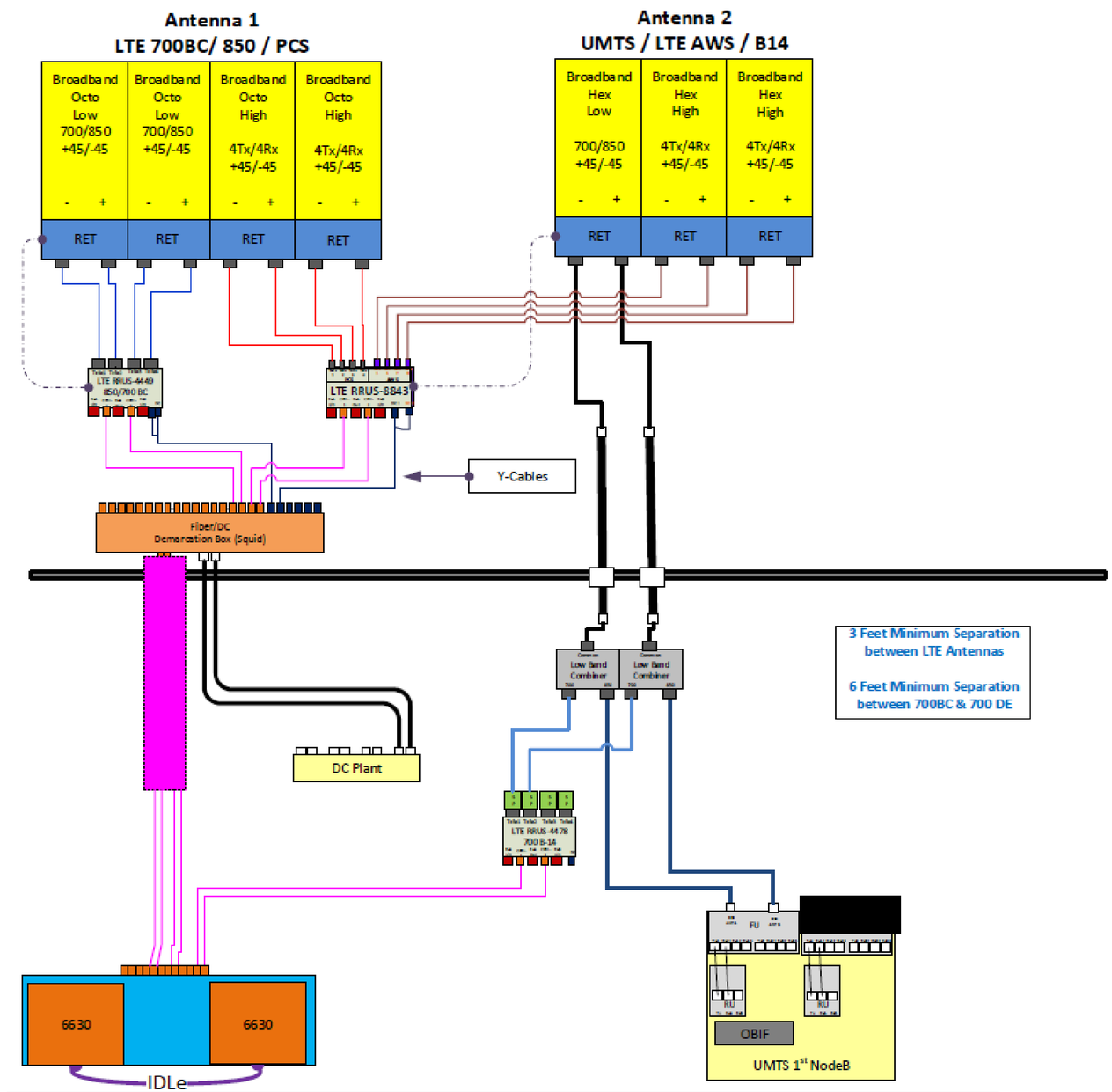

Sector-A B14 Radio will be on its own. Sector B and C will share the B14 Radio. Port 1 & 2 will be used for sector-B. Port 3 & 4 to be used for sector-C.

Diagram - Sector	B	Diagram File Name - CT5860_LTE_3C_A_B_C_Rev4.vsd					
Atoll Site Name -	CT5860	Location Name -	Andover North	Market -	CONNECTICUT	Market Cluster -	NEW ENGLAND

Comments: Important Note: For detailed radio to antenna wiring refer to the latest field notice - Antenna_Radio Connection Drawings Playbook v6.0_Ericsson

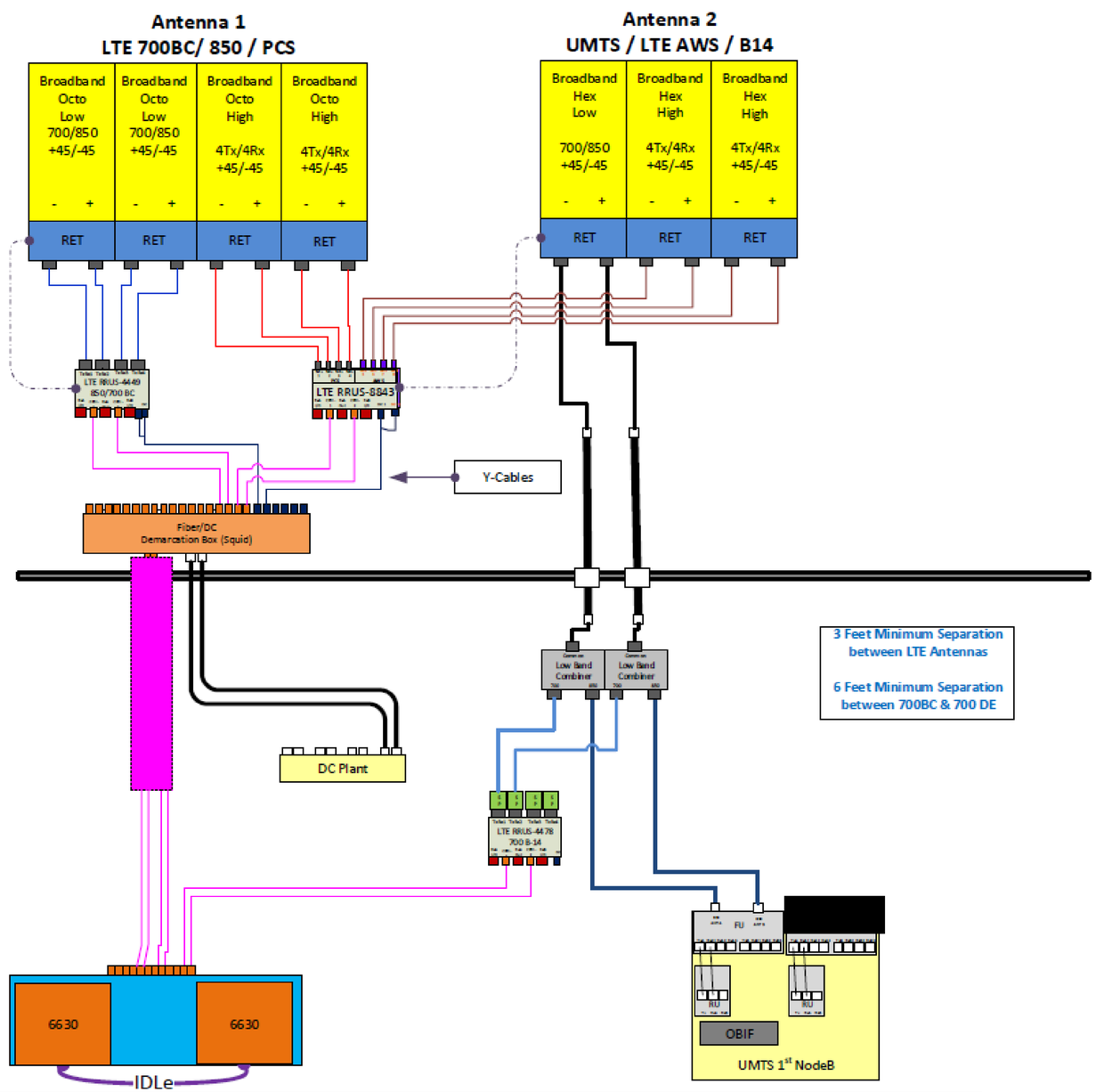

Sector-A B14 Radio will be on its own. Sector B and C will share the B14 Radio. Port 1 & 2 will be used for sector-B. Port 3 & 4 to be used for sector-C.

Diagram - Sector	C	Diagram File Name - CT5860_LTE_3C_A_B_C_Rev4.vsd					
Atoll Site Name -	CT5860	Location Name -	Andover North	Market -	CONNECTICUT	Market Cluster -	NEW ENGLAND

Comments: Important Note: For detailed radio to antenna wiring refer to the latest field notice - Antenna_Radio Connection Drawings Playbook v6.0_Ericsson

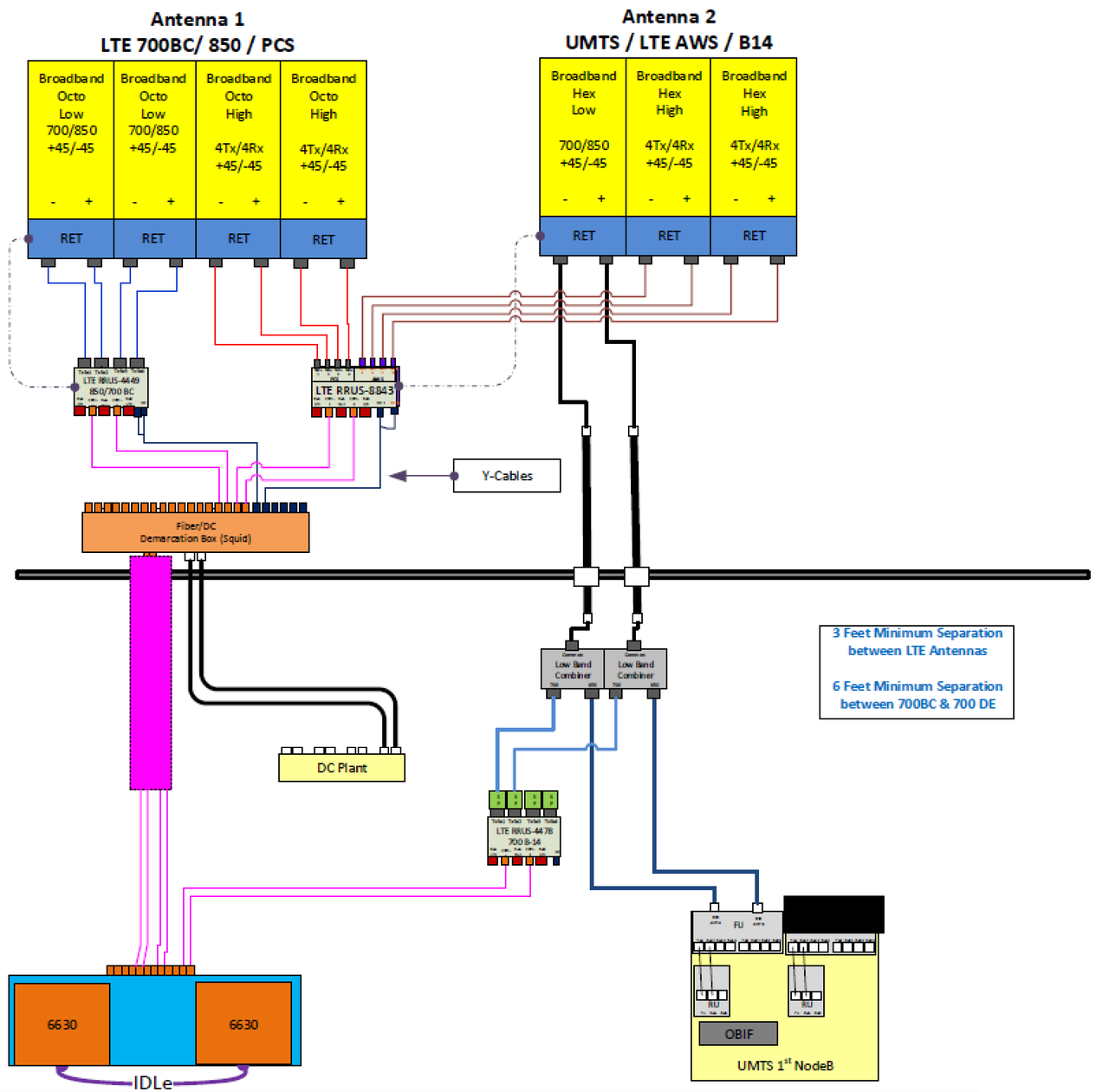

Sector-A B14 Radio will be on its own. Sector B and C will share the B14 Radio. Port 1 & 2 will be used for sector-B. Port 3 & 4 to be used for sector-C.

Exhibit D

Structural Analysis Report

Date: **February 17, 2021**

Crown Castle
2000 Corporate Drive
Canonsburg, PA 15317
724-416-2000

Subject:	**Structural Modification Report**	
Carrier Designation:	***AT&T Mobility* Co-Locate**	
	Site Number:	10070910
	Site Name:	Andover North
	FA Number:	10070910
Crown Castle Designation:	**BU Number:**	842856
	Site Name:	ANDOVER NORTH
	JDE Job Number:	605391
	Work Order Number:	1923928
	Order Number:	517084 Rev. 4
Engineering Firm Designation:	**Crown Castle Project Number:**	1923928

Site Data: **122 JONATHAN TRUMBULL HIGHWAY (ROUTE 6), ANDOVER, Tolland County, CT**
Latitude *41° 45' 0.46"*, Longitude *-72° 24' 9.63"*
149 Foot - Monopole Tower

Crown Castle is pleased to submit this **"Structural Modification Report"** to determine the structural integrity of the above-mentioned tower.

The purpose of the analysis is to determine acceptability of the tower stress level including the proposed modifications as outlined in the attached drawings, "Appendix D". Based on our analysis we have determined the tower stress level for the structure and foundation, under the following load case, to be:

LC4: Modified Structure with Considered + Proposed Equipment Configuration **Sufficient Capacity- 97.2%**

This analysis utilizes an ultimate 3-second gust wind speed of 130 mph as required by the 2018 Connecticut State Building Code. Applicable Standard references and design criteria are listed in Section 2 - "Analysis Criteria".

Structural analysis prepared by: Drew Stephens

Respectfully submitted by:

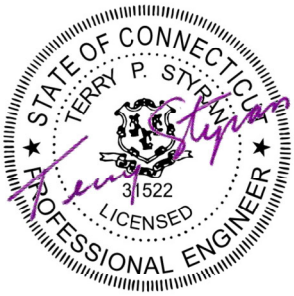

Terry P. Styran, P.E.
Senior Project Engineer

TABLE OF CONTENTS

1) INTRODUCTION

2) ANALYSIS CRITERIA
- Table 1 - Proposed Equipment Configuration
- Table 2 - Other Considered Equipment

3) ANALYSIS PROCEDURE
- Table 3 - Documents Provided
- 3.1) Analysis Method
- 3.2) Assumptions

4) ANALYSIS RESULTS
- Table 4 - Section Capacity (Summary)
- Table 5 - Tower Component Stresses vs. Capacity - LC4
- 4.1) Recommendations

5) APPENDIX A
- tnxTower Output

6) APPENDIX B
- Base Level Drawing

7) APPENDIX C
- Additional Calculations

8) APPENDIX D
- Required Modification Drawings

1) INTRODUCTION

This tower is a 149 ft Monopole tower designed by Engineered Endeavors, Inc. The tower has been modified multiple times to accommodate additional loading.

The modification drawings designed by CCI and attached in Appendix D, have been considered in this analysis.

2) ANALYSIS CRITERIA

TIA-222 Revision:	TIA-222-H
Risk Category:	II
Wind Speed:	130 mph
Exposure Category:	C
Topographic Factor:	1
Ice Thickness:	2 in
Wind Speed with Ice:	50 mph
Service Wind Speed:	60 mph

Table 1 - Proposed Equipment Configuration

Mounting Level (ft)	Center Line Elevation (ft)	Number of Antennas	Antenna Manufacturer	Antenna Model	Number of Feed Lines	Feed Line Size (in)
147.0	151.0	3	cci antennas	DMP65R-BU6D w/ Mount Pipe	1 2 6	3/8 7/8 1-1/4
		3	cci antennas	HPA65R-BU6A w/ Mount Pipe		
		3	ericsson	RRUS 4449 B5/B12		
		3	ericsson	RRUS 8843 B2/B66A		
		1	raycap	DC6-48-60-18-8F		
	147.0	1	sabre	C10855721C 12' Platform Mount		

Table 2 - Other Considered Equipment

Mounting Level (ft)	Center Line Elevation (ft)	Number of Antennas	Antenna Manufacturer	Antenna Model	Number of Feed Lines	Feed Line Size (in)
138.0	140.0	3	ericsson	KRY 112 489/2	13	1-5/8
		3	ericsson	RADIO 4449 B12/B71		
		3	rfs celwave	APX16DWV-16DWV-S-E-A20 w/ Mount Pipe		
		3	rfs celwave	APXVAARR24_43-U-NA20 w/ Mount Pipe		
	138.0	1	tower mounts	Side Arm Mount [SO 101-3]		
130.0	130.0	1	SitePro1	RMV5-SQNP w/ PRK-SFS and HRK12	2	1-5/8
		12	commscope	NHH-65B-R2B w/ Mount Pipe		
		1	rfs celwave	DB-C1-12C-24AB-0Z		
		6	samsung telecommunications	RFV01U-D1A		
		6	samsung telecommunications	RFV01U-D2A		

3) ANALYSIS PROCEDURE

Table 3 - Documents Provided

Document	Reference	Source
4-GEOTECHNICAL REPORTS	4713186	CCISITES
4-GEOTECHNICAL REPORTS	9289410	CCISITES
4-TOWER FOUNDATION DRAWINGS/DESIGN/SPECS	4529267	CCISITES
4-TOWER MANUFACTURER DRAWINGS	4713188	CCISITES
4-TOWER REINFORCEMENT DESIGN/DRAWINGS/DATA	4713190	CCISITES
4-POST-MODIFICATION INSPECTION	4713189	CCISITES
4-TOWER REINFORCEMENT DESIGN/DRAWINGS/DATA	5760149	CCISITES
4-POST-MODIFICATION INSPECTION	6003147	CCISITES
4-TOWER REINFORCEMENT DESIGN/DRAWINGS/DATA	Appendix D	ON FILE

3.1) Analysis Method

tnxTower (version 8.0.7.5), a commercially available analysis software package, was used to create a three-dimensional model of the tower and calculate member stresses for various loading cases. Selected output from the analysis is included in Appendix A. When applicable, Crown Castle has calculated and provided the effective area for panel antennas using approved methods following the intent of the TIA-222 standard.

tnxTower was used to determine the loads on the modified structure. Additional calculations were performed to determine the stresses in the pole and in the reinforcing elements. These calculations are included in Appendix C.

3.2) Assumptions

1) Tower and structures were maintained in accordance with the TIA-222 Standard.
2) The configuration of antennas, transmission cables, mounts and other appurtenances are as specified in Tables 1 and 2 and the referenced drawings.

This analysis may be affected if any assumptions are not valid or have been made in error. Crown Castle should be notified to determine the effect on the structural integrity of the tower.

4) ANALYSIS RESULTS

Table 4 - Section Capacity (Summary)

Elevation (ft)	Component Type	Size	Critical Element	% Capacity	Pass / Fail
149 - 144	Pole	TP22.426x21.5x0.1875	Pole	8.5%	Pass
144 - 139	Pole	TP23.352x22.426x0.1875	Pole	15.1%	Pass
139 - 134	Pole	TP24.278x23.352x0.1875	Pole	24.7%	Pass
134 - 129	Pole	TP25.204x24.278x0.1875	Pole	34.4%	Pass
129 - 127.39	Pole	TP26.202x25.204x0.1875	Pole	38.3%	Pass
127.39 - 122.39	Pole	TP26.043x25.128x0.1875	Pole	51.1%	Pass
122.39 - 117.39	Pole	TP26.958x26.043x0.1875	Pole	62.1%	Pass
117.39 - 112.39	Pole	TP27.873x26.958x0.1875	Pole	72.3%	Pass

112.39 - 107.39	Pole	TP28.788x27.873x0.1875	Pole	81.7%	Pass
107.39 - 102.39	Pole	TP29.703x28.788x0.1875	Pole	90.6%	Pass
102.39 - 98.5	Pole	TP30.415x29.703x0.1875	Pole	97.2%	Pass
98.5 - 98.25	Pole + Reinf.	TP30.46x30.415x0.3438	Reinf. 2 Tension Rupture	78.2%	Pass
98.25 - 93.25	Pole + Reinf.	TP31.375x30.46x0.3375	Reinf. 2 Tension Rupture	84.6%	Pass
93.25 - 88.25	Pole + Reinf.	TP32.29x31.375x0.3313	Reinf. 2 Tension Rupture	90.6%	Pass
88.25 - 83.87	Pole + Reinf.	TP33.96x32.29x0.3313	Reinf. 2 Tension Rupture	95.5%	Pass
83.87 - 78.13	Pole	TP33.763x32.716x0.25	Pole	85.9%	Pass
78.13 - 73.13	Pole	TP34.675x33.763x0.25	Pole	90.0%	Pass
73.13 - 69.92	Pole	TP35.259x34.675x0.25	Pole	92.5%	Pass
69.92 - 69.67	Pole + Reinf.	TP35.305x35.259x0.5	Reinf. 3 Tension Rupture	65.6%	Pass
69.67 - 64.67	Pole + Reinf.	TP36.216x35.305x0.4875	Reinf. 3 Tension Rupture	68.5%	Pass
64.67 - 59.67	Pole + Reinf.	TP37.127x36.216x0.4875	Reinf. 3 Tension Rupture	71.2%	Pass
59.67 - 57.25	Pole + Reinf.	TP37.568x37.127x0.4813	Reinf. 3 Tension Rupture	72.5%	Pass
57.25 - 57	Pole + Reinf.	TP37.614x37.568x0.4188	Reinf. 1 Tension Rupture	84.4%	Pass
57 - 52	Pole + Reinf.	TP38.525x37.614x0.4125	Reinf. 1 Tension Rupture	87.3%	Pass
52 - 48.76	Pole + Reinf.	TP40.121x38.525x0.4125	Reinf. 1 Tension Rupture	89.0%	Pass
48.76 - 42.24	Pole	TP39.803x38.616x0.3125	Pole	84.0%	Pass
42.24 - 37.24	Pole	TP40.714x39.803x0.3125	Pole	86.0%	Pass
37.24 - 32.24	Pole	TP41.625x40.714x0.3125	Pole	88.1%	Pass
32.24 - 27.24	Pole	TP42.536x41.625x0.3125	Pole	90.0%	Pass
27.24 - 22.24	Pole	TP43.447x42.536x0.3125	Pole	91.8%	Pass
22.24 - 17.25	Pole	TP44.357x43.447x0.3125	Pole	93.6%	Pass
17.25 - 17	Pole + Reinf.	TP44.403x44.357x0.625	Reinf. 4 Tension Rupture	62.0%	Pass
17 - 12	Pole + Reinf.	TP45.314x44.403x0.6125	Reinf. 4 Tension Rupture	63.3%	Pass
12 - 7	Pole + Reinf.	TP46.225x45.314x0.6125	Reinf. 4 Tension Rupture	64.5%	Pass
7 - 5.25	Pole + Reinf.	TP46.543x46.225x0.6125	Reinf. 4 Tension Rupture	64.9%	Pass
5.25 - 5	Pole + Reinf.	TP46.589x46.543x0.6	Reinf. 7 Compression	80.9%	Pass
5 - 0	Pole + Reinf.	TP47.5x46.589x0.5875	Reinf. 7 Compression	82.2%	Pass
				Summary	
			Pole	97.2%	Pass
			Reinforcement	95.5%	Pass
			Overall	97.2%	Pass

Table 5 - Tower Component Stresses vs. Capacity - LC4

Notes	Component	Elevation (ft)	% Capacity	Pass / Fail
1	Anchor Rods	0	76.9	Pass
1	Base Plate	0	92.6	Pass
1	Base Foundation (Structure)	0	62.7	Pass
1	Base Foundation (Soil Interaction)	0	84.3	Pass

Structure Rating (max from all components) =	97.2%

Notes:
1) See additional documentation in “Appendix C – Additional Calculations” for calculations supporting the % capacity consumed.

4.1) Recommendations

Perform the modifications detailed in "Appendix D" to remedy the deficiencies identified in Crown Castle Work Order No. 1913213

APPENDIX A

TNXTOWER OUTPUT

Section	Length (ft)	Number of Sides	Thickness (in)	Socket Length (ft)	Top Dia (in)	Bot Dia (in)	Grade	Weight (K)
1	5.00	18	0.188		21.500	22.426		0.2
2	5.00	18	0.188		22.426	23.352		0.2
3	5.00	18	0.188		23.352	24.278		0.2
4	5.00	18	0.188		24.278	25.204		0.2
5	5.00	18	0.188	3.78	25.204	26.202		0.3
6	5.00	18	0.188		26.202	26.958		0.3
7	5.00	18	0.188		26.958	27.873		0.3
8	5.00	18	0.188		27.873	28.788		0.3
9	5.00	18	0.188		28.788	29.703		0.3
10	5.00	18	0.188		29.703	30.415		0.2
11	5.89	18	0.188		30.415	30.460		0.0
12	2.25	18	0.188		30.460	30.675		0.0
13	5.00	18	0.338		30.675	31.375		0.5
14	5.00	18	0.331		31.375	32.290		0.5
15	9.12	18	0.331	4.75	32.290	32.716		1.0
16	5.75	18	0.250		32.716	33.763		0.5
17	5.00	18	0.250		33.763	33.875		0.5
18	3.21	18	0.250		33.875	34.673		0.3
19	2.57	18	0.250		34.673	35.259		0.3
20	5.00	18	0.487		35.259	35.305		0.9
21	5.00	18	0.487		35.305	36.216		0.9
22	2.42	18	0.481		36.216	36.262		0.4
23	2.42	18	0.481		36.262	36.308		0.4
24	5.00	18	0.412		36.308	37.634		0.8
25	6.52	18	0.412	5.52	37.634	38.525		1.5
26	2.76	18	0.313		38.525	38.616		0.9
27	5.00	18	0.313		38.616	39.803		0.7
28	5.00	18	0.313		39.803	40.714		0.7
29	5.00	18	0.313		40.714	41.625		0.7
30	5.00	18	0.313		41.625	42.536		0.7
31	4.99	18	0.313		42.536	43.447		0.7
32	2.54	18	0.625		43.447	43.537		0.1
33	5.00	18	0.619		43.537	44.448		1.4
34	5.00	18	0.613		44.448	45.314		1.4
35	2.75	18	0.613		45.314	45.423		0.5
36	2.75	18	0.613		45.423	45.532		0.5
37	5.00	18	0.588		45.532	46.589		1.4
38	5.00	18	0.588		46.589	47.500		1.4
							A572-65	20.1

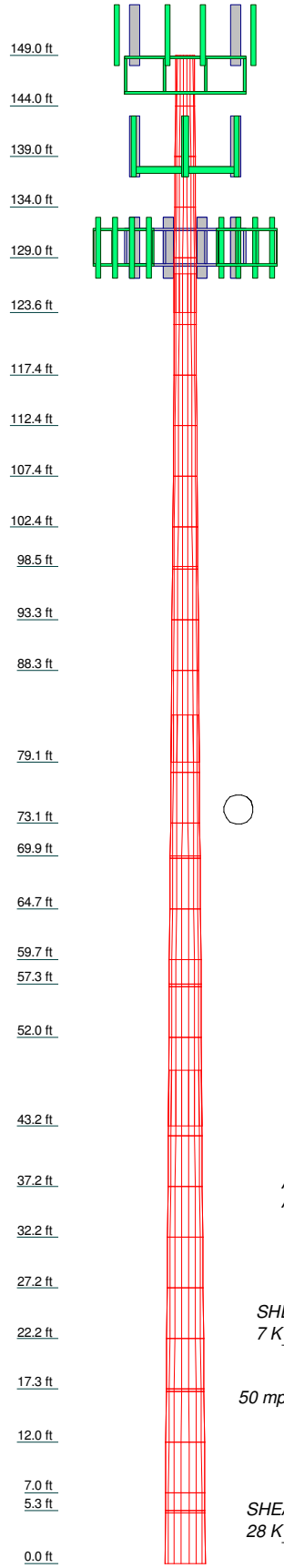

MATERIAL STRENGTH

GRADE	Fy	Fu	GRADE	Fy	Fu
A572-65	65 ksi	80 ksi			

TOWER DESIGN NOTES

1. Tower is located in Tolland County, Connecticut.
2. Tower designed for Exposure C to the TIA-222-H Standard.
3. Tower designed for a 130 mph basic wind in accordance with the TIA-222-H Standard.
4. Tower is also designed for a 50 mph basic wind with 2.00 in ice. Ice is considered to increase in thickness with height.
5. Deflections are based upon a 60 mph wind.
6. Tower Risk Category II.
7. Topographic Category 1 with Crest Height of 0.00 ft
8. TOWER RATING: 97.2%

ALL REACTIONS ARE FACTORED

AXIAL 73 K

SHEAR 7 K — *MOMENT 827 kip-ft*

TORQUE 0 kip-ft
50 mph WIND - 2.000 in ICE

AXIAL 40 K

SHEAR 28 K — *MOMENT 2989 kip-ft*

TORQUE 1 kip-ft
REACTIONS - 130 mph WIND

CROWN CASTLE
The Pathway to Possible

Crown Castle
2000 Corporate Drive
Canonsburg, PA 15317
Phone: 724-416-2000
FAX:

Job: **BU# 842856**		
Project:		
Client: Crown Castle	Drawn by: dstephens	App'd:
Code: TIA-222-H	Date: 02/12/21	Scale: NTS
Path: C:\Users\dstephens\Desktop\SDD Processing\842856\WO 1923928 - SDD\Prod\842856_R.er		Dwg No. E-1

Tower Input Data

The tower is a monopole.
This tower is designed using the TIA-222-H standard.
The following design criteria apply:

3) Tower is located in Tolland County, Connecticut.
4) Tower base elevation above sea level: 496.00 ft.
5) Basic wind speed of 130 mph.
6) Risk Category II.
7) Exposure Category C.
8) Simplified Topographic Factor Procedure for wind speed-up calculations is used.
9) Topographic Category: 1.
10) Crest Height: 0.00 ft.
11) Nominal ice thickness of 2.000 in.
12) Ice thickness is considered to increase with height.
13) Ice density of 56 pcf.
14) A wind speed of 50 mph is used in combination with ice.
15) Temperature drop of 50 °F.
16) Deflections calculated using a wind speed of 60 mph.
17) TOWER RATING: 97.2%.
18) A non-linear (P-delta) analysis was used.
19) Pressures are calculated at each section.
20) Stress ratio used in pole design is 1.05.
21) Tower analysis based on target reliabilities in accordance with Annex S.
22) Load Modification Factors used: $K_{es}(F_w) = 0.95$, $K_{es}(t_i) = 0.85$.
23) Local bending stresses due to climbing loads, feed line supports, and appurtenance mounts are not considered.

Options

Consider Moments - Legs	Distribute Leg Loads As Uniform	Use ASCE 10 X-Brace Ly Rules
Consider Moments - Horizontals	Assume Legs Pinned	Calculate Redundant Bracing Forces
Consider Moments - Diagonals	√ Assume Rigid Index Plate	Ignore Redundant Members in FEA
Use Moment Magnification	√ Use Clear Spans For Wind Area	SR Leg Bolts Resist Compression
Use Code Stress Ratios	Use Clear Spans For KL/r	All Leg Panels Have Same Allowable
√ Use Code Safety Factors - Guys	Retension Guys To Initial Tension	Offset Girt At Foundation
Escalate Ice	√ Bypass Mast Stability Checks	√ Consider Feed Line Torque
Always Use Max Kz	√ Use Azimuth Dish Coefficients	Include Angle Block Shear Check
Use Special Wind Profile	√ Project Wind Area of Appurt.	Use TIA-222-H Bracing Resist. Exemption
Include Bolts In Member Capacity	Autocalc Torque Arm Areas	Use TIA-222-H Tension Splice Exemption
Leg Bolts Are At Top Of Section	Add IBC .6D+W Combination	**Poles**
Secondary Horizontal Braces Leg	√ Sort Capacity Reports By Component	√ Include Shear-Torsion Interaction
Use Diamond Inner Bracing (4 Sided)	Triangulate Diamond Inner Bracing	Always Use Sub-Critical Flow
SR Members Have Cut Ends	Treat Feed Line Bundles As Cylinder	Use Top Mounted Sockets
SR Members Are Concentric	Ignore KL/ry For 60 Deg. Angle Legs	Pole Without Linear Attachments
		Pole With Shroud Or No Appurtenances
		Outside and Inside Corner Radii Are Known

Tapered Pole Section Geometry

Section	Elevation ft	Section Length ft	Splice Length ft	Number of Sides	Top Diameter in	Bottom Diameter in	Wall Thickness in	Bend Radius in	Pole Grade

Section	Elevation ft	Section Length ft	Splice Length ft	Number of Sides	Top Diameter in	Bottom Diameter in	Wall Thickness in	Bend Radius in	Pole Grade
L1	149.00-144.00	5.00	0.00	18	21.500	22.426	0.188	0.750	A572-65 (65 ksi)
L2	144.00-139.00	5.00	0.00	18	22.426	23.352	0.188	0.750	A572-65 (65 ksi)
L3	139.00-134.00	5.00	0.00	18	23.352	24.278	0.188	0.750	A572-65 (65 ksi)
L4	134.00-129.00	5.00	0.00	18	24.278	25.204	0.188	0.750	A572-65 (65 ksi)
L5	129.00-123.61	5.39	3.78	18	25.204	26.202	0.188	0.750	A572-65 (65 ksi)
L6	123.61-122.39	5.00	0.00	18	25.128	26.043	0.188	0.750	A572-65 (65 ksi)
L7	122.39-117.39	5.00	0.00	18	26.043	26.958	0.188	0.750	A572-65 (65 ksi)
L8	117.39-112.39	5.00	0.00	18	26.958	27.873	0.188	0.750	A572-65 (65 ksi)
L9	112.39-107.39	5.00	0.00	18	27.873	28.788	0.188	0.750	A572-65 (65 ksi)
L10	107.39-102.39	5.00	0.00	18	28.788	29.703	0.188	0.750	A572-65 (65 ksi)
L11	102.39-98.50	3.89	0.00	18	29.703	30.415	0.188	0.750	A572-65 (65 ksi)
L12	98.50-98.25	0.25	0.00	18	30.415	30.460	0.344	1.375	A572-65 (65 ksi)
L13	98.25-93.25	5.00	0.00	18	30.460	31.375	0.338	1.350	A572-65 (65 ksi)
L14	93.25-88.25	5.00	0.00	18	31.375	32.290	0.331	1.325	A572-65 (65 ksi)
L15	88.25-79.13	9.12	4.75	18	32.290	33.960	0.331	1.325	A572-65 (65 ksi)
L16	79.13-78.13	5.75	0.00	18	32.716	33.763	0.250	1.000	A572-65 (65 ksi)
L17	78.13-73.13	5.00	0.00	18	33.763	34.675	0.250	1.000	A572-65 (65 ksi)
L18	73.13-69.92	3.21	0.00	18	34.675	35.259	0.250	1.000	A572-65 (65 ksi)
L19	69.92-69.67	0.25	0.00	18	35.259	35.305	0.500	2.000	A572-65 (65 ksi)
L20	69.67-64.67	5.00	0.00	18	35.305	36.216	0.487	1.950	A572-65 (65 ksi)
L21	64.67-59.67	5.00	0.00	18	36.216	37.127	0.487	1.950	A572-65 (65 ksi)
L22	59.67-57.25	2.42	0.00	18	37.127	37.568	0.481	1.925	A572-65 (65 ksi)
L23	57.25-57.00	0.25	0.00	18	37.568	37.614	0.419	1.675	A572-65 (65 ksi)
L24	57.00-52.00	5.00	0.00	18	37.614	38.525	0.412	1.650	A572-65 (65 ksi)
L25	52.00-43.24	8.76	5.52	18	38.525	40.121	0.412	1.650	A572-65 (65 ksi)
L26	43.24-42.24	6.52	0.00	18	38.616	39.803	0.313	1.250	A572-65 (65 ksi)
L27	42.24-37.24	5.00	0.00	18	39.803	40.714	0.313	1.250	A572-65 (65 ksi)
L28	37.24-32.24	5.00	0.00	18	40.714	41.625	0.313	1.250	A572-65 (65 ksi)
L29	32.24-27.24	5.00	0.00	18	41.625	42.536	0.313	1.250	A572-65 (65 ksi)
L30	27.24-22.24	5.00	0.00	18	42.536	43.447	0.313	1.250	A572-65 (65 ksi)
L31	22.24-17.25	4.99	0.00	18	43.447	44.357	0.313	1.250	A572-65 (65 ksi)
L32	17.25-17.00	0.25	0.00	18	44.357	44.403	0.625	2.500	A572-65 (65 ksi)
L33	17.00-12.00	5.00	0.00	18	44.403	45.314	0.613	2.450	A572-65 (65 ksi)
L34	12.00-7.00	5.00	0.00	18	45.314	46.225	0.613	2.450	A572-65 (65 ksi)
L35	7.00-5.25	1.75	0.00	18	46.225	46.543	0.613	2.450	A572-65

Section	Elevation ft	Section Length ft	Splice Length ft	Number of Sides	Top Diameter in	Bottom Diameter in	Wall Thickness in	Bend Radius in	Pole Grade
L36	5.25-5.00	0.25	0.00	18	46.543	46.589	0.600	2.400	(65 ksi) A572-65 (65 ksi)
L37	5.00-0.00	5.00		18	46.589	47.500	0.588	2.350	A572-65 (65 ksi)

Tapered Pole Properties

Section	Tip Dia. in	Area in^2	I in^4	r in	C in	I/C in^3	J in^4	It/Q in^2	w in	w/t
L1	21.803	12.684	727.862	7.566	10.922	66.642	1456.681	6.343	3.454	18.421
	22.743	13.235	826.923	7.895	11.392	72.585	1654.933	6.619	3.617	19.291
L2	22.743	13.235	826.923	7.895	11.392	72.585	1654.933	6.619	3.617	19.291
	23.683	13.786	934.587	8.223	11.863	78.783	1870.404	6.894	3.780	20.16
L3	23.683	13.786	934.587	8.223	11.863	78.783	1870.404	6.894	3.780	20.16
	24.624	14.337	1051.213	8.552	12.333	85.234	2103.810	7.170	3.943	21.029
L4	24.624	14.337	1051.213	8.552	12.333	85.234	2103.810	7.170	3.943	21.029
	25.564	14.888	1177.159	8.881	12.804	91.939	2355.868	7.445	4.106	21.898
L5	25.564	14.888	1177.159	8.881	12.804	91.939	2355.868	7.445	4.106	21.898
	26.577	15.482	1323.723	9.235	13.311	99.448	2649.188	7.742	4.282	22.835
L6	26.188	14.843	1166.401	8.854	12.765	91.376	2334.337	7.423	4.092	21.827
	26.416	15.387	1299.554	9.179	13.230	98.230	2600.818	7.695	4.254	22.686
L7	26.416	15.387	1299.554	9.179	13.230	98.230	2600.818	7.695	4.254	22.686
	27.345	15.932	1442.473	9.503	13.695	105.332	2886.844	7.967	4.415	23.544
L8	27.345	15.932	1442.473	9.503	13.695	105.332	2886.844	7.967	4.415	23.544
	28.274	16.476	1595.504	9.828	14.159	112.681	3193.107	8.240	4.576	24.403
L9	28.274	16.476	1595.504	9.828	14.159	112.681	3193.107	8.240	4.576	24.403
	29.203	17.021	1758.992	10.153	14.624	120.279	3520.299	8.512	4.737	25.262
L10	29.203	17.021	1758.992	10.153	14.624	120.279	3520.299	8.512	4.737	25.262
	30.132	17.565	1933.284	10.478	15.089	128.124	3869.113	8.784	4.898	26.121
L11	30.132	17.565	1933.284	10.478	15.089	128.124	3869.113	8.784	4.898	26.121
	30.855	17.989	2076.502	10.731	15.451	134.396	4155.736	8.996	5.023	26.789
L12	30.831	32.809	3748.188	10.675	15.451	242.592	7501.308	16.408	4.748	13.812
	30.877	32.859	3765.323	10.691	15.474	243.335	7535.600	16.433	4.756	13.836
L13	30.878	32.268	3699.164	10.694	15.474	239.059	7403.196	16.137	4.767	14.124
	31.807	33.249	4046.620	11.018	15.939	253.887	8098.565	16.627	4.928	14.602
L14	31.808	32.639	3974.083	11.021	15.939	249.336	7953.395	16.323	4.939	14.91
	32.737	33.601	4335.960	11.345	16.404	264.331	8677.626	16.804	5.100	15.397
L15	32.737	33.601	4335.960	11.345	16.404	264.331	8677.626	16.804	5.100	15.397
	34.433	35.357	5051.550	11.938	17.252	292.817	10109.748	17.682	5.394	16.284
L16	34.061	25.762	3430.738	11.526	16.620	206.423	6865.990	12.883	5.318	21.272
	34.246	26.593	3773.470	11.897	17.152	220.004	7551.904	13.299	5.502	22.009
L17	34.246	26.593	3773.470	11.897	17.152	220.004	7551.904	13.299	5.502	22.009
	35.171	27.316	4089.718	12.221	17.615	232.176	8184.817	13.661	5.663	22.651
L18	35.171	27.316	4089.718	12.221	17.615	232.176	8184.817	13.661	5.663	22.651
	35.765	27.780	4301.648	12.428	17.912	240.158	8608.957	13.893	5.766	23.063
L19	35.726	55.163	8420.302	12.340	17.912	470.100	16851.684	27.587	5.326	10.651
	35.772	55.235	8453.457	12.356	17.935	471.342	16918.037	27.623	5.334	10.667
L20	35.774	53.874	8251.004	12.360	17.935	460.054	16512.865	26.942	5.356	10.986
	36.700	55.284	8915.938	12.684	18.398	484.620	17843.607	27.647	5.516	11.315
L21	36.700	55.284	8915.938	12.684	18.398	484.620	17843.607	27.647	5.516	11.315
	37.625	56.694	9615.669	13.007	18.861	509.826	19243.990	28.352	5.676	11.644
L22	37.626	55.976	9497.249	13.009	18.861	503.547	19006.996	27.994	5.687	11.818
	38.074	56.650	9844.292	13.166	19.085	515.820	19701.537	28.330	5.765	11.979
L23	38.083	49.376	8609.191	13.188	19.085	451.104	17229.711	24.693	5.875	14.03
	38.130	49.437	8640.906	13.204	19.108	452.217	17293.182	24.723	5.883	14.049
L24	38.131	48.707	8516.229	13.207	19.108	445.692	17043.664	24.358	5.894	14.289
	39.056	49.900	9157.487	13.530	19.571	467.916	18327.024	24.955	6.054	14.677
L25	39.056	49.900	9157.487	13.530	19.571	467.916	18327.024	24.955	6.054	14.677
	40.676	51.989	10356.716	14.097	20.382	508.142	20727.059	26.000	6.335	15.358
L26	40.184	37.992	7042.027	13.598	19.617	358.980	14093.321	19.000	6.246	19.988
	40.369	39.170	7717.470	14.019	20.220	381.676	15445.095	19.589	6.455	20.657
L27	40.369	39.170	7717.470	14.019	20.220	381.676	15445.095	19.589	6.455	20.657
	41.294	40.073	8264.002	14.343	20.683	399.560	16538.877	20.040	6.616	21.17
L28	41.294	40.073	8264.002	14.343	20.683	399.560	16538.877	20.040	6.616	21.17

Section	Tip Dia. in	Area in^2	I in^4	r in	C in	I/C in^3	J in^4	It/Q in^2	w in	w/t
	42.219	40.977	8835.745	14.666	21.146	417.853	17683.117	20.492	6.776	21.683
L29	42.219	40.977	8835.745	14.666	21.146	417.853	17683.117	20.492	6.776	21.683
	43.144	41.881	9433.270	14.989	21.608	436.556	18878.952	20.944	6.936	22.196
L30	43.144	41.881	9433.270	14.989	21.608	436.556	18878.952	20.944	6.936	22.196
	44.069	42.784	10057.143	15.313	22.071	455.669	20127.520	21.396	7.097	22.709
L31	44.069	42.784	10057.143	15.313	22.071	455.669	20127.520	21.396	7.097	22.709
	44.993	43.687	10707.004	15.636	22.533	475.163	21428.097	21.847	7.257	23.222
L32	44.945	86.753	20961.431	15.525	22.533	930.241	41950.443	43.385	6.707	10.731
	44.991	86.844	21026.999	15.541	22.556	932.194	42081.667	43.430	6.715	10.744
L33	44.993	85.131	20624.116	15.545	22.556	914.333	41275.370	42.574	6.737	10.999
	45.918	86.902	21938.305	15.869	23.019	953.041	43905.477	43.459	6.897	11.261
L34	45.918	86.902	21938.305	15.869	23.019	953.041	43905.477	43.459	6.897	11.261
	46.843	88.673	23307.168	16.192	23.482	992.551	46645.004	44.345	7.058	11.522
L35	46.843	88.673	23307.168	16.192	23.482	992.551	46645.004	44.345	7.058	11.522
	47.167	89.293	23799.393	16.305	23.644	1006.570	47630.102	44.655	7.114	11.614
L36	47.169	87.495	23332.731	16.310	23.644	986.833	46696.164	43.756	7.136	11.893
	47.215	87.581	23402.201	16.326	23.667	988.803	46835.195	43.799	7.144	11.906
L37	47.217	85.780	22933.345	16.331	23.667	968.993	45896.866	42.898	7.166	12.197
	48.142	87.479	24323.047	16.654	24.130	1008.000	48678.099	43.748	7.326	12.47

Tower Elevation ft	Gusset Area (per face) ft^2	Gusset Thickness in	Gusset Grade	Adjust. Factor A_f	Adjust. Factor A_r	Weight Mult.	Double Angle Stitch Bolt Spacing Diagonals in	Double Angle Stitch Bolt Spacing Horizontals in	Double Angle Stitch Bolt Spacing Redundants in
L1 149.00-144.00				1	1	1			
L2 144.00-139.00				1	1	1			
L3 139.00-134.00				1	1	1			
L4 134.00-129.00				1	1	1			
L5 129.00-123.61				1	1	1			
L6 123.61-122.39				1	1	1			
L7 122.39-117.39				1	1	1			
L8 117.39-112.39				1	1	1			
L9 112.39-107.39				1	1	1			
L10 107.39-102.39				1	1	1			
L11 102.39-98.50				1	1	1			
L12 98.50-98.25				1	1	0.959145			
L13 98.25-93.25				1	1	0.964288			
L14 93.25-88.25				1	1	0.970367			
L15 88.25-79.13				1	1	0.96048			
L16 79.13-78.13				1	1	1			
L17 78.13-73.13				1	1	1			
L18 73.13-69.92				1	1	1			
L19 69.92-69.67				1	1	0.944901			
L20 69.67-64.67				1	1	0.957152			
L21 64.67-59.67				1	1	0.946102			
L22 59.67-57.25				1	1	0.953008			

Tower Elevation ft	Gusset Area (per face) ft^2	Gusset Thickness in	Gusset Grade	Adjust. Factor A_f	Adjust. Factor A_r	Weight Mult.	Double Angle Stitch Bolt Spacing Diagonals in	Double Angle Stitch Bolt Spacing Horizontals in	Double Angle Stitch Bolt Spacing Redundants in
L23 57.25-57.00				1	1	0.963839			
L24 57.00-52.00				1	1	0.969379			
L25 52.00-43.24				1	1	0.963836			
L26 43.24-42.24				1	1	1			
L27 42.24-37.24				1	1	1			
L28 37.24-32.24				1	1	1			
L29 32.24-27.24				1	1	1			
L30 27.24-22.24				1	1	1			
L31 22.24-17.25				1	1	1			
L32 17.25-17.00				1	1	0.964184			
L33 17.00-12.00				1	1	0.973933			
L34 12.00-7.00				1	1	0.96467			
L35 7.00-5.25				1	1	0.961515			
L36 5.25-5.00				1	1	0.926587			
L37 5.00-0.00				1	1	0.938002			

Feed Line/Linear Appurtenances - Entered As Round Or Flat

Description	Sector	Exclude From Torque Calculation	Component Type	Placement ft	Total Number	Number Per Row	Start/End Position	Width or Diameter in	Perimeter in	Weight plf
***										
****										
CCI-AFP-060100	A	No	Surface Af (CaAa)	59.75 - 44.75	1	1	0.100 0.250	6.000	14.000	0.00
CCI-AFP-060100	B	No	Surface Af (CaAa)	59.75 - 44.75	1	1	0.100 0.250	6.000	14.000	0.00
CCI-AFP-060100	C	No	Surface Af (CaAa)	59.75 - 44.75	1	1	0.100 0.250	6.000	14.000	0.00
***										
CCI-AFP-045100	A	No	Surface Af (CaAa)	100.50 - 80.50	1	1	0.300 0.400	4.500	11.000	0.00
CCI-AFP-045100	B	No	Surface Af (CaAa)	100.50 - 80.50	1	1	0.300 0.400	4.500	11.000	0.00
CCI-AFP-045100	C	No	Surface Af (CaAa)	100.50 - 80.50	1	1	0.300 0.400	4.500	11.000	0.00
********										
CCI-65FP-080125	A	No	Surface Af (CaAa)	21.25 - 1.25	1	1	0.250 0.400	8.000	18.500	0.00
CCI-65FP-080125	B	No	Surface Af (CaAa)	21.25 - 1.25	1	1	-0.075 0.075	8.000	18.500	0.00
CCI-65FP-080125	C	No	Surface Af (CaAa)	21.25 - 1.25	1	1	-0.250 -0.100	8.000	18.500	0.00
CCI-65FP-080125	C	No	Surface Af (CaAa)	21.25 - 1.25	1	1	0.350 0.500	8.000	18.500	0.00
***										
CCI-65FP-065125	A	No	Surface Af (CaAa)	73.42 - 53.42	1	1	-0.075 0.075	6.500	15.500	0.00
CCI-65FP-065125	B	No	Surface Af (CaAa)	73.42 - 53.42	1	1	-0.075 0.075	6.500	15.500	0.00

Description	Sector	Exclude From Torque Calculation	Component Type	Placement ft	Total Number	Number Per Row	Start/End Position	Width or Diameter in	Perimeter in	Weight plf
CCI-65FP-065125	C	No	Surface Af (CaAa)	73.42 - 53.42	1	1	-0.075 0.075	6.500	15.500	0.00
***										

Feed Line/Linear Appurtenances - Entered As Area

Description	Face or Leg	Allow Shield	Exclude From Torque Calculation	Component Type	Placement ft	Total Number		C_AA_A ft^2/ft	Weight plf
HCS 6X12 4AWG(1-5/8")	A	No	No	Inside Pole	138.00 - 8.00	13	No Ice	0.00	2.40
							1/2" Ice	0.00	2.40
							1" Ice	0.00	2.40
							2" Ice	0.00	2.40
***									
HB158-1-13U6-S6F18 (1-5/8")	C	No	No	Inside Pole	130.00 - 0.00	2	No Ice	0.00	1.90
							1/2" Ice	0.00	1.90
							1" Ice	0.00	1.90
							2" Ice	0.00	1.90
***									
***									
LDF6-50A(1-1/4)	B	No	No	Inside Pole	147.00 - 0.00	6	No Ice	0.00	0.60
							1/2" Ice	0.00	0.60
							1" Ice	0.00	0.60
							2" Ice	0.00	0.60
FB-L98B-034-XXX(3/8)	B	No	No	Inside Pole	147.00 - 0.00	1	No Ice	0.00	0.06
							1/2" Ice	0.00	0.06
							1" Ice	0.00	0.06
							2" Ice	0.00	0.06
WR-VG66ST-BRD(7/8)	B	No	No	Inside Pole	147.00 - 0.00	2	No Ice	0.00	0.91
							1/2" Ice	0.00	0.91
							1" Ice	0.00	0.91
							2" Ice	0.00	0.91
***									

Feed Line/Linear Appurtenances Section Areas

Tower Section	Tower Elevation ft	Face	A_R ft^2	A_F ft^2	C_AA_A In Face ft^2	C_AA_A Out Face ft^2	Weight K
L1	149.00-144.00	A	0.000	0.000	0.000	0.000	0.00
		B	0.000	0.000	0.000	0.000	0.02
		C	0.000	0.000	0.000	0.000	0.00
L2	144.00-139.00	A	0.000	0.000	0.000	0.000	0.00
		B	0.000	0.000	0.000	0.000	0.03
		C	0.000	0.000	0.000	0.000	0.00
L3	139.00-134.00	A	0.000	0.000	0.000	0.000	0.12
		B	0.000	0.000	0.000	0.000	0.03
		C	0.000	0.000	0.000	0.000	0.00
L4	134.00-129.00	A	0.000	0.000	0.000	0.000	0.16
		B	0.000	0.000	0.000	0.000	0.03
		C	0.000	0.000	0.000	0.000	0.00
L5	129.00-123.61	A	0.000	0.000	0.000	0.000	0.17
		B	0.000	0.000	0.000	0.000	0.03
		C	0.000	0.000	0.000	0.000	0.02
L6	123.61-122.39	A	0.000	0.000	0.000	0.000	0.04
		B	0.000	0.000	0.000	0.000	0.01
		C	0.000	0.000	0.000	0.000	0.00
L7	122.39-117.39	A	0.000	0.000	0.000	0.000	0.16
		B	0.000	0.000	0.000	0.000	0.03

Tower Section	Tower Elevation ft	Face	A_R ft^2	A_F ft^2	C_AA_A In Face ft^2	C_AA_A Out Face ft^2	Weight K
		C	0.000	0.000	0.000	0.000	0.02
L8	117.39-112.39	A	0.000	0.000	0.000	0.000	0.16
		B	0.000	0.000	0.000	0.000	0.03
		C	0.000	0.000	0.000	0.000	0.02
L9	112.39-107.39	A	0.000	0.000	0.000	0.000	0.16
		B	0.000	0.000	0.000	0.000	0.03
		C	0.000	0.000	0.000	0.000	0.02
L10	107.39-102.39	A	0.000	0.000	0.000	0.000	0.16
		B	0.000	0.000	0.000	0.000	0.03
		C	0.000	0.000	0.000	0.000	0.02
L11	102.39-98.50	A	0.000	0.000	1.500	0.000	0.12
		B	0.000	0.000	1.500	0.000	0.02
		C	0.000	0.000	1.500	0.000	0.01
L12	98.50-98.25	A	0.000	0.000	0.188	0.000	0.01
		B	0.000	0.000	0.188	0.000	0.00
		C	0.000	0.000	0.188	0.000	0.00
L13	98.25-93.25	A	0.000	0.000	3.750	0.000	0.16
		B	0.000	0.000	3.750	0.000	0.03
		C	0.000	0.000	3.750	0.000	0.02
L14	93.25-88.25	A	0.000	0.000	3.750	0.000	0.16
		B	0.000	0.000	3.750	0.000	0.03
		C	0.000	0.000	3.750	0.000	0.02
L15	88.25-79.13	A	0.000	0.000	5.813	0.000	0.28
		B	0.000	0.000	5.813	0.000	0.05
		C	0.000	0.000	5.813	0.000	0.03
L16	79.13-78.13	A	0.000	0.000	0.000	0.000	0.03
		B	0.000	0.000	0.000	0.000	0.01
		C	0.000	0.000	0.000	0.000	0.00
L17	78.13-73.13	A	0.000	0.000	0.316	0.000	0.16
		B	0.000	0.000	0.316	0.000	0.03
		C	0.000	0.000	0.316	0.000	0.02
L18	73.13-69.92	A	0.000	0.000	3.475	0.000	0.10
		B	0.000	0.000	3.475	0.000	0.02
		C	0.000	0.000	3.475	0.000	0.01
L19	69.92-69.67	A	0.000	0.000	0.271	0.000	0.01
		B	0.000	0.000	0.271	0.000	0.00
		C	0.000	0.000	0.271	0.000	0.00
L20	69.67-64.67	A	0.000	0.000	5.417	0.000	0.16
		B	0.000	0.000	5.417	0.000	0.03
		C	0.000	0.000	5.417	0.000	0.02
L21	64.67-59.67	A	0.000	0.000	5.497	0.000	0.16
		B	0.000	0.000	5.497	0.000	0.03
		C	0.000	0.000	5.497	0.000	0.02
L22	59.67-57.25	A	0.000	0.000	5.042	0.000	0.08
		B	0.000	0.000	5.042	0.000	0.01
		C	0.000	0.000	5.042	0.000	0.01
L23	57.25-57.00	A	0.000	0.000	0.521	0.000	0.01
		B	0.000	0.000	0.521	0.000	0.00
		C	0.000	0.000	0.521	0.000	0.00
L24	57.00-52.00	A	0.000	0.000	8.878	0.000	0.16
		B	0.000	0.000	8.878	0.000	0.03
		C	0.000	0.000	8.878	0.000	0.02
L25	52.00-43.24	A	0.000	0.000	7.250	0.000	0.27
		B	0.000	0.000	7.250	0.000	0.05
		C	0.000	0.000	7.250	0.000	0.03
L26	43.24-42.24	A	0.000	0.000	0.000	0.000	0.03
		B	0.000	0.000	0.000	0.000	0.01
		C	0.000	0.000	0.000	0.000	0.00
L27	42.24-37.24	A	0.000	0.000	0.000	0.000	0.16
		B	0.000	0.000	0.000	0.000	0.03
		C	0.000	0.000	0.000	0.000	0.02
L28	37.24-32.24	A	0.000	0.000	0.000	0.000	0.16
		B	0.000	0.000	0.000	0.000	0.03
		C	0.000	0.000	0.000	0.000	0.02
L29	32.24-27.24	A	0.000	0.000	0.000	0.000	0.16
		B	0.000	0.000	0.000	0.000	0.03
		C	0.000	0.000	0.000	0.000	0.02
L30	27.24-22.24	A	0.000	0.000	0.000	0.000	0.16
		B	0.000	0.000	0.000	0.000	0.03

Tower Section	Tower Elevation ft	Face	A_R ft^2	A_F ft^2	C_AA_A In Face ft^2	C_AA_A Out Face ft^2	Weight K
		C	0.000	0.000	0.000	0.000	0.02
L31	22.24-17.25	A	0.000	0.000	5.333	0.000	0.16
		B	0.000	0.000	5.333	0.000	0.03
		C	0.000	0.000	10.667	0.000	0.02
L32	17.25-17.00	A	0.000	0.000	0.333	0.000	0.01
		B	0.000	0.000	0.333	0.000	0.00
		C	0.000	0.000	0.667	0.000	0.00
L33	17.00-12.00	A	0.000	0.000	6.667	0.000	0.16
		B	0.000	0.000	6.667	0.000	0.03
		C	0.000	0.000	13.333	0.000	0.02
L34	12.00-7.00	A	0.000	0.000	6.667	0.000	0.12
		B	0.000	0.000	6.667	0.000	0.03
		C	0.000	0.000	13.333	0.000	0.02
L35	7.00-5.25	A	0.000	0.000	2.333	0.000	0.00
		B	0.000	0.000	2.333	0.000	0.01
		C	0.000	0.000	4.667	0.000	0.01
L36	5.25-5.00	A	0.000	0.000	0.333	0.000	0.00
		B	0.000	0.000	0.333	0.000	0.00
		C	0.000	0.000	0.667	0.000	0.00
L37	5.00-0.00	A	0.000	0.000	5.000	0.000	0.00
		B	0.000	0.000	5.000	0.000	0.03
		C	0.000	0.000	10.000	0.000	0.02

Feed Line/Linear Appurtenances Section Areas - With Ice

Tower Section	Tower Elevation ft	Face or Leg	Ice Thickness in	A_R ft^2	A_F ft^2	C_AA_A In Face ft^2	C_AA_A Out Face ft^2	Weight K
L1	149.00-144.00	A	1.973	0.000	0.000	0.000	0.000	0.00
		B		0.000	0.000	0.000	0.000	0.02
		C		0.000	0.000	0.000	0.000	0.00
L2	144.00-139.00	A	1.966	0.000	0.000	0.000	0.000	0.00
		B		0.000	0.000	0.000	0.000	0.03
		C		0.000	0.000	0.000	0.000	0.00
L3	139.00-134.00	A	1.959	0.000	0.000	0.000	0.000	0.12
		B		0.000	0.000	0.000	0.000	0.03
		C		0.000	0.000	0.000	0.000	0.00
L4	134.00-129.00	A	1.952	0.000	0.000	0.000	0.000	0.16
		B		0.000	0.000	0.000	0.000	0.03
		C		0.000	0.000	0.000	0.000	0.00
L5	129.00-123.61	A	1.944	0.000	0.000	0.000	0.000	0.17
		B		0.000	0.000	0.000	0.000	0.03
		C		0.000	0.000	0.000	0.000	0.02
L6	123.61-122.39	A	1.939	0.000	0.000	0.000	0.000	0.04
		B		0.000	0.000	0.000	0.000	0.01
		C		0.000	0.000	0.000	0.000	0.00
L7	122.39-117.39	A	1.934	0.000	0.000	0.000	0.000	0.16
		B		0.000	0.000	0.000	0.000	0.03
		C		0.000	0.000	0.000	0.000	0.02
L8	117.39-112.39	A	1.926	0.000	0.000	0.000	0.000	0.16
		B		0.000	0.000	0.000	0.000	0.03
		C		0.000	0.000	0.000	0.000	0.02
L9	112.39-107.39	A	1.917	0.000	0.000	0.000	0.000	0.16
		B		0.000	0.000	0.000	0.000	0.03
		C		0.000	0.000	0.000	0.000	0.02
L10	107.39-102.39	A	1.908	0.000	0.000	0.000	0.000	0.16
		B		0.000	0.000	0.000	0.000	0.03
		C		0.000	0.000	0.000	0.000	0.02
L11	102.39-98.50	A	1.900	0.000	0.000	2.260	0.000	0.15
		B		0.000	0.000	2.260	0.000	0.05
		C		0.000	0.000	2.260	0.000	0.04
L12	98.50-98.25	A	1.896	0.000	0.000	0.282	0.000	0.01
		B		0.000	0.000	0.282	0.000	0.00
		C		0.000	0.000	0.282	0.000	0.00
L13	98.25-93.25	A	1.891	0.000	0.000	5.641	0.000	0.22
		B		0.000	0.000	5.641	0.000	0.09

Tower Section	Tower Elevation ft	Face or Leg	Ice Thickness in	A_R ft²	A_F ft²	C_AA_A In Face ft²	C_AA_A Out Face ft²	Weight K
		C		0.000	0.000	5.641	0.000	0.09
L14	93.25-88.25	A	1.881	0.000	0.000	5.631	0.000	0.22
		B		0.000	0.000	5.631	0.000	0.09
		C		0.000	0.000	5.631	0.000	0.09
L15	88.25-79.13	A	1.866	0.000	0.000	8.704	0.000	0.39
		B		0.000	0.000	8.704	0.000	0.15
		C		0.000	0.000	8.704	0.000	0.14
L16	79.13-78.13	A	1.854	0.000	0.000	0.000	0.000	0.03
		B		0.000	0.000	0.000	0.000	0.01
		C		0.000	0.000	0.000	0.000	0.00
L17	78.13-73.13	A	1.847	0.000	0.000	0.421	0.000	0.16
		B		0.000	0.000	0.421	0.000	0.03
		C		0.000	0.000	0.421	0.000	0.02
L18	73.13-69.92	A	1.837	0.000	0.000	4.625	0.000	0.15
		B		0.000	0.000	4.625	0.000	0.07
		C		0.000	0.000	4.625	0.000	0.06
L19	69.92-69.67	A	1.832	0.000	0.000	0.360	0.000	0.01
		B		0.000	0.000	0.360	0.000	0.01
		C		0.000	0.000	0.360	0.000	0.00
L20	69.67-64.67	A	1.825	0.000	0.000	7.199	0.000	0.24
		B		0.000	0.000	7.199	0.000	0.11
		C		0.000	0.000	7.199	0.000	0.10
L21	64.67-59.67	A	1.811	0.000	0.000	7.288	0.000	0.24
		B		0.000	0.000	7.288	0.000	0.11
		C		0.000	0.000	7.288	0.000	0.10
L22	59.67-57.25	A	1.800	0.000	0.000	6.527	0.000	0.15
		B		0.000	0.000	6.527	0.000	0.09
		C		0.000	0.000	6.527	0.000	0.08
L23	57.25-57.00	A	1.796	0.000	0.000	0.674	0.000	0.02
		B		0.000	0.000	0.674	0.000	0.01
		C		0.000	0.000	0.674	0.000	0.01
L24	57.00-52.00	A	1.787	0.000	0.000	11.433	0.000	0.28
		B		0.000	0.000	11.433	0.000	0.15
		C		0.000	0.000	11.433	0.000	0.15
L25	52.00-43.24	A	1.763	0.000	0.000	9.119	0.000	0.38
		B		0.000	0.000	9.119	0.000	0.15
		C		0.000	0.000	9.119	0.000	0.14
L26	43.24-42.24	A	1.745	0.000	0.000	0.000	0.000	0.03
		B		0.000	0.000	0.000	0.000	0.01
		C		0.000	0.000	0.000	0.000	0.00
L27	42.24-37.24	A	1.732	0.000	0.000	0.000	0.000	0.16
		B		0.000	0.000	0.000	0.000	0.03
		C		0.000	0.000	0.000	0.000	0.02
L28	37.24-32.24	A	1.709	0.000	0.000	0.000	0.000	0.16
		B		0.000	0.000	0.000	0.000	0.03
		C		0.000	0.000	0.000	0.000	0.02
L29	32.24-27.24	A	1.682	0.000	0.000	0.000	0.000	0.16
		B		0.000	0.000	0.000	0.000	0.03
		C		0.000	0.000	0.000	0.000	0.02
L30	27.24-22.24	A	1.652	0.000	0.000	0.000	0.000	0.16
		B		0.000	0.000	0.000	0.000	0.03
		C		0.000	0.000	0.000	0.000	0.02
L31	22.24-17.25	A	1.615	0.000	0.000	6.419	0.000	0.22
		B		0.000	0.000	6.419	0.000	0.09
		C		0.000	0.000	12.837	0.000	0.14
L32	17.25-17.00	A	1.592	0.000	0.000	0.401	0.000	0.01
		B		0.000	0.000	0.401	0.000	0.01
		C		0.000	0.000	0.801	0.000	0.01
L33	17.00-12.00	A	1.566	0.000	0.000	7.999	0.000	0.23
		B		0.000	0.000	7.999	0.000	0.10
		C		0.000	0.000	15.997	0.000	0.17
L34	12.00-7.00	A	1.501	0.000	0.000	7.966	0.000	0.20
		B		0.000	0.000	7.966	0.000	0.10
		C		0.000	0.000	15.932	0.000	0.16
L35	7.00-5.25	A	1.436	0.000	0.000	2.777	0.000	0.02
		B		0.000	0.000	2.777	0.000	0.03
		C		0.000	0.000	5.554	0.000	0.05
L36	5.25-5.00	A	1.411	0.000	0.000	0.396	0.000	0.00
		B		0.000	0.000	0.396	0.000	0.00

Tower Section n	Tower Elevation ft	Face or Leg	Ice Thickness in	A_R ft²	A_F ft²	C_AA_A In Face ft²	C_AA_A Out Face ft²	Weight K
		C		0.000	0.000	0.792	0.000	0.01
L37	5.00-0.00	A	1.313	0.000	0.000	5.904	0.000	0.04
		B		0.000	0.000	5.904	0.000	0.07
		C		0.000	0.000	11.808	0.000	0.11

Feed Line Center of Pressure

Section	Elevation ft	CP_X in	CP_Z in	CP_X Ice in	CP_Z Ice in
L1	149.00-144.00	0.000	0.000	0.000	0.000
L2	144.00-139.00	0.000	0.000	0.000	0.000
L3	139.00-134.00	0.000	0.000	0.000	0.000
L4	134.00-129.00	0.000	0.000	0.000	0.000
L5	129.00-123.61	0.000	0.000	0.000	0.000
L6	123.61-122.39	0.000	0.000	0.000	0.000
L7	122.39-117.39	0.000	0.000	0.000	0.000
L8	117.39-112.39	0.000	0.000	0.000	0.000
L9	112.39-107.39	0.000	0.000	0.000	0.000
L10	107.39-102.39	0.000	0.000	0.000	0.000
L11	102.39-98.50	0.000	0.000	0.000	0.000
L12	98.50-98.25	0.000	0.000	0.000	0.000
L13	98.25-93.25	0.000	0.000	0.000	0.000
L14	93.25-88.25	0.000	0.000	0.000	0.000
L15	88.25-79.13	0.000	0.000	0.000	0.000
L16	79.13-78.13	0.000	0.000	0.000	0.000
L17	78.13-73.13	0.000	0.000	0.000	0.000
L18	73.13-69.92	0.000	0.000	0.000	0.000
L19	69.92-69.67	0.000	0.000	0.000	0.000
L20	69.67-64.67	0.000	0.000	0.000	0.000
L21	64.67-59.67	0.000	0.000	0.000	0.000
L22	59.67-57.25	0.000	0.000	0.000	0.000
L23	57.25-57.00	0.000	0.000	0.000	0.000
L24	57.00-52.00	0.000	0.000	0.000	0.000
L25	52.00-43.24	0.000	0.000	0.000	0.000
L26	43.24-42.24	0.000	0.000	0.000	0.000
L27	42.24-37.24	0.000	0.000	0.000	0.000
L28	37.24-32.24	0.000	0.000	0.000	0.000
L29	32.24-27.24	0.000	0.000	0.000	0.000
L30	27.24-22.24	0.000	0.000	0.000	0.000
L31	22.24-17.25	1.649	-2.982	1.397	-2.526
L32	17.25-17.00	1.797	-3.249	1.552	-2.807
L33	17.00-12.00	1.809	-3.272	1.562	-2.824
L34	12.00-7.00	1.833	-3.315	1.579	-2.856
L35	7.00-5.25	1.849	-3.345	1.591	-2.877
L36	5.25-5.00	1.854	-3.353	1.594	-2.883
L37	5.00-0.00	1.666	-3.013	1.392	-2.517

Note: For pole sections, center of pressure calculations do not consider feed line shielding.

Shielding Factor Ka

Tower Section	Feed Line Record No.	Description	Feed Line Segment Elev.	K_a No Ice	K_a Ice
L11	15	CCI-AFP-045100	98.50 - 100.50	1.0000	1.0000
L11	16	CCI-AFP-045100	98.50 -	1.0000	1.0000

Tower Section	Feed Line Record No.	Description	Feed Line Segment Elev.	K_a No Ice	K_a Ice
L11	17	CCI-AFP-045100	100.50 98.50 - 100.50	1.0000	1.0000
L12	15	CCI-AFP-045100	98.25 - 98.50	1.0000	1.0000
L12	16	CCI-AFP-045100	98.25 - 98.50	1.0000	1.0000
L12	17	CCI-AFP-045100	98.25 - 98.50	1.0000	1.0000
L13	15	CCI-AFP-045100	93.25 - 98.25	1.0000	1.0000
L13	16	CCI-AFP-045100	93.25 - 98.25	1.0000	1.0000
L13	17	CCI-AFP-045100	93.25 - 98.25	1.0000	1.0000
L14	15	CCI-AFP-045100	88.25 - 93.25	1.0000	1.0000
L14	16	CCI-AFP-045100	88.25 - 93.25	1.0000	1.0000
L14	17	CCI-AFP-045100	88.25 - 93.25	1.0000	1.0000
L15	15	CCI-AFP-045100	80.50 - 88.25	1.0000	1.0000
L15	16	CCI-AFP-045100	80.50 - 88.25	1.0000	1.0000
L15	17	CCI-AFP-045100	80.50 - 88.25	1.0000	1.0000
L17	24	CCI-65FP-065125	73.13 - 73.42	1.0000	1.0000
L17	25	CCI-65FP-065125	73.13 - 73.42	1.0000	1.0000
L17	26	CCI-65FP-065125	73.13 - 73.42	1.0000	1.0000
L18	24	CCI-65FP-065125	69.92 - 73.13	1.0000	1.0000
L18	25	CCI-65FP-065125	69.92 - 73.13	1.0000	1.0000
L18	26	CCI-65FP-065125	69.92 - 73.13	1.0000	1.0000
L19	24	CCI-65FP-065125	69.67 - 69.92	1.0000	1.0000
L19	25	CCI-65FP-065125	69.67 - 69.92	1.0000	1.0000
L19	26	CCI-65FP-065125	69.67 - 69.92	1.0000	1.0000
L20	24	CCI-65FP-065125	64.67 - 69.67	1.0000	1.0000
L20	25	CCI-65FP-065125	64.67 - 69.67	1.0000	1.0000
L20	26	CCI-65FP-065125	64.67 - 69.67	1.0000	1.0000
L21	11	CCI-AFP-060100	59.67 - 59.75	1.0000	1.0000
L21	12	CCI-AFP-060100	59.67 - 59.75	1.0000	1.0000
L21	13	CCI-AFP-060100	59.67 - 59.75	1.0000	1.0000
L21	24	CCI-65FP-065125	59.67 - 64.67	1.0000	1.0000
L21	25	CCI-65FP-065125	59.67 - 64.67	1.0000	1.0000
L21	26	CCI-65FP-065125	59.67 - 64.67	1.0000	1.0000
L22	11	CCI-AFP-060100	57.25 - 59.67	1.0000	1.0000
L22	12	CCI-AFP-060100	57.25 - 59.67	1.0000	1.0000
L22	13	CCI-AFP-060100	57.25 - 59.67	1.0000	1.0000

Tower Section	Feed Line Record No.	Description	Feed Line Segment Elev.	K_a No Ice	K_a Ice
L22	24	CCI-65FP-065125	57.25 - 59.67	1.0000	1.0000
L22	25	CCI-65FP-065125	57.25 - 59.67	1.0000	1.0000
L22	26	CCI-65FP-065125	57.25 - 59.67	1.0000	1.0000
L23	11	CCI-AFP-060100	57.00 - 57.25	1.0000	1.0000
L23	12	CCI-AFP-060100	57.00 - 57.25	1.0000	1.0000
L23	13	CCI-AFP-060100	57.00 - 57.25	1.0000	1.0000
L23	24	CCI-65FP-065125	57.00 - 57.25	1.0000	1.0000
L23	25	CCI-65FP-065125	57.00 - 57.25	1.0000	1.0000
L23	26	CCI-65FP-065125	57.00 - 57.25	1.0000	1.0000
L24	11	CCI-AFP-060100	52.00 - 57.00	1.0000	1.0000
L24	12	CCI-AFP-060100	52.00 - 57.00	1.0000	1.0000
L24	13	CCI-AFP-060100	52.00 - 57.00	1.0000	1.0000
L24	24	CCI-65FP-065125	53.42 - 57.00	1.0000	1.0000
L24	25	CCI-65FP-065125	53.42 - 57.00	1.0000	1.0000
L24	26	CCI-65FP-065125	53.42 - 57.00	1.0000	1.0000
L25	11	CCI-AFP-060100	44.75 - 52.00	1.0000	1.0000
L25	12	CCI-AFP-060100	44.75 - 52.00	1.0000	1.0000
L25	13	CCI-AFP-060100	44.75 - 52.00	1.0000	1.0000
L31	19	CCI-65FP-080125	17.25 - 21.25	1.0000	1.0000
L31	20	CCI-65FP-080125	17.25 - 21.25	1.0000	1.0000
L31	21	CCI-65FP-080125	17.25 - 21.25	1.0000	1.0000
L31	22	CCI-65FP-080125	17.25 - 21.25	1.0000	1.0000
L32	19	CCI-65FP-080125	17.00 - 17.25	1.0000	1.0000
L32	20	CCI-65FP-080125	17.00 - 17.25	1.0000	1.0000
L32	21	CCI-65FP-080125	17.00 - 17.25	1.0000	1.0000
L32	22	CCI-65FP-080125	17.00 - 17.25	1.0000	1.0000
L33	19	CCI-65FP-080125	12.00 - 17.00	1.0000	1.0000
L33	20	CCI-65FP-080125	12.00 - 17.00	1.0000	1.0000
L33	21	CCI-65FP-080125	12.00 - 17.00	1.0000	1.0000
L33	22	CCI-65FP-080125	12.00 - 17.00	1.0000	1.0000
L34	19	CCI-65FP-080125	7.00 - 12.00	1.0000	1.0000
L34	20	CCI-65FP-080125	7.00 - 12.00	1.0000	1.0000
L34	21	CCI-65FP-080125	7.00 - 12.00	1.0000	1.0000
L34	22	CCI-65FP-080125	7.00 - 12.00	1.0000	1.0000
L35	19	CCI-65FP-080125	5.25 - 7.00	1.0000	1.0000
L35	20	CCI-65FP-080125	5.25 - 7.00	1.0000	1.0000
L35	21	CCI-65FP-080125	5.25 - 7.00	1.0000	1.0000
L35	22	CCI-65FP-080125	5.25 - 7.00	1.0000	1.0000
L36	19	CCI-65FP-080125	5.00 - 5.25	1.0000	1.0000

Tower Section	Feed Line Record No.	Description	Feed Line Segment Elev.	K_a No Ice	K_a Ice
L36	20	CCI-65FP-080125	5.00 - 5.25	1.0000	1.0000
L36	21	CCI-65FP-080125	5.00 - 5.25	1.0000	1.0000
L36	22	CCI-65FP-080125	5.00 - 5.25	1.0000	1.0000
L37	19	CCI-65FP-080125	1.25 - 5.00	1.0000	1.0000
L37	20	CCI-65FP-080125	1.25 - 5.00	1.0000	1.0000
L37	21	CCI-65FP-080125	1.25 - 5.00	1.0000	1.0000
L37	22	CCI-65FP-080125	1.25 - 5.00	1.0000	1.0000

Effective Width of Flat Linear Attachments / Feed Lines

Tower Section	Attachment Record No.	Description	Attachment Segment Elev.	Ratio Calculation Method	Effective Width Ratio
L11	15	CCI-AFP-045100	98.50 - 100.50	Auto	0.0000
L11	16	CCI-AFP-045100	98.50 - 100.50	Auto	0.0000
L11	17	CCI-AFP-045100	98.50 - 100.50	Auto	0.0000
L12	15	CCI-AFP-045100	98.25 - 98.50	Auto	0.0000
L12	16	CCI-AFP-045100	98.25 - 98.50	Auto	0.0000
L12	17	CCI-AFP-045100	98.25 - 98.50	Auto	0.0000
L13	15	CCI-AFP-045100	93.25 - 98.25	Auto	0.0000
L13	16	CCI-AFP-045100	93.25 - 98.25	Auto	0.0000
L13	17	CCI-AFP-045100	93.25 - 98.25	Auto	0.0000
L14	15	CCI-AFP-045100	88.25 - 93.25	Auto	0.0000
L14	16	CCI-AFP-045100	88.25 - 93.25	Auto	0.0000
L14	17	CCI-AFP-045100	88.25 - 93.25	Auto	0.0000
L15	15	CCI-AFP-045100	80.50 - 88.25	Auto	0.0000
L15	16	CCI-AFP-045100	80.50 - 88.25	Auto	0.0000
L15	17	CCI-AFP-045100	80.50 - 88.25	Auto	0.0000
L17	24	CCI-65FP-065125	73.13 - 73.42	Auto	0.1295
L17	25	CCI-65FP-065125	73.13 - 73.42	Auto	0.1295
L17	26	CCI-65FP-065125	73.13 - 73.42	Auto	0.1295
L18	24	CCI-65FP-065125	69.92 - 73.13	Auto	0.1209
L18	25	CCI-65FP-065125	69.92 - 73.13	Auto	0.1209
L18	26	CCI-65FP-065125	69.92 - 73.13	Auto	0.1209
L19	24	CCI-65FP-065125	69.67 - 69.92	Auto	0.1801
L19	25	CCI-65FP-065125	69.67 - 69.92	Auto	0.1801
L19	26	CCI-65FP-065125	69.67 -	Auto	0.1801

Tower Section	Attachment Record No.	Description	Attachment Segment Elev.	Ratio Calculation Method	Effective Width Ratio
			69.92		
L20	24	CCI-65FP-065125	64.67 - 69.67	Auto	0.1637
L20	25	CCI-65FP-065125	64.67 - 69.67	Auto	0.1637
L20	26	CCI-65FP-065125	64.67 - 69.67	Auto	0.1637
L21	11	CCI-AFP-060100	59.67 - 59.75	Auto	0.0541
L21	12	CCI-AFP-060100	59.67 - 59.75	Auto	0.0541
L21	13	CCI-AFP-060100	59.67 - 59.75	Auto	0.0541
L21	24	CCI-65FP-065125	59.67 - 64.67	Auto	0.1390
L21	25	CCI-65FP-065125	59.67 - 64.67	Auto	0.1390
L21	26	CCI-65FP-065125	59.67 - 64.67	Auto	0.1390
L22	11	CCI-AFP-060100	57.25 - 59.67	Auto	0.0456
L22	12	CCI-AFP-060100	57.25 - 59.67	Auto	0.0456
L22	13	CCI-AFP-060100	57.25 - 59.67	Auto	0.0456
L22	24	CCI-65FP-065125	57.25 - 59.67	Auto	0.1190
L22	25	CCI-65FP-065125	57.25 - 59.67	Auto	0.1190
L22	26	CCI-65FP-065125	57.25 - 59.67	Auto	0.1190
L23	11	CCI-AFP-060100	57.00 - 57.25	Auto	0.0202
L23	12	CCI-AFP-060100	57.00 - 57.25	Auto	0.0202
L23	13	CCI-AFP-060100	57.00 - 57.25	Auto	0.0202
L23	24	CCI-65FP-065125	57.00 - 57.25	Auto	0.0955
L23	25	CCI-65FP-065125	57.00 - 57.25	Auto	0.0955
L23	26	CCI-65FP-065125	57.00 - 57.25	Auto	0.0955
L24	11	CCI-AFP-060100	52.00 - 57.00	Auto	0.0058
L24	12	CCI-AFP-060100	52.00 - 57.00	Auto	0.0058
L24	13	CCI-AFP-060100	52.00 - 57.00	Auto	0.0058
L24	24	CCI-65FP-065125	53.42 - 57.00	Auto	0.0844
L24	25	CCI-65FP-065125	53.42 - 57.00	Auto	0.0844
L24	26	CCI-65FP-065125	53.42 - 57.00	Auto	0.0844
L25	11	CCI-AFP-060100	44.75 - 52.00	Auto	0.0000
L25	12	CCI-AFP-060100	44.75 - 52.00	Auto	0.0000
L25	13	CCI-AFP-060100	44.75 - 52.00	Auto	0.0000
L31	19	CCI-65FP-080125	17.25 - 21.25	Auto	0.1009
L31	20	CCI-65FP-080125	17.25 - 21.25	Auto	0.1009
L31	21	CCI-65FP-080125	17.25 - 21.25	Auto	0.1009
L31	22	CCI-65FP-080125	17.25 -	Auto	0.1009

Tower Section	Attachment Record No.	Description	Attachment Segment Elev.	Ratio Calculation Method	Effective Width Ratio
			21.25		
L32	19	CCI-65FP-080125	17.00 - 17.25	Auto	0.1611
L32	20	CCI-65FP-080125	17.00 - 17.25	Auto	0.1611
L32	21	CCI-65FP-080125	17.00 - 17.25	Auto	0.1611
L32	22	CCI-65FP-080125	17.00 - 17.25	Auto	0.1611
L33	19	CCI-65FP-080125	12.00 - 17.00	Auto	0.1479
L33	20	CCI-65FP-080125	12.00 - 17.00	Auto	0.1479
L33	21	CCI-65FP-080125	12.00 - 17.00	Auto	0.1479
L33	22	CCI-65FP-080125	12.00 - 17.00	Auto	0.1479
L34	19	CCI-65FP-080125	7.00 - 12.00	Auto	0.1278
L34	20	CCI-65FP-080125	7.00 - 12.00	Auto	0.1278
L34	21	CCI-65FP-080125	7.00 - 12.00	Auto	0.1278
L34	22	CCI-65FP-080125	7.00 - 12.00	Auto	0.1278
L35	19	CCI-65FP-080125	5.25 - 7.00	Auto	0.1143
L35	20	CCI-65FP-080125	5.25 - 7.00	Auto	0.1143
L35	21	CCI-65FP-080125	5.25 - 7.00	Auto	0.1143
L35	22	CCI-65FP-080125	5.25 - 7.00	Auto	0.1143
L36	19	CCI-65FP-080125	5.00 - 5.25	Auto	0.1075
L36	20	CCI-65FP-080125	5.00 - 5.25	Auto	0.1075
L36	21	CCI-65FP-080125	5.00 - 5.25	Auto	0.1075
L36	22	CCI-65FP-080125	5.00 - 5.25	Auto	0.1075
L37	19	CCI-65FP-080125	1.25 - 5.00	Auto	0.0968
L37	20	CCI-65FP-080125	1.25 - 5.00	Auto	0.0968
L37	21	CCI-65FP-080125	1.25 - 5.00	Auto	0.0968
L37	22	CCI-65FP-080125	1.25 - 5.00	Auto	0.0968

Discrete Tower Loads

Description	Face or Leg	Offset Type	Offsets: Horz Lateral Vert ft ft ft	Azimuth Adjustment ° °	Placement ft		C_AA_A Front ft^2	C_AA_A Side ft^2	Weight K
HPA65R-BU6A w/ Mount Pipe	A	From Leg	4.00 0.00 4.00	0.0000	147.00	No Ice 1/2" Ice 1" Ice 2" Ice	5.83 6.40 6.99 8.19	5.00 5.56 6.13 7.32	0.08 0.14 0.22 0.40
HPA65R-BU6A w/ Mount Pipe	B	From Leg	4.00 0.00 4.00	0.0000	147.00	No Ice 1/2" Ice 1" Ice 2" Ice	5.83 6.40 6.99 8.19	5.00 5.56 6.13 7.32	0.08 0.14 0.22 0.40
HPA65R-BU6A w/ Mount Pipe	C	From Leg	4.00 0.00 4.00	0.0000	147.00	No Ice 1/2" Ice 1" Ice 2" Ice	5.83 6.40 6.99 8.19	5.00 5.56 6.13 7.32	0.08 0.14 0.22 0.40
DMP65R-BU6D w/ Mount Pipe	A	From Leg	4.00 0.00 4.00	0.0000	147.00	No Ice 1/2" Ice	11.96 12.70 13.46	5.97 6.63 7.30	0.11 0.20 0.30

Description	Face or Leg	Offset Type	Offsets: Horz Lateral Vert ft ft ft	Azimuth Adjustment °	Placement ft		C_AA_A Front ft^2	C_AA_A Side ft^2	Weight K
						1" Ice	15.02	8.69	0.53
						2" Ice			
DMP65R-BU6D w/ Mount Pipe	B	From Leg	4.00	0.0000	147.00	No Ice	11.96	5.97	0.11
			0.00			1/2"	12.70	6.63	0.20
			4.00			Ice	13.46	7.30	0.30
						1" Ice	15.02	8.69	0.53
						2" Ice			
DMP65R-BU6D w/ Mount Pipe	C	From Leg	4.00	0.0000	147.00	No Ice	11.96	5.97	0.11
			0.00			1/2"	12.70	6.63	0.20
			4.00			Ice	13.46	7.30	0.30
						1" Ice	15.02	8.69	0.53
						2" Ice			
RRUS 4449 B5/B12	A	From Leg	4.00	0.0000	147.00	No Ice	1.97	1.41	0.07
			0.00			1/2"	2.14	1.56	0.09
			4.00			Ice	2.33	1.73	0.11
						1" Ice	2.72	2.07	0.16
						2" Ice			
RRUS 4449 B5/B12	B	From Leg	4.00	0.0000	147.00	No Ice	1.97	1.41	0.07
			0.00			1/2"	2.14	1.56	0.09
			4.00			Ice	2.33	1.73	0.11
						1" Ice	2.72	2.07	0.16
						2" Ice			
RRUS 4449 B5/B12	C	From Leg	4.00	0.0000	147.00	No Ice	1.97	1.41	0.07
			0.00			1/2"	2.14	1.56	0.09
			4.00			Ice	2.33	1.73	0.11
						1" Ice	2.72	2.07	0.16
						2" Ice			
RRUS 8843 B2/B66A	A	From Leg	4.00	0.0000	147.00	No Ice	1.64	1.35	0.07
			0.00			1/2"	1.80	1.50	0.09
			4.00			Ice	1.97	1.65	0.11
						1" Ice	2.32	1.99	0.16
						2" Ice			
RRUS 8843 B2/B66A	B	From Leg	4.00	0.0000	147.00	No Ice	1.64	1.35	0.07
			0.00			1/2"	1.80	1.50	0.09
			4.00			Ice	1.97	1.65	0.11
						1" Ice	2.32	1.99	0.16
						2" Ice			
RRUS 8843 B2/B66A	C	From Leg	4.00	0.0000	147.00	No Ice	1.64	1.35	0.07
			0.00			1/2"	1.80	1.50	0.09
			4.00			Ice	1.97	1.65	0.11
						1" Ice	2.32	1.99	0.16
						2" Ice			
DC6-48-60-18-8F	A	From Leg	4.00	0.0000	147.00	No Ice	1.21	1.21	0.02
			0.00			1/2"	1.89	1.89	0.04
			4.00			Ice	2.11	2.11	0.07
						1" Ice	2.57	2.57	0.13
						2" Ice			
Sabre C10855721C 12' Platform Mount	C	None		0.0000	147.00	No Ice	24.66	24.66	2.24
						1/2"	32.58	32.58	2.85
						Ice	40.50	40.50	3.46
						1" Ice	56.34	56.34	4.68
						2" Ice			
(2) P2.5 STD x 10' Mount Pipe	A	From Leg	4.00	0.0000	147.00	No Ice	2.88	2.88	0.06
			0.00			1/2"	3.91	3.91	0.08
			4.00			Ice	4.96	4.96	0.11
						1" Ice	6.19	6.19	0.18
						2" Ice			
(2) P2.5 STD x 10' Mount Pipe	B	From Leg	4.00	0.0000	147.00	No Ice	2.88	2.88	0.06
			0.00			1/2"	3.91	3.91	0.08
			4.00			Ice	4.96	4.96	0.11
						1" Ice	6.19	6.19	0.18
						2" Ice			
(2) P2.5 STD x 10' Mount Pipe	C	From Leg	4.00	0.0000	147.00	No Ice	2.88	2.88	0.06
			0.00			1/2"	3.91	3.91	0.08
			4.00			Ice	4.96	4.96	0.11

Description	Face or Leg	Offset Type	Offsets: Horz Lateral Vert ft ft ft	Azimuth Adjustment °	Placement ft		C_AA_A Front ft^2	C_AA_A Side ft^2	Weight K
						1" Ice	6.19	6.19	0.18
						2" Ice			
****									
APXVAARR24_43-U-NA20 w/ Mount Pipe	A	From Leg	2.00	0.0000	138.00	No Ice	14.69	6.87	0.19
			0.00			1/2"	15.46	7.55	0.31
			2.00			Ice	16.23	8.25	0.46
						1" Ice	17.82	9.67	0.79
						2" Ice			
APXVAARR24_43-U-NA20 w/ Mount Pipe	B	From Leg	2.00	0.0000	138.00	No Ice	14.69	6.87	0.19
			0.00			1/2"	15.46	7.55	0.31
			2.00			Ice	16.23	8.25	0.46
						1" Ice	17.82	9.67	0.79
						2" Ice			
APXVAARR24_43-U-NA20 w/ Mount Pipe	C	From Leg	2.00	0.0000	138.00	No Ice	14.69	6.87	0.19
			0.00			1/2"	15.46	7.55	0.31
			2.00			Ice	16.23	8.25	0.46
						1" Ice	17.82	9.67	0.79
						2" Ice			
APX16DWV-16DWV-S-E-A20 w/ Mount Pipe	A	From Leg	2.00	0.0000	138.00	No Ice	6.29	2.76	0.06
			0.00			1/2"	6.86	3.27	0.11
			2.00			Ice	7.45	3.79	0.16
						1" Ice	8.68	4.90	0.29
						2" Ice			
APX16DWV-16DWV-S-E-A20 w/ Mount Pipe	B	From Leg	2.00	0.0000	138.00	No Ice	6.29	2.76	0.06
			0.00			1/2"	6.86	3.27	0.11
			2.00			Ice	7.45	3.79	0.16
						1" Ice	8.68	4.90	0.29
						2" Ice			
APX16DWV-16DWV-S-E-A20 w/ Mount Pipe	C	From Leg	2.00	0.0000	138.00	No Ice	6.29	2.76	0.06
			0.00			1/2"	6.86	3.27	0.11
			2.00			Ice	7.45	3.79	0.16
						1" Ice	8.68	4.90	0.29
						2" Ice			
RADIO 4449 B12/B71	A	From Leg	2.00	0.0000	138.00	No Ice	1.65	1.16	0.07
			0.00			1/2"	1.81	1.30	0.09
			2.00			Ice	1.98	1.45	0.11
						1" Ice	2.34	1.76	0.16
						2" Ice			
RADIO 4449 B12/B71	B	From Leg	2.00	0.0000	138.00	No Ice	1.65	1.16	0.07
			0.00			1/2"	1.81	1.30	0.09
			2.00			Ice	1.98	1.45	0.11
						1" Ice	2.34	1.76	0.16
						2" Ice			
RADIO 4449 B12/B71	C	From Leg	2.00	0.0000	138.00	No Ice	1.65	1.16	0.07
			0.00			1/2"	1.81	1.30	0.09
			2.00			Ice	1.98	1.45	0.11
						1" Ice	2.34	1.76	0.16
						2" Ice			
KRY 112 489/2	A	From Leg	2.00	0.0000	138.00	No Ice	0.56	0.37	0.02
			0.00			1/2"	0.66	0.45	0.02
			2.00			Ice	0.76	0.54	0.03
						1" Ice	1.00	0.75	0.05
						2" Ice			
KRY 112 489/2	B	From Leg	2.00	0.0000	138.00	No Ice	0.56	0.37	0.02
			0.00			1/2"	0.66	0.45	0.02
			2.00			Ice	0.76	0.54	0.03
						1" Ice	1.00	0.75	0.05
						2" Ice			
KRY 112 489/2	C	From Leg	2.00	0.0000	138.00	No Ice	0.56	0.37	0.02
			0.00			1/2"	0.66	0.45	0.02
			2.00			Ice	0.76	0.54	0.03
						1" Ice	1.00	0.75	0.05
						2" Ice			
Side Arm Mount [SO 101-3]	C	None		0.0000	138.00	No Ice	5.81	5.81	0.25
						1/2"	6.95	6.95	0.34

Description	Face or Leg	Offset Type	Offsets: Horz Lateral Vert ft ft ft	Azimuth Adjustment °	Placement ft		C_AA_A Front ft^2	C_AA_A Side ft^2	Weight K
						Ice	8.28	8.28	0.46
						1" Ice	11.54	11.54	0.78
						2" Ice			
****									
(4) NHH-65B-R2B w/ Mount Pipe	A	From Leg	3.00	0.0000	130.00	No Ice	4.09	3.29	0.07
			0.00			1/2"	4.48	3.67	0.13
			0.00			Ice	4.88	4.06	0.21
						1" Ice	5.70	4.86	0.39
						2" Ice			
(4) NHH-65B-R2B w/ Mount Pipe	B	From Leg	3.00	0.0000	130.00	No Ice	4.09	3.29	0.07
			0.00			1/2"	4.48	3.67	0.13
			0.00			Ice	4.88	4.06	0.21
						1" Ice	5.70	4.86	0.39
						2" Ice			
(4) NHH-65B-R2B w/ Mount Pipe	C	From Leg	3.00	0.0000	130.00	No Ice	4.09	3.29	0.07
			0.00			1/2"	4.48	3.67	0.13
			0.00			Ice	4.88	4.06	0.21
						1" Ice	5.70	4.86	0.39
						2" Ice			
(2) RFV01U-D1A	A	From Leg	3.00	0.0000	130.00	No Ice	1.88	1.25	0.08
			0.00			1/2"	2.05	1.39	0.10
			0.00			Ice	2.22	1.54	0.12
						1" Ice	2.60	1.86	0.18
						2" Ice			
(2) RFV01U-D1A	B	From Leg	3.00	0.0000	130.00	No Ice	1.88	1.25	0.08
			0.00			1/2"	2.05	1.39	0.10
			0.00			Ice	2.22	1.54	0.12
						1" Ice	2.60	1.86	0.18
						2" Ice			
(2) RFV01U-D1A	C	From Leg	3.00	0.0000	130.00	No Ice	1.88	1.25	0.08
			0.00			1/2"	2.05	1.39	0.10
			0.00			Ice	2.22	1.54	0.12
						1" Ice	2.60	1.86	0.18
						2" Ice			
(2) RFV01U-D2A	A	From Leg	3.00	0.0000	130.00	No Ice	1.88	1.01	0.07
			0.00			1/2"	2.05	1.14	0.09
			0.00			Ice	2.22	1.28	0.11
						1" Ice	2.60	1.59	0.15
						2" Ice			
(2) RFV01U-D2A	B	From Leg	3.00	0.0000	130.00	No Ice	1.88	1.01	0.07
			0.00			1/2"	2.05	1.14	0.09
			0.00			Ice	2.22	1.28	0.11
						1" Ice	2.60	1.59	0.15
						2" Ice			
(2) RFV01U-D2A	C	From Leg	3.00	0.0000	130.00	No Ice	1.88	1.01	0.07
			0.00			1/2"	2.05	1.14	0.09
			0.00			Ice	2.22	1.28	0.11
						1" Ice	2.60	1.59	0.15
						2" Ice			
DB-C1-12C-24AB-0Z	A	From Leg	3.00	0.0000	130.00	No Ice	4.06	3.10	0.03
			0.00			1/2"	4.32	3.34	0.07
			0.00			Ice	4.58	3.58	0.11
						1" Ice	5.14	4.09	0.20
						2" Ice			
Site Pro1 RMV5-SQNP w/ PRK-SFS and HRK12	C	None		0.0000	130.00	No Ice	14.77	14.77	0.61
						1/2"	18.10	18.10	0.85
						Ice	21.77	21.77	1.16
						1" Ice	30.35	30.35	2.03
						2" Ice			
(2) 10' horizontal x 2" Pipe Mount	A	From Leg	3.00	0.0000	130.00	No Ice	1.90	0.01	0.03
			0.00			1/2"	2.92	0.04	0.04
			2.00			Ice	3.97	0.09	0.06
						1" Ice	5.65	0.21	0.13
						2" Ice			
(2) 10' horizontal x 2" Pipe	B	From Leg	3.00	0.0000	130.00	No Ice	1.90	0.01	0.03

Description	Face or Leg	Offset Type	Offsets: Horz Lateral Vert ft ft ft	Azimuth Adjustment °	Placement ft		C_AA_A Front ft^2	C_AA_A Side ft^2	Weight K
Mount			0.00			1/2"	2.92	0.04	0.04
			2.00			Ice	3.97	0.09	0.06
						1" Ice	5.65	0.21	0.13
						2" Ice			
(2) 10' horizontal x 2" Pipe	C	From Leg	3.00	0.0000	130.00	No Ice	1.90	0.01	0.03
Mount			0.00			1/2"	2.92	0.04	0.04
			2.00			Ice	3.97	0.09	0.06
						1" Ice	5.65	0.21	0.13
						2" Ice			
(2) Dual Antenna Bracket	A	From Leg	3.00	0.0000	130.00	No Ice	0.00	0.97	0.07
			0.00			1/2"	0.00	1.13	0.10
			0.00			Ice	0.00	1.30	0.13
						1" Ice	0.00	1.61	0.19
						2" Ice			
(2) Dual Antenna Bracket	B	From Leg	3.00	0.0000	130.00	No Ice	0.00	0.97	0.07
			0.00			1/2"	0.00	1.13	0.10
			0.00			Ice	0.00	1.30	0.13
						1" Ice	0.00	1.61	0.19
						2" Ice			
(2) Dual Antenna Bracket	C	From Leg	3.00	0.0000	130.00	No Ice	0.00	0.97	0.07
			0.00			1/2"	0.00	1.13	0.10
			0.00			Ice	0.00	1.30	0.13
						1" Ice	0.00	1.61	0.19
						2" Ice			

Load Combinations

Comb. No.	Description
1	Dead Only
2	1.2 Dead+1.0 Wind 0 deg - No Ice
3	0.9 Dead+1.0 Wind 0 deg - No Ice
4	1.2 Dead+1.0 Wind 30 deg - No Ice
5	0.9 Dead+1.0 Wind 30 deg - No Ice
6	1.2 Dead+1.0 Wind 60 deg - No Ice
7	0.9 Dead+1.0 Wind 60 deg - No Ice
8	1.2 Dead+1.0 Wind 90 deg - No Ice
9	0.9 Dead+1.0 Wind 90 deg - No Ice
10	1.2 Dead+1.0 Wind 120 deg - No Ice
11	0.9 Dead+1.0 Wind 120 deg - No Ice
12	1.2 Dead+1.0 Wind 150 deg - No Ice
13	0.9 Dead+1.0 Wind 150 deg - No Ice
14	1.2 Dead+1.0 Wind 180 deg - No Ice
15	0.9 Dead+1.0 Wind 180 deg - No Ice
16	1.2 Dead+1.0 Wind 210 deg - No Ice
17	0.9 Dead+1.0 Wind 210 deg - No Ice
18	1.2 Dead+1.0 Wind 240 deg - No Ice
19	0.9 Dead+1.0 Wind 240 deg - No Ice
20	1.2 Dead+1.0 Wind 270 deg - No Ice
21	0.9 Dead+1.0 Wind 270 deg - No Ice
22	1.2 Dead+1.0 Wind 300 deg - No Ice
23	0.9 Dead+1.0 Wind 300 deg - No Ice
24	1.2 Dead+1.0 Wind 330 deg - No Ice
25	0.9 Dead+1.0 Wind 330 deg - No Ice
26	1.2 Dead+1.0 Ice+1.0 Temp
27	1.2 Dead+1.0 Wind 0 deg+1.0 Ice+1.0 Temp
28	1.2 Dead+1.0 Wind 30 deg+1.0 Ice+1.0 Temp
29	1.2 Dead+1.0 Wind 60 deg+1.0 Ice+1.0 Temp
30	1.2 Dead+1.0 Wind 90 deg+1.0 Ice+1.0 Temp

Comb. No.	Description
31	1.2 Dead+1.0 Wind 120 deg+1.0 Ice+1.0 Temp
32	1.2 Dead+1.0 Wind 150 deg+1.0 Ice+1.0 Temp
33	1.2 Dead+1.0 Wind 180 deg+1.0 Ice+1.0 Temp
34	1.2 Dead+1.0 Wind 210 deg+1.0 Ice+1.0 Temp
35	1.2 Dead+1.0 Wind 240 deg+1.0 Ice+1.0 Temp
36	1.2 Dead+1.0 Wind 270 deg+1.0 Ice+1.0 Temp
37	1.2 Dead+1.0 Wind 300 deg+1.0 Ice+1.0 Temp
38	1.2 Dead+1.0 Wind 330 deg+1.0 Ice+1.0 Temp
39	Dead+Wind 0 deg - Service
40	Dead+Wind 30 deg - Service
41	Dead+Wind 60 deg - Service
42	Dead+Wind 90 deg - Service
43	Dead+Wind 120 deg - Service
44	Dead+Wind 150 deg - Service
45	Dead+Wind 180 deg - Service
46	Dead+Wind 210 deg - Service
47	Dead+Wind 240 deg - Service
48	Dead+Wind 270 deg - Service
49	Dead+Wind 300 deg - Service
50	Dead+Wind 330 deg - Service

Maximum Member Forces

Section No.	Elevation ft	Component Type	Condition	Gov. Load Comb.	Axial K	Major Axis Moment kip-ft	Minor Axis Moment kip-ft
L1	149 - 144	Pole	Max Tension	39	0.00	0.00	-0.00
			Max. Compression	26	-10.87	0.00	0.64
			Max. Mx	8	-3.76	-35.99	0.08
			Max. My	2	-3.76	0.00	36.11
			Max. Vy	8	6.54	-35.99	0.08
			Max. Vx	2	-6.55	0.00	36.11
			Max. Torque	8			0.36
L2	144 - 139	Pole	Max Tension	1	0.00	0.00	0.00
			Max. Compression	26	-11.48	0.00	0.66
			Max. Mx	8	-4.02	-69.79	0.08
			Max. My	2	-4.02	0.00	69.92
			Max. Vy	8	6.98	-69.79	0.08
			Max. Vx	2	-6.98	0.00	69.92
			Max. Torque	8			0.36
L3	139 - 134	Pole	Max Tension	1	0.00	0.00	0.00
			Max. Compression	26	-17.06	0.00	0.68
			Max. Mx	8	-5.59	-122.09	0.10
			Max. My	2	-5.59	0.00	122.23
			Max. Vy	8	10.32	-122.09	0.10
			Max. Vx	2	-10.33	0.00	122.23
			Max. Torque	8			0.36
L4	134 - 129	Pole	Max Tension	1	0.00	0.00	0.00
			Max. Compression	26	-28.99	0.00	1.53
			Max. Mx	8	-9.05	-180.25	0.18
			Max. My	2	-9.04	0.00	180.58
			Max. Vy	8	15.51	-180.25	0.18
			Max. Vx	2	-15.55	0.00	180.58
			Max. Torque	8			0.94
L5	129 - 123.612	Pole	Max Tension	1	0.00	0.00	0.00
			Max. Compression	26	-29.28	0.00	1.54
			Max. Mx	8	-9.22	-205.36	0.18
			Max. My	2	-9.21	0.00	205.77
			Max. Vy	8	15.66	-205.36	0.18
			Max. Vx	2	-15.71	0.00	205.77
			Max. Torque	8			0.94
L6	123.612 - 122.388	Pole	Max Tension	1	0.00	0.00	0.00
			Max. Compression	26	-30.65	0.00	1.58
			Max. Mx	8	-9.99	-284.95	0.19
			Max. My	2	-9.98	0.00	285.59

Section No.	Elevation ft	Component Type	Condition	Gov. Load Comb.	Axial K	Major Axis Moment kip-ft	Minor Axis Moment kip-ft
			Max. Vy	8	16.18	-284.95	0.19
			Max. Vx	2	-16.22	0.00	285.59
			Max. Torque	8			0.94
L7	122.388 - 117.388	Pole	Max Tension	1	0.00	0.00	0.00
			Max. Compression	26	-31.55	0.00	1.61
			Max. Mx	8	-10.59	-366.94	0.21
			Max. My	2	-10.58	0.00	367.81
			Max. Vy	8	16.63	-366.94	0.21
			Max. Vx	2	-16.68	0.00	367.81
			Max. Torque	8			0.94
L8	117.388 - 112.388	Pole	Max Tension	1	0.00	0.00	0.00
			Max. Compression	26	-32.47	0.00	1.64
			Max. Mx	8	-11.22	-451.21	0.22
			Max. My	2	-11.21	0.00	452.31
			Max. Vy	8	17.09	-451.21	0.22
			Max. Vx	2	-17.14	0.00	452.31
			Max. Torque	8			0.94
L9	112.388 - 107.388	Pole	Max Tension	1	0.00	0.00	0.00
			Max. Compression	26	-33.42	0.00	1.67
			Max. Mx	8	-11.87	-537.76	0.22
			Max. My	2	-11.86	0.00	539.09
			Max. Vy	8	17.55	-537.76	0.22
			Max. Vx	2	-17.59	0.00	539.09
			Max. Torque	8			0.94
L10	107.388 - 102.388	Pole	Max Tension	1	0.00	0.00	0.00
			Max. Compression	26	-34.38	0.00	1.69
			Max. Mx	8	-12.55	-626.57	0.23
			Max. My	2	-12.54	0.00	628.12
			Max. Vy	8	18.00	-626.57	0.23
			Max. Vx	2	-18.04	0.00	628.12
			Max. Torque	8			0.93
L11	102.388 - 98.5	Pole	Max Tension	1	0.00	0.00	0.00
			Max. Compression	26	-35.22	0.00	1.70
			Max. Mx	8	-13.09	-697.17	0.24
			Max. My	2	-13.09	0.00	698.90
			Max. Vy	8	18.35	-697.17	0.24
			Max. Vx	2	-18.39	0.00	698.90
			Max. Torque	8			0.93
L12	98.5 - 98.25	Pole	Max Tension	1	0.00	0.00	0.00
			Max. Compression	26	-35.30	0.00	1.71
			Max. Mx	8	-13.16	-701.76	0.24
			Max. My	2	-13.15	0.00	703.50
			Max. Vy	8	18.36	-701.76	0.24
			Max. Vx	2	-18.41	0.00	703.50
			Max. Torque	8			0.93
L13	98.25 - 93.25	Pole	Max Tension	1	0.00	0.00	0.00
			Max. Compression	26	-36.77	0.00	1.72
			Max. Mx	8	-14.08	-794.84	0.24
			Max. My	2	-14.07	0.00	796.81
			Max. Vy	8	18.88	-794.84	0.24
			Max. Vx	2	-18.93	0.00	796.81
			Max. Torque	8			0.93
L14	93.25 - 88.25	Pole	Max Tension	1	0.00	0.00	0.00
			Max. Compression	26	-38.26	0.00	1.72
			Max. Mx	8	-15.03	-890.50	0.25
			Max. My	2	-15.02	0.00	892.70
			Max. Vy	8	19.40	-890.50	0.25
			Max. Vx	2	-19.44	0.00	892.70
			Max. Torque	8			0.93
L15	88.25 - 79.128	Pole	Max Tension	1	0.00	0.00	0.00
			Max. Compression	26	-39.55	0.00	1.72

Section No.	Elevation ft	Component Type	Condition	Gov. Load Comb.	Axial K	Major Axis Moment kip-ft	Minor Axis Moment kip-ft
			Max. Mx	8	-15.87	-976.34	0.25
			Max. My	2	-15.86	0.00	978.75
			Max. Vy	8	19.85	-976.34	0.25
			Max. Vx	2	-19.89	0.00	978.75
			Max. Torque	8			0.93
L16	79.128 - 78.128	Pole	Max Tension	1	0.00	0.00	0.00
			Max. Compression	26	-42.10	0.00	1.72
			Max. Mx	8	-17.45	-1092.24	0.26
			Max. My	2	-17.44	0.00	1094.91
			Max. Vy	8	20.50	-1092.24	0.26
			Max. Vx	2	-20.55	0.00	1094.91
			Max. Torque	8			0.93
L17	78.128 - 73.128	Pole	Max Tension	1	0.00	0.00	0.00
			Max. Compression	26	-43.32	0.00	1.72
			Max. Mx	8	-18.35	-1195.83	0.26
			Max. My	2	-18.34	0.00	1198.73
			Max. Vy	8	20.96	-1195.83	0.26
			Max. Vx	2	-21.01	0.00	1198.73
			Max. Torque	8			0.93
L18	73.128 - 69.92	Pole	Max Tension	1	0.00	0.00	0.00
			Max. Compression	26	-44.26	0.00	1.72
			Max. Mx	8	-18.94	-1263.49	0.26
			Max. My	2	-18.93	0.00	1266.54
			Max. Vy	8	21.25	-1263.49	0.26
			Max. Vx	2	-21.30	0.00	1266.54
			Max. Torque	8			0.93
L19	69.92 - 69.67	Pole	Max Tension	1	0.00	0.00	0.00
			Max. Compression	26	-44.36	0.00	1.72
			Max. Mx	8	-19.02	-1268.80	0.26
			Max. My	2	-19.02	0.00	1271.86
			Max. Vy	8	21.26	-1268.80	0.26
			Max. Vx	2	-21.31	0.00	1271.86
			Max. Torque	8			0.93
L20	69.67 - 64.67	Pole	Max Tension	1	0.00	0.00	0.00
			Max. Compression	26	-46.33	0.00	1.72
			Max. Mx	8	-20.37	-1376.47	0.26
			Max. My	2	-20.37	0.00	1379.76
			Max. Vy	8	21.81	-1376.47	0.26
			Max. Vx	2	-21.86	0.00	1379.76
			Max. Torque	8			0.93
L21	64.67 - 59.67	Pole	Max Tension	1	0.00	0.00	0.00
			Max. Compression	26	-48.32	0.00	1.72
			Max. Mx	8	-21.75	-1486.85	0.27
			Max. My	2	-21.74	0.00	1490.36
			Max. Vy	8	22.35	-1486.85	0.27
			Max. Vx	2	-22.40	0.00	1490.36
			Max. Torque	8			0.93
L22	59.67 - 57.25	Pole	Max Tension	1	0.00	0.00	0.00
			Max. Compression	26	-49.40	0.00	1.72
			Max. Mx	8	-22.42	-1541.23	0.27
			Max. My	2	-22.42	0.00	1544.86
			Max. Vy	8	22.61	-1541.23	0.27
			Max. Vx	2	-22.66	0.00	1544.86
			Max. Torque	8			0.93
L23	57.25 - 57	Pole	Max Tension	1	0.00	0.00	0.00
			Max. Compression	26	-49.51	0.00	1.72
			Max. Mx	8	-22.50	-1546.89	0.27
			Max. My	2	-22.49	0.00	1550.53
			Max. Vy	8	22.63	-1546.89	0.27
			Max. Vx	2	-22.68	0.00	1550.53
			Max. Torque	8			0.93
L24	57 - 52	Pole	Max Tension	1	0.00	0.00	0.00

Section No.	Elevation ft	Component Type	Condition	Gov. Load Comb.	Axial K	Major Axis Moment kip-ft	Minor Axis Moment kip-ft
			Max. Compression	26	-51.55	0.00	1.72
			Max. Mx	8	-23.78	-1661.29	0.27
			Max. My	2	-23.78	0.00	1665.16
			Max. Vy	8	23.15	-1661.29	0.27
			Max. Vx	2	-23.19	0.00	1665.16
			Max. Torque	8			0.93
L25	52 - 43.243	Pole	Max Tension	1	0.00	0.00	0.00
			Max. Compression	26	-52.75	0.00	1.72
			Max. Mx	8	-24.63	-1736.76	0.27
			Max. My	2	-24.62	0.00	1740.78
			Max. Vy	8	23.47	-1736.76	0.27
			Max. Vx	2	-23.51	0.00	1740.78
			Max. Torque	8			0.93
L26	43.243 - 42.243	Pole	Max Tension	1	0.00	0.00	0.00
			Max. Compression	26	-56.48	0.00	1.72
			Max. Mx	8	-27.15	-1892.06	0.28
			Max. My	2	-27.14	0.00	1896.37
			Max. Vy	8	24.19	-1892.06	0.28
			Max. Vx	2	-24.24	0.00	1896.37
			Max. Torque	8			0.93
L27	42.243 - 37.243	Pole	Max Tension	1	0.00	0.00	0.00
			Max. Compression	26	-57.98	0.00	1.72
			Max. Mx	8	-28.33	-2013.99	0.28
			Max. My	2	-28.32	0.00	2018.53
			Max. Vy	8	24.61	-2013.99	0.28
			Max. Vx	2	-24.66	0.00	2018.53
			Max. Torque	8			0.93
L28	37.243 - 32.243	Pole	Max Tension	1	0.00	0.00	0.00
			Max. Compression	26	-59.50	0.00	1.72
			Max. Mx	8	-29.53	-2137.96	0.28
			Max. My	2	-29.53	0.00	2142.73
			Max. Vy	8	25.01	-2137.96	0.28
			Max. Vx	2	-25.06	0.00	2142.73
			Max. Torque	8			0.93
L29	32.243 - 27.243	Pole	Max Tension	1	0.00	0.00	0.00
			Max. Compression	26	-61.04	0.00	1.72
			Max. Mx	8	-30.75	-2263.89	0.28
			Max. My	2	-30.75	0.00	2268.89
			Max. Vy	8	25.40	-2263.89	0.28
			Max. Vx	2	-25.44	0.00	2268.89
			Max. Torque	8			0.93
L30	27.243 - 22.243	Pole	Max Tension	1	0.00	0.00	0.00
			Max. Compression	26	-62.60	0.00	1.72
			Max. Mx	8	-32.00	-2391.70	0.28
			Max. My	2	-32.00	0.00	2396.91
			Max. Vy	8	25.76	-2391.70	0.28
			Max. Vx	2	-25.81	0.00	2396.91
			Max. Torque	8			0.93
L31	22.243 - 17.25	Pole	Max Tension	1	0.00	0.00	0.00
			Max. Compression	26	-64.43	0.02	1.66
			Max. Mx	8	-33.27	-2521.06	0.28
			Max. My	2	-33.27	0.00	2526.50
			Max. Vy	8	26.10	-2521.06	0.28
			Max. Vx	2	-26.15	0.00	2526.50
			Max. Torque	8			0.93
L32	17.25 - 17	Pole	Max Tension	1	0.00	0.00	0.00
			Max. Compression	26	-64.56	0.02	1.66
			Max. Mx	8	-33.39	-2527.59	0.28
			Max. My	2	-33.38	0.00	2533.03
			Max. Vy	8	26.10	-2527.59	0.28
			Max. Vx	2	-26.15	0.00	2533.03
			Max. Torque	8			0.93
L33	17 - 12	Pole	Max Tension	1	0.00	0.00	0.00

Section No.	Elevation ft	Component Type	Condition	Gov. Load Comb.	Axial K	Major Axis Moment kip-ft	Minor Axis Moment kip-ft
			Max. Compression	26	-67.26	0.05	1.60
			Max. Mx	8	-35.41	-2659.11	0.28
			Max. My	2	-35.41	0.00	2664.77
			Max. Vy	8	26.52	-2659.11	0.28
			Max. Vx	2	-26.56	0.00	2664.77
			Max. Torque	8			0.93
L34	12 - 7	Pole	Max Tension	1	0.00	0.00	0.00
			Max. Compression	26	-69.92	0.07	1.53
			Max. Mx	8	-37.42	-2792.67	0.28
			Max. My	2	-37.42	0.00	2798.55
			Max. Vy	8	26.93	-2792.67	0.28
			Max. Vx	2	-26.97	0.00	2798.55
			Max. Torque	8			0.93
L35	7 - 5.25	Pole	Max Tension	1	0.00	0.00	0.00
			Max. Compression	26	-70.79	0.08	1.51
			Max. Mx	8	-38.07	-2839.89	0.28
			Max. My	2	-38.07	0.00	2845.85
			Max. Vy	8	27.08	-2839.89	0.28
			Max. Vx	2	-27.12	0.00	2845.85
			Max. Torque	8			0.92
L36	5.25 - 5	Pole	Max Tension	1	0.00	0.00	0.00
			Max. Compression	26	-70.91	0.08	1.51
			Max. Mx	8	-38.17	-2846.66	0.28
			Max. My	2	-38.17	0.00	2852.63
			Max. Vy	8	27.08	-2846.66	0.28
			Max. Vx	2	-27.13	0.00	2852.63
			Max. Torque	8			0.92
L37	5 - 0	Pole	Max Tension	1	0.00	0.00	0.00
			Max. Compression	26	-73.20	0.09	1.47
			Max. Mx	8	-39.96	-2983.07	0.28
			Max. My	2	-39.96	0.00	2989.25
			Max. Vy	8	27.49	-2983.07	0.28
			Max. Vx	2	-27.54	0.00	2989.25
			Max. Torque	8			0.92

Maximum Reactions

Location	Condition	Gov. Load Comb.	Vertical K	Horizontal, X K	Horizontal, Z K
Pole	Max. Vert	26	73.20	0.00	0.00
	Max. H_x	21	29.98	27.48	0.00
	Max. H_z	2	39.97	0.00	27.53
	Max. M_x	2	2989.25	0.00	27.53
	Max. M_z	8	2983.07	-27.48	0.00
	Max. Torsion	8	0.92	-27.48	0.00
	Min. Vert	11	29.98	-23.80	-13.76
	Min. H_x	9	29.98	-27.48	0.00
	Min. H_z	14	39.97	0.00	-27.53
	Min. M_x	14	-2988.67	0.00	-27.53
	Min. M_z	20	-2983.07	27.48	0.00
	Min. Torsion	20	-0.92	27.48	0.00

Tower Mast Reaction Summary

Load Combination	Vertical K	$Shear_x$ K	$Shear_z$ K	Overturning Moment, M_x kip-ft	Overturning Moment, M_z kip-ft	Torque kip-ft
Dead Only	33.31	0.00	0.00	-0.22	0.00	0.00
1.2 Dead+1.0 Wind 0 deg - No Ice	39.97	0.00	-27.53	-2989.25	0.00	0.00

Load Combination	Vertical K	$Shear_x$ K	$Shear_z$ K	Overturning Moment, M_x kip-ft	Overturning Moment, M_z kip-ft	Torque kip-ft
0.9 Dead+1.0 Wind 0 deg - No Ice	29.98	0.00	-27.53	-2948.83	0.00	0.00
1.2 Dead+1.0 Wind 30 deg - No Ice	39.97	13.74	-23.84	-2588.81	-1491.53	-0.46
0.9 Dead+1.0 Wind 30 deg - No Ice	29.98	13.74	-23.84	-2553.79	-1471.39	-0.46
1.2 Dead+1.0 Wind 60 deg - No Ice	39.97	23.80	-13.76	-1494.77	-2583.41	-0.80
0.9 Dead+1.0 Wind 60 deg - No Ice	29.98	23.80	-13.76	-1474.52	-2548.54	-0.79
1.2 Dead+1.0 Wind 90 deg - No Ice	39.97	27.48	0.00	-0.28	-2983.07	-0.92
0.9 Dead+1.0 Wind 90 deg - No Ice	29.98	27.48	0.00	-0.20	-2942.80	-0.92
1.2 Dead+1.0 Wind 120 deg - No Ice	39.97	23.80	13.76	1494.22	-2583.40	-0.80
0.9 Dead+1.0 Wind 120 deg - No Ice	29.98	23.80	13.76	1474.12	-2548.53	-0.80
1.2 Dead+1.0 Wind 150 deg - No Ice	39.97	13.74	23.84	2588.24	-1491.51	-0.46
0.9 Dead+1.0 Wind 150 deg - No Ice	29.98	13.74	23.84	2553.38	-1471.38	-0.46
1.2 Dead+1.0 Wind 180 deg - No Ice	39.97	0.00	27.53	2988.67	0.00	0.00
0.9 Dead+1.0 Wind 180 deg - No Ice	29.98	0.00	27.53	2948.41	0.00	0.00
1.2 Dead+1.0 Wind 210 deg - No Ice	39.97	-13.74	23.84	2588.24	1491.51	0.46
0.9 Dead+1.0 Wind 210 deg - No Ice	29.98	-13.74	23.84	2553.38	1471.38	0.46
1.2 Dead+1.0 Wind 240 deg - No Ice	39.97	-23.80	13.76	1494.22	2583.40	0.80
0.9 Dead+1.0 Wind 240 deg - No Ice	29.98	-23.80	13.76	1474.12	2548.53	0.80
1.2 Dead+1.0 Wind 270 deg - No Ice	39.97	-27.48	0.00	-0.28	2983.07	0.92
0.9 Dead+1.0 Wind 270 deg - No Ice	29.98	-27.48	0.00	-0.20	2942.80	0.92
1.2 Dead+1.0 Wind 300 deg - No Ice	39.97	-23.80	-13.76	-1494.77	2583.41	0.80
0.9 Dead+1.0 Wind 300 deg - No Ice	29.98	-23.80	-13.76	-1474.52	2548.54	0.79
1.2 Dead+1.0 Wind 330 deg - No Ice	39.97	-13.74	-23.84	-2588.81	1491.53	0.46
0.9 Dead+1.0 Wind 330 deg - No Ice	29.98	-13.74	-23.84	-2553.79	1471.39	0.46
1.2 Dead+1.0 Ice+1.0 Temp	73.20	-0.00	-0.00	-1.47	0.09	0.00
1.2 Dead+1.0 Wind 0 deg+1.0 Ice+1.0 Temp	73.20	0.00	-7.10	-827.05	0.09	0.00
1.2 Dead+1.0 Wind 30 deg+1.0 Ice+1.0 Temp	73.20	3.55	-6.15	-716.46	-412.09	-0.14
1.2 Dead+1.0 Wind 60 deg+1.0 Ice+1.0 Temp	73.20	6.14	-3.55	-414.35	-713.82	-0.24
1.2 Dead+1.0 Wind 90 deg+1.0 Ice+1.0 Temp	73.20	7.09	-0.00	-1.65	-824.26	-0.27
1.2 Dead+1.0 Wind 120 deg+1.0 Ice+1.0 Temp	73.20	6.14	3.55	411.05	-713.82	-0.24
1.2 Dead+1.0 Wind 150 deg+1.0 Ice+1.0 Temp	73.20	3.55	6.15	713.16	-412.08	-0.14
1.2 Dead+1.0 Wind 180 deg+1.0 Ice+1.0 Temp	73.20	0.00	7.10	823.74	0.09	-0.00
1.2 Dead+1.0 Wind 210 deg+1.0 Ice+1.0 Temp	73.20	-3.55	6.15	713.16	412.27	0.14
1.2 Dead+1.0 Wind 240 deg+1.0 Ice+1.0 Temp	73.20	-6.14	3.55	411.05	714.01	0.24
1.2 Dead+1.0 Wind 270 deg+1.0 Ice+1.0 Temp	73.20	-7.09	-0.00	-1.65	824.45	0.27
1.2 Dead+1.0 Wind 300 deg+1.0 Ice+1.0 Temp	73.20	-6.14	-3.55	-414.35	714.01	0.24

Load Combination	Vertical K	$Shear_x$ K	$Shear_z$ K	Overturning Moment, M_x kip-ft	Overturning Moment, M_z kip-ft	Torque kip-ft
1.2 Dead+1.0 Wind 330 deg+1.0 Ice+1.0 Temp	73.20	-3.55	-6.15	-716.46	412.28	0.14
Dead+Wind 0 deg - Service	33.31	0.00	-5.52	-595.94	0.00	0.00
Dead+Wind 30 deg - Service	33.31	2.76	-4.78	-516.13	-297.26	-0.09
Dead+Wind 60 deg - Service	33.31	4.77	-2.76	-298.09	-514.87	-0.16
Dead+Wind 90 deg - Service	33.31	5.51	0.00	-0.24	-594.52	-0.19
Dead+Wind 120 deg - Service	33.31	4.77	2.76	297.61	-514.87	-0.16
Dead+Wind 150 deg - Service	33.31	2.76	4.78	515.65	-297.26	-0.09
Dead+Wind 180 deg - Service	33.31	0.00	5.52	595.46	0.00	0.00
Dead+Wind 210 deg - Service	33.31	-2.76	4.78	515.65	297.26	0.09
Dead+Wind 240 deg - Service	33.31	-4.77	2.76	297.61	514.87	0.16
Dead+Wind 270 deg - Service	33.31	-5.51	0.00	-0.24	594.52	0.19
Dead+Wind 300 deg - Service	33.31	-4.77	-2.76	-298.09	514.87	0.16
Dead+Wind 330 deg - Service	33.31	-2.76	-4.78	-516.13	297.26	0.09

Solution Summary

	Sum of Applied Forces			Sum of Reactions			
Load Comb.	PX K	PY K	PZ K	PX K	PY K	PZ K	% Error
1	0.00	-33.31	0.00	0.00	33.31	0.00	0.000%
2	0.00	-39.97	-27.53	0.00	39.97	27.53	0.000%
3	0.00	-29.98	-27.53	0.00	29.98	27.53	0.000%
4	13.74	-39.97	-23.84	-13.74	39.97	23.84	0.000%
5	13.74	-29.98	-23.84	-13.74	29.98	23.84	0.000%
6	23.80	-39.97	-13.76	-23.80	39.97	13.76	0.000%
7	23.80	-29.98	-13.76	-23.80	29.98	13.76	0.000%
8	27.48	-39.97	0.00	-27.48	39.97	0.00	0.000%
9	27.48	-29.98	0.00	-27.48	29.98	0.00	0.000%
10	23.80	-39.97	13.76	-23.80	39.97	-13.76	0.000%
11	23.80	-29.98	13.76	-23.80	29.98	-13.76	0.000%
12	13.74	-39.97	23.84	-13.74	39.97	-23.84	0.000%
13	13.74	-29.98	23.84	-13.74	29.98	-23.84	0.000%
14	0.00	-39.97	27.53	0.00	39.97	-27.53	0.000%
15	0.00	-29.98	27.53	0.00	29.98	-27.53	0.000%
16	-13.74	-39.97	23.84	13.74	39.97	-23.84	0.000%
17	-13.74	-29.98	23.84	13.74	29.98	-23.84	0.000%
18	-23.80	-39.97	13.76	23.80	39.97	-13.76	0.000%
19	-23.80	-29.98	13.76	23.80	29.98	-13.76	0.000%
20	-27.48	-39.97	0.00	27.48	39.97	0.00	0.000%
21	-27.48	-29.98	0.00	27.48	29.98	0.00	0.000%
22	-23.80	-39.97	-13.76	23.80	39.97	13.76	0.000%
23	-23.80	-29.98	-13.76	23.80	29.98	13.76	0.000%
24	-13.74	-39.97	-23.84	13.74	39.97	23.84	0.000%
25	-13.74	-29.98	-23.84	13.74	29.98	23.84	0.000%
26	0.00	-73.20	0.00	0.00	73.20	0.00	0.000%
27	0.00	-73.20	-7.10	0.00	73.20	7.10	0.000%
28	3.55	-73.20	-6.15	-3.55	73.20	6.15	0.000%
29	6.14	-73.20	-3.55	-6.14	73.20	3.55	0.000%
30	7.09	-73.20	0.00	-7.09	73.20	0.00	0.000%
31	6.14	-73.20	3.55	-6.14	73.20	-3.55	0.000%
32	3.55	-73.20	6.15	-3.55	73.20	-6.15	0.000%
33	0.00	-73.20	7.10	0.00	73.20	-7.10	0.000%
34	-3.55	-73.20	6.15	3.55	73.20	-6.15	0.000%
35	-6.14	-73.20	3.55	6.14	73.20	-3.55	0.000%
36	-7.09	-73.20	0.00	7.09	73.20	0.00	0.000%
37	-6.14	-73.20	-3.55	6.14	73.20	3.55	0.000%
38	-3.55	-73.20	-6.15	3.55	73.20	6.15	0.000%

Load Comb.	Sum of Applied Forces PX K	PY K	PZ K	Sum of Reactions PX K	PY K	PZ K	% Error
39	0.00	-33.31	-5.52	0.00	33.31	5.52	0.000%
40	2.76	-33.31	-4.78	-2.76	33.31	4.78	0.000%
41	4.77	-33.31	-2.76	-4.77	33.31	2.76	0.000%
42	5.51	-33.31	0.00	-5.51	33.31	0.00	0.000%
43	4.77	-33.31	2.76	-4.77	33.31	-2.76	0.000%
44	2.76	-33.31	4.78	-2.76	33.31	-4.78	0.000%
45	0.00	-33.31	5.52	0.00	33.31	-5.52	0.000%
46	-2.76	-33.31	4.78	2.76	33.31	-4.78	0.000%
47	-4.77	-33.31	2.76	4.77	33.31	-2.76	0.000%
48	-5.51	-33.31	0.00	5.51	33.31	0.00	0.000%
49	-4.77	-33.31	-2.76	4.77	33.31	2.76	0.000%
50	-2.76	-33.31	-4.78	2.76	33.31	4.78	0.000%

Non-Linear Convergence Results

Load Combination	Converged?	Number of Cycles	Displacement Tolerance	Force Tolerance
1	Yes	4	0.00000001	0.00000001
2	Yes	5	0.00000001	0.00027587
3	Yes	5	0.00000001	0.00009244
4	Yes	7	0.00000001	0.00014123
5	Yes	6	0.00000001	0.00070687
6	Yes	7	0.00000001	0.00014452
7	Yes	6	0.00000001	0.00072417
8	Yes	6	0.00000001	0.00006337
9	Yes	5	0.00000001	0.00044597
10	Yes	7	0.00000001	0.00014027
11	Yes	6	0.00000001	0.00070213
12	Yes	7	0.00000001	0.00014358
13	Yes	6	0.00000001	0.00071923
14	Yes	5	0.00000001	0.00027578
15	Yes	5	0.00000001	0.00009242
16	Yes	7	0.00000001	0.00014357
17	Yes	6	0.00000001	0.00071923
18	Yes	7	0.00000001	0.00014027
19	Yes	6	0.00000001	0.00070213
20	Yes	6	0.00000001	0.00006337
21	Yes	5	0.00000001	0.00044597
22	Yes	7	0.00000001	0.00014452
23	Yes	6	0.00000001	0.00072418
24	Yes	7	0.00000001	0.00014123
25	Yes	6	0.00000001	0.00070687
26	Yes	4	0.00000001	0.00038957
27	Yes	7	0.00000001	0.00051790
28	Yes	7	0.00000001	0.00072988
29	Yes	7	0.00000001	0.00073502
30	Yes	7	0.00000001	0.00051509
31	Yes	7	0.00000001	0.00072023
32	Yes	7	0.00000001	0.00072562
33	Yes	7	0.00000001	0.00051255
34	Yes	7	0.00000001	0.00072565
35	Yes	7	0.00000001	0.00072025
36	Yes	7	0.00000001	0.00051510
37	Yes	7	0.00000001	0.00073503
38	Yes	7	0.00000001	0.00072991
39	Yes	4	0.00000001	0.00096621
40	Yes	5	0.00000001	0.00044544
41	Yes	5	0.00000001	0.00047417
42	Yes	5	0.00000001	0.00007347
43	Yes	5	0.00000001	0.00043697
44	Yes	5	0.00000001	0.00046465
45	Yes	4	0.00000001	0.00096436
46	Yes	5	0.00000001	0.00046465
47	Yes	5	0.00000001	0.00043697
48	Yes	5	0.00000001	0.00007347

49	Yes	5	0.00000001	0.00047417
50	Yes	5	0.00000001	0.00044544

Maximum Tower Deflections - Service Wind

Section No.	Elevation ft	Horz. Deflection in	Gov. Load Comb.	Tilt °	Twist °
L1	149 - 144	25.356	39	1.5862	0.0027
L2	144 - 139	23.697	39	1.5805	0.0026
L3	139 - 134	22.050	39	1.5634	0.0024
L4	134 - 129	20.426	39	1.5359	0.0023
L5	129 - 123.612	18.837	39	1.4979	0.0021
L6	127.388 - 122.388	18.334	39	1.4831	0.0020
L7	122.388 - 117.388	16.796	39	1.4478	0.0019
L8	117.388 - 112.388	15.314	39	1.3803	0.0016
L9	112.388 - 107.388	13.908	39	1.3037	0.0014
L10	107.388 - 102.388	12.587	39	1.2200	0.0012
L11	102.388 - 98.5	11.355	39	1.1304	0.0010
L12	98.5 - 98.25	10.465	39	1.0575	0.0009
L13	98.25 - 93.25	10.409	39	1.0549	0.0009
L14	93.25 - 88.25	9.333	39	1.0000	0.0008
L15	88.25 - 79.128	8.316	39	0.9424	0.0007
L16	83.873 - 78.128	7.476	39	0.8909	0.0006
L17	78.128 - 73.128	6.428	39	0.8418	0.0006
L18	73.128 - 69.92	5.590	39	0.7592	0.0005
L19	69.92 - 69.67	5.098	39	0.7058	0.0004
L20	69.67 - 64.67	5.061	39	0.7037	0.0004
L21	64.67 - 59.67	4.347	39	0.6600	0.0004
L22	59.67 - 57.25	3.679	39	0.6161	0.0004
L23	57.25 - 57	3.372	39	0.5946	0.0003
L24	57 - 52	3.341	39	0.5921	0.0003
L25	52 - 43.243	2.748	39	0.5406	0.0003
L26	48.76 - 42.243	2.393	39	0.5072	0.0003
L27	42.243 - 37.243	1.727	39	0.4607	0.0002
L28	37.243 - 32.243	1.281	39	0.3913	0.0002
L29	32.243 - 27.243	0.907	39	0.3224	0.0002
L30	27.243 - 22.243	0.606	39	0.2540	0.0001
L31	22.243 - 17.25	0.375	39	0.1862	0.0001
L32	17.25 - 17	0.216	39	0.1191	0.0001
L33	17 - 12	0.209	39	0.1174	0.0001
L34	12 - 7	0.105	39	0.0828	0.0000
L35	7 - 5.25	0.036	39	0.0486	0.0000
L36	5.25 - 5	0.020	39	0.0368	0.0000
L37	5 - 0	0.018	39	0.0351	0.0000

Critical Deflections and Radius of Curvature - Service Wind

Elevation ft	Appurtenance	Gov. Load Comb.	Deflection in	Tilt °	Twist °	Radius of Curvature ft
147.00	HPA65R-BU6A w/ Mount Pipe	39	24.691	1.5847	0.0026	23916
138.00	APXVAARR24_43-U-NA20 w/ Mount Pipe	39	21.723	1.5586	0.0024	11955
130.00	(4) NHH-65B-R2B w/ Mount Pipe	39	19.152	1.5068	0.0022	7549

Maximum Tower Deflections - Design Wind

Section No.	Elevation ft	Horz. Deflection in	Gov. Load Comb.	Tilt °	Twist °
L1	149 - 144	127.102	2	7.9610	0.0132
L2	144 - 139	118.800	2	7.9327	0.0127
L3	139 - 134	110.560	2	7.8478	0.0119
L4	134 - 129	102.433	2	7.7105	0.0113
L5	129 - 123.612	94.478	2	7.5205	0.0105
L6	127.388 - 122.388	91.958	2	7.4466	0.0101
L7	122.388 - 117.388	84.255	2	7.2700	0.0092
L8	117.388 - 112.388	76.834	2	6.9314	0.0080
L9	112.388 - 107.388	69.790	2	6.5477	0.0069
L10	107.388 - 102.388	63.164	2	6.1275	0.0059
L11	102.388 - 98.5	56.991	2	5.6779	0.0050
L12	98.5 - 98.25	52.522	2	5.3119	0.0043
L13	98.25 - 93.25	52.245	2	5.2986	0.0043
L14	93.25 - 88.25	46.847	2	5.0231	0.0039
L15	88.25 - 79.128	41.744	2	4.7339	0.0034
L16	83.873 - 78.128	37.527	2	4.4752	0.0031
L17	78.128 - 73.128	32.271	2	4.2284	0.0028
L18	73.128 - 69.92	28.063	2	3.8134	0.0024
L19	69.92 - 69.67	25.593	2	3.5453	0.0021
L20	69.67 - 64.67	25.407	2	3.5346	0.0021
L21	64.67 - 59.67	21.823	2	3.3148	0.0019
L22	59.67 - 57.25	18.469	2	3.0945	0.0018
L23	57.25 - 57	16.929	2	2.9864	0.0017
L24	57 - 52	16.773	2	2.9737	0.0017
L25	52 - 43.243	13.795	2	2.7148	0.0015
L26	48.76 - 42.243	12.010	2	2.5474	0.0013
L27	42.243 - 37.243	8.670	2	2.3135	0.0012
L28	37.243 - 32.243	6.430	2	1.9650	0.0010
L29	32.243 - 27.243	4.554	2	1.6188	0.0008
L30	27.243 - 22.243	3.039	2	1.2752	0.0006
L31	22.243 - 17.25	1.883	2	0.9346	0.0004
L32	17.25 - 17	1.082	2	0.5977	0.0003
L33	17 - 12	1.051	2	0.5891	0.0003
L34	12 - 7	0.525	2	0.4154	0.0002
L35	7 - 5.25	0.180	2	0.2436	0.0001
L36	5.25 - 5	0.101	2	0.1845	0.0001
L37	5 - 0	0.092	2	0.1759	0.0001

Critical Deflections and Radius of Curvature - Design Wind

Elevation ft	Appurtenance	Gov. Load Comb.	Deflection in	Tilt °	Twist °	Radius of Curvature ft
147.00	HPA65R-BU6A w/ Mount Pipe	2	123.778	7.9537	0.0130	5002
138.00	APXVAARR24_43-U-NA20 w/ Mount Pipe	2	108.924	7.8240	0.0118	2480
130.00	(4) NHH-65B-R2B w/ Mount Pipe	2	96.052	7.5648	0.0108	1561

Compression Checks

Pole Design Data

Section No.	Elevation ft	Size	L ft	L_u ft	Kl/r	A in^2	P_u K	ϕP_n K	Ratio $\frac{P_u}{\phi P_n}$
L1	149 - 144 (1)	TP22.426x21.5x0.188	5.00	0.00	0.0	13.235	-3.76	774.23	0.005
L2	144 - 139 (2)	TP23.352x22.426x0.188	5.00	0.00	0.0	13.786	-4.02	806.47	0.005
L3	139 - 134 (3)	TP24.278x23.352x0.188	5.00	0.00	0.0	14.337	-5.59	838.71	0.007
L4	134 - 129 (4)	TP25.204x24.278x0.188	5.00	0.00	0.0	14.888	-9.04	870.95	0.010
L5	129 - 123.612 (5)	TP26.202x25.204x0.188	5.39	0.00	0.0	15.066	-9.21	881.35	0.010
L6	123.612 - 122.388 (6)	TP26.043x25.128x0.188	5.00	0.00	0.0	15.387	-9.98	900.15	0.011
L7	122.388 - 117.388 (7)	TP26.958x26.043x0.188	5.00	0.00	0.0	15.932	-10.58	932.01	0.011
L8	117.388 - 112.388 (8)	TP27.873x26.958x0.188	5.00	0.00	0.0	16.476	-11.21	963.86	0.012
L9	112.388 - 107.388 (9)	TP28.788x27.873x0.188	5.00	0.00	0.0	17.021	-11.86	995.72	0.012
L10	107.388 - 102.388 (10)	TP29.703x28.788x0.188	5.00	0.00	0.0	17.565	-12.54	1027.58	0.012
L11	102.388 - 98.5 (11)	TP30.415x29.703x0.188	3.89	0.00	0.0	17.989	-13.09	1052.35	0.012
L12	98.5 - 98.25 (12)	TP30.46x30.415x0.344	0.25	0.00	0.0	32.859	-13.15	1922.25	0.007
L13	98.25 - 93.25 (13)	TP31.375x30.46x0.338	5.00	0.00	0.0	33.249	-14.07	1945.04	0.007
L14	93.25 - 88.25 (14)	TP32.29x31.375x0.331	5.00	0.00	0.0	33.601	-15.02	1965.68	0.008
L15	88.25 - 79.128 (15)	TP33.96x32.29x0.331	9.12	0.00	0.0	34.444	-15.86	2014.95	0.008
L16	79.128 - 78.128 (16)	TP33.763x32.716x0.25	5.75	0.00	0.0	26.593	-17.44	1555.68	0.011
L17	78.128 - 73.128 (17)	TP34.675x33.763x0.25	5.00	0.00	0.0	27.316	-18.34	1597.98	0.011
L18	73.128 - 69.92 (18)	TP35.259x34.675x0.25	3.21	0.00	0.0	27.780	-18.93	1625.12	0.012
L19	69.92 - 69.67 (19)	TP35.305x35.259x0.5	0.25	0.00	0.0	55.235	-19.02	3231.27	0.006
L20	69.67 - 64.67 (20)	TP36.216x35.305x0.488	5.00	0.00	0.0	55.284	-20.37	3234.10	0.006
L21	64.67 - 59.67 (21)	TP37.127x36.216x0.488	5.00	0.00	0.0	56.694	-21.74	3316.58	0.007
L22	59.67 - 57.25 (22)	TP37.568x37.127x0.481	2.42	0.00	0.0	56.650	-22.42	3314.03	0.007
L23	57.25 - 57 (23)	TP37.614x37.568x0.419	0.25	0.00	0.0	49.437	-22.49	2892.04	0.008
L24	57 - 52 (24)	TP38.525x37.614x0.413	5.00	0.00	0.0	49.900	-23.78	2919.15	0.008
L25	52 - 43.243 (25)	TP40.121x38.525x0.413	8.76	0.00	0.0	50.673	-24.62	2964.37	0.008
L26	43.243 - 42.243 (26)	TP39.803x38.616x0.313	6.52	0.00	0.0	39.170	-27.14	2291.43	0.012
L27	42.243 - 37.243 (27)	TP40.714x39.803x0.313	5.00	0.00	0.0	40.073	-28.32	2344.29	0.012
L28	37.243 - 32.243 (28)	TP41.625x40.714x0.313	5.00	0.00	0.0	40.977	-29.53	2397.15	0.012
L29	32.243 - 27.243 (29)	TP42.536x41.625x0.313	5.00	0.00	0.0	41.881	-30.75	2450.02	0.013
L30	27.243 - 22.243 (30)	TP43.447x42.536x0.313	5.00	0.00	0.0	42.784	-32.00	2502.88	0.013
L31	22.243 - 17.25 (31)	TP44.357x43.447x0.313	4.99	0.00	0.0	43.687	-33.27	2555.67	0.013
L32	17.25 - 17 (32)	TP44.403x44.357x0.625	0.25	0.00	0.0	86.844	-33.38	5080.35	0.007
L33	17 - 12 (33)	TP45.314x44.403x0.613	5.00	0.00	0.0	86.902	-35.41	5083.78	0.007
L34	12 - 7 (34)	TP46.225x45.314x0.613	5.00	0.00	0.0	88.673	-37.42	5187.39	0.007
L35	7 - 5.25 (35)	TP46.543x46.225x0.613	1.75	0.00	0.0	89.293	-38.07	5223.65	0.007
L36	5.25 - 5 (36)	TP46.589x46.543x0.6	0.25	0.00	0.0	87.581	-38.17	5123.51	0.007
L37	5 - 0 (37)	TP47.5x46.589x0.588	5.00	0.00	0.0	87.479	-39.96	5117.52	0.008

Pole Bending Design Data

Section No.	Elevation ft	Size	M_{ux} kip-ft	ϕM_{nx} kip-ft	Ratio $\frac{M_{ux}}{\phi M_{nx}}$	M_{uy} kip-ft	ϕM_{ny} kip-ft	Ratio $\frac{M_{uy}}{\phi M_{ny}}$
L1	149 - 144 (1)	TP22.426x21.5x0.188	36.11	422.86	0.085	0.00	422.86	0.000
L2	144 - 139 (2)	TP23.352x22.426x0.188	69.92	452.93	0.154	0.00	452.93	0.000
L3	139 - 134 (3)	TP24.278x23.352x0.188	122.23	483.48	0.253	0.00	483.48	0.000
L4	134 - 129 (4)	TP25.204x24.278x0.188	180.58	514.46	0.351	0.00	514.46	0.000
L5	129 - 123.612 (5)	TP26.202x25.204x0.188	205.77	524.53	0.392	0.00	524.53	0.000
L6	123.612 - 122.388 (6)	TP26.043x25.128x0.188	285.59	542.84	0.526	0.00	542.84	0.000
L7	122.388 - 117.388 (7)	TP26.958x26.043x0.188	367.81	574.11	0.641	0.00	574.11	0.000
L8	117.388 - 112.388 (8)	TP27.873x26.958x0.188	452.31	605.63	0.747	0.00	605.63	0.000
L9	112.388 - 107.388 (9)	TP28.788x27.873x0.188	539.09	637.35	0.846	0.00	637.35	0.000
L10	107.388 - 102.388 (10)	TP29.703x28.788x0.188	628.12	669.22	0.939	0.00	669.22	0.000
L11	102.388 - 98.5 (11)	TP30.415x29.703x0.188	698.90	694.06	1.007	0.00	694.06	0.000
L12	98.5 - 98.25 (12)	TP30.46x30.415x0.344	703.50	1506.55	0.467	0.00	1506.55	0.000
L13	98.25 - 93.25 (13)	TP31.375x30.46x0.338	796.81	1571.88	0.507	0.00	1571.88	0.000
L14	93.25 - 88.25 (14)	TP32.29x31.375x0.331	892.70	1630.72	0.547	0.00	1630.72	0.000
L15	88.25 - 79.128 (15)	TP33.96x32.29x0.331	978.75	1703.49	0.575	0.00	1703.49	0.000
L16	79.128 - 78.128 (16)	TP33.763x32.716x0.25	1094.92	1228.92	0.891	0.00	1228.92	0.000
L17	78.128 - 73.128 (17)	TP34.675x33.763x0.25	1198.73	1283.78	0.934	0.00	1283.78	0.000
L18	73.128 - 69.92 (18)	TP35.259x34.675x0.25	1266.54	1319.19	0.960	0.00	1319.19	0.000
L19	69.92 - 69.67 (19)	TP35.305x35.259x0.5	1271.87	2918.19	0.436	0.00	2918.19	0.000
L20	69.67 - 64.67 (20)	TP36.216x35.305x0.488	1379.76	3000.41	0.460	0.00	3000.41	0.000
L21	64.67 - 59.67 (21)	TP37.127x36.216x0.488	1490.37	3156.46	0.472	0.00	3156.46	0.000
L22	59.67 - 57.25 (22)	TP37.568x37.127x0.481	1544.86	3193.57	0.484	0.00	3193.57	0.000
L23	57.25 - 57 (23)	TP37.614x37.568x0.419	1550.53	2799.79	0.554	0.00	2799.79	0.000
L24	57 - 52 (24)	TP38.525x37.614x0.413	1665.16	2896.98	0.575	0.00	2896.98	0.000
L25	52 - 43.243 (25)	TP40.121x38.525x0.413	1740.78	2987.93	0.583	0.00	2987.93	0.000
L26	43.243 - 42.243 (26)	TP39.803x38.616x0.313	1896.38	2177.53	0.871	0.00	2177.53	0.000
L27	42.243 - 37.243 (27)	TP40.714x39.803x0.313	2018.53	2261.48	0.893	0.00	2261.48	0.000
L28	37.243 - 32.243 (28)	TP41.625x40.714x0.313	2142.72	2346.11	0.913	0.00	2346.11	0.000
L29	32.243 - 27.243 (29)	TP42.536x41.625x0.313	2268.88	2431.36	0.933	0.00	2431.36	0.000
L30	27.243 - 22.243 (30)	TP43.447x42.536x0.313	2396.91	2517.18	0.952	0.00	2517.18	0.000
L31	22.243 - 17.25 (31)	TP44.357x43.447x0.313	2526.50	2603.39	0.970	0.00	2603.39	0.000
L32	17.25 - 17 (32)	TP44.403x44.357x0.625	2533.03	5771.44	0.439	0.00	5771.44	0.000
L33	17 - 12 (33)	TP45.314x44.403x0.613	2664.78	5900.52	0.452	0.00	5900.52	0.000
L34	12 - 7 (34)	TP46.225x45.314x0.613	2798.55	6145.13	0.455	0.00	6145.13	0.000
L35	7 - 5.25 (35)	TP46.543x46.225x0.613	2845.86	6231.92	0.457	0.00	6231.92	0.000
L36	5.25 - 5 (36)	TP46.589x46.543x0.6	2852.63	6121.92	0.466	0.00	6121.92	0.000
L37	5 - 0 (37)	TP47.5x46.589x0.588	2989.25	6240.78	0.479	0.00	6240.78	0.000

Pole Shear Design Data

Section No.	Elevation ft	Size	Actual V_u K	ϕV_n K	Ratio $\frac{V_u}{\phi V_n}$	Actual T_u kip-ft	ϕT_n kip-ft	Ratio $\frac{T_u}{\phi T_n}$
L1	149 - 144 (1)	TP22.426x21.5x0.188	6.55	232.27	0.028	0.00	452.35	0.000
L2	144 - 139 (2)	TP23.352x22.426x0.188	6.98	241.94	0.029	0.00	490.81	0.000
L3	139 - 134 (3)	TP24.278x23.352x0.188	10.33	251.61	0.041	0.00	530.84	0.000
L4	134 - 129 (4)	TP25.204x24.278x0.188	15.55	261.29	0.060	0.00	572.43	0.000
L5	129 - 123.612 (5)	TP26.202x25.204x0.188	15.71	264.40	0.059	0.00	586.18	0.000
L6	123.612 - 122.388 (6)	TP26.043x25.128x0.188	16.22	270.04	0.060	0.00	611.46	0.000
L7	122.388 - 117.388 (7)	TP26.958x26.043x0.188	16.68	279.60	0.060	0.00	655.50	0.000
L8	117.388 - 112.388 (8)	TP27.873x26.958x0.188	17.14	289.16	0.059	0.00	701.08	0.000
L9	112.388 - 107.388 (9)	TP28.788x27.873x0.188	17.59	298.72	0.059	0.00	748.19	0.000
L10	107.388 - 102.388 (10)	TP29.703x28.788x0.188	18.04	308.27	0.059	0.00	796.83	0.000
L11	102.388 - 98.5 (11)	TP30.415x29.703x0.188	18.39	315.70	0.058	0.00	835.71	0.000
L12	98.5 - 98.25 (12)	TP30.46x30.415x0.344	18.41	576.68	0.032	0.00	1520.96	0.000
L13	98.25 - 93.25 (13)	TP31.375x30.46x0.338	18.93	583.51	0.032	0.00	1586.07	0.000
L14	93.25 - 88.25 (14)	TP32.29x31.375x0.331	19.44	589.71	0.033	0.00	1650.47	0.000
L15	88.25 - 79.128 (15)	TP33.96x32.29x0.331	19.89	604.49	0.033	0.00	1734.25	0.000
L16	79.128 - 78.128 (16)	TP33.763x32.716x0.25	20.55	466.70	0.044	0.00	1369.75	0.000
L17	78.128 - 73.128 (17)	TP34.675x33.763x0.25	21.01	479.39	0.044	0.00	1445.25	0.000
L18	73.128 - 69.92 (18)	TP35.259x34.675x0.25	21.30	487.54	0.044	0.00	1494.76	0.000
L19	69.92 - 69.67 (19)	TP35.305x35.259x0.5	21.31	969.38	0.022	0.00	2954.71	0.000
L20	69.67 - 64.67 (20)	TP36.216x35.305x0.488	21.86	970.23	0.023	0.00	3035.78	0.000
L21	64.67 - 59.67 (21)	TP37.127x36.216x0.488	22.40	994.98	0.023	0.00	3192.61	0.000
L22	59.67 - 57.25 (22)	TP37.568x37.127x0.481	22.66	994.21	0.023	0.00	3229.10	0.000
L23	57.25 - 57 (23)	TP37.614x37.568x0.419	22.68	867.61	0.026	0.00	2826.13	0.000
L24	57 - 52 (24)	TP38.525x37.614x0.413	23.19	875.74	0.026	0.00	2922.98	0.000
L25	52 - 43.243 (25)	TP40.121x38.525x0.413	23.51	889.31	0.026	0.00	3014.26	0.000
L26	43.243 - 42.243 (26)	TP39.803x38.616x0.313	24.24	687.43	0.035	0.00	2377.39	0.000
L27	42.243 - 37.243 (27)	TP40.714x39.803x0.313	24.66	703.29	0.035	0.00	2488.35	0.000
L28	37.243 - 32.243 (28)	TP41.625x40.714x0.313	25.06	719.15	0.035	0.00	2601.83	0.000
L29	32.243 - 27.243 (29)	TP42.536x41.625x0.313	25.44	735.01	0.035	0.00	2717.85	0.000
L30	27.243 - 22.243 (30)	TP43.447x42.536x0.313	25.81	750.86	0.034	0.00	2836.40	0.000
L31	22.243 - 17.25 (31)	TP44.357x43.447x0.313	26.15	766.70	0.034	0.00	2957.31	0.000
L32	17.25 - 17 (32)	TP44.403x44.357x0.625	26.15	1524.11	0.017	0.00	5843.13	0.000
L33	17 - 12 (33)	TP45.314x44.403x0.613	26.56	1525.13	0.017	0.00	5970.42	0.000
L34	12 - 7 (34)	TP46.225x45.314x0.613	26.97	1556.22	0.017	0.00	6216.27	0.000
L35	7 - 5.25 (35)	TP46.543x46.225x0.613	27.12	1567.09	0.017	0.00	6303.48	0.000
L36	5.25 - 5 (36)	TP46.589x46.543x0.6	27.13	1537.05	0.018	0.00	6190.46	0.000

Section No.	Elevation ft	Size	Actual V_u K	ϕV_n K	Ratio $\frac{V_u}{\phi V_n}$	Actual T_u kip-ft	ϕT_n kip-ft	Ratio $\frac{T_u}{\phi T_n}$
L37	5 - 0 (37)	TP47.5x46.589x0.588	27.54	1535.25	0.018	0.00	6307.38	0.000

Pole Interaction Design Data

Section No.	Elevation ft	Ratio $\frac{P_u}{\phi P_n}$	Ratio $\frac{M_{ux}}{\phi M_{nx}}$	Ratio $\frac{M_{uy}}{\phi M_{ny}}$	Ratio $\frac{V_u}{\phi V_n}$	Ratio $\frac{T_u}{\phi T_n}$	Comb. Stress Ratio	Allow. Stress Ratio	Criteria
L1	149 - 144 (1)	0.005	0.085	0.000	0.028	0.000	0.091	1.050	4.8.2
L2	144 - 139 (2)	0.005	0.154	0.000	0.029	0.000	0.160	1.050	4.8.2
L3	139 - 134 (3)	0.007	0.253	0.000	0.041	0.000	0.261	1.050	4.8.2
L4	134 - 129 (4)	0.010	0.351	0.000	0.060	0.000	0.365	1.050	4.8.2
L5	129 - 123.612 (5)	0.010	0.392	0.000	0.059	0.000	0.406	1.050	4.8.2
L6	123.612 - 122.388 (6)	0.011	0.526	0.000	0.060	0.000	0.541	1.050	4.8.2
L7	122.388 - 117.388 (7)	0.011	0.641	0.000	0.060	0.000	0.656	1.050	4.8.2
L8	117.388 - 112.388 (8)	0.012	0.747	0.000	0.059	0.000	0.762	1.050	4.8.2
L9	112.388 - 107.388 (9)	0.012	0.846	0.000	0.059	0.000	0.861	1.050	4.8.2
L10	107.388 - 102.388 (10)	0.012	0.939	0.000	0.059	0.000	0.954	1.050	4.8.2
L11	102.388 - 98.5 (11)	0.012	1.007	0.000	0.058	0.000	1.023	1.050	4.8.2
L12	98.5 - 98.25 (12)	0.007	0.467	0.000	0.032	0.000	0.475	1.050	4.8.2
L13	98.25 - 93.25 (13)	0.007	0.507	0.000	0.032	0.000	0.515	1.050	4.8.2
L14	93.25 - 88.25 (14)	0.008	0.547	0.000	0.033	0.000	0.556	1.050	4.8.2
L15	88.25 - 79.128 (15)	0.008	0.575	0.000	0.033	0.000	0.584	1.050	4.8.2
L16	79.128 - 78.128 (16)	0.011	0.891	0.000	0.044	0.000	0.904	1.050	4.8.2
L17	78.128 - 73.128 (17)	0.011	0.934	0.000	0.044	0.000	0.947	1.050	4.8.2
L18	73.128 - 69.92 (18)	0.012	0.960	0.000	0.044	0.000	0.974	1.050	4.8.2
L19	69.92 - 69.67 (19)	0.006	0.436	0.000	0.022	0.000	0.442	1.050	4.8.2
L20	69.67 - 64.67 (20)	0.006	0.460	0.000	0.023	0.000	0.467	1.050	4.8.2
L21	64.67 - 59.67 (21)	0.007	0.472	0.000	0.023	0.000	0.479	1.050	4.8.2
L22	59.67 - 57.25 (22)	0.007	0.484	0.000	0.023	0.000	0.491	1.050	4.8.2
L23	57.25 - 57 (23)	0.008	0.554	0.000	0.026	0.000	0.562	1.050	4.8.2
L24	57 - 52 (24)	0.008	0.575	0.000	0.026	0.000	0.584	1.050	4.8.2
L25	52 - 43.243 (25)	0.008	0.583	0.000	0.026	0.000	0.592	1.050	4.8.2
L26	43.243 - 42.243 (26)	0.012	0.871	0.000	0.035	0.000	0.884	1.050	4.8.2
L27	42.243 - 37.243 (27)	0.012	0.893	0.000	0.035	0.000	0.906	1.050	4.8.2
L28	37.243 - 32.243 (28)	0.012	0.913	0.000	0.035	0.000	0.927	1.050	4.8.2
L29	32.243 - 27.243 (29)	0.013	0.933	0.000	0.035	0.000	0.947	1.050	4.8.2
L30	27.243 - 22.243 (30)	0.013	0.952	0.000	0.034	0.000	0.966	1.050	4.8.2
L31	22.243 -	0.013	0.970	0.000	0.034	0.000	0.985	1.050	4.8.2

Section No.	Elevation ft	Ratio P_u / ϕP_n	Ratio M_{ux} / ϕM_{nx}	Ratio M_{uy} / ϕM_{ny}	Ratio V_u / ϕV_n	Ratio T_u / ϕT_n	Comb. Stress Ratio	Allow. Stress Ratio	Criteria
L32	17.25 (31) 17.25 - 17 (32)	0.007	0.439	0.000	0.017	0.000	0.446	1.050	4.8.2
L33	17 - 12 (33)	0.007	0.452	0.000	0.017	0.000	0.459	1.050	4.8.2
L34	12 - 7 (34)	0.007	0.455	0.000	0.017	0.000	0.463	1.050	4.8.2
L35	7 - 5.25 (35)	0.007	0.457	0.000	0.017	0.000	0.464	1.050	4.8.2
L36	5.25 - 5 (36)	0.007	0.466	0.000	0.018	0.000	0.474	1.050	4.8.2
L37	5 - 0 (37)	0.008	0.479	0.000	0.018	0.000	0.487	1.050	4.8.2

Section Capacity Table

Section No.	Elevation ft	Component Type	Size	Critical Element	P K	$øP_{allow}$ K	% Capacity	Pass Fail
L1	149 - 144	Pole	TP22.426x21.5x0.188	1	-3.76	812.94	8.7	Pass
L2	144 - 139	Pole	TP23.352x22.426x0.188	2	-4.02	846.79	15.3	Pass
L3	139 - 134	Pole	TP24.278x23.352x0.188	3	-5.59	880.65	24.9	Pass
L4	134 - 129	Pole	TP25.204x24.278x0.188	4	-9.04	914.50	34.8	Pass
L5	129 - 123.612	Pole	TP26.202x25.204x0.188	5	-9.21	925.41	38.7	Pass
L6	123.612 - 122.388	Pole	TP26.043x25.128x0.188	6	-9.98	945.15	51.5	Pass
L7	122.388 - 117.388	Pole	TP26.958x26.043x0.188	7	-10.58	978.61	62.4	Pass
L8	117.388 - 112.388	Pole	TP27.873x26.958x0.188	8	-11.21	1012.06	72.6	Pass
L9	112.388 - 107.388	Pole	TP28.788x27.873x0.188	9	-11.86	1045.50	82.0	Pass
L10	107.388 - 102.388	Pole	TP29.703x28.788x0.188	10	-12.54	1078.96	90.9	Pass
L11	102.388 - 98.5	Pole	TP30.415x29.703x0.188	11	-13.09	1104.97	97.4	Pass
L12	98.5 - 98.25	Pole	TP30.46x30.415x0.344	12	-13.15	2018.36	45.2	Pass
L13	98.25 - 93.25	Pole	TP31.375x30.46x0.338	13	-14.07	2042.29	49.1	Pass
L14	93.25 - 88.25	Pole	TP32.29x31.375x0.331	14	-15.02	2063.96	53.0	Pass
L15	88.25 - 79.128	Pole	TP33.96x32.29x0.331	15	-15.86	2115.70	55.6	Pass
L16	79.128 - 78.128	Pole	TP33.763x32.716x0.25	16	-17.44	1633.46	86.1	Pass
L17	78.128 - 73.128	Pole	TP34.675x33.763x0.25	17	-18.34	1677.88	90.2	Pass
L18	73.128 - 69.92	Pole	TP35.259x34.675x0.25	18	-18.93	1706.38	92.7	Pass
L19	69.92 - 69.67	Pole	TP35.305x35.259x0.5	19	-19.02	3392.83	42.1	Pass
L20	69.67 - 64.67	Pole	TP36.216x35.305x0.488	20	-20.37	3395.80	44.4	Pass
L21	64.67 - 59.67	Pole	TP37.127x36.216x0.488	21	-21.74	3482.41	45.6	Pass
L22	59.67 - 57.25	Pole	TP37.568x37.127x0.481	22	-22.42	3479.73	46.8	Pass
L23	57.25 - 57	Pole	TP37.614x37.568x0.419	23	-22.49	3036.64	53.5	Pass
L24	57 - 52	Pole	TP38.525x37.614x0.413	24	-23.78	3065.11	55.6	Pass
L25	52 - 43.243	Pole	TP40.121x38.525x0.413	25	-24.62	3112.59	56.3	Pass
L26	43.243 - 42.243	Pole	TP39.803x38.616x0.313	26	-27.14	2406.00	84.2	Pass
L27	42.243 - 37.243	Pole	TP40.714x39.803x0.313	27	-28.32	2461.50	86.3	Pass
L28	37.243 - 32.243	Pole	TP41.625x40.714x0.313	28	-29.53	2517.01	88.3	Pass
L29	32.243 - 27.243	Pole	TP42.536x41.625x0.313	29	-30.75	2572.52	90.2	Pass
L30	27.243 - 22.243	Pole	TP43.447x42.536x0.313	30	-32.00	2628.02	92.0	Pass
L31	22.243 - 17.25	Pole	TP44.357x43.447x0.313	31	-33.27	2683.45	93.8	Pass
L32	17.25 - 17	Pole	TP44.403x44.357x0.625	32	-33.38	5334.37	42.5	Pass
L33	17 - 12	Pole	TP45.314x44.403x0.613	33	-35.41	5337.97	43.7	Pass
L34	12 - 7	Pole	TP46.225x45.314x0.613	34	-37.42	5446.76	44.1	Pass
L35	7 - 5.25	Pole	TP46.543x46.225x0.613	35	-38.07	5484.83	44.2	Pass
L36	5.25 - 5	Pole	TP46.589x46.543x0.6	36	-38.17	5379.69	45.1	Pass
L37	5 - 0	Pole	TP47.5x46.589x0.588	37	-39.96	5373.40	46.4	Pass
							Summary	
						Pole (L11)	97.4	Pass
						RATING =	**97.4**	**Pass**

***NOTE: Above stress ratios for reinforced sections are approximate. More exact calculations are presented in Appendix C.**

APPENDIX B

BASE LEVEL DRAWING

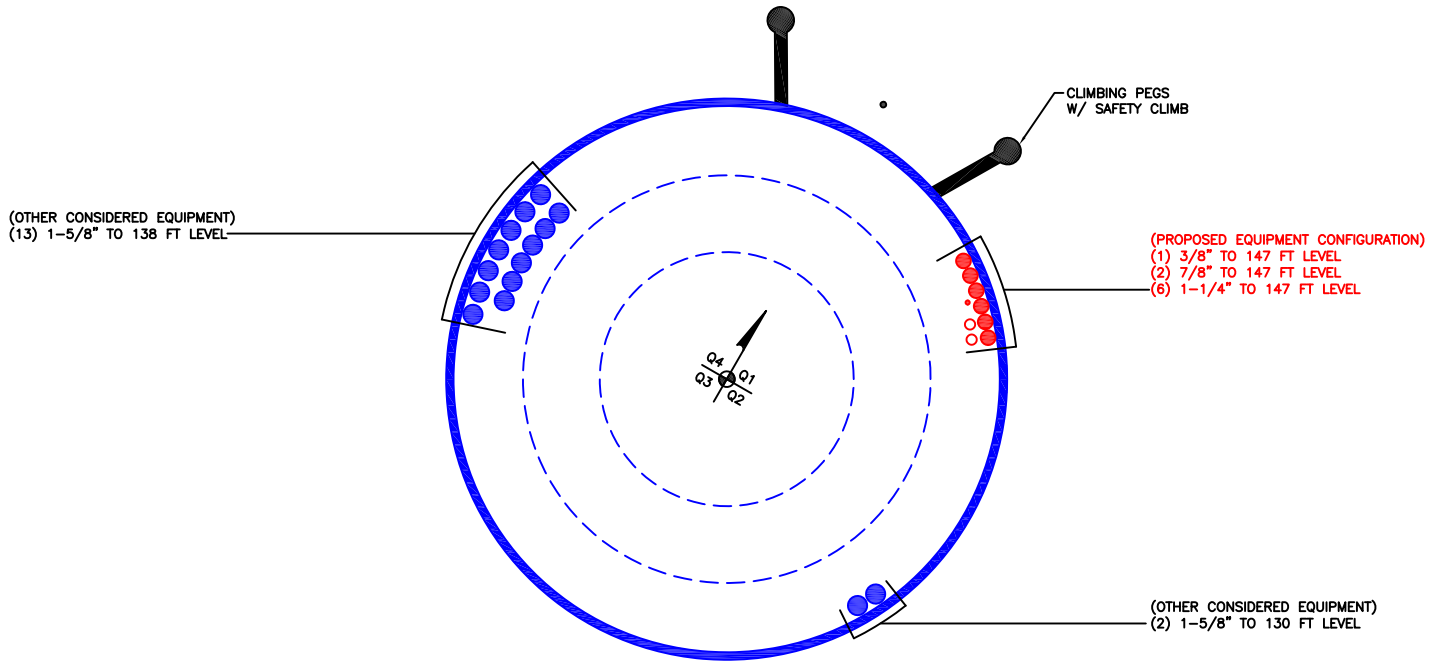
CLIMBING PEGS
W/ SAFETY CLIMB
(OTHER CONSIDERED EQUIPMENT)
(13) 1-5/8" TO 138 FT LEVEL
(PROPOSED EQUIPMENT CONFIGURATION)
(1) 3/8" TO 147 FT LEVEL
(2) 7/8" TO 147 FT LEVEL
(6) 1-1/4" TO 147 FT LEVEL
Q4
Q1
Q3
Q2
(OTHER CONSIDERED EQUIPMENT)
(2) 1-5/8" TO 130 FT LEVEL

APPENDIX C

ADDITIONAL CALCULATIONS

CCIpole

per TIA-222- H

Site BU: 842856

Work Order: 1923928

CROWN CASTLE

Copyright © 2019 Crown Castle

Pole Geometry

	Pole Height Above Base (ft)	Section Length (ft)	Lap Splice Length (ft)	Number of Sides	Top Diameter (in)	Bottom Diameter (in)	Wall Thickness (in)	Bend Radius (in)	Pole Material
1	149	25.388	3.776	18	21.5	26.2021	0.1875	Auto	A572-65
2	127.388	48.26	4.745	18	25.13	33.9598	0.1875	Auto	A572-65
3	83.873	40.63	5.517	18	32.72	40.1211	0.25	Auto	A572-65
4	48.76	48.76	0	18	38.62	47.5	0.3125	Auto	A572-65

Reinforcement Configuration

	Bottom Effective Elevation (ft)	Top Effective Elevation (ft)	Type	Model	Number	1	2	3	4	5	6	7	8	9	10	11	12	13	14	15	16	17	18
1	47.25	57.25	plate	CCI-AFP-060100	3																		
2	82.5	98.5	plate	CCI-AFP-045100	3																		
3	57.25	69.92	plate	CCI-AFP-065125	3																		
4	5.25	17.25	plate	CFP-080125	2																		
5	5.25	17.25	plate	WCFP-080125	2																		
6	0	5.25	plate	TS 1	4	-3.1		1.8							-3.1		1.8						
7	0	5.25	plate	TS 2	2							3.13									3.13		
8	0	5.25	plate	TS 2	2							-3.1									-3.1		
9																							
10																							

Reinforcement Details

	B (in)	H (in)	Gross Area (in^2)	Pole Face to Centroid (in)	Bottom Termination Type	Bottom Termination Length (in)	Top Termination Type	Top Termination Length (in)	Lu (in)	Net Area (in2)	Bolt Hole Size (in)	Reinforcement Material
1	6	1	6	0.5	PC 8.8 - M20 (100)	30	PC 8.8 - M20 (100)	30.000	16.000	4.750	1.1875	A572-65
2	4.5	1	4.5	0.5	PC 8.8 - M20 (100)	24	PC 8.8 - M20 (100)	24.000	20.000	3.250	1.1875	A572-65
3	6.5	1.25	8.125	0.625	PC 8.8 - M20 (100)	42	PC 8.8 - M20 (100)	42.000	19.000	6.563	1.1875	A572-65
4	8	1.25	10	0.625	PC 8.8 - M20 (100)	48	PC 8.8 - M20 (100)	48.000	17.000	8.438	1.1875	A572-65
5	8	1.25	10	0.625	Welded	n/a	PC 8.8 - M20 (100)	48.000	17.000	8.438	1.1875	A572-65
6	0.75	6.5	4.875	3.25	Welded	n/a	Welded	n/a	0.000	4.875	0.0000	A572-50
7	0.75	5.25	3.9375	2.625	Welded	n/a	Welded	n/a	0.000	3.938	0.0000	A572-50
8	0.75	5.25	3.9375	2.625	Welded	n/a	Welded	n/a	0.000	3.938	0.0000	A572-50

Connection Details for Custom Reinforcements

Reinforcement	End	# Bolts	N or X	Bolt Spacing (in)	Edge Dist (in)	Weld Grade (ksi)	Transverse (Horiz.) Weld Type	Horiz. Weld Length (in)	Horiz. Groove Depth (in)	Horiz. Groove Angle (deg)	Horiz. Fillet Size (in)	Vertical Weld Length (in)	Vertical Fillet Size (in)	Rev H Connection Capacity (kip)
CFP-080125	Top	16	N	3	3	-	-	-	-	-	-	-	-	-
	Bottom	16	N	3	3	-	-	-	-	-	-	-	-	-
WCFP-080125	Top	16	N	3	3	-	-	-	-	-	-	-	-	-
	Bottom	-	-	-	-	80	None	-	-	-	-	59.5	0.313	-
TS 1	Top	-	-	-	-	80	None	-	-	-	-	60	0.313	-
	Bottom	-	-	-	-	80	CJP Groove	11.5	0.375	45	0.25	-	-	-
TS 2	Top	-	-	-	-	80	None	-	-	-	-	60	0.313	-
	Bottom	-	-	-	-	80	CJP Groove	10.5	0.375	45	0.25	-	-	-

TNX Geometry Input

Increment (ft): 5 Export to TNX

	Section Height (ft)	Section Length (ft)	Lap Splice Length (ft)	Number of Sides	Top Diameter (in)	Bottom Diameter (in)	Wall Thickness (in)	Tapered Pole Grade	Weight Multiplier
1	149 - 144	5		18	21.500	22.426	0.1875	A572-65	1.000
2	144 - 139	5		18	22.426	23.352	0.1875	A572-65	1.000
3	139 - 134	5		18	23.352	24.278	0.1875	A572-65	1.000
4	134 - 129	5		18	24.278	25.204	0.1875	A572-65	1.000
5	129 - 127.388	5.388	3.776	18	25.204	26.202	0.1875	A572-65	1.000
6	127.388 - 122.388	5		18	25.128	26.043	0.1875	A572-65	1.000
7	122.388 - 117.388	5		18	26.043	26.958	0.1875	A572-65	1.000
8	117.388 - 112.388	5		18	26.958	27.873	0.1875	A572-65	1.000
9	112.388 - 107.388	5		18	27.873	28.788	0.1875	A572-65	1.000
10	107.388 - 102.388	5		18	28.788	29.703	0.1875	A572-65	1.000
11	102.388 - 98.5	3.888		18	29.703	30.415	0.1875	A572-65	1.000
12	98.5 - 98.25	0.25		18	30.415	30.460	0.34375	A572-65	0.959
13	98.25 - 93.25	5		18	30.460	31.375	0.3375	A572-65	0.964
14	93.25 - 88.25	5		18	31.375	32.290	0.33125	A572-65	0.970
15	88.25 - 83.873	9.122	4.745	18	32.290	33.960	0.33125	A572-65	0.960
16	83.873 - 78.128	5.745		18	32.716	33.763	0.25	A572-65	1.000
17	78.128 - 73.128	5		18	33.763	34.675	0.25	A572-65	1.000
18	73.128 - 69.92	3.208		18	34.675	35.259	0.25	A572-65	1.000
19	69.92 - 69.67	0.25		18	35.259	35.305	0.5	A572-65	0.945
20	69.67 - 64.67	5		18	35.305	36.216	0.4875	A572-65	0.957
21	64.67 - 59.67	5		18	36.216	37.127	0.4875	A572-65	0.946
22	59.67 - 57.25	2.42		18	37.127	37.568	0.48125	A572-65	0.953
23	57.25 - 57	0.25		18	37.568	37.614	0.41875	A572-65	0.964
24	57 - 52	5		18	37.614	38.525	0.4125	A572-65	0.969
25	52 - 48.76	8.757	5.517	18	38.525	40.121	0.4125	A572-65	0.964
26	48.76 - 42.243	6.517		18	38.616	39.803	0.3125	A572-65	1.000
27	42.243 - 37.243	5		18	39.803	40.714	0.3125	A572-65	1.000
28	37.243 - 32.243	5		18	40.714	41.625	0.3125	A572-65	1.000
29	32.243 - 27.243	5		18	41.625	42.536	0.3125	A572-65	1.000
30	27.243 - 22.243	5		18	42.536	43.447	0.3125	A572-65	1.000
31	22.243 - 17.25	4.993		18	43.447	44.357	0.3125	A572-65	1.000
32	17.25 - 17	0.25		18	44.357	44.403	0.625	A572-65	0.964
33	17 - 12	5		18	44.403	45.314	0.6125	A572-65	0.974
34	12 - 7	5		18	45.314	46.225	0.6125	A572-65	0.965
35	7 - 5.25	1.75		18	46.225	46.543	0.6125	A572-65	0.962
36	5.25 - 5	0.25		18	46.543	46.589	0.6	A572-65	0.927
37	5 - 0	5		18	46.589	47.500	0.5875	A572-65	0.938

TNX Section Forces

Increment (ft): 5

	Section Height (ft)	TNX Output P_u (K)	M_{ux} (kip-ft)	V_u (K)
1	149 - 144	3.76	36.11	6.55
2	144 - 139	4.02	69.92	6.98
3	139 - 134	5.59	122.23	10.33
4	134 - 129	9.04	180.58	15.55
5	129 - 127.388	9.21	205.77	15.71
6	127.388 - 122.388	9.98	285.59	16.22
7	122.388 - 117.388	10.58	367.81	16.68
8	117.388 - 112.388	11.21	452.31	17.14
9	112.388 - 107.388	11.86	539.09	17.59
10	107.388 - 102.388	12.54	628.12	18.04
11	102.388 - 98.5	13.09	698.90	18.39
12	98.5 - 98.25	13.15	703.50	18.41
13	98.25 - 93.25	14.07	796.81	18.93
14	93.25 - 88.25	15.02	892.70	19.44
15	88.25 - 83.873	15.86	978.75	19.89
16	83.873 - 78.128	17.44	1094.91	20.55
17	78.128 - 73.128	18.34	1198.73	21.01
18	73.128 - 69.92	18.93	1266.54	21.30
19	69.92 - 69.67	19.02	1271.86	21.31
20	69.67 - 64.67	20.37	1379.76	21.86
21	64.67 - 59.67	21.74	1490.36	22.40
22	59.67 - 57.25	22.42	1544.86	22.66
23	57.25 - 57	22.49	1550.53	22.68
24	57 - 52	23.78	1665.16	23.19
25	52 - 48.76	24.62	1740.78	23.51
26	48.76 - 42.243	27.14	1896.37	24.24
27	42.243 - 37.243	28.32	2018.53	24.66
28	37.243 - 32.243	29.53	2142.73	25.06
29	32.243 - 27.243	30.75	2268.89	25.44
30	27.243 - 22.243	32.00	2396.91	25.81
31	22.243 - 17.25	33.27	2526.50	26.15
32	17.25 - 17	33.38	2533.03	26.15
33	17 - 12	35.41	2664.77	26.56
34	12 - 7	37.42	2798.55	26.97
35	7 - 5.25	38.07	2845.85	27.12
36	5.25 - 5	38.17	2852.63	27.13
37	5 - 0	39.96	2989.25	27.54

Analysis Results

Elevation (ft)	Component Type	Size	Critical Element	% Capacity	Pass / Fail
149 - 144	Pole	TP22.426x21.5x0.1875	Pole	8.5%	Pass
144 - 139	Pole	TP23.352x22.426x0.1875	Pole	15.1%	Pass
139 - 134	Pole	TP24.278x23.352x0.1875	Pole	24.7%	Pass
134 - 129	Pole	TP25.204x24.278x0.1875	Pole	34.4%	Pass
129 - 127.39	Pole	TP26.202x25.204x0.1875	Pole	38.3%	Pass
127.39 - 122.39	Pole	TP26.043x25.128x0.1875	Pole	51.1%	Pass
122.39 - 117.39	Pole	TP26.958x26.043x0.1875	Pole	62.1%	Pass
117.39 - 112.39	Pole	TP27.873x26.958x0.1875	Pole	72.3%	Pass
112.39 - 107.39	Pole	TP28.788x27.873x0.1875	Pole	81.7%	Pass
107.39 - 102.39	Pole	TP29.703x28.788x0.1875	Pole	90.6%	Pass
102.39 - 98.5	Pole	TP30.415x29.703x0.1875	Pole	97.2%	Pass
98.5 - 98.25	Pole + Reinf.	TP30.46x30.415x0.3438	Reinf. 2 Tension Rupture	78.2%	Pass
98.25 - 93.25	Pole + Reinf.	TP31.375x30.46x0.3375	Reinf. 2 Tension Rupture	84.6%	Pass
93.25 - 88.25	Pole + Reinf.	TP32.29x31.375x0.3313	Reinf. 2 Tension Rupture	90.6%	Pass
88.25 - 83.87	Pole + Reinf.	TP33.96x32.29x0.3313	Reinf. 2 Tension Rupture	95.5%	Pass
83.87 - 78.13	Pole	TP33.763x32.716x0.25	Pole	85.9%	Pass
78.13 - 73.13	Pole	TP34.675x33.763x0.25	Pole	90.0%	Pass
73.13 - 69.92	Pole	TP35.259x34.675x0.25	Pole	92.5%	Pass
69.92 - 69.67	Pole + Reinf.	TP35.305x35.259x0.5	Reinf. 3 Tension Rupture	65.6%	Pass
69.67 - 64.67	Pole + Reinf.	TP36.216x35.305x0.4875	Reinf. 3 Tension Rupture	68.5%	Pass
64.67 - 59.67	Pole + Reinf.	TP37.127x36.216x0.4875	Reinf. 3 Tension Rupture	71.2%	Pass
59.67 - 57.25	Pole + Reinf.	TP37.568x37.127x0.4813	Reinf. 3 Tension Rupture	72.5%	Pass
57.25 - 57	Pole + Reinf.	TP37.614x37.568x0.4188	Reinf. 1 Tension Rupture	84.4%	Pass
57 - 52	Pole + Reinf.	TP38.525x37.614x0.4125	Reinf. 1 Tension Rupture	87.3%	Pass
52 - 48.76	Pole + Reinf.	TP40.121x38.525x0.4125	Reinf. 1 Tension Rupture	89.0%	Pass
48.76 - 42.24	Pole	TP39.803x38.616x0.3125	Pole	84.0%	Pass
42.24 - 37.24	Pole	TP40.714x39.803x0.3125	Pole	86.0%	Pass
37.24 - 32.24	Pole	TP41.625x40.714x0.3125	Pole	88.1%	Pass
32.24 - 27.24	Pole	TP42.536x41.625x0.3125	Pole	90.0%	Pass
27.24 - 22.24	Pole	TP43.447x42.536x0.3125	Pole	91.8%	Pass
22.24 - 17.25	Pole	TP44.357x43.447x0.3125	Pole	93.6%	Pass
17.25 - 17	Pole + Reinf.	TP44.403x44.357x0.625	Reinf. 4 Tension Rupture	62.0%	Pass
17 - 12	Pole + Reinf.	TP45.314x44.403x0.6125	Reinf. 4 Tension Rupture	63.3%	Pass
12 - 7	Pole + Reinf.	TP46.225x45.314x0.6125	Reinf. 4 Tension Rupture	64.5%	Pass
7 - 5.25	Pole + Reinf.	TP46.543x46.225x0.6125	Reinf. 4 Tension Rupture	64.9%	Pass
5.25 - 5	Pole + Reinf.	TP46.589x46.543x0.6	Reinf. 7 Compression	80.9%	Pass
5 - 0	Pole + Reinf.	TP47.5x46.589x0.5875	Reinf. 7 Compression	82.2%	Pass
				Summary	
			Pole	97.2%	Pass
			Reinforcement	95.5%	Pass
			Overall	97.2%	Pass

Additional Calculations

Section Elevation (ft)	Moment of Inertia (in^4)			Area (in^2)			% Capacity*								
	Pole	Reinf.	Total	Pole	Reinf.	Total	Pole	R1	R2	R3	R4	R5	R6	R7	R8
149 - 144	827	n/a	827	13.23	n/a	13.23	8.5%								
144 - 139	934	n/a	934	13.79	n/a	13.79	15.1%								
139 - 134	1051	n/a	1051	14.34	n/a	14.34	24.7%								
134 - 129	1177	n/a	1177	14.89	n/a	14.89	34.4%								
129 - 127.39	1219	n/a	1219	15.07	n/a	15.07	38.3%								
127.39 - 122.39	1299	n/a	1299	15.39	n/a	15.39	51.1%								
122.39 - 117.39	1442	n/a	1442	15.93	n/a	15.93	62.1%								
117.39 - 112.39	1595	n/a	1595	16.48	n/a	16.48	72.3%								
112.39 - 107.39	1758	n/a	1758	17.02	n/a	17.02	81.7%								
107.39 - 102.39	1933	n/a	1933	17.56	n/a	17.56	90.6%								
102.39 - 98.5	2076	n/a	2076	17.99	n/a	17.99	97.2%								
98.5 - 98.25	2085	1682	3767	18.02	13.50	31.52	53.3%		78.2%						
98.25 - 93.25	2280	1781	4061	18.56	13.50	32.06	58.5%		84.6%						
93.25 - 88.25	2487	1882	4369	19.10	13.50	32.60	63.6%		90.6%						
88.25 - 83.87	2677	1973	4651	19.58	13.50	33.08	68.1%		95.5%						
83.87 - 78.13	3772	n/a	3772	26.59	n/a	26.59	85.9%								
78.13 - 73.13	4088	n/a	4088	27.31	n/a	27.31	90.0%								
73.13 - 69.92	4300	n/a	4300	27.78	n/a	27.78	92.5%								
69.92 - 69.67	4317	4116	8433	27.82	24.38	52.19	46.8%			65.6%					
69.67 - 64.67	4662	4321	8984	28.54	24.38	52.91	49.4%			68.5%					
64.67 - 59.67	5026	4532	9558	29.26	24.38	53.64	52.0%			71.2%					
59.67 - 57.25	5208	4636	9844	29.61	24.38	53.99	53.2%			72.5%					
57.25 - 57	5227	3383	8610	29.65	18.00	47.65	61.2%	84.4%							
57 - 52	5619	3543	9162	30.37	18.00	48.37	63.9%	87.3%							
52 - 48.76	5883	3649	9532	30.84	18.00	48.84	65.7%	89.0%							
48.76 - 42.24	7715	n/a	7715	39.17	n/a	39.17	84.0%								
42.24 - 37.24	8261	n/a	8261	40.07	n/a	40.07	86.0%								
37.24 - 32.24	8833	n/a	8833	40.98	n/a	40.98	88.1%								
32.24 - 27.24	9430	n/a	9430	41.88	n/a	41.88	90.0%								
27.24 - 22.24	10053	n/a	10053	42.78	n/a	42.78	91.8%								
22.24 - 17.25	10703	n/a	10703	43.69	n/a	43.69	93.6%								
17.25 - 17	10736	10219	20955	43.73	40.00	83.73	48.1%				62.0%	62.0%			
17 - 12	11416	10626	22042	44.63	40.00	84.63	49.5%				63.3%	63.3%			
12 - 7	12123	11042	23165	45.54	40.00	85.54	50.9%				64.5%	64.5%			
7 - 5.25	12378	11189	23567	45.85	40.00	85.85	51.4%				64.9%	64.9%			
5.25 - 5	12414	10966	23381	45.90	35.25	81.15	51.9%						79.0%	80.9%	78.4%
5 - 0	13162	11362	24524	46.80	35.25	82.05	53.3%						80.5%	82.2%	79.7%

Note: Section capacity checked using 5 degree increments.
Rating per TIA-222-H Section 15.5.

Monopole Base Plate Connection

Site Info	
BU #	842856
Site Name	ANDOVER NORTH
Order #	517084 Rev. 4

Analysis Considerations	
TIA-222 Revision	H
Grout Considered:	No
l_{ar} (in)	2.25

Applied Loads	
Moment (kip-ft)	2989.25
Axial Force (kips)	39.96
Shear Force (kips)	27.54

**TIA-222-H Section 15.5 Applied*

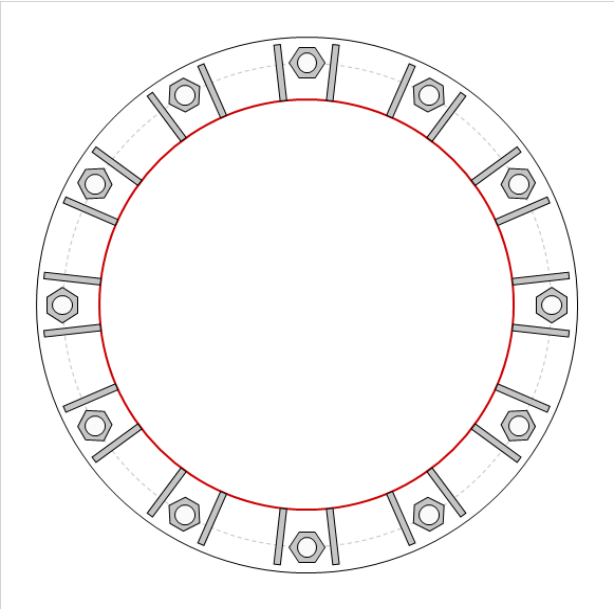

Connection Properties

Anchor Rod Data

(12) 2-1/4" ø bolts (A615-75 N; Fy=75 ksi, Fu=100 ksi) on 56" BC

Base Plate Data

62" OD x 1.5" Plate (A572-60; Fy=60 ksi, Fu=75 ksi)

Stiffener Data

(24) 13"H x 6.5"W x 0.75"T, Notch: 0.75"
plate: Fy= 50 ksi ; weld: Fy= 80 ksi
horiz. weld: 0.375" groove, 45° dbl bevel, 0.25" fillet
vert. weld: 0.3125" fillet

Pole Data

47.5" x 0.3125" 18-sided pole (A572-65; Fy=65 ksi, Fu=80 ksi)

Analysis Results

Anchor Rod Summary *(units of kips, kip-in)*

Pu_c = 216.71	ϕPn_c = 268.39	**Stress Rating**
Vu = 2.29	ϕVn = 120.77	**76.9%**
Mu = n/a	ϕMn = n/a	**Pass**

Base Plate Summary

Max Stress (ksi):	52.48	(Roark's Flexural)
Allowable Stress (ksi):	54	
Stress Rating:	**92.6%**	**Pass**

Stiffener Summary

Horizontal Weld:	**45.1%**	**Pass**
Vertical Weld:	**51.3%**	**Pass**
Plate Flexure+Shear:	**23.5%**	**Pass**
Plate Tension+Shear:	**47.2%**	**Pass**
Plate Compression:	**62.1%**	**Pass**

Pole Summary

Punching Shear:	**20.7%**	**Pass**

Pier and Pad Foundation

BU # :	842856
Site Name:	ANDOVER NORTH
App. Number:	517084 Rev. 4

TIA-222 Revision:	H
Tower Type:	Monopole

Top & Bot. Pad Rein. Different?:	✓
Block Foundation?:	
Rectangular Pad?:	

Superstructure Analysis Reactions

Compression, P_{comp}:	39.97	kips
Base Shear, Vu_comp:	27.53	kips
Moment, M_u:	2989.25	ft-kips
Tower Height, **H**:	149	ft
BP Dist. Above Fdn, bp_{dist}:	4.25	in

Foundation Analysis Checks

	Capacity	Demand	Rating*	Check
Lateral (Sliding) (kips)	223.81	27.53	**11.7%**	**Pass**
Bearing Pressure (ksf)	13.50	4.53	**33.6%**	**Pass**
*Overturning (kip*ft)*	3800.96	3205.48	**84.3%**	**Pass**
*Pier Flexure (Comp.) (kip*ft)*	4731.62	3113.14	**62.7%**	**Pass**
Pier Compression (kip)	21120.36	66.85	**0.3%**	**Pass**
*Pad Flexure (kip*ft)*	2736.60	1648.33	**57.4%**	**Pass**
Pad Shear - 1-way (kips)	735.13	291.74	**37.8%**	**Pass**
Pad Shear - 2-way (Comp) (ksi)	0.190	0.000	**0.0%**	**Pass**
*Flexural 2-way (Comp) (kip*ft)*	3755.83	1867.88	**47.4%**	**Pass**

**Rating per TIA-222-H Section 15.5*

Soil Rating*:	**84.3%**
Structural Rating*:	**62.7%**

Pier Properties

Pier Shape:	Circular	
Pier Diameter, **dpier**:	6.5	ft
Ext. Above Grade, **E**:	1	ft
Pier Rebar Size, **Sc**:	8	
Pier Rebar Quantity, **mc**:	40	
Pier Tie/Spiral Size, **St**:	4	
Pier Tie/Spiral Quantity, **mt**:	5	
Pier Reinforcement Type:	Tie	
Pier Clear Cover, cc_{pier}:	3	in

Pad Properties

Depth, **D**:	6.5	ft
Pad Width, W_1:	20.5	ft
Pad Thickness, **T**:	3	ft
Pad Rebar Size (Top dir.2), Sp_{top2}:	8	
Pad Rebar Quantity (Top dir. 2), mp_{top2}:	21	
Pad Rebar Size (Bottom dir. 2), Sp_2:	8	
Pad Rebar Quantity (Bottom dir. 2), mp_2:	25	
Pad Clear Cover, cc_{pad}:	3	in

Material Properties

Rebar Grade, **Fy**:	60	ksi
Concrete Compressive Strength, **F'c**:	4	ksi
Dry Concrete Density, δc:	150	pcf

Soil Properties

Total Soil Unit Weight, γ:	115	pcf
Ultimate Gross Bearing, Qult:	18.000	ksf
Cohesion, **Cu**:		ksf
Friction Angle, φ:	36	degrees
SPT Blow Count, N_{blows}:	47	
Base Friction, μ:		
Neglected Depth, **N**:	3.33	ft
Foundation Bearing on Rock?	No	
Groundwater Depth, **gw**:	N/A	ft

<--Toggle between Gross and Net

ASCE 7 Hazards Report

Address:
No Address at This Location

Standard: ASCE/SEI 7-10
Risk Category: II
Soil Class: D - Stiff Soil

Elevation: 495.67 ft (NAVD 88)
Latitude: 41.750128
Longitude: -72.402675

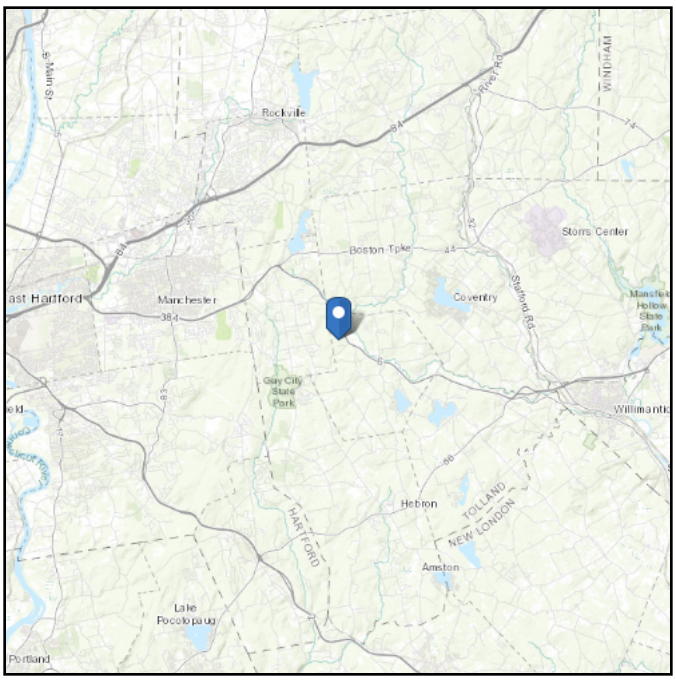

Wind

Results:

Wind Speed:	130 Vmph per Jurisdiction
10-year MRI	77 Vmph
25-year MRI	87 Vmph
50-year MRI	94 Vmph
100-year MRI	102 Vmph
Data Source:	ASCE/SEI 7-10, Fig. 26.5-1A and Figs. CC-1–CC-4, incorporating errata of March 12, 2014
Date Accessed:	Tue Sep 08 2020

Value provided is 3-second gust wind speeds at 33 ft above ground for Exposure C Category, based on linear interpolation between contours. Wind speeds are interpolated in accordance with the 7-10 Standard. Wind speeds correspond to approximately a 7% probability of exceedance in 50 years (annual exceedance probability = 0.00143, MRI = 700 years).

Site is in a hurricane-prone region as defined in ASCE/SEI 7-10 Section 26.2. Glazed openings need not be protected against wind-borne debris.

Mountainous terrain, gorges, ocean promontories, and special wind regions should be examined for unusual wind conditions.

Seismic

Site Soil Class: D - Stiff Soil

Results:

S_S :	0.177	S_{DS} :	0.189
S_1 :	0.063	S_{D1} :	0.101
F_a :	1.6	T_L :	6
F_v :	2.4	PGA :	0.089
S_{MS} :	0.283	PGA_M :	0.142
S_{M1} :	0.151	F_{PGA} :	1.6
		I_e :	1

Seismic Design Category B

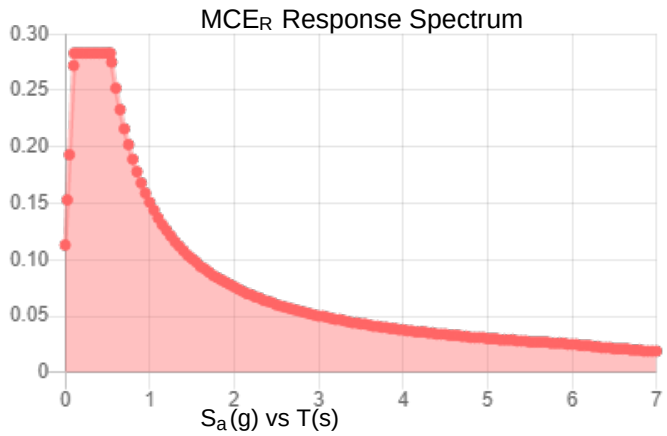

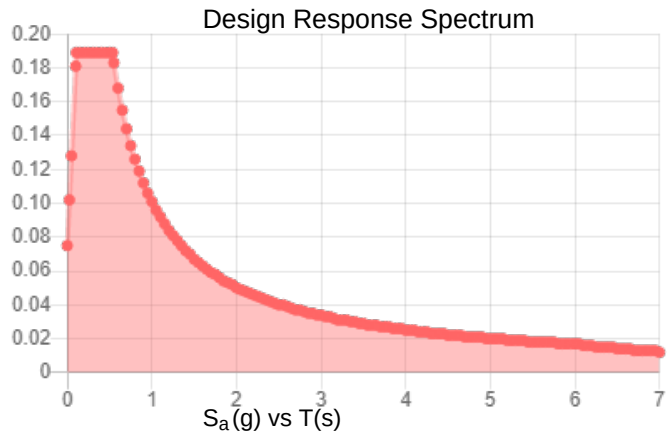

Data Accessed: Tue Sep 08 2020

Date Source: USGS Seismic Design Maps based on ASCE/SEI 7-10, incorporating Supplement 1 and errata of March 31, 2013, and ASCE/SEI 7-10 Table 1.5-2. Additional data for site-specific ground motion procedures in accordance with ASCE/SEI 7-10 Ch. 21 are available from USGS.

Ice

Results:

Ice Thickness:	1.00 in.
Concurrent Temperature:	5 F
Gust Speed:	50 mph
Data Source:	Standard ASCE/SEI 7-10, Figs. 10-2 through 10-8
Date Accessed:	Tue Sep 08 2020

Ice thicknesses on structures in exposed locations at elevations higher than the surrounding terrain and in valleys and gorges may exceed the mapped values.

Values provided are equivalent radial ice thicknesses due to freezing rain with concurrent 3-second gust speeds, for a 50-year mean recurrence interval, and temperatures concurrent with ice thicknesses due to freezing rain. Thicknesses for ice accretions caused by other sources shall be obtained from local meteorological studies. Ice thicknesses in exposed locations at elevations higher than the surrounding terrain and in valleys and gorges may exceed the mapped values.

The ASCE 7 Hazard Tool is provided for your convenience, for informational purposes only, and is provided “as is” and without warranties of any kind. The location data included herein has been obtained from information developed, produced, and maintained by third party providers; or has been extrapolated from maps incorporated in the ASCE 7 standard. While ASCE has made every effort to use data obtained from reliable sources or methodologies, ASCE does not make any representations or warranties as to the accuracy, completeness, reliability, currency, or quality of any data provided herein. Any third-party links provided by this Tool should not be construed as an endorsement, affiliation, relationship, or sponsorship of such third-party content by or from ASCE.

ASCE does not intend, nor should anyone interpret, the results provided by this Tool to replace the sound judgment of a competent professional, having knowledge and experience in the appropriate field(s) of practice, nor to substitute for the standard of care required of such professionals in interpreting and applying the contents of this Tool or the ASCE 7 standard.

In using this Tool, you expressly assume all risks associated with your use. Under no circumstances shall ASCE or its officers, directors, employees, members, affiliates, or agents be liable to you or any other person for any direct, indirect, special, incidental, or consequential damages arising from or related to your use of, or reliance on, the Tool or any information obtained therein. To the fullest extent permitted by law, you agree to release and hold harmless ASCE from any and all liability of any nature arising out of or resulting from any use of data provided by the ASCE 7 Hazard Tool.

APPENDIX D

REQUIRED MODIFICATION DRAWINGS

TOWER MODIFICATION DRAWINGS

SITE NAME: ANDOVER NORTH
BU NUMBER: 842856

SITE ADDRESS:
122 JONATHAN TRUMBULL HIGHWAY (ROUTE 6)
ANDOVER, CT 06232
TOLLAND COUNTY, USA

PROJECT CONTACTS:

1. CROWN PROJECT MANAGER

DAN VADNEY
(518) 373-3510
DAN.VADNEY@CROWNCASTLE.COM
3 CORPORATE PARK DRIVE, SUITE 101
CLIFTON PARK, NY 12065

2. CROWN DESIGN ENGINEER (EOR)

TERRY P. STYRAN, P.E.
(724) 416-9627
EORAPPROVAL@CROWNCASTLE.COM
2000 CORPORATE DRIVE
CANONSBURG, PA 15317

TOWER INFORMATION

TOWER MANUFACTURER / DWG #:	EEI / DWG # GS54863
TOWER HEIGHT / TYPE:	149 FT MONOPOLE TOWER
TOWER LOCATION:	LAT 41° 45' 00.36"
DATUM: (NAD 1983)	LONG -72° 24' 09.72"
	ELEV 496.0 FT AMSL
STRUCTURAL DESIGN DRAWING:	CCI / WO # 1923928
STRUCTURAL ANALYSIS REPORT:	CCI / WO # 1913213
STRUCTURAL ANALYSIS DATE:	01/15/21
ORDER #:	517084 REV # 4
CCISITES DOCUMENT ID:	9507835

CODE COMPLIANCE

THIS MODIFICATION DESIGN IS BASED ON THE REQUIREMENTS OF TIA-222-H STRUCTURAL STANDARDS FOR STEEL ANTENNA TOWERS AND ANTENNA SUPPORTING STRUCTURES BASED UPON AN ULTIMATE 3-SECOND GUST WIND SPEED OF 130 MPH WITH NO ICE AS REQUIRED BY THE 2018 CONNECTICUT BUILDING CODE, 50 MPH WITH 2 INCH ICE THICKNESS, 60 MPH UNDER SERVICE LOADS, EXPOSURE CATEGORY C AND RISK CATEGORY II.

HOT WORK INCLUDED

NA	BASE GRINDING ONLY
X	BASE WELDING (AND GRINDING)
NA	AERIAL GRINDING ONLY
X	AERIAL WELDING (AND GRINDING)

ATTENTION ALL CONTRACTORS, ANYTIME YOU ACCESS A CROWN SITE FOR ANY REASON YOU ARE TO CALL THE CROWN NOC UPON ARRIVAL AND DEPARTURE, DAILY AT 800-788-7011

LOOK UP!

SAFETY CLIMB: 'LOOK UP'
THE INTEGRITY OF THE WIRE ROPE SAFETY CLIMB SYSTEM SHALL BE CONSIDERED DURING ALL STAGES OF DESIGN, INSTALLATION, AND INSPECTION. TOWER REINFORCEMENTS AND EQUIPMENT INSTALLATIONS SHALL NOT COMPROMISE THE INTEGRITY OR FUNCTIONAL USE OF ANY WIRE ROPE SAFETY CLIMB ON THE STRUCTURE. THIS SHALL INCLUDE, BUT NOT BE LIMITED TO: PINCHING OF THE WIRE ROPE, BENDING OF THE WIRE ROPE FROM ITS SUPPORTS, DIRECT CONTACT OR CLOSE PROXIMITY TO THE WIRE ROPE WHICH MAY CAUSE FRICTIONAL WEAR, OR IMPACT TO THE ANCHORAGE POINTS IN ANY WAY. ANY COMPROMISED SAFETY CLIMB MUST BE REPORTED TO YOUR CROWN POC FOR RESOLUTION, INCLUDING EXISTING CONDITIONS.

DRAWINGS INCLUDED

SHEET NUMBER	DESCRIPTION
S-1	TITLE PAGE
S-2	MODIFICATION INSPECTION CHECKLIST
S-3	NOTES
S-4	POLE MODIFICATION SCHEDULE
S-5	TOWER SECTION
S-6	DETAILS

NO.	DATE	DESCRIPTION	BY

REVISIONS

STATE OF CONNECTICUT
TERRY P. STYRAN
31522
LICENSED
PROFESSIONAL ENGINEER

2/18/2021

CROWN CASTLE

THIS DRAWING IS COPYRIGHTED AND IS THE SOLE PROPERTY OF CROWN CASTLE. IT IS PRODUCED SOLELY FOR USE BY CROWN CASTLE AND ITS AFFILIATES. REPRODUCTION OR USE OF THIS DRAWING AND/OR THE INFORMATION CONTAINED IN IT IS FORBIDDEN WITHOUT THE WRITTEN PERMISSION OF CROWN CASTLE.

SITE NAME: ANDOVER NORTH
BU NUMBER: 842856
WO NUMBER: 1923928
SITE ADDRESS:
122 JONATHAN TRUMBULL HIGHWAY (ROUTE 6)
ANDOVER, CT 06232
TOLLAND COUNTY, USA

ENG/QA BY: **DBS**	DATE: **02/12/21**
DFT BY: **SL**	DATE: **02/12/21**
DFT/QA BY: **SL**	DATE: **02/16/21**
APRV'D BY: **DBS**	DATE: **02/17/21**
SCALE: N.T.S.	

TITLE PAGE

S-1 REV 0

MI CHECKLIST

REQUIRED	REPORT ITEM	APPLICABLE CROWN DOC #	BRIEF DESCRIPTION
PRE-CONSTRUCTION			
X	MI CHECKLIST DRAWING	CED-SOW-10007	THIS CHECKLIST SERVES AS A GUIDELINE FOR THE REQUIRED CONSTRUCTION DOCUMENTS AND INSPECTIONS FOR THIS MODIFICATION.
X	EOR APPROVED SHOP DRAWINGS	CED-SOW-10007	ONCE THE PRE-MODIFICATION MAPPING IS COMPLETE AND PRIOR TO FABRICATION, THE CONTRACTOR SHALL PROVIDE DETAILED ASSEMBLY DRAWINGS AND/OR SHOP DRAWINGS. THESE ARE TO INCLUDE, BUT ARE NOT LIMITED TO, A VISUAL LAYOUT OF NEW REINFORCEMENT, EXISTING REINFORCEMENT CONFIGURATION, PORTHOLES, MOUNTS, STEP PEGS, SAFETY CLIMBS AND ANY OTHER MISCELLANEOUS ITEMS WHICH MAY AFFECT SUCCESSFUL INSTALLATION OF MODIFICATIONS ON THE TOWER. THESE DRAWINGS SHALL BE SUBMITTED TO THE EOR FOR APPROVAL. SHOP DRAWINGS SUBMISSION SHALL INCLUDE THE EOR RFI FORM DETAILING ANY CHANGES FROM THE ORIGINAL DESIGN.
X	FABRICATION INSPECTION	CED-SOW-10007	A LETTER FROM THE FABRICATOR, STATING THAT THE WORK WAS PERFORMED IN ACCORDANCE WITH INDUSTRY STANDARDS AND THE CONTRACT DOCUMENTS, SHALL BE PROVIDED TO THE MI INSPECTOR FOR INCLUSION IN THE MI REPORT.
NA	FABRICATOR CERTIFIED WELD INSPECTION	CED-SOW-10007 CED-STD-10069	A CWI SHALL INSPECT ALL WELDING PERFORMED ON STRUCTURAL MEMBERS DURING FABRICATION. A WRITTEN REPORT SHALL BE PROVIDED TO THE MI INSPECTOR FOR INCLUSION IN THE MI REPORT.
X	MATERIAL TEST REPORTS (MTR)	CED-SOW-10007	MATERIAL TEST REPORTS SHALL BE PROVIDED FOR MATERIAL USED AS REQUIRED PER SECTION 9.2.5 OF CED-SOW-10007. MTRS SHALL BE PROVIDED TO THE MI INSPECTOR FOR INCLUSION IN THE MI REPORT.
NA	FABRICATOR NDE INSPECTION REPORT	CED-SOW-10066 CED-STD-10069	CRITICAL SHOP WELDS THAT REQUIRE TESTING ARE NOTED ON THESE CONTRACT DRAWINGS. A CERTIFIED NDT INSPECTOR SHALL PERFORM NON-DESTRUCTIVE EXAMINATION AND A REPORT SHALL BE PROVIDED TO THE MI INSPECTOR FOR INCLUSION IN THE MI REPORT.
NA	NDE OF MONOPOLE BASE PLATE	ENG-SOW-10033	A NDE OF THE POLE TO BASE PLATE CONNECTION IS REQUIRED AND A WRITTEN REPORT SHALL BE PROVIDED TO THE MI INSPECTOR FOR INCLUSION IN THE MI REPORT.
X	PACKING SLIPS	CED-SOW-10007	PACKING/SHIPPING LIST FOR ALL MATERIAL THAT WAS USED DURING CONSTRUCTION OF THE MODIFICATION.
ADDITIONAL TESTING AND INSPECTIONS:			
X OR NA			
CONSTRUCTION			
NA	FOUNDATION INSPECTIONS	CED-SOW-10144	A VISUAL OBSERVATION OF THE EXCAVATION AND REBAR SHALL BE PERFORMED BEFORE PLACING THE CONCRETE. A VISUAL OBSERVATION OF THE REBAR SHALL BE PERFORMED BEFORE PLACING THE EPOXY. A SEALED WRITTEN REPORT SHALL BE PROVIDED TO THE MI INSPECTOR FOR INCLUSION IN THE MI REPORT.
NA	CONCRETE COMP. STRENGTH AND SLUMP TEST	CED-SOW-10144	THE CONCRETE MIX DESIGN, SLUMP TEST, AND COMPRESSIVE STRENGTH TESTS SHALL BE PROVIDED AS PART OF THE FOUNDATION REPORT.
NA	EARTHWORK	CED-SOW-10144	FOUNDATION SUB-GRADES SHALL BE INSPECTED AND APPROVED BY AN APPROVED FOUNDATION INSPECTOR AND RESULTS INCLUDED AS PART OF THE FOUNDATION REPORT.
NA	MICROPILE/ROCK ANCHOR	CED-SOW-10144	MICROPILES/ROCK ANCHORS SHALL BE INSPECTED BY THE FOUNDATION INSPECTION VENDOR AND SHALL BE INCLUDED AS PART OF THE FOUNDATION INSPECTION REPORT, ADDITIONAL TESTING AND/OR INSPECTION REQUIREMENTS ARE NOTED IN THESE CONTRACT DOCUMENTS.
NA	POST-INSTALLED ANCHOR ROD VERIFICATION	CED-SOW-10007	POST INSTALLED ANCHOR ROD VERIFICATION SHALL BE PERFORMED IN ACCORDANCE WITH CROWN REQUIREMENTS AND A REPORT SHALL BE PROVIDED TO THE MI INSPECTOR FOR INCLUSION IN THE MI REPORT.
NA	BASE PLATE GROUT VERIFICATION	ENG-STD-10323	THE GENERAL CONTRACTOR SHALL PROVIDE DOCUMENTATION TO THE MI INSPECTOR THAT CERTIFIES THAT THE GROUT WAS REMOVED AND/OR INSTALLED IN ACCORDANCE WITH CROWN REQUIREMENTS FOR INCLUSION IN THE MI REPORT.
X	FIELD CERTIFIED WELD INSPECTION	CED-SOW-10066 CED-STD-10069	A CROWN APPROVED CERTIFIED WELD INSPECTOR SHALL INSPECT AND TEST FIELD WELDS, FOLLOWING ALL PROCEDURES SPECIFIED IN CROWN STANDARD DOCUMENTS APPLICABLE TO WELD INSPECTIONS. A REPORT SHALL BE PROVIDED. NDE OF FIELD WELDS SHALL BE PERFORMED AS REQUIRED BY CROWN STANDARDS AND CONTRACT DOCUMENTS. THE NDE REPORT SHALL BE INCLUDED IN THE CWI REPORT.
X	ON-SITE COLD GALVANIZING VERIFICATION	OPS-STD-10149	THE GENERAL CONTRACTOR SHALL PROVIDE WRITTEN AND PHOTOGRAPHIC DOCUMENTATION TO THE MI INSPECTOR VERIFYING THAT ANY ON-SITE COLD GALVANIZING WAS APPLIED PER MANUFACTURER SPECIFICATIONS AND APPLICABLE STANDARDS.
NA	TENSION TWIST AND PLUMB	CED-PRC-10182 CED-STD-10261	THE GENERAL CONTRACTOR SHALL PROVIDE A REPORT IN ACCORDANCE WITH APPLICABLE STANDARDS DOCUMENTING TENSION TWIST AND PLUMB.
X	GC AS-BUILT DRAWINGS	CED-SOW-10007	THE GENERAL CONTRACTOR SHALL SUBMIT A LEGIBLE COPY OF THE ORIGINAL DESIGN DRAWINGS EITHER STATING "INSTALLED AS DESIGNED" OR NOTING ANY CHANGES THAT WERE REQUIRED AND APPROVED BY THE ENGINEER OF RECORD. EOR/RFI FORMS APPROVING ALL CHANGES SHALL BE SUBMITTED.
ADDITIONAL TESTING AND INSPECTIONS:			
X OR NA			
POST-CONSTRUCTION			
X	CONSTRUCTION COMPLIANCE LETTER	CED-SOW-10007	A LETTER FROM THE GENERAL CONTRACTOR STATING THAT THE WORKMANSHIP WAS PERFORMED IN ACCORDANCE WITH INDUSTRY STANDARDS AND THESE CONTRACT DRAWINGS, INCLUDING LISTING ADDITIONAL PARTIES TO THE MODIFICATION PROCESS.
NA	POST INSTALLED ANCHOR ROD PULL TESTS	CED PRC 10119	POST-INSTALLED ANCHOR RODS SHALL BE TESTED BY A CROWN APPROVED PULL TEST INSPECTOR AND A REPORT SHALL BE PROVIDED INDICATING TESTING RESULTS.
X	PHOTOGRAPHS	CED-SOW-10007	PHOTOGRAPHS SHALL BE SUBMITTED TO THE MI. PHOTOS SHALL DOCUMENT ALL PHASES OF THE CONSTRUCTION. THE PHOTOS SHALL BE ORGANIZED IN A MANNER THAT EASILY IDENTIFIES THE EXACT LOCATION OF THE PHOTO.
NA	BOLT HOLE INSTALLATION VERIFICATION REPORT	CED-SOW-10007	THE MI INSPECTOR SHALL VERIFY THE INSTALLATION AND TIGHTNESS 10% OF ALL NON PRE-TENSIONED BOLTS INSTALLED AS PART OF THE MODIFICATION. THE MI INSPECTOR SHALL LOOSEN THE NUT AND VERIFY THE BOLT HOLE SIZE AND CONDITION. THE MI REPORT SHALL CONTAIN THE COMPLETED BOLT INSTALLATION VERIFICATION REPORT, INCLUDING THE SUPPORTING PHOTOGRAPHS.
X	PUNCHLIST DEVELOPMENT AND CORRECTION DOCUMENTATION	CED-PRC-10283 CED-FRM-10285	FINAL PUNCHLIST INDICATING ALL NONCONFORMANCE(S) IDENTIFIED AND THE FINAL RESOLUTION/APPROVAL.
X	MI INSPECTOR REDLINE OR RECORD DRAWING(S)	CED-SOW-10007	THE MI INSPECTOR SHALL OBSERVE AND REPORT ANY DISCREPANCIES BETWEEN THE CONTRACTOR'S REDLINE DRAWING AND THE ACTUAL COMPLETED INSTALLATION.
ADDITIONAL TESTING AND INSPECTIONS:			
X OR NA			

THE MI CHECKLIST SHALL BE REVIEWED PRIOR TO THE START OF CONSTRUCTION. ALL PARTIES TO THE MODIFICATION SHALL UNDERSTAND CROWN REQUIREMENTS AND INSPECTION/DOCUMENTATION THAT IS APPLICABLE TO THE SCOPE OF WORK THEY ARE PERFORMING. ERRORS ON THE MI CHECKLIST SHALL BE BROUGHT TO THE ATTENTION OF THE CROWN POC AND EOR AS SOON AS POSSIBLE.

MODIFICATION INSPECTION NOTES

GENERAL

THE MI IS AN ON-SITE VISUAL AND HANDS-ON INSPECTION OF TOWER MODIFICATIONS INCLUDING A REVIEW OF CONSTRUCTION REPORTS AND ADDITIONAL PERTINENT DOCUMENTATION PROVIDED BY THE GENERAL CONTRACTOR (GC), AS WELL AS ANY INSPECTION DOCUMENTS PROVIDED BY 3RD PARTY INSPECTORS. THE MI IS TO ENSURE THE INSTALLATION WAS CONSTRUCTED IN ACCORDANCE WITH THE CONTRACT DOCUMENTS, NAMELY THE MODIFICATION DRAWINGS; IN ACCORDANCE WITH APPLICABLE CROWN STANDARDS; AND AS DESIGNED BY THE ENGINEER OF RECORD (EOR).

NO DOCUMENT, CODE OR POLICY CAN ANTICIPATE EVERY SITUATION THAT MAY ARISE. ACCORDINGLY, THIS CHECKLIST IS INTENDED TO SERVE AS A SOURCE OF GUIDING PRINCIPLES IN ESTABLISHING GUIDELINES FOR MODIFICATION INSPECTION.

THE MI IS TO CONFIRM INSTALLATION CONFIGURATION AND WORKMANSHIP ONLY AND IS NOT A REVIEW OF THE MODIFICATION DESIGN ITSELF, AND THE MI INSPECTOR DOES NOT TAKE OWNERSHIP OF THE MODIFICATION DESIGN. OWNERSHIP OF THE STRUCTURAL MODIFICATION DESIGN EFFECTIVENESS AND INTEGRITY RESIDES WITH THE EOR AT ALL TIMES. THE MI INSPECTOR SHALL INSPECT AND NOTE CONFORMANCE/NONCONFORMANCE AND PROVIDE TO THE CROWN POINT OF CONTACT (CROWN POC) FOR EVALUATION.

ALL MI'S SHALL BE CONDUCTED BY A CROWN APPROVED MI INSPECTOR, WORKING FOR A CROWN APPROVED MI VENDOR. SEE CROWN CED-LST-10173, "APPROVED MI VENDORS".

TO ENSURE THAT THE REQUIREMENTS OF THE MI ARE MET, IT IS VITAL THAT THE GENERAL CONTRACTOR (GC) AND THE MI INSPECTOR BEGIN COMMUNICATING AND COORDINATING AS SOON AS A PURCHASE ORDER (PO) IS RECEIVED. IT IS EXPECTED THAT EACH PARTY WILL BE PROACTIVE IN REACHING OUT TO THE OTHER PARTY. IF CONTACT INFORMATION IS NOT KNOWN THE GC AND/OR INSPECTOR SHALL CONTACT THE CROWN POINT OF CONTACT (POC).

REFER TO CROWN CED-SOW-10007, "MODIFICATION INSPECTION SOW", FOR FURTHER DETAILS AND REQUIREMENTS.

SERVICE LEVEL COMMITMENT

THE FOLLOWING RECOMMENDATIONS AND SUGGESTIONS ARE OFFERED TO ENHANCE THE EFFICIENCY AND EFFECTIVENESS OF DELIVERING AN MI REPORT:

- THE GC SHALL PROVIDE A MINIMUM OF 5 BUSINESS DAYS NOTICE, PREFERABLY 10, TO THE MI INSPECTOR AS TO WHEN THE SITE WILL BE READY FOR THE MI TO BE CONDUCTED.
- THE GC AND MI INSPECTOR COORDINATE CLOSELY THROUGHOUT THE ENTIRE PROJECT.
- WHEN POSSIBLE, IT IS PREFERRED TO HAVE THE GC AND MI INSPECTOR ON-SITE SIMULTANEOUSLY FOR ANY GUY WIRE TENSIONING OR RE-TENSIONING OPERATIONS.
- WHEN POSSIBLE, IT IS PREFERRED TO HAVE THE GC AND MI INSPECTOR ON-SITE DURING THE MI TO HAVE ANY MINOR DEFICIENCIES CORRECTED DURING THE INITIAL MI. THEREFORE, THE GC MAY CHOOSE TO COORDINATE THE MI CAREFULLY TO ENSURE ALL CONSTRUCTION FACILITIES ARE AT THEIR DISPOSAL WHEN THE MI INSPECTOR IS ON SITE.

REQUIRED PHOTOS

BETWEEN THE GC AND THE MI INSPECTOR THE FOLLOWING PHOTOGRAPHS, AT A MINIMUM, ARE TO BE TAKEN AND INCLUDED IN THE MI REPORT:

- PRE-CONSTRUCTION GENERAL SITE CONDITION
- PHOTOGRAPHS DURING THE REINFORCEMENT MODIFICATION CONSTRUCTION/ERECTION AND INSPECTION
  - RAW MATERIALS
  - PHOTOS OF ALL CRITICAL DETAILS
  - FOUNDATION MODIFICATIONS
  - WELD PREPARATION
  - BOLT INSTALLATION
  - FINAL INSTALLED CONDITION
  - SURFACE COATING REPAIR
- POST CONSTRUCTION PHOTOGRAPHS
  - FINAL INFIELD CONDITION

PHOTOS OF ELEVATED MODIFICATIONS TAKEN ONLY FROM THE GROUND SHALL BE CONSIDERED INADEQUATE.

THIS IS NOT A COMPLETE LIST OF REQUIRED PHOTOS, FOR A COMPLETE LIST OF PHOTOS SEE CED-SOW-10007.

NO.	DATE	DESCRIPTION	BY

REVISIONS

STATE OF CONNECTICUT
JERRY P. STYRAN
31522
LICENSED
PROFESSIONAL ENGINEER

2/18/2021

CROWN CASTLE

THIS DRAWING IS COPYRIGHTED AND IS THE SOLE PROPERTY OF CROWN CASTLE. IT IS PRODUCED SOLELY FOR USE BY CROWN CASTLE AND ITS AFFILIATES. REPRODUCTION OR USE OF THIS DRAWING AND/OR THE INFORMATION CONTAINED IN IT IS FORBIDDEN WITHOUT THE WRITTEN PERMISSION OF CROWN CASTLE.

SITE NAME: ANDOVER NORTH
BU NUMBER: 842856
WO NUMBER: 1923928
SITE ADDRESS:
122 JONATHAN TRUMBULL HIGHWAY (ROUTE 6)
ANDOVER, CT 06232
TOLLAND COUNTY, USA

ENG/QA BY: **DBS** DATE: **02/12/21**
DFT BY: **SL** DATE: **02/12/21**
DFT/QA BY: **SL** DATE: **02/16/21**
APRV'D BY: **DBS** DATE: **02/17/21**
SCALE: N.T.S.

MODIFICATION INSPECTION CHECKLIST

S-2 REV 0

GENERAL NOTES

1. The General Contractor (GC) shall reference CED-STD-10159, "Tower Modification Construction Specifications", as a continuation of the following General Notes. The GC shall keep a copy of this document with the Structural Design Drawings (SDD) at all times, and shall ensure that all Contractor Personnel are aware of the information enclosed within the General Notes and CED-STD-10159.
2. The Contract Documents are the property of Crown Castle (Crown). They are provided to the GC and its Lower Tier Contractors and material suppliers for the limited purpose of use in completing the Work for this Site, and shall be kept in strict confidence and not disclosed to any third parties. The Contract Documents shall not be used for any other purpose whatsoever without the prior written consent of Crown.
3. Detail drawings, including notes and tables, shall govern over general notes and typical details. Contact the Crown Point of Contact (POC) and Engineer of Record (EOR) for clarification as needed.
4. Do not scale drawings.
5. Any Work performed without a prefabrication mapping is done at the risk of the GC and/or fabricator. All dimensions of existing structural elements are assumed based on the available documentation and are preliminary until field-verified by the GC, unless noted otherwise (UNO). Where discrepancies are found, GC shall contact the Crown POC and EOR through RFI.
6. For this analysis and modification, the tower has been assumed to be in good condition without any structural defects, UNO. If the GC discovers any indication of an existing structural defect, contact the Crown POC and EOR immediately.
7. All construction means and methods, including but not limited to erection plans, rigging plans, climbing plans, and rescue plans, shall be the responsibility of the GC responsible for the execution of the Work contained herein, and shall meet ANSI/ASSE A10.48 (latest edition); federal, state, and local regulations; and any applicable industry consensus standards related to the construction activities being performed. All rigging plans shall adhere to ANSI/ASSE A10.48 (latest edition) and Crown standard CED-STD-10253, "Rigging Program", including the required involvement of a qualified engineer for class IV construction to certify the supporting structure(s) in accordance with the ANSI/TIA-322 (latest edition).
8. The structural integrity of the modification design extends to the complete condition only. The GC must be cognizant that the removal of any structural component of an existing tower has the potential to cause the partial or complete collapse of the structure. All necessary precautions must be taken to ensure structural integrity, including, but not limited to, engineering assessment of construction stresses with installation maximum wind speed and/or temporary bracing and shoring.
9. Aerial and underground utilities and facilities may or may not be shown on the drawings. The GC shall take every precaution to preserve and protect these items, which may include aerial or underground power lines, telephone lines, water lines, sewer lines, cable television facilities, pipelines, structures and other public and private improvements within or adjacent to the Work area. The responsibility for determining the actual on-site location of these items shall rest exclusively with the GC.
10. All manufacturer's hardware assembly instructions shall be followed, UNO. Conflicting notes shall be brought to the attention of the EOR and the Crown POC.
11. The GC shall fabricate all required items per the materials specified below, UNO on the detail drawing sheets. If the GC finds for any component that the materials have not been clearly specified, the GC shall submit an RFI to the EOR to confirm the required material.

All structural elements shall be new and shall conform to the following requirements, UNO:

Monopoles:

- Structural shapes and plates: ASTM A572 Grade 65 (FY = 65 KSI)
- Welding electrodes, SMAW: E80XX
- Welding electrodes, FCAW: E8XT-XX
- Welding electrodes, GMAW: ER80S-X

Self-Support and Guyed Towers:

- Structural shapes and plates: ASTM A572 Grade 50 (FY = 50 KSI)
- Welding electrodes, SMAW: E70XX
- Welding electrodes, FCAW: E7XT-XX
- Welding electrodes, GMAW: ER70S-X

All tower types:

- Steel angle: ASTM A572 Grade 50 (FY = 50 KSI)
- Solid rod: ASTM A36 (FY = 36 KSI)
- Pipe/tube (round): ASTM A500 Grade C (FY = 46 KSI)
- Pipe/tube (square): ASTM A500 Grade C (FY = 50 KSI)
- Bolts: ASTM F3125 Grade A325 Type 1
- U-bolts: ASTM A307 Grade A, or SAE J429 Grade 2
- Nuts: ASTM A563 Grade DH
- Washers: ASTM F436 Type 1
- Guy Wires: ASTM A475 Grade EHS
- Bridge Strand: ASTM A586 Grade 1

12. After fabrication, hot-dip galvanize all steel items, UNO. Galvanize per ASTM A123, ASTM A153/A153M, or ASTM A653 G90, as applicable. ASTM A490 bolts shall not be hot-dip galvanized, but shall instead be coated with Magni 565 or EOR approved equivalent, per ASTM F2833.
13. Contractor Personnel shall not drill holes in any new or existing structural members, other than those drilled holes shown on structural drawings, without the approval of the EOR.
14. For a list of Crown-approved cold galvanizing compounds, refer to OPS-STD-10149, “Tower Protective Coatings”.
15. All exposed structural steel as the result of this scope of Work including welds (after final inspection of the weld by the CWI), field drilled holes, and shaft interiors (where accessible), shall be cleaned and two (2) coats cold galvanizing shall be applied by brush in accordance with OPS-STD-10149, “Tower Protective Coatings”. Photo documentation is required to be submitted to the MI Inspector.
16. If removal of existing modifications is required per the modification scope, the GC shall clean and cold galvanize any existing empty bolt holes, UNO. If additional unexpected, oversized, or slotted holes are found, the GC shall contact the EOR and Crown POC for guidance prior to proceeding with the modifications.
17. All Work involving base plate grout scope items or resulting in disturbance of base plate grout shall reference ENG-STD-10323, "Base Plate Grout", and shall follow any Base Plate Grout Removal Notes contained herein.
18. All tower grounding affected by the Work shall be repaired or replaced in accordance with OPS-STD-10090, "Tower Grounding", and OPS-BUL-10133, "Grounding Repair Recommendation".
19. If scope of modification requires removal or covering of tower ID tag, the tag must be replaced.
20. Any hardware removed from the existing tower shall be replaced with new hardware of equal size and quality, UNO. No existing fasteners shall be reused.
21. All joints using ASTM A325 or A490 bolts, U-bolts, V-bolts, and threaded rods shall be snug tightened, UNO.
22. A nut locking device shall be installed on all proposed and/or replaced snug tightened ASTM A325 or A490 bolts, U-bolts, V-bolts, and threaded rods.
23. All joints are bearing type connections UNO. If no bolt length is given in the Bill of Materials, the connection may include threads in the shear planes, and the GC is responsible for sizing the length of the bolt.
24. Blind bolts shall be installed per the installation specifications on the corresponding Approved Fastener sheets contained in CED-CAT-10300, "Monopole Standard Drawings and Approved Reinforcement Components".
25. If ASTM A325 or A490 bolts, and/or threaded rods are specified to be pre-tensioned, these shall be installed and tightened to the pretensioned condition according to the requirements of the RCSC Specification for Structural Joints Using ASTM High Strength Bolts.
26. All proposed and/or replaced bolts shall be of sufficient length such that the end of the bolt be at least flush with the face of the nut. It is not permitted for the bolt end to be below the face of the nut after tightening is completed.

NO.	DATE	DESCRIPTION	BY

REVISIONS

STATE OF CONNECTICUT
TERRY P. STYRAN
31522
LICENSED
PROFESSIONAL ENGINEER

2/18/2021

CROWN CASTLE

THIS DRAWING IS COPYRIGHTED AND IS THE SOLE PROPERTY OF CROWN CASTLE. IT IS PRODUCED SOLELY FOR USE BY CROWN CASTLE AND ITS AFFILIATES. REPRODUCTION OR USE OF THIS DRAWING AND/OR THE INFORMATION CONTAINED IN IT IS FORBIDDEN WITHOUT THE WRITTEN PERMISSION OF CROWN CASTLE.

SITE NAME: ANDOVER NORTH
BU NUMBER: 842856
WO NUMBER: 1923928
SITE ADDRESS:
122 JONATHAN TRUMBULL HIGHWAY (ROUTE 6)
ANDOVER, CT 06232
TOLLAND COUNTY, USA

ENG/QA BY: **DBS** DATE: **02/12/21**
DFT BY: **SL** DATE: **02/12/21**
DFT/QA BY: **SL** DATE: **02/16/21**
APRV'D BY: **DBS** DATE: **02/17/21**
SCALE: N.T.S.

NOTES

S-3 REV 0

POLE SPECIFICATIONS

TOWER TAPER:	0.1856 IN/FT
BASE PL STEEL:	ASTM A572 GRADE 60 (60 KSI)
ANCHOR RODS:	2 1/4"Ø #18J ASTM A615 GRADE 75

SHAFT SECTION DATA

SHAFT SECTION	SECTION SHAPE	SECTION LENGTH (FT)	PLATE THICKNESS (IN)	SECTION GRADE (KSI)	FLANGE PLATE GRADE (KSI)	LAP SPLICE (IN)	DIAMETER ACROSS FLATS OR OF ROUND SECTION (IN)	
							@ TOP	@ BOTTOM
1	18-SIDED	25.39	0.1875	65	-	45 57 66	21.500	26.202
2	18-SIDED	48.26	0.1875	65	-		25.128	33.960
3	18-SIDED	40.63	0.2500	65	-		32.716	40.121
4	18-SIDED	48.76	0.3125	65	-		38.616	47.500

NOTE: DIMENSIONS SHOWN DO NOT INCLUDE GALVANIZING TOLERANCES

POLE MODIFICATION SCHEDULE

	ELEVATION (FT)	MODIFICATION	REFERENCE SHEET
A	1.3 - 73.4	**INSTALL NEW FLAT PLATE REINFORCEMENT**	S-4
D	12.0 - 21.3	**REMOVE & REPLACE EXISTING CLIMBING PEGS AS REQUIRED**	S-5
C	0.0	**INSTALL NEW TRANSITION STIFFENERS ON EXISTING BASE PLATE STIFFENERS**	S-5

PRIOR TO FABRICATION AND INSTALLATION, CONTRACTOR SHALL FIELD VERIFY ALL LENGTHS AND QUANTITIES GIVEN. LENGTH AND QUANTITIES PROVIDED ARE FOR QUOTING PURPOSES ONLY, AND SHALL NOT BE USED FOR FABRICATION.

FOR PARTS NOT DETAILED WITHIN THE DRAWING AND STARTING WITH "CCI-", SEE THE FOLLOWING CATALOG FOR DETAILS: CED-CAT-10300, MONOPOLE STANDARD DRAWINGS AND APPROVED REINFORCEMENT COMPONENTS

BOLT COUNT BY LENGTH

LENGTH	QUANTITY
SHORT	314
MEDIUM	0
LONG	0
TOTAL	**314**

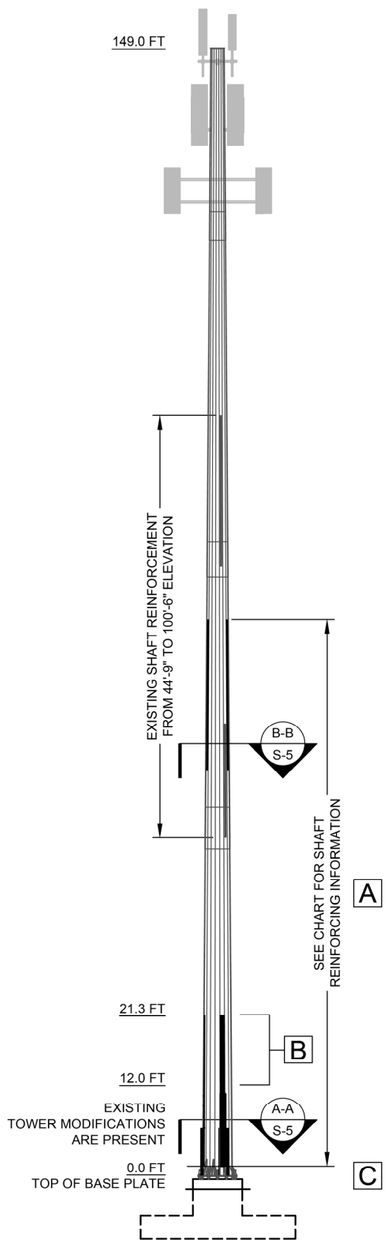

POLE ELEVATION

CCI FLAT PLATE (65 KSI) REINFORCING SCHEDULE

BOTTOM ELEVATION	TOP ELEVATION	PART NUMBER	FLAT / DEGREES (°)	TERMINATION BOLTS (BOTTOM)	TERMINATION BOLTS (TOP)	MAX INTERMEDIATE BOLT SPACING	BOLT QUANTITY PER PLATE	STEEL WEIGHT PER PLATE (BLACK)	TOTAL BOLT QUANTITY	TOTAL STEEL WEIGHT (BLACK)
1'-3"	21'-3"	CCI-CFP-08012520	2, 11	16	16	1'-5"	43	680.0	86	1360.0
1'-3"	21'-3"	CCI-WCFP-08012520	7, 16	0	16	1'-5"	24	680.0	48	1360.0
53'-5"	73'-5"	CCI-AFP-06512520	4, 10, 16	14	14	1'-7"	36	552.5	108	1657.5
								TOTAL	314	4377.5

NOTES FOR CROWN (65 KSI) FLAT PLATES INCLUDING BOLTED BRIDGE STIFFENERS:

1. FASTENERS MAY BE USED ON THIS PROJECT AS INDICATED IN THE FOLLOWING TABLES:

NEXGEN2	APPROVED	SPECIALTY FASTENERS	NA

   ORDERING INFORMATION AND INSTALLATION DETAILS FOR APPROVED FASTENERS CAN BE FOUND IN CED-CAT-10300.
2. ALL FLAT PLATE REINFORCEMENT IS TO BE INSTALLED CENTERED ON ITS DESIGNATED FLAT OR AZIMUTH, UNO, WITH A TOLERANCE FROM CENTER OF THE FLAT OR AZIMUTH AS FOLLOWS:

ALLOWABLE FLAT PLATE CENTERING TOLERANCE	3/8"

   GC SHALL REDLINE ALL DEVIATIONS FROM CENTER, INCLUDING THOSE WITHIN TOLERANCE.
3. GC SHALL REPLACE ANY STEP BOLTS AND STEP BOLT CLIPS THAT INTERFERE WITH THE INSTALLATION OF FLAT PLATE. REFERENCE CED-CAT-10300 FOR APPROVED OPTIONS. CCI-SB-0100 IS THE DEFAULT OPTION; OTHER OPTIONS MAY BE REQUIRED FOR FIT-UP.
4. FOR PLATES STARTING AT 6", THE BOTTOM OF THE FLAT PLATE SHALL BEGIN AT 6" +/- 1". FOR SINGLE PLATES OR MULTIPLE PLATES SPLICED TOGETHER, THE BOTTOM OF THE FLAT PLATE RUN SHALL BEGIN AT THE PROPOSED ELEVATION +/- 3". FOR MULTIPLE PLATES SPLICED TOGETHER, THE TOP OF THE FLAT PLATE IS TO BE PLACED SUCH THAT THERE IS NO MORE THAN 3" DIFFERENCE BETWEEN THE ACTUAL OVERALL LENGTH OF THE SPAN AND THE PROPOSED OVERALL LENGTH OF THE SPAN, FROM THE BOTTOM OF THE BOTTOM PLATE TO THE TOP OF THE TOP PLATE.
5. SHIMS FOR MONOPOLE REINFORCEMENT MEMBER SHALL BE REQUIRED WHERE GAPS BETWEEN THE POLE SHAFT AND REINFORCING MEMBER EXIST AT FASTENER LOCATIONS. FOR INTERMEDIATE CONNECTIONS, THE MINIMUM SHIM LENGTH AND WIDTH SHALL BE THE WIDTH OF THE REINFORCING MEMBER. FOR TERMINATION CONNECTIONS, A CONTINUOUS SHIM PLATE (PREFERRED) OR EQUIVALENT INDIVIDUAL SHIM PLATES THE WIDTH OF THE REINFORCING MEMBER MAY BE USED. SHIM THICKNESSES SHALL BE NO LESS THAN 1/16". STACKING OF SHIMS IS PERMITTED. FINGER SHIMS AND HORSESHOE SHIMS ARE PERMITTED. SINGLE AND STACKED SHIMS IN BOLT TERMINATION REGIONS SHALL BE NO GREATER THAN A TOTAL OF 1/4" WITHOUT EOR APPROVAL. SINGLE AND STACKED SHIMS AT INTERMEDIATE CONNECTIONS SHALL BE NO GREATER THAN A TOTAL OF 5/8" WITHOUT EOR APPROVAL.
6. SHIM MATERIAL SHALL BE STEEL GRADE A36 OR GREATER IF WELDED, UNO, AND SHALL REQUIRE MTR; IF SHIMS ARE NOT WELDED, THERE IS NO MINIMUM REQUIRED STEEL GRADE.
7. IF UNEXPECTED HOLES ARE FOUND IN A LOCATION WHERE FLAT PLATE IS PROPOSED TO BE INSTALLED, THE GC SHALL NOT PLACE NEW BOLT HOLES WITHIN A CENTER-TO-CENTER DISTANCE OF 3 TIMES THE DIAMETER OF THE LARGER OF THE TWO HOLES, WITHOUT EOR APPROVAL. EXISTING HOLES MAY INCLUDE BUT ARE NOT LIMITED TO EMPTY BOLT HOLES AND JACKING NUTS WITH CENTER HOLES.

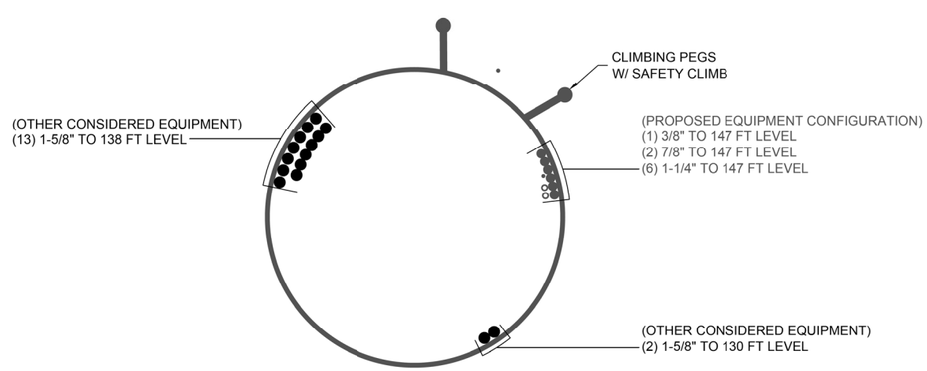

BASE LEVEL DRAWING

NO.	DATE	DESCRIPTION	BY

REVISIONS

STATE OF CONNECTICUT
TERRY P. STYRAN
31522
LICENSED
PROFESSIONAL ENGINEER

2/18/2021

CROWN CASTLE

THIS DRAWING IS COPYRIGHTED AND IS THE SOLE PROPERTY OF CROWN CASTLE. IT IS PRODUCED SOLELY FOR USE BY CROWN CASTLE AND ITS AFFILIATES. REPRODUCTION OR USE OF THIS DRAWING AND/OR THE INFORMATION CONTAINED IN IT IS FORBIDDEN WITHOUT THE WRITTEN PERMISSION OF CROWN CASTLE.

SITE NAME: ANDOVER NORTH

BU NUMBER: 842856

WO NUMBER: 1923928

SITE ADDRESS:
122 JONATHAN TRUMBULL HIGHWAY (ROUTE 6)
ANDOVER, CT 06232
TOLLAND COUNTY, USA

ENG/QA BY: **DBS**	DATE: **02/12/21**
DFT BY: **SL**	DATE: **02/12/21**
DFT/QA BY: **SL**	DATE: **02/16/21**
APRV'D BY: **DBS**	DATE: **02/17/21**

SCALE: N.T.S.

POLE MODIFICATION SCHEDULE

S-4

REV 0

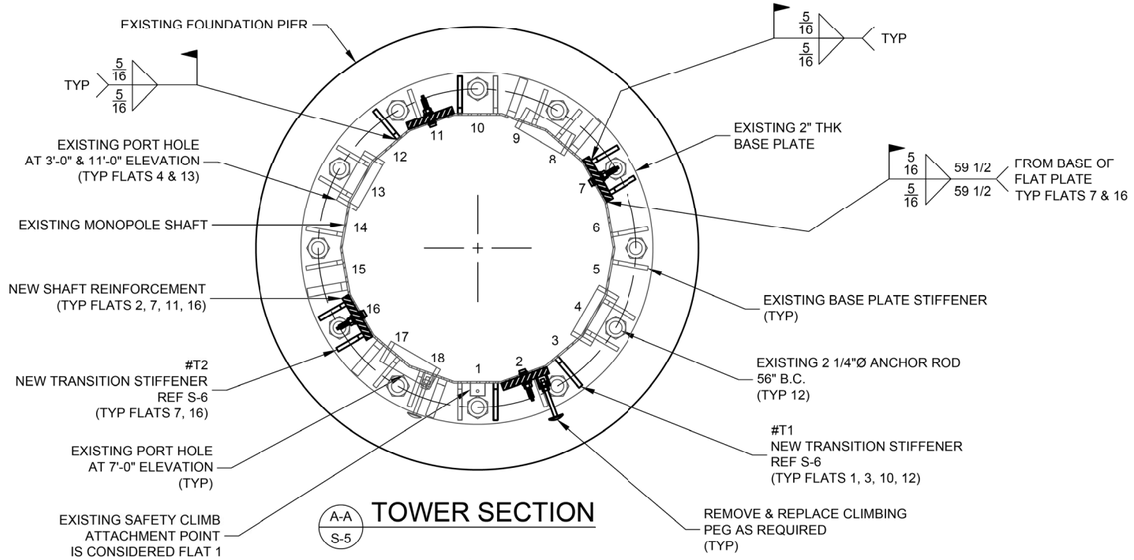

A-A / S-5 TOWER SECTION

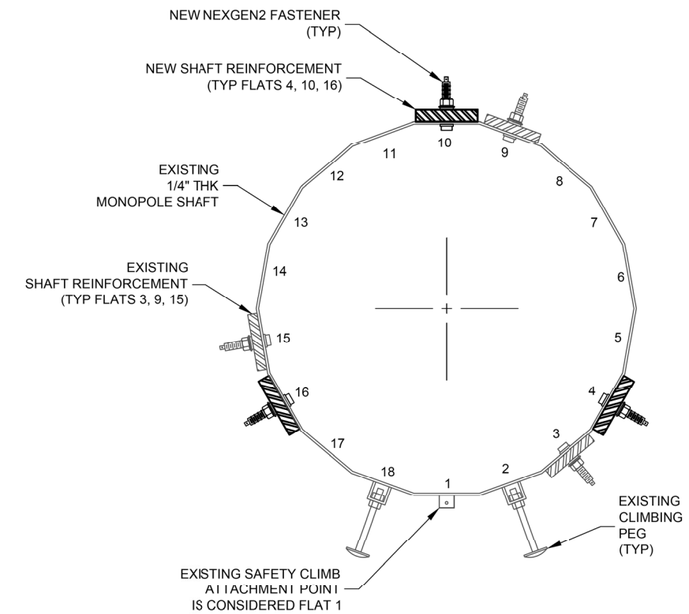

B-B / S-5 TOWER SECTION

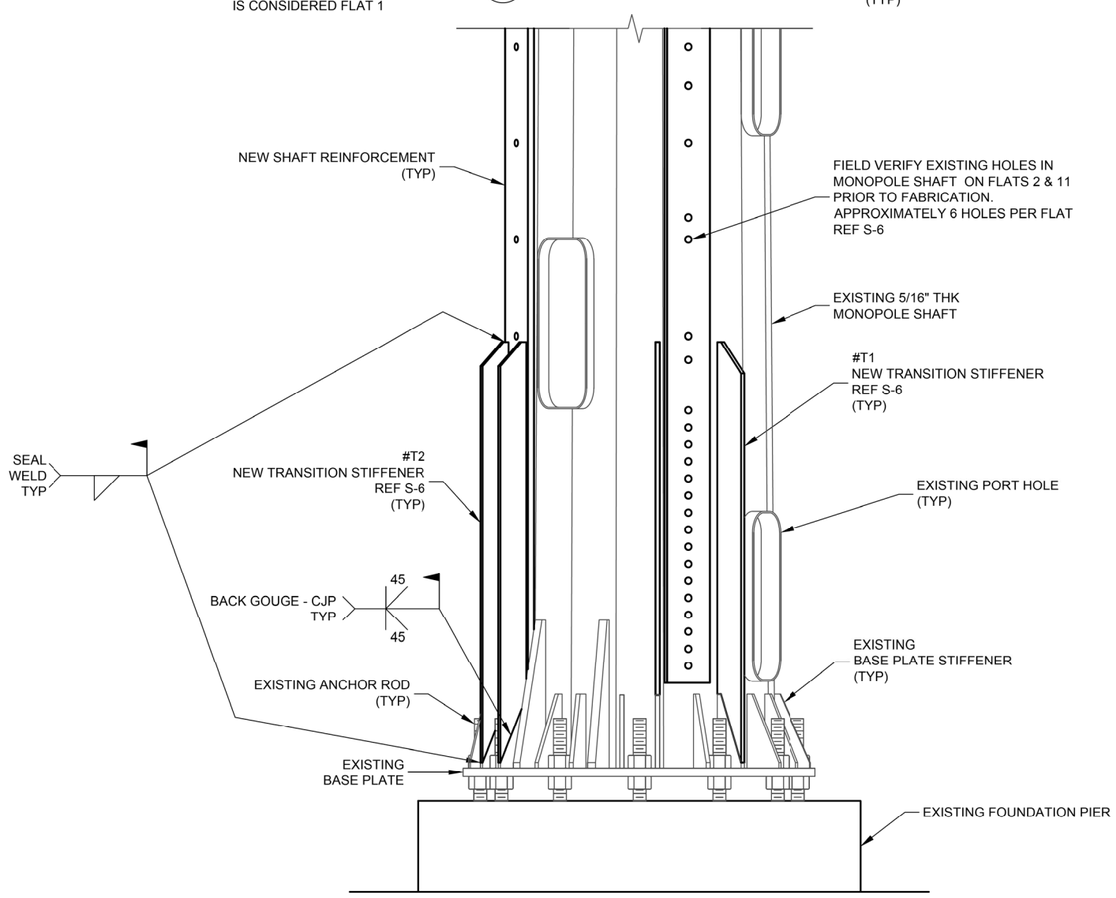

ELEVATION VIEW

NO.	DATE	DESCRIPTION	BY

REVISIONS

2/18/2021

CROWN CASTLE

"THIS DRAWING IS COPYRIGHTED AND IS THE SOLE PROPERTY OF CROWN CASTLE. IT IS PRODUCED SOLELY FOR USE BY CROWN CASTLE AND ITS AFFILIATES. REPRODUCTION OR USE OF THIS DRAWING AND/OR THE INFORMATION CONTAINED IN IT IS FORBIDDEN WITHOUT THE WRITTEN PERMISSION OF CROWN CASTLE.

SITE NAME: ANDOVER NORTH
BU NUMBER: 842856
WO NUMBER: 1923928
SITE ADDRESS:
122 JONATHAN TRUMBULL HIGHWAY (ROUTE 6)
ANDOVER, CT 06232
TOLLAND COUNTY, USA

ENG/QA BY: **DBS** DATE: **02/12/21**
DFT BY: **SL** DATE: **02/12/21**
DFT/QA BY: **SL** DATE: **02/16/21**
APRV'D BY: **DBS** DATE: **02/17/21**
SCALE: N.T.S.

TOWER SECTION

S-5 REV 0

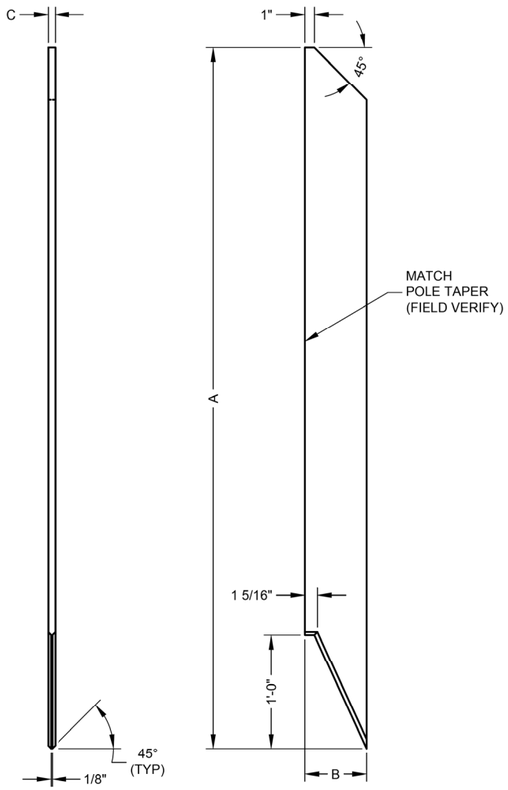

#T1 TRANSITION STIFFENER

WEIGHT (lbs)	A (in)	B (in)	C (in)	STEEL GRADE
89.4	74	6 1/2	3/4	A572-65

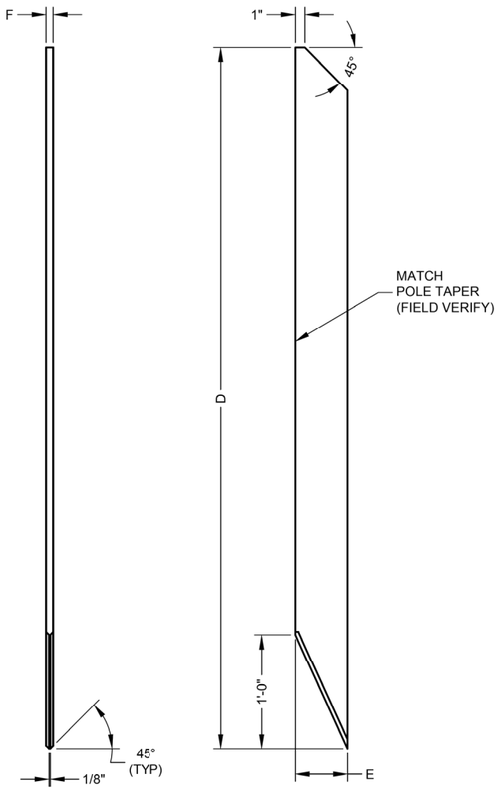

#T2 TRANSITION STIFFENER

WEIGHT (lbs)	D (in)	E (in)	F (in)	STEEL GRADE
77.3	74	5 1/4	3/4	A572-65

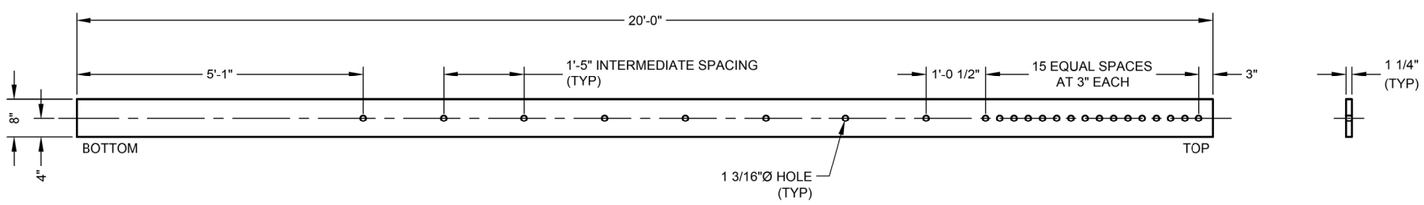

(2) CCI-WCFP-08012530

ASTM A572-65

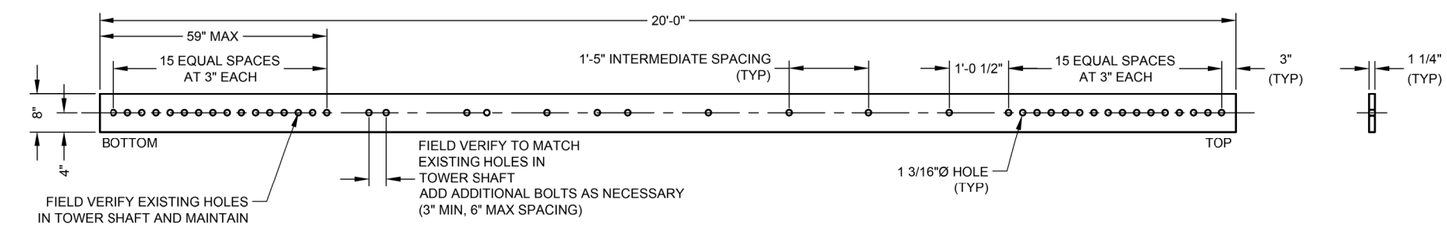

(2) CCI-CFP-08012530

ASTM A572-65

NOTES:

1. ALL HOLES ARE TO BE DRILLED. DO NOT BURN OR PUNCH.
2. FABRICATION TOLERANCES: FRACTIONS ± 1/16"
   ANGLES ± 1/2 DEGREE
   DECIMALS ± .010"
   BOLT HOLES ± 1/32"
3. THE 65 KSI MATERIAL SHALL CONFORM TO THE FOLLOWING:
   A. MATERIAL SHALL BE ASTM A572 HAVING A MINIMUM TENSILE STRENGTH (Fu) OF 80 KSI AND A MINIMUM YIELD STRENGTH (Fy) OF 65 KSI.
   B. THE FINISH SHALL BE HOT-DIP GALVANIZED PER ASTM A123.

NO.	DATE	DESCRIPTION	BY

REVISIONS

CROWN CASTLE

THIS DRAWING IS COPYRIGHTED AND IS THE SOLE PROPERTY OF CROWN CASTLE. IT IS PRODUCED SOLELY FOR USE BY CROWN CASTLE AND ITS AFFILIATES. REPRODUCTION OR USE OF THIS DRAWING AND/OR THE INFORMATION CONTAINED IN IT IS FORBIDDEN WITHOUT THE WRITTEN PERMISSION OF CROWN CASTLE.

SITE NAME: ANDOVER NORTH
BU NUMBER: 842856
WO NUMBER: 1923928
SITE ADDRESS:
122 JONATHAN TRUMBULL HIGHWAY (ROUTE 6)
ANDOVER, CT 06232
TOLLAND COUNTY, USA

STATE OF CONNECTICUT
TERRY P. STYRAN
31522
LICENSED
PROFESSIONAL ENGINEER

2/18/2021

ENG/QA BY: **DBS**	DATE: **02/12/21**	
DFT BY: **SL**	DATE: **02/12/21**	
DFT/QA BY: **SL**	DATE: **02/16/21**	
APRV'D BY: **DBS**	DATE: **02/17/21**	
SCALE: N.T.S.		

DETAILS

S-6

REV 0

Exhibit E

Mount Analysis

Date: **April 13, 2021**

Kevin Morrow
Crown Castle
6325 Ardrey Kell Rd, Suite 600
Charlotte, NC 28277
(704) 405-6619

POD Group
1033 E Turkeyfoot Lake Rd. Suite 206
Akron, OH 44312
(330) 961.7432
aherkenhoff@podgrp.com

Subject:	**Mount Replacement Analysis Report**	
Carrier Designation:	**AT&T Mobility**	
	Carrier Site Number:	**10070910**
	Carrier Site Name:	**Andover North**
	FA Number:	**10070910**
	Pace Number:	**MRCTB047251**
Crown Castle Designation:	**Crown Castle BU Number:**	**842856**
	Crown Castle Site Name:	**ANDOVER NORTH**
	Crown Castle JDE Job Number:	**605391**
	Crown Castle Order Number:	**517084 Rev.4**
Engineering Firm Designation:	**POD Report Designation:**	**21-77774**
Site Data:	**122 Jonathan Trumbull Highway (Route 6), Andover, Tolland County, CT 06232** **Latitude 41° 45' 0.46" Longitude -72° 24' 9.63"**	
Structure Information:	**Tower Height & Type:**	**149 Monopole**
	Mount Elevation:	**147 ft**
	Mount Type:	**12 ft Platform with Support Rails**

Dear Kevin Morrow,

POD Group is pleased to submit this "Mount Replacement Analysis Report" to determine the structural integrity of AT&T Mobility's antenna mounting system with the proposed appurtenance and equipment addition on the abovementioned supporting tower structure. Analysis of the existing supporting tower structure is to be completed by others and therefore is not part of this analysis. Analysis of the antenna mounting system as a tie-off point for fall protection or rigging is not part of this document.

The purpose of the analysis is to determine acceptability of the mount stress level. Based on our analysis we have determined the mount stress level to be:

12 ft Platform with Support Rails (Multiple Sector) **Sufficient**

The analysis has been performed in accordance with the TIA-222-H Standard based upon an ultimate 3-second gust wind speed of 119 mph. Applicable Standard references and design criteria are listed in Section 2 - Analysis Criteria.

Mount structural analysis prepared by: Cait Campbell

Respectfully submitted by:

4/13/2021

STATE OF CONNECTICUT
JASON CHERONIS
PEN.0032793
LICENSED
PROFESSIONAL ENGINEER

Jason Cheronis, PE
Connecticut PE#: 0032793

TABLE OF CONTENTS

1) INTRODUCTION

2) ANALYSIS CRITERIA
Table 1 – Proposed Equipment Configuration

3) ANALYSIS PROCEDURE
Table 2 – Documents Provided
3.1) Analysis Method
3.2) Assumptions

4) ANALYSIS RESULTS
Table 3 - Mount Component Stresses vs. Capacity
4.1) Recommendations
Table 4 – AT&T Specification

5) APPENDIX A
Wire Frame and Rendered Models

6) APPENDIX B
Software Input Calculations

7) APPENDIX C
Software Analysis Output

8) APPENDIX D
Additional Calculations

9) APPENDIX E
Design Criteria

10) APPENDIX F
Mount Specification Sheets

1) INTRODUCTION

This mount is a proposed 12 ft Platform with Support Rails designed by Sabre (PN: C10855721C). This mount is to be installed at the 147 ft elevation on the 149 Monopole.

2) ANALYSIS CRITERIA

TIA-222 Revision:	TIA-222-H
Risk Category:	II
Ultimate Wind Speed:	119 mph
Exposure Category:	C
Topographic Factor at Base:	1.00
Topographic Factor at Mount:	1.00
Ice Thickness:	1.50 in
Wind Speed with Ice:	50 mph
Seismic S_s:	0.193
Seismic S_1:	0.055
Live Loading Wind Speed:	30 mph
Man Live Load at Mid/End-Points:	250 lb
Man Live Load at Mount Pipes:	500 lb

Table 1 - Proposed Equipment Configuration

Mount Centerline (ft)	Antenna Centerline (ft)	Number of Antennas	Antenna Manufacturer	Antenna Model	Mount / Modification Details	Note
147	151	3	CCI ANTENNAS	DMP65R-BU6D	12 ft Platform with Support Rails	-
		3	CCI ANTENNAS	HPA65R-BU6A		
		3	ERICSSON	RRUS 4449 B5/B12		
		3	ERICSSON	RRUS 8843 B2/B66A		
		1	RAYCAP	DC6-48-60-18-8F		

3) ANALYSIS PROCEDURE

Table 2 - Documents Provided

Document	Remarks	Reference	Source
Crown Application	-	Crown Castle App # 517084 Rev.4 Dated: 04/16/2020	Crown Castle
Structural Analysis	-	GPD Engineering Report #: 2019777.842856.04 Dated: 10/15/2019	Crown Castle
Mount Specification Sheets	-	Sabre Industries Part #: C10855721C Dated: 10/18/2017	POD

3.1) Analysis Method

RISA-3D (Version 17.0.4), a commercially available analysis software package, was used to create a three-dimensional model of the antenna mounting system and calculate member stresses for various loading cases. Selected output from the analysis are included in the Appendices.

A tool internally developed, using Microsoft Excel, by POD Group, was used to calculate wind loading on all appurtenances, dishes, and mount members for various load cases. Selected output from the calculations is included in Appendix B.

This analysis was performed in accordance with Crown Castle's ENG-SOW-10208 Tower Mount Analysis (Revision B). In addition, this analysis is in accordance with AT&T's mount technical directive.

3.2) Assumptions

1) The antenna mounting system was properly fabricated, installed, and maintained in good condition in accordance with its original design, TIA Standards, and/or manufacturer's specifications. This is not a condition assessment of the mount, structure, or foundation.
2) The configuration of antennas, mounts, and other appurtenances are as specified in Table 1 and the referenced drawings.
3) All member connections are assumed to have been designed to meet or exceed the load carrying capacity of the connected member unless otherwise specified in this report.
4) The weight of the mount was increased 10% in the analysis to account for connections, coax, and jumpers.
5) The purpose of this report is to assess the feasibility of adding appurtenances usually accompanied by transmission lines to the structure. POD Group does not analyze the fabrication of the mount or structure (including welding).
6) The analysis will be required to be revised if the existing conditions in the field differ from those shown in the above-referenced documents or assumed in this analysis. No allowance was made for any damaged, missing, or rusted members.
7) Steel grades have been assumed as follows, unless noted otherwise:
    a. Angle, Plate — ASTM A36 (GR 36)
    b. HSS (Rectangular) — ASTM 500 (GR B-46)
    c. Pipe — ASTM A53 (GR 35)
    d. Connection Bolts — ASTM A325

If any of these assumptions are not valid or have been made in error, this analysis may be affected, and POD Group should be allowed to review any new information to determine its effect on the structural integrity of the mount.

4) ANALYSIS RESULTS

Table 3 - Mount Component Stresses vs. Capacity (12 ft Platform with Support Rails)

Notes	Component	Critical Member	Centerline (ft)	% Capacity	Pass / Fail
1	SO	SOBOT2	147	47.6	Pass
	CR	CR2B	147	35.0	Pass
	Mount Pipe	MP ALPHA3	147	29.8	Pass
	INNER	INNER4	147	29.4	Pass
	CP	CP1	147	26.8	Pass
	RAIL	RAIL1	147	17.0	Pass
	ENDCOR	ENDCORNER2B	147	16.6	Pass
	FACE	FACE3	147	15.8	Pass
	CORNER	CORNER3	147	8.5	Pass
1	Flange Plate	-	-	29.6	Pass
	Bolts	-	-	5.5	Pass

Structure Rating (max from all components) =	47.6%

Notes:
1) See additional documentation in “Appendix C – Software Analysis Output” and “Appendix D – Additional Calculations” for calculations supporting the % capacity

4.1) Recommendations

The mount has sufficient capacity to carry the proposed loading configuration. No modifications are required at this time.

Table 4 – AT&T Specification

Wind Speed (mph)	Ice Thickness (in)	Height (ft)	Exposure	Class	Topo	# of Pipes	Allowable EPA per Pipe (ft sq.)	Allowable Weight per Sector (lbs)
119	1.50	147	C	II	1	4	6.37	2960

APPENDIX A

Wire Frame and Rendered Models

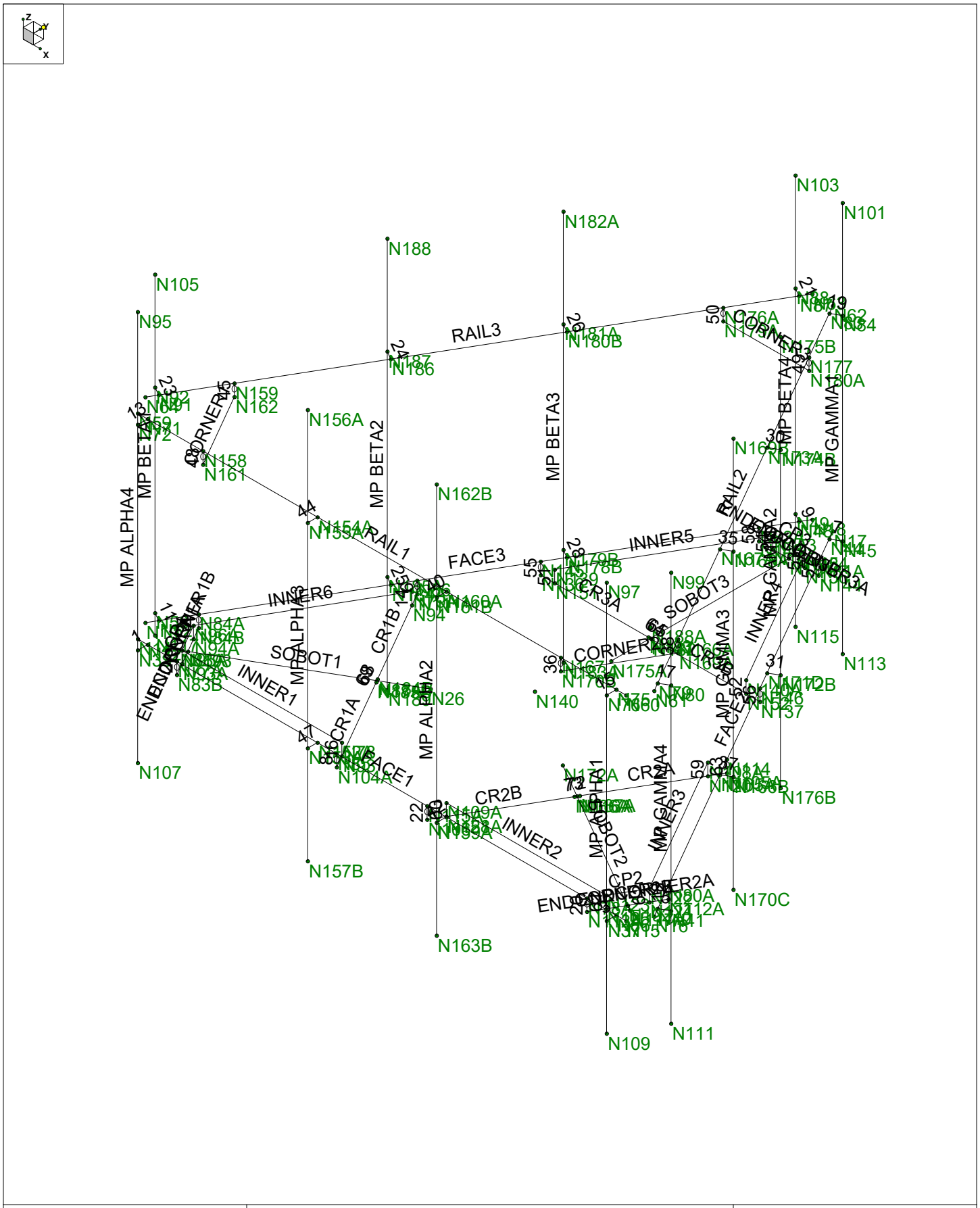

Power of Design	842856	SK - 1
CC		Apr 13, 2021 at 3:26 PM
21-77774		(PL37) 12.5' Sabre Platform with R...

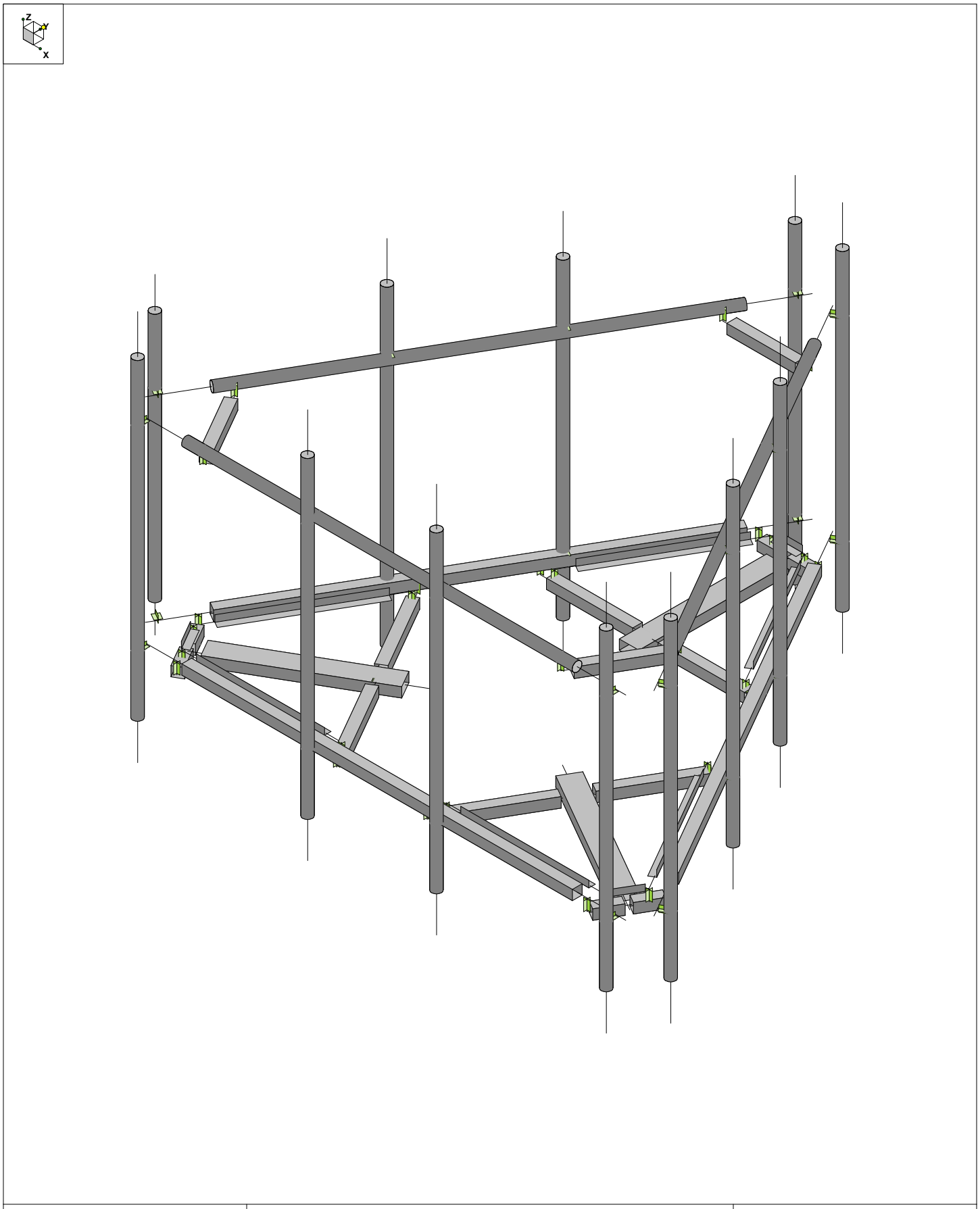

Power of Design	842856	SK - 2
CC		Apr 13, 2021 at 3:26 PM
21-77774		(PL37) 12.5' Sabre Platform with R...

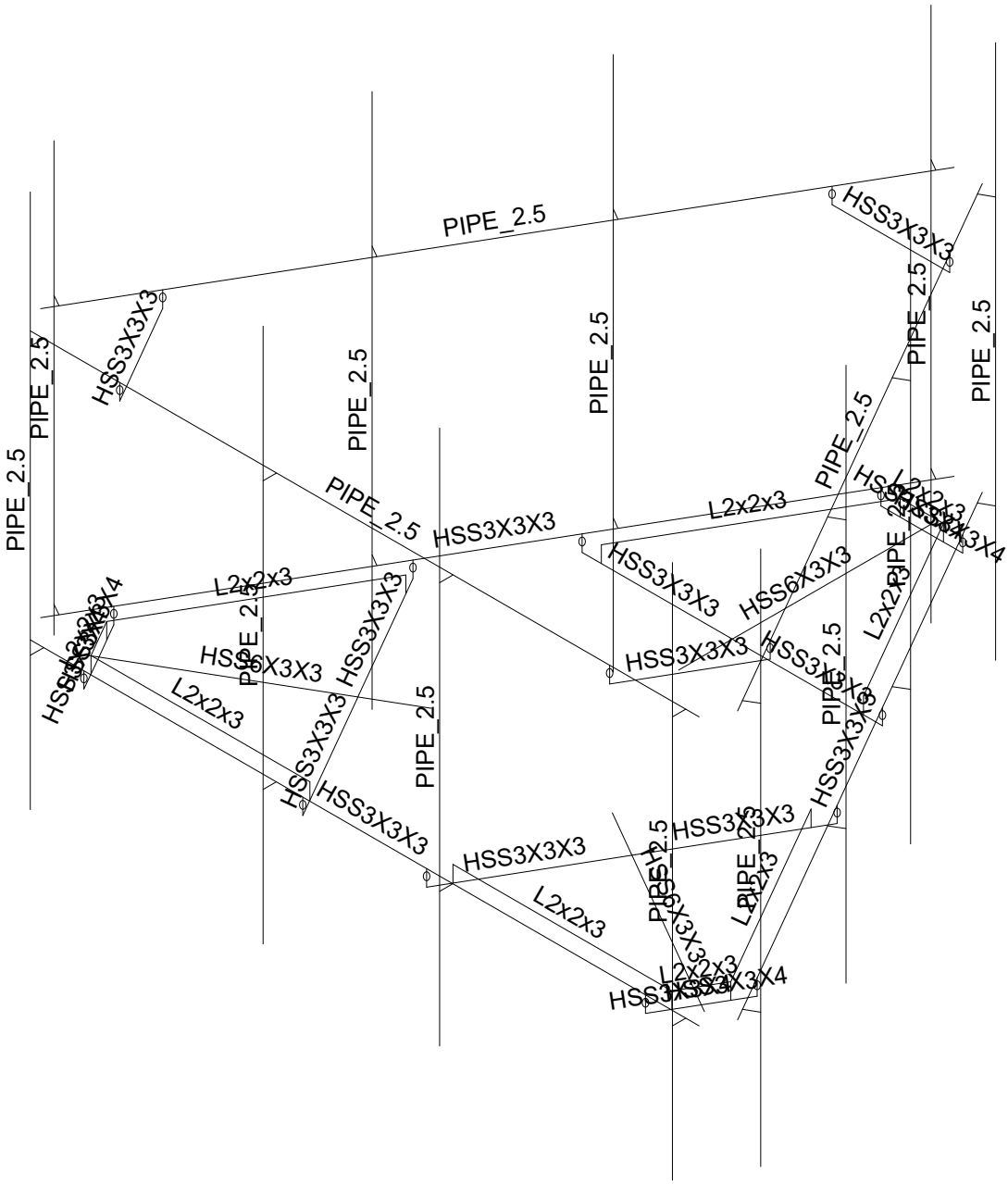

Power of Design	842856	SK - 3
CC		Apr 13, 2021 at 3:26 PM
21-77774		(PL37) 12.5' Sabre Platform with R...

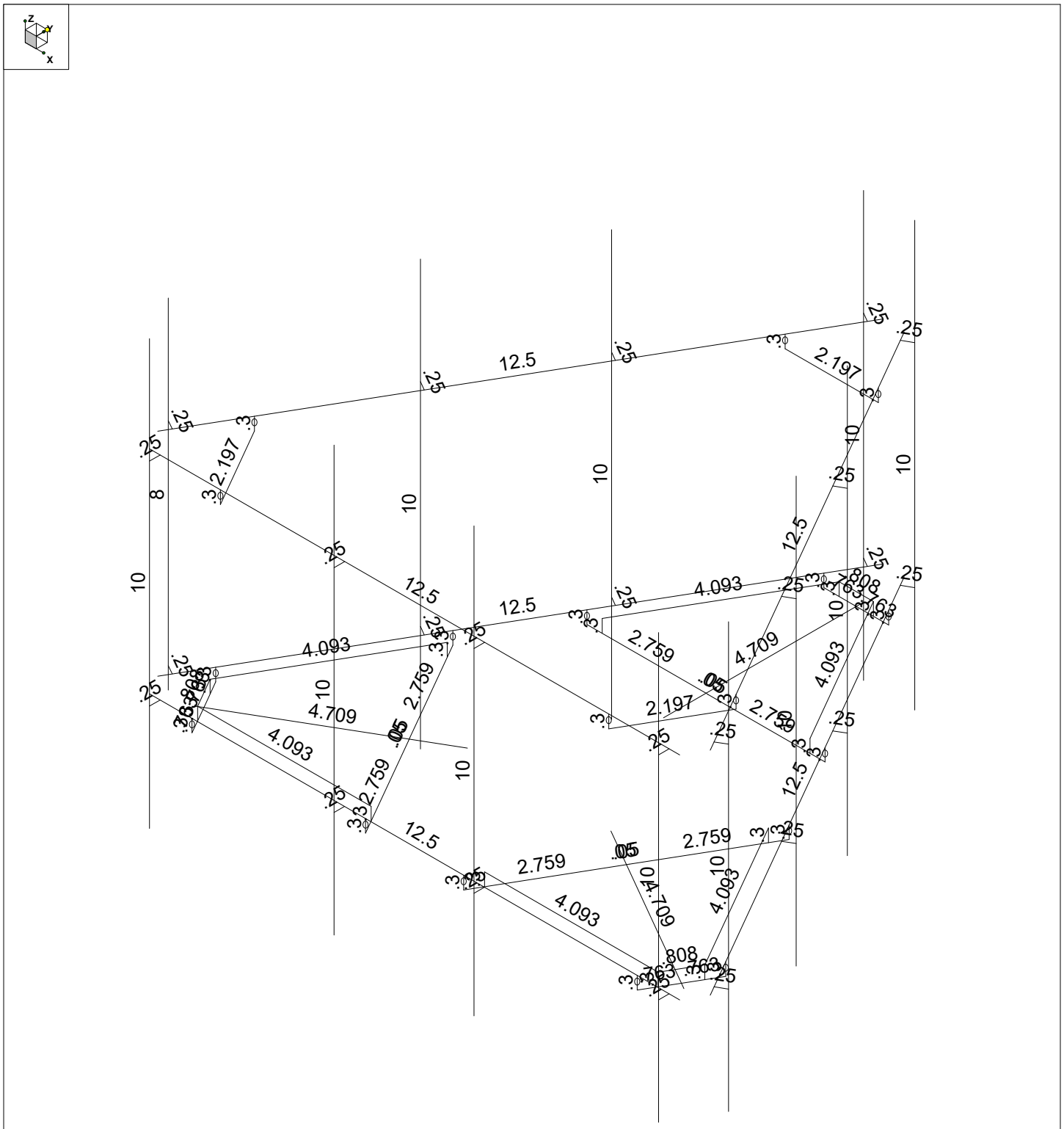

Member Length (ft) Displayed

Power of Design	842856	SK - 4
CC		Apr 13, 2021 at 3:27 PM
21-77774		(PL37) 12.5' Sabre Platform with R...

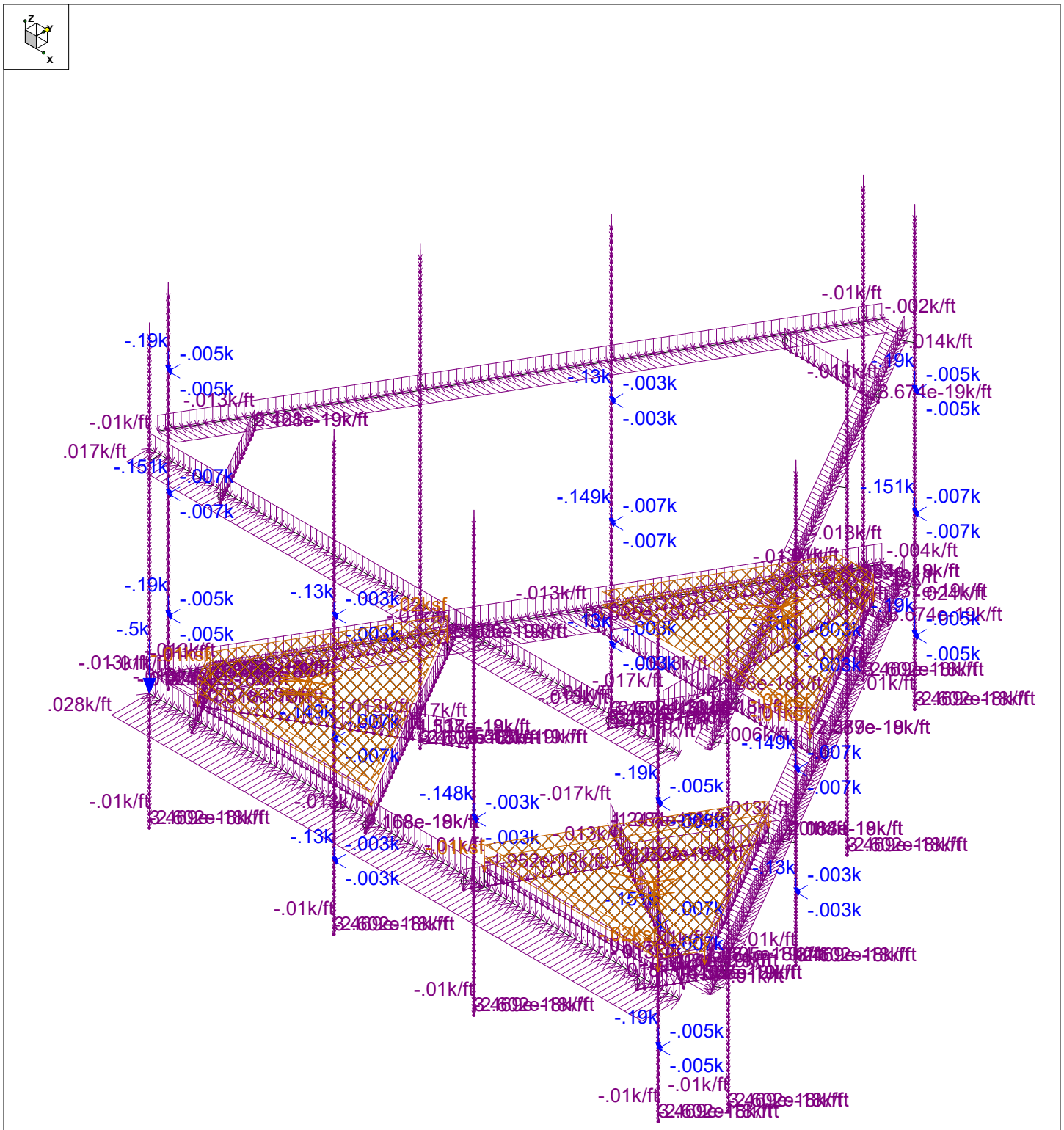

Loads: DL - Dead Load

Power of Design	842856	SK - 5
CC		Apr 13, 2021 at 3:27 PM
21-77774		(PL37) 12.5' Sabre Platform with R...

APPENDIX B

Software Input Calculations

POD Job #	**21-77774**
Site Number	**842856**
Site Name	**ANDOVER NORTH**

General Site Information

Mount Type	SFP	Risk Category	II	I (seismic)	1			Use CFD	Yes
V (Wind Speed)	119	I(ice)	1	Sms	0.309				
Zs	495.67			Sm1	0.132				width (ft) / height (ft)
ti	1.5	Ss	0.193	Sds	0.206			Front Outer Dimensions	12 / 5
Vi	50	S1	0.055	Sd1	0.088				
Kzt	1	Soil Site Class	D (assumed)	Seismic Design Category					
Exposure	C	Fa	1.600		B				
zg	900	Fv	2.400	Seismic Analysis Not Required					
α	9.5			R	2	TIA-222-H 16.7			
Kmin	0.85	Tower Type	Monopole	As	1	TIA-222-H 16.7			
G_H	1	Tower Height	149	Cs, Min	0.03	TIA-222-H 2.7.7.1.1			
Ke	0.98			Cs	0.10293333	TIA-222-H 2.7.7.1.1			
K_D	0.95								
K_s	0.9								

Appurtenance Information

Model	Shielded	% Shielded	Centerline	Centerline on MP	Spacing (in)	Azimuth	Sector	Quantity	MP #
DMP65R-BU6D			151	4	60	40	A/B/C	1	1
HPA65R-BU6A			151	4	60	40	A/B/C	1	3
RRUS 4449 B5/B12			151	4			A/B/C	1	1
RRUS 8843 B2/B66A			151	4			A/B/C	1	3
DC6-48-60-18-8F			151	4			A	1	2

Mount Information

Elevation (ft)	147	Grating Thickness (in)	1
K_z	1.37	Grating Ice Weight (k/ft^)	0.020
Kiz	1.16		
tiz	1.74		

	Length (ft)	Width (in)	Centerline
Mount Pipes	10	2.875	151

Round Members

Member	Length (ft)	Width (in)	Frame Member	# of Members
RAIL on	12.5	2.875	Yes	2
RAIL off	12.5	2.875	No	1

Flat Members

Member	Length (ft)	Width (in)	Shape	A	B	C	D	Frame Member	# of Members
FACE on	12.5	3	Square HSS	3	0.1875	3		Yes	2
FACE off	12.5	3	Square HSS	3	0.1875	3		No	1
SOBOT	4.709	3	Square HSS	6	0.1875	3		No	3
INNER	4.093	2	Angle	2	0.1875			No	6
CR	2.759	3	Square HSS	3	0.1875	3		No	6
CORNER	2.179	3	Square HSS	3	0.1875	3		No	3
CP	0.808	2	Angle	2	0.1875			No	3
ENDCOR	0.763	3	Square HSS	3	0.25	3		No	6

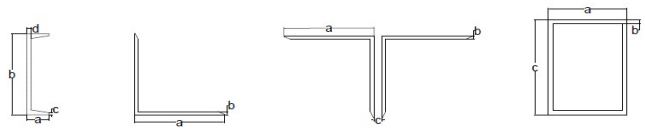

Version 3.52

Appurtenance Wind Calculations

Model	Height	Width	Depth	Weight (lbs)	Kz	qz (lb/ft$_2$)	$(EPA)_N$ (ft^2)	$(EPA)_T$(ft^2)	Wind Force (Kips) Front	Side	Alpha	Beta	Gamma
DMP65R-BU6D	71.2	20.7	7.7	89.3	1.38	46.69	11.93	4.48	0.557	0.209	0.547	0.547	0.353
HPA65R-BU6A	71.1	11.7	7.6	54.5	1.38	46.69	5.88	3.82	0.275	0.178	0.272	0.272	0.218
RRUS 4449 B5/B12	17.9	13.2	9.4	71.0	1.38	46.69	1.77	1.27	0.083	0.059	0.077	0.077	0.059
RRUS 8843 B2/B66A	14.9	13.2	10.9	72.0	1.38	46.69	1.48	1.22	0.069	0.057	0.066	0.066	0.057
DC6-48-60-18-8F	31.3	11.0	11.0	32.8	1.38	46.69	1.09	1.09	0.051	0.051	0.051	0.051	0.051

Appurtenance Ice Calculations

Model	tiz (in)	Height	Width	Depth	Weight (lbs)	Kiz	qz (lb/ft$_2$)	$(EPA)_N$ (ft^2)	$(EPA)_T$(ft^2)	Wind Force (Kips) Front	Side	Alpha	Beta	Gamma
DMP65R-BU6D	1.75	74.69	24.19	11.19	287.68	1.16	8.24	13.17	6.13	0.109	0.051	0.118	0.118	0.095
HPA65R-BU6A	1.75	74.59	15.19	11.09	202.51	1.16	8.24	7.20	5.26	0.059	0.043	0.068	0.068	0.068
RRUS 4449 B5/B12	1.75	21.39	16.68	12.93	77.35	1.16	8.24	1.56	1.21	0.013	0.010	0.012	0.012	0.010
RRUS 8843 B2/B66A	1.75	18.39	16.69	14.39	73.73	1.16	8.24	1.35	1.16	0.011	0.010	0.011	0.011	0.010
DC6-48-60-18-8F	1.75	34.74	14.49	14.49	113.95	1.16	8.24	2.20	2.20	0.018	0.018	0.018	0.018	0.018

Round Members

Member	Wind Calculations q_z (lb/ft^2)	Ar	C	Rr	Cf	EPA (ft^2)	Load (k/ft)	Ice Calculations Width (in)	Weight (k/ft)	q_z (lb/ft^2)	Arice	Rrice	Cf	EPA (ft^2)	Load (k/ft)
RAIL on	46.43	5.99	32.56	0.58	1.20	1.86	0.007	6.36	0.01	8.20	13.25	0.64	1.20	4.59	0.003
RAIL off	46.43	2.99	32.56	0.58	1.20	1.86	0.003	6.36	0.01	8.20	6.62	0.64	1.20	4.59	0.002

Flat Members

Member	Wind Calculations q_z (lb/ft^2)	Af	Cf	EPA	Load (k/ft)	Ice Calculations Width (in)	Weight (k/ft)	q_z (lb/ft^2)	Arice	Rrice	Cf	EPA	Load (k/ft)
FACE on	46.43	6.25	1.25	3.52	0.013	6.48	0.01	8.20	13.51	0.64	1.25	4.87	0.003
FACE off	46.43	3.13	1.25	3.52	0.007	6.48	0.01	8.20	6.75	0.64	1.25	4.87	0.002
SOBOT	46.43	3.53	1.25	1.32	0.007	6.48	0.02	8.20	7.63	0.64	1.25	1.84	0.002
INNER	46.43	4.09	2.00	1.23	0.007	5.48	0.01	8.20	11.22	0.64	2.00	2.16	0.002
CR	46.43	4.14	1.25	0.78	0.007	6.48	0.01	8.20	8.94	0.64	1.25	1.08	0.002
CORNER	46.43	1.63	1.25	0.61	0.007	6.48	0.01	8.20	3.53	0.64	1.25	0.85	0.002
CP	46.43	0.40	2.00	0.24	0.007	5.48	0.01	8.20	1.11	0.64	2.00	0.43	0.002
ENDCOR	46.43	1.14	1.25	0.21	0.007	6.48	0.01	8.20	2.47	0.64	1.25	0.30	0.002

Appurtenance Seismic Calculations

Model	Weight	Sds	ρ	Cs	As	Ev	Eh
DMP65R-BU6D	89.3	0.206	1.000	0.103	1.000	0.004	0.009
HPA65R-BU6A	54.5	0.206	1.000	0.103	1.000	0.002	0.006
RRUS 4449 B5/B12	71.0	0.206	1.000	0.103	1.000	0.003	0.007
RRUS 8843 B2/B66A	72.0	0.206	1.000	0.103	1.000	0.003	0.007
DC6-48-60-18-8F	32.8	0.206	1.000	0.103	1.000	0.001	0.003

Version 3.52

APPENDIX C

Software Analysis Output

Hot Rolled Steel Design Parameters

	Label	Shape	Length[ft]	Lbyy[ft]	Lbzz[ft]	Lcomp top[ft]	Lcomp bot[ft]	L-torq...	Kyy	Kzz	Cb	Functi...
1	SOBOT3	HSS6X3X3	4.709		3.5	Lbyy						Lateral
2	SOBOT2	HSS6X3X3	4.709		3.5	Lbyy						Lateral
3	SOBOT1	HSS6X3X3	4.709		3.5	Lbyy						Lateral
4	RAIL3	PIPE_2.5	12.5	9.15	9.15	Lbyy						Lateral
5	RAIL2	PIPE_2.5	12.5	9.15	9.15	Lbyy						Lateral
6	RAIL1	PIPE_2.5	12.5	9.15	9.15	Lbyy						Lateral
7	MP GAMM...	PIPE_2.5	10			Lbyy						Lateral
8	MP GAMM...	PIPE_2.5	10			Lbyy						Lateral
9	MP GAMM...	PIPE_2.5	10			Lbyy						Lateral
10	MP GAMM...	PIPE_2.5	10			Lbyy						Lateral
11	MP BETA4	PIPE_2.5	10			Lbyy						Lateral
12	MP BETA3	PIPE_2.5	10			Lbyy						Lateral
13	MP BETA2	PIPE_2.5	10			Lbyy						Lateral
14	MP BETA1	PIPE_2.5	8			Lbyy						Lateral
15	MP ALPHA4	PIPE_2.5	10			Lbyy						Lateral
16	MP ALPHA3	PIPE_2.5	10			Lbyy						Lateral
17	MP ALPHA2	PIPE_2.5	10			Lbyy						Lateral
18	MP ALPHA1	PIPE_2.5	10			Lbyy						Lateral
19	INNER6	L2x2x3	4.093			Lbyy						Lateral
20	INNER5	L2x2x3	4.093			Lbyy						Lateral
21	INNER4	L2x2x3	4.093			Lbyy						Lateral
22	INNER3	L2x2x3	4.093			Lbyy						Lateral
23	INNER2	L2x2x3	4.093			Lbyy						Lateral
24	INNER1	L2x2x3	4.093			Lbyy						Lateral
25	FACE3	HSS3X3X3	12.5	4.09	4.09	Lbyy						Lateral
26	FACE2	HSS3X3X3	12.5	4.09	4.09	Lbyy						Lateral
27	FACE1	HSS3X3X3	12.5	4.09	4.09	Lbyy						Lateral
28	ENDCORN...	HSS3X3X4	.763			Lbyy						Lateral
29	ENDCORN...	HSS3X3X4	.763			Lbyy						Lateral
30	ENDCORN...	HSS3X3X4	.763			Lbyy						Lateral
31	ENDCORN...	HSS3X3X4	.763			Lbyy						Lateral
32	ENDCORN...	HSS3X3X4	.763			Lbyy						Lateral
33	ENDCORN...	HSS3X3X4	.763			Lbyy						Lateral
34	CR3B	HSS3X3X3	2.759			Lbyy						Lateral
35	CR3A	HSS3X3X3	2.759			Lbyy						Lateral
36	CR2B	HSS3X3X3	2.759			Lbyy						Lateral
37	CR2A	HSS3X3X3	2.759			Lbyy						Lateral
38	CR1B	HSS3X3X3	2.759			Lbyy						Lateral
39	CR1A	HSS3X3X3	2.759			Lbyy						Lateral
40	CP3	L2x2x3	.808			Lbyy						Lateral
41	CP2	L2x2x3	.808			Lbyy						Lateral
42	CP1	L2x2x3	.808			Lbyy						Lateral
43	CORNER3	HSS3X3X3	2.197		1.09	Lbyy						Lateral
44	CORNER2	HSS3X3X3	2.197		1.09	Lbyy						Lateral
45	CORNER1	HSS3X3X3	2.197		1.09	Lbyy						Lateral

Member Primary Data

	Label	I Joint	J Joint	K Joint	Rotate(deg)	Section/Shape	Type	Design List	Material	Design Rules
1	SOBOT3	N175A	N148			HSS6X3X3	Beam	SquareTube	A500 Gr. C	Typical
2	SOBOT2	N172A	N117A			HSS6X3X3	Beam	SquareTube	A500 Gr. C	Typical
3	SOBOT1	N26	N88A			HSS6X3X3	Beam	SquareTube	A500 Gr. C	Typical
4	RAIL3	N63	N64			PIPE_2.5	Beam	Pipe	A53 Gr.B	Typical
5	RAIL2	N61	N62			PIPE_2.5	Beam	Pipe	A53 Gr.B	Typical
6	RAIL1	N59	N60			PIPE_2.5	Beam	Pipe	A53 Gr.B	Typical

Member Primary Data (Continued)

	Label	I Joint	J Joint	K Joint	Rotate(deg)	Section/Shape	Type	Design List	Material	Design Rules
7	MP GAMMA4	N111	N99			PIPE_2.5	Beam	Pipe	A53 Gr.B	Typical
8	MP GAMMA3	N170C	N169B			PIPE_2.5	Beam	Pipe	A53 Gr.B	Typical
9	MP GAMMA2	N176B	N175B			PIPE_2.5	Beam	Pipe	A53 Gr.B	Typical
10	MP GAMMA1	N113	N101			PIPE_2.5	Beam	Pipe	A53 Gr.B	Typical
11	MP BETA4	N115	N103			PIPE_2.5	Beam	Pipe	A53 Gr.B	Typical
12	MP BETA3	N183A	N182A			PIPE_2.5	Beam	Pipe	A53 Gr.B	Typical
13	MP BETA2	N189	N188			PIPE_2.5	Beam	Pipe	A53 Gr.B	Typical
14	MP BETA1	N117	N105			PIPE_2.5	Beam	Pipe	A53 Gr.B	Typical
15	MP ALPHA4	N107	N95			PIPE_2.5	Beam	Pipe	A53 Gr.B	Typical
16	MP ALPHA3	N157B	N156A			PIPE_2.5	Beam	Pipe	A53 Gr.B	Typical
17	MP ALPHA2	N163B	N162B			PIPE_2.5	Beam	Pipe	A53 Gr.B	Typical
18	MP ALPHA1	N109	N97			PIPE_2.5	Beam	Pipe	A53 Gr.B	Typical
19	INNER6	N79A	N96A		180	L2x2x3	Beam	Single Angle	A36 Gr.36	Typical
20	INNER5	N153	N139		180	L2x2x3	Beam	Single Angle	A36 Gr.36	Typical
21	INNER4	N140A	N154		180	L2x2x3	Beam	Single Angle	A36 Gr.36	Typical
22	INNER3	N122	N108A		180	L2x2x3	Beam	Single Angle	A36 Gr.36	Typical
23	INNER2	N109A	N123			L2x2x3	Beam	Single Angle	A36 Gr.36	Typical
24	INNER1	N95A	N78			L2x2x3	Beam	Single Angle	A36 Gr.36	Typical
25	FACE3	N18	N19			HSS3X3X3	Beam	SquareTube	A500 Gr. C	Typical
26	FACE2	N16	N17			HSS3X3X3	Beam	SquareTube	A500 Gr. C	Typical
27	FACE1	N14	N15			HSS3X3X3	Beam	SquareTube	A500 Gr. C	Typical
28	ENDCORNER...	N143	N191			HSS3X3X4	Beam	SquareTube	A500 Gr. C	Typical
29	ENDCORNER...	N144	N191			HSS3X3X4	Beam	SquareTube	A500 Gr. C	Typical
30	ENDCORNER...	N192	N113A			HSS3X3X4	Beam	SquareTube	A500 Gr. C	Typical
31	ENDCORNER...	N192	N112A			HSS3X3X4	Beam	SquareTube	A500 Gr. C	Typical
32	ENDCORNER...	N84B	N193			HSS3X3X4	Beam	SquareTube	A500 Gr. C	Typical
33	ENDCORNER...	N193	N83B			HSS3X3X4	Beam	SquareTube	A500 Gr. C	Typical
34	CR3B	N182	N137			HSS3X3X3	Beam	SquareTube	A500 Gr. C	Typical
35	CR3A	N136	N183			HSS3X3X3	Beam	SquareTube	A500 Gr. C	Typical
36	CR2B	N186A	N106			HSS3X3X3	Beam	SquareTube	A500 Gr. C	Typical
37	CR2A	N105A	N187A			HSS3X3X3	Beam	SquareTube	A500 Gr. C	Typical
38	CR1B	N184B	N111A			HSS3X3X3	Beam	SquareTube	A500 Gr. C	Typical
39	CR1A	N104A	N185B			HSS3X3X3	Beam	SquareTube	A500 Gr. C	Typical
40	CP3	N154	N153		180	L2x2x3	Beam	Single Angle	A36 Gr.36	Typical
41	CP2	N123	N122			L2x2x3	Beam	Single Angle	A36 Gr.36	Typical
42	CP1	N96A	N95A			L2x2x3	Beam	Single Angle	A36 Gr.36	Typical
43	CORNER3	N180A	N179A			HSS3X3X3	Beam	SquareTube	A500 Gr. C	Typical
44	CORNER2	N170B	N169A			HSS3X3X3	Beam	SquareTube	A500 Gr. C	Typical
45	CORNER1	N162	N161			HSS3X3X3	Beam	SquareTube	A500 Gr. C	Typical
46	73	N116A	N186A			RIGID	None	None	RIGID	Typical
47	72	N187A	N116A			RIGID	None	None	RIGID	Typical
48	69	N87A	N185B			RIGID	None	None	RIGID	Typical
49	68	N184B	N87A			RIGID	None	None	RIGID	Typical
50	65	N147	N182			RIGID	None	None	RIGID	Typical
51	64	N183	N147			RIGID	None	None	RIGID	Typical
52	63	N105A	N114			RIGID	None	None	RIGID	Typical
53	62	N124	N122			RIGID	None	None	RIGID	Typical
54	61	N125	N123			RIGID	None	None	RIGID	Typical
55	60	N121	N109A			RIGID	None	None	RIGID	Typical
56	59	N120	N108A			RIGID	None	None	RIGID	Typical
57	58	N143	N83A			RIGID	None	None	RIGID	Typical
58	57	N144	N81A			RIGID	None	None	RIGID	Typical
59	56	N137	N146			RIGID	None	None	RIGID	Typical
60	55	N136	N145			RIGID	None	None	RIGID	Typical
61	54	N155	N153			RIGID	None	None	RIGID	Typical
62	53	N156	N154			RIGID	None	None	RIGID	Typical
63	52	N152	N140A			RIGID	None	None	RIGID	Typical

Member Primary Data (Continued)

	Label	I Joint	J Joint	K Joint	Rotate(deg)	Section/Shape	Type	Design List	Material	Design Rules
64	51	N151	N139			RIGID	None	None	RIGID	Typical
65	50	N176A	N179A			RIGID	None	None	RIGID	Typical
66	49	N180A	N177			RIGID	None	None	RIGID	Typical
67	48	N158	N161			RIGID	None	None	RIGID	Typical
68	47	N152A	N153A			RIGID	None	None	RIGID	Typical
69	45	N162	N159			RIGID	None	None	RIGID	Typical
70	44	N154A	N155A			RIGID	None	None	RIGID	Typical
71	42	N158A	N159A			RIGID	None	None	RIGID	Typical
72	40	N160A	N161B			RIGID	None	None	RIGID	Typical
73	38	N166A	N169A			RIGID	None	None	RIGID	Typical
74	37	N165A	N166B			RIGID	None	None	RIGID	Typical
75	36	N170B	N167			RIGID	None	None	RIGID	Typical
76	35	N167A	N168A			RIGID	None	None	RIGID	Typical
77	31	N171D	N172B			RIGID	None	None	RIGID	Typical
78	30	N173A	N174B			RIGID	None	None	RIGID	Typical
79	28	N178B	N179B			RIGID	None	None	RIGID	Typical
80	26	N180B	N181A			RIGID	None	None	RIGID	Typical
81	25	N184A	N185A			RIGID	None	None	RIGID	Typical
82	24	N186	N187			RIGID	None	None	RIGID	Typical
83	23	N91	N92			RIGID	None	None	RIGID	Typical
84	22	N106	N115A			RIGID	None	None	RIGID	Typical
85	21	N87	N88			RIGID	None	None	RIGID	Typical
86	20	N113A	N78A			RIGID	None	None	RIGID	Typical
87	19	N83	N84			RIGID	None	None	RIGID	Typical
88	18	N112A	N80A			RIGID	None	None	RIGID	Typical
89	17	N79	N80			RIGID	None	None	RIGID	Typical
90	16	N93	N78			RIGID	None	None	RIGID	Typical
91	15	N75	N76			RIGID	None	None	RIGID	Typical
92	14	N94	N79A			RIGID	None	None	RIGID	Typical
93	13	N71	N72			RIGID	None	None	RIGID	Typical
94	12	N94A	N96A			RIGID	None	None	RIGID	Typical
95	11	N52	N53			RIGID	None	None	RIGID	Typical
96	10	N93A	N95A			RIGID	None	None	RIGID	Typical
97	9	N48	N49			RIGID	None	None	RIGID	Typical
98	8	N104A	N85			RIGID	None	None	RIGID	Typical
99	7	N44	N45			RIGID	None	None	RIGID	Typical
100	6	N111A	N86			RIGID	None	None	RIGID	Typical
101	5	N40	N41			RIGID	None	None	RIGID	Typical
102	4	N84B	N84A			RIGID	None	None	RIGID	Typical
103	3	N36	N37			RIGID	None	None	RIGID	Typical
104	2	N83B	N77A			RIGID	None	None	RIGID	Typical
105	1	N32	N33			RIGID	None	None	RIGID	Typical

Member Advanced Data

	Label	I Release	J Release	I Offset[in]	J Offset[in]	T/C Only	Physical	Defl Rat...	Analysis ...	Inactive	Seismic...
1	SOBOT3						Yes				None
2	SOBOT2						Yes				None
3	SOBOT1						Yes				None
4	RAIL3						Yes				None
5	RAIL2						Yes				None
6	RAIL1						Yes				None
7	MP GAMM...						Yes				None
8	MP GAMM...						Yes				None
9	MP GAMM...						Yes				None
10	MP GAMM...						Yes				None

Member Advanced Data (Continued)

	Label	I Release	J Release	I Offset[in]	J Offset[in]	T/C Only	Physical	Defl Rat...	Analysis ...	Inactive	Seismic...
11	MP BETA4						Yes				None
12	MP BETA3						Yes				None
13	MP BETA2						Yes				None
14	MP BETA1						Yes				None
15	MP ALPHA4						Yes				None
16	MP ALPHA3						Yes				None
17	MP ALPHA2						Yes				None
18	MP ALPHA1						Yes				None
19	INNER6						Yes				None
20	INNER5						Yes				None
21	INNER4						Yes				None
22	INNER3						Yes				None
23	INNER2						Yes				None
24	INNER1						Yes				None
25	FACE3						Yes				None
26	FACE2						Yes				None
27	FACE1						Yes				None
28	ENDCORN...						Yes				None
29	ENDCORN...						Yes				None
30	ENDCORN...						Yes				None
31	ENDCORN...						Yes				None
32	ENDCORN...						Yes				None
33	ENDCORN...						Yes				None
34	CR3B						Yes				None
35	CR3A						Yes				None
36	CR2B						Yes				None
37	CR2A						Yes				None
38	CR1B						Yes				None
39	CR1A						Yes				None
40	CP3						Yes				None
41	CP2						Yes				None
42	CP1						Yes				None
43	CORNER3						Yes				None
44	CORNER2						Yes				None
45	CORNER1						Yes				None
46	73						Yes	** NA **			None
47	72						Yes	** NA **			None
48	69						Yes	** NA **			None
49	68						Yes	** NA **			None
50	65						Yes	** NA **			None
51	64						Yes	** NA **			None
52	63		OOOXOO				Yes	** NA **			None
53	62						Yes	** NA **			None
54	61						Yes	** NA **			None
55	60						Yes	** NA **			None
56	59						Yes	** NA **			None
57	58		OOOXOO				Yes	** NA **			None
58	57		OOOXOO				Yes	** NA **			None
59	56		OOOXOO				Yes	** NA **			None
60	55		OOOXOO				Yes	** NA **			None
61	54						Yes	** NA **			None
62	53						Yes	** NA **			None
63	52						Yes	** NA **			None
64	51						Yes	** NA **			None
65	50	OOOXOO					Yes	** NA **			None
66	49		OOOXOO				Yes	** NA **			None
67	48	OOOXOO					Yes	** NA **			None

Member Advanced Data (Continued)

	Label	I Release	J Release	I Offset[in]	J Offset[in]	T/C Only	Physical	Defl Rat...	Analysis ...	Inactive	Seismic...
68	47						Yes	** NA **			None
69	45		OOOXOO				Yes	** NA **			None
70	44						Yes	** NA **			None
71	42						Yes	** NA **			None
72	40						Yes	** NA **			None
73	38	OOOXOO					Yes	** NA **			None
74	37						Yes	** NA **			None
75	36		OOOXOO				Yes	** NA **			None
76	35						Yes	** NA **			None
77	31						Yes	** NA **			None
78	30						Yes	** NA **			None
79	28						Yes	** NA **			None
80	26						Yes	** NA **			None
81	25						Yes	** NA **			None
82	24						Yes	** NA **			None
83	23						Yes	** NA **			None
84	22		OOOXOO				Yes	** NA **			None
85	21						Yes	** NA **			None
86	20		OOOXOO				Yes	** NA **			None
87	19						Yes	** NA **			None
88	18		OOOXOO				Yes	** NA **			None
89	17						Yes	** NA **			None
90	16						Yes	** NA **			None
91	15						Yes	** NA **			None
92	14						Yes	** NA **			None
93	13						Yes	** NA **			None
94	12						Yes	** NA **			None
95	11						Yes	** NA **			None
96	10						Yes	** NA **			None
97	9						Yes	** NA **			None
98	8		OOOXOO				Yes	** NA **			None
99	7						Yes	** NA **			None
100	6		OOOXOO				Yes	** NA **			None
101	5						Yes	** NA **			None
102	4		OOOXOO				Yes	** NA **			None
103	3						Yes	** NA **			None
104	2		OOOXOO				Yes	** NA **			None
105	1						Yes	** NA **			None

Hot Rolled Steel Properties

	Label	E [ksi]	G [ksi]	Nu	Therm (/1E...	Density[k/ft...	Yield[ksi]	Ry	Fu[ksi]	Rt
1	A992	29000	11154	.3	.65	.49	50	1.1	65	1.1
2	A36 Gr.36	29000	11154	.3	.65	.49	36	1.5	58	1.2
3	A572 Gr.50	29000	11154	.3	.65	.49	50	1.1	65	1.1
4	A500 Gr.B RND	29000	11154	.3	.65	.527	42	1.4	58	1.3
5	A500 Gr.B Rect	29000	11154	.3	.65	.527	46	1.4	58	1.3
6	A53 Gr.B	29000	11154	.3	.65	.49	35	1.6	60	1.2
7	A1085	29000	11154	.3	.65	.49	50	1.4	65	1.3
8	A500 Gr. C	29000	11154	.3	.65	.49	50	1.3	50	1.2

Member Point Loads (BLC 1 : Live Load)

	Member Label	Direction	Magnitude[k,k-ft]	Location[ft,%]
1	FACE1	Z	-.5	0

Member Point Loads (BLC 2 : Wind Load (0))

	Member Label	Direction	Magnitude[k,k-ft]	Location[ft,%]
1	MP ALPHA1	Y	-.207	6.5
2	MP ALPHA1	Y	-.207	1.5
3	MP BETA1	Y	-.258	6.5
4	MP BETA1	Y	-.258	1.5
5	MP GAMMA1	Y	-.11	6.5
6	MP GAMMA1	Y	-.11	1.5
7	MP ALPHA3	Y	-.117	6.5
8	MP ALPHA3	Y	-.117	1.5
9	MP BETA3	Y	-.132	6.5
10	MP BETA3	Y	-.132	1.5
11	MP GAMMA3	Y	-.091	6.5
12	MP GAMMA3	Y	-.091	1.5
13	MP ALPHA1	Y	-.083	4
14	MP BETA1	Y	-.065	4
15	MP GAMMA1	Y	-.065	4
16	MP ALPHA3	Y	-.069	4
17	MP BETA3	Y	-.06	4
18	MP GAMMA3	Y	-.06	4
19	MP ALPHA2	Y	-.051	4

Member Point Loads (BLC 3 : Dead Load)

	Member Label	Direction	Magnitude[k,k-ft]	Location[ft,%]
1	MP ALPHA1	Z	-.045	6.5
2	MP ALPHA1	Z	-.045	1.5
3	MP BETA1	Z	-.045	6.5
4	MP BETA1	Z	-.045	1.5
5	MP GAMMA1	Z	-.045	6.5
6	MP GAMMA1	Z	-.045	1.5
7	MP ALPHA3	Z	-.027	6.5
8	MP ALPHA3	Z	-.027	1.5
9	MP BETA3	Z	-.027	6.5
10	MP BETA3	Z	-.027	1.5
11	MP GAMMA3	Z	-.027	6.5
12	MP GAMMA3	Z	-.027	1.5
13	MP ALPHA1	Z	-.071	4
14	MP BETA1	Z	-.071	4
15	MP GAMMA1	Z	-.071	4
16	MP ALPHA3	Z	-.072	4
17	MP BETA3	Z	-.072	4
18	MP GAMMA3	Z	-.072	4
19	MP ALPHA2	Z	-.033	4

Member Point Loads (BLC 4 : Wind Load (30))

	Member Label	Direction	Magnitude[k,k-ft]	Location[ft,%]
1	MP ALPHA1	Y	-.108	6.5
2	MP ALPHA1	Y	-.108	1.5
3	MP ALPHA1	X	-.062	6.5
4	MP ALPHA1	X	-.062	1.5
5	MP BETA1	Y	-.153	6.5
6	MP BETA1	Y	-.153	1.5
7	MP BETA1	X	-.088	6.5
8	MP BETA1	X	-.088	1.5
9	MP GAMMA1	Y	-.108	6.5
10	MP GAMMA1	Y	-.108	1.5
11	MP GAMMA1	X	-.062	6.5
12	MP GAMMA1	X	-.062	1.5

Member Point Loads (BLC 4 : Wind Load (30)) (Continued)

	Member Label	Direction	Magnitude[k,k-ft]	Location[ft,%]
13	MP ALPHA3	Y	-.082	6.5
14	MP ALPHA3	Y	-.082	1.5
15	MP ALPHA3	X	-.047	6.5
16	MP ALPHA3	X	-.047	1.5
17	MP BETA3	Y	-.094	6.5
18	MP BETA3	Y	-.094	1.5
19	MP BETA3	X	-.055	6.5
20	MP BETA3	X	-.055	1.5
21	MP GAMMA3	Y	-.082	6.5
22	MP GAMMA3	Y	-.082	1.5
23	MP GAMMA3	X	-.047	6.5
24	MP GAMMA3	X	-.047	1.5
25	MP ALPHA1	Y	-.067	4
26	MP ALPHA1	X	-.038	4
27	MP BETA1	Y	-.051	4
28	MP BETA1	X	-.03	4
29	MP GAMMA1	Y	-.067	4
30	MP GAMMA1	X	-.038	4
31	MP ALPHA3	Y	-.057	4
32	MP ALPHA3	X	-.033	4
33	MP BETA3	Y	-.049	4
34	MP BETA3	X	-.028	4
35	MP GAMMA3	Y	-.057	4
36	MP GAMMA3	X	-.033	4
37	MP ALPHA2	Y	-.044	4
38	MP ALPHA2	X	-.025	4

Member Point Loads (BLC 5 : Wind Load (60))

	Member Label	Direction	Magnitude[k,k-ft]	Location[ft,%]
1	MP ALPHA1	Y	-.055	6.5
2	MP ALPHA1	Y	-.055	1.5
3	MP ALPHA1	X	-.095	6.5
4	MP ALPHA1	X	-.095	1.5
5	MP BETA1	Y	-.055	6.5
6	MP BETA1	Y	-.055	1.5
7	MP BETA1	X	-.095	6.5
8	MP BETA1	X	-.095	1.5
9	MP GAMMA1	Y	-.103	6.5
10	MP GAMMA1	Y	-.103	1.5
11	MP GAMMA1	X	-.179	6.5
12	MP GAMMA1	X	-.179	1.5
13	MP ALPHA3	Y	-.045	6.5
14	MP ALPHA3	Y	-.045	1.5
15	MP ALPHA3	X	-.078	6.5
16	MP ALPHA3	X	-.078	1.5
17	MP BETA3	Y	-.045	6.5
18	MP BETA3	Y	-.045	1.5
19	MP BETA3	X	-.078	6.5
20	MP BETA3	X	-.078	1.5
21	MP GAMMA3	Y	-.059	6.5
22	MP GAMMA3	Y	-.059	1.5
23	MP GAMMA3	X	-.102	6.5
24	MP GAMMA3	X	-.102	1.5
25	MP ALPHA1	Y	-.033	4
26	MP ALPHA1	X	-.056	4
27	MP BETA1	Y	-.033	4

Member Point Loads (BLC 5 : Wind Load (60)) (Continued)

	Member Label	Direction	Magnitude[k,k-ft]	Location[ft,%]
28	MP BETA1	X	-.056	4
29	MP GAMMA1	Y	-.041	4
30	MP GAMMA1	X	-.072	4
31	MP ALPHA3	Y	-.03	4
32	MP ALPHA3	X	-.052	4
33	MP BETA3	Y	-.03	4
34	MP BETA3	X	-.052	4
35	MP GAMMA3	Y	-.034	4
36	MP GAMMA3	X	-.06	4
37	MP ALPHA2	Y	-.025	4
38	MP ALPHA2	X	-.044	4

Member Point Loads (BLC 6 : Wind Load (90))

	Member Label	Direction	Magnitude[k,k-ft]	Location[ft,%]
1	MP ALPHA1	X	-.176	6.5
2	MP ALPHA1	X	-.176	1.5
3	MP BETA1	X	-.125	6.5
4	MP BETA1	X	-.125	1.5
5	MP GAMMA1	X	-.273	6.5
6	MP GAMMA1	X	-.273	1.5
7	MP ALPHA3	X	-.109	6.5
8	MP ALPHA3	X	-.109	1.5
9	MP BETA3	X	-.095	6.5
10	MP BETA3	X	-.095	1.5
11	MP GAMMA3	X	-.136	6.5
12	MP GAMMA3	X	-.136	1.5
13	MP ALPHA1	X	-.059	4
14	MP BETA1	X	-.077	4
15	MP GAMMA1	X	-.077	4
16	MP ALPHA3	X	-.057	4
17	MP BETA3	X	-.066	4
18	MP GAMMA3	X	-.066	4
19	MP ALPHA2	X	-.051	4

Member Point Loads (BLC 7 : Wind Load (120))

	Member Label	Direction	Magnitude[k,k-ft]	Location[ft,%]
1	MP ALPHA1	Y	.129	6.5
2	MP ALPHA1	Y	.129	1.5
3	MP ALPHA1	X	-.224	6.5
4	MP ALPHA1	X	-.224	1.5
5	MP BETA1	Y	.103	6.5
6	MP BETA1	Y	.103	1.5
7	MP BETA1	X	-.179	6.5
8	MP BETA1	X	-.179	1.5
9	MP GAMMA1	Y	.129	6.5
10	MP GAMMA1	Y	.129	1.5
11	MP GAMMA1	X	-.224	6.5
12	MP GAMMA1	X	-.224	1.5
13	MP ALPHA3	Y	.066	6.5
14	MP ALPHA3	Y	.066	1.5
15	MP ALPHA3	X	-.114	6.5
16	MP ALPHA3	X	-.114	1.5
17	MP BETA3	Y	.059	6.5
18	MP BETA3	Y	.059	1.5
19	MP BETA3	X	-.102	6.5
20	MP BETA3	X	-.102	1.5

Member Point Loads (BLC 7 : Wind Load (120)) (Continued)

	Member Label	Direction	Magnitude[k,k-ft]	Location[ft,%]
21	MP GAMMA3	Y	.066	6.5
22	MP GAMMA3	Y	.066	1.5
23	MP GAMMA3	X	-.114	6.5
24	MP GAMMA3	X	-.114	1.5
25	MP ALPHA1	Y	.033	4
26	MP ALPHA1	X	-.056	4
27	MP BETA1	Y	.041	4
28	MP BETA1	X	-.072	4
29	MP GAMMA1	Y	.033	4
30	MP GAMMA1	X	-.056	4
31	MP ALPHA3	Y	.03	4
32	MP ALPHA3	X	-.052	4
33	MP BETA3	Y	.034	4
34	MP BETA3	X	-.06	4
35	MP GAMMA3	Y	.03	4
36	MP GAMMA3	X	-.052	4
37	MP ALPHA2	Y	.025	4
38	MP ALPHA2	X	-.044	4

Member Point Loads (BLC 8 : Wind Load (150))

	Member Label	Direction	Magnitude[k,k-ft]	Location[ft,%]
1	MP ALPHA1	Y	.237	6.5
2	MP ALPHA1	Y	.237	1.5
3	MP ALPHA1	X	-.137	6.5
4	MP ALPHA1	X	-.137	1.5
5	MP BETA1	Y	.237	6.5
6	MP BETA1	Y	.237	1.5
7	MP BETA1	X	-.137	6.5
8	MP BETA1	X	-.137	1.5
9	MP GAMMA1	Y	.153	6.5
10	MP GAMMA1	Y	.153	1.5
11	MP GAMMA1	X	-.088	6.5
12	MP GAMMA1	X	-.088	1.5
13	MP ALPHA3	Y	.118	6.5
14	MP ALPHA3	Y	.118	1.5
15	MP ALPHA3	X	-.068	6.5
16	MP ALPHA3	X	-.068	1.5
17	MP BETA3	Y	.118	6.5
18	MP BETA3	Y	.118	1.5
19	MP BETA3	X	-.068	6.5
20	MP BETA3	X	-.068	1.5
21	MP GAMMA3	Y	.094	6.5
22	MP GAMMA3	Y	.094	1.5
23	MP GAMMA3	X	-.055	6.5
24	MP GAMMA3	X	-.055	1.5
25	MP ALPHA1	Y	.067	4
26	MP ALPHA1	X	-.038	4
27	MP BETA1	Y	.067	4
28	MP BETA1	X	-.038	4
29	MP GAMMA1	Y	.051	4
30	MP GAMMA1	X	-.03	4
31	MP ALPHA3	Y	.057	4
32	MP ALPHA3	X	-.033	4
33	MP BETA3	Y	.057	4
34	MP BETA3	X	-.033	4
35	MP GAMMA3	Y	.049	4

Member Point Loads (BLC 8 : Wind Load (150)) (Continued)

	Member Label	Direction	Magnitude[k,k-ft]	Location[ft,%]
36	MP GAMMA3	X	-.028	4
37	MP ALPHA2	Y	.044	4
38	MP ALPHA2	X	-.025	4

Member Point Loads (BLC 9 : Wind Load (180))

	Member Label	Direction	Magnitude[k,k-ft]	Location[ft,%]
1	MP ALPHA1	Y	.207	6.5
2	MP ALPHA1	Y	.207	1.5
3	MP BETA1	Y	.258	6.5
4	MP BETA1	Y	.258	1.5
5	MP GAMMA1	Y	.11	6.5
6	MP GAMMA1	Y	.11	1.5
7	MP ALPHA3	Y	.117	6.5
8	MP ALPHA3	Y	.117	1.5
9	MP BETA3	Y	.132	6.5
10	MP BETA3	Y	.132	1.5
11	MP GAMMA3	Y	.091	6.5
12	MP GAMMA3	Y	.091	1.5
13	MP ALPHA1	Y	.083	4
14	MP BETA1	Y	.065	4
15	MP GAMMA1	Y	.065	4
16	MP ALPHA3	Y	.069	4
17	MP BETA3	Y	.06	4
18	MP GAMMA3	Y	.06	4
19	MP ALPHA2	Y	.051	4

Member Point Loads (BLC 10 : Wind Load (210))

	Member Label	Direction	Magnitude[k,k-ft]	Location[ft,%]
1	MP ALPHA1	Y	.108	6.5
2	MP ALPHA1	Y	.108	1.5
3	MP ALPHA1	X	.062	6.5
4	MP ALPHA1	X	.062	1.5
5	MP BETA1	Y	.153	6.5
6	MP BETA1	Y	.153	1.5
7	MP BETA1	X	.088	6.5
8	MP BETA1	X	.088	1.5
9	MP GAMMA1	Y	.108	6.5
10	MP GAMMA1	Y	.108	1.5
11	MP GAMMA1	X	.062	6.5
12	MP GAMMA1	X	.062	1.5
13	MP ALPHA3	Y	.082	6.5
14	MP ALPHA3	Y	.082	1.5
15	MP ALPHA3	X	.047	6.5
16	MP ALPHA3	X	.047	1.5
17	MP BETA3	Y	.094	6.5
18	MP BETA3	Y	.094	1.5
19	MP BETA3	X	.055	6.5
20	MP BETA3	X	.055	1.5
21	MP GAMMA3	Y	.082	6.5
22	MP GAMMA3	Y	.082	1.5
23	MP GAMMA3	X	.047	6.5
24	MP GAMMA3	X	.047	1.5
25	MP ALPHA1	Y	.067	4
26	MP ALPHA1	X	.038	4
27	MP BETA1	Y	.051	4
28	MP BETA1	X	.03	4

Member Point Loads (BLC 10 : Wind Load (210)) (Continued)

	Member Label	Direction	Magnitude[k,k-ft]	Location[ft,%]
29	MP GAMMA1	Y	.067	4
30	MP GAMMA1	X	.038	4
31	MP ALPHA3	Y	.057	4
32	MP ALPHA3	X	.033	4
33	MP BETA3	Y	.049	4
34	MP BETA3	X	.028	4
35	MP GAMMA3	Y	.057	4
36	MP GAMMA3	X	.033	4
37	MP ALPHA2	Y	.044	4
38	MP ALPHA2	X	.025	4

Member Point Loads (BLC 11 : Wind Load (240))

	Member Label	Direction	Magnitude[k,k-ft]	Location[ft,%]
1	MP ALPHA1	Y	.055	6.5
2	MP ALPHA1	Y	.055	1.5
3	MP ALPHA1	X	.095	6.5
4	MP ALPHA1	X	.095	1.5
5	MP BETA1	Y	.055	6.5
6	MP BETA1	Y	.055	1.5
7	MP BETA1	X	.095	6.5
8	MP BETA1	X	.095	1.5
9	MP GAMMA1	Y	.103	6.5
10	MP GAMMA1	Y	.103	1.5
11	MP GAMMA1	X	.179	6.5
12	MP GAMMA1	X	.179	1.5
13	MP ALPHA3	Y	.045	6.5
14	MP ALPHA3	Y	.045	1.5
15	MP ALPHA3	X	.078	6.5
16	MP ALPHA3	X	.078	1.5
17	MP BETA3	Y	.045	6.5
18	MP BETA3	Y	.045	1.5
19	MP BETA3	X	.078	6.5
20	MP BETA3	X	.078	1.5
21	MP GAMMA3	Y	.059	6.5
22	MP GAMMA3	Y	.059	1.5
23	MP GAMMA3	X	.102	6.5
24	MP GAMMA3	X	.102	1.5
25	MP ALPHA1	Y	.033	4
26	MP ALPHA1	X	.056	4
27	MP BETA1	Y	.033	4
28	MP BETA1	X	.056	4
29	MP GAMMA1	Y	.041	4
30	MP GAMMA1	X	.072	4
31	MP ALPHA3	Y	.03	4
32	MP ALPHA3	X	.052	4
33	MP BETA3	Y	.03	4
34	MP BETA3	X	.052	4
35	MP GAMMA3	Y	.034	4
36	MP GAMMA3	X	.06	4
37	MP ALPHA2	Y	.025	4
38	MP ALPHA2	X	.044	4

Member Point Loads (BLC 12 : Wind Load (270))

	Member Label	Direction	Magnitude[k,k-ft]	Location[ft,%]
1	MP ALPHA1	X	.176	6.5
2	MP ALPHA1	X	.176	1.5

Member Point Loads (BLC 12 : Wind Load (270)) (Continued)

	Member Label	Direction	Magnitude[k,k-ft]	Location[ft,%]
3	MP BETA1	X	.125	6.5
4	MP BETA1	X	.125	1.5
5	MP GAMMA1	X	.273	6.5
6	MP GAMMA1	X	.273	1.5
7	MP ALPHA3	X	.109	6.5
8	MP ALPHA3	X	.109	1.5
9	MP BETA3	X	.095	6.5
10	MP BETA3	X	.095	1.5
11	MP GAMMA3	X	.136	6.5
12	MP GAMMA3	X	.136	1.5
13	MP ALPHA1	X	.059	4
14	MP BETA1	X	.077	4
15	MP GAMMA1	X	.077	4
16	MP ALPHA3	X	.057	4
17	MP BETA3	X	.066	4
18	MP GAMMA3	X	.066	4
19	MP ALPHA2	X	.051	4

Member Point Loads (BLC 13 : Wind Load (300))

	Member Label	Direction	Magnitude[k,k-ft]	Location[ft,%]
1	MP ALPHA1	Y	-.129	6.5
2	MP ALPHA1	Y	-.129	1.5
3	MP ALPHA1	X	.224	6.5
4	MP ALPHA1	X	.224	1.5
5	MP BETA1	Y	-.103	6.5
6	MP BETA1	Y	-.103	1.5
7	MP BETA1	X	.179	6.5
8	MP BETA1	X	.179	1.5
9	MP GAMMA1	Y	-.129	6.5
10	MP GAMMA1	Y	-.129	1.5
11	MP GAMMA1	X	.224	6.5
12	MP GAMMA1	X	.224	1.5
13	MP ALPHA3	Y	-.066	6.5
14	MP ALPHA3	Y	-.066	1.5
15	MP ALPHA3	X	.114	6.5
16	MP ALPHA3	X	.114	1.5
17	MP BETA3	Y	-.059	6.5
18	MP BETA3	Y	-.059	1.5
19	MP BETA3	X	.102	6.5
20	MP BETA3	X	.102	1.5
21	MP GAMMA3	Y	-.066	6.5
22	MP GAMMA3	Y	-.066	1.5
23	MP GAMMA3	X	.114	6.5
24	MP GAMMA3	X	.114	1.5
25	MP ALPHA1	Y	-.033	4
26	MP ALPHA1	X	.056	4
27	MP BETA1	Y	-.041	4
28	MP BETA1	X	.072	4
29	MP GAMMA1	Y	-.033	4
30	MP GAMMA1	X	.056	4
31	MP ALPHA3	Y	-.03	4
32	MP ALPHA3	X	.052	4
33	MP BETA3	Y	-.034	4
34	MP BETA3	X	.06	4
35	MP GAMMA3	Y	-.03	4
36	MP GAMMA3	X	.052	4

Member Point Loads (BLC 13 : Wind Load (300)) (Continued)

	Member Label	Direction	Magnitude[k,k-ft]	Location[ft,%]
37	MP ALPHA2	Y	-.025	4
38	MP ALPHA2	X	.044	4

Member Point Loads (BLC 14 : Wind Load (330))

	Member Label	Direction	Magnitude[k,k-ft]	Location[ft,%]
1	MP ALPHA1	Y	-.237	6.5
2	MP ALPHA1	Y	-.237	1.5
3	MP ALPHA1	X	.137	6.5
4	MP ALPHA1	X	.137	1.5
5	MP BETA1	Y	-.237	6.5
6	MP BETA1	Y	-.237	1.5
7	MP BETA1	X	.137	6.5
8	MP BETA1	X	.137	1.5
9	MP GAMMA1	Y	-.153	6.5
10	MP GAMMA1	Y	-.153	1.5
11	MP GAMMA1	X	.088	6.5
12	MP GAMMA1	X	.088	1.5
13	MP ALPHA3	Y	-.118	6.5
14	MP ALPHA3	Y	-.118	1.5
15	MP ALPHA3	X	.068	6.5
16	MP ALPHA3	X	.068	1.5
17	MP BETA3	Y	-.118	6.5
18	MP BETA3	Y	-.118	1.5
19	MP BETA3	X	.068	6.5
20	MP BETA3	X	.068	1.5
21	MP GAMMA3	Y	-.094	6.5
22	MP GAMMA3	Y	-.094	1.5
23	MP GAMMA3	X	.055	6.5
24	MP GAMMA3	X	.055	1.5
25	MP ALPHA1	Y	-.067	4
26	MP ALPHA1	X	.038	4
27	MP BETA1	Y	-.067	4
28	MP BETA1	X	.038	4
29	MP GAMMA1	Y	-.051	4
30	MP GAMMA1	X	.03	4
31	MP ALPHA3	Y	-.057	4
32	MP ALPHA3	X	.033	4
33	MP BETA3	Y	-.057	4
34	MP BETA3	X	.033	4
35	MP GAMMA3	Y	-.049	4
36	MP GAMMA3	X	.028	4
37	MP ALPHA2	Y	-.044	4
38	MP ALPHA2	X	.025	4

Member Point Loads (BLC 15 : Maintanence (0))

	Member Label	Direction	Magnitude[k,k-ft]	Location[ft,%]
1	MP ALPHA1	Y	-.013	6.5
2	MP ALPHA1	Y	-.013	1.5
3	MP BETA1	Y	-.016	6.5
4	MP BETA1	Y	-.016	1.5
5	MP GAMMA1	Y	-.007	6.5
6	MP GAMMA1	Y	-.007	1.5
7	MP ALPHA3	Y	-.007	6.5
8	MP ALPHA3	Y	-.007	1.5
9	MP BETA3	Y	-.008	6.5
10	MP BETA3	Y	-.008	1.5

Member Point Loads (BLC 15 : Maintanence (0)) (Continued)

	Member Label	Direction	Magnitude[k,k-ft]	Location[ft,%]
11	MP GAMMA3	Y	-.006	6.5
12	MP GAMMA3	Y	-.006	1.5
13	MP ALPHA1	Y	-.005	4
14	MP BETA1	Y	-.004	4
15	MP GAMMA1	Y	-.004	4
16	MP ALPHA3	Y	-.004	4
17	MP BETA3	Y	-.004	4
18	MP GAMMA3	Y	-.004	4
19	MP ALPHA2	Y	-.003	4

Member Point Loads (BLC 16 : Maintanence (30))

	Member Label	Direction	Magnitude[k,k-ft]	Location[ft,%]
1	MP ALPHA1	Y	-.007	6.5
2	MP ALPHA1	Y	-.007	1.5
3	MP ALPHA1	X	-.004	6.5
4	MP ALPHA1	X	-.004	1.5
5	MP BETA1	Y	-.01	6.5
6	MP BETA1	Y	-.01	1.5
7	MP BETA1	X	-.006	6.5
8	MP BETA1	X	-.006	1.5
9	MP GAMMA1	Y	-.007	6.5
10	MP GAMMA1	Y	-.007	1.5
11	MP GAMMA1	X	-.004	6.5
12	MP GAMMA1	X	-.004	1.5
13	MP ALPHA3	Y	-.005	6.5
14	MP ALPHA3	Y	-.005	1.5
15	MP ALPHA3	X	-.003	6.5
16	MP ALPHA3	X	-.003	1.5
17	MP BETA3	Y	-.006	6.5
18	MP BETA3	Y	-.006	1.5
19	MP BETA3	X	-.003	6.5
20	MP BETA3	X	-.003	1.5
21	MP GAMMA3	Y	-.005	6.5
22	MP GAMMA3	Y	-.005	1.5
23	MP GAMMA3	X	-.003	6.5
24	MP GAMMA3	X	-.003	1.5
25	MP ALPHA1	Y	-.004	4
26	MP ALPHA1	X	-.002	4
27	MP BETA1	Y	-.003	4
28	MP BETA1	X	-.002	4
29	MP GAMMA1	Y	-.004	4
30	MP GAMMA1	X	-.002	4
31	MP ALPHA3	Y	-.004	4
32	MP ALPHA3	X	-.002	4
33	MP BETA3	Y	-.003	4
34	MP BETA3	X	-.002	4
35	MP GAMMA3	Y	-.004	4
36	MP GAMMA3	X	-.002	4
37	MP ALPHA2	Y	-.003	4
38	MP ALPHA2	X	-.002	4

Member Point Loads (BLC 17 : Maintanence (60))

	Member Label	Direction	Magnitude[k,k-ft]	Location[ft,%]
1	MP ALPHA1	Y	-.003	6.5
2	MP ALPHA1	Y	-.003	1.5
3	MP ALPHA1	X	-.006	6.5

Member Point Loads (BLC 17 : Maintanence (60)) (Continued)

	Member Label	Direction	Magnitude[k,k-ft]	Location[ft,%]
4	MP ALPHA1	X	-.006	1.5
5	MP BETA1	Y	-.003	6.5
6	MP BETA1	Y	-.003	1.5
7	MP BETA1	X	-.006	6.5
8	MP BETA1	X	-.006	1.5
9	MP GAMMA1	Y	-.007	6.5
10	MP GAMMA1	Y	-.007	1.5
11	MP GAMMA1	X	-.011	6.5
12	MP GAMMA1	X	-.011	1.5
13	MP ALPHA3	Y	-.003	6.5
14	MP ALPHA3	Y	-.003	1.5
15	MP ALPHA3	X	-.005	6.5
16	MP ALPHA3	X	-.005	1.5
17	MP BETA3	Y	-.003	6.5
18	MP BETA3	Y	-.003	1.5
19	MP BETA3	X	-.005	6.5
20	MP BETA3	X	-.005	1.5
21	MP GAMMA3	Y	-.004	6.5
22	MP GAMMA3	Y	-.004	1.5
23	MP GAMMA3	X	-.006	6.5
24	MP GAMMA3	X	-.006	1.5
25	MP ALPHA1	Y	-.002	4
26	MP ALPHA1	X	-.004	4
27	MP BETA1	Y	-.002	4
28	MP BETA1	X	-.004	4
29	MP GAMMA1	Y	-.003	4
30	MP GAMMA1	X	-.005	4
31	MP ALPHA3	Y	-.002	4
32	MP ALPHA3	X	-.003	4
33	MP BETA3	Y	-.002	4
34	MP BETA3	X	-.003	4
35	MP GAMMA3	Y	-.002	4
36	MP GAMMA3	X	-.004	4
37	MP ALPHA2	Y	-.002	4
38	MP ALPHA2	X	-.003	4

Member Point Loads (BLC 18 : Maintanence (90))

	Member Label	Direction	Magnitude[k,k-ft]	Location[ft,%]
1	MP ALPHA1	X	-.011	6.5
2	MP ALPHA1	X	-.011	1.5
3	MP BETA1	X	-.008	6.5
4	MP BETA1	X	-.008	1.5
5	MP GAMMA1	X	-.017	6.5
6	MP GAMMA1	X	-.017	1.5
7	MP ALPHA3	X	-.007	6.5
8	MP ALPHA3	X	-.007	1.5
9	MP BETA3	X	-.006	6.5
10	MP BETA3	X	-.006	1.5
11	MP GAMMA3	X	-.009	6.5
12	MP GAMMA3	X	-.009	1.5
13	MP ALPHA1	X	-.004	4
14	MP BETA1	X	-.005	4
15	MP GAMMA1	X	-.005	4
16	MP ALPHA3	X	-.004	4
17	MP BETA3	X	-.004	4
18	MP GAMMA3	X	-.004	4

Member Point Loads (BLC 18 : Maintanence (90)) (Continued)

	Member Label	Direction	Magnitude[k,k-ft]	Location[ft,%]
19	MP ALPHA2	X	-.003	4

Member Point Loads (BLC 19 : Maintanence (120))

	Member Label	Direction	Magnitude[k,k-ft]	Location[ft,%]
1	MP ALPHA1	Y	.008	6.5
2	MP ALPHA1	Y	.008	1.5
3	MP ALPHA1	X	-.014	6.5
4	MP ALPHA1	X	-.014	1.5
5	MP BETA1	Y	.007	6.5
6	MP BETA1	Y	.007	1.5
7	MP BETA1	X	-.011	6.5
8	MP BETA1	X	-.011	1.5
9	MP GAMMA1	Y	.008	6.5
10	MP GAMMA1	Y	.008	1.5
11	MP GAMMA1	X	-.014	6.5
12	MP GAMMA1	X	-.014	1.5
13	MP ALPHA3	Y	.004	6.5
14	MP ALPHA3	Y	.004	1.5
15	MP ALPHA3	X	-.007	6.5
16	MP ALPHA3	X	-.007	1.5
17	MP BETA3	Y	.004	6.5
18	MP BETA3	Y	.004	1.5
19	MP BETA3	X	-.006	6.5
20	MP BETA3	X	-.006	1.5
21	MP GAMMA3	Y	.004	6.5
22	MP GAMMA3	Y	.004	1.5
23	MP GAMMA3	X	-.007	6.5
24	MP GAMMA3	X	-.007	1.5
25	MP ALPHA1	Y	.002	4
26	MP ALPHA1	X	-.004	4
27	MP BETA1	Y	.003	4
28	MP BETA1	X	-.005	4
29	MP GAMMA1	Y	.002	4
30	MP GAMMA1	X	-.004	4
31	MP ALPHA3	Y	.002	4
32	MP ALPHA3	X	-.003	4
33	MP BETA3	Y	.002	4
34	MP BETA3	X	-.004	4
35	MP GAMMA3	Y	.002	4
36	MP GAMMA3	X	-.003	4
37	MP ALPHA2	Y	.002	4
38	MP ALPHA2	X	-.003	4

Member Point Loads (BLC 20 : Maintanence (150))

	Member Label	Direction	Magnitude[k,k-ft]	Location[ft,%]
1	MP ALPHA1	Y	.015	6.5
2	MP ALPHA1	Y	.015	1.5
3	MP ALPHA1	X	-.009	6.5
4	MP ALPHA1	X	-.009	1.5
5	MP BETA1	Y	.015	6.5
6	MP BETA1	Y	.015	1.5
7	MP BETA1	X	-.009	6.5
8	MP BETA1	X	-.009	1.5
9	MP GAMMA1	Y	.01	6.5
10	MP GAMMA1	Y	.01	1.5
11	MP GAMMA1	X	-.006	6.5

Member Point Loads (BLC 20 : Maintanence (150)) (Continued)

	Member Label	Direction	Magnitude[k,k-ft]	Location[ft,%]
12	MP GAMMA1	X	-.006	1.5
13	MP ALPHA3	Y	.007	6.5
14	MP ALPHA3	Y	.007	1.5
15	MP ALPHA3	X	-.004	6.5
16	MP ALPHA3	X	-.004	1.5
17	MP BETA3	Y	.007	6.5
18	MP BETA3	Y	.007	1.5
19	MP BETA3	X	-.004	6.5
20	MP BETA3	X	-.004	1.5
21	MP GAMMA3	Y	.006	6.5
22	MP GAMMA3	Y	.006	1.5
23	MP GAMMA3	X	-.003	6.5
24	MP GAMMA3	X	-.003	1.5
25	MP ALPHA1	Y	.004	4
26	MP ALPHA1	X	-.002	4
27	MP BETA1	Y	.004	4
28	MP BETA1	X	-.002	4
29	MP GAMMA1	Y	.003	4
30	MP GAMMA1	X	-.002	4
31	MP ALPHA3	Y	.004	4
32	MP ALPHA3	X	-.002	4
33	MP BETA3	Y	.004	4
34	MP BETA3	X	-.002	4
35	MP GAMMA3	Y	.003	4
36	MP GAMMA3	X	-.002	4
37	MP ALPHA2	Y	.003	4
38	MP ALPHA2	X	-.002	4

Member Point Loads (BLC 21 : Maintanence (180))

	Member Label	Direction	Magnitude[k,k-ft]	Location[ft,%]
1	MP ALPHA1	Y	.013	6.5
2	MP ALPHA1	Y	.013	1.5
3	MP BETA1	Y	.016	6.5
4	MP BETA1	Y	.016	1.5
5	MP GAMMA1	Y	.007	6.5
6	MP GAMMA1	Y	.007	1.5
7	MP ALPHA3	Y	.007	6.5
8	MP ALPHA3	Y	.007	1.5
9	MP BETA3	Y	.008	6.5
10	MP BETA3	Y	.008	1.5
11	MP GAMMA3	Y	.006	6.5
12	MP GAMMA3	Y	.006	1.5
13	MP ALPHA1	Y	.005	4
14	MP BETA1	Y	.004	4
15	MP GAMMA1	Y	.004	4
16	MP ALPHA3	Y	.004	4
17	MP BETA3	Y	.004	4
18	MP GAMMA3	Y	.004	4
19	MP ALPHA2	Y	.003	4

Member Point Loads (BLC 22 : Maintanence (210))

	Member Label	Direction	Magnitude[k,k-ft]	Location[ft,%]
1	MP ALPHA1	Y	.007	6.5
2	MP ALPHA1	Y	.007	1.5
3	MP ALPHA1	X	.004	6.5
4	MP ALPHA1	X	.004	1.5

Member Point Loads (BLC 22 : Maintanence (210)) (Continued)

	Member Label	Direction	Magnitude[k,k-ft]	Location[ft,%]
5	MP BETA1	Y	.01	6.5
6	MP BETA1	Y	.01	1.5
7	MP BETA1	X	.006	6.5
8	MP BETA1	X	.006	1.5
9	MP GAMMA1	Y	.007	6.5
10	MP GAMMA1	Y	.007	1.5
11	MP GAMMA1	X	.004	6.5
12	MP GAMMA1	X	.004	1.5
13	MP ALPHA3	Y	.005	6.5
14	MP ALPHA3	Y	.005	1.5
15	MP ALPHA3	X	.003	6.5
16	MP ALPHA3	X	.003	1.5
17	MP BETA3	Y	.006	6.5
18	MP BETA3	Y	.006	1.5
19	MP BETA3	X	.003	6.5
20	MP BETA3	X	.003	1.5
21	MP GAMMA3	Y	.005	6.5
22	MP GAMMA3	Y	.005	1.5
23	MP GAMMA3	X	.003	6.5
24	MP GAMMA3	X	.003	1.5
25	MP ALPHA1	Y	.004	4
26	MP ALPHA1	X	.002	4
27	MP BETA1	Y	.003	4
28	MP BETA1	X	.002	4
29	MP GAMMA1	Y	.004	4
30	MP GAMMA1	X	.002	4
31	MP ALPHA3	Y	.004	4
32	MP ALPHA3	X	.002	4
33	MP BETA3	Y	.003	4
34	MP BETA3	X	.002	4
35	MP GAMMA3	Y	.004	4
36	MP GAMMA3	X	.002	4
37	MP ALPHA2	Y	.003	4
38	MP ALPHA2	X	.002	4

Member Point Loads (BLC 23 : Maintanence (240))

	Member Label	Direction	Magnitude[k,k-ft]	Location[ft,%]
1	MP ALPHA1	Y	.003	6.5
2	MP ALPHA1	Y	.003	1.5
3	MP ALPHA1	X	.006	6.5
4	MP ALPHA1	X	.006	1.5
5	MP BETA1	Y	.003	6.5
6	MP BETA1	Y	.003	1.5
7	MP BETA1	X	.006	6.5
8	MP BETA1	X	.006	1.5
9	MP GAMMA1	Y	.007	6.5
10	MP GAMMA1	Y	.007	1.5
11	MP GAMMA1	X	.011	6.5
12	MP GAMMA1	X	.011	1.5
13	MP ALPHA3	Y	.003	6.5
14	MP ALPHA3	Y	.003	1.5
15	MP ALPHA3	X	.005	6.5
16	MP ALPHA3	X	.005	1.5
17	MP BETA3	Y	.003	6.5
18	MP BETA3	Y	.003	1.5
19	MP BETA3	X	.005	6.5

Member Point Loads (BLC 23 : Maintanence (240)) (Continued)

	Member Label	Direction	Magnitude[k,k-ft]	Location[ft,%]
20	MP BETA3	X	.005	1.5
21	MP GAMMA3	Y	.004	6.5
22	MP GAMMA3	Y	.004	1.5
23	MP GAMMA3	X	.006	6.5
24	MP GAMMA3	X	.006	1.5
25	MP ALPHA1	Y	.002	4
26	MP ALPHA1	X	.004	4
27	MP BETA1	Y	.002	4
28	MP BETA1	X	.004	4
29	MP GAMMA1	Y	.003	4
30	MP GAMMA1	X	.005	4
31	MP ALPHA3	Y	.002	4
32	MP ALPHA3	X	.003	4
33	MP BETA3	Y	.002	4
34	MP BETA3	X	.003	4
35	MP GAMMA3	Y	.002	4
36	MP GAMMA3	X	.004	4
37	MP ALPHA2	Y	.002	4
38	MP ALPHA2	X	.003	4

Member Point Loads (BLC 24 : Maintanence (270))

	Member Label	Direction	Magnitude[k,k-ft]	Location[ft,%]
1	MP ALPHA1	X	.011	6.5
2	MP ALPHA1	X	.011	1.5
3	MP BETA1	X	.008	6.5
4	MP BETA1	X	.008	1.5
5	MP GAMMA1	X	.017	6.5
6	MP GAMMA1	X	.017	1.5
7	MP ALPHA3	X	.007	6.5
8	MP ALPHA3	X	.007	1.5
9	MP BETA3	X	.006	6.5
10	MP BETA3	X	.006	1.5
11	MP GAMMA3	X	.009	6.5
12	MP GAMMA3	X	.009	1.5
13	MP ALPHA1	X	.004	4
14	MP BETA1	X	.005	4
15	MP GAMMA1	X	.005	4
16	MP ALPHA3	X	.004	4
17	MP BETA3	X	.004	4
18	MP GAMMA3	X	.004	4
19	MP ALPHA2	X	.003	4

Member Point Loads (BLC 25 : Maintanence (300))

	Member Label	Direction	Magnitude[k,k-ft]	Location[ft,%]
1	MP ALPHA1	Y	-.008	6.5
2	MP ALPHA1	Y	-.008	1.5
3	MP ALPHA1	X	.014	6.5
4	MP ALPHA1	X	.014	1.5
5	MP BETA1	Y	-.007	6.5
6	MP BETA1	Y	-.007	1.5
7	MP BETA1	X	.011	6.5
8	MP BETA1	X	.011	1.5
9	MP GAMMA1	Y	-.008	6.5
10	MP GAMMA1	Y	-.008	1.5
11	MP GAMMA1	X	.014	6.5
12	MP GAMMA1	X	.014	1.5

Member Point Loads (BLC 25 : Maintanence (300)) (Continued)

	Member Label	Direction	Magnitude[k,k-ft]	Location[ft,%]
13	MP ALPHA3	Y	-.004	6.5
14	MP ALPHA3	Y	-.004	1.5
15	MP ALPHA3	X	.007	6.5
16	MP ALPHA3	X	.007	1.5
17	MP BETA3	Y	-.004	6.5
18	MP BETA3	Y	-.004	1.5
19	MP BETA3	X	.006	6.5
20	MP BETA3	X	.006	1.5
21	MP GAMMA3	Y	-.004	6.5
22	MP GAMMA3	Y	-.004	1.5
23	MP GAMMA3	X	.007	6.5
24	MP GAMMA3	X	.007	1.5
25	MP ALPHA1	Y	-.002	4
26	MP ALPHA1	X	.004	4
27	MP BETA1	Y	-.003	4
28	MP BETA1	X	.005	4
29	MP GAMMA1	Y	-.002	4
30	MP GAMMA1	X	.004	4
31	MP ALPHA3	Y	-.002	4
32	MP ALPHA3	X	.003	4
33	MP BETA3	Y	-.002	4
34	MP BETA3	X	.004	4
35	MP GAMMA3	Y	-.002	4
36	MP GAMMA3	X	.003	4
37	MP ALPHA2	Y	-.002	4
38	MP ALPHA2	X	.003	4

Member Point Loads (BLC 26 : Maintanence (330))

	Member Label	Direction	Magnitude[k,k-ft]	Location[ft,%]
1	MP ALPHA1	Y	-.015	6.5
2	MP ALPHA1	Y	-.015	1.5
3	MP ALPHA1	X	.009	6.5
4	MP ALPHA1	X	.009	1.5
5	MP BETA1	Y	-.015	6.5
6	MP BETA1	Y	-.015	1.5
7	MP BETA1	X	.009	6.5
8	MP BETA1	X	.009	1.5
9	MP GAMMA1	Y	-.01	6.5
10	MP GAMMA1	Y	-.01	1.5
11	MP GAMMA1	X	.006	6.5
12	MP GAMMA1	X	.006	1.5
13	MP ALPHA3	Y	-.007	6.5
14	MP ALPHA3	Y	-.007	1.5
15	MP ALPHA3	X	.004	6.5
16	MP ALPHA3	X	.004	1.5
17	MP BETA3	Y	-.007	6.5
18	MP BETA3	Y	-.007	1.5
19	MP BETA3	X	.004	6.5
20	MP BETA3	X	.004	1.5
21	MP GAMMA3	Y	-.006	6.5
22	MP GAMMA3	Y	-.006	1.5
23	MP GAMMA3	X	.003	6.5
24	MP GAMMA3	X	.003	1.5
25	MP ALPHA1	Y	-.004	4
26	MP ALPHA1	X	.002	4
27	MP BETA1	Y	-.004	4

Member Point Loads (BLC 26 : Maintanence (330)) (Continued)

	Member Label	Direction	Magnitude[k,k-ft]	Location[ft,%]
28	MP BETA1	X	.002	4
29	MP GAMMA1	Y	-.003	4
30	MP GAMMA1	X	.002	4
31	MP ALPHA3	Y	-.004	4
32	MP ALPHA3	X	.002	4
33	MP BETA3	Y	-.004	4
34	MP BETA3	X	.002	4
35	MP GAMMA3	Y	-.003	4
36	MP GAMMA3	X	.002	4
37	MP ALPHA2	Y	-.003	4
38	MP ALPHA2	X	.002	4

Member Point Loads (BLC 27 : Ice Dead Load)

	Member Label	Direction	Magnitude[k,k-ft]	Location[ft,%]
1	MP ALPHA1	Z	-.144	6.5
2	MP ALPHA1	Z	-.144	1.5
3	MP BETA1	Z	-.144	6.5
4	MP BETA1	Z	-.144	1.5
5	MP GAMMA1	Z	-.144	6.5
6	MP GAMMA1	Z	-.144	1.5
7	MP ALPHA3	Z	-.101	6.5
8	MP ALPHA3	Z	-.101	1.5
9	MP BETA3	Z	-.101	6.5
10	MP BETA3	Z	-.101	1.5
11	MP GAMMA3	Z	-.101	6.5
12	MP GAMMA3	Z	-.101	1.5
13	MP ALPHA1	Z	-.077	4
14	MP BETA1	Z	-.077	4
15	MP GAMMA1	Z	-.077	4
16	MP ALPHA3	Z	-.074	4
17	MP BETA3	Z	-.074	4
18	MP GAMMA3	Z	-.074	4
19	MP ALPHA2	Z	-.114	4

Member Point Loads (BLC 28 : Ice Wind Load (0))

	Member Label	Direction	Magnitude[k,k-ft]	Location[ft,%]
1	MP ALPHA1	Y	-.032	6.5
2	MP ALPHA1	Y	-.032	1.5
3	MP BETA1	Y	-.067	6.5
4	MP BETA1	Y	-.067	1.5
5	MP GAMMA1	Y	-.021	6.5
6	MP GAMMA1	Y	-.021	1.5
7	MP ALPHA3	Y	-.017	6.5
8	MP ALPHA3	Y	-.017	1.5
9	MP BETA3	Y	-.042	6.5
10	MP BETA3	Y	-.042	1.5
11	MP GAMMA3	Y	-.017	6.5
12	MP GAMMA3	Y	-.017	1.5
13	MP ALPHA1	Y	-.013	4
14	MP BETA1	Y	-.011	4
15	MP GAMMA1	Y	-.011	4
16	MP ALPHA3	Y	-.011	4
17	MP BETA3	Y	-.01	4
18	MP GAMMA3	Y	-.01	4
19	MP ALPHA2	Y	-.018	4

Member Point Loads (BLC 29 : Ice Wind Load (30))

	Member Label	Direction	Magnitude[k,k-ft]	Location[ft,%]
1	MP ALPHA1	Y	-.011	6.5
2	MP ALPHA1	Y	-.011	1.5
3	MP ALPHA1	X	-.006	6.5
4	MP ALPHA1	X	-.006	1.5
5	MP BETA1	Y	-.041	6.5
6	MP BETA1	Y	-.041	1.5
7	MP BETA1	X	-.024	6.5
8	MP BETA1	X	-.024	1.5
9	MP GAMMA1	Y	-.011	6.5
10	MP GAMMA1	Y	-.011	1.5
11	MP GAMMA1	X	-.006	6.5
12	MP GAMMA1	X	-.006	1.5
13	MP ALPHA3	Y	-.008	6.5
14	MP ALPHA3	Y	-.008	1.5
15	MP ALPHA3	X	-.004	6.5
16	MP ALPHA3	X	-.004	1.5
17	MP BETA3	Y	-.029	6.5
18	MP BETA3	Y	-.029	1.5
19	MP BETA3	X	-.017	6.5
20	MP BETA3	X	-.017	1.5
21	MP GAMMA3	Y	-.008	6.5
22	MP GAMMA3	Y	-.008	1.5
23	MP GAMMA3	X	-.004	6.5
24	MP GAMMA3	X	-.004	1.5
25	MP ALPHA1	Y	-.011	4
26	MP ALPHA1	X	-.006	4
27	MP BETA1	Y	-.009	4
28	MP BETA1	X	-.005	4
29	MP GAMMA1	Y	-.011	4
30	MP GAMMA1	X	-.006	4
31	MP ALPHA3	Y	-.009	4
32	MP ALPHA3	X	-.005	4
33	MP BETA3	Y	-.008	4
34	MP BETA3	X	-.005	4
35	MP GAMMA3	Y	-.009	4
36	MP GAMMA3	X	-.005	4
37	MP ALPHA2	Y	-.016	4
38	MP ALPHA2	X	-.009	4

Member Point Loads (BLC 30 : Ice Wind Load (60))

	Member Label	Direction	Magnitude[k,k-ft]	Location[ft,%]
1	MP ALPHA1	Y	-.01	6.5
2	MP ALPHA1	Y	-.01	1.5
3	MP ALPHA1	X	-.018	6.5
4	MP ALPHA1	X	-.018	1.5
5	MP BETA1	Y	-.01	6.5
6	MP BETA1	Y	-.01	1.5
7	MP BETA1	X	-.018	6.5
8	MP BETA1	X	-.018	1.5
9	MP GAMMA1	Y	-.016	6.5
10	MP GAMMA1	Y	-.016	1.5
11	MP GAMMA1	X	-.028	6.5
12	MP GAMMA1	X	-.028	1.5
13	MP ALPHA3	Y	-.009	6.5
14	MP ALPHA3	Y	-.009	1.5
15	MP ALPHA3	X	-.015	6.5

Member Point Loads (BLC 30 : Ice Wind Load (60)) (Continued)

	Member Label	Direction	Magnitude[k,k-ft]	Location[ft,%]
16	MP ALPHA3	X	-.015	1.5
17	MP BETA3	Y	-.009	6.5
18	MP BETA3	Y	-.009	1.5
19	MP BETA3	X	-.015	6.5
20	MP BETA3	X	-.015	1.5
21	MP GAMMA3	Y	-.009	6.5
22	MP GAMMA3	Y	-.009	1.5
23	MP GAMMA3	X	-.015	6.5
24	MP GAMMA3	X	-.015	1.5
25	MP ALPHA1	Y	-.005	4
26	MP ALPHA1	X	-.009	4
27	MP BETA1	Y	-.005	4
28	MP BETA1	X	-.009	4
29	MP GAMMA1	Y	-.006	4
30	MP GAMMA1	X	-.011	4
31	MP ALPHA3	Y	-.005	4
32	MP ALPHA3	X	-.009	4
33	MP BETA3	Y	-.005	4
34	MP BETA3	X	-.009	4
35	MP GAMMA3	Y	-.006	4
36	MP GAMMA3	X	-.01	4
37	MP ALPHA2	Y	-.009	4
38	MP ALPHA2	X	-.016	4

Member Point Loads (BLC 31 : Ice Wind Load (90))

	Member Label	Direction	Magnitude[k,k-ft]	Location[ft,%]
1	MP ALPHA1	X	-.048	6.5
2	MP ALPHA1	X	-.048	1.5
3	MP BETA1	X	-.013	6.5
4	MP BETA1	X	-.013	1.5
5	MP GAMMA1	X	-.059	6.5
6	MP GAMMA1	X	-.059	1.5
7	MP ALPHA3	X	-.034	6.5
8	MP ALPHA3	X	-.034	1.5
9	MP BETA3	X	-.009	6.5
10	MP BETA3	X	-.009	1.5
11	MP GAMMA3	X	-.034	6.5
12	MP GAMMA3	X	-.034	1.5
13	MP ALPHA1	X	-.01	4
14	MP BETA1	X	-.012	4
15	MP GAMMA1	X	-.012	4
16	MP ALPHA3	X	-.01	4
17	MP BETA3	X	-.011	4
18	MP GAMMA3	X	-.011	4
19	MP ALPHA2	X	-.018	4

Member Point Loads (BLC 32 : Ice Wind Load (120))

	Member Label	Direction	Magnitude[k,k-ft]	Location[ft,%]
1	MP ALPHA1	Y	.033	6.5
2	MP ALPHA1	Y	.033	1.5
3	MP ALPHA1	X	-.058	6.5
4	MP ALPHA1	X	-.058	1.5
5	MP BETA1	Y	.016	6.5
6	MP BETA1	Y	.016	1.5
7	MP BETA1	X	-.028	6.5
8	MP BETA1	X	-.028	1.5

Member Point Loads (BLC 32 : Ice Wind Load (120)) (Continued)

	Member Label	Direction	Magnitude[k,k-ft]	Location[ft,%]
9	MP GAMMA1	Y	.033	6.5
10	MP GAMMA1	Y	.033	1.5
11	MP GAMMA1	X	-.058	6.5
12	MP GAMMA1	X	-.058	1.5
13	MP ALPHA3	Y	.021	6.5
14	MP ALPHA3	Y	.021	1.5
15	MP ALPHA3	X	-.037	6.5
16	MP ALPHA3	X	-.037	1.5
17	MP BETA3	Y	.009	6.5
18	MP BETA3	Y	.009	1.5
19	MP BETA3	X	-.015	6.5
20	MP BETA3	X	-.015	1.5
21	MP GAMMA3	Y	.021	6.5
22	MP GAMMA3	Y	.021	1.5
23	MP GAMMA3	X	-.037	6.5
24	MP GAMMA3	X	-.037	1.5
25	MP ALPHA1	Y	.005	4
26	MP ALPHA1	X	-.009	4
27	MP BETA1	Y	.006	4
28	MP BETA1	X	-.011	4
29	MP GAMMA1	Y	.005	4
30	MP GAMMA1	X	-.009	4
31	MP ALPHA3	Y	.005	4
32	MP ALPHA3	X	-.009	4
33	MP BETA3	Y	.006	4
34	MP BETA3	X	-.01	4
35	MP GAMMA3	Y	.005	4
36	MP GAMMA3	X	-.009	4
37	MP ALPHA2	Y	.009	4
38	MP ALPHA2	X	-.016	4

Member Point Loads (BLC 33 : Ice Wind Load (150))

	Member Label	Direction	Magnitude[k,k-ft]	Location[ft,%]
1	MP ALPHA1	Y	.051	6.5
2	MP ALPHA1	Y	.051	1.5
3	MP ALPHA1	X	-.029	6.5
4	MP ALPHA1	X	-.029	1.5
5	MP BETA1	Y	.051	6.5
6	MP BETA1	Y	.051	1.5
7	MP BETA1	X	-.029	6.5
8	MP BETA1	X	-.029	1.5
9	MP GAMMA1	Y	.041	6.5
10	MP GAMMA1	Y	.041	1.5
11	MP GAMMA1	X	-.024	6.5
12	MP GAMMA1	X	-.024	1.5
13	MP ALPHA3	Y	.03	6.5
14	MP ALPHA3	Y	.03	1.5
15	MP ALPHA3	X	-.017	6.5
16	MP ALPHA3	X	-.017	1.5
17	MP BETA3	Y	.03	6.5
18	MP BETA3	Y	.03	1.5
19	MP BETA3	X	-.017	6.5
20	MP BETA3	X	-.017	1.5
21	MP GAMMA3	Y	.029	6.5
22	MP GAMMA3	Y	.029	1.5
23	MP GAMMA3	X	-.017	6.5

Member Point Loads (BLC 33 : Ice Wind Load (150)) (Continued)

	Member Label	Direction	Magnitude[k,k-ft]	Location[ft,%]
24	MP GAMMA3	X	-.017	1.5
25	MP ALPHA1	Y	.011	4
26	MP ALPHA1	X	-.006	4
27	MP BETA1	Y	.011	4
28	MP BETA1	X	-.006	4
29	MP GAMMA1	Y	.009	4
30	MP GAMMA1	X	-.005	4
31	MP ALPHA3	Y	.009	4
32	MP ALPHA3	X	-.005	4
33	MP BETA3	Y	.009	4
34	MP BETA3	X	-.005	4
35	MP GAMMA3	Y	.008	4
36	MP GAMMA3	X	-.005	4
37	MP ALPHA2	Y	.016	4
38	MP ALPHA2	X	-.009	4

Member Point Loads (BLC 34 : Ice Wind Load (180))

	Member Label	Direction	Magnitude[k,k-ft]	Location[ft,%]
1	MP ALPHA1	Y	.032	6.5
2	MP ALPHA1	Y	.032	1.5
3	MP BETA1	Y	.067	6.5
4	MP BETA1	Y	.067	1.5
5	MP GAMMA1	Y	.021	6.5
6	MP GAMMA1	Y	.021	1.5
7	MP ALPHA3	Y	.017	6.5
8	MP ALPHA3	Y	.017	1.5
9	MP BETA3	Y	.042	6.5
10	MP BETA3	Y	.042	1.5
11	MP GAMMA3	Y	.017	6.5
12	MP GAMMA3	Y	.017	1.5
13	MP ALPHA1	Y	.013	4
14	MP BETA1	Y	.011	4
15	MP GAMMA1	Y	.011	4
16	MP ALPHA3	Y	.011	4
17	MP BETA3	Y	.01	4
18	MP GAMMA3	Y	.01	4
19	MP ALPHA2	Y	.018	4

Member Point Loads (BLC 35 : Ice Wind Load (210))

	Member Label	Direction	Magnitude[k,k-ft]	Location[ft,%]
1	MP ALPHA1	Y	.011	6.5
2	MP ALPHA1	Y	.011	1.5
3	MP ALPHA1	X	.006	6.5
4	MP ALPHA1	X	.006	1.5
5	MP BETA1	Y	.041	6.5
6	MP BETA1	Y	.041	1.5
7	MP BETA1	X	.024	6.5
8	MP BETA1	X	.024	1.5
9	MP GAMMA1	Y	.011	6.5
10	MP GAMMA1	Y	.011	1.5
11	MP GAMMA1	X	.006	6.5
12	MP GAMMA1	X	.006	1.5
13	MP ALPHA3	Y	.008	6.5
14	MP ALPHA3	Y	.008	1.5
15	MP ALPHA3	X	.004	6.5
16	MP ALPHA3	X	.004	1.5

Member Point Loads (BLC 35 : Ice Wind Load (210)) (Continued)

	Member Label	Direction	Magnitude[k,k-ft]	Location[ft,%]
17	MP BETA3	Y	.029	6.5
18	MP BETA3	Y	.029	1.5
19	MP BETA3	X	.017	6.5
20	MP BETA3	X	.017	1.5
21	MP GAMMA3	Y	.008	6.5
22	MP GAMMA3	Y	.008	1.5
23	MP GAMMA3	X	.004	6.5
24	MP GAMMA3	X	.004	1.5
25	MP ALPHA1	Y	.011	4
26	MP ALPHA1	X	.006	4
27	MP BETA1	Y	.009	4
28	MP BETA1	X	.005	4
29	MP GAMMA1	Y	.011	4
30	MP GAMMA1	X	.006	4
31	MP ALPHA3	Y	.009	4
32	MP ALPHA3	X	.005	4
33	MP BETA3	Y	.008	4
34	MP BETA3	X	.005	4
35	MP GAMMA3	Y	.009	4
36	MP GAMMA3	X	.005	4
37	MP ALPHA2	Y	.016	4
38	MP ALPHA2	X	.009	4

Member Point Loads (BLC 36 : Ice Wind Load (240))

	Member Label	Direction	Magnitude[k,k-ft]	Location[ft,%]
1	MP ALPHA1	Y	.01	6.5
2	MP ALPHA1	Y	.01	1.5
3	MP ALPHA1	X	.018	6.5
4	MP ALPHA1	X	.018	1.5
5	MP BETA1	Y	.01	6.5
6	MP BETA1	Y	.01	1.5
7	MP BETA1	X	.018	6.5
8	MP BETA1	X	.018	1.5
9	MP GAMMA1	Y	.016	6.5
10	MP GAMMA1	Y	.016	1.5
11	MP GAMMA1	X	.028	6.5
12	MP GAMMA1	X	.028	1.5
13	MP ALPHA3	Y	.009	6.5
14	MP ALPHA3	Y	.009	1.5
15	MP ALPHA3	X	.015	6.5
16	MP ALPHA3	X	.015	1.5
17	MP BETA3	Y	.009	6.5
18	MP BETA3	Y	.009	1.5
19	MP BETA3	X	.015	6.5
20	MP BETA3	X	.015	1.5
21	MP GAMMA3	Y	.009	6.5
22	MP GAMMA3	Y	.009	1.5
23	MP GAMMA3	X	.015	6.5
24	MP GAMMA3	X	.015	1.5
25	MP ALPHA1	Y	.005	4
26	MP ALPHA1	X	.009	4
27	MP BETA1	Y	.005	4
28	MP BETA1	X	.009	4
29	MP GAMMA1	Y	.006	4
30	MP GAMMA1	X	.011	4
31	MP ALPHA3	Y	.005	4

Member Point Loads (BLC 36 : Ice Wind Load (240)) (Continued)

	Member Label	Direction	Magnitude[k,k-ft]	Location[ft,%]
32	MP ALPHA3	X	.009	4
33	MP BETA3	Y	.005	4
34	MP BETA3	X	.009	4
35	MP GAMMA3	Y	.006	4
36	MP GAMMA3	X	.01	4
37	MP ALPHA2	Y	.009	4
38	MP ALPHA2	X	.016	4

Member Point Loads (BLC 37 : Ice Wind Load (270))

	Member Label	Direction	Magnitude[k,k-ft]	Location[ft,%]
1	MP ALPHA1	X	.048	6.5
2	MP ALPHA1	X	.048	1.5
3	MP BETA1	X	.013	6.5
4	MP BETA1	X	.013	1.5
5	MP GAMMA1	X	.059	6.5
6	MP GAMMA1	X	.059	1.5
7	MP ALPHA3	X	.034	6.5
8	MP ALPHA3	X	.034	1.5
9	MP BETA3	X	.009	6.5
10	MP BETA3	X	.009	1.5
11	MP GAMMA3	X	.034	6.5
12	MP GAMMA3	X	.034	1.5
13	MP ALPHA1	X	.01	4
14	MP BETA1	X	.012	4
15	MP GAMMA1	X	.012	4
16	MP ALPHA3	X	.01	4
17	MP BETA3	X	.011	4
18	MP GAMMA3	X	.011	4
19	MP ALPHA2	X	.018	4

Member Point Loads (BLC 38 : Ice Wind Load (300))

	Member Label	Direction	Magnitude[k,k-ft]	Location[ft,%]
1	MP ALPHA1	Y	-.033	6.5
2	MP ALPHA1	Y	-.033	1.5
3	MP ALPHA1	X	.058	6.5
4	MP ALPHA1	X	.058	1.5
5	MP BETA1	Y	-.016	6.5
6	MP BETA1	Y	-.016	1.5
7	MP BETA1	X	.028	6.5
8	MP BETA1	X	.028	1.5
9	MP GAMMA1	Y	-.033	6.5
10	MP GAMMA1	Y	-.033	1.5
11	MP GAMMA1	X	.058	6.5
12	MP GAMMA1	X	.058	1.5
13	MP ALPHA3	Y	-.021	6.5
14	MP ALPHA3	Y	-.021	1.5
15	MP ALPHA3	X	.037	6.5
16	MP ALPHA3	X	.037	1.5
17	MP BETA3	Y	-.009	6.5
18	MP BETA3	Y	-.009	1.5
19	MP BETA3	X	.015	6.5
20	MP BETA3	X	.015	1.5
21	MP GAMMA3	Y	-.021	6.5
22	MP GAMMA3	Y	-.021	1.5
23	MP GAMMA3	X	.037	6.5
24	MP GAMMA3	X	.037	1.5

Member Point Loads (BLC 38 : Ice Wind Load (300)) (Continued)

	Member Label	Direction	Magnitude[k,k-ft]	Location[ft,%]
25	MP ALPHA1	Y	-.005	4
26	MP ALPHA1	X	.009	4
27	MP BETA1	Y	-.006	4
28	MP BETA1	X	.011	4
29	MP GAMMA1	Y	-.005	4
30	MP GAMMA1	X	.009	4
31	MP ALPHA3	Y	-.005	4
32	MP ALPHA3	X	.009	4
33	MP BETA3	Y	-.006	4
34	MP BETA3	X	.01	4
35	MP GAMMA3	Y	-.005	4
36	MP GAMMA3	X	.009	4
37	MP ALPHA2	Y	-.009	4
38	MP ALPHA2	X	.016	4

Member Point Loads (BLC 39 : Ice Wind Load (330))

	Member Label	Direction	Magnitude[k,k-ft]	Location[ft,%]
1	MP ALPHA1	Y	-.051	6.5
2	MP ALPHA1	Y	-.051	1.5
3	MP ALPHA1	X	.029	6.5
4	MP ALPHA1	X	.029	1.5
5	MP BETA1	Y	-.051	6.5
6	MP BETA1	Y	-.051	1.5
7	MP BETA1	X	.029	6.5
8	MP BETA1	X	.029	1.5
9	MP GAMMA1	Y	-.041	6.5
10	MP GAMMA1	Y	-.041	1.5
11	MP GAMMA1	X	.024	6.5
12	MP GAMMA1	X	.024	1.5
13	MP ALPHA3	Y	-.03	6.5
14	MP ALPHA3	Y	-.03	1.5
15	MP ALPHA3	X	.017	6.5
16	MP ALPHA3	X	.017	1.5
17	MP BETA3	Y	-.03	6.5
18	MP BETA3	Y	-.03	1.5
19	MP BETA3	X	.017	6.5
20	MP BETA3	X	.017	1.5
21	MP GAMMA3	Y	-.029	6.5
22	MP GAMMA3	Y	-.029	1.5
23	MP GAMMA3	X	.017	6.5
24	MP GAMMA3	X	.017	1.5
25	MP ALPHA1	Y	-.011	4
26	MP ALPHA1	X	.006	4
27	MP BETA1	Y	-.011	4
28	MP BETA1	X	.006	4
29	MP GAMMA1	Y	-.009	4
30	MP GAMMA1	X	.005	4
31	MP ALPHA3	Y	-.009	4
32	MP ALPHA3	X	.005	4
33	MP BETA3	Y	-.009	4
34	MP BETA3	X	.005	4
35	MP GAMMA3	Y	-.008	4
36	MP GAMMA3	X	.005	4
37	MP ALPHA2	Y	-.016	4
38	MP ALPHA2	X	.009	4

Member Point Loads (BLC 40 : Earthquake (x-direction))

	Member Label	Direction	Magnitude[k,k-ft]	Location[ft,%]
1	MP ALPHA1	X	-.005	6.5
2	MP ALPHA1	X	-.005	1.5
3	MP BETA1	X	-.005	6.5
4	MP BETA1	X	-.005	1.5
5	MP GAMMA1	X	-.005	6.5
6	MP GAMMA1	X	-.005	1.5
7	MP ALPHA3	X	-.003	6.5
8	MP ALPHA3	X	-.003	1.5
9	MP BETA3	X	-.003	6.5
10	MP BETA3	X	-.003	1.5
11	MP GAMMA3	X	-.003	6.5
12	MP GAMMA3	X	-.003	1.5
13	MP ALPHA1	X	-.007	4
14	MP BETA1	X	-.007	4
15	MP GAMMA1	X	-.007	4
16	MP ALPHA3	X	-.007	4
17	MP BETA3	X	-.007	4
18	MP GAMMA3	X	-.007	4
19	MP ALPHA2	X	-.003	4

Member Point Loads (BLC 41 : Earthquake (y-direction))

	Member Label	Direction	Magnitude[k,k-ft]	Location[ft,%]
1	MP ALPHA1	Y	-.005	6.5
2	MP ALPHA1	Y	-.005	1.5
3	MP BETA1	Y	-.005	6.5
4	MP BETA1	Y	-.005	1.5
5	MP GAMMA1	Y	-.005	6.5
6	MP GAMMA1	Y	-.005	1.5
7	MP ALPHA3	Y	-.003	6.5
8	MP ALPHA3	Y	-.003	1.5
9	MP BETA3	Y	-.003	6.5
10	MP BETA3	Y	-.003	1.5
11	MP GAMMA3	Y	-.003	6.5
12	MP GAMMA3	Y	-.003	1.5
13	MP ALPHA1	Y	-.007	4
14	MP BETA1	Y	-.007	4
15	MP GAMMA1	Y	-.007	4
16	MP ALPHA3	Y	-.007	4
17	MP BETA3	Y	-.007	4
18	MP GAMMA3	Y	-.007	4
19	MP ALPHA2	Y	-.003	4

Member Point Loads (BLC 42 : Earthquake (z-direction))

	Member Label	Direction	Magnitude[k,k-ft]	Location[ft,%]
1	MP ALPHA1	Z	-.002	6.5
2	MP ALPHA1	Z	-.002	1.5
3	MP BETA1	Z	-.002	6.5
4	MP BETA1	Z	-.002	1.5
5	MP GAMMA1	Z	-.002	6.5
6	MP GAMMA1	Z	-.002	1.5
7	MP ALPHA3	Z	-.001	6.5
8	MP ALPHA3	Z	-.001	1.5
9	MP BETA3	Z	-.001	6.5
10	MP BETA3	Z	-.001	1.5
11	MP GAMMA3	Z	-.001	6.5
12	MP GAMMA3	Z	-.001	1.5

Member Point Loads (BLC 42 : Earthquake (z-direction)) (Continued)

	Member Label	Direction	Magnitude[k,k-ft]	Location[ft,%]
13	MP ALPHA1	Z	-.003	4
14	MP BETA1	Z	-.003	4
15	MP GAMMA1	Z	-.003	4
16	MP ALPHA3	Z	-.003	4
17	MP BETA3	Z	-.003	4
18	MP GAMMA3	Z	-.003	4
19	MP ALPHA2	Z	-.001	4

Member Distributed Loads (BLC 2 : Wind Load (0))

	Member Label	Direction	Start Magnitude[k/ft,...	End Magnitude[k/ft,F,...	Start Location[ft,%]	End Location[ft,%]
1	SOBOT3	PY	-.007	-.007	0	0
2	SOBOT2	PY	-.007	-.007	0	0
3	SOBOT1	PY	-.007	-.007	0	0
4	RAIL1	PY	-.003	-.003	0	0
5	RAIL2	PY	-.007	-.007	0	0
6	RAIL3	PY	-.007	-.007	0	0
7	MP GAMMA4	PY	-.012	-.012	0	0
8	MP GAMMA3	PY	-.012	-.012	0	0
9	MP GAMMA2	PY	-.012	-.012	0	0
10	MP GAMMA1	PY	-.012	-.012	0	0
11	MP BETA4	PY	-.012	-.012	0	0
12	MP BETA3	PY	-.012	-.012	0	0
13	MP BETA2	PY	-.012	-.012	0	0
14	MP BETA1	PY	-.012	-.012	0	0
15	MP ALPHA4	PY	-.012	-.012	0	0
16	MP ALPHA3	PY	-.012	-.012	0	0
17	MP ALPHA2	PY	-.012	-.012	0	0
18	MP ALPHA1	PY	-.012	-.012	0	0
19	INNER6	PY	-.007	-.007	0	0
20	INNER5	PY	-.007	-.007	0	0
21	INNER4	PY	-.007	-.007	0	0
22	INNER3	PY	-.007	-.007	0	0
23	INNER2	PY	-.007	-.007	0	0
24	INNER1	PY	-.007	-.007	0	0
25	FACE1	PY	-.007	-.007	0	0
26	FACE2	PY	-.013	-.013	0	0
27	FACE3	PY	-.013	-.013	0	0
28	ENDCORNER3B	PY	-.007	-.007	0	0
29	ENDCORNER3A	PY	-.007	-.007	0	0
30	ENDCORNER2B	PY	-.007	-.007	0	0
31	ENDCORNER2A	PY	-.007	-.007	0	0
32	ENDCORNER1B	PY	-.007	-.007	0	0
33	ENDCORNER1A	PY	-.007	-.007	0	0
34	CR3B	PY	-.007	-.007	0	0
35	CR3A	PY	-.007	-.007	0	0
36	CR2B	PY	-.007	-.007	0	0
37	CR2A	PY	-.007	-.007	0	0
38	CR1B	PY	-.007	-.007	0	0
39	CR1A	PY	-.007	-.007	0	0
40	CP3	PY	-.007	-.007	0	0
41	CP2	PY	-.007	-.007	0	0
42	CP1	PY	-.007	-.007	0	0
43	CORNER3	PY	-.007	-.007	0	0
44	CORNER2	PY	-.007	-.007	0	0
45	CORNER1	PY	-.007	-.007	0	0

Member Distributed Loads (BLC 4 : Wind Load (30))

	Member Label	Direction	Start Magnitude[k/ft,...	End Magnitude[k/ft,F,...	Start Location[ft,%]	End Location[ft,%]
1	SOBOT3	PY	-.006	-.006	0	0
2	SOBOT2	PY	-.006	-.006	0	0
3	SOBOT1	PY	-.006	-.006	0	0
4	RAIL1	PY	-.003	-.003	0	0
5	RAIL2	PY	-.006	-.006	0	0
6	RAIL3	PY	-.006	-.006	0	0
7	MP GAMMA4	PY	-.01	-.01	0	0
8	MP GAMMA3	PY	-.01	-.01	0	0
9	MP GAMMA2	PY	-.01	-.01	0	0
10	MP GAMMA1	PY	-.01	-.01	0	0
11	MP BETA4	PY	-.01	-.01	0	0
12	MP BETA3	PY	-.01	-.01	0	0
13	MP BETA2	PY	-.01	-.01	0	0
14	MP BETA1	PY	-.01	-.01	0	0
15	MP ALPHA4	PY	-.01	-.01	0	0
16	MP ALPHA3	PY	-.01	-.01	0	0
17	MP ALPHA2	PY	-.01	-.01	0	0
18	MP ALPHA1	PY	-.01	-.01	0	0
19	INNER6	PY	-.006	-.006	0	0
20	INNER5	PY	-.006	-.006	0	0
21	INNER4	PY	-.006	-.006	0	0
22	INNER3	PY	-.006	-.006	0	0
23	INNER2	PY	-.006	-.006	0	0
24	INNER1	PY	-.006	-.006	0	0
25	FACE1	PY	-.006	-.006	0	0
26	FACE2	PY	-.011	-.011	0	0
27	FACE3	PY	-.011	-.011	0	0
28	ENDCORNER3B	PY	-.006	-.006	0	0
29	ENDCORNER3A	PY	-.006	-.006	0	0
30	ENDCORNER2B	PY	-.006	-.006	0	0
31	ENDCORNER2A	PY	-.006	-.006	0	0
32	ENDCORNER1B	PY	-.006	-.006	0	0
33	ENDCORNER1A	PY	-.006	-.006	0	0
34	CR3B	PY	-.006	-.006	0	0
35	CR3A	PY	-.006	-.006	0	0
36	CR2B	PY	-.006	-.006	0	0
37	CR2A	PY	-.006	-.006	0	0
38	CR1B	PY	-.006	-.006	0	0
39	CR1A	PY	-.006	-.006	0	0
40	CP3	PY	-.006	-.006	0	0
41	CP2	PY	-.006	-.006	0	0
42	CP1	PY	-.006	-.006	0	0
43	CORNER3	PY	-.006	-.006	0	0
44	CORNER2	PY	-.006	-.006	0	0
45	CORNER1	PY	-.006	-.006	0	0
46	SOBOT3	PX	-.003	-.003	0	0
47	SOBOT2	PX	-.003	-.003	0	0
48	SOBOT1	PX	-.003	-.003	0	0
49	RAIL1	PX	-.002	-.002	0	0
50	RAIL2	PX	-.003	-.003	0	0
51	RAIL3	PX	-.003	-.003	0	0
52	MP GAMMA4	PX	-.006	-.006	0	0
53	MP GAMMA3	PX	-.006	-.006	0	0
54	MP GAMMA2	PX	-.006	-.006	0	0
55	MP GAMMA1	PX	-.006	-.006	0	0
56	MP BETA4	PX	-.006	-.006	0	0
57	MP BETA3	PX	-.006	-.006	0	0

Member Distributed Loads (BLC 4 : Wind Load (30)) (Continued)

	Member Label	Direction	Start Magnitude[k/ft,...	End Magnitude[k/ft,F,...	Start Location[ft,%]	End Location[ft,%]
58	MP BETA2	PX	-.006	-.006	0	0
59	MP BETA1	PX	-.006	-.006	0	0
60	MP ALPHA4	PX	-.006	-.006	0	0
61	MP ALPHA3	PX	-.006	-.006	0	0
62	MP ALPHA2	PX	-.006	-.006	0	0
63	MP ALPHA1	PX	-.006	-.006	0	0
64	INNER6	PX	-.003	-.003	0	0
65	INNER5	PX	-.003	-.003	0	0
66	INNER4	PX	-.003	-.003	0	0
67	INNER3	PX	-.003	-.003	0	0
68	INNER2	PX	-.003	-.003	0	0
69	INNER1	PX	-.003	-.003	0	0
70	FACE1	PX	-.003	-.003	0	0
71	FACE2	PX	-.007	-.007	0	0
72	FACE3	PX	-.007	-.007	0	0
73	ENDCORNER3B	PX	-.003	-.003	0	0
74	ENDCORNER3A	PX	-.003	-.003	0	0
75	ENDCORNER2B	PX	-.003	-.003	0	0
76	ENDCORNER2A	PX	-.003	-.003	0	0
77	ENDCORNER1B	PX	-.003	-.003	0	0
78	ENDCORNER1A	PX	-.003	-.003	0	0
79	CR3B	PX	-.003	-.003	0	0
80	CR3A	PX	-.003	-.003	0	0
81	CR2B	PX	-.003	-.003	0	0
82	CR2A	PX	-.003	-.003	0	0
83	CR1B	PX	-.003	-.003	0	0
84	CR1A	PX	-.003	-.003	0	0
85	CP3	PX	-.003	-.003	0	0
86	CP2	PX	-.003	-.003	0	0
87	CP1	PX	-.003	-.003	0	0
88	CORNER3	PX	-.003	-.003	0	0
89	CORNER2	PX	-.003	-.003	0	0
90	CORNER1	PX	-.003	-.003	0	0

Member Distributed Loads (BLC 5 : Wind Load (60))

	Member Label	Direction	Start Magnitude[k/ft,...	End Magnitude[k/ft,F,...	Start Location[ft,%]	End Location[ft,%]
1	SOBOT3	PY	-.003	-.003	0	0
2	SOBOT2	PY	-.003	-.003	0	0
3	SOBOT1	PY	-.003	-.003	0	0
4	RAIL1	PY	-.002	-.002	0	0
5	RAIL2	PY	-.003	-.003	0	0
6	RAIL3	PY	-.003	-.003	0	0
7	MP GAMMA4	PY	-.006	-.006	0	0
8	MP GAMMA3	PY	-.006	-.006	0	0
9	MP GAMMA2	PY	-.006	-.006	0	0
10	MP GAMMA1	PY	-.006	-.006	0	0
11	MP BETA4	PY	-.006	-.006	0	0
12	MP BETA3	PY	-.006	-.006	0	0
13	MP BETA2	PY	-.006	-.006	0	0
14	MP BETA1	PY	-.006	-.006	0	0
15	MP ALPHA4	PY	-.006	-.006	0	0
16	MP ALPHA3	PY	-.006	-.006	0	0
17	MP ALPHA2	PY	-.006	-.006	0	0
18	MP ALPHA1	PY	-.006	-.006	0	0
19	INNER6	PY	-.003	-.003	0	0
20	INNER5	PY	-.003	-.003	0	0

Member Distributed Loads (BLC 5 : Wind Load (60)) (Continued)

	Member Label	Direction	Start Magnitude[k/ft,...	End Magnitude[k/ft,F,...	Start Location[ft,%]	End Location[ft,%]
21	INNER4	PY	-.003	-.003	0	0
22	INNER3	PY	-.003	-.003	0	0
23	INNER2	PY	-.003	-.003	0	0
24	INNER1	PY	-.003	-.003	0	0
25	FACE1	PY	-.003	-.003	0	0
26	FACE2	PY	-.007	-.007	0	0
27	FACE3	PY	-.007	-.007	0	0
28	ENDCORNER3B	PY	-.003	-.003	0	0
29	ENDCORNER3A	PY	-.003	-.003	0	0
30	ENDCORNER2B	PY	-.003	-.003	0	0
31	ENDCORNER2A	PY	-.003	-.003	0	0
32	ENDCORNER1B	PY	-.003	-.003	0	0
33	ENDCORNER1A	PY	-.003	-.003	0	0
34	CR3B	PY	-.003	-.003	0	0
35	CR3A	PY	-.003	-.003	0	0
36	CR2B	PY	-.003	-.003	0	0
37	CR2A	PY	-.003	-.003	0	0
38	CR1B	PY	-.003	-.003	0	0
39	CR1A	PY	-.003	-.003	0	0
40	CP3	PY	-.003	-.003	0	0
41	CP2	PY	-.003	-.003	0	0
42	CP1	PY	-.003	-.003	0	0
43	CORNER3	PY	-.003	-.003	0	0
44	CORNER2	PY	-.003	-.003	0	0
45	CORNER1	PY	-.003	-.003	0	0
46	SOBOT3	PX	-.006	-.006	0	0
47	SOBOT2	PX	-.006	-.006	0	0
48	SOBOT1	PX	-.006	-.006	0	0
49	RAIL1	PX	-.003	-.003	0	0
50	RAIL2	PX	-.006	-.006	0	0
51	RAIL3	PX	-.006	-.006	0	0
52	MP GAMMA4	PX	-.01	-.01	0	0
53	MP GAMMA3	PX	-.01	-.01	0	0
54	MP GAMMA2	PX	-.01	-.01	0	0
55	MP GAMMA1	PX	-.01	-.01	0	0
56	MP BETA4	PX	-.01	-.01	0	0
57	MP BETA3	PX	-.01	-.01	0	0
58	MP BETA2	PX	-.01	-.01	0	0
59	MP BETA1	PX	-.01	-.01	0	0
60	MP ALPHA4	PX	-.01	-.01	0	0
61	MP ALPHA3	PX	-.01	-.01	0	0
62	MP ALPHA2	PX	-.01	-.01	0	0
63	MP ALPHA1	PX	-.01	-.01	0	0
64	INNER6	PX	-.006	-.006	0	0
65	INNER5	PX	-.006	-.006	0	0
66	INNER4	PX	-.006	-.006	0	0
67	INNER3	PX	-.006	-.006	0	0
68	INNER2	PX	-.006	-.006	0	0
69	INNER1	PX	-.006	-.006	0	0
70	FACE1	PX	-.006	-.006	0	0
71	FACE2	PX	-.011	-.011	0	0
72	FACE3	PX	-.011	-.011	0	0
73	ENDCORNER3B	PX	-.006	-.006	0	0
74	ENDCORNER3A	PX	-.006	-.006	0	0
75	ENDCORNER2B	PX	-.006	-.006	0	0
76	ENDCORNER2A	PX	-.006	-.006	0	0
77	ENDCORNER1B	PX	-.006	-.006	0	0

Member Distributed Loads (BLC 5 : Wind Load (60)) (Continued)

	Member Label	Direction	Start Magnitude[k/ft,...	End Magnitude[k/ft,F,...	Start Location[ft,%]	End Location[ft,%]
78	ENDCORNER1A	PX	-.006	-.006	0	0
79	CR3B	PX	-.006	-.006	0	0
80	CR3A	PX	-.006	-.006	0	0
81	CR2B	PX	-.006	-.006	0	0
82	CR2A	PX	-.006	-.006	0	0
83	CR1B	PX	-.006	-.006	0	0
84	CR1A	PX	-.006	-.006	0	0
85	CP3	PX	-.006	-.006	0	0
86	CP2	PX	-.006	-.006	0	0
87	CP1	PX	-.006	-.006	0	0
88	CORNER3	PX	-.006	-.006	0	0
89	CORNER2	PX	-.006	-.006	0	0
90	CORNER1	PX	-.006	-.006	0	0

Member Distributed Loads (BLC 6 : Wind Load (90))

	Member Label	Direction	Start Magnitude[k/ft,...	End Magnitude[k/ft,F,...	Start Location[ft,%]	End Location[ft,%]
1	SOBOT3	PX	-.007	-.007	0	0
2	SOBOT2	PX	-.007	-.007	0	0
3	SOBOT1	PX	-.007	-.007	0	0
4	RAIL2	PX	-.003	-.003	0	0
5	RAIL3	PX	-.007	-.007	0	0
6	RAIL1	PX	-.007	-.007	0	0
7	MP GAMMA4	PX	-.012	-.012	0	0
8	MP GAMMA3	PX	-.012	-.012	0	0
9	MP GAMMA2	PX	-.012	-.012	0	0
10	MP GAMMA1	PX	-.012	-.012	0	0
11	MP BETA4	PX	-.012	-.012	0	0
12	MP BETA3	PX	-.012	-.012	0	0
13	MP BETA2	PX	-.012	-.012	0	0
14	MP BETA1	PX	-.012	-.012	0	0
15	MP ALPHA4	PX	-.012	-.012	0	0
16	MP ALPHA3	PX	-.012	-.012	0	0
17	MP ALPHA2	PX	-.012	-.012	0	0
18	MP ALPHA1	PX	-.012	-.012	0	0
19	INNER6	PX	-.007	-.007	0	0
20	INNER5	PX	-.007	-.007	0	0
21	INNER4	PX	-.007	-.007	0	0
22	INNER3	PX	-.007	-.007	0	0
23	INNER2	PX	-.007	-.007	0	0
24	INNER1	PX	-.007	-.007	0	0
25	FACE2	PX	-.007	-.007	0	0
26	FACE3	PX	-.013	-.013	0	0
27	FACE1	PX	-.013	-.013	0	0
28	ENDCORNER3B	PX	-.007	-.007	0	0
29	ENDCORNER3A	PX	-.007	-.007	0	0
30	ENDCORNER2B	PX	-.007	-.007	0	0
31	ENDCORNER2A	PX	-.007	-.007	0	0
32	ENDCORNER1B	PX	-.007	-.007	0	0
33	ENDCORNER1A	PX	-.007	-.007	0	0
34	CR3B	PX	-.007	-.007	0	0
35	CR3A	PX	-.007	-.007	0	0
36	CR2B	PX	-.007	-.007	0	0
37	CR2A	PX	-.007	-.007	0	0
38	CR1B	PX	-.007	-.007	0	0
39	CR1A	PX	-.007	-.007	0	0
40	CP3	PX	-.007	-.007	0	0

Member Distributed Loads (BLC 6 : Wind Load (90)) (Continued)

	Member Label	Direction	Start Magnitude[k/ft,...	End Magnitude[k/ft,F,...	Start Location[ft,%]	End Location[ft,%]
41	CP2	PX	-.007	-.007	0	0
42	CP1	PX	-.007	-.007	0	0
43	CORNER3	PX	-.007	-.007	0	0
44	CORNER2	PX	-.007	-.007	0	0
45	CORNER1	PX	-.007	-.007	0	0

Member Distributed Loads (BLC 7 : Wind Load (120))

	Member Label	Direction	Start Magnitude[k/ft,...	End Magnitude[k/ft,F,...	Start Location[ft,%]	End Location[ft,%]
1	SOBOT3	PY	.003	.003	0	0
2	SOBOT2	PY	.003	.003	0	0
3	SOBOT1	PY	.003	.003	0	0
4	RAIL2	PY	.002	.002	0	0
5	RAIL3	PY	.003	.003	0	0
6	RAIL1	PY	.003	.003	0	0
7	MP GAMMA4	PY	.006	.006	0	0
8	MP GAMMA3	PY	.006	.006	0	0
9	MP GAMMA2	PY	.006	.006	0	0
10	MP GAMMA1	PY	.006	.006	0	0
11	MP BETA4	PY	.006	.006	0	0
12	MP BETA3	PY	.006	.006	0	0
13	MP BETA2	PY	.006	.006	0	0
14	MP BETA1	PY	.006	.006	0	0
15	MP ALPHA4	PY	.006	.006	0	0
16	MP ALPHA3	PY	.006	.006	0	0
17	MP ALPHA2	PY	.006	.006	0	0
18	MP ALPHA1	PY	.006	.006	0	0
19	INNER6	PY	.003	.003	0	0
20	INNER5	PY	.003	.003	0	0
21	INNER4	PY	.003	.003	0	0
22	INNER3	PY	.003	.003	0	0
23	INNER2	PY	.003	.003	0	0
24	INNER1	PY	.003	.003	0	0
25	FACE2	PY	.003	.003	0	0
26	FACE3	PY	.007	.007	0	0
27	FACE1	PY	.007	.007	0	0
28	ENDCORNER3B	PY	.003	.003	0	0
29	ENDCORNER3A	PY	.003	.003	0	0
30	ENDCORNER2B	PY	.003	.003	0	0
31	ENDCORNER2A	PY	.003	.003	0	0
32	ENDCORNER1B	PY	.003	.003	0	0
33	ENDCORNER1A	PY	.003	.003	0	0
34	CR3B	PY	.003	.003	0	0
35	CR3A	PY	.003	.003	0	0
36	CR2B	PY	.003	.003	0	0
37	CR2A	PY	.003	.003	0	0
38	CR1B	PY	.003	.003	0	0
39	CR1A	PY	.003	.003	0	0
40	CP3	PY	.003	.003	0	0
41	CP2	PY	.003	.003	0	0
42	CP1	PY	.003	.003	0	0
43	CORNER3	PY	.003	.003	0	0
44	CORNER2	PY	.003	.003	0	0
45	CORNER1	PY	.003	.003	0	0
46	SOBOT3	PX	-.006	-.006	0	0
47	SOBOT2	PX	-.006	-.006	0	0
48	SOBOT1	PX	-.006	-.006	0	0

Member Distributed Loads (BLC 7 : Wind Load (120)) (Continued)

	Member Label	Direction	Start Magnitude[k/ft,...	End Magnitude[k/ft,F,...	Start Location[ft,%]	End Location[ft,%]
49	RAIL2	PX	-.003	-.003	0	0
50	RAIL3	PX	-.006	-.006	0	0
51	RAIL1	PX	-.006	-.006	0	0
52	MP GAMMA4	PX	-.01	-.01	0	0
53	MP GAMMA3	PX	-.01	-.01	0	0
54	MP GAMMA2	PX	-.01	-.01	0	0
55	MP GAMMA1	PX	-.01	-.01	0	0
56	MP BETA4	PX	-.01	-.01	0	0
57	MP BETA3	PX	-.01	-.01	0	0
58	MP BETA2	PX	-.01	-.01	0	0
59	MP BETA1	PX	-.01	-.01	0	0
60	MP ALPHA4	PX	-.01	-.01	0	0
61	MP ALPHA3	PX	-.01	-.01	0	0
62	MP ALPHA2	PX	-.01	-.01	0	0
63	MP ALPHA1	PX	-.01	-.01	0	0
64	INNER6	PX	-.006	-.006	0	0
65	INNER5	PX	-.006	-.006	0	0
66	INNER4	PX	-.006	-.006	0	0
67	INNER3	PX	-.006	-.006	0	0
68	INNER2	PX	-.006	-.006	0	0
69	INNER1	PX	-.006	-.006	0	0
70	FACE2	PX	-.006	-.006	0	0
71	FACE3	PX	-.011	-.011	0	0
72	FACE1	PX	-.011	-.011	0	0
73	ENDCORNER3B	PX	-.006	-.006	0	0
74	ENDCORNER3A	PX	-.006	-.006	0	0
75	ENDCORNER2B	PX	-.006	-.006	0	0
76	ENDCORNER2A	PX	-.006	-.006	0	0
77	ENDCORNER1B	PX	-.006	-.006	0	0
78	ENDCORNER1A	PX	-.006	-.006	0	0
79	CR3B	PX	-.006	-.006	0	0
80	CR3A	PX	-.006	-.006	0	0
81	CR2B	PX	-.006	-.006	0	0
82	CR2A	PX	-.006	-.006	0	0
83	CR1B	PX	-.006	-.006	0	0
84	CR1A	PX	-.006	-.006	0	0
85	CP3	PX	-.006	-.006	0	0
86	CP2	PX	-.006	-.006	0	0
87	CP1	PX	-.006	-.006	0	0
88	CORNER3	PX	-.006	-.006	0	0
89	CORNER2	PX	-.006	-.006	0	0
90	CORNER1	PX	-.006	-.006	0	0

Member Distributed Loads (BLC 8 : Wind Load (150))

	Member Label	Direction	Start Magnitude[k/ft,...	End Magnitude[k/ft,F,...	Start Location[ft,%]	End Location[ft,%]
1	SOBOT3	PY	.006	.006	0	0
2	SOBOT2	PY	.006	.006	0	0
3	SOBOT1	PY	.006	.006	0	0
4	RAIL2	PY	.003	.003	0	0
5	RAIL3	PY	.006	.006	0	0
6	RAIL1	PY	.006	.006	0	0
7	MP GAMMA4	PY	.01	.01	0	0
8	MP GAMMA3	PY	.01	.01	0	0
9	MP GAMMA2	PY	.01	.01	0	0
10	MP GAMMA1	PY	.01	.01	0	0
11	MP BETA4	PY	.01	.01	0	0

Member Distributed Loads (BLC 8 : Wind Load (150)) (Continued)

	Member Label	Direction	Start Magnitude[k/ft,...	End Magnitude[k/ft,F,...	Start Location[ft,%]	End Location[ft,%]
12	MP BETA3	PY	.01	.01	0	0
13	MP BETA2	PY	.01	.01	0	0
14	MP BETA1	PY	.01	.01	0	0
15	MP ALPHA4	PY	.01	.01	0	0
16	MP ALPHA3	PY	.01	.01	0	0
17	MP ALPHA2	PY	.01	.01	0	0
18	MP ALPHA1	PY	.01	.01	0	0
19	INNER6	PY	.006	.006	0	0
20	INNER5	PY	.006	.006	0	0
21	INNER4	PY	.006	.006	0	0
22	INNER3	PY	.006	.006	0	0
23	INNER2	PY	.006	.006	0	0
24	INNER1	PY	.006	.006	0	0
25	FACE2	PY	.006	.006	0	0
26	FACE3	PY	.011	.011	0	0
27	FACE1	PY	.011	.011	0	0
28	ENDCORNER3B	PY	.006	.006	0	0
29	ENDCORNER3A	PY	.006	.006	0	0
30	ENDCORNER2B	PY	.006	.006	0	0
31	ENDCORNER2A	PY	.006	.006	0	0
32	ENDCORNER1B	PY	.006	.006	0	0
33	ENDCORNER1A	PY	.006	.006	0	0
34	CR3B	PY	.006	.006	0	0
35	CR3A	PY	.006	.006	0	0
36	CR2B	PY	.006	.006	0	0
37	CR2A	PY	.006	.006	0	0
38	CR1B	PY	.006	.006	0	0
39	CR1A	PY	.006	.006	0	0
40	CP3	PY	.006	.006	0	0
41	CP2	PY	.006	.006	0	0
42	CP1	PY	.006	.006	0	0
43	CORNER3	PY	.006	.006	0	0
44	CORNER2	PY	.006	.006	0	0
45	CORNER1	PY	.006	.006	0	0
46	SOBOT3	PX	-.003	-.003	0	0
47	SOBOT2	PX	-.003	-.003	0	0
48	SOBOT1	PX	-.003	-.003	0	0
49	RAIL2	PX	-.002	-.002	0	0
50	RAIL3	PX	-.003	-.003	0	0
51	RAIL1	PX	-.003	-.003	0	0
52	MP GAMMA4	PX	-.006	-.006	0	0
53	MP GAMMA3	PX	-.006	-.006	0	0
54	MP GAMMA2	PX	-.006	-.006	0	0
55	MP GAMMA1	PX	-.006	-.006	0	0
56	MP BETA4	PX	-.006	-.006	0	0
57	MP BETA3	PX	-.006	-.006	0	0
58	MP BETA2	PX	-.006	-.006	0	0
59	MP BETA1	PX	-.006	-.006	0	0
60	MP ALPHA4	PX	-.006	-.006	0	0
61	MP ALPHA3	PX	-.006	-.006	0	0
62	MP ALPHA2	PX	-.006	-.006	0	0
63	MP ALPHA1	PX	-.006	-.006	0	0
64	INNER6	PX	-.003	-.003	0	0
65	INNER5	PX	-.003	-.003	0	0
66	INNER4	PX	-.003	-.003	0	0
67	INNER3	PX	-.003	-.003	0	0
68	INNER2	PX	-.003	-.003	0	0

Member Distributed Loads (BLC 8 : Wind Load (150)) (Continued)

	Member Label	Direction	Start Magnitude[k/ft,...	End Magnitude[k/ft,F,...	Start Location[ft,%]	End Location[ft,%]
69	INNER1	PX	-.003	-.003	0	0
70	FACE2	PX	-.003	-.003	0	0
71	FACE3	PX	-.007	-.007	0	0
72	FACE1	PX	-.007	-.007	0	0
73	ENDCORNER3B	PX	-.003	-.003	0	0
74	ENDCORNER3A	PX	-.003	-.003	0	0
75	ENDCORNER2B	PX	-.003	-.003	0	0
76	ENDCORNER2A	PX	-.003	-.003	0	0
77	ENDCORNER1B	PX	-.003	-.003	0	0
78	ENDCORNER1A	PX	-.003	-.003	0	0
79	CR3B	PX	-.003	-.003	0	0
80	CR3A	PX	-.003	-.003	0	0
81	CR2B	PX	-.003	-.003	0	0
82	CR2A	PX	-.003	-.003	0	0
83	CR1B	PX	-.003	-.003	0	0
84	CR1A	PX	-.003	-.003	0	0
85	CP3	PX	-.003	-.003	0	0
86	CP2	PX	-.003	-.003	0	0
87	CP1	PX	-.003	-.003	0	0
88	CORNER3	PX	-.003	-.003	0	0
89	CORNER2	PX	-.003	-.003	0	0
90	CORNER1	PX	-.003	-.003	0	0

Member Distributed Loads (BLC 9 : Wind Load (180))

	Member Label	Direction	Start Magnitude[k/ft,...	End Magnitude[k/ft,F,...	Start Location[ft,%]	End Location[ft,%]
1	SOBOT3	PY	.007	.007	0	0
2	SOBOT2	PY	.007	.007	0	0
3	SOBOT1	PY	.007	.007	0	0
4	RAIL2	PY	.003	.003	0	0
5	RAIL3	PY	.007	.007	0	0
6	RAIL1	PY	.007	.007	0	0
7	MP GAMMA4	PY	.012	.012	0	0
8	MP GAMMA3	PY	.012	.012	0	0
9	MP GAMMA2	PY	.012	.012	0	0
10	MP GAMMA1	PY	.012	.012	0	0
11	MP BETA4	PY	.012	.012	0	0
12	MP BETA3	PY	.012	.012	0	0
13	MP BETA2	PY	.012	.012	0	0
14	MP BETA1	PY	.012	.012	0	0
15	MP ALPHA4	PY	.012	.012	0	0
16	MP ALPHA3	PY	.012	.012	0	0
17	MP ALPHA2	PY	.012	.012	0	0
18	MP ALPHA1	PY	.012	.012	0	0
19	INNER6	PY	.007	.007	0	0
20	INNER5	PY	.007	.007	0	0
21	INNER4	PY	.007	.007	0	0
22	INNER3	PY	.007	.007	0	0
23	INNER2	PY	.007	.007	0	0
24	INNER1	PY	.007	.007	0	0
25	FACE2	PY	.007	.007	0	0
26	FACE3	PY	.013	.013	0	0
27	FACE1	PY	.013	.013	0	0
28	ENDCORNER3B	PY	.007	.007	0	0
29	ENDCORNER3A	PY	.007	.007	0	0
30	ENDCORNER2B	PY	.007	.007	0	0
31	ENDCORNER2A	PY	.007	.007	0	0

Member Distributed Loads (BLC 9 : Wind Load (180)) (Continued)

	Member Label	Direction	Start Magnitude[k/ft,...	End Magnitude[k/ft,F,...	Start Location[ft,%]	End Location[ft,%]
32	ENDCORNER1B	PY	.007	.007	0	0
33	ENDCORNER1A	PY	.007	.007	0	0
34	CR3B	PY	.007	.007	0	0
35	CR3A	PY	.007	.007	0	0
36	CR2B	PY	.007	.007	0	0
37	CR2A	PY	.007	.007	0	0
38	CR1B	PY	.007	.007	0	0
39	CR1A	PY	.007	.007	0	0
40	CP3	PY	.007	.007	0	0
41	CP2	PY	.007	.007	0	0
42	CP1	PY	.007	.007	0	0
43	CORNER3	PY	.007	.007	0	0
44	CORNER2	PY	.007	.007	0	0
45	CORNER1	PY	.007	.007	0	0

Member Distributed Loads (BLC 10 : Wind Load (210))

	Member Label	Direction	Start Magnitude[k/ft,...	End Magnitude[k/ft,F,...	Start Location[ft,%]	End Location[ft,%]
1	SOBOT3	PY	.006	.006	0	0
2	SOBOT2	PY	.006	.006	0	0
3	SOBOT1	PY	.006	.006	0	0
4	RAIL3	PY	.003	.003	0	0
5	RAIL2	PY	.006	.006	0	0
6	RAIL1	PY	.006	.006	0	0
7	MP GAMMA4	PY	.01	.01	0	0
8	MP GAMMA3	PY	.01	.01	0	0
9	MP GAMMA2	PY	.01	.01	0	0
10	MP GAMMA1	PY	.01	.01	0	0
11	MP BETA4	PY	.01	.01	0	0
12	MP BETA3	PY	.01	.01	0	0
13	MP BETA2	PY	.01	.01	0	0
14	MP BETA1	PY	.01	.01	0	0
15	MP ALPHA4	PY	.01	.01	0	0
16	MP ALPHA3	PY	.01	.01	0	0
17	MP ALPHA2	PY	.01	.01	0	0
18	MP ALPHA1	PY	.01	.01	0	0
19	INNER6	PY	.006	.006	0	0
20	INNER5	PY	.006	.006	0	0
21	INNER4	PY	.006	.006	0	0
22	INNER3	PY	.006	.006	0	0
23	INNER2	PY	.006	.006	0	0
24	INNER1	PY	.006	.006	0	0
25	FACE3	PY	.006	.006	0	0
26	FACE2	PY	.011	.011	0	0
27	FACE1	PY	.011	.011	0	0
28	ENDCORNER3B	PY	.006	.006	0	0
29	ENDCORNER3A	PY	.006	.006	0	0
30	ENDCORNER2B	PY	.006	.006	0	0
31	ENDCORNER2A	PY	.006	.006	0	0
32	ENDCORNER1B	PY	.006	.006	0	0
33	ENDCORNER1A	PY	.006	.006	0	0
34	CR3B	PY	.006	.006	0	0
35	CR3A	PY	.006	.006	0	0
36	CR2B	PY	.006	.006	0	0
37	CR2A	PY	.006	.006	0	0
38	CR1B	PY	.006	.006	0	0
39	CR1A	PY	.006	.006	0	0

Member Distributed Loads (BLC 10 : Wind Load (210)) (Continued)

	Member Label	Direction	Start Magnitude[k/ft,...	End Magnitude[k/ft,F,...	Start Location[ft,%]	End Location[ft,%]
40	CP3	PY	.006	.006	0	0
41	CP2	PY	.006	.006	0	0
42	CP1	PY	.006	.006	0	0
43	CORNER3	PY	.006	.006	0	0
44	CORNER2	PY	.006	.006	0	0
45	CORNER1	PY	.006	.006	0	0
46	SOBOT3	PX	.003	.003	0	0
47	SOBOT2	PX	.003	.003	0	0
48	SOBOT1	PX	.003	.003	0	0
49	RAIL3	PX	.002	.002	0	0
50	RAIL2	PX	.003	.003	0	0
51	RAIL1	PX	.003	.003	0	0
52	MP GAMMA4	PX	.006	.006	0	0
53	MP GAMMA3	PX	.006	.006	0	0
54	MP GAMMA2	PX	.006	.006	0	0
55	MP GAMMA1	PX	.006	.006	0	0
56	MP BETA4	PX	.006	.006	0	0
57	MP BETA3	PX	.006	.006	0	0
58	MP BETA2	PX	.006	.006	0	0
59	MP BETA1	PX	.006	.006	0	0
60	MP ALPHA4	PX	.006	.006	0	0
61	MP ALPHA3	PX	.006	.006	0	0
62	MP ALPHA2	PX	.006	.006	0	0
63	MP ALPHA1	PX	.006	.006	0	0
64	INNER6	PX	.003	.003	0	0
65	INNER5	PX	.003	.003	0	0
66	INNER4	PX	.003	.003	0	0
67	INNER3	PX	.003	.003	0	0
68	INNER2	PX	.003	.003	0	0
69	INNER1	PX	.003	.003	0	0
70	FACE3	PX	.003	.003	0	0
71	FACE2	PX	.007	.007	0	0
72	FACE1	PX	.007	.007	0	0
73	ENDCORNER3B	PX	.003	.003	0	0
74	ENDCORNER3A	PX	.003	.003	0	0
75	ENDCORNER2B	PX	.003	.003	0	0
76	ENDCORNER2A	PX	.003	.003	0	0
77	ENDCORNER1B	PX	.003	.003	0	0
78	ENDCORNER1A	PX	.003	.003	0	0
79	CR3B	PX	.003	.003	0	0
80	CR3A	PX	.003	.003	0	0
81	CR2B	PX	.003	.003	0	0
82	CR2A	PX	.003	.003	0	0
83	CR1B	PX	.003	.003	0	0
84	CR1A	PX	.003	.003	0	0
85	CP3	PX	.003	.003	0	0
86	CP2	PX	.003	.003	0	0
87	CP1	PX	.003	.003	0	0
88	CORNER3	PX	.003	.003	0	0
89	CORNER2	PX	.003	.003	0	0
90	CORNER1	PX	.003	.003	0	0

Member Distributed Loads (BLC 11 : Wind Load (240))

	Member Label	Direction	Start Magnitude[k/ft,...	End Magnitude[k/ft,F,...	Start Location[ft,%]	End Location[ft,%]
1	SOBOT3	PY	.003	.003	0	0
2	SOBOT2	PY	.003	.003	0	0

Member Distributed Loads (BLC 11 : Wind Load (240)) (Continued)

	Member Label	Direction	Start Magnitude[k/ft,...	End Magnitude[k/ft,F,...	Start Location[ft,%]	End Location[ft,%]
3	SOBOT1	PY	.003	.003	0	0
4	RAIL3	PY	.002	.002	0	0
5	RAIL2	PY	.003	.003	0	0
6	RAIL1	PY	.003	.003	0	0
7	MP GAMMA4	PY	.006	.006	0	0
8	MP GAMMA3	PY	.006	.006	0	0
9	MP GAMMA2	PY	.006	.006	0	0
10	MP GAMMA1	PY	.006	.006	0	0
11	MP BETA4	PY	.006	.006	0	0
12	MP BETA3	PY	.006	.006	0	0
13	MP BETA2	PY	.006	.006	0	0
14	MP BETA1	PY	.006	.006	0	0
15	MP ALPHA4	PY	.006	.006	0	0
16	MP ALPHA3	PY	.006	.006	0	0
17	MP ALPHA2	PY	.006	.006	0	0
18	MP ALPHA1	PY	.006	.006	0	0
19	INNER6	PY	.003	.003	0	0
20	INNER5	PY	.003	.003	0	0
21	INNER4	PY	.003	.003	0	0
22	INNER3	PY	.003	.003	0	0
23	INNER2	PY	.003	.003	0	0
24	INNER1	PY	.003	.003	0	0
25	FACE3	PY	.003	.003	0	0
26	FACE2	PY	.007	.007	0	0
27	FACE1	PY	.007	.007	0	0
28	ENDCORNER3B	PY	.003	.003	0	0
29	ENDCORNER3A	PY	.003	.003	0	0
30	ENDCORNER2B	PY	.003	.003	0	0
31	ENDCORNER2A	PY	.003	.003	0	0
32	ENDCORNER1B	PY	.003	.003	0	0
33	ENDCORNER1A	PY	.003	.003	0	0
34	CR3B	PY	.003	.003	0	0
35	CR3A	PY	.003	.003	0	0
36	CR2B	PY	.003	.003	0	0
37	CR2A	PY	.003	.003	0	0
38	CR1B	PY	.003	.003	0	0
39	CR1A	PY	.003	.003	0	0
40	CP3	PY	.003	.003	0	0
41	CP2	PY	.003	.003	0	0
42	CP1	PY	.003	.003	0	0
43	CORNER3	PY	.003	.003	0	0
44	CORNER2	PY	.003	.003	0	0
45	CORNER1	PY	.003	.003	0	0
46	SOBOT3	PX	.006	.006	0	0
47	SOBOT2	PX	.006	.006	0	0
48	SOBOT1	PX	.006	.006	0	0
49	RAIL3	PX	.003	.003	0	0
50	RAIL2	PX	.006	.006	0	0
51	RAIL1	PX	.006	.006	0	0
52	MP GAMMA4	PX	.01	.01	0	0
53	MP GAMMA3	PX	.01	.01	0	0
54	MP GAMMA2	PX	.01	.01	0	0
55	MP GAMMA1	PX	.01	.01	0	0
56	MP BETA4	PX	.01	.01	0	0
57	MP BETA3	PX	.01	.01	0	0
58	MP BETA2	PX	.01	.01	0	0
59	MP BETA1	PX	.01	.01	0	0

Member Distributed Loads (BLC 11 : Wind Load (240)) (Continued)

	Member Label	Direction	Start Magnitude[k/ft,...	End Magnitude[k/ft,F,...	Start Location[ft,%]	End Location[ft,%]
60	MP ALPHA4	PX	.01	.01	0	0
61	MP ALPHA3	PX	.01	.01	0	0
62	MP ALPHA2	PX	.01	.01	0	0
63	MP ALPHA1	PX	.01	.01	0	0
64	INNER6	PX	.006	.006	0	0
65	INNER5	PX	.006	.006	0	0
66	INNER4	PX	.006	.006	0	0
67	INNER3	PX	.006	.006	0	0
68	INNER2	PX	.006	.006	0	0
69	INNER1	PX	.006	.006	0	0
70	FACE3	PX	.006	.006	0	0
71	FACE2	PX	.011	.011	0	0
72	FACE1	PX	.011	.011	0	0
73	ENDCORNER3B	PX	.006	.006	0	0
74	ENDCORNER3A	PX	.006	.006	0	0
75	ENDCORNER2B	PX	.006	.006	0	0
76	ENDCORNER2A	PX	.006	.006	0	0
77	ENDCORNER1B	PX	.006	.006	0	0
78	ENDCORNER1A	PX	.006	.006	0	0
79	CR3B	PX	.006	.006	0	0
80	CR3A	PX	.006	.006	0	0
81	CR2B	PX	.006	.006	0	0
82	CR2A	PX	.006	.006	0	0
83	CR1B	PX	.006	.006	0	0
84	CR1A	PX	.006	.006	0	0
85	CP3	PX	.006	.006	0	0
86	CP2	PX	.006	.006	0	0
87	CP1	PX	.006	.006	0	0
88	CORNER3	PX	.006	.006	0	0
89	CORNER2	PX	.006	.006	0	0
90	CORNER1	PX	.006	.006	0	0

Member Distributed Loads (BLC 12 : Wind Load (270))

	Member Label	Direction	Start Magnitude[k/ft,...	End Magnitude[k/ft,F,...	Start Location[ft,%]	End Location[ft,%]
1	SOBOT3	PX	.007	.007	0	0
2	SOBOT2	PX	.007	.007	0	0
3	SOBOT1	PX	.007	.007	0	0
4	RAIL3	PX	.003	.003	0	0
5	RAIL2	PX	.007	.007	0	0
6	RAIL1	PX	.007	.007	0	0
7	MP GAMMA4	PX	.012	.012	0	0
8	MP GAMMA3	PX	.012	.012	0	0
9	MP GAMMA2	PX	.012	.012	0	0
10	MP GAMMA1	PX	.012	.012	0	0
11	MP BETA4	PX	.012	.012	0	0
12	MP BETA3	PX	.012	.012	0	0
13	MP BETA2	PX	.012	.012	0	0
14	MP BETA1	PX	.012	.012	0	0
15	MP ALPHA4	PX	.012	.012	0	0
16	MP ALPHA3	PX	.012	.012	0	0
17	MP ALPHA2	PX	.012	.012	0	0
18	MP ALPHA1	PX	.012	.012	0	0
19	INNER6	PX	.007	.007	0	0
20	INNER5	PX	.007	.007	0	0
21	INNER4	PX	.007	.007	0	0
22	INNER3	PX	.007	.007	0	0

Member Distributed Loads (BLC 12 : Wind Load (270)) (Continued)

	Member Label	Direction	Start Magnitude[k/ft,...	End Magnitude[k/ft,F,...	Start Location[ft,%]	End Location[ft,%]
23	INNER2	PX	.007	.007	0	0
24	INNER1	PX	.007	.007	0	0
25	FACE3	PX	.007	.007	0	0
26	FACE2	PX	.013	.013	0	0
27	FACE1	PX	.013	.013	0	0
28	ENDCORNER3B	PX	.007	.007	0	0
29	ENDCORNER3A	PX	.007	.007	0	0
30	ENDCORNER2B	PX	.007	.007	0	0
31	ENDCORNER2A	PX	.007	.007	0	0
32	ENDCORNER1B	PX	.007	.007	0	0
33	ENDCORNER1A	PX	.007	.007	0	0
34	CR3B	PX	.007	.007	0	0
35	CR3A	PX	.007	.007	0	0
36	CR2B	PX	.007	.007	0	0
37	CR2A	PX	.007	.007	0	0
38	CR1B	PX	.007	.007	0	0
39	CR1A	PX	.007	.007	0	0
40	CP3	PX	.007	.007	0	0
41	CP2	PX	.007	.007	0	0
42	CP1	PX	.007	.007	0	0
43	CORNER3	PX	.007	.007	0	0
44	CORNER2	PX	.007	.007	0	0
45	CORNER1	PX	.007	.007	0	0

Member Distributed Loads (BLC 13 : Wind Load (300))

	Member Label	Direction	Start Magnitude[k/ft,...	End Magnitude[k/ft,F,...	Start Location[ft,%]	End Location[ft,%]
1	SOBOT3	PY	-.003	-.003	0	0
2	SOBOT2	PY	-.003	-.003	0	0
3	SOBOT1	PY	-.003	-.003	0	0
4	RAIL3	PY	-.002	-.002	0	0
5	RAIL2	PY	-.003	-.003	0	0
6	RAIL1	PY	-.003	-.003	0	0
7	MP GAMMA4	PY	-.006	-.006	0	0
8	MP GAMMA3	PY	-.006	-.006	0	0
9	MP GAMMA2	PY	-.006	-.006	0	0
10	MP GAMMA1	PY	-.006	-.006	0	0
11	MP BETA4	PY	-.006	-.006	0	0
12	MP BETA3	PY	-.006	-.006	0	0
13	MP BETA2	PY	-.006	-.006	0	0
14	MP BETA1	PY	-.006	-.006	0	0
15	MP ALPHA4	PY	-.006	-.006	0	0
16	MP ALPHA3	PY	-.006	-.006	0	0
17	MP ALPHA2	PY	-.006	-.006	0	0
18	MP ALPHA1	PY	-.006	-.006	0	0
19	INNER6	PY	-.003	-.003	0	0
20	INNER5	PY	-.003	-.003	0	0
21	INNER4	PY	-.003	-.003	0	0
22	INNER3	PY	-.003	-.003	0	0
23	INNER2	PY	-.003	-.003	0	0
24	INNER1	PY	-.003	-.003	0	0
25	FACE3	PY	-.003	-.003	0	0
26	FACE2	PY	-.007	-.007	0	0
27	FACE1	PY	-.007	-.007	0	0
28	ENDCORNER3B	PY	-.003	-.003	0	0
29	ENDCORNER3A	PY	-.003	-.003	0	0
30	ENDCORNER2B	PY	-.003	-.003	0	0

Member Distributed Loads (BLC 13 : Wind Load (300)) (Continued)

	Member Label	Direction	Start Magnitude[k/ft,...	End Magnitude[k/ft,F,...	Start Location[ft,%]	End Location[ft,%]
31	ENDCORNER2A	PY	-.003	-.003	0	0
32	ENDCORNER1B	PY	-.003	-.003	0	0
33	ENDCORNER1A	PY	-.003	-.003	0	0
34	CR3B	PY	-.003	-.003	0	0
35	CR3A	PY	-.003	-.003	0	0
36	CR2B	PY	-.003	-.003	0	0
37	CR2A	PY	-.003	-.003	0	0
38	CR1B	PY	-.003	-.003	0	0
39	CR1A	PY	-.003	-.003	0	0
40	CP3	PY	-.003	-.003	0	0
41	CP2	PY	-.003	-.003	0	0
42	CP1	PY	-.003	-.003	0	0
43	CORNER3	PY	-.003	-.003	0	0
44	CORNER2	PY	-.003	-.003	0	0
45	CORNER1	PY	-.003	-.003	0	0
46	SOBOT3	PX	.006	.006	0	0
47	SOBOT2	PX	.006	.006	0	0
48	SOBOT1	PX	.006	.006	0	0
49	RAIL3	PX	.003	.003	0	0
50	RAIL2	PX	.006	.006	0	0
51	RAIL1	PX	.006	.006	0	0
52	MP GAMMA4	PX	.01	.01	0	0
53	MP GAMMA3	PX	.01	.01	0	0
54	MP GAMMA2	PX	.01	.01	0	0
55	MP GAMMA1	PX	.01	.01	0	0
56	MP BETA4	PX	.01	.01	0	0
57	MP BETA3	PX	.01	.01	0	0
58	MP BETA2	PX	.01	.01	0	0
59	MP BETA1	PX	.01	.01	0	0
60	MP ALPHA4	PX	.01	.01	0	0
61	MP ALPHA3	PX	.01	.01	0	0
62	MP ALPHA2	PX	.01	.01	0	0
63	MP ALPHA1	PX	.01	.01	0	0
64	INNER6	PX	.006	.006	0	0
65	INNER5	PX	.006	.006	0	0
66	INNER4	PX	.006	.006	0	0
67	INNER3	PX	.006	.006	0	0
68	INNER2	PX	.006	.006	0	0
69	INNER1	PX	.006	.006	0	0
70	FACE3	PX	.006	.006	0	0
71	FACE2	PX	.011	.011	0	0
72	FACE1	PX	.011	.011	0	0
73	ENDCORNER3B	PX	.006	.006	0	0
74	ENDCORNER3A	PX	.006	.006	0	0
75	ENDCORNER2B	PX	.006	.006	0	0
76	ENDCORNER2A	PX	.006	.006	0	0
77	ENDCORNER1B	PX	.006	.006	0	0
78	ENDCORNER1A	PX	.006	.006	0	0
79	CR3B	PX	.006	.006	0	0
80	CR3A	PX	.006	.006	0	0
81	CR2B	PX	.006	.006	0	0
82	CR2A	PX	.006	.006	0	0
83	CR1B	PX	.006	.006	0	0
84	CR1A	PX	.006	.006	0	0
85	CP3	PX	.006	.006	0	0
86	CP2	PX	.006	.006	0	0
87	CP1	PX	.006	.006	0	0

Member Distributed Loads (BLC 13 : Wind Load (300)) (Continued)

	Member Label	Direction	Start Magnitude[k/ft,...	End Magnitude[k/ft,F,...	Start Location[ft,%]	End Location[ft,%]
88	CORNER3	PX	.006	.006	0	0
89	CORNER2	PX	.006	.006	0	0
90	CORNER1	PX	.006	.006	0	0

Member Distributed Loads (BLC 14 : Wind Load (330))

	Member Label	Direction	Start Magnitude[k/ft,...	End Magnitude[k/ft,F,...	Start Location[ft,%]	End Location[ft,%]
1	SOBOT3	PY	-.006	-.006	0	0
2	SOBOT2	PY	-.006	-.006	0	0
3	SOBOT1	PY	-.006	-.006	0	0
4	RAIL1	PY	-.003	-.003	0	0
5	RAIL2	PY	-.006	-.006	0	0
6	RAIL3	PY	-.006	-.006	0	0
7	MP GAMMA4	PY	-.01	-.01	0	0
8	MP GAMMA3	PY	-.01	-.01	0	0
9	MP GAMMA2	PY	-.01	-.01	0	0
10	MP GAMMA1	PY	-.01	-.01	0	0
11	MP BETA4	PY	-.01	-.01	0	0
12	MP BETA3	PY	-.01	-.01	0	0
13	MP BETA2	PY	-.01	-.01	0	0
14	MP BETA1	PY	-.01	-.01	0	0
15	MP ALPHA4	PY	-.01	-.01	0	0
16	MP ALPHA3	PY	-.01	-.01	0	0
17	MP ALPHA2	PY	-.01	-.01	0	0
18	MP ALPHA1	PY	-.01	-.01	0	0
19	INNER6	PY	-.006	-.006	0	0
20	INNER5	PY	-.006	-.006	0	0
21	INNER4	PY	-.006	-.006	0	0
22	INNER3	PY	-.006	-.006	0	0
23	INNER2	PY	-.006	-.006	0	0
24	INNER1	PY	-.006	-.006	0	0
25	FACE1	PY	-.006	-.006	0	0
26	FACE2	PY	-.011	-.011	0	0
27	FACE3	PY	-.011	-.011	0	0
28	ENDCORNER3B	PY	-.006	-.006	0	0
29	ENDCORNER3A	PY	-.006	-.006	0	0
30	ENDCORNER2B	PY	-.006	-.006	0	0
31	ENDCORNER2A	PY	-.006	-.006	0	0
32	ENDCORNER1B	PY	-.006	-.006	0	0
33	ENDCORNER1A	PY	-.006	-.006	0	0
34	CR3B	PY	-.006	-.006	0	0
35	CR3A	PY	-.006	-.006	0	0
36	CR2B	PY	-.006	-.006	0	0
37	CR2A	PY	-.006	-.006	0	0
38	CR1B	PY	-.006	-.006	0	0
39	CR1A	PY	-.006	-.006	0	0
40	CP3	PY	-.006	-.006	0	0
41	CP2	PY	-.006	-.006	0	0
42	CP1	PY	-.006	-.006	0	0
43	CORNER3	PY	-.006	-.006	0	0
44	CORNER2	PY	-.006	-.006	0	0
45	CORNER1	PY	-.006	-.006	0	0
46	SOBOT3	PX	.003	.003	0	0
47	SOBOT2	PX	.003	.003	0	0
48	SOBOT1	PX	.003	.003	0	0
49	RAIL1	PX	.002	.002	0	0
50	RAIL2	PX	.003	.003	0	0

Member Distributed Loads (BLC 14 : Wind Load (330)) (Continued)

	Member Label	Direction	Start Magnitude[k/ft,...	End Magnitude[k/ft,F,...	Start Location[ft,%]	End Location[ft,%]
51	RAIL3	PX	.003	.003	0	0
52	MP GAMMA4	PX	.006	.006	0	0
53	MP GAMMA3	PX	.006	.006	0	0
54	MP GAMMA2	PX	.006	.006	0	0
55	MP GAMMA1	PX	.006	.006	0	0
56	MP BETA4	PX	.006	.006	0	0
57	MP BETA3	PX	.006	.006	0	0
58	MP BETA2	PX	.006	.006	0	0
59	MP BETA1	PX	.006	.006	0	0
60	MP ALPHA4	PX	.006	.006	0	0
61	MP ALPHA3	PX	.006	.006	0	0
62	MP ALPHA2	PX	.006	.006	0	0
63	MP ALPHA1	PX	.006	.006	0	0
64	INNER6	PX	.003	.003	0	0
65	INNER5	PX	.003	.003	0	0
66	INNER4	PX	.003	.003	0	0
67	INNER3	PX	.003	.003	0	0
68	INNER2	PX	.003	.003	0	0
69	INNER1	PX	.003	.003	0	0
70	FACE1	PX	.003	.003	0	0
71	FACE2	PX	.007	.007	0	0
72	FACE3	PX	.007	.007	0	0
73	ENDCORNER3B	PX	.003	.003	0	0
74	ENDCORNER3A	PX	.003	.003	0	0
75	ENDCORNER2B	PX	.003	.003	0	0
76	ENDCORNER2A	PX	.003	.003	0	0
77	ENDCORNER1B	PX	.003	.003	0	0
78	ENDCORNER1A	PX	.003	.003	0	0
79	CR3B	PX	.003	.003	0	0
80	CR3A	PX	.003	.003	0	0
81	CR2B	PX	.003	.003	0	0
82	CR2A	PX	.003	.003	0	0
83	CR1B	PX	.003	.003	0	0
84	CR1A	PX	.003	.003	0	0
85	CP3	PX	.003	.003	0	0
86	CP2	PX	.003	.003	0	0
87	CP1	PX	.003	.003	0	0
88	CORNER3	PX	.003	.003	0	0
89	CORNER2	PX	.003	.003	0	0
90	CORNER1	PX	.003	.003	0	0

Member Distributed Loads (BLC 15 : Maintanence (0))

	Member Label	Direction	Start Magnitude[k/ft,...	End Magnitude[k/ft,F,...	Start Location[ft,%]	End Location[ft,%]
1	SOBOT3	PY	-.000415	-.000415	0	0
2	SOBOT2	PY	-.000415	-.000415	0	0
3	SOBOT1	PY	-.000415	-.000415	0	0
4	RAIL1	PY	-.00022	-.00022	0	0
5	RAIL2	PY	-.000439	-.000439	0	0
6	RAIL3	PY	-.000439	-.000439	0	0
7	MP GAMMA4	PY	-.000768	-.000768	0	0
8	MP GAMMA3	PY	-.000768	-.000768	0	0
9	MP GAMMA2	PY	-.000768	-.000768	0	0
10	MP GAMMA1	PY	-.000768	-.000768	0	0
11	MP BETA4	PY	-.000768	-.000768	0	0
12	MP BETA3	PY	-.000768	-.000768	0	0
13	MP BETA2	PY	-.000768	-.000768	0	0

Member Distributed Loads (BLC 15 : Maintanence (0)) (Continued)

	Member Label	Direction	Start Magnitude[k/ft,...	End Magnitude[k/ft,F,...	Start Location[ft,%]	End Location[ft,%]
14	MP BETA1	PY	-.000768	-.000768	0	0
15	MP ALPHA4	PY	-.000768	-.000768	0	0
16	MP ALPHA3	PY	-.000768	-.000768	0	0
17	MP ALPHA2	PY	-.000768	-.000768	0	0
18	MP ALPHA1	PY	-.000768	-.000768	0	0
19	INNER6	PY	-.000443	-.000443	0	0
20	INNER5	PY	-.000443	-.000443	0	0
21	INNER4	PY	-.000443	-.000443	0	0
22	INNER3	PY	-.000443	-.000443	0	0
23	INNER2	PY	-.000443	-.000443	0	0
24	INNER1	PY	-.000443	-.000443	0	0
25	FACE1	PY	-.000415	-.000415	0	0
26	FACE2	PY	-.00083	-.00083	0	0
27	FACE3	PY	-.00083	-.00083	0	0
28	ENDCORNER3B	PY	-.000415	-.000415	0	0
29	ENDCORNER3A	PY	-.000415	-.000415	0	0
30	ENDCORNER2B	PY	-.000415	-.000415	0	0
31	ENDCORNER2A	PY	-.000415	-.000415	0	0
32	ENDCORNER1B	PY	-.000415	-.000415	0	0
33	ENDCORNER1A	PY	-.000415	-.000415	0	0
34	CR3B	PY	-.000415	-.000415	0	0
35	CR3A	PY	-.000415	-.000415	0	0
36	CR2B	PY	-.000415	-.000415	0	0
37	CR2A	PY	-.000415	-.000415	0	0
38	CR1B	PY	-.000415	-.000415	0	0
39	CR1A	PY	-.000415	-.000415	0	0
40	CP3	PY	-.000443	-.000443	0	0
41	CP2	PY	-.000443	-.000443	0	0
42	CP1	PY	-.000443	-.000443	0	0
43	CORNER3	PY	-.000415	-.000415	0	0
44	CORNER2	PY	-.000415	-.000415	0	0
45	CORNER1	PY	-.000415	-.000415	0	0

Member Distributed Loads (BLC 16 : Maintanence (30))

	Member Label	Direction	Start Magnitude[k/ft,...	End Magnitude[k/ft,F,...	Start Location[ft,%]	End Location[ft,%]
1	SOBOT3	PY	-.000359	-.000359	0	0
2	SOBOT2	PY	-.000359	-.000359	0	0
3	SOBOT1	PY	-.000359	-.000359	0	0
4	RAIL1	PY	-.00019	-.00019	0	0
5	RAIL2	PY	-.00038	-.00038	0	0
6	RAIL3	PY	-.00038	-.00038	0	0
7	MP GAMMA4	PY	-.000665	-.000665	0	0
8	MP GAMMA3	PY	-.000665	-.000665	0	0
9	MP GAMMA2	PY	-.000665	-.000665	0	0
10	MP GAMMA1	PY	-.000665	-.000665	0	0
11	MP BETA4	PY	-.000665	-.000665	0	0
12	MP BETA3	PY	-.000665	-.000665	0	0
13	MP BETA2	PY	-.000665	-.000665	0	0
14	MP BETA1	PY	-.000665	-.000665	0	0
15	MP ALPHA4	PY	-.000665	-.000665	0	0
16	MP ALPHA3	PY	-.000665	-.000665	0	0
17	MP ALPHA2	PY	-.000665	-.000665	0	0
18	MP ALPHA1	PY	-.000665	-.000665	0	0
19	INNER6	PY	-.000383	-.000383	0	0
20	INNER5	PY	-.000383	-.000383	0	0
21	INNER4	PY	-.000383	-.000383	0	0

Member Distributed Loads (BLC 16 : Maintanence (30)) (Continued)

	Member Label	Direction	Start Magnitude[k/ft,...	End Magnitude[k/ft,F,...	Start Location[ft,%]	End Location[ft,%]
22	INNER3	PY	-.000383	-.000383	0	0
23	INNER2	PY	-.000383	-.000383	0	0
24	INNER1	PY	-.000383	-.000383	0	0
25	FACE1	PY	-.000359	-.000359	0	0
26	FACE2	PY	-.000719	-.000719	0	0
27	FACE3	PY	-.000719	-.000719	0	0
28	ENDCORNER3B	PY	-.000359	-.000359	0	0
29	ENDCORNER3A	PY	-.000359	-.000359	0	0
30	ENDCORNER2B	PY	-.000359	-.000359	0	0
31	ENDCORNER2A	PY	-.000359	-.000359	0	0
32	ENDCORNER1B	PY	-.000359	-.000359	0	0
33	ENDCORNER1A	PY	-.000359	-.000359	0	0
34	CR3B	PY	-.000359	-.000359	0	0
35	CR3A	PY	-.000359	-.000359	0	0
36	CR2B	PY	-.000359	-.000359	0	0
37	CR2A	PY	-.000359	-.000359	0	0
38	CR1B	PY	-.000359	-.000359	0	0
39	CR1A	PY	-.000359	-.000359	0	0
40	CP3	PY	-.000383	-.000383	0	0
41	CP2	PY	-.000383	-.000383	0	0
42	CP1	PY	-.000383	-.000383	0	0
43	CORNER3	PY	-.000359	-.000359	0	0
44	CORNER2	PY	-.000359	-.000359	0	0
45	CORNER1	PY	-.000359	-.000359	0	0
46	SOBOT3	PX	-.000207	-.000207	0	0
47	SOBOT2	PX	-.000207	-.000207	0	0
48	SOBOT1	PX	-.000207	-.000207	0	0
49	RAIL1	PX	-.00011	-.00011	0	0
50	RAIL2	PX	-.00022	-.00022	0	0
51	RAIL3	PX	-.00022	-.00022	0	0
52	MP GAMMA4	PX	-.000384	-.000384	0	0
53	MP GAMMA3	PX	-.000384	-.000384	0	0
54	MP GAMMA2	PX	-.000384	-.000384	0	0
55	MP GAMMA1	PX	-.000384	-.000384	0	0
56	MP BETA4	PX	-.000384	-.000384	0	0
57	MP BETA3	PX	-.000384	-.000384	0	0
58	MP BETA2	PX	-.000384	-.000384	0	0
59	MP BETA1	PX	-.000384	-.000384	0	0
60	MP ALPHA4	PX	-.000384	-.000384	0	0
61	MP ALPHA3	PX	-.000384	-.000384	0	0
62	MP ALPHA2	PX	-.000384	-.000384	0	0
63	MP ALPHA1	PX	-.000384	-.000384	0	0
64	INNER6	PX	-.000221	-.000221	0	0
65	INNER5	PX	-.000221	-.000221	0	0
66	INNER4	PX	-.000221	-.000221	0	0
67	INNER3	PX	-.000221	-.000221	0	0
68	INNER2	PX	-.000221	-.000221	0	0
69	INNER1	PX	-.000221	-.000221	0	0
70	FACE1	PX	-.000207	-.000207	0	0
71	FACE2	PX	-.000415	-.000415	0	0
72	FACE3	PX	-.000415	-.000415	0	0
73	ENDCORNER3B	PX	-.000207	-.000207	0	0
74	ENDCORNER3A	PX	-.000207	-.000207	0	0
75	ENDCORNER2B	PX	-.000207	-.000207	0	0
76	ENDCORNER2A	PX	-.000207	-.000207	0	0
77	ENDCORNER1B	PX	-.000207	-.000207	0	0
78	ENDCORNER1A	PX	-.000207	-.000207	0	0

Member Distributed Loads (BLC 16 : Maintanence (30)) (Continued)

	Member Label	Direction	Start Magnitude[k/ft,...	End Magnitude[k/ft,F,...	Start Location[ft,%]	End Location[ft,%]
79	CR3B	PX	-.000207	-.000207	0	0
80	CR3A	PX	-.000207	-.000207	0	0
81	CR2B	PX	-.000207	-.000207	0	0
82	CR2A	PX	-.000207	-.000207	0	0
83	CR1B	PX	-.000207	-.000207	0	0
84	CR1A	PX	-.000207	-.000207	0	0
85	CP3	PX	-.000221	-.000221	0	0
86	CP2	PX	-.000221	-.000221	0	0
87	CP1	PX	-.000221	-.000221	0	0
88	CORNER3	PX	-.000207	-.000207	0	0
89	CORNER2	PX	-.000207	-.000207	0	0
90	CORNER1	PX	-.000207	-.000207	0	0

Member Distributed Loads (BLC 17 : Maintanence (60))

	Member Label	Direction	Start Magnitude[k/ft,...	End Magnitude[k/ft,F,...	Start Location[ft,%]	End Location[ft,%]
1	SOBOT3	PY	-.000207	-.000207	0	0
2	SOBOT2	PY	-.000207	-.000207	0	0
3	SOBOT1	PY	-.000207	-.000207	0	0
4	RAIL1	PY	-.00011	-.00011	0	0
5	RAIL2	PY	-.00022	-.00022	0	0
6	RAIL3	PY	-.00022	-.00022	0	0
7	MP GAMMA4	PY	-.000384	-.000384	0	0
8	MP GAMMA3	PY	-.000384	-.000384	0	0
9	MP GAMMA2	PY	-.000384	-.000384	0	0
10	MP GAMMA1	PY	-.000384	-.000384	0	0
11	MP BETA4	PY	-.000384	-.000384	0	0
12	MP BETA3	PY	-.000384	-.000384	0	0
13	MP BETA2	PY	-.000384	-.000384	0	0
14	MP BETA1	PY	-.000384	-.000384	0	0
15	MP ALPHA4	PY	-.000384	-.000384	0	0
16	MP ALPHA3	PY	-.000384	-.000384	0	0
17	MP ALPHA2	PY	-.000384	-.000384	0	0
18	MP ALPHA1	PY	-.000384	-.000384	0	0
19	INNER6	PY	-.000221	-.000221	0	0
20	INNER5	PY	-.000221	-.000221	0	0
21	INNER4	PY	-.000221	-.000221	0	0
22	INNER3	PY	-.000221	-.000221	0	0
23	INNER2	PY	-.000221	-.000221	0	0
24	INNER1	PY	-.000221	-.000221	0	0
25	FACE1	PY	-.000207	-.000207	0	0
26	FACE2	PY	-.000415	-.000415	0	0
27	FACE3	PY	-.000415	-.000415	0	0
28	ENDCORNER3B	PY	-.000207	-.000207	0	0
29	ENDCORNER3A	PY	-.000207	-.000207	0	0
30	ENDCORNER2B	PY	-.000207	-.000207	0	0
31	ENDCORNER2A	PY	-.000207	-.000207	0	0
32	ENDCORNER1B	PY	-.000207	-.000207	0	0
33	ENDCORNER1A	PY	-.000207	-.000207	0	0
34	CR3B	PY	-.000207	-.000207	0	0
35	CR3A	PY	-.000207	-.000207	0	0
36	CR2B	PY	-.000207	-.000207	0	0
37	CR2A	PY	-.000207	-.000207	0	0
38	CR1B	PY	-.000207	-.000207	0	0
39	CR1A	PY	-.000207	-.000207	0	0
40	CP3	PY	-.000221	-.000221	0	0
41	CP2	PY	-.000221	-.000221	0	0

Member Distributed Loads (BLC 17 : Maintanence (60)) (Continued)

	Member Label	Direction	Start Magnitude[k/ft,...	End Magnitude[k/ft,F,...	Start Location[ft,%]	End Location[ft,%]
42	CP1	PY	-.000221	-.000221	0	0
43	CORNER3	PY	-.000207	-.000207	0	0
44	CORNER2	PY	-.000207	-.000207	0	0
45	CORNER1	PY	-.000207	-.000207	0	0
46	SOBOT3	PX	-.000359	-.000359	0	0
47	SOBOT2	PX	-.000359	-.000359	0	0
48	SOBOT1	PX	-.000359	-.000359	0	0
49	RAIL1	PX	-.00019	-.00019	0	0
50	RAIL2	PX	-.00038	-.00038	0	0
51	RAIL3	PX	-.00038	-.00038	0	0
52	MP GAMMA4	PX	-.000665	-.000665	0	0
53	MP GAMMA3	PX	-.000665	-.000665	0	0
54	MP GAMMA2	PX	-.000665	-.000665	0	0
55	MP GAMMA1	PX	-.000665	-.000665	0	0
56	MP BETA4	PX	-.000665	-.000665	0	0
57	MP BETA3	PX	-.000665	-.000665	0	0
58	MP BETA2	PX	-.000665	-.000665	0	0
59	MP BETA1	PX	-.000665	-.000665	0	0
60	MP ALPHA4	PX	-.000665	-.000665	0	0
61	MP ALPHA3	PX	-.000665	-.000665	0	0
62	MP ALPHA2	PX	-.000665	-.000665	0	0
63	MP ALPHA1	PX	-.000665	-.000665	0	0
64	INNER6	PX	-.000383	-.000383	0	0
65	INNER5	PX	-.000383	-.000383	0	0
66	INNER4	PX	-.000383	-.000383	0	0
67	INNER3	PX	-.000383	-.000383	0	0
68	INNER2	PX	-.000383	-.000383	0	0
69	INNER1	PX	-.000383	-.000383	0	0
70	FACE1	PX	-.000359	-.000359	0	0
71	FACE2	PX	-.000719	-.000719	0	0
72	FACE3	PX	-.000719	-.000719	0	0
73	ENDCORNER3B	PX	-.000359	-.000359	0	0
74	ENDCORNER3A	PX	-.000359	-.000359	0	0
75	ENDCORNER2B	PX	-.000359	-.000359	0	0
76	ENDCORNER2A	PX	-.000359	-.000359	0	0
77	ENDCORNER1B	PX	-.000359	-.000359	0	0
78	ENDCORNER1A	PX	-.000359	-.000359	0	0
79	CR3B	PX	-.000359	-.000359	0	0
80	CR3A	PX	-.000359	-.000359	0	0
81	CR2B	PX	-.000359	-.000359	0	0
82	CR2A	PX	-.000359	-.000359	0	0
83	CR1B	PX	-.000359	-.000359	0	0
84	CR1A	PX	-.000359	-.000359	0	0
85	CP3	PX	-.000383	-.000383	0	0
86	CP2	PX	-.000383	-.000383	0	0
87	CP1	PX	-.000383	-.000383	0	0
88	CORNER3	PX	-.000359	-.000359	0	0
89	CORNER2	PX	-.000359	-.000359	0	0
90	CORNER1	PX	-.000359	-.000359	0	0

Member Distributed Loads (BLC 18 : Maintanence (90))

	Member Label	Direction	Start Magnitude[k/ft,...	End Magnitude[k/ft,F,...	Start Location[ft,%]	End Location[ft,%]
1	SOBOT3	PX	-.000415	-.000415	0	0
2	SOBOT2	PX	-.000415	-.000415	0	0
3	SOBOT1	PX	-.000415	-.000415	0	0
4	RAIL2	PX	-.00022	-.00022	0	0

Member Distributed Loads (BLC 18 : Maintanence (90)) (Continued)

	Member Label	Direction	Start Magnitude[k/ft,...	End Magnitude[k/ft,F,...	Start Location[ft,%]	End Location[ft,%]
5	RAIL3	PX	-.000439	-.000439	0	0
6	RAIL1	PX	-.000439	-.000439	0	0
7	MP GAMMA4	PX	-.000768	-.000768	0	0
8	MP GAMMA3	PX	-.000768	-.000768	0	0
9	MP GAMMA2	PX	-.000768	-.000768	0	0
10	MP GAMMA1	PX	-.000768	-.000768	0	0
11	MP BETA4	PX	-.000768	-.000768	0	0
12	MP BETA3	PX	-.000768	-.000768	0	0
13	MP BETA2	PX	-.000768	-.000768	0	0
14	MP BETA1	PX	-.000768	-.000768	0	0
15	MP ALPHA4	PX	-.000768	-.000768	0	0
16	MP ALPHA3	PX	-.000768	-.000768	0	0
17	MP ALPHA2	PX	-.000768	-.000768	0	0
18	MP ALPHA1	PX	-.000768	-.000768	0	0
19	INNER6	PX	-.000443	-.000443	0	0
20	INNER5	PX	-.000443	-.000443	0	0
21	INNER4	PX	-.000443	-.000443	0	0
22	INNER3	PX	-.000443	-.000443	0	0
23	INNER2	PX	-.000443	-.000443	0	0
24	INNER1	PX	-.000443	-.000443	0	0
25	FACE2	PX	-.000415	-.000415	0	0
26	FACE3	PX	-.00083	-.00083	0	0
27	FACE1	PX	-.00083	-.00083	0	0
28	ENDCORNER3B	PX	-.000415	-.000415	0	0
29	ENDCORNER3A	PX	-.000415	-.000415	0	0
30	ENDCORNER2B	PX	-.000415	-.000415	0	0
31	ENDCORNER2A	PX	-.000415	-.000415	0	0
32	ENDCORNER1B	PX	-.000415	-.000415	0	0
33	ENDCORNER1A	PX	-.000415	-.000415	0	0
34	CR3B	PX	-.000415	-.000415	0	0
35	CR3A	PX	-.000415	-.000415	0	0
36	CR2B	PX	-.000415	-.000415	0	0
37	CR2A	PX	-.000415	-.000415	0	0
38	CR1B	PX	-.000415	-.000415	0	0
39	CR1A	PX	-.000415	-.000415	0	0
40	CP3	PX	-.000443	-.000443	0	0
41	CP2	PX	-.000443	-.000443	0	0
42	CP1	PX	-.000443	-.000443	0	0
43	CORNER3	PX	-.000415	-.000415	0	0
44	CORNER2	PX	-.000415	-.000415	0	0
45	CORNER1	PX	-.000415	-.000415	0	0

Member Distributed Loads (BLC 19 : Maintanence (120))

	Member Label	Direction	Start Magnitude[k/ft,...	End Magnitude[k/ft,F,...	Start Location[ft,%]	End Location[ft,%]
1	SOBOT3	PY	.000207	.000207	0	0
2	SOBOT2	PY	.000207	.000207	0	0
3	SOBOT1	PY	.000207	.000207	0	0
4	RAIL2	PY	.00011	.00011	0	0
5	RAIL3	PY	.00022	.00022	0	0
6	RAIL1	PY	.00022	.00022	0	0
7	MP GAMMA4	PY	.000384	.000384	0	0
8	MP GAMMA3	PY	.000384	.000384	0	0
9	MP GAMMA2	PY	.000384	.000384	0	0
10	MP GAMMA1	PY	.000384	.000384	0	0
11	MP BETA4	PY	.000384	.000384	0	0
12	MP BETA3	PY	.000384	.000384	0	0

Member Distributed Loads (BLC 19 : Maintanence (120)) (Continued)

	Member Label	Direction	Start Magnitude[k/ft,...	End Magnitude[k/ft,F,...	Start Location[ft,%]	End Location[ft,%]
13	MP BETA2	PY	.000384	.000384	0	0
14	MP BETA1	PY	.000384	.000384	0	0
15	MP ALPHA4	PY	.000384	.000384	0	0
16	MP ALPHA3	PY	.000384	.000384	0	0
17	MP ALPHA2	PY	.000384	.000384	0	0
18	MP ALPHA1	PY	.000384	.000384	0	0
19	INNER6	PY	.000221	.000221	0	0
20	INNER5	PY	.000221	.000221	0	0
21	INNER4	PY	.000221	.000221	0	0
22	INNER3	PY	.000221	.000221	0	0
23	INNER2	PY	.000221	.000221	0	0
24	INNER1	PY	.000221	.000221	0	0
25	FACE2	PY	.000207	.000207	0	0
26	FACE3	PY	.000415	.000415	0	0
27	FACE1	PY	.000415	.000415	0	0
28	ENDCORNER3B	PY	.000207	.000207	0	0
29	ENDCORNER3A	PY	.000207	.000207	0	0
30	ENDCORNER2B	PY	.000207	.000207	0	0
31	ENDCORNER2A	PY	.000207	.000207	0	0
32	ENDCORNER1B	PY	.000207	.000207	0	0
33	ENDCORNER1A	PY	.000207	.000207	0	0
34	CR3B	PY	.000207	.000207	0	0
35	CR3A	PY	.000207	.000207	0	0
36	CR2B	PY	.000207	.000207	0	0
37	CR2A	PY	.000207	.000207	0	0
38	CR1B	PY	.000207	.000207	0	0
39	CR1A	PY	.000207	.000207	0	0
40	CP3	PY	.000221	.000221	0	0
41	CP2	PY	.000221	.000221	0	0
42	CP1	PY	.000221	.000221	0	0
43	CORNER3	PY	.000207	.000207	0	0
44	CORNER2	PY	.000207	.000207	0	0
45	CORNER1	PY	.000207	.000207	0	0
46	SOBOT3	PX	-.000359	-.000359	0	0
47	SOBOT2	PX	-.000359	-.000359	0	0
48	SOBOT1	PX	-.000359	-.000359	0	0
49	RAIL2	PX	-.00019	-.00019	0	0
50	RAIL3	PX	-.00038	-.00038	0	0
51	RAIL1	PX	-.00038	-.00038	0	0
52	MP GAMMA4	PX	-.000665	-.000665	0	0
53	MP GAMMA3	PX	-.000665	-.000665	0	0
54	MP GAMMA2	PX	-.000665	-.000665	0	0
55	MP GAMMA1	PX	-.000665	-.000665	0	0
56	MP BETA4	PX	-.000665	-.000665	0	0
57	MP BETA3	PX	-.000665	-.000665	0	0
58	MP BETA2	PX	-.000665	-.000665	0	0
59	MP BETA1	PX	-.000665	-.000665	0	0
60	MP ALPHA4	PX	-.000665	-.000665	0	0
61	MP ALPHA3	PX	-.000665	-.000665	0	0
62	MP ALPHA2	PX	-.000665	-.000665	0	0
63	MP ALPHA1	PX	-.000665	-.000665	0	0
64	INNER6	PX	-.000383	-.000383	0	0
65	INNER5	PX	-.000383	-.000383	0	0
66	INNER4	PX	-.000383	-.000383	0	0
67	INNER3	PX	-.000383	-.000383	0	0
68	INNER2	PX	-.000383	-.000383	0	0
69	INNER1	PX	-.000383	-.000383	0	0

Member Distributed Loads (BLC 19 : Maintanence (120)) (Continued)

	Member Label	Direction	Start Magnitude[k/ft,...	End Magnitude[k/ft,F,...	Start Location[ft,%]	End Location[ft,%]
70	FACE2	PX	-.000359	-.000359	0	0
71	FACE3	PX	-.000719	-.000719	0	0
72	FACE1	PX	-.000719	-.000719	0	0
73	ENDCORNER3B	PX	-.000359	-.000359	0	0
74	ENDCORNER3A	PX	-.000359	-.000359	0	0
75	ENDCORNER2B	PX	-.000359	-.000359	0	0
76	ENDCORNER2A	PX	-.000359	-.000359	0	0
77	ENDCORNER1B	PX	-.000359	-.000359	0	0
78	ENDCORNER1A	PX	-.000359	-.000359	0	0
79	CR3B	PX	-.000359	-.000359	0	0
80	CR3A	PX	-.000359	-.000359	0	0
81	CR2B	PX	-.000359	-.000359	0	0
82	CR2A	PX	-.000359	-.000359	0	0
83	CR1B	PX	-.000359	-.000359	0	0
84	CR1A	PX	-.000359	-.000359	0	0
85	CP3	PX	-.000383	-.000383	0	0
86	CP2	PX	-.000383	-.000383	0	0
87	CP1	PX	-.000383	-.000383	0	0
88	CORNER3	PX	-.000359	-.000359	0	0
89	CORNER2	PX	-.000359	-.000359	0	0
90	CORNER1	PX	-.000359	-.000359	0	0

Member Distributed Loads (BLC 20 : Maintanence (150))

	Member Label	Direction	Start Magnitude[k/ft,...	End Magnitude[k/ft,F,...	Start Location[ft,%]	End Location[ft,%]
1	SOBOT3	PY	.000359	.000359	0	0
2	SOBOT2	PY	.000359	.000359	0	0
3	SOBOT1	PY	.000359	.000359	0	0
4	RAIL2	PY	.00019	.00019	0	0
5	RAIL3	PY	.00038	.00038	0	0
6	RAIL1	PY	.00038	.00038	0	0
7	MP GAMMA4	PY	.000665	.000665	0	0
8	MP GAMMA3	PY	.000665	.000665	0	0
9	MP GAMMA2	PY	.000665	.000665	0	0
10	MP GAMMA1	PY	.000665	.000665	0	0
11	MP BETA4	PY	.000665	.000665	0	0
12	MP BETA3	PY	.000665	.000665	0	0
13	MP BETA2	PY	.000665	.000665	0	0
14	MP BETA1	PY	.000665	.000665	0	0
15	MP ALPHA4	PY	.000665	.000665	0	0
16	MP ALPHA3	PY	.000665	.000665	0	0
17	MP ALPHA2	PY	.000665	.000665	0	0
18	MP ALPHA1	PY	.000665	.000665	0	0
19	INNER6	PY	.000383	.000383	0	0
20	INNER5	PY	.000383	.000383	0	0
21	INNER4	PY	.000383	.000383	0	0
22	INNER3	PY	.000383	.000383	0	0
23	INNER2	PY	.000383	.000383	0	0
24	INNER1	PY	.000383	.000383	0	0
25	FACE2	PY	.000359	.000359	0	0
26	FACE3	PY	.000719	.000719	0	0
27	FACE1	PY	.000719	.000719	0	0
28	ENDCORNER3B	PY	.000359	.000359	0	0
29	ENDCORNER3A	PY	.000359	.000359	0	0
30	ENDCORNER2B	PY	.000359	.000359	0	0
31	ENDCORNER2A	PY	.000359	.000359	0	0
32	ENDCORNER1B	PY	.000359	.000359	0	0

Member Distributed Loads (BLC 20 : Maintanence (150)) (Continued)

	Member Label	Direction	Start Magnitude[k/ft,...	End Magnitude[k/ft,F,...	Start Location[ft,%]	End Location[ft,%]
33	ENDCORNER1A	PY	.000359	.000359	0	0
34	CR3B	PY	.000359	.000359	0	0
35	CR3A	PY	.000359	.000359	0	0
36	CR2B	PY	.000359	.000359	0	0
37	CR2A	PY	.000359	.000359	0	0
38	CR1B	PY	.000359	.000359	0	0
39	CR1A	PY	.000359	.000359	0	0
40	CP3	PY	.000383	.000383	0	0
41	CP2	PY	.000383	.000383	0	0
42	CP1	PY	.000383	.000383	0	0
43	CORNER3	PY	.000359	.000359	0	0
44	CORNER2	PY	.000359	.000359	0	0
45	CORNER1	PY	.000359	.000359	0	0
46	SOBOT3	PX	-.000207	-.000207	0	0
47	SOBOT2	PX	-.000207	-.000207	0	0
48	SOBOT1	PX	-.000207	-.000207	0	0
49	RAIL2	PX	-.00011	-.00011	0	0
50	RAIL3	PX	-.00022	-.00022	0	0
51	RAIL1	PX	-.00022	-.00022	0	0
52	MP GAMMA4	PX	-.000384	-.000384	0	0
53	MP GAMMA3	PX	-.000384	-.000384	0	0
54	MP GAMMA2	PX	-.000384	-.000384	0	0
55	MP GAMMA1	PX	-.000384	-.000384	0	0
56	MP BETA4	PX	-.000384	-.000384	0	0
57	MP BETA3	PX	-.000384	-.000384	0	0
58	MP BETA2	PX	-.000384	-.000384	0	0
59	MP BETA1	PX	-.000384	-.000384	0	0
60	MP ALPHA4	PX	-.000384	-.000384	0	0
61	MP ALPHA3	PX	-.000384	-.000384	0	0
62	MP ALPHA2	PX	-.000384	-.000384	0	0
63	MP ALPHA1	PX	-.000384	-.000384	0	0
64	INNER6	PX	-.000221	-.000221	0	0
65	INNER5	PX	-.000221	-.000221	0	0
66	INNER4	PX	-.000221	-.000221	0	0
67	INNER3	PX	-.000221	-.000221	0	0
68	INNER2	PX	-.000221	-.000221	0	0
69	INNER1	PX	-.000221	-.000221	0	0
70	FACE2	PX	-.000207	-.000207	0	0
71	FACE3	PX	-.000415	-.000415	0	0
72	FACE1	PX	-.000415	-.000415	0	0
73	ENDCORNER3B	PX	-.000207	-.000207	0	0
74	ENDCORNER3A	PX	-.000207	-.000207	0	0
75	ENDCORNER2B	PX	-.000207	-.000207	0	0
76	ENDCORNER2A	PX	-.000207	-.000207	0	0
77	ENDCORNER1B	PX	-.000207	-.000207	0	0
78	ENDCORNER1A	PX	-.000207	-.000207	0	0
79	CR3B	PX	-.000207	-.000207	0	0
80	CR3A	PX	-.000207	-.000207	0	0
81	CR2B	PX	-.000207	-.000207	0	0
82	CR2A	PX	-.000207	-.000207	0	0
83	CR1B	PX	-.000207	-.000207	0	0
84	CR1A	PX	-.000207	-.000207	0	0
85	CP3	PX	-.000221	-.000221	0	0
86	CP2	PX	-.000221	-.000221	0	0
87	CP1	PX	-.000221	-.000221	0	0
88	CORNER3	PX	-.000207	-.000207	0	0
89	CORNER2	PX	-.000207	-.000207	0	0

Member Distributed Loads (BLC 20 : Maintanence (150)) (Continued)

	Member Label	Direction	Start Magnitude[k/ft,...	End Magnitude[k/ft,F,...	Start Location[ft,%]	End Location[ft,%]
90	CORNER1	PX	-.000207	-.000207	0	0

Member Distributed Loads (BLC 21 : Maintanence (180))

	Member Label	Direction	Start Magnitude[k/ft,...	End Magnitude[k/ft,F,...	Start Location[ft,%]	End Location[ft,%]
1	SOBOT3	PY	.000415	.000415	0	0
2	SOBOT2	PY	.000415	.000415	0	0
3	SOBOT1	PY	.000415	.000415	0	0
4	RAIL2	PY	.00022	.00022	0	0
5	RAIL3	PY	.000439	.000439	0	0
6	RAIL1	PY	.000439	.000439	0	0
7	MP GAMMA4	PY	.000768	.000768	0	0
8	MP GAMMA3	PY	.000768	.000768	0	0
9	MP GAMMA2	PY	.000768	.000768	0	0
10	MP GAMMA1	PY	.000768	.000768	0	0
11	MP BETA4	PY	.000768	.000768	0	0
12	MP BETA3	PY	.000768	.000768	0	0
13	MP BETA2	PY	.000768	.000768	0	0
14	MP BETA1	PY	.000768	.000768	0	0
15	MP ALPHA4	PY	.000768	.000768	0	0
16	MP ALPHA3	PY	.000768	.000768	0	0
17	MP ALPHA2	PY	.000768	.000768	0	0
18	MP ALPHA1	PY	.000768	.000768	0	0
19	INNER6	PY	.000443	.000443	0	0
20	INNER5	PY	.000443	.000443	0	0
21	INNER4	PY	.000443	.000443	0	0
22	INNER3	PY	.000443	.000443	0	0
23	INNER2	PY	.000443	.000443	0	0
24	INNER1	PY	.000443	.000443	0	0
25	FACE2	PY	.000415	.000415	0	0
26	FACE3	PY	.00083	.00083	0	0
27	FACE1	PY	.00083	.00083	0	0
28	ENDCORNER3B	PY	.000415	.000415	0	0
29	ENDCORNER3A	PY	.000415	.000415	0	0
30	ENDCORNER2B	PY	.000415	.000415	0	0
31	ENDCORNER2A	PY	.000415	.000415	0	0
32	ENDCORNER1B	PY	.000415	.000415	0	0
33	ENDCORNER1A	PY	.000415	.000415	0	0
34	CR3B	PY	.000415	.000415	0	0
35	CR3A	PY	.000415	.000415	0	0
36	CR2B	PY	.000415	.000415	0	0
37	CR2A	PY	.000415	.000415	0	0
38	CR1B	PY	.000415	.000415	0	0
39	CR1A	PY	.000415	.000415	0	0
40	CP3	PY	.000443	.000443	0	0
41	CP2	PY	.000443	.000443	0	0
42	CP1	PY	.000443	.000443	0	0
43	CORNER3	PY	.000415	.000415	0	0
44	CORNER2	PY	.000415	.000415	0	0
45	CORNER1	PY	.000415	.000415	0	0

Member Distributed Loads (BLC 22 : Maintanence (210))

	Member Label	Direction	Start Magnitude[k/ft,...	End Magnitude[k/ft,F,...	Start Location[ft,%]	End Location[ft,%]
1	SOBOT3	PY	.000359	.000359	0	0
2	SOBOT2	PY	.000359	.000359	0	0
3	SOBOT1	PY	.000359	.000359	0	0
4	RAIL3	PY	.00019	.00019	0	0

Member Distributed Loads (BLC 22 : Maintanence (210)) (Continued)

	Member Label	Direction	Start Magnitude[k/ft,...	End Magnitude[k/ft,F,...	Start Location[ft,%]	End Location[ft,%]
5	RAIL2	PY	.00038	.00038	0	0
6	RAIL1	PY	.00038	.00038	0	0
7	MP GAMMA4	PY	.000665	.000665	0	0
8	MP GAMMA3	PY	.000665	.000665	0	0
9	MP GAMMA2	PY	.000665	.000665	0	0
10	MP GAMMA1	PY	.000665	.000665	0	0
11	MP BETA4	PY	.000665	.000665	0	0
12	MP BETA3	PY	.000665	.000665	0	0
13	MP BETA2	PY	.000665	.000665	0	0
14	MP BETA1	PY	.000665	.000665	0	0
15	MP ALPHA4	PY	.000665	.000665	0	0
16	MP ALPHA3	PY	.000665	.000665	0	0
17	MP ALPHA2	PY	.000665	.000665	0	0
18	MP ALPHA1	PY	.000665	.000665	0	0
19	INNER6	PY	.000383	.000383	0	0
20	INNER5	PY	.000383	.000383	0	0
21	INNER4	PY	.000383	.000383	0	0
22	INNER3	PY	.000383	.000383	0	0
23	INNER2	PY	.000383	.000383	0	0
24	INNER1	PY	.000383	.000383	0	0
25	FACE3	PY	.000359	.000359	0	0
26	FACE2	PY	.000719	.000719	0	0
27	FACE1	PY	.000719	.000719	0	0
28	ENDCORNER3B	PY	.000359	.000359	0	0
29	ENDCORNER3A	PY	.000359	.000359	0	0
30	ENDCORNER2B	PY	.000359	.000359	0	0
31	ENDCORNER2A	PY	.000359	.000359	0	0
32	ENDCORNER1B	PY	.000359	.000359	0	0
33	ENDCORNER1A	PY	.000359	.000359	0	0
34	CR3B	PY	.000359	.000359	0	0
35	CR3A	PY	.000359	.000359	0	0
36	CR2B	PY	.000359	.000359	0	0
37	CR2A	PY	.000359	.000359	0	0
38	CR1B	PY	.000359	.000359	0	0
39	CR1A	PY	.000359	.000359	0	0
40	CP3	PY	.000383	.000383	0	0
41	CP2	PY	.000383	.000383	0	0
42	CP1	PY	.000383	.000383	0	0
43	CORNER3	PY	.000359	.000359	0	0
44	CORNER2	PY	.000359	.000359	0	0
45	CORNER1	PY	.000359	.000359	0	0
46	SOBOT3	PX	.000207	.000207	0	0
47	SOBOT2	PX	.000207	.000207	0	0
48	SOBOT1	PX	.000207	.000207	0	0
49	RAIL3	PX	.00011	.00011	0	0
50	RAIL2	PX	.00022	.00022	0	0
51	RAIL1	PX	.00022	.00022	0	0
52	MP GAMMA4	PX	.000384	.000384	0	0
53	MP GAMMA3	PX	.000384	.000384	0	0
54	MP GAMMA2	PX	.000384	.000384	0	0
55	MP GAMMA1	PX	.000384	.000384	0	0
56	MP BETA4	PX	.000384	.000384	0	0
57	MP BETA3	PX	.000384	.000384	0	0
58	MP BETA2	PX	.000384	.000384	0	0
59	MP BETA1	PX	.000384	.000384	0	0
60	MP ALPHA4	PX	.000384	.000384	0	0
61	MP ALPHA3	PX	.000384	.000384	0	0

Member Distributed Loads (BLC 22 : Maintanence (210)) (Continued)

	Member Label	Direction	Start Magnitude[k/ft,...	End Magnitude[k/ft,F,...	Start Location[ft,%]	End Location[ft,%]
62	MP ALPHA2	PX	.000384	.000384	0	0
63	MP ALPHA1	PX	.000384	.000384	0	0
64	INNER6	PX	.000221	.000221	0	0
65	INNER5	PX	.000221	.000221	0	0
66	INNER4	PX	.000221	.000221	0	0
67	INNER3	PX	.000221	.000221	0	0
68	INNER2	PX	.000221	.000221	0	0
69	INNER1	PX	.000221	.000221	0	0
70	FACE3	PX	.000207	.000207	0	0
71	FACE2	PX	.000415	.000415	0	0
72	FACE1	PX	.000415	.000415	0	0
73	ENDCORNER3B	PX	.000207	.000207	0	0
74	ENDCORNER3A	PX	.000207	.000207	0	0
75	ENDCORNER2B	PX	.000207	.000207	0	0
76	ENDCORNER2A	PX	.000207	.000207	0	0
77	ENDCORNER1B	PX	.000207	.000207	0	0
78	ENDCORNER1A	PX	.000207	.000207	0	0
79	CR3B	PX	.000207	.000207	0	0
80	CR3A	PX	.000207	.000207	0	0
81	CR2B	PX	.000207	.000207	0	0
82	CR2A	PX	.000207	.000207	0	0
83	CR1B	PX	.000207	.000207	0	0
84	CR1A	PX	.000207	.000207	0	0
85	CP3	PX	.000221	.000221	0	0
86	CP2	PX	.000221	.000221	0	0
87	CP1	PX	.000221	.000221	0	0
88	CORNER3	PX	.000207	.000207	0	0
89	CORNER2	PX	.000207	.000207	0	0
90	CORNER1	PX	.000207	.000207	0	0

Member Distributed Loads (BLC 23 : Maintanence (240))

	Member Label	Direction	Start Magnitude[k/ft,...	End Magnitude[k/ft,F,...	Start Location[ft,%]	End Location[ft,%]
1	SOBOT3	PY	.000207	.000207	0	0
2	SOBOT2	PY	.000207	.000207	0	0
3	SOBOT1	PY	.000207	.000207	0	0
4	RAIL3	PY	.00011	.00011	0	0
5	RAIL2	PY	.00022	.00022	0	0
6	RAIL1	PY	.00022	.00022	0	0
7	MP GAMMA4	PY	.000384	.000384	0	0
8	MP GAMMA3	PY	.000384	.000384	0	0
9	MP GAMMA2	PY	.000384	.000384	0	0
10	MP GAMMA1	PY	.000384	.000384	0	0
11	MP BETA4	PY	.000384	.000384	0	0
12	MP BETA3	PY	.000384	.000384	0	0
13	MP BETA2	PY	.000384	.000384	0	0
14	MP BETA1	PY	.000384	.000384	0	0
15	MP ALPHA4	PY	.000384	.000384	0	0
16	MP ALPHA3	PY	.000384	.000384	0	0
17	MP ALPHA2	PY	.000384	.000384	0	0
18	MP ALPHA1	PY	.000384	.000384	0	0
19	INNER6	PY	.000221	.000221	0	0
20	INNER5	PY	.000221	.000221	0	0
21	INNER4	PY	.000221	.000221	0	0
22	INNER3	PY	.000221	.000221	0	0
23	INNER2	PY	.000221	.000221	0	0
24	INNER1	PY	.000221	.000221	0	0

Member Distributed Loads (BLC 23 : Maintanence (240)) (Continued)

	Member Label	Direction	Start Magnitude[k/ft,...	End Magnitude[k/ft,F,...	Start Location[ft,%]	End Location[ft,%]
25	FACE3	PY	.000207	.000207	0	0
26	FACE2	PY	.000415	.000415	0	0
27	FACE1	PY	.000415	.000415	0	0
28	ENDCORNER3B	PY	.000207	.000207	0	0
29	ENDCORNER3A	PY	.000207	.000207	0	0
30	ENDCORNER2B	PY	.000207	.000207	0	0
31	ENDCORNER2A	PY	.000207	.000207	0	0
32	ENDCORNER1B	PY	.000207	.000207	0	0
33	ENDCORNER1A	PY	.000207	.000207	0	0
34	CR3B	PY	.000207	.000207	0	0
35	CR3A	PY	.000207	.000207	0	0
36	CR2B	PY	.000207	.000207	0	0
37	CR2A	PY	.000207	.000207	0	0
38	CR1B	PY	.000207	.000207	0	0
39	CR1A	PY	.000207	.000207	0	0
40	CP3	PY	.000221	.000221	0	0
41	CP2	PY	.000221	.000221	0	0
42	CP1	PY	.000221	.000221	0	0
43	CORNER3	PY	.000207	.000207	0	0
44	CORNER2	PY	.000207	.000207	0	0
45	CORNER1	PY	.000207	.000207	0	0
46	SOBOT3	PX	.000359	.000359	0	0
47	SOBOT2	PX	.000359	.000359	0	0
48	SOBOT1	PX	.000359	.000359	0	0
49	RAIL3	PX	.00019	.00019	0	0
50	RAIL2	PX	.00038	.00038	0	0
51	RAIL1	PX	.00038	.00038	0	0
52	MP GAMMA4	PX	.000665	.000665	0	0
53	MP GAMMA3	PX	.000665	.000665	0	0
54	MP GAMMA2	PX	.000665	.000665	0	0
55	MP GAMMA1	PX	.000665	.000665	0	0
56	MP BETA4	PX	.000665	.000665	0	0
57	MP BETA3	PX	.000665	.000665	0	0
58	MP BETA2	PX	.000665	.000665	0	0
59	MP BETA1	PX	.000665	.000665	0	0
60	MP ALPHA4	PX	.000665	.000665	0	0
61	MP ALPHA3	PX	.000665	.000665	0	0
62	MP ALPHA2	PX	.000665	.000665	0	0
63	MP ALPHA1	PX	.000665	.000665	0	0
64	INNER6	PX	.000383	.000383	0	0
65	INNER5	PX	.000383	.000383	0	0
66	INNER4	PX	.000383	.000383	0	0
67	INNER3	PX	.000383	.000383	0	0
68	INNER2	PX	.000383	.000383	0	0
69	INNER1	PX	.000383	.000383	0	0
70	FACE3	PX	.000359	.000359	0	0
71	FACE2	PX	.000719	.000719	0	0
72	FACE1	PX	.000719	.000719	0	0
73	ENDCORNER3B	PX	.000359	.000359	0	0
74	ENDCORNER3A	PX	.000359	.000359	0	0
75	ENDCORNER2B	PX	.000359	.000359	0	0
76	ENDCORNER2A	PX	.000359	.000359	0	0
77	ENDCORNER1B	PX	.000359	.000359	0	0
78	ENDCORNER1A	PX	.000359	.000359	0	0
79	CR3B	PX	.000359	.000359	0	0
80	CR3A	PX	.000359	.000359	0	0
81	CR2B	PX	.000359	.000359	0	0

Member Distributed Loads (BLC 23 : Maintanence (240)) (Continued)

	Member Label	Direction	Start Magnitude[k/ft,...	End Magnitude[k/ft,F,...	Start Location[ft,%]	End Location[ft,%]
82	CR2A	PX	.000359	.000359	0	0
83	CR1B	PX	.000359	.000359	0	0
84	CR1A	PX	.000359	.000359	0	0
85	CP3	PX	.000383	.000383	0	0
86	CP2	PX	.000383	.000383	0	0
87	CP1	PX	.000383	.000383	0	0
88	CORNER3	PX	.000359	.000359	0	0
89	CORNER2	PX	.000359	.000359	0	0
90	CORNER1	PX	.000359	.000359	0	0

Member Distributed Loads (BLC 24 : Maintanence (270))

	Member Label	Direction	Start Magnitude[k/ft,...	End Magnitude[k/ft,F,...	Start Location[ft,%]	End Location[ft,%]
1	SOBOT3	PX	.000415	.000415	0	0
2	SOBOT2	PX	.000415	.000415	0	0
3	SOBOT1	PX	.000415	.000415	0	0
4	RAIL3	PX	.00022	.00022	0	0
5	RAIL2	PX	.000439	.000439	0	0
6	RAIL1	PX	.000439	.000439	0	0
7	MP GAMMA4	PX	.000768	.000768	0	0
8	MP GAMMA3	PX	.000768	.000768	0	0
9	MP GAMMA2	PX	.000768	.000768	0	0
10	MP GAMMA1	PX	.000768	.000768	0	0
11	MP BETA4	PX	.000768	.000768	0	0
12	MP BETA3	PX	.000768	.000768	0	0
13	MP BETA2	PX	.000768	.000768	0	0
14	MP BETA1	PX	.000768	.000768	0	0
15	MP ALPHA4	PX	.000768	.000768	0	0
16	MP ALPHA3	PX	.000768	.000768	0	0
17	MP ALPHA2	PX	.000768	.000768	0	0
18	MP ALPHA1	PX	.000768	.000768	0	0
19	INNER6	PX	.000443	.000443	0	0
20	INNER5	PX	.000443	.000443	0	0
21	INNER4	PX	.000443	.000443	0	0
22	INNER3	PX	.000443	.000443	0	0
23	INNER2	PX	.000443	.000443	0	0
24	INNER1	PX	.000443	.000443	0	0
25	FACE3	PX	.000415	.000415	0	0
26	FACE2	PX	.00083	.00083	0	0
27	FACE1	PX	.00083	.00083	0	0
28	ENDCORNER3B	PX	.000415	.000415	0	0
29	ENDCORNER3A	PX	.000415	.000415	0	0
30	ENDCORNER2B	PX	.000415	.000415	0	0
31	ENDCORNER2A	PX	.000415	.000415	0	0
32	ENDCORNER1B	PX	.000415	.000415	0	0
33	ENDCORNER1A	PX	.000415	.000415	0	0
34	CR3B	PX	.000415	.000415	0	0
35	CR3A	PX	.000415	.000415	0	0
36	CR2B	PX	.000415	.000415	0	0
37	CR2A	PX	.000415	.000415	0	0
38	CR1B	PX	.000415	.000415	0	0
39	CR1A	PX	.000415	.000415	0	0
40	CP3	PX	.000443	.000443	0	0
41	CP2	PX	.000443	.000443	0	0
42	CP1	PX	.000443	.000443	0	0
43	CORNER3	PX	.000415	.000415	0	0
44	CORNER2	PX	.000415	.000415	0	0

Member Distributed Loads (BLC 24 : Maintanence (270)) (Continued)

	Member Label	Direction	Start Magnitude[k/ft,...	End Magnitude[k/ft,F,...	Start Location[ft,%]	End Location[ft,%]
45	CORNER1	PX	.000415	.000415	0	0

Member Distributed Loads (BLC 25 : Maintanence (300))

	Member Label	Direction	Start Magnitude[k/ft,...	End Magnitude[k/ft,F,...	Start Location[ft,%]	End Location[ft,%]
1	SOBOT3	PY	-.000207	-.000207	0	0
2	SOBOT2	PY	-.000207	-.000207	0	0
3	SOBOT1	PY	-.000207	-.000207	0	0
4	RAIL3	PY	-.00011	-.00011	0	0
5	RAIL2	PY	-.00022	-.00022	0	0
6	RAIL1	PY	-.00022	-.00022	0	0
7	MP GAMMA4	PY	-.000384	-.000384	0	0
8	MP GAMMA3	PY	-.000384	-.000384	0	0
9	MP GAMMA2	PY	-.000384	-.000384	0	0
10	MP GAMMA1	PY	-.000384	-.000384	0	0
11	MP BETA4	PY	-.000384	-.000384	0	0
12	MP BETA3	PY	-.000384	-.000384	0	0
13	MP BETA2	PY	-.000384	-.000384	0	0
14	MP BETA1	PY	-.000384	-.000384	0	0
15	MP ALPHA4	PY	-.000384	-.000384	0	0
16	MP ALPHA3	PY	-.000384	-.000384	0	0
17	MP ALPHA2	PY	-.000384	-.000384	0	0
18	MP ALPHA1	PY	-.000384	-.000384	0	0
19	INNER6	PY	-.000221	-.000221	0	0
20	INNER5	PY	-.000221	-.000221	0	0
21	INNER4	PY	-.000221	-.000221	0	0
22	INNER3	PY	-.000221	-.000221	0	0
23	INNER2	PY	-.000221	-.000221	0	0
24	INNER1	PY	-.000221	-.000221	0	0
25	FACE3	PY	-.000207	-.000207	0	0
26	FACE2	PY	-.000415	-.000415	0	0
27	FACE1	PY	-.000415	-.000415	0	0
28	ENDCORNER3B	PY	-.000207	-.000207	0	0
29	ENDCORNER3A	PY	-.000207	-.000207	0	0
30	ENDCORNER2B	PY	-.000207	-.000207	0	0
31	ENDCORNER2A	PY	-.000207	-.000207	0	0
32	ENDCORNER1B	PY	-.000207	-.000207	0	0
33	ENDCORNER1A	PY	-.000207	-.000207	0	0
34	CR3B	PY	-.000207	-.000207	0	0
35	CR3A	PY	-.000207	-.000207	0	0
36	CR2B	PY	-.000207	-.000207	0	0
37	CR2A	PY	-.000207	-.000207	0	0
38	CR1B	PY	-.000207	-.000207	0	0
39	CR1A	PY	-.000207	-.000207	0	0
40	CP3	PY	-.000221	-.000221	0	0
41	CP2	PY	-.000221	-.000221	0	0
42	CP1	PY	-.000221	-.000221	0	0
43	CORNER3	PY	-.000207	-.000207	0	0
44	CORNER2	PY	-.000207	-.000207	0	0
45	CORNER1	PY	-.000207	-.000207	0	0
46	SOBOT3	PX	.000359	.000359	0	0
47	SOBOT2	PX	.000359	.000359	0	0
48	SOBOT1	PX	.000359	.000359	0	0
49	RAIL3	PX	.00019	.00019	0	0
50	RAIL2	PX	.00038	.00038	0	0
51	RAIL1	PX	.00038	.00038	0	0
52	MP GAMMA4	PX	.000665	.000665	0	0

Member Distributed Loads (BLC 25 : Maintanence (300)) (Continued)

	Member Label	Direction	Start Magnitude[k/ft,...	End Magnitude[k/ft,F,...	Start Location[ft,%]	End Location[ft,%]
53	MP GAMMA3	PX	.000665	.000665	0	0
54	MP GAMMA2	PX	.000665	.000665	0	0
55	MP GAMMA1	PX	.000665	.000665	0	0
56	MP BETA4	PX	.000665	.000665	0	0
57	MP BETA3	PX	.000665	.000665	0	0
58	MP BETA2	PX	.000665	.000665	0	0
59	MP BETA1	PX	.000665	.000665	0	0
60	MP ALPHA4	PX	.000665	.000665	0	0
61	MP ALPHA3	PX	.000665	.000665	0	0
62	MP ALPHA2	PX	.000665	.000665	0	0
63	MP ALPHA1	PX	.000665	.000665	0	0
64	INNER6	PX	.000383	.000383	0	0
65	INNER5	PX	.000383	.000383	0	0
66	INNER4	PX	.000383	.000383	0	0
67	INNER3	PX	.000383	.000383	0	0
68	INNER2	PX	.000383	.000383	0	0
69	INNER1	PX	.000383	.000383	0	0
70	FACE3	PX	.000359	.000359	0	0
71	FACE2	PX	.000719	.000719	0	0
72	FACE1	PX	.000719	.000719	0	0
73	ENDCORNER3B	PX	.000359	.000359	0	0
74	ENDCORNER3A	PX	.000359	.000359	0	0
75	ENDCORNER2B	PX	.000359	.000359	0	0
76	ENDCORNER2A	PX	.000359	.000359	0	0
77	ENDCORNER1B	PX	.000359	.000359	0	0
78	ENDCORNER1A	PX	.000359	.000359	0	0
79	CR3B	PX	.000359	.000359	0	0
80	CR3A	PX	.000359	.000359	0	0
81	CR2B	PX	.000359	.000359	0	0
82	CR2A	PX	.000359	.000359	0	0
83	CR1B	PX	.000359	.000359	0	0
84	CR1A	PX	.000359	.000359	0	0
85	CP3	PX	.000383	.000383	0	0
86	CP2	PX	.000383	.000383	0	0
87	CP1	PX	.000383	.000383	0	0
88	CORNER3	PX	.000359	.000359	0	0
89	CORNER2	PX	.000359	.000359	0	0
90	CORNER1	PX	.000359	.000359	0	0

Member Distributed Loads (BLC 26 : Maintanence (330))

	Member Label	Direction	Start Magnitude[k/ft,...	End Magnitude[k/ft,F,...	Start Location[ft,%]	End Location[ft,%]
1	SOBOT3	PY	-.000359	-.000359	0	0
2	SOBOT2	PY	-.000359	-.000359	0	0
3	SOBOT1	PY	-.000359	-.000359	0	0
4	RAIL1	PY	-.00019	-.00019	0	0
5	RAIL2	PY	-.00038	-.00038	0	0
6	RAIL3	PY	-.00038	-.00038	0	0
7	MP GAMMA4	PY	-.000665	-.000665	0	0
8	MP GAMMA3	PY	-.000665	-.000665	0	0
9	MP GAMMA2	PY	-.000665	-.000665	0	0
10	MP GAMMA1	PY	-.000665	-.000665	0	0
11	MP BETA4	PY	-.000665	-.000665	0	0
12	MP BETA3	PY	-.000665	-.000665	0	0
13	MP BETA2	PY	-.000665	-.000665	0	0
14	MP BETA1	PY	-.000665	-.000665	0	0
15	MP ALPHA4	PY	-.000665	-.000665	0	0

Member Distributed Loads (BLC 26 : Maintanence (330)) (Continued)

	Member Label	Direction	Start Magnitude[k/ft,...	End Magnitude[k/ft,F,...	Start Location[ft,%]	End Location[ft,%]
16	MP ALPHA3	PY	-.000665	-.000665	0	0
17	MP ALPHA2	PY	-.000665	-.000665	0	0
18	MP ALPHA1	PY	-.000665	-.000665	0	0
19	INNER6	PY	-.000383	-.000383	0	0
20	INNER5	PY	-.000383	-.000383	0	0
21	INNER4	PY	-.000383	-.000383	0	0
22	INNER3	PY	-.000383	-.000383	0	0
23	INNER2	PY	-.000383	-.000383	0	0
24	INNER1	PY	-.000383	-.000383	0	0
25	FACE1	PY	-.000359	-.000359	0	0
26	FACE2	PY	-.000719	-.000719	0	0
27	FACE3	PY	-.000719	-.000719	0	0
28	ENDCORNER3B	PY	-.000359	-.000359	0	0
29	ENDCORNER3A	PY	-.000359	-.000359	0	0
30	ENDCORNER2B	PY	-.000359	-.000359	0	0
31	ENDCORNER2A	PY	-.000359	-.000359	0	0
32	ENDCORNER1B	PY	-.000359	-.000359	0	0
33	ENDCORNER1A	PY	-.000359	-.000359	0	0
34	CR3B	PY	-.000359	-.000359	0	0
35	CR3A	PY	-.000359	-.000359	0	0
36	CR2B	PY	-.000359	-.000359	0	0
37	CR2A	PY	-.000359	-.000359	0	0
38	CR1B	PY	-.000359	-.000359	0	0
39	CR1A	PY	-.000359	-.000359	0	0
40	CP3	PY	-.000383	-.000383	0	0
41	CP2	PY	-.000383	-.000383	0	0
42	CP1	PY	-.000383	-.000383	0	0
43	CORNER3	PY	-.000359	-.000359	0	0
44	CORNER2	PY	-.000359	-.000359	0	0
45	CORNER1	PY	-.000359	-.000359	0	0
46	SOBOT3	PX	.000207	.000207	0	0
47	SOBOT2	PX	.000207	.000207	0	0
48	SOBOT1	PX	.000207	.000207	0	0
49	RAIL1	PX	.00011	.00011	0	0
50	RAIL2	PX	.00022	.00022	0	0
51	RAIL3	PX	.00022	.00022	0	0
52	MP GAMMA4	PX	.000384	.000384	0	0
53	MP GAMMA3	PX	.000384	.000384	0	0
54	MP GAMMA2	PX	.000384	.000384	0	0
55	MP GAMMA1	PX	.000384	.000384	0	0
56	MP BETA4	PX	.000384	.000384	0	0
57	MP BETA3	PX	.000384	.000384	0	0
58	MP BETA2	PX	.000384	.000384	0	0
59	MP BETA1	PX	.000384	.000384	0	0
60	MP ALPHA4	PX	.000384	.000384	0	0
61	MP ALPHA3	PX	.000384	.000384	0	0
62	MP ALPHA2	PX	.000384	.000384	0	0
63	MP ALPHA1	PX	.000384	.000384	0	0
64	INNER6	PX	.000221	.000221	0	0
65	INNER5	PX	.000221	.000221	0	0
66	INNER4	PX	.000221	.000221	0	0
67	INNER3	PX	.000221	.000221	0	0
68	INNER2	PX	.000221	.000221	0	0
69	INNER1	PX	.000221	.000221	0	0
70	FACE1	PX	.000207	.000207	0	0
71	FACE2	PX	.000415	.000415	0	0
72	FACE3	PX	.000415	.000415	0	0

Member Distributed Loads (BLC 26 : Maintanence (330)) (Continued)

	Member Label	Direction	Start Magnitude[k/ft,...	End Magnitude[k/ft,F,...	Start Location[ft,%]	End Location[ft,%]
73	ENDCORNER3B	PX	.000207	.000207	0	0
74	ENDCORNER3A	PX	.000207	.000207	0	0
75	ENDCORNER2B	PX	.000207	.000207	0	0
76	ENDCORNER2A	PX	.000207	.000207	0	0
77	ENDCORNER1B	PX	.000207	.000207	0	0
78	ENDCORNER1A	PX	.000207	.000207	0	0
79	CR3B	PX	.000207	.000207	0	0
80	CR3A	PX	.000207	.000207	0	0
81	CR2B	PX	.000207	.000207	0	0
82	CR2A	PX	.000207	.000207	0	0
83	CR1B	PX	.000207	.000207	0	0
84	CR1A	PX	.000207	.000207	0	0
85	CP3	PX	.000221	.000221	0	0
86	CP2	PX	.000221	.000221	0	0
87	CP1	PX	.000221	.000221	0	0
88	CORNER3	PX	.000207	.000207	0	0
89	CORNER2	PX	.000207	.000207	0	0
90	CORNER1	PX	.000207	.000207	0	0

Member Distributed Loads (BLC 27 : Ice Dead Load)

	Member Label	Direction	Start Magnitude[k/ft,...	End Magnitude[k/ft,F,...	Start Location[ft,%]	End Location[ft,%]
1	SOBOT3	Z	-.017	-.017	0	0
2	SOBOT2	Z	-.017	-.017	0	0
3	SOBOT1	Z	-.017	-.017	0	0
4	RAIL1	Z	-.01	-.01	0	0
5	RAIL2	Z	-.01	-.01	0	0
6	RAIL3	Z	-.01	-.01	0	0
7	MP GAMMA4	Z	-.01	-.01	0	0
8	MP GAMMA3	Z	-.01	-.01	0	0
9	MP GAMMA2	Z	-.01	-.01	0	0
10	MP GAMMA1	Z	-.01	-.01	0	0
11	MP BETA4	Z	-.01	-.01	0	0
12	MP BETA3	Z	-.01	-.01	0	0
13	MP BETA2	Z	-.01	-.01	0	0
14	MP BETA1	Z	-.01	-.01	0	0
15	MP ALPHA4	Z	-.01	-.01	0	0
16	MP ALPHA3	Z	-.01	-.01	0	0
17	MP ALPHA2	Z	-.01	-.01	0	0
18	MP ALPHA1	Z	-.01	-.01	0	0
19	INNER6	Z	-.01	-.01	0	0
20	INNER5	Z	-.01	-.01	0	0
21	INNER4	Z	-.01	-.01	0	0
22	INNER3	Z	-.01	-.01	0	0
23	INNER2	Z	-.01	-.01	0	0
24	INNER1	Z	-.01	-.01	0	0
25	FACE1	Z	-.013	-.013	0	0
26	FACE2	Z	-.013	-.013	0	0
27	FACE3	Z	-.013	-.013	0	0
28	ENDCORNER3B	Z	-.013	-.013	0	0
29	ENDCORNER3A	Z	-.013	-.013	0	0
30	ENDCORNER2B	Z	-.013	-.013	0	0
31	ENDCORNER2A	Z	-.013	-.013	0	0
32	ENDCORNER1B	Z	-.013	-.013	0	0
33	ENDCORNER1A	Z	-.013	-.013	0	0
34	CR3B	Z	-.013	-.013	0	0
35	CR3A	Z	-.013	-.013	0	0

Member Distributed Loads (BLC 27 : Ice Dead Load) (Continued)

	Member Label	Direction	Start Magnitude[k/ft,...	End Magnitude[k/ft,F,...	Start Location[ft,%]	End Location[ft,%]
36	CR2B	Z	-.013	-.013	0	0
37	CR2A	Z	-.013	-.013	0	0
38	CR1B	Z	-.013	-.013	0	0
39	CR1A	Z	-.013	-.013	0	0
40	CP3	Z	-.01	-.01	0	0
41	CP2	Z	-.01	-.01	0	0
42	CP1	Z	-.01	-.01	0	0
43	CORNER3	Z	-.013	-.013	0	0
44	CORNER2	Z	-.013	-.013	0	0
45	CORNER1	Z	-.013	-.013	0	0

Member Distributed Loads (BLC 28 : Ice Wind Load (0))

	Member Label	Direction	Start Magnitude[k/ft,...	End Magnitude[k/ft,F,...	Start Location[ft,%]	End Location[ft,%]
1	SOBOT3	PY	-.002	-.002	0	0
2	SOBOT2	PY	-.002	-.002	0	0
3	SOBOT1	PY	-.002	-.002	0	0
4	RAIL1	PY	-.002	-.002	0	0
5	RAIL2	PY	-.003	-.003	0	0
6	RAIL3	PY	-.003	-.003	0	0
7	MP GAMMA4	PY	-.005	-.005	0	0
8	MP GAMMA3	PY	-.005	-.005	0	0
9	MP GAMMA2	PY	-.005	-.005	0	0
10	MP GAMMA1	PY	-.005	-.005	0	0
11	MP BETA4	PY	-.005	-.005	0	0
12	MP BETA3	PY	-.005	-.005	0	0
13	MP BETA2	PY	-.005	-.005	0	0
14	MP BETA1	PY	-.005	-.005	0	0
15	MP ALPHA4	PY	-.005	-.005	0	0
16	MP ALPHA3	PY	-.005	-.005	0	0
17	MP ALPHA2	PY	-.005	-.005	0	0
18	MP ALPHA1	PY	-.005	-.005	0	0
19	INNER6	PY	-.002	-.002	0	0
20	INNER5	PY	-.002	-.002	0	0
21	INNER4	PY	-.002	-.002	0	0
22	INNER3	PY	-.002	-.002	0	0
23	INNER2	PY	-.002	-.002	0	0
24	INNER1	PY	-.002	-.002	0	0
25	FACE1	PY	-.002	-.002	0	0
26	FACE2	PY	-.003	-.003	0	0
27	FACE3	PY	-.003	-.003	0	0
28	ENDCORNER3B	PY	-.002	-.002	0	0
29	ENDCORNER3A	PY	-.002	-.002	0	0
30	ENDCORNER2B	PY	-.002	-.002	0	0
31	ENDCORNER2A	PY	-.002	-.002	0	0
32	ENDCORNER1B	PY	-.002	-.002	0	0
33	ENDCORNER1A	PY	-.002	-.002	0	0
34	CR3B	PY	-.002	-.002	0	0
35	CR3A	PY	-.002	-.002	0	0
36	CR2B	PY	-.002	-.002	0	0
37	CR2A	PY	-.002	-.002	0	0
38	CR1B	PY	-.002	-.002	0	0
39	CR1A	PY	-.002	-.002	0	0
40	CP3	PY	-.002	-.002	0	0
41	CP2	PY	-.002	-.002	0	0
42	CP1	PY	-.002	-.002	0	0
43	CORNER3	PY	-.002	-.002	0	0

Member Distributed Loads (BLC 28 : Ice Wind Load (0)) (Continued)

	Member Label	Direction	Start Magnitude[k/ft,...	End Magnitude[k/ft,F,...	Start Location[ft,%]	End Location[ft,%]
44	CORNER2	PY	-.002	-.002	0	0
45	CORNER1	PY	-.002	-.002	0	0

Member Distributed Loads (BLC 29 : Ice Wind Load (30))

	Member Label	Direction	Start Magnitude[k/ft,...	End Magnitude[k/ft,F,...	Start Location[ft,%]	End Location[ft,%]
1	SOBOT3	PY	-.001	-.001	0	0
2	SOBOT2	PY	-.001	-.001	0	0
3	SOBOT1	PY	-.001	-.001	0	0
4	RAIL1	PY	-.001	-.001	0	0
5	RAIL2	PY	-.003	-.003	0	0
6	RAIL3	PY	-.003	-.003	0	0
7	MP GAMMA4	PY	-.004	-.004	0	0
8	MP GAMMA3	PY	-.004	-.004	0	0
9	MP GAMMA2	PY	-.004	-.004	0	0
10	MP GAMMA1	PY	-.004	-.004	0	0
11	MP BETA4	PY	-.004	-.004	0	0
12	MP BETA3	PY	-.004	-.004	0	0
13	MP BETA2	PY	-.004	-.004	0	0
14	MP BETA1	PY	-.004	-.004	0	0
15	MP ALPHA4	PY	-.004	-.004	0	0
16	MP ALPHA3	PY	-.004	-.004	0	0
17	MP ALPHA2	PY	-.004	-.004	0	0
18	MP ALPHA1	PY	-.004	-.004	0	0
19	INNER6	PY	-.002	-.002	0	0
20	INNER5	PY	-.002	-.002	0	0
21	INNER4	PY	-.002	-.002	0	0
22	INNER3	PY	-.002	-.002	0	0
23	INNER2	PY	-.002	-.002	0	0
24	INNER1	PY	-.002	-.002	0	0
25	FACE1	PY	-.001	-.001	0	0
26	FACE2	PY	-.003	-.003	0	0
27	FACE3	PY	-.003	-.003	0	0
28	ENDCORNER3B	PY	-.001	-.001	0	0
29	ENDCORNER3A	PY	-.001	-.001	0	0
30	ENDCORNER2B	PY	-.001	-.001	0	0
31	ENDCORNER2A	PY	-.001	-.001	0	0
32	ENDCORNER1B	PY	-.001	-.001	0	0
33	ENDCORNER1A	PY	-.001	-.001	0	0
34	CR3B	PY	-.001	-.001	0	0
35	CR3A	PY	-.001	-.001	0	0
36	CR2B	PY	-.001	-.001	0	0
37	CR2A	PY	-.001	-.001	0	0
38	CR1B	PY	-.001	-.001	0	0
39	CR1A	PY	-.001	-.001	0	0
40	CP3	PY	-.002	-.002	0	0
41	CP2	PY	-.002	-.002	0	0
42	CP1	PY	-.002	-.002	0	0
43	CORNER3	PY	-.001	-.001	0	0
44	CORNER2	PY	-.001	-.001	0	0
45	CORNER1	PY	-.001	-.001	0	0
46	SOBOT3	PX	-.000799	-.000799	0	0
47	SOBOT2	PX	-.000799	-.000799	0	0
48	SOBOT1	PX	-.000799	-.000799	0	0
49	RAIL1	PX	-.000752	-.000752	0	0
50	RAIL2	PX	-.002	-.002	0	0
51	RAIL3	PX	-.002	-.002	0	0

Member Distributed Loads (BLC 29 : Ice Wind Load (30)) (Continued)

	Member Label	Direction	Start Magnitude[k/ft,...	End Magnitude[k/ft,F,...	Start Location[ft,%]	End Location[ft,%]
52	MP GAMMA4	PX	-.002	-.002	0	0
53	MP GAMMA3	PX	-.002	-.002	0	0
54	MP GAMMA2	PX	-.002	-.002	0	0
55	MP GAMMA1	PX	-.002	-.002	0	0
56	MP BETA4	PX	-.002	-.002	0	0
57	MP BETA3	PX	-.002	-.002	0	0
58	MP BETA2	PX	-.002	-.002	0	0
59	MP BETA1	PX	-.002	-.002	0	0
60	MP ALPHA4	PX	-.002	-.002	0	0
61	MP ALPHA3	PX	-.002	-.002	0	0
62	MP ALPHA2	PX	-.002	-.002	0	0
63	MP ALPHA1	PX	-.002	-.002	0	0
64	INNER6	PX	-.001	-.001	0	0
65	INNER5	PX	-.001	-.001	0	0
66	INNER4	PX	-.001	-.001	0	0
67	INNER3	PX	-.001	-.001	0	0
68	INNER2	PX	-.001	-.001	0	0
69	INNER1	PX	-.001	-.001	0	0
70	FACE1	PX	-.000799	-.000799	0	0
71	FACE2	PX	-.002	-.002	0	0
72	FACE3	PX	-.002	-.002	0	0
73	ENDCORNER3B	PX	-.000799	-.000799	0	0
74	ENDCORNER3A	PX	-.000799	-.000799	0	0
75	ENDCORNER2B	PX	-.000799	-.000799	0	0
76	ENDCORNER2A	PX	-.000799	-.000799	0	0
77	ENDCORNER1B	PX	-.000799	-.000799	0	0
78	ENDCORNER1A	PX	-.000799	-.000799	0	0
79	CR3B	PX	-.000799	-.000799	0	0
80	CR3A	PX	-.000799	-.000799	0	0
81	CR2B	PX	-.000799	-.000799	0	0
82	CR2A	PX	-.000799	-.000799	0	0
83	CR1B	PX	-.000799	-.000799	0	0
84	CR1A	PX	-.000799	-.000799	0	0
85	CP3	PX	-.001	-.001	0	0
86	CP2	PX	-.001	-.001	0	0
87	CP1	PX	-.001	-.001	0	0
88	CORNER3	PX	-.000799	-.000799	0	0
89	CORNER2	PX	-.000799	-.000799	0	0
90	CORNER1	PX	-.000799	-.000799	0	0

Member Distributed Loads (BLC 30 : Ice Wind Load (60))

	Member Label	Direction	Start Magnitude[k/ft,...	End Magnitude[k/ft,F,...	Start Location[ft,%]	End Location[ft,%]
1	SOBOT3	PY	-.000799	-.000799	0	0
2	SOBOT2	PY	-.000799	-.000799	0	0
3	SOBOT1	PY	-.000799	-.000799	0	0
4	RAIL1	PY	-.000752	-.000752	0	0
5	RAIL2	PY	-.002	-.002	0	0
6	RAIL3	PY	-.002	-.002	0	0
7	MP GAMMA4	PY	-.002	-.002	0	0
8	MP GAMMA3	PY	-.002	-.002	0	0
9	MP GAMMA2	PY	-.002	-.002	0	0
10	MP GAMMA1	PY	-.002	-.002	0	0
11	MP BETA4	PY	-.002	-.002	0	0
12	MP BETA3	PY	-.002	-.002	0	0
13	MP BETA2	PY	-.002	-.002	0	0
14	MP BETA1	PY	-.002	-.002	0	0

Member Distributed Loads (BLC 30 : Ice Wind Load (60)) (Continued)

	Member Label	Direction	Start Magnitude[k/ft,...	End Magnitude[k/ft,F,...	Start Location[ft,%]	End Location[ft,%]
15	MP ALPHA4	PY	-.002	-.002	0	0
16	MP ALPHA3	PY	-.002	-.002	0	0
17	MP ALPHA2	PY	-.002	-.002	0	0
18	MP ALPHA1	PY	-.002	-.002	0	0
19	INNER6	PY	-.001	-.001	0	0
20	INNER5	PY	-.001	-.001	0	0
21	INNER4	PY	-.001	-.001	0	0
22	INNER3	PY	-.001	-.001	0	0
23	INNER2	PY	-.001	-.001	0	0
24	INNER1	PY	-.001	-.001	0	0
25	FACE1	PY	-.000799	-.000799	0	0
26	FACE2	PY	-.002	-.002	0	0
27	FACE3	PY	-.002	-.002	0	0
28	ENDCORNER3B	PY	-.000799	-.000799	0	0
29	ENDCORNER3A	PY	-.000799	-.000799	0	0
30	ENDCORNER2B	PY	-.000799	-.000799	0	0
31	ENDCORNER2A	PY	-.000799	-.000799	0	0
32	ENDCORNER1B	PY	-.000799	-.000799	0	0
33	ENDCORNER1A	PY	-.000799	-.000799	0	0
34	CR3B	PY	-.000799	-.000799	0	0
35	CR3A	PY	-.000799	-.000799	0	0
36	CR2B	PY	-.000799	-.000799	0	0
37	CR2A	PY	-.000799	-.000799	0	0
38	CR1B	PY	-.000799	-.000799	0	0
39	CR1A	PY	-.000799	-.000799	0	0
40	CP3	PY	-.001	-.001	0	0
41	CP2	PY	-.001	-.001	0	0
42	CP1	PY	-.001	-.001	0	0
43	CORNER3	PY	-.000799	-.000799	0	0
44	CORNER2	PY	-.000799	-.000799	0	0
45	CORNER1	PY	-.000799	-.000799	0	0
46	SOBOT3	PX	-.001	-.001	0	0
47	SOBOT2	PX	-.001	-.001	0	0
48	SOBOT1	PX	-.001	-.001	0	0
49	RAIL1	PX	-.001	-.001	0	0
50	RAIL2	PX	-.003	-.003	0	0
51	RAIL3	PX	-.003	-.003	0	0
52	MP GAMMA4	PX	-.004	-.004	0	0
53	MP GAMMA3	PX	-.004	-.004	0	0
54	MP GAMMA2	PX	-.004	-.004	0	0
55	MP GAMMA1	PX	-.004	-.004	0	0
56	MP BETA4	PX	-.004	-.004	0	0
57	MP BETA3	PX	-.004	-.004	0	0
58	MP BETA2	PX	-.004	-.004	0	0
59	MP BETA1	PX	-.004	-.004	0	0
60	MP ALPHA4	PX	-.004	-.004	0	0
61	MP ALPHA3	PX	-.004	-.004	0	0
62	MP ALPHA2	PX	-.004	-.004	0	0
63	MP ALPHA1	PX	-.004	-.004	0	0
64	INNER6	PX	-.002	-.002	0	0
65	INNER5	PX	-.002	-.002	0	0
66	INNER4	PX	-.002	-.002	0	0
67	INNER3	PX	-.002	-.002	0	0
68	INNER2	PX	-.002	-.002	0	0
69	INNER1	PX	-.002	-.002	0	0
70	FACE1	PX	-.001	-.001	0	0
71	FACE2	PX	-.003	-.003	0	0

Member Distributed Loads (BLC 30 : Ice Wind Load (60)) (Continued)

	Member Label	Direction	Start Magnitude[k/ft,...	End Magnitude[k/ft,F,...	Start Location[ft,%]	End Location[ft,%]
72	FACE3	PX	-.003	-.003	0	0
73	ENDCORNER3B	PX	-.001	-.001	0	0
74	ENDCORNER3A	PX	-.001	-.001	0	0
75	ENDCORNER2B	PX	-.001	-.001	0	0
76	ENDCORNER2A	PX	-.001	-.001	0	0
77	ENDCORNER1B	PX	-.001	-.001	0	0
78	ENDCORNER1A	PX	-.001	-.001	0	0
79	CR3B	PX	-.001	-.001	0	0
80	CR3A	PX	-.001	-.001	0	0
81	CR2B	PX	-.001	-.001	0	0
82	CR2A	PX	-.001	-.001	0	0
83	CR1B	PX	-.001	-.001	0	0
84	CR1A	PX	-.001	-.001	0	0
85	CP3	PX	-.002	-.002	0	0
86	CP2	PX	-.002	-.002	0	0
87	CP1	PX	-.002	-.002	0	0
88	CORNER3	PX	-.001	-.001	0	0
89	CORNER2	PX	-.001	-.001	0	0
90	CORNER1	PX	-.001	-.001	0	0

Member Distributed Loads (BLC 31 : Ice Wind Load (90))

	Member Label	Direction	Start Magnitude[k/ft,...	End Magnitude[k/ft,F,...	Start Location[ft,%]	End Location[ft,%]
1	SOBOT3	PX	-.002	-.002	0	0
2	SOBOT2	PX	-.002	-.002	0	0
3	SOBOT1	PX	-.002	-.002	0	0
4	RAIL2	PX	-.002	-.002	0	0
5	RAIL3	PX	-.003	-.003	0	0
6	RAIL1	PX	-.003	-.003	0	0
7	MP GAMMA4	PX	-.005	-.005	0	0
8	MP GAMMA3	PX	-.005	-.005	0	0
9	MP GAMMA2	PX	-.005	-.005	0	0
10	MP GAMMA1	PX	-.005	-.005	0	0
11	MP BETA4	PX	-.005	-.005	0	0
12	MP BETA3	PX	-.005	-.005	0	0
13	MP BETA2	PX	-.005	-.005	0	0
14	MP BETA1	PX	-.005	-.005	0	0
15	MP ALPHA4	PX	-.005	-.005	0	0
16	MP ALPHA3	PX	-.005	-.005	0	0
17	MP ALPHA2	PX	-.005	-.005	0	0
18	MP ALPHA1	PX	-.005	-.005	0	0
19	INNER6	PX	-.002	-.002	0	0
20	INNER5	PX	-.002	-.002	0	0
21	INNER4	PX	-.002	-.002	0	0
22	INNER3	PX	-.002	-.002	0	0
23	INNER2	PX	-.002	-.002	0	0
24	INNER1	PX	-.002	-.002	0	0
25	FACE2	PX	-.002	-.002	0	0
26	FACE3	PX	-.003	-.003	0	0
27	FACE1	PX	-.003	-.003	0	0
28	ENDCORNER3B	PX	-.002	-.002	0	0
29	ENDCORNER3A	PX	-.002	-.002	0	0
30	ENDCORNER2B	PX	-.002	-.002	0	0
31	ENDCORNER2A	PX	-.002	-.002	0	0
32	ENDCORNER1B	PX	-.002	-.002	0	0
33	ENDCORNER1A	PX	-.002	-.002	0	0
34	CR3B	PX	-.002	-.002	0	0

Member Distributed Loads (BLC 31 : Ice Wind Load (90)) (Continued)

	Member Label	Direction	Start Magnitude[k/ft,...	End Magnitude[k/ft,F,...	Start Location[ft,%]	End Location[ft,%]
35	CR3A	PX	-.002	-.002	0	0
36	CR2B	PX	-.002	-.002	0	0
37	CR2A	PX	-.002	-.002	0	0
38	CR1B	PX	-.002	-.002	0	0
39	CR1A	PX	-.002	-.002	0	0
40	CP3	PX	-.002	-.002	0	0
41	CP2	PX	-.002	-.002	0	0
42	CP1	PX	-.002	-.002	0	0
43	CORNER3	PX	-.002	-.002	0	0
44	CORNER2	PX	-.002	-.002	0	0
45	CORNER1	PX	-.002	-.002	0	0

Member Distributed Loads (BLC 32 : Ice Wind Load (120))

	Member Label	Direction	Start Magnitude[k/ft,...	End Magnitude[k/ft,F,...	Start Location[ft,%]	End Location[ft,%]
1	SOBOT3	PY	.000799	.000799	0	0
2	SOBOT2	PY	.000799	.000799	0	0
3	SOBOT1	PY	.000799	.000799	0	0
4	RAIL2	PY	.000752	.000752	0	0
5	RAIL3	PY	.002	.002	0	0
6	RAIL1	PY	.002	.002	0	0
7	MP GAMMA4	PY	.002	.002	0	0
8	MP GAMMA3	PY	.002	.002	0	0
9	MP GAMMA2	PY	.002	.002	0	0
10	MP GAMMA1	PY	.002	.002	0	0
11	MP BETA4	PY	.002	.002	0	0
12	MP BETA3	PY	.002	.002	0	0
13	MP BETA2	PY	.002	.002	0	0
14	MP BETA1	PY	.002	.002	0	0
15	MP ALPHA4	PY	.002	.002	0	0
16	MP ALPHA3	PY	.002	.002	0	0
17	MP ALPHA2	PY	.002	.002	0	0
18	MP ALPHA1	PY	.002	.002	0	0
19	INNER6	PY	.001	.001	0	0
20	INNER5	PY	.001	.001	0	0
21	INNER4	PY	.001	.001	0	0
22	INNER3	PY	.001	.001	0	0
23	INNER2	PY	.001	.001	0	0
24	INNER1	PY	.001	.001	0	0
25	FACE2	PY	.000799	.000799	0	0
26	FACE3	PY	.002	.002	0	0
27	FACE1	PY	.002	.002	0	0
28	ENDCORNER3B	PY	.000799	.000799	0	0
29	ENDCORNER3A	PY	.000799	.000799	0	0
30	ENDCORNER2B	PY	.000799	.000799	0	0
31	ENDCORNER2A	PY	.000799	.000799	0	0
32	ENDCORNER1B	PY	.000799	.000799	0	0
33	ENDCORNER1A	PY	.000799	.000799	0	0
34	CR3B	PY	.000799	.000799	0	0
35	CR3A	PY	.000799	.000799	0	0
36	CR2B	PY	.000799	.000799	0	0
37	CR2A	PY	.000799	.000799	0	0
38	CR1B	PY	.000799	.000799	0	0
39	CR1A	PY	.000799	.000799	0	0
40	CP3	PY	.001	.001	0	0
41	CP2	PY	.001	.001	0	0
42	CP1	PY	.001	.001	0	0

Member Distributed Loads (BLC 32 : Ice Wind Load (120)) (Continued)

	Member Label	Direction	Start Magnitude[k/ft,...	End Magnitude[k/ft,F,...	Start Location[ft,%]	End Location[ft,%]
43	CORNER3	PY	.000799	.000799	0	0
44	CORNER2	PY	.000799	.000799	0	0
45	CORNER1	PY	.000799	.000799	0	0
46	SOBOT3	PX	-.001	-.001	0	0
47	SOBOT2	PX	-.001	-.001	0	0
48	SOBOT1	PX	-.001	-.001	0	0
49	RAIL2	PX	-.001	-.001	0	0
50	RAIL3	PX	-.003	-.003	0	0
51	RAIL1	PX	-.003	-.003	0	0
52	MP GAMMA4	PX	-.004	-.004	0	0
53	MP GAMMA3	PX	-.004	-.004	0	0
54	MP GAMMA2	PX	-.004	-.004	0	0
55	MP GAMMA1	PX	-.004	-.004	0	0
56	MP BETA4	PX	-.004	-.004	0	0
57	MP BETA3	PX	-.004	-.004	0	0
58	MP BETA2	PX	-.004	-.004	0	0
59	MP BETA1	PX	-.004	-.004	0	0
60	MP ALPHA4	PX	-.004	-.004	0	0
61	MP ALPHA3	PX	-.004	-.004	0	0
62	MP ALPHA2	PX	-.004	-.004	0	0
63	MP ALPHA1	PX	-.004	-.004	0	0
64	INNER6	PX	-.002	-.002	0	0
65	INNER5	PX	-.002	-.002	0	0
66	INNER4	PX	-.002	-.002	0	0
67	INNER3	PX	-.002	-.002	0	0
68	INNER2	PX	-.002	-.002	0	0
69	INNER1	PX	-.002	-.002	0	0
70	FACE2	PX	-.001	-.001	0	0
71	FACE3	PX	-.003	-.003	0	0
72	FACE1	PX	-.003	-.003	0	0
73	ENDCORNER3B	PX	-.001	-.001	0	0
74	ENDCORNER3A	PX	-.001	-.001	0	0
75	ENDCORNER2B	PX	-.001	-.001	0	0
76	ENDCORNER2A	PX	-.001	-.001	0	0
77	ENDCORNER1B	PX	-.001	-.001	0	0
78	ENDCORNER1A	PX	-.001	-.001	0	0
79	CR3B	PX	-.001	-.001	0	0
80	CR3A	PX	-.001	-.001	0	0
81	CR2B	PX	-.001	-.001	0	0
82	CR2A	PX	-.001	-.001	0	0
83	CR1B	PX	-.001	-.001	0	0
84	CR1A	PX	-.001	-.001	0	0
85	CP3	PX	-.002	-.002	0	0
86	CP2	PX	-.002	-.002	0	0
87	CP1	PX	-.002	-.002	0	0
88	CORNER3	PX	-.001	-.001	0	0
89	CORNER2	PX	-.001	-.001	0	0
90	CORNER1	PX	-.001	-.001	0	0

Member Distributed Loads (BLC 33 : Ice Wind Load (150))

	Member Label	Direction	Start Magnitude[k/ft,...	End Magnitude[k/ft,F,...	Start Location[ft,%]	End Location[ft,%]
1	SOBOT3	PY	.001	.001	0	0
2	SOBOT2	PY	.001	.001	0	0
3	SOBOT1	PY	.001	.001	0	0
4	RAIL2	PY	.001	.001	0	0
5	RAIL3	PY	.003	.003	0	0

Member Distributed Loads (BLC 33 : Ice Wind Load (150)) (Continued)

	Member Label	Direction	Start Magnitude[k/ft,...	End Magnitude[k/ft,F,...	Start Location[ft,%]	End Location[ft,%]
6	RAIL1	PY	.003	.003	0	0
7	MP GAMMA4	PY	.004	.004	0	0
8	MP GAMMA3	PY	.004	.004	0	0
9	MP GAMMA2	PY	.004	.004	0	0
10	MP GAMMA1	PY	.004	.004	0	0
11	MP BETA4	PY	.004	.004	0	0
12	MP BETA3	PY	.004	.004	0	0
13	MP BETA2	PY	.004	.004	0	0
14	MP BETA1	PY	.004	.004	0	0
15	MP ALPHA4	PY	.004	.004	0	0
16	MP ALPHA3	PY	.004	.004	0	0
17	MP ALPHA2	PY	.004	.004	0	0
18	MP ALPHA1	PY	.004	.004	0	0
19	INNER6	PY	.002	.002	0	0
20	INNER5	PY	.002	.002	0	0
21	INNER4	PY	.002	.002	0	0
22	INNER3	PY	.002	.002	0	0
23	INNER2	PY	.002	.002	0	0
24	INNER1	PY	.002	.002	0	0
25	FACE2	PY	.001	.001	0	0
26	FACE3	PY	.003	.003	0	0
27	FACE1	PY	.003	.003	0	0
28	ENDCORNER3B	PY	.001	.001	0	0
29	ENDCORNER3A	PY	.001	.001	0	0
30	ENDCORNER2B	PY	.001	.001	0	0
31	ENDCORNER2A	PY	.001	.001	0	0
32	ENDCORNER1B	PY	.001	.001	0	0
33	ENDCORNER1A	PY	.001	.001	0	0
34	CR3B	PY	.001	.001	0	0
35	CR3A	PY	.001	.001	0	0
36	CR2B	PY	.001	.001	0	0
37	CR2A	PY	.001	.001	0	0
38	CR1B	PY	.001	.001	0	0
39	CR1A	PY	.001	.001	0	0
40	CP3	PY	.002	.002	0	0
41	CP2	PY	.002	.002	0	0
42	CP1	PY	.002	.002	0	0
43	CORNER3	PY	.001	.001	0	0
44	CORNER2	PY	.001	.001	0	0
45	CORNER1	PY	.001	.001	0	0
46	SOBOT3	PX	-.000799	-.000799	0	0
47	SOBOT2	PX	-.000799	-.000799	0	0
48	SOBOT1	PX	-.000799	-.000799	0	0
49	RAIL2	PX	-.000752	-.000752	0	0
50	RAIL3	PX	-.002	-.002	0	0
51	RAIL1	PX	-.002	-.002	0	0
52	MP GAMMA4	PX	-.002	-.002	0	0
53	MP GAMMA3	PX	-.002	-.002	0	0
54	MP GAMMA2	PX	-.002	-.002	0	0
55	MP GAMMA1	PX	-.002	-.002	0	0
56	MP BETA4	PX	-.002	-.002	0	0
57	MP BETA3	PX	-.002	-.002	0	0
58	MP BETA2	PX	-.002	-.002	0	0
59	MP BETA1	PX	-.002	-.002	0	0
60	MP ALPHA4	PX	-.002	-.002	0	0
61	MP ALPHA3	PX	-.002	-.002	0	0
62	MP ALPHA2	PX	-.002	-.002	0	0

Member Distributed Loads (BLC 33 : Ice Wind Load (150)) (Continued)

	Member Label	Direction	Start Magnitude[k/ft,...	End Magnitude[k/ft,F,...	Start Location[ft,%]	End Location[ft,%]
63	MP ALPHA1	PX	-.002	-.002	0	0
64	INNER6	PX	-.001	-.001	0	0
65	INNER5	PX	-.001	-.001	0	0
66	INNER4	PX	-.001	-.001	0	0
67	INNER3	PX	-.001	-.001	0	0
68	INNER2	PX	-.001	-.001	0	0
69	INNER1	PX	-.001	-.001	0	0
70	FACE2	PX	-.000799	-.000799	0	0
71	FACE3	PX	-.002	-.002	0	0
72	FACE1	PX	-.002	-.002	0	0
73	ENDCORNER3B	PX	-.000799	-.000799	0	0
74	ENDCORNER3A	PX	-.000799	-.000799	0	0
75	ENDCORNER2B	PX	-.000799	-.000799	0	0
76	ENDCORNER2A	PX	-.000799	-.000799	0	0
77	ENDCORNER1B	PX	-.000799	-.000799	0	0
78	ENDCORNER1A	PX	-.000799	-.000799	0	0
79	CR3B	PX	-.000799	-.000799	0	0
80	CR3A	PX	-.000799	-.000799	0	0
81	CR2B	PX	-.000799	-.000799	0	0
82	CR2A	PX	-.000799	-.000799	0	0
83	CR1B	PX	-.000799	-.000799	0	0
84	CR1A	PX	-.000799	-.000799	0	0
85	CP3	PX	-.001	-.001	0	0
86	CP2	PX	-.001	-.001	0	0
87	CP1	PX	-.001	-.001	0	0
88	CORNER3	PX	-.000799	-.000799	0	0
89	CORNER2	PX	-.000799	-.000799	0	0
90	CORNER1	PX	-.000799	-.000799	0	0

Member Distributed Loads (BLC 34 : Ice Wind Load (180))

	Member Label	Direction	Start Magnitude[k/ft,...	End Magnitude[k/ft,F,...	Start Location[ft,%]	End Location[ft,%]
1	SOBOT3	PY	.002	.002	0	0
2	SOBOT2	PY	.002	.002	0	0
3	SOBOT1	PY	.002	.002	0	0
4	RAIL2	PY	.002	.002	0	0
5	RAIL3	PY	.003	.003	0	0
6	RAIL1	PY	.003	.003	0	0
7	MP GAMMA4	PY	.005	.005	0	0
8	MP GAMMA3	PY	.005	.005	0	0
9	MP GAMMA2	PY	.005	.005	0	0
10	MP GAMMA1	PY	.005	.005	0	0
11	MP BETA4	PY	.005	.005	0	0
12	MP BETA3	PY	.005	.005	0	0
13	MP BETA2	PY	.005	.005	0	0
14	MP BETA1	PY	.005	.005	0	0
15	MP ALPHA4	PY	.005	.005	0	0
16	MP ALPHA3	PY	.005	.005	0	0
17	MP ALPHA2	PY	.005	.005	0	0
18	MP ALPHA1	PY	.005	.005	0	0
19	INNER6	PY	.002	.002	0	0
20	INNER5	PY	.002	.002	0	0
21	INNER4	PY	.002	.002	0	0
22	INNER3	PY	.002	.002	0	0
23	INNER2	PY	.002	.002	0	0
24	INNER1	PY	.002	.002	0	0
25	FACE2	PY	.002	.002	0	0

Member Distributed Loads (BLC 34 : Ice Wind Load (180)) (Continued)

	Member Label	Direction	Start Magnitude[k/ft,...	End Magnitude[k/ft,F,...	Start Location[ft,%]	End Location[ft,%]
26	FACE3	PY	.003	.003	0	0
27	FACE1	PY	.003	.003	0	0
28	ENDCORNER3B	PY	.002	.002	0	0
29	ENDCORNER3A	PY	.002	.002	0	0
30	ENDCORNER2B	PY	.002	.002	0	0
31	ENDCORNER2A	PY	.002	.002	0	0
32	ENDCORNER1B	PY	.002	.002	0	0
33	ENDCORNER1A	PY	.002	.002	0	0
34	CR3B	PY	.002	.002	0	0
35	CR3A	PY	.002	.002	0	0
36	CR2B	PY	.002	.002	0	0
37	CR2A	PY	.002	.002	0	0
38	CR1B	PY	.002	.002	0	0
39	CR1A	PY	.002	.002	0	0
40	CP3	PY	.002	.002	0	0
41	CP2	PY	.002	.002	0	0
42	CP1	PY	.002	.002	0	0
43	CORNER3	PY	.002	.002	0	0
44	CORNER2	PY	.002	.002	0	0
45	CORNER1	PY	.002	.002	0	0

Member Distributed Loads (BLC 35 : Ice Wind Load (210))

	Member Label	Direction	Start Magnitude[k/ft,...	End Magnitude[k/ft,F,...	Start Location[ft,%]	End Location[ft,%]
1	SOBOT3	PY	.001	.001	0	0
2	SOBOT2	PY	.001	.001	0	0
3	SOBOT1	PY	.001	.001	0	0
4	RAIL3	PY	.001	.001	0	0
5	RAIL2	PY	.003	.003	0	0
6	RAIL1	PY	.003	.003	0	0
7	MP GAMMA4	PY	.004	.004	0	0
8	MP GAMMA3	PY	.004	.004	0	0
9	MP GAMMA2	PY	.004	.004	0	0
10	MP GAMMA1	PY	.004	.004	0	0
11	MP BETA4	PY	.004	.004	0	0
12	MP BETA3	PY	.004	.004	0	0
13	MP BETA2	PY	.004	.004	0	0
14	MP BETA1	PY	.004	.004	0	0
15	MP ALPHA4	PY	.004	.004	0	0
16	MP ALPHA3	PY	.004	.004	0	0
17	MP ALPHA2	PY	.004	.004	0	0
18	MP ALPHA1	PY	.004	.004	0	0
19	INNER6	PY	.002	.002	0	0
20	INNER5	PY	.002	.002	0	0
21	INNER4	PY	.002	.002	0	0
22	INNER3	PY	.002	.002	0	0
23	INNER2	PY	.002	.002	0	0
24	INNER1	PY	.002	.002	0	0
25	FACE3	PY	.001	.001	0	0
26	FACE2	PY	.003	.003	0	0
27	FACE1	PY	.003	.003	0	0
28	ENDCORNER3B	PY	.001	.001	0	0
29	ENDCORNER3A	PY	.001	.001	0	0
30	ENDCORNER2B	PY	.001	.001	0	0
31	ENDCORNER2A	PY	.001	.001	0	0
32	ENDCORNER1B	PY	.001	.001	0	0
33	ENDCORNER1A	PY	.001	.001	0	0

Member Distributed Loads (BLC 35 : Ice Wind Load (210)) (Continued)

	Member Label	Direction	Start Magnitude[k/ft,...	End Magnitude[k/ft,F,...	Start Location[ft,%]	End Location[ft,%]
34	CR3B	PY	.001	.001	0	0
35	CR3A	PY	.001	.001	0	0
36	CR2B	PY	.001	.001	0	0
37	CR2A	PY	.001	.001	0	0
38	CR1B	PY	.001	.001	0	0
39	CR1A	PY	.001	.001	0	0
40	CP3	PY	.002	.002	0	0
41	CP2	PY	.002	.002	0	0
42	CP1	PY	.002	.002	0	0
43	CORNER3	PY	.001	.001	0	0
44	CORNER2	PY	.001	.001	0	0
45	CORNER1	PY	.001	.001	0	0
46	SOBOT3	PX	.000799	.000799	0	0
47	SOBOT2	PX	.000799	.000799	0	0
48	SOBOT1	PX	.000799	.000799	0	0
49	RAIL3	PX	.000752	.000752	0	0
50	RAIL2	PX	.002	.002	0	0
51	RAIL1	PX	.002	.002	0	0
52	MP GAMMA4	PX	.002	.002	0	0
53	MP GAMMA3	PX	.002	.002	0	0
54	MP GAMMA2	PX	.002	.002	0	0
55	MP GAMMA1	PX	.002	.002	0	0
56	MP BETA4	PX	.002	.002	0	0
57	MP BETA3	PX	.002	.002	0	0
58	MP BETA2	PX	.002	.002	0	0
59	MP BETA1	PX	.002	.002	0	0
60	MP ALPHA4	PX	.002	.002	0	0
61	MP ALPHA3	PX	.002	.002	0	0
62	MP ALPHA2	PX	.002	.002	0	0
63	MP ALPHA1	PX	.002	.002	0	0
64	INNER6	PX	.001	.001	0	0
65	INNER5	PX	.001	.001	0	0
66	INNER4	PX	.001	.001	0	0
67	INNER3	PX	.001	.001	0	0
68	INNER2	PX	.001	.001	0	0
69	INNER1	PX	.001	.001	0	0
70	FACE3	PX	.000799	.000799	0	0
71	FACE2	PX	.002	.002	0	0
72	FACE1	PX	.002	.002	0	0
73	ENDCORNER3B	PX	.000799	.000799	0	0
74	ENDCORNER3A	PX	.000799	.000799	0	0
75	ENDCORNER2B	PX	.000799	.000799	0	0
76	ENDCORNER2A	PX	.000799	.000799	0	0
77	ENDCORNER1B	PX	.000799	.000799	0	0
78	ENDCORNER1A	PX	.000799	.000799	0	0
79	CR3B	PX	.000799	.000799	0	0
80	CR3A	PX	.000799	.000799	0	0
81	CR2B	PX	.000799	.000799	0	0
82	CR2A	PX	.000799	.000799	0	0
83	CR1B	PX	.000799	.000799	0	0
84	CR1A	PX	.000799	.000799	0	0
85	CP3	PX	.001	.001	0	0
86	CP2	PX	.001	.001	0	0
87	CP1	PX	.001	.001	0	0
88	CORNER3	PX	.000799	.000799	0	0
89	CORNER2	PX	.000799	.000799	0	0
90	CORNER1	PX	.000799	.000799	0	0

Member Distributed Loads (BLC 36 : Ice Wind Load (240))

	Member Label	Direction	Start Magnitude[k/ft,...	End Magnitude[k/ft,F,...	Start Location[ft,%]	End Location[ft,%]
1	SOBOT3	PY	.000799	.000799	0	0
2	SOBOT2	PY	.000799	.000799	0	0
3	SOBOT1	PY	.000799	.000799	0	0
4	RAIL3	PY	.000752	.000752	0	0
5	RAIL2	PY	.002	.002	0	0
6	RAIL1	PY	.002	.002	0	0
7	MP GAMMA4	PY	.002	.002	0	0
8	MP GAMMA3	PY	.002	.002	0	0
9	MP GAMMA2	PY	.002	.002	0	0
10	MP GAMMA1	PY	.002	.002	0	0
11	MP BETA4	PY	.002	.002	0	0
12	MP BETA3	PY	.002	.002	0	0
13	MP BETA2	PY	.002	.002	0	0
14	MP BETA1	PY	.002	.002	0	0
15	MP ALPHA4	PY	.002	.002	0	0
16	MP ALPHA3	PY	.002	.002	0	0
17	MP ALPHA2	PY	.002	.002	0	0
18	MP ALPHA1	PY	.002	.002	0	0
19	INNER6	PY	.001	.001	0	0
20	INNER5	PY	.001	.001	0	0
21	INNER4	PY	.001	.001	0	0
22	INNER3	PY	.001	.001	0	0
23	INNER2	PY	.001	.001	0	0
24	INNER1	PY	.001	.001	0	0
25	FACE3	PY	.000799	.000799	0	0
26	FACE2	PY	.002	.002	0	0
27	FACE1	PY	.002	.002	0	0
28	ENDCORNER3B	PY	.000799	.000799	0	0
29	ENDCORNER3A	PY	.000799	.000799	0	0
30	ENDCORNER2B	PY	.000799	.000799	0	0
31	ENDCORNER2A	PY	.000799	.000799	0	0
32	ENDCORNER1B	PY	.000799	.000799	0	0
33	ENDCORNER1A	PY	.000799	.000799	0	0
34	CR3B	PY	.000799	.000799	0	0
35	CR3A	PY	.000799	.000799	0	0
36	CR2B	PY	.000799	.000799	0	0
37	CR2A	PY	.000799	.000799	0	0
38	CR1B	PY	.000799	.000799	0	0
39	CR1A	PY	.000799	.000799	0	0
40	CP3	PY	.001	.001	0	0
41	CP2	PY	.001	.001	0	0
42	CP1	PY	.001	.001	0	0
43	CORNER3	PY	.000799	.000799	0	0
44	CORNER2	PY	.000799	.000799	0	0
45	CORNER1	PY	.000799	.000799	0	0
46	SOBOT3	PX	.001	.001	0	0
47	SOBOT2	PX	.001	.001	0	0
48	SOBOT1	PX	.001	.001	0	0
49	RAIL3	PX	.001	.001	0	0
50	RAIL2	PX	.003	.003	0	0
51	RAIL1	PX	.003	.003	0	0
52	MP GAMMA4	PX	.004	.004	0	0
53	MP GAMMA3	PX	.004	.004	0	0
54	MP GAMMA2	PX	.004	.004	0	0
55	MP GAMMA1	PX	.004	.004	0	0
56	MP BETA4	PX	.004	.004	0	0
57	MP BETA3	PX	.004	.004	0	0

Member Distributed Loads (BLC 36 : Ice Wind Load (240)) (Continued)

	Member Label	Direction	Start Magnitude[k/ft,...	End Magnitude[k/ft,F,...	Start Location[ft,%]	End Location[ft,%]
58	MP BETA2	PX	.004	.004	0	0
59	MP BETA1	PX	.004	.004	0	0
60	MP ALPHA4	PX	.004	.004	0	0
61	MP ALPHA3	PX	.004	.004	0	0
62	MP ALPHA2	PX	.004	.004	0	0
63	MP ALPHA1	PX	.004	.004	0	0
64	INNER6	PX	.002	.002	0	0
65	INNER5	PX	.002	.002	0	0
66	INNER4	PX	.002	.002	0	0
67	INNER3	PX	.002	.002	0	0
68	INNER2	PX	.002	.002	0	0
69	INNER1	PX	.002	.002	0	0
70	FACE3	PX	.001	.001	0	0
71	FACE2	PX	.003	.003	0	0
72	FACE1	PX	.003	.003	0	0
73	ENDCORNER3B	PX	.001	.001	0	0
74	ENDCORNER3A	PX	.001	.001	0	0
75	ENDCORNER2B	PX	.001	.001	0	0
76	ENDCORNER2A	PX	.001	.001	0	0
77	ENDCORNER1B	PX	.001	.001	0	0
78	ENDCORNER1A	PX	.001	.001	0	0
79	CR3B	PX	.001	.001	0	0
80	CR3A	PX	.001	.001	0	0
81	CR2B	PX	.001	.001	0	0
82	CR2A	PX	.001	.001	0	0
83	CR1B	PX	.001	.001	0	0
84	CR1A	PX	.001	.001	0	0
85	CP3	PX	.002	.002	0	0
86	CP2	PX	.002	.002	0	0
87	CP1	PX	.002	.002	0	0
88	CORNER3	PX	.001	.001	0	0
89	CORNER2	PX	.001	.001	0	0
90	CORNER1	PX	.001	.001	0	0

Member Distributed Loads (BLC 37 : Ice Wind Load (270))

	Member Label	Direction	Start Magnitude[k/ft,...	End Magnitude[k/ft,F,...	Start Location[ft,%]	End Location[ft,%]
1	SOBOT3	PX	.002	.002	0	0
2	SOBOT2	PX	.002	.002	0	0
3	SOBOT1	PX	.002	.002	0	0
4	RAIL3	PX	.002	.002	0	0
5	RAIL2	PX	.003	.003	0	0
6	RAIL1	PX	.003	.003	0	0
7	MP GAMMA4	PX	.005	.005	0	0
8	MP GAMMA3	PX	.005	.005	0	0
9	MP GAMMA2	PX	.005	.005	0	0
10	MP GAMMA1	PX	.005	.005	0	0
11	MP BETA4	PX	.005	.005	0	0
12	MP BETA3	PX	.005	.005	0	0
13	MP BETA2	PX	.005	.005	0	0
14	MP BETA1	PX	.005	.005	0	0
15	MP ALPHA4	PX	.005	.005	0	0
16	MP ALPHA3	PX	.005	.005	0	0
17	MP ALPHA2	PX	.005	.005	0	0
18	MP ALPHA1	PX	.005	.005	0	0
19	INNER6	PX	.002	.002	0	0
20	INNER5	PX	.002	.002	0	0

Member Distributed Loads (BLC 37 : Ice Wind Load (270)) (Continued)

	Member Label	Direction	Start Magnitude[k/ft,...	End Magnitude[k/ft,F,...	Start Location[ft,%]	End Location[ft,%]
21	INNER4	PX	.002	.002	0	0
22	INNER3	PX	.002	.002	0	0
23	INNER2	PX	.002	.002	0	0
24	INNER1	PX	.002	.002	0	0
25	FACE3	PX	.002	.002	0	0
26	FACE2	PX	.003	.003	0	0
27	FACE1	PX	.003	.003	0	0
28	ENDCORNER3B	PX	.002	.002	0	0
29	ENDCORNER3A	PX	.002	.002	0	0
30	ENDCORNER2B	PX	.002	.002	0	0
31	ENDCORNER2A	PX	.002	.002	0	0
32	ENDCORNER1B	PX	.002	.002	0	0
33	ENDCORNER1A	PX	.002	.002	0	0
34	CR3B	PX	.002	.002	0	0
35	CR3A	PX	.002	.002	0	0
36	CR2B	PX	.002	.002	0	0
37	CR2A	PX	.002	.002	0	0
38	CR1B	PX	.002	.002	0	0
39	CR1A	PX	.002	.002	0	0
40	CP3	PX	.002	.002	0	0
41	CP2	PX	.002	.002	0	0
42	CP1	PX	.002	.002	0	0
43	CORNER3	PX	.002	.002	0	0
44	CORNER2	PX	.002	.002	0	0
45	CORNER1	PX	.002	.002	0	0

Member Distributed Loads (BLC 38 : Ice Wind Load (300))

	Member Label	Direction	Start Magnitude[k/ft,...	End Magnitude[k/ft,F,...	Start Location[ft,%]	End Location[ft,%]
1	SOBOT3	PY	-.000799	-.000799	0	0
2	SOBOT2	PY	-.000799	-.000799	0	0
3	SOBOT1	PY	-.000799	-.000799	0	0
4	RAIL3	PY	-.000752	-.000752	0	0
5	RAIL2	PY	-.002	-.002	0	0
6	RAIL1	PY	-.002	-.002	0	0
7	MP GAMMA4	PY	-.002	-.002	0	0
8	MP GAMMA3	PY	-.002	-.002	0	0
9	MP GAMMA2	PY	-.002	-.002	0	0
10	MP GAMMA1	PY	-.002	-.002	0	0
11	MP BETA4	PY	-.002	-.002	0	0
12	MP BETA3	PY	-.002	-.002	0	0
13	MP BETA2	PY	-.002	-.002	0	0
14	MP BETA1	PY	-.002	-.002	0	0
15	MP ALPHA4	PY	-.002	-.002	0	0
16	MP ALPHA3	PY	-.002	-.002	0	0
17	MP ALPHA2	PY	-.002	-.002	0	0
18	MP ALPHA1	PY	-.002	-.002	0	0
19	INNER6	PY	-.001	-.001	0	0
20	INNER5	PY	-.001	-.001	0	0
21	INNER4	PY	-.001	-.001	0	0
22	INNER3	PY	-.001	-.001	0	0
23	INNER2	PY	-.001	-.001	0	0
24	INNER1	PY	-.001	-.001	0	0
25	FACE3	PY	-.000799	-.000799	0	0
26	FACE2	PY	-.002	-.002	0	0
27	FACE1	PY	-.002	-.002	0	0
28	ENDCORNER3B	PY	-.000799	-.000799	0	0

Member Distributed Loads (BLC 38 : Ice Wind Load (300)) (Continued)

	Member Label	Direction	Start Magnitude[k/ft,...	End Magnitude[k/ft,F,...	Start Location[ft,%]	End Location[ft,%]
29	ENDCORNER3A	PY	-.000799	-.000799	0	0
30	ENDCORNER2B	PY	-.000799	-.000799	0	0
31	ENDCORNER2A	PY	-.000799	-.000799	0	0
32	ENDCORNER1B	PY	-.000799	-.000799	0	0
33	ENDCORNER1A	PY	-.000799	-.000799	0	0
34	CR3B	PY	-.000799	-.000799	0	0
35	CR3A	PY	-.000799	-.000799	0	0
36	CR2B	PY	-.000799	-.000799	0	0
37	CR2A	PY	-.000799	-.000799	0	0
38	CR1B	PY	-.000799	-.000799	0	0
39	CR1A	PY	-.000799	-.000799	0	0
40	CP3	PY	-.001	-.001	0	0
41	CP2	PY	-.001	-.001	0	0
42	CP1	PY	-.001	-.001	0	0
43	CORNER3	PY	-.000799	-.000799	0	0
44	CORNER2	PY	-.000799	-.000799	0	0
45	CORNER1	PY	-.000799	-.000799	0	0
46	SOBOT3	PX	.001	.001	0	0
47	SOBOT2	PX	.001	.001	0	0
48	SOBOT1	PX	.001	.001	0	0
49	RAIL3	PX	.001	.001	0	0
50	RAIL2	PX	.003	.003	0	0
51	RAIL1	PX	.003	.003	0	0
52	MP GAMMA4	PX	.004	.004	0	0
53	MP GAMMA3	PX	.004	.004	0	0
54	MP GAMMA2	PX	.004	.004	0	0
55	MP GAMMA1	PX	.004	.004	0	0
56	MP BETA4	PX	.004	.004	0	0
57	MP BETA3	PX	.004	.004	0	0
58	MP BETA2	PX	.004	.004	0	0
59	MP BETA1	PX	.004	.004	0	0
60	MP ALPHA4	PX	.004	.004	0	0
61	MP ALPHA3	PX	.004	.004	0	0
62	MP ALPHA2	PX	.004	.004	0	0
63	MP ALPHA1	PX	.004	.004	0	0
64	INNER6	PX	.002	.002	0	0
65	INNER5	PX	.002	.002	0	0
66	INNER4	PX	.002	.002	0	0
67	INNER3	PX	.002	.002	0	0
68	INNER2	PX	.002	.002	0	0
69	INNER1	PX	.002	.002	0	0
70	FACE3	PX	.001	.001	0	0
71	FACE2	PX	.003	.003	0	0
72	FACE1	PX	.003	.003	0	0
73	ENDCORNER3B	PX	.001	.001	0	0
74	ENDCORNER3A	PX	.001	.001	0	0
75	ENDCORNER2B	PX	.001	.001	0	0
76	ENDCORNER2A	PX	.001	.001	0	0
77	ENDCORNER1B	PX	.001	.001	0	0
78	ENDCORNER1A	PX	.001	.001	0	0
79	CR3B	PX	.001	.001	0	0
80	CR3A	PX	.001	.001	0	0
81	CR2B	PX	.001	.001	0	0
82	CR2A	PX	.001	.001	0	0
83	CR1B	PX	.001	.001	0	0
84	CR1A	PX	.001	.001	0	0
85	CP3	PX	.002	.002	0	0

Member Distributed Loads (BLC 38 : Ice Wind Load (300)) (Continued)

	Member Label	Direction	Start Magnitude[k/ft,...	End Magnitude[k/ft,F,...	Start Location[ft,%]	End Location[ft,%]
86	CP2	PX	.002	.002	0	0
87	CP1	PX	.002	.002	0	0
88	CORNER3	PX	.001	.001	0	0
89	CORNER2	PX	.001	.001	0	0
90	CORNER1	PX	.001	.001	0	0

Member Distributed Loads (BLC 39 : Ice Wind Load (330))

	Member Label	Direction	Start Magnitude[k/ft,...	End Magnitude[k/ft,F,...	Start Location[ft,%]	End Location[ft,%]
1	SOBOT3	PY	-.001	-.001	0	0
2	SOBOT2	PY	-.001	-.001	0	0
3	SOBOT1	PY	-.001	-.001	0	0
4	RAIL1	PY	-.001	-.001	0	0
5	RAIL2	PY	-.003	-.003	0	0
6	RAIL3	PY	-.003	-.003	0	0
7	MP GAMMA4	PY	-.004	-.004	0	0
8	MP GAMMA3	PY	-.004	-.004	0	0
9	MP GAMMA2	PY	-.004	-.004	0	0
10	MP GAMMA1	PY	-.004	-.004	0	0
11	MP BETA4	PY	-.004	-.004	0	0
12	MP BETA3	PY	-.004	-.004	0	0
13	MP BETA2	PY	-.004	-.004	0	0
14	MP BETA1	PY	-.004	-.004	0	0
15	MP ALPHA4	PY	-.004	-.004	0	0
16	MP ALPHA3	PY	-.004	-.004	0	0
17	MP ALPHA2	PY	-.004	-.004	0	0
18	MP ALPHA1	PY	-.004	-.004	0	0
19	INNER6	PY	-.002	-.002	0	0
20	INNER5	PY	-.002	-.002	0	0
21	INNER4	PY	-.002	-.002	0	0
22	INNER3	PY	-.002	-.002	0	0
23	INNER2	PY	-.002	-.002	0	0
24	INNER1	PY	-.002	-.002	0	0
25	FACE1	PY	-.001	-.001	0	0
26	FACE2	PY	-.003	-.003	0	0
27	FACE3	PY	-.003	-.003	0	0
28	ENDCORNER3B	PY	-.001	-.001	0	0
29	ENDCORNER3A	PY	-.001	-.001	0	0
30	ENDCORNER2B	PY	-.001	-.001	0	0
31	ENDCORNER2A	PY	-.001	-.001	0	0
32	ENDCORNER1B	PY	-.001	-.001	0	0
33	ENDCORNER1A	PY	-.001	-.001	0	0
34	CR3B	PY	-.001	-.001	0	0
35	CR3A	PY	-.001	-.001	0	0
36	CR2B	PY	-.001	-.001	0	0
37	CR2A	PY	-.001	-.001	0	0
38	CR1B	PY	-.001	-.001	0	0
39	CR1A	PY	-.001	-.001	0	0
40	CP3	PY	-.002	-.002	0	0
41	CP2	PY	-.002	-.002	0	0
42	CP1	PY	-.002	-.002	0	0
43	CORNER3	PY	-.001	-.001	0	0
44	CORNER2	PY	-.001	-.001	0	0
45	CORNER1	PY	-.001	-.001	0	0
46	SOBOT3	PX	.000799	.000799	0	0
47	SOBOT2	PX	.000799	.000799	0	0
48	SOBOT1	PX	.000799	.000799	0	0

Member Distributed Loads (BLC 39 : Ice Wind Load (330)) (Continued)

	Member Label	Direction	Start Magnitude[k/ft,...	End Magnitude[k/ft,F,...	Start Location[ft,%]	End Location[ft,%]
49	RAIL1	PX	.000752	.000752	0	0
50	RAIL2	PX	.002	.002	0	0
51	RAIL3	PX	.002	.002	0	0
52	MP GAMMA4	PX	.002	.002	0	0
53	MP GAMMA3	PX	.002	.002	0	0
54	MP GAMMA2	PX	.002	.002	0	0
55	MP GAMMA1	PX	.002	.002	0	0
56	MP BETA4	PX	.002	.002	0	0
57	MP BETA3	PX	.002	.002	0	0
58	MP BETA2	PX	.002	.002	0	0
59	MP BETA1	PX	.002	.002	0	0
60	MP ALPHA4	PX	.002	.002	0	0
61	MP ALPHA3	PX	.002	.002	0	0
62	MP ALPHA2	PX	.002	.002	0	0
63	MP ALPHA1	PX	.002	.002	0	0
64	INNER6	PX	.001	.001	0	0
65	INNER5	PX	.001	.001	0	0
66	INNER4	PX	.001	.001	0	0
67	INNER3	PX	.001	.001	0	0
68	INNER2	PX	.001	.001	0	0
69	INNER1	PX	.001	.001	0	0
70	FACE1	PX	.000799	.000799	0	0
71	FACE2	PX	.002	.002	0	0
72	FACE3	PX	.002	.002	0	0
73	ENDCORNER3B	PX	.000799	.000799	0	0
74	ENDCORNER3A	PX	.000799	.000799	0	0
75	ENDCORNER2B	PX	.000799	.000799	0	0
76	ENDCORNER2A	PX	.000799	.000799	0	0
77	ENDCORNER1B	PX	.000799	.000799	0	0
78	ENDCORNER1A	PX	.000799	.000799	0	0
79	CR3B	PX	.000799	.000799	0	0
80	CR3A	PX	.000799	.000799	0	0
81	CR2B	PX	.000799	.000799	0	0
82	CR2A	PX	.000799	.000799	0	0
83	CR1B	PX	.000799	.000799	0	0
84	CR1A	PX	.000799	.000799	0	0
85	CP3	PX	.001	.001	0	0
86	CP2	PX	.001	.001	0	0
87	CP1	PX	.001	.001	0	0
88	CORNER3	PX	.000799	.000799	0	0
89	CORNER2	PX	.000799	.000799	0	0
90	CORNER1	PX	.000799	.000799	0	0

Member Distributed Loads (BLC 43 : BLC 3 Transient Area Loads)

	Member Label	Direction	Start Magnitude[k/ft,...	End Magnitude[k/ft,F,...	Start Location[ft,%]	End Location[ft,%]
1	INNER6	Z	-.008	-.015	0	.819
2	INNER6	Z	-.015	-.016	.819	1.637
3	INNER6	Z	-.016	-.014	1.637	2.456
4	INNER6	Z	-.014	-.011	2.456	3.274
5	INNER6	Z	-.011	-.006	3.274	4.093
6	INNER1	Z	-.002	-.009	0	.819
7	INNER1	Z	-.009	-.013	.819	1.637
8	INNER1	Z	-.013	-.016	1.637	2.456
9	INNER1	Z	-.016	-.015	2.456	3.274
10	INNER1	Z	-.015	-.008	3.274	4.093
11	CP1	Z	-.003	-.003	.001	.808

Member Distributed Loads (BLC 43 : BLC 3 Transient Area Loads) (Continued)

	Member Label	Direction	Start Magnitude[k/ft,...	End Magnitude[k/ft,F,...	Start Location[ft,%]	End Location[ft,%]
12	INNER3	Z	-.002	-.009	0	.819
13	INNER3	Z	-.009	-.013	.819	1.637
14	INNER3	Z	-.013	-.016	1.637	2.456
15	INNER3	Z	-.016	-.015	2.456	3.274
16	INNER3	Z	-.015	-.008	3.274	4.093
17	INNER2	Z	-.008	-.015	0	.819
18	INNER2	Z	-.015	-.016	.819	1.637
19	INNER2	Z	-.016	-.014	1.637	2.456
20	INNER2	Z	-.014	-.011	2.456	3.274
21	INNER2	Z	-.011	-.006	3.274	4.093
22	CP2	Z	-.003	-.003	.001	.808
23	INNER5	Z	-.006	-.011	0	.819
24	INNER5	Z	-.011	-.014	.819	1.637
25	INNER5	Z	-.014	-.016	1.637	2.456
26	INNER5	Z	-.016	-.015	2.456	3.274
27	INNER5	Z	-.015	-.008	3.274	4.093
28	INNER4	Z	-.008	-.015	0	.819
29	INNER4	Z	-.015	-.016	.819	1.637
30	INNER4	Z	-.016	-.013	1.637	2.456
31	INNER4	Z	-.013	-.009	2.456	3.274
32	INNER4	Z	-.009	-.002	3.274	4.093
33	CP3	Z	-.003	-.003	0	.807

Member Distributed Loads (BLC 44 : BLC 27 Transient Area Loads)

	Member Label	Direction	Start Magnitude[k/ft,...	End Magnitude[k/ft,F,...	Start Location[ft,%]	End Location[ft,%]
1	INNER3	Z	-.005	-.018	0	.819
2	INNER3	Z	-.018	-.026	.819	1.637
3	INNER3	Z	-.026	-.032	1.637	2.456
4	INNER3	Z	-.032	-.03	2.456	3.274
5	INNER3	Z	-.03	-.016	3.274	4.093
6	INNER2	Z	-.016	-.03	0	.819
7	INNER2	Z	-.03	-.033	.819	1.637
8	INNER2	Z	-.033	-.027	1.637	2.456
9	INNER2	Z	-.027	-.022	2.456	3.274
10	INNER2	Z	-.022	-.011	3.274	4.093
11	CP2	Z	-.005	-.005	.001	.808
12	INNER5	Z	-.011	-.022	0	.819
13	INNER5	Z	-.022	-.027	.819	1.637
14	INNER5	Z	-.027	-.033	1.637	2.456
15	INNER5	Z	-.033	-.03	2.456	3.274
16	INNER5	Z	-.03	-.016	3.274	4.093
17	INNER4	Z	-.016	-.03	0	.819
18	INNER4	Z	-.03	-.032	.819	1.637
19	INNER4	Z	-.032	-.026	1.637	2.456
20	INNER4	Z	-.026	-.018	2.456	3.274
21	INNER4	Z	-.018	-.005	3.274	4.093
22	CP3	Z	-.005	-.005	0	.807
23	INNER6	Z	-.016	-.03	0	.819
24	INNER6	Z	-.03	-.033	.819	1.637
25	INNER6	Z	-.033	-.027	1.637	2.456
26	INNER6	Z	-.027	-.022	2.456	3.274
27	INNER6	Z	-.022	-.011	3.274	4.093
28	INNER1	Z	-.005	-.018	0	.819
29	INNER1	Z	-.018	-.026	.819	1.637
30	INNER1	Z	-.026	-.032	1.637	2.456
31	INNER1	Z	-.032	-.03	2.456	3.274

Member Distributed Loads (BLC 44 : BLC 27 Transient Area Loads) (Continued)

	Member Label	Direction	Start Magnitude[k/ft,...	End Magnitude[k/ft,F,...	Start Location[ft,%]	End Location[ft,%]
32	INNER1	Z	-.03	-.016	3.274	4.093
33	CP1	Z	-.005	-.005	.001	.808

Member Area Loads (BLC 3 : Dead Load)

	Joint A	Joint B	Joint C	Joint D	Direction	Distribution	Magnitude[ksf]
1	N96A	N95A	N78	N79A	Z	Two Way	-.01
2	N109A	N123	N122	N108A	Z	Two Way	-.01
3	N140A	N154	N153	N139	Z	Two Way	-.01

Member Area Loads (BLC 27 : Ice Dead Load)

	Joint A	Joint B	Joint C	Joint D	Direction	Distribution	Magnitude[ksf]
1	N123	N122	N108A	N109A	Z	Two Way	-.02
2	N140A	N154	N153	N139	Z	Two Way	-.02
3	N79A	N96A	N95A	N78	Z	Two Way	-.02

Envelope Joint Reactions

	Joint		X [k]	LC	Y [k]	LC	Z [k]	LC	MX [k-ft]	LC	MY [k-ft]	LC	MZ [k-ft]	LC
1	N26	max	.208	11	.786	2	3.293	9	1.016	20	4.394	12	1.609	17
2		min	-3.377	30	-2.159	21	-.057	26	-2.817	3	-1.076	29	-1.544	35
3	N172A	max	3.496	15	.581	35	3.498	33	1.298	17	.909	14	1.166	5
4		min	-.617	32	-2.122	18	-.233	14	-3.025	35	-4.668	33	-1.256	23
5	N175A	max	1.295	11	3.974	3	3.313	21	5.171	21	1.311	11	1.737	29
6		min	-1.309	29	-.496	20	-.22	2	-1.146	2	-1.3	29	-1.73	11
7	Totals:	max	4.305	11	4.38	2	8.926	15						
8		min	-4.305	29	-4.442	20	3.399	32						

Basic Load Cases

	BLC Description	Category	X Gravity	Y Gravity	Z Gravity	Joint	Point	Distrib...	Area(Mem...	Surface(P...
1	Live Load	DL					1			
2	Wind Load (0)	DL					19	45		
3	Dead Load	DL			-1.1		19		3	
4	Wind Load (30)	DL					38	90		
5	Wind Load (60)	DL					38	90		
6	Wind Load (90)	DL					19	45		
7	Wind Load (120)	DL					38	90		
8	Wind Load (150)	DL					38	90		
9	Wind Load (180)	DL					19	45		
10	Wind Load (210)	DL					38	90		
11	Wind Load (240)	DL					38	90		
12	Wind Load (270)	DL					19	45		
13	Wind Load (300)	DL					38	90		
14	Wind Load (330)	DL					38	90		
15	Maintanence (0)	DL					19	45		
16	Maintanence (30)	DL					38	90		
17	Maintanence (60)	DL					38	90		
18	Maintanence (90)	DL					19	45		
19	Maintanence (120)	DL					38	90		
20	Maintanence (150)	DL					38	90		
21	Maintanence (180)	DL					19	45		
22	Maintanence (210)	DL					38	90		
23	Maintanence (240)	DL					38	90		
24	Maintanence (270)	DL					19	45		

Basic Load Cases (Continued)

	BLC Description	Category	X Gravity	Y Gravity	Z Gravity	Joint	Point	Distrib...	Area(Mem...	Surface(P...
25	Maintanence (300)	DL					38	90		
26	Maintanence (330)	DL					38	90		
27	Ice Dead Load	DL					19	45	3	
28	Ice Wind Load (0)	DL					19	45		
29	Ice Wind Load (30)	DL					38	90		
30	Ice Wind Load (60)	DL					38	90		
31	Ice Wind Load (90)	DL					19	45		
32	Ice Wind Load (120)	DL					38	90		
33	Ice Wind Load (150)	DL					38	90		
34	Ice Wind Load (180)	DL					19	45		
35	Ice Wind Load (210)	DL					38	90		
36	Ice Wind Load (240)	DL					38	90		
37	Ice Wind Load (270)	DL					19	45		
38	Ice Wind Load (300)	DL					38	90		
39	Ice Wind Load (330)	DL					38	90		
40	Earthquake (x-direction)	DL	-.113				19			
41	Earthquake (y-direction)	DL		-.113			19			
42	Earthquake (z-direction)	DL			-.045		19			
43	BLC 3 Transient Area ...	None						33		
44	BLC 27 Transient Are...	None						33		

Load Combinations

	Description	So...	P...	S...	BLC	Fact..	BLC	Fact..	BLC	Fact..	BLC	Fact..	BLC	Fact..	BLC	Fact..	BLC	Fact..	BLC	Fact..	BLC	Fact..	BLC	Fact...
1	1.4D	Yes	Y		3	1.4																		
2	1.2D + 1.0W(0)	Yes	Y		3	1.2	2	1																
3	1.2D + 1.0Di + ...	Yes	Y		3	1.2	27	1	28	1														
4	1.2D + 1.5L + 1...	Yes	Y		3	1.2	1	1.5	15	1														
5	1.2D + 1.0W(30)	Yes	Y		3	1.2	4	1																
6	1.2D + 1.0Di + ...	Yes	Y		3	1.2	27	1	29	1														
7	1.2D + 1.5L + 1...	Yes	Y		3	1.2	1	1.5	16	1														
8	1.2D + 1.0W(60)	Yes	Y		3	1.2	5	1																
9	1.2D + 1.0Di + ...	Yes	Y		3	1.2	27	1	30	1														
10	1.2D + 1.5L + 1...	Yes	Y		3	1.2	1	1.5	17	1														
11	1.2D + 1.0W(90)	Yes	Y		3	1.2	6	1																
12	1.2D + 1.0Di + ...	Yes	Y		3	1.2	27	1	31	1														
13	1.2D + 1.5L + 1...	Yes	Y		3	1.2	1	1.5	18	1														
14	1.2D + 1.0W(1...	Yes	Y		3	1.2	7	1																
15	1.2D + 1.0Di + ...	Yes	Y		3	1.2	27	1	32	1														
16	1.2D + 1.5L + 1...	Yes	Y		3	1.2	1	1.5	19	1														
17	1.2D + 1.0W(1...	Yes	Y		3	1.2	8	1																
18	1.2D + 1.0Di + ...	Yes	Y		3	1.2	27	1	33	1														
19	1.2D + 1.5L + 1...	Yes	Y		3	1.2	1	1.5	20	1														
20	1.2D + 1.0W(1...	Yes	Y		3	1.2	9	1																
21	1.2D + 1.0Di + ...	Yes	Y		3	1.2	27	1	34	1														
22	1.2D + 1.5L + 1...	Yes	Y		3	1.2	1	1.5	21	1														
23	1.2D + 1.0W(2...	Yes	Y		3	1.2	10	1																
24	1.2D + 1.0Di + ...	Yes	Y		3	1.2	27	1	35	1														
25	1.2D + 1.5L + 1...	Yes	Y		3	1.2	1	1.5	22	1														
26	1.2D + 1.0W(2...	Yes	Y		3	1.2	11	1																
27	1.2D + 1.0Di + ...	Yes	Y		3	1.2	27	1	36	1														
28	1.2D + 1.5L + 1...	Yes	Y		3	1.2	1	1.5	23	1														
29	1.2D + 1.0W(2...	Yes	Y		3	1.2	12	1																
30	1.2D + 1.0Di + ...	Yes	Y		3	1.2	27	1	37	1														
31	1.2D + 1.5L + 1...	Yes	Y		3	1.2	1	1.5	24	1														
32	1.2D + 1.0W(3...	Yes	Y		3	1.2	13	1																

Load Combinations (Continued)

	Description	So...	P...	S...	BLC	Fact..	BLC	Fact..	BLC	Fact..	BLC	Fact..	BLC	Fact..	BLC	Fact..	BLC	Fact..	BLC	Fact..	BLC	Fact..	BLC	Fact...
33	1.2D + 1.0Di + ...	Yes	Y		3	1.2	27	1	38	1														
34	1.2D + 1.5L + 1...	Yes	Y		3	1.2	1	1.5	25	1														
35	1.2D + 1.0W(3...	Yes	Y		3	1.2	14	1																
36	1.2D + 1.0Di + ...	Yes	Y		3	1.2	27	1	39	1														
37	1.2D + 1.5L + 1...	Yes	Y		3	1.2	1	1.5	26	1														
38	1.2D + 1.0E(x) ...	Yes	Y		3	1.2	40	1	42	1	1	1												
39	1.2D + 1.0E(y) ...	Yes	Y		3	1.2	41	1	42	1	1	1												
40	1.2D - 1.0E(x) ...	Yes	Y		3	1.2	40	-1	42	1	1	1												
41	1.2D - 1.0E(y) ...	Yes	Y		3	1.2	41	-1	42	1	1	1												

Envelope AISC 14th(360-10): LRFD Steel Code Checks

	Member	Shape	Code Check	Loc[ft]	LC	Shear Che...	Loc[...	Dir	LC	phi*P...	phi*P...	phi*M...	phi*M...	Cb	Eqn
1	SOBOT3	HSS6X3...	.452	0	21	.163	0	z	14	113.4...	131.85	11.895	20.963	2....	H1-1b
2	SOBOT2	HSS6X3...	.476	0	33	.181	0	z	35	113.4...	131.85	11.895	20.963	3....	H1-1b
3	SOBOT1	HSS6X3...	.448	0	6	.197	0	z	14	113.4...	131.85	11.895	20.963	3.61	H1-1b
4	RAIL3	PIPE_2.5	.169	7.812	5	.201	10.9...		35	25.561	50.715	3.596	3.596	2....	H1-1b
5	RAIL2	PIPE_2.5	.169	7.813	17	.114	10.9...		11	25.561	50.715	3.596	3.596	2....	H1-1b
6	RAIL1	PIPE_2.5	.170	7.812	32	.150	1.562		17	25.561	50.715	3.596	3.596	2....	H1-1b
7	MP GAMMA4	PIPE_2.5	.146	2.5	9	.030	2.5		26	22.373	50.715	3.596	3.596	1.46	H1-1b
8	MP GAMMA3	PIPE_2.5	.269	2.5	17	.056	2.5		35	22.373	50.715	3.596	3.596	1....	H1-1b
9	MP GAMMA2	PIPE_2.5	.256	2.5	35	.049	2.5		14	22.373	50.715	3.596	3.596	1....	H1-1b
10	MP GAMMA1	PIPE_2.5	.218	2.5	11	.032	2.5		11	22.373	50.715	3.596	3.596	1....	H1-1b
11	MP BETA4	PIPE_2.5	.142	2.5	3	.038	2.5		14	22.373	50.715	3.596	3.596	1....	H1-1b
12	MP BETA3	PIPE_2.5	.283	2.5	5	.049	2.5		17	22.373	50.715	3.596	3.596	1....	H1-1b
13	MP BETA2	PIPE_2.5	.261	2.5	20	.057	2.5		35	22.373	50.715	3.596	3.596	1....	H1-1b
14	MP BETA1	PIPE_2.5	.246	.5	35	.074	.5		35	30.038	50.715	3.596	3.596	2....	H1-1b
15	MP ALPHA4	PIPE_2.5	.174	2.5	17	.031	2.5		35	22.373	50.715	3.596	3.596	1....	H1-1b
16	MP ALPHA3	PIPE_2.5	.298	2.5	14	.054	2.5		14	22.373	50.715	3.596	3.596	1....	H1-1b
17	MP ALPHA2	PIPE_2.5	.260	2.5	14	.045	2.5		29	22.373	50.715	3.596	3.596	1....	H1-1b
18	MP ALPHA1	PIPE_2.5	.202	2.5	17	.025	2.5		17	22.373	50.715	3.596	3.596	1.84	H1-1b
19	INNER6	L2x2x3	.294	0	6	.027	0	z	36	10.108	23.393	.558	1.239	3....	H2-1
20	INNER5	L2x2x3	.278	4.093	21	.028	4.093	z	18	10.108	23.393	.558	1.239	3....	H2-1
21	INNER4	L2x2x3	.294	0	21	.027	0	z	21	10.108	23.393	.558	1.239	3....	H2-1
22	INNER3	L2x2x3	.287	4.093	36	.028	4.093	z	36	10.108	23.393	.558	1.239	3....	H2-1
23	INNER2	L2x2x3	.292	0	30	.027	0	z	36	10.108	23.393	.558	1.239	3....	H2-1
24	INNER1	L2x2x3	.277	4.093	9	.028	4.093	z	9	10.108	23.393	.558	1.239	3....	H2-1
25	FACE3	HSS3X3...	.151	5.078	23	.161	11.5...	y	35	74.286	85.05	7.388	7.388	2....	H1-1b
26	FACE2	HSS3X3...	.158	5.078	35	.158	5.078	z	3	74.286	85.05	7.388	7.388	2....	H1-1b
27	FACE1	HSS3X3...	.149	5.078	14	.162	5.078	z	18	74.286	85.05	7.388	7.388	1	H1-1b
28	ENDCORNE...	HSS3X3...	.136	.763	3	.185	.366	y	30	109.2...	109.8	9.3	9.3	1....	H1-1b
29	ENDCORNE...	HSS3X3...	.149	.763	36	.153	.366	y	12	109.2...	109.8	9.3	9.3	1....	H1-1b
30	ENDCORNE...	HSS3X3...	.166	0	17	.153	0	y	21	109.2...	109.8	9.3	9.3	1....	H1-1b
31	ENDCORNE...	HSS3X3...	.137	0	15	.187	.397	y	3	109.2...	109.8	9.3	9.3	1....	H1-1b
32	ENDCORNE...	HSS3X3...	.152	.763	32	.160	.763	y	36	109.2...	109.8	9.3	9.3	1....	H1-1b
33	ENDCORNE...	HSS3X3...	.136	0	30	.191	.397	y	18	109.2...	109.8	9.3	9.3	1.96	H1-1b
34	CR3B	HSS3X3...	.319	0	21	.109	2.414	z	15	79.969	85.05	7.388	7.388	2....	H1-1b
35	CR3A	HSS3X3...	.337	2.759	18	.112	.345	z	30	79.969	85.05	7.388	7.388	2....	H1-1b
36	CR2B	HSS3X3...	.350	0	36	.109	2.414	z	27	79.969	85.05	7.388	7.388	2....	H1-1b
37	CR2A	HSS3X3...	.349	2.759	33	.119	.345	z	3	79.969	85.05	7.388	7.388	2....	H1-1b
38	CR1B	HSS3X3...	.320	0	12	.114	2.414	z	36	79.969	85.05	7.388	7.388	2....	H1-1b
39	CR1A	HSS3X3...	.340	2.759	6	.121	0	y	17	79.969	85.05	7.388	7.388	2....	H1-1b
40	CP3	L2x2x3	.211	0	30	.044	0	y	29	22.64	23.393	.558	1.239	1....	H2-1
41	CP2	L2x2x3	.212	0	3	.043	.808	y	2	22.64	23.393	.558	1.239	1....	H2-1
42	CP1	L2x2x3	.268	0	17	.064	.808	y	17	22.64	23.393	.558	1.239	2....	H2-1
43	CORNER3	HSS3X3...	.057	0	8	.062	0	z	29	81.793	85.05	7.388	7.388	1....	H1-1b

Envelope AISC 14th(360-10): LRFD Steel Code Checks (Continued)

	Member	Shape	Code Check	Loc[ft]	LC	Shear Che...	Loc[...	Dir	LC	phi*P...	phi*P...	phi*M...	phi*M...	Cb	Eqn
44	CORNER2	HSS3X3...	.061	0	20	.056	0	z	2	81.793	85.05	7.388	7.388	1....	H1-1b
45	CORNER1	HSS3X3...	.085	0	35	.088	0	z	17	81.793	85.05	7.388	7.388	1....	H1-1b

APPENDIX D

Additional Calculations

POD Job #	**21-77774**
Site Number	**842856**
Site Name	**ANDOVER NORTH**

Calculations Based on *TIA-222-H*

Reactions from RISA-3D

Moment	5.478	ft-kip
Axial	4.199	kips
Shear	3.507	kips

Capacities

Bolts	*5.5%*
Flange Plate	*29.6%*

Bolt Information

Grade	A325	
Threads in Shear Plane	Included	
Diameter	0.625	in.
Bolt Spacing	9.25	in.
Number of Rods	4	

Flange Plate Inforation

Width	11.5	in.
Thickness	0.625	in.
Grade	A572-50	

Standoff Information

Standoff Member	HSS	
Flat-Flat	6	in.
Thickness	0.1875	in.

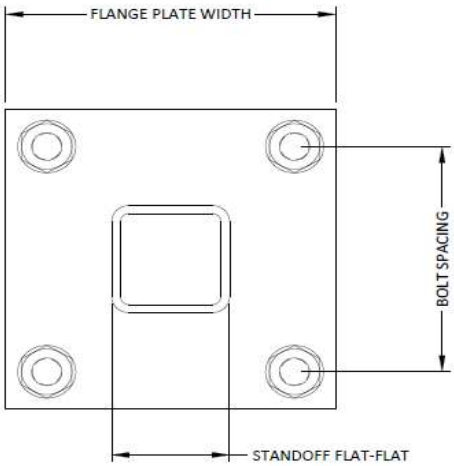

Bolt Calculations

ϕ	0.75	
A_{nt}	0.226	in^2
A_b	0.307	in^2
Fu	120	ksi
ϕR_{nV}	13.81	kips
ϕR_{nt}	20.34	kips
V	0.88	kips
F	4.60	kips
Capacity	5.5%	

Flange Plate Calculations

ϕ	0.9	
Fy	50	ksi
t_{min}	0.21	in
Z	1.1	in^3
ϕM_n	50.5	in-kip
M_u	15.0	in-kip
Capacity	29.6%	

Ver 1.0 - 3/5/2019

APPENDIX E

Design Criteria

ASCE 7 Hazards Report

Address:
No Address at This Location

Standard: ASCE/SEI 7-16
Risk Category: II
Soil Class: D - Default (see Section 11.4.3)

Elevation: 495.67 ft (NAVD 88)
Latitude: 41.750128
Longitude: -72.402675

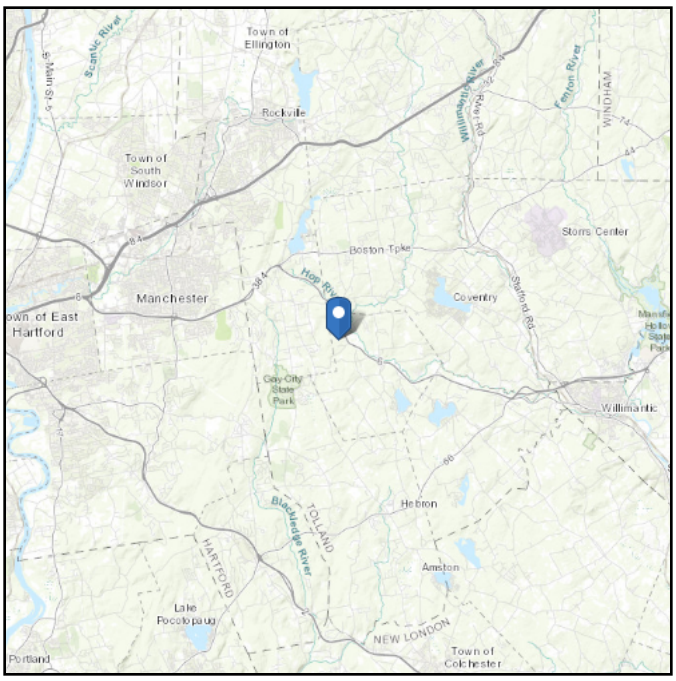

Wind

Results:

Wind Speed:	119 Vmph
10-year MRI	75 Vmph
25-year MRI	84 Vmph
50-year MRI	91 Vmph
100-year MRI	98 Vmph

Data Source:	ASCE/SEI 7-16, Fig. 26.5-1B and Figs. CC.2-1–CC.2-4, and Section 26.5.2
Date Accessed:	Mon Apr 12 2021

Value provided is 3-second gust wind speeds at 33 ft above ground for Exposure C Category, based on linear interpolation between contours. Wind speeds are interpolated in accordance with the 7-16 Standard. Wind speeds correspond to approximately a 7% probability of exceedance in 50 years (annual exceedance probability = 0.00143, MRI = 700 years).

Site is in a hurricane-prone region as defined in ASCE/SEI 7-16 Section 26.2. Glazed openings need not be protected against wind-borne debris.

Seismic

Site Soil Class: D - Default (see Section 11.4.3)

Results:

S_S :	0.193	S_{D1} :	0.088
S_1 :	0.055	T_L :	6
F_a :	1.6	PGA :	0.104
F_v :	2.4	PGA_M :	0.166
S_{MS} :	0.308	F_{PGA} :	1.591
S_{M1} :	0.132	I_e :	1
S_{DS} :	0.205	C_v :	0.7

Seismic Design Category B

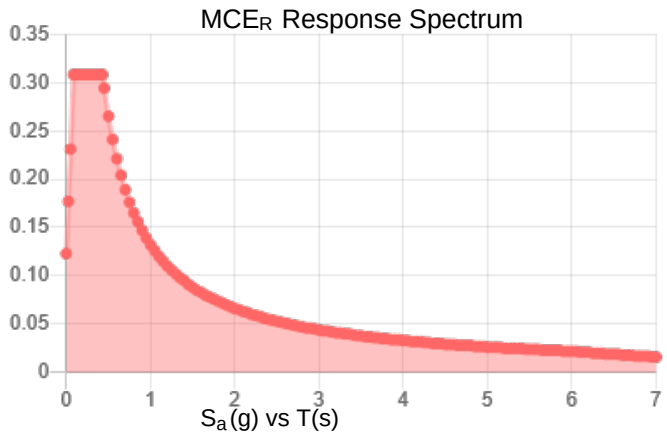

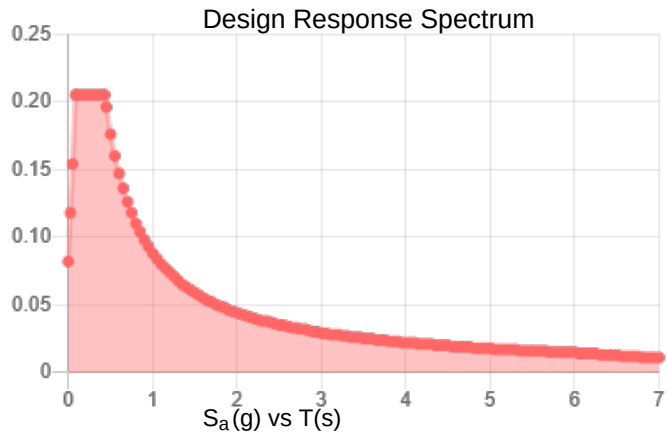

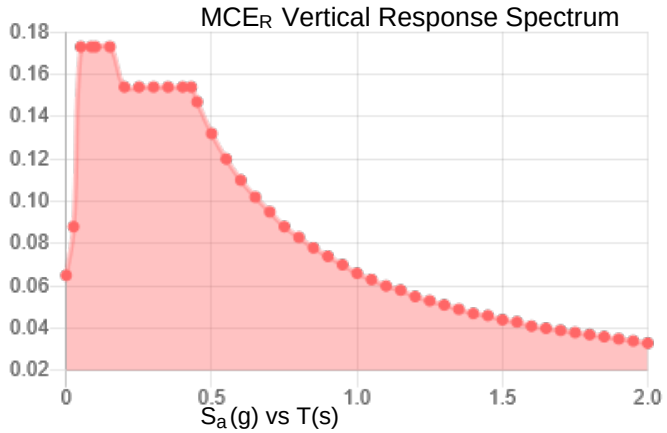

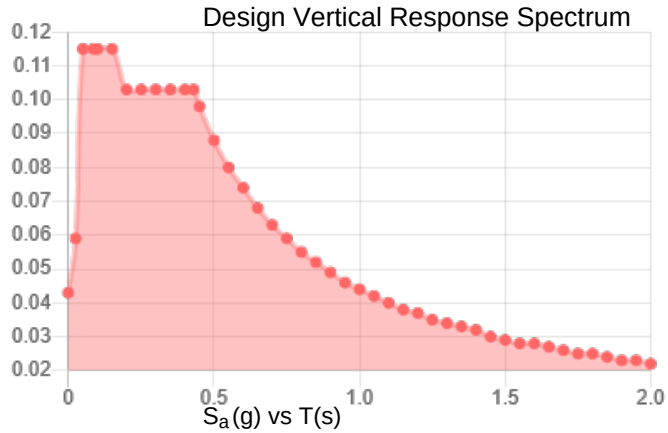

Data Accessed: Mon Apr 12 2021

Date Source: USGS Seismic Design Maps based on ASCE/SEI 7-16 and ASCE/SEI 7-16 Table 1.5-2. Additional data for site-specific ground motion procedures in accordance with ASCE/SEI 7-16 Ch. 21 are available from USGS.

Ice

Results:

Ice Thickness:	1.50 in.
Concurrent Temperature:	15 F
Gust Speed:	50 mph
Data Source:	Standard ASCE/SEI 7-16, Figs. 10-2 through 10-8
Date Accessed:	Mon Apr 12 2021

Ice thicknesses on structures in exposed locations at elevations higher than the surrounding terrain and in valleys and gorges may exceed the mapped values.

Values provided are equivalent radial ice thicknesses due to freezing rain with concurrent 3-second gust speeds, for a 500-year mean recurrence interval, and temperatures concurrent with ice thicknesses due to freezing rain. Thicknesses for ice accretions caused by other sources shall be obtained from local meteorological studies. Ice thicknesses in exposed locations at elevations higher than the surrounding terrain and in valleys and gorges may exceed the mapped values.

The ASCE 7 Hazard Tool is provided for your convenience, for informational purposes only, and is provided “as is” and without warranties of any kind. The location data included herein has been obtained from information developed, produced, and maintained by third party providers; or has been extrapolated from maps incorporated in the ASCE 7 standard. While ASCE has made every effort to use data obtained from reliable sources or methodologies, ASCE does not make any representations or warranties as to the accuracy, completeness, reliability, currency, or quality of any data provided herein. Any third-party links provided by this Tool should not be construed as an endorsement, affiliation, relationship, or sponsorship of such third-party content by or from ASCE.

ASCE does not intend, nor should anyone interpret, the results provided by this Tool to replace the sound judgment of a competent professional, having knowledge and experience in the appropriate field(s) of practice, nor to substitute for the standard of care required of such professionals in interpreting and applying the contents of this Tool or the ASCE 7 standard.

In using this Tool, you expressly assume all risks associated with your use. Under no circumstances shall ASCE or its officers, directors, employees, members, affiliates, or agents be liable to you or any other person for any direct, indirect, special, incidental, or consequential damages arising from or related to your use of, or reliance on, the Tool or any information obtained therein. To the fullest extent permitted by law, you agree to release and hold harmless ASCE from any and all liability of any nature arising out of or resulting from any use of data provided by the ASCE 7 Hazard Tool.

APPENDIX F

Mount Specification Sheets

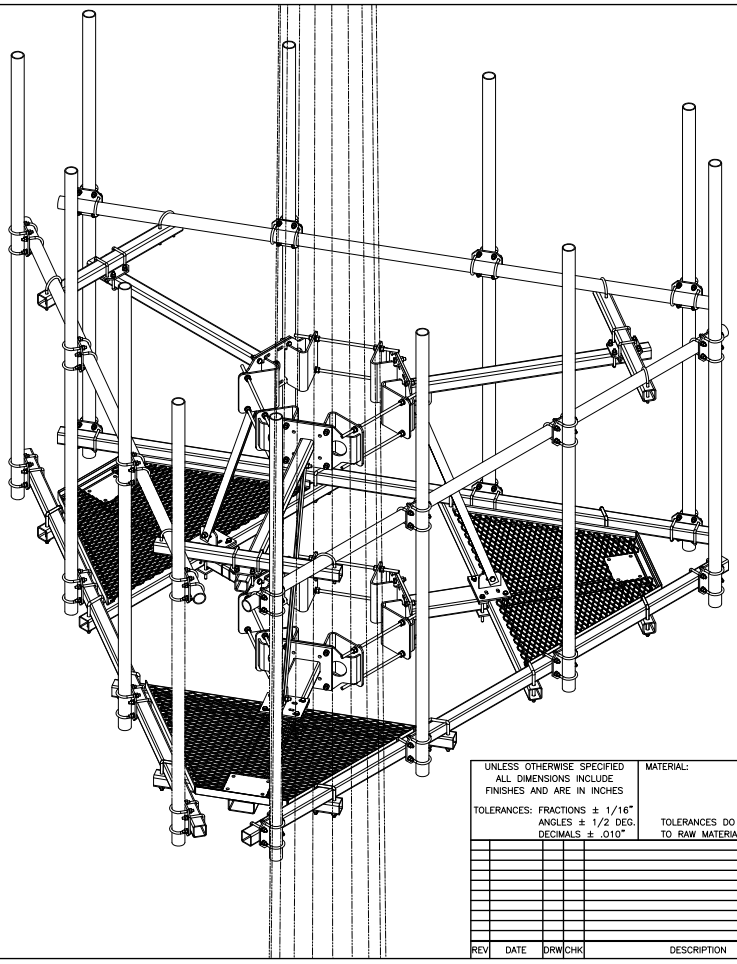

ISOMETRIC VIEW

SEE PAGES 2 & 3
FOR ADDITIONAL DETAILS

C10855721C SABRE 12' HD TENSION PLATFORM W/(12) 2 7/8" O.D. X 10' MTG PIPES

ITEM	QTY.	PART NO.	DESCRIPTION	WEIGHT
1.	1	C10855111C	12' HC PLATFORM ASSEMBLY	913
2.	1	C10112377	TRI-COLLAR BRACKET ASSEMBLY	208
3.	1	C10851301	SUPPORT RAIL/TENSION BRACKET 12'	900
4.	12	C10902025	CROSSOVER PLATE KIT 2 7/8"ø TO 2 7/8"ø PIPES	108
5.	12	C10902502	CROSSOVER PLATE KIT 3" SQ. TUBE TO 2 7/8"ø PIPES	108
6.	12	C10901329	PIPE, 2 7/8" O.D. X .203 X 10'-0	722
			TOTAL WEIGHT	2959

Patent Pending

UNLESS OTHERWISE SPECIFIED
ALL DIMENSIONS INCLUDE
FINISHES AND ARE IN INCHES

TOLERANCES: FRACTIONS ± 1/16"
ANGLES ± 1/2 DEG.
DECIMALS ± .010"

MATERIAL:

TOLERANCES DO NOT APPLY
TO RAW MATERIAL

REV	DATE	DRW	CHK	DESCRIPTION

Sabre Industries™
Towers and Poles

CONFIDENTIAL

This document and the information contained herein is the confidential trade secret property of Sabre Communications Corporation ("Sabre") and must not be reproduced, copied or used, in whole or in part, for any purpose without the prior written consent of Sabre.
© 2016 Sabre Communications Corporation. All rights reserved.

12' HD M.O.V.E. PLATFORM
W/(12) 2 7/8" O.D. X 10' MOUNTING PIPES

		SIZE	DRAWING NO.	REV
DATE	10/18/17	B	C10855721C	0
DRAWN BY	WRF		SCALE	PAGE
CHECKED BY	WMN		None	1 OF 3

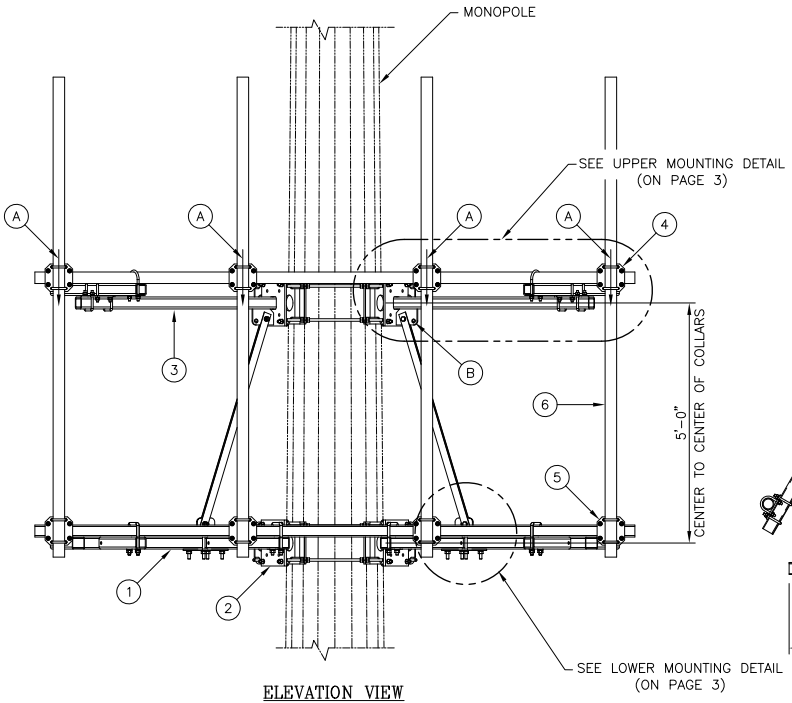

ELEVATION VIEW

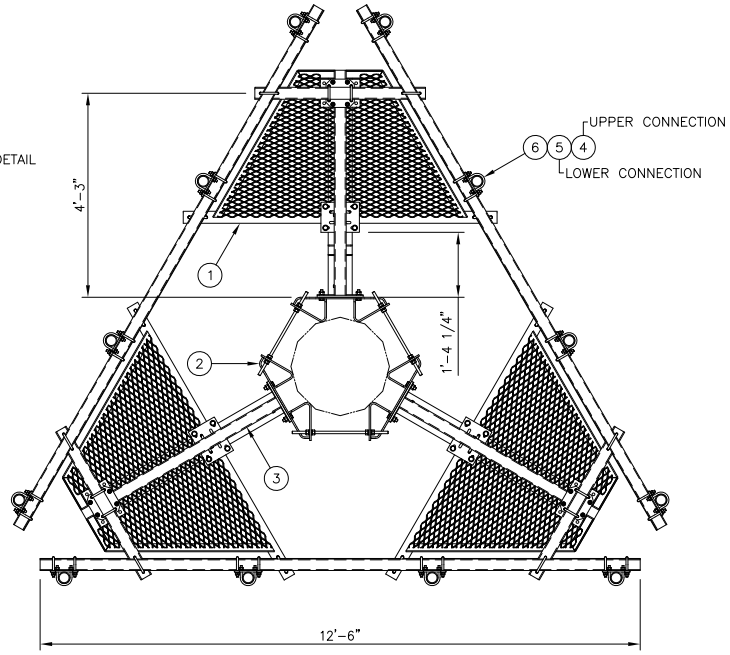

PLAN VIEW

NOTES:

1. SABRE INDUSTRIES RECOMMENDS A FALL PROTECTION PLAN BE COMPLETED AND FOLLOWED BY A COMPETENT PERSON FOR EACH CLIMB.
2. ANY CONSTRUCTION OR MAINTENANCE MUST BE PERFORMED IN ACCORDANCE WITH THE REQUIREMENTS OF ANSI/TIA-222, ANSI/TIA-322 AND ANSI/TIA-1019A.
3. LOCATIONS LABELED "A" HAVE BEEN DESIGNED FOR A 500 LB. VERTICAL LIVE LOAD CONSIDERED WITH A 30 MPH 3-SECOND GUST WIND SPEED. THIS LOAD CAN ONLY BE APPLIED AT ONE LOCATION AT A TIME. ARROW SHOWN REPRESENTS THE VERTICAL LOAD. CONNECTION AND RIGGING TO BE DETERMINED BY A COMPETENT RIGGER IN ACCORDANCE WITH ANSI/TIA-1019A.
4. LOCATIONS LABELED "B" HAVE BEEN DESIGNED FOR A 3600 LB. VERTICAL FACTORED LOAD IN ACCORDANCE WITH TIA-222 SECTION 12.

UNLESS OTHERWISE SPECIFIED
ALL DIMENSIONS INCLUDE FINISHES AND ARE IN INCHES
TOLERANCES: FRACTIONS ± 1/16"
ANGLES ± 1/2 DEG.
DECIMALS ± .010"

MATERIAL:
TOLERANCES DO NOT APPLY TO RAW MATERIAL

REV	DATE	DRW	CHK	DESCRIPTION

Sabre Industries™
Towers and Poles

CONFIDENTIAL
This document and the information contained herein is the confidential trade secret property of Sabre Communications Corporation ("Sabre") and must not be reproduced, copied or used, in whole or in part, for any purpose without the prior written consent of Sabre.
© 2016 Sabre Communications Corporation. All rights reserved.

12' HD M.O.V.E. PLATFORM
W/(12) 2 7/8" O.D. X 10' MOUNTING PIPES

		SIZE	DRAWING NO.	REV
DATE	10/18/17	B	C10855721C	0
DRAWN BY	WRF		SCALE	PAGE
CHECKED BY	WMN		None	2 OF 3

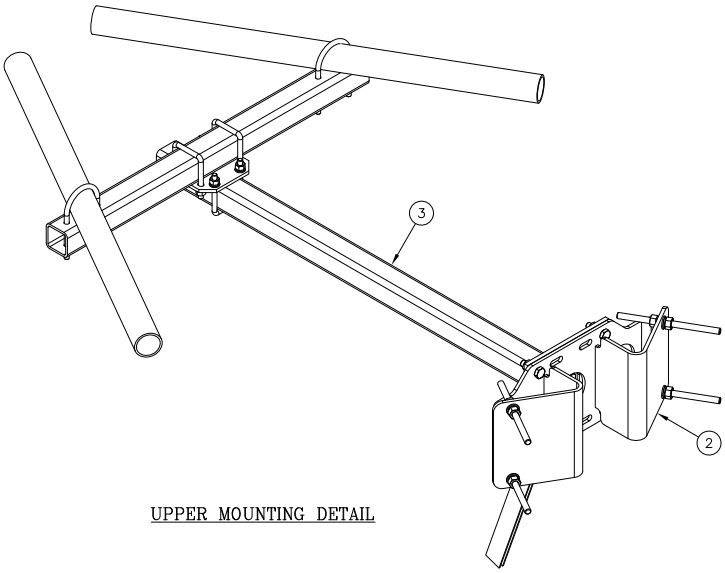

UPPER MOUNTING DETAIL

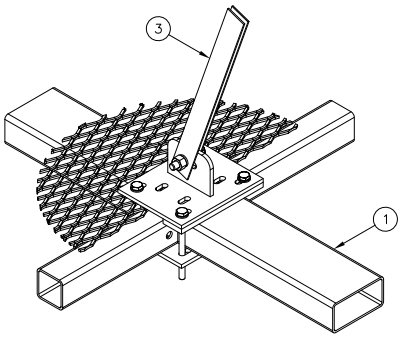

LOWER MOUNTING DETAIL

UNLESS OTHERWISE SPECIFIED
ALL DIMENSIONS INCLUDE
FINISHES AND ARE IN INCHES

TOLERANCES: FRACTIONS ± 1/16"
ANGLES ± 1/2 DEG.
DECIMALS ± .010"

MATERIAL:

TOLERANCES DO NOT APPLY
TO RAW MATERIAL

REV	DATE	DRW	CHK	DESCRIPTION

Sabre Industries™
Towers and Poles

CONFIDENTIAL

This document and the information contained herein is the confidential trade secret property of Sabre Communications Corporation ("Sabre") and must not be reproduced, copied or used, in whole or in part, for any purpose without the prior written consent of Sabre.
© 2016 Sabre Communications Corporation. All rights reserved.

12' HD M.O.V.E. PLATFORM
W/(12) 2 7/8" O.D. X 10' MOUNTING PIPES

		SIZE	DRAWING NO.	REV
DATE	10/18/17	B	C10855721C	0
DRAWN BY	WRF		SCALE	PAGE
CHECKED BY	WMN		None	3 OF 3

Exhibit F

Power Density/RF Emissions Report

RF EMISSIONS COMPLIANCE REPORT

Crown Castle on behalf of AT&T Mobility, LLC

Crown Castle Site Name: ANDOVER NORTH
Crown Castle Site BU Number: 842856
AT&T Mobility, LLC FA: 10070910
AT&T Mobility, LLC USID: 27084
AT&T Mobility, LLC Site ID: CT5860
AT&T Site Name: Andover North
Application ID: 517084
122 Jonathan Trumbull Highway (Route 6)
Andover, CT
6/16/2021

Report Status:

AT&T Mobility, LLC Is Compliant

Michael Fischer, P.E.
Registered Professional Engineer (Electrical)
Connecticut License Number 33928
Expires January 31, 2022

Signed 16 June 2021

Prepared By:

Site Safe, LLC

8618 Westwood Center Drive
Suite 315

Vienna, VA 22182

Voice: 703-276-1100
Fax: 703-276-1169

Engineering Statement in Re:
Electromagnetic Energy Analysis
Crown Castle
Andover, CT

My signature on the cover of this document indicates:

That I am registered as a Professional Engineer in the jurisdiction indicated; and

That I have extensive professional experience in the wireless communications engineering industry; and

That I am an employee of Site Safe, LLC in Vienna, Virginia; and

That I am thoroughly familiar with the Rules and Regulations of the Federal Communications Commission ("the FCC" and "the FCC Rules") both in general and specifically as they apply to the FCC's Guidelines for Human Exposure to Radio Frequency Electromagnetic Fields; and

That the technical information serving as the basis for this report was supplied by Crown Castle on behalf of AT&T Mobility, LLC (see attached Site Summary and Carrier documents) and that AT&T Mobility, LLC's installation involves communications equipment, antennas and associated technical equipment at a location referred to as "ANDOVER NORTH" ("the site"); and

That AT&T Mobility, LLC proposes to operate at the site with transmit antennas listed in the carrier summary and with a maximum effective radiated power as specified by AT&T Mobility, LLC and shown on the worksheet and that worst-case 100% duty cycle has been assumed; and

That this analysis has been performed with the assumption that the ground immediately surrounding the tower is primarily flat or falling; and

That at this time, the FCC requires that certain licensees address specific levels of radio frequency energy to which workers or members of the public might possibly be exposed (at §1.1307(b) of the FCC Rules); and

That such consideration of possible exposure of humans to radio frequency energy must utilize the standards set by the FCC, which is the federal agency having jurisdiction over communications facilities; and

That the FCC rules define two tiers of permissible exposure guidelines: 1) "uncontrolled environments," which defines situations in which persons may not be aware of (the "general public"), or may not be able to control their exposure to a transmission facility; and 2) "controlled environments," which defines situations in which persons are aware of their potential for exposure (industry personnel); and

That this statement specifically addresses the uncontrolled environment (which is more conservative than the controlled environment) and the limit set forth in the FCC rules for licensees of AT&T Mobility, LLC's operating frequencies as shown on the attached antenna worksheet; and

That when applying the uncontrolled environment standards, the predicted Maximum Power Density at two meters above ground level from the proposed AT&T Mobility, LLC operation is no more than 2.932% of the maximum permissible exposure limits in any accessible area on the ground; and

That it is understood per FCC Guidelines and OET 65 Appendix A, that regardless of the existent radio frequency environment, only those licensees whose contributions exceed 5% of the exposure limit pertinent to their operation(s) bear any responsibility for bringing any non-compliant area(s) into compliance; and

That when applying the uncontrolled environment standards, the cumulative predicted energy density from the proposed operation is no more than 9.940% of the maximum in any accessible area up to two meters above the ground per OET 65; and

That the calculations provided in this report are based on data provided by the client and antenna pattern data supplied by the antenna manufacturer, in accordance with FCC guidelines listed in OET 65. Horizontal and vertical antenna patterns are combined for modeling purposes to accurately reflect the energy two meters above ground level where on-axis energy refers to maximum energy two meters above the ground along the azimuth of the antenna and where area energy refers to the maximum energy anywhere two meters above the ground regardless of the antenna azimuth, accounting for cumulative energy from multiple antennas for the carrier(s) and frequency range(s) indicated; and

That the Occupational Safety and Health Administration has policies in place which address worker safety in and around communications sites, thus individual companies will be responsible for their employees' training regarding radio frequency safety; and

In summary, it is stated here that the proposed operation at the site will not result in exposure of the public to excessive levels of radio frequency energy as defined in the FCC Rules and Regulations, specifically 47 CFR 1.1307(b), and that AT&T Mobility, LLC's proposed operation is completely compliant.

Finally, it is stated that access to the tower should be restricted to communication industry professionals and approved contractor personnel trained in radio frequency safety and that this instant analysis addresses exposure levels at two meters above ground level and does not address exposure levels on the tower or in the immediate proximity of the antennas.

Crown Castle
ANDOVER NORTH
Site Summary

Carrier	Area Maximum Percentage MPE
AT&T Mobility, LLC (Proposed)	0.636 %
AT&T Mobility, LLC (Proposed)	0.558 %
AT&T Mobility, LLC (Proposed)	0.547 %
AT&T Mobility, LLC (Proposed)	0.562 %
AT&T Mobility, LLC (Proposed)	0.629 %
T-Mobile	0.300 %
T-Mobile	0.244 %
T-Mobile	0.524 %
T-Mobile	0.207 %
Verizon Wireless	1.788 %
Verizon Wireless	1.740 %
Verizon Wireless	0.730 %
Verizon Wireless	1.475 %
Composite Site MPE:	9.940 %

AT&T Mobility, LLC (Proposed)
ANDOVER NORTH
Carrier Summary

Frequency:	1900	MHz
Maximum Permissible Exposure (MPE):	1000	µW/cm^2
Maximum power density at ground level:	6.35543	µW/cm^2
Highest percentage of Maximum Permissible Exposure:	0.63554	%

					On Axis		Area	
Antenna Make	**Model**	**Height (feet)**	**Orientation (degrees true)**	**ERP (Watts)**	**Max Power Density (µW/cm^2)**	**Percent of MPE**	**Max Power Density (µW/cm^2)**	**Percent of MPE**
CCI Antennas	DMP65R-BU6D	151	40	4075	4.474445	0.447444	5.453649	0.545365
CCI Antennas	DMP65R-BU6D	151	170	4075	5.118257	0.511826	6.306428	0.630643
CCI Antennas	DMP65R-BU6D	151	290	4075	5.10456	0.510456	6.065119	0.606512

AT&T Mobility, LLC (Proposed)
ANDOVER NORTH
Carrier Summary

Frequency:	737	MHz
Maximum Permissible Exposure (MPE):	491.33	µW/cm^2
Maximum power density at ground level:	2.74015	µW/cm^2
Highest percentage of Maximum Permissible Exposure:	0.55770	%

					On Axis		Area	
Antenna Make	**Model**	**Height (feet)**	**Orientation (degrees true)**	**ERP (Watts)**	**Max Power Density (µW/cm^2)**	**Percent of MPE**	**Max Power Density (µW/cm^2)**	**Percent of MPE**
CCI Antennas	DMP65R-BU6D	151	40	2400	2.710541	0.55167	2.725395	0.554694
CCI Antennas	DMP65R-BU6D	151	170	2400	2.710541	0.55167	2.725395	0.554694
CCI Antennas	DMP65R-BU6D	151	290	2400	2.710541	0.55167	2.725395	0.554694

AT&T Mobility, LLC (Proposed)
ANDOVER NORTH
Carrier Summary

Frequency:	2100	MHz
Maximum Permissible Exposure (MPE):	1000	µW/cm^2
Maximum power density at ground level:	5.47382	µW/cm^2
Highest percentage of Maximum Permissible Exposure:	0.54738	%

					On Axis		Area	
Antenna Make	**Model**	**Height (feet)**	**Orientation (degrees true)**	**ERP (Watts)**	**Max Power Density (µW/cm^2)**	**Percent of MPE**	**Max Power Density (µW/cm^2)**	**Percent of MPE**
CCI Antennas	DMP65R-BU6D	151	40	5497	3.208307	0.320831	4.578996	0.457900
CCI Antennas	DMP65R-BU6D	151	170	5497	3.746999	0.374700	5.457549	0.545755
CCI Antennas	DMP65R-BU6D	151	290	5497	3.770832	0.377083	5.219415	0.521942

AT&T Mobility, LLC (Proposed)
ANDOVER NORTH
Carrier Summary

Frequency:	850	MHz
Maximum Permissible Exposure (MPE):	566.67	µW/cm^2
Maximum power density at ground level:	3.18328	µW/cm^2
Highest percentage of Maximum Permissible Exposure:	0.56176	%

					On Axis		Area	
Antenna Make	**Model**	**Height (feet)**	**Orientation (degrees true)**	**ERP (Watts)**	**Max Power Density (µW/cm^2)**	**Percent of MPE**	**Max Power Density (µW/cm^2)**	**Percent of MPE**
CCI Antennas	HPA65R-BU6A	151	40	658	0.714963	0.126170	0.719505	0.126971
CCI Antennas	DMP65R-BU6D	151	40	1120	1.214731	0.214364	1.222989	0.215822
CCI Antennas	DMP65R-BU6D	151	40	1120	1.214731	0.214364	1.222989	0.215822
CCI Antennas	HPA65R-BU6A	151	170	658	0.714963	0.126170	0.719505	0.126971
CCI Antennas	DMP65R-BU6D	151	170	1120	1.214731	0.214364	1.222989	0.215822
CCI Antennas	DMP65R-BU6D	151	170	1120	1.214731	0.214364	1.222989	0.215822
CCI Antennas	HPA65R-BU6A	151	290	658	0.714963	0.126170	0.719505	0.126971
CCI Antennas	DMP65R-BU6D	151	290	1120	1.214731	0.214364	1.222989	0.215822
CCI Antennas	DMP65R-BU6D	151	290	1120	1.214731	0.214364	1.222989	0.215822

AT&T Mobility, LLC (Proposed)
ANDOVER NORTH
Carrier Summary

Frequency:	763	MHz
Maximum Permissible Exposure (MPE):	508.67	µW/cm^2
Maximum power density at ground level:	3.1984	µW/cm^2
Highest percentage of Maximum Permissible Exposure:	0.62878	%

					On Axis		Area	
Antenna Make	**Model**	**Height (feet)**	**Orientation (degrees true)**	**ERP (Watts)**	**Max Power Density (µW/cm^2)**	**Percent of MPE**	**Max Power Density (µW/cm^2)**	**Percent of MPE**
CCI Antennas	HPA65R-BU6A	151	40	2819	1.856419	0.364958	1.897661	0.373066
CCI Antennas	HPA65R-BU6A	151	170	2819	3.173264	0.623839	3.191000	0.627326
CCI Antennas	HPA65R-BU6A	151	290	2819	1.371145	0.269557	1.401823	0.275588

T-Mobile
ANDOVER NORTH
Carrier Summary

Frequency:	700	MHz
Maximum Permissible Exposure (MPE):	466.67	µW/cm^2
Maximum power density at ground level:	1.40127	µW/cm^2
Highest percentage of Maximum Permissible Exposure:	0.30027	%

					On Axis		Area	
Antenna Make	**Model**	**Height (feet)**	**Orientation (degrees true)**	**ERP (Watts)**	**Max Power Density (µW/cm^2)**	**Percent of MPE**	**Max Power Density (µW/cm^2)**	**Percent of MPE**
RFS	APXVAARR24_43-U-NA20	140	0	3484	1.141771	0.244665	1.202739	0.257730
RFS	APXVAARR24_43-U-NA20	140	120	3484	1.141771	0.244665	1.202739	0.257730
RFS	APXVAARR24_43-U-NA20	140	240	3484	1.141771	0.244665	1.202739	0.257730

T-Mobile
ANDOVER NORTH
Carrier Summary

Frequency:	600	MHz
Maximum Permissible Exposure (MPE):	400	µW/cm^2
Maximum power density at ground level:	0.97769	µW/cm^2
Highest percentage of Maximum Permissible Exposure:	0.24442	%

					On Axis		Area	
Antenna Make	**Model**	**Height (feet)**	**Orientation (degrees true)**	**ERP (Watts)**	**Max Power Density (µW/cm^2)**	**Percent of MPE**	**Max Power Density (µW/cm^2)**	**Percent of MPE**
RFS	APXVAARR24_43-U-NA20	140	0	2501	0.888190	0.222048	0.905055	0.226264
RFS	APXVAARR24_43-U-NA20	140	120	2501	0.888190	0.222048	0.905055	0.226264
RFS	APXVAARR24_43-U-NA20	140	240	2501	0.888190	0.222048	0.905055	0.226264

T-Mobile
ANDOVER NORTH
Carrier Summary

Frequency:	2100	MHz
Maximum Permissible Exposure (MPE):	1000	µW/cm^2
Maximum power density at ground level:	5.24443	µW/cm^2
Highest percentage of Maximum Permissible Exposure:	0.52444	%

					On Axis		Area	
Antenna Make	**Model**	**Height (feet)**	**Orientation (degrees true)**	**ERP (Watts)**	**Max Power Density (µW/cm^2)**	**Percent of MPE**	**Max Power Density (µW/cm^2)**	**Percent of MPE**
RFS	APX16DWV-16DWVS-C-A20	140	0	6763	4.955299	0.495530	5.193235	0.519323
RFS	APX16DWV-16DWVS-C-A20	140	120	6763	4.955299	0.495530	5.193235	0.519323
RFS	APX16DWV-16DWVS-C-A20	140	240	6763	4.955299	0.495530	5.193235	0.519323

T-Mobile
ANDOVER NORTH
Carrier Summary

Frequency:	1900	MHz
Maximum Permissible Exposure (MPE):	1000	µW/cm^2
Maximum power density at ground level:	2.06521	µW/cm^2
Highest percentage of Maximum Permissible Exposure:	0.20652	%

					On Axis		Area	
Antenna Make	**Model**	**Height (feet)**	**Orientation (degrees true)**	**ERP (Watts)**	**Max Power Density (µW/cm^2)**	**Percent of MPE**	**Max Power Density (µW/cm^2)**	**Percent of MPE**
RFS	APX16DWV-16DWVS-C-A20	140	0	6763	1.588207	0.158821	1.875333	0.187533
RFS	APX16DWV-16DWVS-C-A20	140	120	6763	1.588207	0.158821	1.875333	0.187533
RFS	APX16DWV-16DWVS-C-A20	140	240	6763	1.588207	0.158821	1.875333	0.187533

Verizon Wireless
ANDOVER NORTH
Carrier Summary

Frequency:	2100	MHz
Maximum Permissible Exposure (MPE):	1000	µW/cm^2
Maximum power density at ground level:	17.87640	µW/cm^2
Highest percentage of Maximum Permissible Exposure:	1.78764	%

					On Axis		Area	
Antenna Make	**Model**	**Height (feet)**	**Orientation (degrees true)**	**ERP (Watts)**	**Max Power Density (µW/cm^2)**	**Percent of MPE**	**Max Power Density (µW/cm^2)**	**Percent of MPE**
Commscope	NHH-65B-R2B	130	0	6763	4.434909	0.443491	7.616429	0.761643
Commscope	NHH-65B-R2B	130	0	6763	4.434909	0.443491	7.616429	0.761643
Commscope	NHH-65B-R2B	130	90	6763	4.434909	0.443491	7.616429	0.761643
Commscope	NHH-65B-R2B	130	90	6763	4.434909	0.443491	7.616429	0.761643
Commscope	NHH-65B-R2B	130	210	6763	4.434909	0.443491	7.616429	0.761643
Commscope	NHH-65B-R2B	130	210	6763	4.434909	0.443491	7.616429	0.761643

Verizon Wireless
ANDOVER NORTH
Carrier Summary

Frequency:	1900	MHz
Maximum Permissible Exposure (MPE):	1000	µW/cm^2
Maximum power density at ground level:	17.40248	µW/cm^2
Highest percentage of Maximum Permissible Exposure:	1.74025	%

					On Axis		Area	
Antenna Make	**Model**	**Height (feet)**	**Orientation (degrees true)**	**ERP (Watts)**	**Max Power Density (µW/cm^2)**	**Percent of MPE**	**Max Power Density (µW/cm^2)**	**Percent of MPE**
Commscope	NHH-65B-R2B	130	0	6027	5.768221	0.576822	7.620179	0.762018
Commscope	NHH-65B-R2B	130	0	6027	5.768221	0.576822	7.620179	0.762018
Commscope	NHH-65B-R2B	130	90	6027	5.768221	0.576822	7.620179	0.762018
Commscope	NHH-65B-R2B	130	90	6027	5.768221	0.576822	7.620179	0.762018
Commscope	NHH-65B-R2B	130	210	6027	5.768221	0.576822	7.620179	0.762018
Commscope	NHH-65B-R2B	130	210	6027	5.768221	0.576822	7.620179	0.762018

Verizon Wireless
ANDOVER NORTH
Carrier Summary

Frequency:	850	MHz
Maximum Permissible Exposure (MPE):	566.67	µW/cm^2
Maximum power density at ground level:	4.13638	µW/cm^2
Highest percentage of Maximum Permissible Exposure:	0.72995	%

					On Axis		Area	
Antenna Make	**Model**	**Height (feet)**	**Orientation (degrees true)**	**ERP (Watts)**	**Max Power Density (µW/cm^2)**	**Percent of MPE**	**Max Power Density (µW/cm^2)**	**Percent of MPE**
Commscope	NHH-65B-R2B	130	0	3091	1.341667	0.236765	1.392413	0.245720
Commscope	NHH-65B-R2B	130	0	3091	1.341667	0.236765	1.392413	0.245720
Commscope	NHH-65B-R2B	130	90	3091	1.341667	0.236765	1.392413	0.245720
Commscope	NHH-65B-R2B	130	90	3091	1.341667	0.236765	1.392413	0.245720
Commscope	NHH-65B-R2B	130	210	3091	1.341667	0.236765	1.392413	0.245720
Commscope	NHH-65B-R2B	130	210	3091	1.341667	0.236765	1.392413	0.245720

Verizon Wireless
ANDOVER NORTH
Carrier Summary

Frequency:	751	MHz
Maximum Permissible Exposure (MPE):	500.67	µW/cm^2
Maximum power density at ground level:	7.38334	µW/cm^2
Highest percentage of Maximum Permissible Exposure:	1.47470	%

					On Axis		Area	
Antenna Make	**Model**	**Height (feet)**	**Orientation (degrees true)**	**ERP (Watts)**	**Max Power Density (µW/cm^2)**	**Percent of MPE**	**Max Power Density (µW/cm^2)**	**Percent of MPE**
Commscope	NHH-65B-R2B	130	0	3021	1.666377	0.332832	2.399894	0.479340
Commscope	NHH-65B-R2B	130	0	3021	1.666377	0.332832	2.399894	0.479340
Commscope	NHH-65B-R2B	130	90	3021	1.666377	0.332832	2.399894	0.479340
Commscope	NHH-65B-R2B	130	90	3021	1.666377	0.332832	2.399894	0.479340
Commscope	NHH-65B-R2B	130	210	3021	1.666377	0.332832	2.399894	0.479340
Commscope	NHH-65B-R2B	130	210	3021	1.666377	0.332832	2.399894	0.479340