AMERICAN TOWER®
CORPORATION

Structural Analysis Report

Structure	:	**225.5 ft Self Supported Tower**
ATC Site Name	:	**Winstead, CT**
ATC Site Number	:	**88019**
Engineering Number	:	**12943526_C3_02**
Proposed Carrier	:	**DISH NETWORK CORPORATION**
Carrier Site Name	:	**ATC - 88019**
Carrier Site Number	:	**CT0100015A**
Site Location	:	**428 Platt Hill Road** **Winsted, CT 06098-2522** **41.898300,-73.116000**
County	:	**Litchfield**
Date	:	**April 14, 2019**
Max Usage	:	**82%**
Result	:	**Pass**

Prepared By:
Timothy Kassakatis
Structural Engineer II

Reviewed By:

STATE OF CONNECTICUT
ESHA KAUSHAL MODI
32598
LICENSED
PROFESSIONAL ENGINEER

Karen Wager
Apr 17 2019 2:10 PM cosign

COA: PEC.0001553

Table of Contents

Introduction 1

Supporting Documents 1

Analysis 1

Conclusion 1

Existing and Reserved Equipment 2

Equipment to be Removed 2

Proposed Equipment 2

Structure Usages 3

Foundations 3

Standard Conditions 4

Calculations ..... Attached

Introduction

The purpose of this report is to summarize results of a structural analysis performed on the 225.5 ft self supported tower to reflect the change in loading by DISH NETWORK CORPORATION.

Supporting Documents

Tower Drawings	TEP Mapping: Job #070513, dated April 5, 2007
Foundation Drawing	TEP Mapping: Job #070513, dated April 5, 2007
Geotechnical Report	TEP Project #070513.02, dated April 4, 2007

Analysis

The tower was analyzed using Power Line Systems tower analysis software. This program considers an elastic three-dimensional model and second-order effects per ANSI/TIA-222.

Basic Wind Speed:	93 mph (3-Second Gust, Vasd) / 120 mph (3-Second Gust, Vult)
Basic Wind Speed w/ Ice:	No Ice Considered
Code:	ANSI/TIA-222-G / 2015 IBC / 2018 Connecticut State Building Code
Structure Class:	II
Exposure Category:	B
Topographic Category:	1
Crest Height:	0 ft

Conclusion

Based on the analysis results, the structure meets the requirements per the applicable codes listed above. The tower and foundation can support the equipment as described in this report.

If you have any questions or require additional information, please contact American Tower via email at Engineering@americantower.com. Please include the American Tower site name, site number, and engineering number in the subject line for any questions.

Existing and Reserved Equipment

Elevation[1] (ft)		Qty	Antenna	Mount Type	Lines	Carrier
Mount	RAD					
226.0	226.0	4	KS15676	Platform w/ Handrails	-	AT&T Mobility
196.0	196.0	3	RFS APXVTM14-C-I20	Sector Frame	(4) 1 1/4" Hybriflex	Sprint Nextel
		3	RFS APXVSPP18-C-A20			
		3	Alcatel-Lucent 800MHz 2X50W RRH w/ Filter			
		3	Alcatel-Lucent 1900MHz 4X45 RRH			
		3	Alcatel-Lucent TD-RRH8x20-25 w/ Solar Shield			
194.0	194.0	1	Andrew DB616E-BC	Side Arm	(1) 1 1/4" Coax	US Dept Of Homeland Security
174.0	174.0	1	Comprod 872F-70SM	Side Arm	(1) 7/8" Coax	All-star Transportation
160.0	160.0	1	Procom CXL 900-3LW	Side Arm	(1) 1/2" Coax	SigfoxS.A.
		1	5" x 3" x 2" Cavity Filter			
		1	Low Noise Amplifier			

Equipment to be Removed

Elevation[1] (ft)		Qty	Antenna	Mount Type	Lines	Carrier
Mount	RAD					
No loading considered as to be removed						

Proposed Equipment

Elevation[1] (ft)		Qty	Antenna	Mount Type	Lines	Carrier
Mount	RAD					
154.0	154.0	3	Ericsson Radio 0208	Stand-Off	(1) 1.08" Hybrid	Dish Network
		2	Ericsson Radio 4415 B70			
		3	Comba ODI2-065R18K-GQ			

[1]Mount elevation is defined as height above bottom of steel structure to the bottom of mount, RAD elevation is defined as center of antenna above ground level (AGL).

Install proposed coax anywhere on tower.

Structure Usages

Structural Component	Controlling Usage	Pass/Fail
Legs	53%	Pass
Diagonals	82%	Pass
Horizontals	47%	Pass
Anchor Bolts	32%	Pass
Lower Diagonal	78%	Pass
Lower Horizontal	41%	Pass

Foundations

Reaction Component	Analysis Reactions	% of Usage
Uplift (Kips)	258.4	30%
Axial (Kips)	160.6	6%

The structure base reactions resulting from this analysis were found to be acceptable through analysis based on geotechnical and foundation information, therefore no modification or reinforcement of the foundation will be required.

AMERICAN TOWER®
CORPORATION

Standard Conditions

All engineering services performed by A.T. Engineering Service, PLLC are prepared on the basis that the information used is current and correct. This information may consist of, but is not limited to the following:

- Information supplied by the client regarding antenna, mounts and feed line loading
- Information from drawings, design and analysis documents, and field notes in the possession of A.T. Engineering Service, PLLC

It is the responsibility of the client to ensure that the information provided to A.T. Engineering Service, PLLC and used in the performance of our engineering services is correct and complete.

All assets of American Tower Corporation, its affiliates and subsidiaries (collectively "American Tower") are inspected at regular intervals. Based upon these inspections and in the absence of information to the contrary, American Tower assumes that all structures were constructed in accordance with the drawings and specifications.

Unless explicitly agreed by both the client and A.T. Engineering Service, PLLC, all services will be performed in accordance with the current revision of ANSI/TIA-222.

All services are performed, results obtained, and recommendations made in accordance with generally accepted engineering principles and practices. A.T. Engineering Service, PLLC is not responsible for the conclusions, opinions and recommendations made by others based on the information supplied herein.

American Tower Corp., Project: "88019 - 2019.04.17"
Tower Version 15.30, 1:29:31 PM Wednesday, April 17, 2019
Undeformed geometry displayed

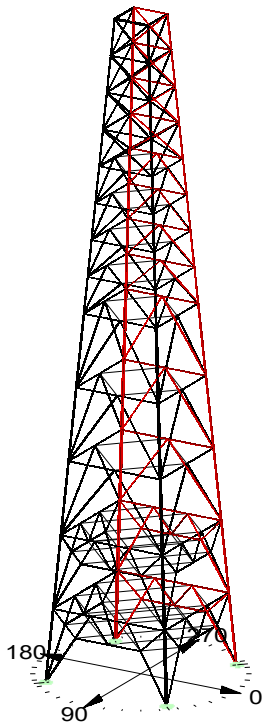

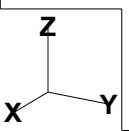

Project Name : 88019 - Winstead, CT
Project Notes: 225' Type 'A' AT&T Tag Tower
Project File : X:\W-Z\Winstead, CT (88019)\12943526 DISH NETWORK CORPORATION\12943526_02_CUST_STRUCTRL\88019 - 2019.04.17.tow
Date run : 1:27:35 PM Wednesday, April 17, 2019
by : Tower Version 15.30
Licensed to : American Tower Corp.

Successfully performed nonlinear analysis

The model has 0 warnings.

Member check option: ANSI/TIA 222-G-1
Connection rupture check: Not Checked
Crossing diagonal check: Fixed
Included angle check: None
Climbing load check: None
Redundant members checked with: Actual Force
Loads from file: X:\W-Z\Winstead, CT (88019)\12943526 DISH NETWORK CORPORATION\12943526_02_CUST_STRUCTRL\88019 - 2019.04.17.eia

*** Analysis Results:

Maximum element usage is 81.70% for Angle "D 4X" in load case "W -90"

Foundation Design Forces For All Load Cases:

Note: loads are factored.

Load Case	Foundation Description	Axial Force (kips)	Shear Force (kips)	Bending Moment (ft-k)	Foundation Usage %
W 0	0P	189.67	32.06	2.35	0.00
W 0	0X	182.93	31.05	2.15	0.00
W 0	0XY	-92.85	18.67	2.67	0.00
W 0	0Y	-94.52	19.39	2.84	0.00
W 180	0P	-91.74	19.25	2.92	0.00
W 180	0X	-90.49	18.60	2.74	0.00
W 180	0XY	180.57	30.94	2.22	0.00
W 180	0Y	186.88	31.92	2.41	0.00
W 45	0P	258.36	43.23	2.43	0.00
W 45	0X	43.52	11.49	2.52	0.00
W 45	0XY	-160.13	29.59	3.09	0.00
W 45	0Y	43.48	11.49	2.52	0.00
W -45	0P	49.09	12.48	2.73	0.00
W -45	0X	252.80	42.61	2.46	0.00
W -45	0XY	43.98	11.30	2.39	0.00
W -45	0Y	-160.64	29.91	3.15	0.00
W 90	0P	189.69	32.06	2.35	0.00
W 90	0X	-94.50	19.40	2.84	0.00
W 90	0XY	-92.82	18.67	2.67	0.00
W 90	0Y	182.86	31.04	2.15	0.00
W -90	0P	-91.76	19.25	2.92	0.00
W -90	0X	186.95	31.92	2.41	0.00
W -90	0XY	180.55	30.93	2.21	0.00
W -90	0Y	-90.50	18.59	2.73	0.00
W 0 Ice	0P	94.93	12.28	1.56	0.00
W 0 Ice	0X	90.86	11.90	1.49	0.00
W 0 Ice	0XY	44.09	4.07	2.04	0.00
W 0 Ice	0Y	46.35	4.13	2.10	0.00
W 180 Ice	0P	49.86	4.44	2.17	0.00
W 180 Ice	0X	47.00	4.30	2.10	0.00
W 180 Ice	0XY	87.95	11.74	1.44	0.00
W 180 Ice	0Y	91.42	12.05	1.51	0.00
W 45 Ice	0P	106.71	14.32	1.36	0.00
W 45 Ice	0X	68.50	8.06	1.82	0.00
W 45 Ice	0XY	32.56	1.89	2.19	0.00
W 45 Ice	0Y	68.46	8.06	1.82	0.00
W -45 Ice	0P	72.39	8.45	1.89	0.00
W -45 Ice	0X	102.82	14.00	1.31	0.00
W -45 Ice	0XY	66.02	7.98	1.77	0.00
W -45 Ice	0Y	35.00	1.99	2.25	0.00
W 90 Ice	0P	94.93	12.28	1.56	0.00
W 90 Ice	0X	46.39	4.13	2.10	0.00
W 90 Ice	0XY	44.10	4.08	2.04	0.00
W 90 Ice	0Y	90.81	11.90	1.49	0.00
W -90 Ice	0P	49.85	4.43	2.17	0.00
W -90 Ice	0X	91.47	12.05	1.51	0.00
W -90 Ice	0XY	87.94	11.74	1.44	0.00
W -90 Ice	0Y	46.96	4.30	2.10	0.00

Summary of Joint Support Reactions For All Load Cases:

Load Case	Joint Label	Long. Force (kips)	Tran. Force (kips)	Vert. Force (kips)	Shear Force (kips)	Tran. Moment (ft-k)	Long. Moment (ft-k)	Bending Moment (ft-k)	Vert. Moment (ft-k)	Found. Usage %
W 0	0P	-27.02	-17.25	-189.67	32.06	-0.23	-2.34	2.35	-0.84	0.00
W 0	0X	-25.73	17.38	-182.93	31.05	0.02	-2.15	2.15	0.84	0.00
W 0	0XY	-16.85	-8.05	92.85	18.67	0.41	-2.64	2.67	0.85	0.00
W 0	0Y	-17.70	7.92	94.52	19.39	-0.34	-2.82	2.84	-0.83	0.00
W 180	0P	17.66	7.65	91.74	19.25	-0.34	2.90	2.92	0.84	0.00
W 180	0X	16.87	-7.82	90.49	18.60	0.41	2.70	2.74	-0.86	0.00
W 180	0XY	25.74	17.15	-180.57	30.94	0.03	2.22	2.22	-0.85	0.00
W 180	0Y	27.02	-16.98	-186.88	31.92	-0.23	2.40	2.41	0.85	0.00
W 45	0P	-30.57	-30.57	-258.36	43.23	1.72	-1.72	2.43	0.00	0.00
W 45	0X	-11.23	-2.48	-43.52	11.49	2.02	-1.50	2.52	1.26	0.00
W 45	0XY	-20.93	-20.92	160.13	29.59	2.18	-2.18	3.09	-0.00	0.00
W 45	0Y	-2.47	-11.22	-43.48	11.49	1.50	-2.02	2.52	-1.26	0.00
W -45	0P	-12.22	2.55	-49.09	12.48	-2.20	-1.63	2.73	-1.26	0.00
W -45	0X	-29.57	30.68	-252.80	42.61	-1.88	-1.58	2.46	-0.00	0.00
W -45	0XY	-1.94	11.13	-43.98	11.30	-1.46	-1.89	2.39	1.27	0.00
W -45	0Y	-21.46	20.84	160.64	29.91	-2.15	-2.31	3.15	0.02	0.00
W 90	0P	-17.25	-27.03	-189.69	32.06	2.34	0.23	2.35	0.84	0.00
W 90	0X	7.92	-17.71	94.50	19.40	2.82	0.34	2.84	0.83	0.00
W 90	0XY	-8.05	-16.85	92.82	18.67	2.64	-0.41	2.67	-0.85	0.00
W 90	0Y	17.38	-25.72	-182.86	31.04	2.15	-0.02	2.15	-0.84	0.00
W -90	0P	7.66	17.67	91.76	19.25	-2.90	0.34	2.92	-0.84	0.00
W -90	0X	-16.98	27.03	-186.95	31.92	-2.40	0.23	2.41	-0.85	0.00
W -90	0XY	17.16	25.74	-180.55	30.93	-2.21	-0.03	2.21	0.85	0.00
W -90	0Y	-7.83	16.87	90.50	18.59	-2.70	-0.41	2.73	0.86	0.00
W 0 Ice	0P	-9.45	-7.84	-94.93	12.28	-1.29	0.87	1.56	-0.14	0.00
W 0 Ice	0X	-8.96	7.84	-90.86	11.90	1.18	0.90	1.49	0.13	0.00
W 0 Ice	0XY	2.07	3.51	-44.09	4.07	1.25	-1.62	2.04	0.14	0.00
W 0 Ice	0Y	2.19	-3.50	-46.35	4.13	-1.31	-1.64	2.10	-0.13	0.00
W 180 Ice	0P	-2.22	-3.84	-49.86	4.44	-1.31	1.73	2.17	0.14	0.00
W 180 Ice	0X	-2.04	3.79	-47.00	4.30	1.24	1.70	2.10	-0.15	0.00
W 180 Ice	0XY	8.99	7.56	-87.95	11.74	1.19	-0.82	1.44	-0.14	0.00
W 180 Ice	0Y	9.43	-7.50	-91.42	12.05	-1.29	-0.79	1.51	0.15	0.00
W 45 Ice	0P	-10.13	-10.13	-106.71	14.32	-0.96	0.96	1.36	0.00	0.00
W 45 Ice	0X	-6.63	4.59	-68.50	8.06	1.52	1.00	1.82	0.20	0.00
W 45 Ice	0XY	1.33	1.33	-32.56	1.89	1.55	-1.55	2.19	-0.00	0.00
W 45 Ice	0Y	4.59	-6.63	-68.46	8.06	-1.00	-1.52	1.82	-0.20	0.00
W -45 Ice	0P	-7.08	-4.60	-72.39	8.45	-1.62	0.98	1.89	-0.21	0.00
W -45 Ice	0X	-9.68	10.12	-102.82	14.00	0.86	0.98	1.31	-0.01	0.00
W -45 Ice	0XY	4.42	6.64	-66.02	7.98	0.93	-1.50	1.77	0.21	0.00
W -45 Ice	0Y	1.49	-1.32	-35.00	1.99	-1.61	-1.56	2.25	0.01	0.00
W 90 Ice	0P	-7.84	-9.46	-94.93	12.28	-0.87	1.29	1.56	0.14	0.00
W 90 Ice	0X	-3.50	2.19	-46.39	4.13	1.64	1.31	2.10	0.13	0.00
W 90 Ice	0XY	3.51	2.07	-44.10	4.08	1.62	-1.25	2.04	-0.14	0.00
W 90 Ice	0Y	7.83	-8.95	-90.81	11.90	-0.90	-1.18	1.49	-0.13	0.00
W -90 Ice	0P	-3.84	-2.22	-49.85	4.43	-1.73	1.31	2.17	-0.14	0.00
W -90 Ice	0X	-7.50	9.43	-91.47	12.05	0.79	1.29	1.51	-0.15	0.00
W -90 Ice	0XY	7.56	8.98	-87.94	11.74	0.82	-1.19	1.44	0.14	0.00
W -90 Ice	0Y	3.78	-2.04	-46.96	4.30	-1.70	-1.24	2.10	0.15	0.00

Summary of Joint Support Reactions For All Load Cases in Direction of Leg:

Load Case	Support Joint	Origin Joint	Leg Member	Force In Leg Dir. (kips)	Residual Shear Perpendicular To Leg (kips)	Residual Shear Horizontal To Leg - Res. (kips)	Residual Shear Horizontal To Leg - Long. (kips)	Residual Shear Horizontal To Leg - Tran. (kips)	Total Long. Force (kips)	Total Tran. Force (kips)	Total Vert. Force (kips)
W 0	0P	1P	L 1P	191.868	13.736	13.790	13.324	3.553	-27.02	-17.25	-189.67
W 0	0X	1X	L 1X	185.082	13.136	13.191	12.514	-4.170	-25.73	17.38	-182.93
W 0	0XY	1XY	L 1XY	-94.155	10.199	10.233	10.144	1.347	-16.85	-8.05	92.85
W 0	0Y	1Y	L 1Y	-95.874	10.897	10.931	10.876	-1.095	-17.70	7.92	94.52
W 180	0P	1P	L 1P	-93.082	11.050	11.084	-11.036	-1.029	17.66	7.65	91.74
W 180	0X	1X	L 1X	-91.791	10.381	10.415	-10.335	1.289	16.87	-7.82	90.49
W 180	0XY	1XY	L 1XY	182.717	13.297	13.352	-12.703	-4.112	25.74	17.15	-180.57
W 180	0Y	1Y	L 1Y	189.079	13.915	13.969	-13.527	3.486	27.02	-16.98	-186.88
W 45	0P	1P	L 1P	261.420	16.758	16.845	11.908	11.915	-30.57	-30.57	-258.36
W 45	0X	1X	L 1X	43.923	9.841	9.843	8.082	5.618	-11.23	-2.48	-43.52
W 45	0XY	1XY	L 1XY	-162.306	13.168	13.237	9.361	9.358	-20.93	-20.92	160.13
W 45	0Y	1Y	L 1Y	43.879	9.835	9.836	5.612	8.078	-2.47	-11.22	-43.48
W -45	0P	1P	L 1P	49.528	10.600	10.602	8.676	-6.093	-12.22	2.55	-49.09
W -45	0X	1X	L 1X	255.819	16.712	16.798	11.313	-12.418	-29.57	30.68	-252.80
W -45	0XY	1XY	L 1XY	44.414	9.454	9.457	5.114	-7.955	-1.94	11.13	-43.98
W -45	0Y	1Y	L 1Y	-162.843	13.440	13.510	9.860	-9.235	-21.46	20.84	160.64
W 90	0P	1P	L 1P	191.892	13.741	13.795	3.548	13.331	-17.25	-27.03	-189.69
W 90	0X	1X	L 1X	-95.854	10.902	10.936	-1.094	10.881	7.92	-17.71	94.50
W 90	0XY	1XY	L 1XY	-94.131	10.197	10.230	1.347	10.141	-8.05	-16.85	92.82
W 90	0Y	1Y	L 1Y	185.014	13.134	13.189	-4.174	12.511	17.38	-25.72	-182.86

W -90	0P	1P	L 1P	-93.106	11.052	11.086	-1.028	-11.038	7.66	17.67	91.76
W -90	0X	1X	L 1X	189.147	13.918	13.971	3.482	-13.530	-16.98	27.03	-186.95
W -90	0XY	1XY	L 1XY	182.693	13.292	13.347	-4.116	-12.697	17.16	25.74	-180.55
W -90	0Y	1Y	L 1Y	-91.810	10.376	10.410	1.290	-10.329	-7.83	16.87	90.50
W 0 Ice	0P	1P	L 1P	95.678	2.767	2.778	2.597	0.988	-9.45	-7.84	-94.93
W 0 Ice	0X	1X	L 1X	91.596	2.700	2.713	2.395	-1.274	-8.96	7.84	-90.86
W 0 Ice	0XY	1XY	L 1XY	44.266	1.155	1.156	1.110	-0.322	2.07	3.51	-44.09
W 0 Ice	0Y	1Y	L 1Y	46.522	1.168	1.170	1.160	0.151	2.19	-3.50	-46.35
W 180 Ice	0P	1P	L 1P	50.036	1.398	1.400	-1.380	0.239	-2.22	-3.84	-49.86
W 180 Ice	0X	1X	L 1X	47.179	1.405	1.407	-1.351	-0.392	-2.04	3.79	-47.00
W 180 Ice	0XY	1XY	L 1XY	88.682	2.884	2.897	-2.635	-1.204	8.99	7.56	-87.95
W 180 Ice	0Y	1Y	L 1Y	92.165	2.951	2.963	-2.823	0.900	9.43	-7.50	-91.42
W 45 Ice	0P	1P	L 1P	107.615	3.407	3.424	2.420	2.423	-10.13	-10.13	-106.71
W 45 Ice	0X	1X	L 1X	68.955	1.719	1.722	1.684	0.361	-6.63	4.59	-68.50
W 45 Ice	0XY	1XY	L 1XY	32.581	1.433	1.440	1.018	1.019	1.33	1.33	-32.56
W 45 Ice	0Y	1Y	L 1Y	68.911	1.719	1.722	0.359	1.684	4.59	-6.63	-68.46
W -45 Ice	0P	1P	L 1P	72.857	1.953	1.955	1.852	-0.626	-7.08	-4.60	-72.39
W -45 Ice	0X	1X	L 1X	103.712	3.491	3.509	2.252	-2.692	-9.68	10.12	-102.82
W -45 Ice	0XY	1XY	L 1XY	66.475	1.902	1.905	0.344	-1.874	4.42	6.64	-66.02
W -45 Ice	0Y	1Y	L 1Y	35.017	1.582	1.590	1.033	-1.209	1.49	-1.32	-35.00
W 90 Ice	0P	1P	L 1P	95.682	2.768	2.780	0.986	2.600	-7.84	-9.46	-94.93
W 90 Ice	0X	1X	L 1X	46.562	1.170	1.172	0.151	1.162	-3.50	2.19	-46.39
W 90 Ice	0XY	1XY	L 1XY	44.270	1.156	1.158	-0.324	1.112	3.51	2.07	-44.10
W 90 Ice	0Y	1Y	L 1Y	91.548	2.701	2.714	-1.276	2.395	7.83	-8.95	-90.81
W -90 Ice	0P	1P	L 1P	50.032	1.396	1.399	0.237	-1.378	-3.84	-2.22	-49.85
W -90 Ice	0X	1X	L 1X	92.213	2.950	2.962	0.899	-2.823	-7.50	9.43	-91.47
W -90 Ice	0XY	1XY	L 1XY	88.678	2.883	2.896	-1.207	-2.632	7.56	8.98	-87.94
W -90 Ice	0Y	1Y	L 1Y	47.139	1.403	1.405	-0.393	-1.349	3.78	-2.04	-46.96

Overturning Moment Summary For All Load Cases:

Load Case	Transverse Moment (ft-k)	Longitudinal Moment (ft-k)	Torsional Moment (ft-k)	Resultant Moment (ft-k)	Transverse Force (kips)	Longitudinal Force (kips)	Vertical Force (kips)
W 0	113.900	-12599.281	54.263	12599.796	-0.000	87.300	185.231
W 180	113.896	12367.721	-54.256	12368.245	-0.000	-87.300	185.231
W 45	9415.105	-9417.069	-0.440	13316.358	65.191	65.191	185.231
W -45	-9187.391	-9417.157	77.187	13156.406	-65.191	65.191	185.231
W 90	12597.318	-115.866	-54.885	12597.851	87.300	-0.000	185.231
W -90	-12369.687	-115.861	54.879	12370.229	-87.300	-0.000	185.231
W 0 Ice	142.375	-2145.124	8.274	2149.844	-0.000	14.148	276.232
W 180 Ice	142.375	1856.443	-8.274	1861.895	-0.000	-14.148	276.232
W 45 Ice	1667.473	-1669.440	-0.072	2359.554	10.839	10.839	276.232
W -45 Ice	-1382.724	-1669.442	11.776	2167.709	-10.839	10.839	276.232
W 90 Ice	2143.157	-144.343	-8.376	2148.012	14.148	-0.000	276.232
W -90 Ice	-1858.411	-144.342	8.376	1864.008	-14.148	-0.000	276.232

EIA Sections Information:

Section Label	Top Z (ft)	Bottom Z (ft)	Joint Count	Member Count	Top Width (ft)	Bottom Width (ft)	Gross Area (ft^2)	Face Adjust Factor	Face Adjust Factor	Dead Load Factor
212.5-225.0	225.000	212.500	8	20	12.50	14.31	167.53	1.1060	1.1060	1.327
200.0-212.5	212.500	200.000	8	16	14.31	16.11	190.10	1.1810	1.1810	1.417
187.5-200.0	200.000	187.500	8	16	16.11	17.92	212.67	1.1810	1.1810	1.418
175.0-187.5	187.500	175.000	12	24	17.92	19.72	235.24	1.1870	1.1870	1.425
162.5-175.0	175.000	162.500	16	24	19.72	21.53	257.81	1.2240	1.2240	1.468
150.0-162.5	162.500	150.000	16	24	21.53	23.33	280.38	1.2300	1.2300	1.476
137.5-150.0	150.000	137.500	16	24	23.33	25.14	302.95	1.2370	1.2370	1.484
125.0-137.5	137.500	125.000	16	24	25.14	26.94	325.52	1.2430	1.2430	1.492
100.0-125.0	125.000	100.000	16	24	26.94	30.56	718.75	1.2740	1.2740	1.529
75.00-100.0	100.000	75.000	16	24	30.56	34.17	800.03	1.2910	1.2910	1.549
50.00-75.00	75.000	50.000	20	32	34.17	37.78	899.31	1.3330	1.3330	1.600
25.00-50.00	50.000	25.000	36	76	37.78	41.39	989.58	1.2110	1.2110	1.453
0.000-25.00	25.000	0.000	28	56	41.39	45.00	1079.86	1.2140	1.2140	1.457

Printed capacities do not include the strength factor entered for each load case.
The Group Summary reports on the member and load case that resulted in maximum usage which may not necessarily be the same as that which produces maximum force.

Group Summary (Compression Portion):

Group Label	Group Desc.	Angle Type	Angle Size	Steel Strength (ksi)	Max Usage Cont-rol %	Max Use In Comp. %	Comp. Control Member	Comp. Force (kips)	Comp. Control Load Case	L/r Capacity (kips)	Comp. Connect. Shear Capacity (kips)	Comp. Connect. Bearing Capacity (kips)	RLX	RLY	RLZ	L/r	KL/r	Length Comp. Member (ft)	Curve No.	No. Of Bolts Comp.
Leg S1	L 8" x 8" x 1.125"	SAE	8X8X1.13	33.0	53.04	Comp 53.04	L 1P	-215.696	W 45	406.679	0.000	0.000	0.333	0.333	0.333	64.43	64.43	25.130	1	0
Leg S2	L 8" x 8" x 1.125"	SAE	8X8X1.13	33.0	45.81	Comp 45.81	L 2P	-186.286	W 45	406.679	0.000	0.000	0.333	0.333	0.333	64.43	64.43	25.130	1	0
Leg S3	L 8" x 8" x 1"	SAE	8X8X1	33.0	49.43	Comp 49.43	L 3P	-180.229	W 45	364.625	0.000	0.000	0.333	0.333	0.333	64.43	64.43	25.130	1	0
Leg S4	L 8" x 8" x 0.875"	SAE	8X8X0.88	33.0	47.50	Comp 47.50	L 4P	-153.161	W 45	322.419	0.000	0.000	0.333	0.333	0.333	64.02	64.02	25.130	1	0
Leg S5	L 8" x 8" x 0.75"	SAE	8X8X0.75	33.0	45.13	Comp 45.13	L 5P	-126.122	W 45	279.493	0.000	0.000	0.333	0.333	0.333	63.61	63.61	25.130	1	0
Leg S6	L 6" x 6" x 0.875"	SAE	6X6X0.88	33.0	45.99	Comp 45.99	L 6P	-108.782	W 45	236.511	0.000	0.000	0.500	0.500	0.500	64.44	64.44	12.565	1	0
Leg S7	L 6" x 6" x 0.875"	SAE	6X6X0.88	33.0	40.17	Comp 40.17	L 7P	-94.995	W 45	236.511	0.000	0.000	0.500	0.500	0.500	64.44	64.44	12.565	1	0
Leg S8	L 6" x 6" x 0.875"	SAE	6X6X0.88	33.0	34.09	Comp 34.09	L 8P	-80.619	W 45	236.511	0.000	0.000	0.500	0.500	0.500	64.44	64.44	12.565	1	0
Leg S9	L 6" x 6" x 0.875"	SAE	6X6X0.88	33.0	27.43	Comp 27.43	L 9P	-64.884	W 45	236.511	0.000	0.000	0.500	0.500	0.500	64.44	64.44	12.565	1	0
Leg S10	L 6" x 6" x 0.625"	SAE	6X6X0.63	33.0	31.29	Comp 31.29	L 10P	-54.256	W 45	173.411	0.000	0.000	0.500	0.500	0.500	63.89	63.89	12.565	1	0
Leg S11	L 6" x 6" x 0.625"	SAE	6X6X0.63	33.0	23.43	Comp 23.43	L 11P	-40.622	W 45	173.411	0.000	0.000	0.500	0.500	0.500	63.89	63.89	12.565	1	0
Leg S12	L 6" x 6" x 0.5"	SAE	6X6X0.5	33.0	18.06	Comp 18.06	L 12X	-25.328	W -45	140.241	0.000	0.000	0.500	0.500	0.500	63.89	63.89	12.565	1	0
Leg S13	L 6" x 6" x 0.5"	SAE	6X6X0.5	33.0	7.55	Comp 7.55	L 13X	-10.584	W -45	140.241	0.000	0.000	0.500	0.500	0.500	63.89	63.89	12.565	1	0
Diag S1	B/B L3"x3"x0.25"	DAE	3X3X0.25	33.0	80.91	Comp 80.91	D 2X	-28.710	W -90	35.483	0.000	0.000	0.333	0.850	0.333	144.44	135.03	19.683	6	0
Diag S2	B/B L3"x3"x0.25"	DAE	3X3X0.25	33.0	81.70	Comp 81.70	D 4X	-29.696	W -90	36.348	0.000	0.000	0.333	0.850	0.333	141.41	133.17	19.271	6	0
Diag S3	B/B L2.5"x3"x0.3125"	DAS	3X2.5X0.31	33.0	63.63	Comp 63.63	D 5X	-20.167	W -90	31.693	0.000	0.000	0.333	0.667	0.333	171.98	151.97	31.386	6	0
Diag S4	B/B L2.5"x3"x0.25"	DAS	3X2.5X0.25	33.0	75.65	Comp 75.65	D 7X	-20.210	W -90	26.716	0.000	0.000	0.333	0.667	0.333	167.36	149.13	30.333	6	0
Diag S5	B/B L2.5"x3"x0.25"	DAS	3X2.5X0.25	33.0	72.93	Comp 72.93	D 9X	-20.381	W -90	27.947	0.000	0.000	0.333	0.667	0.333	161.96	145.81	29.354	6	0
Diag S6	B/B L2.5"x2.5"x0.25"	DAE	2.5X2.5X0.25	33.0	60.42	Comp 60.42	D 11X	-12.640	W -90	20.921	0.000	0.000	0.500	1.000	0.500	185.55	160.31	18.400	6	0
Diag S7	B/B L2.5"x2.5"x0.25"	DAE	2.5X2.5X0.25	33.0	57.66	Comp 57.66	D 13X	-12.695	W -90	22.015	0.000	0.000	0.500	1.000	0.500	178.99	156.28	17.750	6	0
Diag S8	B/B L2.5"x2.5"x0.25"	DAE	2.5X2.5X0.25	33.0	54.51	Comp 54.51	D 16Y	-12.622	W 180	23.154	0.000	0.000	0.500	1.000	0.500	172.66	152.39	17.122	6	0
Diag S9	B/B L2.5"x2.5"x0.25"	DAE	2.5X2.5X0.25	33.0	52.67	Comp 52.67	D 18Y	-12.815	W 180	24.331	0.000	0.000	0.500	1.000	0.500	166.59	148.65	16.520	6	0
Diag S10	L 4" x 3" x 0.25"	SAU	4X3X0.25	33.0	75.85	Comp 75.85	D 19Y	-8.381	W 180	11.050	0.000	0.000	0.520	0.750	0.520	227.11	185.88	22.611	6	0
Diag S11	L 4" x 3" x 0.25"	SAU	4X3X0.25	33.0	67.52	Comp 67.52	D 21Y	-8.252	W 180	12.223	0.000	0.000	0.520	0.750	0.520	212.26	176.74	21.131	6	0
Diag S12	L 3.5" x 3.5" x 0.25"	SAE	3.5X3.5X0.25	33.0	46.95	Comp 46.95	D 24XY	-7.444	W -90	15.856	0.000	0.000	0.520	0.750	0.520	177.19	155.17	19.707	6	0
Diag S13	L 3.5" x 3.5" x 0.25"	SAE	3.5X3.5X0.25	33.0	36.70	Comp 36.70	D 26Y	-6.426	W 90	17.509	0.000	0.000	0.520	0.750	0.520	164.99	147.67	18.349	6	0
Horiz 1	B/B L3.5"x3"x0.3125"	DAL	3.5X3X0.31	33.0	40.52	Comp 40.52	H 2Y	-18.392	W -45	45.387	0.000	0.000	1.000	1.000	1.000	150.51	138.76	13.796	6	0
Horiz 2	B/B L3"x3"x0.3125"	DAE	3X3X0.31	33.0	46.56	Comp 46.56	H 3P	-17.281	W -90	37.116	0.000	0.000	1.000	1.000	1.000	163.89	147.00	12.593	6	0
Horiz 3	B/B L3.5"x2.5"x0.3125"	DAL	3.5X2.5X0.31	33.0	33.96	Comp 33.96	H 5P	-10.531	W -90	31.011	0.000	0.000	1.000	1.000	1.000	186.36	160.81	17.083	6	0
Horiz 4	B/B L3"x2.5"x0.25"	DAL	3X2.5X0.25	33.0	45.14	Comp 45.14	H 7P	-9.791	W -90	21.689	0.000	0.000	1.000	1.000	1.000	194.00	165.51	15.278	6	0
Horiz 5	B/B L3"x2.5"x0.25"	DAL	3X2.5X0.25	33.0	36.96	Comp 36.96	H 9P	-9.580	W -90	25.917	0.000	0.000	1.000	1.000	1.000	171.08	151.41	13.472	6	0
Horiz 6	B/B L2.5"x2.5"x0.25"	DAE	2.5X2.5X0.25	33.0	42.11	Comp 42.11	H 11P	-8.135	W -90	19.319	0.000	0.000	1.000	1.000	1.000	196.14	166.83	12.569	6	0
Horiz 7	B/B L2.5"x2.5"x0.25"	DAE	2.5X2.5X0.25	33.0	37.22	Comp 37.22	H 14P	-8.000	W 180	21.493	0.000	0.000	1.000	1.000	1.000	182.05	158.16	11.667	6	0
Horiz 8	B/B L2.5"x2.5"x0.25"	DAE	2.5X2.5X0.25	33.0	32.44	Comp 32.44	H 16P	-7.805	W 180	24.057	0.000	0.000	1.000	1.000	1.000	167.97	149.50	10.764	6	0
Horiz 9	B/B L2.5"x2.5"x0.25"	DAE	2.5X2.5X0.25	33.0	29.85	Comp 29.85	H 18P	-8.091	W 180	27.107	0.000	0.000	1.000	1.000	1.000	153.88	140.84	9.861	6	0
Horiz 10	B/B L3"x2.5"x0.25"	DAL	3X2.5X0.25	33.0	3.66	Tens 2.99	H 19Y	-1.103	W 0	36.927	0.000	0.000	0.500	0.670	0.500	127.48	124.60	17.917	6	0
Horiz 11	B/B L3"x2.5"x0.25"	DAL	3X2.5X0.25	33.0	3.08	Tens 1.36	H 22P	-0.643	W -90	47.142	0.000	0.000	0.500	0.500	0.500	102.29	102.29	16.111	1	0
Horiz 12	B/B L3.5"x3"x0.3125"	DAL	3.5X3X0.31	33.0	1.58	Tens 0.28	H 24P	-0.238	W -90	85.676	0.000	0.000	0.500	0.500	0.500	78.03	78.03	14.306	1	0
Horiz 13	C8x11.5	CHN	C8x11.5	33.0	1.13	Comp 1.13	H 25Y	-0.230	W 0	20.331	0.000	0.000	1.000	1.000	1.000	240.00	193.80	12.500	6	0
LD 1	B/B L2.5"x2"x0.25"	DAL	2.5X2X0.25	33.0	70.02	Comp 70.02	LD 1X	-13.321	W -45	19.025	0.000	0.000	1.000	1.000	1.000	183.48	159.04	11.987	6	0
LD 2	B/B L2.5"x2.5"x0.25"	DAE	2.5X2.5X0.25	33.0	68.97	Comp 68.97	LD 3X	-18.748	W -90	27.182	0.000	0.000	1.000	1.000	1.000	153.57	140.64	9.841	6	0
LD 3	B/B L2.5"x2.5"x0.25"	DAE	2.5X2.5X0.25	33.0	75.63	Comp 75.63	LD 5P	-18.031	W -90	23.840	0.000	0.000	1.000	1.000	1.000	169.07	150.18	10.834	6	0
LD 4	B/B L2.5"x2"x0.25"	DAL	2.5X2X0.25	33.0	66.42	Comp 66.42	LD 7X	-13.521	W -45	20.356	0.000	0.000	1.000	1.000	1.000	174.88	153.75	11.425	6	0
LD 5	B/B L2.5"x2"x0.25"	DAL	2.5X2X0.25	33.0	74.68	Comp 74.68	LD 9X	-19.124	W -90	25.608	0.000	0.000	1.000	1.000	1.000	147.47	136.90	9.635	6	0
LD 6	B/B L2.5"x2"x0.25"	DAL	2.5X2X0.25	33.0	78.18	Comp 78.18	LD 11P	-17.973	W -90	22.989	0.000	0.000	1.000	1.000	1.000	160.13	144.68	10.462	6	0
LH 1	B/B L3.5"x3.5"x0.3125"	DAE	3.5X3.5X0.31	33.0	40.72	Comp 40.72	LH 1X	-15.441	W -45	37.918	0.000	0.000	1.000	2.000	1.000	181.48	157.81	12.099	6	0
LH 2	B/B L3.5"x3.5"x0.3125"	DAE	3.5X3.5X0.31	33.0	34.87	Comp 34.87	LH 3X	-14.922	W -45	42.789	0.000	0.000	1.000	2.000	1.000	166.43	148.56	11.095	6	0
DUM 1	Dummy Bracing Member	DUM	0.1X0.1X1	36.0	0.00	0.00	BR 7XY	-0.722	W 45	0.324	0.000	0.000	1.000	1.000	1.000	2.59	2.59	21.606	1	0

Group Summary (Tension Portion):

Group Label	Group Desc.	Angle Type	Angle Size	Steel Strength (ksi)	Max Usage Cont-rol %	Max Use In Tens. %	Tension Control Member	Tension Force (kips)	Tension Control Load Case	Net Section Capacity (kips)	Tension Connect. Shear Capacity (kips)	Tension Connect. Bearing Capacity (kips)	Tension Connect. Rupture Capacity (kips)	Length Tens. Member (ft)	No. Of Bolts Tens.	No. Of Holes	Hole Diameter (in)
Leg S1	L 8" x 8" x 1.125"	SAE	8X8X1.13	33.0	53.04	Comp 26.00	L 1XY	129.207	W 45	496.880	0.000	0.000	0.000	25.130	0	0.000	0
Leg S2	L 8" x 8" x 1.125"	SAE	8X8X1.13	33.0	45.81	Comp 23.27	L 2XY	115.629	W 45	496.880	0.000	0.000	0.000	25.130	0	0.000	0
Leg S3	L 8" x 8" x 1"	SAE	8X8X1	33.0	49.43	Comp 25.61	L 3XY	114.108	W 45	445.499	0.000	0.000	0.000	25.130	0	0.000	0
Leg S4	L 8" x 8" x 0.875"	SAE	8X8X0.88	33.0	47.50	Comp 24.42	L 4XY	95.971	W 45	392.930	0.000	0.000	0.000	25.130	0	0.000	0
Leg S5	L 8" x 8" x 0.75"	SAE	8X8X0.75	33.0	45.13	Comp 22.47	L 5XY	76.336	W 45	339.767	0.000	0.000	0.000	25.130	0	0.000	0
Leg S6	L 6" x 6" x 0.875"	SAE	6X6X0.88	33.0	45.99	Comp 23.30	L 6Y	67.339	W -45	288.981	0.000	0.000	0.000	12.565	0	0.000	0
Leg S7	L 6" x 6" x 0.875"	SAE	6X6X0.88	33.0	40.17	Comp 19.74	L 7Y	57.042	W -45	288.981	0.000	0.000	0.000	12.565	0	0.000	0
Leg S8	L 6" x 6" x 0.875"	SAE	6X6X0.88	33.0	34.09	Comp 16.15	L 8XY	46.677	W 45	288.981	0.000	0.000	0.000	12.565	0	0.000	0
Leg S9	L 6" x 6" x 0.875"	SAE	6X6X0.88	33.0	27.43	Comp 12.49	L 9XY	36.096	W 45	288.981	0.000	0.000	0.000	12.565	0	0.000	0
Leg S10	L 6" x 6" x 0.625"	SAE	6X6X0.63	33.0	31.29	Comp 14.42	L 10XY	30.460	W 45	211.167	0.000	0.000	0.000	12.565	0	0.000	0
Leg S11	L 6" x 6" x 0.625"	SAE	6X6X0.63	33.0	23.43	Comp 9.19	L 11XY	19.404	W 45	211.167	0.000	0.000	0.000	12.565	0	0.000	0
Leg S12	L 6" x 6" x 0.5"	SAE	6X6X0.5	33.0	18.06	Comp 4.82	L 12XY	8.236	W 45	170.775	0.000	0.000	0.000	12.565	0	0.000	0
Leg S13	L 6" x 6" x 0.5"	SAE	6X6X0.5	33.0	7.55	Comp 0.12	L 13XY	0.208	W 45	170.775	0.000	0.000	0.000	12.565	0	0.000	0
Diag S1	B/B L3"x3"x0.25"	DAE	3X3X0.25	33.0	80.91	Comp 26.37	D 2P	22.554	W -90	85.536	0.000	0.000	0.000	19.683	0	0.000	0
Diag S2	B/B L3"x3"x0.25"	DAE	3X3X0.25	33.0	81.70	Comp 25.81	D 4P	22.073	W -90	85.536	0.000	0.000	0.000	19.271	0	0.000	0
Diag S3	B/B L2.5"x3"x0.3125"	DAS	3X2.5X0.31	33.0	63.63	Comp 18.41	D 5P	17.717	W -90	96.228	0.000	0.000	0.000	31.386	0	0.000	0
Diag S4	B/B L2.5"x3"x0.25"	DAS	3X2.5X0.25	33.0	75.65	Comp 23.03	D 7P	17.990	W -90	78.111	0.000	0.000	0.000	30.333	0	0.000	0
Diag S5	B/B L2.5"x3"x0.25"	DAS	3X2.5X0.25	33.0	72.93	Comp 24.17	D 9P	18.879	W -90	78.111	0.000	0.000	0.000	29.354	0	0.000	0
Diag S6	B/B L2.5"x2.5"x0.25"	DAE	2.5X2.5X0.25	33.0	60.42	Comp 16.10	D 11P	11.378	W -90	70.686	0.000	0.000	0.000	18.400	0	0.000	0
Diag S7	B/B L2.5"x2.5"x0.25"	DAE	2.5X2.5X0.25	33.0	57.66	Comp 16.31	D 13P	11.530	W -90	70.686	0.000	0.000	0.000	17.750	0	0.000	0
Diag S8	B/B L2.5"x2.5"x0.25"	DAE	2.5X2.5X0.25	33.0	54.51	Comp 16.32	D 16P	11.534	W 180	70.686	0.000	0.000	0.000	17.122	0	0.000	0
Diag S9	B/B L2.5"x2.5"x0.25"	DAE	2.5X2.5X0.25	33.0	52.67	Comp 16.60	D 18P	11.734	W 180	70.686	0.000	0.000	0.000	16.520	0	0.000	0

Diag S10	L 4" x 3" x 0.25"	SAU	4X3X0.25	33.0	75.85	Comp	14.15	D 19Y	7.103	W 0	50.193	0.000	0.000	0.000	22.611	0	0.000	0
Diag S11	L 4" x 3" x 0.25"	SAU	4X3X0.25	33.0	67.52	Comp	14.06	D 21P	7.058	W 180	50.193	0.000	0.000	0.000	21.131	0	0.000	0
Diag S12	L 3.5" x 3.5" x 0.25"	SAE	3.5X3.5X0.25	33.0	46.95	Comp	11.79	D 24XY	5.917	W 90	50.193	0.000	0.000	0.000	19.707	0	0.000	0
Diag S13	L 3.5" x 3.5" x 0.25"	SAE	3.5X3.5X0.25	33.0	36.70	Comp	10.33	D 26Y	5.186	W -90	50.193	0.000	0.000	0.000	18.349	0	0.000	0
Horiz 1	B/B L3.5"x3"x0.3125"	DAL	3.5X3X0.31	33.0	40.52	Comp	19.38	H 1X	22.272	W -45	114.939	0.000	0.000	0.000	13.796	0	0.000	0
Horiz 2	B/B L3"x3"x0.3125"	DAE	3X3X0.31	33.0	46.56	Comp	18.97	H 3X	20.004	W -90	105.435	0.000	0.000	0.000	12.593	0	0.000	0
Horiz 3	B/B L3.5"x2.5"x0.3125"	DAL	3.5X2.5X0.31	33.0	33.96	Comp	10.49	H 5P	11.058	W 90	105.435	0.000	0.000	0.000	17.083	0	0.000	0
Horiz 4	B/B L3"x2.5"x0.25"	DAL	3X2.5X0.25	33.0	45.14	Comp	12.99	H 7X	10.147	W -90	78.111	0.000	0.000	0.000	15.278	0	0.000	0
Horiz 5	B/B L3"x2.5"x0.25"	DAL	3X2.5X0.25	33.0	36.96	Comp	12.43	H 9X	9.711	W -90	78.111	0.000	0.000	0.000	13.472	0	0.000	0
Horiz 6	B/B L2.5"x2.5"x0.25"	DAE	2.5X2.5X0.25	33.0	42.11	Comp	12.37	H 11X	8.746	W -90	70.686	0.000	0.000	0.000	12.569	0	0.000	0
Horiz 7	B/B L2.5"x2.5"x0.25"	DAE	2.5X2.5X0.25	33.0	37.22	Comp	12.03	H 13X	8.505	W -90	70.686	0.000	0.000	0.000	11.667	0	0.000	0
Horiz 8	B/B L2.5"x2.5"x0.25"	DAE	2.5X2.5X0.25	33.0	32.44	Comp	11.38	H 16Y	8.046	W 180	70.686	0.000	0.000	0.000	10.764	0	0.000	0
Horiz 9	B/B L2.5"x2.5"x0.25"	DAE	2.5X2.5X0.25	33.0	29.85	Comp	12.21	H 18P	8.627	W 0	70.686	0.000	0.000	0.000	9.861	0	0.000	0
Horiz 10	B/B L3"x2.5"x0.25"	DAL	3X2.5X0.25	33.0	3.66	Tens	3.66	H 20P	2.860	W 90	78.111	0.000	0.000	0.000	17.917	0	0.000	0
Horiz 11	B/B L3"x2.5"x0.25"	DAL	3X2.5X0.25	33.0	3.08	Tens	3.08	H 22X	2.402	W -90	78.111	0.000	0.000	0.000	16.111	0	0.000	0
Horiz 12	B/B L3.5"x3"x0.3125"	DAL	3.5X3X0.31	33.0	1.58	Tens	1.58	H 24P	1.817	W 90	114.939	0.000	0.000	0.000	14.306	0	0.000	0
Horiz 13	C8x11.5	CHN	C8x11.5	33.0	1.13	Comp	0.33	H 26X	0.327	W -90	100.386	0.000	0.000	0.000	12.500	0	0.000	0
LD 1	B/B L2.5"x2"x0.25"	DAL	2.5X2X0.25	33.0	70.02	Comp	19.62	LD 2Y	12.411	W -45	63.261	0.000	0.000	0.000	11.987	0	0.000	0
LD 2	B/B L2.5"x2.5"x0.25"	DAE	2.5X2.5X0.25	33.0	68.97	Comp	21.03	LD 3P	14.863	W -90	70.686	0.000	0.000	0.000	9.841	0	0.000	0
LD 3	B/B L2.5"x2.5"x0.25"	DAE	2.5X2.5X0.25	33.0	75.63	Comp	26.76	LD 5X	18.917	W -90	70.686	0.000	0.000	0.000	10.834	0	0.000	0
LD 4	B/B L2.5"x2"x0.25"	DAL	2.5X2X0.25	33.0	66.42	Comp	17.69	LD 8Y	11.190	W -45	63.261	0.000	0.000	0.000	11.425	0	0.000	0
LD 5	B/B L2.5"x2"x0.25"	DAL	2.5X2X0.25	33.0	74.68	Comp	23.33	LD 9P	14.760	W -90	63.261	0.000	0.000	0.000	9.635	0	0.000	0
LD 6	B/B L2.5"x2"x0.25"	DAL	2.5X2X0.25	33.0	78.18	Comp	29.64	LD 11X	18.749	W -90	63.261	0.000	0.000	0.000	10.462	0	0.000	0
LH 1	B/B L3.5"x3.5"x0.3125"	DAE	3.5X3.5X0.31	33.0	40.72	Comp	10.90	LH 2Y	13.531	W -45	124.146	0.000	0.000	0.000	12.099	0	0.000	0
LH 2	B/B L3.5"x3.5"x0.3125"	DAE	3.5X3.5X0.31	33.0	34.87	Comp	9.37	LH 4Y	11.630	W -45	124.146	0.000	0.000	0.000	11.095	0	0.000	0
DUM 1	Dummy Bracing Member	DUM	0.1X0.1X1	36.0	0.00		0.00	BR 7X	0.542	W -45	0.324	0.000	0.000	0.000	21.606	0	0.000	0

*** Maximum Stress Summary for Each Load Case

Summary of Maximum Usages by Load Case:

Load Case	Maximum Usage %	Element Label	Element Type
W 0	80.65	D 3P	Angle
W 180	81.68	D 3Y	Angle
W 45	72.02	D 4P	Angle
W -45	75.11	D 4X	Angle
W 90	80.70	D 4P	Angle
W -90	81.70	D 4X	Angle
W 0 Ice	27.03	D 3P	Angle
W 180 Ice	28.21	D 3Y	Angle
W 45 Ice	25.87	D 4P	Angle
W -45 Ice	27.35	D 4X	Angle
W 90 Ice	27.05	D 4P	Angle
W -90 Ice	28.21	D 4X	Angle

*** Weight of structure (lbs):
Weight of Angles*Section DLF: 110646.3
Total: 110646.3

*** End of Report

Site #:	88019	Engineer:	mothy.Kassakatis	Windspeed: No Ice:	93 mph	Ice:	40 mph
Name:	Winstead, CT	Date:	04/17/19	Carrier	Dish Network Corportation		

Taper:	-0.144444	Taper Change:	225	ft	
FW @ Base:	45.00	ft	FW @ Top:	12.5	ft

Spreadsheet Version Last Updated: 11/12/2014

Joint Label	Symmetry Code	X Coord. *(ft)*	Y Coord. *(ft)*	Z Coord. *(ft)*	X Disp. Rest.	Y Disp. Rest.	Z Disp. Rest.	X Rot. Rest.	Y Rot. Rest.	Z Rot. Rest.	Drop Sub-Brace *(Y or Blank)*	# Vert	Drop (ft)	Height (ft)	Type	Count	Z-Elev. (ft)	FW (ft)	# Sub-Brace
0	XY-Symmetry	22.5	22.5	0	Fixed	Fixed	Fixed	Fixed	Fixed	Fixed			8.333	25	2	1	0	45	3
1	XY-Symmetry	20.69444444	20.69444444	25	Free	Free	Free	Free	Free	Free			8.333	25	2	2	25	41.38888889	3
2	XY-Symmetry	18.88888889	18.88888889	50	Free	Free	Free	Free	Free	Free				25	A	3	50	37.77777778	2
3	XY-Symmetry	17.08333333	17.08333333	75	Free	Free	Free	Free	Free	Free				25	A	4	75	34.16666667	2
4	XY-Symmetry	15.27777778	15.27777778	100	Free	Free	Free	Free	Free	Free				25	A	5	100	30.55555556	2
5	XY-Symmetry	13.47222222	13.47222222	125	Free	Free	Free	Free	Free	Free				12.5	A	6	125	26.94444444	1
6	XY-Symmetry	12.56944444	12.56944444	137.5	Free	Free	Free	Free	Free	Free				12.5	A	7	137.5	25.13888889	1
7	XY-Symmetry	11.66666667	11.66666667	150	Free	Free	Free	Free	Free	Free				12.5	A	8	150	23.33333333	1
8	XY-Symmetry	10.76388889	10.76388889	162.5	Free	Free	Free	Free	Free	Free				12.5	A	9	162.5	21.52777778	1
9	XY-Symmetry	9.861111111	9.861111111	175	Free	Free	Free	Free	Free	Free			1	12.5	X	10	175	19.72222222	1
10	XY-Symmetry	8.958333333	8.958333333	187.5	Free	Free	Free	Free	Free	Free			1	12.5	X	11	187.5	17.91666667	1
11	XY-Symmetry	8.055555556	8.055555556	200	Free	Free	Free	Free	Free	Free			1	12.5	X	12	200	16.11111111	1
12	XY-Symmetry	7.152777778	7.152777778	212.5	Free	Free	Free	Free	Free	Free				12.5	X	13	212.5	14.30555556	1
13	XY-Symmetry	6.25	6.25	225	Free	Free	Free	Free	Free	Free						14	225	12.5	
A1	XY-Symmetry	20.69444444	6.898148148	25	Free	Free	Free	Free	Free	Free									
A2	XY-Symmetry	6.898148148	20.69444444	25	Free	Free	Free	Free	Free	Free									
A3	XY-Symmetry	18.88888889	6.296296296	50	Free	Free	Free	Free	Free	Free									
A4	XY-Symmetry	6.296296296	18.88888889	50	Free	Free	Free	Free	Free	Free									
A5	Y-Symmetry	17.08333333	0	75	Free	Free	Free	Free	Free	Free									
A6	X-Symmetry	0	17.08333333	75	Free	Free	Free	Free	Free	Free									
A7	Y-Symmetry	15.27777778	0	100	Free	Free	Free	Free	Free	Free									
A8	X-Symmetry	0	15.27777778	100	Free	Free	Free	Free	Free	Free									
A9	Y-Symmetry	13.47222222	0	125	Free	Free	Free	Free	Free	Free									
A10	X-Symmetry	0	13.47222222	125	Free	Free	Free	Free	Free	Free									
A11	Y-Symmetry	12.56944444	0	137.5	Free	Free	Free	Free	Free	Free									
A12	X-Symmetry	0	12.56944444	137.5	Free	Free	Free	Free	Free	Free									
A13	Y-Symmetry	11.66666667	0	150	Free	Free	Free	Free	Free	Free									
A14	X-Symmetry	0	11.66666667	150	Free	Free	Free	Free	Free	Free									
A15	Y-Symmetry	10.76388889	0	162.5	Free	Free	Free	Free	Free	Free									
A16	X-Symmetry	0	10.76388889	162.5	Free	Free	Free	Free	Free	Free									
A17	Y-Symmetry	9.861111111	0	175	Free	Free	Free	Free	Free	Free									
A18	X-Symmetry	0	9.861111111	175	Free	Free	Free	Free	Free	Free									
H1	XY-Symmetry	21.29627222	12.09855741	16.667	Free	Free	Free	Free	Free	Free									
H2	XY-Symmetry	12.09855741	21.29627222	16.667	Free	Free	Free	Free	Free	Free									
H3	Y-Symmetry	21.29627222	0	16.667	Free	Free	Free	Free	Free	Free									
H4	X-Symmetry	0	21.29627222	16.667	Free	Free	Free	Free	Free	Free									
H5	XY-Symmetry	19.49071667	11.09548704	41.667	Free	Free	Free	Free	Free	Free									
H6	XY-Symmetry	11.09548704	19.49071667	41.667	Free	Free	Free	Free	Free	Free									
H7	Y-Symmetry	19.49071667	0	41.667	Free	Free	Free	Free	Free	Free									
H8	X-Symmetry	0	19.49071667	41.667	Free	Free	Free	Free	Free	Free									

NOTES	
Types:	
1:	Built up Horizs. w/ A
2:	Built up Horizs. w/ M
A:	Typical A brace
X:	Typical X brace
Drop:	Use only for types 1 & 2

# Sections:	13

Legs

Site No.:	88019
Engineer:	Timothy.Kassakatis
Date:	04/17/2019
Carrier:	Dish Network Corportation

When inputting thickness values, include all decimal places.

Tower Section #	Section Elevations *(ft)*	Type of Shape [1]	Diameter or Length *(in)*	Thickness [2] *(in)*	F_Y *(ksi)*
1	0.000-25.00	L	8	1.125	33
2	25.00-50.00	L	8	1.125	33
3	50.00-75.00	L	8	1	33
4	75.00-100.0	L	8	0.875	33
5	100.0-125.0	L	8	0.75	33
6	125.0-137.5	L	6	0.875	33
7	137.5-150.0	L	6	0.875	33
8	150.0-162.5	L	6	0.875	33
9	162.5-175.0	L	6	0.875	33
10	175.0-187.5	L	6	0.625	33
11	187.5-200.0	L	6	0.625	33
12	200.0-212.5	L	6	0.5	33
13	212.5-225.0	L	6	0.5	33

Notes:

[1] Type of Leg Shape: **R** = Round or **P** = Bent Plate or **S** = Schifflerized Angle. **L** = Even Leg

[2] For Solid Round Leg Shapes Thickness Equals Zero.

[3] Adjust for Bent Plate Leg Shapes.

Diagonals

Site No.:	88019
Engineer:	Timothy.Kassakatis
Date:	04/17/2019
Carrier:	Dish Network Corportation

When inputting thickness values, include all decimal places.

Tower Section #	Section Elevations *(ft)*	Type of Shape [1]	Diameter [2] *(in)*	Web Length [3] *(in)*	Flange Length [3] *(in)*	Thickness *(in)*	F_y *(ksi)*	Is Diag. Tension Only? *(Y/N)*
1	0.000-25.00	2L		3	3	0.25	33	
2	25.00-50.00	2L		3	3	0.25	33	
3	50.00-75.00	2L		2.5	3	0.3125	33	
4	75.00-100.0	2L		2.5	3	0.25	33	
5	100.0-125.0	2L		2.5	3	0.25	33	
6	125.0-137.5	2L		2.5	2.5	0.25	33	
7	137.5-150.0	2L		2.5	2.5	0.25	33	
8	150.0-162.5	2L		2.5	2.5	0.25	33	
9	162.5-175.0	2L		2.5	2.5	0.25	33	
10	175.0-187.5	L		4	3	0.25	33	
11	187.5-200.0	L		4	3	0.25	33	
12	200.0-212.5	L		3.5	3.5	0.25	33	
13	212.5-225.0	L		3.5	3.5	0.25	33	

Notes:

[1] Type of Diagonal Shape: **R** = Round, **L** = Single-Angle or **2L** = Double-Angle.

[2] Applies to Pipes and Solid Round Shapes only. For Solid Round Shapes Thickness Equals Zero.

[3] Applies to Single-Angle and Double-Angle Shapes only.

[4] Applies to Double-Angle Shapes only.

[5] Applies to Single-Angle Shapes only.

Horizontals

Site No.:	88019
Engineer:	Timothy.Kassakatis
Date:	04/17/2019
Carrier:	Dish Network Corportation

When inputting thickness values, include all decimal places.

Tower Section #	Section Elevations *(ft)*	Type of Shape [1]	Diameter [2] *(in)*	Web Length [3] *(in)*	Flange Length [3] *(in)*	Thickness *(in)*	F_y *(ksi)*	
1	0.000-25.00	2L		3.5	3	0.3125	33	
2	25.00-50.00	2L		3	3	0.3125	33	
3	50.00-75.00	2L		3.5	2.5	0.25	33	
4	75.00-100.0	2L		3	2.5	0.25	33	
5	100.0-125.0	2L		3	2.5	0.25	33	
6	125.0-137.5	2L		2.5	2.5	0.25	33	
7	137.5-150.0	2L		2.5	2.5	0.25	33	
8	150.0-162.5	2L		2.5	2.5	0.25	33	
9	162.5-175.0	2L		2.5	2.5	0.25	33	
10	175.0-187.5	2L		3	2.5	0.25	33	
11	187.5-200.0	2L		3	2.5	0.25	33	
12	200.0-212.5	2L		3.5	3	0.3125	33	
13	212.5-225.0	C		8	11.5		33	

Notes:

[1] Type of Horizontal Shape: **R** = Round, **L** = Single-Angle, **2L** = Double-Angle, **C** = Channel, **W** = W Shape

[2] Applies to Pipes and Solid Round Shapes only. For Solid Round Shapes Thickness Equals Zero.

[3] Applies to Single-Angle and Double-Angle Shapes only.

[4] Applies to Double-Angle Shapes only.

[5] Applies to Single-Angle Shapes only.

Built-up Diagonals

Site No.:	88019
Engineer:	Timothy.Kassakatis
Date:	04/17/2019
Carrier:	Dish Network Corportation

When inputting thickness values, include all decimal places.
Input diags. from left to center & from base section upward.

Tower Built-up Diag. #	Section Elevations *(ft)*	Type of Shape [1]	Diameter [2] *(in)*	Web Length [3] *(in)*	Flange Length [3] *(in)*	Thickness *(in)*	F_y *(ksi)*
1	0.000-25.00	2L		2.5	2	0.25	33
2	0.000-25.00	2L		2.5	2.5	0.25	33
3	0.000-25.00	2L		2.5	2.5	0.25	33
4	25.00-50.00	2L		2.5	2	0.25	33
5	25.00-50.00	2L		2.5	2	0.25	33
6	25.00-50.00	2L		2.5	2	0.25	33

Notes:

[1] Type of Diagonal Shape: **R** = Round, **L** = Single-Angle or **2L** = Double-Angle.

[2] Applies to Pipes and Solid Round Shapes only. For Solid Round Shapes Thickness Equals Zero.

[3] Applies to Single-Angle and Double-Angle Shapes only.

[4] Applies to Double-Angle Shapes only.

[5] Applies to Single-Angle Shapes only.

Built-up Horizontals

Site No.:	88019
Engineer:	Timothy.Kassakatis
Date:	04/17/2019
Carrier:	Dish Network Corportation

When inputting thickness values, include all decimal places.

Tower Section #	Section Elevations *(ft)*	Type of Shape [1]	Diameter [2] *(in)*	Web Length [3] *(in)*	Flange Length [3] *(in)*	Thickness *(in)*	F_y *(ksi)*	Is Horiz. Tension Only? *(Y/N)*
1	0.000-25.00	2L		3.5	3.5	0.3125	33	
2	25.00-50.00	2L		3.5	3.5	0.3125	33	

Notes:

[1] Type of Horizontal Shape: **R** = Round, **L** = Single-Angle or **2L** = Double-Angle.

[2] Applies to Pipes and Solid Round Shapes only. For Solid Round Shapes Thickness Equals Zero.

[3] Applies to Single-Angle and Double-Angle Shapes only.

[4] Applies to Double-Angle Shapes only.

[5] Applies to Single-Angle Shapes only.

Coax (p. 1 of 2)

Orig by MED, Improved by ABL. Last update 6/25/13 MED

Site No.:	88019
Engineer:	Timothy.Kassakatis
Date:	04/17/19
Carrier:	Dish Network Corportation

Description	From (ft)	To (ft)	Quantity	Shape	Width or Diameter (in)	Perimeter (in)	Unit Weight (lb/ft)	Part of Face Solidity Ratio (Yes/No)	Include in Wind Load (Yes/No)
1 Ladder	0	225	1	Flat	2	8.0	6	Yes	Yes
2 1-1/4" Hybriflex Cable	0	198	4	Round	1.54	4.8	1	Yes	Yes
3 1-1/4" Coax	0	194	1	Round	1.55	4.9	0.63	Yes	Yes
4 7/8" Coax	0	174	1	Round	1.09	3.4	0.33	Yes	Yes
5 1/2" Coax	0	160	1	Round	0.63	2.0	0.15	Yes	Yes
6 Wave Guide	0	225	1	Flat	2	8.0	6	Yes	Yes

Coax (p. 2 of 2)

Site No.:	88019
Engineer:	Timothy.Kassakatis
Date:	04/17/19
Carrier:	Dish Network Corportation

	Exposure	B	α	7	$k_{z\ max}$	2.01
Tia Code: TIA-222-G	Topo Cat:	1	z_g	1200	$k_{z\ min}$	0.7
f			K_e	0.9	K_t	

Description	From (ft)	To (ft)	Quantity	Face # (1-4, A-D)	Coax Width (in)	Coax Shape (Block / Flat / Ind)	% Exposed	Spacing (in)	Shape (Round/Flat)	Block Width (# coax)	Block Depth (# coax)	Perimeter (in)	Unit Weight (lb/ft)	In Face Zone (Yes/No)	Include in Wind Load (Yes/No)
Ladder	0	225	1	A	2.00	**Flat**	100	1	**Flat**	**1**	**1**	**8.0**	**6**	Yes	Yes
1-1/4" Hybriflex Cable	0	198	4	1	1.54	**Ind**	100	1	**Round**	**4**	**1**	**4.8**	**1**	Yes	Yes
1-1/4" Coax	0	194	1	1	1.55	**Ind**	100	1	**Round**	**1**	**1**	**4.9**	**0.63**	Yes	Yes
7/8" Coax	0	174	1	1	1.09	**Ind**	100	1	**Round**	**1**	**1**	**3.4**	**0.33**	Yes	Yes
1/2" Coax	0	160	1	1	0.63	**Ind**	100	1	**Round**	**1**	**1**	**2.0**	**0.15**	Yes	Yes
Wave Guide	0	225	1	1	2.00	**Flat**	100	1	**Flat**	**1**	**1**	**8.0**	**6**	Yes	Yes
								1						No	No
								1						No	No
								1						No	No
								1						No	No
								1						No	No
								1						No	No
								1						No	No
								1						No	No
								1						No	No
								1						No	No
								1						No	No
								1						No	No
								1						No	No
								1						No	No
								1						No	No
								1						No	No
								1						No	No
								1						No	No
								1						No	No
								1						No	No
								1						No	No
								1						No	No
								1						No	No
								1						No	No
								1						No	No
								1						No	No
								1						No	No
								1						No	No
								1						No	No
								1						No	No
								1						No	No
								1						No	No
								1						No	No
								1						No	No
								1						No	No
								1						No	No
								1						No	No
								1						No	No
								1						No	No
								1						No	No
								1						No	No
								1						No	No
								1						No	No
								1						No	No
								1						No	No
								1						No	No
								1						No	No
								1						No	No
								1						No	No
								1						No	No
								1						No	No
								1						No	No
								1						No	No
								1						No	No

Task:	Determine Point Loads	
Tower Height:	225	ft
Gh:	0.85	
Wind Speed:	93	mph, Vasd
Ice Wind Speed:	40	
Ice Density:	56	
Tower Type:	S	

Ice Thick:	0.75	in
Topographic Category (1-4):	1	
Exposure Category (B-D):	B	
Structure Class (1-3):	2	
Height of Crest (H) if Topo Cat. >1:	0	ft
Load Factor; Wind:	1.6	
Load Factor; Dead:	1.2	

Site No.:	88019
Engineer:	Timothy.Kassakatis
Date:	04/17/2019
Carrier:	Dish Network Corportation

No.	Carrier	Elevation (ft)	Quantity	# of Azimuths	Manufacturer	Model	Height (in)	Width (in)	Depth (in)	Weight (lbs/ea)	Flat/Round (F/R)	Reduction	C_AA_C (ft^2)	Weight (k)	Ka
1	-	225	1	1	-	-	1	1	1	1	F	1.000			1
	-	225	1	4	-	Platform w/ HR						1.000	75.00	8.00	1
2	-	206.25	1	1	-	-	1	1	1	1	F	1.000			1
	-	206.25	1	4	-	Catwalk						1.000	70.00	8.00	1
3	-	175	1	1	-	-	1	1	1	1	F	1.000			1
	-	175	1	1	-	Rest Platform						1.000	15.00	0.50	1
4	-	125	1	1	-	-	1	1	1	1	F	1.000			1
	-	125	1	3	-	Platform w/ HR						1.000	80.00	9.00	1
5	-	75	1	1	-	-	1	1	1	1	F	1.000			1
	-	75	1	1	-	Rest Platform						1.000	15.00	0.50	1
6	-	25	1	1	-	-	1	1	1	1	F	1.000			1
	-	25	1	1	-	Rest Platform						1.000	15.00	0.50	1
7		225	4	4			0.001	0.001	0.001	0.001	F	0.001			1
	AT&T	225	4	4	-	Rohr KS15676 Horn						0.850	128.00	2.50	1
8	AT&T	225	4	4	-	-	0.001	0.001	0.001	0.001	F	1.000			1
		225	4	4	-	-						0.001	0.00	0.00	1
9	Sprint	198	3	3	RFS	APXVTM14-C-I20	56.3	12.6	6.3	52.9	F	0.660			0.8
	Sprint	198	3	3	-	Sector Frame						0.750	17.60	0.30	0.75
10	Sprint	198	3	3	RFS	APXVSPP18-C-A20	72	11.8	7	57	F	0.690			0.8
	Sprint	198	3	3	Alcatel-Lucent	800 MHz 2X50W RRH w/ Filter						0.670	2.06	0.06	0.8
11	Sprint	198	3	3	Alcatel-Lucent	1900 MHz 4X45 RRH	25.1	11.1	10.7	60	F	0.670			0.8
	Sprint	198	3	3	Alcatel-Lucent	TD-RRH8x20-25 w/ Solar Shield						0.670	4.05	0.07	0.8
12	US Dept. Of Homeland Security	194	1	1	Andrew	DB616E-BC	231	3.5	3.5	51	F	1.000			1
	US Dept. Of Homeland Security	194	1	1	-	Side Arm						1.000	6.30	0.15	1
13	All-Star Transportation, LLC	174	1	1	Comprod	872F-70SM	126	40	3.5	21	F	1.000			1
	All-Star Transportation, LLC	174	1	1	-	Side Arm						1.000	6.30	0.15	1
14	Sigfox S.A.	160	1	1	Procom	CXL 900-3LW	27.6	0.6	0.6	1.5	F	1.000			1
	Sigfox S.A.	160	1	1	-	Side Arm						1.000	6.30	0.15	1
15	Sigfox S.A.	160	1	1	Generic	5" x 3" x 2" Cavity Filter	5.3	3.2	1.9	1.5	F	1.000			1
	Sigfox S.A.	160	1	1	Generic	Low Noise Amplifier						1.000	0.19	0.50	1
16	Dish Network	154	3	3	Ericsson	Radio 0208	13.8	12.2	3.1	19.8	F	0.648			1
	Dish Network	154	3	3	Generic	Stand-Off						1.000	2.50	0.08	1
17	Dish Network	154	2	2	Ericsson	Radio 4415 B70	16.5	13.5	4.8	38.6	F	0.500			1
	Dish Network	154	3	3	Comba	ODI2-065R18K-GQ						0.600	4.85	0.03	1
18															1
															1
19															1
															1
20															1
															1
21															1
															1
22															1
															1
23															1
															1
24															1
															1
25															1
															1
26															1
															1
27															1
															1
28															1
															1
29															1
															1
30															1
															1
31															1
															1
32															1
															1
33															1
															1
34															1
															1
35															1
															1
36															1
															1
37															1
															1
38															1
															1
39															1
															1
40															1
															1
41															1
															1
42															1
															1
43															1
															1
44															1
															1
45															1
															1
46															1
															1
47															1
															1
48															1
															1
49															1
															1
50															1
															1

No.	Elevation	C_AA_C	C_AA_C (Ice)	Force	Force (Ice)	Weight	Weight (Ice)	60 Azi	Force	F (Ice)	Height	Sum of Forces (No I	
	(ft)	*(ft^2)*	*(ft^2)*	*(lb)*	*(lb)*	*(lb)*	*(lb)*	Mult.	mean	mean	Flag	60 Azi.	180 Azi.
1	225	0.01	0.06	0.310	0.224	1	2	1.00	0.17	0.12			
	225	75.00	101.25	2391.702	373.315	9600	12480	1.00	1315.44	205.32	1.5044444	2392.012192	
2	206.25	0.01	0.06	0.302	0.219	1	2	1.00	0.17	0.12	1.5044454		
	206.25	70.00	94.50	2177.445	339.872	9600	12480	1.00	1197.59	186.93	1.5048485	2177.747152	
3	175	0.01	0.06	0.289	0.209	1	2	1.00	0.16	0.11	1.5048495		
	175	15.00	20.25	445.198	69.490	600	780	1.00	244.86	38.22	1.5057143	445.4862998	
4	125	0.01	0.06	0.262	0.189	1	2	1.00	0.14	0.10	1.5057153		
	125	80.00	108.00	2156.755	336.642	10800	14040	1.00	1186.22	185.15	1.5080000	2157.017124	
5	75	0.01	0.06	0.227	0.164	1	2	1.00	0.12	0.09	1.5080010		
	75	15.00	20.25	349.475	54.549	600	780	1.00	192.21	30.00	1.5133333	349.7020097	
6	25	0.01	0.06	0.174	0.126	1	2	1.00	0.10	0.07	1.5133343		
	25	15.00	20.25	268.753	41.949	600	780	1.00	147.81	23.07	1.5400000	268.9269903	
7	225	0.00	0.00	0.000	0.000	0	0	1.00	0.00	0.00	1.5400010		
	225	435.20	587.52	13878.250	2166.220	12000	15600	1.00	7633.04	1191.42	1.5400010	13878.25038	
8	225	0.00	0.09	0.000	0.323	0	0	1.00	0.00	0.18	1.5400020		
	225	0.00	0.00	0.000	0.000	5	6	1.00	0.00	0.00	1.5044444	13878.25051	
9	198	10.05	12.55	308.884	44.615	190	425	1.00	169.89	24.54	1.5044454		
	198	39.60	53.46	913.146	142.531	1080	1404	1.00	502.23	78.39	1.5044454	1222.029752	
10	198	13.29	15.74	408.563	55.948	205	491	1.00	224.71	30.77	1.5044464		
	198	4.14	5.59	101.844	15.897	230	300	1.00	56.01	8.74	1.5044464	1732.437128	
11	198	4.20	5.24	129.090	18.626	216	354	1.00	71.00	10.24	1.5044474		
	198	8.14	10.99	200.228	31.253	252	328	1.00	110.13	17.19	1.5050505	2061.755193	
12	194	11.23	16.15	343.241	57.062	61	414	1.00	188.78	31.38	1.5050515		
	194	6.30	8.51	192.571	30.058	180	234	1.00	105.91	16.53	1.5051546	535.8121915	
13	174	43.01	51.44	1274.475	176.242	25	1173	1.00	700.96	96.93	1.5051556		
	174	6.30	8.51	186.677	29.138	180	234	1.00	102.67	16.03	1.5057471	1461.152011	
14	160	0.23	0.69	6.654	2.312	2	18	1.00	3.66	1.27	1.5057481		
	160	6.30	8.51	182.256	28.448	180	234	1.00	100.24	15.65	1.5062500	188.9102102	
15	160	0.14	0.31	4.089	1.039	2	8	1.00	2.25	0.57	1.5062510		
	160	0.19	0.26	5.497	0.858	600	780	1.00	3.02	0.47	1.5062500	198.4955471	
16	154	2.73	3.96	78.074	13.112	71	128	1.00	42.94	7.21	1.5062510		
	154	7.50	10.13	214.615	33.499	270	351	1.00	118.04	18.42	1.5064935	292.6888956	
17	154	1.86	2.63	53.117	8.685	93	168	1.00	29.21	4.78	1.5064945		
	154	8.73	11.79	249.812	38.993	90	117	1.00	137.40	21.45	1.5064935	595.6185223	
18					#VALUE!			1.00	#VALUE!	#VALUE!	1.5064945		
								1.00	#VALUE!	#VALUE!	#DIV/0!	#VALUE!	
19					#VALUE!			1.00	#VALUE!	#VALUE!	#DIV/0!		
								1.00	#VALUE!	#VALUE!	#DIV/0!	#VALUE!	
20					#VALUE!			1.00	#VALUE!	#VALUE!	#DIV/0!		
								1.00	#VALUE!	#VALUE!	#DIV/0!	#VALUE!	
21					#VALUE!			1.00	#VALUE!	#VALUE!	#DIV/0!		
								1.00	#VALUE!	#VALUE!	#DIV/0!	#VALUE!	
22					#VALUE!			1.00	#VALUE!	#VALUE!	#DIV/0!		
								1.00	#VALUE!	#VALUE!	#DIV/0!	#VALUE!	
23					#VALUE!			1.00	#VALUE!	#VALUE!	#DIV/0!		
								1.00	#VALUE!	#VALUE!	#DIV/0!	#VALUE!	
24					#VALUE!			1.00	#VALUE!	#VALUE!	#DIV/0!		
								1.00	#VALUE!	#VALUE!	#DIV/0!	#VALUE!	
25					#VALUE!			1.00	#VALUE!	#VALUE!	#DIV/0!		
								1.00	#VALUE!	#VALUE!	#DIV/0!	#VALUE!	
26					#VALUE!			1.00	#VALUE!	#VALUE!	#DIV/0!		
								1.00	#VALUE!	#VALUE!	#DIV/0!	#VALUE!	
27					#VALUE!			1.00	#VALUE!	#VALUE!	#DIV/0!		
								1.00	#VALUE!	#VALUE!	#DIV/0!	#VALUE!	
28					#VALUE!			1.00	#VALUE!	#VALUE!	#DIV/0!		
								1.00	#VALUE!	#VALUE!	#DIV/0!	#VALUE!	
29					#VALUE!			1.00	#VALUE!	#VALUE!	#DIV/0!		
								1.00	#VALUE!	#VALUE!	#DIV/0!	#VALUE!	
30					#VALUE!			1.00	#VALUE!	#VALUE!	#DIV/0!		
								1.00	#VALUE!	#VALUE!	#DIV/0!	#VALUE!	
31					#VALUE!			1.00	#VALUE!	#VALUE!	#DIV/0!		
								1.00	#VALUE!	#VALUE!	#DIV/0!	#VALUE!	
32					#VALUE!			1.00	#VALUE!	#VALUE!	#DIV/0!		
								1.00	#VALUE!	#VALUE!	#DIV/0!	#VALUE!	
33					#VALUE!			1.00	#VALUE!	#VALUE!	#DIV/0!		
								1.00	#VALUE!	#VALUE!	#DIV/0!	#VALUE!	
34					#VALUE!			1.00	#VALUE!	#VALUE!	#DIV/0!		
								1.00	#VALUE!	#VALUE!	#DIV/0!	#VALUE!	
35					#VALUE!			1.00	#VALUE!	#VALUE!	#DIV/0!		
								1.00	#VALUE!	#VALUE!	#DIV/0!	#VALUE!	
36					#VALUE!			1.00	#VALUE!	#VALUE!	#DIV/0!		
								1.00	#VALUE!	#VALUE!	#DIV/0!	#VALUE!	
37					#VALUE!			1.00	#VALUE!	#VALUE!	#DIV/0!		
								1.00	#VALUE!	#VALUE!	#DIV/0!	#VALUE!	
38					#VALUE!			1.00	#VALUE!	#VALUE!	#DIV/0!		
								1.00	#VALUE!	#VALUE!	#DIV/0!	#VALUE!	
39					#VALUE!			1.00	#VALUE!	#VALUE!	#DIV/0!		
								1.00	#VALUE!	#VALUE!	#DIV/0!	#VALUE!	
40					#VALUE!			1.00	#VALUE!	#VALUE!	#DIV/0!		
								1.00	#VALUE!	#VALUE!	#DIV/0!	#VALUE!	
41					#VALUE!			1.00	#VALUE!	#VALUE!	#DIV/0!		
								1.00	#VALUE!	#VALUE!	#DIV/0!	#VALUE!	
42					#VALUE!			1.00	#VALUE!	#VALUE!	#DIV/0!		
								1.00	#VALUE!	#VALUE!	#DIV/0!	#VALUE!	
43					#VALUE!			1.00	#VALUE!	#VALUE!	#DIV/0!		
								1.00	#VALUE!	#VALUE!	#DIV/0!	#VALUE!	
44					#VALUE!			1.00	#VALUE!	#VALUE!	#DIV/0!		
								1.00	#VALUE!	#VALUE!	#DIV/0!	#VALUE!	
45					#VALUE!			1.00	#VALUE!	#VALUE!	#DIV/0!		
								1.00	#VALUE!	#VALUE!	#DIV/0!	#VALUE!	
46					#VALUE!			1.00	#VALUE!	#VALUE!	#DIV/0!		
								1.00	#VALUE!	#VALUE!	#DIV/0!	#VALUE!	
47					#VALUE!			1.00	#VALUE!	#VALUE!	#DIV/0!		
								1.00	#VALUE!	#VALUE!	#DIV/0!	#VALUE!	
48					#VALUE!			1.00	#VALUE!	#VALUE!	#DIV/0!		
								1.00	#VALUE!	#VALUE!	#DIV/0!	#VALUE!	
49					#VALUE!			1.00	#VALUE!	#VALUE!	#DIV/0!		
								1.00	#VALUE!	#VALUE!	#DIV/0!	#VALUE!	
50					#VALUE!			1.00	#VALUE!	#VALUE!	#DIV/0!		
								1.00	#VALUE!	#VALUE!	#DIV/0!	#VALUE!	

Foundation

Site No.:	88019
Engineer:	Timothy.Kassakatis
Date:	04/17/19
Carrier:	Dish Network Corportation

Design Loads (Factored)

Compression/Leg:	258.36	k
Uplift/Leg:	160.64	k
Shear/Leg	43.23	k

Face Width @ Top of Pier (d_1):	3.50	ft
Face Width @ Bottom of Pier (d_2):	8.50	ft
Total Length of Pier (l):	9.50	ft
Height of Pedestal Above Ground (h):	0.50	ft
Width of Pad (W):	20.50	ft
Length of Pad (L):	20.50	ft
Thickness of Pad (t):	2.00	ft
Water Table Depth (w):	30.00	ft
Unit Weight of Concrete:	150.0	pcf
Unit Weight of Soil (Above Water Table):	115.0	pcf
Unit Weight of Soil (Below Water Table):	52.6	pcf
Friction Angle of Uplift (A):	20	°
Ultimate Compressive Bearing Pressure:	9000	psf
Ultimate Skin Friction:	0	psf

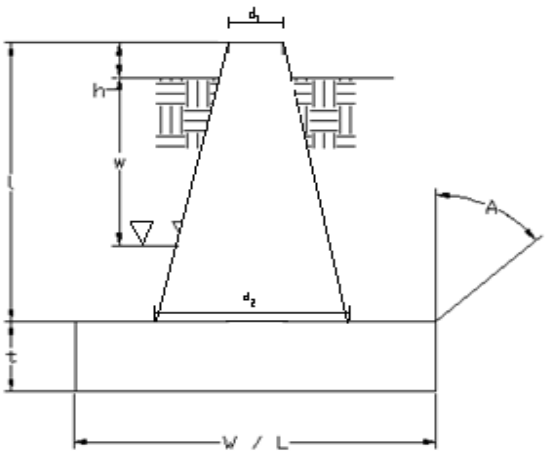

Volume Pier (Total):	361.79	ft^3
Volume Pad (Total):	840.50	ft^3
Volume Soil (Total):	4736.93	ft^3
Volume Pier (Buoyant):	0.00	ft^3
Volume Pad (Buoyant):	0.00	ft^3
Volume Soil (Buoyant):	0.00	ft^3
Weight Pier:	54.27	k
Weight Pad:	126.08	k
Weight Soil:	544.75	k
Uplift Skin Friction:	0.00	k

Uplift Check

ϕs Uplift Resistance (k)	Ratio	Result
543.82	0.30	**OK**

Axial Check

ϕs Axial Resistance (k)	Ratio	Result
2836.69	0.09	**OK**

Anchor Bolt Check

Bolt Diameter (in)	2.5
# of Bolts	4
Steel Grade	A36
Steel Fy	36
Steel Fu	58
Detail Type	C

Usage Ratio	Result
0.32	**OK**