DISH WIRELESS FIRST TIME INSTALL
CONSTRUCTION DRAWINGS

DISH WIRELESS SITE ID:

CT0100015A

TOWER OWNER SITE ID:

88019

SITE ADDRESS:

428 PLATT HILL ROAD
WINSTED, CT 06098
COUNTY: LITCHFIELD

SITE SUMMARY

PROJECT SCOPE:	PROJECT CONSISTS OF INSTALLING PROPOSED DISH WIRELESS TELECOMMUNICATION EQUIPMENT, CABLING, AND ANTENNAS AT AN EXISTING TELECOMMUNICATION SITE
SITE TYPE:	CO-LOCATION
TYPE OF OCCUPANCY:	TELECOMMUNICATIONS
TOWER TYPE:	SELF SUPPORT TOWER
TOWER HEIGHT:	225'
RAD CENTER:	154'
TOWER LATITUDE:	41° 53' 53.83" N (41.89828611)
TOWER LONGITUDE:	73° 6' 57.64" W (-73.11601111)
ZONING JURISDICTION:	LITCHFIELD COUNTY
COUNTY:	LITCHFIELD
PARCEL NUMBER:	019077
POWER COMPANY:	EVER SOURCE (877) 659-6326
TELEPHONE COMPANY:	FRONTIER COMMUNICATIONS (800) 376-6843

PROJECT DIRECTORY

TOWER MANAGER:	AMERICAN TOWER 10 PRESIDENTIAL WAY WOBURN, MA 01801 PHONE: (813) 960-6200
APPLICANT:	DISH WIRELESS 9601 S MERIDIAN BLVD ENGLEWOOD, CO 80112 PHONE: (866) 624-6874
SITE DESIGNER:	AMERICAN TOWER 10 PRESIDENTIAL WAY WOBURN, MA 01801 PHONE: (813) 960-6200

GENERAL NOTES

THE FACILITY IS UNMANNED AND NOT FOR HUMAN HABITATION, THEREFORE HANDICAP ACCESS IS NOT REQUIRED. A TECHNICIAN WILL VISIT THE SITE AS REQUIRED FOR ROUTINE MAINTENANCE. THE PROJECT WILL NOT RESULT IN ANY SIGNIFICANT DISTURBANCE OR EFFECT ON DRAINAGE; NO SANITARY SEWER SERVICE, POTABLE WATER, OR TRASH DISPOSAL IS REQUIRED AND NO COMMERCIAL SIGNAGE IS PROPOSED.

UNDERGROUND
SERVICE ALERT

CALL 811

48 HOURS BEFORE YOU DIG

VICINITY MAP

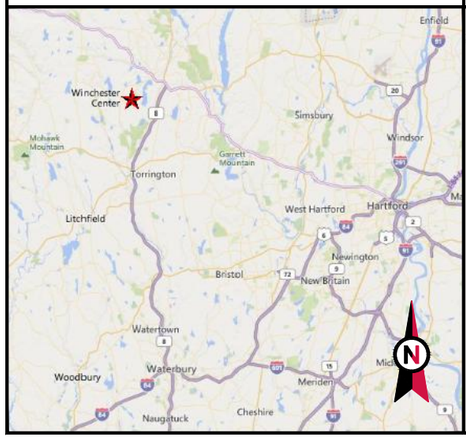

LOCAL MAP

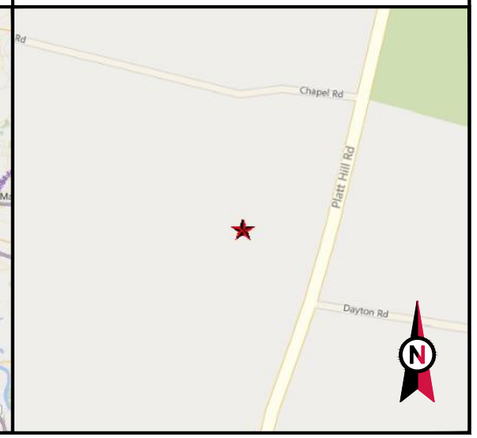

CODE COMPLIANCE

ALL WORK AND MATERIALS SHALL BE PERFORMED AND INSTALLED IN ACCORDANCE WITH THE CURRENT EDITIONS OF THE FOLLOWING CODES AS ADOPTED BY THE LOCAL GOVERNING AUTHORITIES. NOTHING IN THESE PLANS IS TO BE CONSTRUED TO PERMIT WORK NOT CONFORMING TO THE LATEST EDITIONS OF THE FOLLOWING:

- INTERNATIONAL BUILDING CODE (LOCALLY ADOPTED
- NATIONAL ELECTRIC CODE (LOCALLY ADOPTED)
- ANSI/TIA/EIA-222-G
- LOCAL BUILDING CODE
- CITY/COUNTY ORDINANCES
- FAA COMPLIANCE
- FCC COMPLIANCE

DISH WIRELESS PROJECT MANAGER APPROVAL:

SIGNATURE DATE

CONSTRUCTION MANAGER APPROVAL:

SIGNATURE DATE

LEASING/SITE ACQUISITION:

SIGNATURE DATE

RF ENGINEER:

SIGNATURE DATE

LANDLORD/TOWER OWNER APPROVAL:

SIGNATURE DATE

SHEET INDEX

SHEET NO:	DESCRIPTION:	REV:	DATE:	BY:
T-1	TITLE SHEET	0	06/03/19	TC
GN-1	GENERAL NOTES	0	06/03/19	TC
GN-2	GENERAL NOTES	0	06/03/19	TC
EN-1	ELECTRICAL NOTES	0	06/03/19	TC
EN-2	ELECTRICAL NOTES	0	06/03/19	TC
C-1	COMPOUND PLAN	0	06/03/19	TC
C-2	EQUIPMENT PLAN	0	06/03/19	TC
C-3	TOWER ELEVATION & ANTENNA LAYOUT	0	06/03/19	TC
1 OF 3	ANTENNA SCHEDULE & DIAGRAM			
2 OF 3	CABLE COLOR CODE			
3 OF 3	ANTENNA MOUNT DETAILS			
C-4	EQUIPMENT DETAILS	0	06/03/19	TC
C-5	EQUIPMENT DETAILS			
C-6	EQUIPMENT DETAILS			
C-7	CIVIL DETAILS	0	06/03/19	TC
E-1	UTILITY PLANS	0	06/03/19	TC
E-2	ELECTRICAL DETAILS	0	06/03/19	TC
G-1	GROUNDING NOTES & DETAILS	0	06/03/19	TC
G-2	GROUNDING NOTES & DETAILS	0	06/03/19	TC
G-3	GROUNDING NOTES & DETAILS	0	06/03/19	TC
RF-1	RF DATA SHEET			
RF-2	PLUMBING DIAGRAM			

AMERICAN TOWER®
A.T. ENGINEERING SERVICE, PLLC
3500 REGENCY PARKWAY
SUITE 100
CARY, NC 27518
PHONE: (919) 468-0112
COA: P-1177

SEAL:

STATE OF CONNECTICUT
PATRICK P. BARRY
28959
LICENSED
PROFESSIONAL ENGINEER

Authorized by "EOR"
Jun 11 2019 3:57 PM

cosign

DRAWN BY:	TC
APPROVED BY:	PPB
DATE DRAWN:	06/03/19

REV.	DESCRIPTION	BY	DATE
0	FOR CONSTRUCTION	TC	06/03/19

THESE DRAWINGS AND/OR THE ACCOMPANYING SPECIFICATION AS INSTRUMENTS OR SERVICE ARE THE EXCLUSIVE PROPERTY OF AMERICAN TOWER. THEIR USE AND PUBLICATION SHALL BE RESTRICTED TO THE ORIGINAL SITE FOR WHICH THEY ARE PREPARED. ANY USE OR DISCLOSURE OTHER THAN THAT WHICH RELATES TO AMERICAN TOWER OR THE SPECIFIED CARRIER IS STRICTLY PROHIBITED. TITLE TO THESE DOCUMENTS SHALL REMAIN THE PROPERTY OF AMERICAN TOWER WHETHER OR NOT THE PROJECT IS EXECUTED. NEITHER THE ARCHITECT NOR THE ENGINEER WILL BE PROVIDING ON-SITE CONSTRUCTION REVIEW OF THIS PROJECT. CONTRACTOR(S) MUST VERIFY ALL DIMENSIONS AND ADVISE AMERICAN TOWER OF ANY DISCREPANCIES. ANY PRIOR ISSUANCE OF THIS DRAWING IS SUPERSEDED BY THE LATEST VERSION ON FILE WITH AMERICAN TOWER.

ATC PROJECT NUMBER:
12963795

DISH WIRELESS SITE NUMBER:
CT0100015A

ATC SITE NUMBER:
88019

SITE ADDRESS:
428 PLATT HILL ROAD
WINSTED, CT 06098

TITLE SHEET

SHEET NUMBER: T-1

REVISION: 0

Copyright © 2019 ATC IP LLC. All Rights Reserved.

GENERAL NOTES:

1. EVERY EFFORT HAS BEEN MADE IN THE CONSTRUCTION DOCUMENTS TO PROVIDE A COMPLETE SCOPE OF WORK. MINOR DISCREPANCIES IN THE DRAWINGS AND/OR SPECIFICATIONS SHALL NOT EXCUSE CONTRACTORS FROM COMPLETING THE PROJECT AND IMPROVEMENTS IN ACCORDANCE WITH THE INTENT OF THESE DOCUMENTS.

2. ALL REFERENCES TO OWNER HEREIN SHALL BE CONSTRUED TO MEAN THE CARRIER OR ITS DESIGNATED REPRESENTATIVE.

3. BIDDING REQUIREMENTS
   a. PRIOR TO THE SUBMISSION OF BIDS, VISIT THE JOB SITE TO BECOME FAMILIAR WITH ALL CONDITIONS AFFECTING THE PROPOSED PROJECT. VISIT THE SITE WITH THE CONSTRUCTION DOCUMENTS TO VERIFY FIELD DIMENSIONS AND CONDITIONS TO CONFIRM THAT THE PROJECT WILL BE ACCOMPLISHED AS SHOWN.
   b. PROVIDE NOTIFICATION TO OWNER IN WRITING OF ANY CONFLICTS, ERRORS, OR OMISSIONS PRIOR TO SUBMISSION OF PRICE PROPOSAL. IN THE EVENT OF DISCREPANCIES, PRICE THE MORE COSTLY OR EXTENSIVE WORK, UNLESS DIRECTED OTHERWISE.
   c. WHEN TOWER IS OWNED BY A THIRD PARTY, CONTACT TOWER OWNER REPRESENTATIVE FOR PARTICIPATION IN BID WALK.
   d. WHERE ANCHORING TO A CONCRETE ROOF SLAB, CONFIRM (PRIOR TO SUBMITTING BID) THE PRESENCE OF POST TENSION TENDONS. INCLUDE PROVISIONS FOR X-RAY PROCEDURES TO LOCATE THE TENDONS PRIOR TO CONSTRUCTION.

4. DRAWINGS ARE NOT TO BE SCALED. WRITTEN DIMENSIONS TAKE PRECEDENCE. CONSTRUCTION DOCUMENTS ARE INTENDED FOR DIAGRAMMATIC PURPOSES ONLY, UNO.

5. FIELD VERIFY ALL DIMENSIONS, ELEVATIONS AND EXISTING CONDITIONS PRIOR TO BEGINNING ANY MATERIALS ORDERING, FABRICATION OR CONSTRUCTION WORK ON THIS PROJECT. BRING ANY DISCREPANCIES IMMEDIATELY TO THE ATTENTION OF THE OWNER AND RESOLVE BEFORE PROCEEDING WITH THE WORK.

6. FURNISH ALL MATERIALS, EQUIPMENT, LABOR, AND ANY REQUIREMENTS NECESSARY TO COMPLETE PROJECT AS DESCRIBED IN THE CONSTRUCTION DOCUMENTS AND CONSTRUCTION SOW.

7. SUPERVISE AND DIRECT THE PROJECT DESCRIBED IN THE CONSTRUCTION DOCUMENTS. PROVIDE ALL CONSTRUCTION MEANS, METHODS, TECHNIQUES, SEQUENCES, AND PROCEDURES FOR COORDINATING ALL PORTIONS OF THE WORK UNDER THE CONTRACT.

8. ALL WORK PERFORMED ON THE PROJECT AND MATERIALS INSTALLED SHALL BE IN STRICT ACCORDANCE WITH ALL APPLICABLE CODES, REGULATIONS, AND ORDINANCES. GIVE ALL NOTICES AND COMPLY WITH ALL LAWS, ORDINANCES, RULES, REGULATIONS AND LAWFUL ORDERS OF ANY PUBLIC AUTHORITY, MUNICIPAL AND UTILITY COMPANY SPECIFICATIONS, AND LOCAL AND STATE JURISDICTIONAL CODES APPLICABLE TO THE WORK.

9. CONSTRUCTION COORDINATION REQUIREMENTS
   a. NOTIFY OWNER OF ANY DISCREPANCIES PRIOR TO START OF WORK.
   b. OBTAIN ALL PERMITS. SCHEDULE AND COORDINATE ALL INSPECTIONS.
   c. PROVIDE, AT THE PROJECT SITE, A FULL, CURRENT SET OF CONSTRUCTION DOCUMENTS FOR USE BY ALL PERSONNEL INVOLVED WITH THE PROJECT.
   d. RECEIVE WRITTEN AUTHORIZATION TO PROCEED WITH CONSTRUCTION PRIOR TO STARTING WORK ON ANY ITEM NOT CLEARLY DEFINED BY THE CONSTRUCTION DOCUMENTS.
   e. PERFORM WORK DURING OWNER'S PREFERRED HOURS TO AVOID DISTURBING NORMAL BUSINESS.
   f. PROVIDE FALL PROTECTION IN ACCORDANCE WITH FEDERAL, STATE, LOCAL, AND OWNER REQUIREMENTS.
   g. IF FAA LIGHTING AND MARKING IS PRESENT ON SITE AND IS POWERED BY ELECTRICAL SERVICE THAT IS TO BE INTERRUPTED, MAINTAIN THE NECESSARY LIGHTS DURING CONSTRUCTION AND NOTIFY THE PROPER AUTHORITIES IN THE EVENT OF A DISRUPTION.
   h. PROVIDE A PORTABLE FIRE EXTINGUISHER WITH A RATING OF NOT LESS THAN 2-A OR 2-A10BC WITHIN 75 FEET TRAVEL DISTANCE TO ALL PORTIONS OF PROJECT AREA DURING CONSTRUCTION.
   i. STRUCTURAL COMPONENTS OF ADJACENT FACILITIES SHALL NOT BE ALTERED BY THIS CONSTRUCTION PROJECT, UNO. ENSURE THAT EXCAVATION DOES NOT AFFECT ADJACENT STRUCTURES.
   j. SEAL ALL PENETRATIONS THROUGH FIRE-RATED AREAS WITH U.L. LISTED OR FIRE MARSHALL-APPROVED MATERIALS, IF APPLICABLE.
   k. BURIED UTILITIES MAY EXIST IN THE AREA AND UTILITY INFORMATION SHOWN MAY NOT BE COMPLETE. CONTACT THE UTILITY LOCATE SERVICE A MINIMUM OF 48 HOURS PRIOR TO CONSTRUCTION.
   l. COORDINATE ALL POWER INSTALLATION WITH POWER COMPANY AS REQUIRED. REPORT POWER INSTALLATION COORDINATION SOLUTION(S) TO OWNER.
   m. PROTECT EXISTING IMPROVEMENTS, EASEMENTS, PAVING, CURBING, ETC. DURING CONSTRUCTION. UPON COMPLETION OF WORK, REPAIR ANY DAMAGE THAT MAY HAVE OCCURRED DUE TO CONSTRUCTION ON OR ABOUT THE PROPERTY.
   n. KEEP GENERAL WORK AREA CLEAN AND HAZARD FREE DURING CONSTRUCTION AND DISPOSE OF ALL DIRT, DEBRIS, AND RUBBISH. REMOVE EQUIPMENT NOT SPECIFIED AS REMAINING ON THE PROPERTY OR PREMISES. SITE SHALL BE LEFT IN CLEAN CONDITION AND FREE FROM PAINT SPOTS, DUST, OR SMUDGES OF ANY NATURE.
   o. MAINTAIN THE INTEGRITY OF THE BUILDING ENVELOPE AND CONSTRUCT BARRIERS IN THE AREA OF WORK TO PREVENT DAMAGE FROM WEATHER AS WELL AS FROM CONSTRUCTION DUST AND DEBRIS.

10. INSTALL ALL EQUIPMENT AND MATERIALS ACCORDING TO MANUFACTURER'S SPECIFICATIONS, UNO, OR WHERE LOCAL CODES OR ORDINANCES DIRECT OTHERWISE.

11. PROPOSED CELLULAR EQUIPMENT AND FIXTURES WILL BE FURNISHED BY OWNER AND INSTALLED BY CONTRACTOR, UNLESS NOTED OTHERWISE.

12. ANY SUBSTITUTIONS OF MATERIALS AND/OR EQUIPMENT, MUST BE APPROVED BY OWNER.

13. DOCUMENT ALL CHANGES MADE IN THE FIELD BY MARKING UP THE APPROVED CONSTRUCTION DRAWINGS AND SUBMITTING THE REDLINED SET TO OWNER UPON COMPLETION. DOCUMENT ALL WORK PERFORMED WITH PHOTOGRAPHS TO BE SUBMITTED WITH REDLINED CONSTRUCTION DRAWINGS.

14. PROVIDE SUPPORTS FOR CABLES TO THE ELEVATION OF ALL INITIAL AND FUTURE ANTENNAS IN ACCORDANCE WITH ALL MANUFACTURER'S REQUIREMENTS.

15. CONFIRM THAT THE REQUIREMENTS OF THE STRUCTURAL ANALYSIS, MOUNT ANALYSIS AND ANY ASSOCIATED MODIFICATIONS HAVE BEEN FOLLOWED AND COMPLETED AS REQUIRED TO SUPPORT THE EQUIPMENT ASSOCIATED WITH THIS PROJECT.

16. KNOW AND OBSERVE MANUFACTURER'S MINIMUM BEND RADIUS SPECIFICATIONS BEFORE HANDLING HYBRID CABLES, RF CABLES, AND FIBER OPTIC LINES.

17. ALL WORK SHALL BE PERFORMED IN ACCORDANCE WITH THE REQUIREMENTS STIPULATED IN THE CONSTRUCTION SCOPE OF WORK CONTRACT, REGARDLESS OF INCLUSION OR OMISSION FROM THE CONSTRUCTION DRAWING(s).

ABBREVIATIONS

A/C	AIR CONDITIONING
AFF	ABOVE FINISHED FLOOR
AGL	ABOVE GROUND LEVEL, ABOVE GRADE LEVEL
AWS	ADVANCED WIRELESS SERVICE
BBU	BATTERY BACKUP UNIT
BLDG	BUILDING
BLK	BLOCKING
CLG	CEILING
CLR	CLEAR
CONC	CONCRETE
CONT	CONTINUOUS
D	DEPTH
DBL	DOUBLE
DEG	DEGREE
ø, DIA	DIAMETER
DIAG	DIAGONAL
DN	DOWN
DET	DETAIL
DWG	DRAWING
E	EXISTING
EA	EACH
ELEV, EL	ELEVATION
ELEC	ELECTRICAL
EQ	EQUAL
EQUIP	EQUIPMENT
EXT	EXTERIOR
FIF	FIBER INTERFACE FRAME, FACILITY INTERFACE FRAME
FIN	FINISH
FLUOR	FLUORESCENT
FLR	FLOOR
FT	FOOT, FEET
GA	GAUGE
GALV	GALVANIZED
GC	GENERAL CONTRACTOR
GRND	GROUND
GSM	GLOBAL SYSTEM MOBILE
GYP	GYPSUM BOARD
HORZ	HORIZONTAL
HR	HOUR
HT	HEIGHT
ID	INSIDE DIAMETER
IN	INCH, INCHES
INSUL	INSULATION
INT	INTERIOR
L	LENGTH
LBS	POUNDS
LTE	LONG TERM EVOLUTION
MAX	MAXIMUM
MECH	MECHANICAL
MTL	METAL
MFR	MANUFACTURER
MGR	MANAGER
MIMO	MULTIPLE IN MULTIPLE OUT
mMIMO	MASSIVE MULTIPLE IN MULTIPLE OUT
MIN	MINIMUM
MISC	MISCELLANEOUS
NA	NOT APPLICABLE
NIC	NOT IN CONTRACT
NO	NUMBER
NTS	NOT TO SCALE
OC	ON CENTER
OD	OUTSIDE DIAMETER
PCS	PERSONAL COMMUNICATION SERVICE
PDU	POWER DISTRIBUTION UNIT
PROJ	PROJECT
PROP	PROPERTY
PT	PRESSURE TREATED
PVC	POLYVINYL CHLORIDE
REQ	REQUIRED
RF	RADIO FREQUENCY
RM	ROOM
RO	ROUGH OPENING
RRH	REMOTE RADIO HEAD
SHT	SHEET
SIM	SIMILAR
SPEC	SPECIFICATION
SF	SQUARE FOOT
SS	STAINLESS STEEL
STL	STEEL
SUSP	SUSPENDED
TMA	TOWER MOUNTED AMPLIFIER
TND	TINNED
TYP	TYPICAL
UMTS	UNIVERSAL MOBILE TELECOMMUNICATION SERVICE
UNO	UNLESS NOTED OTHERWISE
VERT	VERTICAL
W/	WITH
W/O	WITHOUT
WCS	WIRELESS COMMUNICATION SERVICE
WP	WATER PROOF

SCOPE OF WORK

THIS IS NOT AN ALL INCLUSIVE LIST. CONTRACTOR SHALL UTILIZE SPECIFIED EQUIPMENT PART OR ENGINEER APPROVED EQUIVALENT. CONTRACTOR SHALL VERIFY ALL NEEDED EQUIPMENT TO PROVIDE A FUNCTIONAL SITE.
THE PROJECT GENERALLY CONSISTS OF THE FOLLOWING:

- INSTALL (3) PROPOSED PANEL ANTENNAS (1 PER SECTOR)
- INSTALL (3) PROPOSED ANTENNA MOUNTS (1 PER SECTOR)
- INSTALL (3) PROPOSED RETs
- INSTALL (5) PROPOSED RRUs AND ASSOCIATED JUMPERS
- INSTALL (1) PROPOSED HYBRID CABLE
- INSTALL (1) PROPOSED CABLE LADDER (IF APPLICABLE)
- INSTALL (1) PROPOSED METAL PLATFORM FOR GROUND EQUIPMENT
- INSTALL (1) PROPOSED ICE BRIDGE
- INSTALL (1) PROPOSED BATTERY BACKUP SYSTEM IN CABINET
- INSTALL (1) PROPOSED LOAD CENTER MOUNTED TO PROPOSED H-FRAME
- INSTALL (1) PROPOSED SURGE SUPPRESSION DEVICE
- INSTALL (1) PROPOSED EQUIPMENT CABINET
- INSTALL (1) PROPOSED RBS CHASSIS IN PROPOSED EQUIPMENT CABINET
- INSTALL (1) PROPOSED BASEBAND UNIT IN PROPOSED RBS CHASSIS
- INSTALL (1) PROPOSED POWER CONDUIT FROM PLATFORM TO MEET-ME-POINT DESIGNATED BY POWER COMPANY
- INSTALL (1) PROPOSED METER BASE FOR POWER METER
- INSTALL (1) PROPOSED GPS ANTENNA WITH CABLE
- INSTALL (1) PROPOSED LTE BACKHAUL ANTENNA WITH CABLE

THE SIZE, HEIGHT AND DIRECTION OF ALL ANTENNAS SHALL BE ADJUSTED TO MEET SYSTEM REQUIREMENT DEPICTED BY THE LATEST APPROVED RFDS.

PROJECT NOTES

1. THE FOLLOWING INFORMATION HAS BEEN PROVIDED BY DISH WIRELESS FOR THIS PROJECT AND HAS NOT BEEN FIELD VERIFIED AS PART OF THIS PROJECT.
   a. EXISTING TOWER, MOUNT AND EQUIPMENT ELEVATIONS
   b. DESIGN PACKAGE BASED ON THE APPLICATION #: 12943526, DATED 04/01/19.

2. A STRUCTURAL ANALYSIS TO DETERMINE THE TOWER CAPACITY TO SUPPORT THE PROPOSED EQUIPMENT WAS PERFORMED FOR DISH WIRELESS OUTSIDE THE SCOPE OF THIS PROJECT.

3. CONFIRM THAT THE REQUIREMENTS OF THE STRUCTURAL ANALYSIS AND ANY ASSOCIATED MODIFICATIONS HAVE BEEN FOLLOWED AND COMPLETED AS REQUIRED TO SUPPORT THE EQUIPMENT ASSOCIATED WITH THIS PROJECT.

dish WIRELESS

AMERICAN TOWER®
A.T. ENGINEERING SERVICE, PLLC
3500 REGENCY PARKWAY
SUITE 100
CARY, NC 27518
PHONE: (919) 468-0112
COA: P-1177

SEAL:

STATE OF CONNECTICUT
PATRICK P. BARRY
28959
LICENSED
PROFESSIONAL ENGINEER

Authorized by "EOR"
Jun 11 2019 3:58 PM

cosign

DRAWN BY:	TC
APPROVED BY:	PPB
DATE DRAWN:	06/03/19

REV.	DESCRIPTION	BY	DATE
0	FOR CONSTRUCTION	TC	06/03/19

THESE DRAWINGS AND/OR THE ACCOMPANYING SPECIFICATION AS INSTRUMENTS OR SERVICE ARE THE EXCLUSIVE PROPERTY OF AMERICAN TOWER. THEIR USE AND PUBLICATION SHALL BE RESTRICTED TO THE ORIGINAL SITE FOR WHICH THEY ARE PREPARED. ANY USE OR DISCLOSURE OTHER THAN THAT WHICH RELATES TO AMERICAN TOWER OR THE SPECIFIED CARRIER IS STRICTLY PROHIBITED. TITLE TO THESE DOCUMENTS SHALL REMAIN THE PROPERTY OF AMERICAN TOWER WHETHER OR NOT THE PROJECT IS EXECUTED. NEITHER THE ARCHITECT NOR THE ENGINEER WILL BE PROVIDING ON-SITE CONSTRUCTION REVIEW OF THIS PROJECT. CONTRACTOR(S) MUST VERIFY ALL DIMENSIONS AND ADVISE AMERICAN TOWER OF ANY DISCREPANCIES. ANY PRIOR ISSUANCE OF THIS DRAWING IS SUPERSEDED BY THE LATEST VERSION ON FILE WITH AMERICAN TOWER.

ATC PROJECT NUMBER:
12963795

DISH WIRELESS SITE NUMBER:
CT0100015A

ATC SITE NUMBER:
88019

SITE ADDRESS:
428 PLATT HILL ROAD
WINSTED, CT 06098

GENERAL NOTES

SHEET NUMBER: GN-1

REVISION: 0

Copyright © 2019 ATC IP LLC. All Rights Reserved.

SITE NOTES:

1. WHEN SITE WORK IS INCLUDED IN SCOPE:
   a. CLEAR AND GRUB SITE OF ALL VEGETATION, PAVING, GRAVEL BASE AND OTHER DEBRIS NOT TO REMAIN. SUBGRADES ARE TO BE SET PRIOR TO LANDSCAPE INSTALLATION.
   b. PROVIDE ELEVATION OF SUBGRADE WITHIN 0.10 FOOT OF ELEVATIONS SHOWN ON PLAN MINUS DEPTH OF TOPSOIL, FILL, AND MULCH.
   c. ROUGH GRADE ALL AREAS WITHIN 1 FOOT OF ELEVATIONS INDICATED BEFORE PLANTING. PROVIDE POSITIVE DRAINAGE AWAY FROM EQUIPMENT SLABS, BUILDINGS AND THROUGH ALL PLANTER AREAS TO AVOID LOW SPOTS AND STANDING WATER.
   d. BLEND NEW GRADES NATURALLY INTO EXISTING GRADES.
   e. MAINTAIN POSITIVE DRAINAGE ON THE SITE AT ALL TIMES.
   f. IF REQUIRED, MAINTAIN CONTINUOUS EROSION CONTROL ON THE DOWNSTREAM SIDE OF THE SITE.
   g. IN LANDSCAPE AREAS, FINISH GRADES ARE TO FOLLOW THE GRADES AND EDGE DETAILS INDICATED AND BE MOUNDED 6 INCHES IN THE CENTER OF THE BED ABOVE THE EDGE OF THE LANDSCAPE AREA.
   h. DO NOT PLACE FILL OR EMBANKMENT MATERIAL ON FROZEN GROUND. DO NOT PLACE FROZEN MATERIALS, SNOW OR ICE IN ANY FILL OR EMBANKMENT.
   i. NOTIFY OWNER IF MODIFICATIONS TO THE PROPOSED GRADING SEEM NECESSARY AND OBTAIN APPROVAL PRIOR TO START OF WORK.
2. FOOTINGS SHALL BEAR ON FIRM, NATURAL, UNDISTURBED SOIL, OR ON ENGINEERED FILL (COMPACTED TO 95% ASTM D1557). ENSURE THAT EXCAVATIONS ARE FREE OF ORGANIC MATERIAL, DEBRIS, OR OTHER FOREIGN MATERIAL. NOTIFY OWNER IF ANY UNUSUAL CONDITIONS ARE ENCOUNTERED.
3. FILL AND SLAB BASE MATERIAL SHALL BE 3/4" MINUS CRUSHED ROCK PLACED IN 8" (MAXIMUM) LOOSE LIFTS AND COMPACTED TO 98% ASTM D1557.

CONCRETE NOTES:

1. CONCRETE AND REINFORCING SHALL CONFORM TO THE FOLLOWING REQUIREMENTS:

CONCRETE CONSTRUCTION	ACI 318, f'c=4 KSI, UNO
CEMENT	ASTM C150, PORTLAND CEMENT TYPE II, UNO
REINFORCING STEEL	ASTM A615 (INCLUDING SUPPLEMENT S1), GRADE 60, fy=60 KSI, UNO
WELDED WIRE FABRIC	ASTM A185
SPIRAL REINFORCEMENT	ASTM A615, GRADE 60, fy=60 KSI
ANCHOR BOLTS	ASTM A307
GRADE 60 REBAR WELDING	ASTM A706

NOTES: ANY BARS SO NOTED ON THE DRAWINGS SHALL BE GRADE 60, fy=60 KSI. REINFORCING COMPLYING WITH ASTM A615(S1) MAY BE WELDED ONLY IF MATERIAL PROPERTY REPORTS INDICATING CONFORMANCE WITH WELDING PROCEDURES SPECIFIED IN A.W.S. D14 ARE SUBMITTED.

2. CONCRETE PROTECTION (COVER) FOR REINFORCING STEEL SHALL BE AS FOLLOWS:

FOOTINGS AND OTHER UNFORMED SURFACES, EARTH FACE		3"
FORMED SURFACES EXPOSED TO EARTH OR WEATHER	(≥ #6 BARS)	2"
FORMED SURFACES EXPOSED TO EARTH OR WEATHER	(≤ #5 BARS)	1 1/2"
SLABS AND WALLS	(INTERIOR FACE)	3/4"

3. AIR ENTRAIN ALL CONCRETE WITH SURFACES EXPOSED TO WEATHER WITH AN AIR-ENTRAINING AGENT CONFORMING TO ASTM C260, C494, C618, C989 AND C1017. AIR ENTRAIN CONCRETE EXPOSED TO FREEZING AND THAWING WHILE MOIST IN ACCORDANCE WITH ACI 318, SECTION 4.4.1.
4. DETAIL REINFORCING STEEL (INCLUDING HOOKS AND BENDS) IN ACCORDANCE WITH ACI 315 AND 318. LAP ALL CONTINUOUS REINFORCEMENT AT LEAST 30 BAR DIAMETERS OR A MINIMUM OF 2'-0". PROVIDE CORNER BARS AT ALL WALL AND FOOTING INTERSECTIONS. LAP CORNER BARS AT LEAST 30 BAR DIAMETERS OR A MINIMUM OF 2'-0". LAP ADJACENT MATS OF WELDED WIRE FABRIC A MINIMUM OF 8" AT SIDES AND ENDS.
5. PERFORM WELDING OF GRADE 60 REINFORCING BARS (IF REQUIRED) USING LOW HYDROGEN ELECTRODES. PERFORM WELDING OF GRADE 40 REINFORCING BARS (IF REQUIRED) USING E70 XX ELECTRODES. DO NOT WELD WITHIN 4" OF COLD BENDS IN REINFORCING STEEL.
6. DO NOT FIELD BEND REINFORCING PARTIALLY EMBEDDED IN CONCRETE UNLESS SPECIFICALLY SO DETAILED OR APPROVED BY THE ENGINEER.
7. SUPPORT BARS ON CHAIRS OR DOBIE BRICKS.
8. FURNISH NON-SHRINK GROUT BY AN APPROVED MANUFACTURER. MIX AND PLACE IN STRICT ACCORDANCE WITH THE MANUFACTURER'S PUBLISHED RECOMMENDATIONS. GROUT STRENGTH SHALL BE AT LEAST EQUAL TO THE MATERIAL ON WHICH IT IS PLACED (4 KSI, MINIMUM).
9. ALL EXPANSION ANCHORS TO BE HILTI BRAND, UNO. TEST ADHESIVE ANCHORS TO CONFIRM CAPACITY UNLESS WAIVED BY ENGINEER AND LOCAL JURISDICTION.

STRUCTURAL STEEL NOTES:

1. STRUCTURAL STEEL SHALL CONFORM TO THE FOLLOWING REQUIREMENTS:

WIDE FLANGE SHAPES	ASTM A992, GRADE 50
SHAPES, PLATES, ANGLES, & RODS	ASTM A36, Fy 36 KSI
SPECIAL SHAPES AND PLATES	ASTM A572, Fy 50 KSI
PIPE COLUMNS	ASTM A53, GR B, Fy 35 KSI
STRUCTURAL TUBING	ASTM A500, GR B, Fy 46KSI
ANCHOR BOLTS	ASTM A307
CONNECTION BOLTS	ASTM A325 TWIST-OFF

2. BASE STRUCTURAL STEEL DESIGN, FABRICATION AND ERECTION (INCLUDING FIELD WELDING, HIGH STRENGTH FIELD BOLTING, EXPANSION BOLTS, AND THREADED EXPANSION ANCHORS) ON THE AISC "SPECIFICATION FOR THE DESIGN, FABRICATION, AND ERECTION OF STRUCTURAL STEEL FOR BUILDINGS" LATEST EDITION.
3. HOT DIP GALVANIZE AFTER FABRICATION PER A123/A123M-00 ALL STEEL EXPOSED TO WEATHER AND WHERE NOTED.
4. CONFORM TO ALL AISC AND AWS STANDARDS FOR WELDING. PERFORM WELDING BY ANSI/AWS D1.1 CERTIFIED WELDERS USING E70 XX ELECTRODES. USE ONLY PRE-QUALIFIED WELDS AS DEFINED BY AWS.
5. PROVIDE COLD-FORMED STEEL FRAMING MEMBERS OF THE SHAPE, SIZE, AND GAUGE SHOWN ON THE PLANS. PROVIDE MINIMUM SECTION PROPERTIES INDICATED. ALL COLD-FORMED STEEL FRAMING SHALL CONFORM TO THE AISI "SPECIFICATION FOR THE DESIGN OF COLD-FORMED STEEL STRUCTURAL MEMBERS."
6. FOR BOLTED CONNECTIONS, USE 3/4" DIA., BEARING-TYPE, A325 BOLTS WITH A MINIMUM OF TWO BOLTS, UNO.
7. FOR NON-STRUCTURAL CONNECTIONS FOR STEEL GRATING, USE 5/8" DIA. A307 BOLTS, UNO.
8. PREPARE AND PAINT IN ACCORDANCE WITH THE PAINT MANUFACTURERS WRITTEN INSTRUCTIONS, UNO.
9. TOUCH UP ALL FIELD DRILLING, WELDING AND CUT SURFACES WITH 2 COATS OF GALVACON (ZINC RICH PAINT) OR APPROVED EQUAL.
10. THE STRUCTURAL INTEGRITY OF THE EQUIPMENT PLATFORM HAS NOT BEEN REVIEWED BY AMERICAN TOWER.

SPECIAL INSPECTIONS:

1. WHEN REQUIRED, PROVIDE SPECIAL INSPECTIONS PERFORMED BY AN INDEPENDENT INSPECTOR, APPROVED BY OWNER'S REPRESENTATIVE AND THE LOCAL JURISDICTION.
2. THE SPECIAL INSPECTOR SHALL PROVIDE A COPY OF THE REPORT TO THE OWNER'S REPRESENTATIVE, STRUCTURAL ENGINEER, CONTRACTOR, AND BUILDING OFFICIAL.

dish WIRELESS

AMERICAN TOWER®

A.T. ENGINEERING SERVICE, PLLC
3500 REGENCY PARKWAY
SUITE 100
CARY, NC 27518
PHONE: (919) 468-0112
COA: P-1177

SEAL:

STATE OF CONNECTICUT
PATRICK P. BARRY
28959
LICENSED
PROFESSIONAL ENGINEER

Authorized by "EOR"
Jun 11 2019 3:58 PM

cosign

DRAWN BY:	TC
APPROVED BY:	PPB
DATE DRAWN:	06/03/19

REV.	DESCRIPTION	BY	DATE
0	FOR CONSTRUCTION	TC	06/03/19

THESE DRAWINGS AND/OR THE ACCOMPANYING SPECIFICATION AS INSTRUMENTS OR SERVICE ARE THE EXCLUSIVE PROPERTY OF AMERICAN TOWER. THEIR USE AND PUBLICATION SHALL BE RESTRICTED TO THE ORIGINAL SITE FOR WHICH THEY ARE PREPARED. ANY USE OR DISCLOSURE OTHER THAN THAT WHICH RELATES TO AMERICAN TOWER OR THE SPECIFIED CARRIER IS STRICTLY PROHIBITED. TITLE TO THESE DOCUMENTS SHALL REMAIN THE PROPERTY OF AMERICAN TOWER WHETHER OR NOT THE PROJECT IS EXECUTED. NEITHER THE ARCHITECT NOR THE ENGINEER WILL BE PROVIDING ON-SITE CONSTRUCTION REVIEW OF THIS PROJECT. CONTRACTOR(S) MUST VERIFY ALL DIMENSIONS AND ADVISE AMERICAN TOWER OF ANY DISCREPANCIES. ANY PRIOR ISSUANCE OF THIS DRAWING IS SUPERSEDED BY THE LATEST VERSION ON FILE WITH AMERICAN TOWER.

ATC PROJECT NUMBER:
12963795

DISH WIRELESS SITE NUMBER:
CT0100015A

ATC SITE NUMBER:
88019

SITE ADDRESS:
428 PLATT HILL ROAD
WINSTED, CT 06098

GENERAL NOTES

SHEET NUMBER: GN-2

REVISION: 0

Copyright © 2019 ATC IP LLC. All Rights Reserved.

ELECTRICAL NOTES:

GENERAL

GENERAL CONDITIONS:

A. CONTRACTOR SHALL INSPECT THE EXISTING SITE CONDITIONS PRIOR TO SUBMITTING BID. ANY QUESTIONS ARISING DURING THE BID PERIOD IN REGARD TO THE CONTRACTORS FUNCTIONS, THE SCOPE OF WORK, OR ANY OTHER ISSUE RELATED TO THIS PROJECT SHALL BE ISSUED TO CONSTRUCTION MANAGER IN WRITING FOR CLARIFICATION PRIOR TO SUBMITTAL OF BID AND CONTRACT AWARD.

B. THE CONTRACTOR SHALL OBTAIN PERMITS, LICENSES, MAKE ALL DEPOSITS, AND PAY ALL FEES REQUIRED FOR THE CONSTRUCTION OF WORK UNDER THIS SECTION.

C. DRAWINGS SHOW THE GENERAL ARRANGEMENT OF ALL SYSTEMS AND COMPONENTS COVERED UNDER THIS SECTION. THE CONTRACTOR SHALL FIELD VERIFY ALL DIMENSIONS. DRAWINGS SHALL NOT BE SCALED TO DETERMINE DIMENSIONS.

LAWS, REGULATIONS, ORDINANCES, STATUTES AND CODES:

A. ALL WORK SHALL BE INSTALLED IN ACCORDANCE WITH THE LATEST EDITION OF THE NATIONAL ELECTRICAL CODE (NEC), AND ALL APPLICABLE LOCAL LAWS, REGULATIONS, ORDINANCES, STATUTES AND CODES. CONDUIT BENDS SHALL BE THE RADIUS BEND FOR THE TRADE SIZE OF CONDUIT IN COMPLIANCE WITH THE LATEST EDITIONS OF NEC.

REFERENCES:

A. THE PUBLICATIONS LISTED BELOW ARE PART OF THIS SPECIFICATION. EACH PUBLICATION SHALL BE THE LATEST REVISION AND ADDENDUM IN EFFECT ON THE DATE. THIS SPECIFICATION IS ISSUED FOR CONSTRUCTION UNLESS OTHERWISE NOTED. EXCEPT AS MODIFIED BY THE REQUIREMENT SPECIFIED HEREIN OR THE DETAILS OF THE DRAWINGS, WORK INCLUDED IN THIS SPECIFICATION SHALL CONFORM TO THE APPLICABLE PROVISION OF THESE PUBLICATIONS.

1. ANSI/IEEE (AMERICAN NATIONAL STANDARDS INSTITUTE)
2. ASTM (AMERICAN SOCIETY FOR TESTING AND MATERIALS)
3. ICEA (INSULATED CABLE ENGINEERS ASSOCIATION)
4. NEMA (NATIONAL ELECTRICAL MANUFACTURER'S ASSOCIATION)
5. NFPA (NATIONAL FIRE PROTECTION ASSOCIATION)
6. OSHA (OCCUPATIONAL SAFETY AND HEALTH ADMINISTRATION)
7. UL (UNDERWRITERS LABORATORIES. INC.)
8. DISH WIRELESS GROUNDING AND BONDING STANDARDS, LATEST EDITION, AND COMPLY WITH DISH WIRELESS GROUNDING CHECKLIST, LATEST VERSION
9. R56 MOTOROLA STANDARDS

SCOPE OF WORK:

A. WORK UNDER THIS SECTION SHALL CONSIST OF FURNISHING ALL LABOR, MATERIAL, AND ASSOCIATED SERVICES REQUIRED TO COMPLETE REQUIRED CONSTRUCTION AND BE OPERATIONAL.

B. ALL ELECTRICAL EQUIPMENT UNDER THIS CONTRACT SHALL BE PROPERLY TESTED, ADJUSTED, AND ALIGNED BY THE CONTRACTOR.

C. THE CONTRACTOR SHALL BE RESPONSIBLE FOR ALL EXCAVATING, DRAINING OF TRENCHES, BACKFILLING, AND REMOVAL OF EXCESS DIRT.

D. THE CONTRACTOR SHALL PREPARE A COMPLETE SET OF AS-BUILT DRAWINGS, DOCUMENT ALL WIRING EQUIPMENT CONDITIONS, AND CHANGES WHILE COMPLETING THIS CONTRACT, THE AS-BUILT DRAWINGS SHALL BE SUBMITTED AT COMPLETION OF THE PROJECT.

PRODUCTS

GENERAL:

A. ALL MATERIALS AND EQUIPMENT SHALL BE UL LISTED, NEW, AND FREE FROM DEFECTS.

B. ALL ITEMS OF MATERIALS AND EQUIPMENT SHALL BE ACCEPTABLE TO THE AUTHORITY HAVING JURISDICTION AS SUITABLE FOR THE USE INTENDED.

C. ALL EQUIPMENT SHALL BEAR THE UNDERWRITERS LABORATORIES LABEL OF APPROVAL, AND SHALL CONFORM TO REQUIREMENT OF THE NATIONAL ELECTRICAL CODE.

D. ALL OVERCURRENT DEVICES SHALL HAVE AN INTERRUPTING CURRENT RATING EQUAL TO OR GREATER THAN THE SHORT CIRCUIT CURRENT AVAILABLE, 10,000 AIC MINIMUM. VERIFY AVAILABLE SHORT CIRCUIT CURRENT DOES NOT EXCEED THE RATING OF ELECTRICAL EQUIPMENT.

MATERIALS AND EQUIPMENT:

A. CONDUIT:

1. RIGID METAL CONDUIT (RMC) SHALL BE HOT-DIPPED GALVANIZED INSIDE AND OUTSIDE INCLUDING ENDS AND THREADS AND ENAMELED OR LACQUERED INSIDE IN ADDITION TO GALVANIZING.

2. LIQUID TIGHT FLEXIBLE METAL CONDUIT SHALL BE UL LISTED.

3. CONDUIT CLAMPS, STRAPS AND SUPPORTS SHALL BE STEEL OR MALLEABLE IRON. ALL FITTINGS SHALL BE COMPRESSION AND CONCRETE TIGHT TYPE.

4. NONMETALLIC CONDUIT AND FITTINGS SHALL BE SCHEDULE 40 PVC UNLESS SCHEDULE 80 PVC IS SPECIFIED. INSTALL USING SOLVENT-CEMENT-TYPE JOINTS AS RECOMMENDED BY THE MANUFACTURER.

B. CONDUCTORS AND CABLE:

1. CONDUCTORS AND CABLE SHALL BE FLAME-RETARDANT, MOISTURE AND HEAT RESISTANT THERMOPLASTIC, SINGLE CONDUCTOR, COPPER, TYPE THHN/THWN-2, 600 VOLT, SIZE AS INDICATED, #12 AWG SHALL BE THE MINIMUM SIZE CONDUCTOR USED.

2. #10 AWG AND SMALLER CONDUCTOR SHALL BE SOLID OR STRANDED AND #8 AWG AND LARGER CONDUCTORS SHALL BE STRANDED.

3. SOLDERLESS, COMPRESSION-TYPE CONNECTORS SHALL BE USED FOR TERMINATION OF ALL STRANDED CONDUCTORS.

4. STRAIN-RELIEF SUPPORTS GRIPS SHALL BE HUBBELL KELLEMS OR APPROVED EQUAL. CABLES SHALL BE SUPPORTED IN ACCORDANCE WITH THE NEC AND CABLE MANUFACTURER'S RECOMMENDATIONS.

5. ALL CONDUCTORS SHALL BE TAGGED AT BOTH ENDS OF THE CONDUCTOR, AT ALL PULL BOXES, J-BOXES, EQUIPMENT AND CABINETS AND SHALL BE IDENTIFIED WITH APPROVED PLASTIC TAGS (ACTION CRAFT, BRADY, OR APPROVED EQUAL).

C. DISCONNECT SWITCHES:

1. DISCONNECT SWITCHES SHALL BE HEAVY DUTY, DEAD-FRONT, QUICK-MAKE, QUICK-BREAK, EXTERNALLY OPERABLE, HANDLE LOCKABLE AND INTERLOCK WITH COVER IN CLOSED POSITION, RATING AS INDICATED, UL LABELED FURNISHED IN NEMA 3R ENCLOSURE, SQUARE-D OR ENGINEER APPROVED EQUAL.

D. CHEMICAL ELECTROLYTIC GROUNDING SYSTEM:

1. INSTALL CHEMICAL GROUNDING AS REQUIRED. THE SYSTEM SHALL BE ELECTROLYTIC MAINTENANCE FREE ELECTRODE CONSISTING OF RODS WITH A MINIMUM #2 AWG CU EXOTHERMICALLY WELDED PIGTAIL, PROTECTIVE BOXES, AND BACKFILL MATERIAL. MANUFACTURER SHALL BE LYNCOLE XIT GROUNDING ROD TYPES K2-(*)CS OR K2L-(*)CS (*) LENGTH AS REQUIRED.

2. GROUND ACCESS BOX SHALL BE A POLYPLASTIC BOX FOR NON-TRAFFIC APPLICATIONS, INCLUDING BOLT DOWN FLUSH COVER WITH "BREATHER" HOLES, XIT MODEL #XB-22. ALL DISCONNECT SWITCHES AND CONTROLLING DEVICES SHALL BE PROVIDED WITH ENGRAVED LAMICOID NAMEPLATES INDICATING EQUIPMENT CONTROLLED, BRANCH CIRCUITS ID NUMBERING, AND THE ELECTRICAL POWER SOURCE.

3. BACKFILL MATERIAL SHALL BE LYNCONITE AND LYNCOLE GROUNDING GRAVEL.

E. SYSTEM GROUNDING

1. ALL GROUNDING COMPONENTS SHALL BE TINNED AND GROUNDING CONDUCTOR SHALL BE #2 AWG BARE, SOLID, TINNED, COPPER. ABOVE GRADE GROUNDING CONDUCTORS SHALL BE INSULATED WHERE NOTED.

2. GROUNDING BUSES SHALL BE BARE, TINNED ANNEALED COPPER BARS OF RECTANGULAR CROSS SECTION. STANDARD BUS BARS MGB, SHALL BE FURNISHED AND INSTALLED BY THE CONTRACTOR. THEY SHALL NOT BE FABRICATED OR MODIFIED IN THE FIELD. ALL GROUNDING BUSES SHALL BE IDENTIFIED WITH MINIMUM 3/4" LETTERS BY WAY OF STENCILING OR DESIGNATION PLATE.

3. CONNECTORS SHALL BE HIGH-CONDUCTIVITY, HEAVY DUTY, LISTED AND LABELED AS GROUNDING CONNECTORS FOR THE MATERIALS USED. USE TWO-HOLE COMPRESSION LUGS WITH HEAT SHRINK FOR MECHANICAL CONNECTIONS. INTERIOR CONNECTIONS USE TWO-HOLE COMPRESSION LUGS WITH INSPECTION WINDOW AND CLEAR HEAT SHRINK.

4. EXOTHERMIC WELDED CONNECTIONS SHALL BE PROVIDED IN KIT FORM AND SELECTED FOR THE SPECIFIC TYPES, SIZES, AND COMBINATIONS OF CONDUCTORS AND OTHER ITEMS TO BE CONNECTED.

5. GROUND RODS SHALL BE COPPER-CLAD STEEL WITH HIGH-STRENGTH STEEL CORE AND ELECTROLYTIC-GRADE COPPER OUTER SHEATH, MOLTEN WELDED TO CORE, 5/8"x10'-0". ALL GROUNDING RODS SHALL BE INSTALLED WITH INSPECTION SLEEVES.

6. INSTALL AN EQUIPMENT GROUNDING CONDUCTOR IN ALL CONDUITS IN COMPLIANCE WITH THE DISH WIRELESS SPECIFICATIONS AND NEC. THE EQUIPMENT GROUNDING CONDUCTORS SHALL BE BONDED TO ALL METALLIC JUNCTION BOXES, PULLBOXES, DISCONNECT SWITCHES, STARTERS, AND EQUIPMENT.

F. OTHER MATERIALS:

1. THE CONTRACTOR SHALL PROVIDE OTHER MATERIALS, THOUGH NOT SPECIFICALLY DESCRIBED, WHICH ARE REQUIRED FOR A COMPLETELY OPERATIONAL SYSTEM AND PROPER INSTALLATION OF THE WORK.

2. PROVIDE PULL BOXES AND JUNCTION BOXES WHERE SHOWN OR REQUIRED BY NEC.

G. PANELS AND LOAD CENTERS:

1. ALL PANEL LABELS SHALL BE TYPEWRITTEN.

EXECUTION:

GENERAL:

A. ALL MATERIAL AND EQUIPMENT SHALL BE INSTALLED IN STRICT ACCORDANCE WITH THE MANUFACTURER'S RECOMMENDATIONS.

B. EQUIPMENT SHALL BE TIGHTLY COVERED AND PROTECTED AGAINST DIRT OR WATER, AND AGAINST CHEMICAL OR MECHANICAL INJURY DURING INSTALLATION AND CONSTRUCTION PERIODS.

LABOR AND WORKMANSHIP:

A. ALL LABOR FOR THE INSTALLATION OF MATERIALS AND EQUIPMENT FURNISHED FOR THE ELECTRICAL SYSTEM SHALL BE INSTALLED BY EXPERIENCED WIREMEN, IN A NEAT AND WORKMAN-LIKE MANNER.

B. ALL ELECTRICAL EQUIPMENT SHALL BE ADJUSTED, ALIGNED AND TESTED BY THE CONTRACTOR AS REQUIRED TO PRODUCE THE INTENDED PERFORMANCE.

C. UPON COMPLETION OF WORK, THE CONTRACTOR SHALL THOROUGHLY CLEAN ALL EXPOSED EQUIPMENT, REMOVE ALL LABELS AND ANY DEBRIS, CRATING OR CARTONS AND LEAVE THE INSTALLATION FINISHED AND READY FOR OPERATION.

dish WIRELESS

AMERICAN TOWER®

A.T. ENGINEERING SERVICE, PLLC
3500 REGENCY PARKWAY
SUITE 100
CARY, NC 27518
PHONE: (919) 468-0112
COA: P-1177

SEAL:

STATE OF CONNECTICUT
PATRICK P. BARRY
28959
LICENSED
PROFESSIONAL ENGINEER

Authorized by "EOR"
Jun 11 2019 3:58 PM

cosign

DRAWN BY:	TC
APPROVED BY:	PPB
DATE DRAWN:	06/03/19

REV.	DESCRIPTION	BY	DATE
0	FOR CONSTRUCTION	TC	06/03/19

THESE DRAWINGS AND/OR THE ACCOMPANYING SPECIFICATION AS INSTRUMENTS OR SERVICE ARE THE EXCLUSIVE PROPERTY OF AMERICAN TOWER. THEIR USE AND PUBLICATION SHALL BE RESTRICTED TO THE ORIGINAL SITE FOR WHICH THEY ARE PREPARED. ANY USE OR DISCLOSURE OTHER THAN THAT WHICH RELATES TO AMERICAN TOWER OR THE SPECIFIED CARRIER IS STRICTLY PROHIBITED. TITLE TO THESE DOCUMENTS SHALL REMAIN THE PROPERTY OF AMERICAN TOWER WHETHER OR NOT THE PROJECT IS EXECUTED. NEITHER THE ARCHITECT NOR THE ENGINEER WILL BE PROVIDING ON-SITE CONSTRUCTION REVIEW OF THIS PROJECT. CONTRACTOR(S) MUST VERIFY ALL DIMENSIONS AND ADVISE AMERICAN TOWER OF ANY DISCREPANCIES. ANY PRIOR ISSUANCE OF THIS DRAWING IS SUPERSEDED BY THE LATEST VERSION ON FILE WITH AMERICAN TOWER.

ATC PROJECT NUMBER:
12963795

DISH WIRELESS SITE NUMBER:
CT0100015A

ATC SITE NUMBER:
88019

SITE ADDRESS:
428 PLATT HILL ROAD
WINSTED, CT 06098

ELECTRICAL NOTES

SHEET NUMBER:	REVISION:
EN-1	0

Copyright © 2019 ATC IP LLC. All Rights Reserved.

ELECTRICAL NOTES (CONTINUED)

COORDINATION:

A. THE CONTRACTOR SHALL COORDINATE THE INSTALLATION OF ELECTRICAL ITEMS WITH THE OWNER–FURNISHED EQUIPMENT DELIVERY SCHEDULE TO PREVENT UNNECESSARY DELAYS IN THE TOTAL WORK.

INSTALLATION:

A. CONDUIT:

1. ALL ELECTRICAL WIRING SHALL BE INSTALLED IN CONDUIT AS SPECIFIED. NO CONDUIT OR TUBING OF LESS THAN 3/4 INCH TRADE SIZE.
2. PROVIDE RIGID PVC SCHEDULE 80 CONDUITS FOR ALL RISERS, OR WHERE RMC OTHERWISE NOTED.
3. INSTALL SCHEDULE 40 PVC CONDUIT WITH A MINIMUM COVER OF 24" UNDER ROADWAYS, PARKING LOTS, STREETS, AND ALLEYS. CONDUIT SHALL HAVE A MINIMUM COVER OF 18" IN ALL OTHER NON–TRAFFIC APPLICATIONS (REFER TO 2017 NEC, TABLE 300.5).
4. USE GALVANIZED FLEXIBLE STEEL CONDUIT WHERE DIRECT CONNECTION TO EQUIPMENT WITH MOVEMENT, VIBRATION, OR FOR EASE OF MAINTENANCE. USE LIQUID TIGHT, FLEXIBLE METAL CONDUIT FOR OUTDOOR APPLICATIONS. INSTALL GALVANIZED FLEXIBLE STEEL CONDUIT AT ALL POINTS OF CONNECTION TO EQUIPMENT MOUNTED ON SUPPORT TO ALLOW FOR EXPANSION AND CONTRACTION.
5. A RUN OF CONDUIT BETWEEN BOXES OR EQUIPMENT SHALL NOT CONTAIN MORE THAN THE EQUIVALENT OF THREE 90 DEGREE BENDS MAX. CONDUIT BEND SHALL BE MADE WITH THE UL LISTED BENDER OR FACTORY 90 DEGREE ELBOWS MAY BE USED.
6. FIELD FABRICATED CONDUITS SHALL BE CUT SQUARE WITH A CONDUIT CUTTING TOOL AND REAMED TO PROVIDE A SMOOTH INSIDE SURFACE.
7. PROVIDE INSULATED GROUNDING BUSHING FOR ALL CONDUITS.
8. CONTRACTOR IS RESPONSIBLE FOR PROTECTING ALL CONDUITS DURING CONSTRUCTION. TEMPORARY OPENINGS IN THE CONDUIT SYSTEM SHALL BE PLUGGED OR CAPPED TO PREVENT ENTRANCE OF MOISTURE OR FOREIGN MATTER. CONTRACTOR SHALL REPLACE ANY CONDUITS CONTAINING FOREIGN MATERIALS THAT CANNOT BE REMOVED.
9. ALL CONDUITS SHALL BE SWABBED CLEAN BY PULLING AN APPROPRIATE SIZE MANDREL THROUGH THE CONDUIT BEFORE INSTALLATION OF CONDUCTORS OR CABLES. CONDUIT SHALL BE FREE OF DIRT AND DEBRIS.
10. INSTALL PULL STRINGS IN ALL CLEAN EMPTY CONDUITS. IDENTIFY PULL STRINGS AT EACH END.
11. INSTALL 2" HIGHLY VISIBLE AND DETECTABLE TAPE 12" ABOVE ALL UNDERGROUND CONDUITS AND CONDUCTORS.
12. CONDUITS SHALL BE INSTALLED IN SUCH A MANNER AS TO INSURE AGAINST COLLECTION OF TRAPPED CONDENSATION.
13. PROVIDE CORE DRILLING AS NECESSARY FOR PENETRATIONS TO ALLOW FOR RACEWAYS AND CABLES TO BE ROUTED THROUGH THE BUILDING. DO NOT PENETRATE STRUCTURAL MEMBERS AND/OR SLEEVES. PENETRATIONS IN FIRE RATED CONSTRUCTION SHALL BE EFFECTIVELY SEALED WITH FIRE RATED MATERIAL WHICH SHALL MAINTAIN THE FIRE RATING OF THE WALL OR STRUCTURE. FIRE STOPS AT FLOOR PENETRATIONS SHALL PREVENT PASSAGE OF WATER, SMOKE, FIRE, AND FUMES. ALL MATERIAL SHALL BE UL APPROVED FOR THE PURPOSE.

B. CONDUCTORS AND CABLE:

1. SPLICES SHALL BE MADE ONLY AT OUTLETS, JUNCTION BOXES, OR ACCESSIBLE RACEWAY CONDUITS APPROVED FOR THIS PURPOSE.
2. PULLING LUBRICANTS SHALL BE UL APPROVED. CONTRACTOR SHALL USE NYLON OR HEMP ROPE FOR PULLING CONDUCTOR OR CABLES INTO THE CONDUIT.
3. CABLES SHALL BE NEATLY TRAINED, WITHOUT INTERLACING, AND BE OF SUFFICIENT LENGTH IN ALL BOXES AND EQUIPMENT TO PERMIT MAKING A NEAT ARRANGEMENT. CABLES SHALL BE SECURED IN A MANNER TO AVOID TENSION ON CONDUCTORS OR TERMINALS. CONDUCTORS SHALL BE PROTECTED FROM MECHANICAL INJURY AND MOISTURE. SHARP BENDS OVER CONDUIT BUSHINGS IS PROHIBITED. DAMAGED CABLES SHALL BE REMOVED AND REPLACED AT THE CONTRACTOR'S EXPENSE.

C. DISCONNECT SWITCHES:

1. INSTALL DISCONNECT SWITCHES LEVEL AND PLUMB. CONNECT TO WIRING SYSTEM AND GROUNDING SYSTEM AS INDICATED.

D. GROUNDING:

1. ALL METALLIC PARTS OF ELECTRICAL EQUIPMENT WHICH DO NOT CARRY CURRENT SHALL BE GROUNDED IN ACCORDANCE WITH THE REQUIREMENTS OF THE BUILDING MANUFACTURER, DISH WIRELESS GROUNDING AND BONDING STANDARDS, LATEST EDITION, AND COMPLY WITH DISH WIRELESS GROUNDING CHECKLIST, LATEST VERSION, AND THE NATIONAL ELECTRICAL CODE.
2. PROVIDE ELECTRICAL GROUNDING AND BONDING SYSTEM INDICATED WITH ASSEMBLY OF MATERIALS, INCLUDING GROUNDING ELECTRODES, BONDING JUMPERS AND ADDITIONAL ACCESSORIES AS REQUIRED FOR A COMPLETE INSTALLATION.
3. ALL GROUNDING CONDUCTORS SHALL PROVIDE A STRAIGHT DOWNWARD PATH TO GROUND WITH GRADUAL BEND AS REQUIRED. GROUNDING CONDUCTORS SHALL NOT BE LOOPED OR SHARPLY BENT. ROUTE GROUNDING CONNECTIONS AND CONDUCTORS TO GROUND IN THE SHORTEST AND STRAIGHTEST PATHS POSSIBLE TO MINIMIZE TRANSIENT VOLTAGE RISES.
4. BUILDINGS AND/OR NEW TOWERS GREATER THAN 75 FEET IN HEIGHT AND WHERE THE MAIN GROUNDING CONDUCTORS ARE REQUIRED TO BE ROUTED TO GRADE, THE CONTRACTOR SHALL ROUTE TWO GROUNDING CONDUCTORS FROM THE ROOFTOP, TOWER, AND WATER TOWERS GROUNDING RING, TO THE EXISTING GROUNDING SYSTEM, THE GROUNDING CONDUCTORS SHALL NOT BE SMALLER THAN 2/0 AWG COPPER. ROOFTOP GROUNDING RING SHALL BE BONDED TO THE EXISTING GROUNDING SYSTEM, THE BUILDING STEEL COLUMNS, LIGHTNING PROTECTION SYSTEM, AND BUILDING MAIN WATER LINE (FERROUS OR NONFERROUS METAL PIPING ONLY). SEE STANDARD 6.3.2.2.
5. TIGHTEN GROUNDING AND BONDING CONNECTORS, INCLUDING SCREWS AND BOLTS, IN ACCORDANCE WITH MANUFACTURER'S PUBLISHED TORQUE TIGHTENING VALUES FOR CONNECTORS AND BOLTS. WHERE MANUFACTURER'S TORQUING REQUIREMENTS ARE NOT AVAILABLE, TIGHTEN CONNECTIONS TO COMPLY WITH TIGHTENING TORQUE VALUES SPECIFIED IN UL TO ASSURE PERMANENT AND EFFECTIVE GROUNDING.
6. CONTRACTOR SHALL VERIFY THE LOCATIONS OF GROUNDING TIE–IN–POINTS TO THE EXISTING GROUNDING SYSTEM. ALL UNDERGROUND GROUNDING CONNECTIONS SHALL BE MADE BY THE EXOTHERMIC WELD PROCESS AND INSTALLED IN ACCORDANCE WITH THE MANUFACTURER'S INSTRUCTIONS.
7. ALL GROUNDING CONNECTIONS SHALL BE INSPECTED FOR TIGHTNESS. EXOTHERMIC WELDED CONNECTIONS SHALL BE APPROVED BY THE INSPECTOR HAVING JURISDICTION BEFORE BEING PERMANENTLY CONCEALED.
8. APPLY CORROSION–RESISTANT FINISH TO FIELD CONNECTIONS AND PLACES WHERE FACTORY APPLIED PROTECTIVE COATINGS HAVE BEEN DESTROYED. USE KOPR–SHIELD ANTI–OXIDATION COMPOUND ON ALL COMPRESSION GROUNDING CONNECTIONS.
9. A SEPARATE, CONTINUOUS, INSULATED EQUIPMENT GROUNDING CONDUCTOR SHALL BE INSTALLED IN ALL FEEDER AND BRANCH CIRCUITS.
10. BOND ALL INSULATED GROUNDING BUSHINGS WITH A BARE #6 AWG GROUNDING CONDUCTOR TO A GROUND BUS.
11. DIRECT BURIED GROUNDING CONDUCTORS SHALL BE INSTALLED AT A NOMINAL DEPTH OF 30" MINIMUM BELOW GRADE, OR 6" BELOW THE FROST LINE, USE THE GREATER OF THE TWO DISTANCES.
12. ALL GROUNDING CONDUCTORS EMBEDDED IN OR PENETRATING CONCRETE SHALL BE INSTALLED IN SCHEDULE 40 PVC CONDUIT.
13. THE INSTALLATION OF CHEMICAL ELECTROLYTIC GROUNDING SYSTEM SHALL BE IN STRICT ACCORDANCE WITH MANUFACTURER'S INSTRUCTIONS. REMOVE SEALING TAPE FROM LEACHING AND BREATHER HOLES. INSTALL PROTECTIVE BOX FLUSH WITH GRADE.
14. DRIVE GROUND RODS UNTIL TOPS ARE A MINIMUM DISTANCE OF 30" DEPTH OR 6" BELOW FROST LINE, USING THE GREATER OF THE TWO DISTANCES.
15. CONTRACTOR SHALL REPAIR, AND/OR REPLACE, EXISTING GROUNDING SYSTEM COMPONENTS DAMAGED DURING CONSTRUCTION AT THE CONTRACTORS EXPENSE.

ACCEPTANCE TESTING:

A. CERTIFIED PERSONNEL USING CERTIFIED EQUIPMENT SHALL PERFORM REQUIRED TESTS AND SUBMIT WRITTEN TEST REPORTS UPON COMPLETION.

B. WHEN MATERIAL AND/OR WORKMANSHIP IS FOUND NOT TO COMPLY WITH THE SPECIFIED REQUIREMENTS, THE NON–COMPLYING ITEMS SHALL BE REMOVED FROM THE PROJECT SITE AND REPLACED WITH ITEMS COMPLYING WITH THE SPECIFIED REQUIREMENTS PROMPTLY AFTER RECEIPT OF NOTICE FOR NON–COMPLIANCE.

C. TEST PROCEDURES:

1. ALL FEEDERS SHALL HAVE INSULATION TESTED AFTER INSTALLATION, BEFORE CONNECTION TO DEVICES. THE CONDUCTORS SHALL TEST FREE FROM SHORT CIRCUITS AND GROUNDS. TESTING SHALL BE FOR ONE MINUTE USING 1000V DC. PROVIDE WRITTEN DOCUMENTATION FOR ALL TEST RESULTS.
2. PRIOR TO ENERGIZING CIRCUITRY, TEST WIRING DEVICES FOR ELECTRICAL CONTINUITY AND PROPER POLARITY CONNECTIONS.
3. MEASURE AND RECORD VOLTAGES BETWEEN PHASES AND BETWEEN PHASE CONDUCTORS AND NEUTRALS, SUBMIT A REPORT OF MAXIMUM AND MINIMUM VOLTAGES.
4. PERFORM GROUNDING TEST TO MEASURE GROUNDING RESISTANCE OF GROUNDING SYSTEM USING THE IEEE STANDARD 3–POINT "FALL–OF–POTENTIAL" METHOD. PROVIDE PLOTTED TEST VALUES AND LOCATION SKETCH. NOTIFY THE ENGINEER IMMEDIATELY IF MEASURED VALUE IS OVER 5 OHMS.

dish WIRELESS

AMERICAN TOWER®

A.T. ENGINEERING SERVICE, PLLC
3500 REGENCY PARKWAY
SUITE 100
CARY, NC 27518
PHONE: (919) 468-0112
COA: P-1177

SEAL:

STATE OF CONNECTICUT
PATRICK P. BARRY
28959
LICENSED
PROFESSIONAL ENGINEER

Authorized by "EOR"
Jun 11 2019 3:58 PM

cosign

DRAWN BY:	TC
APPROVED BY:	PPB
DATE DRAWN:	06/03/19

REV.	DESCRIPTION	BY	DATE
0	FOR CONSTRUCTION	TC	06/03/19

THESE DRAWINGS AND/OR THE ACCOMPANYING SPECIFICATION AS INSTRUMENTS OR SERVICE ARE THE EXCLUSIVE PROPERTY OF AMERICAN TOWER. THEIR USE AND PUBLICATION SHALL BE RESTRICTED TO THE ORIGINAL SITE FOR WHICH THEY ARE PREPARED. ANY USE OR DISCLOSURE OTHER THAN THAT WHICH RELATES TO AMERICAN TOWER OR THE SPECIFIED CARRIER IS STRICTLY PROHIBITED. TITLE TO THESE DOCUMENTS SHALL REMAIN THE PROPERTY OF AMERICAN TOWER WHETHER OR NOT THE PROJECT IS EXECUTED. NEITHER THE ARCHITECT NOR THE ENGINEER WILL BE PROVIDING ON-SITE CONSTRUCTION REVIEW OF THIS PROJECT. CONTRACTOR(S) MUST VERIFY ALL DIMENSIONS AND ADVISE AMERICAN TOWER OF ANY DISCREPANCIES. ANY PRIOR ISSUANCE OF THIS DRAWING IS SUPERSEDED BY THE LATEST VERSION ON FILE WITH AMERICAN TOWER.

ATC PROJECT NUMBER:
12963795

DISH WIRELESS SITE NUMBER:
CT0100015A

ATC SITE NUMBER:
88019

SITE ADDRESS:
428 PLATT HILL ROAD
WINSTED, CT 06098

ELECTRICAL NOTES

SHEET NUMBER:	REVISION:
EN-2	0

Copyright © 2019 ATC IP LLC. All Rights Reserved.

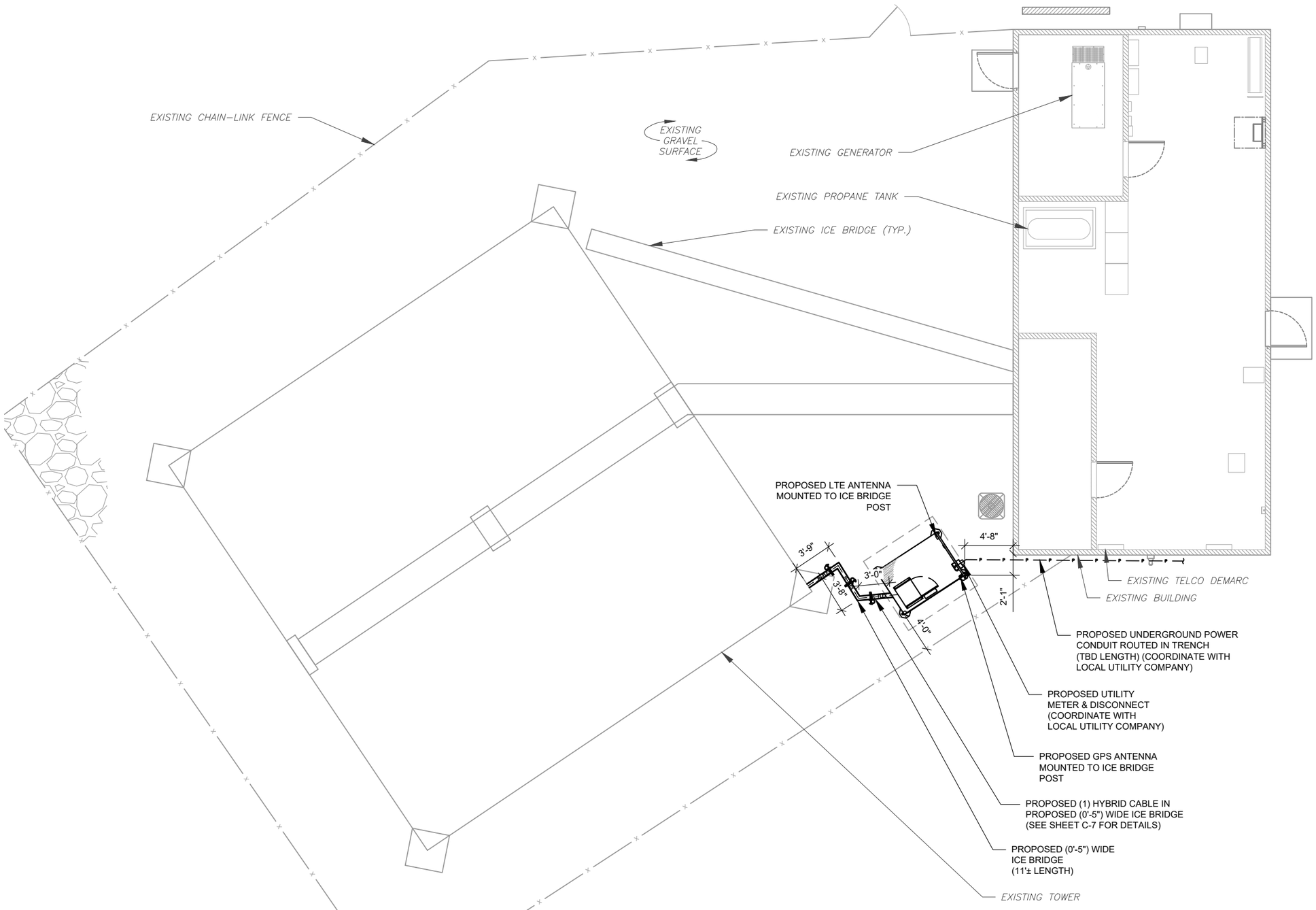

1 COMPOUND PLAN

0 10' 20'

SCALE: 1"=10' (11X17)
1"=5' (22X34)

N

HYBRID CABLE LENGTH:

PROPOSED DISH WIRELESS HYBRID CABLE LENGTH: **190'-0"±**. CONTRACTOR TO VERIFY UTILITY ROUTES WITH DISH CM BEFORE CONSTRUCTION.

dish WIRELESS

AMERICAN TOWER®

A.T. ENGINEERING SERVICE, PLLC
3500 REGENCY PARKWAY
SUITE 100
CARY, NC 27518
PHONE: (919) 468-0112
COA: P-1177

SEAL:

STATE OF CONNECTICUT
PATRICK P. BARRY
28959
LICENSED
PROFESSIONAL ENGINEER

Authorized by "EOR"
Jun 11 2019 3:58 PM

cosign

DRAWN BY:	TC
APPROVED BY:	PPB
DATE DRAWN:	06/03/19

REV.	DESCRIPTION	BY	DATE
0	FOR CONSTRUCTION	TC	06/03/19

THESE DRAWINGS AND/OR THE ACCOMPANYING SPECIFICATION AS INSTRUMENTS OR SERVICE ARE THE EXCLUSIVE PROPERTY OF AMERICAN TOWER. THEIR USE AND PUBLICATION SHALL BE RESTRICTED TO THE ORIGINAL SITE FOR WHICH THEY ARE PREPARED. ANY USE OR DISCLOSURE OTHER THAN THAT WHICH RELATES TO AMERICAN TOWER OR THE SPECIFIED CARRIER IS STRICTLY PROHIBITED. TITLE TO THESE DOCUMENTS SHALL REMAIN THE PROPERTY OF AMERICAN TOWER WHETHER OR NOT THE PROJECT IS EXECUTED. NEITHER THE ARCHITECT NOR THE ENGINEER WILL BE PROVIDING ON-SITE CONSTRUCTION REVIEW OF THIS PROJECT. CONTRACTOR(S) MUST VERIFY ALL DIMENSIONS AND ADVISE AMERICAN TOWER OF ANY DISCREPANCIES. ANY PRIOR ISSUANCE OF THIS DRAWING IS SUPERSEDED BY THE LATEST VERSION ON FILE WITH AMERICAN TOWER.

ATC PROJECT NUMBER:
12963795

DISH WIRELESS SITE NUMBER:
CT0100015A

ATC SITE NUMBER:
88019

SITE ADDRESS:
428 PLATT HILL ROAD
WINSTED, CT 06098

COMPOUND PLAN

SHEET NUMBER: C-1

REVISION: 0

Copyright © 2019 ATC IP LLC. All Rights Reserved.

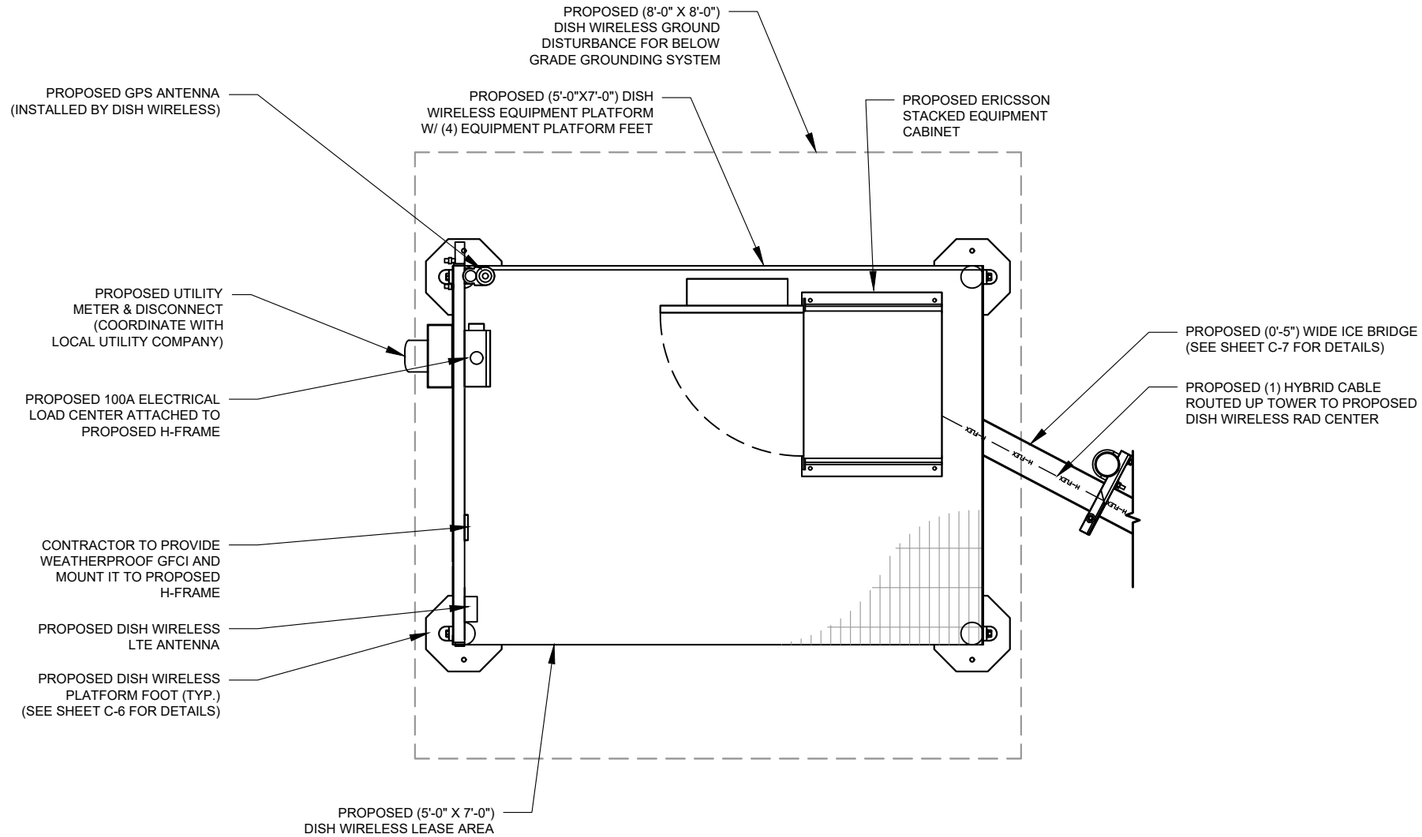

1 EQUIPMENT PLAN

0 2' 4'

SCALE: 1"=2' (11X17)
1"=1' (22X34)

NOTES:

1. PROPOSED SATELLITE DISH OR LTE BACKHAUL LOCATION TO BE VERIFIED, WITH DISH CM, IN THE FIELD AT TIME OF CONSTRUCTION.
2. CONTRACTOR TO PROVIDE 4MIL BLACK PLASTIC BENEATH PROPOSED DISH WIRELESS EQUIPMENT PLATFORM AND LEGS.

dish WIRELESS

AMERICAN TOWER®

A.T. ENGINEERING SERVICE, PLLC
3500 REGENCY PARKWAY
SUITE 100
CARY, NC 27518
PHONE: (919) 468-0112
COA: P-1177

SEAL:

STATE OF CONNECTICUT
PATRICK P. BARRY
28959
LICENSED
PROFESSIONAL ENGINEER

Authorized by "EOR"
Jun 11 2019 3:58 PM

cosign

DRAWN BY:	TC
APPROVED BY:	PPB
DATE DRAWN:	06/03/19

REV.	DESCRIPTION	BY	DATE
0	FOR CONSTRUCTION	TC	06/03/19

THESE DRAWINGS AND/OR THE ACCOMPANYING SPECIFICATION AS INSTRUMENTS OR SERVICE ARE THE EXCLUSIVE PROPERTY OF AMERICAN TOWER. THEIR USE AND PUBLICATION SHALL BE RESTRICTED TO THE ORIGINAL SITE FOR WHICH THEY ARE PREPARED. ANY USE OR DISCLOSURE OTHER THAN THAT WHICH RELATES TO AMERICAN TOWER OR THE SPECIFIED CARRIER IS STRICTLY PROHIBITED. TITLE TO THESE DOCUMENTS SHALL REMAIN THE PROPERTY OF AMERICAN TOWER WHETHER OR NOT THE PROJECT IS EXECUTED. NEITHER THE ARCHITECT NOR THE ENGINEER WILL BE PROVIDING ON-SITE CONSTRUCTION REVIEW OF THIS PROJECT. CONTRACTOR(S) MUST VERIFY ALL DIMENSIONS AND ADVISE AMERICAN TOWER OF ANY DISCREPANCIES. ANY PRIOR ISSUANCE OF THIS DRAWING IS SUPERSEDED BY THE LATEST VERSION ON FILE WITH AMERICAN TOWER.

Copyright © 2019 ATC IP LLC. All Rights Reserved.

ATC PROJECT NUMBER:
12963795

DISH WIRELESS SITE NUMBER:
CT0100015A

ATC SITE NUMBER:
88019

SITE ADDRESS:
428 PLATT HILL ROAD
WINSTED, CT 06098

EQUIPMENT PLAN

SHEET NUMBER: C-2

REVISION: 0

NOTES:

1. DISH WIRELESS TO CONFIRM WITH TOWER OWNER THE VERTICAL LEASE AREA RIGHTS AVAILABLE PRIOR TO CONSTRUCTION. EXISTING EQUIPMENT MAY OBSTRUCT DESIRED DISH WIRELESS RAD CENTER.
2. TOWER FACE WIDTH/DIAMETER IS AN ESTIMATE FROM STRUCTURAL ANALYSIS.
3. STRUCTURE INFORMATION IS SHOWN FOR ILLUSTRATIVE PURPOSES ONLY. STRUCTURAL INTEGRITY OF SUPPORTING STRUCTURE, ANTENNA MOUNTS, AND FOUNDATION SHALL BE VERIFIED AS ACCEPTABLE BY ENGINEER CERTIFIED STRUCTURAL ANALYSIS, UTILIZING THE LOADING REPRESENTED WITHIN THESE DRAWINGS PRIOR TO THE EXECUTION OF EQUIPMENT CHANGES CONTAINED IN THESE DRAWINGS. CONTRACTOR SHALL OBTAIN ALL STRUCTURAL REPORTS AND FOLLOW ALL RECOMMENDATIONS.

RAD CENTER	FACE WIDTH
154'–0"±	26'–0"±

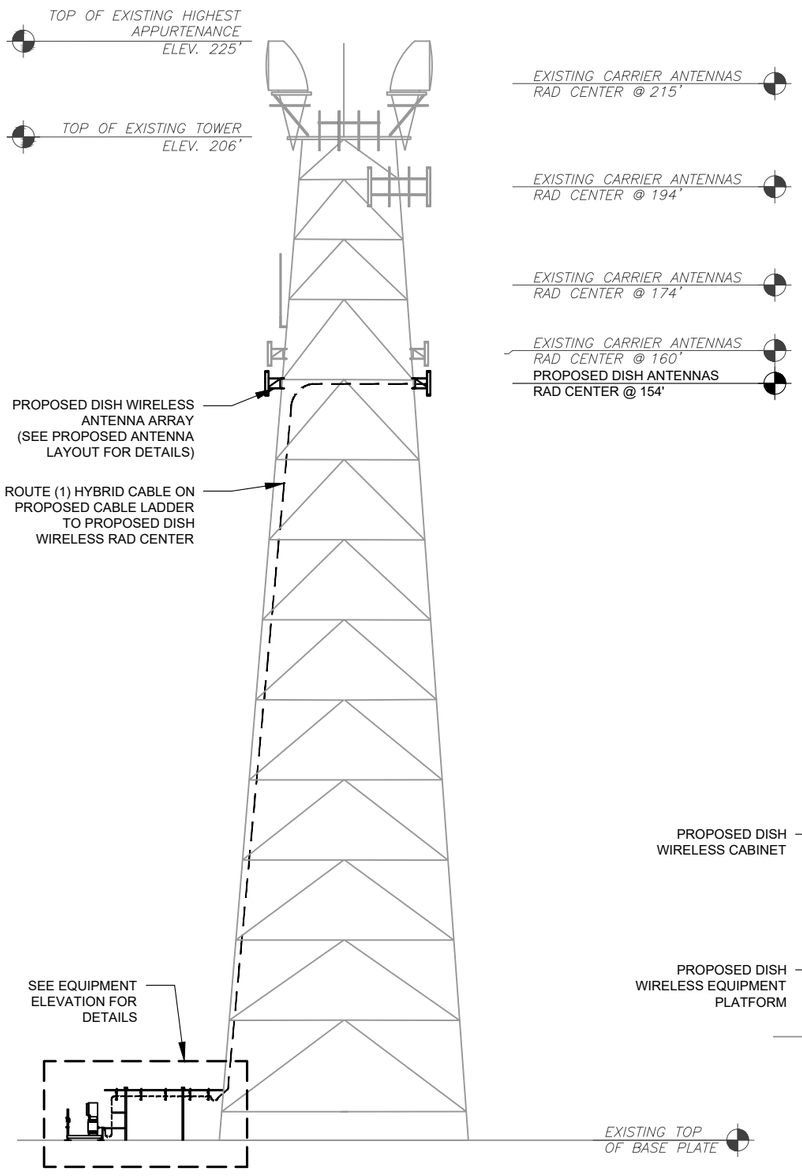

1 FINAL TOWER ELEVATION
N.T.S.

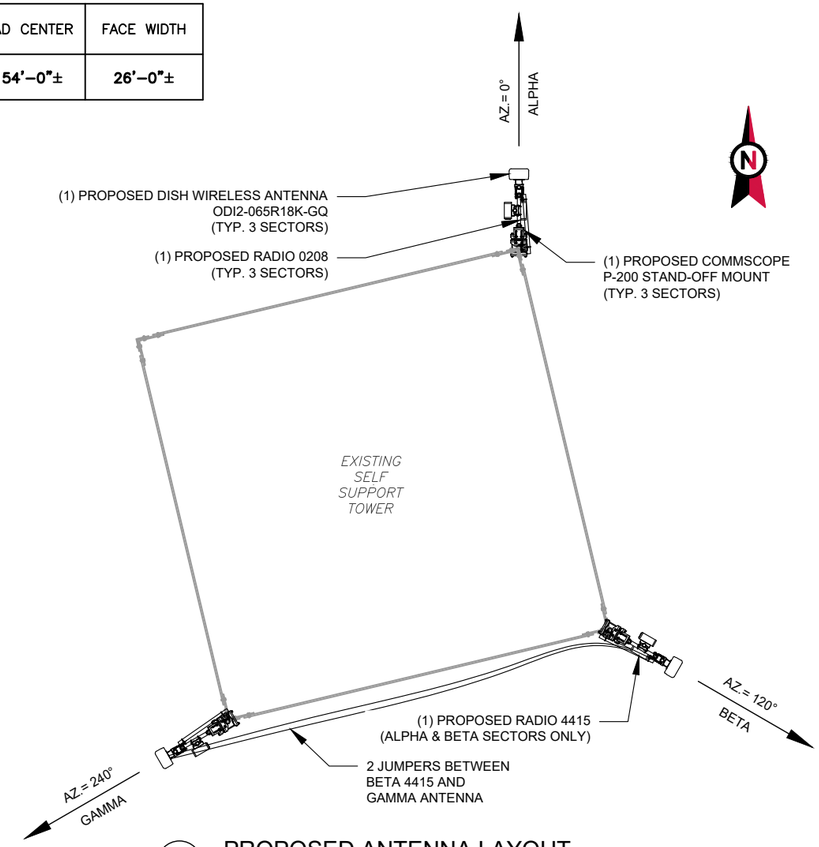

2 PROPOSED ANTENNA LAYOUT
N.T.S.

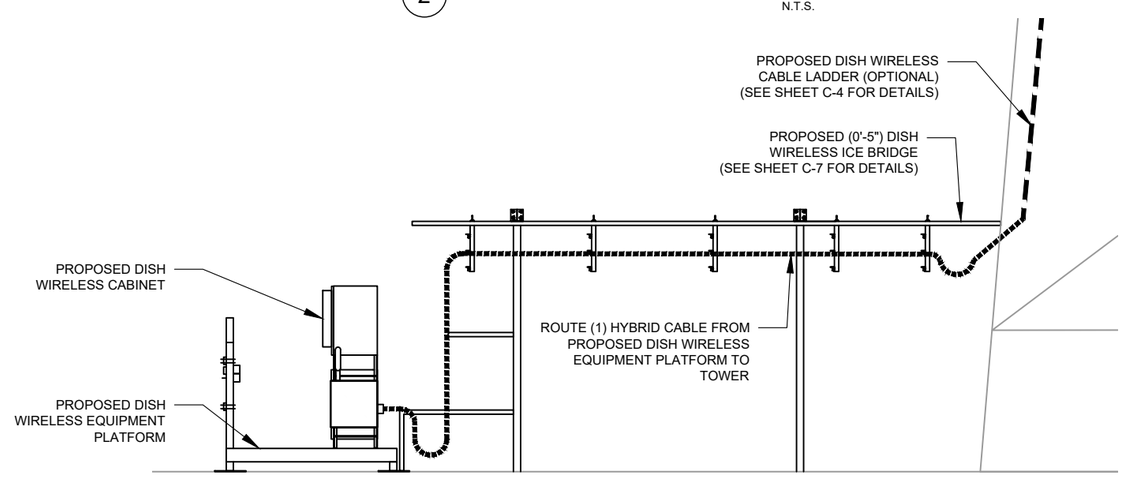

3 EQUIPMENT ELEVATION
N.T.S.

ANTENNA LAYOUT NOTES:

1. THIS ANTENNA ORIENTATION PLAN IS A SCHEMATIC. THE CONTRACTOR SHALL VERIFY TOWER ORIENTATION AND FIELD COORDINATE REQUIRED ADJUSTMENTS TO ACHIEVE THE DESIRED ANTENNA AZIMUTHS.
2. ANTENNA CENTERLINE HEIGHT REFERENCED FROM GROUND AT BASE OF TOWER, ASSUMING HEIGHT OF 0'–0" AT SAID REFERENCE POINT.
3. ALL ANTENNAS, CABLES AND MOUNTS SHALL BE INSTALLED IN ACCORDANCE WITH THE TOWER ENGINEER'S RECOMMENDATIONS IN A MANNER CONSISTENT WITH THE STRUCTURAL ANALYSIS REPORT.
4. ALL ANTENNA BRACKETS PER ANTENNA MANUFACTURER, OR EQUAL. CONTRACTOR TO COORDINATE REQUIRED MECHANICAL DOWN TILT WITH DISH WIRELESS.
5. ALL ANTENNA INFORMATION TO BE CONFIRMED WITH DISH WIRELESS RF DESIGN PRIOR TO INSTALLATION.
6. VERIFY POSITIONS AND AZIMUTH OF ANTENNAS WITH DISH WIRELESS PRIOR TO INSTALLATION.
7. SECTOR FRAMES AND ANTENNAS SHOULD HAVE IDENTIFYING TORQUE MARKS SHOWN AFTER INSTALLATION.
8. ALL CLOSE–OUT PHOTOS ADHERE TO CLOSE–OUT DOCUMENTATION.

EQUIPMENT TESTING:

CONTRACTOR SHALL COMPLETE THE FOLLOWING REQUIREMENTS:

1. ANTENNAS & RF JUMPERS:
- ALL RF JUMPERS & ANTENNA PORTS MUST HAVE DOCUMENTED PASSING SYSTEM SWEEP TEST.
- PIM TESTING IS REQUIRED FOR ALL INSTALLED ANTENNAS & FEEDLINES.
- SYSTEM SWEEPS SHALL BE AT A RETURN LOSS OF ≤ –16db.
- ALL SWEEPS MUST BE PROVIDED IN A PDF AS WELL AS ANRITSU (OR EQUAL) DATA FILE FORMAT.
- FINAL ACCEPTANCE: PERFORM ALL TECHNICAL TESTS SPECIFIED IN THE CONSTRUCTION SOW, SECTION XIV.

2. HYBRID CABLES:
- ALL FIBER PAIRS MUST HAVE A DOCUMENTED PASSING POWER & A FIBER INSPECTION SCOPE TEST.
- PASSING POWER TEST SHALL BE ≤ 3db.
- REQUIRED FIBER TEST GEAR SHALL BE VIAVI JDSU FIT–SD103; P5000i FIBER SCOPE DIGITAL INSPECTION KIT; VIAVI 2303/11, OLS–35 OPTICAL LASER LIGHT SOURCE 1310/1550 NM, SM, INTERCHANGEABLE ADAPTER OR EQUAL.
- ALL FIBER TEST RESULTS MUST BE PROVIDED IN PDF FORMAT.
- FINAL ACCEPTANCE: PERFORM ALL TECHNICAL TESTS SPECIFIED IN THE CONSTRUCTION SOW, SECTION XIV.

INSTALLER NOTE:

1. SCHEMATIC LAYOUT ONLY. REFER TO SHEETS C–1 AND C–2 FOR EXACT EQUIPMENT LAYOUT, SIZES AND LOCATIONS OF ICE BRIDGE.
2. ALL CABLE SUPPORTS SHOULD BE BLOCKS WITH GROMMETS, NO SNAP–INS ARE ALLOWED.

dish WIRELESS

AMERICAN TOWER®

A.T. ENGINEERING SERVICE, PLLC
3500 REGENCY PARKWAY
SUITE 100
CARY, NC 27518
PHONE: (919) 468-0112
COA: P-1177

SEAL:

STATE OF CONNECTICUT
PATRICK P. BARRY
28959
LICENSED
PROFESSIONAL ENGINEER

Authorized by "EOR"
Jun 11 2019 3:58 PM

cosign

DRAWN BY:	TC
APPROVED BY:	PPB
DATE DRAWN:	06/03/19

REV.	DESCRIPTION	BY	DATE
0	FOR CONSTRUCTION	TC	06/03/19

THESE DRAWINGS AND/OR THE ACCOMPANYING SPECIFICATION AS INSTRUMENTS OR SERVICE ARE THE EXCLUSIVE PROPERTY OF AMERICAN TOWER. THEIR USE AND PUBLICATION SHALL BE RESTRICTED TO THE ORIGINAL SITE FOR WHICH THEY ARE PREPARED. ANY USE OR DISCLOSURE OTHER THAN THAT WHICH RELATES TO AMERICAN TOWER OR THE SPECIFIED CARRIER IS STRICTLY PROHIBITED. TITLE TO THESE DOCUMENTS SHALL REMAIN THE PROPERTY OF AMERICAN TOWER WHETHER OR NOT THE PROJECT IS EXECUTED. NEITHER THE ARCHITECT NOR THE ENGINEER WILL BE PROVIDING ON-SITE CONSTRUCTION REVIEW OF THIS PROJECT. CONTRACTOR(S) MUST VERIFY ALL DIMENSIONS AND ADVISE AMERICAN TOWER OF ANY DISCREPANCIES. ANY PRIOR ISSUANCE OF THIS DRAWING IS SUPERSEDED BY THE LATEST VERSION ON FILE WITH AMERICAN TOWER.

ATC PROJECT NUMBER:
12963795

DISH WIRELESS SITE NUMBER:
CT0100015A

ATC SITE NUMBER:
88019

SITE ADDRESS:
428 PLATT HILL ROAD
WINSTED, CT 06098

TOWER ELEVATION & ANTENNA LAYOUT

SHEET NUMBER: C-3

REVISION: 0

Copyright © 2019 ATC IP LLC. All Rights Reserved.

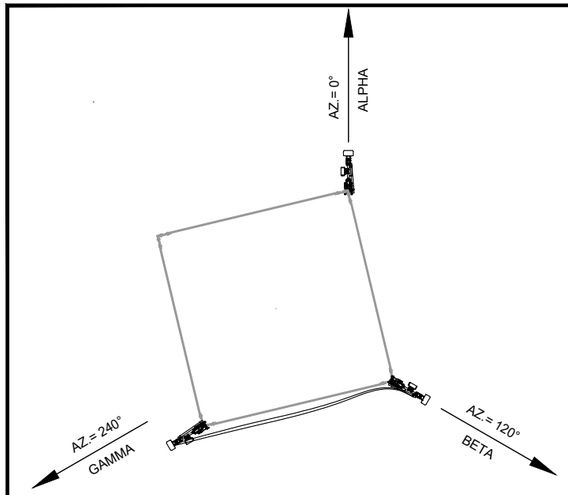

TYPICAL SECTOR

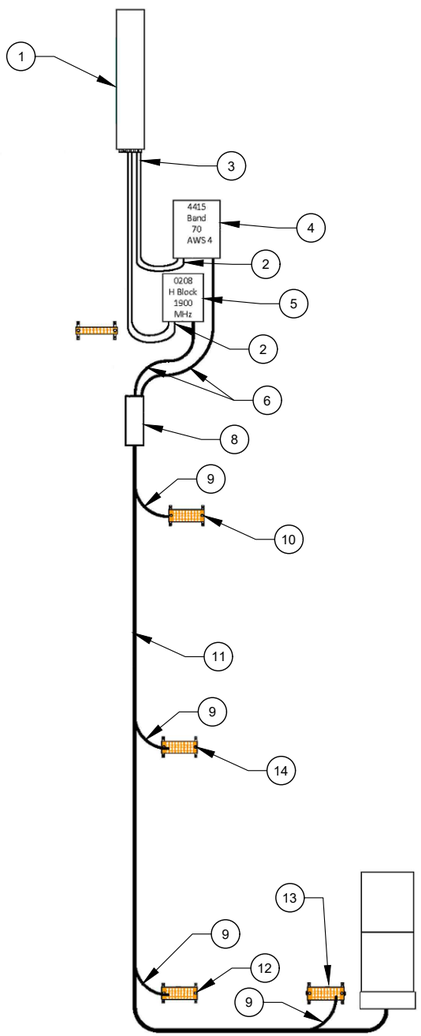

PROPOSED ERICSSON EQUIPMENT SCHEDULE

SECTOR	ANTENNA MANUFACTURER	HYBRID CABLES	AZIMUTH	RAD CENTER	MECH D-TILT	ELECT D-TILT	RRU MANUFACTURER	RRU TECHNOLOGY	RRU LOCATION	JUMPER SIZE	JUMPER QTY	JUMPER LENGTH
ALPHA 1	-	-	-	-	-	-	-	-	-	-	-	-
ALPHA 2	ODI2-065R18K-GQ	HYBRID - DSHYBKIT-18612-70M	0°	154'-0"	-	-	-	-	-	-	-	-
ALPHA 3	-	-	-	-	0°	- 2°	ERICSSON 0208 ERICSSON 4415	H BLOCK BAND 70	SECTOR MOUNT	1/2"	2	10'-0"
BETA 1	-	-	-	-	-	-	-	-	-	-	-	-
BETA 2	ODI2-065R18K-GQ	SHARE WITH ALPHA	120°	154'-0"	-	-	-	-	-	-	-	-
BETA 3	-	-	-	-	0°	- 2°	ERICSSON 0208 ERICSSON 4415	H BLOCK BAND 70	SECTOR MOUNT	1/2"	2	10'-0"
GAMMA 1	-	-	-	-	-	-	-	-	-	-	-	-
GAMMA 2	ODI2-065R18K-GQ	SHARE WITH ALPHA	240°	154'-0"	-	-	-	-	-	-	-	-
GAMMA 3	-	-	-	-	0°	- 2°	ERICSSON 0208 ERICSSON 4415	H BLOCK BAND 70	SECTOR MOUNT	1/2"	2	30'-0"
PROPOSED RET CABLE 4415 RRU TO ANTENNA, (1) PER SECTOR. BETA SECTOR TO BE DAISY CHAINED TO GAMMA.												

NOTE:

1. CONTRACTOR TO REFER TO, AND VALIDATE, THE LATEST RFDS PRIOR TO CONSTRUCTION.

KEY NOTES:

1. ANTENNA - COMBA ODI2 - 065R18K-GQ - (DISH PROVIDED)
2. CLAMSHELL WEATHER PROOFING (CONTRACTOR PROVIDED)
3. PROPOSED (6 EA.) 1/2" COAX JUMPERS FROM RRUs TO ANTENNA - (DISH PROVIDED) - VARIABLE LENGTHS
4. RRU - 4415 (X2) BAND 70 AWS 4 - (DISH PROVIDED)
5. RRU - 0208 (X3) H BLOCK 1900 MHZ - (DISH PROVIDED)
6. DC/FIBER JUMPER CABLES (BREAKOUT CYLINDER TO RRU)
7. SECTOR GROUND BUS BAR - 12'X4"X1/4" (DISH PROVIDED)
8. FIBER/POWER BREAKOUT CYLINDER
9. GROUND KIT ON HYBRID CABLE
10. UPPER TOWER GROUND BUS BAR - 12"X4"X1/4" (DISH PROVIDED)
11. HYBRID CABLE
12. LOWER TOWER GROUND BUS BAR - 12"X4"X1/4" (DISH PROVIDED)
13. EQUIPMENT GROUND BUS BAR - 12"X4"X1/4" (DISH PROVIDED)
14. ADD ADDITIONAL BUS BARS AND GROUND KITS ON TOWER IN 50, 100, OR 200-FOOT INCREMENTS BASED ON TOWER HEIGHT AND LIGHTING ZONE REQUIREMENTS

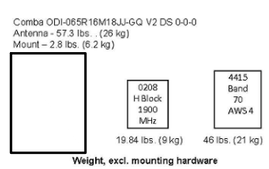

ANTENNA NOTES:

1. ANTENNA FEEDERS AND ANTENNA JUMPERS SHALL BE COLOR CODED PER DISH WIRELESS REQUIREMENTS. CABLE TRIPING SHALL BE ADDED TO EACH ANTENNA FEEDLINE AND ANTENNA JUMPER PER SHEET A–4.0 DETAIL 5.
2. TERMINATE UNUSED ANTENNA PORTS WITH CONNECOR CAP AND WEIATHERPROOF THOROUGHLY.
3. CONTRACTOR MUST FOLLOW ALL MANUFACTURERS' RECOMMENDATIONS AND DISH SPECIFICATIONS REGARDING INSTALLATION OF FEEDLINES, CONNECTORS, AND ANTENNAS.
4. WEATHERPROOF ALL ANTENNA CONNECTORS WITH CLAM SHELLS.
5. ANTENNA CONTRACTOR SHALL PERFORM A "TAPE DROP" MEASUREMENT TO CONFIRM/VALIDATE ANTENNA CENTERLINE (ACL) HEIGHT.
6. CONTRACTOR TO CONFIRM/VALIDATE THE LATEST RFDS PRIOR TO CONSTRUCTION.

INSTALLER NOTE:

1. SCHEMATIC LAYOUT ONLY. REFER TO EXACT EQUIPMENT LAYOUT, SIZES AND LOCATIONS OF ICE BRIDGE OR RMC.
2. ALL CABLE SUPPORTS SHOULD BE BLOCKS AND GROMMETS. BUTTERFLIES AND SNAP–INS ARE NOT ALLOWED.
3. STRAIN–RELIEVE SUPPORT FOR ALL TOWER CABLES AND/OR FIBERS, SHALL OCCUR EVERY 48" VERTICALLY, AND 24" HORIZONTALLY.
4. CONTRACTOR TO REFERENCE DISH NETWORK LATEST ISSUE RFDS AND GIVE PRECEDENCE TO INFORMATION PROVIDED IN LATEST RFDS OVER INFOMRATION PROVIDED IN ANTENNA SCHEDULE TABLE.
5. CONTRACTOR TO VERIFY PROPOSED LOADING, TOWER/FOUNDATION MODIFICATIONS AND REMOVED EQUIPMENT AS STATED IN PASSING STRUCTURAL ANALYSIS AND MOD DESIGNS AND CONTACT DISH NETWORK IMMEDIATELY IN THE EVENT OF ANY DISCREPANCIES.
6. CONTRACTOR IS TO NOTE ANY APPERTENANCES ON TOWER THAT EXTENDS WITHIN 2' OF THE TOP OF AND 5' BELOW THE DISH ANTENNAS. IF ANY APPERTENANCE IS ENCROACHING THIS THRESHOLD, THE CONTRACTOR IS TO COMMUNICATE THE FINDING WITH DISH NETWORK IMMEDIATELY AND BEFORE CONSTRUCTION STARTS.

EQUIPMENT TESTING:

1. ANTENNAS & RF JUMPERS:
   - ALL RF JUMPERS & ANTENNA PORTS MUST HAVE DOCUMENTED PASSING SYSTEM SWEEP TESTS.
   - PIM TESTING IS REQUIRED FOR ALL INSTALLED ANTENNAS & FEEDLINES.
   - SYSTEM SWEEPS SHALL BE AT A RETURN LOSS OF ≤ –16db.
   - ALL SWEEPS MUST BE PROVIDED IN A PDF AS WELL AS ANRITSU (OR EQUAL) DATA FILE FORMAT.
2. HYBRID CABLES:
   - ALL FIBER PAIRS MUST HAVE A DOCUMENTED PASSING POWER & A FIBER INSPECTION SCOPE TEST.
   - PASSING POWER TEST SHALL BE ≤ 3db.
   - REQUIRED FIBER TEST GEAR SHALL BE VIAVI JDSU FIT–SD103; P5000i FIBER SCOPE DIGITAL INSPECTION KIT;VIAVI 2303/11, OLS–35 OPTICAL LASER LIGHT SOURCE 1310/1550 NM, SM, INTERCHANGEABLE ADAPTER OR EQUAL.
   - ALL FIBER TEST RESULTS MUST BE PROVIDED IN PDF FORMAT.

THIS SHEET HAS BEEN PROVIDED BY THE APPLICANT AND REPRODUCED AT THEIR REQUEST

ATC PROJECT NUMBER:
12963795

DISH WIRELESS SITE NUMBER:
CT0100015A

ATC SITE NUMBER:
88019

SITE ADDRESS:
428 PLATT HILL ROAD
WINSTED, CT 06098

ANTENNA SCHEDULE & DIAGRAM

SHEET NUMBER: 1 OF 3

REVISION: 0

Copyright © 2019 ATC IP LLC. All Rights Reserved.

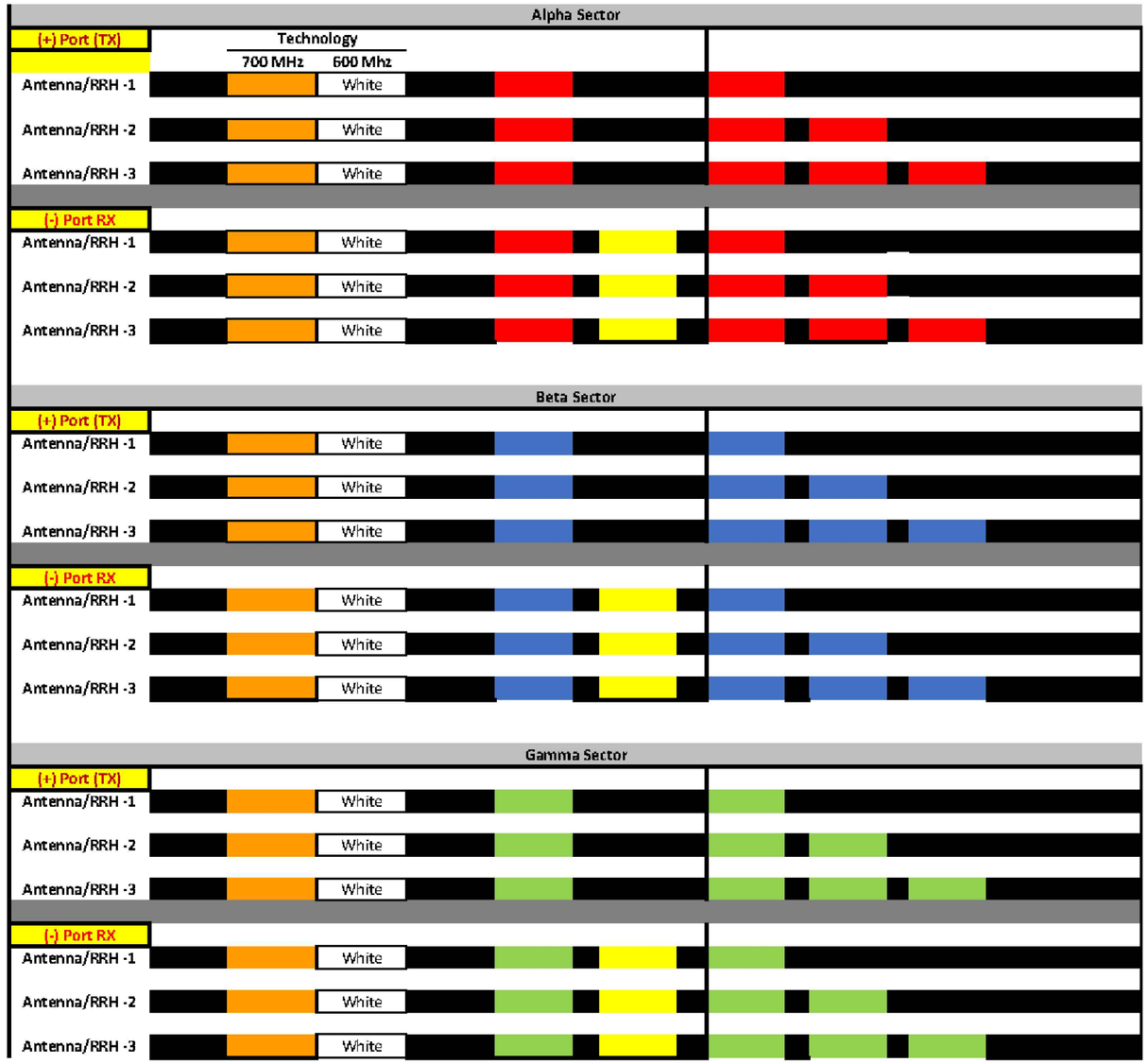

NOTE:

CONTRACTOR TO REFER TO, AND VALIDATE, THE LATEST RFDS PRIOR TO CONSTRUCTION.

CABLE COLOR CODE

Copyright © 2019 ATC IP LLC. All Rights Reserved.

THIS SHEET HAS BEEN PROVIDED BY THE APPLICANT AND REPRODUCED AT THEIR REQUEST

ATC PROJECT NUMBER:
12963795

DISH WIRELESS SITE NUMBER:
CT0100015A

ATC SITE NUMBER:
88019

SITE ADDRESS:
428 PLATT HILL ROAD
WINSTED, CT 06098

CABLE COLOR CODE

SHEET NUMBER: 2 OF 3

REVISION: 0

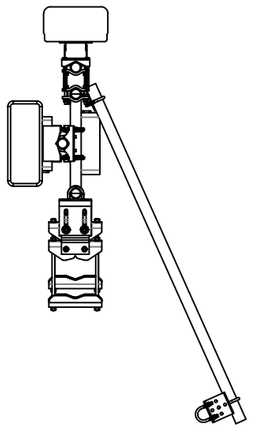

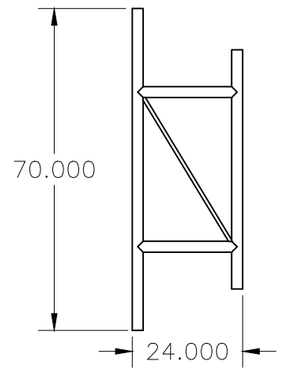

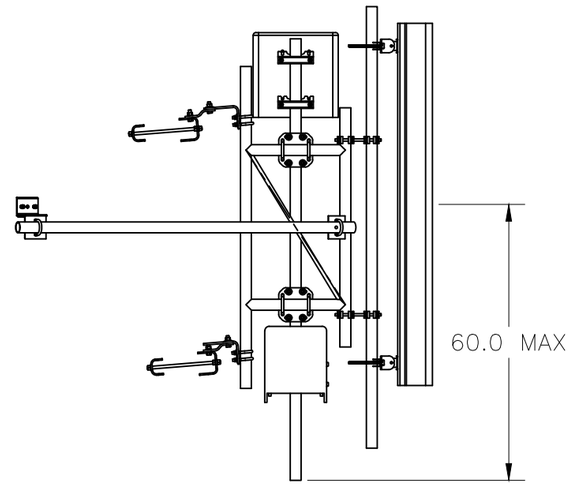

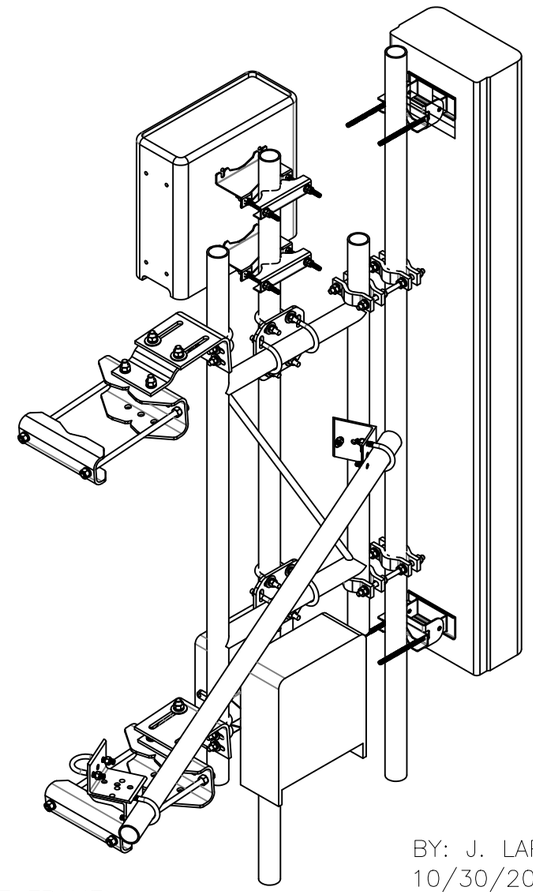

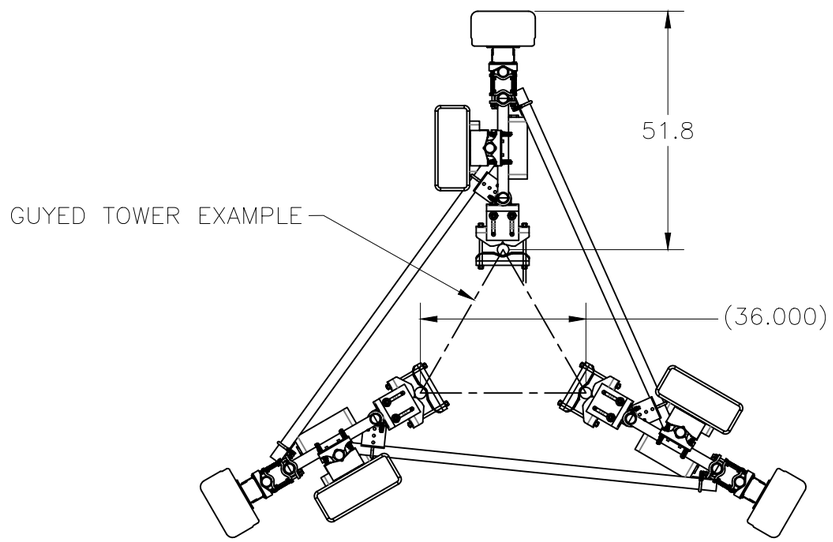

BY: J. LAPALME
10/30/2018

COMMSCOPE P-200 STAND-OFF FRAME,
PM-SU2-B UNIVERSAL TOWER MOUNT KIT,
BC-30-10 PIPE-TO-PIPE CLAMP SET,
XP-2020 CROSSOVER BRKTS. (2),
SA-B12 STIFF ARM KIT AND
PLUS 2X MT-651-96 PLAIN END PIPES

SCALE 1:28

28.000

NOTICE: THIS DRAWING CONTAINS CONFIDENTIAL INFORMATION AND IS THE SOLE PROPERTY OF dish TECHNOLOGIES
UNAUTHORIZED REPRODUCTION OR DISTRIBUTION IS EXPRESSLY PROHIBITED WITHOUT PRIOR WRITTEN CONSENT OF DISH TECHNOLOGIES.

dish TECHNOLOGIES

TITLE: TOP VIEW, GUYED TOWER P-200 CONFIG.		
SIZE: B	DWG. NO.: XXXXX	REV.: WC01
SCALE: NONE	SHEET 1 OF 1	

Copyright © 2019 ATC IP LLC. All Rights Reserved.

THIS SHEET HAS BEEN PROVIDED BY THE APPLICANT AND REPRODUCED AT THEIR REQUEST

ATC PROJECT NUMBER: 12963795

DISH WIRELESS SITE NUMBER: CT0100015A

ATC SITE NUMBER: 88019

SITE ADDRESS:
428 PLATT HILL ROAD
WINSTED, CT 06098

ANTENNA MOUNT DETAILS

SHEET NUMBER: 3 OF 3

REVISION: 0

NOTE: NO BAND 29 ANTENNA

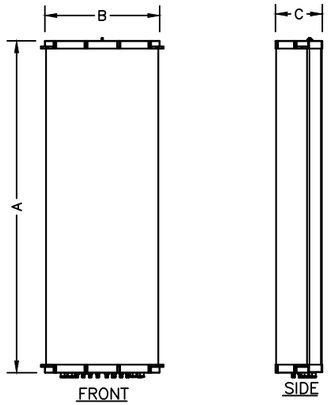

ANTENNA SPECIFICATIONS				
MODEL	LENGTH (A)	WIDTH (B)	DEPTH (C)	WEIGHT (lb)
COMBA – ODI–065R16M18JJ–GQ V2	78.7"	14.0"	7.6"	57.3
PANORAMA – WMMG–7–27	6.10"	6.10"	2.95"	2.43

ANTENNA SPECIFICATIONS
N.T.S.

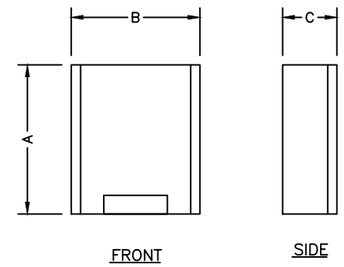

RADIO SPECIFICATIONS				
MODEL	LENGTH (A)	WIDTH (B)	DEPTH (C)	WEIGHT (lb)
ERICSSON – RADIO 4415	16.54"	13.64"	4.84"	44.09
ERICSSON – RADIO 0208	13.82"	11.73"	3.31"	18.52

RADIO SPECIFICATIONS
N.T.S.

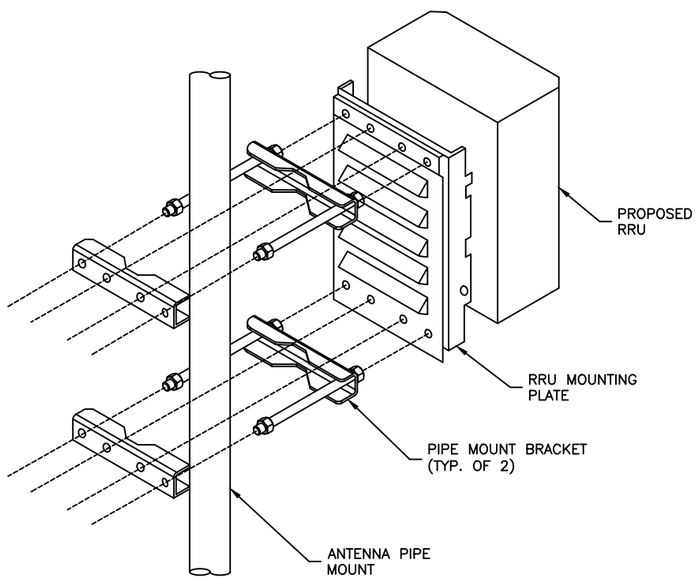

NOTES:

1. ERICSSON VIA DISH WIRELESS SUPPLIES RRU, RRU PIPE–MOUNTING BRACKET. SUBCONTRACTOR SHALL INSTALL ALL MOUNTING HARDWARE INCLUDING RRU PIPE–MOUNTING BRACKET.
2. NO PAINTING OF THE RRU OR SOLAR SHIELD IS ALLOWED

REMOTE RADIO UNIT (RRU) PIPE MOUNT
N.T.S.

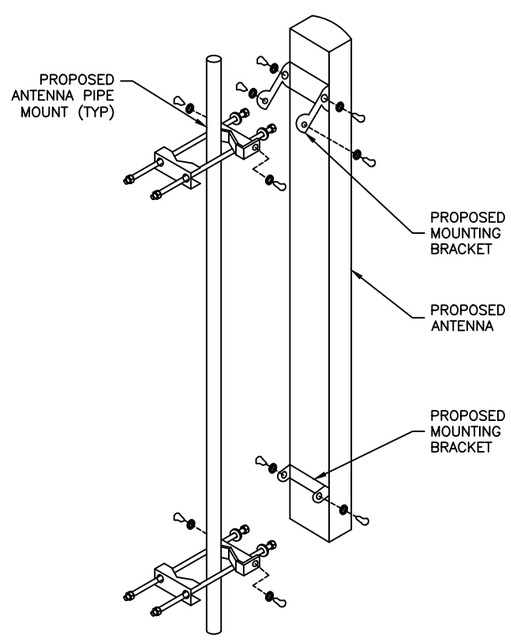

ANTENNA MOUNTING
N.T.S.

LADDER NOTE:

LADDER TO BE PLACED ON TOWER IN 20'–0" SECTIONS UP TO PROPOSED DISH WIRELESS RAD CENTER.

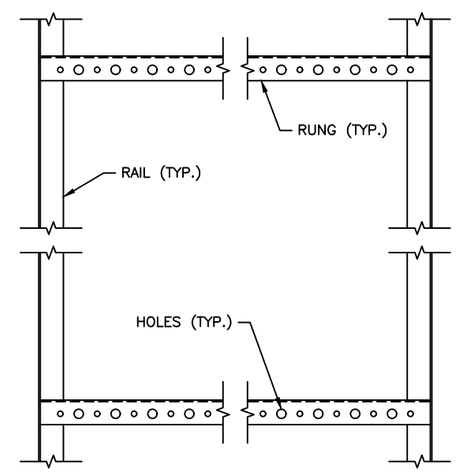

CABLE LADDER DETAIL (OPTIONAL)
N.T.S.

dish WIRELESS

AMERICAN TOWER®

A.T. ENGINEERING SERVICE, PLLC
3500 REGENCY PARKWAY
SUITE 100
CARY, NC 27518
PHONE: (919) 468-0112
COA: P-1177

SEAL:

STATE OF CONNECTICUT
PATRICK P. BARRY
28959
LICENSED
PROFESSIONAL ENGINEER

Authorized by "EOR"
Jun 11 2019 3:58 PM

cosign

DRAWN BY:	TC
APPROVED BY:	PPB
DATE DRAWN:	06/03/19

REV.	DESCRIPTION	BY	DATE
0	FOR CONSTRUCTION	TC	06/03/19

THESE DRAWINGS AND/OR THE ACCOMPANYING SPECIFICATION AS INSTRUMENTS OR SERVICE ARE THE EXCLUSIVE PROPERTY OF AMERICAN TOWER. THEIR USE AND PUBLICATION SHALL BE RESTRICTED TO THE ORIGINAL SITE FOR WHICH THEY ARE PREPARED. ANY USE OR DISCLOSURE OTHER THAN THAT WHICH RELATES TO AMERICAN TOWER OR THE SPECIFIED CARRIER IS STRICTLY PROHIBITED. TITLE TO THESE DOCUMENTS SHALL REMAIN THE PROPERTY OF AMERICAN TOWER WHETHER OR NOT THE PROJECT IS EXECUTED. NEITHER THE ARCHITECT NOR THE ENGINEER WILL BE PROVIDING ON-SITE CONSTRUCTION REVIEW OF THIS PROJECT. CONTRACTOR(S) MUST VERIFY ALL DIMENSIONS AND ADVISE AMERICAN TOWER OF ANY DISCREPANCIES. ANY PRIOR ISSUANCE OF THIS DRAWING IS SUPERSEDED BY THE LATEST VERSION ON FILE WITH AMERICAN TOWER.

ATC PROJECT NUMBER:
12963795

DISH WIRELESS SITE NUMBER:
CT0100015A

ATC SITE NUMBER:
88019

SITE ADDRESS:
428 PLATT HILL ROAD
WINSTED, CT 06098

EQUIPMENT DETAILS

SHEET NUMBER:	REVISION:
C-4	0

Copyright © 2019 ATC IP LLC. All Rights Reserved.

REVISIONS					
ECO NO.	ITEM MASTER	REV	DESCRIPTION	DATE	BY
C45181	219097	01	INITIAL RELEASE. CREATED FROM 219216X. UPDATED WITH RBS6101 CABINET WITH BATTERY ENCLOSURE/PLINTH BBU6101.	12-18-18	JL

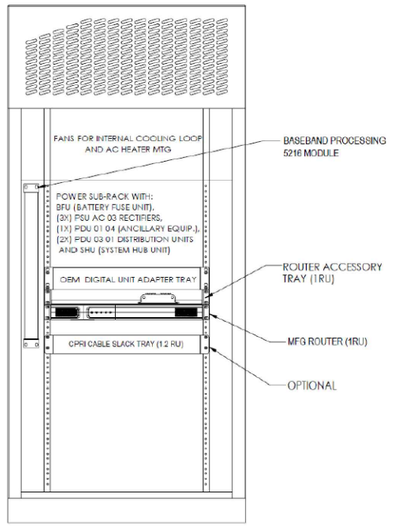

NOTES: UNLESS OTHERWISE SPECIFIED

1. POWER CABINET WEIGHT IS 180kg (397 LBS) MAX. INCLUDES STANDARD EQUIPMENT. DISH HAS ALSO ADDED: A MFG ROUTER @ 3.72 kg (8.2 LBS) AND/OR LTE ROUTER @ 0.58kg (1.3 LBS) AND 1 ACCESSORY TRAY@ 0.69kg (3.73lbs).
2. BATTERY ENCLOSURE WEIGHT IS ≤ 93kg (205 LBS) EXCLUDING THE STORAGE BATTERIES. THE NSB 40FT HT RED BATTERY WEIGHT IS 14kg (30.86 LBS) EACH X 4 (56kg / 123.5 LBS TOTAL), EXCLUDING CABLES.
3. POWER EQUIPMENT IN THE CABINET CONVERTS AC POWER INTO -48V DC POWER FOR THE BASE STATION.
4. THE POWER SYSTEM CAPACITY RATING IS 10kW MAXIMUM. THE SYSTEM IS OUTFITTED WITH 3X 2500W RECTIFIERS (7.5kW), WHICH 1 RECTIFIER (2.5kW) IS FOR SYSTEM REDUNDANCY.
5. AC INPUT POWER OPTION: PLEASE SEE SEPARATE RBS6101 CABINET DOCUMENT WITH OTHER AC POWER OPTIONS.

AC INPUT	VOLTAGE RANGE V AC	NOMINAL VOLTAGE	RECOMMENDED EQUIP. AC BREAKER	RATED PWR	TYP PWR
2W + PE + N 120/240V AC, 60 Hz	200/100 240/120	115V	60A	10kW	2.5kW

UNLESS OTHERWISE SPECIFIED DIMENSIONS ARE IN MILLIMETERS TOLERANCES ARE:
X.XXX ± .100 HOLE DIA. ± 0.05
X.XX ± .25 ANGLES ± 5°
X.X ± .40
X ± .75

APPROVALS	DATE
DESIGNED	
DRAWN J. LAPALME	05-04-18
CHECKED	

dish TECHNOLOGIES

TITLE ASSY DWG, ERICSSON RBS6101 CABINET AND BATTERY PLINTH WITH SELECTED DISH MODULES

SIZE B | DWG. NO. 219097 | REV. 01

SCALE NONE | SHEET 1 OF 3

NOTICE: THIS DRAWING CONTAINS CONFIDENTIAL INFORMATION AND IS THE SOLE PROPERTY OF dish TECHNOLOGIES
UNAUTHORIZED REPRODUCTION OR DISTRIBUTION IS EXPRESSLY PROHIBITED WITHOUT PRIOR WRITTEN CONSENT OF DISH TECHNOLOGIES

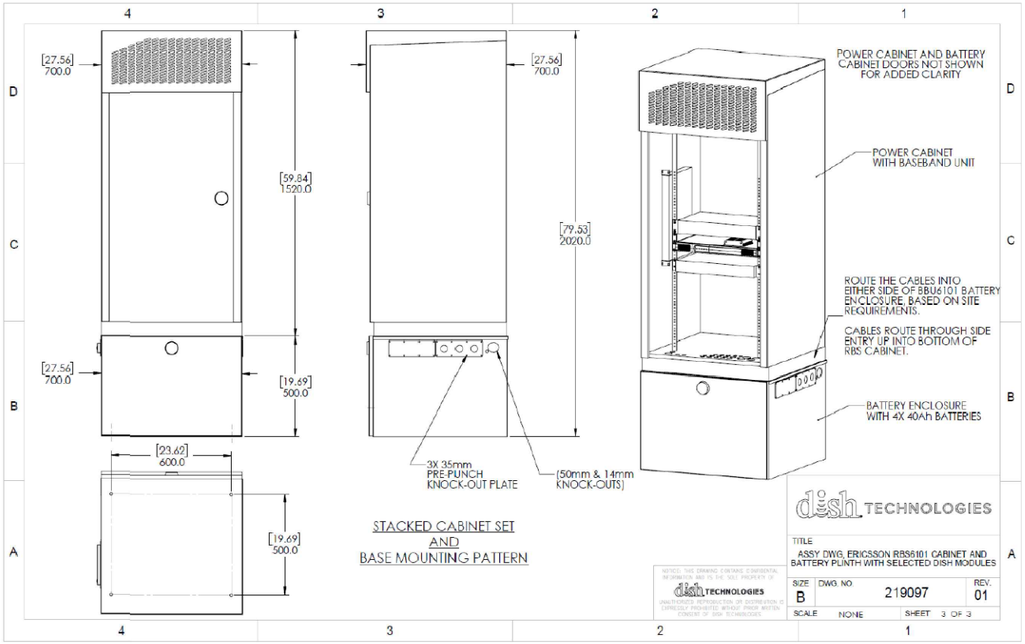

STACKED CABINET SET AND BASE MOUNTING PATTERN

dish TECHNOLOGIES

TITLE ASSY DWG, ERICSSON RBS6101 CABINET AND BATTERY PLINTH WITH SELECTED DISH MODULES

SIZE B | DWG. NO. 219097 | REV. 01

SCALE NONE | SHEET 3 OF 3

NOTICE: THIS DRAWING CONTAINS CONFIDENTIAL INFORMATION AND IS THE SOLE PROPERTY OF dish TECHNOLOGIES
UNAUTHORIZED REPRODUCTION OR DISTRIBUTION IS EXPRESSLY PROHIBITED WITHOUT PRIOR WRITTEN CONSENT OF DISH TECHNOLOGIES

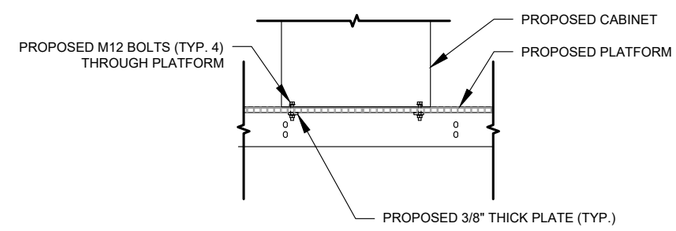

CABINET ATTACHMENT TO PLATFORM

N.T.S.

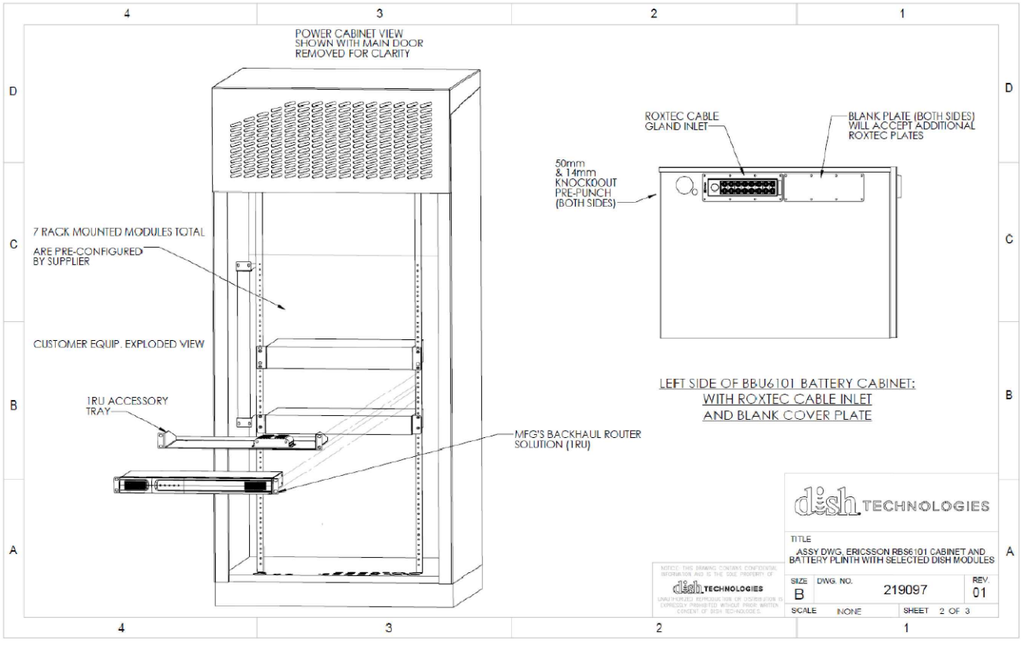

LEFT SIDE OF BBU6101 BATTERY CABINET: WITH ROXTEC CABLE INLET AND BLANK COVER PLATE

dish TECHNOLOGIES

TITLE ASSY DWG, ERICSSON RBS6101 CABINET AND BATTERY PLINTH WITH SELECTED DISH MODULES

SIZE B | DWG. NO. 219097 | REV. 01

SCALE NONE | SHEET 2 OF 3

NOTICE: THIS DRAWING CONTAINS CONFIDENTIAL INFORMATION AND IS THE SOLE PROPERTY OF dish TECHNOLOGIES
UNAUTHORIZED REPRODUCTION OR DISTRIBUTION IS EXPRESSLY PROHIBITED WITHOUT PRIOR WRITTEN CONSENT OF DISH TECHNOLOGIES

Copyright © 2019 ATC IP LLC. All Rights Reserved.

THIS SHEET HAS BEEN PROVIDED BY THE APPLICANT AND REPRODUCED AT THEIR REQUEST

ATC PROJECT NUMBER: 12963795

DISH WIRELESS SITE NUMBER: CT0100015A

ATC SITE NUMBER: 88019

SITE ADDRESS:
428 PLATT HILL ROAD
WINSTED, CT 06098

EQUIPMENT DETAILS

SHEET NUMBER: C-5

REVISION: 0

NOTES:
1.0 GENERAL
1.1 ALL METRIC DIMENSIONS ARE IN BRACKETS
2.0 DESIGN NOTES
2.1 RECOMMENDED 3/8 BOLTS TORQUE TO 25 FT-LBS.
2.2 RECOMMENDED 1/2 BOLTS TORQUE TO 60 FT-LBS.
2.3 RECOMMENDED 3/4 BOLTS TORQUE TO 200 FT-LBS.
3.0 MANUFACTURING/SPECIAL REQUIRMENTS
4.0 TEST
5.0 PACKAGING

REVISIONS				
REV.	ECN	DESCRIPTION	BY	DATE
A	800000032049	INITIAL RELEASE	RJC	10/15/18

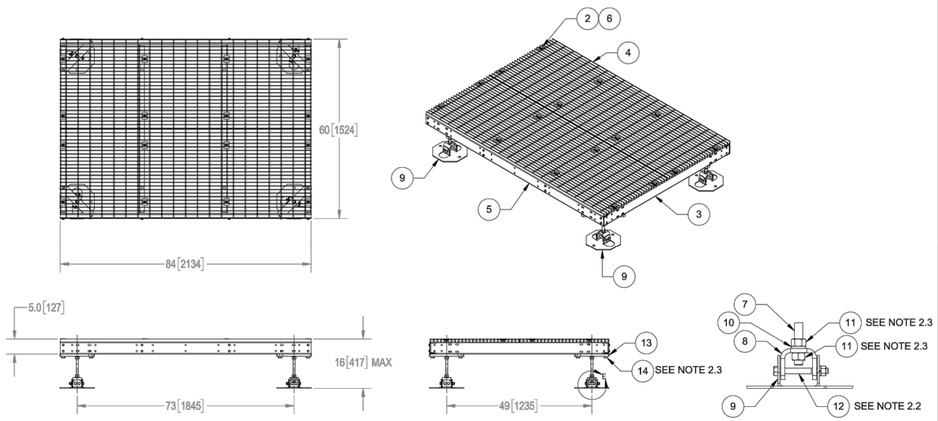

ITEM	PART NO.	DESCRIPTION	QTY.	WEIGHT	NOTE NO.
1	G8-03105	3/8" X 1" GALV BOLT KIT	16	0.05 LBS	
2	MTC390324	BAR GRATING CLIP	16	0.17 LBS	
3	MTC392204	CHANNEL, 11 GA, 4 X 2 X 59.75	4	14.15 LBS	
4	MTC403303	30" X 84" BAR GRATING	2	122.66 LBS	
5	MTC4045801	CHANNEL, 11 GA, 4" X 1.8" X 84.00"	2	20.26 LBS	
6	151220	12-24 X 2" SELF DRILLING SCREW	16	0.03 LBS	
7	MTS8412	3/4" X 12" GALV THREADED ROD	4	1.51 LBS	
8	MTCP0306CWP14	FOOTPAD CONNECTION BRACKET	4	2.11 LBS	
9	MTCP0306CWP13	12" X 12" FOOTPAD	4	5.63 LBS	
10	GWL-06	3/4" GALV LOCK WASHER	8	0.04 LBS	
11	GN-06	3/4" GALV HEX NUT	16	0.15 LBS	
12	G8-04445	1/2" X 4-1/2" GALV BOLT KIT	8	0.30 LBS	
13	MTC392211	BRACKET, FOOT MOUNTING	4	7.36 LBS	
14	G8-06205	3/4" X 2" GALV BOLT KIT	8	0.41 LBS	

DENSITY	0	lbs/in³
MASS	433	lbs
VOLUME		in³
SURFACE AREA		in²
HEIGHT	13.0	
LENGTH	84.0	
WIDTH	60.0	

© 2018 CommScope, Inc.

COMMSCOPE, INC. OF NORTH CAROLINA

TOLERANCES: 1 PLACE .X ± .25; 2 PLACE .XX ± 0.12; 3 PLACE .XXX ± 0.06; ANGLES ± 2°

SAP MATERIAL MASTER: MTC4045LP

FINISH: GALV A123

MATERIAL: A1011/A1018

UNLESS OTHERWISE SPECIFIED DIMENSIONS ARE IN MILLIMETERS AND DEGREES

	NAME	DATE
CE	RJC	10/15/2018
RW	BCAMPBELLCON	10/15/2018
RV		
AD	MCT107	10/15/2018
RE	BCAMPBELLCON	08/20/2018

ECN 008000032049

TITLE: 5X7 PLATFORM, LOW PROFILE

SCALE: 1:15 DOCUMENT NO. MTC4045LP

SIZE	WORK AREA	24	MODEL		DRAWING			SHEET
			VERSION	STATUS	REVISION	VERSION	STATUS	REVISION	
C			00	AD		04	AD		1 OF 3

NOTES:
1.0 ALL METRIC DIMENSIONS ARE IN BRACKETS.

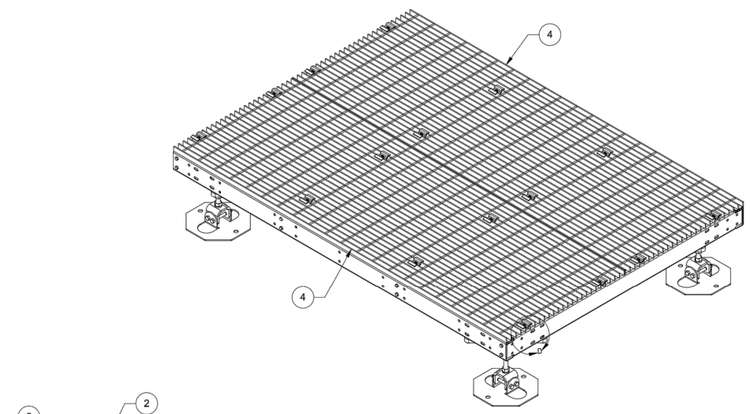

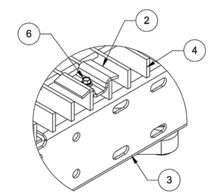

DETAIL D
SCALE 1 : 2

© 2018 CommScope, Inc.

COMMSCOPE, INC. OF NORTH CAROLINA

TITLE: 5X7 PLATFORM, LOW PROFILE

SIZE	SCALE	DOCUMENT NO.	DRAWING			SHEET
			VERSION	STATUS	REVISION	
C	1:8	MTC4045LP	04	AD		3 OF 3

NOTES:

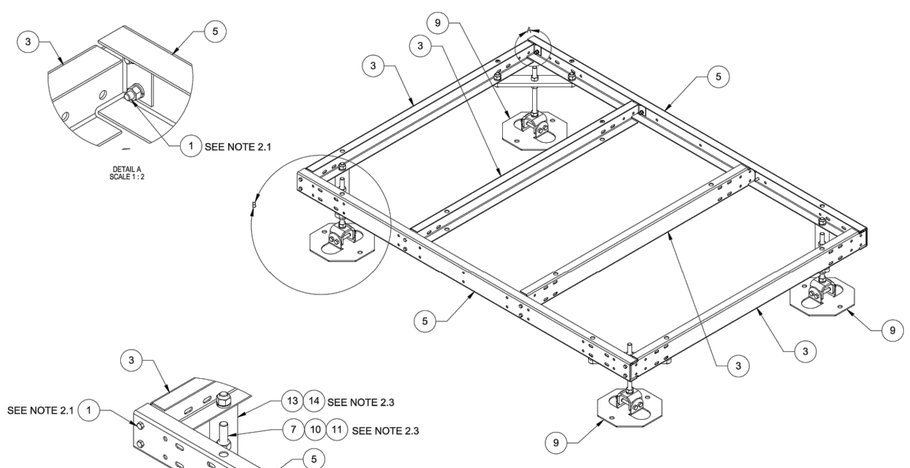

© 2018 CommScope, Inc.

COMMSCOPE, INC. OF NORTH CAROLINA

TITLE: 5X7 PLATFORM, LOW PROFILE

SIZE	SCALE	DOCUMENT NO.	DRAWING			SHEET
			VERSION	STATUS	REVISION	
C	1:8	MTC4045LP	04	AD		2 OF 3

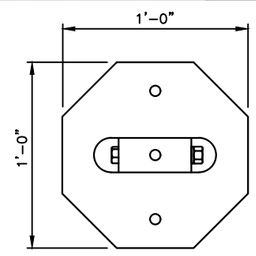

NOTE:

1. CONTRACTOR TO BURY PLATFORM FEET WITH A MINIMUM OF 2" OF FILL PER EXISTING SITE SURFACE
2. WEED BARRIER FABRIC TO BE ADDED AT DISCRETION OF DISH WIRELESS CONSTRUCTION MANAGER AT TIME OF CONSTRUCTION

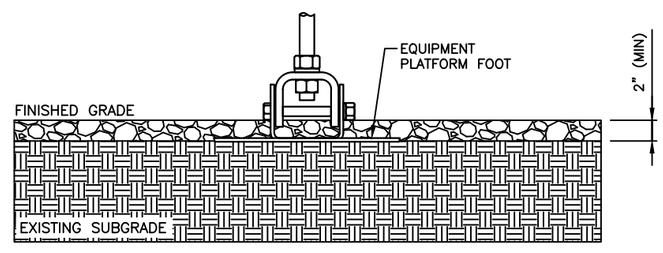

EQUIPMENT PLATFORM FOOT DETAIL
NOT TO SCALE

CABINET	DIMENSIONS	WEIGHT FULLY LOADED
CABINET	79.53"x27.56"x27.56"	630± lbs

EQUIPMENT LOADING
NOT TO SCALE

Copyright © 2019 ATC IP LLC. All Rights Reserved.

THIS SHEET HAS BEEN PROVIDED BY THE APPLICANT AND REPRODUCED AT THEIR REQUEST

ATC PROJECT NUMBER:
12963795

DISH WIRELESS SITE NUMBER:
CT0100015A

ATC SITE NUMBER:
88019

SITE ADDRESS:
428 PLATT HILL ROAD
WINSTED, CT 06098

EQUIPMENT DETAILS

SHEET NUMBER:	REVISION:
C-6	0

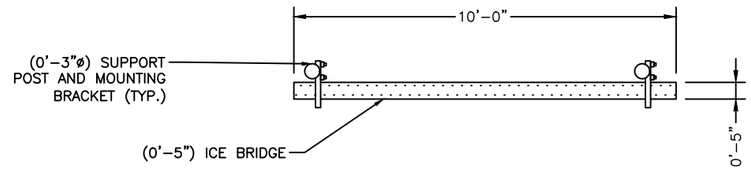

ICE BRIDGE PLAN VIEW

N.T.S.

NOTE:

ALL SUPPORT POSTS MUST BE GROUNDED

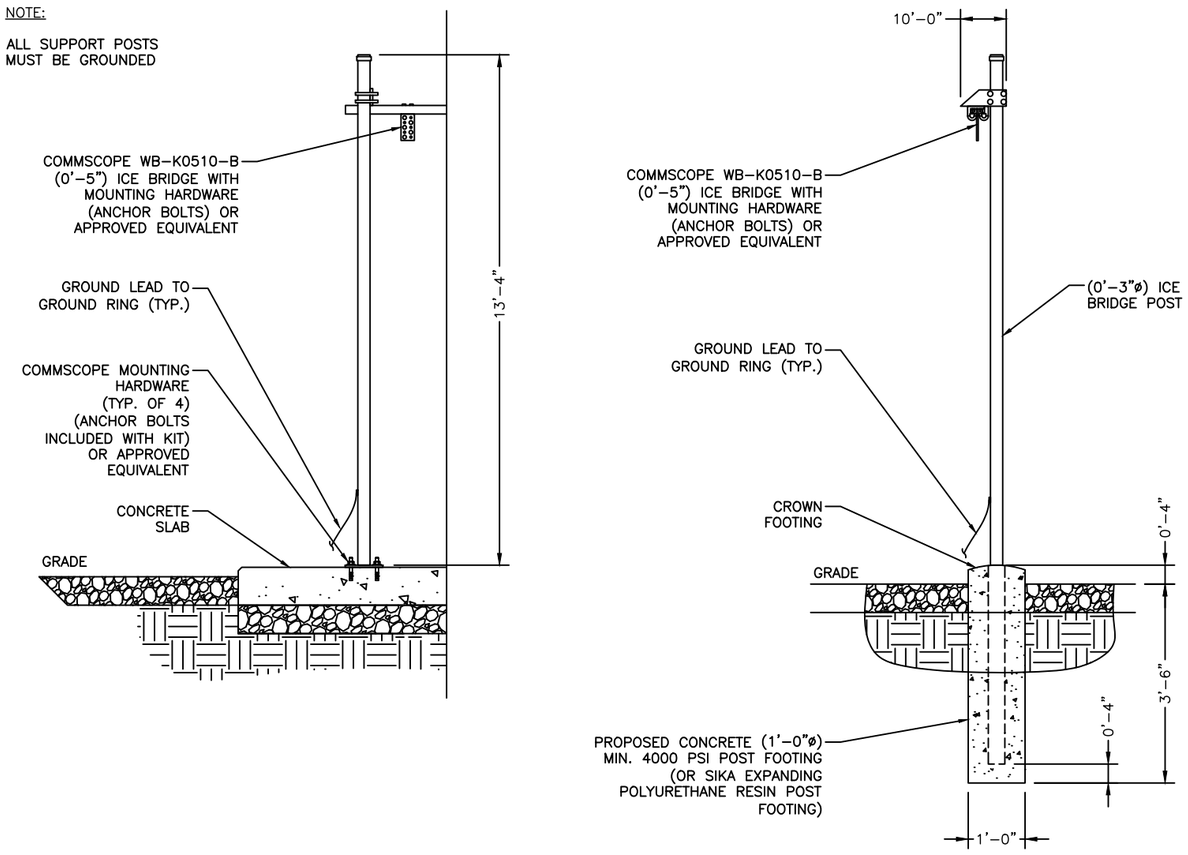

ICE BRIDGE POST ELEVATIONS

N.T.S.

dish WIRELESS

AMERICAN TOWER®

A.T. ENGINEERING SERVICE, PLLC
3500 REGENCY PARKWAY
SUITE 100
CARY, NC 27518
PHONE: (919) 468-0112
COA: P-1177

SEAL:

STATE OF CONNECTICUT
PATRICK P. BARRY
28959
LICENSED
PROFESSIONAL ENGINEER

Authorized by "EOR"
Jun 11 2019 3:59 PM

cosign

DRAWN BY:	TC
APPROVED BY:	PPB
DATE DRAWN:	06/03/19

REV.	DESCRIPTION	BY	DATE
0	FOR CONSTRUCTION	TC	06/03/19

THESE DRAWINGS AND/OR THE ACCOMPANYING SPECIFICATION AS INSTRUMENTS OR SERVICE ARE THE EXCLUSIVE PROPERTY OF AMERICAN TOWER. THEIR USE AND PUBLICATION SHALL BE RESTRICTED TO THE ORIGINAL SITE FOR WHICH THEY ARE PREPARED. ANY USE OR DISCLOSURE OTHER THAN THAT WHICH RELATES TO AMERICAN TOWER OR THE SPECIFIED CARRIER IS STRICTLY PROHIBITED. TITLE TO THESE DOCUMENTS SHALL REMAIN THE PROPERTY OF AMERICAN TOWER WHETHER OR NOT THE PROJECT IS EXECUTED. NEITHER THE ARCHITECT NOR THE ENGINEER WILL BE PROVIDING ON-SITE CONSTRUCTION REVIEW OF THIS PROJECT. CONTRACTOR(S) MUST VERIFY ALL DIMENSIONS AND ADVISE AMERICAN TOWER OF ANY DISCREPANCIES. ANY PRIOR ISSUANCE OF THIS DRAWING IS SUPERSEDED BY THE LATEST VERSION ON FILE WITH AMERICAN TOWER.

ATC PROJECT NUMBER:
12963795

DISH WIRELESS SITE NUMBER:
CT0100015A

ATC SITE NUMBER:
88019

SITE ADDRESS:
428 PLATT HILL ROAD
WINSTED, CT 06098

CIVIL DETAILS

SHEET NUMBER:	REVISION:
C-7	0

Copyright © 2019 ATC IP LLC. All Rights Reserved.

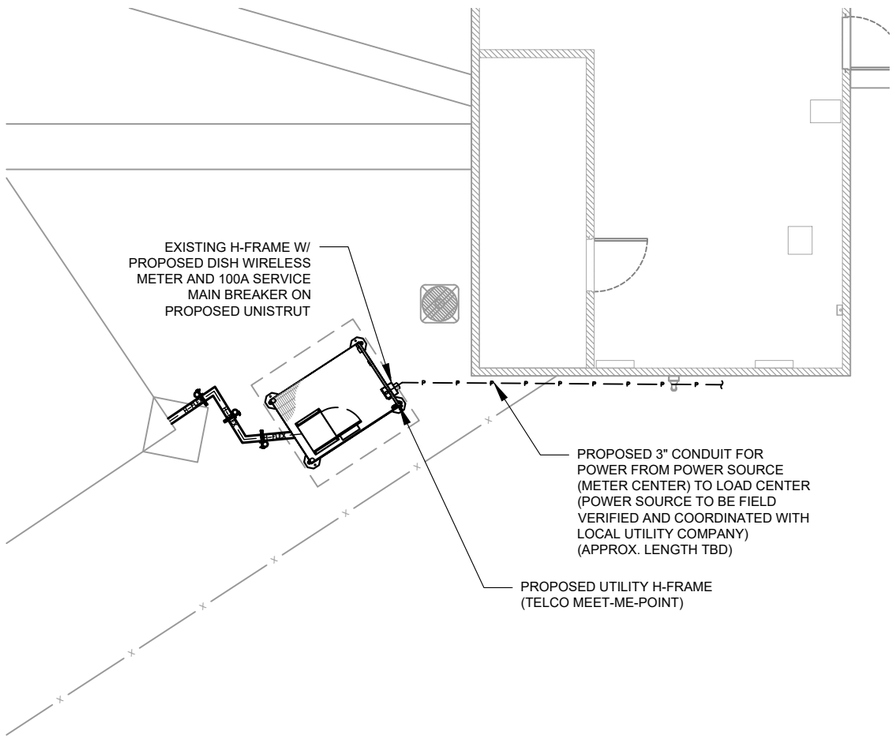

1 COMPOUND UTILITY PLAN

0 10' 20'

SCALE: 1"=10' (11X17)
1"=5' (22X34)

N

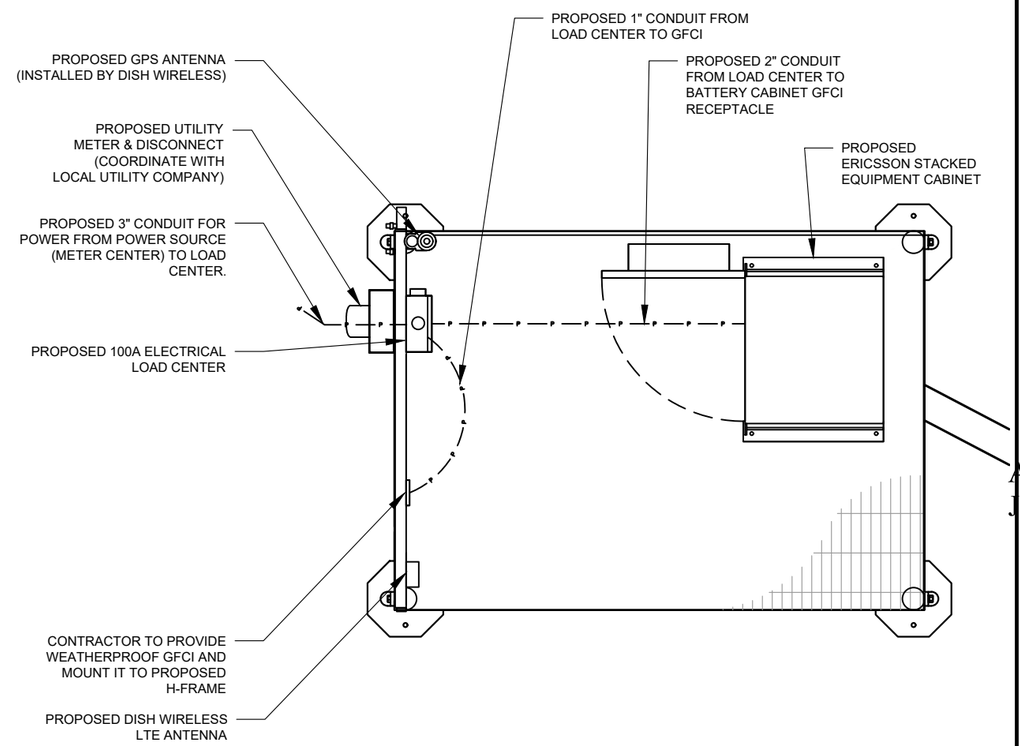

2 EQUIPMENT PLATFORM UTILITY PLAN

N.T.S.

NOTES:

1. CONTRACTOR SHALL ARRANGE CONDUITS, WIRING, EQUIPMENT AND OTHER WORK AS SHOWN ON THIS PLAN AND SHEET E-2, PROVIDING REQUIRED CLEARANCES AND ACCESS PER NEC. WHERE FIELD ADJUSTMENTS ARE NECESSARY, COORDINATE WITH SITE CM AND DISH WIRELESS.
2. PULL BOX(ES) ARE REQUIRED WHEN THE EQUIVALENT OF THREE 90 DEGREE BENDS MAX, INCLUDING THE BENDS LOCATED AT AN OUTLET OR FITTING, ARE USED BETWEEN PULL POINTS; 150 FEET OF CONDUIT LENGTH IS EQUIVALENT TO AN ADDITIONAL 90 DEGREES.

UTILITY NOTES:

1. CONTRACTOR TO COORDINATE SERVICE ROUTING & CONNECTION WITH LOCAL TELEPHONE AND POWER COMPANIES.
2. CONTRACTOR SHALL FOLLOW LOCAL UTILITY COMPANY STANDARDS WHEN CONNECTING TO UTILITIES, PROVIDING REQUIRED CLEARANCES AND ACCESS PER NEC. LOCAL AND STATE BUILDING CODES SHALL GOVERN IN CASES WHERE UTILITY CO. STANDARDS DIFFER.

NOTES:

1. ELECTRICAL ROUTING IS A SCHEMATIC. THE CONTRACTOR SHALL VERIFY EQUIPMENT LOCATION AND ELECTRICAL ROUTING PRIOR TO INSTALLATION.

INSTALLER NOTE:

SCHEMATIC LAYOUT ONLY. REFER TO COMPOUND PLAN DRAWING FOR EXACT EQUIPMENT LAYOUT.

dish WIRELESS

AMERICAN TOWER®

A.T. ENGINEERING SERVICE, PLLC
3500 REGENCY PARKWAY
SUITE 100
CARY, NC 27518
PHONE: (919) 468-0112
COA: P-1177

SEAL:

STATE OF CONNECTICUT
PATRICK P. BARRY
28959
LICENSED
PROFESSIONAL ENGINEER

Authorized by "EOR"
Jun 11 2019 3:59 PM

cosign

DRAWN BY:	TC
APPROVED BY:	PPB
DATE DRAWN:	06/03/19

REV.	DESCRIPTION	BY	DATE
0	FOR CONSTRUCTION	TC	06/03/19

THESE DRAWINGS AND/OR THE ACCOMPANYING SPECIFICATION AS INSTRUMENTS OR SERVICE ARE THE EXCLUSIVE PROPERTY OF AMERICAN TOWER. THEIR USE AND PUBLICATION SHALL BE RESTRICTED TO THE ORIGINAL SITE FOR WHICH THEY ARE PREPARED. ANY USE OR DISCLOSURE OTHER THAN THAT WHICH RELATES TO AMERICAN TOWER OR THE SPECIFIED CARRIER IS STRICTLY PROHIBITED. TITLE TO THESE DOCUMENTS SHALL REMAIN THE PROPERTY OF AMERICAN TOWER WHETHER OR NOT THE PROJECT IS EXECUTED. NEITHER THE ARCHITECT NOR THE ENGINEER WILL BE PROVIDING ON-SITE CONSTRUCTION REVIEW OF THIS PROJECT. CONTRACTOR(S) MUST VERIFY ALL DIMENSIONS AND ADVISE AMERICAN TOWER OF ANY DISCREPANCIES. ANY PRIOR ISSUANCE OF THIS DRAWING IS SUPERSEDED BY THE LATEST VERSION ON FILE WITH AMERICAN TOWER.

ATC PROJECT NUMBER:
12963795

DISH WIRELESS SITE NUMBER:
CT0100015A

ATC SITE NUMBER:
88019

SITE ADDRESS:
428 PLATT HILL ROAD
WINSTED, CT 06098

UTILITY PLANS

SHEET NUMBER: E-1

REVISION: 0

Copyright © 2019 ATC IP LLC. All Rights Reserved.

NOTE: CONTRACTOR TO INSTALL EXPANSION FITTING SLIP JOINT AT METER CENTER CONDUIT TUERMINATION, AS PER LOCAL UTILITY POLICY, ORDINANCE AND/OR SPECIFIED REQUIREMENT

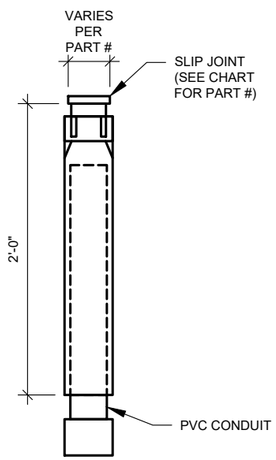

CARLON EXPANSION FITTINGS				
COUPLING END PART #	MALE TERMINAL ADAPTER END PART #	SIZE	STD. CTN. QTY.	TRAVEL LENGTH
E945D	E945DX	1/2"	20	4"
E945E	E945EX	3/4"	15	4"
E945F	E945FX	1"	10	4"
E945G	E945GX	1-1/4"	5	4"
E945H	E945HX	1-1/2"	5	4"
E945J	E945JX	2"	15	8"
E945K	E945KX	2-1/2"	10	8"
E945L	E945LX	3"	10	8"
E945M	E945MX	3-1/2"	5	8"
E945N	E945NX	4"	5	8"
E945P	E945PX	5"	1	8"
E945R	E945RX	6"	1	8"

1 EXPANSION FITTING UTILITY PLAN TABLE

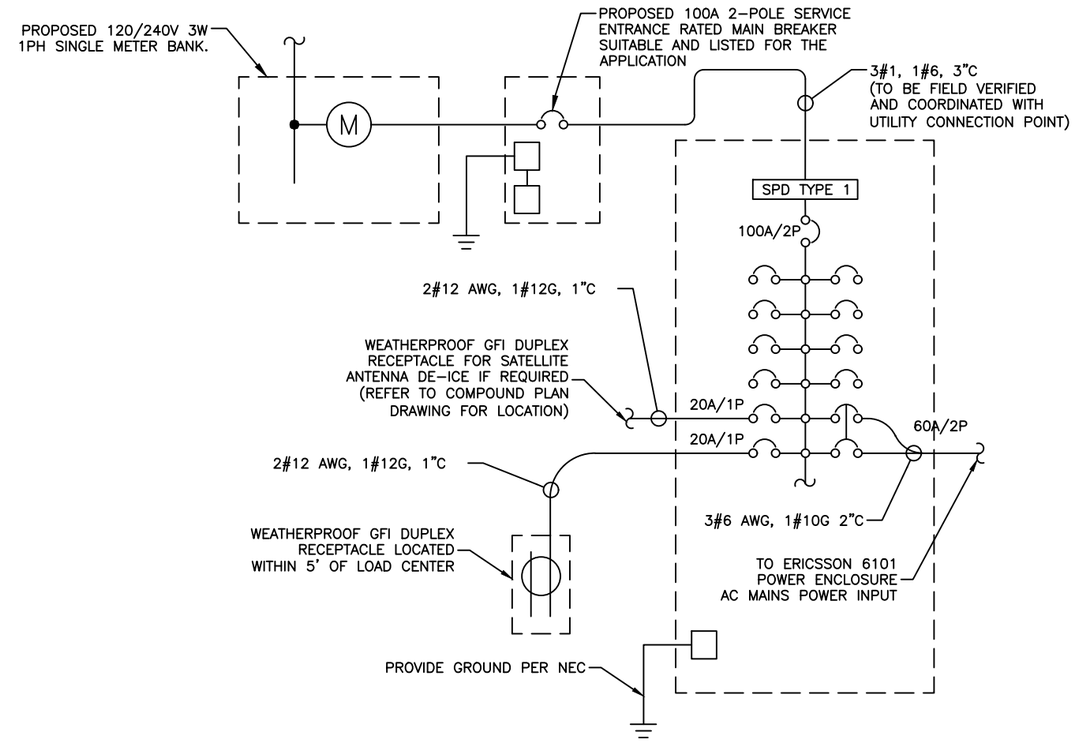

3 ELECTRICAL ONE-LINE DIAGRAM

N.T.S.

PROPOSED 100A, 120/240V POWER PANEL										
LOAD SERVED	VOLT AMPERES (WATTS)		TRIP	CKT #	PHASE	CKT #	TRIP	VOLT AMPERES (WATTS)		LOAD SERVED
	L1	L2						L1	L2	
SPARE	–		–	1	A	2	–	–		SPARE
SPARE		–	–	3	B	4	–		–	SPARE
SPARE	–		–	5	A	6	–	–		SPARE
SPARE		–	–	7	B	8	–		–	SPARE
GFCI	180		–	9	A	10	60	2000		ERICSSON EQUIPMENT CABINET
GFCI		180	–	11	B	12			2000	
VOLT AMPS	180	180						2000	2000	VOLT AMPS
L1 VOLT AMPERES				2180		2180	L2 VOLT AMPERES			
L1 AMPS				18.2		18.2	L2 AMPS			
				18.2			MAX AMPS			
				22.8			MAX AMPS x125%			

2 ELECTRICAL PANEL SCHEDULE

CONDUIT TRENCH NOTE:

1. WIDTH OF TRENCH AS REQUIRED BY UTILITY COMPANY OR PER QUANTITY OF CONDUITS AND LOCAL CODE REQUIREMENTS.
2. VERIFY DISTANCE PER LOCAL CODE, UTILITY COMPANY, AND CLIENT REQUIREMENTS.

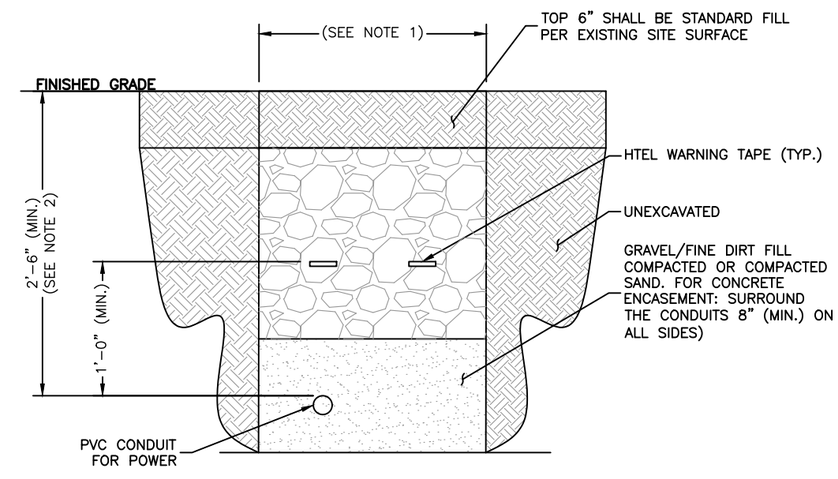

4 CONDUIT TRENCH DETAIL

N.T.S.

dish WIRELESS

AMERICAN TOWER®

A.T. ENGINEERING SERVICE, PLLC
3500 REGENCY PARKWAY
SUITE 100
CARY, NC 27518
PHONE: (919) 468-0112
COA: P-1177

SEAL:

STATE OF CONNECTICUT · PATRICK P. BARRY · 28959 · LICENSED · PROFESSIONAL ENGINEER

Authorized by "EOR"
Jun 11 2019 3:59 PM

cosign

DRAWN BY:	TC
APPROVED BY:	PPB
DATE DRAWN:	06/03/19

REV.	DESCRIPTION	BY	DATE
0	FOR CONSTRUCTION	TC	06/03/19

THESE DRAWINGS AND/OR THE ACCOMPANYING SPECIFICATION AS INSTRUMENTS OR SERVICE ARE THE EXCLUSIVE PROPERTY OF AMERICAN TOWER. THEIR USE AND PUBLICATION SHALL BE RESTRICTED TO THE ORIGINAL SITE FOR WHICH THEY ARE PREPARED. ANY USE OR DISCLOSURE OTHER THAN THAT WHICH RELATES TO AMERICAN TOWER OR THE SPECIFIED CARRIER IS STRICTLY PROHIBITED. TITLE TO THESE DOCUMENTS SHALL REMAIN THE PROPERTY OF AMERICAN TOWER WHETHER OR NOT THE PROJECT IS EXECUTED. NEITHER THE ARCHITECT NOR THE ENGINEER WILL BE PROVIDING ON-SITE CONSTRUCTION REVIEW OF THIS PROJECT. CONTRACTOR(S) MUST VERIFY ALL DIMENSIONS AND ADVISE AMERICAN TOWER OF ANY DISCREPANCIES. ANY PRIOR ISSUANCE OF THIS DRAWING IS SUPERSEDED BY THE LATEST VERSION ON FILE WITH AMERICAN TOWER.

Copyright © 2019 ATC IP LLC. All Rights Reserved.

ATC PROJECT NUMBER:
12963795

DISH WIRELESS SITE NUMBER:
CT0100015A

ATC SITE NUMBER:
88019

SITE ADDRESS:
428 PLATT HILL ROAD
WINSTED, CT 06098

ELECTRICAL DETAILS

SHEET NUMBER: E-2

REVISION: 0

LEGEND

- GROUNDING CONDUCTOR – ABOVE GRADE
- GROUNDING CONDUCTOR – BELOW GRADE
- GROUNDING ELECTRODE SYSTEM
- EXOTHERMIC CONNECTION
- MECHANICAL CONNECTION
- GROUND INSPECTION/TEST WELL
- GROUND ROD

INSTALLER NOTE:

SCHEMATIC LAYOUT ONLY. REFER TO SHEETS C–1 AND C–2 FOR EXACT EQUIPMENT LAYOUT, SIZES AND LOCATIONS OF ICE BRIDGE AND ANTENNA SUPPORT STRUCTURE.

TOWER GROUNDING NOTE:

ALL CONNECTIONS TO BE MECHANICAL ON TOWER. EXOTHERMIC WELDS ARE ONLY ALLOWED AT GRADE.

6 BUSBARS TOTAL:

- ONE PER SECTOR ON ANTENNA FRAME= (3=TOTAL)
- ONE TOWER TOP COLLECTOR
- ONE AT BOTTOM OF TOWER AT APPROX 10' AGL
- ONE ON PLATFORM BEHIND CABINET

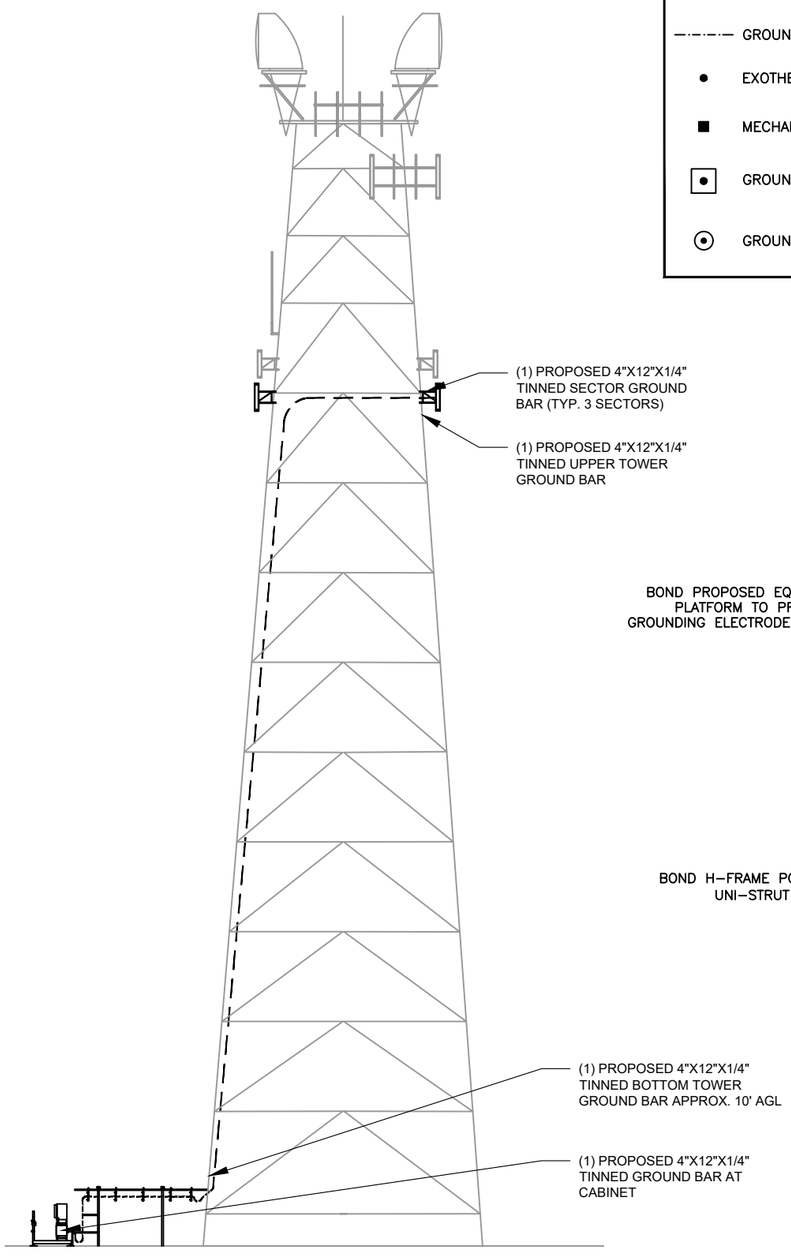

TOWER ELEVATION GROUNDING

11"x17" SCALE: N.T.S.
24"x36" SCALE: N.T.S.

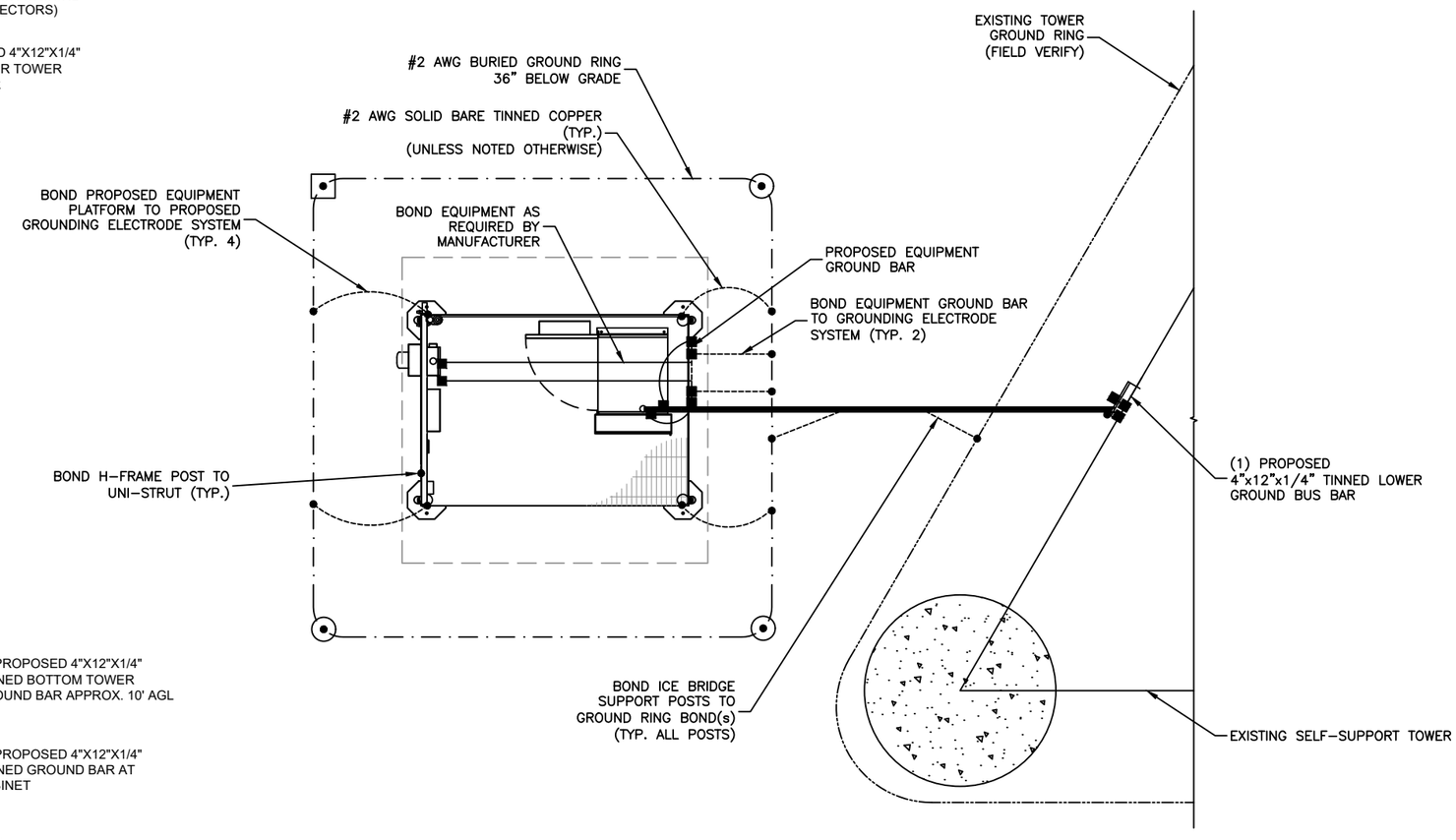

TYPICAL GROUNDING PLAN SCHEMATIC

N.T.S.

dish WIRELESS

AMERICAN TOWER®

A.T. ENGINEERING SERVICE, PLLC
3500 REGENCY PARKWAY
SUITE 100
CARY, NC 27518
PHONE: (919) 468-0112
COA: P-1177

SEAL: STATE OF CONNECTICUT · PATRICK P. BARRY · 28959 · LICENSED · PROFESSIONAL ENGINEER

Authorized by "EOR"
Jun 11 2019 3:59 PM

cosign

DRAWN BY:	TC
APPROVED BY:	PPB
DATE DRAWN:	06/03/19

REV.	DESCRIPTION	BY	DATE
0	FOR CONSTRUCTION	TC	06/03/19

THESE DRAWINGS AND/OR THE ACCOMPANYING SPECIFICATION AS INSTRUMENTS OR SERVICE ARE THE EXCLUSIVE PROPERTY OF AMERICAN TOWER. THEIR USE AND PUBLICATION SHALL BE RESTRICTED TO THE ORIGINAL SITE FOR WHICH THEY ARE PREPARED. ANY USE OR DISCLOSURE OTHER THAN THAT WHICH RELATES TO AMERICAN TOWER OR THE SPECIFIED CARRIER IS STRICTLY PROHIBITED. TITLE TO THESE DOCUMENTS SHALL REMAIN THE PROPERTY OF AMERICAN TOWER WHETHER OR NOT THE PROJECT IS EXECUTED. NEITHER THE ARCHITECT NOR THE ENGINEER WILL BE PROVIDING ON-SITE CONSTRUCTION REVIEW OF THIS PROJECT. CONTRACTOR(S) MUST VERIFY ALL DIMENSIONS AND ADVISE AMERICAN TOWER OF ANY DISCREPANCIES. ANY PRIOR ISSUANCE OF THIS DRAWING IS SUPERSEDED BY THE LATEST VERSION ON FILE WITH AMERICAN TOWER.

ATC PROJECT NUMBER:
12963795

DISH WIRELESS SITE NUMBER:
CT0100015A

ATC SITE NUMBER:
88019

SITE ADDRESS:
428 PLATT HILL ROAD
WINSTED, CT 06098

GROUNDING NOTES & DETAILS

SHEET NUMBER: G-1

REVISION: 0

Copyright © 2019 ATC IP LLC. All Rights Reserved.

LEGEND	
———	GROUNDING CONDUCTOR – ABOVE GRADE
●	EXOTHERMIC CONNECTION
■	MECHANICAL CONNECTION
⏚	GROUND ROD

NOTE:

1. SEE SHEET G-3 FOR GROUND BAR DETAILS.
2. ALL CONDUCTORS SHALL BE #2 AWG SOLID BARE TINNED COPPER, UNO.
3. ADD MID GROUND BUS BAR WHERE APPLICABLE PER LIGHTNING ZONE REQUIREMENTS.

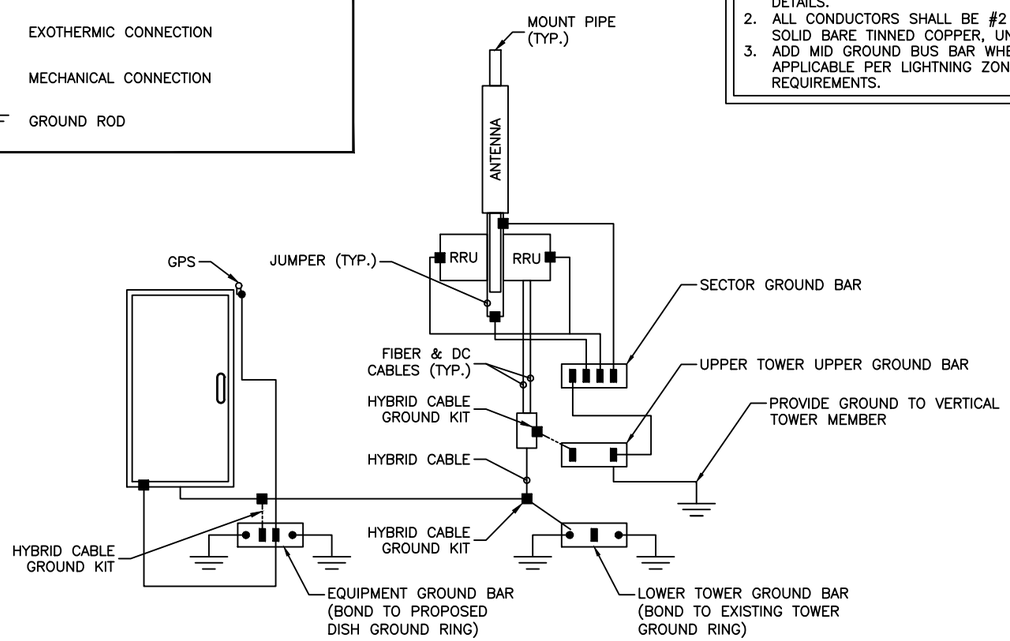

GROUNDING RISER DIAGRAM (TYP. PER SECTOR)

N.T.S.

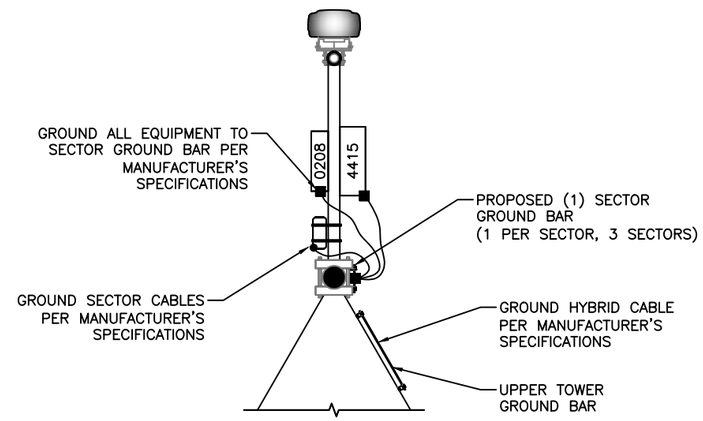

NOTE:

GROUNDING SHOWN FOR (1) SECTOR ONLY.
GROUNDING REQUIRED FOR ALL (3) SECTORS.

GROUND BAR AT MOUNT

N.T.S.

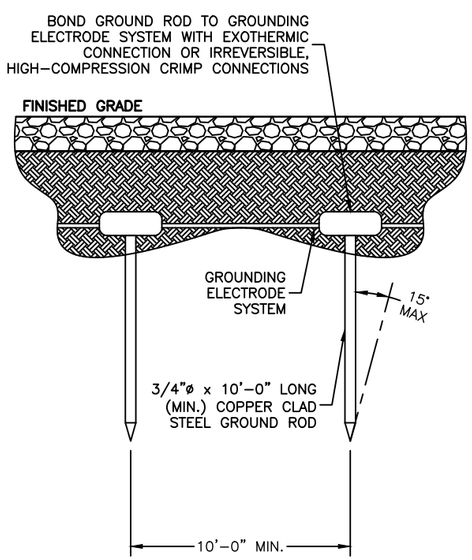

GROUND ROD DETAIL

N.T.S.

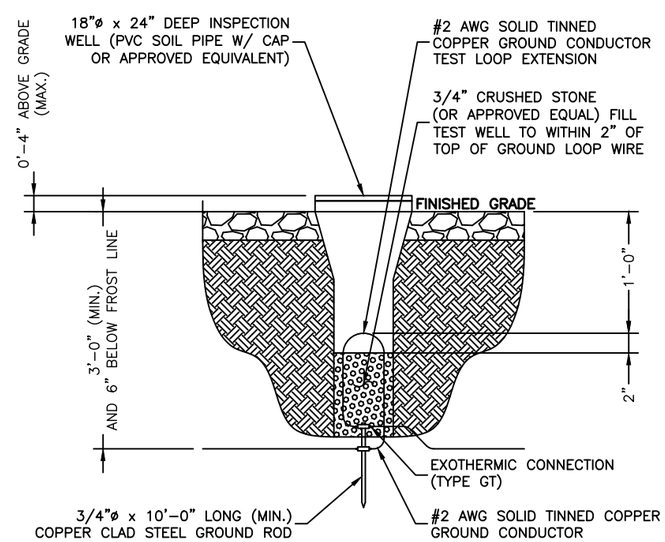

TEST WELL DETAIL

N.T.S.

dish WIRELESS

AMERICAN TOWER®

A.T. ENGINEERING SERVICE, PLLC
3500 REGENCY PARKWAY
SUITE 100
CARY, NC 27518
PHONE: (919) 468-0112
COA: P-1177

SEAL:

STATE OF CONNECTICUT
PATRICK P. BARRY
28959
LICENSED
PROFESSIONAL ENGINEER

Authorized by "EOR"
Jun 11 2019 3:59 PM

cosign

DRAWN BY:	TC
APPROVED BY:	PPB
DATE DRAWN:	06/03/19

REV.	DESCRIPTION	BY	DATE
0	FOR CONSTRUCTION	TC	06/03/19

THESE DRAWINGS AND/OR THE ACCOMPANYING SPECIFICATION AS INSTRUMENTS OR SERVICE ARE THE EXCLUSIVE PROPERTY OF AMERICAN TOWER. THEIR USE AND PUBLICATION SHALL BE RESTRICTED TO THE ORIGINAL SITE FOR WHICH THEY ARE PREPARED. ANY USE OR DISCLOSURE OTHER THAN THAT WHICH RELATES TO AMERICAN TOWER OR THE SPECIFIED CARRIER IS STRICTLY PROHIBITED. TITLE TO THESE DOCUMENTS SHALL REMAIN THE PROPERTY OF AMERICAN TOWER WHETHER OR NOT THE PROJECT IS EXECUTED. NEITHER THE ARCHITECT NOR THE ENGINEER WILL BE PROVIDING ON-SITE CONSTRUCTION REVIEW OF THIS PROJECT. CONTRACTOR(S) MUST VERIFY ALL DIMENSIONS AND ADVISE AMERICAN TOWER OF ANY DISCREPANCIES. ANY PRIOR ISSUANCE OF THIS DRAWING IS SUPERSEDED BY THE LATEST VERSION ON FILE WITH AMERICAN TOWER.

ATC PROJECT NUMBER:
12963795

DISH WIRELESS SITE NUMBER:
CT0100015A

ATC SITE NUMBER:
88019

SITE ADDRESS:
428 PLATT HILL ROAD
WINSTED, CT 06098

GROUNDING NOTES & DETAILS

SHEET NUMBER: G-2

REVISION: 0

Copyright © 2019 ATC IP LLC. All Rights Reserved.

ERICSSON CONFIGURATION

NOTES:

1. ALL HARDWARE SHALL BE 18-8 STAINLESS STEEL INCLUDING BELLEVILLE WASHERS. COAT ALL SURFACES WITH KOPR-SHIELD BEFORE MATING.
2. IF BONDING TO STEEL, INSERT A TOOTH WASHER BETWEEN LUG AND STEEL AND COAT ALL SURFACE WITH KOPR-SHIELD.
3. USE A THIN COAT OF NO-OX OR UL LISTED ANTIOXIDANT COMPOUND BETWEEN CONNECTIONS.

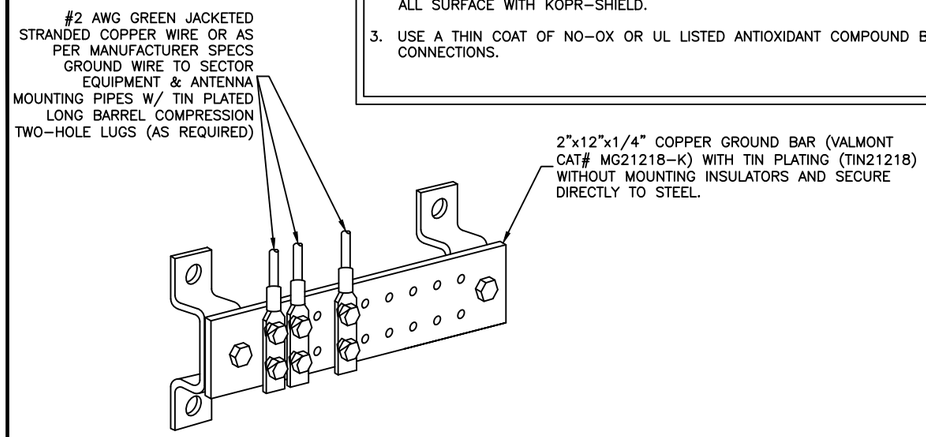

SECTOR GROUND BAR DETAIL

NOT TO SCALE

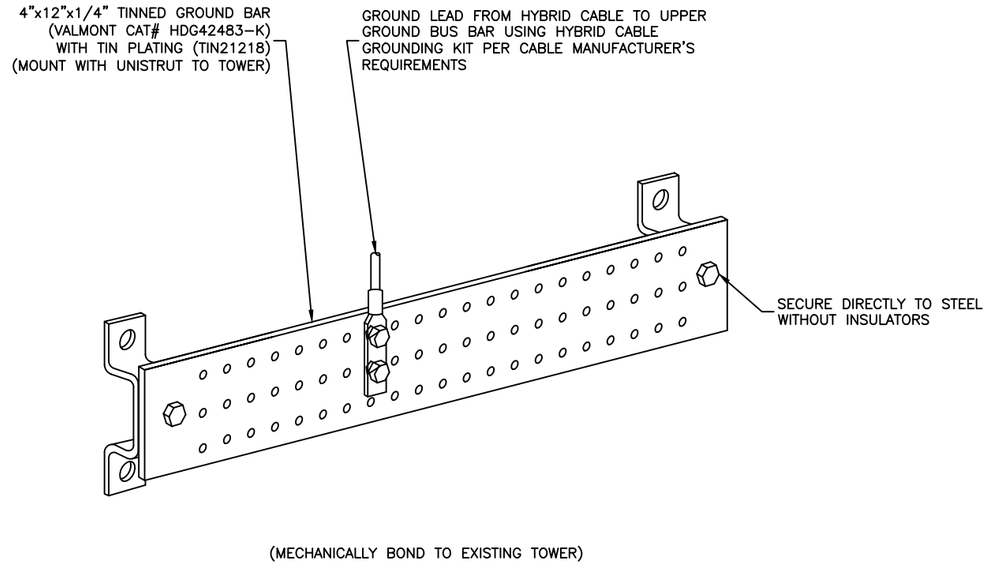

UPPER TOWER GROUND BAR DETAIL

NOT TO SCALE

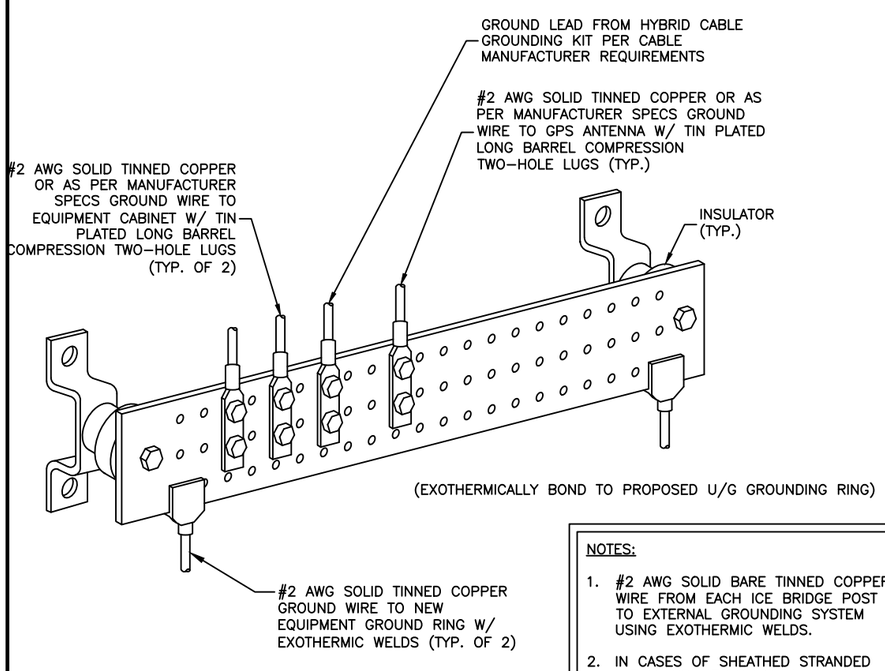

EQUIPMENT GROUND BAR DETAIL

NOT TO SCALE

NOTES:

1. #2 AWG SOLID BARE TINNED COPPER WIRE FROM EACH ICE BRIDGE POST TO EXTERNAL GROUNDING SYSTEM USING EXOTHERMIC WELDS.
2. IN CASES OF SHEATHED STRANDED WIRES, CONNECTOR SHALL HAVE INSPECTION WINDOW AND NO MORE THAN 1/8" GAP BETWEEN CONNECTOR BODY AND SHEATH.

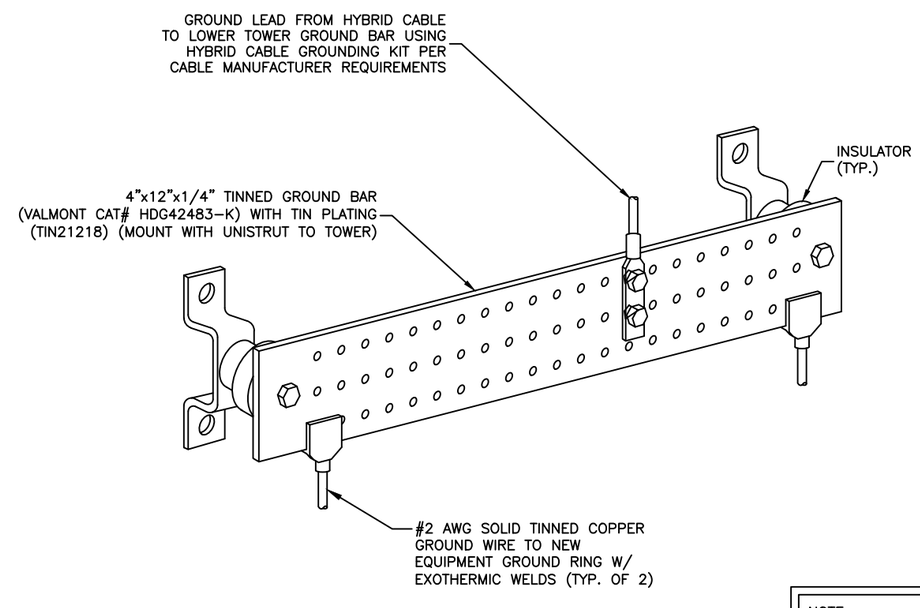

LOWER TOWER GROUND BAR DETAIL

NOT TO SCALE

NOTE:

#2 AWG SOLID TINNED COPPER GROUND CONDUCTOR FROM ICE BRIDGE POSTS TO BURIED GROUND RING USING EXOTHERMIC WELDS.

dish WIRELESS

AMERICAN TOWER®

A.T. ENGINEERING SERVICE, PLLC
3500 REGENCY PARKWAY
SUITE 100
CARY, NC 27518
PHONE: (919) 468-0112
COA: P-1177

SEAL:

STATE OF CONNECTICUT
PATRICK P. BARRY
28959
LICENSED
PROFESSIONAL ENGINEER

Authorized by "EOR"
Jun 11 2019 3:59 PM

cosign

DRAWN BY:	TC
APPROVED BY:	PPB
DATE DRAWN:	06/03/19

REV.	DESCRIPTION	BY	DATE
0	FOR CONSTRUCTION	TC	06/03/19

THESE DRAWINGS AND/OR THE ACCOMPANYING SPECIFICATION AS INSTRUMENTS OR SERVICE ARE THE EXCLUSIVE PROPERTY OF AMERICAN TOWER. THEIR USE AND PUBLICATION SHALL BE RESTRICTED TO THE ORIGINAL SITE FOR WHICH THEY ARE PREPARED. ANY USE OR DISCLOSURE OTHER THAN THAT WHICH RELATES TO AMERICAN TOWER OR THE SPECIFIED CARRIER IS STRICTLY PROHIBITED. TITLE TO THESE DOCUMENTS SHALL REMAIN THE PROPERTY OF AMERICAN TOWER WHETHER OR NOT THE PROJECT IS EXECUTED. NEITHER THE ARCHITECT NOR THE ENGINEER WILL BE PROVIDING ON-SITE CONSTRUCTION REVIEW OF THIS PROJECT. CONTRACTOR(S) MUST VERIFY ALL DIMENSIONS AND ADVISE AMERICAN TOWER OF ANY DISCREPANCIES. ANY PRIOR ISSUANCE OF THIS DRAWING IS SUPERSEDED BY THE LATEST VERSION ON FILE WITH AMERICAN TOWER.

ATC PROJECT NUMBER:
12963795

DISH WIRELESS SITE NUMBER:
CT0100015A

ATC SITE NUMBER:
88019

SITE ADDRESS:
428 PLATT HILL ROAD
WINSTED, CT 06098

GROUNDING NOTES & DETAILS

SHEET NUMBER: G-3

REVISION: 0

Copyright © 2019 ATC IP LLC. All Rights Reserved.

RF Design Data Sheet

Site Information			
State	CT	Site ID	CT0100015A
Site Name	88019	Tower Type	Self Support
Address	428 Platt Hill Road	City	Winsted
Latitude (degrees)	41.89828611	Zip	06098-2522
Longitude (degrees)	-73.11601111	Tower Owner	ATC
RFDS Revision	2.0	Issue Date	6/1/2019
RF Engineer	Neil Nocete		neil.nocete@dish.com

Design Information			
Technology	**NB-IoT**		
Vendor	**Ericsson**		
Site Configuration	**4415-2 No Band 29**		
Site Type - Equipment - Band	**AWS-4**		
Sector Information (Expected Configuration)	**Sector-1 (Alpha)**	**Sector-2 (Beta)**	**Sector-3 (Gamma)**
LTE Sector Number	CT0100015A_1	CT0100015A_2	CT0100015A_3
Antenna Center Line (ft)	154	154	154
Antenna Model Number	ODI2-065R18K-GQ	ODI2-065R18K-GQ	ODI2-065R18K-GQ
Number of Antennas / Sector	1	1	1
Antenna Dimensions (LxWxD) (In)	53.5 x 9.8 x 2.4	53.5 x 9.8 x 2.4	53.5 x 9.8 x 2.4
Antenna Weight (lbs.)	25	25	25
Antenna Manufacturer	Comba	Comba	Comba
Horizontal Beamwidth	64	64	64
Gain (dBd)	17.8	17.8	17.8
Azimuth (deg) (Relative to True North)	0	120	240
Antenna Downtilt (Mechanical)	0	0	0
Antenna Downtilt 2100 (Electrical)	2	2	2
Antenna Downtilt 700 (Electrical)	-	-	-
Radio Model (Band 70)	Radio 4415	Radio 4415	-
Radio Quantity (Band 70)	1	1	-
Radio Model (H-Block)	Radio 0208	Radio 0208	Radio 0208
Radio Quantity (H-Block)	1	1	1
Radio Model (700 band)	-	-	-
Radio Quantity (700 band)	-	-	-
Number of Feeders / Sector	4	4	4
Feeder Diameter (Nominal) (in)	1/2	1/2	1/2
Feeder Length (m)	3	3	3
700 MHz Radio location	-	-	-
700 MHz Coax Cable Type (in)	-	-	-
TX/RX Diplexer Model			
TX/RX Diplexer Qty			
TX/RX Diplexer Dim (inch) / Wt (lbs)			

Description of Cabling Configuration Changes / Additions

Mandatory : Append Sketches indicating Locations of all new Antennas, Cabling, Duplexor, Diplexors (if applicable), TMA's etc....

Sector Alpha	
Sector Beta	
Sector Gamma	
General Comments	4/1 - RAD change from 169 to 154 6/1 - Tilts for 700 put to nill as No B29

NOTE:

CONTRACTOR TO REFER TO, AND VALIDATE, THE LATEST RFDS PRIOR TO CONSTRUCTION.

THIS SHEET HAS BEEN PROVIDED BY THE APPLICANT AND REPRODUCED AT THEIR REQUEST

ATC PROJECT NUMBER:
12963795

DISH WIRELESS SITE NUMBER:
CT0100015A

ATC SITE NUMBER:
88019

SITE ADDRESS:
428 PLATT HILL ROAD
WINSTED, CT 06098

RF DATA SHEET

SHEET NUMBER: RF-1

REVISION: 0

Copyright © 2019 ATC IP LLC. All Rights Reserved.

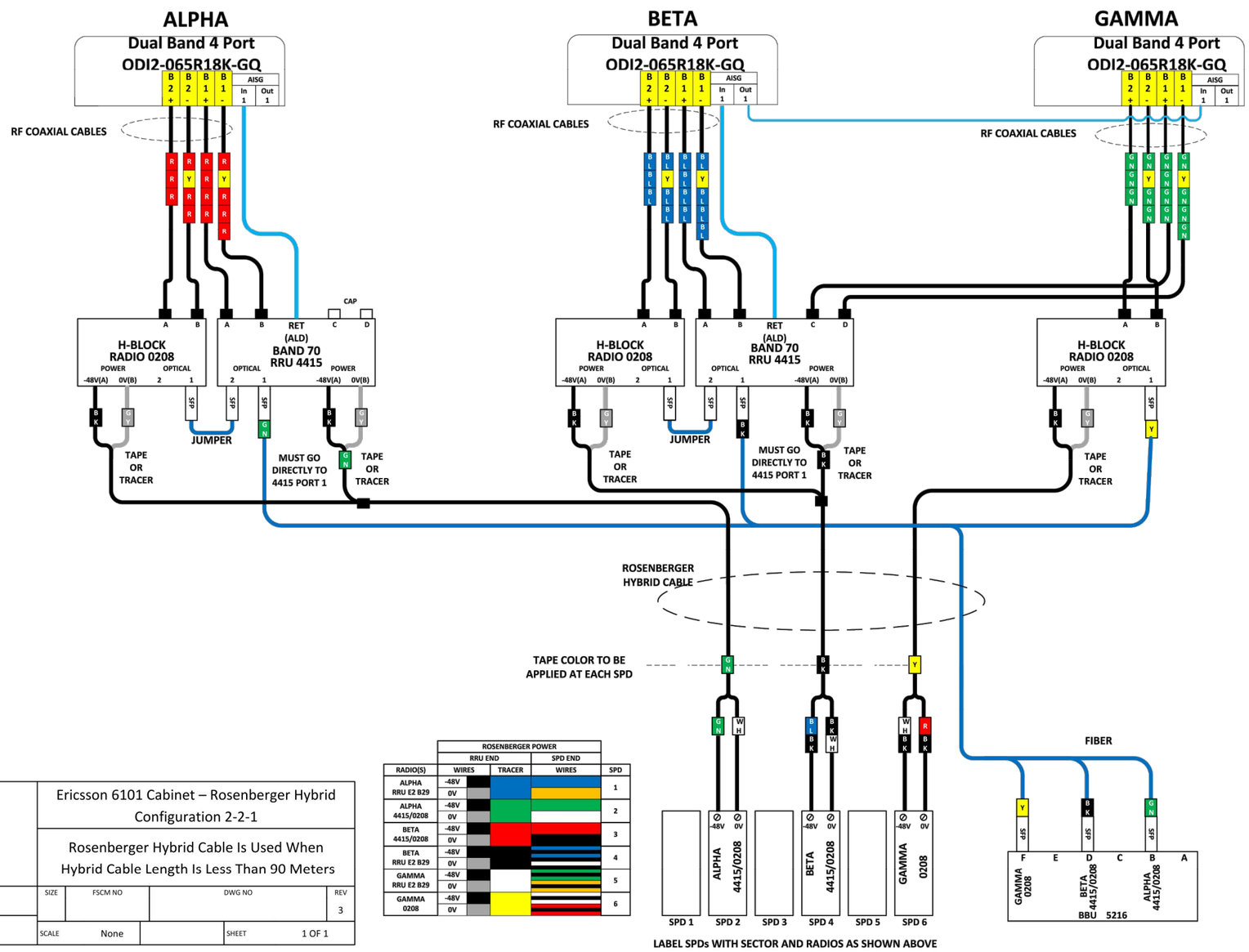

RADIO(S)	ROSENBERGER POWER				SPD
	RRU END			SPD END	
	WIRES		TRACER	WIRES	
ALPHA RRU E2 B29	-48V				1
	0V				
ALPHA 4415/0208	-48V				2
	0V				
BETA 4415/0208	-48V				3
	0V				
BETA RRU E2 B29	-48V				4
	0V				
GAMMA RRU E2 B29	-48V				5
	0V				
GAMMA 0208	-48V				6
	0V				

	Ericsson 6101 Cabinet – Rosenberger Hybrid Configuration 2-2-1			
	Rosenberger Hybrid Cable Is Used When Hybrid Cable Length Is Less Than 90 Meters			
L. Scott	SIZE	FSCM NO	DWG NO	REV 3
11- Apr- 2019	SCALE None		SHEET 1 OF 1	

NOTE:

CONTRACTOR TO REFER TO, AND VALIDATE, THE LATEST RFDS PRIOR TO CONSTRUCTION.

PLUMBING DIAGRAM

THIS SHEET HAS BEEN PROVIDED BY THE APPLICANT AND REPRODUCED AT THEIR REQUEST

ATC PROJECT NUMBER:
12963795

DISH WIRELESS SITE NUMBER:
CT0100015A

ATC SITE NUMBER:
88019

SITE ADDRESS:
428 PLATT HILL ROAD
WINSTED, CT 06098

PLUMBING DIAGRAM

SHEET NUMBER: RF-2

REVISION: 0

Copyright © 2019 ATC IP LLC. All Rights Reserved.