September 28, 2020

Melanie A. Bachman Executive
Director Connecticut Siting Council
10 Franklin Square
New Britain, CT 06051

Re: **Notice of Exempt Modification – Antenna and RRU changes**
Property Address: **173 S Broad Street Stonington, CT 06378**
Applicant: **New Cingular Wireless PCS, LLC (AT&T Mobility)**

Dear Ms. Bachman:

On behalf of AT&T, please accept this application as notification pursuant to R.C.S.A. §16-50j-73, for construction that constitutes an exempt modification pursuant to R.C.S.A. §16- 50j-72(b) (2).

AT&T currently maintains a wireless telecommunications facility consisting of twelve (12) wireless telecommunication antennas at an antenna center line height of 120 feet on an existing 180-foot self-support tower, owned by SBA Communications Corporation at 805 Congress Avenue, Boca Raton, FL 33487. AT&T now intends to remove three (3) 4' CSS DUO1417-8686-40i Panel Antennas, remove three (3) 4' KMW AM-X-CD-14-65-00T panel antennas, and swap these for three (3) 4' CCI DMP65R-BU4DA panel antennas and three (3) 4' CCI OP65R-BU4DA panel antennas. In addition, AT&T intends to remove sis (6) RRUS-11 and replace with three (3) 4449 V5/B12 RRU, three (3) 4478 B14 RRU as well as add three (3) new 8843 B2 B66 RRU. AT&T is also proposing to add (1) Raycap Squid, as well as one (1) fiber line, (2) DC Power Cables and one (1) Y-Cable to their equipment configuration. All the changes will take place on the existing antenna mounts.

Attached is a summary of the planned modifications including power density calculations reflecting the change in AT&T's operations at the site. Also included is documentation of the structural sufficiency of the tower to accommodate the revised antenna configuration.

Please accept this letter pursuant to Regulation of Connecticut State Agencies §16-50j-73, for construction that constitutes an exempt modification pursuant to R.C.S.A. § 16-5I0j-72(b) (2). In accordance with R.C.S.A., a copy of this letter is being sent to Lawrence Stannard – Building Official, Town of Stonington, CT at 152 Elm St Stonington, CT 06378 and Danielle Chesebrough – First Selectman, Town of Stonington, CT at 152 Elm St. Stonington, CT 06378. A copy of this letter is being sent to the property owner, Town of Stonington at 152 Elm St. Stonington, CT 06378 and to the tower company, SBA Communications Corporation at 805 Congress Avenue, Boca Raton, FL 33487.

The following is a list of subsequent decisions by the Connecticut Siting Council:

- **EM-CING-137-110406** - New Cingular Wireless PCS, LLC notice of intent to modify an existing telecommunications facility located at 173 South Broad Street, **Stonington**, Connecticut.

The planned modifications to AT&T's facility fall squarely within those activities explicitly provided for in R.C.S.A. §16-50j-72(b) (2).

1. The proposed modifications will not result in an increase in the height of the existing tower. AT&T's replacement antennas will be installed at the 120 -foot level of the 180-foot self-support tower.
2. The proposed modifications will not involve any changes to ground-mounted equipment and, therefore, will not require and extension of the site boundary.
3. The proposed modifications will not increase the noise levels at the facility by six decibels or more, or to levels that exceed state and local criteria.
4. The operation of the modified facility will not increase radio frequency (RF) emissions at the facility to a level at or above the Federal Communications Commission (FCC) safety standard. A cumulative worst-case RF emissions calculation for AT&T's modified facility is provided in the RF Emissions Compliance Report, included in Tab 2.
5. The proposed modifications will not cause a change or alteration in the physical or environmental characteristics of the site.
6. The tower and its foundation can support AT&T's proposed modifications. (See Structural Analysis Report included in Tab 3).

For the foregoing reasons, AT&T respectfully submits that the proposed modifications to the above referenced telecommunications facility constitutes an exempt modification under
R.C.S.A. §16-50j-72(b) (2).

Sincerely,

85 Rangeway Road
Bldg. 3, Suite 102
Billerica, MA 01862

Sharon R. Keefe
Project Manager – AT&T New England
sharon.Keefe@smartlinkgroup.com
c. 978-930-3918
www.smartlinkgroup.com

CC w/enclosures:
Lawrence Stannard – Building Official, Town of Stonington, CT
Danielle Chesebrough – First Selectman, Town of Stonington, CT
Town of Stonington, CT - Property Owner
SBA Communications – Tower Company

September 29, 2020

Connecticut Siting Council
10 Franklin Square
New Britain, CT 06051

Re: Original Zoning Decision
Property Address:173 S. Broad St. Stonington, CT 06378
Applicant: New Cingular Wireless PCS, LLC (AT&T Mobility)

To Whom It May Concern;

Upon review of the above referenced property, and consultation with the Town of Stonington Building Dept., it has been determined that the original zoning decision cannot be located for this site. Additional inquiries may be directed to the Town of Stonington Building Dept., at (860) 535-5075.

Thank you.

85 Rangeway Road
Bldg. 3, Suite 102
Billerica, MA 01862

Sharon R. Keefe
Project Manager – AT&T New England
sharon.Keefe@smartlinkgroup.com
c. 978-930-3918
www.smartlinkgroup.com

Town of Stonington, CT

Property Listing Report

Map Block Lot	37-1-2	Building #	1	Section #	1	Account	00623600

Property Information

Property Location	173 S BROAD ST
Owner	STONINGTON TOWN OF
Co-Owner	POLICE STATION
Mailing Address	152 ELM ST STONINGTON CT 06378
Land Use	9031 MUN POLICE
Land Class	E
Zoning Code	M-1
Census Tract	7051

Street Index	5000
Acreage	11.47
Utilities	
Lot Setting/Desc	Suburban
Survey Map #	NA
School District	
Fire District	Pawcatuck
Trash Day	T
Polling Place (District)	2

Photo

Sketch

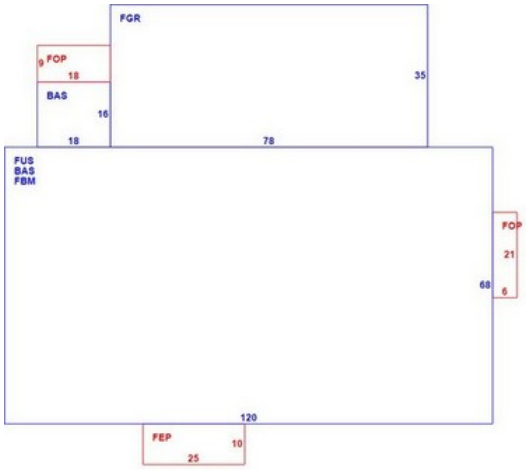

Primary Construction Details

				(*Industrial / Commercial Details)	
Year Built	2000	Bedrooms	0	Building Desc.	MUN POLICE
Stories	2	Full Bathrooms	0	Building Grade	Good
Building Style	Other Municip	Half Bathrooms	0	Heat / AC	HEAT/AC SPLIT
Building Use	Ind/Comm	Total Rooms	0	Frame Type	MASONRY
Building Condition	G	Roof Style	Flat	Baths / Plumbing	ABOVE AVERAGE
Occupancy	1	Roof Cover	Tar & Gravel	Ceiling / Wall	SUS-CEIL & WL
Extra Fixtures		Interior Floors 1	Vinyl/Asphalt	Rooms / Prtns	ABOVE AVERAGE
Bath Style	NA	Interior Floors 2	Carpet	Wall Height	10
Kitchen Style	NA	Exterior Walls	Brick/Masonry	First Floor Use	9031
AC Type	Central	Exterior Walls 2	NA		
Heating Type	Forced Air-Duc	Interior Walls	Drywall/Sheet		
Heating Fuel	Gas	Interior Walls 2	NA		

Report Created On 9/29/2020

Town of Stonington, CT

Property Listing Report

Map Block Lot	37-1-2	Building #	1	Section #	1	Account	00623600

Valuation Summary

(Assessed value = 70% of Appraised Value)

Item	Appraised	Assessed
Buildings	2454200	1717900
Extras	187100	131000
Improvements		
Outbuildings	277200	194100
Land	1394200	976000
Total	4312700	3019000

Sub Areas

Subarea Type	Gross Area (sq ft)	Living Area (sq ft)
First Floor	8448	8448
Basement, Finished	8160	5712
Porch, Enclosed	250	0
Garage	2730	2457
Porch, Open	288	0
Upper Story, Finished	8160	8160
Total Area	28036	24777

Outbuilding and Extra Features

Type	Description
PAVING-ASPHALT	37018.00 S.F.
SPRINKLERS-WET	11428.00 S.F.
ELV1	3.00 UNIT
CELL TOWER	1.00 UNIT
COMM MAS	1710.00 SF
GAS TANK	1.00 UNIT
GOOD QUALITY	484.00 S.F.
LIGHTS-IN W/PL	9.00 UNITS
FENCE-6' CHAIN	400.00 L.F.

Sales History

Owner of Record	Book/ Page	Sale Date	Sale Price
STONINGTON TOWN OF	0432/0629	3/1/1999	0
STONINGTON TOWN OF	0432/0627	3/1/1999	0
OLIVERIO SAMUEL F & MARIE A	0208/0086	9/16/1974	0
OLIVERIO SAMUEL F & MARIE A	0180/0588	3/30/1971	0
OLIVERIO SAMUEL F & MARIE A	0166/0143	4/24/1968	0

Report Created On 9/29/2020

SHEET INDEX

NO.	DESCRIPTION
T1	TITLE SHEET
C1	GENERAL NOTES
C2	OVERALL SITE PLAN
C2A	ENLARGED SITE PLAN
C3	ELEVATION VIEW
C4	ANTENNA ORIENTATION PLAN
C5	EQUIPMENT DETAILS
C6	PLUMBING DIAGRAM
C7	GROUNDING DETAILS

DRIVING DIRECTIONS

FROM 550 COCHITUATE RD.:

GET ON I-90 EAST/MASSACHUETTS TURNPIKE. HEAD NORTHWEST TOWARD LEGGATT MCCALL CONN. TURN LEFT ONTO LEGGATT MCCALL CON. CONTINUE ONTO BURR STREET. TURN LEFT ONTO COCHITUATE ROAD. USE THE RIGHT LANE TO TAKE THE RAMP TO I-90 EAST/MASSPIKE WEST/SPRINGFIELD/BOSTON. KEEP RIGHT AT THE FORK, FOLLOW SIGNS FOR I-90 EAST/I-95/MASSACHUETTS TURNPIKE/BOSTON AND MERGE ONTO I-90 EAST/MASSACHUETTS TURNPIKE. FOLLOW I-95 SOUTH/MA-128 SOUTH TO CT-49 SOUTH IN NORTH STONINGTON. TAKE EXIT 92 FROM I-95 SOUTH. MERGE ONTO I-90 EAST/MASSACHUETTS TURNPIKE (SIGNS FOR I-90 EAST/I-95/BOSTON). USE THE RIGHT 2 LANES TO TAKE EXIT 14 TOWARD N.H.-MAINE/I-95/MA-128/SOUTH SHORE. KEEP RIGHT AT THE FORK, FOLLOW SIGNS FOR I-95 SOUTH/STATE ROUTE 128 SOUTH/CAPE COD/SOUTH SHORE AND MERGE ONTO I-95 SOUTH/MA-128 SOUTH. USE THE RIGHT 2 LANES TO TAKE THE I-95 SOUTH EXIT TOWARD PROVIDENCE RI. CONTINUE ONTO I-95 SOUTH. KEEP RIGHT AT THE FORK TO STAY ON I-95 SOUTH. TAKE EXIT 92 FOR CT-49 TOWARD CT-2/PAWCATUCK/NO. STONINGTON. FOLLOW CT-49 SOUTH, CT-2 EAST/LIBERTY STREET AND WEST BROAD STREET TO SPELLMAN DRIVE IN STONINGTON. TURN LEFT ONTO CT-49 SOUTH. USE ANY LANE TO TURN LEFT ONTO CT-2 EAST/LIBERTY STREET. TURN RIGHT ONTO MORGAN STREET. TURN RIGHT ONTO MORGAN STREET. TURN RIGHT ONTO WEST BROAD STREET. SLIGHT LEFT ONTO BROAD STREET. TURN RIGHT ONTO SPELLMAN DRIVE.

LOCATION MAP

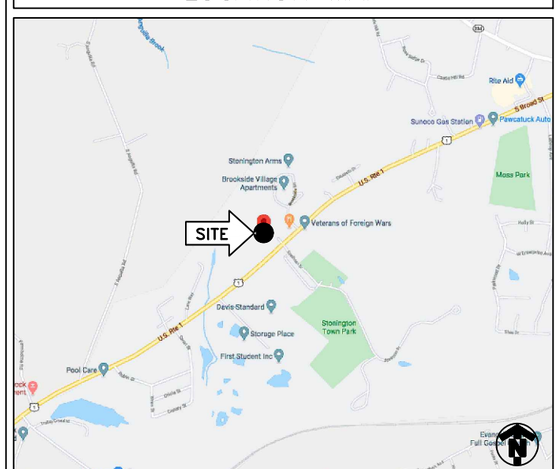

at&t

PROJECT

LTE 2C/3C/5G NR/RETROFIT

SITE NAME

STONINGTON - BROAD STREET

CELL SITE ID

CTL02231

FA SITE NUMBER

10049131

PACE ID

MRCTB048204/MRCTB048186/MRCTB047266
MRCTB047203/MRCTB047284

SITE ADDRESS

173 SOUTH BROAD STREET
STONINGTON, CT 06378

STRUCTURE TYPE

SELF SUPPORT

PROJECT TEAM

smartlink

PROJECT MANAGER

INFINIGY

1033 Watervliet Shaker Rd
Albany, NY 12205
Office # (518) 690-0790
Fax # (518) 690-0793

ENGINEER

SCOPE OF WORK (PER LTE RFDS, DATED 07/22/2020 V3.00):

- HANDICAP ACCESS REQUIREMENTS ARE NOT REQUIRED.
- FACILITY IS UNMANNED AND NOT FOR HUMAN HABITATION.
- FACILITY HAS NO PLUMBING OR REFRIGERANTS.
- THIS FACILITY SHALL MEET OR EXCEED ALL FAA AND FCC REGULATORY REQUIREMENTS.
- ALL NEW MATERIAL SHALL BE FURNISHED AND INSTALLED BY CONTRACTOR UNLESS NOTED OTHERWISE. EQUIPMENT, ANTENNAS/RRU AND CABLES FURNISHED BY OWNER AND INSTALLED BY CONTRACTOR.

TOWER
- REMOVE (6) PANEL ANTENNAS
- INSTALL (6) PANEL ANTENNAS
- REMOVE (3) RRUS-11
- INSTALL (3) B14 4478
- INSTALL (3) 4449 B5/B12
- INSTALL (3) 8843 B2/B66A
- INSTALL (1) DC ONLY 'SQUID' W/ (3) DC CABLES

GROUND
- ADD 6630
- ADD IDLe CABLE
- ADD DC12

PROJECT SUMMARY

SITE NAME:	STONINGTON - BROAD STREET	
CELL SITE ID:	CTL02231	
FA SITE #:	10049131	
SITE ADDRESS:	171 SOUTH BROAD STREET STONINGTON, CT 06378	
COUNTY:	NEW LONDON	
SITE COORDINATES: LATITUDE:	41.3690750° N	(NAD 83)
LONGITUDE:	71.8623719° W	(NAD 83)
RAD CENTER	±120'	(AGL)
LANDLORD:	TBD	
APPLICANT:	AT&T MOBILITY 550 COCHITUATE RD. FRAMINGHAM, MA 01701	
CLIENT REPRESENTATIVE:	SMARTLINK, LLC 85 RANGEWAY RD., BUILDING 3, SUITE 102 NORTH BILLERICA, MA 01862	
CONTACT:	SHARON KEEFE (978) 930-3918	
ENGINEER:	INFINIGY 1033 WATERVLIET SHAKER ROAD ALBANY, NY 12205	
CONTACT:	ALEX WELLER (518) 690-0790	
BUILDING CODE:	2018 CT STATE BUILDING CODE 2015 INTERNATIONAL BUILDING CODE ANSI/TIA-222 G 2015 INTERNATIONAL PLUMBING CODE 2015 INTERNATIONAL MECHANICAL CODE 2015 INTERNATIONAL ENERGY CONSERVATION CODE 2017 NFPA 70	
ELECTRICAL CODE:	NATIONAL ELECTRICAL CODE (LATEST EDITION)	

811 Know what's below. Call before you dig.

TO OBTAIN LOCATION OF PARTICIPANTS UNDERGROUND FACILITIES BEFORE YOU DIG IN CONNECTICUT, CONTACT CALL BEFORE YOU DIG
TOLL FREE: 1-800-922-4455 OR www.cbyd.com
CONNECTICUT STATUTE REQUIRES MIN OF 2 WORKING DAYS NOTICE BEFORE YOU EXCAVATE

INFINIGY
INFINIGY ENGINEERING, PLLC
1033 Watervliet Shaker Rd
Albany, NY 12205
Office # (518) 690-0790
Fax # (518) 690-0793

at&t

STATE OF CONNECTICUT
JOHN S. STEVENS
24705
LICENSED PROFESSIONAL ENGINEER
9/17/20

UNAUTHORIZED ALTERATION OR ADDITION TO THIS DOCUMENT IS A VIOLATION OF APPLICABLE STATE AND/OR LOCAL LAWS

No.	Submittal / Revision	App'd	Date
2	REVISED FOR PERMIT	BMM	09/17/20
1	ISSUED FOR PERMIT	BMM	08/06/20
0	ISSUED FOR REVIEW	BMM	07/28/20

Drawn: BMM Date: 07/28/20
Designed: ASW Date: 07/28/20
Checked: ASW Date: 07/28/20

Project Number: 499-006

Project Title: STONINGTON-BROAD STREET
CTL02231
FA# 10049131
171 SOUTHBROAD STREET
STONINGTON,CT 06378

Prepared For: smartlink

Drawing Scale: AS NOTED
Date: 09/17/20
CD

Drawing Title: **TITLE PAGE**

Drawing Number: **T1**

GENERAL NOTES

PART 1 – GENERAL REQUIREMENTS

1.1 THE WORK SHALL COMPLY WITH APPLICABLE NATIONAL CODES AND STANDARDS, LATEST EDITION, AND PORTIONS THEREOF, INCLUDED BUT NOT LIMITED TO THE FOLLOWING:
A. GR-63-CORE NEBS REQUIREMENTS: PHYSICAL PROTECTION
B. GR-78-CORE GENERIC REQUIREMENTS FOR THE PHYSICAL DESIGN AND MANUFACTURE OF TELECOMMUNICATIONS EQUIPMENT.
C. NATIONAL FIRE PROTECTION ASSOCIATION CODES AND STANDARDS (NFPA) INCLUDING NFPA 70 (NATIONAL ELECTRICAL CODE – "NEC").
D. AND NFPA 101 (LIFE SAFETY CODE).
E. AMERICAN SOCIETY FOR TESTING OF MATERIALS (ASTM).
F. INSTITUTE OF ELECTRONIC AND ELECTRICAL ENGINEERS (IEEE).

1.2 DEFINITIONS:
A: WORK: THE SUM OF TASKS AND RESPONSIBILITIES IDENTIFIED IN THE CONTRACT DOCUMENTS.
B: COMPANY: AT&T CORPORATION
C. ENGINEER: SYNONYMOUS WITH ARCHITECT & ENGINEER AND "A&E". THE DESIGN PROFESSIONAL HAVING PROFESSIONAL RESPONSIBILITY FOR DESIGN OF THE PROJECT.
D: CONTRACTOR: CONSTRUCTION CONTRACTOR; CONSTRUCTION VENDOR; INDIVIDUAL OR ENTITY WHO AFTER EXECUTION OF A CONTRACT IS BOUND TO ACCOMPLISH THE WORK.
E: THIRD PARTY VENDOR OR AGENCY: A VENDOR OR AGENCY ENGAGED SEPARATELY BY THE COMPANY, A&E, OR CONTRACTOR TO PROVIDE MATERIALS OR TO ACCOMPLISH SPECIFIC TASKS RELATED TO BUT NOT INCLUDED IN THE WORK.

1.3 POINT OF CONTACT: COMMUNICATION BETWEEN THE COMPANY AND THE CONTRACTOR SHALL FLOW THROUGH THE SINGLE COMPANY SITE DEVELOPMENT SPECIALIST OR OTHER PROJECT COORDINATOR APPOINTED TO MANAGE THE PROJECT FOR THE COMPANY.

1.4 ON-SITE SUPERVISION: THE CONTRACTOR SHALL SUPERVISE AND DIRECT THE WORK AND SHALL BE RESPONSIBLE FOR CONSTRUCTION MEANS, METHODS, TECHNIQUES, SEQUENCES, AND PROCEDURES IN ACCORDANCE WITH THE CONTRACT DOCUMENTS. THE CONTRACTOR SHALL EMPLOY A COMPETENT SUPERINTENDENT WHO SHALL BE IN ATTENDANCE AT THE SITE AT ALL TIMES DURING PERFORMANCE OF THE WORK.

1.5 DRAWINGS, SPECIFICATIONS AND DETAILS REQUIRED AT JOBSITE: THE CONSTRUCTION CONTRACTOR SHALL MAINTAIN A FULL SET OF THE CONSTRUCTION DRAWINGS, STANDARD CONSTRUCTION DETAILS FOR WIRELESS SITES, AND THE STANDARD CONSTRUCTION SPECIFICATIONS FOR WIRELESS SITES AT THE JOBSITE FROM MOBILIZATION THROUGH CONSTRUCTION COMPLETION.
A. THE JOBSITE DRAWINGS, SPECIFICATIONS AND DETAILS SHALL BE CLEARLY MARKED DAILY IN PENCIL WITH ANY CHANGES IN CONSTRUCTION OVER WHAT IS DEPICTED IN THE DOCUMENTS. AT CONSTRUCTION COMPLETION, THIS JOBSITE MARKUP SET SHALL BE DELIVERED TO THE COMPANY OR COMPANY'S DESIGNATED REPRESENTATIVE TO BE FORWARDED TO THE COMPANY'S A&E VENDOR FOR PRODUCTION OF "AS-BUILT" DRAWINGS.

1.6 USE OF JOB SITE: THE CONTRACTOR SHALL CONFINE ALL CONSTRUCTION AND RELATED OPERATIONS INCLUDING STAGING AND STORAGE OF MATERIALS AND EQUIPMENT, PARKING, TEMPORARY FACILITIES, AND WASTE STORAGE TO THE LEASE PARCEL UNLESS OTHERWISE PERMITTED BY THE CONTRACT DOCUMENTS.

1.7 NOTICE TO PROCEED:
A. NO WORK SHALL COMMENCE PRIOR TO COMPANY'S WRITTEN NOTICE TO PROCEED.
B. UPON RECEIVING NOTICE TO PROCEED, CONTRACTOR SHALL FULLY PERFORM ALL WORK NECESSARY TO PROVIDE AT&T WITH AN OPERATIONAL WIRELESS FACILITY.

PART 2 – EXECUTION

2.1 TEMPORARY UTILITIES AND FACILITIES: THE CONTRACTOR SHALL BE RESPONSIBLE FOR ALL TEMPORARY UTILITIES AND FACILITIES NECESSARY EXCEPT AS OTHERWISE INDICATED IN THE CONSTRUCTION DOCUMENTS. TEMPORARY UTILITIES AND FACILITIES INCLUDE, POTABLE WATER, HEAT, HVAC, ELECTRICITY, SANITARY FACILITIES, WASTE DISPOSAL FACILITIES, AND TELEPHONE/COMMUNICATION SERVICES. PROVIDE TEMPORARY UTILITIES AND FACILITIES IN ACCORDANCE WITH OSHA AND THE AUTHORITY HAVING JURISDICTION. CONTRACTOR MAY UTILIZE THE COMPANY ELECTRICAL SERVICE IN THE COMPLETION OF THE WORK WHEN IT BECOMES AVAILABLE. USE OF THE LESSORS OR SITE OWNER'S UTILITIES OR FACILITIES IS EXPRESSLY FORBIDDEN EXCEPT AS OTHERWISE ALLOWED IN THE CONTRACT DOCUMENTS.

2.2 ACCESS TO WORK: THE CONTRACTOR SHALL PROVIDE ACCESS TO THE JOB SITE FOR AUTHORIZED COMPANY PERSONNEL AND AUTHORIZED REPRESENTATIVES OF THE ARCHITECT/ENGINEER DURING ALL PHASES OF THE WORK.

2.3 TESTING: REQUIREMENTS FOR TESTING BY THIS CONTRACTOR SHALL BE AS INDICATED HEREWITH, ON THE CONSTRUCTION DRAWINGS, AND IN THE INDIVIDUAL SECTIONS OF THESE SPECIFICATIONS. SHOULD COMPANY CHOOSE TO ENGAGE ANY THIRD-PARTY TO CONDUCT ADDITIONAL TESTING, THE CONTRACTOR SHALL COOPERATE WITH AND PROVIDE A WORK AREA FOR COMPANY'S TEST AGENCY.

2.4 COMPANY FURNISHED MATERIAL AND EQUIPMENT: ALL HANDLING, STORAGE AND INSTALLATION OF COMPANY FURNISHED MATERIAL AND EQUIPMENT SHALL BE IN ACCORDANCE WITH THE REQUIREMENTS OF THE CONTRACT DOCUMENTS AND WITH THE MANUFACTURER'S INSTRUCTIONS AND RECOMMENDATIONS.
A. CONTRACTOR SHALL PROCURE ALL OTHER REQUIRED WORK RELATED MATERIALS NOT PROVIDED BY AT&T TO SUCCESSFULLY CONSTRUCT A WIRELESS FACILITY.

2.5 DIMENSIONS: VERIFY DIMENSIONS INDICATED ON DRAWINGS WITH FIELD DIMENSIONS BEFORE FABRICATION OR ORDERING OF MATERIALS. DO NOT SCALE DRAWINGS.

2.6 EXISTING CONDITIONS: NOTIFY THE COMPANY REPRESENTATIVE OF EXISTING CONDITIONS DIFFERING FROM THOSE INDICATED ON THE DRAWINGS. DO NOT REMOVE OR ALTER STRUCTURAL COMPONENTS WITHOUT PRIOR WRITTEN APPROVAL FROM THE ARCHITECT AND ENGINEER.

PART 3 – RECEIPT OF MATERIAL & EQUIPMENT

3.1 RECEIPT OF MATERIAL AND EQUIPMENT: CONTRACTOR IS RESPONSIBLE FOR AT&T PROVIDED MATERIAL AND EQUIPMENT AND UPON RECEIPT SHALL:
A. ACCEPT DELIVERIES AS SHIPPED AND TAKE RECEIPT.
B. VERIFY COMPLETENESS AND CONDITION OF ALL DELIVERIES.
C. TAKE RESPONSIBILITY FOR EQUIPMENT AND PROVIDE INSURANCE PROTECTION AS REQUIRED IN AGREEMENT.
D. RECORD ANY DEFECTS OR DAMAGES AND WITHIN TWENTY-FOUR HOURS AFTER RECEIPT, REPORT TO AT&T OR ITS DESIGNATED PROJECT REPRESENTATIVE OF SUCH.
E. PROVIDE SECURE AND NECESSARY WEATHER PROTECTED WAREHOUSING.
F. COORDINATE SAFE AND SECURE TRANSPORTATION OF MATERIAL AND EQUIPMENT, DELIVERING AND OFF-LOADING FROM CONTRACTOR'S WAREHOUSE TO SITE.

PART 4 – GENERAL REQUIREMENTS FOR CONSTRUCTION

4.1 CONTRACTOR SHALL KEEP THE SITE FREE FROM ACCUMULATING WASTE MATERIAL, DEBRIS, AND TRASH. AT THE COMPLETION OF THE WORK, CONTRACTOR SHALL REMOVE FROM THE SITE ALL REMAINING RUBBISH, IMPLEMENTS, TEMPORARY FACILITIES, AND SURPLUS MATERIALS.

4.2 EQUIPMENT ROOMS SHALL AT ALL TIMES BE MAINTAINED "BROOM CLEAN" AND CLEAR OF DEBRIS.

4.3 CONTRACTOR SHALL TAKE ALL REASONABLE PRECAUTIONS TO DISCOVER AND LOCATE ANY HAZARDOUS CONDITION.
A. IN THE EVENT CONTRACTOR ENCOUNTERS ANY HAZARDOUS CONDITION WHICH HAS NOT BEEN ABATED OR OTHERWISE MITIGATED, CONTRACTOR AND ALL OTHER PERSONS SHALL IMMEDIATELY STOP WORK IN THE AFFECTED AREA AND NOTIFY COMPANY IN WRITING. THE WORK IN THE AFFECTED AREA SHALL NOT BE RESUMED EXCEPT BY WRITTEN NOTIFICATION BY COMPANY.
B. CONTRACTOR AGREES TO USE CARE WHILE ON THE SITE AND SHALL NOT TAKE ANY ACTION THAT WILL OR MAY RESULT IN OR CAUSE THE HAZARDOUS CONDITION TO BE FURTHER RELEASED IN THE ENVIRONMENT, OR TO FURTHER EXPOSE INDIVIDUALS TO THE HAZARD.

4.4 CONTRACTOR'S ACTIVITIES SHALL BE RESTRICTED TO THE PROJECT LIMITS. SHOULD AREAS OUTSIDE THE PROJECT LIMITS BE AFFECTED BY CONTRACTOR'S ACTIVITIES, CONTRACTOR SHALL IMMEDIATELY RETURN THEM TO ORIGINAL CONDITION.

4.5 CONDUCT TESTING AS REQUIRED HEREIN.

PART 5 – TESTS AND INSPECTIONS

5.1 TESTS AND INSPECTIONS:
A. THE CONTRACTOR SHALL BE RESPONSIBLE FOR ALL CONSTRUCTION TESTS, INSPECTIONS AND PROJECT DOCUMENTATION.

B. CONTRACTOR SHALL COORDINATE TEST AND INSPECTION SCHEDULES WITH COMPANY'S REPRESENTATIVE WHO MUST BE ON SITE TO WITNESS SUCH TESTS AND INSPECTIONS.

C. WHEN THE USE OF A THIRD PARTY INDEPENDENT TESTING AGENCY IS REQUIRED, THE AGENCY THAT IS SELECTED MUST PERFORM SUCH WORK ON A REGULAR BASIS IN THE STATE WHERE THE PROJECT IS LOCATED AND HAVE A THOROUGH UNDERSTANDING OF LOCAL AVAILABLE MATERIALS, INCLUDING THE SOIL, ROCK, AND GROUNDWATER CONDITIONS.

D. THE THIRD PARTY TESTING AGENCY IS TO BE FAMILIAR WITH THE APPLICABLE REQUIREMENTS FOR THE TESTS TO BE DONE, EQUIPMENT TO BE USED, AND ASSOCIATED HEALTH AND SAFETY ISSUES.

E. SITE RESISTANCE TO EARTH TESTING PER EXHIBIT: CELL SITE GROUNDING SYSTEM DESIGN.

F. ANTENNA AND COAX SWEEP TESTS PER EXHIBIT: ANTENNA TRANSMISSION LINE ACCEPTANCE STANDARDS.

G. ALL OTHER TESTS REQUIRED BY COMPANY OR JURISDICTION.

PART 6 – TRENCHING AND BACKFILLING

6.1 TRENCHING AND BACKFILLING: THE CONTRACTOR SHALL PERFORM ALL EXCAVATION OF EVERY DESCRIPTION AND OF WHATEVER SUBSTANCES ENCOUNTERED, TO THE DEPTHS INDICATED ON THE CONSTRUCTION DRAWINGS OR AS OTHERWISE SPECIFIED.

A. PROTECTION OF EXISTING UTILITIES: THE CONTRACTOR SHALL CHECK WITH THE LOCAL UTILITIES AND THE RESPECTIVE UTILITY LOCATOR COMPANIES PRIOR TO STARTING EXCAVATION OPERATIONS IN EACH RESPECTIVE AREA TO ASCERTAIN THE LOCATIONS OF KNOWN UTILITY LINES. THE LOCATIONS, NUMBER AND TYPES OF EXISTING UTILITY LINES DETAILED ON THE CONSTRUCTION DRAWINGS ARE APPROXIMATE AND DO NOT REPRESENT EXACT INFORMATION. THE CONTRACTOR SHALL BE RESPONSIBLE FOR REPAIRING ALL LINES DAMAGED DURING EXCAVATION AND ALL ASSOCIATED OPERATIONS. ALL UTILITY LINES UNCOVERED DURING THE EXCAVATION OPERATIONS, SHALL BE PROTECTED FROM DAMAGE DURING EXCAVATION AND ASSOCIATED OPERATIONS. ALL REPAIRS SHALL BE APPROVED BY THE UTILITY COMPANY.

B. HAND DIGGING: UNLESS APPROVED IN WRITING OTHERWISE, ALL DIGGING WITHIN AN EXISTING CELL SITE COMPOUND IS TO BE DONE BY HAND.

C. DURING EXCAVATION, MATERIAL SUITABLE FOR BACKFILLING SHALL BE STOCKPILED IN AN ORDERLY MANNER A SUFFICIENT DISTANCE FROM THE BANKS OF THE TRENCH TO AVOID OVERLOADING AND TO PREVENT SLIDES OR CAVE-INS. ALL EXCAVATED MATERIALS NOT REQUIRED OR SUITABLE FOR BACKFILL SHALL BE REMOVED AND DISPOSED OF AT THE CONTRACTOR'S EXPENSE.

D. GRADING SHALL BE DONE AS MAY BE NECESSARY TO PREVENT SURFACE WATER FROM FLOWING INTO TRENCHES OR OTHER EXCAVATIONS, AND ANY WATER ACCUMULATING THEREIN SHALL BE REMOVED BY PUMPING OR BY OTHER APPROVED METHOD.

E. SHEETING AND SHORING SHALL BE DONE AS NECESSARY FOR THE PROTECTION OF THE WORK AND FOR THE SAFETY OF PERSONNEL. UNLESS OTHERWISE INDICATED, EXCAVATION SHALL BE BY OPEN CUT, EXCEPT THAT SHORT SECTIONS OF A TRENCH MAY BE TUNNELED IF, THE CONDUIT CAN BE SAFELY AND PROPERLY INSTALLED AND BACKFILL CAN BE PROPERLY TAMPED IN SUCH TUNNEL SECTIONS. EARTH EXCAVATION SHALL COMPRISE ALL MATERIALS AND SHALL INCLUDE CLAY, SILT, SAND, MUCK, GRAVEL, HARDPAN, LOOSE SHALE, AND LOOSE STONE.

F. TRENCHES SHALL BE OF NECESSARY WIDTH FOR THE PROPER LAYING OF THE CONDUIT OR CABLE, AND THE BANKS SHALL BE AS NEARLY VERTICAL AS PRACTICABLE. THE BOTTOM OF THE TRENCHES SHALL BE ACCURATELY GRADED TO PROVIDE UNIFORM BEARING AND SUPPORT FOR EACH SECTION OF THE CONDUIT OR CABLE ON UNDISTURBED SOIL AT EVERY POINT ALONG ITS ENTIRE LENGTH. EXCEPT WHERE ROCK IS ENCOUNTERED, CARE SHALL BE TAKEN NOT TO EXCAVATE BELOW THE DEPTHS INDICATED. WHERE ROCK EXCAVATIONS ARE NECESSARY, THE ROCK SHALL BE EXCAVATED TO A MINIMUM OVER DEPTH OF 6 INCHES BELOW THE TRENCH DEPTHS INDICATED ON THE CONSTRUCTION DRAWINGS OR SPECIFIED. OVER DEPTHS IN THE ROCK EXCAVATION AND UNAUTHORIZED OVER DEPTHS SHALL BE THOROUGHLY BACK FILLED AND TAMPED TO THE APPROPRIATE GRADE. WHENEVER WET OR OTHERWISE UNSTABLE SOIL THAT IS INCAPABLE OF PROPERLY SUPPORTING THE CONDUIT OR CABLE IS ENCOUNTERED IN THE BOTTOM OF THE TRENCH, SUCH SOLID SHALL BE REMOVED TO A MINIMUM OVER DEPTH OF 6 INCHES AND THE TRENCH BACKFILLED TO THE PROPER GRADE WITH EARTH OF OTHER SUITABLE MATERIAL, AS HEREINAFTER SPECIFIED.

G. BACKFILLING OF TRENCHES. TRENCHES SHALL NOT BE BACKFILLED UNTIL ALL SPECIFIED TESTS HAVE BEEN PERFORMED AND ACCEPTED. WHERE COMPACTED BACKFILL IS NOT INDICATED THE TRENCHES SHALL BE CAREFULLY BACKFILLED WITH SELECT MATERIAL SUCH AS EXCAVATED SOILS THAT ARE FREE OF ROOTS, SOD, RUBBISH OR STONES, DEPOSITED IN 6 INCH LAYERS AND THOROUGHLY AND CAREFULLY RAMMED UNTIL THE CONDUIT OR CABLE HAS A COVER OF NOT LESS THAN 1 FOOT. THE REMAINDER OF THE BACKFILL MATERIAL SHALL BE GRANULAR IN NATURE AND SHALL NOT CONTAIN ROOTS, SOD, RUBBING, OR STONES OF 2-1/2 INCH MAXIMUM DIMENSION. BACKFILL SHALL BE CAREFULLY PLACED IN THE TRENCH AND IN 1 FOOT LAYERS AND EACH LAYER TAMPED. SETTLING THE BACKFILL WITH WATER WILL BE PERMITTED. THE SURFACE SHALL BE GRADED TO A REASONABLE UNIFORMITY AND THE MOUNDING OVER THE TRENCHES LEFT IN A UNIFORM AND NEAT CONDITION.

SYMBOL	DESCRIPTION
	CIRCUIT BREAKER
	NON-FUSIBLE DISCONNECT SWITCH
F	FUSIBLE DISCONNECT SWITCH
	SURFACE MOUNTED PANEL BOARD
T	TRANSFORMER
M	KILOWATT HOUR METER
JB	JUNCTION BOX
PB	PULL BOX TO NEC/TELCO STANDARDS
	UNDERGROUND UTILITIES
	EXOTHERMIC WELD CONNECTION
	MECHANICAL CONNECTION
OR	GROUND ROD
OR	GROUND ROD WITH INSPECTION SLEEVE
	GROUND BAR
	120AC DUPLEX RECEPTACLE
G	GROUND CONDUCTOR
	DC POWER AND FIBER OPTIC TRUNK CABLES
	DC POWER CABLES
# / #	REPRESENTS DETAIL NUMBER / REF. DRAWING NUMBER

ABBREVIATIONS

CIGBE	COAX ISOLATED GROUND BAR EXTERNAL
MIGB	MASTER ISOLATED GROUND BAR
SST	SELF SUPPORTING TOWER
GPS	GLOBAL POSITIONING SYSTEM
TYP.	TYPICAL
DWG	DRAWING
BCW	BARE COPPER WIRE
BFG	BELOW FINISH GRADE
PVC	POLYVINYL CHLORIDE
CAB	CABINET
C	CONDUIT
SS	STAINLESS STEEL
G	GROUND
AWG	AMERICAN WIRE GAUGE
RGS	RIGID GALVANIZED STEEL
AHJ	AUTHORITY HAVING JURISDICTION
TTLNA	TOWER TOP LOW NOISE AMPLIFIER
UNO	UNLESS NOTED OTHERWISE
EMT	ELECTRICAL METALLIC TUBING
AGL	ABOVE GROUND LEVEL

INFINIGY
INFINIGY ENGINEERING, PLLC
1033 Watervliet Shaker Rd
Albany, NY 12205
Office # (518) 690-0790
Fax # (518) 690-0793

at&t

STATE OF CONNECTICUT
CHRISTOPHER S. STEVENS
24705
LICENSED PROFESSIONAL ENGINEER
9/17/20

UNAUTHORIZED ALTERATION OR ADDITION TO THIS DOCUMENT IS A VIOLATION OF APPLICABLE STATE AND/OR LOCAL LAWS

No.	Submittal / Revision	App'd	Date
2	REVISED FOR PERMIT	BMM	09/17/20
1	ISSUED FOR PERMIT	BMM	08/06/20
0	ISSUED FOR REVIEW	BMM	07/28/20

Drawn: BMM Date: 07/28/20
Designed: ASW Date: 07/28/20
Checked: ASW Date: 07/28/20

Project Number: 499-006

Project Title:
STONINGTON-
BROAD STREET

CTL02231
FA# 10049131
171 SOUTHBROAD STREET
STONINGTON,CT 06378

Prepared For:
smartlink

Drawing Scale: AS NOTED
Date: 09/17/20
CD

Drawing Title
GENERAL NOTES

Drawing Number
C1

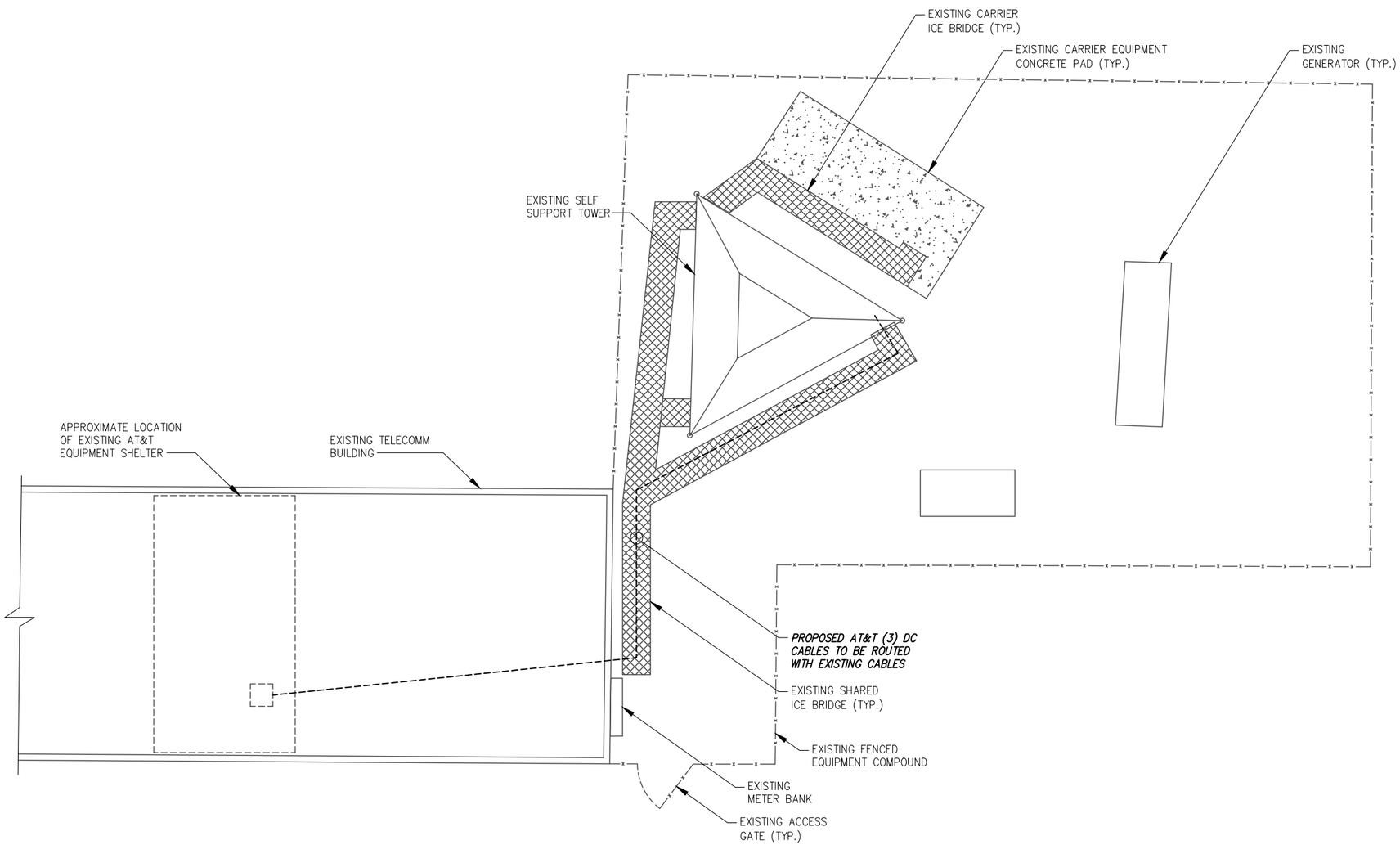

1 SITE PLAN
SCALE: AS NOTED

GRAPHIC SCALE:
10' 5' 0 5' 10'
SCALE (11x17): 1" = 10'-0"
SCALE (22x34): 1" = 5'-0"

BASEMAPPING PREPARED FROM A SITE WALK PERFORMED BY INFINIGY ENGINEERING AND PROVIDED INFORMATION, AND DOES NOT REPRESENT AN ACTUAL FIELD SURVEY.

INFINIGY
INFINIGY ENGINEERING, PLLC
1033 Watervliet Shaker Rd
Albany, NY 12205
Office # (518) 690-0790
Fax # (518) 690-0793

at&t

STATE OF CONNECTICUT
JOHN S. STEVENS
24705
LICENSED
PROFESSIONAL ENGINEER
9/17/20

UNAUTHORIZED ALTERATION OR ADDITION TO THIS DOCUMENT IS A VIOLATION OF APPLICABLE STATE AND/OR LOCAL LAWS

No.	Submittal / Revision	App'd	Date
2	REVISED FOR PERMIT	BMM	09/17/20
1	ISSUED FOR PERMIT	BMM	08/06/20
0	ISSUED FOR REVIEW	BMM	07/28/20

Drawn: BMM Date: 07/28/20
Designed: ASW Date: 07/28/20
Checked: ASW Date: 07/28/20

Project Number: 499-006

Project Title:
STONINGTON-
BROAD STREET
CTL02231
FA# 10049131
171 SOUTHBROAD STREET
STONINGTON,CT 06378

Prepared For:
smartlink

Drawing Scale: AS NOTED
Date: 09/17/20
CD

Drawing Title
OVERALL SITE PLAN

Drawing Number
C2

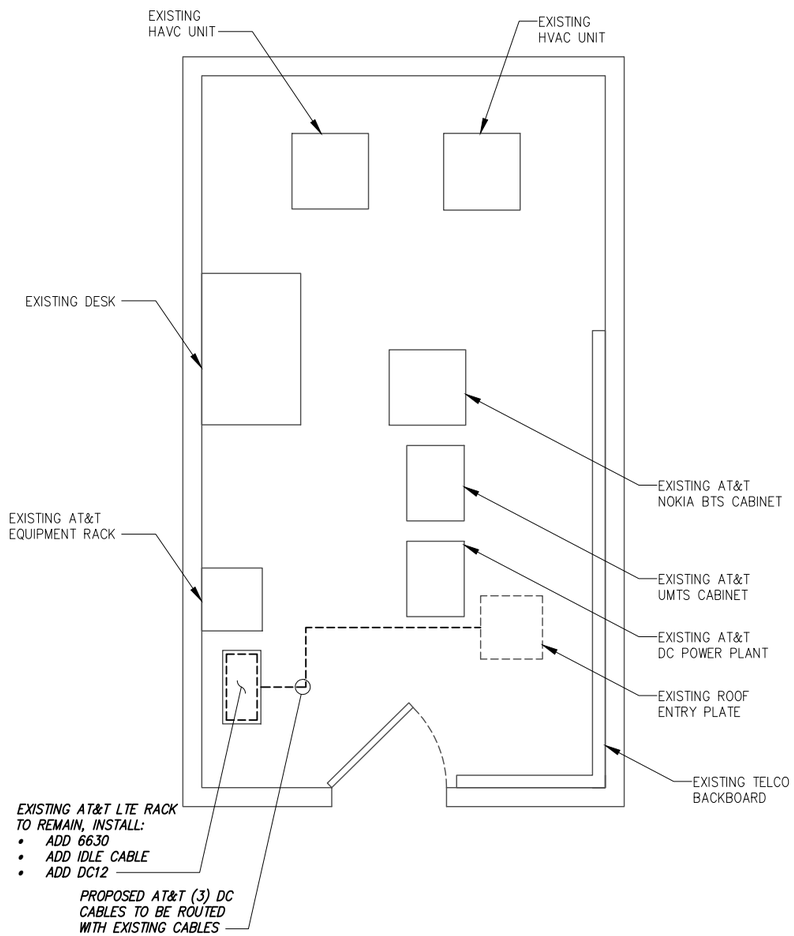

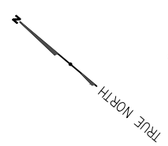

1 / -- ENLARGED SITE PLAN
SCALE: AS NOTED

GRAPHIC SCALE:

4' 2' 0 2' 4'

SCALE (11x17): 1" = 4'-0"
SCALE (22x34): 1" = 2'-0"

INFINIGY
INFINIGY ENGINEERING, PLLC
1033 Watervliet Shaker Rd
Albany, NY 12205
Office # (518) 690-0790
Fax # (518) 690-0793

at&t

CONNECTICUT STEVEN S. WOLOSZYN 24705 LICENSED PROFESSIONAL ENGINEER

9/17/20

UNAUTHORIZED ALTERATION OR ADDITION TO THIS DOCUMENT IS A VIOLATION OF APPLICABLE STATE AND/OR LOCAL LAWS

No.	Submittal / Revision	App'd	Date
2	REVISED FOR PERMIT	BMM	09/17/20
1	ISSUED FOR PERMIT	BMM	08/06/20
0	ISSUED FOR REVIEW	BMM	07/28/20

Drawn: BMM Date: 07/28/20
Designed: ASW Date: 07/28/20
Checked: ASW Date: 07/28/20

Project Number: 499-006

Project Title:
STONINGTON-BROAD STREET
CTL02231
FA# 10049131
171 SOUTHBROAD STREET
STONINGTON,CT 06378

Prepared For: smartlink

Drawing Scale: AS NOTED
Date: 09/17/20
CD

Drawing Title
ENLARGED SITE PLAN

Drawing Number
C2A

NOTE:
- *INFINIGY ENGINEERING HAS NOT EVALUATED THE TOWER LOADING FOR THIS SITE, AND ASSUMES NO RESPONSIBILITY FOR ITS STRUCTURAL INTEGRITY REGARDING ITS EXISTING OR PROPOSED LOADING. FINAL INSTALLATION TO COMPLY STRUCTURAL ANALYSIS.*
- *FOR STRUCTURAL INFORMATION PERTAINING TO THE ANTENNA MOUNT, SEE 'MOUNT ANALYSIS REPORT' COMPLETED BY INFINIGY, DATED 07/15/20.*

NOTE:
- 3' MINIMUM SEPARATION BETWEEN ALL LTE ANTENNAS
- 6' MINIMUM SEPARATION BETWEEN 700 BC/700 DE ANTENNAS

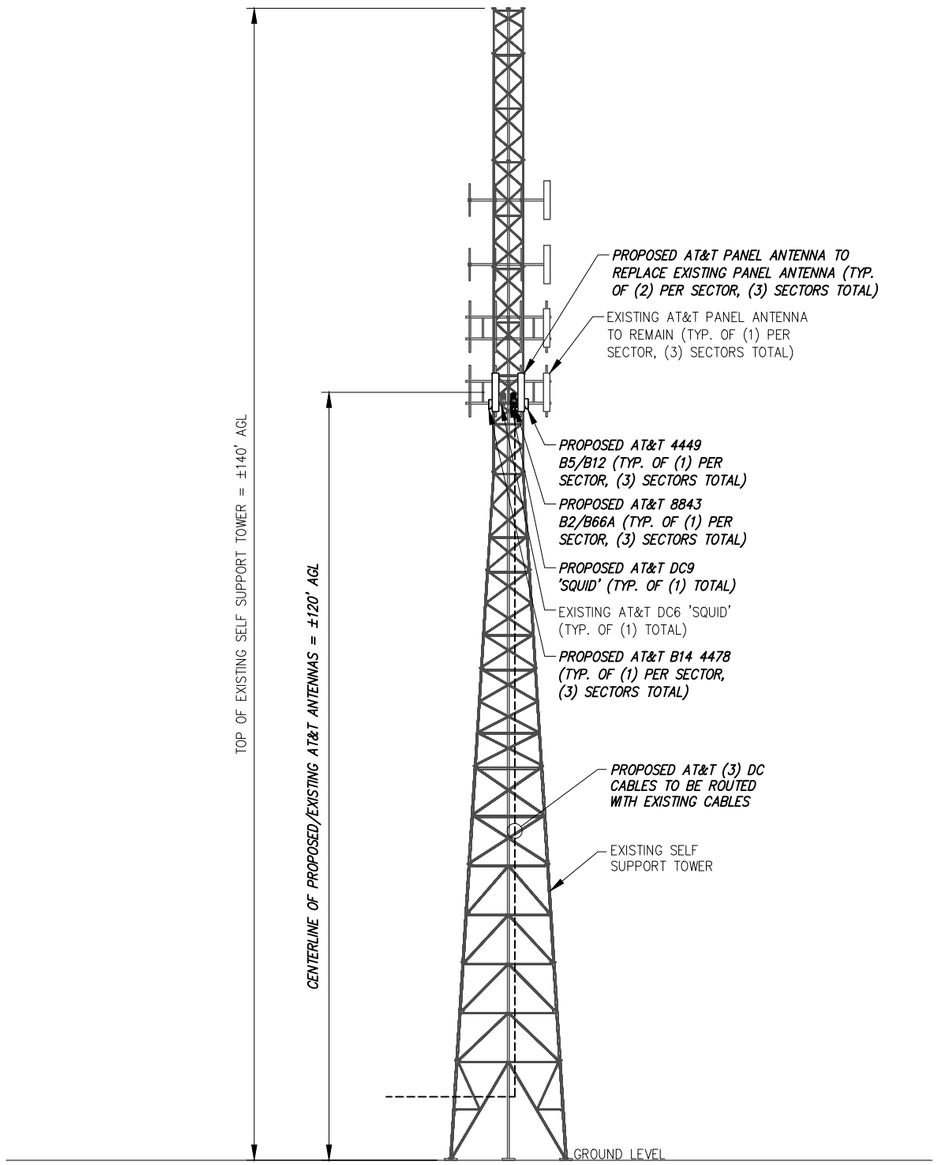

1 ELEVATION VIEW
NOT TO SCALE

FINAL ANTENNA CONFIGURATION & CABLE SCHEDULE BASED ON LTE RFDS DATED 07/22/20, V 3.00

SECTOR	ANTENNA POSITION	ANTENNA STATUS & TECHNOLOGY	ANTENNA MANF/MODEL	TMA/ DIPLEXER	RRUS	AZIMUTH	ANTENNA ℄ HEIGHT	CABLE FEEDER TYPE	CABLE FEEDER LENGTH	RAYCAP UNIT
ALPHA	A-1	(E) UMTS 850	POWERWAVE 7770	(1) (E) TT19-08BP111-001	--	143°	±120'	(4) (E) 1-5/8 COAX CABLES	±180'	(1) (E) DC6 'SQUID' (1) (P) DC9 'SQUID'
	A-2	*(P) LTE 700/850/5G 850*	*CCI DMP65R-BU4DA*	--	*(1) (P) 4449 B5/B12 (1) (P) 8843 B2/B66A*	*23°*	*±120'*	(2) (E) DC CALES (1) (E) FIBER CABLE	--	
	A-3	*(P) LTE 700*	*CCI OPA65R-BU4DA*	--	*(1) (P) B14 4478*	*23°*	*±120'*	SEE A-2 FOR CABLE INFORMATION	--	
	A-4	--	--	--	--	--	--	--	--	
BETA	B-1	(E) UMTS 850	POWERWAVE 7770	(1) (E) TT19-08BP111-001	--	263°	±120'	(4) (E) 1-5/8 COAX CABLES	±180'	
	B-2	*(P) LTE 700/850/5G 850*	*CCI DMP65R-BU4DA*	--	*(1) (P) 4449 B5/B12 (1) (P) 8843 B2/B66A*	*143°*	*±120'*	*(3) (P) DC CABLES*	--	
	B-3	*(P) LTE 700*	*CCI OPA65R-BU4DA*	--	*(1) (P) B14 4478*	*143°*	*±120'*	SEE A-2 FOR CABLE INFORMATION	--	
	B-4	--	--	--	--	--	--	--	--	
GAMMA	G-1	(E) UMTS 850	POWERWAVE 7770	(1) (E) TT19-08BP111-001	--	23°	±120'	(4) (E) 1-5/8 COAX CABLES	±180'	
	G-2	*(P) LTE 700/850/5G 850*	*CCI DMP65R-BU4DA*	--	*(1) (P) 4449 B5/B12 (1) (P) 8843 B2/B66A*	*263°*	*±120'*	SEE A-2 FOR CABLE INFORMATION	--	
	G-3	*(P) LTE 700*	*CCI OPA65R-BU4DA*	--	*(1) (P) B14 4478*	*263°*	*±120'*	SEE A-2 FOR CABLE INFORMATION	--	
	G-4	--	--	--	--	--	--	--	--	

2 AT&T ANTENNA SCHEDULE
NOT TO SCALE

INFINIGY
INFINIGY ENGINEERING, PLLC
1033 Watervliet Shaker Rd
Albany, NY 12205
Office # (518) 690-0790
Fax # (518) 690-0793

at&t

STATE OF CONNECTICUT 24705 LICENSED PROFESSIONAL ENGINEER
9/17/20

UNAUTHORIZED ALTERATION OR ADDITION TO THIS DOCUMENT IS A VIOLATION OF APPLICABLE STATE AND/OR LOCAL LAWS

No.	Submittal / Revision	App'd	Date
2	REVISED FOR PERMIT	BMM	09/17/20
1	ISSUED FOR PERMIT	BMM	08/06/20
0	ISSUED FOR REVIEW	BMM	07/28/20

Drawn: BMM Date: 07/28/20
Designed: ASW Date: 07/28/20
Checked: ASW Date: 07/28/20

Project Number: 499-006

Project Title:
STONINGTON-BROAD STREET
CTL02231
FA# 10049131
171 SOUTHBROAD STREET
STONINGTON,CT 06378

Prepared For: smartlink

Drawing Scale: AS NOTED
Date: 09/17/20
CD

Drawing Title
ELEVATION VIEW

Drawing Number
C3

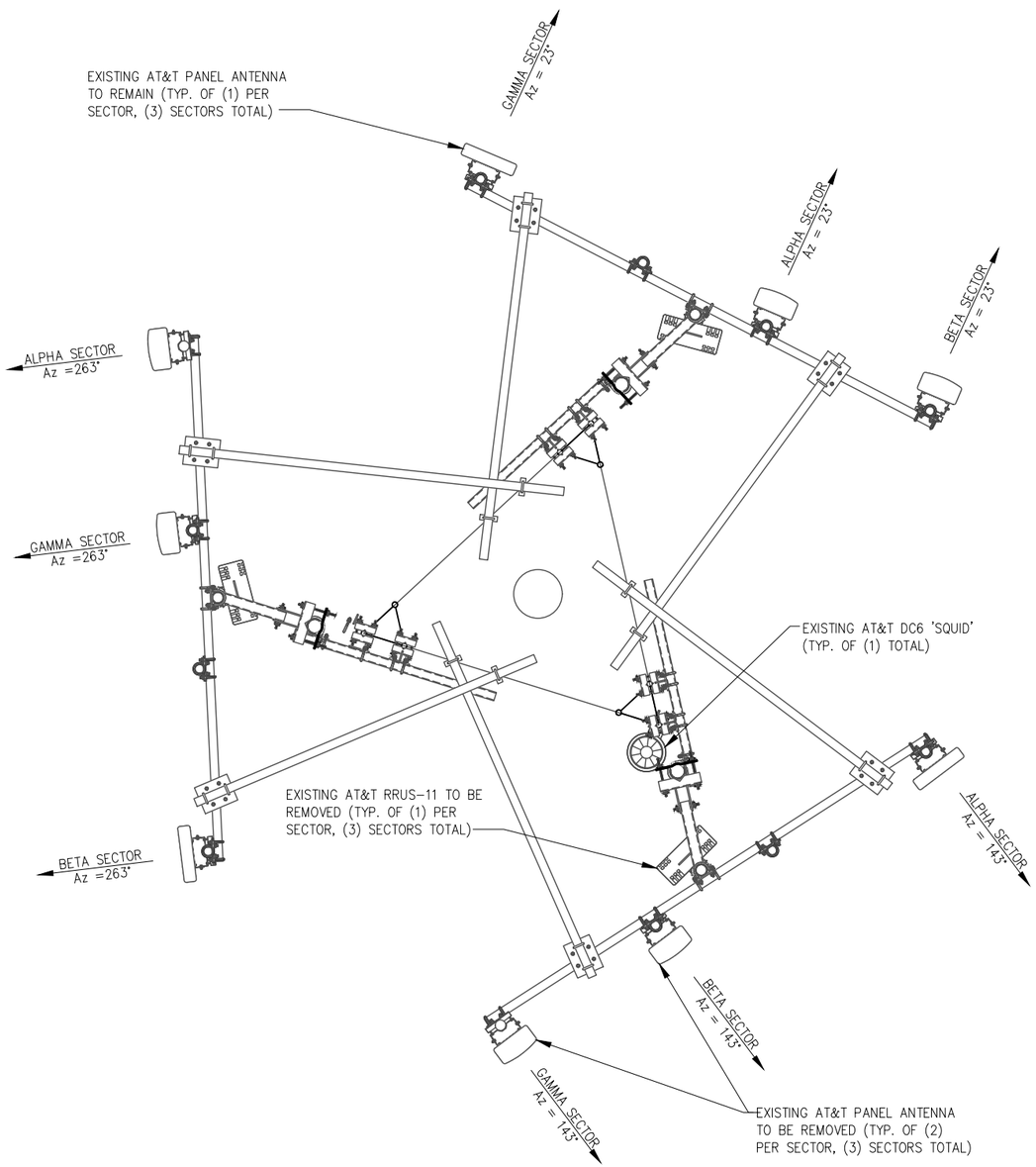

1 EXISTING ANTENNA ORIENTATION PLAN
NOT TO SCALE

NOTE:
- 3' MINIMUM SEPARATION BETWEEN ALL LTE ANTENNAS
- 6' MINIMUM SEPARATION BETWEEN 700 BC/700 DE ANTENNAS

NOTE:
- INFINIGY ENGINEERING HAS NOT EVALUATED THE TOWER LOADING FOR THIS SITE, AND ASSUMES NO RESPONSIBILITY FOR ITS STRUCTURAL INTEGRITY REGARDING ITS EXISTING OR PROPOSED LOADING. FINAL INSTALLATION TO COMPLY STRUCTURAL ANALYSIS.
- FOR STRUCTURAL INFORMATION PERTAINING TO THE ANTENNA MOUNT, SEE 'MOUNT ANALYSIS REPORT' COMPLETED BY INFINIGY, DATED 07/15/20.

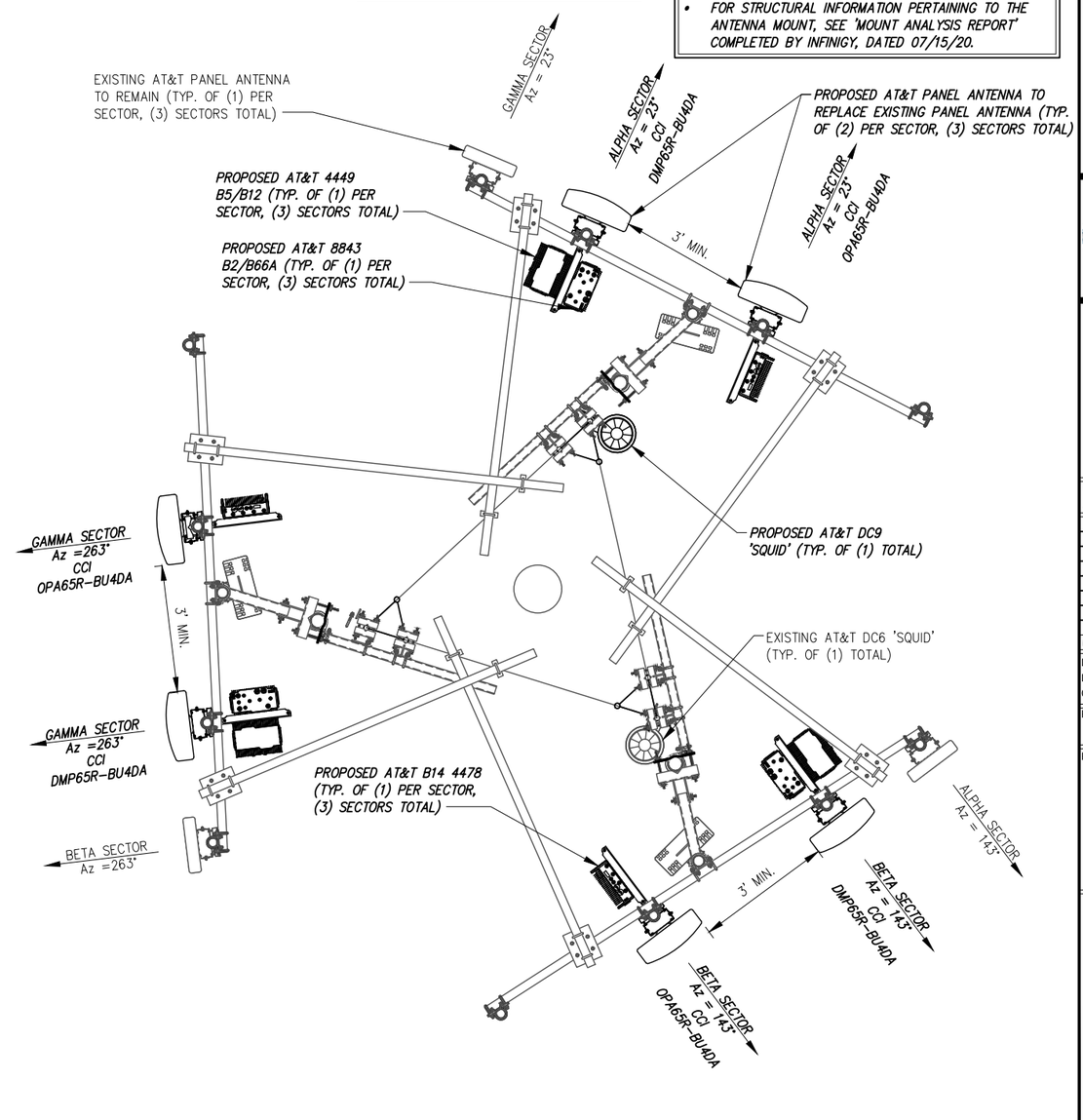

2 PROPOSED ANTENNA ORIENTATION PLAN
NOT TO SCALE

INFINIGY
INFINIGY ENGINEERING, PLLC
1033 Watervliet Shaker Rd
Albany, NY 12205
Office # (518) 690-0790
Fax # (518) 690-0793

at&t

STATE OF CONNECTICUT
24705
LICENSED PROFESSIONAL ENGINEER
9/17/20

UNAUTHORIZED ALTERATION OR ADDITION TO THIS DOCUMENT IS A VIOLATION OF APPLICABLE STATE AND/OR LOCAL LAWS

No.	Submittal / Revision	App'd	Date
2	REVISED FOR PERMIT	BMM	09/17/20
1	ISSUED FOR PERMIT	BMM	08/06/20
0	ISSUED FOR REVIEW	BMM	07/28/20

Drawn: BMM Date: 07/28/20
Designed: ASW Date: 07/28/20
Checked: ASW Date: 07/28/20

Project Number: 499-006

Project Title:
STONINGTON-BROAD STREET
CTL02231
FA# 10049131
171 SOUTHBROAD STREET
STONINGTON,CT 06378

Prepared For: smartlink

Drawing Scale: AS NOTED
Date: 09/17/20
CD

Drawing Title
ANTENNA ORIENTATION PLAN

Drawing Number
C4

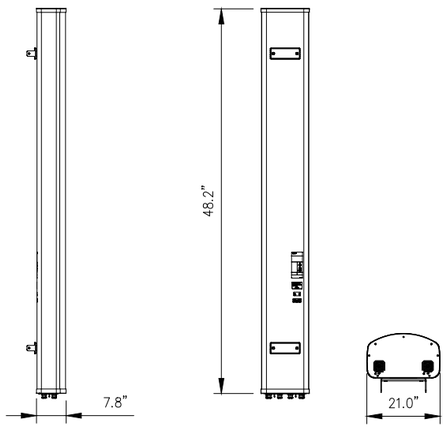

CCI MODEL NO.:	OPA65R-BU4DA
RADOME MATERIAL:	FIBERGLASS
RADOME COLOR:	LIGHT GRAY
DIMENSIONS, HxWxD:	48.2"x21.0"x7.8"
WEIGHT, W/ PRE-MOUNTED BRACKETS:	52.5 LBS
CONNECTOR:	7-16 DIN FEMALE

1 ANTENNA DETAIL
NOT TO SCALE

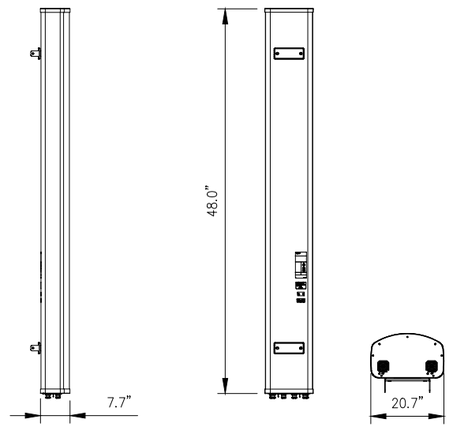

CCI MODEL NO.:	DMP65R-BU4DA
RADOME MATERIAL:	FIBERGLASS
RADOME COLOR:	LIGHT GRAY
DIMENSIONS, HxWxD:	48.0"x20.7"x7.7"
WEIGHT, W/ PRE-MOUNTED BRACKETS:	67.9 LBS
CONNECTOR:	7-16 DIN FEMALE

2 ANTENNA DETAIL
NOT TO SCALE

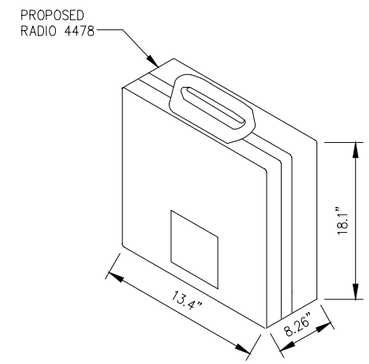

RADIO 4478-B14 SPECIFICATIONS
- HxWxD, (INCHES) : 18.1"x13.4"x8.26"
- WEIGHT (LBS) : 59.5
- COLOR : GRAY
- MOUNTING BRACKET: SXK1250244/1

3 ERICSSON RADIO 4478-B14 DETAIL
NOT TO SCALE

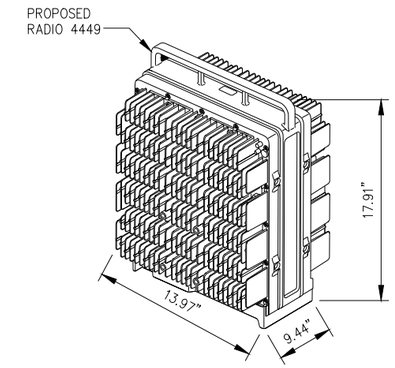

RADIO 4449 SPECIFICATIONS
- HxWxD, (INCHES) : 17.91"x13.97"x9.44"
- WEIGHT (LBS) : 70.54
- COLOR : GRAY

4 ERICSSON RADIO 4449 DETAIL
NOT TO SCALE

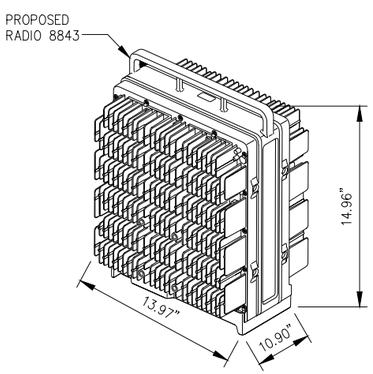

RADIO 8843 SPECIFICATIONS
- HxWxD, (INCHES) : 14.96"x13.97"x10.90"
- WEIGHT (LBS) : 71.87
- COLOR : GRAY

5 ERICSSON RADIO 8843 DETAIL
NOT TO SCALE

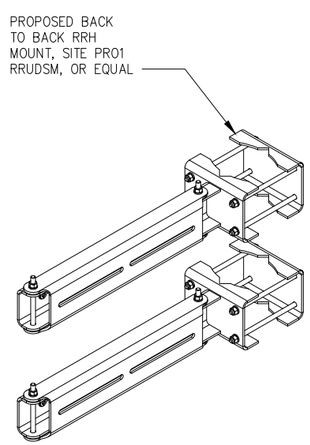

6 BACK TO BACK PIPE MOUNT DETAIL
NOT TO SCALE

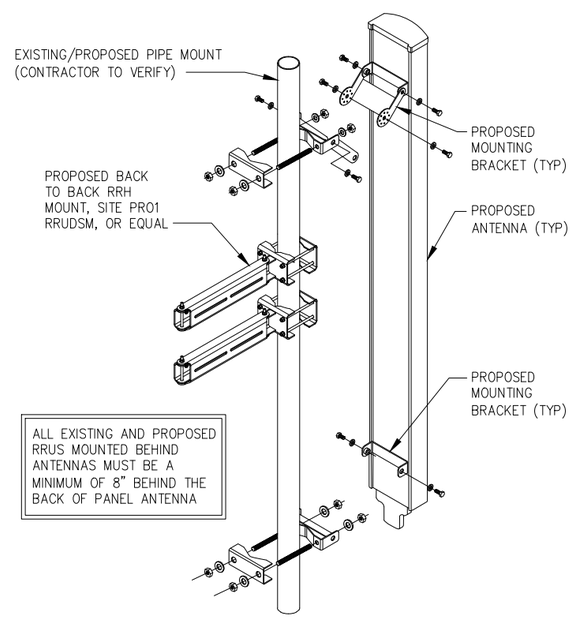

ALL EXISTING AND PROPOSED RRUS MOUNTED BEHIND ANTENNAS MUST BE A MINIMUM OF 8" BEHIND THE BACK OF PANEL ANTENNA

7 ANTENNA MOUNTING DETAIL
NOT TO SCALE

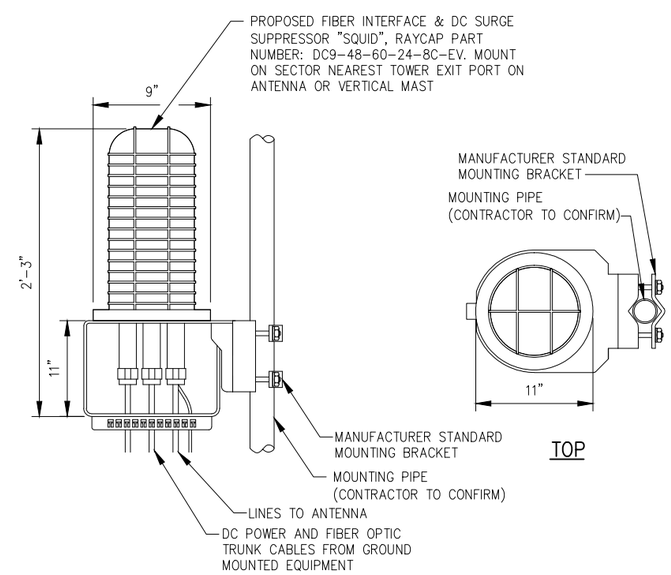

8 SQUID DETAIL
NOT TO SCALE

INFINIGY
INFINIGY ENGINEERING, PLLC
1033 Watervliet Shaker Rd
Albany, NY 12205
Office # (518) 690-0790
Fax # (518) 690-0793

at&t

STATE OF CONNECTICUT
24705
LICENSED PROFESSIONAL ENGINEER
9/17/20

UNAUTHORIZED ALTERATION OR ADDITION TO THIS DOCUMENT IS A VIOLATION OF APPLICABLE STATE AND/OR LOCAL LAWS

No.	Submittal / Revision	App'd	Date
2	REVISED FOR PERMIT	BMM	09/17/20
1	ISSUED FOR PERMIT	BMM	08/06/20
0	ISSUED FOR REVIEW	BMM	07/28/20

Drawn: BMM Date: 07/28/20
Designed: ASW Date: 07/28/20
Checked: ASW Date: 07/28/20

Project Number: 499-006

Project Title:
STONINGTON-
BROAD STREET
CTL02231
FA# 10049131
171 SOUTHBROAD STREET
STONINGTON,CT 06378

Prepared For: smartlink

Drawing Scale: AS NOTED
Date: 09/17/20
CD

Drawing Title
EQUIPMENT DETAILS

Drawing Number
C5

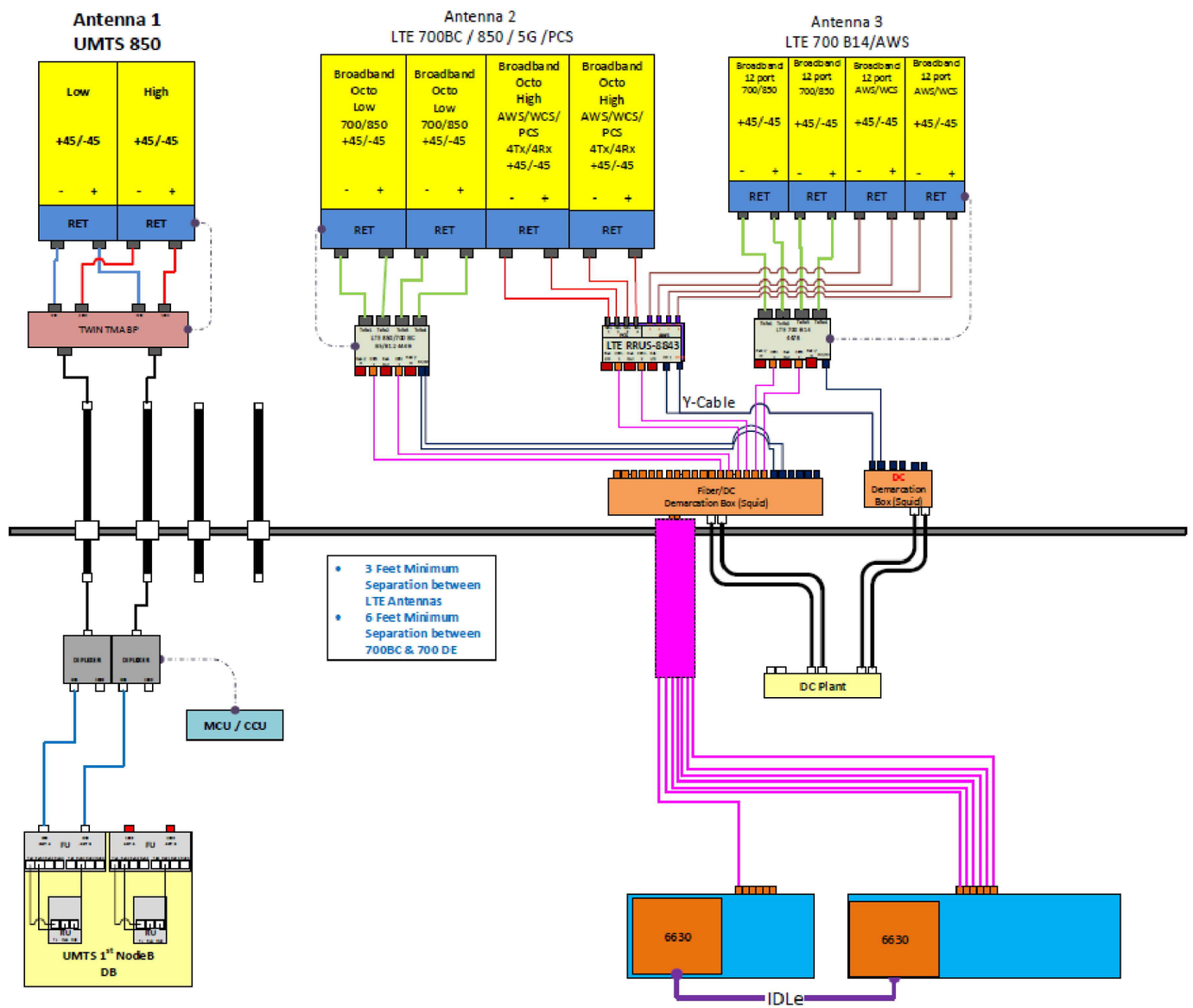

- 3 Feet Minimum Separation between LTE Antennas
- 6 Feet Minimum Separation between 700BC & 700 DE

ALPHA/BETA/GAMMA

1 PLUMBING DIAGRAM (FINAL CONFIGURATION)
NOT TO SCALE

*BASED ON LTE RFDS, DATED 07/22/2020, V3.00

INFINIGY
INFINIGY ENGINEERING, PLLC
1033 Watervliet Shaker Rd
Albany, NY 12205
Office # (518) 690-0790
Fax # (518) 690-0793

at&t

STATE OF CONNECTICUT
LICENSED PROFESSIONAL ENGINEER
24705
9/17/20

UNAUTHORIZED ALTERATION OR ADDITION TO THIS DOCUMENT IS A VIOLATION OF APPLICABLE STATE AND/OR LOCAL LAWS

No.	Submittal / Revision	App'd	Date
2	REVISED FOR PERMIT	BMM	09/17/20
1	ISSUED FOR PERMIT	BMM	08/06/20
0	ISSUED FOR REVIEW	BMM	07/28/20

Drawn: BMM Date: 07/28/20
Designed: ASW Date: 07/28/20
Checked: ASW Date: 07/28/20

Project Number: 499-006

Project Title:
STONINGTON-BROAD STREET
CTL02231
FA# 10049131
171 SOUTHBROAD STREET
STONINGTON,CT 06378

Prepared For: smartlink

Drawing Scale: AS NOTED
Date: 09/17/20
CD

Drawing Title
PLUMBING DIAGRAM

Drawing Number
C6

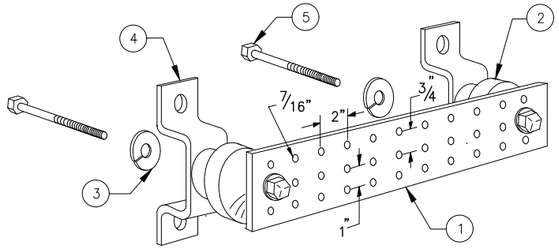

LEGEND

1 – SOLID TINNED COPPER GROUND BAR, 1/4"x 4"x 20" MIN., NEWTON INSTRUMENT CO. HOLE CENTERS TO MATCH NEMA DOUBLE LUG CONFIGURATION
2 – INSULATORS, NEWTON INSTRUMENT CAT. NO. 3061-4
3 – 5/8" LOCKWASHERS, NEWTON INSTRUMENT CO. CAT. NO. 3015-8
4 – WALL MOUNTING BRACKET, NEWTON INSTRUMENT CO. CAT NO. A-6056
5 – 5/8-11 X 1" H.H.C.S. BOLTS, NEWTON INSTRUMENT CO. CAT NO. 3012-1
6 – GROUND BAR SHALL BE SIZED TO ACCOMODATE ALL GROUNDING CONNECTIONS REQUIRED PLUS PROVIDE 50% SPARE CAPACITY
7 – GROUND BARS SHALL NEITHER BE FIELD FABRICATED NOR NEW HOLES DRILLED
8 – GROUND LUGS SHALL MATCH THE HOLE SPACING ON THE BAR
9 – HARDWARE DIAMETER SHALL BE MINIMUM 3/8"

1 GROUND BAR
NOT TO SCALE

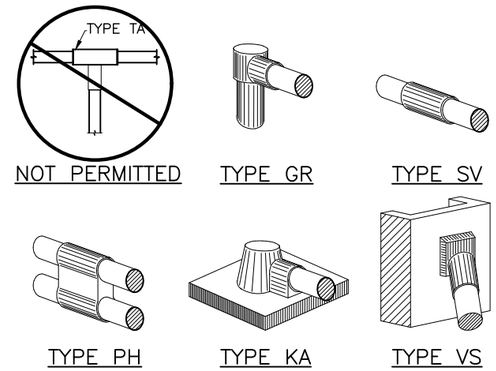

2 CADWELDS (TYPICAL)
NOT TO SCALE

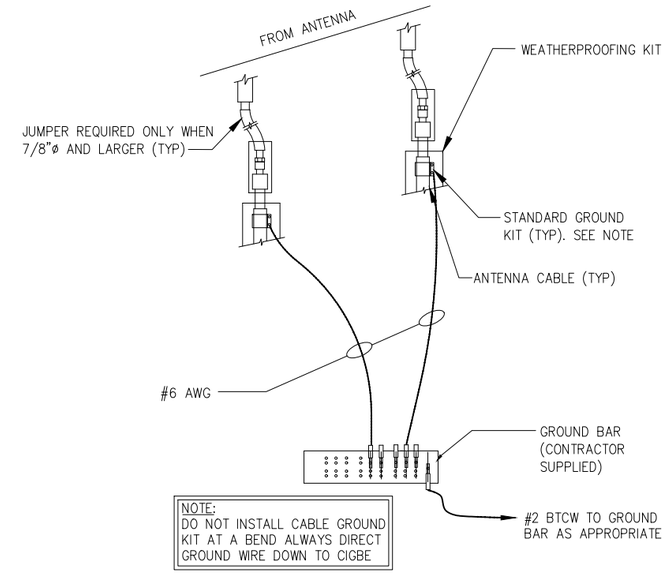

NOTE:
DO NOT INSTALL CABLE GROUND KIT AT A BEND ALWAYS DIRECT GROUND WIRE DOWN TO CIGBE

3 CONNECTION OF GROUND WIRES TO GROUNDING BARS @ ANTENNAS
NOT TO SCALE

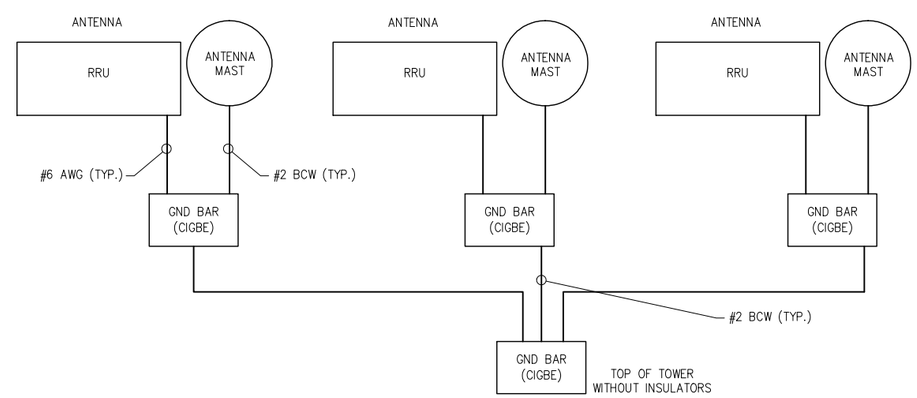

4 SCHEMATIC DIAGRAM GROUNDING SYSTEM
NOT TO SCALE

INFINIGY
INFINIGY ENGINEERING, PLLC
1033 Watervliet Shaker Rd
Albany, NY 12205
Office # (518) 690-0790
Fax # (518) 690-0793

at&t

STATE OF CONNECTICUT
JOHN S. STEVENS
24705
LICENSED
PROFESSIONAL ENGINEER
9/17/20

UNAUTHORIZED ALTERATION OR ADDITION TO THIS DOCUMENT IS A VIOLATION OF APPLICABLE STATE AND/OR LOCAL LAWS

No.	Submittal / Revision	App'd	Date
2	REVISED FOR PERMIT	BMM	09/17/20
1	ISSUED FOR PERMIT	BMM	08/06/20
0	ISSUED FOR REVIEW	BMM	07/28/20

Drawn: BMM Date: 07/28/20
Designed: ASW Date: 07/28/20
Checked: ASW Date: 07/28/20

Project Number: 499-006

Project Title:
STONINGTON-BROAD STREET
CTL02231
FA# 10049131
171 SOUTHBROAD STREET
STONINGTON,CT 06378

Prepared For: smartlink

Drawing Scale: AS NOTED
Date: 09/17/20
CD

Drawing Title
GROUNDING DETAILS

Drawing Number
C7

INFINIGY

FROM ZERO TO INFINIGY

the solutions are endless

Mount Analysis Report

July 15, 2020

AT&T Site Name	STONINGTON-BROAD ST
AT&T Site Number	CTL02231
AT&T FA Number	10049131
Infinigy Job Number	1106-A0001-H
Client	Smartlink
Carrier	AT&T
Site Location	171 South Broad Street Stonington CT 06378 41° 22’ 8.67” N NAD83 71° 51’ 44.53884” W NAD83
Mount Centerline EL.	120.0 ft
Mount Type	Sector Frame
Structural Usage Ratio	**46.8%**
Overall Result	**Pass**

Upon reviewing the results of this analysis, it is our opinion that the structure meets the specified TIA code requirements. The mounts and connections for the proposed carrier are therefore deemed adequate to support the final loading configuration as listed in this report.

STATE OF CONNECTICUT
JOHN T. LIU
No. 33076
LICENSED
PROFESSIONAL ENGINEER

7/16/2020

John T. Liu,
Project Engineer
Engineering Consultant to Infinigy

Professional Certification. I hereby certify that these documents were prepared or approved by me, and that I am a duly licensed professional engineer under the laws of the State of Connecticut License No. 33076, Expiration Date: 1/31/2021.

Contents

Introduction…….. 3

Supporting Documentation…….. 3

Analysis Code Requirements……... 3

Conclusion…… 3

Final Configuration Loading…… 4

Structure Usages……... 4

Assumptions and Limitations…… 5

Calculations…….. Appended

Introduction

Infinigy Engineering has been requested to perform a mount analysis on the Proposed AT&T mounts. All referenced supporting documents have been obtained from the client and are assumed to be accurate and applicable to this site. The mount was analyzed using RISA-3D Version 17.04 analysis software.

Supporting Documentation

Construction Drawings	Hudson Design Group, Site ID: CT2231, dated November 4, 2010
Proposed Loading	AT&T RDFS ID: 65086, Site ID: CTL02231, dated June 26, 2020
Mount Mapping	Infinigy, Site ID: CTL02231, Job # 1106-A0001-H dated June 30, 2020

Analysis Code Requirements

Wind Speed	129 mph (3-Second Gust, V_{ULT})
Wind Speed w/ ice	50 mph (3-Second Gust, V_{ASD}) w/ 1.0" ice
TIA Revision	ANSI/TIA-222-H
Adopted IBC	2018 IBC
Risk Category	II
Exposure Category	C
Topographic Category	1
Calculated Crest Height	0 ft.
Spectral Response	S_s = 0.183 g / S_1 = 0.052 g
Site Class	D-Stiff Soil (Assumed)

Conclusion

Upon reviewing the results of this analysis, it is our opinion that the structure meets the specified TIA code requirements. The mounts and connections are therefore deemed adequate to support the final loading configuration as listed in this report.

If you have any questions, require additional information, or actual conditions differ from those as detailed in this report please contact me via the information below:

John T. Liu, P.E.
Engineering Consultant to Infinigy
structural@infinigy.com

Final Configuration Loading

Mount CL (ft)	Rad. HT (ft)	Vert. O/S (ft)	Horiz. O/S (ft)*	Qty	Appurtenance	Carrier
120.0	120.0	0.0	4.5	3	CCI Antennas DMP65R-BU4DA	AT&T
			8.0	3	CCI Antennas OPA65R-BU4DA	
			0.0	3	Powerwave 7770	
			0.0	3	Powerwave TT19-08BP111-001	
			4.5	3	Ericsson 4449 B5/B12	
			4.5	3	Ericsson 8843 B2/B66A	
			8.0	3	Ericsson 4478 B14	
			--	1	Raycap DC6 Squid	
			--	1	Raycap DC9 Squid	

***Horizontal Offset is defined as the distance from the left most edge of the mount face horizontal when viewed facing the tower**

Structure Usages

Horizontal	46.8%	Pass
Mount Pipe	28.4%	Pass
Standoff	17.3%	Pass
Bracing	8.6%	Pass
RATING =	**46.8%**	**Pass**

Assumptions and Limitations

Our structural calculations are completed assuming all information provided to Infinigy Engineering is accurate and applicable to this site. For the purposes of calculations, we assume an overall structure condition of "like new" and all members and connections to be free of corrosion and/or structural defects. The structure owner and/or contractor shall verify the structure's condition prior to installation of any proposed equipment. If actual conditions differ from those described in this report Infinigy Engineering should be notified immediately to complete a revised evaluation.

Our evaluation is completed using standard TIA, AISC, ACI, and ASCE methods and procedures. Our structural results are proprietary and should not be used by others as their own. Infinigy Engineering is not responsible for decisions made by others that are or are not based on our supplied assumptions and conclusions.

This report is an evaluation of the proposed carriers mount structure only and does not reflect adequacy of the existing tower, other mounts, or coax mounting attachments. These elements are assumed to be adequate for the purposes of this analysis and are assumed to have been installed per their manufacturer requirements.

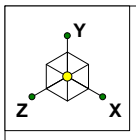

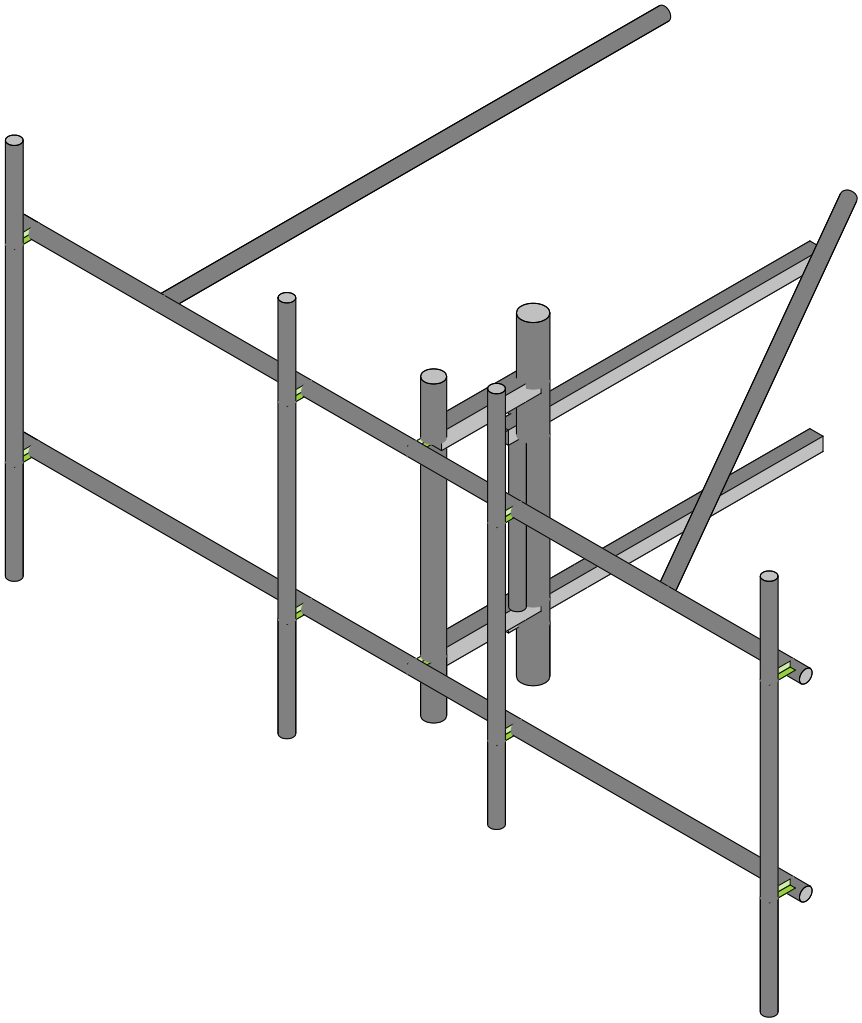

Envelope Only Solution

AT&T	CTL02231	Proposed Configuration
Infinigy Engineering PLLC		July 15, 2020 at 4:52 PM
		CTL02231.r3d

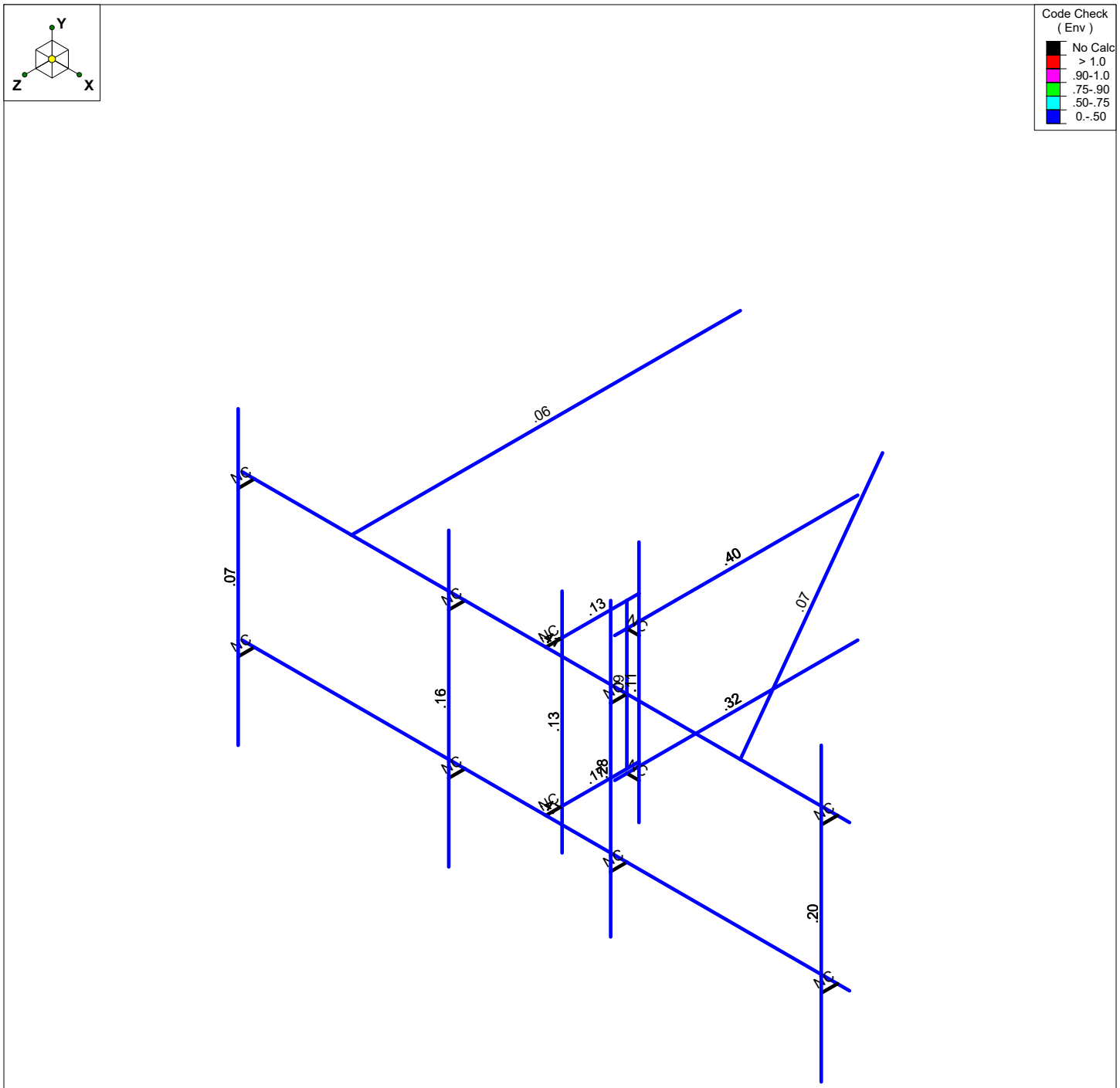

Member Code Checks Displayed (Enveloped)
Envelope Only Solution

AT&T		Member Stresses
Infinigy Engineering PLLC	CTL02231	July 15, 2020 at 4:53 PM
		CTL02231.r3d

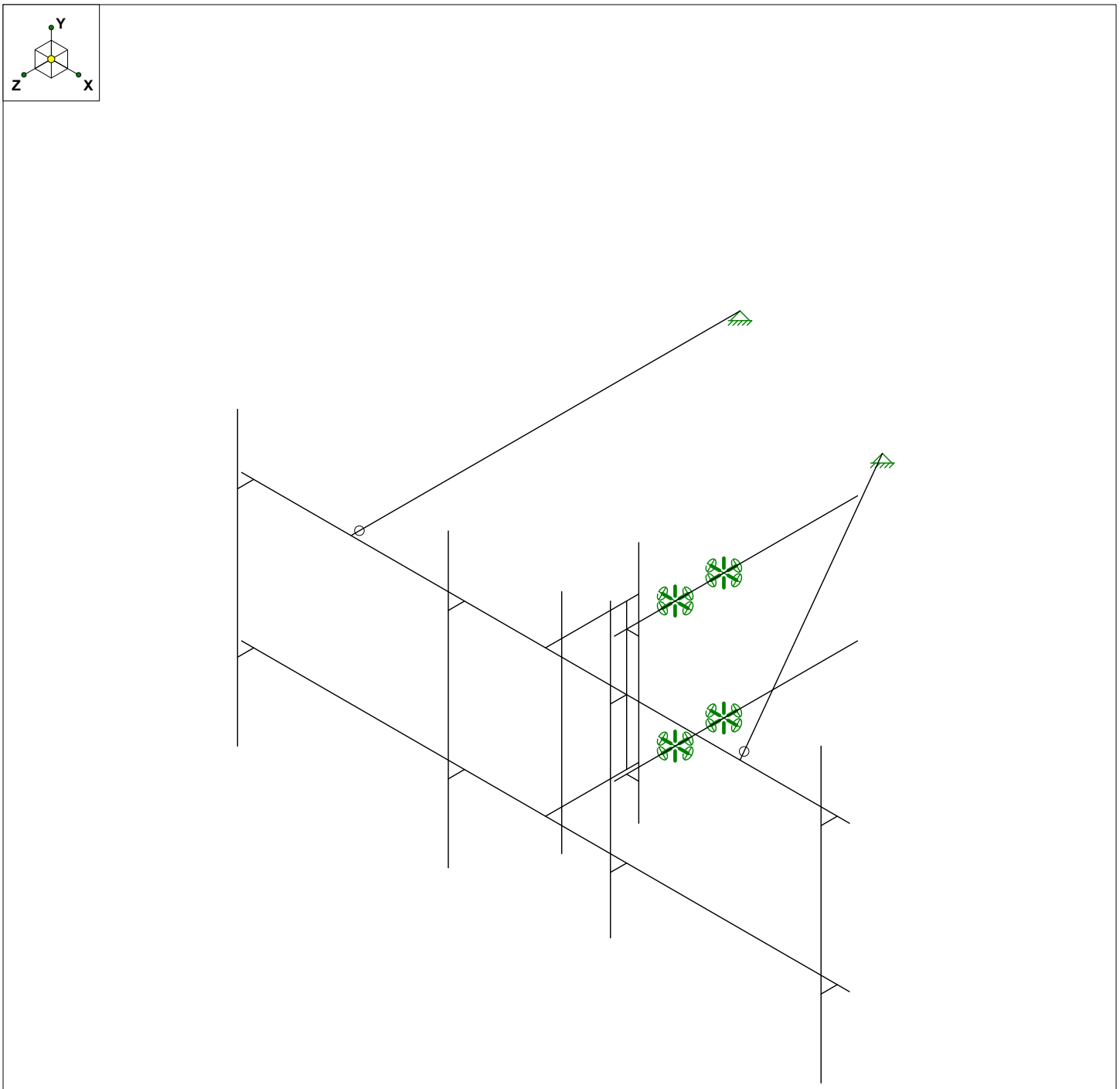

Envelope Only Solution

AT&T		Boundary Conditions
Infinigy Engineering PLLC	CTL02231	July 15, 2020 at 4:53 PM
		CTL02231.r3d

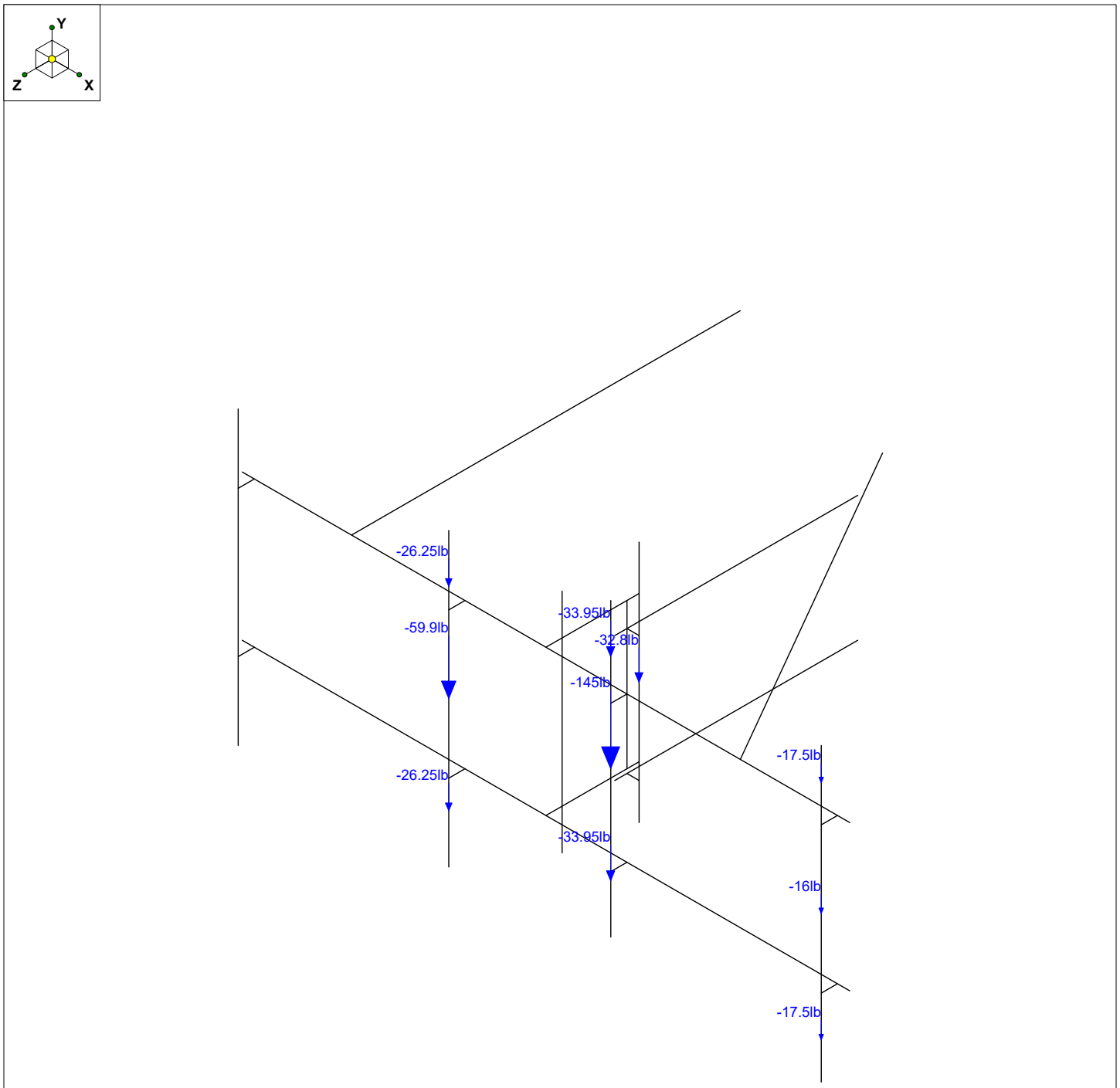

Loads: BLC 1, Self Weight
Envelope Only Solution

AT&T		Self Weight
Infinigy Engineering PLLC	CTL02231	July 15, 2020 at 4:54 PM
		CTL02231.r3d

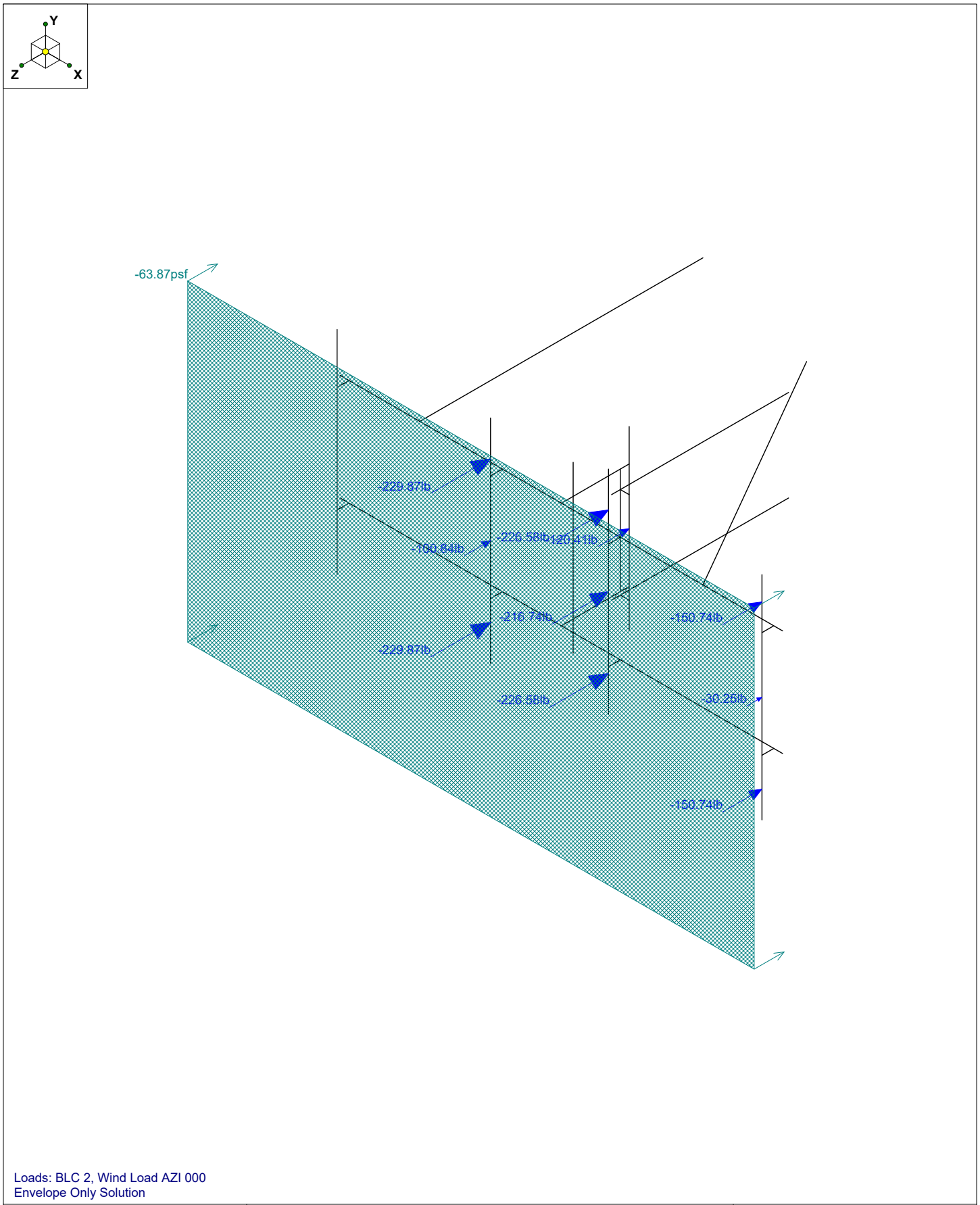

Loads: BLC 2, Wind Load AZI 000
Envelope Only Solution

AT&T	CTL02231	Wind Load AZI 000
Infinigy Engineering PLLC		July 15, 2020 at 4:55 PM
		CTL02231.r3d

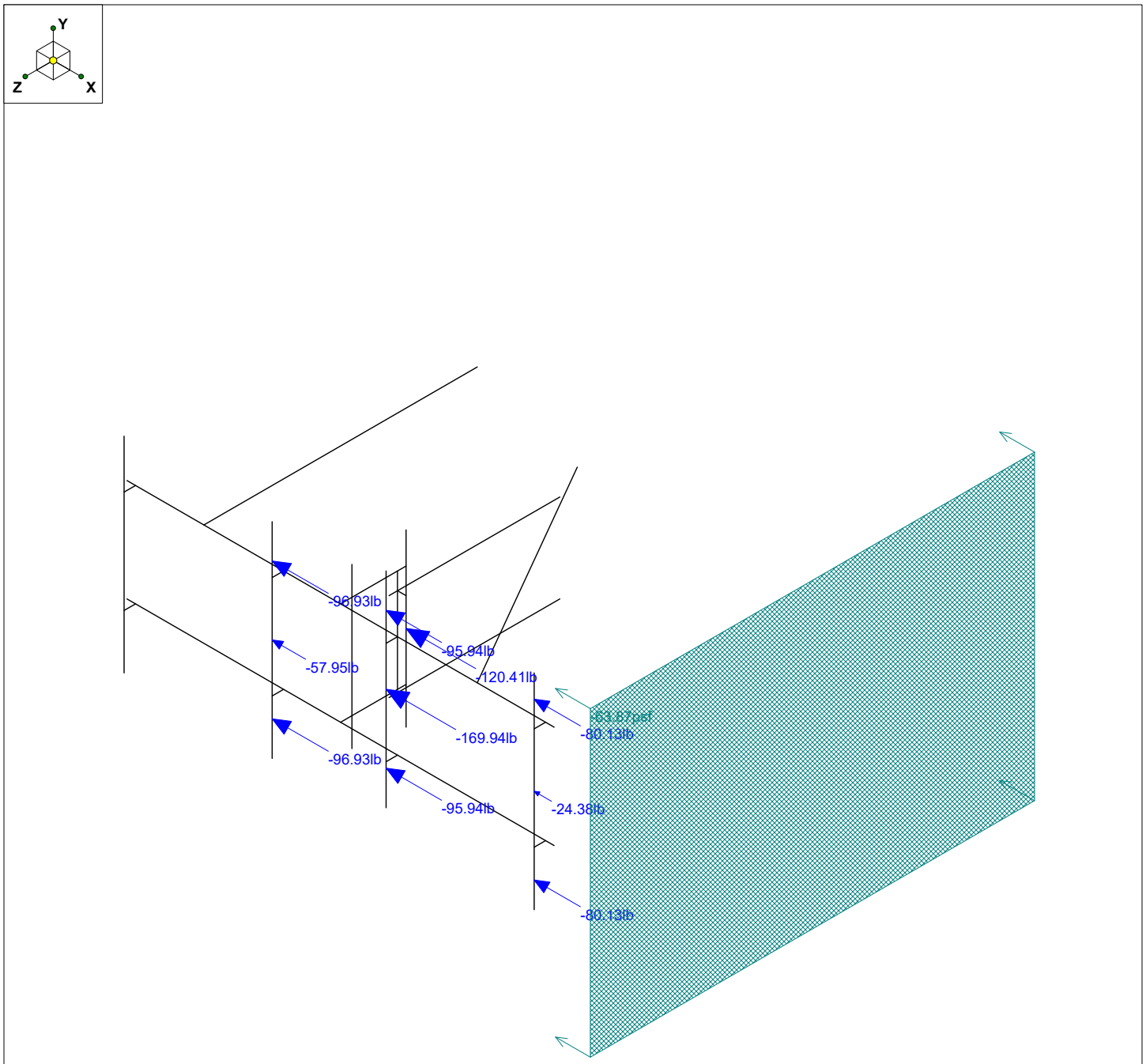

Loads: BLC 3, Wind Load AZI 090
Envelope Only Solution

AT&T	CTL02231	Wind Load AZI 090
Infinigy Engineering PLLC		July 15, 2020 at 4:56 PM
		CTL02231.r3d

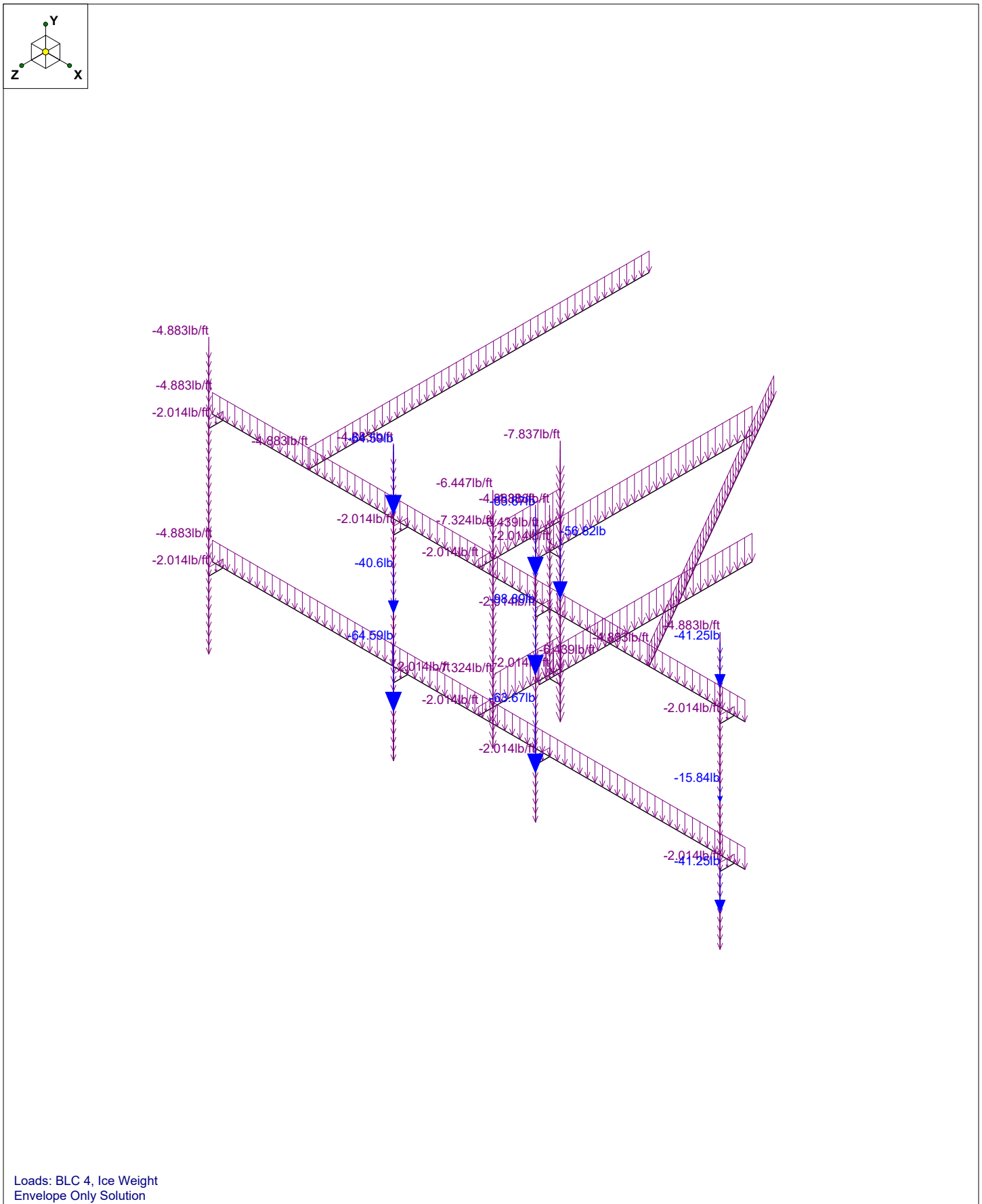

Loads: BLC 4, Ice Weight
Envelope Only Solution

AT&T		Ice Weight
Infinigy Engineering PLLC	CTL02231	July 15, 2020 at 4:54 PM
		CTL02231.r3d

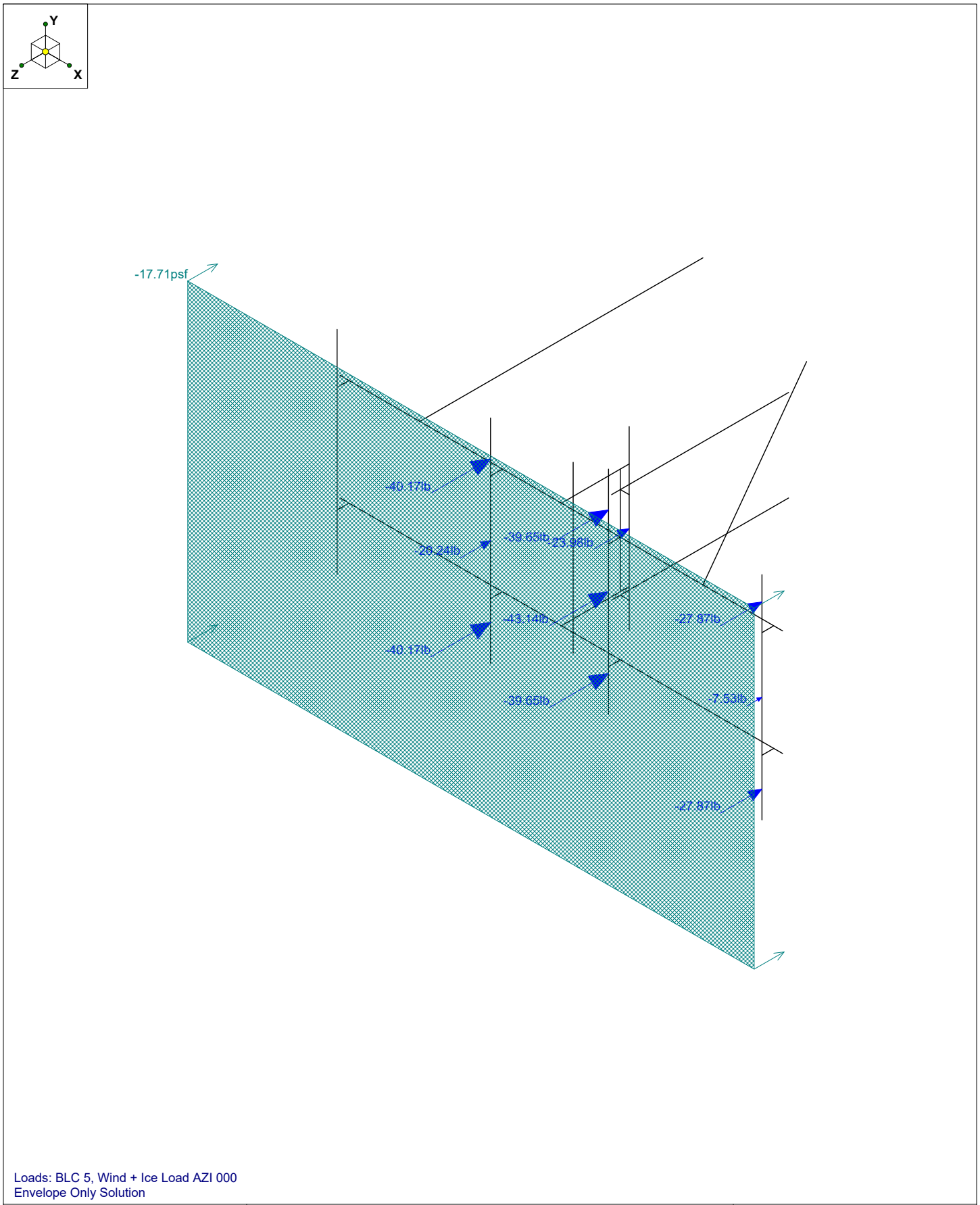

Loads: BLC 5, Wind + Ice Load AZI 000
Envelope Only Solution

AT&T	CTL02231	Wind + Ice Load AZI 000
Infinigy Engineering PLLC		July 15, 2020 at 4:55 PM
		CTL02231.r3d

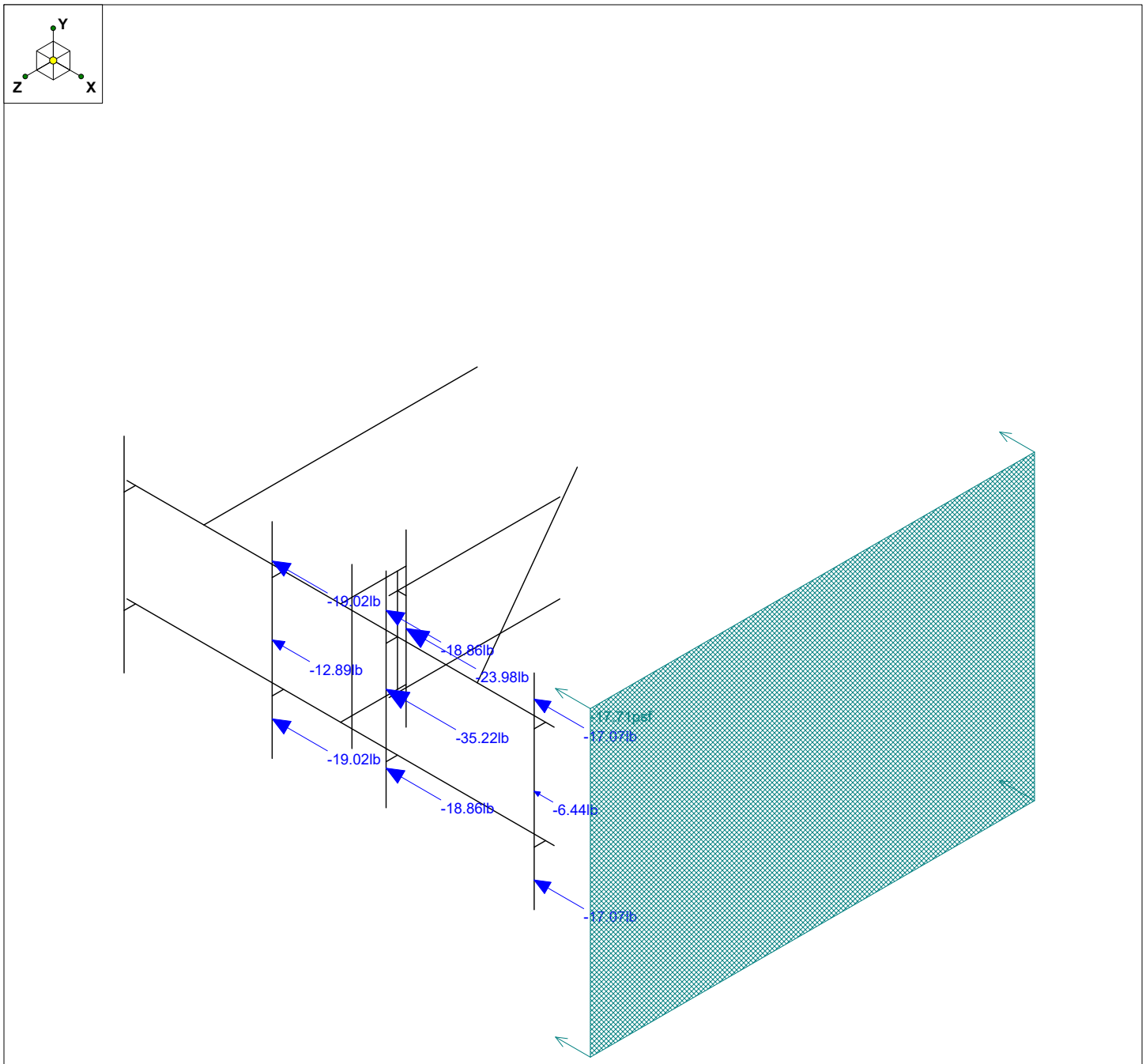

Loads: BLC 6, Wind + Ice Load AZI 090
Envelope Only Solution

AT&T	CTL02231	Wind + Ice Load AZI 090
Infinigy Engineering PLLC		July 15, 2020 at 4:55 PM
		CTL02231.r3d

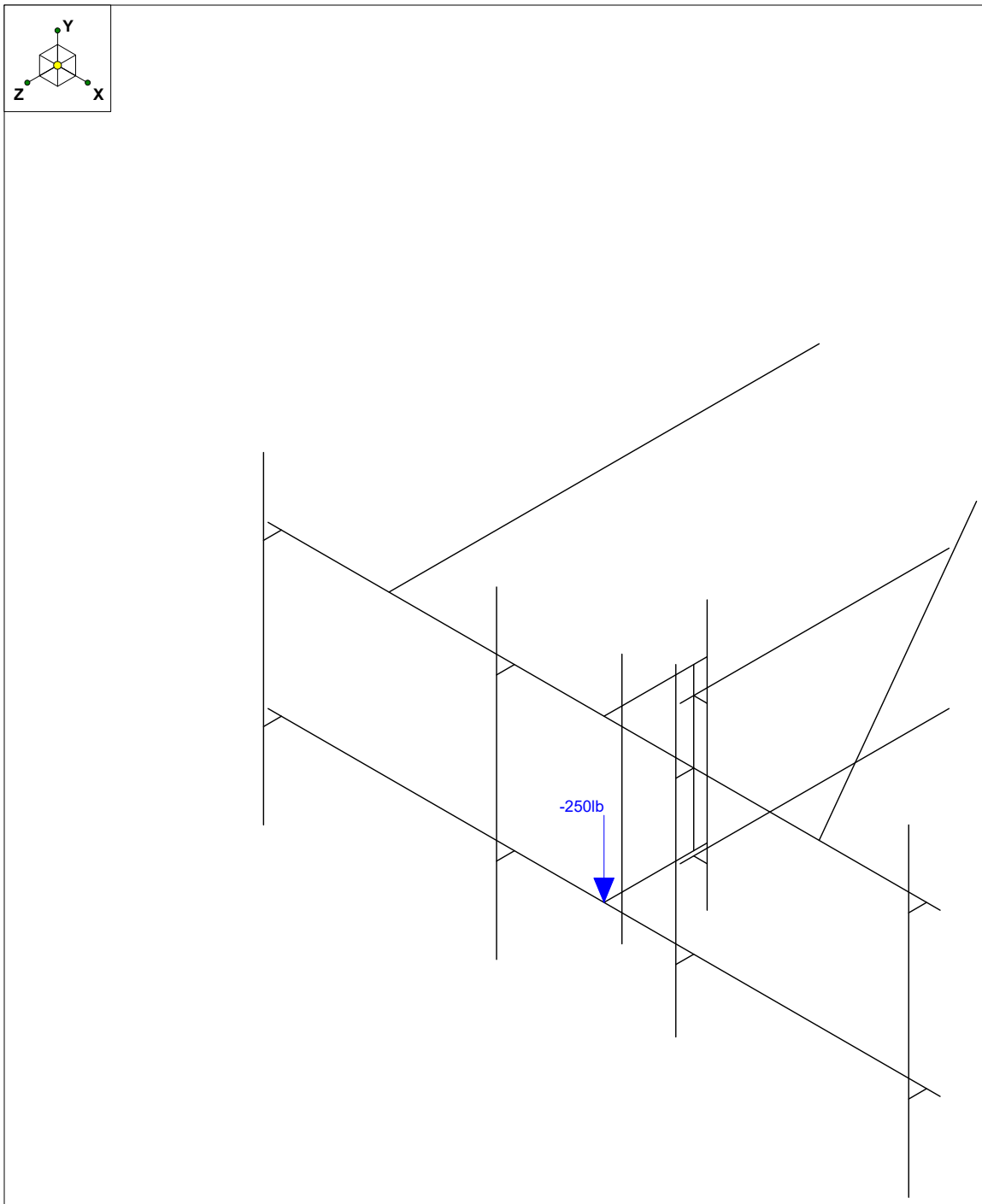

Loads: BLC 7, Service Live 1
Envelope Only Solution

AT&T	CTL02231	Service Live 1
Infinigy Engineering PLLC		July 15, 2020 at 4:54 PM
		CTL02231.r3d

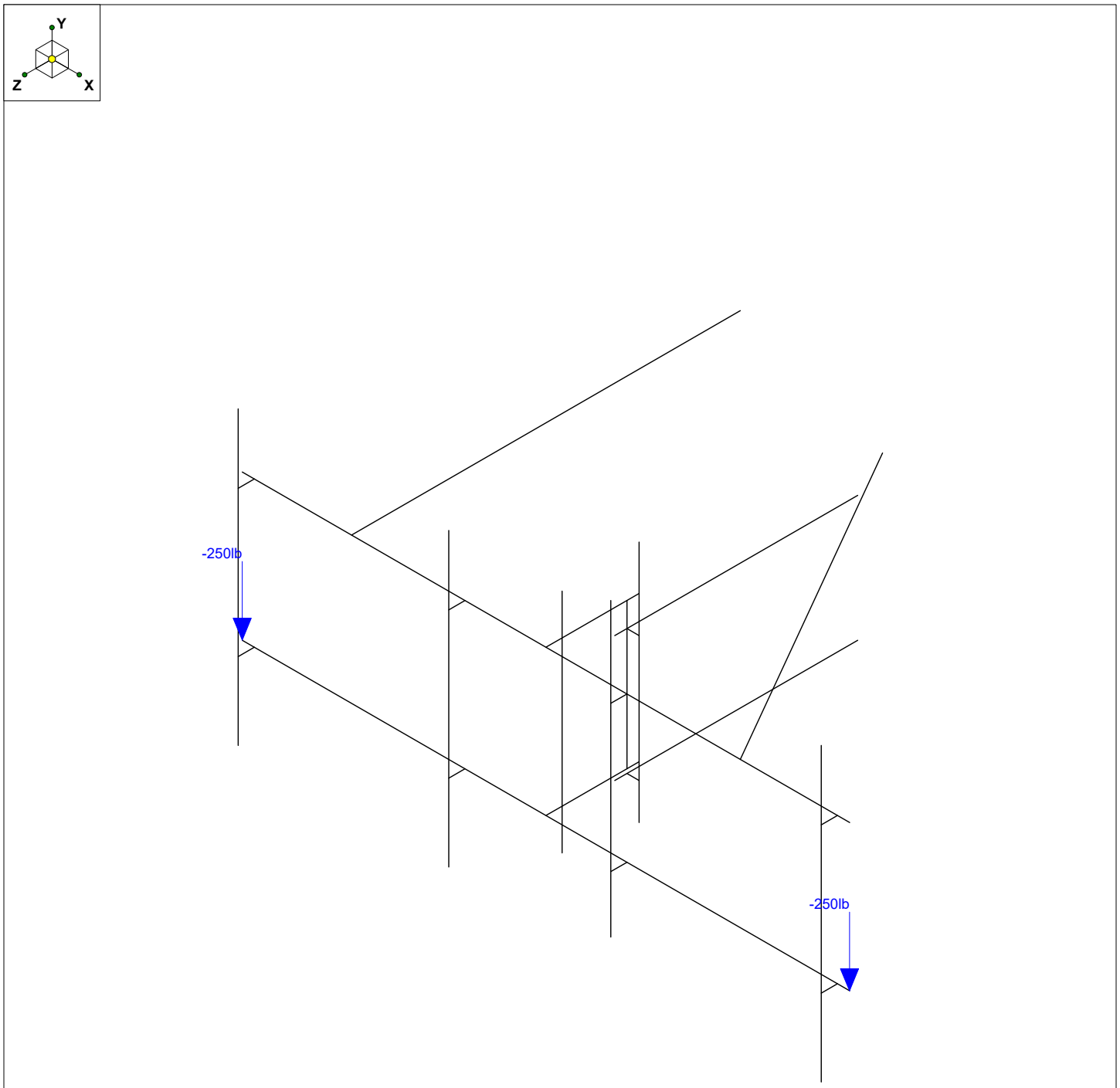

Loads: BLC 8, Service Live 2
Envelope Only Solution

AT&T	CTL02231	Service Live 2
Infinigy Engineering PLLC		July 15, 2020 at 4:55 PM
		CTL02231.r3d

ASCE 7 Hazards Report

Address:
No Address at This Location

Standard: ASCE/SEI 7-16
Risk Category: II
Soil Class: D - Stiff Soil

Elevation: 38.69 ft (NAVD 88)
Latitude: 41.369075
Longitude: -71.862372

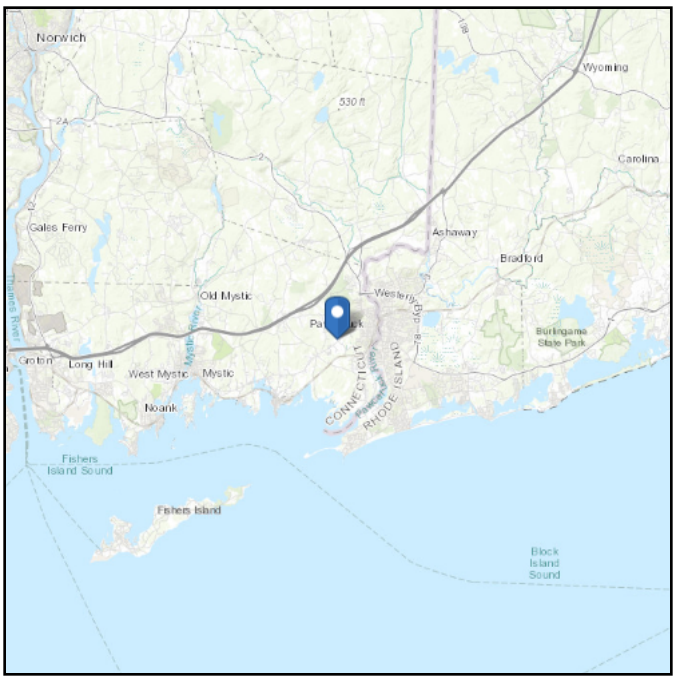

Wind

Results:

Wind Speed:	129 Vmph
10-year MRI	76 Vmph
25-year MRI	87 Vmph
50-year MRI	100 Vmph
100-year MRI	106 Vmph
Data Source:	ASCE/SEI 7-16, Fig. 26.5-1B and Figs. CC.2-1–CC.2-4
Date Accessed:	Tue Jul 14 2020

Value provided is 3-second gust wind speeds at 33 ft above ground for Exposure C Category, based on linear interpolation between contours. Wind speeds are interpolated in accordance with the 7-16 Standard. Wind speeds correspond to approximately a 7% probability of exceedance in 50 years (annual exceedance probability = 0.00143, MRI = 700 years).

Site is in a hurricane-prone region as defined in ASCE/SEI 7-16 Section 26.2. Glazed openings need not be protected against wind-borne debris.

Mountainous terrain, gorges, ocean promontories, and special wind regions should be examined for unusual wind conditions.

Seismic

Site Soil Class: D - Stiff Soil

Results:

S_S :	0.183	S_{D1} :	0.083
S_1 :	0.052	T_L :	6
F_a :	1.6	PGA :	0.1
F_v :	2.4	PGA_M :	0.16
S_{MS} :	0.293	F_{PGA} :	1.6
S_{M1} :	0.124	I_e :	1
S_{DS} :	0.195	C_v :	0.7

Seismic Design Category B

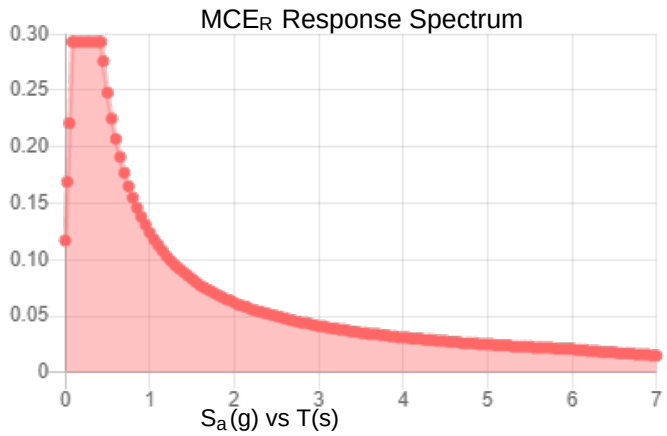

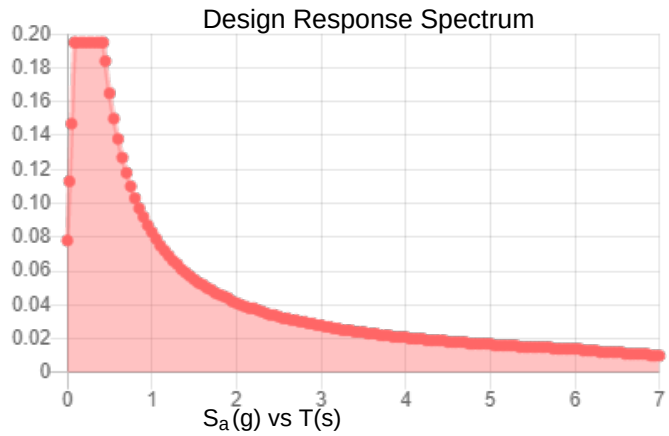

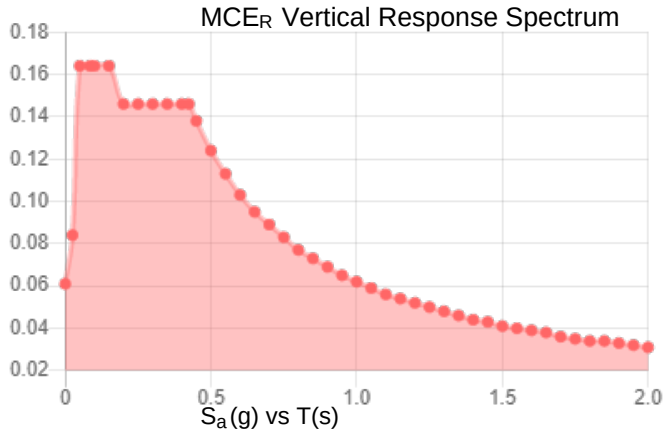

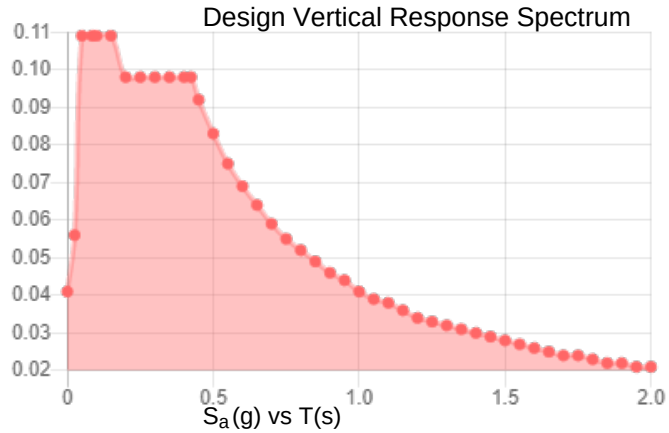

Data Accessed: Tue Jul 14 2020

Date Source: USGS Seismic Design Maps based on ASCE/SEI 7-16 and ASCE/SEI 7-16 Table 1.5-2. Additional data for site-specific ground motion procedures in accordance with ASCE/SEI 7-16 Ch. 21 are available from USGS.

Ice

Results:

Ice Thickness:	1.00 in.
Concurrent Temperature:	15 F
Gust Speed:	50 mph
Data Source:	Standard ASCE/SEI 7-16, Figs. 10-2 through 10-8
Date Accessed:	Tue Jul 14 2020

Ice thicknesses on structures in exposed locations at elevations higher than the surrounding terrain and in valleys and gorges may exceed the mapped values.

Values provided are equivalent radial ice thicknesses due to freezing rain with concurrent 3-second gust speeds, for a 500-year mean recurrence interval, and temperatures concurrent with ice thicknesses due to freezing rain. Thicknesses for ice accretions caused by other sources shall be obtained from local meteorological studies. Ice thicknesses in exposed locations at elevations higher than the surrounding terrain and in valleys and gorges may exceed the mapped values.

The ASCE 7 Hazard Tool is provided for your convenience, for informational purposes only, and is provided “as is” and without warranties of any kind. The location data included herein has been obtained from information developed, produced, and maintained by third party providers; or has been extrapolated from maps incorporated in the ASCE 7 standard. While ASCE has made every effort to use data obtained from reliable sources or methodologies, ASCE does not make any representations or warranties as to the accuracy, completeness, reliability, currency, or quality of any data provided herein. Any third-party links provided by this Tool should not be construed as an endorsement, affiliation, relationship, or sponsorship of such third-party content by or from ASCE.

ASCE does not intend, nor should anyone interpret, the results provided by this Tool to replace the sound judgment of a competent professional, having knowledge and experience in the appropriate field(s) of practice, nor to substitute for the standard of care required of such professionals in interpreting and applying the contents of this Tool or the ASCE 7 standard.

In using this Tool, you expressly assume all risks associated with your use. Under no circumstances shall ASCE or its officers, directors, employees, members, affiliates, or agents be liable to you or any other person for any direct, indirect, special, incidental, or consequential damages arising from or related to your use of, or reliance on, the Tool or any information obtained therein. To the fullest extent permitted by law, you agree to release and hold harmless ASCE from any and all liability of any nature arising out of or resulting from any use of data provided by the ASCE 7 Hazard Tool.

Member Primary Data

	Label	I Joint	J Joint	K Joint	Rotate(deg)	Section/Shape	Type	Design List	Material	Design Rules
1	HP1	N9	N8			2" Pipe	Beam	Pipe	A53 Gr.B	Typical
2	M2	N12A	N11			2" Pipe	Beam	Pipe	A53 Gr.B	Typical
3	M3	N10	N14			RIGID	None	None	RIGID	Typical
4	M4	N12	N13			RIGID	None	None	RIGID	Typical
5	M5	N18	N16			RIGID	None	None	RIGID	Typical
6	M6	N17	N15			RIGID	None	None	RIGID	Typical
7	MP4	N19	N20			2" Pipe	Beam	Pipe	A53 Gr.B	Typical
8	M8	N24	N22			RIGID	None	None	RIGID	Typical
9	M9	N23	N21			RIGID	None	None	RIGID	Typical
10	MP3	N25	N26			2" Pipe	Beam	Pipe	A53 Gr.B	Typical
11	M11	N30	N28			RIGID	None	None	RIGID	Typical
12	M12	N29	N27			RIGID	None	None	RIGID	Typical
13	MP2	N31	N32			2" Pipe	Beam	Pipe	A53 Gr.B	Typical
14	M14	N36	N34			RIGID	None	None	RIGID	Typical
15	M15	N35	N33			RIGID	None	None	RIGID	Typical
16	MP1	N37	N38			2" Pipe	Beam	Pipe	A53 Gr.B	Typical
17	M17	N39	N40			3" Pipe	Beam	Pipe	A53 Gr.B	Typical
18	M18	N14	N44			HSS3x3x4	Beam	SquareTube	A500 Gr.B...	Typical
19	M19	N13	N43			HSS3x3x4	Beam	SquareTube	A500 Gr.B...	Typical
20	M20	N42	N41			2" Pipe	Beam	Pipe	A53 Gr.B	Typical
21	MP5	N45	N46			4" Pipe	Beam	Pipe	A53 Gr.B	Typical
22	M22	N49	N47			RIGID	None	None	RIGID	Typical
23	M23	N50	N48			RIGID	None	None	RIGID	Typical
24	M24	N52	N54			HSS2.5x2.5x4	Beam	SquareTube	A500 Gr.B...	Typical
25	M25	N51	N53			HSS2.5x2.5x4	Beam	SquareTube	A500 Gr.B...	Typical
26	M26	N59A	N61			2" Pipe	Beam	Pipe	A53 Gr.B	Typical
27	M27	N60A	N62			2" Pipe	Beam	Pipe	A53 Gr.B	Typical

Hot Rolled Steel Properties

	Label	E [psi]	G [psi]	Nu	Therm (/1...	Density[lb/...	Yield[psi]	Ry	Fu[psi]	Rt
1	A992	2.9e+7	1.115e+7	.3	.65	490	50000	1.1	65000	1.1
2	A36 Gr.36	2.9e+7	1.115e+7	.3	.65	490	36000	1.5	58000	1.2
3	A572 Gr.50	2.9e+7	1.115e+7	.3	.65	490	50000	1.1	65000	1.1
4	A500 Gr.B RND	2.9e+7	1.115e+7	.3	.65	527	42000	1.4	58000	1.3
5	A500 Gr.B Rect	2.9e+7	1.115e+7	.3	.65	527	46000	1.4	58000	1.3
6	A53 Gr.B	2.9e+7	1.115e+7	.3	.65	490	35000	1.6	60000	1.2
7	A1085	2.9e+7	1.115e+7	.3	.65	490	50000	1.4	65000	1.3

Hot Rolled Steel Design Parameters

	Label	Shape	Length[in]	Lbyy[in]	Lbzz[in]	Lcomp top[in]	Lcomp bot[in]	L-torq...	Kyy	Kzz	Cb	Function
1	HP1	2" Pipe	150	75	75	Lbyy	75	75				Lateral
2	M2	2" Pipe	150	48	48	Lbyy	48	48				Lateral
3	MP4	2" Pipe	72	36	36	Lbyy	36	36				Lateral
4	MP3	2" Pipe	72	36	36	Lbyy	36	36				Lateral
5	MP2	2" Pipe	72	36	36	Lbyy	36	36				Lateral
6	MP1	2" Pipe	72	36	36	Lbyy	36	36				Lateral
7	M17	3" Pipe	56	36	36	Lbyy	36	36				Lateral
8	M18	HSS3x3x4	19	16	16	Lbyy	16	16				Lateral
9	M19	HSS3x3x4	19	16	16	Lbyy	16	16				Lateral
10	M20	2" Pipe	36			Lbyy			.65	.65		Lateral
11	MP5	4" Pipe	60	31	31	Lbyy	31	31				Lateral
12	M24	HSS2.5x2.5...	60	33	33	Lbyy	33	33				Lateral
13	M25	HSS2.5x2.5...	60	33	33	Lbyy	33	33				Lateral

Hot Rolled Steel Design Parameters (Continued)

	Label	Shape	Length[in]	Lbyy[in]	Lbzz[in]	Lcomp top[in]	Lcomp bot[in]	L-torq...	Kyy	Kzz	Cb	Function
14	M26	2" Pipe	96			Lbyy						Lateral
15	M27	2" Pipe	96			Lbyy						Lateral

Hot Rolled Steel Section Sets

	Label	Shape	Type	Design List	Material	Design Rul...	A [in2]	Iyy [in4]	Izz [in4]	J [in4]
1	2" Pipe	PIPE_2.0	Beam	Pipe	A53 Gr.B	Typical	1.02	.627	.627	1.25
2	3" Pipe	PIPE_3.0	Beam	Pipe	A53 Gr.B	Typical	2.07	2.85	2.85	5.69
3	4" Pipe	PIPE_4.0	Beam	Pipe	A53 Gr.B	Typical	2.96	6.82	6.82	13.6
4	HSS3x3x4	HSS3X3X4	Beam	SquareTube	A500 Gr.B R...	Typical	2.44	3.02	3.02	5.08
5	HSS2.5x2.5x4	HSS2.5X2.5X4	Beam	SquareTube	A500 Gr.B R...	Typical	1.97	1.63	1.63	2.79

Basic Load Cases

	BLC Description	Category	X Gravity	Y Gravity	Z Gravity	Joint	Point	Distributed	Area(Me...	Surface(...
1	Self Weight	DL		-1			11			
2	Wind Load AZI 000	WLZ					11		1	
3	Wind Load AZI 090	WLX					11		1	
4	Ice Weight	OL1					11	27		
5	Wind + Ice Load AZI 000	OL2					11		1	
6	Wind + Ice Load AZI 090	OL3					11		1	
7	Service Live 1	LL					1			
8	Service Live 2	OL4					2			
9	Service Live 3	OL5								
10	Seismic Load AZI 000	ELZ					11			
11	Seismic Load AZI 090	ELX					11			
12	BLC 2 Transient Area Loads	None						12		
13	BLC 3 Transient Area Loads	None						23		
14	BLC 5 Transient Area Loads	None						12		
15	BLC 6 Transient Area Loads	None						23		

Load Combinations

	Description	So...	P...	S...	BLC	Fac...	BLC	Fac...	BLC	Fac...	BLC	Fac...	B...	F...	B...	F.....	F.....	...	...	F...	B.....
1	1.4D	Yes	Y		DL	1.4															
2	1.2D + 1W AZI 000	Yes	Y		DL	1.2	W...	1													
3	1.2D + 1W AZI 030	Yes	Y		DL	1.2	W...	.866	WLX	.5											
4	1.2D + 1W AZI 060	Yes	Y		DL	1.2	W...	.5	WLX	.866											
5	1.2D + 1W AZI 090	Yes	Y		DL	1.2			WLX	1											
6	1.2D + 1W AZI 120	Yes	Y		DL	1.2	W...	-.5	WLX	.866											
7	1.2D + 1W AZI 150	Yes	Y		DL	1.2	W...	-.866	WLX	.5											
8	1.2D + 1W AZI 180	Yes	Y		DL	1.2	W...	-1													
9	1.2D + 1W AZI 210	Yes	Y		DL	1.2	W...	-.866	WLX	-.5											
10	1.2D + 1W AZI 240	Yes	Y		DL	1.2	W...	-.5	WLX	-.866											
11	1.2D + 1W AZI 270	Yes	Y		DL	1.2			WLX	-1											
12	1.2D + 1W AZI 300	Yes	Y		DL	1.2	W...	.5	WLX	-.866											
13	1.2D + 1W AZI 330	Yes	Y		DL	1.2	W...	.866	WLX	-.5											
14	0.9D + 1W AZI 000	Yes	Y		DL	.9	W...	1													
15	0.9D + 1W AZI 030	Yes	Y		DL	.9	W...	.866	WLX	.5											
16	0.9D + 1W AZI 060	Yes	Y		DL	.9	W...	.5	WLX	.866											
17	0.9D + 1W AZI 090	Yes	Y		DL	.9			WLX	1											
18	0.9D + 1W AZI 120	Yes	Y		DL	.9	W...	-.5	WLX	.866											
19	0.9D + 1W AZI 150	Yes	Y		DL	.9	W...	-.866	WLX	.5											
20	0.9D + 1W AZI 180	Yes	Y		DL	.9	W...	-1													
21	0.9D + 1W AZI 210	Yes	Y		DL	.9	W...	-.866	WLX	-.5											

Load Combinations (Continued)

	Description	So...	P...	S...	BLC	Fac...	BLC	Fac...	BLC	Fac...	BLC	Fac...	B...	F...	B...	F.....	F.....	...	...	F...	B.....
22	0.9D + 1W AZI 240	Yes	Y		DL	.9	W...	-.5	WLX	-.866											
23	0.9D + 1W AZI 270	Yes	Y		DL	.9			WLX	-1											
24	0.9D + 1W AZI 300	Yes	Y		DL	.9	W...	.5	WLX	-.866											
25	0.9D + 1W AZI 330	Yes	Y		DL	.9	W...	.866	WLX	-.5											
26	1.2D + 1.0Di	Yes	Y		DL	1.2	OL1	1													
27	1.2D + 1.0Di + 1.0Wi AZI 000	Yes	Y		DL	1.2	OL1	1	OL2	1											
28	1.2D + 1.0Di + 1.0Wi AZI 030	Yes	Y		DL	1.2	OL1	1	OL2	.866	OL3	.5									
29	1.2D + 1.0Di + 1.0Wi AZI 060	Yes	Y		DL	1.2	OL1	1	OL2	.5	OL3	.866									
30	1.2D + 1.0Di + 1.0Wi AZI 090	Yes	Y		DL	1.2	OL1	1			OL3	1									
31	1.2D + 1.0Di + 1.0Wi AZI 120	Yes	Y		DL	1.2	OL1	1	OL2	-.5	OL3	.866									
32	1.2D + 1.0Di + 1.0Wi AZI 150	Yes	Y		DL	1.2	OL1	1	OL2	-.866	OL3	.5									
33	1.2D + 1.0Di + 1.0Wi AZI 180	Yes	Y		DL	1.2	OL1	1	OL2	-1											
34	1.2D + 1.0Di + 1.0Wi AZI 210	Yes	Y		DL	1.2	OL1	1	OL2	-.866	OL3	-.5									
35	1.2D + 1.0Di + 1.0Wi AZI 240	Yes	Y		DL	1.2	OL1	1	OL2	-.5	OL3	-.866									
36	1.2D + 1.0Di + 1.0Wi AZI 270	Yes	Y		DL	1.2	OL1	1			OL3	-1									
37	1.2D + 1.0Di + 1.0Wi AZI 300	Yes	Y		DL	1.2	OL1	1	OL2	.5	OL3	-.866									
38	1.2D + 1.0Di + 1.0Wi AZI 330	Yes	Y		DL	1.2	OL1	1	OL2	.866	OL3	-.5									
39	(1.2+0.2Sds) + 1.0 E AZI 000	Yes	Y		DL	1.239	ELZ	1													
40	(1.2+0.2Sds) + 1.0 E AZI 030	Yes	Y		DL	1.239	ELZ	.866	ELX	.5											
41	(1.2+0.2Sds) + 1.0 E AZI 060	Yes	Y		DL	1.239	ELZ	.5	ELX	.866											
42	(1.2+0.2Sds) + 1.0 E AZI 090	Yes	Y		DL	1.239			ELX	1											
43	(1.2+0.2Sds) + 1.0 E AZI 120	Yes	Y		DL	1.239	ELZ	-.5	ELX	.866											
44	(1.2+0.2Sds) + 1.0 E AZI 150	Yes	Y		DL	1.239	ELZ	-.866	ELX	.5											
45	(1.2+0.2Sds) + 1.0 E AZI 180	Yes	Y		DL	1.239	ELZ	-1													
46	(1.2+0.2Sds) + 1.0 E AZI 210	Yes	Y		DL	1.239	ELZ	-.866	ELX	-.5											
47	(1.2+0.2Sds) + 1.0 E AZI 240	Yes	Y		DL	1.239	ELZ	-.5	ELX	-.866											
48	(1.2+0.2Sds) + 1.0 E AZI 270	Yes	Y		DL	1.239			ELX	-1											
49	(1.2+0.2Sds) + 1.0 E AZI 300	Yes	Y		DL	1.239	ELZ	.5	ELX	-.866											
50	(1.2+0.2Sds) + 1.0 E AZI 330	Yes	Y		DL	1.239	ELZ	.866	ELX	-.5											
51	(0.9-0.2Sds) + 1.0E AZI 000	Yes	Y		DL	.861	ELZ	1													
52	(0.9-0.2Sds) + 1.0E AZI 030	Yes	Y		DL	.861	ELZ	.866	ELX	.5											
53	(0.9-0.2Sds) + 1.0E AZI 060	Yes	Y		DL	.861	ELZ	.5	ELX	.866											
54	(0.9-0.2Sds) + 1.0E AZI 090	Yes	Y		DL	.861			ELX	1											
55	(0.9-0.2Sds) + 1.0E AZI 120	Yes	Y		DL	.861	ELZ	-.5	ELX	.866											
56	(0.9-0.2Sds) + 1.0E AZI 150	Yes	Y		DL	.861	ELZ	-.866	ELX	.5											
57	(0.9-0.2Sds) + 1.0E AZI 180	Yes	Y		DL	.861	ELZ	-1													
58	(0.9-0.2Sds) + 1.0E AZI 210	Yes	Y		DL	.861	ELZ	-.866	ELX	-.5											
59	(0.9-0.2Sds) + 1.0E AZI 240	Yes	Y		DL	.861	ELZ	-.5	ELX	-.866											
60	(0.9-0.2Sds) + 1.0E AZI 270	Yes	Y		DL	.861			ELX	-1											
61	(0.9-0.2Sds) + 1.0E AZI 300	Yes	Y		DL	.861	ELZ	.5	ELX	-.866											
62	(0.9-0.2Sds) + 1.0E AZI 330	Yes	Y		DL	.861	ELZ	.866	ELX	-.5											
63	1.2D + 1.5L + 1.0WL (30 mph) AZI 000	Yes	Y		DL	1.2	LL	1.5	WLZ	.054											
64	1.2D + 1.5L + 1.0WL (30 mph) AZI 030	Yes	Y		DL	1.2	LL	1.5	WLZ	.047	WLX	.027									
65	1.2D + 1.5L + 1.0WL (30 mph) AZI 060	Yes	Y		DL	1.2	LL	1.5	WLZ	.027	WLX	.047									
66	1.2D + 1.5L + 1.0WL (30 mph) AZI 090	Yes	Y		DL	1.2	LL	1.5			WLX	.054									
67	1.2D + 1.5L + 1.0WL (30 mph) AZI 120	Yes	Y		DL	1.2	LL	1.5	WLZ	-.027	WLX	.047									
68	1.2D + 1.5L + 1.0WL (30 mph) AZI 150	Yes	Y		DL	1.2	LL	1.5	WLZ	-.047	WLX	.027									
69	1.2D + 1.5L + 1.0WL (30 mph) AZI 180	Yes	Y		DL	1.2	LL	1.5	WLZ	-.054											
70	1.2D + 1.5L + 1.0WL (30 mph) AZI 210	Yes	Y		DL	1.2	LL	1.5	WLZ	-.047	WLX	-.027									
71	1.2D + 1.5L + 1.0WL (30 mph) AZI 240	Yes	Y		DL	1.2	LL	1.5	WLZ	-.027	WLX	-.047									
72	1.2D + 1.5L + 1.0WL (30 mph) AZI 270	Yes	Y		DL	1.2	LL	1.5			WLX	-.054									
73	1.2D + 1.5L + 1.0WL (30 mph) AZI 300	Yes	Y		DL	1.2	LL	1.5	WLZ	.027	WLX	-.047									
74	1.2D + 1.5L + 1.0WL (30 mph) AZI 330	Yes	Y		DL	1.2	LL	1.5	WLZ	.047	WLX	-.027									

Joint Loads and Enforced Displacements

	Joint Label	L,D,M	Direction	Magnitude[(lb,lb-ft), (in,rad), (lb*s^...
No Data to Print ...				

Member Area Loads (BLC 2 : Wind Load AZI 000)

	Joint A	Joint B	Joint C	Joint D	Direction	Distribution	Magnitude[psf]
1	N81	N82	N84	N83	PZ	Open Structure	-63.87

Member Area Loads (BLC 3 : Wind Load AZI 090)

	Joint A	Joint B	Joint C	Joint D	Direction	Distribution	Magnitude[psf]
1	N82	N85	N87	N84	PX	Open Structure	-63.87

Member Area Loads (BLC 5 : Wind + Ice Load AZI 000)

	Joint A	Joint B	Joint C	Joint D	Direction	Distribution	Magnitude[psf]
1	N81	N82	N84	N83	PZ	Open Structure	-17.71

Member Area Loads (BLC 6 : Wind + Ice Load AZI 090)

	Joint A	Joint B	Joint C	Joint D	Direction	Distribution	Magnitude[psf]
1	N82	N85	N87	N84	PX	Open Structure	-17.71

Member Point Loads (BLC 1 : Self Weight)

	Member Label	Direction	Magnitude[lb,lb-ft]	Location[in,%]
1	MP2	Y	-33.95	12
2	MP3	Y	-26.25	12
3	MP1	Y	-17.5	8
4	MP1	Y	-16	36
5	MP2	Y	-70	36
6	MP2	Y	-75	36
7	MP3	Y	-59.9	36
8	MP5	Y	-32.8	30
9	MP2	Y	-33.95	60
10	MP3	Y	-26.25	60
11	MP1	Y	-17.5	63

Member Point Loads (BLC 2 : Wind Load AZI 000)

	Member Label	Direction	Magnitude[lb,lb-ft]	Location[in,%]
1	MP2	Z	-226.58	12
2	MP3	Z	-229.87	12
3	MP1	Z	-150.74	8
4	MP1	Z	-30.25	36
5	MP2	Z	-108.37	36
6	MP2	Z	-108.37	36
7	MP3	Z	-100.84	36
8	MP5	Z	-120.41	30
9	MP2	Z	-226.58	60
10	MP3	Z	-229.87	60
11	MP1	Z	-150.74	63

Member Point Loads (BLC 3 : Wind Load AZI 090)

	Member Label	Direction	Magnitude[lb,lb-ft]	Location[in,%]
1	MP2	X	-95.94	12
2	MP3	X	-96.93	12

Member Point Loads (BLC 3 : Wind Load AZI 090) (Continued)

	Member Label	Direction	Magnitude[lb,lb-ft]	Location[in,%]
3	MP1	X	-80.13	8
4	MP1	X	-24.38	36
5	MP2	X	-77.17	36
6	MP2	X	-92.77	36
7	MP3	X	-57.95	36
8	MP5	X	-120.41	30
9	MP2	X	-95.94	60
10	MP3	X	-96.93	60
11	MP1	X	-80.13	63

Member Point Loads (BLC 4 : Ice Weight)

	Member Label	Direction	Magnitude[lb,lb-ft]	Location[in,%]
1	MP2	Y	-63.67	12
2	MP3	Y	-64.59	12
3	MP1	Y	-41.25	8
4	MP1	Y	-15.84	36
5	MP2	Y	-47.07	36
6	MP2	Y	-51.82	36
7	MP3	Y	-40.6	36
8	MP5	Y	-56.82	30
9	MP2	Y	-63.67	60
10	MP3	Y	-64.59	60
11	MP1	Y	-41.25	63

Member Point Loads (BLC 5 : Wind + Ice Load AZI 000)

	Member Label	Direction	Magnitude[lb,lb-ft]	Location[in,%]
1	MP2	Z	-39.65	12
2	MP3	Z	-40.17	12
3	MP1	Z	-27.87	8
4	MP1	Z	-7.53	36
5	MP2	Z	-21.57	36
6	MP2	Z	-21.57	36
7	MP3	Z	-20.24	36
8	MP5	Z	-23.98	30
9	MP2	Z	-39.65	60
10	MP3	Z	-40.17	60
11	MP1	Z	-27.87	63

Member Point Loads (BLC 6 : Wind + Ice Load AZI 090)

	Member Label	Direction	Magnitude[lb,lb-ft]	Location[in,%]
1	MP2	X	-18.86	12
2	MP3	X	-19.02	12
3	MP1	X	-17.07	8
4	MP1	X	-6.44	36
5	MP2	X	-16.29	36
6	MP2	X	-18.93	36
7	MP3	X	-12.89	36
8	MP5	X	-23.98	30
9	MP2	X	-18.86	60
10	MP3	X	-19.02	60
11	MP1	X	-17.07	63

Member Point Loads (BLC 7 : Service Live 1)

	Member Label	Direction	Magnitude[lb,lb-ft]	Location[in,%]
1	HP1	Y	-250	%50

Member Point Loads (BLC 8 : Service Live 2)

	Member Label	Direction	Magnitude[lb,lb-ft]	Location[in,%]
1	HP1	Y	-250	0
2	HP1	Y	-250	%100

Member Point Loads (BLC 10 : Seismic Load AZI 000)

	Member Label	Direction	Magnitude[lb,lb-ft]	Location[in,%]
1	MP2	Z	-3.48	12
2	MP3	Z	-2.69	12
3	MP1	Z	-1.79	8
4	MP1	Z	-1.64	36
5	MP2	Z	-7.18	36
6	MP2	Z	-7.69	36
7	MP3	Z	-6.14	36
8	MP5	Z	-3.36	30
9	MP2	Z	-3.48	60
10	MP3	Z	-2.69	60
11	MP1	Z	-1.79	63

Member Point Loads (BLC 11 : Seismic Load AZI 090)

	Member Label	Direction	Magnitude[lb,lb-ft]	Location[in,%]
1	MP2	X	-3.48	12
2	MP3	X	-2.69	12
3	MP1	X	-1.79	8
4	MP1	X	-1.64	36
5	MP2	X	-7.18	36
6	MP2	X	-7.69	36
7	MP3	X	-6.14	36
8	MP5	X	-3.36	30
9	MP2	X	-3.48	60
10	MP3	X	-2.69	60
11	MP1	X	-1.79	63

Envelope AISC 15th(360-16): LRFD Steel Code Checks

	Member	Shape	Code Check	Loc[in]	LC	Shear ...	Loc[in]	Dir	LC	phi*Pnc ...	phi*Pnt [...	phi*Mn y...	phi*Mn z...	Cb	Eqn
1	HP1	PIPE_2.0	.468	75	2	.175	75		8	20114.4...	32130	1871.625	1871.625	1	H1-1b
2	M2	PIPE_2.0	.414	123....	2	.186	121....		2	26521.4...	32130	1871.625	1871.625	1	H1-1b
3	M25	HSS2.5X2.5...	.402	15	12	.144	15	z	12	74647.6...	81558	5623.5	5623.5	1	H1-1b
4	M24	HSS2.5X2.5...	.319	15	6	.087	15	z	12	74647.6...	81558	5623.5	5623.5	1	H1-1b
5	MP2	PIPE_2.0	.284	22.5	37	.199	22.5		8	28843.4...	32130	1871.625	1871.625	1	H1-1b
6	MP1	PIPE_2.0	.203	17.25	8	.054	17.25		8	28843.4...	32130	1871.625	1871.625	1	H1-1b
7	M19	HSS3X3X4	.173	19	30	.082	19	y	38	99620.2...	101016	8556	8556	1	H1-1b
8	MP3	PIPE_2.0	.159	17.25	29	.081	17.25		4	28843.4...	32130	1871.625	1871.625	1	H1-1b
9	M17	PIPE_3.0	.129	45.5	27	.059	45.5		27	62138.0...	65205	5748.75	5748.75	1	H1-1b
10	M18	HSS3X3X4	.126	0	12	.049	15.833	z	12	99620.2...	101016	8556	8556	1	H1-1b
11	MP5	PIPE_4.0	.114	20	36	.138	50.625		12	91270.6...	93240	10631.25	10631.25	1	H1-1b
12	M20	PIPE_2.0	.086	0	35	.033	36		13	30698.0...	32130	1871.625	1871.625	2...	H1-1b
13	M27	PIPE_2.0	.073	96	14	.004	96		12	14916.0...	32130	1871.625	1871.625	1...	H1-1b*
14	MP4	PIPE_2.0	.071	52.5	35	.021	17.25		9	28843.4...	32130	1871.625	1871.625	1	H1-1b
15	M26	PIPE_2.0	.065	48	5	.006	0		11	14916.0...	32130	1871.625	1871.625	1...	H1-1b

SBA Communications Corporation
8051 Congress Avenue
Boca Raton, FL 33487-1307

T + 561.995.7670
F + 561.995.7626

sbasite.com

Structural Analysis Report

Client: AT&T

Client Site ID / Name: CTL02231 / Stonington- South Broad St
Application #: 133654, v1

SBA Site ID / Name: CT03241-S / Stonington 2, CT

180' Self Supporting Tower

173 South Broad Street
Pawcatuck, CT 06379-1995
Lat: 41.369067, Long: -71.862361

Project number: CT03241-ATT-081220

Analysis Results

Tower	96.3%	Pass
Foundation	74.0%	Pass

Change in tower stress due to mount modification / replacement	N/A

Prepared by:

Daniel Yohannes,
Structural Engineer II
561-322-7936
dyohannes@sbasite.com

Reviewed by:

Nitesh Ahuja, P.E.
Director of Engineering
561-226-9452
nahuja@sbasite.com

STATE OF CONNECTICUT
NITESH AHUJA
No. 27942
LICENSED
PROFESSIONAL ENGINEER
08/21/2020

August 18, 2020

Table of Contents

Introduction 3
Analysis Criteria 3
Appurtenance Loading 4
Existing Loading: 4
Proposed Loading: 5
Analysis Results 6
Tower 6
Foundation 6
Conclusions 7
Installation Requirements 7
Assumptions and Limitations 8
Assumptions 8
Limitations 8
Appendix 9
Tower Geometry .....
Coax Layout .....
tnxTower Report .....
Foundation Analysis Report .....

Introduction

The purpose of this report is to summarize the analysis results on the 180' Self Supporting Tower to support the proposed antennas and transmissions lines in addition to those currently installed.

Table 1 List of Documents Used

Item	Document
Tower Design	Pirod , Job #: A-116770 , Dated: 2/25/2000
Foundation Design	Pirod , Job #: A-116770 , Dated: 2/25/2000
Geotechnical report	JGI , Project # 99731G , Dated: 3/1/2000
Modification drawings	N/A
Latest SA Report	TES, Project # 90357, dated 12/10/2019

Analysis Criteria

Table 2 Code Related Data

Jurisdiction (State/County/City)	Connecticut / New London / Pawcatuck
Governing Codes	ANSI/TIA-222-H , 2018 IBC
Ultimate Wind Speed (3-Sec gust)	137 mph
Wind Speed with Ice (3-Sec gust)	50 mph
Service Wind Speed (3-Sec gust)	60 mph
Ice Thickness	1 in
Risk category *	III
Exposure Category	C
Topographic Category	1
Crest Height	0 ft.
Ground Elevation	39.04 ft.
Seismic Parameter S_s	0.183
Seismic Parameter S_1	0.052

*This structural analysis is based upon the tower being classified as a Risk category III; however, if a different classification is required subsequent to the date hereof, the tower classification will be changed to meet such requirement and a new structural analysis will be run.

Appurtenance Loading

Existing Loading:

Table 3 Existing Appurtenances

Mount Elev. (ft)	CL Elev. (ft)	Type	Qty	Manufacturer	Model	Feed Line Size	Mount Type Qty.	Carrier
179	190	Omni	2	Celwave	PD220	(4) 7/8"	(3) 10' Rigid Side Arms	Stonington Police
	189.3	Omni	1	Celwave	PD1142-1			
	180	Yagi	1		Yagi			
	175	Dipole	1		10' dipole			
178	178	Panel	1		2' x 1' Panel	(1) 7/8"	Direct Mount	
165	173	Dipole	2	Decibel	DB212	(2) 7/8"	(2) Standoffs	
150	150	Panel	6	Decibel	DB844H90-XY	(12) 1-5/8"	(3) T-Frames	Verizon
		Panel	3	JMA Wireless	MX06FRO660-03			
		Diplexer	3	Commscope	CBC426T-DS-43			
		Diplexer	3	Commscope	CBC1923T-DS-43			
140	140	Panel	3	Ericsson	Air 21 B2A/B4P	(9) 1-5/8" (4) 1-5/8" Fiber	(3) T-Frames w/ Mods (MetroSite MS-HR35-18 Support Rail Pipe Kits (2) MS-C1B-350P V-Bracing Kits (3) MS-STZ-350P Stabilizer Adapter Kits (3) MS-STZ-2PST Stabilizer Kits	T-Mobile
		Panel	3	Ericsson	Air 21 B4A/B2P			
		Panel	3	RFS	APXVAARR24_43-U-NA20			
		TMA	3	Ericsson	KRY 112 144/1			
		RRU	3	Ericsson	Radio 4449 B71+B12			
120	120	Panel	3	KMW	DUO1417-8686-40i	(12) 1-5/8" (1) 1/2" Fiber (2) 3/4" DC	(3) T-Frames	AT&T
		Panel	6	Powerwave	7770			
		Panel	3	KMW	AM-X-CD-14-65-00T			
		TMA	6	Powerwave	TT19-08BP111-001 TMA			
		RRU	6	Ericsson	RRUS-11			
		Other	1	Raycap	DC6-48-60-18-8F			
101	106.9	Omni	1	Celwave	PD1167	(2) 7/8"	(2) 3' Standoffs	Stonington Police
	106	Dipole	1		10' dipole			
90	99.167	Dipole	1	Decibel	DS4C06F36D-N	(1) 7/8"	Direct Mount	
75	75	GPS	1		GPS Receiver		Direct Mount	Verizon
63	63	Omni	1		DB437 Yagi	(1) 7/8"	Direct Mount	Stonington Police
51	60.167	Dipole	1	Decibel	DB413-B	(1) 7/8"	Direct Mount	
42	43	Omni	1		2' Omni	(2) 7/8"	(1) Standoff	
	42	Omni	2	Decibel	DB437 Yagi		Direct Mount	

Proposed Loading:

Information pertaining to proposed antennas and transmission lines were based upon the Application #: 133654, v1 from AT&T and is listed in Table 4.

Table 4 Proposed Appurtenances

Mount Elev. (ft)	CL Elev. (ft)	Type	Qty	Manufacturer	Model	Feed Line Size	Mount Type Qty.	Carrier
120	120	Panel	6	Powerwave	7770	(12) 1-5/8" (1) 1/2" Fiber (2) 3/4" DC (1) Y-cable	(3) T-Frames	AT&T
		Panel	3	Cci Antennas	DMP65R-BU4DA			
		Panel	3	Cci Antennas	OPA65R-BU4DA			
		TMA	6	Powerwave	TT19-08BP111-001 TMA			
		RRU	3	Ericsson	4449 B5/B12			
		RRU	3	Ericsson	RRUS-4478 B14			
		RRU	3	Ericsson	RRUS 8843 B2 B66A			
		Others	2	Raycap	DC6-48-60-18-8F			

Note: AT&T loading includes FirstNET equipment

Analysis Results

Tower

The results of the structural analysis are shown below in table 5. Additional information for the tower analysis is provided within the Appendix.

Table 5 Tower Analysis Summary

Structural Component	% capacity	Analysis Result
Leg	96.3	Pass
Diagonal	84.7	Pass
Horizontal	67.5	Pass
Top girt	54.5	Pass
Bottom girt	83.6	Pass
Bolt	84.7	Pass
Anchor Bolt	62.2	Pass

Foundation

The results of the foundation analysis are shown below in table 6. Additional information for the foundation analysis is provided within the Appendix.

Table 6 Foundation Analysis Summary

Structural Component	Max Usage (%)	Analysis Result
Foundation	74.0	Pass

Conclusions

Based on the analysis results, the existing tower and foundation were found to be ***sufficient*** to safely support the equipment listed in this analysis. No modification to the tower and foundation is needed at this time.

Installation Requirements

This analysis was performed under the assumption that the carrier will place the proposed equipment and feed lines at the installation height listed in Table 4 and in accordance with the coax layout shown. TMAs and RRUs are to be installed on existing mounts behind tenant's antennas unless otherwise noted. No equipment is to be installed directly in the climbing path. All equipment is to be installed per mount manufacturer specifications. In case site conditions do not allow for the required installation parameters to be met the carrier must notify SBA Communications Corporation engineers for approval of an alternative placement.

Assumptions and Limitations

Assumptions

This analysis was completed based on the following assumptions:

- Tower and foundation were built in accordance to manufacturer specifications.
- Tower and foundation has been properly maintained in accordance with the manufacturer's specifications
- All existing structural members were assumed to be in good condition with no physical damage or deterioration associated with corrosion
- Welds and bolts are assumed able to carry their intended original design loads.
- The configuration of antennas, transmission cables, mounts and other appurtenances are as specified in Table 3 and 4.
- This analysis may be affected if any assumptions are not valid or have been made in error. SBA should be notified to determine the effect on the structural integrity of the tower.

Limitations

The computer generated analysis performed by the tower software is limited to theoretical capacities of the towers structural members and does not account for any missing or damaged members or connections. The tower and foundation are assumed to have been properly designed, fabricated, installed and maintained, barring any conflicting findings from the most recent inspection.

SBA Communications Corporation has used its due diligence to verify the information provided to perform this analysis. It is unreasonable to perform a more detailed inspection of a tower and its components. This report is not a condition assessment of the tower or foundation.

Appendix

Section	T1	T2	T3	T4	T5	T6	T7	T8	T9	T10
Legs	SR 1 1/2		SR 2	A	B	C	#12 - 2.00" - 1.25" conn. (Pirod 105219)		#12 - 2.25" - 1.25" conn. (Pirod 105220)	
Leg Grade	A572-50									
Diagonals	SR 3/4		SR 1	L2 1/2x2 1/2x3/16	L3x3x3/16		L3x3x5/16		L3 1/2x3 1/2x5/16	
Diagonal Grade	A572-50			A36						
Top Girts	SR 7/8		SR 1				N.A.			
Mid Girts	N.A.		SR 1				N.A.			
Bottom Girts	SR 7/8		SR 1				N.A.			
Horizontals	SR 3/4	SR 7/8					N.A.			
Face Width (ft)	4	4.5		5	6	8	10	12	14	16
# Panels @ (ft)	4 @ 2.26042	8 @ 2.41667	8 @ 2.375				13 @ 10			
Weight (K)	0.4	0.9	1.6	1.1	2.4	2.8	4.1	4.2	5.0	5.2

27.6

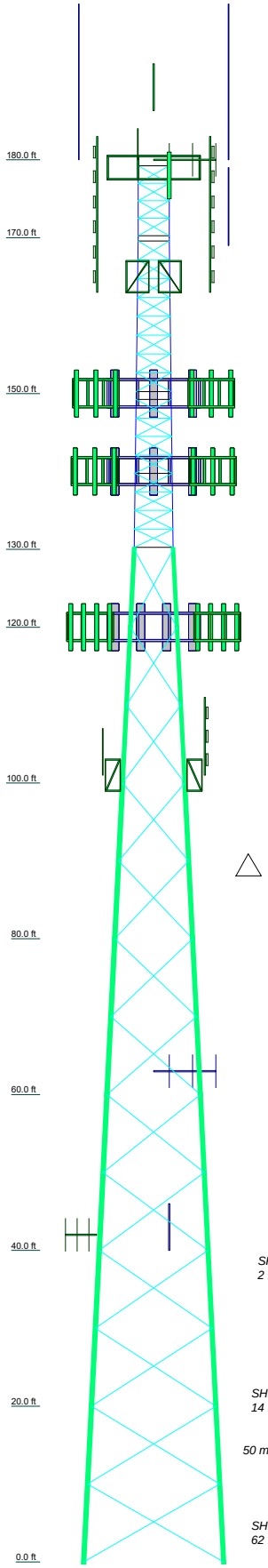

ALL REACTIONS ARE FACTORED

MAX. CORNER REACTIONS AT BASE:
DOWN: 414 K
SHEAR: 41 K

UPLIFT: -372 K
SHEAR: 37 K

AXIAL 57 K
SHEAR 2 K *MOMENT 293 kip-ft*
TORQUE 0 kip-ft
SEISMIC

AXIAL 110 K
SHEAR 14 K *MOMENT 1409 kip-ft*
TORQUE 3 kip-ft
50 mph WIND - 1.0000 in ICE

AXIAL 55 K
SHEAR 62 K *MOMENT 6170 kip-ft*
TORQUE 22 kip-ft
REACTIONS - 137 mph WIND

DESIGNED APPURTENANCE LOADING

TYPE	ELEVATION	TYPE	ELEVATION
Lightning Rod	180	(3) Stabilizer Kit (4' FW)	140
Yagi	180	Air 21 B2A/B4P (55.9" x 12" x 7.8") w/ mount pipe	140
Seismic Load @180	180	Air 21 B2A/B4P (55.9" x 12" x 7.8") w/ mount pipe	140
PD1142	179	Air 21 B2A/B4P (55.9" x 12" x 7.8") w/ mount pipe	140
PD220	179	Seismic Load @130	130
10' dipole	179	DMP65R-BU4DA (48" x 20.7" x 7.7") w/ mount pipe	120
(3) 10 ft face mounted side arm	179	DMP65R-BU4DA (48" x 20.7" x 7.7") w/ mount pipe	120
PD220	179	OPA65R-BU4DA (46" x 21" x 7.8") w/ mount pipe	120
2' x 1' Panel	178	OPA65R-BU4DA (46" x 21" x 7.8") w/ mount pipe	120
Seismic Load @170	170	OPA65R-BU4DA (46" x 21" x 7.8") w/ mount pipe	120
6' Standoff	165	(2) TT19-08BP111-001 TMA (9.9" x 6.7" x 5.4")	120
6' Standoff	165	(2) TT19-08BP111-001 TMA (9.9" x 6.7" x 5.4")	120
DB212	165	(2) TT19-08BP111-001 TMA (9.9" x 6.7" x 5.4")	120
DB212	165	4449 B5/B12 (17.9" x 13.19" x 9.44")	120
(2) DB844H90-XY (48" x 6" x 8.5") w/ mount pipe	150	4449 B5/B12 (17.9" x 13.19" x 9.44")	120
MX06FRO660-03 (71.1" x 15.4" x 10.7") w/ mount pipe	150	4449 B5/B12 (17.9" x 13.19" x 9.44")	120
MX06FRO660-03 (71.1" x 15.4" x 10.7") w/ mount pipe	150	RRUS-4478 B14 (16.5" x 13.4" x 7.7")	120
MX06FRO660-03 (71.1" x 15.4" x 10.7") w/ mount pipe	150	RRUS-4478 B14 (16.5" x 13.4" x 7.7")	120
CBC426T-DS-43 (6" x 4.8" x 3.4")	150	RRUS-4478 B14 (16.5" x 13.4" x 7.7")	120
CBC426T-DS-43 (6" x 4.8" x 3.4")	150	RRUS 8843 B2 B66A (14.9" x 13.2" x 10.9")	120
CBC426T-DS-43 (6" x 4.8" x 3.4")	150	RRUS 8843 B2 B66A (14.9" x 13.2" x 10.9")	120
CBC1923T-DS-43 (6.9" x 5.5" x 4")	150	RRUS 8843 B2 B66A (14.9" x 13.2" x 10.9")	120
CBC1923T-DS-43 (6.9" x 5.5" x 4")	150	DC6-48-60-18-8F (24" x 11" x 18.5")	120
CBC1923T-DS-43 (6.9" x 5.5" x 4")	150	DC6-48-60-18-8F (24" x 11" x 18.5")	120
15' Pirod Universal T-Frame	150	15' Pirod Universal T-Frame	120
15' Pirod Universal T-Frame	150	15' Pirod Universal T-Frame	120
15' Pirod Universal T-Frame	150	15' Pirod Universal T-Frame	120
(2) DB844H90-XY (48" x 6" x 8.5") w/ mount pipe	150	(2) 7770 (55" x 11" x 5") w/ mount pipe	120
(2) DB844H90-XY (48" x 6" x 8.5") w/ mount pipe	150	(2) 7770 (55" x 11" x 5") w/ mount pipe	120
Seismic Load @150	150	(2) 7770 (55" x 11" x 5") w/ mount pipe	120
Air 21 B4A/B2P (55.9" x 12" x 7.8") w/ mount pipe	140	DMP65R-BU4DA (48" x 20.7" x 7.7") w/ mount pipe	120
Air 21 B4A/B2P (55.9" x 12" x 7.8") w/ mount pipe	140	Seismic Load @120	120
Air 21 B4A/B2P (55.9" x 12" x 7.8") w/ mount pipe	140	3' Standoff Mount	101
APXVAARR24_43-U-NA20 (95.9" x 24" x 8.7") w/ mount pipe	140	3' Standoff Mount	101
		10' dipole	101
APXVAARR24_43-U-NA20 (95.9" x 24" x 8.7") w/ mount pipe	140	Celwave - PD1167	101
		Seismic Load @100	100
APXVAARR24_43-U-NA20 (95.9" x 24" x 8.7") w/ mount pipe	140	Decibel - DB212	90
		Seismic Load @80	80
KRY 112 144/1 (6.9" x 6.1" x 2.7")	140	GPS	75
KRY 112 144/1 (6.9" x 6.1" x 2.7")	140	Decibel - DB437	63
KRY 112 144/1 (6.9" x 6.1" x 2.7")	140	Seismic Load @60	60
Radio 4449 B71+B12 (13.1" x 14.9" x 9.2")	140	Decibel - DB212	51
Radio 4449 B71+B12 (13.1" x 14.9" x 9.2")	140	2' Omni	42
Radio 4449 B71+B12 (13.1" x 14.9" x 9.2")	140	Decibel - DB437	42
15' Pirod Universal T-Frame	140	2' Standoff Mount	42
15' Pirod Universal T-Frame	140	Seismic Load @40	40
15' Pirod Universal T-Frame	140	Seismic Load @20	20
(3) HR w/ Double V-Brace Kits	140		

SYMBOL LIST

MARK	SIZE	MARK	SIZE
A	#12 - 1.25" - 1.00" conn. (Pirod 105244)	C	#12 - 1.75" - 1.25" conn. (Pirod 105218)
B	#12 - 1.50" - 1.00" conn. (Pirod 105217)		

MATERIAL STRENGTH

GRADE	Fy	Fu	GRADE	Fy	Fu
A572-50	50 ksi	65 ksi	A36	36 ksi	58 ksi

TOWER DESIGN NOTES

1. Tower is located in New London County, Connecticut.
2. Tower designed for Exposure C to the TIA-222-H Standard.
3. Tower designed for a 137 mph basic wind in accordance with the TIA-222-H Standard.
4. Tower is also designed for a 50 mph basic wind with 1.00 in ice. Ice is considered to increase in thickness with height.
5. Deflections are based upon a 60 mph wind.
6. Tower Risk Category III.
7. Topographic Category 1 with Crest Height of 0.00 ft
8. TOWER RATING: 96.3%

SBA Communications
8051 Congress Avenue
Boca Raton, FL 33487-1307
Phone: 5619957670
FAX: 5619957626

Job:			
Project: ***CT03241-ATT-081220***			
Client:	Drawn by: Daniel Yohannes		App'd:
Code: TIA-222-H	Date: 08/18/20		Scale: NTS
Path: C:\Temp\CT03241-S\Towercalc\CT03241-ATT-081220.eri			Dwg No. E-1

Coax Layout

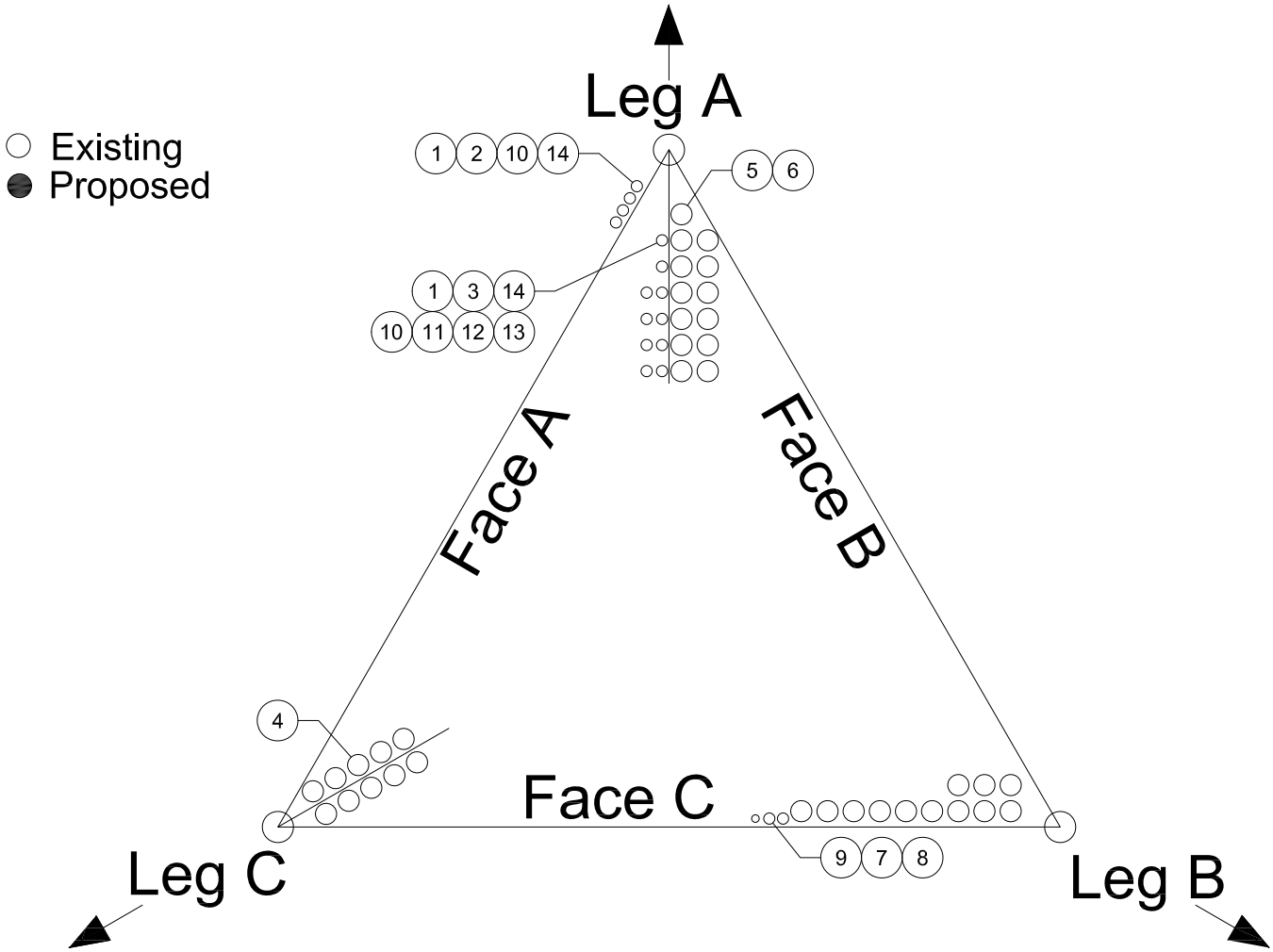

CT03241-S					
#	CARRIER	SIZE	QTY.	ELEVATION	NOTES
1	Stonington Police	7/8"	4	179'	
2	Stonington Police	7/8"	1	178'	
3	Stonington Police	7/8"	2	165'	
4	Verizon	1-5/8"	12	150'	
5	T-Mobile	1-5/8"	9	140'	
6	T-Mobile	1-5/8"	4	140'	Fiber
7	AT&T	1-5/8"	12	120'	
8	AT&T	3/4"	2	120'	DC Power
9	AT&T	1/2"	1	120'	Fiber
10	Stonington Police	7/8"	2	101'	
11	Stonington Police	7/8"	1	90'	
12	Stonington Police	7/8"	1	63'	
13	Stonington Police	7/8"	1	51'	
14	Stonington Police	7/8"	2	42'	

Tower Input Data

The main tower is a 3x free standing tower with an overall height of 180.00 ft above the ground line.
The base of the tower is set at an elevation of 0.00 ft above the ground line.
The face width of the tower is 4.00 ft at the top and 18.00 ft at the base.
This tower is designed using the TIA-222-H standard.
The following design criteria apply:

Tower is located in New London County, Connecticut.
Tower base elevation above sea level: 39.04 ft.
Basic wind speed of 137 mph.
Risk Category III.
Exposure Category C.
Simplified Topographic Factor Procedure for wind speed-up calculations is used.
Topographic Category: 1.
Crest Height: 0.00 ft.
Nominal ice thickness of 1.0000 in.
Ice thickness is considered to increase with height.
Ice density of 56 pcf.
A wind speed of 50 mph is used in combination with ice.
Temperature drop of 50 °F.
Deflections calculated using a wind speed of 60 mph.
Pressures are calculated at each section.
Stress ratio used in tower member design is 1.
Local bending stresses due to climbing loads, feed line supports, and appurtenance mounts are not considered.

Options

Consider Moments - Legs
Consider Moments - Horizontals
Consider Moments - Diagonals
Use Moment Magnification
√ Use Code Stress Ratios
√ Use Code Safety Factors - Guys
Escalate Ice
Always Use Max Kz
Use Special Wind Profile
√ Include Bolts In Member Capacity
Leg Bolts Are At Top Of Section
√ Secondary Horizontal Braces Leg
Use Diamond Inner Bracing (4 Sided)
SR Members Have Cut Ends
SR Members Are Concentric

Distribute Leg Loads As Uniform
Assume Legs Pinned
√ Assume Rigid Index Plate
√ Use Clear Spans For Wind Area
√ Use Clear Spans For KL/r
Retension Guys To Initial Tension
√ Bypass Mast Stability Checks
√ Use Azimuth Dish Coefficients
√ Project Wind Area of Appurt.
Autocalc Torque Arm Areas
Add IBC .6D+W Combination
√ Sort Capacity Reports By Component
√ Triangulate Diamond Inner Bracing
Treat Feed Line Bundles As Cylinder
Ignore KL/ry For 60 Deg. Angle Legs

Use ASCE 10 X-Brace Ly Rules
√ Calculate Redundant Bracing Forces
Ignore Redundant Members in FEA
SR Leg Bolts Resist Compression
All Leg Panels Have Same Allowable
Offset Girt At Foundation
√ Consider Feed Line Torque
√ Include Angle Block Shear Check
Use TIA-222-H Bracing Resist. Exemption
Use TIA-222-H Tension Splice Exemption

Poles

Include Shear-Torsion Interaction
Always Use Sub-Critical Flow
Use Top Mounted Sockets
Pole Without Linear Attachments
Pole With Shroud Or No Appurtenances
Outside and Inside Corner Radii Are Known

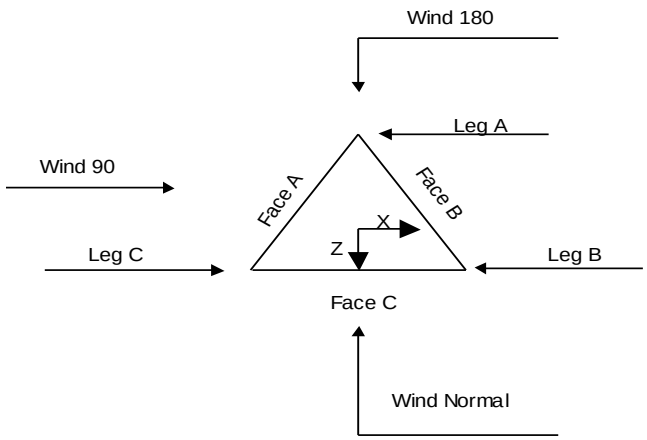

Triangular Tower

Tower Section Geometry

Tower Section	Tower Elevation ft	Assembly Database	Description	Section Width ft	Number of Sections	Section Length ft
T1	180.00-170.00		#48 1.50"Lx0.750"D (106778-RAO)	4.00	1	10.00
T2	170.00-150.00	aa-pirod	#54/48 1.50"Lx0.750"D (100316)	4.00	1	20.00
T3	150.00-130.00	aa-pirod	#60/54 2.00"Lx1.000"DTrans(114529)	4.50	1	20.00
T4	130.00-120.00		U- 6,12Z,1.00"D x 10'	5.00	1	10.00
T5	120.00-100.00		U- 8,12Z,1.00"D x 20'	6.00	1	20.00
T6	100.00-80.00		U-10,12Z,1.00"D x 20'	8.00	1	20.00
T7	80.00-60.00		U-12,12Z,1.25"D x 20'	10.00	1	20.00
T8	60.00-40.00		U-14,12Z,1.25"D x 20'	12.00	1	20.00
T9	40.00-20.00		U-16,12Z,1.25"D x 20'	14.00	1	20.00
T10	20.00-0.00		U-18,12Z,1.25"D x 20'	16.00	1	20.00

Tower Section Geometry *(cont'd)*

Tower Section	Tower Elevation ft	Diagonal Spacing ft	Bracing Type	Has K Brace End Panels	Has Horizontals	Top Girt Offset in	Bottom Girt Offset in
T1	180.00-170.00	2.26	X Brace	No	Steps	9.0000	2.5000
T2	170.00-150.00	2.42	X Brace	No	Steps	5.5000	2.5000

Tower Section	Tower Elevation ft	Diagonal Spacing ft	Bracing Type	Has K Brace End Panels	Has Horizontals	Top Girt Offset in	Bottom Girt Offset in
T3	150.00-130.00	2.38	X Brace	No	Steps	9.5000	2.5000
T4	130.00-120.00	10.00	X Brace	No	No	0.0000	0.0000
T5	120.00-100.00	10.00	X Brace	No	No	0.0000	0.0000
T6	100.00-80.00	10.00	X Brace	No	No	0.0000	0.0000
T7	80.00-60.00	10.00	X Brace	No	No	0.0000	0.0000
T8	60.00-40.00	10.00	X Brace	No	No	0.0000	0.0000
T9	40.00-20.00	10.00	X Brace	No	No	0.0000	0.0000
T10	20.00-0.00	10.00	X Brace	No	No	0.0000	0.0000

Tower Section Geometry *(cont'd)*

Tower Elevation ft	Leg Type	Leg Size	Leg Grade	Diagonal Type	Diagonal Size	Diagonal Grade
T1 180.00-170.00	Solid Round	1 1/2	A572-50 (50 ksi)	Solid Round	3/4	A572-50 (50 ksi)
T2 170.00-150.00	Solid Round	1 1/2	A572-50 (50 ksi)	Solid Round	3/4	A572-50 (50 ksi)
T3 150.00-130.00	Solid Round	2	A572-50 (50 ksi)	Solid Round	1	A572-50 (50 ksi)
T4 130.00-120.00	Truss Leg	#12 - 1.25" - 1.00" conn. (Pirod 105244)	A572-50 (50 ksi)	Equal Angle	L2 1/2x2 1/2x3/16	A36 (36 ksi)
T5 120.00-100.00	Truss Leg	#12 - 1.50" - 1.00" conn. (Pirod 105217)	A572-50 (50 ksi)	Equal Angle	L3x3x3/16	A36 (36 ksi)
T6 100.00-80.00	Truss Leg	#12 - 1.75" - 1.25" conn. (Pirod 105218)	A572-50 (50 ksi)	Equal Angle	L3x3x3/16	A36 (36 ksi)
T7 80.00-60.00	Truss Leg	#12 - 2.00" - 1.25" conn. (Pirod 105219)	A572-50 (50 ksi)	Equal Angle	L3x3x5/16	A36 (36 ksi)
T8 60.00-40.00	Truss Leg	#12 - 2.00" - 1.25" conn. (Pirod 105219)	A572-50 (50 ksi)	Equal Angle	L3x3x5/16	A36 (36 ksi)
T9 40.00-20.00	Truss Leg	#12 - 2.25" - 1.25" conn. (Pirod 105220)	A572-50 (50 ksi)	Equal Angle	L3 1/2x3 1/2x5/16	A36 (36 ksi)
T10 20.00-0.00	Truss Leg	#12 - 2.25" - 1.25" conn. (Pirod 105220)	A572-50 (50 ksi)	Equal Angle	L3 1/2x3 1/2x5/16	A36 (36 ksi)

Tower Section Geometry *(cont'd)*

Tower Elevation ft	Top Girt Type	Top Girt Size	Top Girt Grade	Bottom Girt Type	Bottom Girt Size	Bottom Girt Grade
T1 180.00-170.00	Solid Round	7/8	A572-50 (50 ksi)	Solid Round	7/8	A572-50 (50 ksi)
T2 170.00-150.00	Solid Round	7/8	A572-50 (50 ksi)	Solid Round	7/8	A572-50 (50 ksi)
T3 150.00-130.00	Solid Round	1	A572-50 (50 ksi)	Solid Round	1	A572-50 (50 ksi)

Tower Section Geometry *(cont'd)*

Tower Elevation ft	No. of Mid Girts	Mid Girt Type	Mid Girt Size	Mid Girt Grade	Horizontal Type	Horizontal Size	Horizontal Grade
T1 180.00-170.00	None	Solid Round		A572-50 (50 ksi)	Solid Round	3/4	A572-50 (50 ksi)
T2 170.00-150.00	None	Solid Round		A572-50 (50 ksi)	Solid Round	7/8	A572-50 (50 ksi)
T3 150.00-130.00	1	Solid Round	1	A572-50 (50 ksi)	Solid Round	7/8	A572-50 (50 ksi)

Tower Section Geometry *(cont'd)*

Tower Elevation ft	Gusset Area (per face) ft^2	Gusset Thickness in	Gusset Grade	Adjust. Factor A_f	Adjust. Factor A_r	Weight Mult.	Double Angle Stitch Bolt Spacing Diagonals in	Double Angle Stitch Bolt Spacing Horizontals in	Double Angle Stitch Bolt Spacing Redundants in
T1 180.00-170.00	0.00	0.0000	A36 (36 ksi)	1	1	1.05	36.0000	36.0000	36.0000
T2 170.00-150.00	0.00	0.0000	A36 (36 ksi)	1	1	1.05	36.0000	36.0000	36.0000
T3 150.00-130.00	0.00	0.0000	A36 (36 ksi)	1	1	1.05	36.0000	36.0000	36.0000
T4 130.00-120.00	0.00	0.5000	A36 (36 ksi)	1	1	1.05	36.0000	36.0000	36.0000
T5 120.00-100.00	0.00	0.5000	A36 (36 ksi)	1	1	1.05	36.0000	36.0000	36.0000
T6 100.00-80.00	0.00	0.5000	A36 (36 ksi)	1	1	1.05	36.0000	36.0000	36.0000
T7 80.00-60.00	0.00	0.5000	A36 (36 ksi)	1	1	1.05	36.0000	36.0000	36.0000
T8 60.00-40.00	0.00	0.5000	A36 (36 ksi)	1	1	1.05	36.0000	36.0000	36.0000
T9 40.00-20.00	0.00	0.5000	A36 (36 ksi)	1	1	1.05	36.0000	36.0000	36.0000
T10 20.00-0.00	0.00	0.5000	A36 (36 ksi)	1	1	1.05	36.0000	36.0000	36.0000

Tower Section Geometry *(cont'd)*

Tower Elevation ft	Calc K Single Angles	Calc K Solid Rounds	K Factors[1] Legs	X Brace Diags X Y	K Brace Diags X Y	Single Diags X Y	Girts X Y	Horiz. X Y	Sec. Horiz. X Y	Inner Brace X Y
T1	No	Yes	1	1	1	1	1	1	1	1
180.00-170.00				1	1	1	1	1	1	1
T2	No	No	1	1	1	1	1	1	1	1
170.00-150.00				1	1	1	1	1	1	1
T3	No	No	1	1	1	1	1	1	1	1
150.00-130.00				1	1	1	1	1	1	1
T4	Yes	No	1	1	1	1	1	1	1	1

Tower Elevation ft	Calc K Single Angles	Calc K Solid Rounds	K Factors[1] Legs	X Brace Diags X Y	K Brace Diags X Y	Single Diags X Y	Girts X Y	Horiz. X Y	Sec. Horiz. X Y	Inner Brace X Y
130.00-120.00				1	1	1	1	1	1	1
T5	Yes	No	1	1	1	1	1	1	1	1
120.00-100.00				1	1	1	1	1	1	1
T6	Yes	No	1	1	1	1	1	1	1	1
100.00-80.00				1	1	1	1	1	1	1
T7	Yes	No	1	1	1	1	1	1	1	1
80.00-60.00				1	1	1	1	1	1	1
T8	Yes	No	1	1	1	1	1	1	1	1
60.00-40.00				1	1	1	1	1	1	1
T9	Yes	No	1	1	1	1	1	1	1	1
40.00-20.00				1	1	1	1	1	1	1
T10	Yes	No	1	1	1	1	1	1	1	1
20.00-0.00				1	1	1	1	1	1	1

[1]*Note: K factors are applied to member segment lengths. K-braces without inner supporting members will have the K factor in the out-of-plane direction applied to the overall length.*

Tower Section Geometry *(cont'd)*

Tower Elevation ft	Truss-Leg K Factors: Truss-Legs Used As Leg Members: Leg Panels	X Brace Diagonals	Z Brace Diagonals	Truss-Legs Used As Inner Members: Leg Panels	X Brace Diagonals	Z Brace Diagonals
T4 130.00-120.00	1	0.5	0.7	1	0.5	0.7
T5 120.00-100.00	1	0.5	0.7	1	0.5	0.7
T6 100.00-80.00	1	0.5	0.7	1	0.5	0.7
T7 80.00-60.00	1	0.5	0.7	1	0.5	0.7
T8 60.00-40.00	1	0.5	0.7	1	0.5	0.7
T9 40.00-20.00	1	0.5	0.7	1	0.5	0.7
T10 20.00-0.00	1	0.5	0.7	1	0.5	0.7

Tower Section Geometry *(cont'd)*

Tower Elevation ft	Leg Net Width Deduct in	Leg U	Diagonal Net Width Deduct in	Diagonal U	Top Girt Net Width Deduct in	Top Girt U	Bottom Girt Net Width Deduct in	Bottom Girt U	Mid Girt Net Width Deduct in	Mid Girt U	Long Horizontal Net Width Deduct in	Long Horizontal U	Short Horizontal Net Width Deduct in	Short Horizontal U
T1 180.00-170.00	0.0000	1	0.0000	0.75	0.0000	0.75	0.0000	0.75	0.0000	0.75	0.0000	0.75	0.0000	0.75

Tower Elevation ft	Leg		Diagonal		Top Girt		Bottom Girt		Mid Girt		Long Horizontal		Short Horizontal	
	Net Width Deduct in	U	Net Width Deduct in	U	Net Width Deduct in	U	Net Width Deduct in	U	Net Width Deduct in	U	Net Width Deduct in	U	Net Width Deduct in	U
T2 170.00-150.00	0.0000	1	0.0000	1	0.0000	1	0.0000	1	0.0000	1	0.0000	1	0.0000	1
T3 150.00-130.00	0.0000	1	0.0000	1	0.0000	1	0.0000	1	0.0000	1	0.0000	1	0.0000	1
T4 130.00-120.00	0.0000	1	0.0000	0.75	0.0000	0.75	0.0000	0.75	0.0000	0.75	0.0000	0.75	0.0000	0.75
T5 120.00-100.00	0.0000	1	0.0000	0.75	0.0000	0.75	0.0000	0.75	0.0000	0.75	0.0000	0.75	0.0000	0.75
T6 100.00-80.00	0.0000	1	0.0000	0.75	0.0000	0.75	0.0000	0.75	0.0000	0.75	0.0000	0.75	0.0000	0.75
T7 80.00-60.00	0.0000	1	0.0000	0.75	0.0000	0.75	0.0000	0.75	0.0000	0.75	0.0000	0.75	0.0000	0.75
T8 60.00-40.00	0.0000	1	0.0000	0.75	0.0000	0.75	0.0000	0.75	0.0000	0.75	0.0000	0.75	0.0000	0.75
T9 40.00-20.00	0.0000	1	0.0000	0.75	0.0000	0.75	0.0000	0.75	0.0000	0.75	0.0000	0.75	0.0000	0.75
T10 20.00-0.00	0.0000	1	0.0000	0.75	0.0000	0.75	0.0000	0.75	0.0000	0.75	0.0000	0.75	0.0000	0.75

Tower Section Geometry *(cont'd)*

Tower Elevation	Connection Offsets							
	Diagonal				K-Bracing			
	Vert. Top	Horiz. Top	Vert. Bot.	Horiz. Bot.	Vert. Top	Horiz. Top	Vert. Bot.	Horiz. Bot.
ft	in	in	in	in	in	in	in	in
T1 180.00-170.00	0.0000	0.0000	0.0000	0.0000	0.0000	0.0000	0.0000	0.0000
T2 170.00-150.00	0.0000	0.0000	0.0000	0.0000	0.0000	0.0000	0.0000	0.0000
T3 150.00-130.00	0.0000	0.0000	0.0000	0.0000	0.0000	0.0000	0.0000	0.0000
T4 130.00-120.00	5.0000	10.7500	5.0000	10.7500	0.0000	0.0000	0.0000	0.0000
T5 120.00-100.00	5.0000	10.7500	5.0000	10.7500	0.0000	0.0000	0.0000	0.0000
T6 100.00-80.00	5.0000	10.7500	5.0000	10.7500	0.0000	0.0000	0.0000	0.0000
T7 80.00-60.00	5.0000	12.2500	5.0000	12.2500	0.0000	0.0000	0.0000	0.0000
T8 60.00-40.00	5.0000	12.2500	5.0000	12.2500	0.0000	0.0000	0.0000	0.0000
T9 40.00-20.00	5.0000	12.2500	5.0000	12.2500	0.0000	0.0000	0.0000	0.0000
T10 20.00-0.00	5.0000	12.2500	5.0000	12.2500	0.0000	0.0000	0.0000	0.0000

Tower Section Geometry *(cont'd)*

Tower Elevation ft	Leg Connection Type	Leg Bolt Size in	Leg No.	Diagonal Bolt Size in	Diagonal No.	Top Girt Bolt Size in	Top Girt No.	Bottom Girt Bolt Size in	Bottom Girt No.	Mid Girt Bolt Size in	Mid Girt No.	Long Horizontal Bolt Size in	Long Horizontal No.	Short Horizontal Bolt Size in	Short Horizontal No.
T1 180.00-170.00	Sleeve DS	0.5625 A325N	3	0.6250 A325N	0	0.6250 A325N	0	0.6250 A325N	0	0.6250 A325N	0	0.6250 A325N	0	0.6250 A325N	0
T2 170.00-150.00	Sleeve DS	0.5625 A325X	3	0.6250 A325X	0	0.6250 A325X	0	0.6250 A325X	0	0.6250 A325X	0	0.6250 A325X	0	0.6250 A325X	0
T3 150.00-130.00	Flange	1.0000 A325X	6	0.6250 A325X	0	0.6250 A325X	0	0.6250 A325X	0	0.6250 A325X	0	0.6250 A325X	0	0.6250 A325X	0
T4 130.00-120.00	Flange	1.0000 A325N	6	1.0000 A325N	1	1.0000 A325N	0	1.0000 A325N	0	1.0000 A325N	0	1.0000 A325N	0	1.0000 A325N	0
T5 120.00-100.00	Flange	1.0000 A325N	6	1.0000 A325N	1	1.0000 A325N	0	1.0000 A325N	0	1.0000 A325N	0	1.0000 A325N	0	1.0000 A325N	0
T6 100.00-80.00	Flange	1.0000 A325N	6	1.0000 A325N	1	1.0000 A325N	0	1.0000 A325N	0	1.0000 A325N	0	1.0000 A325N	0	1.0000 A325N	0
T7 80.00-60.00	Flange	1.2500 A325N	6	1.2500 A325N	1	1.0000 A325N	0	1.0000 A325N	0	1.0000 A325N	0	1.0000 A325N	0	1.0000 A325N	0
T8 60.00-40.00	Flange	1.2500 A325N	6	1.2500 A325N	1	1.0000 A325N	0	1.0000 A325N	0	1.0000 A325N	0	1.0000 A325N	0	1.0000 A325N	0
T9 40.00-20.00	Flange	1.2500 A325N	6	1.2500 A325N	1	1.0000 A325N	0	1.0000 A325N	0	1.0000 A325N	0	1.0000 A325N	0	1.0000 A325N	0
T10 20.00-0.00	Flange	1.2500 A687	6	1.2500 A325N	1	1.0000 A325N	0	1.0000 A325N	0	1.0000 A325N	0	1.0000 A325N	0	1.0000 A325N	0

Feed Line/Linear Appurtenances - Entered As Round Or Flat

Description	Face or Leg	Allow Shield	Exclude From Torque Calculation	Component Type	Placement ft	Face Offset in	Lateral Offset (Frac FW)	#	# Per Row	Clear Spacing in	Width or Diameter in	Perimeter in	Weight plf
********													
7/8	A	No	No	Ar (CaAa)	180.00 - 165.00	-6.0000	0.45	3	3	0.5000	1.1100		0.54
7/8	A	No	No	Ar (CaAa)	165.00 - 101.00	-6.0000	0.45	4	4	0.5000	1.1100		0.54
7/8	A	No	No	Ar (CaAa)	101.00 - 90.00	-6.0000	0.45	6	6	0.5000	1.1100		0.54
7/8	A	No	No	Ar (CaAa)	90.00 - 63.00	-6.0000	0.45	7	7	0.5000	1.1100		0.54
7/8	A	No	No	Ar (CaAa)	63.00 - 51.00	-6.0000	0.45	8	8	0.5000	1.1100		0.54
7/8	A	No	No	Ar (CaAa)	51.00 - 43.00	-6.0000	0.45	9	9	0.5000	1.1100		0.54
7/8	A	No	No	Ar (CaAa)	43.00 - 5.00	-6.0000	0.45	10	10	0.5000	1.1100		0.54
***													
7/8	A	No	No	Ar (CaAa)	42.00 - 5.00	0.0000	0.45	4	4	0.5000	1.1100		0.54
7/8	A	No	No	Ar (CaAa)	101.00 - 42.00	0.0000	0.45	3	3	0.5000	1.1100		0.54
7/8	A	No	No	Ar (CaAa)	180.00 - 101.00	0.0000	0.45	2	2	0.5000	1.1100		0.54
***													
Feedline Ladder	C	No	No	Af (CaAa)	150.00 - 5.00	-6.0000	0.45	1	1	0.5000	0.5000		6.00
1 5/8 Coax	C	No	No	Ar (CaAa)	150.00 - 5.00	-6.0000	0.45	12	6	0.5000	1.9800		1.04
***													
Feedline	B	No	No	Af (CaAa)	140.00 -	-6.0000	-0.45	1	1	0.5000	0.5000		6.00

Description	Face or Leg	Allow Shield	Exclude From Torque Calculation	Component Type	Placement ft	Face Offset in	Lateral Offset (Frac FW)	#	# Per Row	Clear Spacing in	Width or Diameter in	Perimeter in	Weight plf
Ladder					5.00								
1 5/8 (9 coax and 4 fiber) ***	B	No	No	Ar (CaAa)	140.00 - 5.00	-6.0000	-0.45	13	7	0.5000	1.9800		0.82
Feedline Ladder	C	No	No	Af (CaAa)	120.00 - 5.00	0.0000	-0.15	1	1	0.5000	0.5000		6.00
1 5/8	C	No	No	Ar (CaAa)	120.00 - 5.00	0.0000	-0.15	12	9	0.5000	1.9800		1.04
1/2" Fiber	C	No	No	Ar (CaAa)	120.00 - 5.00	0.0000	-0.08	1	1	0.4200 0.5000	0.4200		0.08
3/4" DC Cable	C	No	No	Ar (CaAa)	120.00 - 5.00	0.0000	-0.08	2	2	0.5000	1.1100		0.54

Feed Line/Linear Appurtenances Section Areas

Tower Section	Tower Elevation ft	Face	A_R ft^2	A_F ft^2	C_AA_A In Face ft^2	C_AA_A Out Face ft^2	Weight K
T1	180.00-170.00	A	0.000	0.000	5.550	0.000	0.03
		B	0.000	0.000	0.000	0.000	0.00
		C	0.000	0.000	0.000	0.000	0.00
T2	170.00-150.00	A	0.000	0.000	12.765	0.000	0.06
		B	0.000	0.000	0.000	0.000	0.00
		C	0.000	0.000	0.000	0.000	0.00
T3	150.00-130.00	A	0.000	0.000	13.320	0.000	0.06
		B	0.000	0.000	26.573	0.000	0.17
		C	0.000	0.000	49.187	0.000	0.37
T4	130.00-120.00	A	0.000	0.000	6.660	0.000	0.03
		B	0.000	0.000	26.573	0.000	0.17
		C	0.000	0.000	24.593	0.000	0.18
T5	120.00-100.00	A	0.000	0.000	13.653	0.000	0.07
		B	0.000	0.000	53.147	0.000	0.33
		C	0.000	0.000	103.653	0.000	0.76
T6	100.00-80.00	A	0.000	0.000	21.090	0.000	0.10
		B	0.000	0.000	53.147	0.000	0.33
		C	0.000	0.000	103.653	0.000	0.76
T7	80.00-60.00	A	0.000	0.000	22.533	0.000	0.11
		B	0.000	0.000	53.147	0.000	0.33
		C	0.000	0.000	103.653	0.000	0.76
T8	60.00-40.00	A	0.000	0.000	26.196	0.000	0.13
		B	0.000	0.000	53.147	0.000	0.33
		C	0.000	0.000	103.653	0.000	0.76
T9	40.00-20.00	A	0.000	0.000	31.080	0.000	0.15
		B	0.000	0.000	53.147	0.000	0.33
		C	0.000	0.000	103.653	0.000	0.76
T10	20.00-0.00	A	0.000	0.000	23.310	0.000	0.11
		B	0.000	0.000	39.860	0.000	0.25
		C	0.000	0.000	77.740	0.000	0.57

Feed Line/Linear Appurtenances Section Areas - With Ice

Tower Section	Tower Elevation ft	Face or Leg	Ice Thickness in	A_R ft^2	A_F ft^2	C_AA_A In Face ft^2	C_AA_A Out Face ft^2	Weight K
T1	180.00-170.00	A	1.359	0.000	0.000	18.337	0.000	0.17
		B		0.000	0.000	0.000	0.000	0.00
		C		0.000	0.000	0.000	0.000	0.00
T2	170.00-150.00	A	1.347	0.000	0.000	39.220	0.000	0.37
		B		0.000	0.000	0.000	0.000	0.00
		C		0.000	0.000	0.000	0.000	0.00
T3	150.00-130.00	A	1.329	0.000	0.000	39.882	0.000	0.38
		B		0.000	0.000	29.460	0.000	0.54
		C		0.000	0.000	53.143	0.000	1.06
T4	130.00-120.00	A	1.314	0.000	0.000	19.840	0.000	0.19
		B		0.000	0.000	29.382	0.000	0.54
		C		0.000	0.000	26.493	0.000	0.53
T5	120.00-100.00	A	1.297	0.000	0.000	40.003	0.000	0.38
		B		0.000	0.000	58.590	0.000	1.06
		C		0.000	0.000	145.421	0.000	2.39
T6	100.00-80.00	A	1.271	0.000	0.000	52.038	0.000	0.54
		B		0.000	0.000	58.322	0.000	1.05
		C		0.000	0.000	144.604	0.000	2.36
T7	80.00-60.00	A	1.240	0.000	0.000	54.148	0.000	0.56
		B		0.000	0.000	57.993	0.000	1.04
		C		0.000	0.000	143.605	0.000	2.33
T8	60.00-40.00	A	1.199	0.000	0.000	60.054	0.000	0.62
		B		0.000	0.000	57.567	0.000	1.02
		C		0.000	0.000	142.306	0.000	2.28
T9	40.00-20.00	A	1.139	0.000	0.000	67.714	0.000	0.70
		B		0.000	0.000	56.947	0.000	0.99
		C		0.000	0.000	140.418	0.000	2.21
T10	20.00-0.00	A	1.021	0.000	0.000	49.690	0.000	0.48
		B		0.000	0.000	41.789	0.000	0.70
		C		0.000	0.000	102.506	0.000	1.56

Feed Line Center of Pressure

Section	Elevation ft	CP_X in	CP_Z in	CP_X Ice in	CP_Z Ice in
T1	180.00-170.00	-0.1791	-3.1835	-0.1479	-2.6693
T2	170.00-150.00	-0.1807	-3.2673	-0.1606	-2.9474
T3	150.00-130.00	-10.6456	-6.6992	-6.8052	-4.3640
T4	130.00-120.00	-7.8420	-8.4413	-4.5761	-4.9327
T5	120.00-100.00	-3.8224	-6.7043	-2.3642	-3.0754
T6	100.00-80.00	-4.4160	-8.5116	-2.9700	-5.1024
T7	80.00-60.00	-5.1112	-10.0451	-3.6916	-6.6264
T8	60.00-40.00	-5.7398	-11.5073	-4.1467	-7.6109
T9	40.00-20.00	-6.0038	-12.8139	-4.4539	-8.1660
T10	20.00-0.00	-5.3415	-11.1713	-3.9565	-7.4025

Shielding Factor Ka

Tower Section	Feed Line Record No.	Description	Feed Line Segment Elev.	K_a No Ice	K_a Ice

Tower Section	Feed Line Record No.	Description	Feed Line Segment Elev.	K_a No Ice	K_a Ice
T1	2	7/8	170.00 - 180.00	0.0000	0.0000
T1	12	7/8	170.00 - 180.00	0.6000	0.5487
T2	2	7/8	165.00 - 170.00	0.0000	0.0000
T2	3	7/8	150.00 - 165.00	0.0000	0.0000
T2	12	7/8	150.00 - 170.00	0.6000	0.5844
T3	3	7/8	130.00 - 150.00	0.0000	0.0000
T3	12	7/8	130.00 - 150.00	0.6000	0.5645
T3	14	Feedline Ladder	130.00 - 150.00	0.6000	0.5645
T3	15	1 5/8 Coax	130.00 - 150.00	0.6000	0.5645
T3	17	Feedline Ladder	130.00 - 140.00	0.6000	0.5645
T3	18	1 5/8 (9 coax and 4 fiber)	130.00 - 140.00	0.6000	0.5645
T4	3	7/8	120.00 - 130.00	0.0000	0.0000
T4	12	7/8	120.00 - 130.00	0.6000	0.4223
T4	14	Feedline Ladder	120.00 - 130.00	0.6000	0.4223
T4	15	1 5/8 Coax	120.00 - 130.00	0.6000	0.4223
T4	17	Feedline Ladder	120.00 - 130.00	0.6000	0.4223
T4	18	1 5/8 (9 coax and 4 fiber)	120.00 - 130.00	0.6000	0.4223
T5	3	7/8	101.00 - 120.00	0.0000	0.0000
T5	4	7/8	100.00 - 101.00	0.0000	0.0000
T5	11	7/8	100.00 - 101.00	0.6000	0.4847
T5	12	7/8	101.00 - 120.00	0.6000	0.4847
T5	14	Feedline Ladder	100.00 - 120.00	0.6000	0.4847
T5	15	1 5/8 Coax	100.00 - 120.00	0.6000	0.4847
T5	17	Feedline Ladder	100.00 - 120.00	0.6000	0.4847
T5	18	1 5/8 (9 coax and 4 fiber)	100.00 - 120.00	0.6000	0.4847
T5	20	Feedline Ladder	100.00 - 120.00	0.6000	0.4847
T5	21	1 5/8	100.00 - 120.00	0.6000	0.4847
T5	22	1/2" Fiber	100.00 - 120.00	0.6000	0.4847
T5	23	3/4" DC Cable	100.00 - 120.00	0.6000	0.4847
T6	4	7/8	90.00 - 100.00	0.0000	0.0000
T6	5	7/8	80.00 - 90.00	0.0000	0.0000
T6	11	7/8	80.00 - 100.00	0.6000	0.5474
T6	14	Feedline Ladder	80.00 - 100.00	0.6000	0.5474

Tower Section	Feed Line Record No.	Description	Feed Line Segment Elev.	K_a No Ice	K_a Ice
T6	15	1 5/8 Coax	80.00 - 100.00	0.6000	0.5474
T6	17	Feedline Ladder	80.00 - 100.00	0.6000	0.5474
T6	18	1 5/8 (9 coax and 4 fiber)	80.00 - 100.00	0.6000	0.5474
T6	20	Feedline Ladder	80.00 - 100.00	0.6000	0.5474
T6	21	1 5/8	80.00 - 100.00	0.6000	0.5474
T6	22	1/2" Fiber	80.00 - 100.00	0.6000	0.5474
T6	23	3/4" DC Cable	80.00 - 100.00	0.6000	0.5474
T7	5	7/8	63.00 - 80.00	0.0000	0.0000
T7	6	7/8	60.00 - 63.00	0.0000	0.0000
T7	11	7/8	60.00 - 80.00	0.6000	0.6000
T7	14	Feedline Ladder	60.00 - 80.00	0.6000	0.6000
T7	15	1 5/8 Coax	60.00 - 80.00	0.6000	0.6000
T7	17	Feedline Ladder	60.00 - 80.00	0.6000	0.6000
T7	18	1 5/8 (9 coax and 4 fiber)	60.00 - 80.00	0.6000	0.6000
T7	20	Feedline Ladder	60.00 - 80.00	0.6000	0.6000
T7	21	1 5/8	60.00 - 80.00	0.6000	0.6000
T7	22	1/2" Fiber	60.00 - 80.00	0.6000	0.6000
T7	23	3/4" DC Cable	60.00 - 80.00	0.6000	0.6000
T8	6	7/8	51.00 - 60.00	0.0000	0.0000
T8	7	7/8	43.00 - 51.00	0.0000	0.0000
T8	8	7/8	40.00 - 43.00	0.0000	0.0000
T8	10	7/8	40.00 - 42.00	0.6000	0.6000
T8	11	7/8	42.00 - 60.00	0.6000	0.6000
T8	14	Feedline Ladder	40.00 - 60.00	0.6000	0.6000
T8	15	1 5/8 Coax	40.00 - 60.00	0.6000	0.6000
T8	17	Feedline Ladder	40.00 - 60.00	0.6000	0.6000
T8	18	1 5/8 (9 coax and 4 fiber)	40.00 - 60.00	0.6000	0.6000
T8	20	Feedline Ladder	40.00 - 60.00	0.6000	0.6000
T8	21	1 5/8	40.00 - 60.00	0.6000	0.6000
T8	22	1/2" Fiber	40.00 - 60.00	0.6000	0.6000
T8	23	3/4" DC Cable	40.00 - 60.00	0.6000	0.6000
T9	8	7/8	20.00 - 40.00	0.0000	0.0000
T9	10	7/8	20.00 - 40.00	0.6000	0.6000
T9	14	Feedline Ladder	20.00 - 40.00	0.6000	0.6000
T9	15	1 5/8 Coax	20.00 - 40.00	0.6000	0.6000
T9	17	Feedline Ladder	20.00 - 40.00	0.6000	0.6000
T9	18	1 5/8 (9 coax and 4 fiber)	20.00 - 40.00	0.6000	0.6000
T9	20	Feedline Ladder	20.00 - 40.00	0.6000	0.6000
T9	21	1 5/8	20.00 - 40.00	0.6000	0.6000
T9	22	1/2" Fiber	20.00 - 40.00	0.6000	0.6000
T9	23	3/4" DC Cable	20.00 - 40.00	0.6000	0.6000
T10	8	7/8	5.00 - 20.00	0.0000	0.0000
T10	10	7/8	5.00 - 20.00	0.6000	0.6000
T10	14	Feedline Ladder	5.00 - 20.00	0.6000	0.6000
T10	15	1 5/8 Coax	5.00 - 20.00	0.6000	0.6000
T10	17	Feedline Ladder	5.00 - 20.00	0.6000	0.6000
T10	18	1 5/8 (9 coax and 4 fiber)	5.00 - 20.00	0.6000	0.6000
T10	20	Feedline Ladder	5.00 - 20.00	0.6000	0.6000
T10	21	1 5/8	5.00 - 20.00	0.6000	0.6000
T10	22	1/2" Fiber	5.00 - 20.00	0.6000	0.6000
T10	23	3/4" DC Cable	5.00 - 20.00	0.6000	0.6000

User Defined Loads - Seismic

Description	Elevation	Offset From Centroid	Azimuth Angle	E_v	E_{hx}	E_{hz}	E_h
	ft	ft	°	K	K	K	K
Seismic Load @180	180.00	0.00	0.0000	0.05	0.00	0.00	0.11
Seismic Load @170	170.00	0.00	0.0000	0.05	0.00	0.00	0.10
Seismic Load @150	150.00	0.00	0.0000	0.31	0.00	0.00	0.77
Seismic Load @130	130.00	0.00	0.0000	0.06	0.00	0.00	0.09
Seismic Load @120	120.00	0.00	0.0000	0.27	0.00	0.00	0.51
Seismic Load @100	100.00	0.00	0.0000	0.16	0.00	0.00	0.22
Seismic Load @80	80.00	0.00	0.0000	0.21	0.00	0.00	0.23
Seismic Load @60	60.00	0.00	0.0000	0.22	0.00	0.00	0.18
Seismic Load @40	40.00	0.00	0.0000	0.25	0.00	0.00	0.13
Seismic Load @20	20.00	0.00	0.0000	0.24	0.00	0.00	0.06

Discrete Tower Loads

Description	Face or Leg	Offset Type	Offsets: Horz Lateral Vert	Azimuth Adjustment	Placement		C_AA_A Front	C_AA_A Side	Weight
			ft ft ft	°	ft		ft^2	ft^2	K
Lightning Rod	C	From Leg	0.00	0.0000	180.00	No Ice	0.50	0.50	0.00
			0.00			1/2" Ice	1.00	1.00	0.00
			2.00			1" Ice	1.50	1.50	0.00
***									
PD220	B	From Face	10.00	0.0000	179.00	No Ice	3.08	3.08	0.02
			0.00			1/2" Ice	5.30	5.30	0.05
			11.00			1" Ice	7.54	7.54	0.09
PD220	A	From Face	10.00	0.0000	179.00	No Ice	3.08	3.08	0.02
			0.00			1/2" Ice	5.30	5.30	0.05
			11.00			1" Ice	7.54	7.54	0.09
PD1142	C	From Face	10.00	0.0000	179.00	No Ice	1.32	1.32	0.01
			0.00			1/2" Ice	3.21	3.21	0.02
			10.30			1" Ice	5.12	5.12	0.05
Yagi	C	From Face	6.00	0.0000	180.00	No Ice	3.36	1.00	0.03
			0.00			1/2" Ice	4.20	1.25	0.04
			0.00			1" Ice	5.04	1.50	0.04
10' dipole	B	From Face	10.00	0.0000	179.00	No Ice	3.00	3.00	0.02
			0.00			1/2" Ice	4.03	4.03	0.04
			-5.00			1" Ice	5.03	5.03	0.07
(3) 10 ft face mounted side arm	C	None		0.0000	179.00	No Ice	64.90	64.90	0.57
						1/2" Ice	85.95	85.95	0.86
						1" Ice	107.00	107.00	1.16
***									
2' x 1' Panel	B	From Leg	0.00	0.0000	178.00	No Ice	2.80	2.80	0.03
			0.00			1/2" Ice	3.16	3.16	0.04
			0.00			1" Ice	3.52	3.52	0.06
***									
DB212	C	From Leg	6.00	0.0000	165.00	No Ice	6.50	6.50	0.03
			0.00			1/2" Ice	8.13	8.13	0.07
			8.00			1" Ice	9.75	9.75	0.13
DB212	B	From Leg	6.00	0.0000	165.00	No Ice	6.50	6.50	0.03
			0.00			1/2" Ice	8.13	8.13	0.07
			8.00			1" Ice	9.75	9.75	0.13
6' Standoff	C	From Leg	0.00	0.0000	165.00	No Ice	2.24	5.32	0.12
			0.00			1/2" Ice	3.19	7.69	0.16

Description	Face or Leg	Offset Type	Offsets: Horz Lateral Vert ft ft ft	Azimuth Adjustment °	Placement ft		C_AA_A Front ft^2	C_AA_A Side ft^2	Weight K
			0.00			1" Ice	4.14	10.06	0.20
6' Standoff	B	From Leg	0.00	0.0000	165.00	No Ice	2.24	5.32	0.12
			0.00			1/2" Ice	3.19	7.69	0.16
			0.00			1" Ice	4.14	10.06	0.20
***									
(2) DB844H90-XY (48" x 6" x 8.5") w/ mount pipe	A	From Leg	3.00	0.0000	150.00	No Ice	3.82	5.70	0.04
			0.00			1/2" Ice	4.53	6.81	0.08
			0.00			1" Ice	5.24	7.92	0.12
(2) DB844H90-XY (48" x 6" x 8.5") w/ mount pipe	B	From Leg	3.00	0.0000	150.00	No Ice	3.82	5.70	0.04
			0.00			1/2" Ice	4.53	6.81	0.08
			0.00			1" Ice	5.24	7.92	0.12
(2) DB844H90-XY (48" x 6" x 8.5") w/ mount pipe	C	From Leg	3.00	0.0000	150.00	No Ice	3.82	5.70	0.04
			0.00			1/2" Ice	4.53	6.81	0.08
			0.00			1" Ice	5.24	7.92	0.12
MX06FRO660-03 (71.1" x 15.4" x 10.7") w/ mount pipe	A	From Leg	3.00	0.0000	150.00	No Ice	10.33	9.21	0.09
			0.00			1/2" Ice	11.02	10.46	0.17
			0.00			1" Ice	11.70	11.72	0.26
MX06FRO660-03 (71.1" x 15.4" x 10.7") w/ mount pipe	B	From Leg	3.00	0.0000	150.00	No Ice	10.33	9.21	0.09
			0.00			1/2" Ice	11.01	10.46	0.17
			0.00			1" Ice	11.70	11.71	0.26
MX06FRO660-03 (71.1" x 15.4" x 10.7") w/ mount pipe	C	From Leg	3.00	0.0000	150.00	No Ice	10.33	9.21	0.09
			0.00			1/2" Ice	11.01	10.46	0.17
			0.00			1" Ice	11.70	11.71	0.26
CBC426T-DS-43 (6" x 4.8" x 3.4")	A	From Leg	3.00	0.0000	150.00	No Ice	0.24	0.17	0.01
			0.00			1/2" Ice	0.30	0.22	0.01
			0.00			1" Ice	0.35	0.27	0.01
CBC426T-DS-43 (6" x 4.8" x 3.4")	B	From Leg	3.00	0.0000	150.00	No Ice	0.24	0.17	0.01
			0.00			1/2" Ice	0.30	0.22	0.01
			0.00			1" Ice	0.35	0.27	0.01
CBC426T-DS-43 (6" x 4.8" x 3.4")	C	From Leg	3.00	0.0000	150.00	No Ice	0.24	0.17	0.01
			0.00			1/2" Ice	0.30	0.22	0.01
			0.00			1" Ice	0.35	0.27	0.01
CBC1923T-DS-43 (6.9" x 5.5" x 4")	A	From Leg	3.00	0.0000	150.00	No Ice	0.32	0.23	0.01
			0.00			1/2" Ice	0.38	0.29	0.01
			0.00			1" Ice	0.45	0.35	0.01
CBC1923T-DS-43 (6.9" x 5.5" x 4")	B	From Leg	3.00	0.0000	150.00	No Ice	0.32	0.23	0.01
			0.00			1/2" Ice	0.38	0.29	0.01
			0.00			1" Ice	0.45	0.35	0.01
CBC1923T-DS-43 (6.9" x 5.5" x 4")	C	From Leg	3.00	0.0000	150.00	No Ice	0.32	0.23	0.01
			0.00			1/2" Ice	0.38	0.29	0.01
			0.00			1" Ice	0.45	0.35	0.01
15' Pirod Universal T-Frame	A	From Leg	1.50	0.0000	150.00	No Ice	15.00	15.00	0.50
			0.00			1/2" Ice	18.75	18.75	0.63
			0.00			1" Ice	22.50	22.50	0.75
15' Pirod Universal T-Frame	B	From Leg	1.50	0.0000	150.00	No Ice	15.00	15.00	0.50
			0.00			1/2" Ice	18.75	18.75	0.63
			0.00			1" Ice	22.50	22.50	0.75
15' Pirod Universal T-Frame	C	From Leg	1.50	0.0000	150.00	No Ice	15.00	15.00	0.50
			0.00			1/2" Ice	18.75	18.75	0.63
			0.00			1" Ice	22.50	22.50	0.75
***									
Air 21 B2A/B4P (55.9" x 12" x 7.8") w/ mount pipe	A	From Leg	3.00	0.0000	140.00	No Ice	6.83	6.16	0.12
			0.00			1/2" Ice	7.54	7.31	0.18
			0.00			1" Ice	8.25	8.47	0.23
Air 21 B2A/B4P (55.9" x 12" x 7.8") w/ mount pipe	B	From Leg	3.00	0.0000	140.00	No Ice	6.83	6.16	0.12
			0.00			1/2" Ice	7.54	7.31	0.18
			0.00			1" Ice	8.25	8.47	0.23

Description	Face or Leg	Offset Type	Offsets: Horz Lateral Vert ft ft ft	Azimuth Adjustment °	Placement ft		C_AA_A Front ft^2	C_AA_A Side ft^2	Weight K
Air 21 B2A/B4P (55.9" x 12" x 7.8") w/ mount pipe	C	From Leg	3.00 0.00 0.00	0.0000	140.00	No Ice 1/2" Ice 1" Ice	6.83 7.54 8.25	6.16 7.31 8.47	0.12 0.18 0.23
Air 21 B4A/B2P (55.9" x 12" x 7.8") w/ mount pipe	A	From Leg	3.00 0.00 0.00	0.0000	140.00	No Ice 1/2" Ice 1" Ice	6.83 7.54 8.25	6.16 7.31 8.47	0.12 0.18 0.23
Air 21 B4A/B2P (55.9" x 12" x 7.8") w/ mount pipe	B	From Leg	3.00 0.00 0.00	0.0000	140.00	No Ice 1/2" Ice 1" Ice	6.83 7.54 8.25	6.16 7.31 8.47	0.12 0.18 0.23
Air 21 B4A/B2P (55.9" x 12" x 7.8") w/ mount pipe	C	From Leg	3.00 0.00 0.00	0.0000	140.00	No Ice 1/2" Ice 1" Ice	6.83 7.54 8.25	6.16 7.31 8.47	0.12 0.18 0.23
APXVAARR24_43-U-NA20 (95.9" x 24" x 8.7") w/ mount pipe	A	From Leg	3.00 0.00 0.00	0.0000	140.00	No Ice 1/2" Ice 1" Ice	20.24 20.90 21.56	10.79 12.19 13.58	0.16 0.30 0.44
APXVAARR24_43-U-NA20 (95.9" x 24" x 8.7") w/ mount pipe	B	From Leg	3.00 0.00 0.00	0.0000	140.00	No Ice 1/2" Ice 1" Ice	20.24 20.90 21.56	10.79 12.19 13.58	0.16 0.30 0.44
APXVAARR24_43-U-NA20 (95.9" x 24" x 8.7") w/ mount pipe	C	From Leg	3.00 0.00 0.00	0.0000	140.00	No Ice 1/2" Ice 1" Ice	20.24 20.90 21.56	10.79 12.19 13.58	0.16 0.30 0.44
KRY 112 144/1 (6.9" x 6.1" x 2.7")	A	From Leg	3.00 0.00 0.00	0.0000	140.00	No Ice 1/2" Ice 1" Ice	0.35 0.42 0.49	0.16 0.21 0.26	0.01 0.01 0.02
KRY 112 144/1 (6.9" x 6.1" x 2.7")	B	From Leg	3.00 0.00 0.00	0.0000	140.00	No Ice 1/2" Ice 1" Ice	0.35 0.42 0.49	0.16 0.21 0.26	0.01 0.01 0.02
KRY 112 144/1 (6.9" x 6.1" x 2.7")	C	From Leg	3.00 0.00 0.00	0.0000	140.00	No Ice 1/2" Ice 1" Ice	0.35 0.42 0.49	0.16 0.21 0.26	0.01 0.01 0.02
Radio 4449 B71+B12 (13.1" x 14.9" x 9.2")	A	From Leg	3.00 0.00 0.00	0.0000	140.00	No Ice 1/2" Ice 1" Ice	1.63 1.77 1.91	1.00 1.12 1.23	0.07 0.09 0.10
Radio 4449 B71+B12 (13.1" x 14.9" x 9.2")	B	From Leg	3.00 0.00 0.00	0.0000	140.00	No Ice 1/2" Ice 1" Ice	1.63 1.77 1.91	1.00 1.12 1.23	0.07 0.09 0.10
Radio 4449 B71+B12 (13.1" x 14.9" x 9.2")	C	From Leg	3.00 0.00 0.00	0.0000	140.00	No Ice 1/2" Ice 1" Ice	1.63 1.77 1.91	1.00 1.12 1.23	0.07 0.09 0.10
15' Pirod Universal T-Frame	A	From Leg	1.50 0.00 0.00	0.0000	140.00	No Ice 1/2" Ice 1" Ice	15.00 18.75 22.50	15.00 18.75 22.50	0.50 0.63 0.75
15' Pirod Universal T-Frame	B	From Leg	1.50 0.00 0.00	0.0000	140.00	No Ice 1/2" Ice 1" Ice	15.00 18.75 22.50	15.00 18.75 22.50	0.50 0.63 0.75
15' Pirod Universal T-Frame	C	From Leg	1.50 0.00 0.00	0.0000	140.00	No Ice 1/2" Ice 1" Ice	15.00 18.75 22.50	15.00 18.75 22.50	0.50 0.63 0.75
(3) HR w/ Double V-Brace Kits	C	None		0.0000	140.00	No Ice 1/2" Ice 1" Ice	15.00 18.75 22.50	15.00 18.75 22.50	0.65 0.81 0.97
(3) Stabilizer Kit (4' FW)	C	None		0.0000	140.00	No Ice 1/2" Ice 1" Ice	3.70 4.63 5.55	3.70 4.63 5.55	0.14 0.17 0.21
***									
(2) 7770 (55" x 11" x 5") w/ mount pipe	A	From Leg	3.00 0.00	0.0000	120.00	No Ice 1/2" Ice	6.32 7.03	4.83 5.97	0.06 0.11

Description	Face or Leg	Offset Type	Offsets: Horz Lateral Vert ft ft ft	Azimuth Adjustment °	Placement ft		C_AA_A Front ft^2	C_AA_A Side ft^2	Weight K
			0.00			1" Ice	7.73	7.12	0.16
(2) 7770 (55" x 11" x 5") w/ mount pipe	B	From Leg	3.00	0.0000	120.00	No Ice	6.32	4.83	0.06
			0.00			1/2" Ice	7.03	5.97	0.11
			0.00			1" Ice	7.73	7.12	0.16
(2) 7770 (55" x 11" x 5") w/ mount pipe	C	From Leg	3.00	0.0000	120.00	No Ice	6.32	4.83	0.06
			0.00			1/2" Ice	7.03	5.97	0.11
			0.00			1" Ice	7.73	7.12	0.16
DMP65R-BU4DA (48" x 20.7" x 7.7") w/ mount pipe	A	From Leg	3.00	0.0000	120.00	No Ice	9.23	5.41	0.10
			0.00			1/2" Ice	9.97	6.51	0.17
			0.00			1" Ice	10.71	7.62	0.23
DMP65R-BU4DA (48" x 20.7" x 7.7") w/ mount pipe	B	From Leg	3.00	0.0000	120.00	No Ice	9.23	5.41	0.10
			0.00			1/2" Ice	9.97	6.51	0.17
			0.00			1" Ice	10.71	7.62	0.23
DMP65R-BU4DA (48" x 20.7" x 7.7") w/ mount pipe	C	From Leg	3.00	0.0000	120.00	No Ice	9.23	5.41	0.10
			0.00			1/2" Ice	9.97	6.51	0.17
			0.00			1" Ice	10.71	7.62	0.23
OPA65R-BU4DA (46" x 21" x 7.8") w/ mount pipe	A	From Leg	3.00	0.0000	120.00	No Ice	9.04	5.27	0.08
			0.00			1/2" Ice	9.79	6.36	0.15
			0.00			1" Ice	10.53	7.46	0.22
OPA65R-BU4DA (46" x 21" x 7.8") w/ mount pipe	B	From Leg	3.00	0.0000	120.00	No Ice	9.04	5.27	0.08
			0.00			1/2" Ice	9.79	6.36	0.15
			0.00			1" Ice	10.53	7.46	0.22
OPA65R-BU4DA (46" x 21" x 7.8") w/ mount pipe	C	From Leg	3.00	0.0000	120.00	No Ice	9.04	5.27	0.08
			0.00			1/2" Ice	9.79	6.36	0.15
			0.00			1" Ice	10.53	7.46	0.22
(2) TT19-08BP111-001 TMA (9.9" x 6.7" x 5.4")	A	From Leg	3.00	0.0000	120.00	No Ice	0.55	0.45	0.02
			0.00			1/2" Ice	0.64	0.53	0.02
			0.00			1" Ice	0.72	0.60	0.03
(2) TT19-08BP111-001 TMA (9.9" x 6.7" x 5.4")	B	From Leg	3.00	0.0000	120.00	No Ice	0.55	0.45	0.02
			0.00			1/2" Ice	0.64	0.53	0.02
			0.00			1" Ice	0.72	0.60	0.03
(2) TT19-08BP111-001 TMA (9.9" x 6.7" x 5.4")	C	From Leg	3.00	0.0000	120.00	No Ice	0.55	0.45	0.02
			0.00			1/2" Ice	0.64	0.53	0.02
			0.00			1" Ice	0.72	0.60	0.03
4449 B5/B12 (17.9" x 13.19" x 9.44")	A	From Leg	3.00	0.0000	120.00	No Ice	1.97	1.41	0.07
			0.00			1/2" Ice	2.12	1.55	0.09
			0.00			1" Ice	2.28	1.68	0.10
4449 B5/B12 (17.9" x 13.19" x 9.44")	B	From Leg	3.00	0.0000	120.00	No Ice	1.97	1.41	0.07
			0.00			1/2" Ice	2.12	1.55	0.09
			0.00			1" Ice	2.28	1.68	0.10
4449 B5/B12 (17.9" x 13.19" x 9.44")	C	From Leg	3.00	0.0000	120.00	No Ice	1.97	1.41	0.07
			0.00			1/2" Ice	2.12	1.55	0.09
			0.00			1" Ice	2.28	1.68	0.10
RRUS-4478 B14 (16.5" x 13.4" x 7.7")	A	From Leg	3.00	0.0000	120.00	No Ice	1.84	1.06	0.06
			0.00			1/2" Ice	1.99	1.18	0.07
			0.00			1" Ice	2.14	1.30	0.09
RRUS-4478 B14 (16.5" x 13.4" x 7.7")	B	From Leg	3.00	0.0000	120.00	No Ice	1.84	1.06	0.06
			0.00			1/2" Ice	1.99	1.18	0.07
			0.00			1" Ice	2.14	1.30	0.09
RRUS-4478 B14 (16.5" x 13.4" x 7.7")	C	From Leg	3.00	0.0000	120.00	No Ice	1.84	1.06	0.06
			0.00			1/2" Ice	1.99	1.18	0.07
			0.00			1" Ice	2.14	1.30	0.09
RRUS 8843 B2 B66A (14.9" x 13.2" x 10.9")	A	From Leg	3.00	0.0000	120.00	No Ice	1.64	1.35	0.07
			0.00			1/2" Ice	1.78	1.48	0.09
			0.00			1" Ice	1.92	1.62	0.10
RRUS 8843 B2 B66A (14.9" x 13.2" x 10.9")	B	From Leg	3.00	0.0000	120.00	No Ice	1.64	1.35	0.07
			0.00			1/2" Ice	1.78	1.48	0.09

Description	Face or Leg	Offset Type	Offsets: Horz Lateral Vert ft ft ft	Azimuth Adjustment °	Placement ft		C_AA_A Front ft^2	C_AA_A Side ft^2	Weight K
			0.00			1" Ice	1.92	1.62	0.10
RRUS 8843 B2 B66A (14.9" x 13.2" x 10.9")	C	From Leg	3.00	0.0000	120.00	No Ice	1.64	1.35	0.07
			0.00			1/2" Ice	1.78	1.48	0.09
			0.00			1" Ice	1.92	1.62	0.10
DC6-48-60-18-8F (24" x 11" x 18.5")	B	From Leg	3.00	0.0000	120.00	No Ice	2.20	3.70	0.03
			0.00			1/2" Ice	2.38	3.91	0.06
			0.00			1" Ice	2.55	4.12	0.09
DC6-48-60-18-8F (24" x 11" x 18.5")	C	From Leg	3.00	0.0000	120.00	No Ice	2.20	3.70	0.03
			0.00			1/2" Ice	2.38	3.91	0.06
			0.00			1" Ice	2.55	4.12	0.09
15' Pirod Universal T-Frame	A	From Leg	1.50	0.0000	120.00	No Ice	15.00	15.00	0.50
			0.00			1/2" Ice	18.75	18.75	0.63
			0.00			1" Ice	22.50	22.50	0.75
15' Pirod Universal T-Frame	B	From Leg	1.50	0.0000	120.00	No Ice	15.00	15.00	0.50
			0.00			1/2" Ice	18.75	18.75	0.63
			0.00			1" Ice	22.50	22.50	0.75
15' Pirod Universal T-Frame	C	From Leg	1.50	0.0000	120.00	No Ice	15.00	15.00	0.50
			0.00			1/2" Ice	18.75	18.75	0.63
			0.00			1" Ice	22.50	22.50	0.75
***									
3' Standoff Mount	B	From Leg	1.50	0.0000	101.00	No Ice	4.50	4.50	0.12
			0.00			1/2" Ice	5.63	5.63	0.15
			0.00			1" Ice	6.75	6.75	0.18
3' Standoff Mount	C	From Leg	1.50	0.0000	101.00	No Ice	4.50	4.50	0.12
			0.00			1/2" Ice	5.63	5.63	0.15
			0.00			1" Ice	6.75	6.75	0.18
10' dipole	B	From Leg	3.00	0.0000	101.00	No Ice	3.76	3.76	0.03
			0.00			1/2" Ice	4.03	4.03	0.04
			5.00			1" Ice	5.03	5.03	0.07
Celwave - PD1167	C	From Leg	3.00	0.0000	101.00	No Ice	1.47	1.47	0.01
			0.00			1/2" Ice	1.84	1.84	0.01
			3.00			1" Ice	2.21	2.21	0.01
***									
Decibel - DB212	C	From Leg	0.50	0.0000	90.00	No Ice	5.50	5.50	0.07
			0.00			1/2" Ice	6.88	6.88	0.09
			8.00			1" Ice	8.25	8.25	0.11
***									
GPS	C	From Leg	0.00	0.0000	75.00	No Ice	1.00	1.00	0.01
			0.00			1/2" Ice	1.25	1.25	0.01
			0.00			1" Ice	1.50	1.50	0.01
***									
Decibel - DB437	A	From Leg	0.50	0.0000	63.00	No Ice	0.80	0.80	0.01
			0.00			1/2" Ice	1.00	1.00	0.02
			0.00			1" Ice	1.20	1.20	0.02
***									
Decibel - DB212	B	From Leg	0.50	0.0000	51.00	No Ice	4.37	4.37	0.03
			0.00			1/2" Ice	5.46	5.46	0.04
			8.00			1" Ice	6.55	6.55	0.05
***									
2' Standoff Mount	A	From Leg	1.00	0.0000	42.00	No Ice	4.50	4.50	0.12
			0.00			1/2" Ice	5.63	5.63	0.15
			0.00			1" Ice	6.75	6.75	0.18
2' Omni	A	From Leg	2.00	0.0000	42.00	No Ice	0.30	0.30	0.01
			0.00			1/2" Ice	0.38	0.38	0.01
			1.00			1" Ice	0.45	0.45	0.01
***									
Decibel - DB437	C	From Leg	0.50	0.0000	42.00	No Ice	0.90	0.90	0.01

Description	Face or Leg	Offset Type	Offsets: Horz Lateral Vert ft ft ft	Azimuth Adjustment °	Placement ft		C_AA_A Front ft^2	C_AA_A Side ft^2	Weight K
			0.00			1/2" Ice	1.62	1.62	0.01
			0.00			1" Ice	2.34	2.34	0.01

Truss-Leg Properties

Section Designation	Area in^2	Area Ice in^2	Self Weight K	Ice Weight K	Equiv. Diameter in	Equiv. Diameter Ice in	Leg Area in^2
#12 - 1.25" - 1.00" conn. (Pirod 105244)	999.6067	2671.6876	0.59	0.42	6.9417	18.5534	3.6816
#12 - 1.50" - 1.00" conn. (Pirod 105217)	1907.4792	5718.2137	0.62	0.78	6.6232	19.8549	5.3014
#12 - 1.75" - 1.25" conn. (Pirod 105218)	2269.1322	6228.9329	0.76	0.75	7.8789	21.6282	7.2158
#12 - 2.00" - 1.25" conn. (Pirod 105219)	2260.7557	5826.0501	1.03	0.74	7.8498	20.2293	9.4248
#12 - 2.00" - 1.25" conn. (Pirod 105219)	2260.7557	5765.6653	1.03	0.71	7.8498	20.0197	9.4248
#12 - 2.25" - 1.25" conn. (Pirod 105220)	2387.7320	5746.1718	1.20	0.68	8.2907	19.9520	11.9282
#12 - 2.25" - 1.25" conn. (Pirod 105220)	2387.7320	5571.2232	1.20	0.59	8.2907	19.3445	11.9282

Load Combinations

Comb. No.	Description
1	Dead Only
2	1.2 Dead+1.0 Wind 0 deg - No Ice
3	0.9 Dead+1.0 Wind 0 deg - No Ice
4	1.2 Dead+1.0 Wind 30 deg - No Ice
5	0.9 Dead+1.0 Wind 30 deg - No Ice
6	1.2 Dead+1.0 Wind 60 deg - No Ice
7	0.9 Dead+1.0 Wind 60 deg - No Ice
8	1.2 Dead+1.0 Wind 90 deg - No Ice
9	0.9 Dead+1.0 Wind 90 deg - No Ice
10	1.2 Dead+1.0 Wind 120 deg - No Ice
11	0.9 Dead+1.0 Wind 120 deg - No Ice
12	1.2 Dead+1.0 Wind 150 deg - No Ice
13	0.9 Dead+1.0 Wind 150 deg - No Ice
14	1.2 Dead+1.0 Wind 180 deg - No Ice
15	0.9 Dead+1.0 Wind 180 deg - No Ice
16	1.2 Dead+1.0 Wind 210 deg - No Ice
17	0.9 Dead+1.0 Wind 210 deg - No Ice
18	1.2 Dead+1.0 Wind 240 deg - No Ice
19	0.9 Dead+1.0 Wind 240 deg - No Ice

Comb. No.	Description
20	1.2 Dead+1.0 Wind 270 deg - No Ice
21	0.9 Dead+1.0 Wind 270 deg - No Ice
22	1.2 Dead+1.0 Wind 300 deg - No Ice
23	0.9 Dead+1.0 Wind 300 deg - No Ice
24	1.2 Dead+1.0 Wind 330 deg - No Ice
25	0.9 Dead+1.0 Wind 330 deg - No Ice
26	1.2 Dead+1.0 Ice+1.0 Temp
27	1.2 Dead+1.0 Wind 0 deg+1.0 Ice+1.0 Temp
28	1.2 Dead+1.0 Wind 30 deg+1.0 Ice+1.0 Temp
29	1.2 Dead+1.0 Wind 60 deg+1.0 Ice+1.0 Temp
30	1.2 Dead+1.0 Wind 90 deg+1.0 Ice+1.0 Temp
31	1.2 Dead+1.0 Wind 120 deg+1.0 Ice+1.0 Temp
32	1.2 Dead+1.0 Wind 150 deg+1.0 Ice+1.0 Temp
33	1.2 Dead+1.0 Wind 180 deg+1.0 Ice+1.0 Temp
34	1.2 Dead+1.0 Wind 210 deg+1.0 Ice+1.0 Temp
35	1.2 Dead+1.0 Wind 240 deg+1.0 Ice+1.0 Temp
36	1.2 Dead+1.0 Wind 270 deg+1.0 Ice+1.0 Temp
37	1.2 Dead+1.0 Wind 300 deg+1.0 Ice+1.0 Temp
38	1.2 Dead+1.0 Wind 330 deg+1.0 Ice+1.0 Temp
39	Dead+Wind 0 deg - Service
40	Dead+Wind 30 deg - Service
41	Dead+Wind 60 deg - Service
42	Dead+Wind 90 deg - Service
43	Dead+Wind 120 deg - Service
44	Dead+Wind 150 deg - Service
45	Dead+Wind 180 deg - Service
46	Dead+Wind 210 deg - Service
47	Dead+Wind 240 deg - Service
48	Dead+Wind 270 deg - Service
49	Dead+Wind 300 deg - Service
50	Dead+Wind 330 deg - Service
51	1.2 Dead+1.0 Ev+1.0 Eh 0 deg
52	0.9 Dead-1.0 Ev+1.0 Eh 0 deg
53	1.2 Dead+1.0 Ev+1.0 Eh 30 deg
54	0.9 Dead-1.0 Ev+1.0 Eh 30 deg
55	1.2 Dead+1.0 Ev+1.0 Eh 60 deg
56	0.9 Dead-1.0 Ev+1.0 Eh 60 deg
57	1.2 Dead+1.0 Ev+1.0 Eh 90 deg
58	0.9 Dead-1.0 Ev+1.0 Eh 90 deg
59	1.2 Dead+1.0 Ev+1.0 Eh 120 deg
60	0.9 Dead-1.0 Ev+1.0 Eh 120 deg
61	1.2 Dead+1.0 Ev+1.0 Eh 150 deg
62	0.9 Dead-1.0 Ev+1.0 Eh 150 deg
63	1.2 Dead+1.0 Ev+1.0 Eh 180 deg
64	0.9 Dead-1.0 Ev+1.0 Eh 180 deg
65	1.2 Dead+1.0 Ev+1.0 Eh 210 deg
66	0.9 Dead-1.0 Ev+1.0 Eh 210 deg
67	1.2 Dead+1.0 Ev+1.0 Eh 240 deg
68	0.9 Dead-1.0 Ev+1.0 Eh 240 deg
69	1.2 Dead+1.0 Ev+1.0 Eh 270 deg
70	0.9 Dead-1.0 Ev+1.0 Eh 270 deg
71	1.2 Dead+1.0 Ev+1.0 Eh 300 deg
72	0.9 Dead-1.0 Ev+1.0 Eh 300 deg
73	1.2 Dead+1.0 Ev+1.0 Eh 330 deg
74	0.9 Dead-1.0 Ev+1.0 Eh 330 deg

Maximum Tower Deflections - Service Wind

Section No.	Elevation ft	Horz. Deflection in	Gov. Load Comb.	Tilt °	Twist °
T1	180 - 170	6.107	39	0.3525	0.0190
T2	170 - 150	5.366	39	0.3470	0.0164
T3	150 - 130	3.959	39	0.3016	0.0127
T4	130 - 120	2.753	39	0.2408	0.0135
T5	120 - 100	2.270	39	0.2052	0.0118
T6	100 - 80	1.495	39	0.1520	0.0087
T7	80 - 60	0.923	39	0.1113	0.0057
T8	60 - 40	0.510	39	0.0797	0.0039
T9	40 - 20	0.228	39	0.0484	0.0024
T10	20 - 0	0.063	39	0.0240	0.0012

Critical Deflections and Radius of Curvature - Service Wind

Elevation ft	Appurtenance	Gov. Load Comb.	Deflection in	Tilt °	Twist °	Radius of Curvature ft
180.00	Lightning Rod	39	6.107	0.3525	0.0190	110395
179.00	PD220	39	6.033	0.3522	0.0188	110395
178.00	2' x 1' Panel	39	5.958	0.3519	0.0186	110395
170.00	Seismic Load @170	39	5.366	0.3470	0.0164	56981
165.00	DB212	39	5.002	0.3394	0.0135	42064
150.00	(2) DB844H90-XY (48" x 6" x 8.5") w/ mount pipe	39	3.959	0.3016	0.0127	24202
140.00	Air 21 B2A/B4P (55.9" x 12" x 7.8") w/ mount pipe	39	3.321	0.2728	0.0143	17128
130.00	Seismic Load @130	39	2.753	0.2408	0.0135	13588
120.00	(2) 7770 (55" x 11" x 5") w/ mount pipe	39	2.270	0.2052	0.0118	18157
101.00	3' Standoff Mount	39	1.529	0.1543	0.0088	23654
100.00	Seismic Load @100	39	1.495	0.1520	0.0087	23959
90.00	Decibel - DB212	39	1.187	0.1305	0.0071	26946
80.00	Seismic Load @80	39	0.923	0.1113	0.0057	30535
75.00	GPS	39	0.806	0.1029	0.0051	32060
63.00	Decibel - DB437	39	0.563	0.0844	0.0041	35984
60.00	Seismic Load @60	39	0.510	0.0797	0.0039	37004
51.00	Decibel - DB212	39	0.368	0.0653	0.0032	39431
42.00	2' Standoff Mount	39	0.251	0.0513	0.0025	41944
40.00	Seismic Load @40	39	0.228	0.0484	0.0024	42222
20.00	Seismic Load @20	39	0.063	0.0240	0.0012	40546

Maximum Tower Deflections - Design Wind

Section No.	Elevation ft	Horz. Deflection in	Gov. Load Comb.	Tilt °	Twist °
T1	180 - 170	31.893	3	1.8439	0.0989
T2	170 - 150	28.017	3	1.8153	0.0854
T3	150 - 130	20.654	3	1.5750	0.0664
T4	130 - 120	14.361	3	1.2564	0.0705
T5	120 - 100	11.837	3	1.0697	0.0613
T6	100 - 80	7.796	3	0.7930	0.0452
T7	80 - 60	4.811	2	0.5804	0.0296

Section No.	Elevation ft	Horz. Deflection in	Gov. Load Comb.	Tilt °	Twist °
T8	60 - 40	2.658	2	0.4155	0.0204
T9	40 - 20	1.188	2	0.2520	0.0124
T10	20 - 0	0.330	2	0.1248	0.0061

Critical Deflections and Radius of Curvature - Design Wind

Elevation ft	Appurtenance	Gov. Load Comb.	Deflection in	Tilt °	Twist °	Radius of Curvature ft
180.00	Lightning Rod	3	31.893	1.8439	0.0989	21477
179.00	PD220	3	31.504	1.8426	0.0981	21477
178.00	2' x 1' Panel	3	31.114	1.8411	0.0972	21477
170.00	Seismic Load @170	3	28.017	1.8153	0.0854	11088
165.00	DB212	3	26.113	1.7750	0.0703	8192
150.00	(2) DB844H90-XY (48" x 6" x 8.5") w/ mount pipe	3	20.654	1.5750	0.0664	4691
140.00	Air 21 B2A/B4P (55.9" x 12" x 7.8") w/ mount pipe	3	17.324	1.4242	0.0746	3268
130.00	Seismic Load @130	3	14.361	1.2564	0.0705	2606
120.00	(2) 7770 (55" x 11" x 5") w/ mount pipe	3	11.837	1.0697	0.0613	3482
101.00	3' Standoff Mount	3	7.971	0.8047	0.0460	4528
100.00	Seismic Load @100	3	7.796	0.7930	0.0452	4586
90.00	Decibel - DB212	2	6.187	0.6805	0.0370	5157
80.00	Seismic Load @80	2	4.811	0.5804	0.0296	5844
75.00	GPS	2	4.201	0.5364	0.0268	6137
63.00	Decibel - DB437	2	2.934	0.4397	0.0216	6893
60.00	Seismic Load @60	2	2.658	0.4155	0.0204	7090
51.00	Decibel - DB212	2	1.918	0.3401	0.0168	7559
42.00	2' Standoff Mount	2	1.307	0.2670	0.0132	8046
40.00	Seismic Load @40	2	1.188	0.2520	0.0124	8100
20.00	Seismic Load @20	2	0.330	0.1248	0.0061	7786

Bolt Design Data

Section No.	Elevation ft	Component Type	Bolt Grade	Bolt Size in	Number Of Bolts	Maximum Load per Bolt K	Allowable Load per Bolt K	Ratio Load / Allowable	Allowable Ratio	Criteria
T1	180	Leg	A325N	0.5625	3	4.02	22.37	0.180 ✔	1	Bolt DS
T2	170	Leg	A325X	0.5625	3	13.94	27.96	0.499 ✔	1	Bolt DS
T3	150	Leg	A325X	1.0000	6	17.24	54.52	0.316 ✔	1	Bolt Tension
T4	130	Leg	A325N	1.0000	6	17.76	54.52	0.326 ✔	1	Bolt Tension
		Diagonal	A325N	1.0000	1	9.04	10.66	0.847 ✔	1	Member Block Shear
T5	120	Leg	A325N	1.0000	6	27.00	54.52	0.495 ✔	1	Bolt Tension
		Diagonal	A325N	1.0000	1	9.70	11.68	0.831 ✔	1	Member Block Shear
T6	100	Leg	A325N	1.0000	6	34.83	54.52	0.639 ✔	1	Bolt Tension

Section No.	Elevation ft	Component Type	Bolt Grade	Bolt Size in	Number Of Bolts	Maximum Load per Bolt K	Allowable Load per Bolt K	Ratio Load / Allowable	Allowable Ratio	Criteria
		Diagonal	A325N	1.0000	1	8.86	11.68	0.758 ✔	1	Member Block Shear
T7	80	Leg	A325N	1.2500	6	42.02	87.22	0.482 ✔	1	Bolt Tension
		Diagonal	A325N	1.2500	1	9.22	20.30	0.454 ✔	1	Member Block Shear
T8	60	Leg	A325N	1.2500	6	48.52	87.22	0.556 ✔	1	Bolt Tension
		Diagonal	A325N	1.2500	1	9.62	20.30	0.474 ✔	1	Member Block Shear
T9	40	Leg	A325N	1.2500	6	54.68	87.22	0.627 ✔	1	Bolt Tension
		Diagonal	A325N	1.2500	1	10.27	23.70	0.433 ✔	1	Member Block Shear
T10	20	Leg	A687	1.2500	6	60.29	90.85	0.664 ✔	1	Bolt Tension
		Diagonal	A325N	1.2500	1	11.54	23.70	0.487 ✔	1	Member Block Shear

Compression Checks

Leg Design Data (Compression)

Section No.	Elevation ft	Size	L ft	L_u ft	Kl/r	A in^2	P_u K	ϕP_n K	Ratio $\frac{P_u}{\phi P_n}$
T1	180 - 170	1 1/2	10.00	2.26	72.3 K=1.00	1.7672	-11.06	54.24	0.204 [1] ✔
T2	170 - 150	1 1/2	20.00	2.42	77.3 K=1.00	1.7672	-41.47	51.35	0.808 [1] ✔
T3	150 - 130	2	20.00	2.38	57.0 K=1.00	3.1416	-107.31	111.47	0.963 [1] ✔
T4	130 - 120	#12 - 1.25" - 1.00" conn. (Pirod 105244)	10.02	10.02	45.4 K=1.00	3.6816	-114.92	142.49	0.806 [1] ✔
T5	120 - 100	#12 - 1.50" - 1.00" conn. (Pirod 105217)	20.03	10.02	37.8 K=1.00	5.3014	-177.24	214.86	0.825 [1] ✔
T6	100 - 80	#12 - 1.75" - 1.25" conn. (Pirod 105218)	20.03	10.02	32.4 K=1.00	7.2158	-227.81	300.68	0.758 [1] ✔
T7	80 - 60	#12 - 2.00" - 1.25" conn. (Pirod 105219)	20.03	10.02	28.4 K=1.00	9.4248	-275.89	399.87	0.690 [1] ✔
T8	60 - 40	#12 - 2.00" - 1.25" conn. (Pirod 105219)	20.03	10.02	28.4 K=1.00	9.4248	-320.34	399.87	0.801 [1] ✔
T9	40 - 20	#12 - 2.25" - 1.25" conn. (Pirod 105220)	20.03	10.02	25.2 K=1.00	11.9282	-363.24	512.38	0.709 [1] ✔
T10	20 - 0	#12 - 2.25" - 1.25" conn. (Pirod 105220)	20.03	10.02	25.2 K=1.00	11.9282	-402.64	512.38	0.786 [1] ✔

[1] P_u / ϕP_n controls

Truss-Leg Diagonal Data

Section No.	Elevation ft	Diagonal Size	L_d ft	Kl/r	ϕP_n K	A in^2	V_u K	ϕV_n K	Stress Ratio
T4	130 - 120	0.5	1.48	99.7	165.67	0.1963	1.73	4.22	0.412 ✓
T5	120 - 100	0.5	1.47	98.8	238.57	0.1963	2.31	4.26	0.543 ✓
T6	100 - 80	0.5	1.46	98.0	324.71	0.1963	1.42	4.29	0.332 ✓
T7	80 - 60	0.625	1.45	77.8	424.12	0.3068	1.34	8.09	0.165 ✓
T8	60 - 40	0.625	1.45	77.8	424.12	0.3068	1.15	8.09	0.142 ✓
T9	40 - 20	0.625	1.43	77.1	536.77	0.3068	0.94	8.13	0.116 ✓
T10	20 - 0	0.625	1.43	77.1	536.77	0.3068	1.21	8.13	0.148 ✓

Diagonal Design Data (Compression)

Section No.	Elevation ft	Size	L ft	L_u ft	Kl/r	A in^2	P_u K	ϕP_n K	Ratio $\frac{P_u}{\phi P_n}$
T1	180 - 170	3/4	4.59	2.23	128.2 K=0.90	0.4418	-2.46	6.07	0.405 [1] ✓
T2	170 - 150	3/4	5.08	2.48	159.0 K=1.00	0.4418	-2.90	3.95	0.735 [1] ✓
T3	150 - 130	1	5.50	2.68	128.4 K=1.00	0.7854	-6.40	10.75	0.595 [1] ✓
T4	130 - 120	L2 1/2x2 1/2x3/16	9.89	5.19	125.8 K=1.00	0.9020	-9.70	16.32	0.594 [1] ✓
T5	120 - 100	L3x3x3/16	10.31	5.34	110.7 K=1.03	1.0900	-9.78	23.80	0.411 [1] ✓
T6	100 - 80	L3x3x3/16	11.98	6.10	122.8 K=1.00	1.0900	-9.02	20.56	0.439 [1] ✓
T7	80 - 60	L3x3x5/16	13.17	6.62	134.9 K=1.00	1.7800	-9.25	27.98	0.331 [1] ✓
T8	60 - 40	L3x3x5/16	14.68	7.36	149.9 K=1.00	1.7800	-9.76	22.66	0.431 [1] ✓
T9	40 - 20	L3 1/2x3 1/2x5/16	16.29	8.16	141.8 K=1.00	2.0900	-10.48	29.73	0.352 [1] ✓
T10	20 - 0	L3 1/2x3 1/2x5/16	17.97	8.99	156.4 K=1.00	2.0900	-12.47	24.45	0.510 [1] ✓

[1] P_u / ϕP_n controls

Horizontal Design Data (Compression)

Section No.	Elevation ft	Size	L ft	L_u ft	Kl/r	A in^2	P_u K	ϕP_n K	Ratio $\frac{P_u}{\phi P_n}$
T1	180 - 170	3/4	4.00	3.88	173.6 K=0.70	0.4418	-0.20	3.31	0.062 [1] ✔
T2	170 - 150	7/8	4.37	4.25	233.1 K=1.00	0.6013	-0.95	2.50	0.379 [1] ✔
T3	150 - 130	KL/R > 200 (C) - 59 7/8 KL/R > 200 (C) - 160	4.58	4.41	242.1 K=1.00	0.6013	-1.57	2.32	0.675 [1] ✔

[1] P_u / ϕP_n controls

Top Girt Design Data (Compression)

Section No.	Elevation ft	Size	L ft	L_u ft	Kl/r	A in^2	P_u K	ϕP_n K	Ratio $\frac{P_u}{\phi P_n}$
T1	180 - 170	7/8	4.00	3.88	148.8 K=0.70	0.6013	-0.52	6.14	0.086 [1] ✔
T2	170 - 150	7/8	4.01	3.89	213.2 K=1.00	0.6013	-0.91	2.99	0.305 [1] ✔
T3	150 - 130	KL/R > 200 (C) - 41 1 KL/R > 200 (C) - 105	4.52	4.35	208.9 K=1.00	0.7854	-2.21	4.06	0.545 [1] ✔

[1] P_u / ϕP_n controls

Bottom Girt Design Data (Compression)

Section No.	Elevation ft	Size	L ft	L_u ft	Kl/r	A in^2	P_u K	ϕP_n K	Ratio $\frac{P_u}{\phi P_n}$
T1	180 - 170	7/8	4.00	3.88	148.8 K=0.70	0.6013	-0.93	6.14	0.151 [1] ✔
T2	170 - 150	7/8	4.49	4.37	239.7 K=1.00	0.6013	-1.57	2.36	0.666 [1] ✔
T3	150 - 130	KL/R > 200 (C) - 43 1 KL/R > 200 (C) - 107	4.99	4.83	231.8 K=1.00	0.7854	-2.76	3.30	0.836 [1] ✔

[1] P_u / ϕP_n controls

Mid Girt Design Data (Compression)

Section No.	Elevation ft	Size	L ft	L_u ft	Kl/r	A in^2	P_u K	ϕP_n K	Ratio $\frac{P_u}{\phi P_n}$
T3	150 - 130	1	4.76	4.59	220.4 K=1.00	0.7854	-0.62	3.65	0.169 [1] ✔
		KL/R > 200 (C) - 112							

[1] P_u / ϕP_n controls

Tension Checks

Leg Design Data (Tension)

Section No.	Elevation ft	Size	L ft	L_u ft	Kl/r	A in^2	P_u K	ϕP_n K	Ratio $\frac{P_u}{\phi P_n}$
T1	180 - 170	1 1/2	10.00	0.21	6.7	0.8575	12.05	41.80	0.288 [1 #] ✔
T2	170 - 150	1 1/2	20.00	0.21	6.7	1.7672	41.81	79.52	0.526 [1] ✔
T3	150 - 130	2	20.00	0.21	5.0	3.1416	103.47	141.37	0.732 [1] ✔
T4	130 - 120	#12 - 1.25" - 1.00" conn. (Pirod 105244)	10.02	10.02	45.4	3.6816	106.56	165.67	0.643 [1] ✔
T5	120 - 100	#12 - 1.50" - 1.00" conn. (Pirod 105217)	20.03	10.02	37.8	5.3014	161.99	238.57	0.679 [1] ✔
T6	100 - 80	#12 - 1.75" - 1.25" conn. (Pirod 105218)	20.03	10.02	32.4	7.2158	208.97	324.71	0.644 [1] ✔
T7	80 - 60	#12 - 2.00" - 1.25" conn. (Pirod 105219)	20.03	10.02	28.4	9.4248	252.09	424.12	0.594 [1] ✔
T8	60 - 40	#12 - 2.00" - 1.25" conn. (Pirod 105219)	20.03	10.02	28.4	9.4248	291.13	424.12	0.686 [1] ✔
T9	40 - 20	#12 - 2.25" - 1.25" conn. (Pirod 105220)	20.03	10.02	25.2	11.9282	328.09	536.77	0.611 [1] ✔
T10	20 - 0	#12 - 2.25" - 1.25" conn. (Pirod 105220)	20.03	10.02	25.2	11.9282	361.73	536.77	0.674 [1] ✔

[1] P_u / ϕP_n controls
[#] Based on net area of leg in section below

Truss-Leg Diagonal Data

Section No.	Elevation ft	Diagonal Size	L_d ft	Kl/r	ϕP_n K	A in^2	V_u K	ϕV_n K	Stress Ratio
T4	130 - 120	0.5	1.48	99.7	165.67	0.1963	1.73	4.22	0.412

Section No.	Elevation ft	Diagonal Size	L_d ft	Kl/r	ϕP_n K	A in^2	V_u K	ϕV_n K	Stress Ratio
T5	120 - 100	0.5	1.47	98.8	238.57	0.1963	2.31	4.26	0.543 ✓
T6	100 - 80	0.5	1.46	98.0	324.71	0.1963	1.42	4.29	0.332 ✓
T7	80 - 60	0.625	1.45	77.8	424.12	0.3068	1.34	8.09	0.165 ✓
T8	60 - 40	0.625	1.45	77.8	424.12	0.3068	1.15	8.09	0.142 ✓
T9	40 - 20	0.625	1.43	77.1	536.77	0.3068	0.94	8.13	0.116 ✓
T10	20 - 0	0.625	1.43	77.1	536.77	0.3068	1.21	8.13	0.148 ✓

Diagonal Design Data (Tension)

Section No.	Elevation ft	Size	L ft	L_u ft	Kl/r	A in^2	P_u K	ϕP_n K	Ratio $\frac{P_u}{\phi P_n}$
T1	180 - 170	3/4	4.59	2.23	142.4	0.4418	2.46	19.88	0.124 [1] ✓
T2	170 - 150	3/4	5.08	2.48	159.0	0.4418	2.85	19.88	0.143 [1] ✓
T3	150 - 130	1	5.34	2.60	124.6	0.7854	6.42	35.34	0.182 [1] ✓
T4	130 - 120	L2 1/2x2 1/2x3/16	9.89	5.19	83.2	0.5183	9.04	22.55	0.401 [1] ✓
T5	120 - 100	L3x3x3/16	10.31	5.34	70.9	0.6593	9.70	28.68	0.338 [1] ✓
T6	100 - 80	L3x3x3/16	11.98	6.10	80.6	0.6593	8.86	28.68	0.309 [1] ✓
T7	80 - 60	L3x3x5/16	12.48	6.28	85.1	1.0127	9.22	44.05	0.209 [1] ✓
T8	60 - 40	L3x3x5/16	14.68	7.36	99.0	1.0127	9.62	44.05	0.218 [1] ✓
T9	40 - 20	L3 1/2x3 1/2x5/16	16.29	8.16	93.4	1.2452	10.27	54.17	0.190 [1] ✓
T10	20 - 0	L3 1/2x3 1/2x5/16	17.97	8.99	102.7	1.2452	11.54	54.17	0.213 [1] ✓

[1] P_u / ϕP_n controls

Horizontal Design Data (Tension)

Section No.	Elevation ft	Size	L ft	L_u ft	Kl/r	A in^2	P_u K	ϕP_n K	Ratio $\frac{P_u}{\phi P_n}$
T1	180 - 170	3/4	4.00	3.88	248.0	0.4418	0.23	19.88	0.012 [1]

Section No.	Elevation ft	Size	L ft	L_u ft	Kl/r	A in^2	P_u K	ϕP_n K	Ratio $\frac{P_u}{\phi P_n}$
T2	170 - 150	7/8	4.37	4.25	233.1	0.6013	1.01	27.06	0.037 [1] ✔
T3	150 - 130	7/8	4.58	4.41	242.1	0.6013	1.67	27.06	0.062 [1] ✔

[1] P_u / ϕP_n controls

Top Girt Design Data (Tension)

Section No.	Elevation ft	Size	L ft	L_u ft	Kl/r	A in^2	P_u K	ϕP_n K	Ratio $\frac{P_u}{\phi P_n}$
T1	180 - 170	7/8	4.00	3.88	212.6	0.6013	0.53	27.06	0.020 [1] ✔
T2	170 - 150	7/8	4.01	3.89	213.2	0.6013	0.90	27.06	0.033 [1] ✔
T3	150 - 130	1	4.52	4.35	208.9	0.7854	2.18	35.34	0.062 [1] ✔

[1] P_u / ϕP_n controls

Bottom Girt Design Data (Tension)

Section No.	Elevation ft	Size	L ft	L_u ft	Kl/r	A in^2	P_u K	ϕP_n K	Ratio $\frac{P_u}{\phi P_n}$
T1	180 - 170	7/8	4.00	3.88	212.6	0.6013	0.94	27.06	0.035 [1] ✔
T2	170 - 150	7/8	4.49	4.37	239.7	0.6013	1.58	27.06	0.059 [1] ✔
T3	150 - 130	1	4.99	4.83	231.8	0.7854	2.95	35.34	0.083 [1] ✔

[1] P_u / ϕP_n controls

Mid Girt Design Data (Tension)

Section No.	Elevation ft	Size	L ft	L_u ft	Kl/r	A in^2	P_u K	ϕP_n K	Ratio $\frac{P_u}{\phi P_n}$
T3	150 - 130	1	4.76	4.59	220.4	0.7854	0.66	35.34	0.019 [1] ✔

Section No.	Elevation ft	Size	L ft	L_u ft	Kl/r	A in^2	P_u K	ϕP_n K	Ratio $\frac{P_u}{\phi P_n}$

[1] P_u / ϕP_n controls

Section Capacity Table

Section No.	Elevation ft	Component Type	Size	Critical Element	P K	ϕP_{allow} K	% Capacity	Pass Fail
T1	180 - 170	Leg	1 1/2	3	12.05	41.80	28.8	Pass
T2	170 - 150	Leg	1 1/2	39	-41.47	51.35	80.8	Pass
T3	150 - 130	Leg	2	103	-107.31	111.47	96.3	Pass
T4	130 - 120	Leg	#12 - 1.25" - 1.00" conn. (Pirod 105244)	169	-114.92	142.49	80.6	Pass
T5	120 - 100	Leg	#12 - 1.50" - 1.00" conn. (Pirod 105217)	178	-177.24	214.86	82.5	Pass
T6	100 - 80	Leg	#12 - 1.75" - 1.25" conn. (Pirod 105218)	193	-227.81	300.68	75.8	Pass
T7	80 - 60	Leg	#12 - 2.00" - 1.25" conn. (Pirod 105219)	208	-275.89	399.87	69.0	Pass
T8	60 - 40	Leg	#12 - 2.00" - 1.25" conn. (Pirod 105219)	223	-320.34	399.87	80.1	Pass
T9	40 - 20	Leg	#12 - 2.25" - 1.25" conn. (Pirod 105220)	238	-363.24	512.38	70.9	Pass
T10	20 - 0	Leg	#12 - 2.25" - 1.25" conn. (Pirod 105220)	253	-402.64	512.38	78.6	Pass
T1	180 - 170	Diagonal	3/4	13	-2.46	6.07	40.5	Pass
T2	170 - 150	Diagonal	3/4	47	-2.90	3.95	73.5	Pass
T3	150 - 130	Diagonal	1	114	-6.40	10.75	59.5	Pass
T4	130 - 120	Diagonal	L2 1/2x2 1/2x3/16	171	-9.70	16.32	59.4 84.7 (b)	Pass
T5	120 - 100	Diagonal	L3x3x3/16	189	-9.78	23.80	41.1 83.1 (b)	Pass
T6	100 - 80	Diagonal	L3x3x3/16	198	-9.02	20.56	43.9 75.8 (b)	Pass
T7	80 - 60	Diagonal	L3x3x5/16	213	-9.25	27.98	33.1 45.4 (b)	Pass
T8	60 - 40	Diagonal	L3x3x5/16	228	-9.76	22.66	43.1 47.4 (b)	Pass
T9	40 - 20	Diagonal	L3 1/2x3 1/2x5/16	243	-10.48	29.73	35.2 43.3 (b)	Pass
T10	20 - 0	Diagonal	L3 1/2x3 1/2x5/16	258	-12.47	24.45	51.0	Pass
T1	180 - 170	Horizontal	3/4	23	-0.20	3.31	6.2	Pass
T2	170 - 150	Horizontal	7/8	59	-0.95	2.50	37.9	Pass
T3	150 - 130	Horizontal	7/8	160	-1.57	2.32	67.5	Pass
T1	180 - 170	Top Girt	7/8	4	-0.52	6.14	8.6	Pass
T2	170 - 150	Top Girt	7/8	41	-0.91	2.99	30.5	Pass
T3	150 - 130	Top Girt	1	105	-2.21	4.06	54.5	Pass
T1	180 - 170	Bottom Girt	7/8	9	-0.93	6.14	15.1	Pass
T2	170 - 150	Bottom Girt	7/8	43	-1.57	2.36	66.6	Pass
T3	150 - 130	Bottom Girt	1	107	-2.76	3.30	83.6	Pass
T3	150 - 130	Mid Girt	1	112	-0.62	3.65	16.9	Pass
							Summary	
						Leg (T3)	96.3	Pass
						Diagonal (T4)	84.7	Pass
						Horizontal (T3)	67.5	Pass

Section No.	Elevation ft	Component Type	Size	Critical Element	P K	$øP_{allow}$ K	% Capacity	Pass Fail
						Top Girt (T3)	54.5	Pass
						Bottom Girt (T3)	83.6	Pass
						Mid Girt (T3)	16.9	Pass
						Bolt Checks	84.7	Pass
						RATING =	**96.3**	**Pass**

V3.4 - 05/06/2020

Self Support Anchor Bolt Check

Project Information			
SBA Project # :	CT03241-ATT-081220		
Code :	H		
Leg Reaction			
Uplift(kips):	372	Shear (kips) :	37
Comp(kips):	414	Shear (kips) :	41

Bolt Information	
Quantity :	6
Diameter (in) :	1.25
Assumed ungrouted gap (in) :	0
Bolt Fy (ksi) :	105
Bolt Fu (AISC Table 2-6) (ksi):	150

Strength Reduction Factors	
Tension :	0.75
Compression :	0.90
Shear :	0.75
Flexure :	0.9

Bolt Capacity : 62.2% ***Pass***

Mat Foundation Design for Self Supporting Tower

			Date
			8/12/2020
Customer Name:		EIA/TIA Standard:	EIA-222-H
Site Name:		Structure Height (Ft.):	180
Site Nmber:	CT03241-ATT-081220	Engineer Name:	D. Yohannes
Engr. Number:		Engineer Login ID:	

Foundation Info Obtained from: Drawings/Calculations

Analysis or Design? Analysis

Number of Tower Legs: 3 Legs

Base Reactions (Factored):

(1). Individual Leg:

Axial Load (Kips):	414.0	Uplift Force (Kips):	372.0
Shear Force (Kips):	41.0		

(2). Tower Base:

Total Vertical Load (Kips):	55.0	Total Shear Force (Kips):	62.0
Moment (Kips-ft):	6170.0		

Foundation Geometries:

Leg distance (Center-to-Center ft.):		18.0	Mods required -Yes/No ?:	No
Diameter of Pier (ft.):	Round	3.5	Pier Height A. G. (ft.):	0.50
Tower center to mat center (ft):		2.599	Depth of Base BG (ft.):	7.0
Length of Pad (ft.):		27	Width of Pad (ft.):	27
Thickness of Pad (ft):		3.25		

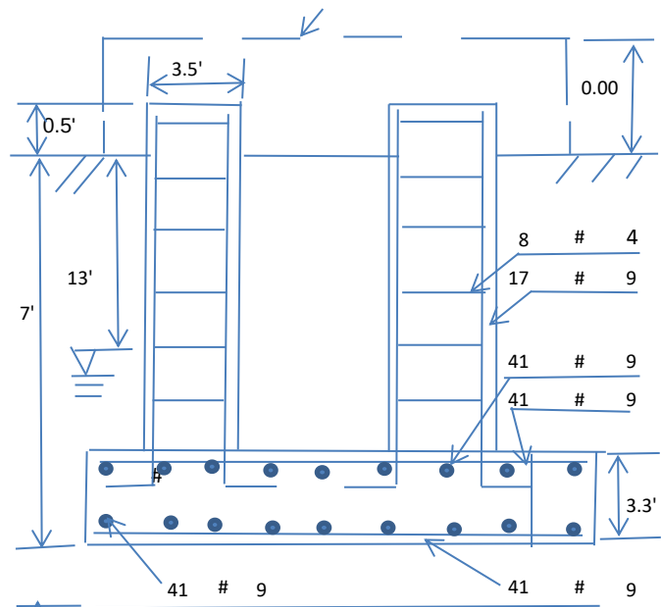

Material Properties and Reabr Info:

Concrete Strength (psi):	4500	Steel Elastic Modulus:	29000	ksi
Vertical bar yield (ksi)	60	Tie steel yield (ksi):	60	
Vertical Rebar Size #:	9	Tie / Stirrup Size #:	4	
Qty. of Vertical Rebars:	17	Tie Spacing (in):	12.0	
Pad Rebar Yield (Ksi):	60	Pad Steel Rebar Size (#):	9	
Concrete Cover (in.):	3	Unit Weight of Concrete:	150.0	pcf

Rebar at the bottom of the concrete pad:

Qty. of Rebar in Pad (L):	41	Qty. of Rebar in Pad (W):	41

Rebar at the top of the concrete pad:

Qty. of Rebar in Pad (L):	41	Qty. of Rebar in Pad (W):	41

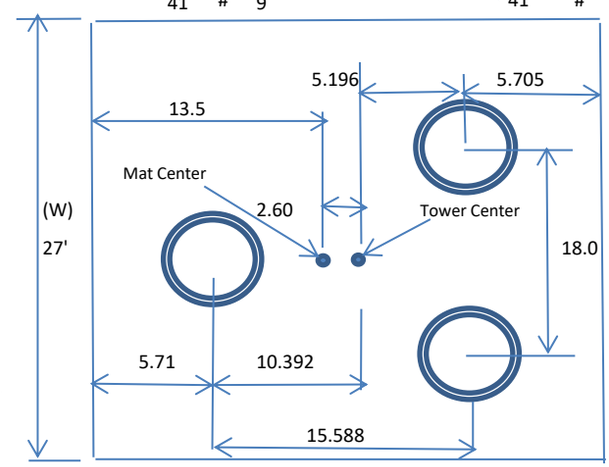

Soil Design Parameters:

Soil Unit Weight (pcf):	120.0	Soil Buoyant Weight:	57.6	Pcf
Water Table B.G.S. (ft):	13.0	Unit Weight of Water:	62.4	pcf
Ultimate Bearing Pressure (psf):	12000	Consider ties in concrete shear strength:		Yes
Consider Soil Lateral Resistance ?	No			

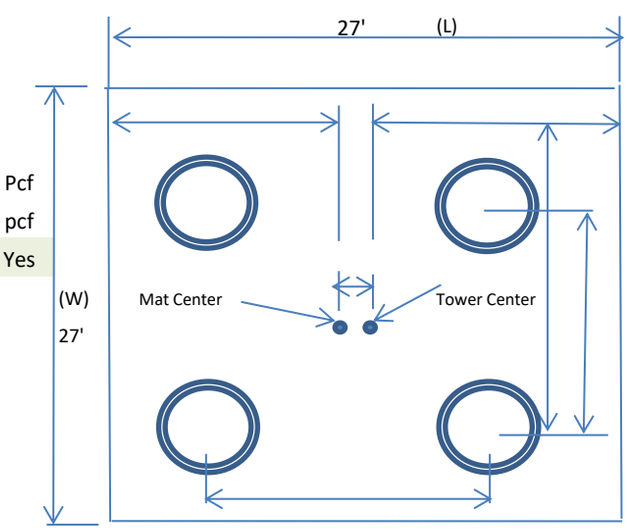

Apply 1.35 for e/w per G/H: 1.35

Foundation Analysis and Design:

Uplift Strength Reduction Factor:	0.75	Compression Strength Reduction Factor:	0.75
Total Dry Soil Volume (cu. Ft.):	2625.51	Total Dry Soil Weight (Kips):	315.06
Total Buoyant Soil Volume (cu. Ft.):	0.00	Total Buoyant Soil Weight (Kips):	0.00
Total Effective Soil Weight (Kips):	315.06	Weight from the Concrete Block at Top (K):	0.00
Total Dry Concrete Volume (cu. Ft.):	2491.92	Total Dry Concrete Weight (Kips):	373.79
Total Buoyant Concrete Volume (cu. Ft.):	0.00	Total Buoyant Concrete Weight (Kips):	0.00
Total Effective Concrete Weight (Kips):	373.79	Total Vertical Load on Base (Kips):	743.85

Check Soil Capacities:

					Load/ Capacity Ratio	
Calculated Maxium Net Soil Pressure under the base (psf):	3967.47	<	Allowable Factored Soil Bearing (psf):	9000	0.44	OK!
Allowable Foundation Overturning Resistance (kips-ft.):	9112.0	>	Design Factored Momont (kips-ft):	6778	0.74	OK!
Factor of Safety Against Overturning (O. R. Moment/Design Moment):	1.34	OK!				

Check the capacities of Reinforceing Concrete:

Strength reduction factor (Flexure and axial tension):	0.90	Strength reduction factor (Shear):	0.75
Strength reduction factor (Axial compresion):	0.65	Wind Load Factor on Concrete Design:	1.00

(1) Concrete Pier:

					Load/ Capacity Ratio	
Vertical Steel Rebar Area (sq. in./each):	1.00		Tie / Stirrup Area (sq. in./each):	0.20		
Calculated Moment Capacity (Mn,Kips-Ft):	732.7	>	Design Factored Moment (Mu, Kips-Ft):	174.3	0.24	OK!
Calculated Shear Capacity (Kips):	108.9	>	Design Factored Shear (Kips):	41.0	0.38	OK!
Calculated Tension Capacity (Tn, Kips):	918.0	>	Design Factored Tension (Tu Kips):	372.0	0.41	OK!
Calculated Compression Capacity (Pn, Kips):	2721.8	>	Design Factored Axial Load (Pu Kips):	414.0	0.15	OK!
Moment & Tension Strength Combination:	0.24	OK!	Check Tie Spacing (Design/Req'd):	1.00		
Pier Reinforcement Ratio:	0.012	Reinforcement Ratio is satisfied per ACI				

(2).Concrete Pad:

One-Way Design Shear Capacity (L or W Direction, Kips):	1155.3	>	One-Way Factored Shear (L/W-Dir Kips)	245.7	0.21	OK!
One-Way Design Shear Capacity (Diagonal Dir., Kips):	972.5	>	One-Way Factored Shear (Dia. Dir, Kips	304.3	0.31	OK!
Lower Steel Pad Reinforcement Ratio (L or W-Direct.):	0.0036		Lower Steel Reinf. Ratio (Dia. Dir.):	0.0032		
Lower Steel Pad Moment Capacity (L or W-Dir. Kips-ft):	6349.6	>	Moment at Bottom (L-Direct. K-Ft):	978.6	0.15	OK!
Lower Steel Pad Moment Capacity (Dia. Direction,K-ft):	6203.9	>	Moment at Bottom (Dia. Dir. K-Ft):	2308.6	0.37	OK!
Upper Steel Pad Reinforcement Ratio (L or W -Direction):	0.0036		Upper Steel Reinf. Ratio (Dia. Dir.):	0.0032		
Upper Steel Pad Moment Capacity (L or W-Dir., Kips-ft):	6349.6	>	Moment at the top (L-Dir Kips-Ft):	393.5	0.06	OK!
Upper Steel Pad Moment Capacity (Dia. Direction, K-ft):	6203.9	>	Moment at the top (Dia. Dir., K-Ft):	722.9	0.12	OK!
Punching Failure Capacity From Down Load (Kips):	1735.0	>	Punch. Failure Factored Shear (K):	414.0	0.24	OK!
Punching Failure Capacity From Uplift (Kips):	1575.3	>	Punch. Failure Factored Shear (K):	372.0	0.24	OK!

(3). Check Max. eccentricity of Loading:

The maximum eccentricity of Loading:	9.11	ft.	Allowable eccentricity (0.45 W, ft.):	12.15	OK!