CENTERLINE COMMUNICATIONS

at&t

EM-CING-134-180305

March 01, 2018

Melanie A. Bachman
Executive Director
Connecticut Siting Council
10 Franklin Square
New Britain, CT 06051

RECEIVED
MAR 5 2018
Connecticut Siting Council

ORIGINAL

RE: Notice of Exempt Modification // Site Number: CT1185 64 Tolland Avenue – Stafford CT 06076 (Name: Stafford Springs Tolland Avenue) N 41.944675 // W -73.317648

Dear Ms. Bachman,

New Cingular Wireless, PCS, LLC ("AT&T") currently maintains nine (6) antennas at the 177-foot level of the existing 180-foot monopole tower at 64 Tolland Avenue in Stafford CT 06076 . The tower is managed by the Cordless Data Transfer, Inc. The property is owned by Nathaniel N. DaSilva. AT&T now intends to install three (3) antennas, (3) RRUs-32 B2, (3) RRUs-32 radios and installing (1) DC6 "Squid".

Please accept this letter as notification pursuant to Regulations of Connecticut State Agencies § 16-50j-73, for construction that constitutes an exempt modification pursuant to R.C.S.A. § 1650j-72(b)(2). In accordance with R.C.S.A. § 16-50j-73, a copy of this letter is being sent to Mary Mitta, First Selectman for the Town of Stafford, as well as the property owner, Nathaniel N. DaSilva and the tower management company.

The planned modifications to the facility fall squarely within those activities explicitly provided for in R.C.S.A. § 16-50j-72(b)(2).

Attached to accommodate this filing are construction drawings dated October 16, 2017 by Hudson Design Group, a structural analysis dated November 10, 2017 by Fred A. Nudd and an Emissions Analysis Report dated February 26, 2018 by Centerline Communications.

1. The proposed modifications will not result in an increase in the height of the existing structure.

2. The proposed modifications will not require the extension of the site boundary.

3. The proposed modifications will not increase noise levels at the facility by six decibels or more, or to levels that exceed state and local criteria.

4. The operation of the replacement antennas will not increase radio frequency emissions at the facility to a level at or above the Federal Communications Commission safety standard.

5. The proposed modifications will not cause a change or alteration in the physical or environmental characteristics of the site.

6. The existing structure and its foundation can support the proposed loading as shown in the attached structural analysis by GPD Engineering, dated February 1, 2017.

For the foregoing reasons, AT&T respectfully submits that the proposed modifications to the above referenced telecommunications facility constitute an exempt modification under R.C.S.A. § 16-50j-72(b)(2).

Sincerely

- Agent

Adam Wolfrey
Site Acquisition c/o New Cingular Wireless, PCS LLC (AT&T)
Centerline Communications, LLC
95 Ryan Drive, Suite 1
Raynham, MA 02767
Mobile: (508) 667-3100

Radio Frequency Emissions Analysis Report

AT&T Existing Facility

Site ID: CT1185
FA#: 10092207

Stafford Springs Tolland Avenue
64 Tolland Avenue
Stafford, CT 06076

February 26, 2018

Centerline Communications Project Number: 950012-024

Site Compliance Summary	
Compliance Status:	**COMPLIANT**
Site total MPE% of FCC general population allowable limit:	**1.88 %**

February 26, 2018

AT&T Mobility – New England
Attn: John Benedetto, RF Manager
550 Cochituate Road
Suite 550 – 13&14
Framingham, MA 06040

Emissions Analysis for Site: **CT1185 – Stafford Springs Tolland Avenue**

Centerline Communications, LLC ("Centerline") was directed to analyze the proposed AT&T facility located at **64 Tolland Avenue, Stafford, CT**, for the purpose of determining whether the emissions from the Proposed AT&T Antenna Installation located on this property are within specified federal limits.

All information used in this report was analyzed as a percentage of current Maximum Permissible Exposure (% MPE) as listed in the FCC OET Bulletin 65 Edition 97-01and ANSI/IEEE Std C95.1. The FCC regulates Maximum Permissible Exposure in units of microwatts per square centimeter (μW/cm2). The number of $\mu W/cm^2$ calculated at each sample point is called the power density. The exposure limit for power density varies depending upon the frequencies being utilized. Wireless Carriers and Paging Services use different frequency bands each with different exposure limits, therefore it is necessary to report results and limits in terms of percent MPE rather than power density.

All results were compared to the FCC (Federal Communications Commission) radio frequency exposure rules, 47 CFR 1.1307(b)(1) – (b)(3), to determine compliance with the Maximum Permissible Exposure (MPE) limits for General Population/Uncontrolled environments as defined below.

General population/uncontrolled exposure limits apply to situations in which the general population may be exposed or in which persons who are exposed as a consequence of their employment may not be made fully aware of the potential for exposure or cannot exercise control over their exposure. Therefore, members of the general population would always be considered under this category when exposure is not employment related, for example, in the case of a telecommunications tower that exposes persons in a nearby residential area.

Population exposure to radio frequencies is regulated and enforced in units of microwatts per square centimeter ($\mu W/cm^2$). The general population exposure limits for the 700 and 850 MHz Bands are approximately 467 $\mu W/cm^2$ and 567 $\mu W/cm^2$ respectively. The general population exposure limit for the 1900 MHz (PCS), 2100 MHz (AWS) and 2300 MHz (WCS) bands is 1000 $\mu W/cm^2$. Because each carrier will be using different frequency bands, and each frequency band has different exposure limits, it is necessary to report percent of MPE rather than power density.

Occupational/controlled exposure limits apply to situations in which persons are exposed as a consequence of their employment and in which those persons who are exposed have been made fully aware of the potential for exposure and can exercise control over their exposure. Occupational/controlled exposure limits also apply where exposure is of a transient nature as a result of incidental passage through a location where exposure levels may be above general population/uncontrolled limits (see below), as long as the exposed person has been made fully aware of the potential for exposure and can exercise control over his or her exposure by leaving the area or by some other appropriate means.

Additional details can be found in FCC OET 65.

CALCULATIONS

Calculations were performed for the proposed AT&T Wireless antenna facility located at **64 Tolland Avenue, Stafford, CT**, using the equipment information listed below. All calculations were performed per the specifications under FCC OET 65. Since AT&T is proposing highly focused directional panel antennas, which project most of the emitted energy out toward the horizon, all calculations were performed assuming a lobe representing the maximum gain of the antenna per the antenna manufactures supplied specifications, minus 10 dB, was focused at the base of the tower. For this report the sample point is the top of a 6-foot person standing at the base of the tower.

Per FCC OET Bulletin No. 65 - Edition 97-01 recommendations to achieve the maximum anticipated value at each sample point, all power levels emitting from the proposed antenna installation are increased by a factor of 2.56 to account for possible in-phase reflections from the surrounding environment. All power values expressed and analyzed are maximum power levels expected to be used on all radios.

All emissions values for additional carriers were taken from the Connecticut Siting Council (CSC) active MPE database. Values in this database are provided by the individual carriers themselves

For each sector the following channel counts, frequency bands and power levels were utilized as shown in *Table 1*:

Technology	Frequency Band	Channel Count	Transmit Power per Channel (W)
UMTS	850 MHz	2	30
UMTS	1900 MHz (PCS)	2	30
LTE	700 MHz	2	30
LTE	1900 MHz (PCS)	4	60
LTE	2300 MHz (WCS)	4	30

Table 1: Channel Data Table

The following antennas listed in *Table 2* were used in the modeling for transmission in the 700 MHz, 850 MHz, 1900 MHz (PCS) and 2300 MHz (WCS) frequency bands. This is based on feedback from the carrier with regards to anticipated antenna selection. Maximum gain values for all antennas are listed in the Inventory and Power Data table below. The maximum gain of the antenna per the antenna manufactures supplied specifications, minus 10 dB, was used for all calculations. This value is a very conservative estimate as gain reductions for these particular antennas are typically much higher in this direction.

Sector	Antenna Number	Antenna Make / Model	Antenna Centerline (ft)
A	1	Powerwave 7770	177
A	2	Commscope SBNH-1D6565C	177
A	3	CCI TPA-65R-LCUUUU-H8	177
B	1	Powerwave 7770	177
B	2	Powerwave P65-17-XLH-RR	177
B	3	CCI TPA-65R-LCUUUU-H8	177
C	1	Powerwave 7770	177
C	2	KMW AM-X-CD-14-65-00T-RET	177
C	3	Quintel QS46512-2	177

Table 2: Antenna Data

All calculations were done with respect to uncontrolled / general population threshold limits.

RESULTS

Per the calculations completed for the proposed AT&T configurations *Table 3* shows resulting emissions power levels and percentages of the FCC's allowable general population limit.

Antenna ID	Antenna Make / Model	Frequency Bands	Antenna Gain (dBd)	Channel Count	Total TX Power (W)	ERP (W)	MPE %
Antenna A1	Powerwave 7770	850 MHz / 1900 MHz (PCS)	11.4 / 13.4	4	120	2,140.89	0.34
Antenna A2	Commscope SBNH-1D6565C	700 MHz	13.65	2	60	1,390.44	0.37
Antenna A3	CCI TPA-65R-LCUUUU-H8	1900 MHz (PCS) / 2300 MHz (WCS)	13.75 / 14.45	8	360	9,034.64	1.11
						Sector A Composite MPE%	**1.82**
Antenna B1	Powerwave 7770	850 MHz / 1900 MHz (PCS)	11.4 / 13.4	4	120	2,140.89	0.34
Antenna B2	Powerwave P65-17-XLH-RR	700 MHz	14.3	2	60	1,614.92	0.43
Antenna B3	CCI TPA-65R-LCUUUU-H8	1900 MHz (PCS) / 2300 MHz (WCS)	13.75 / 14.45	8	360	9,034.64	1.11
						Sector B Composite MPE%	**1.88**
Antenna C1	Powerwave 7770	850 MHz / 1900 MHz (PCS)	11.4 / 13.4	4	120	2,140.89	0.34
Antenna C2	KMW AM-X-CD-14-65-00T-RET	700 MHz	11.85	2	60	918.65	0.24
Antenna C3	Quintel QS46512-2	1900 MHz (PCS) / 2300 MHz (WCS)	13.15 / 14.05	8	360	8,006.08	0.98
						Sector C Composite MPE%	**1.57**

Table 3: AT&T Emissions Levels

The Following table (*table 4*) shows all additional carriers on site and their MPE% as recorded in the CSC active MPE database for this facility along with the newly calculated maximum AT&T MPE contributions per this report. FCC OET 65 specifies that for carriers utilizing directional antennas that the highest recorded sector value be used for composite site MPE values due to their greatly reduced emissions contributions in the directions of the adjacent sectors. For this site, the sector with the largest calculated MPE% is Sector B. *Table 5* below shows a summary for each AT&T Sector as well as the composite MPE value for the site.

Site Composite MPE%	
Carrier	**MPE%**
AT&T – Max Sector Value	**1.88 %**
No Additional Carriers Listed per CSC Active MPE Database	N/A
Site Total MPE %:	**1.88 %**

Table 4: All Carrier MPE Contributions

AT&T Sector A Total:	1.82 %
AT&T Sector B Total:	1.88 %
AT&T Sector C Total:	1.57 %
Site Total:	1.88 %

Table 5: Site MPE Summary

FCC OET 65 specifies that for carriers utilizing directional antennas that the highest recorded sector value be used for composite site MPE values due to their greatly reduced emissions contributions in the directions of the adjacent sectors. *Table 6* below details a breakdown by frequency band and technology for the MPE power values for the maximum calculated AT&T sector(s). For this site, the sector with the largest calculated MPE% is Sector B.

AT&T _ Frequency Band / Technology Max Power Values (Sector B)	# Channels	Watts ERP (Per Channel)	Height (feet)	Total Power Density ($\mu W/cm^2$)	Frequency (MHz)	Allowable MPE ($\mu W/cm^2$)	Calculated % MPE
AT&T 850 MHz UMTS	2	414.12	177	1.02	850 MHz	567	0.18%
AT&T 1900 MHz (PCS) UMTS	2	656.33	177	1.61	1900 MHz (PCS)	1000	0.16%
AT&T 700 MHz LTE	2	807.46	177	1.99	700 MHz	467	0.43%
AT&T 1900 MHz (PCS) LTE	4	1,422.82	177	7.00	1900 MHz (PCS)	1000	0.70%
AT&T 2300 MHz (WCS) LTE	4	835.84	177	4.11	2300 MHz (WCS)	1000	0.41%
						Total:	**1.88%**

Table 6: AT&T Maximum Sector MPE Power Values

Summary

All calculations performed for this analysis yielded results that were **within** the allowable limits for general population exposure to RF Emissions.

The anticipated maximum composite contributions from the AT&T facility as well as the site composite emissions value with regards to compliance with FCC's allowable limits for general population exposure to RF Emissions are shown here:

AT&T Sector	Power Density Value (%)
Sector A:	1.82 %
Sector B:	1.88 %
Sector C:	1.57 %
AT&T Maximum Total (per sector):	1.88 %
Site Total:	1.88 %
Site Compliance Status:	**COMPLIANT**

The anticipated composite MPE value for this site assuming all carriers present is **1.88 %** of the allowable FCC established general population limit sampled at the ground level. This is based upon values listed in the Connecticut Siting Council database for existing carrier emissions.

FCC guidelines state that if a site is found to be out of compliance (over allowable thresholds), that carriers over a 5% contribution to the composite value will require measures to bring the site into compliance. For this facility, the composite values calculated were well within the allowable 100% threshold standard per the federal government.

Scott Heffernan
RF Engineering Director
Centerline Communications, LLC
95 Ryan Drive, Suite 1
Raynham, MA 02767

FRED A. NUDD CORPORATION

1743 ROUTE 104, BOX 577
ONTARIO, NY 14519
(315) 524-2531 FAX (315) 524-4249

www.nuddtowers.com

Mark LeGault
Cordless Data Transfer, Inc.
600 Old Hartford Road
Colchester, CT 06415
December 29, 2017

Nudd Job Number: 117-23243.8

Site Location: Tolland Avenue (64 Tolland Avenue, Stafford, CT 06076, Tolland County)

Subject: Structural Analysis of an existing 180 ft Guyed Tower

Fred A. Nudd Corporation has completed a structural analysis of an existing 180 ft guyed tower. The tower was originally designed by Fred A. Nudd Corporation. The design loading criteria and strength design are per the ANSI/TIA-222-G standard, which is the recommended design standard per the 2012 International Building Code (Sec. 1609 & 3108), , and the 2016 Connecticut State Building Code. Tower and foundation dimensions have been taken from drawings by Fred A. Nudd, project number 9898, dated December 29, 2003. Additional foundation dimensions and installation data was provided by Cordless Data Transfer. Design criteria per each analysis are noted on the following page. The tower is assumed to be in good, undamaged and equivalent to as new condition and has been maintained / inspected per criteria by TIA-222.

The purpose of this analysis is to determine the structure's ability to support new AT&T equipment. The new equipment to be installed, which included antennas, coax, mounts and associated hardware are listed on the following page, along with already installed cellular equipment, in the appurtenance loading table.

Results of the analysis indicate the tower will be able to the support the design loads noted in the appurtenance loading table on the following page. Specific section design loads, capacities and stress ratios are provided on the following pages. Maximum member usage was found to be 92%. Detailed calculation of the applied forces and member capacities are provided in the following pages.

The tower base foundation and anchor design loads were analyzed considering the aforementioned foundation data and assumed soil properties. Based on this, the base foundation and anchors are adequate to support the existing and new loading.

In conclusion, the tower superstructure and substructure can support the proposed AT&T equipment.

We trust this report satisfies your needs. Please contact us with any questions or concerns regarding this report.

Best Regards,

Fred. A. Nudd Corporation

Code Design Criteria

ANSI/TIA-222-G
Windspeed = 98 mph, 3-second gust, V_{asd} / 124 mph, 3-second gust, V_{ult}
Exposure = B
Radial Ice = 1.0 inch
Ice Windspeed = 50 mph, 3-second gust
Structure Class = II
Topographic Category = 1
$S_s < 1.0$, thus seismic loading does not need to be considered

Proposed Appurtenance Loading – AT&T

Elevation (ft)[1]	Antenna	Mount	Coax[2]
177	(1) Andrew SBNH-1D6565C (3) Powerwave 7770 (2) CCI TPA-65R-LCUUUU-H8 (1) Quintel QS46512-2 (1) KMW AM-X-CD-14-65-00T-RET (1) Powewave P65-17-XLH-RR (3) Ericsson RRUS-11 (6) Ericsson RRUS-32 (6) Powerwave LGP21401 (6) Powerwave DBC0061F1V51-2 (6) Kaelus LGP21901	(3) 12 ft Boom / Frame	(12) 1-5/8 (3) 1-5/8 Fiber (2) 3/8 Fiber (4) DC

[1]Note elevation is measured from grade to center of antenna
[2]Additional coax is to be installed on the same tower face as the existing coax

Maximum Member Usage Results

Member	Usage (%)[1]
Legs	92
Diagonals	71
Horizontals	59
Guy Wires	48
Splice Bolts	37

[1]Usage above 100% indicates the applied design load exceeds the member strength capacity and requires strengthening

Foundation Usage Results

Base Reaction	Capacity (kip-ft)	Analysis (kip-ft)	Usage (%)[1]
Base Axial	217.8	179.8	86
Anchor Uplift	93.1	29.0	31
Anchor Shear	52.2	38.5	74

[1] Usage above 100% indicates the applied design load exceeds the foundation strength capacity and requires strengthening

Section	T10	T9	T8	T7	T6	T5	T4	T3	T2	T1
Legs						P2.5x.203				
Leg Grade						A500M-54				
Diagonals						SR 5/8				
Diagonal Grade						A36				
Top Girts				L1 1/2x1 1/2x3/16			N.A.		L1 1/2x1 1/2x3/16	
Bottom Girts	N.A.		L1 1/2x1 1/2x3/16		N.A.			L1 1/2x1 1/2x3/16		
Horizontals						L1 1/2x1 1/2x3/16				
Top Guy Pull-Offs		N.A.			L1 1/2x1 1/2x3/16	N.A.	L1 1/2x1 1/2x3/16		N.A.	L1 1/2x1 1/2x3/16
Bot Guy Pull-Offs				N.A.			L1 1/2x1 1/2x3/16		N.A.	L1 1/2x1 1/2x3/16
Face Width (ft)						3.5				
# Panels @ (ft)	A	4 @ 3.5625				48 @ 3.20833				
Weight (lb)	167.9	6342.9	480.3	658.2	658.2	658.2	658.2	658.2	658.2	872.6

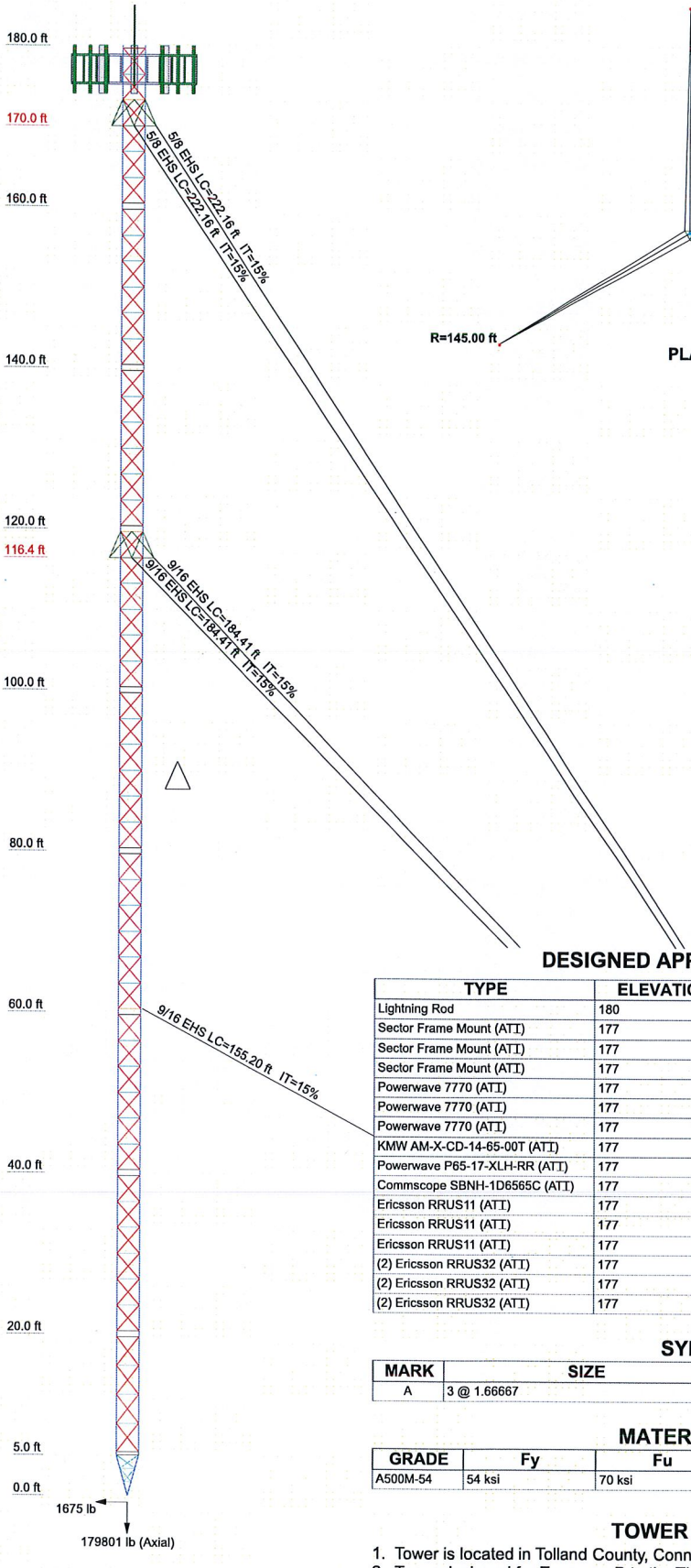

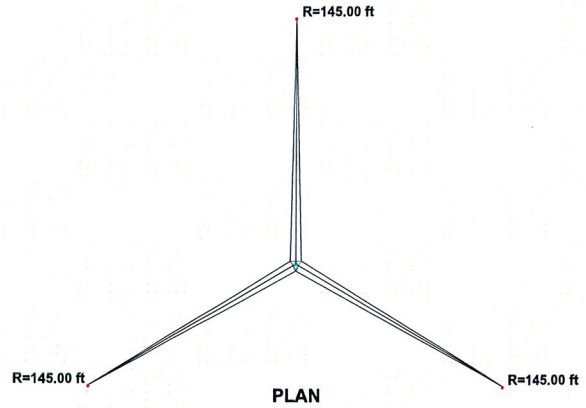

DESIGNED APPURTENANCE LOADING

TYPE	ELEVATION	TYPE	ELEVATION
Lightning Rod	180	(2) Kaelus LGP21901 (ATI)	177
Sector Frame Mount (ATI)	177	(2) Kaelus LGP21901 (ATI)	177
Sector Frame Mount (ATI)	177	(2) Kaelus LGP21901 (ATI)	177
Sector Frame Mount (ATI)	177	(2) Powerwave LGP21401 (ATI)	177
Powerwave 7770 (ATI)	177	(2) Powerwave LGP21401 (ATI)	177
Powerwave 7770 (ATI)	177	(2) Powerwave LGP21401 (ATI)	177
Powerwave 7770 (ATI)	177	CCI TPA-65R-LCUUUU-H8 (ATI)	177
KMW AM-X-CD-14-65-00T (ATI)	177	CCI TPA-65R-LCUUUU-H8 (ATI)	177
Powerwave P65-17-XLH-RR (ATI)	177	Quintel QS46512-2 (ATI)	177
Commscope SBNH-1D6565C (ATI)	177	(2) Powerwave DBC0061F1V51-2 (ATI)	177
Ericsson RRUS11 (ATI)	177		
Ericsson RRUS11 (ATI)	177	(2) Powerwave DBC0061F1V51-2 (ATI)	177
Ericsson RRUS11 (ATI)	177		
(2) Ericsson RRUS32 (ATI)	177	(2) Powerwave DBC0061F1V51-2 (ATI)	177
(2) Ericsson RRUS32 (ATI)	177		
(2) Ericsson RRUS32 (ATI)	177		

SYMBOL LIST

MARK	SIZE	MARK	SIZE
A	3 @ 1.66667		

MATERIAL STRENGTH

GRADE	Fy	Fu	GRADE	Fy	Fu
A500M-54	54 ksi	70 ksi	A36	36 ksi	58 ksi

38491 lb
R=145.00 ft

TOWER DESIGN NOTES

1. Tower is located in Tolland County, Connecticut.
2. Tower designed for Exposure B to the TIA-222-G Standard.
3. Tower designed for a 98 mph basic wind in accordance with the TIA-222-G Standard.
4. Tower is also designed for a 50 mph basic wind with 1.00 in ice. Ice is considered to increase in thickness with height.
5. Deflections are based upon a 60 mph wind.
6. Tower Structure Class II

Job: 117-23243.8			
Project: Tolland Ave., CT			
Client: CDT	Drawn by: FAN	App'd:	
Code: TIA-222-G	Date: 12/29/17	Scale: NTS	
Path:		Dwg No. E-1	

Phone:
FAX:

Tower Input Data

The main tower is a 3x guyed tower with an overall height of 180.00 ft above the ground line.
The base of the tower is set at an elevation of 0.00 ft above the ground line.
The face width of the tower is 3.50 ft at the top and tapered at the base.
This tower is designed using the TIA-222-G standard.
The following design criteria apply:

Tower is located in Tolland County, Connecticut.
Basic wind speed of 98 mph.
Structure Class II.
Exposure Category B.
Topographic Category 1.
Crest Height 0.00 ft.
Nominal ice thickness of 1.0000 in.
Ice thickness is considered to increase with height.
Ice density of 56 pcf.
A wind speed of 50 mph is used in combination with ice.
Temperature drop of 50 °F.
Deflections calculated using a wind speed of 60 mph.
Weld together tower sections have flange connections..
Tension only take-up is 0.0313 in.
Pressures are calculated at each section.
Safety factor used in guy design is 1.
Stress ratio used in tower member design is 1.
Local bending stresses due to climbing loads, feedline supports, and appurtenance mounts are not considered.

Options

Consider Moments - Legs
Consider Moments - Horizontals
Consider Moments - Diagonals
Use Moment Magnification
√ Use Code Stress Ratios
√ Use Code Safety Factors - Guys
Escalate Ice
Always Use Max Kz
Use Special Wind Profile
√ Include Bolts In Member Capacity
√ Leg Bolts Are At Top Of Section
√ Secondary Horizontal Braces Leg
Use Diamond Inner Bracing (4 Sided)
Add IBC .6D+W Combination

Distribute Leg Loads As Uniform
Assume Legs Pinned
√ Assume Rigid Index Plate
√ Use Clear Spans For Wind Area
√ Use Clear Spans For KL/r
√ Retension Guys To Initial Tension
Bypass Mast Stability Checks
√ Use Azimuth Dish Coefficients
√ Project Wind Area of Appurt.
√ Autocalc Torque Arm Areas
SR Members Have Cut Ends
Sort Capacity Reports By Component
√ Triangulate Diamond Inner Bracing

Treat Feedline Bundles As Cylinder
Use ASCE 10 X-Brace Ly Rules
√ Calculate Redundant Bracing Forces
Ignore Redundant Members in FEA
SR Leg Bolts Resist Compression
√ All Leg Panels Have Same Allowable
Offset Girt At Foundation
√ Consider Feedline Torque
Include Angle Block Shear Check

Poles

Include Shear-Torsion Interaction
Always Use Sub-Critical Flow
Use Top Mounted Sockets

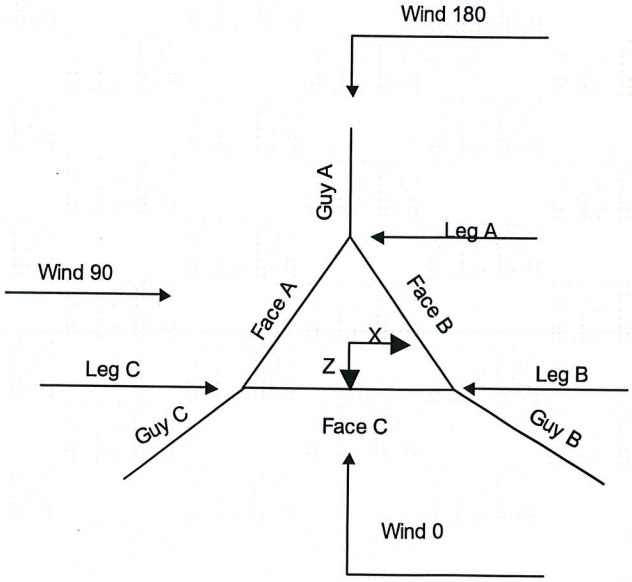

Corner & Starmount Guyed Tower

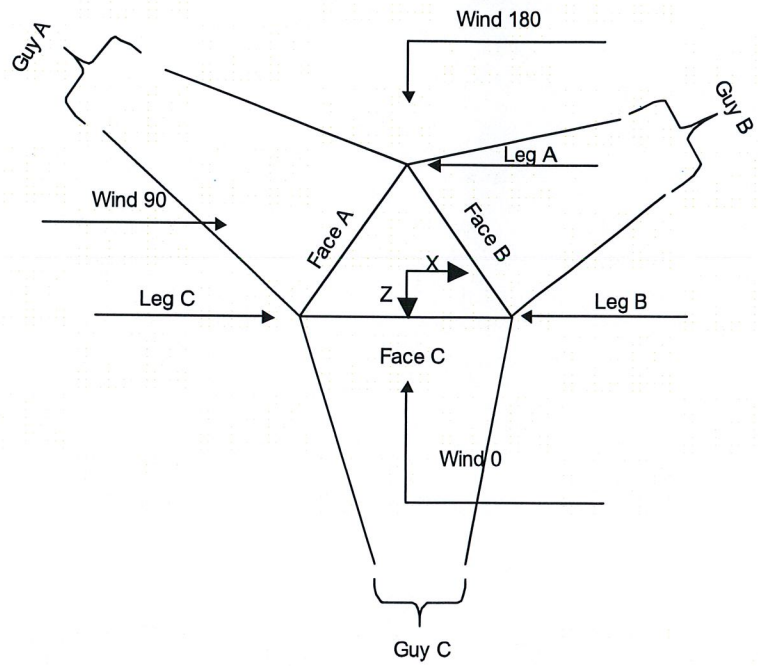

Face Guyed

Tower Section Geometry

Tower Section	Tower Elevation ft	Assembly Database	Description	Section Width ft	Number of Sections	Section Length ft
T1	180.00-160.00			3.50	1	20.00
T2	160.00-140.00			3.50	1	20.00
T3	140.00-120.00			3.50	1	20.00
T4	120.00-100.00			3.50	1	20.00
T5	100.00-80.00			3.50	1	20.00
T6	80.00-60.00			3.50	1	20.00
T7	60.00-40.00			3.50	1	20.00
T8	40.00-20.00			3.50	1	20.00
T9	20.00-5.00			3.50	1	15.00
T10	5.00-0.00			3.50	1	5.00

Tower Section Geometry *(cont'd)*

Tower Section	Tower Elevation ft	Diagonal Spacing ft	Bracing Type	Has K Brace End Panels	Has Horizontals	Top Girt Offset in	Bottom Girt Offset in
T1	180.00-160.00	3.21	TX Brace	No	Yes	4.5000	4.5000
T2	160.00-140.00	3.21	TX Brace	No	Yes	4.5000	4.5000
T3	140.00-120.00	3.21	TX Brace	No	Yes	4.5000	4.5000
T4	120.00-100.00	3.21	TX Brace	No	Yes	4.5000	4.5000
T5	100.00-80.00	3.21	TX Brace	No	Yes	4.5000	4.5000
T6	80.00-60.00	3.21	TX Brace	No	Yes	4.5000	4.5000
T7	60.00-40.00	3.21	TX Brace	No	Yes	4.5000	4.5000
T8	40.00-20.00	3.21	TX Brace	No	Yes	4.5000	4.5000
T9	20.00-5.00	3.56	TX Brace	No	Yes	4.5000	4.5000
T10	5.00-0.00	1.67	X Brace	No	Yes	0.0000	0.0000

Tower Section Geometry *(cont'd)*

Tower Elevation ft	Leg Type	Leg Size	Leg Grade	Diagonal Type	Diagonal Size	Diagonal Grade
T1 180.00-160.00	Pipe	P2.5x.203	A500M-54 (54 ksi)	Solid Round	5/8	A36 (36 ksi)
T2 160.00-140.00	Pipe	P2.5x.203	A500M-54 (54 ksi)	Solid Round	5/8	A36 (36 ksi)
T3 140.00-120.00	Pipe	P2.5x.203	A500M-54 (54 ksi)	Solid Round	5/8	A36 (36 ksi)
T4 120.00-100.00	Pipe	P2.5x.203	A500M-54 (54 ksi)	Solid Round	5/8	A36 (36 ksi)
T5 100.00-80.00	Pipe	P2.5x.203	A500M-54 (54 ksi)	Solid Round	5/8	A36 (36 ksi)
T6 80.00-60.00	Pipe	P2.5x.203	A500M-54 (54 ksi)	Solid Round	5/8	A36 (36 ksi)
T7 60.00-40.00	Pipe	P2.5x.203	A500M-54 (54 ksi)	Solid Round	5/8	A36 (36 ksi)
T8 40.00-20.00	Pipe	P2.5x.203	A500M-54 (54 ksi)	Solid Round	5/8	A36 (36 ksi)
T9 20.00-5.00	Pipe	P2.5x.203	A500M-54 (54 ksi)	Solid Round	5/8	A36 (36 ksi)
T10 5.00-0.00	Pipe	P2.5x.203	A500M-54 (54 ksi)	Solid Round	5/8	A36 (36 ksi)

Tower Section Geometry *(cont'd)*

Tower Elevation ft	Top Girt Type	Top Girt Size	Top Girt Grade	Bottom Girt Type	Bottom Girt Size	Bottom Girt Grade
T1 180.00-160.00	Equal Angle	L1 1/2x1 1/2x3/16	A36 (36 ksi)	Equal Angle	L1 1/2x1 1/2x3/16	A36 (36 ksi)
T2 160.00-140.00	Equal Angle	L1 1/2x1 1/2x3/16	A36 (36 ksi)	Equal Angle	L1 1/2x1 1/2x3/16	A36 (36 ksi)
T3 140.00-120.00	Equal Angle	L1 1/2x1 1/2x3/16	A36 (36 ksi)	Equal Angle	L1 1/2x1 1/2x3/16	A36 (36 ksi)
T4 120.00-100.00	Equal Angle	L1 1/2x1 1/2x3/16	A36 (36 ksi)	Equal Angle	L1 1/2x1 1/2x3/16	A36 (36 ksi)
T5 100.00-80.00	Equal Angle	L1 1/2x1 1/2x3/16	A36	Equal Angle	L1 1/2x1 1/2x3/16	A36

Tower Elevation ft	Top Girt Type	Top Girt Size	Top Girt Grade	Bottom Girt Type	Bottom Girt Size	Bottom Girt Grade
T6 80.00-60.00	Equal Angle	L1 1/2x1 1/2x3/16	(36 ksi) A36 (36 ksi)	Equal Angle	L1 1/2x1 1/2x3/16	(36 ksi) A36 (36 ksi)
T7 60.00-40.00	Equal Angle	L1 1/2x1 1/2x3/16	(36 ksi) A36 (36 ksi)	Equal Angle	L1 1/2x1 1/2x3/16	(36 ksi) A36 (36 ksi)
T8 40.00-20.00	Equal Angle	L1 1/2x1 1/2x3/16	(36 ksi) A36 (36 ksi)	Equal Angle	L1 1/2x1 1/2x3/16	(36 ksi) A36 (36 ksi)
T9 20.00-5.00	Equal Angle	L1 1/2x1 1/2x3/16	(36 ksi) A36 (36 ksi)	Equal Angle	L1 1/2x1 1/2x3/16	(36 ksi) A36 (36 ksi)
T10 5.00-0.00	Equal Angle	L1 1/2x1 1/2x3/16	(36 ksi) A36 (36 ksi)	Equal Angle	L1 1/2x1 1/2x3/16	(36 ksi) A36 (36 ksi)

Tower Section Geometry *(cont'd)*

Tower Elevation ft	No. of Mid Girts	Mid Girt Type	Mid Girt Size	Mid Girt Grade	Horizontal Type	Horizontal Size	Horizontal Grade
T1 180.00-160.00	None	Flat Bar		(36 ksi) A36 (36 ksi)	Single Angle	L1 1/2x1 1/2x3/16	(36 ksi) A36 (36 ksi)
T2 160.00-140.00	None	Flat Bar		(36 ksi) A36 (36 ksi)	Single Angle	L1 1/2x1 1/2x3/16	(36 ksi) A36 (36 ksi)
T3 140.00-120.00	None	Flat Bar		(36 ksi) A36 (36 ksi)	Single Angle	L1 1/2x1 1/2x3/16	(36 ksi) A36 (36 ksi)
T4 120.00-100.00	None	Flat Bar		(36 ksi) A36 (36 ksi)	Single Angle	L1 1/2x1 1/2x3/16	(36 ksi) A36 (36 ksi)
T5 100.00-80.00	None	Flat Bar		(36 ksi) A36 (36 ksi)	Single Angle	L1 1/2x1 1/2x3/16	(36 ksi) A36 (36 ksi)
T6 80.00-60.00	None	Flat Bar		(36 ksi) A36 (36 ksi)	Single Angle	L1 1/2x1 1/2x3/16	(36 ksi) A36 (36 ksi)
T7 60.00-40.00	None	Flat Bar		(36 ksi) A36 (36 ksi)	Single Angle	L1 1/2x1 1/2x3/16	(36 ksi) A36 (36 ksi)
T8 40.00-20.00	None	Flat Bar		(36 ksi) A36 (36 ksi)	Single Angle	L1 1/2x1 1/2x3/16	(36 ksi) A36 (36 ksi)
T9 20.00-5.00	None	Flat Bar		(36 ksi) A36 (36 ksi)	Single Angle	L1 1/2x1 1/2x3/16	(36 ksi) A36 (36 ksi)
T10 5.00-0.00	None	Flat Bar		(36 ksi) A36 (36 ksi)	Single Angle	L1 1/2x1 1/2x3/16	(36 ksi) A36 (36 ksi)

Tower Section Geometry *(cont'd)*

Tower Elevation ft	Gusset Area (per face) ft^2	Gusset Thickness in	Gusset Grade	Adjust. Factor A_f	Adjust. Factor A_r	Weight Mult.	Double Angle Stitch Bolt Spacing Diagonals in	Double Angle Stitch Bolt Spacing Horizontals in
T1 180.00-160.00	0.00	0.0000	A36 (36 ksi)	1	1	1	36.0000	36.0000
T2 160.00-140.00	0.00	0.0000	A36 (36 ksi)	1	1	1	36.0000	36.0000
T3	0.00	0.0000	A36	1	1	1	36.0000	36.0000

Tower Elevation ft	Gusset Area (per face) ft^2	Gusset Thickness in	Gusset Grade	Adjust. Factor A_f	Adjust. Factor A_r	Weight Mult.	Double Angle Stitch Bolt Spacing Diagonals in	Double Angle Stitch Bolt Spacing Horizontals in
140.00-120.00 T4	0.00	0.0000	(36 ksi) A36 (36 ksi)	1	1	1	36.0000	36.0000
120.00-100.00 T5	0.00	0.0000	(36 ksi) A36 (36 ksi)	1	1	1	36.0000	36.0000
100.00-80.00 T6	0.00	0.0000	(36 ksi) A36 (36 ksi)	1	1	1	36.0000	36.0000
80.00-60.00 T7	0.00	0.0000	(36 ksi) A36 (36 ksi)	1	1	1	36.0000	36.0000
60.00-40.00 T8	0.00	0.0000	(36 ksi) A36 (36 ksi)	1	1	1	36.0000	36.0000
40.00-20.00 T9	0.00	0.0000	(36 ksi) A36 (36 ksi)	1	1	1	36.0000	36.0000
20.00-5.00 T10	0.00	0.0000	(36 ksi) A36 (36 ksi)	1	1	1	36.0000	36.0000
5.00-0.00								

Tower Section Geometry *(cont'd)*

Tower Elevation ft	Calc K Single Angles	Calc K Solid Rounds	K Factors[1] Legs	X Brace Diags X Y	K Brace Diags X Y	Single Diags X Y	Girts X Y	Horiz. X Y	Sec. Horiz. X Y	Inner Brace X Y
T1	No	Yes	1	1	1	1	0.65	0.65	1	1
180.00-160.00				1	1	1	0.65	0.65	1	1
T2	No	Yes	1	1	1	1	0.65	0.65	1	1
160.00-140.00				1	1	1	0.65	0.65	1	1
T3	No	Yes	1	1	1	1	0.65	0.65	1	1
140.00-120.00				1	1	1	0.65	0.65	1	1
T4	No	Yes	1	1	1	1	0.65	0.65	1	1
120.00-100.00				1	1	1	0.65	0.65	1	1
T5	No	Yes	1	1	1	1	0.65	0.65	1	1
100.00-80.00				1	1	1	0.65	0.65	1	1
T6	No	Yes	1	1	1	1	0.65	0.65	1	1
80.00-60.00				1	1	1	0.65	0.65	1	1
T7	No	Yes	1	1	1	1	0.65	0.65	1	1
60.00-40.00				1	1	1	0.65	0.65	1	1
T8	No	Yes	1	1	1	1	0.65	0.65	1	1
40.00-20.00				1	1	1	0.65	0.65	1	1
T9 20.00-5.00	No	Yes	1	1	1	1	0.65	0.65	1	1
				1	1	1	0.65	0.65	1	1
T10 5.00-0.00	No	Yes	1	1	1	1	0.65	0.65	1	1
				1	1	1	0.65	0.65	1	1

[1]*Note: K factors are applied to member segment lengths. K-braces without inner supporting members will have the K factor in the out-of-plane direction applied to the overall length.*

Tower Section Geometry *(cont'd)*

Tower Elevation ft	Leg		Diagonal		Top Girt		Bottom Girt		Mid Girt		Long Horizontal		Short Horizontal	
	Net Width Deduct in	U	Net Width Deduct in	U	Net Width Deduct in	U	Net Width Deduct in	U	Net Width Deduct in	U	Net Width Deduct in	U	Net Width Deduct in	U
T1 180.00-160.00	0.0000	1	0.0000	1	0.0000	1	0.0000	1	0.0000	0.75	0.0000	1	0.0000	0.75
T2 160.00-140.00	0.0000	1	0.0000	1	0.0000	1	0.0000	1	0.0000	0.75	0.0000	1	0.0000	0.75
T3 140.00-120.00	0.0000	1	0.0000	1	0.0000	1	0.0000	1	0.0000	0.75	0.0000	1	0.0000	0.75
T4 120.00-100.00	0.0000	1	0.0000	1	0.0000	1	0.0000	1	0.0000	0.75	0.0000	1	0.0000	0.75
T5 100.00-80.00	0.0000	1	0.0000	1	0.0000	1	0.0000	1	0.0000	0.75	0.0000	1	0.0000	0.75
T6 80.00-60.00	0.0000	1	0.0000	1	0.0000	1	0.0000	1	0.0000	0.75	0.0000	1	0.0000	0.75
T7 60.00-40.00	0.0000	1	0.0000	1	0.0000	1	0.0000	1	0.0000	0.75	0.0000	1	0.0000	0.75
T8 40.00-20.00	0.0000	1	0.0000	1	0.0000	1	0.0000	1	0.0000	0.75	0.0000	1	0.0000	0.75
T9 20.00-5.00	0.0000	1	0.0000	1	0.0000	1	0.0000	1	0.0000	0.75	0.0000	1	0.0000	0.75
T10 5.00-0.00	0.0000	1	0.0000	1	0.0000	1	0.0000	1	0.0000	0.75	0.0000	1	0.0000	0.75

Tower Section Geometry *(cont'd)*

Tower Elevation ft	Leg Connection Type	Leg		Diagonal		Top Girt		Bottom Girt		Mid Girt		Long Horizontal		Short Horizontal	
		Bolt Size in	No.	Bolt Size in	No.	Bolt Size in	No.	Bolt Size in	No.	Bolt Size in	No.	Bolt Size in	No.	Bolt Size in	No.
T1 180.00-160.00	Flange	0.7500 A325N	4	0.6250 A325N	0	0.6250 A325N	0	0.6250 A325N	0	0.6250 A325N	0	0.6250 A325N	0	0.6250 A325N	0
T2 160.00-140.00	Flange	0.7500 A325N	4	0.6250 A325N	0	0.6250 A325N	0	0.6250 A325N	0	0.6250 A325N	0	0.6250 A325N	0	0.6250 A325N	0
T3 140.00-120.00	Flange	0.7500 A325N	4	0.6250 A325N	0	0.6250 A325N	0	0.6250 A325N	0	0.6250 A325N	0	0.6250 A325N	0	0.6250 A325N	0
T4 120.00-100.00	Flange	0.7500 A325N	4	0.6250 A325N	0	0.6250 A325N	0	0.6250 A325N	0	0.6250 A325N	0	0.6250 A325N	0	0.6250 A325N	0
T5 100.00-80.00	Flange	0.7500 A325N	4	0.6250 A325N	0	0.6250 A325N	0	0.6250 A325N	0	0.6250 A325N	0	0.6250 A325N	0	0.6250 A325N	0
T6 80.00-60.00	Flange	0.7500 A325N	4	0.6250 A325N	0	0.6250 A325N	0	0.6250 A325N	0	0.6250 A325N	0	0.6250 A325N	0	0.6250 A325N	0
T7 60.00-40.00	Flange	0.7500 A325N	4	0.6250 A325N	0	0.6250 A325N	0	0.6250 A325N	0	0.6250 A325N	0	0.6250 A325N	0	0.6250 A325N	0
T8 40.00-20.00	Flange	0.7500 A325N	4	0.6250 A325N	0	0.6250 A325N	0	0.6250 A325N	0	0.6250 A325N	0	0.6250 A325N	0	0.6250 A325N	0
T9 20.00-5.00	Flange	0.7500 A325N	4	0.6250 A325N	0	0.6250 A325N	0	0.6250 A325N	0	0.6250 A325N	0	0.6250 A325N	0	0.6250 A325N	0
T10 5.00-0.00	Flange	0.7500 A325N	4	0.6250 A325N	0	0.6250 A325N	0	0.6250 A325N	0	0.6250 A325N	0	0.6250 A325N	0	0.6250 A325N	0

Guy Data

Guy Elevation ft	Guy Grade		Guy Size	Initial Tension lb	%	Guy Modulus ksi	Guy Weight plf	L_u ft	Anchor Radius ft	Anchor Azimuth Adj. °	Anchor Elevation ft	End Fitting Efficiency %
170	EHS	A	5/8	6360.00	15%	21000	0.813	221.88	145.00	0.0000	0.00	100%
		B	5/8	6360.00	15%	21000	0.813	221.88	145.00	0.0000	0.00	100%
		C	5/8	6360.00	15%	21000	0.813	221.88	145.00	0.0000	0.00	100%
116.417	EHS	A	9/16	5250.00	15%	21000	0.671	184.18	145.00	0.0000	0.00	100%
		B	9/16	5250.00	15%	21000	0.671	184.18	145.00	0.0000	0.00	100%
		C	9/16	5250.00	15%	21000	0.671	184.18	145.00	0.0000	0.00	100%
60.375	EHS	A	9/16	5250.00	15%	21000	0.671	155.01	145.00	0.0000	0.00	100%
		B	9/16	5250.00	15%	21000	0.671	155.01	145.00	0.0000	0.00	100%
		C	9/16	5250.00	15%	21000	0.671	155.01	145.00	0.0000	0.00	100%

Guy Data *(cont'd)*

Guy Elevation ft	Mount Type	Torque-Arm Spread ft	Torque-Arm Leg Angle °	Torque-Arm Style	Torque-Arm Grade	Torque-Arm Type	Torque-Arm Size
170	Torque Arm	7.00	30.0000	Dog Ear	A36 (36 ksi)	Single Angle	L2x2x5/16 L3x3x1/4
116.417	Torque Arm	7.00	30.0000	Dog Ear	A36 (36 ksi)	Single Angle	L2x2x5/16 L3x3x1/4
60.375	Corner						

Guy Data *(cont'd)*

Guy Elevation ft	Diagonal Grade	Diagonal Type	Upper Diagonal Size	Lower Diagonal Size	Is Strap.	Pull-Off Grade	Pull-Off Type	Pull-Off Size
170.00	A572-50 (50 ksi)	Solid Round			No	A36 (36 ksi)	Equal Angle	L1 1/2x1 1/2x3/16
116.42	A572-50 (50 ksi)	Solid Round			No	A36 (36 ksi)	Equal Angle	L1 1/2x1 1/2x3/16
60.38	A572-50 (50 ksi)	Solid Round			No	A36 (36 ksi)	Equal Angle	L1 1/2x1 1/2x3/16

Guy Data *(cont'd)*

Guy Elevation ft	Cable Weight A lb	Cable Weight B lb	Cable Weight C lb	Cable Weight D lb	Tower Intercept A ft	Tower Intercept B ft	Tower Intercept C ft	Tower Intercept D ft
170	180.38	180.38	180.38		3.12 3.0 sec/pulse	3.12 3.0 sec/pulse	3.12 3.0 sec/pulse	
116.417	123.58	123.58	123.58		2.15 2.5 sec/pulse	2.15 2.5 sec/pulse	2.15 2.5 sec/pulse	
60.375	104.01	104.01	104.01		1.53 2.1 sec/pulse	1.53 2.1 sec/pulse	1.53 2.1 sec/pulse	

Guy Data *(cont'd)*

Guy Elevation ft	Calc K Single Angles	Calc K Solid Rounds	Torque Arm K_x	Torque Arm K_y	Pull Off K_x	Pull Off K_y	Diagonal K_x	Diagonal K_y
170	No	No	1	1	0.65	0.65	1	1
116.417	No	No	1	1	0.65	0.65	1	1
60.375	No	No			0.65	0.65	1	1

Guy Data *(cont'd)*

Guy Elevation ft	Torque-Arm Bolt Size in	Torque-Arm Number	Torque-Arm Net Width Deduct in	Torque-Arm U	Pull Off Bolt Size in	Pull Off Number	Pull Off Net Width Deduct in	Pull Off U	Diagonal Bolt Size in	Diagonal Number	Diagonal Net Width Deduct in	Diagonal U
170	0.7500 A325N	2	0.0000	1	0.0000 A325N	0	0.0000	1	0.6250 A325N	0	0.0000	1
116.417	0.7500 A325N	2	0.0000	1	0.0000 A325N	0	0.0000	1	0.6250 A325N	0	0.0000	1
60.375	0.6250 A325N	0	0.0000	0.75	0.0000 A325N	0	0.0000	1	0.6250 A325N	0	0.0000	1

Guy Pressures

Guy Elevation ft	Guy Location	z ft	q_z psf	q_z Ice psf	Ice Thickness in
170	A	85.00	20	5	2.1985
	B	85.00	20	5	2.1985
	C	85.00	20	5	2.1985
116.417	A	58.21	18	5	2.1168
	B	58.21	18	5	2.1168
	C	58.21	18	5	2.1168
60.375	A	30.19	15	4	1.9823
	B	30.19	15	4	1.9823
	C	30.19	15	4	1.9823

Guy-Mast Forces (Excluding Wind) - No Ice

Guy Elevation ft	Guy Location	Chord Angle °	Guy Tension Top Bottom lb	F_x lb	F_y lb	F_z lb	M_x lb-ft	M_y lb-ft	M_z lb-ft
170	A	49.9259	6498.03 6360.00	-101.28	5009.66	-4137.32	-10123.16	14685.27	-17533.82
	A	49.9259	6498.03	101.28	5009.66	-4137.32	-10123.16	-14685.27	17533.82

Guy Elevation	Guy Location	Chord Angle	Guy Tension Top Bottom lb	F_x	F_y	F_z	M_x	M_y	M_z
ft		°		lb	lb	lb	lb-ft	lb-ft	lb-ft
			6360.00						
	B	49.9259	6498.03	3633.66	5009.66	1980.95	20246.31	14685.27	0.00
			6360.00						
	B	49.9259	6498.03	3532.39	5009.66	2156.37	-10123.16	-14685.27	-17533.82
			6360.00						
	C	49.9259	6498.03	-3532.39	5009.66	2156.37	-10123.16	14685.27	17533.82
			6360.00						
	C	49.9259	6498.03	-3633.66	5009.66	1980.95	20246.31	-14685.27	0.00
			6360.00						
			Sum:	0.00	30057.98	0.00	-0.00	0.00	0.00
116.417	A	39.1448	5328.01	-100.37	3400.60	-4100.44	-6871.68	14554.35	-11902.11
			5250.00						
	A	39.1448	5328.01	100.37	3400.60	-4100.44	-6871.68	-14554.35	11902.11
			5250.00						
	B	39.1448	5328.01	3601.27	3400.60	1963.29	13743.37	14554.35	0.00
			5250.00						
	B	39.1448	5328.01	3500.89	3400.60	2137.14	-6871.68	-14554.35	-11902.11
			5250.00						
	C	39.1448	5328.01	-3500.89	3400.60	2137.14	-6871.68	14554.35	11902.11
			5250.00						
	C	39.1448	5328.01	-3601.27	3400.60	1963.29	13743.37	-14554.35	0.00
			5250.00						
			Sum:	0.00	20403.61	0.00	-0.00	0.00	0.00
60.375	A	22.8926	5290.46	0.00	2102.12	-4854.90	-4247.81	0.00	0.00
			5250.00						
	B	22.8926	5290.46	4204.47	2102.12	2427.45	2123.90	0.00	-3678.71
			5250.00						
	C	22.8926	5290.46	-4204.47	2102.12	2427.45	2123.90	-0.00	3678.71
			5250.00						
			Sum:	0.00	6306.36	0.00	0.00	0.00	0.00

Guy-Mast Forces (Excluding Wind) - Ice

Guy Elevation	Guy Location	Chord Angle	Guy Tension Top Bottom lb	F_x	F_y	F_z	M_x	M_y	M_z
ft		°		lb	lb	lb	lb-ft	lb-ft	lb-ft
170	A	49.9259	11340.86	-166.93	9060.16	-6819.14	-18308.10	24204.30	-31710.56
			9916.02						
	A	49.9259	11340.86	166.93	9060.16	-6819.14	-18308.10	-24204.30	31710.56
			9916.02						
	B	49.9259	11340.86	5989.01	9060.16	3265.01	36616.20	24204.30	0.00
			9916.02						
	B	49.9259	11340.86	5822.09	9060.16	3554.13	-18308.10	-24204.30	-31710.56
			9916.02						
	C	49.9259	11340.86	-5822.09	9060.16	3554.13	-18308.10	24204.30	31710.56
			9916.02						
	C	49.9259	11340.86	-5989.01	9060.16	3265.01	36616.20	-24204.30	0.00
			9916.02						
			Sum:	0.00	54360.96	0.00	-0.00	0.00	0.00
116.417	A	39.1448	9479.64	-171.09	6401.99	-6989.19	-12936.67	24807.90	-22406.97
			8596.54						
	A	39.1448	9479.64	171.09	6401.99	-6989.19	-12936.67	-24807.90	22406.97

Guy Elevation	Guy Location	Chord Angle	Guy Tension Top Bottom lb	F_x	F_y	F_z	M_x	M_y	M_z
ft		°		lb	lb	lb	lb-ft	lb-ft	lb-ft
			8596.54						
	B	39.1448	9479.64	6138.36	6401.99	3346.43	25873.34	24807.90	0.00
			8596.54						
	B	39.1448	9479.64	5967.27	6401.99	3642.76	-12936.67	-24807.90	-22406.97
			8596.54						
	C	39.1448	9479.64	-5967.27	6401.99	3642.76	-12936.67	24807.90	22406.97
			8596.54						
	C	39.1448	9479.64	-6138.36	6401.99	3346.43	25873.34	-24807.90	0.00
			8596.54						
			Sum:	0.00	38411.94	0.00	-0.00	0.00	0.00
60.375	A	22.8926	8905.54	0.00	3912.05	-8000.28	-7905.18	0.00	0.00
			8493.69						
	B	22.8926	8905.54	6928.45	3912.05	4000.14	3952.59	0.00	-6846.09
			8493.69						
	C	22.8926	8905.54	-6928.45	3912.05	4000.14	3952.59	-0.00	6846.09
			8493.69						
			Sum:	0.00	11736.15	-0.00	0.00	0.00	0.00

Guy-Mast Forces (Excluding Wind) - Service

Guy Elevation	Guy Location	Chord Angle	Guy Tension Top Bottom lb	F_x	F_y	F_z	M_x	M_y	M_z
ft		°		lb	lb	lb	lb-ft	lb-ft	lb-ft
170	A	49.9259	6498.03	-101.28	5009.66	-4137.32	-10123.16	14685.27	-17533.82
			6360.00						
	A	49.9259	6498.03	101.28	5009.66	-4137.32	-10123.16	-14685.27	17533.82
			6360.00						
	B	49.9259	6498.03	3633.66	5009.66	1980.95	20246.31	14685.27	0.00
			6360.00						
	B	49.9259	6498.03	3532.39	5009.66	2156.37	-10123.16	-14685.27	-17533.82
			6360.00						
	C	49.9259	6498.03	-3532.39	5009.66	2156.37	-10123.16	14685.27	17533.82
			6360.00						
	C	49.9259	6498.03	-3633.66	5009.66	1980.95	20246.31	-14685.27	0.00
			6360.00						
			Sum:	0.00	30057.98	0.00	-0.00	0.00	0.00
116.417	A	39.1448	5328.01	-100.37	3400.60	-4100.44	-6871.68	14554.35	-11902.11
			5250.00						
	A	39.1448	5328.01	100.37	3400.60	-4100.44	-6871.68	-14554.35	11902.11
			5250.00						
	B	39.1448	5328.01	3601.27	3400.60	1963.29	13743.37	14554.35	0.00
			5250.00						
	B	39.1448	5328.01	3500.89	3400.60	2137.14	-6871.68	-14554.35	-11902.11
			5250.00						
	C	39.1448	5328.01	-3500.89	3400.60	2137.14	-6871.68	14554.35	11902.11
			5250.00						
	C	39.1448	5328.01	-3601.27	3400.60	1963.29	13743.37	-14554.35	0.00
			5250.00						
			Sum:	0.00	20403.61	0.00	-0.00	0.00	0.00
60.375	A	22.8926	5290.46	0.00	2102.12	-4854.90	-4247.81	0.00	0.00
			5250.00						
	B	22.8926	5290.46	4204.47	2102.12	2427.45	2123.90	0.00	-3678.71

Guy Elevation ft	Guy Location	Chord Angle °	Guy Tension Top Bottom lb	F_x lb	F_y lb	F_z lb	M_x lb-ft	M_y lb-ft	M_z lb-ft
	C	22.8926	5250.00 5290.46 5250.00	-4204.47	2102.12	2427.45	2123.90	-0.00	3678.71
			Sum:	0.00	6306.36	0.00	0.00	0.00	0.00

Feed Line/Linear Appurtenances - Entered As Round Or Flat

Description	Face or Leg	Allow Shield	Component Type	Placement ft	Total Number	Number Per Row	Clear Spacing in	Width or Diameter in	Perimeter in	Weight plf
1 5/8 (AT&T)	C	No	Ar (CaAa)	178.00 - 0.00	12	12	1.9800	1.9800		1.04
1 5/8 Fiber (AT&T)	C	No	Ar (CaAa)	178.00 - 0.00	3	3	1.9800	1.9800		1.04
Safety Line 3/8	A	No	Ar (CaAa)	180.00 - 0.00	1	1	0.3750	0.3750		0.22
Fiber (AT&T)	C	No	Ar (CaAa)	178.00 - 0.00	2	2	0.3750	0.3750		0.22
DC (AT&T)	C	No	Ar (CaAa)	178.00 - 0.00	4	4	0.5800	0.5800		0.25

Feed Line/Linear Appurtenances Section Areas

Tower Section	Tower Elevation ft	Face	A_R ft^2	A_F ft^2	C_AA_A In Face ft^2	C_AA_A Out Face ft^2	Weight lb
T1	180.00-160.00	A	0.000	0.000	0.750	0.000	4.40
		B	0.000	0.000	0.000	0.000	0.00
		C	0.000	0.000	58.986	0.000	306.72
T2	160.00-140.00	A	0.000	0.000	0.750	0.000	4.40
		B	0.000	0.000	0.000	0.000	0.00
		C	0.000	0.000	65.540	0.000	340.80
T3	140.00-120.00	A	0.000	0.000	0.750	0.000	4.40
		B	0.000	0.000	0.000	0.000	0.00
		C	0.000	0.000	65.540	0.000	340.80
T4	120.00-100.00	A	0.000	0.000	0.750	0.000	4.40
		B	0.000	0.000	0.000	0.000	0.00
		C	0.000	0.000	65.540	0.000	340.80
T5	100.00-80.00	A	0.000	0.000	0.750	0.000	4.40
		B	0.000	0.000	0.000	0.000	0.00
		C	0.000	0.000	65.540	0.000	340.80
T6	80.00-60.00	A	0.000	0.000	0.750	0.000	4.40
		B	0.000	0.000	0.000	0.000	0.00
		C	0.000	0.000	65.540	0.000	340.80
T7	60.00-40.00	A	0.000	0.000	0.750	0.000	4.40
		B	0.000	0.000	0.000	0.000	0.00
		C	0.000	0.000	65.540	0.000	340.80
T8	40.00-20.00	A	0.000	0.000	0.750	0.000	4.40
		B	0.000	0.000	0.000	0.000	0.00
		C	0.000	0.000	65.540	0.000	340.80
T9	20.00-5.00	A	0.000	0.000	0.563	0.000	3.30
		B	0.000	0.000	0.000	0.000	0.00

Tower Section	Tower Elevation ft	Face	A_R ft^2	A_F ft^2	C_AA_A In Face ft^2	C_AA_A Out Face ft^2	Weight lb
		C	0.000	0.000	49.155	0.000	255.60
T10	5.00-0.00	A	0.000	0.000	0.188	0.000	1.10
		B	0.000	0.000	0.000	0.000	0.00
		C	0.000	0.000	16.385	0.000	85.20

Feed Line/Linear Appurtenances Section Areas - With Ice

Tower Section	Tower Elevation ft	Face or Leg	Ice Thickness in	A_R ft^2	A_F ft^2	C_AA_A In Face ft^2	C_AA_A Out Face ft^2	Weight lb
T1	180.00-160.00	A	2.356	0.000	0.000	10.175	0.000	161.65
		B		0.000	0.000	0.000	0.000	0.00
		C		0.000	0.000	190.704	0.000	3330.61
T2	160.00-140.00	A	2.327	0.000	0.000	10.058	0.000	158.03
		B		0.000	0.000	0.000	0.000	0.00
		C		0.000	0.000	211.126	0.000	3658.35
T3	140.00-120.00	A	2.294	0.000	0.000	9.926	0.000	153.99
		B		0.000	0.000	0.000	0.000	0.00
		C		0.000	0.000	210.262	0.000	3610.79
T4	120.00-100.00	A	2.256	0.000	0.000	9.774	0.000	149.42
		B		0.000	0.000	0.000	0.000	0.00
		C		0.000	0.000	209.269	0.000	3556.40
T5	100.00-80.00	A	2.211	0.000	0.000	9.594	0.000	144.12
		B		0.000	0.000	0.000	0.000	0.00
		C		0.000	0.000	208.099	0.000	3492.61
T6	80.00-60.00	A	2.156	0.000	0.000	9.375	0.000	137.76
		B		0.000	0.000	0.000	0.000	0.00
		C		0.000	0.000	206.667	0.000	3415.04
T7	60.00-40.00	A	2.085	0.000	0.000	9.089	0.000	129.71
		B		0.000	0.000	0.000	0.000	0.00
		C		0.000	0.000	204.808	0.000	3315.07
T8	40.00-20.00	A	1.981	0.000	0.000	8.674	0.000	118.45
		B		0.000	0.000	0.000	0.000	0.00
		C		0.000	0.000	202.107	0.000	3171.37
T9	20.00-5.00	A	1.815	0.000	0.000	6.007	0.000	76.14
		B		0.000	0.000	0.000	0.000	0.00
		C		0.000	0.000	148.349	0.000	2209.43
T10	5.00-0.00	A	1.545	0.000	0.000	1.733	0.000	19.22
		B		0.000	0.000	0.000	0.000	0.00
		C		0.000	0.000	47.708	0.000	647.77

Feed Line Center of Pressure

Section	Elevation ft	CP_X in	CP_Z in	CP_X Ice in	CP_Z Ice in
T1	180.00-160.00	-0.0254	2.4288	-0.0752	1.0915
T2	160.00-140.00	-0.0234	2.4928	-0.0716	1.1732
T3	140.00-120.00	-0.0234	2.4928	-0.0719	1.1947
T4	120.00-100.00	-0.0234	2.4928	-0.0722	1.2192
T5	100.00-80.00	-0.0234	2.4928	-0.0725	1.2480
T6	80.00-60.00	-0.0234	2.4928	-0.0728	1.2831
T7	60.00-40.00	-0.0234	2.4928	-0.0730	1.3283
T8	40.00-20.00	-0.0234	2.4928	-0.0730	1.3936

Section	Elevation	CP_X	CP_Z	CP_X Ice	CP_Z Ice
	ft	in	in	in	in
T9	20.00-5.00	-0.0235	2.5044	-0.0744	1.5408
T10	5.00-0.00	-0.0233	2.4765	-0.0161	0.3865

Shielding Factor Ka

Tower Section	Feed Line Record No.	Description	Feed Line Segment Elev.	K_a No Ice	K_a Ice
T1	1	1 5/8	160.00 - 178.00	0.6000	0.2654
T1	2	1 5/8 Fiber	160.00 - 178.00	0.6000	0.2654
T1	3	Safety Line 3/8	160.00 - 180.00	0.6000	0.2654
T1	4	Fiber	160.00 - 178.00	0.6000	0.2654
T1	5	DC	160.00 - 178.00	0.6000	0.2654
T2	1	1 5/8	140.00 - 160.00	0.6000	0.2713
T2	2	1 5/8 Fiber	140.00 - 160.00	0.6000	0.2713
T2	3	Safety Line 3/8	140.00 - 160.00	0.6000	0.2713
T2	4	Fiber	140.00 - 160.00	0.6000	0.2713
T2	5	DC	140.00 - 160.00	0.6000	0.2713
T3	1	1 5/8	120.00 - 140.00	0.6000	0.2781
T3	2	1 5/8 Fiber	120.00 - 140.00	0.6000	0.2781
T3	3	Safety Line 3/8	120.00 - 140.00	0.6000	0.2781
T3	4	Fiber	120.00 - 140.00	0.6000	0.2781
T3	5	DC	120.00 - 140.00	0.6000	0.2781
T4	1	1 5/8	100.00 - 120.00	0.6000	0.2859
T4	2	1 5/8 Fiber	100.00 - 120.00	0.6000	0.2859
T4	3	Safety Line 3/8	100.00 - 120.00	0.6000	0.2859
T4	4	Fiber	100.00 - 120.00	0.6000	0.2859
T4	5	DC	100.00 - 120.00	0.6000	0.2859
T5	1	1 5/8	80.00 - 100.00	0.6000	0.2952
T5	2	1 5/8 Fiber	80.00 - 100.00	0.6000	0.2952
T5	3	Safety Line 3/8	80.00 - 100.00	0.6000	0.2952
T5	4	Fiber	80.00 - 100.00	0.6000	0.2952
T5	5	DC	80.00 - 100.00	0.6000	0.2952
T6	1	1 5/8	60.00 - 80.00	0.6000	0.3065
T6	2	1 5/8 Fiber	60.00 - 80.00	0.6000	0.3065
T6	3	Safety Line 3/8	60.00 - 80.00	0.6000	0.3065

Tower Section	Feed Line Record No.	Description	Feed Line Segment Elev.	K_a No Ice	K_a Ice
T6	4	Fiber	60.00 - 80.00	0.6000	0.3065
T6	5	DC	60.00 - 80.00	0.6000	0.3065
T7	1	1 5/8	40.00 - 60.00	0.6000	0.3214
T7	2	1 5/8 Fiber	40.00 - 60.00	0.6000	0.3214
T7	3	Safety Line 3/8	40.00 - 60.00	0.6000	0.3214
T7	4	Fiber	40.00 - 60.00	0.6000	0.3214
T7	5	DC	40.00 - 60.00	0.6000	0.3214
T8	1	1 5/8	20.00 - 40.00	0.6000	0.3431
T8	2	1 5/8 Fiber	20.00 - 40.00	0.6000	0.3431
T8	3	Safety Line 3/8	20.00 - 40.00	0.6000	0.3431
T8	4	Fiber	20.00 - 40.00	0.6000	0.3431
T8	5	DC	20.00 - 40.00	0.6000	0.3431
T9	1	1 5/8	5.00 - 20.00	0.6000	0.3992
T9	2	1 5/8 Fiber	5.00 - 20.00	0.6000	0.3992
T9	3	Safety Line 3/8	5.00 - 20.00	0.6000	0.3992
T9	4	Fiber	5.00 - 20.00	0.6000	0.3992
T9	5	DC	5.00 - 20.00	0.6000	0.3992
T10	1	1 5/8	0.00 - 5.00	0.6000	0.0344
T10	2	1 5/8 Fiber	0.00 - 5.00	0.6000	0.0344
T10	3	Safety Line 3/8	0.00 - 5.00	0.6000	0.0344
T10	4	Fiber	0.00 - 5.00	0.6000	0.0344
T10	5	DC	0.00 - 5.00	0.6000	0.0344

Discrete Tower Loads

Description	Face or Leg	Offset Type	Offsets: Horz Lateral Vert ft ft ft	Azimuth Adjustment °	Placement ft		C_AA_A Front ft^2	C_AA_A Side ft^2	Weight lb
Sector Frame Mount (AT&T)	A	From Leg	1.50 0.00 0.00	0.0000	177.00	No Ice 1/2" Ice 1" Ice	18.00 22.00 23.20	9.00 11.00 23.20	465.00 600.00 735.00
Sector Frame Mount (AT&T)	B	From Leg	1.50 0.00 0.00	0.0000	177.00	No Ice 1/2" Ice 1" Ice	18.00 22.00 23.20	9.00 11.00 23.20	465.00 600.00 735.00
Sector Frame Mount (AT&T)	C	From Leg	1.50 0.00 0.00	0.0000	177.00	No Ice 1/2" Ice 1" Ice	18.00 22.00 23.20	9.00 11.00 23.20	465.00 600.00 735.00
Lightning Rod	C	None		0.0000	180.00	No Ice 1/2" Ice 1" Ice	1.00 2.02 3.05	1.00 2.02 3.05	40.00 49.26 64.89
Powerwave 7770 (AT&T)	A	From Leg	3.00 0.00 0.00	0.0000	177.00	No Ice 1/2" Ice 1" Ice	5.51 6.21 6.93	2.93 3.64 4.33	35.00 105.10 195.10
Powerwave 7770 (AT&T)	B	From Leg	3.00 0.00 0.00	0.0000	177.00	No Ice 1/2" Ice 1" Ice	5.51 6.21 6.93	2.93 3.64 4.33	35.00 105.10 195.10
Powerwave 7770 (AT&T)	C	From Leg	3.00 0.00 0.00	0.0000	177.00	No Ice 1/2" Ice 1" Ice	5.51 6.21 6.93	2.93 3.64 4.33	35.00 105.10 195.10
KMW AM-X-CD-14-65-00T (AT&T)	A	From Leg	3.00 0.00	0.0000	177.00	No Ice 1/2" Ice	4.99 5.62	2.83 3.44	36.40 104.80

Description	Face or Leg	Offset Type	Offsets: Horz Lateral Vert ft ft ft	Azimuth Adjustment °	Placement ft		C_AA_A Front ft^2	C_AA_A Side ft^2	Weight lb
			0.00			1" Ice	6.27	4.05	191.70
Powerwave P65-17-XLH-RR (AT&T)	B	From Leg	3.00	0.0000	177.00	No Ice	11.47	6.80	62.00
			0.00			1/2" Ice	12.69	8.12	193.70
			0.00			1" Ice	13.90	9.35	356.50
Commscope SBNH-1D6565C (AT&T)	C	From Leg	3.00	0.0000	177.00	No Ice	11.45	7.70	51.80
			0.00			1/2" Ice	12.67	8.99	191.20
			0.00			1" Ice	13.89	10.22	362.10
Ericsson RRUS11 (AT&T)	A	From Leg	3.00	0.0000	177.00	No Ice	2.78	1.19	55.00
			0.00			1/2" Ice	3.16	1.47	99.60
			0.00			1" Ice	3.57	1.79	157.10
Ericsson RRUS11 (AT&T)	B	From Leg	3.00	0.0000	177.00	No Ice	2.78	1.19	55.00
			0.00			1/2" Ice	3.16	1.47	99.60
			0.00			1" Ice	3.57	1.79	157.10
Ericsson RRUS11 (AT&T)	C	From Leg	3.00	0.0000	177.00	No Ice	2.78	1.19	55.00
			0.00			1/2" Ice	3.16	1.47	99.60
			0.00			1" Ice	3.57	1.79	157.10
(2) Ericsson RRUS32 (AT&T)	A	From Leg	3.00	0.0000	177.00	No Ice	2.69	1.57	60.00
			0.00			1/2" Ice	3.09	1.93	103.90
			0.00			1" Ice	3.52	2.31	161.20
(2) Ericsson RRUS32 (AT&T)	B	From Leg	3.00	0.0000	177.00	No Ice	2.69	1.57	60.00
			0.00			1/2" Ice	3.09	1.93	103.90
			0.00			1" Ice	3.52	2.31	161.20
(2) Ericsson RRUS32 (AT&T)	C	From Leg	3.00	0.0000	177.00	No Ice	2.69	1.57	60.00
			0.00			1/2" Ice	3.09	1.93	103.90
			0.00			1" Ice	3.52	2.31	161.20
(2) Kaelus LGP21901 (AT&T)	A	From Leg	3.00	0.0000	177.00	No Ice	0.23	0.11	10.00
			0.00			1/2" Ice	0.35	0.20	15.90
			0.00			1" Ice	0.52	0.33	26.90
(2) Kaelus LGP21901 (AT&T)	B	From Leg	3.00	0.0000	177.00	No Ice	0.23	0.11	10.00
			0.00			1/2" Ice	0.35	0.20	15.90
			0.00			1" Ice	0.52	0.33	26.90
(2) Kaelus LGP21901 (AT&T)	C	From Leg	3.00	0.0000	177.00	No Ice	0.23	0.11	10.00
			0.00			1/2" Ice	0.35	0.20	15.90
			0.00			1" Ice	0.52	0.33	26.90
(2) Powerwave LGP21401 (AT&T)	A	From Leg	3.00	0.0000	177.00	No Ice	1.67	0.47	31.00
			0.00			1/2" Ice	1.96	0.67	55.30
			0.00			1" Ice	2.30	0.90	89.40
(2) Powerwave LGP21401 (AT&T)	B	From Leg	3.00	0.0000	177.00	No Ice	1.67	0.47	31.00
			0.00			1/2" Ice	1.96	0.67	55.30
			0.00			1" Ice	2.30	0.90	89.40
(2) Powerwave LGP21401 (AT&T)	C	From Leg	3.00	0.0000	177.00	No Ice	1.67	0.47	31.00
			0.00			1/2" Ice	1.96	0.67	55.30
			0.00			1" Ice	2.30	0.90	89.40
CCI TPA-65R-LCUUUU-H8 (AT&T)	A	From Leg	3.00	0.0000	177.00	No Ice	13.80	8.82	81.60
			0.00			1/2" Ice	14.51	10.08	248.40
			0.00			1" Ice	15.73	11.30	447.70
CCI TPA-65R-LCUUUU-H8 (AT&T)	B	From Leg	3.00	0.0000	177.00	No Ice	13.80	8.82	81.60
			0.00			1/2" Ice	14.51	10.08	248.40
			0.00			1" Ice	15.73	11.30	447.70
Quintel QS46512-2 (AT&T)	C	From Leg	3.00	0.0000	177.00	No Ice	5.55	5.08	75.00
			0.00			1/2" Ice	6.22	5.75	170.20
			0.00			1" Ice	6.92	6.43	286.30
(2) Powerwave DBC0061F1V51-2 (AT&T)	A	From Leg	3.00	0.0000	177.00	No Ice	0.41	0.43	25.40
			0.00			1/2" Ice	0.57	0.59	37.50
			0.00			1" Ice	0.77	0.79	56.60
(2) Powerwave DBC0061F1V51-2	B	From Leg	3.00	0.0000	177.00	No Ice	0.41	0.43	25.40
			0.00			1/2" Ice	0.57	0.59	37.50

Description	Face or Leg	Offset Type	Offsets: Horz Lateral Vert ft ft ft	Azimuth Adjustment °	Placement ft		C_AA_A Front ft^2	C_AA_A Side ft^2	Weight lb
(AT&T)			0.00			1" Ice	0.77	0.79	56.60
(2) Powerwave DBC0061F1V51-2	C	From Leg	3.00	0.0000	177.00	No Ice	0.41	0.43	25.40
			0.00			1/2" Ice	0.57	0.59	37.50
(AT&T)			0.00			1" Ice	0.77	0.79	56.60

Tower Pressures - No Ice

$G_H = 0.850$

Section Elevation ft	z ft	K_Z	q_z psf	A_G ft^2	Face	A_F ft^2	A_R ft^2	A_{leg} ft^2	Leg %	C_AA_A In Face ft^2	C_AA_A Out Face ft^2
T1 180.00-160.00	170.00	1.15	24	74.792	A	2.853	12.348	9.583	63.05	0.750	0.000
					B	2.853	12.348		63.05	0.000	0.000
					C	2.853	12.348		63.05	58.986	0.000
T2 160.00-140.00	150.00	1.11	23	74.792	A	2.853	12.348	9.583	63.05	0.750	0.000
					B	2.853	12.348		63.05	0.000	0.000
					C	2.853	12.348		63.05	65.540	0.000
T3 140.00-120.00	130.00	1.065	22	74.792	A	2.853	12.348	9.583	63.05	0.750	0.000
					B	2.853	12.348		63.05	0.000	0.000
					C	2.853	12.348		63.05	65.540	0.000
T4 120.00-100.00	110.00	1.016	21	74.792	A	2.853	12.348	9.583	63.05	0.750	0.000
					B	2.853	12.348		63.05	0.000	0.000
					C	2.853	12.348		63.05	65.540	0.000
T5 100.00-80.00	90.00	0.959	20	74.792	A	2.853	12.348	9.583	63.05	0.750	0.000
					B	2.853	12.348		63.05	0.000	0.000
					C	2.853	12.348		63.05	65.540	0.000
T6 80.00-60.00	70.00	0.892	19	74.792	A	2.853	12.348	9.583	63.05	0.750	0.000
					B	2.853	12.348		63.05	0.000	0.000
					C	2.853	12.348		63.05	65.540	0.000
T7 60.00-40.00	50.00	0.811	17	74.792	A	2.853	12.348	9.583	63.05	0.750	0.000
					B	2.853	12.348		63.05	0.000	0.000
					C	2.853	12.348		63.05	65.540	0.000
T8 40.00-20.00	30.00	0.701	15	74.792	A	2.853	12.348	9.583	63.05	0.750	0.000
					B	2.853	12.348		63.05	0.000	0.000
					C	2.853	12.348		63.05	65.540	0.000
T9 20.00-5.00	12.50	0.7	15	56.094	A	2.038	9.126	7.188	64.38	0.563	0.000
					B	2.038	9.126		64.38	0.000	0.000
					C	2.038	9.126		64.38	49.155	0.000
T10 5.00-0.00	2.50	0.7	15	10.019	A	0.785	3.127	2.584	66.05	0.188	0.000
					B	0.785	3.127		66.05	0.000	0.000
					C	0.785	3.127		66.05	16.385	0.000

Tower Pressure - With Ice

$G_H = 0.850$

Section Elevation ft	z ft	K_Z	q_z psf	t_Z in	A_G ft^2	Face	A_F ft^2	A_R ft^2	A_{leg} ft^2	Leg %	C_AA_A In Face ft^2	C_AA_A Out Face ft^2
T1 180.00-160.00	170.00	1.15	6	2.3563	82.646	A	2.853	57.862	25.292	41.66	10.175	0.000
						B	2.853	57.862		41.66	0.000	0.000
						C	2.853	57.862		41.66	190.704	0.000
T2 160.00-140.00	150.00	1.11	6	2.3270	82.548	A	2.853	57.296	25.096	41.72	10.058	0.000
						B	2.853	57.296		41.72	0.000	0.000
						C	2.853	57.296		41.72	211.126	0.000
T3 140.00-120.00	130.00	1.065	6	2.2939	82.438	A	2.853	56.658	24.876	41.80	9.926	0.000
						B	2.853	56.658		41.80	0.000	0.000
						C	2.853	56.658		41.80	210.262	0.000
T4 120.00-100.00	110.00	1.016	6	2.2559	82.311	A	2.853	55.923	24.623	41.89	9.774	0.000
						B	2.853	55.923		41.89	0.000	0.000
						C	2.853	55.923		41.89	209.269	0.000
T5 100.00-80.00	90.00	0.959	5	2.2111	82.162	A	2.853	55.058	24.324	42.00	9.594	0.000
						B	2.853	55.058		42.00	0.000	0.000
						C	2.853	55.058		42.00	208.099	0.000
T6 80.00-60.00	70.00	0.892	5	2.1562	81.979	A	2.853	53.998	23.958	42.14	9.375	0.000
						B	2.853	53.998		42.14	0.000	0.000
						C	2.853	53.998		42.14	206.667	0.000
T7 60.00-40.00	50.00	0.811	4	2.0849	81.741	A	2.853	52.620	23.482	42.33	9.089	0.000
						B	2.853	52.620		42.33	0.000	0.000
						C	2.853	52.620		42.33	204.808	0.000
T8 40.00-20.00	30.00	0.701	4	1.9810	81.395	A	2.853	50.614	22.790	42.62	8.674	0.000
						B	2.853	50.614		42.62	0.000	0.000
						C	2.853	50.614		42.62	202.107	0.000
T9 20.00-5.00	12.50	0.7	4	1.8150	60.631	A	2.038	34.390	16.262	44.64	6.007	0.000
						B	2.038	34.390		44.64	0.000	0.000
						C	2.038	34.390		44.64	148.349	0.000
T10 5.00-0.00	2.50	0.7	4	1.5452	11.383	A	0.785	10.207	5.362	48.78	1.733	0.000
						B	0.785	10.207		48.78	0.000	0.000
						C	0.785	10.207		48.78	47.708	0.000

Tower Pressure - Service

$G_H = 0.850$

Section Elevation ft	z ft	K_Z	q_z psf	A_G ft^2	Face	A_F ft^2	A_R ft^2	A_{leg} ft^2	Leg %	C_AA_A In Face ft^2	C_AA_A Out Face ft^2
T1 180.00-160.00	170.00	1.15	9	74.792	A	2.853	12.348	9.583	63.05	0.750	0.000
					B	2.853	12.348		63.05	0.000	0.000
					C	2.853	12.348		63.05	58.986	0.000
T2 160.00-140.00	150.00	1.11	9	74.792	A	2.853	12.348	9.583	63.05	0.750	0.000
					B	2.853	12.348		63.05	0.000	0.000
					C	2.853	12.348		63.05	65.540	0.000
T3 140.00-120.00	130.00	1.065	8	74.792	A	2.853	12.348	9.583	63.05	0.750	0.000
					B	2.853	12.348		63.05	0.000	0.000
					C	2.853	12.348		63.05	65.540	0.000
T4 120.00-100.00	110.00	1.016	8	74.792	A	2.853	12.348	9.583	63.05	0.750	0.000
					B	2.853	12.348		63.05	0.000	0.000
					C	2.853	12.348		63.05	65.540	0.000
T5 100.00-80.00	90.00	0.959	8	74.792	A	2.853	12.348	9.583	63.05	0.750	0.000
					B	2.853	12.348		63.05	0.000	0.000
					C	2.853	12.348		63.05	65.540	0.000

Section Elevation ft	z ft	K_Z	q_z psf	A_G ft²	Face	A_F ft²	A_R ft²	A_{leg} ft²	Leg %	C_AA_A In Face ft²	C_AA_A Out Face ft²
T6 80.00-60.00	70.00	0.892	7	74.792	A	2.853	12.348	9.583	63.05	0.750	0.000
					B	2.853	12.348		63.05	0.000	0.000
					C	2.853	12.348		63.05	65.540	0.000
T7 60.00-40.00	50.00	0.811	6	74.792	A	2.853	12.348	9.583	63.05	0.750	0.000
					B	2.853	12.348		63.05	0.000	0.000
					C	2.853	12.348		63.05	65.540	0.000
T8 40.00-20.00	30.00	0.701	5	74.792	A	2.853	12.348	9.583	63.05	0.750	0.000
					B	2.853	12.348		63.05	0.000	0.000
					C	2.853	12.348		63.05	65.540	0.000
T9 20.00-5.00	12.50	0.7	5	56.094	A	2.038	9.126	7.188	64.38	0.563	0.000
					B	2.038	9.126		64.38	0.000	0.000
					C	2.038	9.126		64.38	49.155	0.000
T10 5.00-0.00	2.50	0.7	5	10.019	A	0.785	3.127	2.584	66.05	0.188	0.000
					B	0.785	3.127		66.05	0.000	0.000
					C	0.785	3.127		66.05	16.385	0.000

Tower Forces - No Ice - Wind Normal To Face

Section Elevation ft	Add Weight lb	Self Weight lb	Face	e	C_F	q_z psf	D_F	D_R	A_E ft²	F lb	w plf	Ctrl. Face
T1	311.12	658.24	A	0.203	2.585	24	1	1	9.953	1257.84	62.89	C
180.00-160.00		TA 214.38	B	0.203	2.585		1	1	9.953			
			C	0.203	2.585		1	1	9.953			
T2	345.20	658.24	A	0.203	2.585	23	1	1	9.953	1291.16	64.56	C
160.00-140.00			B	0.203	2.585		1	1	9.953			
			C	0.203	2.585		1	1	9.953			
T3	345.20	658.24	A	0.203	2.585	22	1	1	9.953	1239.44	61.97	C
140.00-120.00			B	0.203	2.585		1	1	9.953			
			C	0.203	2.585		1	1	9.953			
T4	345.20	658.24	A	0.203	2.585	21	1	1	9.953	1181.67	59.08	C
120.00-100.00		TA 214.38	B	0.203	2.585		1	1	9.953			
			C	0.203	2.585		1	1	9.953			
T5	345.20	658.24	A	0.203	2.585	20	1	1	9.953	1115.82	55.79	C
100.00-80.00			B	0.203	2.585		1	1	9.953			
			C	0.203	2.585		1	1	9.953			
T6	345.20	658.24	A	0.203	2.585	19	1	1	9.953	1038.51	51.93	C
80.00-60.00			B	0.203	2.585		1	1	9.953			
			C	0.203	2.585		1	1	9.953			
T7	345.20	658.24	A	0.203	2.585	17	1	1	9.953	943.32	47.17	C
60.00-40.00			B	0.203	2.585		1	1	9.953			
			C	0.203	2.585		1	1	9.953			
T8	345.20	658.24	A	0.203	2.585	15	1	1	9.953	815.22	40.76	C
40.00-20.00			B	0.203	2.585		1	1	9.953			
			C	0.203	2.585		1	1	9.953			
T9 20.00-5.00	258.90	480.27	A	0.199	2.599	15	1	1	7.279	606.19	40.41	C
			B	0.199	2.599		1	1	7.279			
			C	0.199	2.599		1	1	7.279			
T10 5.00-0.00	86.30	167.93	A	0.39	2.083	15	1	1	2.762	195.19	39.04	C
			B	0.39	2.083		1	1	2.762			
			C	0.39	2.083		1	1	2.762			
Sum Weight:	3072.72	6342.91								9684.35		

Tower Forces - No Ice - Wind 60 To Face

Section Elevation ft	Add Weight lb	Self Weight lb	Face	e	C_F	q_z psf	D_F	D_R	A_E ft²	F lb	w plf	Ctrl. Face
T1	311.12	658.24	A	0.203	2.585	24	0.8	1	9.383	1227.71	61.39	C
180.00-160.00		TA 214.38	B	0.203	2.585		0.8	1	9.383			
			C	0.203	2.585		0.8	1	9.383			
T2	345.20	658.24	A	0.203	2.585	23	0.8	1	9.383	1262.09	63.10	C
160.00-140.00			B	0.203	2.585		0.8	1	9.383			
			C	0.203	2.585		0.8	1	9.383			
T3	345.20	658.24	A	0.203	2.585	22	0.8	1	9.383	1211.53	60.58	C
140.00-120.00			B	0.203	2.585		0.8	1	9.383			
			C	0.203	2.585		0.8	1	9.383			
T4	345.20	658.24	A	0.203	2.585	21	0.8	1	9.383	1155.06	57.75	C
120.00-100.00		TA 214.38	B	0.203	2.585		0.8	1	9.383			
			C	0.203	2.585		0.8	1	9.383			
T5	345.20	658.24	A	0.203	2.585	20	0.8	1	9.383	1090.70	54.53	C
100.00-80.00			B	0.203	2.585		0.8	1	9.383			
			C	0.203	2.585		0.8	1	9.383			
T6	345.20	658.24	A	0.203	2.585	19	0.8	1	9.383	1015.13	50.76	C
80.00-60.00			B	0.203	2.585		0.8	1	9.383			
			C	0.203	2.585		0.8	1	9.383			
T7	345.20	658.24	A	0.203	2.585	17	0.8	1	9.383	922.08	46.10	C
60.00-40.00			B	0.203	2.585		0.8	1	9.383			
			C	0.203	2.585		0.8	1	9.383			
T8	345.20	658.24	A	0.203	2.585	15	0.8	1	9.383	796.86	39.84	C
40.00-20.00			B	0.203	2.585		0.8	1	9.383			
			C	0.203	2.585		0.8	1	9.383			
T9 20.00-5.00	258.90	480.27	A	0.199	2.599	15	0.8	1	6.871	593.01	39.53	C
			B	0.199	2.599		0.8	1	6.871			
			C	0.199	2.599		0.8	1	6.871			
T10 5.00-0.00	86.30	167.93	A	0.39	2.083	15	0.8	1	2.605	191.12	38.22	C
			B	0.39	2.083		0.8	1	2.605			
			C	0.39	2.083		0.8	1	2.605			
Sum Weight:	3072.72	6342.91								9465.28		

Tower Forces - No Ice - Wind 90 To Face

Section Elevation ft	Add Weight lb	Self Weight lb	Face	e	C_F	q_z psf	D_F	D_R	A_E ft²	F lb	w plf	Ctrl. Face
T1	311.12	658.24	A	0.203	2.585	24	0.85	1	9.526	1235.24	61.76	C
180.00-160.00		TA 214.38	B	0.203	2.585		0.85	1	9.526			
			C	0.203	2.585		0.85	1	9.526			
T2	345.20	658.24	A	0.203	2.585	23	0.85	1	9.526	1269.36	63.47	C
160.00-140.00			B	0.203	2.585		0.85	1	9.526			
			C	0.203	2.585		0.85	1	9.526			
T3	345.20	658.24	A	0.203	2.585	22	0.85	1	9.526	1218.50	60.93	C
140.00-120.00			B	0.203	2.585		0.85	1	9.526			
			C	0.203	2.585		0.85	1	9.526			
T4	345.20	658.24	A	0.203	2.585	21	0.85	1	9.526	1161.71	58.09	C
120.00-100.00		TA 214.38	B	0.203	2.585		0.85	1	9.526			
			C	0.203	2.585		0.85	1	9.526			

Section Elevation ft	Add Weight lb	Self Weight lb	Face	e	C_F	q_z psf	D_F	D_R	A_E ft²	F lb	w plf	Ctrl. Face
T5	345.20	658.24	A	0.203	2.585	20	0.85	1	9.526	1096.98	54.85	C
100.00-80.00			B	0.203	2.585		0.85	1	9.526			
			C	0.203	2.585		0.85	1	9.526			
T6	345.20	658.24	A	0.203	2.585	19	0.85	1	9.526	1020.97	51.05	C
80.00-60.00			B	0.203	2.585		0.85	1	9.526			
			C	0.203	2.585		0.85	1	9.526			
T7	345.20	658.24	A	0.203	2.585	17	0.85	1	9.526	927.39	46.37	C
60.00-40.00			B	0.203	2.585		0.85	1	9.526			
			C	0.203	2.585		0.85	1	9.526			
T8	345.20	658.24	A	0.203	2.585	15	0.85	1	9.526	801.45	40.07	C
40.00-20.00			B	0.203	2.585		0.85	1	9.526			
			C	0.203	2.585		0.85	1	9.526			
T9 20.00-5.00	258.90	480.27	A	0.199	2.599	15	0.85	1	6.973	596.31	39.75	C
			B	0.199	2.599		0.85	1	6.973			
			C	0.199	2.599		0.85	1	6.973			
T10 5.00-0.00	86.30	167.93	A	0.39	2.083	15	0.85	1	2.644	192.14	38.43	C
			B	0.39	2.083		0.85	1	2.644			
			C	0.39	2.083		0.85	1	2.644			
Sum Weight:	3072.72	6342.91								9520.05		

Tower Forces - With Ice - Wind Normal To Face

Section Elevation ft	Add Weight lb	Self Weight lb	Face	e	C_F	q_z psf	D_F	D_R	A_E ft²	F lb	w plf	Ctrl. Face
T1	3492.26	3976.13	A	0.735	1.782	6	1	1	51.234	768.99	38.45	C
180.00-160.00		TA	B	0.735	1.782		1	1	51.234			
		1038.49	C	0.735	1.782		1	1	51.234			
T2	3816.38	3909.50	A	0.729	1.781	6	1	1	50.509	769.36	38.47	C
160.00-140.00			B	0.729	1.781		1	1	50.509			
			C	0.729	1.781		1	1	50.509			
T3	3764.79	3835.10	A	0.722	1.779	6	1	1	49.698	737.06	36.85	C
140.00-120.00			B	0.722	1.779		1	1	49.698			
			C	0.722	1.779		1	1	49.698			
T4	3705.82	3750.58	A	0.714	1.778	6	1	1	48.775	701.21	35.06	C
120.00-100.00		TA 989.70	B	0.714	1.778		1	1	48.775			
			C	0.714	1.778		1	1	48.775			
T5	3636.73	3652.29	A	0.705	1.776	5	1	1	47.699	660.62	33.03	C
100.00-80.00			B	0.705	1.776		1	1	47.699			
			C	0.705	1.776		1	1	47.699			
T6	3552.80	3533.98	A	0.693	1.776	5	1	1	46.400	613.32	30.67	C
80.00-60.00			B	0.693	1.776		1	1	46.400			
			C	0.693	1.776		1	1	46.400			
T7	3444.79	3383.50	A	0.679	1.776	4	1	1	44.741	555.58	27.78	C
60.00-40.00			B	0.679	1.776		1	1	44.741			
			C	0.679	1.776		1	1	44.741			
T8	3289.82	3171.29	A	0.657	1.78	4	1	1	42.387	478.68	23.93	C
40.00-20.00			B	0.657	1.78		1	1	42.387			
			C	0.657	1.78		1	1	42.387			
T9 20.00-5.00	2285.57	2054.98	A	0.601	1.803	4	1	1	27.634	360.75	24.05	C
			B	0.601	1.803		1	1	27.634			
			C	0.601	1.803		1	1	27.634			
T10 5.00-0.00	666.99	591.24	A	0.966	2.032	4	1	1	10.992	77.38*	15.48	C

Section Elevation ft	Add Weight lb	Self Weight lb	Face	e	C_F	q_z psf	D_F	D_R	A_E ft²	F lb	w plf	Ctrl. Face
			B	0.966	2.032		1	1	10.992			
			C	0.966	2.032		1	1	10.992			
Sum Weight:	31655.94	33886.77			*2.1A_g limit					5722.94		

Tower Forces - With Ice - Wind 60 To Face

Section Elevation ft	Add Weight lb	Self Weight lb	Face	e	C_F	q_z psf	D_F	D_R	A_E ft²	F lb	w plf	Ctrl. Face
T1	3492.26	3976.13	A	0.735	1.782	6	0.8	1	50.663	763.58	38.18	C
180.00-160.00		TA	B	0.735	1.782		0.8	1	50.663			
		1038.49	C	0.735	1.782		0.8	1	50.663			
T2	3816.38	3909.50	A	0.729	1.781	6	0.8	1	49.938	764.15	38.21	C
160.00-140.00			B	0.729	1.781		0.8	1	49.938			
			C	0.729	1.781		0.8	1	49.938			
T3	3764.79	3835.10	A	0.722	1.779	6	0.8	1	49.127	732.06	36.60	C
140.00-120.00			B	0.722	1.779		0.8	1	49.127			
			C	0.722	1.779		0.8	1	49.127			
T4	3705.82	3750.58	A	0.714	1.778	6	0.8	1	48.204	696.44	34.82	C
120.00-100.00		TA 989.70	B	0.714	1.778		0.8	1	48.204			
			C	0.714	1.778		0.8	1	48.204			
T5	3636.73	3652.29	A	0.705	1.776	5	0.8	1	47.128	656.12	32.81	C
100.00-80.00			B	0.705	1.776		0.8	1	47.128			
			C	0.705	1.776		0.8	1	47.128			
T6	3552.80	3533.98	A	0.693	1.776	5	0.8	1	45.829	609.14	30.46	C
80.00-60.00			B	0.693	1.776		0.8	1	45.829			
			C	0.693	1.776		0.8	1	45.829			
T7	3444.79	3383.50	A	0.679	1.776	4	0.8	1	44.170	551.78	27.59	C
60.00-40.00			B	0.679	1.776		0.8	1	44.170			
			C	0.679	1.776		0.8	1	44.170			
T8	3289.82	3171.29	A	0.657	1.78	4	0.8	1	41.817	475.39	23.77	C
40.00-20.00			B	0.657	1.78		0.8	1	41.817			
			C	0.657	1.78		0.8	1	41.817			
T9 20.00-5.00	2285.57	2054.98	A	0.601	1.803	4	0.8	1	27.226	358.38	23.89	C
			B	0.601	1.803		0.8	1	27.226			
			C	0.601	1.803		0.8	1	27.226			
T10 5.00-0.00	666.99	591.24	A	0.966	2.032	4	0.8	1	10.835	76.76	15.35	C
			B	0.966	2.032		0.8	1	10.835			
			C	0.966	2.032		0.8	1	10.835			
Sum Weight:	31655.94	33886.77								5683.79		

Tower Forces - With Ice - Wind 90 To Face

Section Elevation ft	Add Weight lb	Self Weight lb	Face	e	C_F	q_z psf	D_F	D_R	A_E ft²	F lb	w plf	Ctrl. Face

Section Elevation ft	Add Weight lb	Self Weight lb	Face	e	C_F	q_z psf	D_F	D_R	A_E ft²	F lb	w plf	Ctrl. Face
T1	3492.26	3976.13	A	0.735	1.782	6	0.85	1	50.806	764.93	38.25	C
180.00-160.00		TA	B	0.735	1.782		0.85	1	50.806			
		1038.49	C	0.735	1.782		0.85	1	50.806			
T2	3816.38	3909.50	A	0.729	1.781	6	0.85	1	50.081	765.45	38.27	C
160.00-140.00			B	0.729	1.781		0.85	1	50.081			
			C	0.729	1.781		0.85	1	50.081			
T3	3764.79	3835.10	A	0.722	1.779	6	0.85	1	49.270	733.31	36.67	C
140.00-120.00			B	0.722	1.779		0.85	1	49.270			
			C	0.722	1.779		0.85	1	49.270			
T4	3705.82	3750.58	A	0.714	1.778	6	0.85	1	48.347	697.63	34.88	C
120.00-100.00		TA 989.70	B	0.714	1.778		0.85	1	48.347			
			C	0.714	1.778		0.85	1	48.347			
T5	3636.73	3652.29	A	0.705	1.776	5	0.85	1	47.271	657.25	32.86	C
100.00-80.00			B	0.705	1.776		0.85	1	47.271			
			C	0.705	1.776		0.85	1	47.271			
T6	3552.80	3533.98	A	0.693	1.776	5	0.85	1	45.972	610.18	30.51	C
80.00-60.00			B	0.693	1.776		0.85	1	45.972			
			C	0.693	1.776		0.85	1	45.972			
T7	3444.79	3383.50	A	0.679	1.776	4	0.85	1	44.313	552.73	27.64	C
60.00-40.00			B	0.679	1.776		0.85	1	44.313			
			C	0.679	1.776		0.85	1	44.313			
T8	3289.82	3171.29	A	0.657	1.78	4	0.85	1	41.959	476.21	23.81	C
40.00-20.00			B	0.657	1.78		0.85	1	41.959			
			C	0.657	1.78		0.85	1	41.959			
T9 20.00-5.00	2285.57	2054.98	A	0.601	1.803	4	0.85	1	27.328	358.97	23.93	C
			B	0.601	1.803		0.85	1	27.328			
			C	0.601	1.803		0.85	1	27.328			
T10 5.00-0.00	666.99	591.24	A	0.966	2.032	4	0.85	1	10.874	77.02	15.40	C
			B	0.966	2.032		0.85	1	10.874			
			C	0.966	2.032		0.85	1	10.874			
Sum Weight:	31655.94	33886.77								5693.68		

Tower Forces - Service - Wind Normal To Face

Section Elevation ft	Add Weight lb	Self Weight lb	Face	e	C_F	q_z psf	D_F	D_R	A_E ft²	F lb	w plf	Ctrl. Face
T1	311.12	658.24	A	0.203	2.585	9	1	1	9.953	471.49	23.57	C
180.00-160.00		TA 214.38	B	0.203	2.585		1	1	9.953			
			C	0.203	2.585		1	1	9.953			
T2	345.20	658.24	A	0.203	2.585	9	1	1	9.953	483.98	24.20	C
160.00-140.00			B	0.203	2.585		1	1	9.953			
			C	0.203	2.585		1	1	9.953			
T3	345.20	658.24	A	0.203	2.585	8	1	1	9.953	464.59	23.23	C
140.00-120.00			B	0.203	2.585		1	1	9.953			
			C	0.203	2.585		1	1	9.953			
T4	345.20	658.24	A	0.203	2.585	8	1	1	9.953	442.94	22.15	C
120.00-100.00		TA 214.38	B	0.203	2.585		1	1	9.953			
			C	0.203	2.585		1	1	9.953			
T5	345.20	658.24	A	0.203	2.585	8	1	1	9.953	418.26	20.91	C
100.00-80.00			B	0.203	2.585		1	1	9.953			
			C	0.203	2.585		1	1	9.953			
T6	345.20	658.24	A	0.203	2.585	7	1	1	9.953	389.28	19.46	C

Section Elevation ft	Add Weight lb	Self Weight lb	Face	e	C_F	q_z psf	D_F	D_R	A_E ft²	F lb	w plf	Ctrl. Face
80.00-60.00			B	0.203	2.585		1	1	9.953			
			C	0.203	2.585		1	1	9.953			
T7	345.20	658.24	A	0.203	2.585	6	1	1	9.953	353.60	17.68	C
60.00-40.00			B	0.203	2.585		1	1	9.953			
			C	0.203	2.585		1	1	9.953			
T8	345.20	658.24	A	0.203	2.585	5	1	1	9.953	305.58	15.28	C
40.00-20.00			B	0.203	2.585		1	1	9.953			
			C	0.203	2.585		1	1	9.953			
T9 20.00-5.00	258.90	480.27	A	0.199	2.599	5	1	1	7.279	227.22	15.15	C
			B	0.199	2.599		1	1	7.279			
			C	0.199	2.599		1	1	7.279			
T10 5.00-0.00	86.30	167.93	A	0.39	2.083	5	1	1	2.762	73.16	14.63	C
			B	0.39	2.083		1	1	2.762			
			C	0.39	2.083		1	1	2.762			
Sum Weight:	3072.72	6342.91								3630.12		

Tower Forces - Service - Wind 60 To Face

Section Elevation ft	Add Weight lb	Self Weight lb	Face	e	C_F	q_z psf	D_F	D_R	A_E ft²	F lb	w plf	Ctrl. Face
T1	311.12	658.24	A	0.203	2.585	9	0.8	1	9.383	460.20	23.01	C
180.00-160.00		TA 214.38	B	0.203	2.585		0.8	1	9.383			
			C	0.203	2.585		0.8	1	9.383			
T2	345.20	658.24	A	0.203	2.585	9	0.8	1	9.383	473.09	23.65	C
160.00-140.00			B	0.203	2.585		0.8	1	9.383			
			C	0.203	2.585		0.8	1	9.383			
T3	345.20	658.24	A	0.203	2.585	8	0.8	1	9.383	454.13	22.71	C
140.00-120.00			B	0.203	2.585		0.8	1	9.383			
			C	0.203	2.585		0.8	1	9.383			
T4	345.20	658.24	A	0.203	2.585	8	0.8	1	9.383	432.97	21.65	C
120.00-100.00		TA 214.38	B	0.203	2.585		0.8	1	9.383			
			C	0.203	2.585		0.8	1	9.383			
T5	345.20	658.24	A	0.203	2.585	8	0.8	1	9.383	408.84	20.44	C
100.00-80.00			B	0.203	2.585		0.8	1	9.383			
			C	0.203	2.585		0.8	1	9.383			
T6	345.20	658.24	A	0.203	2.585	7	0.8	1	9.383	380.51	19.03	C
80.00-60.00			B	0.203	2.585		0.8	1	9.383			
			C	0.203	2.585		0.8	1	9.383			
T7	345.20	658.24	A	0.203	2.585	6	0.8	1	9.383	345.64	17.28	C
60.00-40.00			B	0.203	2.585		0.8	1	9.383			
			C	0.203	2.585		0.8	1	9.383			
T8	345.20	658.24	A	0.203	2.585	5	0.8	1	9.383	298.70	14.93	C
40.00-20.00			B	0.203	2.585		0.8	1	9.383			
			C	0.203	2.585		0.8	1	9.383			
T9 20.00-5.00	258.90	480.27	A	0.199	2.599	5	0.8	1	6.871	222.29	14.82	C
			B	0.199	2.599		0.8	1	6.871			
			C	0.199	2.599		0.8	1	6.871			
T10 5.00-0.00	86.30	167.93	A	0.39	2.083	5	0.8	1	2.605	71.64	14.33	C
			B	0.39	2.083		0.8	1	2.605			
			C	0.39	2.083		0.8	1	2.605			
Sum Weight:	3072.72	6342.91								3548.00		

Tower Forces - Service - Wind 90 To Face

Section Elevation ft	Add Weight lb	Self Weight lb	Face	e	C_F	q_z psf	D_F	D_R	A_E ft²	F lb	w plf	Ctrl. Face
T1	311.12	658.24	A	0.203	2.585	9	0.85	1	9.526	463.02	23.15	C
180.00-160.00		TA 214.38	B	0.203	2.585		0.85	1	9.526			
			C	0.203	2.585		0.85	1	9.526			
T2	345.20	658.24	A	0.203	2.585	9	0.85	1	9.526	475.81	23.79	C
160.00-140.00			B	0.203	2.585		0.85	1	9.526			
			C	0.203	2.585		0.85	1	9.526			
T3	345.20	658.24	A	0.203	2.585	8	0.85	1	9.526	456.75	22.84	C
140.00-120.00			B	0.203	2.585		0.85	1	9.526			
			C	0.203	2.585		0.85	1	9.526			
T4	345.20	658.24	A	0.203	2.585	8	0.85	1	9.526	435.46	21.77	C
120.00-100.00		TA 214.38	B	0.203	2.585		0.85	1	9.526			
			C	0.203	2.585		0.85	1	9.526			
T5	345.20	658.24	A	0.203	2.585	8	0.85	1	9.526	411.20	20.56	C
100.00-80.00			B	0.203	2.585		0.85	1	9.526			
			C	0.203	2.585		0.85	1	9.526			
T6	345.20	658.24	A	0.203	2.585	7	0.85	1	9.526	382.71	19.14	C
80.00-60.00			B	0.203	2.585		0.85	1	9.526			
			C	0.203	2.585		0.85	1	9.526			
T7	345.20	658.24	A	0.203	2.585	6	0.85	1	9.526	347.63	17.38	C
60.00-40.00			B	0.203	2.585		0.85	1	9.526			
			C	0.203	2.585		0.85	1	9.526			
T8	345.20	658.24	A	0.203	2.585	5	0.85	1	9.526	300.42	15.02	C
40.00-20.00			B	0.203	2.585		0.85	1	9.526			
			C	0.203	2.585		0.85	1	9.526			
T9 20.00-5.00	258.90	480.27	A	0.199	2.599	5	0.85	1	6.973	223.52	14.90	C
			B	0.199	2.599		0.85	1	6.973			
			C	0.199	2.599		0.85	1	6.973			
T10 5.00-0.00	86.30	167.93	A	0.39	2.083	5	0.85	1	2.644	72.02	14.40	C
			B	0.39	2.083		0.85	1	2.644			
			C	0.39	2.083		0.85	1	2.644			
Sum Weight:	3072.72	6342.91								3568.53		

Discrete Appurtenance Pressures - No Ice $G_H = 0.850$

Description	Aiming Azimuth °	Weight lb	$Offset_x$ ft	$Offset_z$ ft	z ft	K_z	q_z psf	C_AA_C Front ft²	C_AA_C Side ft²
Torque Arm Face C	180.0000	0.00	0.00	2.53	170.89	1.152	24	3.54	5.32
Torque Arm Face B	60.0000	0.00	2.19	-1.26	170.89	1.152	24	3.54	5.32
Torque Arm Face A	300.0000	0.00	-2.19	-1.26	170.89	1.152	24	3.54	5.32
Torque Arm Face C	180.0000	0.00	0.00	2.53	117.30	1.034	22	3.54	5.32
Torque Arm Face B	60.0000	0.00	2.19	-1.26	117.30	1.034	22	3.54	5.32
Torque Arm Face A	300.0000	0.00	-2.19	-1.26	117.30	1.034	22	3.54	5.32
Sector Frame Mount	0.0000	465.00	0.00	-3.52	177.00	1.163	24	18.00	9.00
Sector Frame Mount	120.0000	465.00	3.05	1.76	177.00	1.163	24	18.00	9.00
Sector Frame Mount	240.0000	465.00	-3.05	1.76	177.00	1.163	24	18.00	9.00
Lightning Rod	0.0000	40.00	0.00	0.00	180.00	1.169	24	1.00	1.00
Powerwave 7770	0.0000	35.00	0.00	-5.02	177.00	1.163	24	5.51	2.93

Description	Aiming Azimuth °	Weight lb	$Offset_x$ ft	$Offset_z$ ft	z ft	K_z	q_z psf	C_AA_C Front ft^2	C_AA_C Side ft^2
Powerwave 7770	120.0000	35.00	4.35	2.51	177.00	1.163	24	5.51	2.93
Powerwave 7770	240.0000	35.00	-4.35	2.51	177.00	1.163	24	5.51	2.93
KMW AM-X-CD-14-65-00T	0.0000	36.40	0.00	-5.02	177.00	1.163	24	4.99	2.83
Powerwave P65-17-XLH-RR	120.0000	62.00	4.35	2.51	177.00	1.163	24	11.47	6.80
Commscope SBNH-1D6565C	240.0000	51.80	-4.35	2.51	177.00	1.163	24	11.45	7.70
Ericsson RRUS11	0.0000	55.00	0.00	-5.02	177.00	1.163	24	2.78	1.19
Ericsson RRUS11	120.0000	55.00	4.35	2.51	177.00	1.163	24	2.78	1.19
Ericsson RRUS11	240.0000	55.00	-4.35	2.51	177.00	1.163	24	2.78	1.19
Ericsson RRUS32	0.0000	120.00	0.00	-5.02	177.00	1.163	24	5.38	3.14
Ericsson RRUS32	120.0000	120.00	4.35	2.51	177.00	1.163	24	5.38	3.14
Ericsson RRUS32	240.0000	120.00	-4.35	2.51	177.00	1.163	24	5.38	3.14
Kaelus LGP21901	0.0000	20.00	0.00	-5.02	177.00	1.163	24	0.46	0.22
Kaelus LGP21901	120.0000	20.00	4.35	2.51	177.00	1.163	24	0.46	0.22
Kaelus LGP21901	240.0000	20.00	-4.35	2.51	177.00	1.163	24	0.46	0.22
Powerwave LGP21401	0.0000	62.00	0.00	-5.02	177.00	1.163	24	3.34	0.94
Powerwave LGP21401	120.0000	62.00	4.35	2.51	177.00	1.163	24	3.34	0.94
Powerwave LGP21401	240.0000	62.00	-4.35	2.51	177.00	1.163	24	3.34	0.94
CCI TPA-65R-LCUUUU-H8	0.0000	81.60	0.00	-5.02	177.00	1.163	24	13.80	8.82
CCI TPA-65R-LCUUUU-H8	120.0000	81.60	4.35	2.51	177.00	1.163	24	13.80	8.82
Quintel QS46512-2	240.0000	75.00	-4.35	2.51	177.00	1.163	24	5.55	5.08
Powerwave DBC0061F1V51-2	0.0000	50.80	0.00	-5.02	177.00	1.163	24	0.82	0.86
Powerwave DBC0061F1V51-2	120.0000	50.80	4.35	2.51	177.00	1.163	24	0.82	0.86
Powerwave DBC0061F1V51-2	240.0000	50.80	-4.35	2.51	177.00	1.163	24	0.82	0.86
	Sum Weight:	2851.80							

Discrete Appurtenance Pressures - With Ice $G_H = 0.850$

Description	Aiming Azimuth °	Weight lb	$Offset_x$ ft	$Offset_z$ ft	z ft	K_z	q_z psf	C_AA_C Front ft^2	C_AA_C Side ft^2	t_z in
Torque Arm Face C	180.0000	0.00	0.00	2.53	170.89	1.152	6	6.77	9.91	2.3563
Torque Arm Face B	60.0000	0.00	2.19	-1.26	170.89	1.152	6	6.77	9.91	2.3563
Torque Arm Face A	300.0000	0.00	-2.19	-1.26	170.89	1.152	6	6.77	9.91	2.3563
Torque Arm Face C	180.0000	0.00	0.00	2.53	117.30	1.034	6	6.63	9.72	2.2559
Torque Arm Face B	60.0000	0.00	2.19	-1.26	117.30	1.034	6	6.63	9.72	2.2559
Torque Arm Face A	300.0000	0.00	-2.19	-1.26	117.30	1.034	6	6.63	9.72	2.2559
Sector Frame Mount	0.0000	1103.76	0.00	-3.52	177.00	1.163	6	36.31	36.31	2.3658
Sector Frame Mount	120.0000	1103.76	3.05	1.76	177.00	1.163	6	36.31	36.31	2.3658
Sector Frame Mount	240.0000	1103.76	-3.05	1.76	177.00	1.163	6	36.31	36.31	2.3658
Lightning Rod	0.0000	150.05	0.00	0.00	180.00	1.169	6	5.62	5.62	2.3698
Powerwave 7770	0.0000	366.68	0.00	-5.02	177.00	1.163	6	8.82	6.29	2.3658
Powerwave 7770	120.0000	366.68	4.35	2.51	177.00	1.163	6	8.82	6.29	2.3658
Powerwave 7770	240.0000	366.68	-4.35	2.51	177.00	1.163	6	8.82	6.29	2.3658
KMW AM-X-CD-14-65-00T	0.0000	366.68	0.00	-5.02	177.00	1.163	6	8.82	6.29	2.3658
Powerwave P65-17-XLH-RR	120.0000	366.68	4.35	2.51	177.00	1.163	6	8.82	6.29	2.3658
Commscope SBNH-1D6565C	240.0000	366.68	-4.35	2.51	177.00	1.163	6	17.22	6.29	2.3658

Description	Aiming Azimuth °	Weight lb	$Offset_x$ ft	$Offset_z$ ft	z ft	K_z	q_z psf	C_AA_C Front ft^2	C_AA_C Side ft^2	t_z in
Ericsson RRUS11	0.0000	366.68	0.00	-5.02	177.00	1.163	6	8.82	6.29	2.3658
Ericsson RRUS11	120.0000	366.68	4.35	2.51	177.00	1.163	6	8.82	6.29	2.3658
Ericsson RRUS11	240.0000	366.68	-4.35	2.51	177.00	1.163	6	8.82	6.29	2.3658
Ericsson RRUS32	0.0000	733.37	0.00	-5.02	177.00	1.163	6	17.64	12.58	2.3658
Ericsson RRUS32	120.0000	733.37	4.35	2.51	177.00	1.163	6	17.64	12.58	2.3658
Ericsson RRUS32	240.0000	733.37	-4.35	2.51	177.00	1.163	6	17.64	12.58	2.3658
Kaelus LGP21901	0.0000	733.37	0.00	-5.02	177.00	1.163	6	17.64	12.58	2.3658
Kaelus LGP21901	120.0000	733.37	4.35	2.51	177.00	1.163	6	17.64	12.58	2.3658
Kaelus LGP21901	240.0000	733.37	-4.35	2.51	177.00	1.163	6	17.64	12.58	2.3658
Powerwave LGP21401	0.0000	733.37	0.00	-5.02	177.00	1.163	6	17.64	12.58	2.3658
Powerwave LGP21401	120.0000	733.37	4.35	2.51	177.00	1.163	6	17.64	12.58	2.3658
Powerwave LGP21401	240.0000	733.37	-4.35	2.51	177.00	1.163	6	17.64	12.58	2.3658
CCI TPA-65R-LCUUUU-H8	0.0000	366.68	0.00	-5.02	177.00	1.163	6	8.82	6.29	2.3658
CCI TPA-65R-LCUUUU-H8	120.0000	366.68	4.35	2.51	177.00	1.163	6	8.82	6.29	2.3658
Quintel QS46512-2	240.0000	366.68	-4.35	2.51	177.00	1.163	6	8.82	6.29	2.3658
Powerwave DBC0061F1V51-2	0.0000	733.37	0.00	-5.02	177.00	1.163	6	17.64	12.58	2.3658
Powerwave DBC0061F1V51-2	120.0000	733.37	4.35	2.51	177.00	1.163	6	17.64	12.58	2.3658
Powerwave DBC0061F1V51-2	240.0000	733.37	-4.35	2.51	177.00	1.163	6	17.64	12.58	2.3658
	Sum Weight:	16661.95								

Discrete Appurtenance Pressures - Service $G_H = 0.850$

Description	Aiming Azimuth °	Weight lb	$Offset_x$ ft	$Offset_z$ ft	z ft	K_z	q_z psf	C_AA_C Front ft^2	C_AA_C Side ft^2
Torque Arm Face C	180.0000	0.00	0.00	2.53	170.89	1.152	9	3.54	5.32
Torque Arm Face B	60.0000	0.00	2.19	-1.26	170.89	1.152	9	3.54	5.32
Torque Arm Face A	300.0000	0.00	-2.19	-1.26	170.89	1.152	9	3.54	5.32
Torque Arm Face C	180.0000	0.00	0.00	2.53	117.30	1.034	8	3.54	5.32
Torque Arm Face B	60.0000	0.00	2.19	-1.26	117.30	1.034	8	3.54	5.32
Torque Arm Face A	300.0000	0.00	-2.19	-1.26	117.30	1.034	8	3.54	5.32
Sector Frame Mount	0.0000	465.00	0.00	-3.52	177.00	1.163	9	18.00	9.00
Sector Frame Mount	120.0000	465.00	3.05	1.76	177.00	1.163	9	18.00	9.00
Sector Frame Mount	240.0000	465.00	-3.05	1.76	177.00	1.163	9	18.00	9.00
Lightning Rod	0.0000	40.00	0.00	0.00	180.00	1.169	9	1.00	1.00
Powerwave 7770	0.0000	35.00	0.00	-5.02	177.00	1.163	9	5.51	2.93
Powerwave 7770	120.0000	35.00	4.35	2.51	177.00	1.163	9	5.51	2.93
Powerwave 7770	240.0000	35.00	-4.35	2.51	177.00	1.163	9	5.51	2.93
KMW AM-X-CD-14-65-00T	0.0000	36.40	0.00	-5.02	177.00	1.163	9	4.99	2.83
Powerwave P65-17-XLH-RR	120.0000	62.00	4.35	2.51	177.00	1.163	9	11.47	6.80
Commscope SBNH-1D6565C	240.0000	51.80	-4.35	2.51	177.00	1.163	9	11.45	7.70
Ericsson RRUS11	0.0000	55.00	0.00	-5.02	177.00	1.163	9	2.78	1.19
Ericsson RRUS11	120.0000	55.00	4.35	2.51	177.00	1.163	9	2.78	1.19
Ericsson RRUS11	240.0000	55.00	-4.35	2.51	177.00	1.163	9	2.78	1.19
Ericsson RRUS32	0.0000	120.00	0.00	-5.02	177.00	1.163	9	5.38	3.14
Ericsson RRUS32	120.0000	120.00	4.35	2.51	177.00	1.163	9	5.38	3.14
Ericsson RRUS32	240.0000	120.00	-4.35	2.51	177.00	1.163	9	5.38	3.14
Kaelus LGP21901	0.0000	20.00	0.00	-5.02	177.00	1.163	9	0.46	0.22
Kaelus LGP21901	120.0000	20.00	4.35	2.51	177.00	1.163	9	0.46	0.22

Description	Aiming Azimuth °	Weight lb	$Offset_x$ ft	$Offset_z$ ft	z ft	K_z	q_z psf	C_AA_C Front ft^2	C_AA_C Side ft^2
Kaelus LGP21901	240.0000	20.00	-4.35	2.51	177.00	1.163	9	0.46	0.22
Powerwave LGP21401	0.0000	62.00	0.00	-5.02	177.00	1.163	9	3.34	0.94
Powerwave LGP21401	120.0000	62.00	4.35	2.51	177.00	1.163	9	3.34	0.94
Powerwave LGP21401	240.0000	62.00	-4.35	2.51	177.00	1.163	9	3.34	0.94
CCI TPA-65R-LCUUUU-H8	0.0000	81.60	0.00	-5.02	177.00	1.163	9	13.80	8.82
CCI TPA-65R-LCUUUU-H8	120.0000	81.60	4.35	2.51	177.00	1.163	9	13.80	8.82
Quintel QS46512-2	240.0000	75.00	-4.35	2.51	177.00	1.163	9	5.55	5.08
Powerwave DBC0061F1V51-2	0.0000	50.80	0.00	-5.02	177.00	1.163	9	0.82	0.86
Powerwave DBC0061F1V51-2	120.0000	50.80	4.35	2.51	177.00	1.163	9	0.82	0.86
Powerwave DBC0061F1V51-2	240.0000	50.80	-4.35	2.51	177.00	1.163	9	0.82	0.86
	Sum Weight:	2851.80							

Force Totals (Does not include forces on guys)

Load Case	Vertical Forces lb	Sum of Forces X lb	Sum of Forces Z lb	Sum of Torques lb-ft
Leg Weight	3138.04			
Bracing Weight	3204.87			
Total Member Self-Weight	6342.91			
Guy Weight	2135.83			
Total Weight	14403.26			
Wind 0 deg - No Ice		-38.87	-12370.04	185.02
Wind 30 deg - No Ice		6067.51	-10551.04	1252.02
Wind 60 deg - No Ice		10690.40	-6151.36	2012.51
Wind 90 deg - No Ice		12202.35	38.87	2183.01
Wind 120 deg - No Ice		10729.27	6218.69	1827.49
Wind 150 deg - No Ice		6134.84	10589.91	930.99
Wind 180 deg - No Ice		38.87	12370.04	-185.02
Wind 210 deg - No Ice		-6067.51	10551.04	-1252.02
Wind 240 deg - No Ice		-10690.40	6151.36	-2012.51
Wind 270 deg - No Ice		-12202.35	-38.87	-2183.01
Wind 300 deg - No Ice		-10729.27	-6218.69	-1827.49
Wind 330 deg - No Ice		-6134.84	-10589.91	-930.99
Member Ice	27543.86			
Guy Ice	20618.60			
Total Weight Ice	104959.08			
Wind 0 deg - Ice		15.65	-7622.87	-34.40
Wind 30 deg - Ice		3819.40	-6584.09	263.84
Wind 60 deg - Ice		6625.08	-3824.99	493.73
Wind 90 deg - Ice		7611.69	-15.65	586.95
Wind 120 deg - Ice		6609.42	3797.88	528.12
Wind 150 deg - Ice		3792.29	6568.44	323.11
Wind 180 deg - Ice		-15.65	7622.87	34.40
Wind 210 deg - Ice		-3819.40	6584.09	-263.84
Wind 240 deg - Ice		-6625.08	3824.99	-493.73
Wind 270 deg - Ice		-7611.69	15.65	-586.95
Wind 300 deg - Ice		-6609.42	-3797.88	-528.12
Wind 330 deg - Ice		-3792.29	-6568.44	-323.11
Total Weight	14403.26			
Wind 0 deg - Service		-14.57	-4636.83	69.35

Load Case	Vertical Forces lb	Sum of Forces X lb	Sum of Forces Z lb	Sum of Torques lb-ft
Wind 30 deg - Service		2274.37	-3954.99	469.31
Wind 60 deg - Service		4007.23	-2305.80	754.38
Wind 90 deg - Service		4573.97	14.57	818.29
Wind 120 deg - Service		4021.80	2331.04	685.02
Wind 150 deg - Service		2299.61	3969.56	348.97
Wind 180 deg - Service		14.57	4636.83	-69.35
Wind 210 deg - Service		-2274.37	3954.99	-469.31
Wind 240 deg - Service		-4007.23	2305.80	-754.38
Wind 270 deg - Service		-4573.97	-14.57	-818.29
Wind 300 deg - Service		-4021.80	-2331.04	-685.02
Wind 330 deg - Service		-2299.61	-3969.56	-348.97

Load Combinations

Comb. No.	Description
1	Dead Only
2	1.2 Dead+1.6 Wind 0 deg - No Ice+1.0 Guy
3	1.2 Dead+1.6 Wind 30 deg - No Ice+1.0 Guy
4	1.2 Dead+1.6 Wind 60 deg - No Ice+1.0 Guy
5	1.2 Dead+1.6 Wind 90 deg - No Ice+1.0 Guy
6	1.2 Dead+1.6 Wind 120 deg - No Ice+1.0 Guy
7	1.2 Dead+1.6 Wind 150 deg - No Ice+1.0 Guy
8	1.2 Dead+1.6 Wind 180 deg - No Ice+1.0 Guy
9	1.2 Dead+1.6 Wind 210 deg - No Ice+1.0 Guy
10	1.2 Dead+1.6 Wind 240 deg - No Ice+1.0 Guy
11	1.2 Dead+1.6 Wind 270 deg - No Ice+1.0 Guy
12	1.2 Dead+1.6 Wind 300 deg - No Ice+1.0 Guy
13	1.2 Dead+1.6 Wind 330 deg - No Ice+1.0 Guy
14	1.2 Dead+1.0 Ice+1.0 Temp+Guy
15	1.2 Dead+1.0 Wind 0 deg+1.0 Ice+1.0 Temp+1.0 Guy
16	1.2 Dead+1.0 Wind 30 deg+1.0 Ice+1.0 Temp+1.0 Guy
17	1.2 Dead+1.0 Wind 60 deg+1.0 Ice+1.0 Temp+1.0 Guy
18	1.2 Dead+1.0 Wind 90 deg+1.0 Ice+1.0 Temp+1.0 Guy
19	1.2 Dead+1.0 Wind 120 deg+1.0 Ice+1.0 Temp+1.0 Guy
20	1.2 Dead+1.0 Wind 150 deg+1.0 Ice+1.0 Temp+1.0 Guy
21	1.2 Dead+1.0 Wind 180 deg+1.0 Ice+1.0 Temp+1.0 Guy
22	1.2 Dead+1.0 Wind 210 deg+1.0 Ice+1.0 Temp+1.0 Guy
23	1.2 Dead+1.0 Wind 240 deg+1.0 Ice+1.0 Temp+1.0 Guy
24	1.2 Dead+1.0 Wind 270 deg+1.0 Ice+1.0 Temp+1.0 Guy
25	1.2 Dead+1.0 Wind 300 deg+1.0 Ice+1.0 Temp+1.0 Guy
26	1.2 Dead+1.0 Wind 330 deg+1.0 Ice+1.0 Temp+1.0 Guy
27	Dead+Wind 0 deg - Service+Guy
28	Dead+Wind 30 deg - Service+Guy
29	Dead+Wind 60 deg - Service+Guy
30	Dead+Wind 90 deg - Service+Guy
31	Dead+Wind 120 deg - Service+Guy
32	Dead+Wind 150 deg - Service+Guy
33	Dead+Wind 180 deg - Service+Guy
34	Dead+Wind 210 deg - Service+Guy
35	Dead+Wind 240 deg - Service+Guy
36	Dead+Wind 270 deg - Service+Guy
37	Dead+Wind 300 deg - Service+Guy
38	Dead+Wind 330 deg - Service+Guy

Maximum Reactions

Location	Condition	Gov. Load Comb.	Vertical lb	Horizontal, X lb	Horizontal, Z lb
Mast	Max. Vert	23	179800.57	397.59	-68.14
	Max. H_x	11	73501.20	1604.97	11.43
	Max. H_z	2	72803.29	-0.04	1674.52
	Max. M_x	1	0.00	-0.25	18.33
	Max. M_z	1	0.00	-0.25	18.33
	Max. Torsion	1	0.00	-0.25	18.33
	Min. Vert	1	69032.24	-0.25	18.33
	Min. H_x	5	73501.58	-1605.58	10.87
	Min. H_z	8	74124.91	-0.60	-1561.27
	Min. M_x	1	0.00	-0.25	18.33
	Min. M_z	1	0.00	-0.25	18.33
	Min. Torsion	1	0.00	-0.25	18.33
Guy C @ 145 ft Elev 0 ft Azimuth 240 deg	Max. Vert	10	-7604.09	-7428.12	4296.65
	Max. H_x	10	-7604.09	-7428.12	4296.65
	Max. H_z	17	-28799.59	-33199.88	19165.71
	Min. Vert	4	-29953.67	-30527.96	17615.05
	Min. H_x	17	-28799.59	-33199.88	19165.71
	Min. H_z	10	-7604.09	-7428.12	4296.65
Guy B @ 145 ft Elev 0 ft Azimuth 120 deg	Max. Vert	6	-7518.86	7368.91	4261.80
	Max. H_x	25	-28785.79	33189.11	19159.29
	Max. H_z	25	-28785.79	33189.11	19159.29
	Min. Vert	12	-30047.08	30594.13	17654.33
	Min. H_x	6	-7518.86	7368.91	4261.80
	Min. H_z	6	-7518.86	7368.91	4261.80
Guy A @ 145 ft Elev 0 ft Azimuth 0 deg	Max. Vert	2	-7584.43	0.53	-8564.30
	Max. H_x	24	-24105.21	949.22	-32359.08
	Max. H_z	2	-7584.43	0.53	-8564.30
	Min. Vert	8	-30032.62	-0.91	-35308.71
	Min. H_x	18	-24079.40	-949.17	-32338.57
	Min. H_z	21	-29021.43	0.15	-38490.91

Tower Mast Reaction Summary

Load Combination	Vertical lb	$Shear_x$ lb	$Shear_z$ lb	Overturning Moment, M_x lb-ft	Overturning Moment, M_z lb-ft	Torque lb-ft
Dead Only	69032.24	0.25	-18.33	0.00	0.00	0.00
1.2 Dead+1.6 Wind 0 deg - No Ice+1.0 Guy	72803.29	0.04	-1674.52	0.00	0.00	0.00
1.2 Dead+1.6 Wind 30 deg - No Ice+1.0 Guy	73492.11	794.38	-1416.68	0.00	0.00	0.00
1.2 Dead+1.6 Wind 60 deg - No Ice+1.0 Guy	74112.54	1371.49	-812.46	0.00	0.00	0.00
1.2 Dead+1.6 Wind 90 deg - No Ice+1.0 Guy	73501.58	1605.58	-10.87	0.00	0.00	0.00

Load Combination	Vertical lb	$Shear_x$ lb	$Shear_z$ lb	Overturning Moment, M_x lb-ft	Overturning Moment, M_z lb-ft	Torque lb-ft
1.2 Dead+1.6 Wind 120 deg - No Ice+1.0 Guy	72812.43	1431.21	805.11	0.00	0.00	0.00
1.2 Dead+1.6 Wind 150 deg - No Ice+1.0 Guy	73515.17	811.32	1363.66	0.00	0.00	0.00
1.2 Dead+1.6 Wind 180 deg - No Ice+1.0 Guy	74124.91	0.60	1561.27	0.00	0.00	0.00
1.2 Dead+1.6 Wind 210 deg - No Ice+1.0 Guy	73498.75	-810.17	1363.39	0.00	0.00	0.00
1.2 Dead+1.6 Wind 240 deg - No Ice+1.0 Guy	72804.00	-1430.33	804.63	0.00	0.00	0.00
1.2 Dead+1.6 Wind 270 deg - No Ice+1.0 Guy	73501.20	-1604.97	-11.43	0.00	0.00	0.00
1.2 Dead+1.6 Wind 300 deg - No Ice+1.0 Guy	74130.64	-1371.13	-812.96	0.00	0.00	0.00
1.2 Dead+1.6 Wind 330 deg - No Ice+1.0 Guy	73508.31	-794.22	-1416.99	0.00	0.00	0.00
1.2 Dead+1.0 Ice+1.0 Temp+Guy	178330.76	5.11	-168.72	0.00	0.00	0.00
1.2 Dead+1.0 Wind 0 deg+1.0 Ice+1.0 Temp+1.0 Guy	179782.73	5.05	-629.75	0.00	0.00	0.00
1.2 Dead+1.0 Wind 30 deg+1.0 Ice+1.0 Temp+1.0 Guy	179248.16	218.48	-566.64	0.00	0.00	0.00
1.2 Dead+1.0 Wind 60 deg+1.0 Ice+1.0 Temp+1.0 Guy	178746.64	387.26	-385.54	0.00	0.00	0.00
1.2 Dead+1.0 Wind 90 deg+1.0 Ice+1.0 Temp+1.0 Guy	179249.61	459.45	-148.88	0.00	0.00	0.00
1.2 Dead+1.0 Wind 120 deg+1.0 Ice+1.0 Temp+1.0 Guy	179797.79	407.15	67.83	0.00	0.00	0.00
1.2 Dead+1.0 Wind 150 deg+1.0 Ice+1.0 Temp+1.0 Guy	179272.48	245.64	221.29	0.00	0.00	0.00
1.2 Dead+1.0 Wind 180 deg+1.0 Ice+1.0 Temp+1.0 Guy	178777.21	4.68	277.18	0.00	0.00	0.00
1.2 Dead+1.0 Wind 210 deg+1.0 Ice+1.0 Temp+1.0 Guy	179274.48	-236.22	221.48	0.00	0.00	0.00
1.2 Dead+1.0 Wind 240 deg+1.0 Ice+1.0 Temp+1.0 Guy	179800.57	-397.59	68.14	0.00	0.00	0.00
1.2 Dead+1.0 Wind 270 deg+1.0 Ice+1.0 Temp+1.0 Guy	179250.14	-449.68	-148.51	0.00	0.00	0.00
1.2 Dead+1.0 Wind 300 deg+1.0 Ice+1.0 Temp+1.0 Guy	178745.38	-377.30	-385.19	0.00	0.00	0.00
1.2 Dead+1.0 Wind 330 deg+1.0 Ice+1.0 Temp+1.0 Guy	179246.65	-208.38	-566.45	0.00	0.00	0.00
Dead+Wind 0 deg - Service+Guy	69174.08	0.20	-405.09	0.00	0.00	0.00
Dead+Wind 30 deg - Service+Guy	69134.05	189.46	-347.44	0.00	0.00	0.00
Dead+Wind 60 deg - Service+Guy	69095.22	326.72	-206.69	0.00	0.00	0.00
Dead+Wind 90 deg - Service+Guy	69133.53	379.98	-17.46	0.00	0.00	0.00
Dead+Wind 120 deg - Service+Guy	69173.44	335.23	175.22	0.00	0.00	0.00
Dead+Wind 150 deg - Service+Guy	69133.39	190.76	310.31	0.00	0.00	0.00
Dead+Wind 180 deg - Service+Guy	69094.96	0.32	358.79	0.00	0.00	0.00
Dead+Wind 210 deg - Service+Guy	69133.79	-190.13	310.24	0.00	0.00	0.00
Dead+Wind 240 deg - Service+Guy	69173.89	-334.64	175.10	0.00	0.00	0.00
Dead+Wind 270 deg -	69133.75	-379.46	-17.60	0.00	0.00	0.00

Load Combination	Vertical lb	$Shear_x$ lb	$Shear_z$ lb	Overturning Moment, M_x lb-ft	Overturning Moment, M_z lb-ft	Torque lb-ft
Service+Guy						
Dead+Wind 300 deg - Service+Guy	69095.12	-326.27	-206.81	0.00	0.00	0.00
Dead+Wind 330 deg - Service+Guy	69133.88	-189.06	-347.51	0.00	0.00	0.00

Solution Summary

	Sum of Applied Forces			Sum of Reactions			
Load Comb.	PX lb	PY lb	PZ lb	PX lb	PY lb	PZ lb	% Error
1	0.00	-14402.80	0.00	0.00	14402.80	0.02	0.000%
2	-62.19	-17024.38	-22546.72	62.21	17024.35	22540.10	0.023%
3	11082.11	-16856.29	-19261.67	-11081.94	16856.23	19252.79	0.032%
4	19186.68	-16688.20	-11044.24	-19180.85	16688.13	11040.76	0.025%
5	22271.95	-16856.29	62.19	-22264.06	16856.21	-58.07	0.032%
6	19552.43	-17024.38	11327.22	-19546.58	17024.33	-11324.00	0.024%
7	11189.84	-16856.29	19323.87	-11182.03	16856.23	-19319.23	0.032%
8	62.19	-16688.20	22196.20	-62.07	16688.14	-22189.43	0.024%
9	-11082.11	-16856.29	19261.67	11074.51	16856.23	-19257.12	0.032%
10	-19490.24	-17024.38	11219.50	19484.46	17024.33	-11216.29	0.023%
11	-22271.95	-16856.29	-62.19	22264.20	16856.22	66.25	0.031%
12	-19248.88	-16688.20	-11151.96	19243.11	16688.13	11148.39	0.024%
13	-11189.84	-16856.29	-19323.87	11189.70	16856.23	19314.92	0.032%
14	0.00	-107407.72	0.00	-0.01	107406.44	0.19	0.001%
15	15.65	-107633.17	-11296.85	-15.65	107632.10	11271.54	0.023%
16	5652.08	-107407.72	-9758.38	-5645.73	107406.66	9739.55	0.018%
17	9772.94	-107182.27	-5642.41	-9750.04	107180.84	5629.24	0.025%
18	11277.04	-107407.72	-15.65	-11257.65	107406.66	19.39	0.018%
19	9791.19	-107633.17	5634.87	-9769.36	107632.10	-5622.54	0.023%
20	5624.96	-107407.72	9742.72	-5611.92	107406.66	-9728.19	0.018%
21	-15.65	-107182.27	11257.71	15.60	107180.83	-11231.81	0.024%
22	-5652.08	-107407.72	9758.38	5639.01	107406.66	-9743.85	0.018%
23	-9806.84	-107633.17	5661.98	9785.01	107632.10	-5649.64	0.023%
24	-11277.04	-107407.72	15.65	11257.65	107406.66	-11.90	0.018%
25	-9757.29	-107182.27	-5615.30	9734.38	107180.84	5602.16	0.025%
26	-5624.96	-107407.72	-9742.72	5618.63	107406.66	9723.89	0.018%
27	-14.57	-14442.18	-5282.19	14.57	14442.18	5281.41	0.005%
28	2596.29	-14402.80	-4512.57	-2595.93	14402.80	4511.94	0.005%
29	4495.01	-14363.42	-2587.42	-4494.38	14363.42	2587.04	0.005%
30	5217.81	-14402.80	14.57	-5217.09	14402.80	-14.58	0.005%
31	4580.69	-14442.18	2653.71	-4580.02	14442.18	-2653.34	0.005%
32	2621.53	-14402.80	4527.15	-2621.16	14402.80	-4526.53	0.005%
33	14.57	-14363.42	5200.07	-14.57	14363.42	-5199.36	0.005%
34	-2596.29	-14402.80	4512.57	2595.92	14402.80	-4511.95	0.005%
35	-4566.12	-14442.18	2628.47	4565.44	14442.18	-2628.09	0.005%
36	-5217.81	-14402.80	-14.57	5217.09	14402.80	14.56	0.005%
37	-4509.58	-14363.42	-2612.65	4508.96	14363.42	2612.29	0.005%
38	-2621.53	-14402.80	-4527.15	2621.17	14402.80	4526.52	0.005%

Non-Linear Convergence Results

Load Combination	Converged?	Number of Cycles	Displacement Tolerance	Force Tolerance
1	Yes	13	0.00000001	0.00000001
2	Yes	13	0.00000001	0.00007673
3	Yes	13	0.00000001	0.00008520
4	Yes	13	0.00000001	0.00006872
5	Yes	13	0.00000001	0.00008729
6	Yes	13	0.00000001	0.00007607
7	Yes	13	0.00000001	0.00008792
8	Yes	13	0.00000001	0.00006790
9	Yes	13	0.00000001	0.00008480
10	Yes	13	0.00000001	0.00007750
11	Yes	13	0.00000001	0.00008489
12	Yes	13	0.00000001	0.00006815
13	Yes	13	0.00000001	0.00008597
14	Yes	14	0.00132056	0.00119920
15	Yes	15	0.00128545	0.00102677
16	Yes	15	0.00110055	0.00102517
17	Yes	14	0.00147397	0.00120734
18	Yes	15	0.00109099	0.00102447
19	Yes	15	0.00126408	0.00102587
20	Yes	15	0.00107954	0.00102528
21	Yes	14	0.00145458	0.00120876
22	Yes	15	0.00107899	0.00102522
23	Yes	15	0.00126339	0.00102584
24	Yes	15	0.00109159	0.00102448
25	Yes	14	0.00147583	0.00120741
26	Yes	15	0.00110185	0.00102523
27	Yes	13	0.00000001	0.00001541
28	Yes	13	0.00000001	0.00001379
29	Yes	13	0.00000001	0.00001262
30	Yes	13	0.00000001	0.00001365
31	Yes	13	0.00000001	0.00001511
32	Yes	13	0.00000001	0.00001343
33	Yes	13	0.00000001	0.00001214
34	Yes	13	0.00000001	0.00001361
35	Yes	13	0.00000001	0.00001529
36	Yes	13	0.00000001	0.00001367
37	Yes	13	0.00000001	0.00001246
38	Yes	13	0.00000001	0.00001360

Maximum Tower Deflections - Service Wind

Section No.	Elevation ft	Horz. Deflection in	Gov. Load Comb.	Tilt °	Twist °
T1	180 - 160	0.824	33	0.0272	0.0232
T2	160 - 140	0.724	33	0.0226	0.0253
T3	140 - 120	0.616	33	0.0293	0.0281
T4	120 - 100	0.491	37	0.0193	0.0257
T5	100 - 80	0.467	27	0.0035	0.0429
T6	80 - 60	0.447	27	0.0107	0.0603
T7	60 - 40	0.390	27	0.0111	0.0725
T8	40 - 20	0.348	27	0.0191	0.0830
T9	20 - 5	0.221	27	0.0425	0.0891
T10	5 - 0	0.060	35	0.0547	0.0912

Critical Deflections and Radius of Curvature - Service Wind

Elevation ft	Appurtenance	Gov. Load Comb.	Deflection in	Tilt °	Twist °	Radius of Curvature ft
180.00	Lightning Rod	33	0.824	0.0272	0.0232	Inf
177.00	Sector Frame Mount	33	0.809	0.0259	0.0234	Inf
170.00	Guy	33	0.774	0.0234	0.0239	Inf
116.42	Guy	37	0.479	0.0158	0.0273	34249
60.38	Guy	27	0.391	0.0111	0.0723	85108

Maximum Tower Deflections - Design Wind

Section No.	Elevation ft	Horz. Deflection in	Gov. Load Comb.	Tilt °	Twist °
T1	180 - 160	3.946	12	0.1331	0.1122
T2	160 - 140	3.443	12	0.1150	0.1205
T3	140 - 120	2.902	12	0.1437	0.1314
T4	120 - 100	2.285	12	0.0985	0.1187
T5	100 - 80	2.116	4	0.0271	0.1861
T6	80 - 60	1.973	4	0.0544	0.2602
T7	60 - 40	1.693	4	0.0532	0.3122
T8	40 - 20	1.493	10	0.0852	0.3571
T9	20 - 5	0.949	10	0.1823	0.3833
T10	5 - 0	0.258	10	0.2351	0.3921

Critical Deflections and Radius of Curvature - Design Wind

Elevation ft	Appurtenance	Gov. Load Comb.	Deflection in	Tilt °	Twist °	Radius of Curvature ft
180.00	Lightning Rod	12	3.946	0.1331	0.1122	506558
177.00	Sector Frame Mount	12	3.870	0.1279	0.1129	506558
170.00	Guy	12	3.693	0.1178	0.1149	253278
116.42	Guy	12	2.223	0.0828	0.1250	7618
60.38	Guy	4	1.697	0.0533	0.3113	19299

Bolt Design Data

Section No.	Elevation ft	Component Type	Bolt Grade	Bolt Size in	Number Of Bolts	Maximum Load per Bolt lb	Allowable Load lb	Ratio Load / Allowable	Allowable Ratio	Criteria
T1	180	Leg	A325N	0.7500	4	6.07	29820.60	0.000 ✔	1	Bolt Tension
		Torque Arm Top@170	A325N	0.7500	2	6693.75	17892.40	0.374 ✔	1	Bolt Shear
		Torque Arm Bottom@170	A325N	0.7500	2	3794.55	17892.40	0.212 ✔	1	Bolt Shear

Section No.	Elevation ft	Component Type	Bolt Grade	Bolt Size in	Number Of Bolts	Maximum Load per Bolt lb	Allowable Load lb	Ratio Load / Allowable	Allowable Ratio	Criteria
T2	160	Leg	A325N	0.7500	4	2109.84	29820.60	0.071 ✔	1	Bolt Tension
T3	140	Leg	A325N	0.7500	4	2317.69	29820.60	0.078 ✔	1	Bolt Tension
T4	120	Leg	A325N	0.7500	4	2935.21	29820.60	0.098 ✔	1	Bolt Tension
		Torque Arm Top@116.417	A325N	0.7500	2	4817.44	17892.40	0.269 ✔	1	Bolt Shear
		Torque Arm Bottom@116.417	A325N	0.7500	2	2353.34	17892.40	0.132 ✔	1	Bolt Shear
T5	100	Leg	A325N	0.7500	4	3752.80	29820.60	0.126 ✔	1	Bolt Tension
T6	80	Leg	A325N	0.7500	4	4041.32	29820.60	0.136 ✔	1	Bolt Tension
T7	60	Leg	A325N	0.7500	4	4464.50	29820.60	0.150 ✔	1	Bolt Tension
T8	40	Leg	A325N	0.7500	4	4944.27	29820.60	0.166 ✔	1	Bolt Tension
T9	20	Leg	A325N	0.7500	4	5140.04	29820.60	0.172 ✔	1	Bolt Tension
T10	5	Leg	A325N	0.7500	4	5371.61	29820.60	0.180 ✔	1	Bolt Tension

Guy Design Data

Section No.	Elevation ft	Size	Initial Tension lb	Breaking Load lb	Actual T_u lb	Allowable ϕT_n lb	Required S.F.	Actual S.F.
T1	170.00 (A) (559)	5/8 EHS	6360.00	42399.99	12129.30	25440.00	1.000	2.097 ✔
	170.00 (A) (560)	5/8 EHS	6360.00	42399.99	12127.80	25440.00	1.000	2.098 ✔
	170.00 (B) (553)	5/8 EHS	6360.00	42399.99	11963.50	25440.00	1.000	2.126 ✔
	170.00 (B) (554)	5/8 EHS	6360.00	42399.99	11959.30	25440.00	1.000	2.127 ✔
	170.00 (C) (547)	5/8 EHS	6360.00	42399.99	11966.80	25440.00	1.000	2.126 ✔
	170.00 (C) (548)	5/8 EHS	6360.00	42399.99	11972.00	25440.00	1.000	2.125 ✔
T4	116.42 (A) (577)	9/16 EHS	5250.00	35000.04	9926.60	21000.00	1.000	2.116 ✔
	116.42 (A) (578)	9/16 EHS	5250.00	35000.04	9927.46	21000.00	1.000	2.115 ✔
	116.42 (B) (571)	9/16 EHS	5250.00	35000.04	9940.64	21000.00	1.000	2.113 ✔
	116.42 (B) (572)	9/16 EHS	5250.00	35000.04	9910.20	21000.00	1.000	2.119 ✔
	116.42 (C) (565)	9/16 EHS	5250.00	35000.04	9912.08	21000.00	1.000	2.119 ✔
	116.42 (C) (566)	9/16 EHS	5250.00	35000.04	9940.95	21000.00	1.000	2.112 ✔
T6	60.38 (A) (585)	9/16 EHS	5250.00	35000.04	9811.14	21000.00	1.000	2.140 ✔
	60.38 (B) (584)	9/16 EHS	5250.00	35000.04	9866.54	21000.00	1.000	2.128 ✔
	60.38 (C) (583)	9/16 EHS	5250.00	35000.04	9866.93	21000.00	1.000	2.128 ✔

Compression Checks

Leg Design Data (Compression)

Section No.	Elevation ft	Size	L ft	L_u ft	Kl/r	A in^2	Mast Stability Index	P_u lb	ϕP_n lb	Ratio $\frac{P_u}{\phi P_n}$
T1	180 - 160	P2.5x.203	20.00	3.21	40.6 K=1.00	1.7040	1.00	-28526.60	72691.90	0.392 [1] ✓
T2	160 - 140	P2.5x.203	20.00	3.21	40.6 K=1.00	1.7040	1.00	-31097.80	72691.90	0.428 [1] ✓
T3	140 - 120	P2.5x.203	20.00	3.21	40.6 K=1.00	1.7040	1.00	-37486.80	72691.90	0.516 [1] ✓
T4	120 - 100	P2.5x.203	20.00	3.21	40.6 K=1.00	1.7040	1.00	-49461.00	72691.90	0.680 [1] ✓
T5	100 - 80	P2.5x.203	20.00	3.21	40.6 K=1.00	1.7040	1.00	-50186.60	72691.90	0.690 [1] ✓
T6	80 - 60	P2.5x.203	20.00	3.21	40.6 K=1.00	1.7040	1.00	-53554.90	72691.90	0.737 [1] ✓
T7	60 - 40	P2.5x.203	20.00	3.21	40.6 K=1.00	1.7040	0.98	-60085.90	71502.80	0.840 [1] ✓
T8	40 - 20	P2.5x.203	20.00	3.21	40.6 K=1.00	1.7040	0.98	-62656.90	71509.50	0.876 [1] ✓
T9	20 - 5	P2.5x.203	15.00	3.56	45.1 K=1.00	1.7040	1.00	-62009.10	70516.80	0.879 [1] ✓
T10	5 - 0	P2.5x.203	5.39	1.80	22.8 K=1.00	1.7040	0.90	-65726.80	71600.70	0.918 [1] ✓

[1] P_u / ϕP_n controls

Diagonal Design Data (Compression)

Section No.	Elevation ft	Size	L ft	L_u ft	Kl/r	A in^2	P_u lb	ϕP_n lb	Ratio $\frac{P_u}{\phi P_n}$
T10	5 - 0	5/8	2.44	1.46	105.4 K=0.94	0.3068	-3915.31	5538.29	0.707 [1] ✓

[1] P_u / ϕP_n controls

Horizontal Design Data (Compression)

Section No.	Elevation ft	Size	L ft	L_u ft	Kl/r	A in^2	P_u lb	ϕP_n lb	Ratio $\frac{P_u}{\phi P_n}$
T1	180 - 160	L1 1/2x1 1/2x3/16	3.50	3.26	86.7 K=0.65	0.5273	-6306.64	11503.00	0.548 [1] ✓
T2	160 - 140	L1 1/2x1 1/2x3/16	3.50	3.26	86.7 K=0.65	0.5273	-4878.13	11503.00	0.424 [1] ✓
T3	140 - 120	L1 1/2x1 1/2x3/16	3.50	3.26	86.7 K=0.65	0.5273	-4863.00	11503.00	0.423 [1] ✓
T4	120 - 100	L1 1/2x1 1/2x3/16	3.50	3.26	86.7 K=0.65	0.5273	-4161.94	11503.00	0.362 [1] ✓
T5	100 - 80	L1 1/2x1 1/2x3/16	3.50	3.26	86.7 K=0.65	0.5273	-4206.74	11503.00	0.366 [1] ✓
T6	80 - 60	L1 1/2x1 1/2x3/16	3.50	3.26	86.7 K=0.65	0.5273	-4391.54	11503.00	0.382 [1] ✓
T7	60 - 40	L1 1/2x1 1/2x3/16	3.50	3.26	86.7 K=0.65	0.5273	-4045.38	11503.00	0.352 [1] ✓
T8	40 - 20	L1 1/2x1 1/2x3/16	3.50	3.26	86.7 K=0.65	0.5273	-4168.43	11503.00	0.362 [1] ✓
T9	20 - 5	L1 1/2x1 1/2x3/16	3.50	3.26	86.7 K=0.65	0.5273	-3603.52	11503.00	0.313 [1] ✓
T10	5 - 0	L1 1/2x1 1/2x3/16	2.33	2.09	55.7 K=0.65	0.5273	-1203.55	14513.70	0.083 [1] ✓

[1] P_u / ϕP_n controls

Top Girt Design Data (Compression)

Section No.	Elevation ft	Size	L ft	L_u ft	Kl/r	A in^2	P_u lb	ϕP_n lb	Ratio $\frac{P_u}{\phi P_n}$
T1	180 - 160	L1 1/2x1 1/2x3/16	3.50	3.26	86.7 K=0.65	0.5273	-3019.11	11503.00	0.262 [1] ✓
T2	160 - 140	L1 1/2x1 1/2x3/16	3.50	3.26	86.7 K=0.65	0.5273	-2568.24	11503.00	0.223 [1] ✓
T3	140 - 120	L1 1/2x1 1/2x3/16	3.50	3.26	86.7 K=0.65	0.5273	-2653.61	11503.00	0.231 [1] ✓
T5	100 - 80	L1 1/2x1 1/2x3/16	3.50	3.26	86.7 K=0.65	0.5273	-2317.11	11503.00	0.201 [1] ✓
T6	80 - 60	L1 1/2x1 1/2x3/16	3.50	3.26	86.7 K=0.65	0.5273	-2255.16	11503.00	0.196 [1] ✓
T7	60 - 40	L1 1/2x1 1/2x3/16	3.50	3.26	86.7 K=0.65	0.5273	-2070.69	11503.00	0.180 [1] ✓
T8	40 - 20	L1 1/2x1 1/2x3/16	3.50	3.26	86.7 K=0.65	0.5273	-2052.54	11503.00	0.178 [1] ✓
T9	20 - 5	L1 1/2x1 1/2x3/16	3.50	3.26	86.7 K=0.65	0.5273	-1957.72	11503.00	0.170 [1] ✓

[1] P_u / ϕP_n controls

Bottom Girt Design Data (Compression)

Section No.	Elevation ft	Size	L ft	L_u ft	Kl/r	A in^2	P_u lb	ϕP_n lb	Ratio $\frac{P_u}{\phi P_n}$
T1	180 - 160	L1 1/2x1 1/2x3/16	3.50	3.26	86.7 K=0.65	0.5273	-2669.94	11503.00	0.232 [1] ✓
T2	160 - 140	L1 1/2x1 1/2x3/16	3.50	3.26	86.7 K=0.65	0.5273	-2554.07	11503.00	0.222 [1] ✓
T3	140 - 120	L1 1/2x1 1/2x3/16	3.50	3.26	86.7 K=0.65	0.5273	-3262.64	11503.00	0.284 [1] ✓
T4	120 - 100	L1 1/2x1 1/2x3/16	3.50	3.26	86.7 K=0.65	0.5273	-2333.22	11503.00	0.203 [1] ✓
T5	100 - 80	L1 1/2x1 1/2x3/16	3.50	3.26	86.7 K=0.65	0.5273	-2151.86	11503.00	0.187 [1] ✓
T7	60 - 40	L1 1/2x1 1/2x3/16	3.50	3.26	86.7 K=0.65	0.5273	-2286.95	11503.00	0.199 [1] ✓
T8	40 - 20	L1 1/2x1 1/2x3/16	3.50	3.26	86.7 K=0.65	0.5273	-2081.49	11503.00	0.181 [1] ✓
T9	20 - 5	L1 1/2x1 1/2x3/16	3.50	3.26	86.7 K=0.65	0.5273	-22.16	11503.00	0.002 [1] ✓

[1] P_u / ϕP_n controls

Top Guy Pull-Off Design Data (Compression)

Section No.	Elevation ft	Size	L ft	L_u ft	Kl/r	A in^2	P_u lb	ϕP_n lb	Ratio $\frac{P_u}{\phi P_n}$
T1	180 - 160	L1 1/2x1 1/2x3/16	3.50	3.26	86.7 K=0.65	0.5273	-7224.84	11503.00	0.628 [1] ✓
T4	120 - 100	L1 1/2x1 1/2x3/16	3.50	3.26	86.7 K=0.65	0.5273	-3363.92	11503.00	0.292 [1] ✓
T6	80 - 60	L1 1/2x1 1/2x3/16	3.50	3.26	86.7 K=0.65	0.5273	-708.63	11503.00	0.062 [1] ✓

[1] P_u / ϕP_n controls

Bottom Guy Pull-Off Design Data (Compression)

Section No.	Elevation ft	Size	L ft	L_u ft	Kl/r	A in^2	P_u lb	ϕP_n lb	Ratio $\frac{P_u}{\phi P_n}$
T1	180 - 160	L1 1/2x1 1/2x3/16	3.50	3.26	86.7 K=0.65	0.5273	-5468.50	11503.00	0.475 [1] ✓
T4	120 - 100	L1 1/2x1 1/2x3/16	3.50	3.26	86.7 K=0.65	0.5273	-6022.88	11503.00	0.524 [1] ✓

[1] P_u / ϕP_n controls

Torque-Arm Bottom Design Data

Section No.	Elevation ft	Size	L ft	L_u ft	Kl/r	A in^2	P_u lb	ϕP_n lb	Ratio $\frac{P_u}{\phi P_n}$
T1	180 - 160 (551)	L3x3x1/4	3.50	3.38	68.5 K=1.00	1.4400	-7351.54	36439.50	0.202 [1] ✓
T1	180 - 160 (552)	L3x3x1/4	3.50	3.38	68.5 K=1.00	1.4400	-7589.10	36439.50	0.208 [1] ✓
T1	180 - 160 (557)	L3x3x1/4	3.50	3.38	68.5 K=1.00	1.4400	-7435.71	36439.50	0.204 [1] ✓
T1	180 - 160 (558)	L3x3x1/4	3.50	3.38	68.5 K=1.00	1.4400	-7436.73	36439.50	0.204 [1] ✓
T1	180 - 160 (563)	L3x3x1/4	3.50	3.38	68.5 K=1.00	1.4400	-7344.47	36439.50	0.202 [1] ✓
T1	180 - 160 (564)	L3x3x1/4	3.50	3.38	68.5 K=1.00	1.4400	-7583.62	36439.50	0.208 [1] ✓
T4	120 - 100 (569)	L3x3x1/4	3.50	3.38	68.5 K=1.00	1.4400	-4476.81	36439.50	0.123 [1] ✓
T4	120 - 100 (570)	L3x3x1/4	3.50	3.38	68.5 K=1.00	1.4400	-4490.54	36439.50	0.123 [1] ✓
T4	120 - 100 (575)	L3x3x1/4	3.50	3.38	68.5 K=1.00	1.4400	-4706.68	36439.50	0.129 [1] ✓
T4	120 - 100 (576)	L3x3x1/4	3.50	3.38	68.5 K=1.00	1.4400	-4705.53	36439.50	0.129 [1] ✓
T4	120 - 100 (581)	L3x3x1/4	3.50	3.38	68.5 K=1.00	1.4400	-4482.28	36439.50	0.123 [1] ✓
T4	120 - 100 (582)	L3x3x1/4	3.50	3.38	68.5 K=1.00	1.4400	-4494.87	36439.50	0.123 [1] ✓

[1] P_u / ϕP_n controls

Tension Checks

Leg Design Data (Tension)

Section No.	Elevation ft	Size	L ft	L_u ft	Kl/r	A in^2	P_u lb	ϕP_n lb	Ratio $\frac{P_u}{\phi P_n}$
T1	180 - 160	P2.5x.203	20.00	3.21	40.6	1.7040	0.01	82816.80	0.000 [1] ✓

[1] P_u / ϕP_n controls

Diagonal Design Data (Tension)

Section No.	Elevation ft	Size	L ft	L_u ft	Kl/r	A in^2	P_u lb	ϕP_n lb	Ratio $\frac{P_u}{\phi P_n}$
T1	180 - 160	5/8	4.75	4.42	339.7	0.3068	5620.03	9940.20	0.565 [1] ✓
T2	160 - 140	5/8	4.75	4.42	339.7	0.3068	3914.58	9940.20	0.394 [1] ✓
T3	140 - 120	5/8	4.75	4.42	339.7	0.3068	4829.95	9940.20	0.486 [1] ✓
T4	120 - 100	5/8	4.75	4.42	339.7	0.3068	4241.28	9940.20	0.427 [1] ✓
T5	100 - 80	5/8	4.75	4.42	339.7	0.3068	3866.63	9940.20	0.389 [1] ✓
T6	80 - 60	5/8	4.75	4.42	339.7	0.3068	4050.12	9940.20	0.407 [1] ✓
T7	60 - 40	5/8	4.75	4.42	339.7	0.3068	4106.29	9940.20	0.413 [1] ✓
T8	40 - 20	5/8	4.75	4.42	339.7	0.3068	3280.90	9940.20	0.330 [1] ✓
T9	20 - 5	5/8	4.99	4.65	357.3	0.3068	3292.98	9940.20	0.331 [1] ✓

[1] P_u / ϕP_n controls

Horizontal Design Data (Tension)

Section No.	Elevation ft	Size	L ft	L_u ft	Kl/r	A in^2	P_u lb	ϕP_n lb	Ratio $\frac{P_u}{\phi P_n}$
T1	180 - 160	L1 1/2x1 1/2x3/16	3.50	3.26	85.7	0.5273	494.10	17085.90	0.029 [1] ✓
T2	160 - 140	L1 1/2x1 1/2x3/16	3.50	3.26	85.7	0.5273	538.63	17085.90	0.032 [1] ✓
T3	140 - 120	L1 1/2x1 1/2x3/16	3.50	3.26	85.7	0.5273	649.29	17085.90	0.038 [1] ✓
T4	120 - 100	L1 1/2x1 1/2x3/16	3.50	3.26	85.7	0.5273	856.69	17085.90	0.050 [1] ✓
T5	100 - 80	L1 1/2x1 1/2x3/16	3.50	3.26	85.7	0.5273	869.26	17085.90	0.051 [1] ✓
T6	80 - 60	L1 1/2x1 1/2x3/16	3.50	3.26	85.7	0.5273	927.60	17085.90	0.054 [1] ✓
T7	60 - 40	L1 1/2x1 1/2x3/16	3.50	3.26	85.7	0.5273	1040.72	17085.90	0.061 [1] ✓
T8	40 - 20	L1 1/2x1 1/2x3/16	3.50	3.26	85.7	0.5273	1085.25	17085.90	0.064 [1] ✓
T9	20 - 5	L1 1/2x1 1/2x3/16	3.50	3.26	85.7	0.5273	1074.03	17085.90	0.063 [1] ✓
T10	5 - 0	L1 1/2x1 1/2x3/16	2.33	2.09	55.0	0.5273	3507.01	17085.90	0.205 [1] ✓

[1] P_u / ϕP_n controls

Top Girt Design Data (Tension)

Section No.	Elevation ft	Size	L ft	L_u ft	Kl/r	A in^2	P_u lb	ϕP_n lb	Ratio $\frac{P_u}{\phi P_n}$
T9	20 - 5	L1 1/2x1 1/2x3/16	3.50	3.26	85.7	0.5273	50.32	17085.90	0.003 [1] ✓
T10	5 - 0	L1 1/2x1 1/2x3/16	3.50	3.26	85.7	0.5273	9976.70	17085.90	0.584 [1] ✓

[1] P_u / ϕP_n controls

Bottom Girt Design Data (Tension)

Section No.	Elevation ft	Size	L ft	L_u ft	Kl/r	A in^2	P_u lb	ϕP_n lb	Ratio $\frac{P_u}{\phi P_n}$
T9	20 - 5	L1 1/2x1 1/2x3/16	3.50	3.26	85.7	0.5273	3485.64	17085.90	0.204 [1] ✓

[1] P_u / ϕP_n controls

Top Guy Pull-Off Design Data (Tension)

Section No.	Elevation ft	Size	L ft	L_u ft	Kl/r	A in^2	P_u lb	ϕP_n lb	Ratio $\frac{P_u}{\phi P_n}$
T6	80 - 60	L1 1/2x1 1/2x3/16	3.50	3.26	85.7	0.5273	3336.23	17085.90	0.195 [1] ✓

[1] P_u / ϕP_n controls

Torque-Arm Top Design Data

Section No.	Elevation ft	Size	L ft	L_u ft	Kl/r	A in^2	P_u lb	ϕP_n lb	Ratio $\frac{P_u}{\phi P_n}$
T1	180 - 160 (549)	L2x2x5/16	4.75	4.59	91.6	1.1500	13294.40	37260.00	0.357 [1] ✓
T1	180 - 160 (550)	L2x2x5/16	4.75	4.59	91.6	1.1500	13375.30	37260.00	0.359 [1] ✓
T1	180 - 160 (555)	L2x2x5/16	4.75	4.59	91.6	1.1500	13227.70	37260.00	0.355 [1]

Section No.	Elevation ft	Size	L ft	L_u ft	Kl/r	A in^2	P_u lb	ϕP_n lb	Ratio $\frac{P_u}{\phi P_n}$
T1	180 - 160 (556)	L2x2x5/16	4.75	4.59	91.6	1.1500	13221.80	37260.00	0.355 [1]
T1	180 - 160 (561)	L2x2x5/16	4.75	4.59	91.6	1.1500	13312.40	37260.00	0.357 [1]
T1	180 - 160 (562)	L2x2x5/16	4.75	4.59	91.6	1.1500	13387.50	37260.00	0.359 [1]
T4	120 - 100 (567)	L2x2x5/16	4.75	4.59	91.6	1.1500	9477.59	37260.00	0.254 [1]
T4	120 - 100 (568)	L2x2x5/16	4.75	4.59	91.6	1.1500	9634.88	37260.00	0.259 [1]
T4	120 - 100 (573)	L2x2x5/16	4.75	4.59	91.6	1.1500	9547.23	37260.00	0.256 [1]
T4	120 - 100 (574)	L2x2x5/16	4.75	4.59	91.6	1.1500	9550.55	37260.00	0.256 [1]
T4	120 - 100 (579)	L2x2x5/16	4.75	4.59	91.6	1.1500	9480.13	37260.00	0.254 [1]
T4	120 - 100 (580)	L2x2x5/16	4.75	4.59	91.6	1.1500	9634.64	37260.00	0.259 [1]

[1] P_u / ϕP_n controls

Torque-Arm Bottom Design Data

Section No.	Elevation ft	Size	L ft	L_u ft	Kl/r	A in^2	P_u lb	ϕP_n lb	Ratio $\frac{P_u}{\phi P_n}$
T1	180 - 160 (551)	L3x3x1/4	3.50	3.38	43.6	1.4400	326.48	46656.00	0.007 [1]
T1	180 - 160 (552)	L3x3x1/4	3.50	3.38	43.6	1.4400	373.17	46656.00	0.008 [1]
T1	180 - 160 (557)	L3x3x1/4	3.50	3.38	43.6	1.4400	459.66	46656.00	0.010 [1]
T1	180 - 160 (558)	L3x3x1/4	3.50	3.38	43.6	1.4400	407.17	46656.00	0.009 [1]
T1	180 - 160 (563)	L3x3x1/4	3.50	3.38	43.6	1.4400	371.82	46656.00	0.008 [1]
T1	180 - 160 (564)	L3x3x1/4	3.50	3.38	43.6	1.4400	365.31	46656.00	0.008 [1]
T4	120 - 100 (569)	L3x3x1/4	3.50	3.38	43.6	1.4400	1512.41	46656.00	0.032 [1]
T4	120 - 100 (570)	L3x3x1/4	3.50	3.38	43.6	1.4400	1499.94	46656.00	0.032 [1]
T4	120 - 100 (575)	L3x3x1/4	3.50	3.38	43.6	1.4400	1710.93	46656.00	0.037 [1]
T4	120 - 100 (576)	L3x3x1/4	3.50	3.38	43.6	1.4400	1709.60	46656.00	0.037 [1]
T4	120 - 100 (581)	L3x3x1/4	3.50	3.38	43.6	1.4400	1517.14	46656.00	0.033 [1]

Section No.	Elevation ft	Size	L ft	L_u ft	Kl/r	A in^2	P_u lb	ϕP_n lb	Ratio $\frac{P_u}{\phi P_n}$
T4	120 - 100 (582)	L3x3x1/4	3.50	3.38	43.6	1.4400	1503.31	46656.00	0.032 [1] ✓

[1] P_u / ϕP_n controls

Section Capacity Table

Section No.	Elevation ft	Component Type	Size	Critical Element	P lb	ϕP_{allow} lb	% Capacity	Pass Fail
T1	180 - 160	Leg	P2.5x.203	2	-28526.60	72691.90	39.2	Pass
		Diagonal	5/8	46	5620.03	9940.20	56.5	Pass
		Horizontal	L1 1/2x1 1/2x3/16	54	-6306.64	11503.00	54.8	Pass
		Top Girt	L1 1/2x1 1/2x3/16	6	-3019.11	11503.00	26.2	Pass
		Bottom Girt	L1 1/2x1 1/2x3/16	7	-2669.94	11503.00	23.2	Pass
		Guy A@170	5/8	559	12129.30	25440.00	47.7	Pass
		Guy B@170	5/8	553	11963.50	25440.00	47.0	Pass
		Guy C@170	5/8	548	11972.00	25440.00	47.1	Pass
		Top Guy Pull-Off@170	L1 1/2x1 1/2x3/16	45	-7224.84	11503.00	62.8	Pass
		Bottom Guy Pull-Off@170	L1 1/2x1 1/2x3/16	36	-5468.50	11503.00	47.5	Pass
		Torque Arm Top@170	L2x2x5/16	562	13387.50	37260.00	35.9 37.4 (b)	Pass
		Torque Arm Bottom@170	L3x3x1/4	552	-7589.10	36439.50	20.8 21.2 (b)	Pass
T2	160 - 140	Leg	P2.5x.203	62	-31097.80	72691.90	42.8	Pass
		Diagonal	5/8	115	3914.58	9940.20	39.4	Pass
		Horizontal	L1 1/2x1 1/2x3/16	113	-4878.13	11503.00	42.4	Pass
		Top Girt	L1 1/2x1 1/2x3/16	66	-2568.24	11503.00	22.3	Pass
		Bottom Girt	L1 1/2x1 1/2x3/16	67	-2554.07	11503.00	22.2	Pass
T3	140 - 120	Leg	P2.5x.203	121	-37486.80	72691.90	51.6	Pass
		Diagonal	5/8	131	4829.95	9940.20	48.6	Pass
		Horizontal	L1 1/2x1 1/2x3/16	138	-4863.00	11503.00	42.3	Pass
		Top Girt	L1 1/2x1 1/2x3/16	125	-2653.61	11503.00	23.1	Pass
		Bottom Girt	L1 1/2x1 1/2x3/16	127	-3262.64	11503.00	28.4	Pass
T4	120 - 100	Leg	P2.5x.203	181	-49461.00	72691.90	68.0	Pass
		Diagonal	5/8	226	4241.28	9940.20	42.7	Pass
		Horizontal	L1 1/2x1 1/2x3/16	198	-4161.94	11503.00	36.2	Pass
		Bottom Girt	L1 1/2x1 1/2x3/16	187	-2333.22	11503.00	20.3	Pass
		Guy A@116.417	9/16	578	9927.46	21000.00	47.3	Pass
		Guy B@116.417	9/16	571	9940.64	21000.00	47.3	Pass
		Guy C@116.417	9/16	566	9940.95	21000.00	47.3	Pass
		Top Guy Pull-Off@116.417	L1 1/2x1 1/2x3/16	184	-3363.92	11503.00	29.2	Pass
		Bottom Guy Pull-Off@116.417	L1 1/2x1 1/2x3/16	234	-6022.88	11503.00	52.4	Pass
		Torque Arm Top@116.417	L2x2x5/16	568	9634.88	37260.00	25.9 26.9 (b)	Pass
		Torque Arm Bottom@116.417	L3x3x1/4	575	-4706.68	36439.50	12.9 13.2 (b)	Pass
T5	100 - 80	Leg	P2.5x.203	242	-50186.60	72691.90	69.0	Pass
		Diagonal	5/8	295	3866.63	9940.20	38.9	Pass
		Horizontal	L1 1/2x1 1/2x3/16	257	-4206.74	11503.00	36.6	Pass
		Top Girt	L1 1/2x1 1/2x3/16	246	-2317.11	11503.00	20.1	Pass
		Bottom Girt	L1 1/2x1 1/2x3/16	247	-2151.86	11503.00	18.7	Pass

Section No.	Elevation ft	Component Type	Size	Critical Element	P lb	$øP_{allow}$ lb	% Capacity	Pass Fail
T6	80 - 60	Leg	P2.5x.203	301	-53554.90	72691.90	73.7	Pass
		Diagonal	5/8	315	4050.12	9940.20	40.7	Pass
		Horizontal	L1 1/2x1 1/2x3/16	317	-4391.54	11503.00	38.2	Pass
		Top Girt	L1 1/2x1 1/2x3/16	305	-2255.16	11503.00	19.6	Pass
		Guy A@60.375	9/16	585	9811.14	21000.00	46.7	Pass
		Guy B@60.375	9/16	584	9866.54	21000.00	47.0	Pass
		Guy C@60.375	9/16	583	9866.93	21000.00	47.0	Pass
		Top Guy Pull-Off@60.375	L1 1/2x1 1/2x3/16	309	3336.23	17085.90	19.5	Pass
T7	60 - 40	Leg	P2.5x.203	361	-60085.90	71502.80	84.0	Pass
		Diagonal	5/8	415	4106.29	9940.20	41.3	Pass
		Horizontal	L1 1/2x1 1/2x3/16	377	-4045.38	11503.00	35.2	Pass
		Top Girt	L1 1/2x1 1/2x3/16	365	-2070.69	11503.00	18.0	Pass
		Bottom Girt	L1 1/2x1 1/2x3/16	367	-2286.95	11503.00	19.9	Pass
T8	40 - 20	Leg	P2.5x.203	421	-62656.90	71509.50	87.6	Pass
		Diagonal	5/8	476	3280.90	9940.20	33.0	Pass
		Horizontal	L1 1/2x1 1/2x3/16	437	-4168.43	11503.00	36.2	Pass
		Top Girt	L1 1/2x1 1/2x3/16	425	-2052.54	11503.00	17.8	Pass
		Bottom Girt	L1 1/2x1 1/2x3/16	427	-2081.49	11503.00	18.1	Pass
T9	20 - 5	Leg	P2.5x.203	481	-62009.10	70516.80	87.9	Pass
		Diagonal	5/8	492	3292.98	9940.20	33.1	Pass
		Horizontal	L1 1/2x1 1/2x3/16	497	-3603.52	11503.00	31.3	Pass
		Top Girt	L1 1/2x1 1/2x3/16	485	-1957.72	11503.00	17.0	Pass
		Bottom Girt	L1 1/2x1 1/2x3/16	488	3485.64	17085.90	20.4	Pass
T10	5 - 0	Leg	P2.5x.203	523	-65726.80	71600.70	91.8	Pass
		Diagonal	5/8	536	-3915.31	5538.29	70.7	Pass
		Horizontal	L1 1/2x1 1/2x3/16	538	3507.01	17085.90	20.5	Pass
		Top Girt	L1 1/2x1 1/2x3/16	526	9976.70	17085.90	58.4	Pass
							Summary	
						Leg (T10)	91.8	Pass
						Diagonal (T10)	70.7	Pass
						Horizontal (T1)	54.8	Pass
						Top Girt (T10)	58.4	Pass
						Bottom Girt (T3)	28.4	Pass
						Guy A (T1)	47.7	Pass
						Guy B (T4)	47.3	Pass
						Guy C (T4)	47.3	Pass
						Top Guy Pull-Off (T1)	62.8	Pass
						Bottom Guy Pull-Off (T4)	52.4	Pass
						Torque Arm Top (T1)	37.4	Pass
						Torque Arm Bottom (T1)	21.2	Pass
						Bolt Checks	37.4	Pass
						RATING =	**91.8**	**Pass**

Site Name:	**Stafford Tolland Ave.**
Job Number:	**117-23243.8**
Date:	**12/29/2018**

Design Base Loads (Factored) per TIA-222-G

Moment (M_u):	0.0	k-ft	Concrete Compressive Strength (f'_c):	3000	psi
Shear/Leg (V_u):	1.7	k	Vertical Steel Rebar Size #:	5	
Compression/Leg (P_u):	179.8	k	Vertical Steel Rebar Area:	0.31	in^2
Uplift/Leg (T_u):	0.0	k	# of Vertical Steel Rebars:	5	
Tower Type (GT / SST):	GT		Vertical Steel Rebar Yield Strength (F_y):	60	ksi
Diameter of Prismatic Portion of Pier (d):	1.0	ft	Tie / Stirrup Size #:	4	
Depth to Base of Foundation:	5.0	ft	Tie / Stirrup Area:	0.20	in^2
Pier Height Above Ground (h):	0.25	ft	Tie / Stirrup Spacing:	10.0	in
Length / Width of Pad (w):	5.5	ft	Tie / Stirrup Steel Yield Strength (F_y):	40	ksi
Thickness of Pad (t):	5.5	ft	Rebar Cage Diameter:	4.0	in
Depth Below Ground Surface to Water Table (w):	10.0	ft	Bending/Tension Reduction Factor (ϕ_B):	0.90	
Unit Weight of Concrete:	150.0	pcf	Shear Reduction Factor (ϕ_V):	0.75	
Unit Weight of Water:	62.4	pcf	Compression Reduction Factor (ϕ_V):	0.65	
Unit Weight of Soil Above Water Table:	110.0	pcf	Steel Elastic Modulus:	29000	ksi
Unit Weight of Soil Below Water Table:	55.0	pcf	Pad Steel Rebar Size #:	5	
Friction Angle of Uplift from Top of Pad:	30	Degrees	Pad Steel Rebar Area:	0.31	in^2
Friction Angle of Uplift from Base of Pad:	30	Degrees	Pad Steel Rebar Yield Strength (F_y):	60	ksi
Uplift Angle Started at Top or Base of Pad (T/B):	T		# of Rebar in Top of Pad:	0	
Ultimate Skin Friction:	0	psf	# of Rebar in Base of Pad:	5	
Ultimate Compressive Bearing Pressure:	12000	psf	Pad Clear Cover:	3	in
Capacity Increase (Due to Transient Loads):	1.00				
Bearing Strength Reduction Factor (ϕ_s):	0.60				
Uplift Strength Reduction Factor (ϕ_s):	0.75				

Axial Capacities and Design Moment

Weight of Concrete (Bouyancy Considered):	24.9	k
Weight of Soil (Bouyancy Considered):	0.0	k
Ultimate Skin Friction Resistance:	0.0	k
Controlling Failure Mode (Top / Base):	Top	
Nominal Uplift Capacity per Leg ($\phi_s T_n$):	17.6	k
Nominal Compressive Capacity per Leg ($\phi_s P_n$):	217.8	k
P_u:	187.8	k
$T_u/\phi_s T_n$:	0.00	Result: OK
$P_u/\phi_s P_n$:	0.86	Result: OK

Depth (ft) Top	Depth (ft) Bottom	Ultimate Lateral Bearing Pressure (psf)	Increment (psf/ft)	γ_{Soil} (pcf)	Cohesion (psf)	ϕ (degree)
0.0	2.0	0.0	110.0	110	0	0
2	-0.5	660.0	330.0	110	0	30

Inflection Point (Below Ground Surface):	0.0	ft
Factored Design Moment At Inflection Point (M_u):	0.0	k-ft

Pad Strength Capacity

β:	0.85	ACI318-05 - 10.2.7.3
Lower Pad Flexural Reinforcement Ratio:	0.0004	OK - Minimum Reinforcement Ratio Met - /
Upper Pad Flexural Reinforcement Ratio:	0.0000	OK - Minimum Reinforcement Ratio Met - /
Lower Pad Flexural Reinforcement Spacing:	15	in - Pad Reinforcing Spacing OK - ACI7.12.2.2 & 10.5.4
Upper Pad Flexural Reinforcement Spacing:	0	in - Pad Reinforcing Spacing OK - ACI7.12.2.2 & 10.5.4
One Way Design Shear (V_u):	0.0	k
One Way Shear Capacity (ϕV_c):	341.5	k - ACI318-05 - 11.3.1.1
V_u / ϕV_c:	0.00	Result: OK
Punching Design Shear (V_u):	0.0	k
Nominal Punching Shear Capacity ($\phi_c V_n$):	2416.9	k - ACI318-05 - 11.12.2.1
V_u / ϕV_c:	0.00	Result: OK
Flexural Loading Due to Soil Pressure (M_u):	85.8	k-ft
Lower Steel Pad Moment Capacity (ϕM_n):	435.3	k-ft - ACI318-05 - 10.3
M_u / ϕM_n:	0.20	Result: OK
Flexural Loading Due to Uplift (M_u):	0.0	k-ft
Upper Steel Pad Moment Capacity (ϕM_n):	0.0	k-ft - ACI318-05 - 10.3
M_u / ϕM_n:	0.00	Result: OK

Site Name:	Stafford Tolland Ave.
Site Number:	117-23243.8
Date:	1/3/2018

Design Standard per TIA-222-G

Anchor Radius:	145.0	ft
Uplift (Factored - P_u):	29.0	k
Shear (Factored - V_u):	38.5	k
Anchor Base Depth (d):	8.5	ft
Width of Anchor (W):	5.5	ft
Length of Anchor (L):	11.5	ft
Thickness of Anchor (t):	2.0	ft
Depth Below Ground Surface to Water Table (w):	10.0	ft
Soil Uplift at Base / Top of Anchor (B/T):	T	
Unit Weight of Concrete:	150.0	pcf
Unit Weight of Soil Above Water Table:	110.0	pcf
Unit Weight of Water:	62.4	pcf
Submerged Soil Unit Weight:	50.0	pcf
Internal Angle of Friction:	30	Degrees
Cohesion:	0	psf
Ultimate Skin Friction of Pad Sides to Soil:	0	psf
Ultimate Coefficient of Shear Friction:	0.30	
Maximum Top Conical Failure Angle:	30	Degrees
Maximum Base Conical Failure Angle:	30	Degrees
Uplift Strength Reduction Factor (ϕ_u):	0.75	
Shear Strength Reduction Factor (ϕ_v):	0.75	
Concrete Uplift Strength Reduction Factor (ϕ_u):	0.90	

Uplift

Weight of Concrete (Buoyancy Effect Considered):	19.0	k
Weight of Soil (Buoyancy Effect Considered):	101.4	k
Ultimate Uplift Resistance from Skin Friction:	0.0	k
Nominal Factored Uplift Resistance ($\phi_u P_n$)::	93.1	k
P_u / $\phi_u P_n$:	0.31	Result: OK

Shear

Ultimate Shear Friction Resistance Due to Normal Force - Uplift:	12.7	k
Passive Pressure:	2475	psf
Ultimate Passure Pressure Resistance:	56.9	k
Nominal Shear Resistance ($\phi_v V_n$):	52.2	k
V_u / $\phi_v V_n$:	0.74	Result: OK

Anchor Rod Capacity

# of Anchor Rods:	1		Rod F_y:	49	ksi
Anchor Rod Gross Area:	1.77	in^2	Rod F_u:	62	ksi
Anchor Rod Net Area:	1.77	in^2	ϕ_y:	0.80	
Resultant Tensile Load (T_u):	48.2	k	ϕ_t:	0.65	
Anchor Rod Tensile Resistance (ϕT_n)::	69.3	k			
T_u / ϕT_n:	0.70	Result: OK			

Strength Analysis of Reinforced Concrete

Concrete Compressive Srength (f'_c):	3000	psi
Longitudinal Rebar Yield Strength:	60000	psi
# Longitudinal Rebar (Top):	9	
# Longitudinal Rebar (1 Side):	3	
Rebar Size:	4	
Strength Reduction Factor for Shear (ϕ_v):	0.75	
Strength Reduction Factor for Flexure (ϕ_b):	0.9	
Compression Zone Factor (β_1):	0.85	
Area of Single Rebar:	0.20	in^2
One Way Shear due to Shear Load (V_u):	10.6	k
Nominal One Way Shear Capacity for Shear Load ($\phi_c V_n$):	122.3	k
$V_u/\phi_v V_n$:	0.09	Result: OK
One Way Shear due to Uplift (V_u):	12.4	k
Nominal One Way Shear Capacity for Uplift ($\phi_c V_n$):	108.4	k
$V_u/\phi_v V_n$:	0.11	Result: OK
Pad Flexure due to Shear Load (M_u):	55.3	k-ft
Nominal Flexural Capacity for Shear Load ($\phi_b M_n$):	167.4	k-ft
Pad Flexure due to Uplift (M_u):	41.7	k-ft
Nominal Flexural Capacity for Uplift ($\phi_b M_n$):	161.9	k-ft
$M_u/\phi_b M_n$ (Max.):	0.33	Result: OK

SITE NUMBER: CT1185

SITE NAME: STAFFORD SPRINGS TOLLAND AVENUE

PROJECT: LTE 2C/3C 2018 UPGRADE

PROJECT INFORMATION

SCOPE OF WORK: **BIRD NEST**

ITEMS TO BE MOUNTED ON THE EXISTING TOWER:
- INSTALL (1) NEW AT&T (TPA-65R-LCUUUU-H8) (TYP. OF 1 PER ALPHA & BETA SECTORS, TOTAL OF 2)
- INSTALL (1) NEW AT&T (QS46512-2) (TOTAL OF 1, GAMMA SECTOR
- NEW AT&T RRUS: RRUS-32 B2 (PCS) (TYP. OF 1 PER SECTOR, TOTAL OF 3)
- NEW AT&T RRUS: RRUS-32 (WCS) (TYP. OF 1 PER SECTOR, TOTAL OF 3)
- NEW JUMPER CABLES: COAX JUMPER (4) PER SECTOR FROM EACH RRU (TOTAL OF 12)
- NEW FIBER JUMPERS: FIBER JUMPERS (2) FROM THE SQUID TO EACH RRU (TOTAL OF 6)
- REPLACE EXISTING (6)GSM DIPLEXERS WITH (3) DBC0061F1V51-2 LBC
- INSTALL (1) DC6-48-60-18-8C SURGE ARRESTOR WITH (2) DC POWER, (1) FIBER, & (1) ALARM CABLE.

ITEMS TO BE MOUNTED INSIDE EXISTING EQUIPMENT SHELTER:
- INSTALL (1) FIBER MANAGEMENT BOX ON EXISTING ICE BRIDGE POST.
- INSTALL (3) DBC0061F1V51-2 LOW BAND COMBINERS TO REPLACE GSM DIPLEXERS.
- REPLACE EXISTING DUL BBU WITH 5216 AND ADD (1) XMU.
- INSTALL (1) 48V CONVERTER SHELF WITH (4) CONVERTER MODS IN EXISTING RACK WITH (6) 30AMP BREAKERS AND (1) 25AMP BREAKER. INSTALL (1) CONVERTER MOD TO EXISTING SHELF.
- INSTALL (2) 150AMP BREAKERS TO EXISTING POWER PLANT.

ITEMS TO REMAIN:
- (6) ANTENNAS, (3) RRU'S, (1) SURGE ARRESTOR, (12) COAX (2) DC POWER CABLES, & (1) FIBER RUN.

SQUID ALARMING (NOT TO BE DAISY CHAINED).
- THE 1ST SQUID INSTALLED WILL BE ALARMED TO THE LOWEST BAND (OR FIRST INSTALLED RRH/RRU ON THE ALPHA SECTOR, IN THE EVENT THE ALARM CABLE CANNOT BE CONNECTED TO ALPHA IT WILL BE ACCEPTABLE TO ALARM TO THE CLOSEST PHYSICAL SECTOR ON AN EXCEPTION BASIS.
- 2ND SQUID INSTALLED WILL BE ALARMED TO THE LOWEST BAND (OR FIRST INSTALLED) RRH/RRU ON THE BETA SECTOR.

SITE ADDRESS:	64 TOLLAND AVENUE STAFFORD, CT 06076
LATITUDE:	41.944675° N 41° 56' 40.83" N
LONGITUDE:	72.317648° W 72° 19' 03.53" W
TYPE OF SITE:	GUYED TOWER, INDOOR EQUIPMENT
TOWER HEIGHT:	180'± A.G.L
RAD CENTER:	177'± A.G.L
CURRENT USE:	TELECOMMUNICATIONS FACILITY
PROPOSED USE:	TELECOMMUNICATIONS FACILITY

DRAWING INDEX

SHEET NO.	DESCRIPTION	REV.
T-1	TITLE SHEET	A
GN-1	GENERAL NOTES	A
A-1	COMPOUND & EQUIPMENT PLANS	A
A-2	ANTENNA PLANS & ELEVATION	A
A-3	DETAILS	A
RF-1	RF PLUMBING DIAGRAM	A
G-1	GROUNDING DETAILS	A

VICINITY MAP

DIRECTIONS TO SITE:

DEPART ENTERPRISE DR TOWARD CAPITOL BLVD. 0.4 MI. TURN LEFT ONTO CAPITOL BLVD. 0.3 MI. TURN LEFT ONTO WEST ST. 0.2 MI. TAKE RAMP LEFT FOR I-91 N. 7.8 MI. AT EXIT 29, TAKE RAMP RIGHT FOR CT-15 NORTH / US-5 NORTH TOWARD BOSTON / E. HARTFORD. 0.6 MI. KEEP STRAIGHT ONTO CT-15 N. 1.5 MI. KEEP STRAIGHT ONTO I-84 E / US-6 E. 20.5 MI. AT EXIT 70, TAKE RAMP RIGHT FOR CT-32 TOWARD STAFFORD SPRINGS. 0.2 MI. TURN LEFT ONTO CT-32 / RIVER RD. 4.3 MI. AT ROUNDABOUT, TAKE 2ND EXIT ONTO CT-32 / CT-190 / MAIN ST 0.2 MI. BEAR LEFT ONTO CT-140. 0.3 MI. KEEP LEFT ONTO TOLLAND AVE. 0.3 MI. ARRIVE AT ENTRANCE TO SITE ON THE LEFT.

GENERAL NOTES

1. THIS DOCUMENT IS THE CREATION, DESIGN, PROPERTY AND COPYRIGHTED WORK OF AT&T. ANY DUPLICATION OR USE WITHOUT EXPRESS WRITTEN CONSENT IS STRICTLY PROHIBITED. DUPLICATION AND USE BY GOVERNMENT AGENCIES FOR THE PURPOSES OF CONDUCTING THEIR LAWFULLY AUTHORIZED REGULATORY AND ADMINISTRATIVE FUNCTIONS IS SPECIFICALLY ALLOWED.
2. THE FACILITY IS AN UNMANNED PRIVATE AND SECURED EQUIPMENT INSTALLATION. IT IS ONLY ACCESSED BY TRAINED TECHNICIANS FOR PERIODIC ROUTINE MAINTENANCE AND THEREFORE DOES NOT REQUIRE ANY WATER OR SANITARY SEWER SERVICE. THE FACILITY IS NOT GOVERNED BY REGULATIONS REQUIRING PUBLIC ACCESS PER ADA REQUIREMENTS.
3. CONTRACTOR SHALL VERIFY ALL PLANS AND EXISTING DIMENSIONS AND CONDITIONS ON THE JOB SITE AND SHALL IMMEDIATELY NOTIFY THE AT&T MOBILITY REPRESENTATIVE IN WRITING OF DISCREPANCIES BEFORE PROCEEDING WITH THE WORK OR BE RESPONSIBLE FOR SAME.

72 HOURS

CALL
BEFORE YOU DIG
CALL TOLL FREE 1-800-922-4455
OR CALL 811

UNDERGROUND SERVICE ALERT

HUDSON Design Group LLC
45 BEECHWOOD DRIVE
NORTH ANDOVER, MA 01845
TEL: (978) 557-5553
FAX: (978) 336-5586

CENTERLINE COMMUNICATIONS
95 RYAN DRIVE
RAYNHAM, MA 02767

SITE NUMBER: CT1185
SITE NAME: STAFFORD SPRINGS TOLLAND AVENUE
64 TOLLAND AVENUE
STAFFORD, CT 06076
TOLLAND COUNTY

at&t
500 ENTERPRISE DRIVE, SUITE 3A
ROCKY HILL, CT 06067

NO.	DATE	REVISIONS	BY	CHK	APP'D
A	10/16/17	ISSUED FOR REVIEW	SB	SG	DJC

SCALE: AS SHOWN | DESIGNED BY: AT | DRAWN BY: SB

AT&T

TITLE SHEET
(LTE 2C/3C)

SITE NUMBER	DRAWING NUMBER	REV
CT1185	T-1	A

GROUNDING NOTES

1. THE SUBCONTRACTOR SHALL REVIEW AND INSPECT THE EXISTING FACILITY GROUNDING SYSTEM AND LIGHTNING PROTECTION SYSTEM (AS DESIGNED AND INSTALLED) FOR STRICT COMPLIANCE WITH THE NEC (AS ADOPTED BY THE AHJ), THE SITE-SPECIFIC (UL, LPI, OR NFPA) LIGHTING PROTECTION CODE, AND GENERAL COMPLIANCE WITH TELCORDIA AND TIA GROUNDING STANDARDS. THE SUBCONTRACTOR SHALL REPORT ANY VIOLATIONS OR ADVERSE FINDINGS TO THE CONTRACTOR FOR RESOLUTION.
2. ALL GROUND ELECTRODE SYSTEMS (INCLUDING TELECOMMUNICATION, RADIO, LIGHTNING PROTECTION, AND AC POWER GES'S) SHALL BE BONDED TOGETHER, AT OR BELOW GRADE, BY TWO OR MORE COPPER BONDING CONDUCTORS IN ACCORDANCE WITH THE NEC.
3. THE SUBCONTRACTOR SHALL PERFORM IEEE FALL-OF-POTENTIAL RESISTANCE TO EARTH TESTING (PER IEEE 1100 AND 81) FOR NEW GROUND ELECTRODE SYSTEMS. THE SUBCONTRACTOR SHALL FURNISH AND INSTALL SUPPLEMENTAL GROUND ELECTRODES AS NEEDED TO ACHIEVE A TEST RESULT OF 5 OHMS OR LESS.
4. METAL RACEWAY SHALL NOT BE USED AS THE NEC REQUIRED EQUIPMENT GROUND CONDUCTOR. STRANDED COPPER CONDUCTORS WITH GREEN INSULATION, SIZED IN ACCORDANCE WITH THE NEC, SHALL BE FURNISHED AND INSTALLED WITH THE POWER CIRCUITS TO BTS EQUIPMENT.
5. EACH BTS CABINET FRAME SHALL BE DIRECTLY CONNECTED TO THE MASTER GROUND BAR WITH GREEN INSULATED SUPPLEMENTAL EQUIPMENT GROUND WIRES, 6 AWG STRANDED COPPER OR LARGER FOR INDOOR BTS 2 AWG STRANDED COPPER FOR OUTDOOR BTS.
6. EXOTHERMIC WELDS SHALL BE USED FOR ALL GROUNDING CONNECTIONS BELOW GRADE.
7. APPROVED ANTIOXIDANT COATINGS (I.E., CONDUCTIVE GEL OR PASTE) SHALL BE USED ON ALL COMPRESSION AND BOLTED GROUND CONNECTIONS.
8. ICE BRIDGE BONDING CONDUCTORS SHALL BE EXOTHERMICALLY BONDED OR BOLTED TO GROUND BAR.
9. ALUMINUM CONDUCTOR OR COPPER CLAD STEEL CONDUCTOR SHALL NOT BE USED FOR GROUNDING CONNECTIONS.
10. MISCELLANEOUS ELECTRICAL AND NON-ELECTRICAL METAL BOXES, FRAMES AND SUPPORTS SHALL BE BONDED TO THE GROUND RING, IN ACCORDANCE WITH THE NEC.
11. METAL CONDUIT SHALL BE MADE ELECTRICALLY CONTINUOUS WITH LISTED BONDING FITTINGS OR BY BONDING ACROSS THE DISCONTINUITY WITH 6 AWS COPPER WIRE UL APPROVED GROUNDING TYPE CONDUIT CLAMPS.
12. ALL NEW STRUCTURES WITH A FOUNDATION AND/OR FOOTING HAVING 20 FT. OR MORE OF 1/2 IN. OR GREATER ELECTRICALLY CONDUCTIVE REINFORCING STEEL MUST HAVE IT BONDED TO THE GROUND RING USING AN EXOTHERMIC WELD CONNECTION USING #2 AWG SOLID BARE TINNED COPPER GROUND WIRE, PER NEC 250.50

GENERAL NOTES

1. FOR THE PURPOSE OF CONSTRUCTION DRAWING, THE FOLLOWING DEFINITIONS SHALL APPLY:

   CONTRACTOR – CENTERLINE
   SUBCONTRACTOR – GENERAL CONTRACTOR (CONSTRUCTION)
   OWNER – AT&T MOBILITY

2. PRIOR TO THE SUBMISSION OF BIDS, THE BIDDING SUBCONTRACTOR SHALL VISIT THE CELL SITE TO FAMILIARIZE WITH THE EXISTING CONDITIONS AND TO CONFIRM THAT THE WORK CAN BE ACCOMPLISHED AS SHOWN ON THE CONSTRUCTION DRAWINGS. ANY DISCREPANCY FOUND SHALL BE BROUGHT TO THE ATTENTION OF CONTRACTOR.
3. ALL MATERIALS FURNISHED AND INSTALLED SHALL BE IN STRICT ACCORDANCE WITH ALL APPLICABLE CODES, REGULATIONS, AND ORDINANCES. SUBCONTRACTOR SHALL ISSUE ALL APPROPRIATE NOTICES AND COMPLY WITH ALL LAWS, ORDINANCES, RULES, REGULATIONS, AND LAWFUL ORDERS OF ANY PUBLIC AUTHORITY REGARDING THE PERFORMANCE OF THE WORK. ALL WORK CARRIED OUT SHALL COMPLY WITH ALL APPLICABLE MUNICIPAL AND UTILITY COMPANY SPECIFICATIONS AND LOCAL JURISDICTIONAL CODES, ORDINANCES AND APPLICABLE REGULATIONS.
4. DRAWINGS PROVIDED HERE ARE NOT TO BE SCALED AND ARE INTENDED TO SHOW OUTLINE ONLY.
5. UNLESS NOTED OTHERWISE, THE WORK SHALL INCLUDE FURNISHING MATERIALS, EQUIPMENT, APPURTENANCES, AND LABOR NECESSARY TO COMPLETE ALL INSTALLATIONS AS INDICATED ON THE DRAWINGS.
6. "KITTING LIST" SUPPLIED WITH THE BID PACKAGE IDENTIFIES ITEMS THAT WILL BE SUPPLIED BY CONTRACTOR. ITEMS NOT INCLUDED IN THE BILL OF MATERIALS AND KITTING LIST SHALL BE SUPPLIED BY THE SUBCONTRACTOR.
7. THE SUBCONTRACTOR SHALL INSTALL ALL EQUIPMENT AND MATERIALS IN ACCORDANCE WITH MANUFACTURER'S RECOMMENDATIONS UNLESS SPECIFICALLY STATED OTHERWISE.
8. IF THE SPECIFIED EQUIPMENT CANNOT BE INSTALLED AS SHOWN ON THESE DRAWINGS, THE SUBCONTRACTOR SHALL PROPOSE AN ALTERNATIVE INSTALLATION SPACE FOR APPROVAL BY THE CONTRACTOR.
9. SUBCONTRACTOR SHALL DETERMINE ACTUAL ROUTING OF CONDUIT, POWER AND T1 CABLES, GROUNDING CABLES AS SHOWN ON THE POWER, GROUNDING AND TELCO PLAN DRAWING. SUBCONTRACTOR SHALL UTILIZE EXISTING TRAYS AND/OR SHALL ADD NEW TRAYS AS NECESSARY. SUBCONTRACTOR SHALL CONFIRM THE ACTUAL ROUTING WITH THE CONTRACTOR.
10. THE SUBCONTRACTOR SHALL PROTECT EXISTING IMPROVEMENTS, PAVEMENTS, CURBS, LANDSCAPING AND STRUCTURES. ANY DAMAGED PART SHALL BE REPAIRED AT SUBCONTRACTOR'S EXPENSE TO THE SATISFACTION OF OWNER.
11. SUBCONTRACTOR SHALL LEGALLY AND PROPERLY DISPOSE OF ALL SCRAP MATERIALS SUCH AS COAXIAL CABLES AND OTHER ITEMS REMOVED FROM THE EXISTING FACILITY. ANTENNAS REMOVED SHALL BE RETURNED TO THE OWNER'S DESIGNATED LOCATION.
12. SUBCONTRACTOR SHALL LEAVE PREMISES IN CLEAN CONDITION.
13. ALL CONCRETE REPAIR WORK SHALL BE DONE IN ACCORDANCE WITH AMERICAN CONCRETE INSTITUTE (ACI) 301.
14. ANY NEW CONCRETE NEEDED FOR THE CONSTRUCTION SHALL BE AIR-ENTRAINED AND SHALL HAVE 4000 PSI STRENGTH AT 28 DAYS. ALL CONCRETE WORK SHALL BE DONE IN ACCORDANCE WITH ACI 318 CODE REQUIREMENTS.
15. ALL STRUCTURAL STEEL WORK SHALL BE DETAILED, FABRICATED AND ERECTED IN ACCORDANCE WITH AISC SPECIFICATIONS. ALL STRUCTURAL STEEL SHALL BE ASTM A36 (Fy = 36 ksi) UNLESS OTHERWISE NOTED. PIPES SHALL BE ASTM A53 TYPE E (Fy = 36 ksi). ALL STEEL EXPOSED TO WEATHER SHALL BE HOT DIPPED GALVANIZED. TOUCHUP ALL SCRATCHES AND OTHER MARKS IN THE FIELD AFTER STEEL IS ERECTED USING A COMPATIBLE ZINC RICH PAINT.
16. CONSTRUCTION SHALL COMPLY WITH LTE SPECIFICATIONS AND "GENERAL CONSTRUCTION SERVICES FOR CONSTRUCTION OF AT&T SITES."
17. SUBCONTRACTOR SHALL VERIFY ALL EXISTING DIMENSIONS AND CONDITIONS PRIOR TO COMMENCING ANY WORK. ALL DIMENSIONS OF EXISTING CONSTRUCTION SHOWN ON THE DRAWINGS MUST BE VERIFIED. SUBCONTRACTOR SHALL NOTIFY THE CONTRACTOR OF ANY DISCREPANCIES PRIOR TO ORDERING MATERIAL OR PROCEEDING WITH CONSTRUCTION.
18. THE EXISTING CELL SITE IS IN FULL COMMERCIAL OPERATION. ANY CONSTRUCTION WORK BY SUBCONTRACTOR SHALL NOT DISRUPT THE EXISTING NORMAL OPERATION. ANY WORK ON EXISTING EQUIPMENT MUST BE COORDINATED WITH CONTRACTOR. ALSO, WORK SHOULD BE SCHEDULED FOR AN APPROPRIATE MAINTENANCE WINDOW USUALLY IN LOW TRAFFIC PERIODS AFTER MIDNIGHT.
19. SINCE THE CELL SITE IS ACTIVE, ALL SAFETY PRECAUTIONS MUST BE TAKEN WHEN WORKING AROUND HIGH LEVELS OF ELECTROMAGNETIC RADIATION. EQUIPMENT SHOULD BE SHUTDOWN PRIOR TO PERFORMING ANY WORK THAT COULD EXPOSE THE WORKERS TO DANGER. PERSONAL RF EXPOSURE MONITORS ARE ADVISED TO BE WORN TO ALERT OF ANY DANGEROUS EXPOSURE LEVELS.
20. APPLICABLE BUILDING CODES:
    SUBCONTRACTOR'S WORK SHALL COMPLY WITH ALL APPLICABLE NATIONAL, STATE, AND LOCAL CODES AS ADOPTED BY THE LOCAL AUTHORITY HAVING JURISDICTION (AHJ) FOR THE LOCATION. THE EDITION OF THE AHJ ADOPTED CODES AND STANDARDS IN EFFECT ON THE DATE OF CONTRACT AWARD SHALL GOVERN THE DESIGN.
    BUILDING CODE: IBC 2012 WITH 2016 CT BUILDING CODE AMENDMENTS
    ELECTRICAL CODE: REFER TO ELECTRICAL DRAWINGS
    LIGHTENING CODE: REFER TO ELECTRICAL DRAWINGS

    SUBCONTRACTOR'S WORK SHALL COMPLY WITH THE LATEST EDITION OF THE FOLLOWING STANDARDS:

    AMERICAN CONCRETE INSTITUTE (ACI) 318; BUILDING CODE REQUIREMENTS FOR STRUCTURAL CONCRETE;

    AMERICAN INSTITUTE OF STEEL CONSTRUCTION (AISC)

    MANUAL OF STEEL CONSTRUCTION, ASD, FOURTEENTH EDITION;

    TELECOMMUNICATIONS INDUSTRY ASSOCIATION (TIA) 222-G, STRUCTURAL STANDARDS FOR STEEL

    EQUIPMENT AND ANTENNA SUPPORTING STRUCTURES; REFER TO ELECTRICAL DRAWINGS FOR SPECIFIC ELECTRICAL STANDARDS.

FOR ANY CONFLICTS BETWEEN SECTIONS OF LISTED CODES AND STANDARDS REGARDING MATERIAL, METHODS OF CONSTRUCTION, OR OTHER REQUIREMENTS, THE MOST RESTRICTIVE REQUIREMENT SHALL GOVERN. WHERE THERE IS CONFLICT BETWEEN A GENERAL REQUIREMENT AND A SPECIFIC REQUIREMENT, THE SPECIFIC REQUIREMENT SHALL GOVERN.

ABBREVIATIONS

AGL	ABOVE GRADE LEVEL	EQ	EQUAL	REQ	REQUIRED
AWG	AMERICAN WIRE GAUGE	GC	GENERAL CONTRACTOR	RF	RADIO FREQUENCY
BBU	BATTERY BACKUP UNIT	GRC	GALVANIZED RIGID CONDUIT	TBD	TO BE DETERMINED
BTCW	BARE TINNED SOLID COPPER WIRE	MGB	MASTER GROUND BAR	TBR	TO BE REMOVED
BGR	BURIED GROUND RING	MIN	MINIMUM	TBRR	TO BE REMOVED AND REPLACED
BTS	BASE TRANSCEIVER STATION	P	PROPOSED	TYP	TYPICAL
E	EXISTING	NTS	NOT TO SCALE	UG	UNDER GROUND
EGB	EQUIPMENT GROUND BAR	RAD	RADIATION CENTER LINE (ANTENNA)	VIF	VERIFY IN FIELD
EGR	EQUIPMENT GROUND RING	REF	REFERENCE		

HUDSON Design Group LLC
45 BEECHWOOD DRIVE
NORTH ANDOVER, MA 01845
TEL: (978) 557-5553
FAX: (978) 336-5586

CENTERLINE COMMUNICATIONS
95 RYAN DRIVE
RAYNHAM, MA 02767

SITE NUMBER: CT1185
SITE NAME: STAFFORD SPRINGS
TOLLAND AVENUE
64 TOLLAND AVENUE
STAFFORD, CT 06076
TOLLAND COUNTY

at&t
500 ENTERPRISE DRIVE, SUITE 3A
ROCKY HILL, CT 06067

NO.	DATE	REVISIONS	BY	CHK	APP'D
A	10/16/17	ISSUED FOR REVIEW	SB	SG	DJC

SCALE: AS SHOWN | DESIGNED BY: AT | DRAWN BY: SB

AT&T

GENERAL NOTES
(LTE 2C/3C)

SITE NUMBER	DRAWING NUMBER	REV
CT1185	GN-1	A

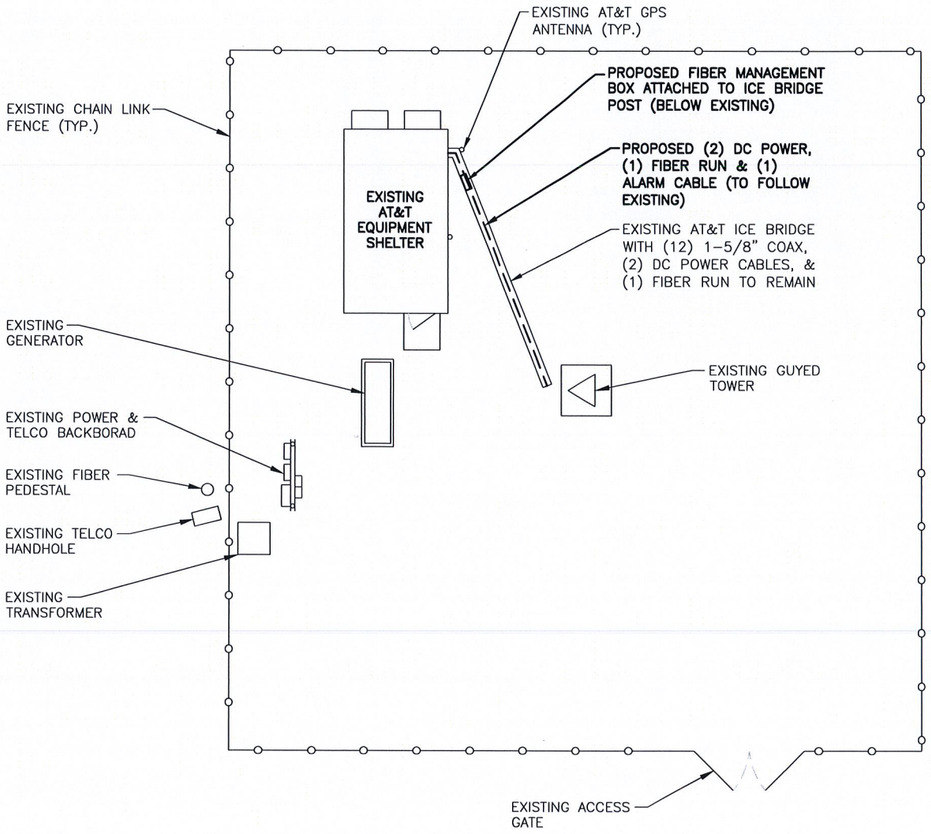

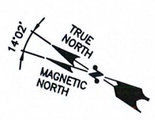

COMPOUND PLAN (1 / A-1)
22x34 SCATE: 1/8"=1'-0"
11x17 SCALE: 1/16"=1'-0"

0 4'-0" 8'-0" 16'-0" 24'-0"

NOTE:

AN ANALYSIS FOR THE CAPACITY OF THE EXISTING STRUCTURES TO SUPPORT THE PROPOSED EQUIPMENT SHALL BE DETERMINED PRIOR TO CONSTRUCTION.

NOTE:

REFER TO THE FINAL RF DATA SHEET FOR FINAL ANTENNA SETTINGS.

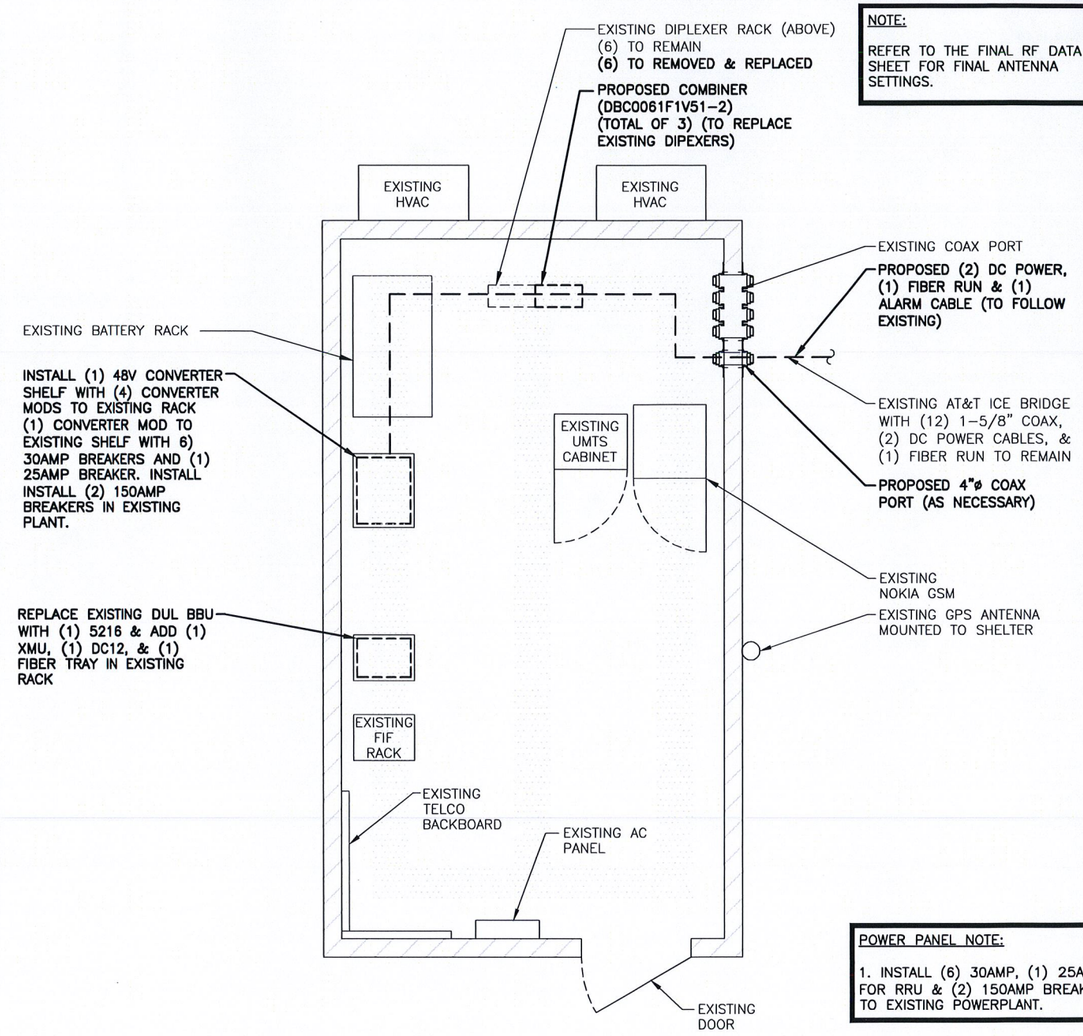

POWER PANEL NOTE:

1. INSTALL (6) 30AMP, (1) 25AMP FOR RRU & (2) 150AMP BREAKERS TO EXISTING POWERPLANT.

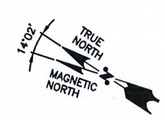

EQUIPMENT PLAN (2 / A-1)
22x34 SCALE: 1/2"=1'-0"
11x17 SCALE: 1/4"=1'-0"

0 1'-0" 2'-0" 4'-0" 6'-0"

HUDSON Design Group LLC
45 BEECHWOOD DRIVE
NORTH ANDOVER, MA 01845
TEL: (978) 557-5553
FAX: (978) 336-5586

CENTERLINE COMMUNICATIONS
95 RYAN DRIVE
RAYNHAM, MA 02767

SITE NUMBER: CT1185
SITE NAME: STAFFORD SPRINGS TOLLAND AVENUE
64 TOLLAND AVENUE
STAFFORD, CT 06076
TOLLAND COUNTY

at&t
500 ENTERPRISE DRIVE, SUITE 3A
ROCKY HILL, CT 06067

NO.	DATE	REVISIONS	BY	CHK	APP'D
A	10/16/17	ISSUED FOR REVIEW	SB	SG	DJC

SCALE: AS SHOWN | DESIGNED BY: AT | DRAWN BY: SB

AT&T

COMPOUND & EQUIPMENT PLANS (LTE 2C/3C)

SITE NUMBER	DRAWING NUMBER	REV
CT1185	A-1	A

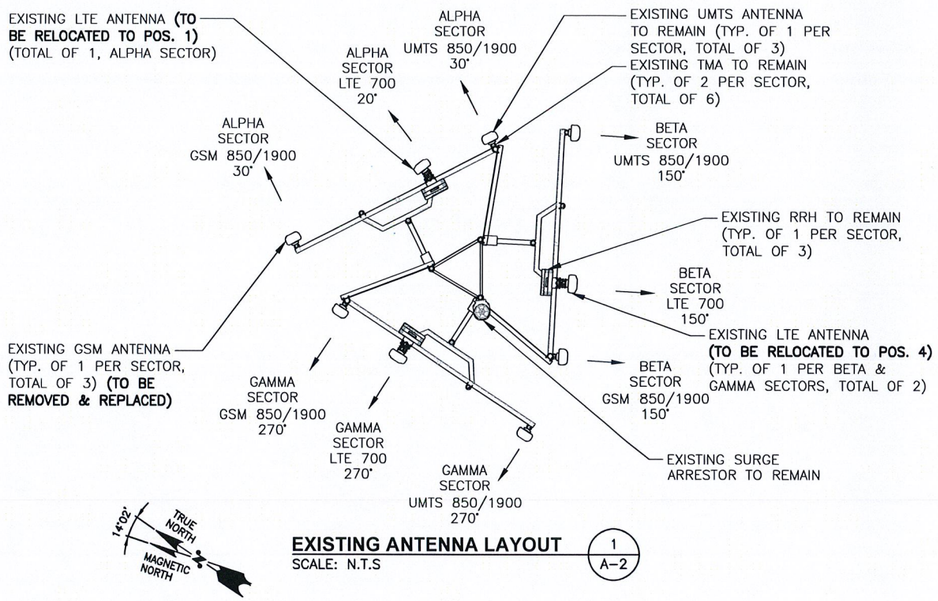

EXISTING ANTENNA LAYOUT

SCALE: N.T.S

1 / A-2

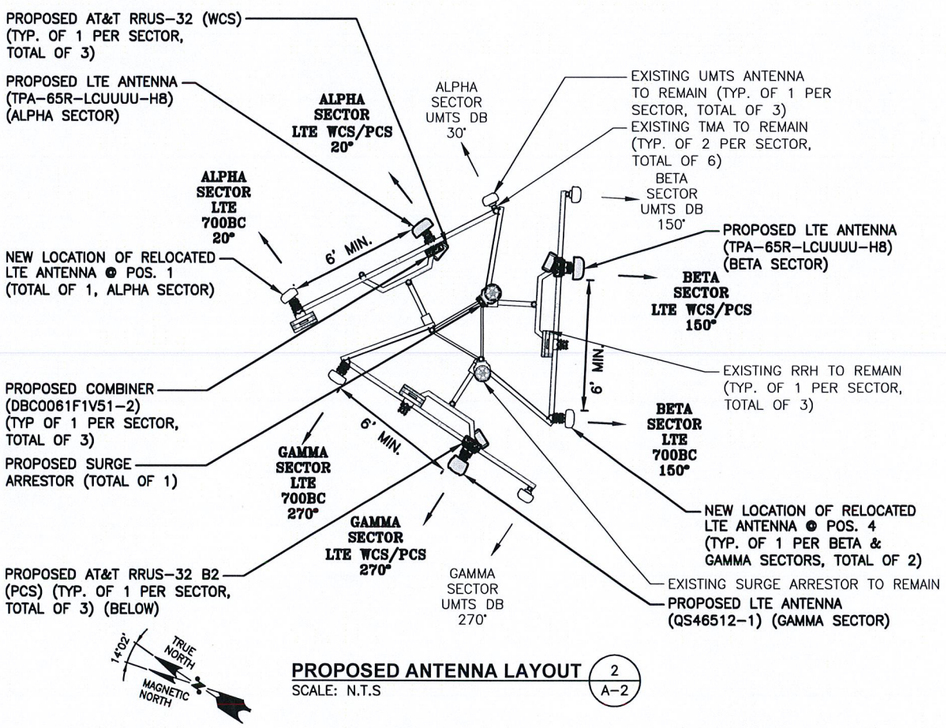

PROPOSED ANTENNA LAYOUT

SCALE: N.T.S

2 / A-2

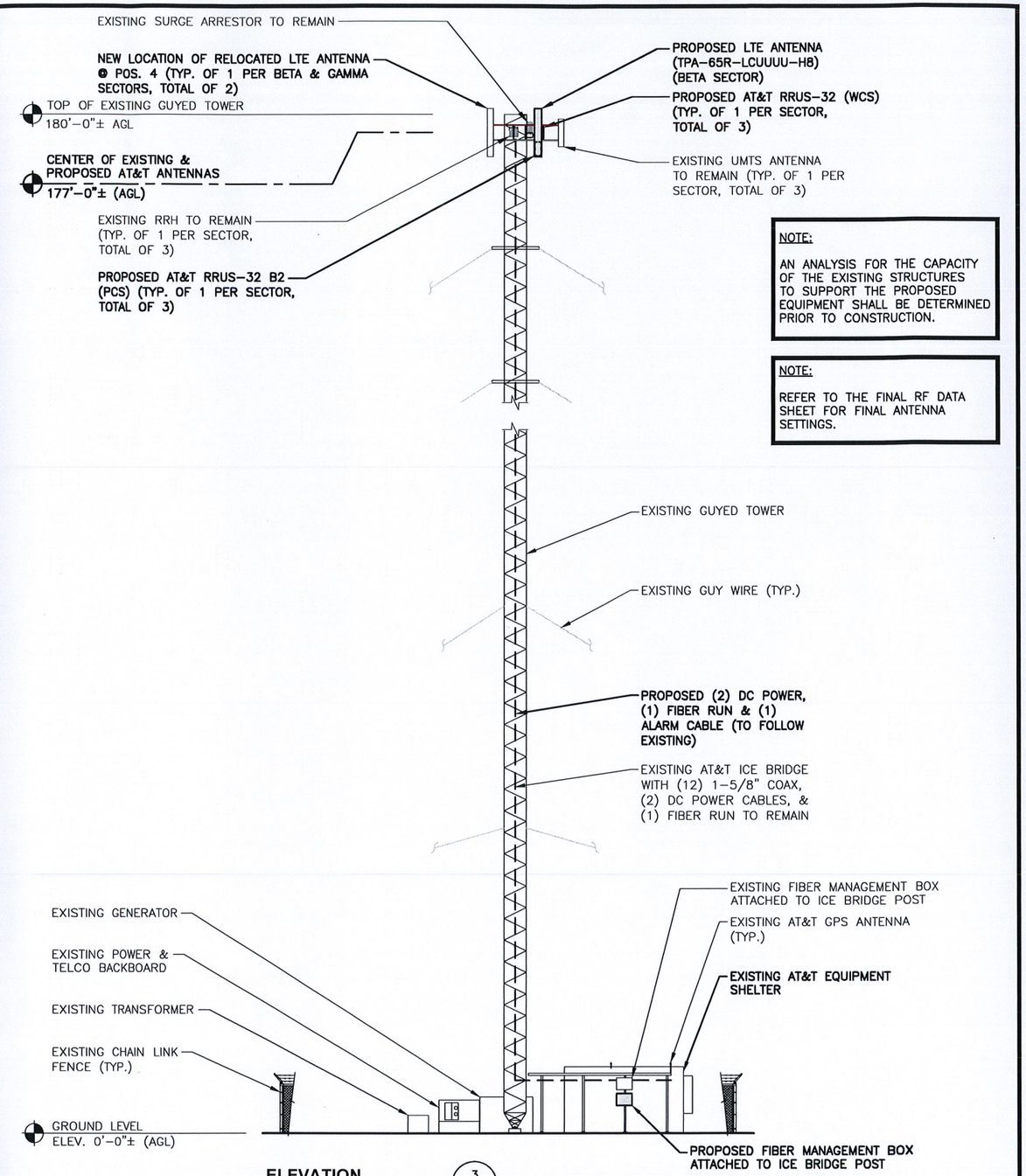

NOTE:

AN ANALYSIS FOR THE CAPACITY OF THE EXISTING STRUCTURES TO SUPPORT THE PROPOSED EQUIPMENT SHALL BE DETERMINED PRIOR TO CONSTRUCTION.

NOTE:

REFER TO THE FINAL RF DATA SHEET FOR FINAL ANTENNA SETTINGS.

ELEVATION

22x34 SCALE: 3/32"=1'-0"
11x17 SCALE: 3/64"=1'-0"

3 / A-2

0 5'-4" 10'-8" 21'-4" 32'-0"

HUDSON Design Group LLC
45 BEECHWOOD DRIVE
NORTH ANDOVER, MA 01845
TEL: (978) 557-5553
FAX: (978) 336-5586

CENTERLINE COMMUNICATIONS
95 RYAN DRIVE
RAYNHAM, MA 02767

SITE NUMBER: CT1185
SITE NAME: STAFFORD SPRINGS TOLLAND AVENUE
64 TOLLAND AVENUE
STAFFORD, CT 06076
TOLLAND COUNTY

at&t
500 ENTERPRISE DRIVE, SUITE 3A
ROCKY HILL, CT 06067

NO.	DATE	REVISIONS	BY	CHK	APP'D
A	10/16/17	ISSUED FOR REVIEW	SB	SG	DJC

SCALE: AS SHOWN | DESIGNED BY: AT | DRAWN BY: SB

AT&T

ANTENNA PLANS & ELEVATION (LTE 2C/3C)

SITE NUMBER	DRAWING NUMBER	REV
CT1185	A-2	A

NOTE:

AN ANALYSIS FOR THE CAPACITY OF THE EXISTING STRUCTURES TO SUPPORT THE PROPOSED EQUIPMENT SHALL BE DETERMINED PRIOR TO CONSTRUCTION.

NOTE:

REFER TO THE FINAL RF DATA SHEET FOR FINAL ANTENNA SETTINGS.

*COAX JUMPER NOTE:
COAX JUMPERS (4) PER SECTOR, SECTOR FROM EACH RRU (TOTAL OF 12).

**FIBER JUMPER NOTE:
FIBER JUMPERS (2) PER SECTOR FROM THE SQUID TO EACH RRU (TOTAL OF 6).

FINAL ANTENNA SCHEDULE

SECTOR	BAND	ANTENNA		SIZE (INCHES) (L X W X D)	RAD CENTER	AZIMUTH	COMBINERS		TMA'S		RRU'S		SIZE (INCHES) (L X W X D)	COAX JUMPERS	FIBER JUMPERS
ALPHA	850 MHZ/1900 MHZ	EXISTING	SBNH-1D6565C	96.4x11.9x7.1	177'-0"±	20°	–	–	–	–	EXISTING	RRUS-11 (700)	–	–	–
	–	–	–	–	–	–	–	–	–	–	–	–	–	–	–
	1900 MHZ	PROPOSED	TPA-65R-LCUUUU-H8	96.0x14.4x8.6	177'-0"±	20°	PG PROPOSED	(1)DBC0061F1V51-2 (1)DBC0061F1V51-2	–	–	PROPOSED PROPOSED	RRUS-32 (WCS) RRUS-32-B2 (PCS)	27.2X12.1X7.0 27.2X12.1X7.0	2* 2*	1** 1**
	850 MHZ/1900 MHZ	EXISTING	7770	55.0x11.0x5.0	177'-0"±	30°	–	–	EXISTING	(2)LGP21401	–	–	–	–	–
BETA	850 MHZ/1900 MHZ	EXISTING	7770	55.0x11.0x5.0	177'-0"±	150°	–	–	EXISTING	(2)LGP21401	–	–	–	–	–
	1900 MHZ	PROPOSED	TPA-65R-LCUUUU-H8	96X14.4X8.6	177'-0"±	150°	PG PROPOSED	(1)DBC0061F1V51-2 (1)DBC0061F1V51-2	–	–	PROPOSED PROPOSED	RRUS-32 (WCS) RRUS-32-B2 (PCS)	27.2X12.1X7.0 27.2X12.1X7.0	2* 2*	1** 1**
	–	–	–	–	–	–	–	–	–	–	–	–	–	–	–
	700 MHZ	EXISTING	P65-17-XLH-RR	96.0x12.0x6.0	177'-0"±	150°	–	–	–	–	EXISTING	RRUS-11 (700)	–	–	–
GAMMA	850 MHZ/1900 MHZ	EXISTING	7770	55.0x11.0x5.0	177'-0"±	270°	–	–	EXISTING	(2)LGP21401	–	–	–	–	–
	1900 MHZ	PROPOSED	QS46512-1	52.0x12.0x10.8	177'-0"±	270°	PG PROPOSED	(1)DBC0061F1V51-2 (1)DBC0061F1V51-2	–	–	PROPOSED PROPOSED	RRUS-32 (WCS) RRUS-32-B2 (PCS)	27.2X12.1X7.0 27.2X12.1X7.0	2* 2*	1** 1**
	–	–	–	–	–	–	–	–	–	–	–	–	–	–	–
	700 MHZ	EXISTING	AM-X-CD-14-65-00T-RET	48.0x11.8x5.9	177'-0"±	270°	–	–	–	–	EXISTING	RRUS-11 (700)	–	–	–

FINAL ANTENNA CONFIGURATION TABLE (5 / A-3)

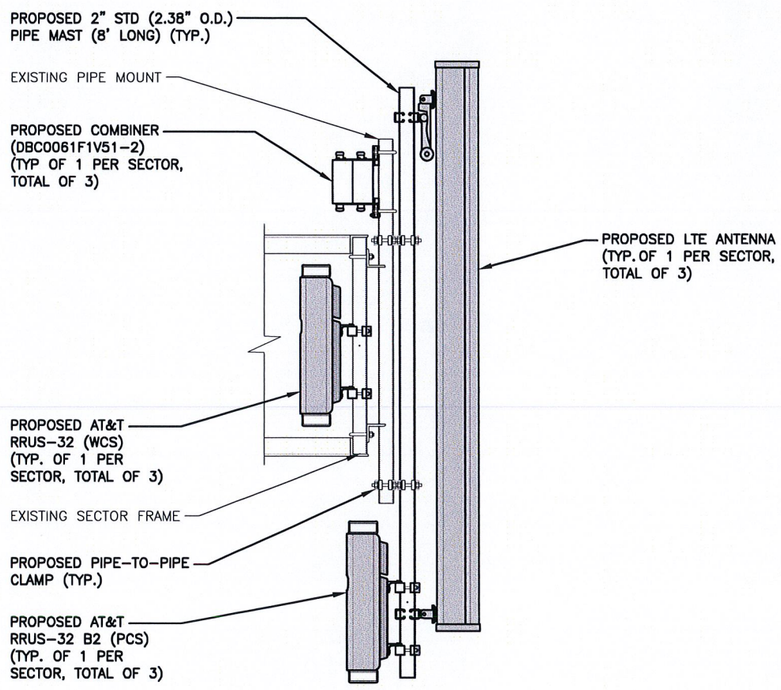

PROPOSED ANTENNA AND RRH MOUNTING DETAIL (1 / A-3)
SCALE: N.T.S

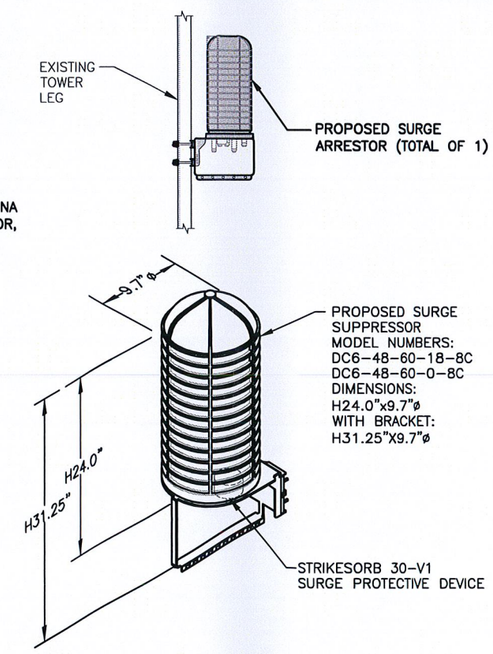

NOTE:
MOUNT PER MANUFACTURER'S SPECIFICATIONS.

DC SURGE SUPPRESSOR DETAIL (2 / A-3)
SCALE: N.T.S

RRH CHART				
QUANTITY	MODEL	L	W	D
3(E)	RRUS-11	19.7"	17.0"	7.2"
6(P)	RRUS-32	27.2"	12.1"	7.0"

NOTE:
MOUNT PER MANUFACTURER'S SPECIFICATIONS

NOTE:

SEE RFDS FOR RRH FREQUENCY AND MODEL NUMBER

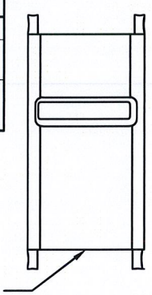

PROPOSED RRH REFER TO THE FINAL RFDS AND CHART FOR QUANTITY, MODEL AND DIMENSIONS

NOTE:
MOUNT PER MANUFACTURER'S SPECIFICATIONS.

PROPOSED RRH DETAIL (3 / A-3)
SCALE: N.T.S

COMBINER DIMENSIONS	
MODEL #	DBC0061F1V51-2
MANUF.	KAELUS
HEIGHT	10.24"
WIDTH	7.98"
DEPTH	7.65"

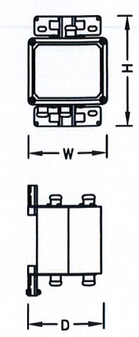

PROPOSED COMBINER (4 / A-3)
SCALE: N.T.S

HUDSON Design Group LLC
45 BEECHWOOD DRIVE
NORTH ANDOVER, MA 01845
TEL: (978) 557-5553
FAX: (978) 336-5586

CENTERLINE COMMUNICATIONS
95 RYAN DRIVE
RAYNHAM, MA 02767

SITE NUMBER: CT1185
SITE NAME: STAFFORD SPRINGS
TOLLAND AVENUE
64 TOLLAND AVENUE
STAFFORD, CT 06076
TOLLAND COUNTY

at&t
500 ENTERPRISE DRIVE, SUITE 3A
ROCKY HILL, CT 06067

NO.	DATE	REVISIONS	BY	CHK	APP'D
A	10/16/17	ISSUED FOR REVIEW	SB	SG	DJC

SCALE: AS SHOWN | DESIGNED BY: AT | DRAWN BY: SB

AT&T

DETAILS
(LTE 2C/3C)

SITE NUMBER	DRAWING NUMBER	REV
CT1185	A-3	A

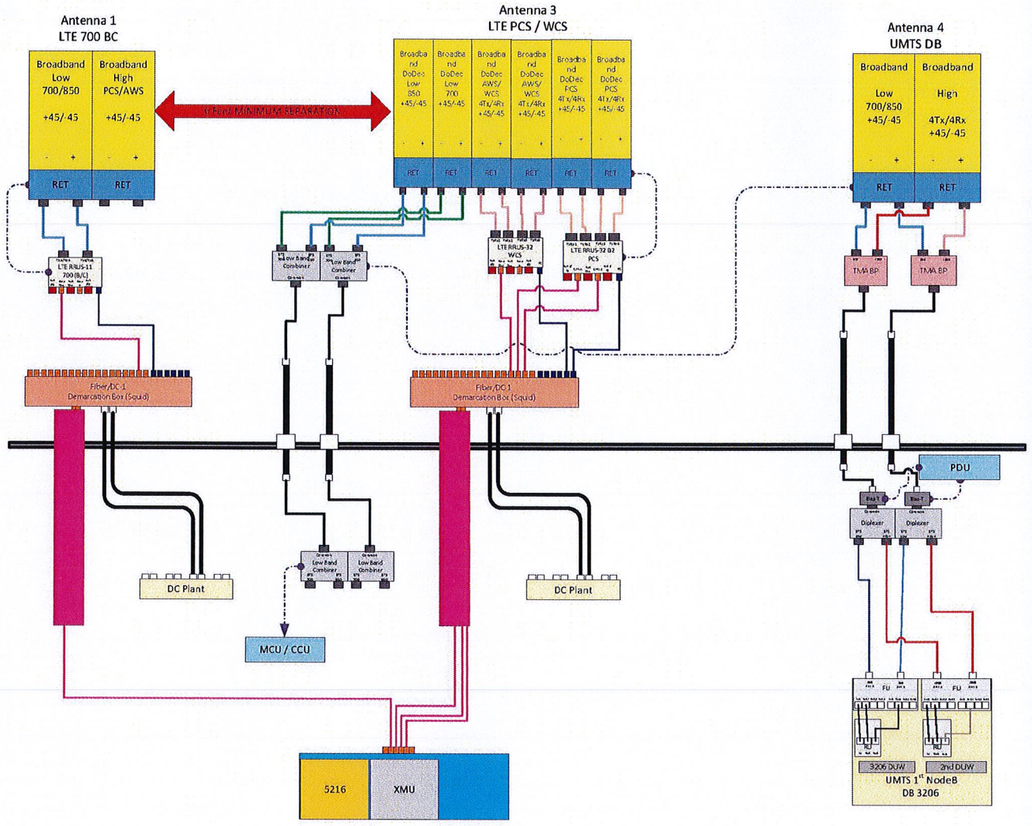

RF PLUMBING DIAGRAM
ALPHA SECTOR (1 / RF-1)
SCALE: N.T.S

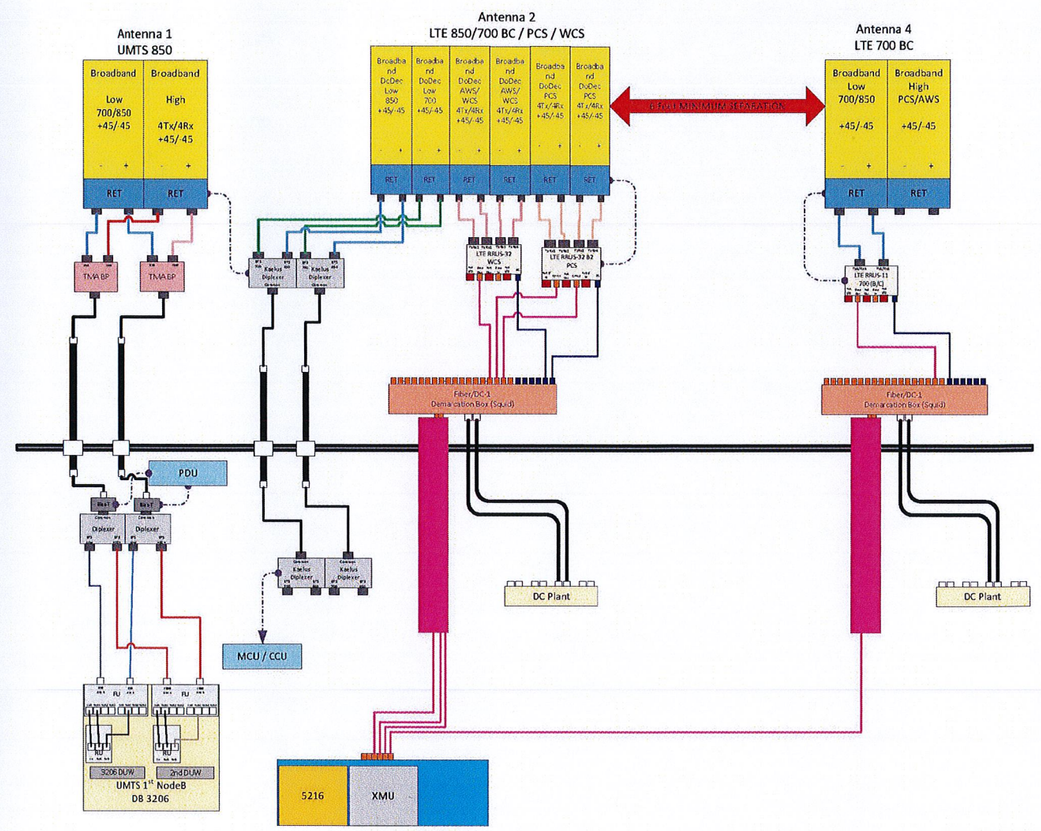

RF PLUMBING DIAGRAM
BETA & GAMMA SECTORS (2 / RF-1)
SCALE: N.T.S

NOTE:
1. CONTRACTOR TO CONFIRM ALL PARTS.
2. INSTALL ALL EQUIPMENT TO MANUFACTURER'S RECOMMENDATIONS

NOTE:
REFER TO THE FINAL RF DATA SHEET FOR FINAL ANTENNA SETTINGS.

HUDSON Design Group LLC
45 BEECHWOOD DRIVE
NORTH ANDOVER, MA 01845
TEL: (978) 557-5553
FAX: (978) 336-5586

CENTERLINE COMMUNICATIONS
95 RYAN DRIVE
RAYNHAM, MA 02767

SITE NUMBER: CT1185
SITE NAME: STAFFORD SPRINGS
TOLLAND AVENUE
64 TOLLAND AVENUE
STAFFORD, CT 06076
TOLLAND COUNTY

at&t
500 ENTERPRISE DRIVE, SUITE 3A
ROCKY HILL, CT 06067

NO.	DATE	REVISIONS	BY	CHK	APP'D
A	10/16/17	ISSUED FOR REVIEW	SB	SG	DJC

SCALE: AS SHOWN | DESIGNED BY: AT | DRAWN BY: SB

AT&T

RF PLUMBING DIAGRAM
(LTE 2C/3C)

SITE NUMBER	DRAWING NUMBER	REV
CT1185	RF-1	A

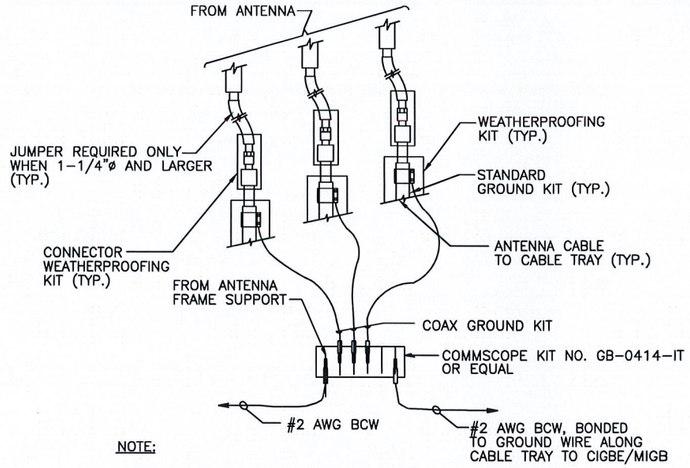

NOTE:

1. DO NOT INSTALL CABLE GROUND KIT AT A BEND AND ALWAYS DIRECT GROUND WIRE DOWN TO CIGBE.

GROUND WIRE TO GROUND BAR CONNECTION DETAIL (1 / G-1)

SCALE: N.T.S

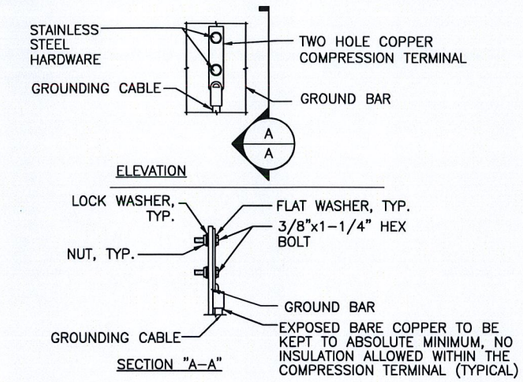

NOTE:

1. "DOUBLING UP" OR "STACKING" OF CONNECTION IS NOT PERMITTED.
2. OXIDE INHIBITING COMPOUND TO BE USED AT ALL LOCATION.
3. CADWELD DOWNLEADS FROM UPPER EGB, LOWER EGB, AND MGB

TYPICAL GROUND BAR CONNECTION DETAIL (3 / G-1)

SCALE: N.T.S

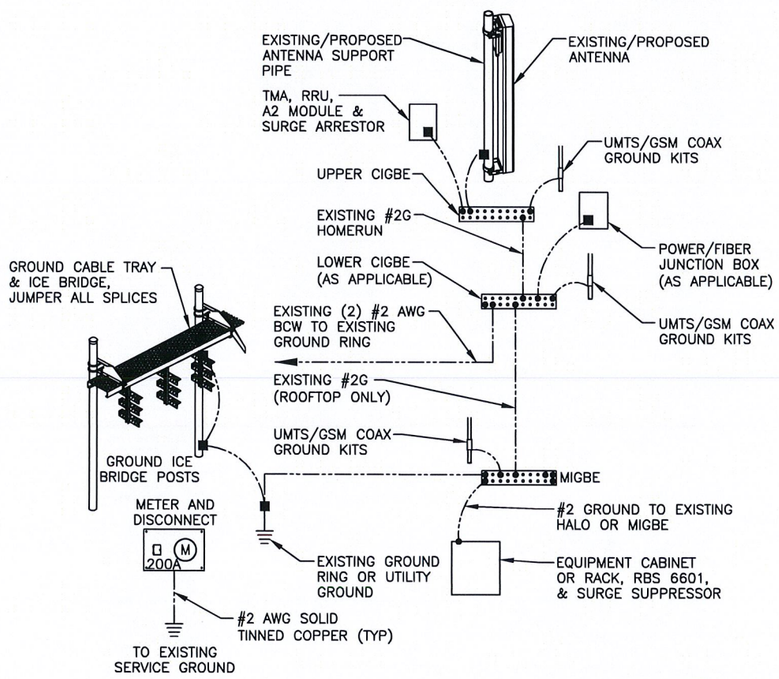

GROUNDING RISER DIAGRAM (2 / G-1)

SCALE: N.T.S

EACH GROUND CONDUCTOR TERMINATING ON ANY GROUND BAR SHALL HAVE AN IDENTIFICATION TAG ATTACHED AT EACH END THAT WILL IDENTIFY ITS ORIGIN AND DESTINATION.

SECTION "P" – SURGE PRODUCERS

CABLE ENTRY PORTS (HATCH PLATES) (#2)
GENERATOR FRAMEWORK (IF AVAILABLE) (#2)
TELCO GROUND BAR
COMMERCIAL POWER COMMON NEUTRAL/GROUND BOND (#2)
+24V POWER SUPPLY RETURN BAR (#2)
–48V POWER SUPPLY RETURN BAR (#2)
RECTIFIER FRAMES.

SECTION "A" – SURGE ABSORBERS

INTERIOR GROUND RING (#2)
EXTERNAL EARTH GROUND FIELD (BURIED GROUND RING) (#2)
METALLIC COLD WATER PIPE (IF AVAILABLE) (#2)
BUILDING STEEL (IF AVAILABLE) (#2)

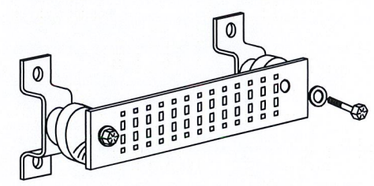

GROUND BAR - DETAIL (4 / G-1)

SCALE: N.T.S

HUDSON Design Group LLC
45 BEECHWOOD DRIVE
NORTH ANDOVER, MA 01845
TEL: (978) 557-5553
FAX: (978) 336-5586

CENTERLINE COMMUNICATIONS
95 RYAN DRIVE
RAYNHAM, MA 02767

SITE NUMBER: CT1185
SITE NAME: STAFFORD SPRINGS TOLLAND AVENUE
64 TOLLAND AVENUE
STAFFORD, CT 06076
TOLLAND COUNTY

at&t
500 ENTERPRISE DRIVE, SUITE 3A
ROCKY HILL, CT 06067

NO.	DATE	REVISIONS	BY	CHK	APP'D
A	10/16/17	ISSUED FOR REVIEW	SB	SG	DJC

SCALE: AS SHOWN | DESIGNED BY: AT | DRAWN BY: SB

AT&T

GROUNDING DETAILS (LTE 2C/3C)

SITE NUMBER	DRAWING NUMBER	REV
CT1185	G-1	A