# STATE OF CONNECTICUT

***CONNECTICUT SITING COUNCIL***

Ten Franklin Square, New Britain, CT 06051

Phone: (860) 827-2935 Fax: (860) 827-2950

E-Mail: siting.council@ct.gov

Internet: ct.gov/csc

*Daniel F. Caruso*
*Chairman*


March 21, 2011

Douglas L. Culp, Real Estate Consultant
New Cingular Wireless PCS, LLC
500 Enterprise Drive
Rocky Hill, CT 06067-3900

RE: **EM-CING-107-110225** - New Cingular Wireless PCS, LLC notice of intent to modify an existing telecommunications facility located at 617 South Orange Center Road, Orange, Connecticut.

Dear Mr. Culp:

The Connecticut Siting Council (Council) hereby acknowledges your notice to modify this existing telecommunications facility, pursuant to Section 16-50j-73 of the Regulations of Connecticut State Agencies with the following conditions:

- Any deviation from the proposed modification as specified in this notice and supporting materials with Council shall render this acknowledgement invalid;
- Any material changes to this modification as proposed shall require the filing of a new notice with the Council;
- Not less than 45 days after completion of construction, the Council shall be notified in writing that construction has been completed;
- The validity of this action shall expire one year from the date of this letter; and
- The applicant may file a request for an extension of time beyond the one year deadline provided that such request is submitted to the Council not less than 60 days prior to the expiration;

The proposed modifications including the placement of all necessary equipment and shelters within the tower compound are to be implemented as specified here and in your notice dated February 21, 2011. The modifications are in compliance with the exception criteria in Section 16-50j-72 (b) of the Regulations of Connecticut State Agencies as changes to an existing facility site that would not increase tower height, extend the boundaries of the tower site, increase noise levels at the tower site boundary by six decibels, and increase the total radio frequencies electromagnetic radiation power density measured at the tower site boundary to or above the standard adopted by the State Department of Environmental Protection pursuant to General Statutes § 22a-162. This facility has also been carefully modeled to ensure that radio frequency emissions are conservatively below State and federal standards applicable to the frequencies now used on this tower.

This decision is under the exclusive jurisdiction of the Council. Please be advised that the validity of this action shall expire one year from the date of this letter. Any additional change to this facility will require explicit notice to this agency pursuant to Regulations of Connecticut State Agencies Section 16-50j-73. Such notice shall include all relevant information regarding the proposed change with cumulative worst-case modeling of radio frequency exposure at the closest point of uncontrolled access to the tower base, consistent with Federal Communications Commission, Office of Engineering and Technology, Bulletin 65. Thank you for your attention and cooperation.

Very truly yours,

Linda Roberts
Executive Director

LR/CDM/laf

c: The Honorable James M. Zeoli, First Selectman, Town of Orange
Paul Dinice, Zoning Enforcement Officer, Town of Orange


CSC
CONNECTICUT SITING COUNCIL
*Affirmative Action / Equal Opportunity Employer*

# STATE OF CONNECTICUT

***CONNECTICUT SITING COUNCIL***

Ten Franklin Square, New Britain, CT 06051

Phone: (860) 827-2935 Fax: (860) 827-2950

E-Mail: siting.council@ct.gov

Internet: ct.gov/csc

*Daniel F. Caruso*
*Chairman*


March 7, 2011

The Honorable James M. Zeoli
First Selectman
Town of Orange
Town Hall
617 Orange Center Road
Orange, CT 06477-2423

RE: **EM-CING-107-110225** - New Cingular Wireless PCS, LLC notice of intent to modify an existing telecommunications facility located at 617 South Orange Center Road, Orange, Connecticut.

Dear First Selectman Zeoli:

The Connecticut Siting Council (Council) received this request to modify an existing telecommunications facility, pursuant to Regulations of Connecticut State Agencies Section 16-50j-72.

If you have any questions or comments regarding this proposal, please call me or inform the Council by March 21, 2011.

Thank you for your cooperation and consideration.

Very truly yours,

Linda Roberts

Linda Roberts
Executive Director

LR/jbw

Enclosure: Notice of Intent

c: Paul Dinice, Zoning Enforcement Officer, Town of Orange

G:\EM\CINGULAR\Orange\zeoli6.DOC

EM-CING-107-110225

**New Cingular Wireless PCS, LLC**
500 Enterprise Drive
Rocky Hill, Connecticut 06067-3900
Phone: (860) 463-5511
Fax: (860) 513-7190

**Douglas L. Culp**
Real Estate Consultant

HAND DELIVERED

February 21, 2011

RECEIVED
FEB 25 2011
CONNECTICUT
SITING COUNCIL

Ms. Linda Roberts
Executive Director
Connecticut Siting Council
10 Franklin Square
New Britain, Connecticut 06051

Re: New Cingular Wireless PCS, LLC notice of intent to modify an existing telecommunications facility located at 617 South Orange Center Road Orange, CT (owner Town of Orange)

Dear Ms. Roberts:

In order to accommodate technological changes, implement Uniform Mobile Telecommunications System ("UMTS") and/or Long Term Evolution ("LTE") capabilities, and enhance system performance in the State of Connecticut, New Cingular Wireless PCS, LLC ("AT&T") plans to modify the equipment configurations at many of its existing cell sites. Please accept this letter and attachments as notification, pursuant to R.C.S.A. Section 16-50j-73, of construction which constitutes an exempt modification pursuant to R.C.S.A. Section 16-50j-72(b)(2). In compliance with R.C.S.A. Section 16-50j-73, a copy of this letter and attachments is being sent to the chief elected official of the municipality in which the affected cell site is located.

UMTS technology offers services to mobile computer and phone users anywhere in the world. Based on the Global System for Mobile ("GSM") communication standard, UMTS is the planned worldwide standard for mobile users. UMTS, fully implemented, gives computer and phone users high-speed access to the Internet as they travel. They have the same capabilities even when they roam, through both terrestrial wireless and satellite transmissions.

LTE is a new high-performance air interface for cellular mobile communications. It is the last step toward the 4th generation (4G) of radio technologies, designed to increase the capacity and speed of mobile telephone networks.

Attached is a summary of the planned modifications, including power density calculations reflecting the change in AT&T's operations at the site. Also included is documentation of the

structural sufficiency of the tower to accommodate the revised antenna configuration.

The changes to the facility do not constitute modifications as defined in Connecticut General Statutes ("C.G.S.") Section 16-50i(d) because the general physical characteristics of the facility will not be significantly changed or altered. Rather, the planned changes to the facility fall squarely within those activities explicitly provided for in R.C.S.A. Section 16-50j-72(b)(2).

1. The height of the overall structure will be unaffected.

2. The proposed changes will not extend the site boundaries. There will be no effect on the site compound other than some enlarged equipment pads as may be noted in the attachments.

3. The proposed changes will not increase the noise level at the existing facility by six decibels or more.

4. Radio frequency power density may increase due to use of one or more GSM channel for UMTS transmissions. Moreover, LTE will utilize additional radio frequencies newly-licensed by the FCC for cellular mobile communications. However, the changes will not increase the calculated "worst case" power density for the combined operations at the site to a level at or above the applicable standard for uncontrolled environments as calculated for a mixed frequency site.

For the foregoing reasons, New Cingular Wireless respectfully submits that the proposed changes at the referenced site constitute exempt modifications under R.C.S.A. Section 16-50j-72(b)(2).

Please feel free to call me at (860) 463-5511 with questions concerning this matter. Thank you for your consideration.

Sincerely,

Douglas L. Culp
Real Estate Consultant

Attachments

**NEW CINGULAR WIRELESS PCS, LLC**
**Equipment Modification**

617 South Orange Center Road Orange, CT
Site Number 5101
Exempt Mod 7/06

**Tower Owner/Manager:** Town of Orange

**Equipment configuration:** Monopole

**Current and/or approved:** Six Powerwave antennas @ 177 ft
Six TMA's @ 177 ft
Twelve runs 1 5/8 inch coax to 177 ft
Outdoor cabinets on existing concrete pad

**Planned Modifications:** Retain existing antennas, TMA's and coax
Install three LTE KMW14-65 antennas or equivalent @ 177 ft
Install six remote radio heads and three surge arrestors @ 177 ft
Install one fiber and two DC power cables to @ 177 ft
Install one new outdoor cabinet and surge suppressor on H-Frame on existing concrete pad

**Power Density:**

Worst-case calculations for existing wireless operations at the site, using standard parameters for other carriers, indicate a radio frequency electromagnetic radiation power density, measured at ground level beside the Monopole, of approximately 39.1 % of the standard adopted by the FCC. As depicted in the second table below, the total radio frequency electromagnetic radiation power density following proposed modifications would be approximately 40.3 % of the standard.

**Existing**

| Company | Centerline Ht (feet) | Frequency (MHz) | Number of Channels | Power Per Channel (Watts) | Power Density ($mW/cm^2$) | Standard Limits ($mW/cm^2$) | Percent of Limit |
|---|---|---|---|---|---|---|---|
| Other Users | | | | | | | 33.62 |
| AT&T UMTS | 177 | 1900 Band | 1 | 500 | 0.0057 | 1.0000 | 0.57 |
| AT&T GSM | 177 | 1900 Band | 3 | 427 | 0.0147 | 1.0000 | 1.47 |
| AT&T GSM | 177 | 880 - 894 | 6 | 296 | 0.0204 | 0.5867 | 3.47 |
| **Total** | | | | | | | **39.1%** |

* Data for other users are from Siting Council records.

## Proposed

| Company | Centerline Ht (feet) | Frequency (MHz) | Number of Channels | Power Per Channel (Watts) | Power Density ($mW/cm^2$) | Standard Limits ($mW/cm^2$) | Percent of Limit |
|---|---|---|---|---|---|---|---|
| Other Users | | | | | | | 33.62 |
| AT&T UMTS | 177 | 1900 Band | 1 | 500 | 0.0057 | 1.0000 | 0.57 |
| AT&T GSM | 177 | 1900 Band | 3 | 427 | 0.0147 | 1.0000 | 1.47 |
| AT&T GSM | 177 | 880 - 894 | 6 | 296 | 0.0204 | 0.5867 | 3.47 |
| AT&T LTE | 177 | 740 - 746 | 1 | 500 | 0.0057 | 0.4933 | 1.16 |
| **Total** | | | | | | | **40.3%** |
| | | | | | | | |

* Data for other users are from Siting Council records.

## Structural information:

The attached structural analysis demonstrates that the monopole and foundation have adequate structural capacity to accommodate the proposed modifications. (GPD Assoc., dated 1-25-11)

## PROJECT INFORMATION

| | |
|---|---|
| SCOPE OF WORK: | UNMANNED TELECOMMUNICATIONS FACILITY MODIFICATIONS |
| SITE ADDRESS: | SOUTH ORANGE CENTER ROAD<br>ORANGE, CT 06477 |
| LATITUDE: | 41.25555° N 41° 15' 19.98" N |
| LONGITUDE: | -73.010889° W -73° 0' 39.2" W |
| JURISDICTION: | NATIONAL, STATE & LOCAL CODES OR ORDINANCES |
| CURRENT USE: | TELECOMMUNICATIONS FACILITY |
| PROPOSED USE: | TELECOMMUNICATIONS FACILITY |
| NOC# | 866-915-5600 |

at&t

# SITE NUMBER: CT5101
# SITE NAME: ORANGE SOUTH

## DRAWING INDEX

| | | REV |
|---|---|---|
| T-1 | TITLE SHEET | 1 |
| GN-1 | GENERAL NOTES | 1 |
| A-1 | COMPOUND & EQUIPMENT PLAN | 1 |
| A-2 | ANTENNA LAYOUT AND ELEVATION | 1 |
| A-3 | DETAILS | 1 |
| G-1 | PLUMBING DIAGRAM & DETAILS | 1 |

## VICINITY MAP

DIRECTIONS TO SITE:
HEAD NORTHEAST ON ENTERPRISE DR TOWARD CAPITAL BLVD. 0.3 MILES. TURN LEFT AT CAPITAL BLVD. 0.3 MILES. TURN LEFT AT WEST ST. 0.3 MILES. TURN LEFT TO MERGE ONTO I-91 S TOWARD NEW HAVEN. 9.6 MILES. TAKE EXIT 17 FOR CT-15 S/W CROSS PKWY. 0.4 MILES. MERGE ONTO CT-15 S. 21.6 MILES. TAKE EXIT 57 TO MERGE ONTO CT-34 E/DERBY AVE/DERBY TURNPIKE TOWARD ORANGE. 0.7 MILES. TURN RIGHT AT ORANGE CENTER RD. DESTINATION WILL BE ON THE LEFT. 3.5 MILES.

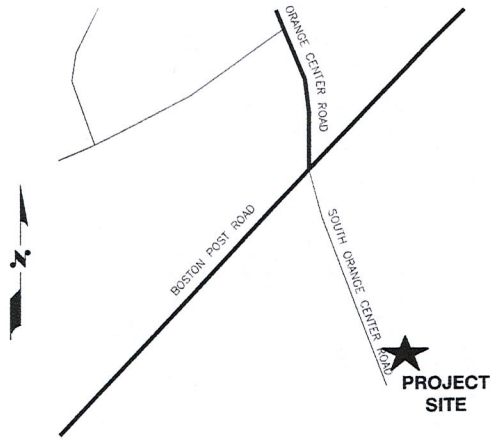


## GENERAL NOTES

1. THIS DOCUMENT IS THE CREATION, DESIGN, PROPERTY AND COPYRIGHTED WORK OF AT&T. ANY DUPLICATION OR USE WITHOUT EXPRESS WRITTEN CONSENT IS STRICTLY PROHIBITED. DUPLICATION AND USE BY GOVERNMENT AGENCIES FOR THE PURPOSES OF CONDUCTING THEIR LAWFULLY AUTHORIZED REGULATORY AND ADMINISTRATIVE FUNCTIONS IS SPECIFICALLY ALLOWED.
2. THE FACILITY IS AN UNMANNED PRIVATE AND SECURED EQUIPMENT INSTALLATION. IT IS ONLY ACCESSED BY TRAINED TECHNICIANS FOR PERIODIC ROUTINE MAINTENANCE AND THEREFORE DOES NOT REQUIRE ANY WATER OR SANITARY SEWER SERVICE. THE FACILITY IS NOT GOVERNED BY REGULATIONS REQUIRING PUBLIC ACCESS PER ADA REQUIREMENTS.
3. CONTRACTOR SHALL VERIFY ALL PLANS AND EXISTING DIMENSIONS AND CONDITIONS ON THE JOB SITE AND SHALL IMMEDIATELY NOTIFY THE AT&T REPRESENTATIVE IN WRITING OF DISCREPANCIES BEFORE PROCEEDING WITH THE WORK OR BE RESPONSIBLE FOR SAME.

72 HOURS
BEFORE YOU DIG
CALL TOLL FREE 800-922-4455

UNDERGROUND SERVICE ALERT


Hudson Design Group LLC
1600 OSGOOD STREET
BUILDING 20 NORTH, SUITE 2-101
N. ANDOVER, MA 01845
TEL: (978) 557-5553
FAX: (978) 336-5536

SAI communications
22 KEEWAYDIN DRIVE
SALEM, NH 03079


SITE NUMBER: CT5101
SITE NAME: ORANGE SOUTH
SOUTH ORANGE CENTER ROAD
ORANGE, CT 06477
NEW HAVEN COUNTY

at&t
500 ENTERPRISE DRIVE, SUITE 3A
ROCKY HILL, CT 06067

| NO. | DATE | REVISIONS | BY | CHK | APP'D |
|---|---|---|---|---|---|
| 1 | 02/03/11 | ISSUED FOR CONSTRUCTION | | | |
| 0 | 01/13/11 | ISSUED FOR REVIEW | JG | DC | DPH |

SCALE: AS SHOWN DESIGNED BY: DC DRAWN BY: JG

STATE OF CONNECTICUT DANIEL P. HAMM No. 24178 LICENSED PROFESSIONAL ENGINEER

AT&T
TITLE SHEET (LTE)

| JOB NUMBER | DRAWING NUMBER | REV |
|---|---|---|
| 5101.01 | T-1 | 1 |

## GROUNDING NOTES

1. THE SUBCONTRACTOR SHALL REVIEW AND INSPECT THE EXISTING FACILITY GROUNDING SYSTEM AND LIGHTNING PROTECTION SYSTEM (AS DESIGNED AND INSTALLED) FOR STRICT COMPLIANCE WITH THE NEC (AS ADOPTED BY THE AHJ), THE SITE-SPECIFIC (UL, LPI, OR NFPA) LIGHTING PROTECTION CODE, AND GENERAL COMPLIANCE WITH TELCORDIA AND TIA GROUNDING STANDARDS. THE SUBCONTRACTOR SHALL REPORT ANY VIOLATIONS OR ADVERSE FINDINGS TO THE CONTRACTOR FOR RESOLUTION.

2. ALL GROUND ELECTRODE SYSTEMS (INCLUDING TELECOMMUNICATION, RADIO, LIGHTNING PROTECTION, AND AC POWER GES'S) SHALL BE BONDED TOGETHER, AT OR BELOW GRADE, BY TWO OR MORE COPPER BONDING CONDUCTORS IN ACCORDANCE WITH THE NEC.

3. THE SUBCONTRACTOR SHALL PERFORM IEEE FALL-OF-POTENTIAL RESISTANCE TO EARTH TESTING (PER IEEE 1100 AND 81) FOR NEW GROUND ELECTRODE SYSTEMS. THE SUBCONTRACTOR SHALL FURNISH AND INSTALL SUPPLEMENTAL GROUND ELECTRODES AS NEEDED TO ACHIEVE A TEST RESULT OF 5 OHMS OR LESS.

4. METAL RACEWAY SHALL NOT BE USED AS THE NEC REQUIRED EQUIPMENT GROUND CONDUCTOR. STRANDED COPPER CONDUCTORS WITH GREEN INSULATION, SIZED IN ACCORDANCE WITH THE NEC, SHALL BE FURNISHED AND INSTALLED WITH THE POWER CIRCUITS TO BTS EQUIPMENT.

5. EACH BTS CABINET FRAME SHALL BE DIRECTLY CONNECTED TO THE MASTER GROUND BAR WITH GREEN INSULATED SUPPLEMENTAL EQUIPMENT GROUND WIRES, 6 AWG STRANDED COPPER OR LARGER FOR INDOOR BTS 2 AWG STRANDED COPPER FOR OUTDOOR BTS.

6. EXOTHERMIC WELDS SHALL BE USED FOR ALL GROUNDING CONNECTIONS BELOW GRADE.

7. APPROVED ANTIOXIDANT COATINGS (I.E., CONDUCTIVE GEL OR PASTE) SHALL BE USED ON ALL COMPRESSION AND BOLTED GROUND CONNECTIONS.

8. ICE BRIDGE BONDING CONDUCTORS SHALL BE EXOTHERMICALLY BONDED OR BOLTED TO THE BRIDGE AND THE TOWER GROUND BAR.

9. ALUMINUM CONDUCTOR OR COPPER CLAD STEEL CONDUCTOR SHALL NOT BE USED FOR GROUNDING CONNECTIONS.

10. MISCELLANEOUS ELECTRICAL AND NON-ELECTRICAL METAL BOXES, FRAMES AND SUPPORTS SHALL BE BONDED TO THE GROUND RING, IN ACCORDANCE WITH THE NEC.

11. METAL CONDUIT SHALL BE MADE ELECTRICALLY CONTINUOUS WITH LISTED BONDING FITTINGS OR BY BONDING ACROSS THE DISCONTINUITY WITH 6 AWS COPPER WIRE UL APPROVED GROUNDING TYPE CONDUIT CLAMPS.

12. ALL NEW STRUCTURES WITH A FOUNDATION AND/OR FOOTING HAVING 20 FT. OR MORE OF 1/2 IN. OR GREATER ELECTRICALLY CONDUCTIVE REINFORCING STEEL MUST HAVE IT BONDED TO THE GROUND RING USING AN EXOTHERMIC WELD CONNECTION USING #2 AWG SOLID BARE TINNED COPPER GROUND WIRE, PER NEC 250.50

## GENERAL NOTES

1. FOR THE PURPOSE OF CONSTRUCTION DRAWING, THE FOLLOWING DEFINITIONS SHALL APPLY:
CONTRACTOR – SAI
SUBCONTRACTOR – GENERAL CONTRACTOR (CONSTRUCTION)
OWNER – AT&T MOBILITY

2. PRIOR TO THE SUBMISSION OF BIDS, THE BIDDING SUBCONTRACTOR SHALL VISIT THE CELL SITE TO FAMILIARIZE WITH THE EXISTING CONDITIONS AND TO CONFIRM THAT THE WORK CAN BE ACCOMPLISHED AS SHOWN ON THE CONSTRUCTION DRAWINGS. ANY DISCREPANCY FOUND SHALL BE BROUGHT TO THE ATTENTION OF CONTRACTOR.

3. ALL MATERIALS FURNISHED AND INSTALLED SHALL BE IN STRICT ACCORDANCE WITH ALL APPLICABLE CODES, REGULATIONS, AND ORDINANCES. SUBCONTRACTOR SHALL ISSUE ALL APPROPRIATE NOTICES AND COMPLY WITH ALL LAWS, ORDINANCES, RULES, REGULATIONS, AND LAWFUL ORDERS OF ANY PUBLIC AUTHORITY REGARDING THE PERFORMANCE OF THE WORK. ALL WORK CARRIED OUT SHALL COMPLY WITH ALL APPLICABLE MUNICIPAL AND UTILITY COMPANY SPECIFICATIONS AND LOCAL JURISDICTIONAL CODES, ORDINANCES AND APPLICABLE REGULATIONS.

4. DRAWINGS PROVIDED HERE ARE NOT TO BE SCALED AND ARE INTENDED TO SHOW OUTLINE ONLY.

5. UNLESS NOTED OTHERWISE, THE WORK SHALL INCLUDE FURNISHING MATERIALS, EQUIPMENT, APPURTENANCES, AND LABOR NECESSARY TO COMPLETE ALL INSTALLATIONS AS INDICATED ON THE DRAWINGS.

6. "KITTING LIST" SUPPLIED WITH THE BID PACKAGE IDENTIFIES ITEMS THAT WILL BE SUPPLIED BY CONTRACTOR. ITEMS NOT INCLUDED IN THE BILL OF MATERIALS AND KITTING LIST SHALL BE SUPPLIED BY THE SUBCONTRACTOR.

7. THE SUBCONTRACTOR SHALL INSTALL ALL EQUIPMENT AND MATERIALS IN ACCORDANCE WITH MANUFACTURER'S RECOMMENDATIONS UNLESS SPECIFICALLY STATED OTHERWISE.

8. IF THE SPECIFIED EQUIPMENT CANNOT BE INSTALLED AS SHOWN ON THESE DRAWINGS, THE SUBCONTRACTOR SHALL PROPOSE AN ALTERNATIVE INSTALLATION SPACE FOR APPROVAL BY THE CONTRACTOR.

9. SUBCONTRACTOR SHALL DETERMINE ACTUAL ROUTING OF CONDUIT, POWER AND T1 CABLES, GROUNDING CABLES AS SHOWN ON THE POWER, GROUNDING AND TELCO PLAN DRAWING. SUBCONTRACTOR SHALL UTILIZE EXISTING TRAYS AND/OR SHALL ADD NEW TRAYS AS NECESSARY. SUBCONTRACTOR SHALL CONFIRM THE ACTUAL ROUTING WITH THE CONTRACTOR.

10. THE SUBCONTRACTOR SHALL PROTECT EXISTING IMPROVEMENTS, PAVEMENTS, CURBS, LANDSCAPING AND STRUCTURES. ANY DAMAGED PART SHALL BE REPAIRED AT SUBCONTRACTOR'S EXPENSE TO THE SATISFACTION OF OWNER.

11. SUBCONTRACTOR SHALL LEGALLY AND PROPERLY DISPOSE OF ALL SCRAP MATERIALS SUCH AS COAXIAL CABLES AND OTHER ITEMS REMOVED FROM THE EXISTING FACILITY. ANTENNAS REMOVED SHALL BE RETURNED TO THE OWNER'S DESIGNATED LOCATION.

12. SUBCONTRACTOR SHALL LEAVE PREMISES IN CLEAN CONDITION.

13. ALL CONCRETE REPAIR WORK SHALL BE DONE IN ACCORDANCE WITH AMERICAN CONCRETE INSTITUTE (ACI) 301.

14. ANY NEW CONCRETE NEEDED FOR THE CONSTRUCTION SHALL BE AIR-ENTRAINED AND SHALL HAVE 4000 PSI STRENGTH AT 28 DAYS. ALL CONCRETE WORK SHALL BE DONE IN ACCORDANCE WITH ACI 318 CODE REQUIREMENTS.

15. ALL STRUCTURAL STEEL WORK SHALL BE DETAILED, FABRICATED AND ERECTED IN ACCORDANCE WITH AISC SPECIFICATIONS. ALL STRUCTURAL STEEL SHALL BE ASTM A36 (Fy = 36 ksi) UNLESS OTHERWISE NOTED. PIPES SHALL BE ASTM A53 TYPE E (Fy = 36 ksi). ALL STEEL EXPOSED TO WEATHER SHALL BE HOT DIPPED GALVANIZED. TOUCHUP ALL SCRATCHES AND OTHER MARKS IN THE FIELD AFTER STEEL IS ERECTED USING A COMPATIBLE ZINC RICH PAINT.

16. CONSTRUCTION SHALL COMPLY WITH UMTS SPECIFICATIONS AND "GENERAL CONSTRUCTION SERVICES FOR CONSTRUCTION OF AT&T MOBILITY SITES."

17. SUBCONTRACTOR SHALL VERIFY ALL EXISTING DIMENSIONS AND CONDITIONS PRIOR TO COMMENCING ANY WORK. ALL DIMENSIONS OF EXISTING CONSTRUCTION SHOWN ON THE DRAWINGS MUST BE VERIFIED. SUBCONTRACTOR SHALL NOTIFY THE CONTRACTOR OF ANY DISCREPANCIES PRIOR TO ORDERING MATERIAL OR PROCEEDING WITH CONSTRUCTION.

18. THE EXISTING CELL SITE IS IN FULL COMMERCIAL OPERATION. ANY CONSTRUCTION WORK BY SUBCONTRACTOR SHALL NOT DISRUPT THE EXISTING NORMAL OPERATION. ANY WORK ON EXISTING EQUIPMENT MUST BE COORDINATED WITH CONTRACTOR. ALSO, WORK SHOULD BE SCHEDULED FOR AN APPROPRIATE MAINTENANCE WINDOW USUALLY IN LOW TRAFFIC PERIODS AFTER MIDNIGHT.

19. SINCE THE CELL SITE IS ACTIVE, ALL SAFETY PRECAUTIONS MUST BE TAKEN WHEN WORKING AROUND HIGH LEVELS OF ELECTROMAGNETIC RADIATION. EQUIPMENT SHOULD BE SHUTDOWN PRIOR TO PERFORMING ANY WORK THAT COULD EXPOSE THE WORKERS TO DANGER. PERSONAL RF EXPOSURE MONITORS ARE ADVISED TO BE WORN TO ALERT OF ANY DANGEROUS EXPOSURE LEVELS.

20. APPLICABLE BUILDING CODES:
SUBCONTRACTOR'S WORK SHALL COMPLY WITH ALL APPLICABLE NATIONAL, STATE, AND LOCAL CODES AS ADOPTED BY THE LOCAL AUTHORITY HAVING JURISDICTION (AHJ) FOR THE LOCATION. THE EDITION OF THE AHJ ADOPTED CODES AND STANDARDS IN EFFECT ON THE DATE OF CONTRACT AWARD SHALL GOVERN THE DESIGN.
BUILDING CODE: 2003 IBC WITH 2005 CT SUPPLEMENT & 2009 CT AMENDMENTS
ELECTRICAL CODE: REFER TO ELECTRICAL DRAWINGS
LIGHTENING CODE: REFER TO ELECTRICAL DRAWINGS

SUBCONTRACTOR'S WORK SHALL COMPLY WITH THE LATEST EDITION OF THE FOLLOWING STANDARDS:

AMERICAN CONCRETE INSTITUTE (ACI) 318; BUILDING CODE REQUIREMENTS FOR STRUCTURAL CONCRETE;

AMERICAN INSTITUTE OF STEEL CONSTRUCTION (AISC)

MANUAL OF STEEL CONSTRUCTION, ASD, NINTH EDITION;

TELECOMMUNICATIONS INDUSTRY ASSOCIATION (TIA) 222-F, STRUCTURAL STANDARDS FOR STEEL

ANTENNA TOWER AND ANTENNA SUPPORTING STRUCTURES; REFER TO ELECTRICAL DRAWINGS FOR SPECIFIC ELECTRICAL STANDARDS.

FOR ANY CONFLICTS BETWEEN SECTIONS OF LISTED CODES AND STANDARDS REGARDING MATERIAL, METHODS OF CONSTRUCTION, OR OTHER REQUIREMENTS, THE MOST RESTRICTIVE REQUIREMENT SHALL GOVERN. WHERE THERE IS CONFLICT BETWEEN A GENERAL REQUIREMENT AND A SPECIFIC REQUIREMENT, THE SPECIFIC REQUIREMENT SHALL GOVERN.

## ABBREVIATIONS

| | | | | | |
|---|---|---|---|---|---|
| AGL | ABOVE GRADE LEVEL | G.C. | GENERAL CONTRACTOR | RF | RADIO FREQUENCY |
| AWG | AMERICAN WIRE GAUGE | MGB | MASTER GROUND BUS | | |
| BCW | BARE COPPER WIRE | MIN | MINIMUM | TBD | TO BE DETERMINED |
| BTS | BASE TRANSCEIVER STATION | PROPOSED | NEW | TBR | TO BE REMOVED |
| EXISTING | EXISTING | N.T.S. | NOT TO SCALE | TBRR | TO BE REMOVED AND REPLACED |
| EG | EQUIPMENT GROUND | REF | REFERENCE | TYP | TYPICAL |
| EGR | EQUIPMENT GROUND RING | REQ | REQUIRED | | |


Hudson Design Group LLC
1600 OSGOOD STREET
BUILDING 20 NORTH SUITE 2-101
N. ANDOVER, MA 01845
TEL: (978) 557-5553
FAX: (978) 336-5586

SAI communications
22 KEEWAYDIN DRIVE
SALEM, NH 03079


**SITE NUMBER: CT5101**
**SITE NAME: ORANGE SOUTH**
SOUTH ORANGE CENTER ROAD
ORANGE, CT 06477
NEW HAVEN COUNTY

at&t
500 ENTERPRISE DRIVE, SUITE 3A
ROCKY HILL, CT 06067

| NO. | DATE | REVISIONS | BY | CHK | APP'D |
|---|---|---|---|---|---|
| 1 | 02/03/11 | ISSUED FOR CONSTRUCTION | JG | DC | DPH |
| 0 | 01/13/11 | ISSUED FOR REVIEW | JG | DC | DPH |

SCALE: AS SHOWN | DESIGNED BY: DC | DRAWN BY: JG

AT&T
GENERAL NOTES (LTE)

| JOB NUMBER | DRAWING NUMBER | REV |
|---|---|---|
| 5101.01 | GN-1 | 1 |

NOTE:

AN ANALYSIS FOR THE CAPACITY OF THE EXISTING STRUCTURES TO SUPPORT THE PROPOSED EQUIPMENT SHALL BE DETERMINED PRIOR TO CONSTRUCTION.

NOTE:

REFER TO THE FINAL RF DATA SHEET FOR FINAL ANTENNA SETTINGS.

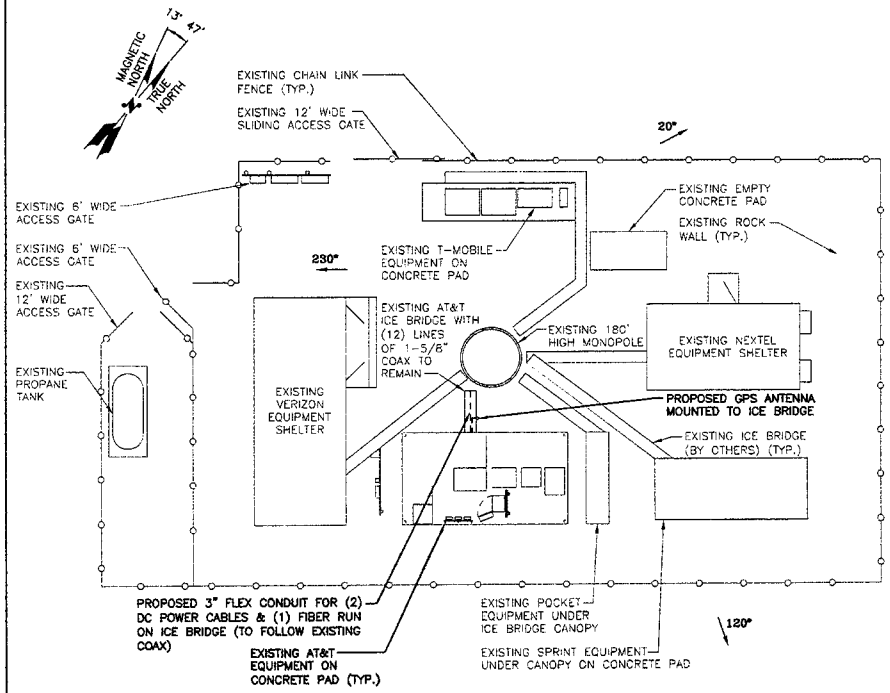


## COMPOUND PLAN

SCALE: 1/8"=1'-0"

0 4'-0" 8'-0" 16'-0" 24'-0"

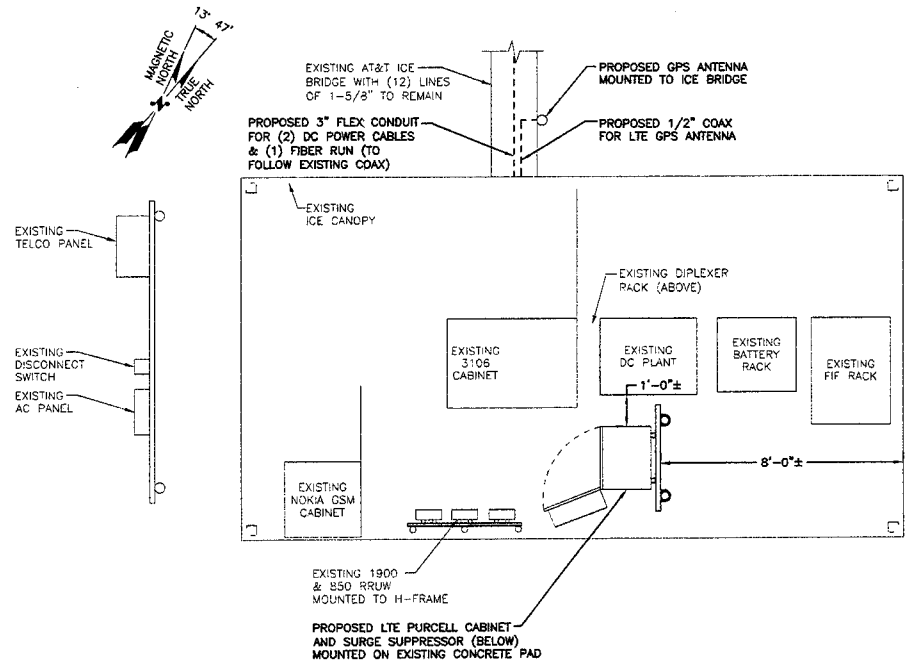


## EQUIPMENT PLAN

SCALE: 1/2"=1'-0"

0 1'-0" 2'-0" 4'-0" 6'-0"


Hudson Design Group LLC
1600 OSGOOD STREET
BUILDING 20 NORTH, SUITE 2-101
N. ANDOVER, MA 01845
TEL: (978) 557-5553
FAX: (978) 336-5586

SAI communications
22 KEEWAYDIN DRIVE
SALEM, NH 03079


**SITE NUMBER: CT5101**
**SITE NAME: ORANGE SOUTH**
SOUTH ORANGE CENTER ROAD
ORANGE, CT 06477
NEW HAVEN COUNTY


at&t
500 ENTERPRISE DRIVE, SUITE 3A
ROCKY HILL, CT 06067


| NO. | DATE | REVISIONS | BY | CHK | APP'D |
|---|---|---|---|---|---|
| 1 | 02/03/11 | ISSUED FOR CONSTRUCTION | | | |
| D | 01/13/11 | ISSUED FOR REVIEW | JG | DC | DPH |

SCALE: AS SHOWN | DESIGNED BY: DC | DRAWN BY: JG

AT&T

COMPOUND & EQUIPMENT PLAN (LTE)

| JOB NUMBER | DRAWING NUMBER | REV |
|---|---|---|
| 5101.01 | A-1 | 1 |

NOTE:

AN ANALYSIS FOR THE CAPACITY OF THE EXISTING STRUCTURES TO SUPPORT THE PROPOSED EQUIPMENT SHALL BE DETERMINED PRIOR TO CONSTRUCTION.

NOTE:

REFER TO THE FINAL RF DATA SHEET FOR FINAL ANTENNA SETTINGS.

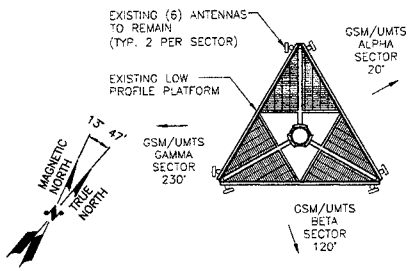


## EXISTING GSM/UMTS ANTENNA PLAN

SCALE: N.T.S.

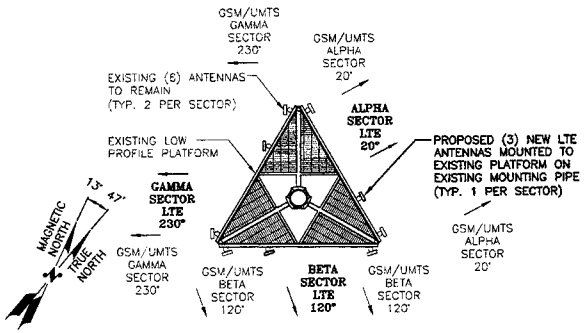


## PROPOSED LTE ANTENNA PLAN

SCALE: N.T.S.

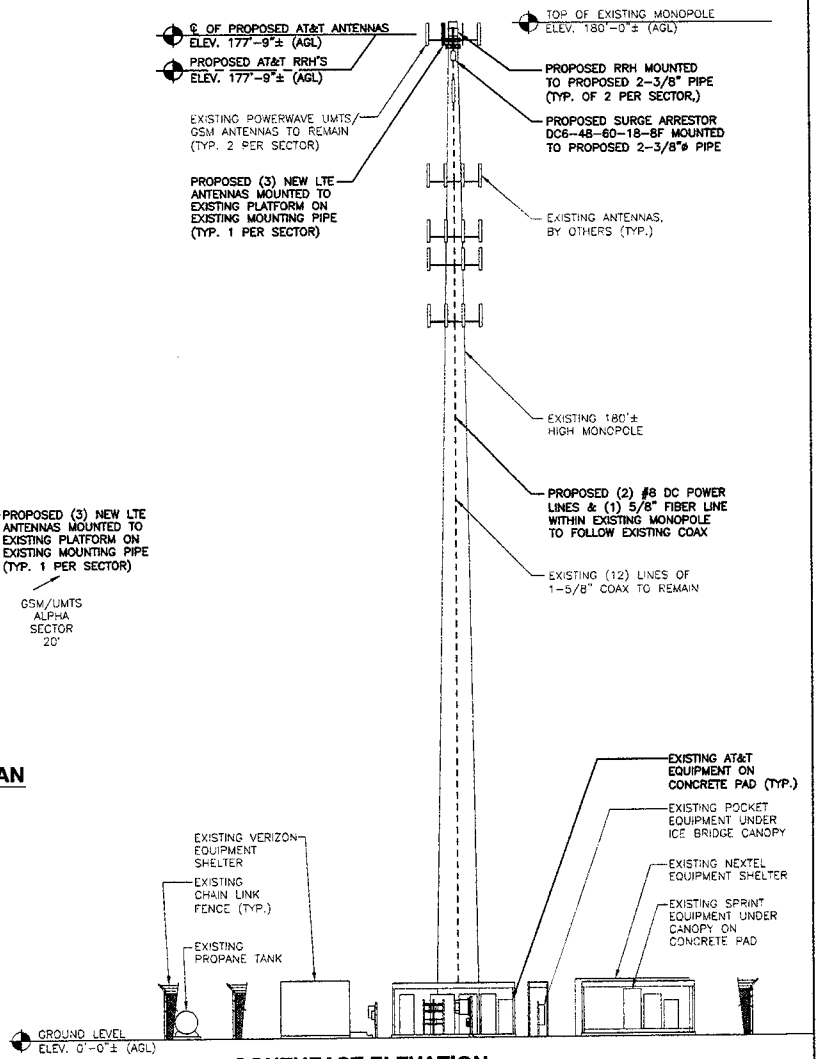


## SOUTHEAST ELEVATION

SCALE: 1/16"=1'-0"

0' 8'-0" 16'-0" 32'-0" 48'-0"


Hudson Design Group LLC
1600 OSGOOD STREET
BUILDING 20 NORTH, SUITE 2-101
N. ANDOVER, MA 01845
TEL: (978) 557-5553
FAX: (978) 336-5586

SAI communications
22 KEEWAYDIN DRIVE
SALEM, NH 03079


**SITE NUMBER: CT5101**
**SITE NAME: ORANGE SOUTH**
SOUTH ORANGE CENTER ROAD
ORANGE, CT 06477
NEW HAVEN COUNTY

at&t
500 ENTERPRISE DRIVE, SUITE 3A
ROCKY HILL, CT 06067

| NO. | DATE | REVISIONS | BY | CHK | APP'D |
|---|---|---|---|---|---|
| 1 | 02/03/11 | ISSUED FOR CONSTRUCTION | JC | DC | DPH |
| 0 | 01/13/11 | ISSUED FOR REVIEW | JC | DC | DPH |

SCALE: AS SHOWN | DESIGNED BY: DC | DRAWN BY: JC

AT&T

ANTENNA LAYOUT AND ELEVATION (LTE)

| JOB NUMBER | DRAWING NUMBER | REV |
|---|---|---|
| 5101.01 | A-2 | 1 |

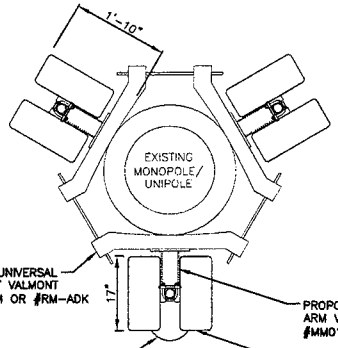


## SECTION A-A

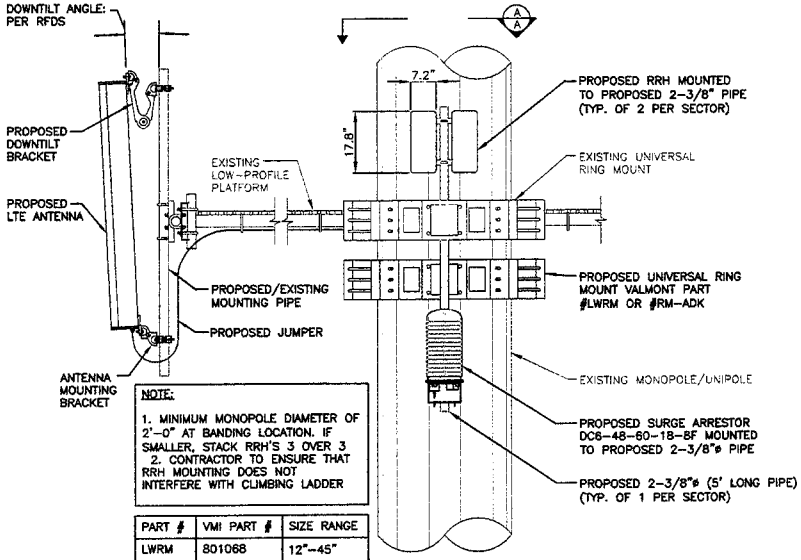


NOTE:

1. MINIMUM MONOPOLE DIAMETER OF 2'-0" AT BANDING LOCATION. IF SMALLER, STACK RRH'S 3 OVER 3
2. CONTRACTOR TO ENSURE THAT RRH MOUNTING DOES NOT INTERFERE WITH CLIMBING LADDER

| PART # | VMI PART # | SIZE RANGE |
|---|---|---|
| LWRM | 801068 | 12"-45" |
| RM-ADK | 157286 | 36"-60" ADAPTER KIT |
| | | |

## PROPOSED RRH & SURGE ARRESTOR MOUNTING DETAIL

SCALE: N.T.S.

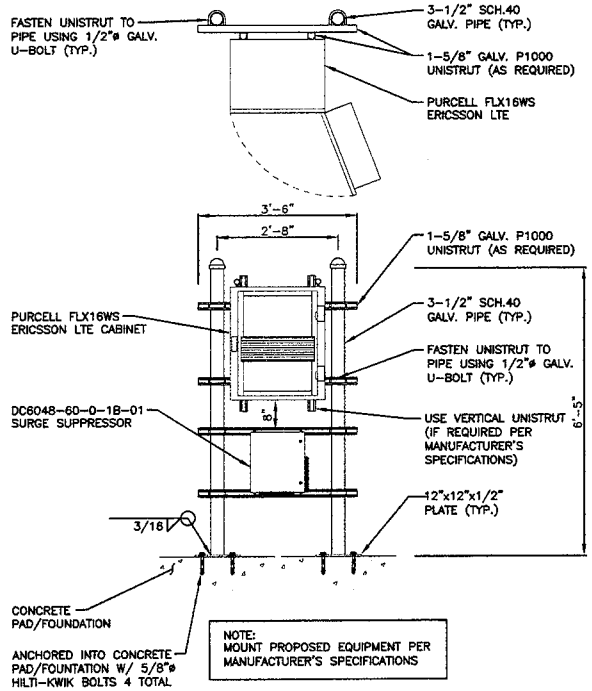


NOTE:
MOUNT PROPOSED EQUIPMENT PER MANUFACTURER'S SPECIFICATIONS

## PROPOSED EQUIPMENT MOUNTING DETAIL

SCALE: N.T.S.

NOTE:

GPS TO BE MOUNTED WITH SOUTHWESTERN EXPOSURE.

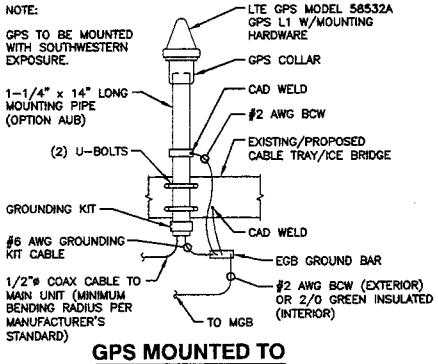


## GPS MOUNTED TO CABLE TRAY/ICE BRIDGE

SCALE: N.T.S.


Hudson Design Groupuc
1600 OSGOOD STREET
BUILDING 20 NORTH, SUITE 2-101
N. ANDOVER, MA 01845
TEL: (978) 557-5553
FAX: (978) 336-5586

SAI communications
22 KEEWAYDIN DRIVE
SALEM, NH 03079


**SITE NUMBER: CT5101**
**SITE NAME: ORANGE SOUTH**
SOUTH ORANGE CENTER ROAD
ORANGE, CT 06477
NEW HAVEN COUNTY


at&t
500 ENTERPRISE DRIVE, SUITE 3A
ROCKY HILL, CT 06067


| NO. | DATE | REVISIONS | BY | CHK | APP'D |
|---|---|---|---|---|---|
| 1 | 02/03/11 | ISSUED FOR CONSTRUCTION | JG | DC | DPH |
| 0 | 01/13/11 | ISSUED FOR REVIEW | JG | DC | DPH |

SCALE: AS SHOWN | DESIGNED BY: DC | DRAWN BY: JG

AT&T

DETAILS (LTE)

| JOB NUMBER | DRAWING NUMBER | REV |
|---|---|---|
| 5101.01 | A-2 | 1 |

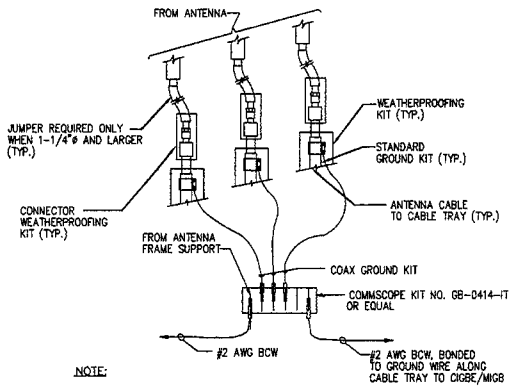


NOTE:

1. DO NOT INSTALL CABLE GROUND KIT AT A BEND AND ALWAYS DIRECT GROUND WIRE DOWN TO CIGBE.

## GROUND WIRE TO GROUND BAR CONNECTION DETAIL

1 — N.T.S.

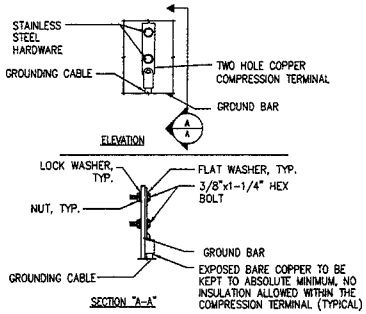


NOTE:

1. "DOUBLING UP" OR "STACKING " OF CONNECTION IS NOT PERMITTED.
2. OXIDE INHIBITING COMPOUND TO BE USED AT ALL LOCATIONS.
3. CADWELD DOWNLEADS FROM UPPER EGB, LOWER EGB, AND MGB.

## TYPICAL GROUND BAR CONNECTION DETAIL

2 — N.T.S.

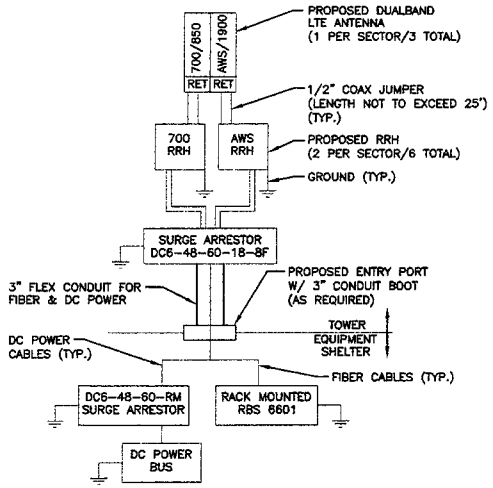


NOTES:

1. CONTRACTOR TO CONFIRM ALL PARTS.
2. INSTALL ALL EQUIPMENT TO MANUFACTURER'S RECOMMENDATIONS.

## PLUMBING DIAGRAM

3 — N.T.S.

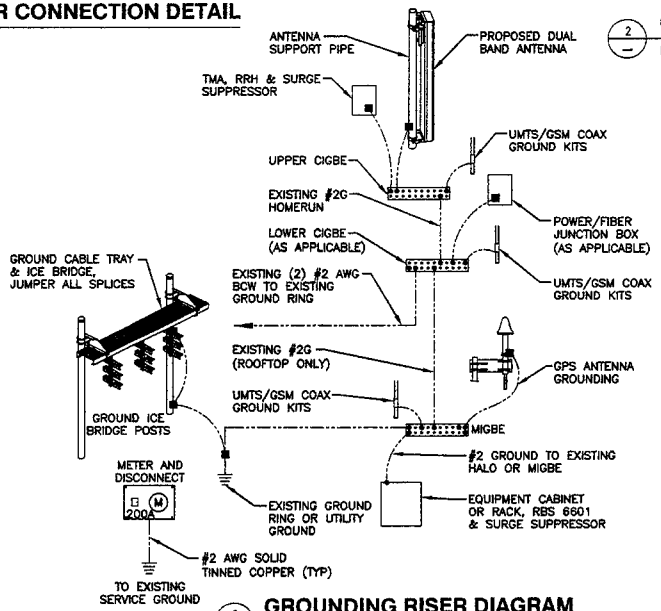


## GROUNDING RISER DIAGRAM

5 — N.T.S.

| WIRELESS SOLUTIONS INC. | | | |
|---|---|---|---|
| NO. | REQ. | PART NO. | DESCRIPTION |
| 1 | 1 | HLGB-0420-IS | SOLID GND. BAR (20"x4"x1/4") |
| 2 | 2 | ——— | WALL MTG. BRKT. |
| 3 | 2 | ——— | INSULATORS |
| 4 | 4 | ——— | 5/8"-11x1" H.H.C.S. |
| 5 | 4 | ——— | 5/8 LOCKWASHER |

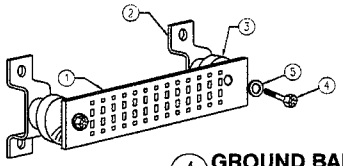


## GROUND BAR - DETAIL

4 — N.T.S.

EACH GROUND CONDUCTOR TERMINATING ON ANY GROUND BAR SHALL HAVE AN IDENTIFICATION TAG ATTACHED AT EACH END THAT WILL IDENTIFY ITS ORIGIN AND DESTINATION.

SECTION "P" – SURGE PRODUCERS

CABLE ENTRY PORTS (HATCH PLATES) (#2)
GENERATOR FRAMEWORK (IF AVAILABLE) (#2)
TELCO GROUND BAR
COMMERCIAL POWER COMMON NEUTRAL/GROUND BOND (#2)
+24V POWER SUPPLY RETURN BAR (#2)
-48V POWER SUPPLY RETURN BAR (#2)
RECTIFIER FRAMES.

SECTION "A" – SURGE ABSORBERS

INTERIOR GROUND RING (#2)
EXTERNAL EARTH GROUND FIELD (BURIED GROUND RING) (#2)
METALLIC COLD WATER PIPE (IF AVAILABLE) (#2)
BUILDING STEEL (IF AVAILABLE) (#2)


Hudson Design Group LLC
1500 OSGOOD STREET
BUILDING 20 NORTH, SUITE 2-101
N. ANDOVER, MA 01845
TEL: (978) 557-5553
FAX: (978) 336-5586

SAI communications
22 KEEWAYDIN DRIVE
SALEM, NH 03079


SITE NUMBER: CT5101
SITE NAME: ORANGE SOUTH
SOUTH ORANGE CENTER ROAD
ORANGE, CT 06477
NEW HAVEN COUNTY


at&t
500 ENTERPRISE DRIVE, SUITE 3A
ROCKY HILL, CT 06067


| NO. | DATE | REVISIONS | BY | CHK | APP'D |
|---|---|---|---|---|---|
| 1 | 02/03/11 | ISSUED FOR CONSTRUCTION | JG | DC | DPH |
| 0 | 01/13/11 | ISSUED FOR REVIEW | JG | DC | DPH |

SCALE: AS SHOWN | DESIGNED BY: DC | DRAWN BY: JG

AT&T

PLUMBING DIAGRAM & DETAILS (LTE)

| JOB NUMBER | DRAWING NUMBER | REV |
|---|---|---|
| 5101.01 | G-1 | 1 |

Hudson Design Group LLC

Andrey Tsikanovsky
Hudson Design Group, LLC
1600 Osgood Street, Building 20 North, Suite 2-101
North Andover, MA 01845
(978) 557-5553 Ext. 225

GPD ASSOCIATES

Jason Cheronis
520 South Main St., Suite 2531
Akron, Ohio 44311
(330) 572-2137
jcheronis@gpdgroup.com

**GPD# 2011147.02**
January 25, 2011

# STRUCTURAL ANALYSIS REPORT

| | | |
|---|---|---|
| **AT&T DESIGNATION:** | **Site USID:** | **16326** |
| | **Site FA:** | **10071197** |
| | **Site Name:** | **ORANGE TRANSFER STATION** |
| **HDG DESIGNATION:** | **Site Number:** | **CT5101** |
| **ANALYSIS CRITERIA:** | **Codes:** | **TIA/EIA-222-F & 2003 IBC**<br>**85-mph with 0" ice**<br>**74-mph with 1/2" ice** |
| **SITE DATA:** | | **617 South Orange Center Rd, Orange, CT 06477, New Haven County**<br>**Latitude 41° 15' 19.979"N, Longitude 73° 0' 39.200"W**<br>**180' Rohn Monopole** |

Mr. Tsikanovsky,

GPD is pleased to submit this Structural Analysis Report to determine the structural integrity of the aforementioned tower. The purpose of the analysis is to determine the suitability of the tower with the addition of the following proposed loading configuration:

| | |
|---|---|
| Elev. 177' | (3) KMW AM-X-CW-14-65-00T-RET Antennas on an existing 13' LP Platform<br>w/ (6) fiber cables inside a 3" conduit |
| Elev. 176' | (6) RRUS 11 - Dual PA RRU RRHs, collar mounted<br>(1) Raycap DC6-48-60-18-8F Fiber/Power Box on same mount |

Based on our analysis we have determined the **tower and its foundation are sufficient** for the proposed, existing, and reserved loadings as referenced in Appendix A.

We at GPD appreciate the opportunity of providing our continuing professional services to you and Hudson Design Group. If you have any questions please do not hesitate to call.

Respectfully submitted,

STATE OF CONNECTICUT
DAVID B. GRANGER, P.E.
NO. 17557
LICENSED
PROFESSIONAL ENGINEER

David B. Granger, P.E.
Connecticut#: 17557

## SUMMARY & RESULTS

The purpose of this analysis was to verify that the existing structure is capable of carrying the proposed loading configuration as specified by AT&T to Hudson Design Group. This report was commissioned by Mr. Andrey Tsikanovsky of Hudson Design Group.

**The proposed (6) fiber lines installed inside the 3" conduit is assumed to be internal to the monopole.**

**TOWER SUMMARY AND RESULTS**

| Member | Capacity | Results |
|---|---|---|
| Monopole | 76.6% | Pass |
| Base Plate | 46.2% | Pass |
| Anchor Bolts | 76.1% | Pass |
| | | |
| Foundation | 25.2% | Pass |

## ANALYSIS METHOD

RISA Tower (Version 5.4.2.0), a commercially available software program, was used to create a three-dimensional model of the tower and calculate primary member stresses for various dead, live, wind, and ice load cases. Selected output from the analysis is included in Appendix B. The following table details the information provided to complete this structural analysis. This analysis is solely based on this information and being provided without the benefit of a site visit.

**DOCUMENTS PROVIDED**

| Document | Remarks | Source |
|---|---|---|
| Construction Drawings | AT&T Site #: CT5101, dated 1/13/11 | HDG |
| Previous Structural Analysis | GPD Associates Job # 2010268.55, dated 5/14/10 | Siterra |
| Foundation Investigation | WEI Project # 2010-1056, dated 3/31/10 | Siterra |
| Geotechnical Report | WEI Project # 2010-1056, dated 3/31/10 | Siterra |

## ASSUMPTIONS

This structural analysis is based on the theoretical capacity of the members and is not a condition assessment of the monopole. This analysis is from information supplied, and therefore, its results are based on and are as accurate as that supplied data. GPD has made no independent determination, nor is it required to, of its accuracy. The following assumptions were made for this structural analysis.

1. The monopole shaft sizes and shape are considered accurate as supplied. The material grade is as per data supplied and/or as assumed and as stated in the materials section.
2. The antenna configuration is as supplied and/or as modeled in the analysis. It is assumed to be complete and accurate. All antennas, mounts, coax and waveguides are assumed to be properly installed and supported as per manufacturer requirements
3. Some assumptions are made regarding antennas and mount sizes and their projected areas based on best interpretation of data supplied and of best knowledge of antenna type and industry practice.
4. All mounts, if applicable, are considered adequate to support the loading. No actual analysis of the mount(s) is performed. This analysis is limited to analyzing the tower only.
5. The soil parameters are as per data supplied or as assumed and stated in the calculations. If no data is available, the foundation system is not verified.
6. The tower and structures have been properly maintained in accordance with TIA Standards and/or with manufacturer's specifications.
7. All welds and connections are assumed to develop at least the member capacity, unless determined otherwise and explicitly stated in this report.
8. All existing loading was obtained from the most recent previous structural analysis by GPD Associates Job # 2010268.55, dated 5/14/10, site photos, and the provided construction drawings, and is assumed to be accurate.
9. All proposed coax is assumed to be internal to the monopole.
10. Foundations are properly designed and constructed to resist the original design loads indicated in the documents provided.
11. No information was available for the structural reinforcement of the foundation. It has been assumed adequate based on the soil interaction of the foundation.
12. Loading interpreted from photos is accurate to ±5' AGL, antenna size accurate to ±3.3 sf, and coax equal to the number of existing antennas without reserve.

If any of these assumptions are not valid or have been made in error, this analysis may be affected, and GPD Associates should be allowed to review any new information to determine its effect on the structural integrity of the tower.

## DISCLAIMER OF WARRANTIES

GPD ASSOCIATES has not performed a site visit to the tower to verify the member sizes or antenna/coax loading. If the existing conditions are not as represented on the tower elevation contained in this report, we should be contacted immediately to evaluate the significance of the discrepancy. This is not a condition assessment of the tower or foundation. This report does not replace a full tower inspection. The tower and foundations are assumed to have been properly fabricated, erected, maintained, in good condition, twist free, and plumb.

The engineering services rendered by GPD ASSOCIATES in connection with this Structural Analysis are limited to a computer analysis of the tower structure and theoretical capacity of its main structural members. All tower components have been assumed to only resist dead loads when no other loads are applied. No allowance was made for any damaged, bent, missing, loose, or rusted members (above and below ground). No allowance was made for loose bolts or cracked welds.

GPD ASSOCIATES does not analyze the fabrication of the structure (including welding). It is not possible to have all the very detailed information needed to perform a thorough analysis of every structural sub-component and connection of an existing tower. GPD ASSOCIATES provides a limited scope of service in that we cannot verify the adequacy of every weld, plate connection detail, etc. The purpose of this report is to assess the feasibility of adding appurtenances usually accompanied by transmission lines to the structure.

It is the owner's responsibility to determine the amount of ice accumulation, if any, that should be considered in the structural analysis.

The attached sketches are a schematic representation of the analyzed tower. If any material is fabricated from these sketches, the contractor shall be responsible for field verifying the existing conditions, proper fit, and clearance in the field. Any mentions of structural modifications are reasonable estimates and should not be used as a precise construction document. Precise modification drawings are obtainable from GPD ASSOCIATES, but are beyond the scope of this report.

Miscellaneous items such as antenna mounts, etc. have not been designed or detailed as a part of our work. We recommend that material of adequate size and strength be purchased from a reputable tower manufacturer.

GPD ASSOCIATES makes no warranties, expressed and/or implied in connection with this report and disclaims any liability arising from material, fabrication, and erection of this tower. GPD ASSOCIATES will not be responsible whatsoever for, or on account of, consequential or incidental damages sustained by any person, firm, or organization as a result of any data or conclusions contained in this report. The maximum liability of GPD ASSOCIATES pursuant to this report will be limited to the total fee received for preparation of this report.

# APPENDIX A

## Tower Analysis Summary Form

# Tower Analysis Summary Form

**General Info**

| | |
|---|---|
| Site Name | ORANGE TRANSFER STATION |
| Site Number | CT5101 (16326) |
| FA Number | 10071197 |
| Date of Analysis | 1/25/2011 |
| Company Performing Analysis | GPD |

**The information contained in this summary report is not to be used independently from the PE stamped tower analysis.**

| Tower Info | Description | Date |
|---|---|---|
| Tower Type (G, SST, MP) | MP | |
| Tower Height (top of steel AGL) | 180' | |
| Tower Manufacturer | Rohn | |
| Tower Model | n/a | |
| Tower Design | n/a | |
| Foundation Design | n/a | |
| Geotech Report | WEI Project # 2010-1056 | 3/31/2010 |
| Tower Mapping | n/a | |
| Previous Structural Analysis | GPD Associates Job # 2010268.55 | 5/14/2010 |
| Foundation Mapping | WEI Project # 2010-1056 | 3/31/2010 |

**Design Parameters**

| | |
|---|---|
| Design Code Used | TIA/EIA-222-F |
| Location of Tower (County, State) | New Haven, CT |
| Basic Wind Speed (mph) | 85-fastest |
| Ice Thickness (in) | 0.5 |
| Structure Classification (I, II, III) | |
| Exposure Category (B, C, D) | |
| Topographic Category (1 to 5) | |

**Analysis Results (% Maximum Usage)**

| *Existing/Reserved + Future + Proposed Condition* | |
|---|---|
| Tower | 76.6% |
| Tower Base | 76.1% |
| Foundation | 25.2% |

**Steel Yield Strength (ksi)**

| | |
|---|---|
| Pole | 65 |
| Base Plate | 60 |
| Anchor Rods | 75 |

**Existing / Reserved Loading**

| Antenna | | | | | | | | Mount | | | Transmission Line | | | |
|---|---|---|---|---|---|---|---|---|---|---|---|---|---|---|
| Antenna Owner | Mount Height (ft) | Antenna CL (ft) | Quantity | Type | Manufacturer | Model | Azimuth | Quantity | Manufacturer | Type | Quantity | Model | Size | Attachment Internal/External |
| AT&T Mobility | 177 | 177 | 6 | Panel | Powerwave | 7770.00 | | 1 | Unknown | 13' LP Platform | 9 | Unknown | 1-5/8" | Internal |
| AT&T Mobility | 177 | 177 | 3 | Panel | Unknown | 4' x 1.5' Panel | | | | on same mount | | | | |
| AT&T Mobility | 177 | 177 | 6 | TMA | Powerwave | TMA | | | | behind the antennas | | | | |
| Unknown | 165 | 165 | 3 | Panel | Unknown | 5' Panel | | | | Pipe mounted | 6 | Unknown | 1-5/8" | External |
| T-Mobile | 148 | 148 | 6 | Panel | RFS | APX16PV-16PVL | | 1 | Unknown | 13' LP Platform | 12 | Unknown | 1-5/8" | Internal |
| T-Mobile | 148 | 148 | 6 | TMA | Powerwave | LGP 21401 | | | | behind the antennas | | | | |
| Nextel | 137 | 137 | 12 | Panel | Decibel | 844G45VTZASX | | 1 | Unknown | 13' LP Platform | 12 | Unknown | 1-5/8" | Internal |
| Sprint | 125 | 127 | 6 | Panel | Decibel | DB980H65T2E-M | | 1 | Unknown | 13' Platform | 6 | Unknown | 1-5/8" | Internal |
| Clearwire | 125 | 127 | 3 | Panel | Argus | LLPX310R | 50/150/260 | | | on the existing mount | 6 | 9207 | 5/16" | Internal |
| Clearwire | 125 | 127 | 3 | RRH | Samsung | FDD R6 RRH | | | | on the existing mount | 1 | RET Cable | 1/4" | Internal |
| Clearwire | 125 | 127 | 2 | Dish | Dragonwave | A-ANT-23G-2-C | 50/150 | | | on the existing mount | 2 | LDF4-50A | 1/2" | Internal |
| Clearwire | 125 | 127 | 2 | DUO | Dragonwave | Horizon DUO | | | | on the existing mount | | | | |
| Verizon | 117 | 117 | 4 | Panel | Decibel | DB844G45ZAXY | | 1 | Unknown | 13' Platform | 6 | Unknown | 1-5/8" | Internal |
| Verizon | 117 | 117 | 6 | Panel | Decibel | 950F40T2E-M_2 | | | | on the same mount | 6 | Unknown | 1-5/8" | Internal |
| Verizon | 117 | 117 | 3 | Panel | Antel | BXA-70063/4CF | | | | on the same mount | 3 | LDF7-50A | 1-5/8" | Internal |
| Verizon | 117 | 117 | 2 | Panel | Antel | LPA-80063/4CF | | | | on the same mount | 3 | LDF7-50A | 1-5/8" | Internal |
| Sprint | 50 | 50 | 1 | GPS | Unknown | GPS Unit | | 1 | Unknown | 2' Standoff | 1 | Unknown | 1/2" | Internal |

Note: The existing 4'x1.5' Panel antennas to be replaced by the proposed loading and was not considering in this analysis.

**Proposed Loading**

| Antenna | | | | | | | | Mount | | | Transmission Line | | | |
|---|---|---|---|---|---|---|---|---|---|---|---|---|---|---|
| Antenna Owner | Mount Height (ft) | Antenna CL (ft) | Quantity | Type | Manufacturer | Model | Azimuth | Quantity | Manufacturer | Type | Quantity | Model | Size | Attachment Internal/External |
| AT&T Mobility | 177 | 177 | 3 | Panel | KMW | AM-X-CW-14-65-00T-RET | | | | on the existing mount | 1 | Unknown | 3" Conduit | Internal |
| | | | | | | | | | | | 6 | Unknown | Fiber Lines | Inside Conduit |
| AT&T Mobility | 176 | 178 | 6 | RRH | Ericsson | RRUS 11 - Dual PA RRU RRHs | | | | collar mount | | | | |
| AT&T Mobility | 176 | 174 | 1 | Fiber/Power | Raycap | DC6-48-60-18-8F | | | | on same mount | | | | |

Note: The existing 4'x1.5' Panel antennas to be replaced by the proposed loading and was not considering in this analysis.

**Future Loading**

| Antenna | | | | | | | | Mount | | | Transmission Line | | | |
|---|---|---|---|---|---|---|---|---|---|---|---|---|---|---|
| Antenna Owner | Mount Height (ft) | Antenna CL (ft) | Quantity | Type | Manufacturer | Model | Azimuth | Quantity | Manufacturer | Type | Quantity | Model | Size | Attachment Internal/External |
| | | | | | | | | | | | | | | |
| | | | | | | | | | | | | | | |

Revision:3
Date: 2/18/09

# APPENDIX B

## RISA Tower Output File

# Tower Input Data

There is a pole section.
This tower is designed using the TIA/EIA-222-F standard.
The following design criteria apply:

Tower is located in New Haven County, Connecticut.
Basic wind speed of 85 mph.
Nominal ice thickness of 0.5000 in.
Ice density of 56 pcf.
A wind speed of 74 mph is used in combination with ice.
Temperature drop of 50 °F.
Deflections calculated using a wind speed of 50 mph.
A non-linear (P-delta) analysis was used.
Pressures are calculated at each section.
Stress ratio used in pole design is 1.333.
Local bending stresses due to climbing loads, feedline supports, and appurtenance mounts are not considered.

# Feed Line/Linear Appurtenances - Entered As Area

| *Description* | *Face or Leg* | *Allow Shield* | *Component Type* | *Placement* *ft* | *Total Number* | | $C_AA_A$ $ft^2/ft$ | *Weight* *plf* |
|---|---|---|---|---|---|---|---|---|
| LDF7-50A (1-5/8 FOAM) | A | No | Inside Pole | 177.00 - 8.00 | 9 | No Ice | 0.00 | 0.82 |
| | | | | | | 1/2" Ice | 0.00 | 0.82 |
| LDF7-50A (1-5/8 FOAM) | A | No | CaAa (Out Of Face) | 165.00 - 8.00 | 5 | No Ice | 0.00 | 0.82 |
| | | | | | | 1/2" Ice | 0.00 | 2.33 |
| LDF7-50A (1-5/8 FOAM) | A | No | CaAa (Out Of Face) | 165.00 - 8.00 | 1 | No Ice | 0.20 | 0.82 |
| | | | | | | 1/2" Ice | 0.30 | 2.33 |
| LDF7-50A (1-5/8 FOAM) | B | No | Inside Pole | 148.00 - 8.00 | 12 | No Ice | 0.00 | 0.82 |
| | | | | | | 1/2" Ice | 0.00 | 0.82 |
| LDF7-50A (1-5/8 FOAM) | C | No | Inside Pole | 137.00 - 8.00 | 12 | No Ice | 0.00 | 0.82 |
| | | | | | | 1/2" Ice | 0.00 | 0.82 |
| LDF7-50A (1-5/8 FOAM) | C | No | Inside Pole | 125.00 - 8.00 | 6 | No Ice | 0.00 | 0.82 |
| | | | | | | 1/2" Ice | 0.00 | 0.82 |
| 9207 (5/16 FOEM) | C | No | Inside Pole | 125.00 - 8.00 | 6 | No Ice | 0.00 | 1.00 |
| | | | | | | 1/2" Ice | 0.00 | 1.00 |
| RET Cable | C | No | Inside Pole | 125.00 - 8.00 | 1 | No Ice | 0.00 | 0.08 |
| | | | | | | 1/2" Ice | 0.00 | 0.08 |
| LDF4-50A (1/2 FOAM) | C | No | Inside Pole | 125.00 - 8.00 | 2 | No Ice | 0.00 | 0.15 |
| | | | | | | 1/2" Ice | 0.00 | 0.15 |
| LDF7-50A (1-5/8 FOAM) | B | No | Inside Pole | 117.00 - 8.00 | 18 | No Ice | 0.00 | 0.82 |
| | | | | | | 1/2" Ice | 0.00 | 0.82 |
| LDF4-50A (1/2 FOAM) | C | No | Inside Pole | 50.00 - 8.00 | 1 | No Ice | 0.00 | 0.15 |
| | | | | | | 1/2" Ice | 0.00 | 0.15 |
| 3" Flex Conduit | A | No | Inside Pole | 177.00 - 8.00 | 1 | No Ice | 0.00 | 0.48 |
| | | | | | | 1/2" Ice | 0.00 | 0.48 |
| FIBER LINES | A | No | Inside Pole | 177.00 - 8.00 | 6 | No Ice | 0.00 | 0.04 |
| | | | | | | 1/2" Ice | 0.00 | 0.04 |
| Safety Line 3/8 | C | No | CaAa (Out Of Face) | 180.00 - 8.00 | 1 | No Ice | 0.04 | 0.22 |
| | | | | | | 1/2" Ice | 0.14 | 0.75 |

# Discrete Tower Loads

| Description | Face or Leg | Offset Type | Offsets: Horz Lateral Vert ft ft ft | Azimuth Adjustment ° | Placement ft | | $C_AA_A$ Front $ft^2$ | $C_AA_A$ Side $ft^2$ | Weight K |
|---|---|---|---|---|---|---|---|---|---|
| (2) 7770.00 w/Mount Pipe | A | From Centroid-Leg | 4.00<br>0.00<br>0.00 | 0.0000 | 177.00 | No Ice<br>1/2" Ice | 6.58<br>7.21 | 4.94<br>5.86 | 0.08<br>0.13 |
| (2) 7770.00 w/Mount Pipe | B | From Centroid-Leg | 4.00<br>0.00<br>0.00 | 0.0000 | 177.00 | No Ice<br>1/2" Ice | 6.58<br>7.21 | 4.94<br>5.86 | 0.08<br>0.13 |
| (2) 7770.00 w/Mount Pipe | C | From Centroid-Leg | 4.00<br>0.00<br>0.00 | 0.0000 | 177.00 | No Ice<br>1/2" Ice | 6.58<br>7.21 | 4.94<br>5.86 | 0.08<br>0.13 |
| AM-X-CW-14-65-00T-RET w/ Mount Pipe | A | From Centroid-Leg | 4.00<br>0.00<br>0.00 | 0.0000 | 177.00 | No Ice<br>1/2" Ice | 5.77<br>6.22 | 4.16<br>4.77 | 0.06<br>0.11 |
| AM-X-CW-14-65-00T-RET w/ Mount Pipe | B | From Centroid-Leg | 4.00<br>0.00<br>0.00 | 0.0000 | 177.00 | No Ice<br>1/2" Ice | 5.77<br>6.22 | 4.16<br>4.77 | 0.06<br>0.11 |
| AM-X-CW-14-65-00T-RET w/ Mount Pipe | C | From Centroid-Leg | 4.00<br>0.00<br>0.00 | 0.0000 | 177.00 | No Ice<br>1/2" Ice | 5.77<br>6.22 | 4.16<br>4.77 | 0.06<br>0.11 |
| (2) RRUS 11 - Dual PA RRU | A | From Leg | 0.50<br>0.00<br>2.00 | 0.0000 | 176.00 | No Ice<br>1/2" Ice | 2.94<br>3.17 | 1.25<br>1.41 | 0.06<br>0.07 |
| (2) RRUS 11 - Dual PA RRU | B | From Leg | 0.50<br>0.00<br>2.00 | 0.0000 | 176.00 | No Ice<br>1/2" Ice | 2.94<br>3.17 | 1.25<br>1.41 | 0.06<br>0.07 |
| (2) RRUS 11 - Dual PA RRU | C | From Leg | 0.50<br>0.00<br>2.00 | 0.0000 | 176.00 | No Ice<br>1/2" Ice | 2.94<br>3.17 | 1.25<br>1.41 | 0.06<br>0.07 |
| 6' x 2" Mount Pipe | A | From Leg | 0.25<br>0.00<br>0.00 | 0.0000 | 176.00 | No Ice<br>1/2" Ice | 1.43<br>1.92 | 1.43<br>1.92 | 0.02<br>0.03 |
| 6' x 2" Mount Pipe | B | From Leg | 0.25<br>0.00<br>0.00 | 0.0000 | 176.00 | No Ice<br>1/2" Ice | 1.43<br>1.92 | 1.43<br>1.92 | 0.02<br>0.03 |
| 6' x 2" Mount Pipe | C | From Leg | 0.25<br>0.00<br>0.00 | 0.0000 | 176.00 | No Ice<br>1/2" Ice | 1.43<br>1.92 | 1.43<br>1.92 | 0.02<br>0.03 |
| 6' x 2" Mount Pipe | A | From Centroid-Leg | 4.00<br>0.00<br>0.00 | 0.0000 | 177.00 | No Ice<br>1/2" Ice | 1.43<br>1.92 | 1.43<br>1.92 | 0.02<br>0.03 |
| 6' x 2" Mount Pipe | B | From Centroid-Leg | 4.00<br>0.00<br>0.00 | 0.0000 | 177.00 | No Ice<br>1/2" Ice | 1.43<br>1.92 | 1.43<br>1.92 | 0.02<br>0.03 |
| 6' x 2" Mount Pipe | C | From Centroid-Leg | 4.00<br>0.00<br>0.00 | 0.0000 | 177.00 | No Ice<br>1/2" Ice | 1.43<br>1.92 | 1.43<br>1.92 | 0.02<br>0.03 |
| DC6-48-60-18-8F | C | From Leg | 0.50<br>0.00<br>-2.00 | 0.0000 | 176.00 | No Ice<br>1/2" Ice | 1.27<br>1.46 | 1.27<br>1.46 | 0.02<br>0.04 |
| (2) 21401 TMA | A | From Centroid-Leg | 4.00<br>0.00<br>0.00 | 0.0000 | 177.00 | No Ice<br>1/2" Ice | 1.29<br>1.45 | 0.36<br>0.48 | 0.01<br>0.02 |
| (2) 21401 TMA | B | From | 4.00 | 0.0000 | 177.00 | No Ice | 1.29 | 0.36 | 0.01 |

| Description | Face or Leg | Offset Type | Offsets: Horz Lateral Vert<br>ft ft ft | Azimuth Adjustment<br>° | Placement<br>ft | | $C_AA_A$ Front<br>$ft^2$ | $C_AA_A$ Side<br>$ft^2$ | Weight<br>K |
|---|---|---|---|---|---|---|---|---|---|
| | | Centroid-Le | 0.00 | | | 1/2" Ice | 1.45 | 0.48 | 0.02 |
| | | g | 0.00 | | | | | | |
| (2) 21401 TMA | C | From | 4.00 | 0.0000 | 177.00 | No Ice | 1.29 | 0.36 | 0.01 |
| | | Centroid-Le | 0.00 | | | 1/2" Ice | 1.45 | 0.48 | 0.02 |
| | | g | 0.00 | | | | | | |
| 5 s.f. Panel Antenna w/Mount | A | From Leg | 1.00 | 0.0000 | 165.00 | No Ice | 5.24 | 4.20 | 0.06 |
| Pipe | | | 0.00 | | | 1/2" Ice | 5.77 | 5.07 | 0.10 |
| | | | 0.00 | | | | | | |
| 5 s.f. Panel Antenna w/Mount | B | From Leg | 1.00 | 0.0000 | 165.00 | No Ice | 5.24 | 4.20 | 0.06 |
| Pipe | | | 0.00 | | | 1/2" Ice | 5.77 | 5.07 | 0.10 |
| | | | 0.00 | | | | | | |
| 5 s.f. Panel Antenna w/Mount | C | From Leg | 1.00 | 0.0000 | 165.00 | No Ice | 5.24 | 4.20 | 0.06 |
| Pipe | | | 0.00 | | | 1/2" Ice | 5.77 | 5.07 | 0.10 |
| | | | 0.00 | | | | | | |
| (2) APX16PV-16PVL | A | From | 4.00 | 0.0000 | 148.00 | No Ice | 6.79 | 3.17 | 0.06 |
| w/mount pipe | | Centroid-Le | 0.00 | | | 1/2" Ice | 7.25 | 3.80 | 0.10 |
| | | g | 0.00 | | | | | | |
| (2) APX16PV-16PVL | B | From | 4.00 | 0.0000 | 148.00 | No Ice | 6.79 | 3.17 | 0.06 |
| w/mount pipe | | Centroid-Le | 0.00 | | | 1/2" Ice | 7.25 | 3.80 | 0.10 |
| | | g | 0.00 | | | | | | |
| (2) APX16PV-16PVL | C | From | 4.00 | 0.0000 | 148.00 | No Ice | 6.79 | 3.17 | 0.06 |
| w/mount pipe | | Centroid-Le | 0.00 | | | 1/2" Ice | 7.25 | 3.80 | 0.10 |
| | | g | 0.00 | | | | | | |
| (2) LGP21401 | A | From | 4.00 | 0.0000 | 148.00 | No Ice | 0.00 | 0.23 | 0.01 |
| | | Centroid-Le | 0.00 | | | 1/2" Ice | 0.00 | 0.31 | 0.02 |
| | | g | 0.00 | | | | | | |
| (2) LGP21401 | B | From | 4.00 | 0.0000 | 148.00 | No Ice | 0.00 | 0.23 | 0.01 |
| | | Centroid-Le | 0.00 | | | 1/2" Ice | 0.00 | 0.31 | 0.02 |
| | | g | 0.00 | | | | | | |
| (2) LGP21401 | C | From | 4.00 | 0.0000 | 148.00 | No Ice | 0.00 | 0.23 | 0.01 |
| | | Centroid-Le | 0.00 | | | 1/2" Ice | 0.00 | 0.31 | 0.02 |
| | | g | 0.00 | | | | | | |
| 6' x 2" Mount Pipe | A | From | 4.00 | 0.0000 | 148.00 | No Ice | 1.43 | 1.43 | 0.02 |
| | | Centroid-Le | 0.00 | | | 1/2" Ice | 1.92 | 1.92 | 0.03 |
| | | g | 0.00 | | | | | | |
| 6' x 2" Mount Pipe | B | From | 4.00 | 0.0000 | 148.00 | No Ice | 1.43 | 1.43 | 0.02 |
| | | Centroid-Le | 0.00 | | | 1/2" Ice | 1.92 | 1.92 | 0.03 |
| | | g | 0.00 | | | | | | |
| 6' x 2" Mount Pipe | C | From | 4.00 | 0.0000 | 148.00 | No Ice | 1.43 | 1.43 | 0.02 |
| | | Centroid-Le | 0.00 | | | 1/2" Ice | 1.92 | 1.92 | 0.03 |
| | | g | 0.00 | | | | | | |
| PiROD 13' Low Profile | C | None | | 0.0000 | 148.00 | No Ice | 15.70 | 15.70 | 1.30 |
| Platform | | | | | | 1/2" Ice | 20.10 | 20.10 | 1.76 |
| (4) 844G45VTZASX | A | From | 4.00 | 0.0000 | 137.00 | No Ice | 7.71 | 5.63 | 0.04 |
| w/Mount Pipe | | Centroid-Le | 0.00 | | | 1/2" Ice | 8.44 | 6.73 | 0.10 |
| | | g | 0.00 | | | | | | |
| (4) 844G45VTZASX | B | From | 4.00 | 0.0000 | 137.00 | No Ice | 7.71 | 5.63 | 0.04 |
| w/Mount Pipe | | Centroid-Le | 0.00 | | | 1/2" Ice | 8.44 | 6.73 | 0.10 |
| | | g | 0.00 | | | | | | |
| (4) 844G45VTZASX | C | From | 4.00 | 0.0000 | 137.00 | No Ice | 7.71 | 5.63 | 0.04 |
| w/Mount Pipe | | Centroid-Le | 0.00 | | | 1/2" Ice | 8.44 | 6.73 | 0.10 |
| | | g | 0.00 | | | | | | |
| PiROD 13' Low Profile | C | None | | 0.0000 | 137.00 | No Ice | 15.70 | 15.70 | 1.30 |
| Platform | | | | | | 1/2" Ice | 20.10 | 20.10 | 1.76 |
| (2) DB980H65T2E-M | A | From | 4.00 | 30.0000 | 125.00 | No Ice | 4.27 | 3.86 | 0.03 |
| w/Mount Pipe | | Centroid-Le | 0.00 | | | 1/2" Ice | 4.86 | 4.95 | 0.07 |
| | | g | 2.00 | | | | | | |

| Description | Face or Leg | Offset Type | Offsets: Horz Lateral Vert<br>ft ft ft | Azimuth Adjustment<br>° | Placement<br>ft | | $C_AA_A$ Front<br>$ft^2$ | $C_AA_A$ Side<br>$ft^2$ | Weight<br>K |
|---|---|---|---|---|---|---|---|---|---|
| (2) DB980H65T2E-M w/Mount Pipe | B | From Centroid-Leg | 4.00<br>0.00<br>2.00 | 0.0000 | 125.00 | No Ice<br>1/2" Ice | 4.27<br>4.86 | 3.86<br>4.95 | 0.03<br>0.07 |
| (2) DB980H65T2E-M w/Mount Pipe | C | From Centroid-Leg | 4.00<br>0.00<br>2.00 | -15.0000 | 125.00 | No Ice<br>1/2" Ice | 4.27<br>4.86 | 3.86<br>4.95 | 0.03<br>0.07 |
| LLPX310R w/ Mount Pipe | A | From Centroid-Leg | 4.00<br>0.00<br>2.00 | 50.0000 | 125.00 | No Ice<br>1/2" Ice | 5.40<br>5.86 | 3.59<br>4.19 | 0.07<br>0.12 |
| LLPX310R w/ Mount Pipe | B | From Centroid-Leg | 4.00<br>0.00<br>2.00 | 30.0000 | 125.00 | No Ice<br>1/2" Ice | 5.40<br>5.86 | 3.59<br>4.19 | 0.07<br>0.12 |
| LLPX310R w/ Mount Pipe | C | From Centroid-Leg | 4.00<br>0.00<br>2.00 | 20.0000 | 125.00 | No Ice<br>1/2" Ice | 5.40<br>5.86 | 3.59<br>4.19 | 0.07<br>0.12 |
| FDD R6 RRH | A | From Centroid-Leg | 4.00<br>0.00<br>2.00 | 50.0000 | 125.00 | No Ice<br>1/2" Ice | 1.80<br>1.99 | 0.78<br>0.92 | 0.03<br>0.04 |
| FDD R6 RRH | B | From Centroid-Leg | 4.00<br>0.00<br>2.00 | 30.0000 | 125.00 | No Ice<br>1/2" Ice | 1.80<br>1.99 | 0.78<br>0.92 | 0.03<br>0.04 |
| FDD R6 RRH | C | From Centroid-Leg | 4.00<br>0.00<br>2.00 | 20.0000 | 125.00 | No Ice<br>1/2" Ice | 1.80<br>1.99 | 0.78<br>0.92 | 0.03<br>0.04 |
| Horizon DUO | A | From Centroid-Leg | 4.00<br>0.00<br>2.00 | 50.0000 | 125.00 | No Ice<br>1/2" Ice | 0.55<br>0.65 | 0.34<br>0.43 | 0.01<br>0.01 |
| Horizon DUO | B | From Centroid-Leg | 4.00<br>0.00<br>2.00 | 30.0000 | 125.00 | No Ice<br>1/2" Ice | 0.55<br>0.65 | 0.34<br>0.43 | 0.01<br>0.01 |
| Valmont 13' Platform w/o rails (GPD) | C | None | | 0.0000 | 125.00 | No Ice<br>1/2" Ice | 24.80<br>26.20 | 24.80<br>26.20 | 1.50<br>2.50 |
| (2) DB844G45ZAXY w/Mount Pipe | A | From Centroid-Leg | 4.00<br>0.00<br>0.00 | 0.0000 | 117.00 | No Ice<br>1/2" Ice | 7.71<br>8.44 | 5.63<br>6.73 | 0.05<br>0.11 |
| BXA-70063/4CF w/ mount pipe | A | From Centroid-Leg | 4.00<br>0.00<br>0.00 | 0.0000 | 117.00 | No Ice<br>1/2" Ice | 5.17<br>5.56 | 3.31<br>3.85 | 0.02<br>0.06 |
| (2) DB950F40T2E-M w/Mount Pipe | A | From Centroid-Leg | 4.00<br>0.00<br>0.00 | 0.0000 | 117.00 | No Ice<br>1/2" Ice | 6.89<br>7.56 | 6.29<br>7.40 | 0.05<br>0.10 |
| (2) LPA-80063/4CF w/ mount pipe | B | From Centroid-Leg | 4.00<br>0.00<br>0.00 | -20.0000 | 117.00 | No Ice<br>1/2" Ice | 7.26<br>7.73 | 7.27<br>7.98 | 0.04<br>0.10 |
| BXA-70063/4CF w/ mount pipe | B | From Centroid-Leg | 4.00<br>0.00<br>0.00 | -20.0000 | 117.00 | No Ice<br>1/2" Ice | 5.17<br>5.56 | 3.31<br>3.85 | 0.02<br>0.06 |
| (2) DB950F40T2E-M w/Mount Pipe | B | From Centroid-Leg | 4.00<br>0.00<br>0.00 | -20.0000 | 117.00 | No Ice<br>1/2" Ice | 6.89<br>7.56 | 6.29<br>7.40 | 0.05<br>0.10 |
| (2) DB844G45ZAXY w/Mount Pipe | C | From Centroid-Leg | 4.00<br>0.00<br>0.00 | 0.0000 | 117.00 | No Ice<br>1/2" Ice | 7.71<br>8.44 | 5.63<br>6.73 | 0.05<br>0.11 |
| BXA-70063/4CF w/ mount pipe | C | From Centroid-Leg | 4.00<br>0.00<br>0.00 | 0.0000 | 117.00 | No Ice<br>1/2" Ice | 5.17<br>5.56 | 3.31<br>3.85 | 0.02<br>0.06 |
| (2) DB950F40T2E-M | C | From | 4.00 | 0.0000 | 117.00 | No Ice | 6.89 | 6.29 | 0.05 |

| Description | Face or Leg | Offset Type | Offsets: Horz Lateral Vert ft ft ft | Azimuth Adjustment ° | Placement ft | | $C_AA_A$ Front $ft^2$ | $C_AA_A$ Side $ft^2$ | Weight K |
|---|---|---|---|---|---|---|---|---|---|
| w/Mount Pipe | | Centroid-Leg | 0.00 0.00 | | | 1/2" Ice | 7.56 | 7.40 | 0.10 |
| Valmont 13' Platform w/o rails (GPD) | C | None | | 0.0000 | 117.00 | No Ice | 24.80 | 24.80 | 1.50 |
| | | | | | | 1/2" Ice | 26.20 | 26.20 | 2.50 |
| GPS | C | From Face | 2.00 0.00 0.00 | 0.0000 | 50.00 | No Ice | 0.17 | 0.17 | 0.00 |
| | | | | | | 1/2" Ice | 0.24 | 0.24 | 0.00 |
| 2'-0" - STANDOFF | C | From Face | 1.00 0.00 0.00 | 0.0000 | 50.00 | No Ice | 1.36 | 1.36 | 0.02 |
| | | | | | | 1/2" Ice | 2.45 | 2.45 | 0.04 |

## Dishes

| Description | Face or Leg | Dish Type | Offset Type | Offsets: Horz Lateral Vert ft | Azimuth Adjustment ° | 3 dB Beam Width ° | Elevation ft | Outside Diameter ft | | Aperture Area $ft^2$ | Weight K |
|---|---|---|---|---|---|---|---|---|---|---|---|
| A-ANT-23G-2-C | A | Paraboloid w/o Radome | From Centroid -Leg | 4.00 0.00 2.00 | 50.0000 | | 125.00 | 2.17 | No Ice | 3.72 | 0.01 |
| | | | | | | | | | 1/2" Ice | 4.01 | 0.02 |
| A-ANT-23G-2-C | B | Paraboloid w/o Radome | From Centroid -Leg | 4.00 0.00 2.00 | 30.0000 | | 125.00 | 2.17 | No Ice | 3.72 | 0.01 |
| | | | | | | | | | 1/2" Ice | 4.01 | 0.02 |

## Critical Deflections and Radius of Curvature - Service Wind

| Elevation ft | Appurtenance | Gov. Load Comb. | Deflection in | Tilt ° | Twist ° | Radius of Curvature ft |
|---|---|---|---|---|---|---|
| 177.00 | (2) 7770.00 w/Mount Pipe | 28 | 32.377 | 1.5350 | 0.0015 | 54506 |
| 176.00 | (2) RRUS 11 - Dual PA RRU | 28 | 32.056 | 1.5347 | 0.0015 | 54506 |
| 165.00 | 5 s.f. Panel Antenna w/Mount Pipe | 28 | 28.541 | 1.5181 | 0.0016 | 21102 |
| 148.00 | (2) APX16PV-16PVL w/mount pipe | 28 | 23.259 | 1.4448 | 0.0017 | 10588 |
| 137.00 | (4) 844G45VTZASX w/Mount Pipe | 28 | 20.006 | 1.3711 | 0.0018 | 8005 |
| 127.00 | A-ANT-23G-2-C | 28 | 17.204 | 1.2895 | 0.0017 | 6816 |
| 125.00 | (2) DB980H65T2E-M w/Mount Pipe | 28 | 16.664 | 1.2717 | 0.0016 | 6704 |
| 117.00 | (2) DB844G45ZAXY w/Mount Pipe | 28 | 14.578 | 1.1964 | 0.0015 | 6293 |
| 50.00 | GPS | 28 | 2.562 | 0.4699 | 0.0003 | 4556 |

## Section Capacity Table

| Section No. | Elevation ft | Component Type | Size | Critical Element | P K | $SF*P_{allow}$ K | % Capacity | Pass Fail |
|---|---|---|---|---|---|---|---|---|
| L1 | 180 - 170.58 | Pole | TP26.25x24x0.1875 | 1 | -1.22 | 781.07 | 3.5 | Pass |
| L2 | 170.58 - 126 | Pole | TP36.525x25.0581x0.25 | 2 | -8.71 | 1449.60 | 37.4 | Pass |
| L3 | 126 - 82.75 | Pole | TP46.357x34.8903x0.3125 | 3 | -20.82 | 2300.36 | 70.0 | Pass |
| L4 | 82.75 - 40.75 | Pole | TP55.765x44.2987x0.375 | 4 | -32.76 | 3320.24 | 76.6 | Pass |
| L5 | 40.75 - 0 | Pole | TP64.75x53.2831x0.4375 | 5 | -50.78 | 4642.75 | 74.8 | Pass |
| | | | | | | | Summary | |
| | | | | | | Pole (L4) | 76.6 | Pass |
| | | | | | | **RATING =** | **76.6** | **Pass** |

# APPENDIX C

## Tower Elevation Drawing

| Section | 1 | 2 | 3 | 4 | 5 |
|---|---|---|---|---|---|
| Length (ft) | 9.42 | 48.00 | 48.00 | 48.00 | 48.00 |
| Number of Sides | 18 | 18 | 18 | 18 | 18 |
| Thickness (in) | 0.1875 | 0.2500 | 0.3125 | 0.3750 | 0.4375 |
| Socket Length (ft) | 3.42 | 4.75 | 6.00 | 7.25 | |
| Top Dia (in) | 24.0000 | 25.0581 | 34.8903 | 44.2987 | 53.2831 |
| Bot Dia (in) | 26.2500 | 36.5250 | 46.3570 | 55.7650 | 64.7500 |
| Grade | A572-65 | | | | |
| Weight (K) | 0.5 | 4.0 | 6.5 | 9.7 | 13.3 |

Total Weight (K) 33.9

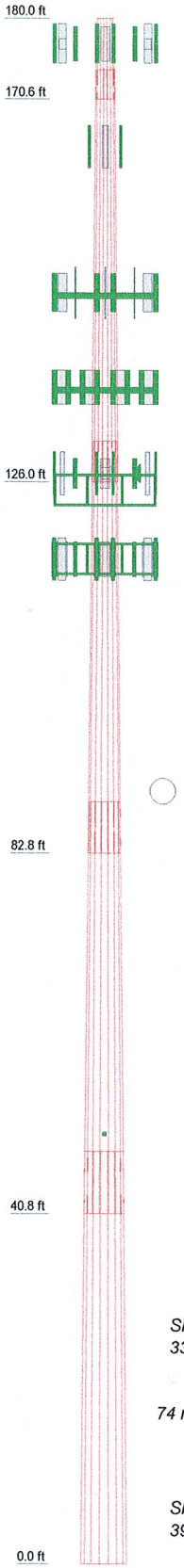


AXIAL
63 K

SHEAR
33 K

MOMENT
3881 kip-ft

TORQUE 1 kip-ft
74 mph WIND - 0.5000 in ICE

AXIAL
51 K

SHEAR
39 K

MOMENT
4531 kip-ft

TORQUE 2 kip-ft
REACTIONS - 85 mph WIND

## DESIGNED APPURTENANCE LOADING

| TYPE | ELEVATION | TYPE | ELEVATION |
|---|---|---|---|
| (2) 7770.00 w/Mount Pipe | 177 | 6' x 2" Mount Pipe | 148 |
| (2) 7770.00 w/Mount Pipe | 177 | PiROD 13' Low Profile Platform | 148 |
| (2) 7770.00 w/Mount Pipe | 177 | (4) 844G45VTZASX w/Mount Pipe | 137 |
| AM-X-CW-14-65-00T-RET w/ Mount Pipe | 177 | (4) 844G45VTZASX w/Mount Pipe | 137 |
| | | (4) 844G45VTZASX w/Mount Pipe | 137 |
| AM-X-CW-14-65-00T-RET w/ Mount Pipe | 177 | PiROD 13' Low Profile Platform | 137 |
| | | (2) DB980H65T2E-M w/Mount Pipe | 125 |
| AM-X-CW-14-65-00T-RET w/ Mount Pipe | 177 | (2) DB980H65T2E-M w/Mount Pipe | 125 |
| | | (2) DB980H65T2E-M w/Mount Pipe | 125 |
| 6' x 2" Mount Pipe | 177 | LLPX310R w/ Mount Pipe | 125 |
| 6' x 2" Mount Pipe | 177 | LLPX310R w/ Mount Pipe | 125 |
| 6' x 2" Mount Pipe | 177 | LLPX310R w/ Mount Pipe | 125 |
| (2) 21401 TMA | 177 | FDD R6 RRH | 125 |
| (2) 21401 TMA | 177 | FDD R6 RRH | 125 |
| (2) 21401 TMA | 177 | FDD R6 RRH | 125 |
| (2) RRUS 11 - Dual PA RRU | 176 | Horizon DUO | 125 |
| (2) RRUS 11 - Dual PA RRU | 176 | Horizon DUO | 125 |
| (2) RRUS 11 - Dual PA RRU | 176 | Valmont 13' Platform w/o rails (GPD) | 125 |
| DC6-48-60-18-8F | 176 | A-ANT-23G-2-C | 125 |
| 6' x 2" Mount Pipe | 176 | A-ANT-23G-2-C | 125 |
| 6' x 2" Mount Pipe | 176 | (2) DB950F40T2E-M w/Mount Pipe | 117 |
| 6' x 2" Mount Pipe | 176 | (2) LPA-80063/4CF w/ mount pipe | 117 |
| 5 s.f. Panel Antenna w/Mount Pipe | 165 | BXA-70063/4CF w/ mount pipe | 117 |
| 5 s.f. Panel Antenna w/Mount Pipe | 165 | (2) DB950F40T2E-M w/Mount Pipe | 117 |
| 5 s.f. Panel Antenna w/Mount Pipe | 165 | (2) DB844G45ZAXY w/Mount Pipe | 117 |
| (2) APX16PV-16PVL w/mount pipe | 148 | BXA-70063/4CF w/ mount pipe | 117 |
| (2) APX16PV-16PVL w/mount pipe | 148 | (2) DB950F40T2E-M w/Mount Pipe | 117 |
| (2) APX16PV-16PVL w/mount pipe | 148 | Valmont 13' Platform w/o rails (GPD) | 117 |
| (2) LGP21401 | 148 | (2) DB844G45ZAXY w/Mount Pipe | 117 |
| (2) LGP21401 | 148 | BXA-70063/4CF w/ mount pipe | 117 |
| (2) LGP21401 | 148 | GPS | 50 |
| 6' x 2" Mount Pipe | 148 | 2'-0" - STANDOFF | 50 |
| 6' x 2" Mount Pipe | 148 | | |

## MATERIAL STRENGTH

| GRADE | Fy | Fu | GRADE | Fy | Fu |
|---|---|---|---|---|---|
| A572-65 | 65 ksi | 80 ksi | | | |

## TOWER DESIGN NOTES

1. Tower is located in New Haven County, Connecticut.
2. Tower designed for a 85 mph basic wind in accordance with the TIA/EIA-222-F Standard.
3. Tower is also designed for a 74 mph basic wind with 0.50 in ice.
4. Deflections are based upon a 50 mph wind.
5. TOWER RATING: 76.6%


GPD GROUP
Consulting Engineers

*GPD Associates*
520 S. Main St.
Akron, Ohio 44313
Phone: (330) 572-2100
FAX: (330) 572-2101


| | | | |
|---|---|---|---|
| Job: ***CT5101 (16326) Orange Transfer Station*** | | | |
| Project: ***2011147.02*** | | | |
| Client: Hudson Design Group | Drawn by: aherkenhoff | App'd: | |
| Code: TIA/EIA-222-F | Date: 01/25/11 | Scale: NTS | |
| Path: N:\2011\2011147\02 CT5101 (16326)\RISA\16326.eri | | Dwg No. E-1 | |

# Feedline Distribution Chart
## 0' - 180'

Round | Flat | App In Face | App Out Face | Truss Leg

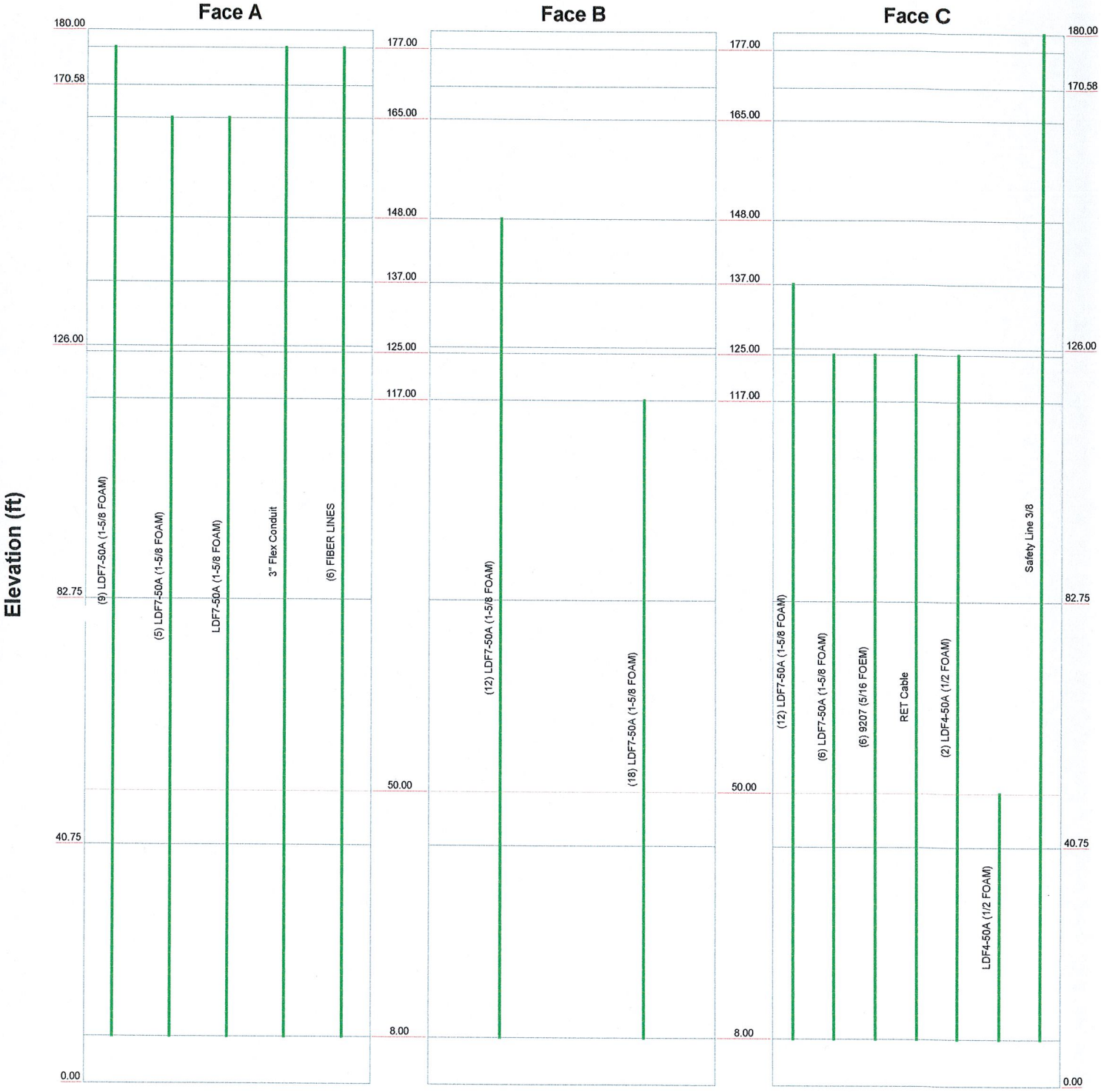


| | | | |
|---|---|---|---|
| GPD GROUP Consulting Engineers | GPD Associates 520 S. Main St. Akron, Ohio 44313 Phone: (330) 572-2100 FAX: (330) 572-2101 | Job: CT5101 (16326) Orange Transfer Station | |
| | | Project: 2011147.02 | |
| | | Client: Hudson Design Group | Drawn by: aherkenhoff / App'd: |
| | | Code: TIA/EIA-222-F | Date: 01/25/11 / Scale: NTS |
| | | Path: N:\2011\2011147\02 CT5101 (16326)\RISA\16326.eri | Dwg No. E-7 |

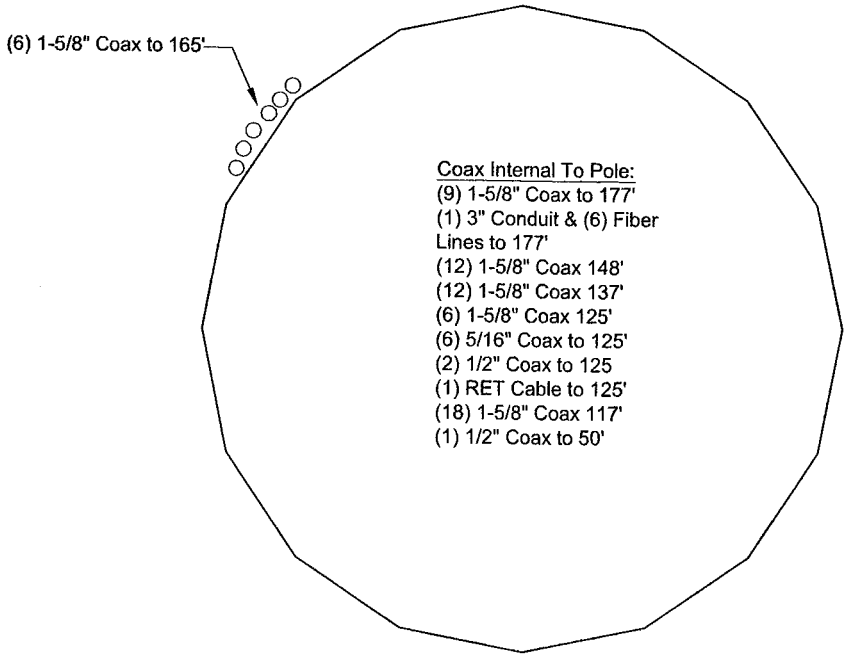


# COAX PLACEMENT

NOT TO SCALE

SHEET 1 OF 1

CT5101 ORANGE TRANSFER STATION
HUDSON DESIGN GROUP

JOB NO. 2011147.02
DATE 1/25/11

*GPD ASSOCIATES* ENGINEERS • ARCHITECTS • PLANNERS
520 South Main Street•Suite 2531•Akron Ohio 44311-1010•Tel: 330-572-2100•Fax: 330-572-2101

# APPENDIX D

## Anchor Rod and Base Plate Analysis

GPD ASSOCIATES

# Anchor Rod and Base Plate Stresses
## CT5101 (16326) Orange Transfer Station
**2011147.02**

| | | |
|---|---|---|
| Overturning Moment = | 4531.00 | k*ft |
| Axial Force = | 51.00 | k |
| Shear Force = | 39.00 | k |

| | |
|---|---|
| Acceptable Stress Ratio = | 105.0% |

| Anchor Rods | | |
|---|---|---|
| Number of Rods = | 20 | |
| Type = | Upset Rod | |
| Rod Yield Strength (Fy) = | 75 | ksi |
| ASIF = | 1.333 | |
| Rod Circle = | 72 | in |
| Rod Diameter = | 2.25 | in |
| Net Tensile Area = | 3.25 | $in^2$ |
| Max Tension on Rod = | 148.41 | kips |
| Max Compression on Rod = | 153.51 | kips |
| Allow. Rod Force = | 195.00 | kips |
| Anchor Rod Capacity = | 76.1% | OK |

| Base Plate | | |
|---|---|---|
| Location = | External | |
| Plate Strength ($F_y$) = | 60 | ksi |
| Outside Diameter = | 77.25 | in |
| Plate Thickness = | 2.75 | in |
| wcalc = | 31.49 | in |
| wmax = | 49.75 | in |
| w = | 31.49 | in |
| S = | 39.69 | $in^3$ |
| fb = | 27.74 | ksi |
| Fb = | 60 | ksi |
| Base Plate Capacity = | 46.2% | OK |

| Stiffeners | | |
|---|---|---|
| Configuration = | None | |

| Pole | | |
|---|---|---|
| Pole Diameter = | 64.75 | in |
| Number of Sides = | 18 | |
| Thickness = | 0.4375 | in |
| Pole Yield Strength = | 65 | ksi |

# APPENDIX E

## Foundation Analysis

# PAD DESIGN - Monopole



**TOWER REACTIONS**

| | | |
|---|---|---|
| total overturning moment = | 4531 | Kip-ft |
| total shear = | 51 | Kip |
| axial = | 39 | Kip |
| ground water table = | Below | ft |

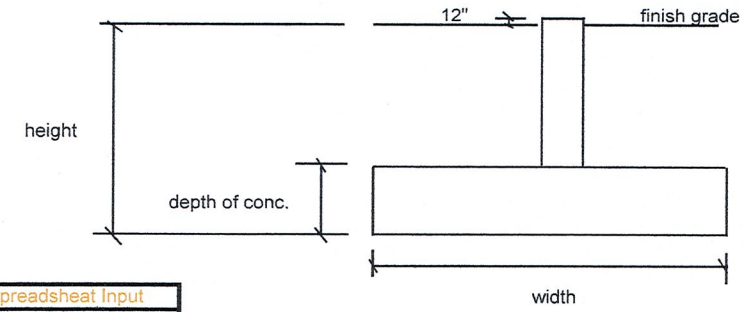


**PAD DIMENSIONS**

| | | |
|---|---|---|
| width = | 48 | ft |
| height = | 7 | ft |
| depth of conc = | 6 | ft |
| $\gamma_{soil}$ = | 0.120 | kcf |
| $\gamma_{conc}$ = | 0.150 | kcf |

Spreadsheat Input
PCAMATS Input

| | | |
|---|---|---|
| Mr = | 57497.87 | k-ft |
| Mot = | 4939 | k-ft |
| P = | 2389.08 | k |
| $w_{wedge}$ | 1.66 | k |
| Allowable Bearing = | 6 | ksf |

F.S. OVERTURNING = 11.6416007 ok > 2

F.S. OVERTURNING / F.S. ALLOWABLE 17.2%

**LOAD PERPENDICULAR TO PAD**

| | | | | | |
|---|---|---|---|---|---|
| $Q_{MAX}$ = P/A+M/S= | 1.30488498 | width/6 | M/P | | |
| $Q_{MIN}$= P/A-M/S= | 0.76896918 | 8.00 | 2.07 | ok (width/6 > M/P | |

**IF M/P>width/6** $Q_{MAX}/Q_{ALL}$

Qmax = 1.513 ksf 25.2% OK

Qmin = 0.000 ksf

**LOAD AT 45 DEGREES TO PAD**

| | |
|---|---|
| $Q_{MAX}$ = P/A+M/S= | 1.41653411 |
| $Q_{MIN}$ = P/A-M/S= | 0.65732006 |

Verify max pressure in PCAMATS for this load case

| | | |
|---|---|---|
| Mx = | 3492.401 | |
| My = | 3492.401 | |
| $e_x$ = | 1.462 | |
| ey = | 1.462 | |
| $e_x/W$ = | 0.030 | ok (e/W < 1/6) |
| $e_y/W$ = | 0.030 | ok (e/W < 1/6) |

IF e/W > 1/6

| | | |
|---|---|---|
| $Q_{ALL}$ = | 13715 | kips |
| $Q_{MAX}$ = | 3238 | kips |
| $Q_{MAX}/Q_{ALL}$ = | 23.6% | OK |

| | |
|---|---|
| $B_1$ = | 67.61 ft |
| $L_1$ = | 67.61 ft |

| | | |
|---|---|---|
| **Foundation Capacity:** | **25.2%** | **OK** |

Simply Intelligent

KMW Communications
Base Station Antennas
For Mobile Communications

# AM-X-CD-14-65-00T-RET (4' 65° Dual Broadband Antenna)

## Dual Band Electrical DownTilt Antenna

*698 ~ 894MHz, X-pol., H65° / V17.0°*
*1710 ~ 2170MHz, X-pol., H65° / V8.5°*

## Electrical Specification

| | | |
|---|---|---|
| Frequency Range | 698~894MHz | 1710~2170MHz |
| Impedance | 50Ω | |
| Polarization | Dual, Slant ±45° | |
| Gain | 14.0dBi / 11.85dBd @ 698-806MHz<br>14.8dBi / 12.65dBd @ 824-894MHz | 16.1dBi / 13.95dBd @1710-1755MHz<br>16.3dBi / 14.15dBd @1850-1900MHz<br>16.0dBi / 13.85dBd @2110-2155MHz |
| Beamwidth – Horizontal | 67° @ 698-806MHz<br>65° @ 824-894MHz | 60° @ 1710-1755MHz<br>61° @ 1850-1900MHz<br>64° @ 2110-2155MHz |
| Beamwidth – Vertical | 17.5 @ 698-806MHz<br>16.5° @ 824-894MHz | 8.8° @ 1710-1755MHz<br>8.5° @ 1850-1900MHz<br>8.0° @ 2110-2155MHz |
| VSWR | ≤1.5:1 | |
| Front-to-Back Ratio | ≥28 dB | |
| Electrical Downtilt Range | 2° ~ 16° | 0° ~ 10° |
| Isolation Between Ports | ≥30 dB | |
| Isolation Between Ports of Different Frequency Elements | ≥35 dB | |
| Cross Pole Discrimination | 10.0 dB @ ±60°<br>15.0 dBi @ 0° | |
| First Upper Side Lobe Suppression | 16dB | |
| Side Lobe Suppression | > 16dB @ 0-6° Tilt<br>> 18dB @ 7-12° Tilt<br>(Up to 15° from Boresight) | > 16dB @ 0-6° Tilt<br>> 18dB @ 7-10° Tilt<br>(Up to 15° from Boresight) |
| Passive Intermodulation | ≤ -150 dBc @ 2x20w | |
| Input Maximum CW Power | 500 W | 300 W |
| Environmental Compliance | IP65 for Radome<br>IP67 for Connectors | |
| RET Motor Configuration | Field Replaceable RET Electronic Control Module /<br>RET Motor is internal to antenna & not field replaceable | |
| Compliant with AISG 1.1 and 2.0 | AISG 1.1 and 2.0 | |

## Mechanical Specification

| | |
|---|---|
| Dimension (W×D×H) | 11.8×5.9×48 inches<br>(300×150×1219mm) |
| Weight (Without clamp) | 16.5 kg (36.4 lbs) |
| Connector | 4 x 7/16 DIN(F), Long Neck |
| Max Wind Speed | 150mph |
| Wind Load (@150 mph) | 1260 N |

Simply Intelligent

KMW Communications

Base Station Antennas

For Mobile Communications

# AM-X-CD-14-65-00T-RET (4' 65° Dual Broadband Antenna)

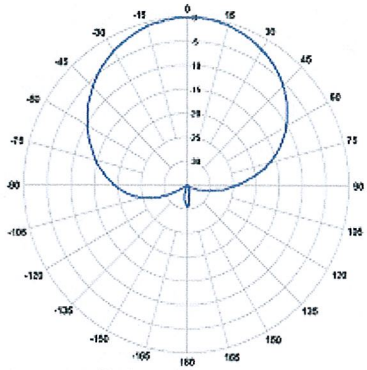

Horizontal Pattern

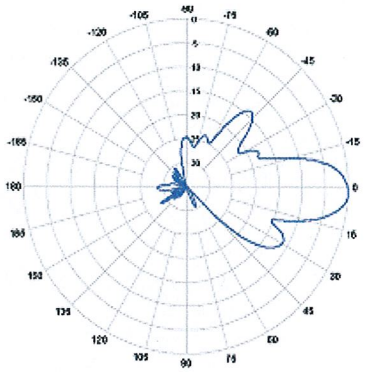

Vertical Pattern (Downtilt 2°)

700MHz band Pattern

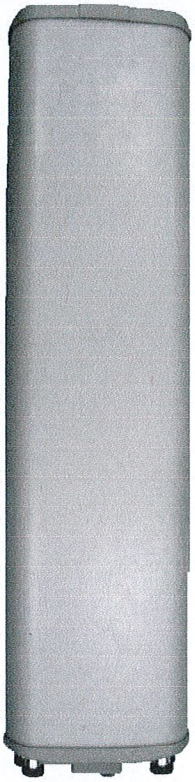

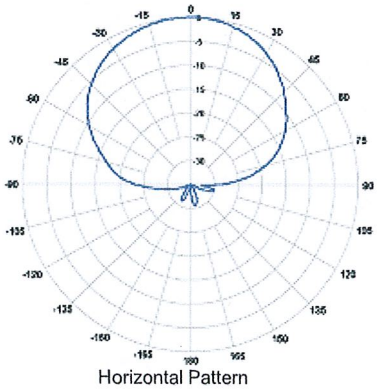

Horizontal Pattern

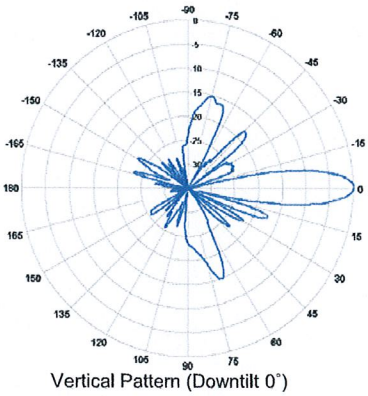

Vertical Pattern (Downtilt 0°)

AWS band Pattern

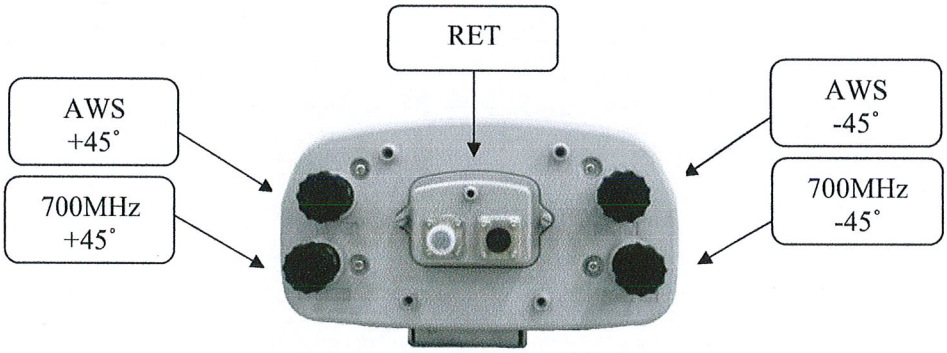

Simply Intelligent

KMW Communications

Base Station Antennas

For Mobile Communications

# AM-X-CD-14-65-00T-RET (4' 65° Dual Broadband Antenna)

Antenna Drawings and Installation Diagram

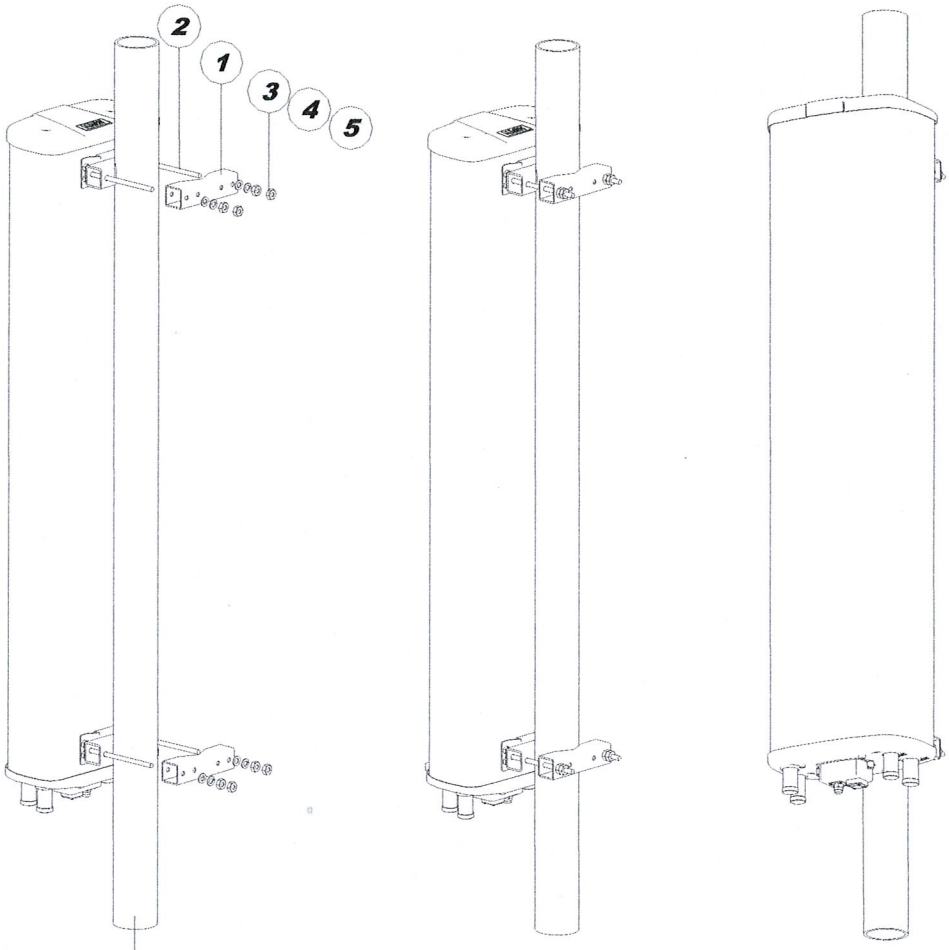


***MOUNT POLE***
***Ø1.97 ~ 3.15inch OD.***
***(50 ~ 80mm OD.)***

## STANDARD MOUNTING KITS

| No. | PART NAME | Q'TY | Recommending Torque |
|---|---|---|---|
| 1 | FIXED CLAMP | 4 | |
| 2 | Hex. Cap Bolt, M10 | 4 | 17mm Spanner |
| 3 | Plain Washer, M10 | 4 | 208lbf.inch |
| 4 | Spring Washer, M10 | 4 | 240kgf.cm |
| 5 | Hex. Nut, M10 | 8 | |

# RRUS 11 – Dual PA RRU.

## Technical Data

RBS6000

- Multi standard
- RF: 2x30 Watts
- Carrier BW: 1.4 – 20 MHz
- Alarms: 2
- Dimensions (with sunshield):
  - Width: 17.0 in
  - Height: 17.8 in
  - Depth: 7.2 in
  - Weight: 55 lbs (Band 12)
  - Weight: 50 lbs (Band 4)
- Temperature: -40 to +131 F
- Cooling: Self convection
- Power: -48 VDC
- Rec. fuse size 20 Amp
  - Rec. DC cable:
    - 6 $mm^2$ up to 60 meters
    - 10 $mm^2$ over 60 meters
    - Shielded
- Power Cons: 200 Watts typ.

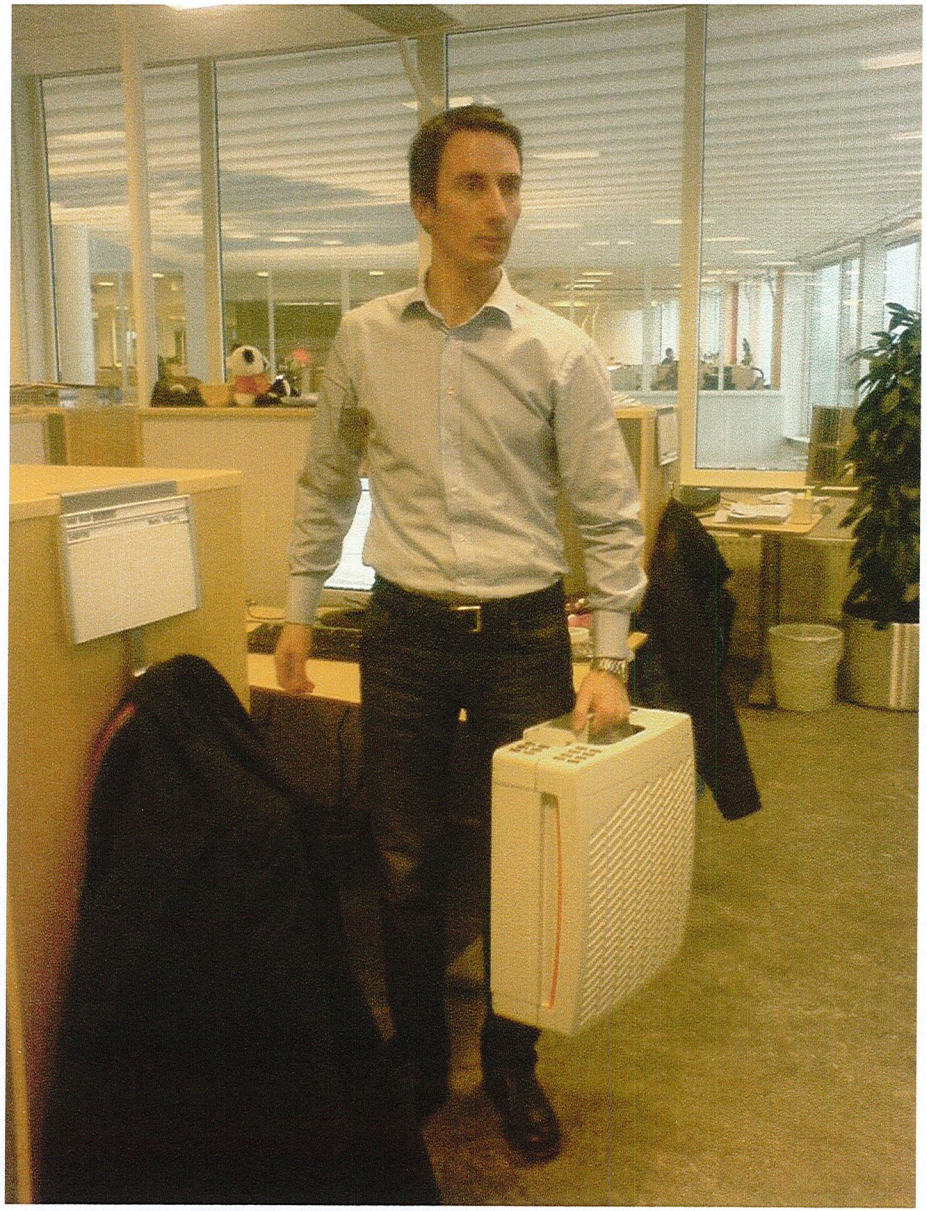

# RRUS-11 I/F

RBS6000

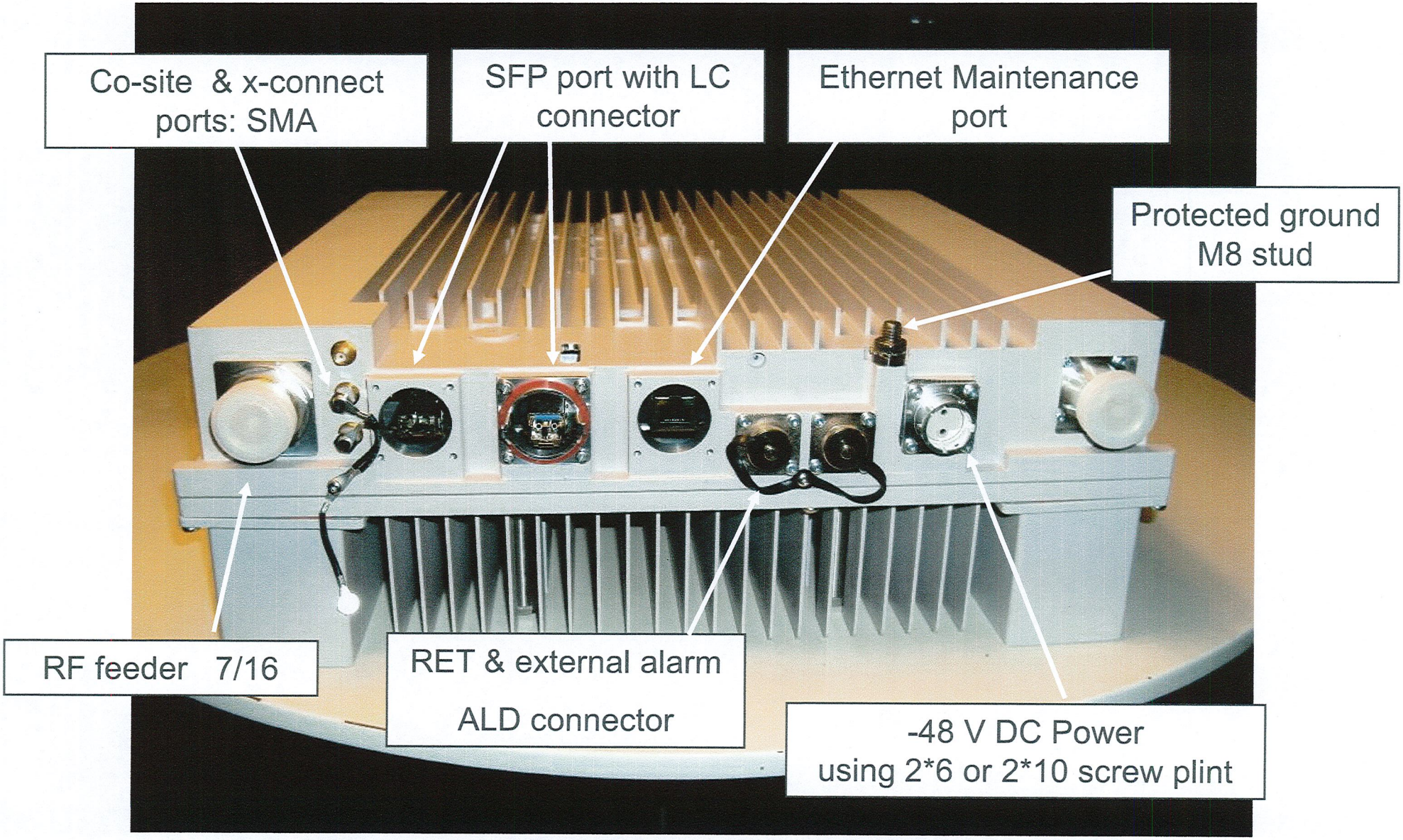

POWER

# DC6-48-60-18-8F

## DC Surge Suppression Solution

The DC6-48-60-18 is a dual chambered, DC surge suppression system for use in multi-circuit, Distributed Antenna Systems. The system will protect up to 6 Remote Radio Heads from voltage surges and lightning, and connect up to 18 fiber pairs. The system is enclosed in a NEMA 4 rated, waterproof enclosure.

### FEATURES

- Protects up to 6 Remote Radio Heads, each with its own protection circuit.
- Flexible design allows for installation at the top of a tower for Remote Radio Head protection.
- Includes fiber connections for up to 18 pairs of fiber.
- LED indicators on individual circuits provide visual indication of suppressor status.
- Form 'C' relays allow for remote monitoring of the suppressor status.
- Patented Strikesorb technology provides over 60 kA of surge current capacity per circuit.
- Strikesorb suppression modules are fully recognized to UL 1449-3rd Edition Safety Standard, meeting all intermediate and high current fault requirements to facilitate use in OEM applications.
- Raycap recommends that DC protection system be installed within 2 meters or 6 feet of the radio.
- Dome design is lightweight and aerodynamic providing maximum flexibility for installation on top of towers.

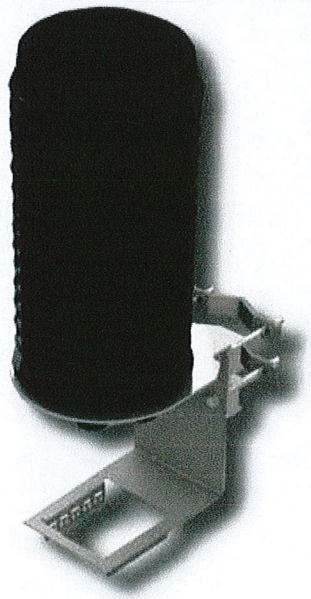

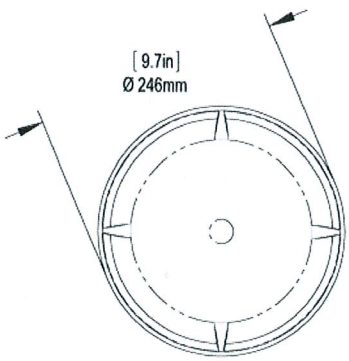


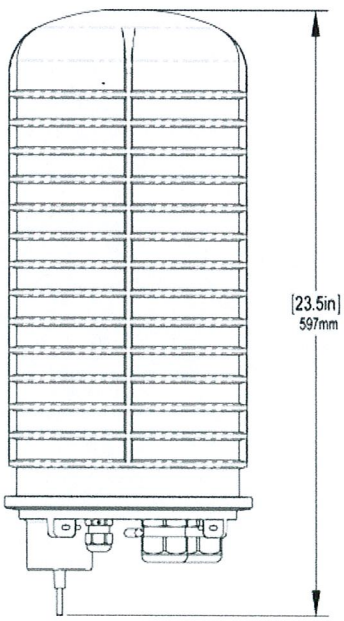


Raycap

Phone 208.777.1166 Toll Free 800.890.2569 Fax 208.777.4466 www.raycapsurgeprotection.com

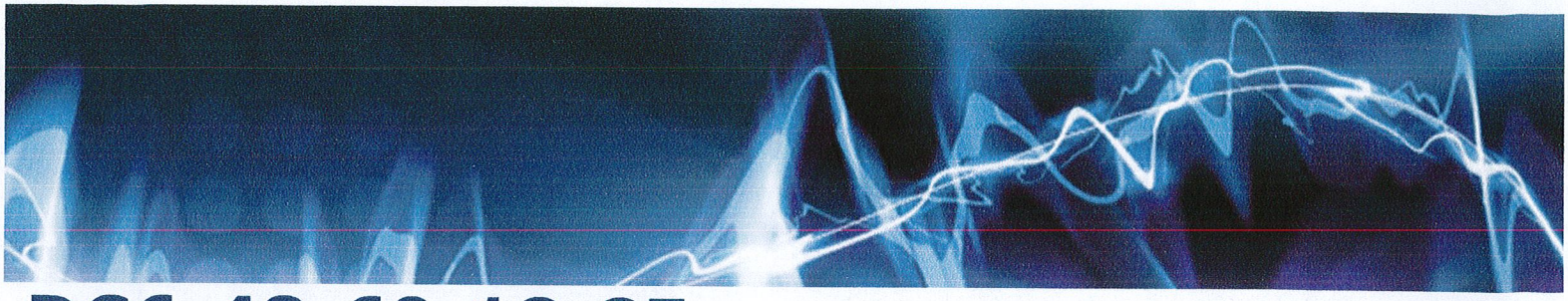

# DC6-48-60-18-8F

## DC Power Surge Protection

| Electrical Specifications | |
|---|---|
| Model Number | DC6-48-60-18-8F |
| Nominal Operating Voltage | 48 VDC |
| Nominal Discharge Current ($I_n$) | 20 kA 8/20 µs |
| Maximum Discharge Current ($I_{max}$) per NEMA LS-1 | 60 kA 8/20 µs |
| Maximum Continuous Operating Voltage ($U_c$) | 75 VDC |
| Voltage Protection Rating | 400 V |

| Mechanical Specifications | |
|---|---|
| Suppression Connection Method | Compression lug, #2-#14 AWG Copper, #2-#12 Aluminum |
| Fiber Connection Method | LC-LC Single mode duplex |
| Environmental Rating | IP 68, 7m 72hrs |
| Operating Temperature | -40° C to + 80° C |
| Storage Temperature | -70° C to + 80° C |
| Cold Temperature Cycling | IEC 61300-2-22e -30° C to + 60° C 200 hrs @ 5 psi |
| Resistance to Aggressive Materials | CEI IEC 61073-2 including acids and bases |
| UV Protection | ISO 4892-2 Method A Xenon-Arc 2160 hrs |
| Weight | 20 lbs without Mounting Bracket |

**STANDARDS**

Strikesorb modules are compliant to the following Surge Protection Device (SPD) Standards:

- ANSI/UL 1449 – 3rd Edition
- IEEE C62.41
- NEMA LS-1, IEC 61643-1:2005 2nd Edition:2005
- IEC 61643-12
- EN 61643-11:2002 (including A11:2007)

GS-07F-0435V

Certified to ISO 9001:2000

TUV Rheinland of North America



Raycap, Inc. 806 W. Clearwater Loop • Post Falls • Idaho • 83854 • USA
Phone 208.777.1166 • Toll Free 800.890.2569 • Fax 208.777.4466 • www.raycapsurgeprotection.com

**New Cingular Wireless PCS, LLC**
500 Enterprise Drive
Rocky Hill, Connecticut 06067-3900
Phone: (860) 463-5511
Fax: (860) 513-7190

**Douglas L. Culp**
Real Estate Consultant

February 22, 2011

Honorable James Zeoli
1st Selectman, Town of Orange
Orange Town Hall
617 Orange Center Road
Orange, CT 06477

Re: Telecommunications Facility – 617 South Orange Center Road Orange, CT

Dear Mr. Zeoli:

In order to accommodate technological changes, implement Uniform Mobile Telecommunications System ("UMTS") and Long Term Evolution ("LTE") capabilities, and enhance system performance in the State of Connecticut, New Cingular Wireless PCS, LLC ("AT&T") will be changing its equipment configuration at certain cell sites.

As required by Regulations of Connecticut State Agencies ("R.C.S.A.") Section 16-50j-73, the Connecticut Siting Council has been notified of the changes and will review AT&T's proposal. Please accept this letter as notification under Section 16-50j-73 of construction which constitutes an exempt modification pursuant to R.C.S.A. Section 16-50j-72(b)(2).

The accompanying letter to the Siting Council fully describes Cingular's proposal for the referenced cell site. However, if you have any questions or require any further information on our plans or the Siting Council's procedures; please call me at (860) 463-5511 or Ms. Linda Roberts, Executive Director, Connecticut Siting Council at (860) 827-2935.

Sincerely,

Douglas L. Culp
Real Estate Consultant

Enclosure