STATE OF CONNECTICUT

CONNECTICUT SITING COUNCIL

Ten Franklin Square, New Britain, CT 06051

Phone: (860) 827-2935 Fax: (860) 827-2950

E-Mail: siting.council@ct.gov

www.ct.gov/csc

VIA ELECTRONIC MAIL

February 10, 2020

Ryan Lynch
Real Estate & Construction Specialist
Smartlink, LLC
Building 3, Suite 102
North Billerica, MA 01862

RE: **EM-AT&T-107-200124** – AT&T notice of intent to modify an existing telecommunications facility located at 525 Overland Drive, Orange, Connecticut.

Dear Mr. Lynch:

The Connecticut Siting Council (Council) is in receipt of your correspondence of January 29, 2020 and February 4, 2020 submitted in response to the Council's January 28, 2020 and January 30, 2020 notifications of an incomplete request for exempt modification with regard to the above-referenced matter.

The submissions render the request for exempt modification complete and the Council will process the request in accordance with the Federal Communications Commission 60-day timeframe.

Thank you for your attention and cooperation.

Sincerely,

Melanie A. Bachman
Executive Director

MAB/IN/emr

Robidoux, Evan

From: Ryan Lynch <ryan.lynch@smartlinkllc.com>
Sent: Tuesday, February 4, 2020 4:28 PM
To: Robidoux, Evan
Cc: CSC-DL Siting Council
Subject: RE: Council Incomplete Letter for EM-AT&T-107-200104 (525 Overland Drive, Orange)
Attachments: AT&T Exempt Mod - EM-AT&T-107-200124 - 525 Overland Drive Response_200204.pdf; 10152334_DE113_190524_CTL02343.pdf; 10152334_DE125_190703_CTL02343.pdf

Good Afternoon,

Please find the attached response and associated documents.

Best Regards,

smartlink

Ryan Lynch | Real Estate & Construction Specialist
Smartlink
85 Rangeway Rd.
Building 3, Suite 102
North Billerica, MA 01862
(m) 781.392.4040

From: Robidoux, Evan <Evan.Robidoux@ct.gov>
Sent: Thursday, January 30, 2020 4:22 PM
To: Ryan Lynch <ryan.lynch@smartlinkllc.com>
Cc: CSC-DL Siting Council <Siting.Council@ct.gov>
Subject: Council Incomplete Letter for EM-AT&T-107-200104 (525 Overland Drive, Orange)

Warning:This message was sent from outside the company and could contain attachments. Please do not open unless you recognize the source of this email and know the content is safe.

Please see the attached correspondence.

Evan Robidoux
Clerk Typist
Connecticut Siting Council
10 Franklin Square
New Britain, CT 06051

2/4/2020

Melanie A. Bachman
Executive Director
Connecticut Siting Council
10 Franklin Square
New Britain, CT 06051

Regarding: Notice of Exempt Modification – EM-AT&T-107-200124
Property Address: 525 Overland Drive, Orange, CT

AT&T Site: CTL02343 / FA: 10152334

Dear Ms. Bachman:

Per the Council's request in its January 30, 2020 correspondence, please find enclosed a copy of the mount analysis prepared by Paul J. Ford, which has been updated to reflect the adoption of the 2018 Connecticut State Building Code.

As for the second deficiency listed by the Council, both the structural and mount analyses provided to the CSC had been both signed and stamped, but the signature did not appear when combined into a PDF response to the Council. The hard copies that have been sent to the Council, along with the soft copies included in my 2/4/2020 email, should all show both the stamp and signature of the professional engineer.

Please contact me with any further questions or concerns for this exempt modification filing.

Sincerely,

Ryan Lynch
Real Estate & Construction Specialist
Smartlink, LLC
85 Rangeway Road, Building 3, Suite 102
North Billerica, MA 01862

Enclosures

PAUL J. FORD & COMPANY

EVERSOURCE

Structural Analysis Report

Transmission Pole #24063
Middletown - Norwalk - 345 Line

Orange Overland Drive Site #CTL02343

Prepared on behalf of:

at&t

99 East River Road, 9th Floor
East Hartford, CT 06108

PJF Project #A80619-0001.001.6000_6050_R1

REVISION	DATE	DESCRIPTION	ENGINEER	PJF TRACKING
0	02/12/2019	ORIGINAL ISSUE DATE	CEC	.001.6000_6050
1	05/24/2019	REVISED PER LOADING COMMENTS	CEC	.001.6000_6050

Columbus
250 E Broad St, Suite 600
Columbus, OH 43215
Phone 614.221.6679

Orlando
1801 Lee Rd, Suite 230
Winter Park, FL 32789
Phone 407.898.9039

PAUL J. FORD & COMPANY

EVERSOURCE

Report Date: May 24, 2019

Client: Smartlink, LLC
85 Rangeway Rd
North Billerica, MA 01862-2105
Attn: David Barbagallo
860-681-7708
david.barbagallo@smartlinkllc.com

Utility Name: Eversource Energy
Structure: Existing 120-ft Transmission Pole #24063
Line Reference: Middletown - Norwalk - 345kV Line
Site Name: Orange Overland Drive AT&T - CTL02343
Site Address: 525 Overland Dr
City, County, State: Orange, New Haven County, CT
Latitude, Longitude: 41.289361, -73.001083

PJF Project: A80619-0001.001.6000_6050_R1

Paul J. Ford and Company is pleased to submit this "**Structural Analysis Report**". The purpose of this analysis is to determine if the structure has sufficient capacity to support the existing and proposed equipment described herein.

Analysis Criteria:

Reference Standard: IEEE Standards Association, "National Electrical Safety Code" (NESC) C2-2007
ANSI/TIA-222-G-2-2009 Standard, "Structural Standard for Antenna Supporting Structures and Antennas – Addendum 2"
ASCE Standard 48-05, "Design of Steel Transmission Pole Structures"

Utility Specification: Eversource OTRM 059 Rev. 1 (11/19/2018)

Proposed Appurtenance Loads:

The structure was analyzed with the addition of the proposed appurtenances loads shown in Table 1 combined with the existing and reserved loads shown in Table 2 and 3 of this report.

Summary of Analysis Results:

Existing Structure:	**Pass**
Existing Foundation:	**Pass**
Existing Antenna Mast:	**Pass**

We at Paul J. Ford and Company appreciate the opportunity of providing our continuing professional services to you and Smartlink, LLC. If you have any questions or need further assistance on this or any other projects please give us a call.

Respectfully Submitted by:
Paul J. Ford and Company

Charles E. Carrillo, P.E.
Project Engineer
ccarrillo@pauljford.com

STATE OF CONNECTICUT
JAMES R. ANTOSZEWSKI
31499
LICENSED
PROFESSIONAL ENGINEER
05/24/2019

TABLE OF CONTENTS

1) INTRODUCTION

2) ANALYSIS CRITERIA

Reference Standard
Utility Specification
Table 1 – Proposed Antenna and Cable Information
Table 2 – Existing and Reserved Antenna and Cable Information
Table 3 – Existing Electrical Utility Wire Information
Table 4a – Utility Tower Analysis - Load Case Information
Table 4b – Antenna Mount Analysis – Load Case Information

3) ANALYSIS PROCEDURE

Table 5 – Documents Provided
3.1) Analysis Method
3.2) Assumptions

4) ANALYSIS RESULTS

Table 6 – Maximum Structure Element Usage
Table 7 – Maximum Foundation Usages
Table 8 – Maximum Antenna Mount Usages
4.1) Recommendations

5) CONCLUSION

STANDARD CONDITIONS

APPENDIX A – STRUCTURE PHOTOS / PROFILE SHEET

APPENDIX B – LOAD CALCULATIONS

Wire Load Sheets (Provided by NU)
TIA-222-G - Load Calculations for Mast Analysis

APPENDIX C – COMPUTER OUTPUT

C1 - TIA-222-G – Risa 3D Mast Analysis – Output
C2 - PLS Software
PLS Software – Structure Model Node Diagram
PLS Software – Structure Usage Diagram (Color Coded by Usage)
PLS Software – Output

APPENDIX D – SUPPLEMENTAL CALCULATIONS

TIA-222-G - Mast Connection to CL&P Tower Analysis
ASCE 48-05 - Anchor Bolt Check
Foundation Analysis

APPENDIX E – SUPPLEMENTAL INFORMATION

1) INTRODUCTION

The purpose of this analysis is to determine if the existing structure and existing foundations have sufficient capacity to support the existing and proposed equipment along with the existing wire loads described herein. The existing structure is a 120' tall double circuit steel transmission pole designated as a 345kV type "33-CDCSP-001-UWX.120". The existing pole consists of a 12-sided round polygonal pole shaft and base plate.

The modified antenna mounting system consists of one (1) Valmont 802738 10'-6" triple t-arm assembly w/ SitePro1 PRK-SFS-L mount kicker kit and a custom handrail kit installed on an existing 12" pipe mast. Refer to Tables 1 and 2 below and drawing SK-1 located in Appendix A for further antenna equipment and mount information.

The proposed modifications, as shown on the drawings referenced in Table 5 of this report have been taken into account as part of this analysis.

2) ANALYSIS CRITERIA

Reference Standard: IEEE Standards Association, "National Electrical Safety Code" (NESC) C2-2007
ANSI/TIA-222-G-2-2009 Standard, "Structural Standard for Antenna Supporting Structures and Antennas – Addendum 2"
ASCE Standard 48-05, "Design of Steel Transmission Pole Structures"

Utility Specification: Eversource OTRM 059 Rev. 1 (11/19/2018)

Table 1 – Proposed Antenna and Cable Information[1]

Mounting Level (feet)	Center Line Elevation (feet)	Quantity	Manufacturer	Model	Number of Feed Lines[2]	Feed Line Size (inches)	Note
130	130	3	Kathrein	800-10965 (Antenna)	-	-	-
		6	CCI	TMABPD7823VG12A (TMA)			
		1	-	10'-6" Custom Handrail			
		1	SitePro1	PRK-SFS-L			

Notes:
1. See drawing SK-1 in "Appendix A – Structure Profile Sheet" for further details.
2. (E) – Coax mounted externally and exposed to the wind.

Table 2 – Existing and Reserved Antenna and Cable Information[1]

Mounting Level (feet)	Center Line Elevation (feet)	Quantity	Manufacturer	Model	Number of Feed Lines[2]	Feed Line Size (inches)	Note
130	130	3	Andrew	SBNH-1D6565B (Antenna)	30 (E)	1-5/8	3
		3	Quintel	QS66512-2 (Antenna)			
		6	Kaelus	TMA2117F00V1-1 (TMA)			
		1	Valmont	802378 (10'-6" Triple T-Arm Assembly)			

Notes:
1. See drawing SK-1 in "Appendix A – Structure Profile Sheet" for further details.
2. (E) – Coax mounted externally and exposed to the wind.
3. Existing equipment to remain. All other existing equipment to be removed.

Table 3 – Existing Electrical Utility Wire Information[1]

Wire Designation	Wire Type	Tension Angle (degrees)	Wind Span		Weight Span	
			Back (feet)	Ahead (feet)	Back (feet)	Ahead (feet)
Shield Wire #1	(1) - Brugg_86AY62ACS-2C_345	0	-	-	-	-
Shield Wire #2	(1) - 19#10 Alumoweld					
Conductor	(6) - Lapwing					

Notes:
1. Wire loads provided by the utility. See "Appendix B – Load Calculations" for further details.

Table 4a – Utility Tower Analysis - Load Case Information[1]

Load Case Name	Radial Ice (inches)	Wind Speed (mph)	Overload Capacity Factors				Note
			Vertical	Wind	Wire Tension		
					Long.	Trans.	
NESC 250B (Heavy)	0.5	39.5	1.5	2.5	1.1	1.65	-
NESC 250C (Extreme Wind)	0	110	1.0	1.0	1.0	1.0	2
NESC 250D (Extreme Wind w/Ice)	0.75	50	1.0	1.0	1.0	1.0	-

Notes:
1. As per the requirements of NU Design Criteria Table, NESC C2-2017 – Construction Grade B, and ASCE 48-05, "Design of Steel Transmission Pole Structures".
2. Apply a 1.25 X Gust Response Factor to all telecommunication equipment projected above top of pole and a 1.0 X Gust Response Factor to the pole structure as per NU Design Criteria Table.

Table 4b – Antenna Mount Analysis - Load Case Information[1]

Load Case Name	Radial Ice (inches)	Wind Speed (mph)	Note
TIA/EIA – High Wind	0	97	-
TIA/EIA – Wind and Ice	0.75	50	-

Notes:
1. As per the requirements of the CT State Building Code, V. ultimate = 125mph (Risk Cat. II) converted to V. nominal = 97mph for use with TIA/EIA-222-G, Structure Class III, Exposure C and Topographic Category 1.

3) ANALYSIS PROCEDURE

Table 5 – Documents Provided

Document	Remarks	Reference	Source
Structure Erection Drawings	Thomas&Betts, 09/04/2007	20707-ND1117AT	Eversource
Structure Fabrication Drawings	Thomas&Betts, Varies	20707-3040-3041, 20707-E, F	
Structure Anchor Bolts	Thomas&Betts, 08/06/2007	20707-ND1117AA	
Structure Foundation Drawings/Schedule	Northeast Utilities Service Co., 03/20/2006	01229-60001, 01007-40001	
Geotechnical Report	Haley & Aldrich, 03/30/2006	32500-100	
Previous SA Report	Centek, 02/23/2016	15267.006	
	PJF, 02/12/2019	80619-0001.001.6000	
RF Data Sheet	AT&T, 07/10/2018	CTL02343	Smartlink, LLC
Mount Modification Drawings	PJF, 02/12/2019	80619-0001.001.6190	PJF

3.1) Analysis Method

Risa-3D is a commercially available analysis software package made by Risa Technologies, LLC. Risa-3D was used to create a three-dimensional model of the mast extension and calculate member stresses for various load cases. Selected output from the analysis is included in Appendix C.

PLS-Pole™ is a commercially available analysis software package made by Powerline Systems, Inc. PLS-Pole™ was used to create a three-dimensional model of the pole and calculate member stresses for various load cases. Equipment and wire load calculations were completed using Microsoft Excel or MathCAD and applied to the structure model as point loads. Load Calculations are included in Appendix B. Selected output from the analysis is included in Appendix C.

LPILE (version 6.0.22) is a commonly available software package by Ensoft, Inc. LPILE was used to create a model of the foundation. Additional calculations were completed using MathCAD. Load Calculations and selected output from the analysis is included in Appendix D.

3.2) Assumptions

1) *The structure was built in accordance with the manufacturer's specifications.*
2) *The structure has been maintained in accordance with the manufacturer's specifications.*
3) *The analysis assumes that no physical deterioration has occurred in any of the structural components and that all members have the same load carrying capacity as the day the structure was erected. No allowance was made for any damaged, missing, or rusted members.*
4) *All bolts have been torqued to the snug-tight condition as defined by AISC.*
5) *No residual stresses exist due to incorrect tower erection.*
6) *All welds conform to the requirements of AWS D1.1.*
7) *The configuration of antennas, cables, mounts and other appurtenances are as specified in Tables 1 and 2 of this report and as per the referenced documents in Table 5.*
8) *The wind loads applied to the structure, due to the antenna installations, are based on the full projected area of all antenna equipment in all directions (i.e. no shielding used).*
9) *Pipe riser and utility tower are in plumb condition.*
10) *Pole shaft steel material assumed to be A871 (weathering steel) with minimum yield stress of 65ksi.*
11) *Pole base plate steel material assumed to be A871 (weathering steel) with a minimum yield stress of 60ksi.*
12) *The mount modifications, as shown in the referenced PJF documents, have been installed.*
13) *No further modifications to the structure have been made other than those referenced herein.*
14) *For the NESC analysis of the structure, a modified shape factor (drag coefficient) has been used for all equipment located above the top of the structure. The modified shape factor is determined by multiplying any applicable shape factors, as required by OTRM 059 Section 4.E.2.c.ii & iii, by 1.25.*

This analysis may be affected if any assumptions are not valid or have been made in error. Paul J Ford and Company should be notified to determine the effect on the structural integrity of the tower.

4) ANALYSIS RESULTS

The following table provides the maximum usages for each structure element type and the loading condition in which they occur:

Table 6 – Maximum Structure Element Usages

Pole – Analysis		
Element Type	**Load Case**	**Usage (%)**
Pole Shaft	NESC 250C (Extreme Wind)	60
Base Plate	NESC 250C (Extreme Wind)	44
Davit Arms	NESC 250D (Extreme Ice w/Wind)	63
Mast	NESC 250C (Extreme Wind)	84
Pole – Supplemental Analysis		
Element Type	**Load Case**	**Usage (%)**
Anchor Bolts	NESC 250C (Extreme Wind)	51
	Maximum Structure Element Usage =	**84**
	Existing Structure Result =	**Pass**

Notes:
1. See "Appendix C – Computer Output" for further detailed information.
2. See "Appendix D – Supplemental Calculations" for calculations supporting the % capacity used.

Table 7 – Maximum Structure Foundation Usages

Foundation Analysis		
	Load Case	**Usage (%)**
Axial Check	NESC 250B (Heavy)	2
Moment Check	NESC 250C (Extreme Wind)	51
Shear Check	NESC 250C (Extreme Wind)	55
Bearing Check	NESC 250B (Heavy)	10
	Maximum Foundation Usage =	**55**
	Existing Foundation Result =	**Pass**

Notes:
1. See "Appendix D – Supplemental Calculations" for calculations supporting the % capacity used.

Table 8 – Maximum Antenna Mast Usages

Antenna Mast – Analysis			
Member		**Load Case**	**Usage (%)**
12" Schedule 80 28' Mast		TIA/EIA – High Wind	89
Mast Connection to CL&P Tower (See Note 3 Below)		TIA/EIA – High Wind	47
Limit State Deformations(1)			
Limit State	**Analysis Value**	**Maximum Allowable Value**	**Result**
Twist	0.00018°	4°	OK
Sway (Tilt)	0.451°	4°	OK
Horizontal Displacement	1.371"	3.24" (2)	OK
		Maximum Antenna Mast Usage =	**89**
		Existing Antenna Mast Result =	**Pass**

Notes:
1. As per the requirements of ANSI/TIA-222-G - Section 2.8.2
2. 1.5% of cantilevered mast height = 18' *12"/ft x 0.015 = 3.24"
3. See "Appendix D – Supplemental Calculations" for calculations supporting the % capacity used.

5) CONCLUSION

The existing transmission pole has **sufficient** capacity to support the existing and proposed equipment along with the existing wire loads described herein.

The existing foundation(s) have **sufficient** capacity to support the existing and proposed equipment along with the existing wire loads described herein.

The modified antenna mast has **sufficient** capacity to support the existing and proposed equipment described herein.

This analysis is presented based upon the assumptions listed herein and information provided by the utility and the wireless carrier. If the existing conditions are different than those presented here, Paul J. Ford and Company should be contacted to verify the validity of the conclusions presented here.

STANDARD CONDITIONS FOR FURNISHING OF PROFESSIONAL ENGINEERING SERVICES ON EXISTING STRUCTURES BY PAUL J. FORD AND COMPANY

1) It is the responsibility of the client to ensure that the information provided to Paul J. Ford and Company is accurate and complete. Paul J. Ford and Company will rely on the accuracy and completeness of such information in performing or furnishing services under this project.

2) If the existing conditions are not as represented on the referenced drawings and/or documents, Paul J. Ford and Company should be contacted immediately to evaluate the significance of the deviation.

3) The structure has been analyzed according to the minimum design loads recommended by the Reference Standard. If additional design loads are required, Paul J. Ford and Company should be made aware of this prior to the start of the project.

4) The standard of care for all Professional Engineering Services performed or furnished by Paul J. Ford and Company under this project will be the skill and care used by members of the Consultant's profession practicing under similar circumstances at the same time and in the same locality.

5) All Services are performed, results obtained, and recommendations made in accordance with generally accepted engineering principles and practices. Paul J. Ford and Company is not responsible for the conclusions, opinions and/or recommendations made by others based on the information supplied herein.

****

APPENDIX A

STRUCTURE PHOTOS / PROFILE SHEET

FINAL ANTENNA INFORMATION

RAD ℄	STATUS	QUANTITY	MANUFACTURER	MODEL
130'-0"±	PROPOSED	3	KATHREIN	800-10965 (ANTENNA)
		6	CCI	TMABPD7823VG12A (TMA)
		1	PJF	CUSTOM HANDRAIL
		1	SITEPRO 1	PRK-SFS-L (MOUNT KICKER KIT)
	EXISTING	3	ANDREW	SBNH-1D6565B (ANTENNA)
		3	QUINTEL	QS66512-2 (ANTENNA)
		6	KAELUS	TMA2117F00V1-1 (TMA)
		1	VALMONT	802738 (10'-6" TRIPLE T-ARM)

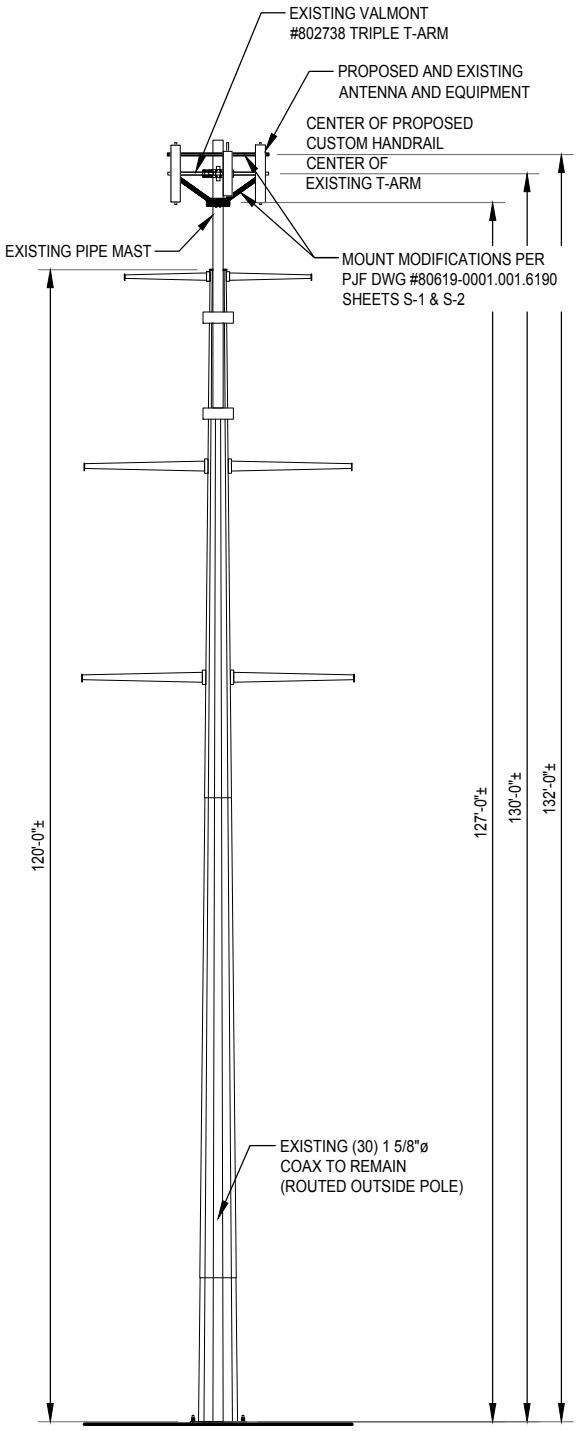

ELEVATION

TRANSVERSE FACE
LOOKING SOUTHWEST

NOTE:
INFORMATION PROVIDED ON THIS DRAWING IS INTENDED SOLELY FOR THE PURPOSES OF THIS STRUCTURAL ANALYSIS REPORT. PJF WILL NOT BE RESPONSIBLE FOR ITEMS FABRICATED, PURCHASED OR INSTALLED BASED ON THIS DRAWING.

PAUL J. FORD & COMPANY
250 E Broad St, Ste 600 · Columbus, OH 43215
Phone 614.221.6679 www.pauljford.com

AT&T
99 EAST RIVER ROAD, 9TH FLOOR EAST HARTFORD, CT 06108

Description:
TRANSMISSION POLE WITH ANTENNA MOUNT - ELEVATIONS AND SECTIONS

Utility:
EVERSOURCE

Structure Info: TOWER #24063; MIDDLETOWN - NORWALK 345kV LINE

Site Info: 525 OVERLAND DRIVE, ORANGE, NEW HAVEN COUNTY, CONNECTICUT
ORANGE OVERLAND DRIVE SITE #CTL02343

Job No.	80619-0001.001.6000
Drawn by:	FE
Designed by:	CEC
Checked by:	JRA
Date	2-12-2019

SK-1

80619-0001.001.6000.dwg

APPENDIX B

LOAD CALCULATIONS

PLS-CADD Version 11.16x64 10:25:52 AM Wednesday, September 28, 2011
Northeast Utilities System
Project Name: 'c:\cps\pls-cadd\prj-dev\xyz files\peaserd_eastdevon_final_pls.DON'
Line Title: '345-kV/115-kV 3827, 1640, 1685, 1776, 1497, & 1350'

Criteria notes:
NESC Heavy per Rule 250B, Page 161
Extreme Wind Loading per Rule 250C, Page 161, Coefficients and Gust Response Factors per Equations in Tables 250-2, 250-3
90 MPH Basic Wind Speed, 3 second Gust Wind Speed, Figure 250-2 Beginning on Page 166
Grade B Construction "Method A" per Table 253-1, Page 173 and Table 261-1A, Page 182
Tension Limits per Rule 261H1, Page 179
Insulator Strength Reduction per Rule 277, Page 188 Should be applied to Insulator Strengths when Modeling Insulators
2002 NESC C2-2002 Criteria File for PLS-CADD Created December 21, 2001
Structure 24277 (just North of Durham Rd) moved 50` south per homeowner request. Structure height increased 5 ft. to maintain ground clearance.
1-27-06 Moved structure 24257 100` NE to accomodate homeowner request.
Homeowner request - Structures 24102 & 3915 were moved 100 ft. North for aesthetic purposes.
Homeowner request - Structure 3910 moved 90 ft. South out of line of sight.
Homeowner requests - Neighborhoods of Salem Rd, Country Ct., & Brookwood Ct. requested 135` typ. split phase.
do not change these areas structure heights.
Homeowner request - Structures 24098 & 3911 moved South to property line.
Structure 3808 raised 10 ft. to meet road clearance requirements
12-5-06: Structure 3807 moved 15 ft. South to avoid existing 3808 guy wires.
3848: Moved 5 ft. South towards 3847 per field request, too close to rock wall and distribution lines.
3848: Moved 5 ft. North back to original spot per email from Jason Cabral. Rock wall will be moved, PAR said there should be no
impact to adjacent distribution lines.
3807: (1-24-07) Moved approx. 20 ft. southwest to get structure away from existing 1640 guy locations to accomodate construction.
3849: (1-24-07) Moved approx. 14 ft. southwest to get structure away from existing 1640 guy locations to accomodate construction.
3888: (1-24-07) Moved approx. 20 ft. north to get structure away from existing 1640 guy locations to accomodate construction.
5-22-07 : Moved structure 24043 20 ft. northeast per homeowner request. This was a field call from Tim Arvin.
6-11-07: Moved structure 3911 5 ft. South to avoid underground utilities to two residences.
10-17-07: Moved structure 24002 46.5 ft. north per field request.
10-24-07: Moved structure 24045 11.75 ft. east per field request.
1-4-08: Moved structure 24091 17 ft. south to avoid underground storm water drainage pipe.

Weather Cases

WC #	Description	Air Density Factor (psf/mph^2)	Wind Vel. (mph)	Wind Pres. (psf)	Wire Ice Thick (in)	Wire Ice Density (lbs/ft^3)	Wire Ice Load (lbs/ft)	Wire Temp (deg F)	Ambient Temp (deg F)	Weather Load Factor	NESC Constant (lbs/ft)	Wire Wind Height Adjust Model	Wire Gust Response Factor
1	NESC Heavy	0.00256	40	4.0	0.50	57.000	0.00	0	0	1.00	0.30	None	1
2	0F 4psf w/ ice	0.00256	40	4.0	0.50	57.000	0.00	0	0	1.00	0.00	None	1
3	0F 4psf w/o ice	0.00256	40	4.0	0.00	0.000	0.00	0	0	1.00	0.00	None	1
4	NESC Ext Wind	0.00256	112	32.1	0.00	0.000	0.00	60	60	1.00	0.00	None	1
5	ASCE Ice/Wind	0.00256	50	6.4	0.75	57.000	0.00	32	32	1.00	0.00	None	1
6	Maximum Operating	0.00256	0	0.0	0.00	0.000	0.00	285	285	1.00	0.00	None	1
7	NESC Blowout 6PSF	0.00256	48	6.0	0.00	0.000	0.00	60	60	1.00	0.00	None	1
8	3# Wind (SWING 1)	0.00256	34	3.0	0.00	0.000	0.00	60	60	1.00	0.00	None	1
9	6# Wind (SWING 2)	0.00256	48	6.0	0.00	0.000	0.00	60	60	1.00	0.00	None	1
10	60 mph Wind (SWING 3)	0.00256	60	9.2	0.00	0.000	0.00	60	60	1.00	0.00	None	1
11	GALLOPING (SWING)	0.00256	28	2.0	0.50	57.000	0.00	32	32	1.00	0.00	None	1
12	GALLOPING (SAG)	0.00256	0	0.0	0.50	57.000	0.00	32	32	1.00	0.00	None	1
13	-20 Deg F	0.00256	0	0.0	0.00	0.000	0.00	-20	-20	1.00	0.00	None	1
14	0 Deg F	0.00256	0	0.0	0.00	0.000	0.00	0	0	1.00	0.00	None	1
15	50 Deg F	0.00256	0	0.0	0.00	0.000	0.00	50	50	1.00	0.00	None	1
16	60 Deg F	0.00256	0	0.0	0.00	0.000	0.00	60	60	1.00	0.00	None	1
17	120 Deg F	0.00256	0	0.0	0.00	0.000	0.00	120	120	1.00	0.00	None	1
18	NU Ice	0.00256	0	0.0	1.00	57.000	0.00	0	0	1.00	0.00	None	1
19	NU Blowout	0.00256	60	9.2	0.00	0.000	0.00	60	60	1.00	0.00	None	1
20	Construction	0.00256	30	2.3	0.00	0.000	0.00	30	30	1.00	0.00	None	1
21	UI Ice	0.00256	56	8.0	0.50	57.000	0.00	0	0	1.00	0.00	None	1
22	NU Extreme Wind 90mph	0.00256	90	20.7	0.00	0.000	0.00	60	60	1.00	0.00	None	1
23	9psf Wind 60 deg F	0.00256	59	9.0	0.00	0.000	0.00	60	60	1.00	0.00	None	1
24	Tower High Wind	0.00256	80	16.4	0.00	0.000	0.00	60	60	1.00	0.00	None	1
25	UI Heavy Ice (Tower)	0.00256	0	0.0	1.50	57.000	0.00	32	32	1.00	0.00	None	1
26	ADSS Survey Temp	0.00256	0	0.0	0.00	0.000	0.00	85	85	1.00	0.00	None	1
27	ADSS 90 Deg Case	0.00256	0	0.0	0.00	0.000	0.00	90	90	1.00	0.00	None	1

Structure Loads Criteria

LC #	WC Load Case #	Description	Cable Condition	Wind Dir.	Bisect Wind Angle	Wire Vert. Load Factor	Wire + Struct. Wind Load Factor	Wire Tension Load Factor	Struct Weight Load Factor	Struct Wind Area Factor	Struct. Wind Load Model	Struct. Ice Thick (in)	Struct. Ice Density (lbs/ft^3)	Pole Tip Deflection Check	Pole Tip Deflect Limit % or (ft)
1	1	NESC Heavy NA+	Load RS	NA+		1.50	2.50	1.65	1.50	1.00	Pre V7 Standard	0.00	0.000	No Limit	0.00
2	1	NESC Heavy NA-	Load RS	NA-		1.50	2.50	1.65	1.50	1.00	Pre V7 Standard	0.00	0.000	No Limit	0.00
3	1	NESC Uplift NA+	Load RS	NA+		1.00	2.50	1.65	1.00	1.00	Pre V7 Standard	0.00	0.000	No Limit	0.00
4	1	NESC Uplift NA-	Load RS	NA-		1.00	2.50	1.65	1.00	1.00	Pre V7 Standard	0.00	0.000	No Limit	0.00
5	4	NESC Ext Wind NA	Load RS	NA+		1.10	1.10	1.10	1.10	1.00	Pre V7 Standard	0.00	0.000	No Limit	0.00
6	4	NESC Ext Wind NA	Load RS	NA-		1.10	1.10	1.10	1.10	1.00	Pre V7 Standard	0.00	0.000	No Limit	0.00
7	1	NESC Ins NA+	Load RS	NA+		1.00	1.00	1.00	1.00	1.00	Pre V7 Standard	0.00	0.000	No Limit	0.00
8	1	NESC Ins NA-	Load RS	NA-		1.00	1.00	1.00	1.00	1.00	Pre V7 Standard	0.00	0.000	No Limit	0.00

9	5	ASCE Ice/Wind NA	Load RS	NA+	1.10	1.10	1.10	1.10	1.00	Pre V7 Standard	0.00	0.000	No Limit	0.00
10	5	ASCE Ice/Wind NA	Load RS	NA-	1.10	1.10	1.10	1.10	1.00	Pre V7 Standard	0.00	0.000	No Limit	0.00
11	18	NU Ice	Load RS	NA+	1.10	1.10	1.10	1.10	1.00	Pre V7 Standard	0.00	0.000	No Limit	0.00
12	24	Tower High Wind	Load RS	NA+	1.10	1.10	1.10	1.10	1.00	Pre V7 Standard	0.00	0.000	No Limit	0.00
13	24	Tower High Wind	Load RS	NA-	1.10	1.10	1.10	1.10	1.00	Pre V7 Standard	0.00	0.000	No Limit	0.00
14	1	Broken SW NA+	Load RS	NA+	1.10	1.10	1.10	1.10	1.00	Pre V7 Standard	0.00	0.000	No Limit	0.00
15	1	Broken SW NA-	Load RS	NA-	1.10	1.10	1.10	1.10	1.00	Pre V7 Standard	0.00	0.000	No Limit	0.00
16	1	Cond SW NA+	Load RS	NA+	1.10	1.10	1.10	1.10	1.00	Pre V7 Standard	0.00	0.000	No Limit	0.00
17	1	Cond SW NA-	Load RS	NA-	1.10	1.10	1.10	1.10	1.00	Pre V7 Standard	0.00	0.000	No Limit	0.00
18	1	Deadend Tower NA	Load RS	NA+	1.00	1.00	1.00	1.00	1.00	Pre V7 Standard	0.00	0.000	No Limit	0.00
19	1	Deadend Tower NA	Load RS	NA-	1.00	1.00	1.00	1.00	1.00	Pre V7 Standard	0.00	0.000	No Limit	0.00
20	25	UI Havey Ice Tow	Load RS	NA+	1.10	1.10	1.10	1.10	1.00	Pre V7 Standard	0.00	0.000	No Limit	0.00
21	25	UI Havey Ice Tow	Load RS	NA-	1.10	1.10	1.10	1.10	1.00	Pre V7 Standard	0.00	0.000	No Limit	0.00

Cable Load Adjustments for each Load Case

LC #	WC #	Load Case Description	Struct Types On Which To Apply	Command 1 Wire(s) Set: Phase: Side:	Command 1 Value (lbs) or %	Command 1
1	1	NESC Heavy NA+	All			
2	1	NESC Heavy NA-	All			
3	1	NESC Uplift NA+	All			
4	1	NESC Uplift NA-	All			
5	4	NESC Ext Wind NA	All			
6	4	NESC Ext Wind NA	All			
7	1	NESC Ins NA+	All			
8	1	NESC Ins NA-	All			
9	5	ASCE Ice/Wind NA	All			
10	5	ASCE Ice/Wind NA	All			
11	18	NU Ice	All			
12	24	Tower High Wind	All TOWER			
13	24	Tower High Wind	All TOWER			
14	1	Broken SW NA+	Non-DeadEnd TOWER	1:1:Ahead # Broken Subconductors	1	
15	1	Broken SW NA-	Non-DeadEnd TOWER	1:1:Ahead # Broken Subconductors	1	
16	1	Cond SW NA+	Non-DeadEnd TOWER	2:1:Ahead # Broken Subconductors	1	
17	1	Cond SW NA-	Non-DeadEnd TOWER	2:1:Ahead # Broken Subconductors	1	
18	1	Deadend Tower NA	DeadEnd TOWER	Ahead Spans # Broken Subconductors	1	
19	1	Deadend Tower NA	DeadEnd TOWER	Ahead Spans # Broken Subconductors	1	
20	25	UI Havey Ice Tow	All TOWER			
21	25	UI Havey Ice Tow	All TOWER			

Span and Wire Summary For Structure Range

Span azimuth is measured clockwise from structure transverse axis (0=transverse, 90=back, 270=ahead)
Azimuth of structure transverse axis is 147.8322 (deg) measured clockwise from North.

Str. No.	Str. Name	LC #	WC #	Load Case Description	Set No.	Phase No.	Attach. Joint Labels	Back span Cable Name	Len. (ft)	Azi. (deg)	Horiz. Load (lbs/ft)	Vert. Load (lbs/ft)	Horiz. Tension (lbs)	Ahead span Cable Name	Len. (ft)	Azi. (deg)	Horiz. Load (lbs/ft)	Vert. Load (lbs/ft)	Horiz. Tension (lbs)
24063	33-cdcsp-01-uwx.120	1	1	NESC Heavy NA+	1	1	TL:SW	brugg_86ay62acs-2c_345_tight.wir	459	90	1.35	1.70	10156	brugg_86ay62acs-2c_345_tight.wir	708	270	1.35	1.70	10155
24063	33-cdcsp-01-uwx.120	1	1		2	1	X1	lapwing_tight.wir	459	90	2.09	4.56	45159	lapwing_tight.wir	708	270	2.09	4.56	45156
24063	33-cdcsp-01-uwx.120	1	1		3	1	Y1	lapwing_tight.wir	459	90	2.09	4.56	45159	lapwing_tight.wir	708	270	2.09	4.56	45156
24063	33-cdcsp-01-uwx.120	1	1		4	1	Z1	lapwing_tight.wir	459	90	2.09	4.56	45159	lapwing_tight.wir	708	270	2.09	4.56	45156
24063	33-cdcsp-01-uwx.120	1	1		5	1	TR:SW	19#10_alumoweld_tight.wir	459	90	1.26	1.61	9773	19#10_alumoweld_tight.wir	708	270	1.26	1.61	9772
24063	33-cdcsp-01-uwx.120	1	1		6	1	X2	lapwing_tight.wir	459	90	2.09	4.56	45168	lapwing_tight.wir	708	270	2.09	4.56	45166
24063	33-cdcsp-01-uwx.120	1	1		7	1	Y2	lapwing_tight.wir	459	90	2.09	4.56	45168	lapwing_tight.wir	708	270	2.09	4.56	45166
24063	33-cdcsp-01-uwx.120	1	1		8	1	Z2	lapwing_tight.wir	459	90	2.09	4.56	45168	lapwing_tight.wir	708	270	2.09	4.56	45166
24063	33-cdcsp-01-uwx.120	2	1	NESC Heavy NA-	1	1	TL:SW	brugg_86ay62acs-2c_345_tight.wir	459	90	1.35	1.70	10156	brugg_86ay62acs-2c_345_tight.wir	708	270	1.35	1.70	10155
24063	33-cdcsp-01-uwx.120	2	1		2	1	X1	lapwing_tight.wir	459	90	2.09	4.56	45159	lapwing_tight.wir	708	270	2.09	4.56	45156
24063	33-cdcsp-01-uwx.120	2	1		3	1	Y1	lapwing_tight.wir	459	90	2.09	4.56	45159	lapwing_tight.wir	708	270	2.09	4.56	45156
24063	33-cdcsp-01-uwx.120	2	1		4	1	Z1	lapwing_tight.wir	459	90	2.09	4.56	45159	lapwing_tight.wir	708	270	2.09	4.56	45156
24063	33-cdcsp-01-uwx.120	2	1		5	1	TR:SW	19#10_alumoweld_tight.wir	459	90	1.26	1.61	9773	19#10_alumoweld_tight.wir	708	270	1.26	1.61	9772
24063	33-cdcsp-01-uwx.120	2	1		6	1	X2	lapwing_tight.wir	459	90	2.09	4.56	45168	lapwing_tight.wir	708	270	2.09	4.56	45166
24063	33-cdcsp-01-uwx.120	2	1		7	1	Y2	lapwing_tight.wir	459	90	2.09	4.56	45168	lapwing_tight.wir	708	270	2.09	4.56	45166
24063	33-cdcsp-01-uwx.120	2	1		8	1	Z2	lapwing_tight.wir	459	90	2.09	4.56	45168	lapwing_tight.wir	708	270	2.09	4.56	45166
24063	33-cdcsp-01-uwx.120	3	1	NESC Uplift NA+	1	1	TL:SW	brugg_86ay62acs-2c_345_tight.wir	459	90	1.35	1.13	10156	brugg_86ay62acs-2c_345_tight.wir	708	270	1.35	1.13	10155
24063	33-cdcsp-01-uwx.120	3	1		2	1	X1	lapwing_tight.wir	459	90	2.09	3.04	45159	lapwing_tight.wir	708	270	2.09	3.04	45156
24063	33-cdcsp-01-uwx.120	3	1		3	1	Y1	lapwing_tight.wir	459	90	2.09	3.04	45159	lapwing_tight.wir	708	270	2.09	3.04	45156
24063	33-cdcsp-01-uwx.120	3	1		4	1	Z1	lapwing_tight.wir	459	90	2.09	3.04	45159	lapwing_tight.wir	708	270	2.09	3.04	45156
24063	33-cdcsp-01-uwx.120	3	1		5	1	TR:SW	19#10_alumoweld_tight.wir	459	90	1.26	1.08	9773	19#10_alumoweld_tight.wir	708	270	1.26	1.08	9772
24063	33-cdcsp-01-uwx.120	3	1		6	1	X2	lapwing_tight.wir	459	90	2.09	3.04	45168	lapwing_tight.wir	708	270	2.09	3.04	45166
24063	33-cdcsp-01-uwx.120	3	1		7	1	Y2	lapwing_tight.wir	459	90	2.09	3.04	45168	lapwing_tight.wir	708	270	2.09	3.04	45166
24063	33-cdcsp-01-uwx.120	3	1		8	1	Z2	lapwing_tight.wir	459	90	2.09	3.04	45168	lapwing_tight.wir	708	270	2.09	3.04	45166
24063	33-cdcsp-01-uwx.120	4	1	NESC Uplift NA-	1	1	TL:SW	brugg_86ay62acs-2c_345_tight.wir	459	90	1.35	1.13	10156	brugg_86ay62acs-2c_345_tight.wir	708	270	1.35	1.13	10155
24063	33-cdcsp-01-uwx.120	4	1		2	1	X1	lapwing_tight.wir	459	90	2.09	3.04	45159	lapwing_tight.wir	708	270	2.09	3.04	45156
24063	33-cdcsp-01-uwx.120	4	1		3	1	Y1	lapwing_tight.wir	459	90	2.09	3.04	45159	lapwing_tight.wir	708	270	2.09	3.04	45156
24063	33-cdcsp-01-uwx.120	4	1		4	1	Z1	lapwing_tight.wir	459	90	2.09	3.04	45159	lapwing_tight.wir	708	270	2.09	3.04	45156
24063	33-cdcsp-01-uwx.120	4	1		5	1	TR:SW	19#10_alumoweld_tight.wir	459	90	1.26	1.08	9773	19#10_alumoweld_tight.wir	708	270	1.26	1.08	9772
24063	33-cdcsp-01-uwx.120	4	1		6	1	X2	lapwing_tight.wir	459	90	2.09	3.04	45168	lapwing_tight.wir	708	270	2.09	3.04	45166
24063	33-cdcsp-01-uwx.120	4	1		7	1	Y2	lapwing_tight.wir	459	90	2.09	3.04	45168	lapwing_tight.wir	708	270	2.09	3.04	45166
24063	33-cdcsp-01-uwx.120	4	1		8	1	Z2	lapwing_tight.wir	459	90	2.09	3.04	45168	lapwing_tight.wir	708	270	2.09	3.04	45166

24063	33-cdcsp-01-uwx.120	5	4	NESC Ext Wind NA	1	1	TL:SW	brugg_86ay62acs-2c_345_tight.wir	459	90	1.83	0.48	6344	brugg_86ay62acs-2c_345_tight.wir	708	270	1.83	0.48	6339
24063	33-cdcsp-01-uwx.120	5	4		2	1	X1	lapwing_tight.wir	459	90	4.43	1.97	30015	lapwing_tight.wir	708	270	4.43	1.97	29995
24063	33-cdcsp-01-uwx.120	5	4		3	1	Y1	lapwing_tight.wir	459	90	4.43	1.97	30015	lapwing_tight.wir	708	270	4.43	1.97	29995
24063	33-cdcsp-01-uwx.120	5	4		4	1	Z1	lapwing_tight.wir	459	90	4.43	1.97	30015	lapwing_tight.wir	708	270	4.43	1.97	29995
24063	33-cdcsp-01-uwx.120	5	4		5	1	TR:SW	19#10_alumoweld_tight.wir	459	90	1.50	0.49	5716	19#10_alumoweld_tight.wir	708	270	1.50	0.49	5712
24063	33-cdcsp-01-uwx.120	5	4		6	1	X2	lapwing_tight.wir	459	90	4.43	1.97	30065	lapwing_tight.wir	708	270	4.43	1.97	30044
24063	33-cdcsp-01-uwx.120	5	4		7	1	Y2	lapwing_tight.wir	459	90	4.43	1.97	30065	lapwing_tight.wir	708	270	4.43	1.97	30044
24063	33-cdcsp-01-uwx.120	5	4		8	1	Z2	lapwing_tight.wir	459	90	4.43	1.97	30065	lapwing_tight.wir	708	270	4.43	1.97	30044
24063	33-cdcsp-01-uwx.120	6	4	NESC Ext Wind NA	1	1	TL:SW	brugg_86ay62acs-2c_345_tight.wir	459	90	1.83	0.48	6344	brugg_86ay62acs-2c_345_tight.wir	708	270	1.83	0.48	6339
24063	33-cdcsp-01-uwx.120	6	4		2	1	X1	lapwing_tight.wir	459	90	4.43	1.97	30015	lapwing_tight.wir	708	270	4.43	1.97	29995
24063	33-cdcsp-01-uwx.120	6	4		3	1	Y1	lapwing_tight.wir	459	90	4.43	1.97	30015	lapwing_tight.wir	708	270	4.43	1.97	29995
24063	33-cdcsp-01-uwx.120	6	4		4	1	Z1	lapwing_tight.wir	459	90	4.43	1.97	30015	lapwing_tight.wir	708	270	4.43	1.97	29995
24063	33-cdcsp-01-uwx.120	6	4		5	1	TR:SW	19#10_alumoweld_tight.wir	459	90	1.50	0.49	5716	19#10_alumoweld_tight.wir	708	270	1.50	0.49	5712
24063	33-cdcsp-01-uwx.120	6	4		6	1	X2	lapwing_tight.wir	459	90	4.43	1.97	30065	lapwing_tight.wir	708	270	4.43	1.97	30044
24063	33-cdcsp-01-uwx.120	6	4		7	1	Y2	lapwing_tight.wir	459	90	4.43	1.97	30065	lapwing_tight.wir	708	270	4.43	1.97	30044
24063	33-cdcsp-01-uwx.120	6	4		8	1	Z2	lapwing_tight.wir	459	90	4.43	1.97	30065	lapwing_tight.wir	708	270	4.43	1.97	30044
24063	33-cdcsp-01-uwx.120	7	1	NESC Ins NA+	1	1	TL:SW	brugg_86ay62acs-2c_345_tight.wir	459	90	0.54	1.13	6155	brugg_86ay62acs-2c_345_tight.wir	708	270	0.54	1.13	6154
24063	33-cdcsp-01-uwx.120	7	1		2	1	X1	lapwing_tight.wir	459	90	0.83	3.04	27369	lapwing_tight.wir	708	270	0.83	3.04	27367
24063	33-cdcsp-01-uwx.120	7	1		3	1	Y1	lapwing_tight.wir	459	90	0.83	3.04	27369	lapwing_tight.wir	708	270	0.83	3.04	27367
24063	33-cdcsp-01-uwx.120	7	1		4	1	Z1	lapwing_tight.wir	459	90	0.83	3.04	27369	lapwing_tight.wir	708	270	0.83	3.04	27367
24063	33-cdcsp-01-uwx.120	7	1		5	1	TR:SW	19#10_alumoweld_tight.wir	459	90	0.50	1.08	5923	19#10_alumoweld_tight.wir	708	270	0.50	1.08	5922
24063	33-cdcsp-01-uwx.120	7	1		6	1	X2	lapwing_tight.wir	459	90	0.83	3.04	27375	lapwing_tight.wir	708	270	0.83	3.04	27373
24063	33-cdcsp-01-uwx.120	7	1		7	1	Y2	lapwing_tight.wir	459	90	0.83	3.04	27375	lapwing_tight.wir	708	270	0.83	3.04	27373
24063	33-cdcsp-01-uwx.120	7	1		8	1	Z2	lapwing_tight.wir	459	90	0.83	3.04	27375	lapwing_tight.wir	708	270	0.83	3.04	27373
24063	33-cdcsp-01-uwx.120	8	1	NESC Ins NA-	1	1	TL:SW	brugg_86ay62acs-2c_345_tight.wir	459	90	0.54	1.13	6155	brugg_86ay62acs-2c_345_tight.wir	708	270	0.54	1.13	6154
24063	33-cdcsp-01-uwx.120	8	1		2	1	X1	lapwing_tight.wir	459	90	0.83	3.04	27369	lapwing_tight.wir	708	270	0.83	3.04	27367
24063	33-cdcsp-01-uwx.120	8	1		3	1	Y1	lapwing_tight.wir	459	90	0.83	3.04	27369	lapwing_tight.wir	708	270	0.83	3.04	27367
24063	33-cdcsp-01-uwx.120	8	1		4	1	Z1	lapwing_tight.wir	459	90	0.83	3.04	27369	lapwing_tight.wir	708	270	0.83	3.04	27367
24063	33-cdcsp-01-uwx.120	8	1		5	1	TR:SW	19#10_alumoweld_tight.wir	459	90	0.50	1.08	5923	19#10_alumoweld_tight.wir	708	270	0.50	1.08	5922
24063	33-cdcsp-01-uwx.120	8	1		6	1	X2	lapwing_tight.wir	459	90	0.83	3.04	27375	lapwing_tight.wir	708	270	0.83	3.04	27373
24063	33-cdcsp-01-uwx.120	8	1		7	1	Y2	lapwing_tight.wir	459	90	0.83	3.04	27375	lapwing_tight.wir	708	270	0.83	3.04	27373
24063	33-cdcsp-01-uwx.120	8	1		8	1	Z2	lapwing_tight.wir	459	90	0.83	3.04	27375	lapwing_tight.wir	708	270	0.83	3.04	27373
24063	33-cdcsp-01-uwx.120	9	5	ASCE Ice/Wind NA	1	1	TL:SW	brugg_86ay62acs-2c_345_tight.wir	459	90	1.24	1.89	7462	brugg_86ay62acs-2c_345_tight.wir	708	270	1.24	1.89	7461
24063	33-cdcsp-01-uwx.120	9	5		2	1	X1	lapwing_tight.wir	459	90	1.76	4.28	31255	lapwing_tight.wir	708	270	1.76	4.28	31251
24063	33-cdcsp-01-uwx.120	9	5		3	1	Y1	lapwing_tight.wir	459	90	1.76	4.28	31255	lapwing_tight.wir	708	270	1.76	4.28	31251
24063	33-cdcsp-01-uwx.120	9	5		4	1	Z1	lapwing_tight.wir	459	90	1.76	4.28	31255	lapwing_tight.wir	708	270	1.76	4.28	31251
24063	33-cdcsp-01-uwx.120	9	5		5	1	TR:SW	19#10_alumoweld_tight.wir	459	90	1.18	1.79	7236	19#10_alumoweld_tight.wir	708	270	1.18	1.79	7234
24063	33-cdcsp-01-uwx.120	9	5		6	1	X2	lapwing_tight.wir	459	90	1.76	4.28	31304	lapwing_tight.wir	708	270	1.76	4.28	31301
24063	33-cdcsp-01-uwx.120	9	5		7	1	Y2	lapwing_tight.wir	459	90	1.76	4.28	31304	lapwing_tight.wir	708	270	1.76	4.28	31301
24063	33-cdcsp-01-uwx.120	9	5		8	1	Z2	lapwing_tight.wir	459	90	1.76	4.28	31304	lapwing_tight.wir	708	270	1.76	4.28	31301
24063	33-cdcsp-01-uwx.120	10	5	ASCE Ice/Wind NA	1	1	TL:SW	brugg_86ay62acs-2c_345_tight.wir	459	90	1.24	1.89	7462	brugg_86ay62acs-2c_345_tight.wir	708	270	1.24	1.89	7461
24063	33-cdcsp-01-uwx.120	10	5		2	1	X1	lapwing_tight.wir	459	90	1.76	4.28	31255	lapwing_tight.wir	708	270	1.76	4.28	31251
24063	33-cdcsp-01-uwx.120	10	5		3	1	Y1	lapwing_tight.wir	459	90	1.76	4.28	31255	lapwing_tight.wir	708	270	1.76	4.28	31251
24063	33-cdcsp-01-uwx.120	10	5		4	1	Z1	lapwing_tight.wir	459	90	1.76	4.28	31255	lapwing_tight.wir	708	270	1.76	4.28	31251
24063	33-cdcsp-01-uwx.120	10	5		5	1	TR:SW	19#10_alumoweld_tight.wir	459	90	1.18	1.79	7236	19#10_alumoweld_tight.wir	708	270	1.18	1.79	7234
24063	33-cdcsp-01-uwx.120	10	5		6	1	X2	lapwing_tight.wir	459	90	1.76	4.28	31304	lapwing_tight.wir	708	270	1.76	4.28	31301
24063	33-cdcsp-01-uwx.120	10	5		7	1	Y2	lapwing_tight.wir	459	90	1.76	4.28	31304	lapwing_tight.wir	708	270	1.76	4.28	31301
24063	33-cdcsp-01-uwx.120	10	5		8	1	Z2	lapwing_tight.wir	459	90	1.76	4.28	31304	lapwing_tight.wir	708	270	1.76	4.28	31301
24063	33-cdcsp-01-uwx.120	11	18	NU Ice	1	1	TL:SW	brugg_86ay62acs-2c_345_tight.wir	459	90	0.00	2.70	8737	brugg_86ay62acs-2c_345_tight.wir	708	270	0.00	2.70	8737
24063	33-cdcsp-01-uwx.120	11	18		2	1	X1	lapwing_tight.wir	459	90	0.00	5.40	38032	lapwing_tight.wir	708	270	0.00	5.40	38032
24063	33-cdcsp-01-uwx.120	11	18		3	1	Y1	lapwing_tight.wir	459	90	0.00	5.40	38032	lapwing_tight.wir	708	270	0.00	5.40	38032
24063	33-cdcsp-01-uwx.120	11	18		4	1	Z1	lapwing_tight.wir	459	90	0.00	5.40	38032	lapwing_tight.wir	708	270	0.00	5.40	38032
24063	33-cdcsp-01-uwx.120	11	18		5	1	TR:SW	19#10_alumoweld_tight.wir	459	90	0.00	2.56	8429	19#10_alumoweld_tight.wir	708	270	0.00	2.56	8429
24063	33-cdcsp-01-uwx.120	11	18		6	1	X2	lapwing_tight.wir	459	90	0.00	5.40	38081	lapwing_tight.wir	708	270	0.00	5.40	38081
24063	33-cdcsp-01-uwx.120	11	18		7	1	Y2	lapwing_tight.wir	459	90	0.00	5.40	38081	lapwing_tight.wir	708	270	0.00	5.40	38081
24063	33-cdcsp-01-uwx.120	11	18		8	1	Z2	lapwing_tight.wir	459	90	0.00	5.40	38081	lapwing_tight.wir	708	270	0.00	5.40	38081

Wire Loads In Span Coordinate System For Structure Range

Wire loads expressed in span coordinate system (Longitudinal axis is line connecting attach. points)
Note: Loads in this report do not include load from counter weights, insulator weight or insulator wind area.

Str. No.	Str. Name	LC #	WC #	Load Case Description	Set No.	Phase No.	Attach. Joint Labels	--Loads from back span-- Vert. (lbs)	Trans. (lbs)	Long. (lbs)	-Loads from ahead span- Vert. (lbs)	Trans. (lbs)	Long. (lbs)	Warnings
24063	33-cdcsp-01-uwx.120	1	1	NESC Heavy NA+	1	1	TL:SW	582	310	10156	962	480	10155	
24063	33-cdcsp-01-uwx.120	1	1		2	1	X1	3061	960	45159	5041	1483	45156	
24063	33-cdcsp-01-uwx.120	1	1		3	1	Y1	3061	960	45159	5041	1483	45156	
24063	33-cdcsp-01-uwx.120	1	1		4	1	Z1	3061	960	45159	5041	1483	45156	
24063	33-cdcsp-01-uwx.120	1	1		5	1	TR:SW	554	289	9773	915	447	9772	
24063	33-cdcsp-01-uwx.120	1	1		6	1	X2	3061	960	45168	5041	1483	45166	
24063	33-cdcsp-01-uwx.120	1	1		7	1	Y2	3061	960	45168	5041	1483	45166	
24063	33-cdcsp-01-uwx.120	1	1		8	1	Z2	3061	960	45168	5041	1483	45166	
24063	33-cdcsp-01-uwx.120	2	1	NESC Heavy NA-	1	1	TL:SW	582	-310	10156	962	-480	10155	
24063	33-cdcsp-01-uwx.120	2	1		2	1	X1	3061	-960	45159	5041	-1483	45156	
24063	33-cdcsp-01-uwx.120	2	1		3	1	Y1	3061	-960	45159	5041	-1483	45156	
24063	33-cdcsp-01-uwx.120	2	1		4	1	Z1	3061	-960	45159	5041	-1483	45156	
24063	33-cdcsp-01-uwx.120	2	1		5	1	TR:SW	554	-289	9773	915	-447	9772	
24063	33-cdcsp-01-uwx.120	2	1		6	1	X2	3061	-960	45168	5041	-1483	45166	
24063	33-cdcsp-01-uwx.120	2	1		7	1	Y2	3061	-960	45168	5041	-1483	45166	
24063	33-cdcsp-01-uwx.120	2	1		8	1	Z2	3061	-960	45168	5041	-1483	45166	
24063	33-cdcsp-01-uwx.120	3	1	NESC Uplift NA+	1	1	TL:SW	388	310	10156	641	480	10155	
24063	33-cdcsp-01-uwx.120	3	1		2	1	X1	2040	960	45159	3361	1483	45156	
24063	33-cdcsp-01-uwx.120	3	1		3	1	Y1	2040	960	45159	3361	1483	45156	
24063	33-cdcsp-01-uwx.120	3	1		4	1	Z1	2040	960	45159	3361	1483	45156	
24063	33-cdcsp-01-uwx.120	3	1		5	1	TR:SW	369	289	9773	610	447	9772	

24063	33-cdcsp-01-uwx.120	3	1		6	1	X2	2040	960	45168	3361	1483	45166	
24063	33-cdcsp-01-uwx.120	3	1		7	1	Y2	2040	960	45168	3361	1483	45166	
24063	33-cdcsp-01-uwx.120	3	1		8	1	Z2	2040	960	45168	3361	1483	45166	
24063	33-cdcsp-01-uwx.120	4	1	NESC Uplift NA-	1	1	TL:SW	388	-310	10156	641	-480	10155	
24063	33-cdcsp-01-uwx.120	4	1		2	1	X1	2040	-960	45159	3361	-1483	45156	
24063	33-cdcsp-01-uwx.120	4	1		3	1	Y1	2040	-960	45159	3361	-1483	45156	
24063	33-cdcsp-01-uwx.120	4	1		4	1	Z1	2040	-960	45159	3361	-1483	45156	
24063	33-cdcsp-01-uwx.120	4	1		5	1	TR:SW	369	-289	9773	610	-447	9772	
24063	33-cdcsp-01-uwx.120	4	1		6	1	X2	2040	-960	45168	3361	-1483	45166	
24063	33-cdcsp-01-uwx.120	4	1		7	1	Y2	2040	-960	45168	3361	-1483	45166	
24063	33-cdcsp-01-uwx.120	4	1		8	1	Z2	2040	-960	45168	3361	-1483	45166	
24063	33-cdcsp-01-uwx.120	5	4	NESC Ext Wind NA	1	1	TL:SW	274	420	6344	475	648	6339	
24063	33-cdcsp-01-uwx.120	5	4		2	1	X1	1679	2036	30015	2843	3148	29995	
24063	33-cdcsp-01-uwx.120	5	4		3	1	Y1	1679	2036	30015	2843	3148	29995	
24063	33-cdcsp-01-uwx.120	5	4		4	1	Z1	1679	2036	30015	2843	3148	29995	
24063	33-cdcsp-01-uwx.120	5	4		5	1	TR:SW	261	344	5716	450	532	5712	
24063	33-cdcsp-01-uwx.120	5	4		6	1	X2	1680	2036	30065	2846	3148	30044	
24063	33-cdcsp-01-uwx.120	5	4		7	1	Y2	1680	2036	30065	2846	3148	30044	
24063	33-cdcsp-01-uwx.120	5	4		8	1	Z2	1680	2036	30065	2846	3148	30044	
24063	33-cdcsp-01-uwx.120	6	4	NESC Ext Wind NA	1	1	TL:SW	274	-420	6344	475	-648	6339	
24063	33-cdcsp-01-uwx.120	6	4		2	1	X1	1679	-2036	30015	2843	-3148	29995	
24063	33-cdcsp-01-uwx.120	6	4		3	1	Y1	1679	-2036	30015	2843	-3148	29995	
24063	33-cdcsp-01-uwx.120	6	4		4	1	Z1	1679	-2036	30015	2843	-3148	29995	
24063	33-cdcsp-01-uwx.120	6	4		5	1	TR:SW	261	-344	5716	450	-532	5712	
24063	33-cdcsp-01-uwx.120	6	4		6	1	X2	1680	-2036	30065	2846	-3148	30044	
24063	33-cdcsp-01-uwx.120	6	4		7	1	Y2	1680	-2036	30065	2846	-3148	30044	
24063	33-cdcsp-01-uwx.120	6	4		8	1	Z2	1680	-2036	30065	2846	-3148	30044	
24063	33-cdcsp-01-uwx.120	7	1	NESC Ins NA+	1	1	TL:SW	388	124	6155	641	192	6154	
24063	33-cdcsp-01-uwx.120	7	1		2	1	X1	2040	384	27369	3361	593	27367	
24063	33-cdcsp-01-uwx.120	7	1		3	1	Y1	2040	384	27369	3361	593	27367	
24063	33-cdcsp-01-uwx.120	7	1		4	1	Z1	2040	384	27369	3361	593	27367	
24063	33-cdcsp-01-uwx.120	7	1		5	1	TR:SW	369	116	5923	610	179	5922	
24063	33-cdcsp-01-uwx.120	7	1		6	1	X2	2040	384	27375	3361	593	27373	
24063	33-cdcsp-01-uwx.120	7	1		7	1	Y2	2040	384	27375	3361	593	27373	
24063	33-cdcsp-01-uwx.120	7	1		8	1	Z2	2040	384	27375	3361	593	27373	
24063	33-cdcsp-01-uwx.120	8	1	NESC Ins NA-	1	1	TL:SW	388	-124	6155	641	-192	6154	
24063	33-cdcsp-01-uwx.120	8	1		2	1	X1	2040	-384	27369	3361	-593	27367	
24063	33-cdcsp-01-uwx.120	8	1		3	1	Y1	2040	-384	27369	3361	-593	27367	
24063	33-cdcsp-01-uwx.120	8	1		4	1	Z1	2040	-384	27369	3361	-593	27367	
24063	33-cdcsp-01-uwx.120	8	1		5	1	TR:SW	369	-116	5923	610	-179	5922	
24063	33-cdcsp-01-uwx.120	8	1		6	1	X2	2040	-384	27375	3361	-593	27373	
24063	33-cdcsp-01-uwx.120	8	1		7	1	Y2	2040	-384	27375	3361	-593	27373	
24063	33-cdcsp-01-uwx.120	8	1		8	1	Z2	2040	-384	27375	3361	-593	27373	
24063	33-cdcsp-01-uwx.120	9	5	ASCE Ice/Wind NA	1	1	TL:SW	626	286	7462	1029	442	7461	
24063	33-cdcsp-01-uwx.120	9	5		2	1	X1	2775	811	31255	4549	1254	31251	
24063	33-cdcsp-01-uwx.120	9	5		3	1	Y1	2775	811	31255	4549	1254	31251	
24063	33-cdcsp-01-uwx.120	9	5		4	1	Z1	2775	811	31255	4549	1254	31251	
24063	33-cdcsp-01-uwx.120	9	5		5	1	TR:SW	597	271	7236	983	419	7234	
24063	33-cdcsp-01-uwx.120	9	5		6	1	X2	2776	811	31304	4552	1254	31301	
24063	33-cdcsp-01-uwx.120	9	5		7	1	Y2	2776	811	31304	4552	1254	31301	
24063	33-cdcsp-01-uwx.120	9	5		8	1	Z2	2776	811	31304	4552	1254	31301	
24063	33-cdcsp-01-uwx.120	10	5	ASCE Ice/Wind NA	1	1	TL:SW	626	-286	7462	1029	-442	7461	
24063	33-cdcsp-01-uwx.120	10	5		2	1	X1	2775	-811	31255	4549	-1254	31251	
24063	33-cdcsp-01-uwx.120	10	5		3	1	Y1	2775	-811	31255	4549	-1254	31251	
24063	33-cdcsp-01-uwx.120	10	5		4	1	Z1	2775	-811	31255	4549	-1254	31251	
24063	33-cdcsp-01-uwx.120	10	5		5	1	TR:SW	597	-271	7236	983	-419	7234	
24063	33-cdcsp-01-uwx.120	10	5		6	1	X2	2776	-811	31304	4552	-1254	31301	
24063	33-cdcsp-01-uwx.120	10	5		7	1	Y2	2776	-811	31304	4552	-1254	31301	
24063	33-cdcsp-01-uwx.120	10	5		8	1	Z2	2776	-811	31304	4552	-1254	31301	
24063	33-cdcsp-01-uwx.120	11	18	NU Ice	1	1	TL:SW	845	0	8737	1379	0	8737	
24063	33-cdcsp-01-uwx.120	11	18		2	1	X1	3461	0	38032	5666	0	38032	
24063	33-cdcsp-01-uwx.120	11	18		3	1	Y1	3461	0	38032	5666	0	38032	
24063	33-cdcsp-01-uwx.120	11	18		4	1	Z1	3461	0	38032	5666	0	38032	
24063	33-cdcsp-01-uwx.120	11	18		5	1	TR:SW	805	0	8429	1315	0	8429	
24063	33-cdcsp-01-uwx.120	11	18		6	1	X2	3462	0	38081	5669	0	38081	
24063	33-cdcsp-01-uwx.120	11	18		7	1	Y2	3462	0	38081	5669	0	38081	
24063	33-cdcsp-01-uwx.120	11	18		8	1	Z2	3462	0	38081	5669	0	38081	

Wire Loads In Structure Coordinate System For Structure Range

Note: Loads in this report include load from counter weights, insulator weight and insulator wind area.

Str. No.	Str. Name	LC #	WC #	Load Case Description	Set No.	Phase No.	Attach. Joint Labels	----Structure Loads---- Vert. (lbs)	Trans. (lbs)	Long. (lbs)	--Loads from back span- Vert. (lbs)	Trans. (lbs)	Long. (lbs)	-Loads from ahead span- Vert. (lbs)	Trans. (lbs)	Long. (lbs)	Warnings
24063	33-cdcsp-01-uwx.120	1	1	NESC Heavy NA+	1	1	TL:SW	1544	790	2	582	310	10156	962	480	-10155	
24063	33-cdcsp-01-uwx.120	1	1		2	1	X1	8477	2443	3	3248	960	45159	5229	1483	-45156	
24063	33-cdcsp-01-uwx.120	1	1		3	1	Y1	8477	2443	3	3248	960	45159	5229	1483	-45156	
24063	33-cdcsp-01-uwx.120	1	1		4	1	Z1	8477	2443	3	3248	960	45159	5229	1483	-45156	
24063	33-cdcsp-01-uwx.120	1	1		5	1	TR:SW	1468	736	1	554	289	9773	915	447	-9772	
24063	33-cdcsp-01-uwx.120	1	1		6	1	X2	8477	2443	3	3248	960	45168	5229	1483	-45166	
24063	33-cdcsp-01-uwx.120	1	1		7	1	Y2	8477	2443	3	3248	960	45168	5229	1483	-45166	
24063	33-cdcsp-01-uwx.120	1	1		8	1	Z2	8477	2443	3	3248	960	45168	5229	1483	-45166	
24063	33-cdcsp-01-uwx.120	2	1	NESC Heavy NA-	1	1	TL:SW	1544	-790	2	582	-310	10156	962	-480	-10155	
24063	33-cdcsp-01-uwx.120	2	1		2	1	X1	8477	-2443	3	3248	-960	45159	5229	-1483	-45156	
24063	33-cdcsp-01-uwx.120	2	1		3	1	Y1	8477	-2443	3	3248	-960	45159	5229	-1483	-45156	

24063	33-cdcsp-01-uwx.120	2	1		4	1	Z1	8477	-2443	3	3248	-960	45159	5229	-1483	-45156
24063	33-cdcsp-01-uwx.120	2	1		5	1	TR:SW	1468	-736	1	554	-289	9773	915	-447	-9772
24063	33-cdcsp-01-uwx.120	2	1		6	1	X2	8477	-2443	3	3248	-960	45168	5229	-1483	-45166
24063	33-cdcsp-01-uwx.120	2	1		7	1	Y2	8477	-2443	3	3248	-960	45168	5229	-1483	-45166
24063	33-cdcsp-01-uwx.120	2	1		8	1	Z2	8477	-2443	3	3248	-960	45168	5229	-1483	-45166
24063	33-cdcsp-01-uwx.120	3	1	NESC Uplift NA+	1	1	TL:SW	1029	790	2	388	310	10156	641	480	-10155
24063	33-cdcsp-01-uwx.120	3	1		2	1	X1	5651	2443	3	2165	960	45159	3486	1483	-45156
24063	33-cdcsp-01-uwx.120	3	1		3	1	Y1	5651	2443	3	2165	960	45159	3486	1483	-45156
24063	33-cdcsp-01-uwx.120	3	1		4	1	Z1	5651	2443	3	2165	960	45159	3486	1483	-45156
24063	33-cdcsp-01-uwx.120	3	1		5	1	TR:SW	979	736	1	369	289	9773	610	447	-9772
24063	33-cdcsp-01-uwx.120	3	1		6	1	X2	5651	2443	3	2165	960	45168	3486	1483	-45166
24063	33-cdcsp-01-uwx.120	3	1		7	1	Y2	5651	2443	3	2165	960	45168	3486	1483	-45166
24063	33-cdcsp-01-uwx.120	3	1		8	1	Z2	5651	2443	3	2165	960	45168	3486	1483	-45166
24063	33-cdcsp-01-uwx.120	4	1	NESC Uplift NA-	1	1	TL:SW	1029	-790	2	388	-310	10156	641	-480	-10155
24063	33-cdcsp-01-uwx.120	4	1		2	1	X1	5651	-2443	3	2165	-960	45159	3486	-1483	-45156
24063	33-cdcsp-01-uwx.120	4	1		3	1	Y1	5651	-2443	3	2165	-960	45159	3486	-1483	-45156
24063	33-cdcsp-01-uwx.120	4	1		4	1	Z1	5651	-2443	3	2165	-960	45159	3486	-1483	-45156
24063	33-cdcsp-01-uwx.120	4	1		5	1	TR:SW	979	-736	1	369	-289	9773	610	-447	-9772
24063	33-cdcsp-01-uwx.120	4	1		6	1	X2	5651	-2443	3	2165	-960	45168	3486	-1483	-45166
24063	33-cdcsp-01-uwx.120	4	1		7	1	Y2	5651	-2443	3	2165	-960	45168	3486	-1483	-45166
24063	33-cdcsp-01-uwx.120	4	1		8	1	Z2	5651	-2443	3	2165	-960	45168	3486	-1483	-45166
24063	33-cdcsp-01-uwx.120	5	4	NESC Ext Wind NA	1	1	TL:SW	749	1068	5	274	420	6344	475	648	-6339
24063	33-cdcsp-01-uwx.120	5	4		2	1	X1	4797	5184	21	1817	2036	30015	2981	3148	-29995
24063	33-cdcsp-01-uwx.120	5	4		3	1	Y1	4797	5184	21	1817	2036	30015	2981	3148	-29995
24063	33-cdcsp-01-uwx.120	5	4		4	1	Z1	4797	5184	21	1817	2036	30015	2981	3148	-29995
24063	33-cdcsp-01-uwx.120	5	4		5	1	TR:SW	710	877	4	261	344	5716	450	532	-5712
24063	33-cdcsp-01-uwx.120	5	4		6	1	X2	4801	5184	21	1818	2036	30065	2983	3148	-30044
24063	33-cdcsp-01-uwx.120	5	4		7	1	Y2	4801	5184	21	1818	2036	30065	2983	3148	-30044
24063	33-cdcsp-01-uwx.120	5	4		8	1	Z2	4801	5184	21	1818	2036	30065	2983	3148	-30044
24063	33-cdcsp-01-uwx.120	6	4	NESC Ext Wind NA	1	1	TL:SW	749	-1068	5	274	-420	6344	475	-648	-6339
24063	33-cdcsp-01-uwx.120	6	4		2	1	X1	4797	-5184	21	1817	-2036	30015	2981	-3148	-29995
24063	33-cdcsp-01-uwx.120	6	4		3	1	Y1	4797	-5184	21	1817	-2036	30015	2981	-3148	-29995
24063	33-cdcsp-01-uwx.120	6	4		4	1	Z1	4797	-5184	21	1817	-2036	30015	2981	-3148	-29995
24063	33-cdcsp-01-uwx.120	6	4		5	1	TR:SW	710	-877	4	261	-344	5716	450	-532	-5712
24063	33-cdcsp-01-uwx.120	6	4		6	1	X2	4801	-5184	21	1818	-2036	30065	2983	-3148	-30044
24063	33-cdcsp-01-uwx.120	6	4		7	1	Y2	4801	-5184	21	1818	-2036	30065	2983	-3148	-30044
24063	33-cdcsp-01-uwx.120	6	4		8	1	Z2	4801	-5184	21	1818	-2036	30065	2983	-3148	-30044
24063	33-cdcsp-01-uwx.120	7	1	NESC Ins NA+	1	1	TL:SW	1029	316	1	388	124	6155	641	192	-6154
24063	33-cdcsp-01-uwx.120	7	1		2	1	X1	5651	977	2	2165	384	27369	3486	593	-27367
24063	33-cdcsp-01-uwx.120	7	1		3	1	Y1	5651	977	2	2165	384	27369	3486	593	-27367
24063	33-cdcsp-01-uwx.120	7	1		4	1	Z1	5651	977	2	2165	384	27369	3486	593	-27367
24063	33-cdcsp-01-uwx.120	7	1		5	1	TR:SW	979	294	1	369	116	5923	610	179	-5922
24063	33-cdcsp-01-uwx.120	7	1		6	1	X2	5651	977	2	2165	384	27375	3486	593	-27373
24063	33-cdcsp-01-uwx.120	7	1		7	1	Y2	5651	977	2	2165	384	27375	3486	593	-27373
24063	33-cdcsp-01-uwx.120	7	1		8	1	Z2	5651	977	2	2165	384	27375	3486	593	-27373
24063	33-cdcsp-01-uwx.120	8	1	NESC Ins NA-	1	1	TL:SW	1029	-316	1	388	-124	6155	641	-192	-6154
24063	33-cdcsp-01-uwx.120	8	1		2	1	X1	5651	-977	2	2165	-384	27369	3486	-593	-27367
24063	33-cdcsp-01-uwx.120	8	1		3	1	Y1	5651	-977	2	2165	-384	27369	3486	-593	-27367
24063	33-cdcsp-01-uwx.120	8	1		4	1	Z1	5651	-977	2	2165	-384	27369	3486	-593	-27367
24063	33-cdcsp-01-uwx.120	8	1		5	1	TR:SW	979	-294	1	369	-116	5923	610	-179	-5922
24063	33-cdcsp-01-uwx.120	8	1		6	1	X2	5651	-977	2	2165	-384	27375	3486	-593	-27373
24063	33-cdcsp-01-uwx.120	8	1		7	1	Y2	5651	-977	2	2165	-384	27375	3486	-593	-27373
24063	33-cdcsp-01-uwx.120	8	1		8	1	Z2	5651	-977	2	2165	-384	27375	3486	-593	-27373
24063	33-cdcsp-01-uwx.120	9	5	ASCE Ice/Wind NA	1	1	TL:SW	1655	728	2	626	286	7462	1029	442	-7461
24063	33-cdcsp-01-uwx.120	9	5		2	1	X1	7599	2064	4	2912	811	31255	4687	1254	-31251
24063	33-cdcsp-01-uwx.120	9	5		3	1	Y1	7599	2064	4	2912	811	31255	4687	1254	-31251
24063	33-cdcsp-01-uwx.120	9	5		4	1	Z1	7599	2064	4	2912	811	31255	4687	1254	-31251
24063	33-cdcsp-01-uwx.120	9	5		5	1	TR:SW	1579	690	2	597	271	7236	983	419	-7234
24063	33-cdcsp-01-uwx.120	9	5		6	1	X2	7603	2064	4	2914	811	31304	4689	1254	-31301
24063	33-cdcsp-01-uwx.120	9	5		7	1	Y2	7603	2064	4	2914	811	31304	4689	1254	-31301
24063	33-cdcsp-01-uwx.120	9	5		8	1	Z2	7603	2064	4	2914	811	31304	4689	1254	-31301
24063	33-cdcsp-01-uwx.120	10	5	ASCE Ice/Wind NA	1	1	TL:SW	1655	-728	2	626	-286	7462	1029	-442	-7461
24063	33-cdcsp-01-uwx.120	10	5		2	1	X1	7599	-2064	4	2912	-811	31255	4687	-1254	-31251
24063	33-cdcsp-01-uwx.120	10	5		3	1	Y1	7599	-2064	4	2912	-811	31255	4687	-1254	-31251
24063	33-cdcsp-01-uwx.120	10	5		4	1	Z1	7599	-2064	4	2912	-811	31255	4687	-1254	-31251
24063	33-cdcsp-01-uwx.120	10	5		5	1	TR:SW	1579	-690	2	597	-271	7236	983	-419	-7234
24063	33-cdcsp-01-uwx.120	10	5		6	1	X2	7603	-2064	4	2914	-811	31304	4689	-1254	-31301
24063	33-cdcsp-01-uwx.120	10	5		7	1	Y2	7603	-2064	4	2914	-811	31304	4689	-1254	-31301
24063	33-cdcsp-01-uwx.120	10	5		8	1	Z2	7603	-2064	4	2914	-811	31304	4689	-1254	-31301
24063	33-cdcsp-01-uwx.120	11	18	NU Ice	1	1	TL:SW	2224	0	0	845	0	8737	1379	0	-8737
24063	33-cdcsp-01-uwx.120	11	18		2	1	X1	9403	0	-0	3599	0	38032	5804	0	-38032
24063	33-cdcsp-01-uwx.120	11	18		3	1	Y1	9403	0	0	3599	0	38032	5804	0	-38032
24063	33-cdcsp-01-uwx.120	11	18		4	1	Z1	9403	0	0	3599	0	38032	5804	0	-38032
24063	33-cdcsp-01-uwx.120	11	18		5	1	TR:SW	2120	0	0	805	0	8429	1315	0	-8429
24063	33-cdcsp-01-uwx.120	11	18		6	1	X2	9406	0	0	3600	0	38081	5806	0	-38081
24063	33-cdcsp-01-uwx.120	11	18		7	1	Y2	9406	0	0	3600	0	38081	5806	0	-38081
24063	33-cdcsp-01-uwx.120	11	18		8	1	Z2	9406	0	0	3600	0	38081	5806	0	-38081

Wire Load Induced Ground Line Moments For Single Pole Centered At Structure Origin For Structure Range

Note: not applicable to guyed structures or frames. These approximate values do not include nonlinear (P-delta) effects or wind on pole. ??

Str. No.	Str. Name	LC #	WC #	Load Case Description	Vert. Load (kips)	Trans. Shear (kips)	Long. Shear (kips)	Resultant Shear (kips)	Trans. Moment (ft-k)	Long. Moment (ft-k)	Resultant Moment (ft-k)
24063	33-cdcsp-01-uwx.120	1	1	NESC Heavy NA+	53.873	16.184	0.019	16.184	1603.269	1.879	1603.270

24063	33-cdcsp-01-uwx.120	2	1	NESC Heavy NA-	53.873	-16.184	0.019	16.184	-1606.647	1.879	1606.649
24063	33-cdcsp-01-uwx.120	3	1	NESC Uplift NA+	35.915	16.184	0.019	16.184	1603.832	1.879	1603.833
24063	33-cdcsp-01-uwx.120	4	1	NESC Uplift NA-	35.915	-16.184	0.019	16.184	-1606.084	1.879	1606.085
24063	33-cdcsp-01-uwx.120	5	4	NESC Ext Wind NA	30.255	33.050	0.133	33.050	3249.858	13.098	3249.884
24063	33-cdcsp-01-uwx.120	6	4	NESC Ext Wind NA	30.255	-33.050	0.133	33.050	-3251.257	13.098	3251.284
24063	33-cdcsp-01-uwx.120	7	1	NESC Ins NA+	35.915	6.474	0.011	6.474	640.857	1.139	640.858
24063	33-cdcsp-01-uwx.120	8	1	NESC Ins NA-	35.915	-6.474	0.011	6.474	-643.109	1.139	643.111
24063	33-cdcsp-01-uwx.120	9	5	ASCE Ice/Wind NA	48.840	13.805	0.026	13.805	1370.138	2.612	1370.140
24063	33-cdcsp-01-uwx.120	10	5	ASCE Ice/Wind NA	48.840	-13.805	0.026	13.805	-1373.218	2.612	1373.220
24063	33-cdcsp-01-uwx.120	11	18	NU Ice	60.771	0.000	-0.000	0.000	-2.180	-0.000	2.180

Basic factored design wind pressure on structure For Structure Range

Str. No.	Str. Name	LC #	WC #	Load Case Description	Trans. Wind Press. (psf)	Long. Wind Press. (psf)	Notes
24063	33-cdcsp-01-uwx.120	1	1	NESC Heavy NA+	10.0	0.0	
24063	33-cdcsp-01-uwx.120	2	1	NESC Heavy NA-	-10.0	-0.0	
24063	33-cdcsp-01-uwx.120	3	1	NESC Uplift NA+	10.0	0.0	
24063	33-cdcsp-01-uwx.120	4	1	NESC Uplift NA-	-10.0	-0.0	
24063	33-cdcsp-01-uwx.120	5	4	NESC Ext Wind NA	35.3	0.0	
24063	33-cdcsp-01-uwx.120	6	4	NESC Ext Wind NA	-35.3	-0.0	
24063	33-cdcsp-01-uwx.120	7	1	NESC Ins NA+	4.0	0.0	
24063	33-cdcsp-01-uwx.120	8	1	NESC Ins NA-	-4.0	-0.0	
24063	33-cdcsp-01-uwx.120	9	5	ASCE Ice/Wind NA	7.0	0.0	
24063	33-cdcsp-01-uwx.120	10	5	ASCE Ice/Wind NA	-7.0	-0.0	
24063	33-cdcsp-01-uwx.120	11	18	NU Ice	0.0	0.0	

Equipment Loads - TIA-222-G Calculations

Design Data as per TIA-222-G

Wind Speed w/o Ice:	$V := 97$	mph	User Input - See 2016 CT State Building Code - Appendix N
Wind Speed w/ Ice:	$Vi := 50$	mph	User Input - See Annex B of TIA-222-G
Service Wind Speed:	$V_{service_loads} := 60$	mph	Section 2.8.3 - TIA-222-G
Service Importance Factor:	$I_{service_loads} := 1$		Section 2.8.3 - TIA-222-G
Directionality Factor:	$Kd_{service_loads} := 0.85$		Section 2.8.3 - TIA-222-G
Radial Ice Thickness:	$ti := 0.75\ in$		User Input - See Annex B of TIA-222-G
Radial Ice Density:	$Id := 57\ pcf$		User Input - See Annex B of TIA-222-G
Height to Center of Antennas:	$z_{carrier_1} := 130\ ft$		User Input
Structure Type:	$ST :=$ "Pole"		User Input
Structure Class:	$SC :=$ "III"		User Input - Table 2-1 - TIA-222-G
Exposure Category:	$Exp :=$ "C"		User Input - Section 2.6.5.1 - TIA-222-G
Wind Direction Probability Factor:	$Kd := 0.95$		User Input - Table 2-2 - TIA-222-G
Importance Factor, Wind:	$I_{wind} := 1.15$		User Input - Table 2-3 - TIA-222-G
Importance Factor, Ice:	$I_{Ice} := 1.25$		User Input - Table 2-3 - TIA-222-G
Importance Factor, Ice With Wind:	$I_{IcewWind} := 1$		User Input - Table 2-3 - TIA-222-G
Exposure Category Coefficient:	$Zg := 900\ ft$		User Input - Table 2-4 - TIA-222-G
Exposure Category Coefficient:	$\alpha := 9.5$		User Input - Table 2-4 - TIA-222-G
Gust Response Factor:	$G_H := 1.35$		User Input - Section 2.6.7.4 - TIA-222-G - Tubular Spine
Shielding Factor:	$K_a := 0.8$		User Input - Section 2.6.9.2.2 - TIA-222-G
Velocity Pressure Coefficient:	$Kz_{carrier_1} := 2.01 \left(\frac{z_{carrier_1}}{Zg}\right)^{\frac{2}{\alpha}} = 1.34$		Section 2.6.5.2 - TIA-222-G
	$Kzt := 1.0$		Section 2.6.6.4 - TIA-222-G
Velocity Pressure w/o Ice:	$qz_{carrier_1} := 0.00256 \cdot Kd \cdot Kz_{carrier_1} \cdot Kzt \cdot V^2 \cdot I_{wind} \cdot psf = 35.2\ psf$		
Velocity Pressure w/ Ice:	$qz_{ice_carrier_1} := 0.00256 \cdot Kd \cdot Kz_{carrier_1} \cdot Kzt \cdot Vi^2 \cdot I_{IcewWind} \cdot psf = 8.13\ psf$		
Height Escalation Factor for Ice Thickness:	$Kiz := \left(\frac{z_{carrier_1}}{33\ ft}\right)^{0.1} = 1.15$		
Factored Ice Thickness:	$tiz := 2.0 \cdot ti \cdot I_{Ice} \cdot Kiz \cdot Kzt^{0.35} = 2.15\ in$		Section 2.6.8 - TIA-222-G

Standard Equipment Calculations - Equipment 1 (Front Wind)

Equipment Properties

Antenna Carrier:	AT&T	User Defined
Equipment Model:	Proposed Antenna Kathrein - 800-10965	User Defined
Equipment Shape:	Flat	User Defined
Equipment Height:	$L_{eq_1} := 78.7 \cdot in$	User Defined
Equipment Width:	$W_{eq_1} := 20 \cdot in$	User Defined
Equipment Depth:	$D_{eq_1} := 6.9\ in$	User Defined
Equipment Weight:	$WT_{eq_1} := 108.6 \cdot lbf$	User Defined
Equipment Volume:	$V_{eq_1} := L_{eq_1} \cdot W_{eq_1} \cdot D_{eq_1} = 6.29\ ft^3$	
Equipment Quantity:	$N_{eq_1} := 1$	User Defined
Equippment Aspect Ratio:	$Ar_{eq_1} := \frac{L_{eq_1}}{W_{eq_1}} = 3.94$	
Mast Force Coefficient:	$Ca_{eq_1} := 1.2 + \frac{(Ar_{eq_1} - 2.5)}{4.5} \cdot 0.2 = 1.26$	As per Table 2-8 (Flat) - TIA-222-G

Equipment Wind Loads

Equipment Projected Area:	$SA_{eq_1} := L_{eq_1} \cdot W_{eq_1} = 10.93\ ft^2$	
Equipment Wind Force (All):	$F_{eq_1} := qz_{carrier_1} \cdot G_H \cdot Ca_{eq_1} \cdot SA_{eq_1} \cdot N_{eq_1} \cdot K_a = 525\ lbf$	BLC 7 Member Point Load

Equipment Wind Loads (w/ Ice)

Equipment Projected Area (w/ Ice):	$A_ice_{eq_1} := (L_{eq_1} + 2 \cdot tiz) \cdot (W_{eq_1} + 2 \cdot tiz) = 14\ ft^2$	
Equipment Wind Force (w/ Ice) (All):	$Fi_{eq_1} := qz_{ice_carrier_1} \cdot G_H \cdot Ca_{eq_1} \cdot A_ice_{eq_1} \cdot N_{eq_1} \cdot K_a = 155\ lbf$	BLC 5 Member Point Load

Equipment Vertical Loads

Weight of Equipment (All):	$WT_{eq_1} \cdot N_{eq_1} = 108.6\ lbf$	BLC 2 Member Point Load

Equipment Vertical Loads (Ice Only)

Volume of Ice on Equipment:	$V_{ice_eq_1} := (L_{eq_1} + 2 \cdot tiz) \cdot (W_{eq_1} + 2 \cdot tiz) \cdot (D_{eq_1} + 2 \cdot tiz) - V_{eq_1} = 6.79\ ft^3$	
Weight of Ice on Equipment (All):	$WT_{ice_eq_1} := V_{ice_eq_1} \cdot Id \cdot N_{eq_1} = 387\ lbf$	BLC 3 Member Point Load

Standard Equipment Calculations - Equipment 1 (Side Wind)

Equipment Properties

Antenna Carrier:	AT&T	User Defined
Equipment Model:	Proposed Antenna Kathrein - 800-10965	User Defined
Equipment Shape:	Flat	User Defined
Equipment Height:	$L_{eq_1} := 78.7 \cdot in$	User Defined
Equipment Width:	$W_{eq_1} := 20 \cdot in$	User Defined
Equipment Depth:	$D_{eq_1} := 6.9\ in$	User Defined
Equipment Weight:	$WT_{eq_1} := 108.6 \cdot lbf$	User Defined
Equipment Volume:	$V_{eq_1} := L_{eq_1} \cdot W_{eq_1} \cdot D_{eq_1} = 6.29\ ft^3$	
Equipment Quantity:	$N_{eq_1} := 1$	User Defined
Equippment Aspect Ratio:	$Ar_{eq_1} := \frac{L_{eq_1}}{D_{eq_1}} = 11.41$	
Mast Force Coefficient:	$Ca_{eq_1} := 1.4 + \frac{(Ar_{eq_1} - 7)}{18} \cdot 0.6 = 1.55$	As per Table 2-8 (Flat) - TIA-222-G

Equipment Wind Loads

Equipment Projected Area:	$SA_{eq_1} := L_{eq_1} \cdot D_{eq_1} = 3.77\ ft^2$	
Equipment Wind Force (All):	$F_{eq_1} := qz_{carrier_1} \cdot G_H \cdot Ca_{eq_1} \cdot SA_{eq_1} \cdot N_{eq_1} \cdot K_a = 222\ lbf$	**BLC 6** Member Point Load

Equipment Wind Loads (w/ Ice)

Equipment Projected Area (w/ Ice):	$A_ice_{eq_1} := (L_{eq_1} + 2 \cdot tiz) \cdot (D_{eq_1} + 2 \cdot tiz) = 6\ ft^2$	
Equipment Wind Force (w/ Ice) (All):	$Fi_{eq_1} := qz_{ice_carrier_1} \cdot G_H \cdot Ca_{eq_1} \cdot A_ice_{eq_1} \cdot N_{eq_1} \cdot K_a = 88\ lbf$	**BLC 4** Member Point Load

Equipment Vertical Loads

Weight of Equipment (All):	$WT_{eq_1} \cdot N_{eq_1} = 108.6\ lbf$	**BLC 2** Member Point Load

Standard Equipment Calculations - Equipment 2 (Front Wind)

Equipment Properties

Antenna Carrier:	AT&T	User Defined
Equipment Model:	Existing TMA Kaelus - TMA2117F00V1-1	User Defined
Equipment Shape:	Flat	User Defined
Equipment Height:	$L_{eq_2} := 11.8 \cdot in$	User Defined
Equipment Width:	$W_{eq_2} := 9.8 \cdot in$	User Defined
Equipment Depth:	$D_{eq_2} := 4.7\ in$	User Defined
Equipment Weight:	$WT_{eq_2} := 26 \cdot lbf$	User Defined
Equipment Volume:	$V_{eq_2} := L_{eq_2} \cdot W_{eq_2} \cdot D_{eq_2} = 0.31\ ft^3$	
Equipment Quantity:	$N_{eq_2} := 2$	User Defined
Equippment Aspect Ratio:	$Ar_{eq_2} := \frac{L_{eq_2}}{W_{eq_2}} = 1.2$	
Mast Force Coefficient:	$Ca_{eq_2} := 1.2$	As per Table 2-8 (Flat) - TIA-222-G

Equipment Wind Loads

Equipment Projected Area:	$SA_{eq_2} := L_{eq_2} \cdot W_{eq_2} = 0.8\ ft^2$	
Equipment Wind Force (All):	$F_{eq_2} := qz_{carrier_1} \cdot G_H \cdot Ca_{eq_2} \cdot SA_{eq_2} \cdot N_{eq_2} \cdot K_a = 73\ lbf$	**BLC 7** Member Point Load

Equipment Wind Loads (w/ Ice)

Equipment Projected Area (w/ Ice):	$A_ice_{eq_2} := (L_{eq_2} + 2 \cdot tiz) \cdot (W_{eq_2} + 2 \cdot tiz) = 2\ ft^2$	
Equipment Wind Force (w/ Ice) (All):	$Fi_{eq_2} := qz_{ice_carrier_1} \cdot G_H \cdot Ca_{eq_2} \cdot A_ice_{eq_2} \cdot N_{eq_2} \cdot K_a = 33\ lbf$	**BLC 5** Member Point Load

Equipment Vertical Loads

Weight of Equipment (All):	$WT_{eq_2} \cdot N_{eq_2} = 52\ lbf$	**BLC 2** Member Point Load

Equipment Vertical Loads (Ice Only)

Volume of Ice on Equipment:	$V_{ice_eq_2} := (L_{eq_2} + 2 \cdot tiz) \cdot (W_{eq_2} + 2 \cdot tiz) \cdot (D_{eq_2} + 2 \cdot tiz) - V_{eq_2} = 0.87\ ft^3$	
Weight of Ice on Equipment (All):	$WT_{ice_eq_2} := V_{ice_eq_2} \cdot Id \cdot N_{eq_2} = 99\ lbf$	**BLC 3** Member Point Load

Standard Equipment Calculations - Equipment 2 (Side Wind)

Equipment Properties

Antenna Carrier:	AT&T	User Defined
Equipment Model:	Existing TMA Kaelus - TMA2117F00V1-1	User Defined
Equipment Shape:	Flat	User Defined
Equipment Height:	$L_{eq_2} := 11.8 \cdot in$	User Defined
Equipment Width:	$W_{eq_2} := 9.8 \cdot in$	User Defined
Equipment Depth:	$D_{eq_2} := 4.7\ in$	User Defined
Equipment Weight:	$WT_{eq_2} := 26 \cdot lbf$	User Defined
Equipment Volume:	$V_{eq_2} := L_{eq_2} \cdot W_{eq_2} \cdot D_{eq_2} = 0.31\ ft^3$	
Equipment Quantity:	$N_{eq_2} := 2$	User Defined
Equippment Aspect Ratio:	$Ar_{eq_2} := \frac{L_{eq_2}}{D_{eq_2}} = 2.51$	
Mast Force Coefficient:	$Ca_{eq_2} := 1.2$	As per Table 2-8 (Flat) - TIA-222-G

Equipment Wind Loads

Equipment Projected Area:	$SA_{eq_2} := L_{eq_2} \cdot D_{eq_2} = 0.39\ ft^2$	
Equipment Wind Force (All):	$F_{eq_2} := qz_{carrier_1} \cdot G_H \cdot Ca_{eq_2} \cdot SA_{eq_2} \cdot N_{eq_2} \cdot K_a = 35\ lbf$	**BLC 6** Member Point Load

Equipment Wind Loads (w/ Ice)

Equipment Projected Area (w/ Ice):	$A_ice_{eq_2} := (L_{eq_2} + 2 \cdot tiz) \cdot (D_{eq_2} + 2 \cdot tiz) = 1\ ft^2$	
Equipment Wind Force (w/ Ice) (All):	$Fi_{eq_2} := qz_{ice_carrier_1} \cdot G_H \cdot Ca_{eq_2} \cdot A_ice_{eq_2} \cdot N_{eq_2} \cdot K_a = 21\ lbf$	**BLC 4** Member Point Load

Equipment Vertical Loads

Weight of Equipment (All):	$WT_{eq_2} \cdot N_{eq_2} = 52\ lbf$	**BLC 2** Member Point Load

Standard Equipment Calculations - Equipment 3 (Front Wind)

Equipment Properties

Antenna Carrier:	AT&T	User Defined
Equipment Model:	Proposed TMA CCI - TMABPD7823VG12A	User Defined
Equipment Shape:	Flat	User Defined
Equipment Height:	$L_{eq_3} := 10.6 \cdot in$	User Defined
Equipment Width:	$W_{eq_3} := 11 \cdot in$	User Defined
Equipment Depth:	$D_{eq_3} := 3.8\ in$	User Defined
Equipment Weight:	$WT_{eq_3} := 26 \cdot lbf$	User Defined
Equipment Volume:	$V_{eq_3} := L_{eq_3} \cdot W_{eq_3} \cdot D_{eq_3} = 0.26\ ft^3$	
Equipment Quantity:	$N_{eq_3} := 2$	User Defined
Equippment Aspect Ratio:	$Ar_{eq_3} := \frac{L_{eq_3}}{W_{eq_3}} = 0.96$	
Mast Force Coefficient:	$Ca_{eq_3} := 1.2$	As per Table 2-8 (Flat) - TIA-222-G

Equipment Wind Loads

Equipment Projected Area: $SA_{eq_3} := L_{eq_3} \cdot W_{eq_3} = 0.81\ ft^2$

Equipment Wind Force (All): $F_{eq_3} := qz_{carrier_1} \cdot G_H \cdot Ca_{eq_3} \cdot SA_{eq_3} \cdot N_{eq_3} \cdot K_a = 74\ lbf$ — **BLC 7** Member Point Load

Equipment Wind Loads (w/ Ice)

Equipment Projected Area (w/ Ice): $A_ice_{eq_3} := (L_{eq_3} + 2 \cdot tiz) \cdot (W_{eq_3} + 2 \cdot tiz) = 2\ ft^2$

Equipment Wind Force (w/ Ice) (All): $Fi_{eq_3} := qz_{ice_carrier_1} \cdot G_H \cdot Ca_{eq_3} \cdot A_ice_{eq_3} \cdot N_{eq_3} \cdot K_a = 33\ lbf$ — **BLC 5** Member Point Load

Equipment Vertical Loads

Weight of Equipment (All): $WT_{eq_3} \cdot N_{eq_3} = 52\ lbf$ — **BLC 2** Member Point Load

Equipment Vertical Loads (Ice Only)

Volume of Ice on Equipment: $V_{ice_eq_3} := (L_{eq_3} + 2 \cdot tiz) \cdot (W_{eq_3} + 2 \cdot tiz) \cdot (D_{eq_3} + 2 \cdot tiz) - V_{eq_3} = 0.81\ ft^3$

Weight of Ice on Equipment (All): $WT_{ice_eq_3} := V_{ice_eq_3} \cdot Id \cdot N_{eq_3} = 93\ lbf$ — **BLC 3** Member Point Load

Standard Equipment Calculations - Equipment 3 (Side Wind)

Standard Equipment Calculations - Equipment 3 (Side Wind)

Equipment Properties

Antenna Carrier:	AT&T	User Defined
Equipment Model:	Proposed TMA CCI - TMABPD7823VG12A	User Defined
Equipment Shape:	Flat	User Defined
Equipment Height:	$L_{eq_3} := 10.6 \cdot in$	User Defined
Equipment Width:	$W_{eq_3} := 11 \cdot in$	User Defined
Equipment Depth:	$D_{eq_3} := 3.8\ in$	User Defined
Equipment Weight:	$WT_{eq_3} := 26 \cdot lbf$	User Defined
Equipment Volume:	$V_{eq_3} := L_{eq_3} \cdot W_{eq_3} \cdot D_{eq_3} = 0.26\ ft^3$	
Equipment Quantity:	$N_{eq_3} := 2$	User Defined
Equippment Aspect Ratio:	$Ar_{eq_3} := \frac{L_{eq_3}}{D_{eq_3}} = 2.79$	
Mast Force Coefficient:	$Ca_{eq_3} := 1.2 + \frac{(Ar_{eq_3} - 2.5)}{4.5} \cdot 0.6 = 1.24$	As per Table 2-8 (Flat) - TIA-222-G

Equipment Wind Loads

Equipment Projected Area:	$SA_{eq_3} := L_{eq_3} \cdot D_{eq_3} = 0.28\ ft^2$	
Equipment Wind Force (All):	$F_{eq_3} := qz_{carrier_1} \cdot G_H \cdot Ca_{eq_3} \cdot SA_{eq_3} \cdot N_{eq_3} \cdot K_a = 26\ lbf$	BLC 6 Member Point Load

Equipment Wind Loads (w/ Ice)

Equipment Projected Area (w/ Ice):	$A_ice_{eq_3} := (L_{eq_3} + 2 \cdot tiz) \cdot (D_{eq_3} + 2 \cdot tiz) = 1\ ft^2$	
Equipment Wind Force (w/ Ice) (All):	$Fi_{eq_3} := qz_{ice_carrier_1} \cdot G_H \cdot Ca_{eq_3} \cdot A_ice_{eq_3} \cdot N_{eq_3} \cdot K_a = 18\ lbf$	BLC 4 Member Point Load

Equipment Vertical Loads

Weight of Equipment (All):	$WT_{eq_3} \cdot N_{eq_3} = 52\ lbf$	BLC 2 Member Point Load

Standard Equipment Calculations - Equipment 4 (Front Wind)

Equipment Properties

Antenna Carrier:	AT&T	User Defined
Equipment Model:	Existing Antenna Andrew SBNH-1D6565B	User Defined
Equipment Shape:	Flat	User Defined
Equipment Height:	$L_{eq_4} := 72.7 \cdot in$	User Defined
Equipment Width:	$W_{eq_4} := 11.9 \cdot in$	User Defined
Equipment Depth:	$D_{eq_4} := 7.1\ in$	User Defined
Equipment Weight:	$WT_{eq_4} := 47.4 \cdot lbf$	User Defined
Equipment Volume:	$V_{eq_4} := L_{eq_4} \cdot W_{eq_4} \cdot D_{eq_4} = 3.55\ ft^3$	
Equipment Quantity:	$N_{eq_4} := 1$	User Defined
Equippment Aspect Ratio:	$Ar_{eq_4} := \frac{L_{eq_4}}{W_{eq_4}} = 6.11$	
Mast Force Coefficient:	$Ca_{eq_4} := 1.2 + \frac{(Ar_{eq_4} - 2.5)}{4.5} \cdot 0.2 = 1.36$	As per Table 2-8 (Flat) - TIA-222-G

Equipment Wind Loads

Equipment Projected Area:	$SA_{eq_4} := L_{eq_4} \cdot W_{eq_4} = 6.01\ ft^2$	
Equipment Wind Force (All):	$F_{eq_2} := qz_{carrier_1} \cdot G_H \cdot Ca_{eq_4} \cdot SA_{eq_4} \cdot N_{eq_4} \cdot K_a = 311\ lbf$	**BLC 7** Member Point Load

Equipment Wind Loads (w/ Ice)

Equipment Projected Area (w/ Ice):	$A_ice_{eq_4} := (L_{eq_4} + 2 \cdot tiz) \cdot (W_{eq_4} + 2 \cdot tiz) = 9\ ft^2$	
Equipment Wind Force (w/ Ice) (All):	$Fi_{eq_2} := qz_{ice_carrier_1} \cdot G_H \cdot Ca_{eq_4} \cdot A_ice_{eq_4} \cdot N_{eq_4} \cdot K_a = 104\ lbf$	**BLC 5** Member Point Load

Equipment Vertical Loads

Weight of Equipment (All):	$WT_{eq_4} \cdot N_{eq_4} = 47.4\ lbf$	**BLC 2** Member Point Load

Equipment Vertical Loads (Ice Only)

Volume of Ice on Equipment:	$V_{ice_eq_4} := (L_{eq_4} + 2 \cdot tiz) \cdot (W_{eq_4} + 2 \cdot tiz) \cdot (D_{eq_4} + 2 \cdot tiz) - V_{eq_4} = 4.68\ ft^3$	
Weight of Ice on Equipment (All):	$WT_{ice_eq_4} := V_{ice_eq_4} \cdot Id \cdot N_{eq_4} = 267\ lbf$	**BLC 3** Member Point Load

Standard Equipment Calculations - Equipment 4 (Side Wind)

Standard Equipment Calculations - Equipment 4 (Side Wind)

Equipment Properties

Antenna Carrier:	AT&T	User Defined
Equipment Model:	Existing Antenna Andrew SBNH-1D6565B	User Defined
Equipment Shape:	Flat	User Defined
Equipment Height:	$L_{eq_4} := 72.7 \cdot in$	User Defined
Equipment Width:	$W_{eq_4} := 11.9 \cdot in$	User Defined
Equipment Depth:	$D_{eq_4} := 7.1\ in$	User Defined
Equipment Weight:	$WT_{eq_4} := 47.4 \cdot lbf$	User Defined
Equipment Volume:	$V_{eq_4} := L_{eq_4} \cdot W_{eq_4} \cdot D_{eq_4} = 3.55\ ft^3$	
Equipment Quantity:	$N_{eq_4} := 1$	User Defined
Equippment Aspect Ratio:	$Ar_{eq_4} := \frac{L_{eq_4}}{D_{eq_4}} = 10.24$	
Mast Force Coefficient:	$Ca_{eq_4} := 1.4 + \frac{(Ar_{eq_4} - 7)}{18} \cdot 0.6 = 1.51$	As per Table 2-8 (Flat) - TIA-222-G

Equipment Wind Loads

Equipment Projected Area:	$SA_{eq_4} := L_{eq_4} \cdot D_{eq_4} = 3.58\ ft^2$	
Equipment Wind Force (All):	$F_{eq_2} := qz_{carrier_1} \cdot G_H \cdot Ca_{eq_4} \cdot SA_{eq_4} \cdot N_{eq_4} \cdot K_a = 205\ lbf$	**BLC 6** Member Point Load

Equipment Wind Loads (w/ Ice)

Equipment Projected Area (w/ Ice):	$A_ice_{eq_4} := (L_{eq_4} + 2 \cdot tiz) \cdot (D_{eq_4} + 2 \cdot tiz) = 6\ ft^2$	
Equipment Wind Force (w/ Ice) (All):	$Fi_{eq_2} := qz_{ice_carrier_1} \cdot G_H \cdot Ca_{eq_4} \cdot A_ice_{eq_4} \cdot N_{eq_4} \cdot K_a = 81\ lbf$	**BLC 4** Member Point Load

Equipment Vertical Loads

Weight of Equipment (All):	$WT_{eq_4} \cdot N_{eq_4} = 47.4\ lbf$	**BLC 2** Member Point Load

Standard Equipment Calculations - Equipment 5 (Front Wind)

Standard Equipment Calculations - Equipment 5 (Front Wind)

Equipment Properties

Antenna Carrier:	AT&T	User Defined
Equipment Model:	Existing Antenna Quintel QS66512-2	User Defined
Equipment Shape:	Flat	User Defined
Equipment Height:	$L_{eq_5} := 72 \cdot in$	User Defined
Equipment Width:	$W_{eq_5} := 12 \cdot in$	User Defined
Equipment Depth:	$D_{eq_5} := 9.6\ in$	User Defined
Equipment Weight:	$WT_{eq_5} := 111 \cdot lbf$	User Defined
Equipment Volume:	$V_{eq_5} := L_{eq_5} \cdot W_{eq_5} \cdot D_{eq_5} = 4.8\ ft^3$	
Equipment Quantity:	$N_{eq_5} := 1$	User Defined
Equipment Aspect Ratio:	$Ar_{eq_5} := \frac{L_{eq_5}}{W_{eq_5}} = 6$	
Mast Force Coefficient:	$Ca_{eq_5} := 1.2 + \frac{(Ar_{eq_5} - 2.5)}{4.5} \cdot 0.2 = 1.36$	As per Table 2-8 (Flat) - TIA-222-G

Equipment Wind Loads

Equipment Projected Area: $SA_{eq_5} := L_{eq_5} \cdot W_{eq_5} = 6\ ft^2$

Equipment Wind Force (All): $F_{eq_5} := qz_{carrier_1} \cdot G_H \cdot Ca_{eq_5} \cdot SA_{eq_5} \cdot N_{eq_5} \cdot K_a = 309\ lbf$ — **BLC 7** Member Point Load

Equipment Wind Loads (w/ Ice)

Equipment Projected Area (w/ Ice): $A_ice_{eq_5} := (L_{eq_5} + 2 \cdot tiz) \cdot (W_{eq_5} + 2 \cdot tiz) = 9\ ft^2$

Equipment Wind Force (w/ Ice) (All): $Fi_{eq_6} := qz_{ice_carrier_1} \cdot G_H \cdot Ca_{eq_5} \cdot A_ice_{eq_5} \cdot N_{eq_5} \cdot K_a = 103\ lbf$ — **BLC 5** Member Point Load

Equipment Vertical Loads

Weight of Equipment (All): $WT_{eq_5} \cdot N_{eq_5} = 111\ lbf$ — **BLC 2** Member Point Load

Equipment Vertical Loads (Ice Only)

Volume of Ice on Equipment: $V_{ice_eq_5} := (L_{eq_5} + 2 \cdot tiz) \cdot (W_{eq_5} + 2 \cdot tiz) \cdot (D_{eq_5} + 2 \cdot tiz) - V_{eq_5} = 5.21\ ft^3$

Weight of Ice on Equipment (All): $WT_{ice_eq_5} := V_{ice_eq_5} \cdot Id \cdot N_{eq_5} = 297\ lbf$ — **BLC 3** Member Point Load

Standard Equipment Calculations - Equipment 5 (Side Wind)

Standard Equipment Calculations - Equipment 5 (Side Wind)

Equipment Properties

Antenna Carrier:	AT&T	User Defined
Equipment Model:	Existing Antenna Quintel QS66512-2	User Defined
Equipment Shape:	Flat	User Defined
Equipment Height:	$L_{eq_5} := 72 \cdot in$	User Defined
Equipment Width:	$W_{eq_5} := 12 \cdot in$	User Defined
Equipment Depth:	$D_{eq_5} := 9.6\ in$	User Defined
Equipment Weight:	$WT_{eq_5} := 111 \cdot lbf$	User Defined
Equipment Volume:	$V_{eq_5} := L_{eq_5} \cdot W_{eq_5} \cdot D_{eq_5} = 4.8\ ft^3$	
Equipment Quantity:	$N_{eq_5} := 1$	User Defined
Equippment Aspect Ratio:	$Ar_{eq_5} := \frac{L_{eq_5}}{D_{eq_5}} = 7.5$	
Mast Force Coefficient:	$Ca_{eq_5} := 1.4 + \frac{(Ar_{eq_5} - 7)}{18} \cdot 0.6 = 1.42$	As per Table 2-8 (Flat) - TIA-222-G

Equipment Wind Loads

Equipment Projected Area:	$SA_{eq_5} := L_{eq_5} \cdot D_{eq_5} = 4.8\ ft^2$	
Equipment Wind Force (All):	$F_{eq_5} := qz_{carrier_1} \cdot G_H \cdot Ca_{eq_5} \cdot SA_{eq_5} \cdot N_{eq_5} \cdot K_a = 258\ lbf$	BLC 6 Member Point Load

Equipment Wind Loads (w/ Ice)

Equipment Projected Area (w/ Ice):	$A_ice_{eq_5} := (L_{eq_5} + 2 \cdot tiz) \cdot (D_{eq_5} + 2 \cdot tiz) = 7\ ft^2$	
Equipment Wind Force (w/ Ice) (All):	$Fi_{eq_5} := qz_{ice_carrier_1} \cdot G_H \cdot Ca_{eq_5} \cdot A_ice_{eq_5} \cdot N_{eq_5} \cdot K_a = 92\ lbf$	BLC 4 Member Point Load

Equipment Vertical Loads

Weight of Equipment (All):	$WT_{eq_5} \cdot N_{eq_5} = 111\ lbf$	BLC 2 Member Point Load

Standard Equipment Calculations - Mount Member 1 (Front/Side Wind)

Pipe Properties

Antenna Carrier:	AT&T	User Defined
Equipment Model:	Mounting Pipes: P2.0	User Defined
Pipe Height:	$L_{pipe_1} := 96 \cdot in$	User Defined
Pipe Diameter:	$W_{pipe_1} := 2.375 \cdot in$	User Defined
Pipe Weight:	$WT_{pipe_1} := 29.3 \cdot lbf$	User Defined
Pipe Volume:	$V_{pipe_1} := L_{pipe_1} \cdot \frac{\left(\left(W_{pipe_1}\right)^2 \cdot \pi\right)}{4} = 0.25\ ft^3$	
Pipe Quantity:	$N_{pipe_1} := 1$	User Defined
Pipe Aspect Ratio:	$Ar_{pipe_1} := \frac{L_{pipe_1}}{W_{pipe_1}} = 40.42$	
Pipe Force Coefficient:	$Ca_{pipe_1} := 1.2$	As per Table 2-8 (Round)-TIA-222-G

Pipe Wind Loads

Pipe Projected Area:	$SA_{pipe_1} := L_{pipe_1} \cdot W_{pipe_1} = 1.58\ ft^2$	
Pipe Wind Force (All):	$F_{pipe_1} := qz_{carrier_1} \cdot G_H \cdot K_a \cdot Ca_{pipe_1} \cdot SA_{pipe_1} = 72\ lbf$	BLC 6/7
Pipe Wind Force (Distributed):	$\frac{F_{pipe_1}}{L_{pipe_1}} = 9\ plf$	BLC 6/7

Pipe Wind Loads (w/ Ice)

Pipe Projected Area (w/ Ice):	$A_ice_{pipe_1} := \left(L_{pipe_1} + 2 \cdot tiz\right) \cdot \left(W_{pipe_1} + 2 \cdot tiz\right) = 4.65\ ft^2$	
Pipe Wind Force (w/ Ice) (All):	$Fi_{pipe_1} := qz_{ice_carrier_1} \cdot G_H \cdot K_a \cdot Ca_{pipe_1} \cdot A_ice_{pipe_1} = 49\ lbf$	BLC 4/5
Pipe Wind Force (w/ Ice) (Distributed):	$\frac{Fi_{pipe_1}}{L_{pipe_1}} = 6.1\ plf$	BLC 4/5

Pipe Vertical Loads

Weight of Pipe (All):	$WT_{pipe_1} = 29\ lbf$	BLC 2
Weight of Pipe (Distributed):	$\frac{WT_{pipe_1}}{L_{pipe_1}} = 3.7\ plf$	BLC 2

Pipe Vertical Loads (Ice Only)

Volume of Ice on Pipe:	$V_{ice_pipe_1} := \left(L_{pipe_1} + 2 \cdot tiz\right) \cdot \left(\frac{\left(W_{pipe_1} + 2 \cdot tiz\right)^2 \cdot \pi}{4}\right) - V_{pipe_1} = 1.79\ ft^3$	
Weight of Ice on Pipe (All):	$WT_{ice_pipe_1} := V_{ice_pipe_1} \cdot Id = 102\ lbf$	BLC 3
Weight of Ice on Pipe (Distributed):	$\frac{WT_{ice_pipe_1}}{L_{pipe_1}} = 12.7\ plf$	BLC 3

Standard Equipment Calculations - Mount Member 2 (Front/Side Wind)

Pipe Properties

Antenna Carrier:	AT&T	User Defined
Equipment Model:	Pipe Boom: P3.0	User Defined
Pipe Height:	$L_{pipe_2} := 150 \cdot in$	User Defined
Pipe Diameter:	$W_{pipe_2} := 3.5 \cdot in$	User Defined
Pipe Weight:	$WT_{pipe_2} := 94.8 \cdot lbf$	User Defined
Pipe Volume:	$V_{pipe_2} := L_{pipe_2} \cdot \frac{\left(\left(W_{pipe_2}\right)^2 \cdot \pi\right)}{4} = 0.84\ ft^3$	
Pipe Aspect Ratio:	$Ar_{pipe_2} := \frac{L_{pipe_2}}{W_{pipe_2}} = 42.86$	
Pipe Force Coefficient:	$Ca_{pipe_2} := 1.2$	As per Table 2-8 (Round)-TIA-222-G

Pipe Wind Loads

Pipe Projected Area:	$SA_{pipe_2} := L_{pipe_2} \cdot W_{pipe_2} = 3.65\ ft^2$	
Pipe Wind Force (All):	$F_{pipe_2} := qz_{carrier_1} \cdot G_H \cdot K_a \cdot Ca_{pipe_2} \cdot SA_{pipe_2} = 166\ lbf$	BLC 6/7
Pipe Wind Force (Distributed):	$\frac{F_{pipe_2}}{L_{pipe_2}} = 13.3\ plf$	BLC 6/7

Pipe Wind Loads (w/ Ice)

Pipe Projected Area (w/ Ice):	$A_ice_{pipe_2} := \left(L_{pipe_2} + 2 \cdot tiz\right) \cdot \left(W_{pipe_2} + 2 \cdot tiz\right) = 8.36\ ft^2$	
Pipe Wind Force (w/ Ice) (All):	$Fi_{pipe_2} := qz_{ice_carrier_1} \cdot G_H \cdot K_a \cdot Ca_{pipe_2} \cdot A_ice_{pipe_2} = 88\ lbf$	BLC 4/5
Pipe Wind Force (w/ Ice) (Distributed):	$\frac{Fi_{pipe_2}}{L_{pipe_2}} = 7\ plf$	BLC 4/5

Pipe Vertical Loads

Weight of Pipe (All):	$WT_{pipe_2} = 95\ lbf$	BLC 2
Weight of Pipe (Distributed):	$\frac{WT_{pipe_2}}{L_{pipe_2}} = 7.6\ plf$	BLC 2

Pipe Vertical Loads (Ice Only)

Volume of Ice on Pipe:	$V_{ice_pipe_2} := \left(L_{pipe_2} + 2 \cdot tiz\right) \cdot \left(\frac{\left(W_{pipe_2} + 2 \cdot tiz\right)^2 \cdot \pi}{4}\right) - V_{pipe_2} = 3.43\ ft^3$	
Weight of Ice on Pipe (All):	$WT_{ice_pipe_2} := V_{ice_pipe_2} \cdot Id = 196\ lbf$	BLC 3
Weight of Ice on Pipe (Distributed):	$\frac{WT_{ice_pipe_2}}{L_{pipe_2}} = 15.7\ plf$	BLC 3

Standard Equipment Calculations - Mount Member 2 (Front/Side Wind)

Standard Equipment Calculations - Mount Member 3 (Front/Side Wind)

Pipe Properties

Antenna Carrier:	AT&T	User Defined
Equipment Model:	Vertical Pipe: P4.0	User Defined
Pipe Height:	$L_{pipe_3} := 18 \cdot in$	User Defined
Pipe Diameter:	$W_{pipe_3} := 4.5 \cdot in$	User Defined
Pipe Weight:	$WT_{pipe_3} := 15.75 \cdot lbf$	User Defined
Pipe Volume:	$V_{pipe_3} := L_{pipe_3} \cdot \frac{\left(\left(W_{pipe_3}\right)^2 \cdot \pi\right)}{4} = 0.17\ ft^3$	
Pipe Aspect Ratio:	$Ar_{pipe_3} := \frac{L_{pipe_3}}{W_{pipe_3}} = 4$	
Pipe Force Coefficient:	$Ca_{pipe_3} := 0.7 + \frac{\left(Ar_{pipe_3} - 2.5\right)}{4.5} \cdot 0.1 = 0.73$	As per Table 2-8 (Round)-TIA-222-G

Pipe Wind Loads

Pipe Projected Area:	$SA_{pipe_3} := L_{pipe_3} \cdot W_{pipe_3} = 0.56\ ft^2$	
Pipe Wind Force (All):	$F_{pipe_3} := qz_{carrier_1} \cdot G_H \cdot K_a \cdot Ca_{pipe_3} \cdot SA_{pipe_3} = 16\ lbf$	BLC 6/7
Pipe Wind Force (Distributed):	$\frac{F_{pipe_3}}{L_{pipe_3}} = 10.5\ plf$	BLC 6/7

Pipe Wind Loads (w/ Ice)

Pipe Projected Area (w/ Ice):	$A_ice_{pipe_3} := \left(L_{pipe_3} + 2 \cdot tiz\right) \cdot \left(W_{pipe_3} + 2 \cdot tiz\right) = 1.36\ ft^2$	
Pipe Wind Force (w/ Ice) (All):	$Fi_{pipe_3} := qz_{ice_carrier_1} \cdot G_H \cdot K_a \cdot Ca_{pipe_3} \cdot A_ice_{pipe_3} = 9\ lbf$	BLC 4/5
Pipe Wind Force (w/ Ice) (Distributed):	$\frac{Fi_{pipe_3}}{L_{pipe_3}} = 5.9\ plf$	BLC 4/5

Pipe Vertical Loads

Weight of Pipe (All):	$WT_{pipe_3} = 16\ lbf$	BLC 2
Weight of Pipe (Distributed):	$\frac{WT_{pipe_3}}{L_{pipe_3}} = 10.5\ plf$	BLC 2

Pipe Vertical Loads (Ice Only)

Volume of Ice on Pipe:	$V_{ice_pipe_3} := \left(L_{pipe_3} + 2 \cdot tiz\right) \cdot \left(\frac{\left(W_{pipe_3} + 2 \cdot tiz\right)^2 \cdot \pi}{4}\right) - V_{pipe_3} = 0.62\ ft^3$	
Weight of Ice on Pipe (All):	$WT_{ice_pipe_3} := V_{ice_pipe_3} \cdot Id = 35\ lbf$	BLC 3
Weight of Ice on Pipe (Distributed):	$\frac{WT_{ice_pipe_3}}{L_{pipe_3}} = 23.5\ plf$	BLC 3

Standard Equipment Calculations - Mount Member 4 (Front/Side Wind)

Pipe Properties

Antenna Carrier:	AT&T	User Defined
Equipment Model:	HSS Arm Member: HSS4x4x3/16	User Defined
Arm Length:	$L_{member_4} := 36 \cdot in$	User Defined
Arm Width:	$W_{member_4} := 4 \cdot in$	User Defined
Arm Weight:	$WT_{member_4} := 28.3 \cdot lbf$	User Defined
Arm Volume:	$V_{member_4} := L_{member_4} \cdot W_{member_4}^{2} = 0.33\ ft^3$	
Arm Aspect Ratio:	$Ar_{member_4} := \frac{L_{member_4}}{W_{member_4}} = 9$	
Arm Force Coefficient:	$Ca_{member_4} := 1.4 + \frac{(Ar_{member_4} - 7)}{18} \cdot 0.6 = 1.47$	As per Table 2-8 (Flat)-TIA-222-G

Arm Wind Loads

Arm Projected Area:	$SA_{member_4} := L_{member_4} \cdot W_{member_4} = 1\ ft^2$	
Arm Wind Force (All):	$F_{member_4} := qz_{carrier_1} \cdot G_H \cdot K_a \cdot Ca_{member_4} \cdot SA_{member_4} = 56\ lbf$	BLC 6/7
Arm Wind Force (All):	$\frac{F_{member_4}}{L_{member_4}} = 18.6\ plf$	BLC 6/7

Arm Wind Loads (w/ Ice)

Arm Projected Area (w/ Ice):	$A_ice_{member_4} := (L_{member_4} + 2 \cdot tiz) \cdot (W_{member_4} + 2 \cdot tiz) = 2.32\ ft^2$	
Arm Wind Force (w/ Ice) (All):	$Fi_{member_4} := qz_{ice_carrier_1} \cdot G_H \cdot K_a \cdot Ca_{member_4} \cdot A_ice_{member_4} = 30\ lbf$	BLC 4/5
Arm Wind Force (w/ Ice) (Distributed):	$\frac{Fi_{member_4}}{L_{member_4}} = 10\ plf$	BLC 4/5

Arm Vertical Loads

Weight of Arm (All):	$WT_{member_4} = 28\ lbf$	BLC 2
Weight of Arm (Distributed):	$\frac{WT_{member_4}}{L_{member_4}} = 9.4\ plf$	BLC 2

Arm Vertical Loads (Ice Only)

Volume of Ice on HSS Arm:	$V_{ice_member_4} := (L_{member_4} + 2 \cdot tiz) \cdot (W_{member_4} + 2 \cdot tiz)^{2} - V_{member_4} = 1.27\ ft^3$	
Weight of Ice on Arm (All):	$WT_{ice_member_4} := V_{ice_member_4} \cdot Id = 73\ lbf$	BLC 3
Weight of Ice on Arm (Distributed):	$\frac{WT_{ice_member_4}}{L_{member_4}} = 24.2\ plf$	BLC 3

Standard Equipment Calculations - Mount Member 5 (Front/Side Wind)

Pipe Properties

Antenna Carrier:	AT&T	User Defined
Equipment Model:	Single Angle Handrail Member 1: L3x3x1/4	User Defined
Handrail Length:	$L_{member_5} := 126 \cdot in$	User Defined
Handrail Width:	$W_{member_5} := 3 \cdot in$	User Defined
Handrail Weight:	$WT_{member_5} := 51.45 \cdot lbf$	User Defined
Handrail Volume:	$V_{member_5} := L_{member_5} \cdot W_{member_5}^{2} = 0.66\ ft^3$	
Handrail Aspect Ratio:	$Ar_{member_5} := \frac{L_{member_5}}{W_{member_5}} = 42$	
Handrail Force Coefficient:	$Ca_{member_5} := 2$	As per Table 2-8 (Flat)-TIA-222-G

Handrail Wind Loads

Handrail Projected Area:	$SA_{member_5} := L_{member_5} \cdot W_{member_5} = 2.63\ ft^2$	
Handrail Wind Force (All):	$F_{member_5} := qz_{carrier_1} \cdot G_H \cdot K_a \cdot Ca_{member_5} \cdot SA_{member_5} = 200\ lbf$	BLC 6/7
Handrail Wind Force (All):	$\frac{F_{member_5}}{L_{member_5}} = 19\ plf$	BLC 6/7

Handrail Wind Loads (w/ Ice)

Handrail Projected Area (w/ Ice):	$A_ice_{member_5} := (L_{member_5} + 2 \cdot tiz) \cdot (W_{member_5} + 2 \cdot tiz) = 6.61\ ft^2$	
Handrail Wind Force (w/ Ice) (All):	$Fi_{member_5} := qz_{ice_carrier_1} \cdot G_H \cdot K_a \cdot Ca_{member_5} \cdot A_ice_{member_5} = 116\ lbf$	BLC 4/5
Handrail Wind Force (w/ Ice) (Distributed):	$\frac{Fi_{member_5}}{L_{member_5}} = 11.1\ plf$	BLC 4/5

Handrail Vertical Loads

Weight of Handrail (All):	$WT_{member_5} = 51\ lbf$	BLC 2
Weight of Handrail (Distributed):	$\frac{WT_{member_5}}{L_{member_5}} = 4.9\ plf$	BLC 2

Handrail Vertical Loads (Ice Only)

Volume of Ice on Handrail:	$V_{ice_member_5} := (L_{member_5} + 2 \cdot tiz) \cdot (W_{member_5} + 2 \cdot tiz)^2 - V_{member_5} = 3.36\ ft^3$	
Weight of Ice on Handrail:	$WT_{ice_member_5} := V_{ice_member_5} \cdot Id = 192\ lbf$	BLC 3
Weight of Ice on Handrail:	$\frac{WT_{ice_member_5}}{L_{member_5}} = 18.3\ plf$	BLC 3

Standard Equipment Calculations - Mount Member 6 (Front/Side Wind)

Pipe Properties

Antenna Carrier:	AT&T	User Defined
Equipment Model:	Single Angle Handrail Member 2: L2x2x3/16	User Defined
Handrail Length:	$L_{member_6} := 69 \cdot in$	User Defined
Handrail Width:	$W_{member_6} := 2 \cdot in$	User Defined
Handrail Weight:	$WT_{member_6} := 28.3 \cdot lbf$	User Defined
Handrail Volume:	$V_{member_6} := L_{member_6} \cdot W_{member_6}^{2} = 0.16\ ft^3$	
Handrail Aspect Ratio:	$Ar_{member_6} := \frac{L_{member_6}}{W_{member_6}} = 34.5$	
Handrail Force Coefficient:	$Ca_{member_6} := 2$	As per Table 2-8 (Flat)-TIA-222-G

Handrail Wind Loads

Handrail Projected Area:	$SA_{member_6} := L_{member_6} \cdot W_{member_6} = 0.96\ ft^2$	
Handrail Wind Force (All):	$F_{member_6} := qz_{carrier_1} \cdot G_H \cdot K_a \cdot Ca_{member_6} \cdot SA_{member_6} = 73\ lbf$	BLC 6/7
Handrail Wind Force (All):	$\frac{F_{member_6}}{L_{member_6}} = 12.7\ plf$	BLC 6/7

Handrail Wind Loads (w/ Ice)

Handrail Projected Area (w/ Ice):	$A_ice_{member_6} := (L_{member_6} + 2 \cdot tiz) \cdot (W_{member_6} + 2 \cdot tiz) = 3.21\ ft^2$	
Handrail Wind Force (w/ Ice) (All):	$Fi_{member_6} := qz_{ice_carrier_1} \cdot G_H \cdot K_a \cdot Ca_{member_6} \cdot A_ice_{member_6} = 56\ lbf$	BLC 4/5
Handrail Wind Force (w/ Ice) (Distributed):	$\frac{Fi_{member_6}}{L_{member_6}} = 9.8\ plf$	BLC 4/5

Handrail Vertical Loads

Weight of Handrail (All):	$WT_{member_6} = 28\ lbf$	BLC 2
Weight of Handrail (Distributed):	$\frac{WT_{member_6}}{L_{member_6}} = 4.9\ plf$	BLC 2

Handrail Vertical Loads (Ice Only)

Volume of Ice on Handrail:	$V_{ice_member_6} := (L_{member_6} + 2 \cdot tiz) \cdot (W_{member_6} + 2 \cdot tiz)^2 - V_{member_6} = 1.52\ ft^3$	
Weight of Ice on Handrail:	$WT_{ice_member_6} := V_{ice_member_6} \cdot Id = 87\ lbf$	BLC 3
Weight of Ice on Handrail:	$\frac{WT_{ice_member_6}}{L_{member_6}} = 15.1\ plf$	BLC 3

Standard Equipment Calculations - Mount Member 7 (Front/Side Wind)

Pipe Properties

Antenna Carrier:	AT&T	User Defined
Equipment Model:	Single Angle Vertical Kicker Member: L2x2x3/16	User Defined
Handrail Length:	$L_{member_7} := 85.5 \cdot in$	User Defined
Handrail Width:	$W_{member_7} := 2 \cdot in$	User Defined
Handrail Weight:	$WT_{member_7} := 28.3 \cdot lbf$	User Defined
Handrail Volume:	$V_{member_7} := L_{member_7} \cdot W_{member_7}^2 = 0.2\ ft^3$	
Handrail Aspect Ratio:	$Ar_{member_7} := \frac{L_{member_7}}{W_{member_7}} = 42.75$	
Handrail Force Coefficient:	$Ca_{member_7} := 2$	As per Table 2-8 (Flat)-TIA-222-G

Arm Wind Loads

Handrail Projected Area:	$SA_{member_7} := L_{member_7} \cdot W_{member_7} = 1.19\ ft^2$	
Handrail Wind Force (All):	$F_{member_7} := qz_{carrier_1} \cdot G_H \cdot K_a \cdot Ca_{member_7} \cdot SA_{member_7} = 90\ lbf$	BLC 6/7
Handrail Wind Force (All):	$\frac{F_{member_7}}{L_{member_7}} = 12.7\ plf$	BLC 6/7

Arm Wind Loads (w/ Ice)

Handrail Projected Area (w/ Ice):	$A_ice_{member_7} := (L_{member_7} + 2 \cdot tiz) \cdot (W_{member_7} + 2 \cdot tiz) = 3.93\ ft^2$	
Handrail Wind Force (w/ Ice) (All):	$Fi_{member_7} := qz_{ice_carrier_1} \cdot G_H \cdot K_a \cdot Ca_{member_7} \cdot A_ice_{member_7} = 69\ lbf$	BLC 4/5
Handrail Wind Force (w/ Ice) (Distributed):	$\frac{Fi_{member_7}}{L_{member_7}} = 9.7\ plf$	BLC 4/5

Arm Vertical Loads

Weight of Handrail (All):	$WT_{member_7} = 28\ lbf$	BLC 2
Weight of Handrail (Distributed):	$\frac{WT_{member_7}}{L_{member_7}} = 4\ plf$	BLC 2

Arm Vertical Loads (Ice Only)

Volume of Ice on Handrail:	$V_{ice_member_7} := (L_{member_7} + 2 \cdot tiz) \cdot (W_{member_7} + 2 \cdot tiz)^2 - V_{member_7} = 1.87\ ft^3$	
Weight of Ice on Handrail:	$WT_{ice_member_7} := V_{ice_member_7} \cdot Id = 106\ lbf$	BLC 3
Weight of Ice on Handrail:	$\frac{WT_{ice_member_7}}{L_{member_7}} = 14.9\ plf$	BLC 3

Standard Equipment Calculations - Mount Member 8 (Front/Side Wind)

Pipe Properties

Antenna Carrier:	AT&T	User Defined
Equipment Model:	Existing Mast: P12.0 XS	User Defined
Pipe Height:	$L_{pipe_8} := 336 \cdot in$	User Defined
Pipe Diameter:	$W_{pipe_8} := 12.75 \cdot in$	User Defined
Pipe Weight:	$WT_{pipe_8} := 1834 \cdot lbf$	User Defined
Pipe Volume:	$V_{pipe_8} := L_{pipe_8} \cdot \frac{\left(\left(W_{pipe_8}\right)^2 \cdot \pi\right)}{4} = 24.83\ ft^3$	
Pipe Aspect Ratio:	$Ar_{pipe_8} := \frac{L_{pipe_8}}{W_{pipe_8}} = 26.35$	
Pipe Force Coefficient:	$Ca_{pipe_8} := 1.2$	As per Table 2-8 (Round)-TIA-222-G

Pipe Wind Loads

Pipe Projected Area:	$SA_{pipe_8} := L_{pipe_8} \cdot W_{pipe_8} = 29.75\ ft^2$	
Pipe Wind Force (All):	$F_{pipe_8} := qz_{carrier_1} \cdot G_H \cdot Ca_{pipe_8} \cdot SA_{pipe_8} = 1696\ lbf$	BLC 6/7
Pipe Wind Force (Distributed):	$\frac{F_{pipe_8}}{L_{pipe_8}} = 60.6\ plf$	BLC 6/7

Pipe Wind Loads (w/ Ice)

Pipe Projected Area (w/ Ice):	$A_ice_{pipe_8} := \left(L_{pipe_8} + 2 \cdot tiz\right) \cdot \left(W_{pipe_8} + 2 \cdot tiz\right) = 40.3\ ft^2$	
Pipe Wind Force (w/ Ice) (All):	$Fi_{pipe_8} := qz_{ice_carrier_1} \cdot G_H \cdot Ca_{pipe_8} \cdot A_ice_{pipe_8} = 531\ lbf$	BLC 4/5
Pipe Wind Force (w/ Ice) (Distributed):	$\frac{Fi_{pipe_8}}{L_{pipe_8}} = 19\ plf$	BLC 4/5

Pipe Vertical Loads

Weight of Pipe (All):	$WT_{pipe_8} = 1834\ lbf$	BLC 2
Weight of Pipe (Distributed):	$\frac{WT_{pipe_8}}{L_{pipe_8}} = 65.5\ plf$	BLC 2

Pipe Vertical Loads (Ice Only)

Volume of Ice on Pipe:	$V_{ice_pipe_8} := \left(L_{pipe_8} + 2 \cdot tiz\right) \cdot \left(\frac{\left(W_{pipe_8} + 2 \cdot tiz\right)^2 \cdot \pi}{4}\right) - V_{pipe_8} = 20.14\ ft^3$	
Weight of Ice on Pipe (All):	$WT_{ice_pipe_8} := V_{ice_pipe_8} \cdot Id = 1148\ lbf$	BLC 3
Weight of Ice on Pipe (Distributed):	$\frac{WT_{ice_pipe_8}}{L_{pipe_8}} = 41\ plf$	BLC 3

General Information for use in Risa-3D

Risa-3D Basic Load Cases	Description
1	Self Weight (Mast)
2	Weight of Appurtenances
3	Weight of Ice Only
4	TIA Wind with Ice - X
5	TIA Wind with Ice - Z
6	TIA Wind - X
7	TIA Wind - Z

Where:
BLC = Basic Load Case
D = Dead Load
Di = Dead Load of Ice
W = Wind Load
Wi = Wind Load w/ Ice

Load Combination	Description	Wind Factor	P-Delta	BLC	Factor	BLC	Factor	BLC	Factor	BLC	Factor	BLC	Factor
1	1.2D + 1.6W (0)	1.6	Y	1	1.2	2	1.2	6	1.6				
2	1.2D + 1.6W (30)	1.6	Y	1	1.2	2	1.2	6	1.39	7	0.8		
3	1.2D + 1.6W (60)	1.6	Y	1	1.2	2	1.2	6	0.8	7	1.39		
4	1.2D + 1.6W (90)	1.6	Y	1	1.2	2	1.2	7	1.6				
5	1.2D + 1.6W (120)	1.6	Y	1	1.2	2	1.2	6	-0.8	7	1.39		
6	1.2D + 1.6W (150)	1.6	Y	1	1.2	2	1.2	6	-1.39	7	0.8		
7	1.2D + 1.6W (180)	1.6	Y	1	1.2	2	1.2	6	-1.6				
8	1.2D + 1.6W (210)	1.6	Y	1	1.2	2	1.2	6	-1.39	7	-0.8		
9	1.2D + 1.6W (240)	1.6	Y	1	1.2	2	1.2	6	-0.8	7	-1.39		
10	1.2D + 1.6W (270	1.6	Y	1	1.2	2	1.2	7	-1.6				
11	1.2D + 1.6W (300)	1.6	Y	1	1.2	2	1.2	6	0.8	7	-1.39		
12	1.2D + 1.6W (330)	1.6	Y	1	1.2	2	1.2	6	1.39	7	-0.8		
13	1.2D+1.0Di+1.0Wi (0)	1.0	Y	1	1.2	2	1.2	3	1.0	4	1.0		
14	1.2D+1.0Di+1.0Wi (30)	1.0	Y	1	1.2	2	1.2	3	1.0	4	0.866	5	0.5
15	1.2D+1.0Di+1.0Wi (60)	1.0	Y	1	1.2	2	1.2	3	1.0	4	0.5	5	0.866
16	1.2D+1.0Di+1.0Wi (90)	1.0	Y	1	1.2	2	1.2	3	1.0	5	1.0		
17	1.2D+1.0Di+1.0Wi (120)	1.0	Y	1	1.2	2	1.2	3	1.0	4	-0.5	5	0.866
18	1.2D+1.0Di+1.0Wi (150)	1.0	Y	1	1.2	2	1.2	3	1.0	4	-0.866	5	0.5
19	1.2D+1.0Di+1.0Wi (180)	1.0	Y	1	1.2	2	1.2	3	1.0	4	-1.0		
20	1.2D+1.0Di+1.0Wi (210)	1.0	Y	1	1.2	2	1.2	3	1.0	4	-0.866	5	-0.5
21	1.2D+1.0Di+1.0Wi (240)	1.0	Y	1	1.2	2	1.2	3	1.0	4	-0.5	5	-0.866
22	1.2D+1.0Di+1.0Wi (270)	1.0	Y	1	1.2	2	1.2	3	1.0	5	-1.0		
23	1.2D+1.0Di+1.0Wi (300)	1.0	Y	1	1.2	2	1.2	3	1.0	4	0.5	5	-0.866
24	1.2D+1.0Di+1.0Wi (330)	1.0	Y	1	1.2	2	1.2	3	1.0	4	0.866	5	-0.5
25	1.2D + 1.6W (0) Service Wind	1.0	Y	1	1.2	2	1.2	7	0.48				

Service Load Conversion Factor: $$SLCF := \frac{(V_{service_loads})^2}{(V)^2} \cdot \frac{I_{service_loads}}{I_{wind}} \cdot \frac{Kd_{service_loads}}{Kd} = 0.3$$

Note: For this site - 270 wind direction is worst case. Therefore, service loads only checked for this direction.

APPENDIX C

COMPUTER OUTPUT

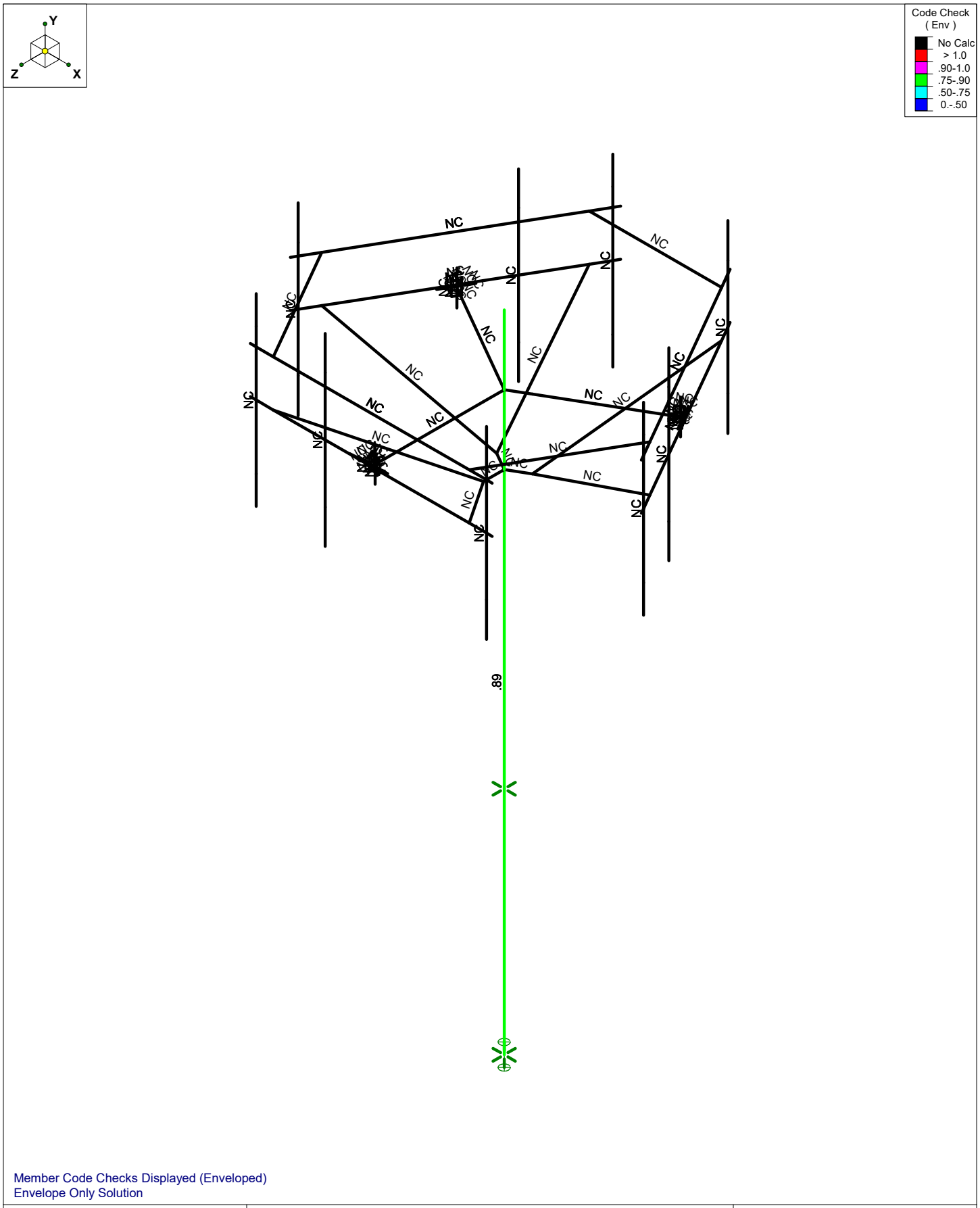

Member Code Checks Displayed (Enveloped)
Envelope Only Solution

Paul J Ford & Company	Orange Overland Drive	SK - 1
CEC		Apr 26, 2019 at 4:34 PM
A80619-0001.001.6190		80619-0001.001.6000 - Mast.r3d

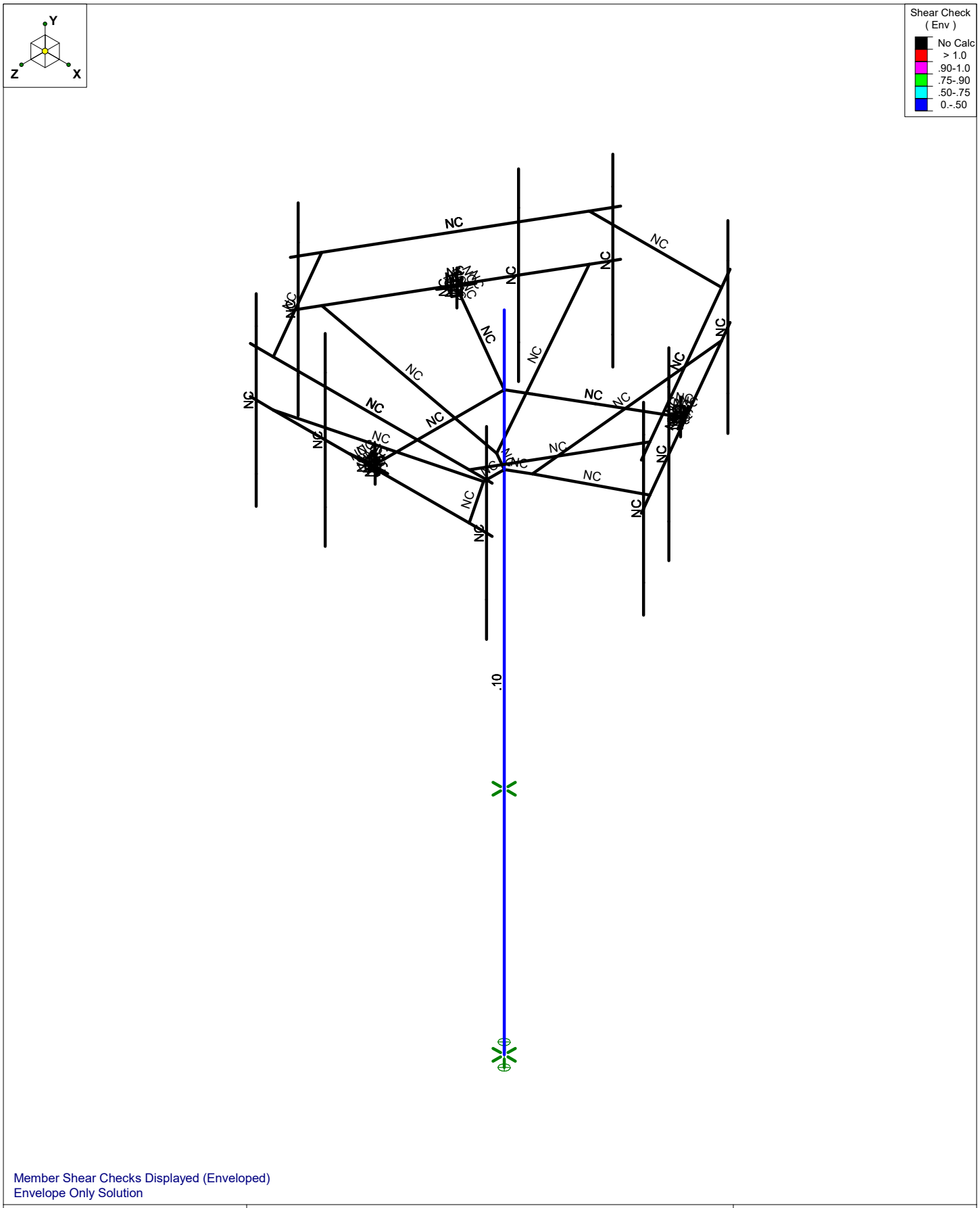

Member Shear Checks Displayed (Enveloped)
Envelope Only Solution

Paul J Ford & Company	Orange Overland Drive	SK - 2
CEC		Apr 26, 2019 at 4:34 PM
A80619-0001.001.6190		80619-0001.001.6000 - Mast.r3d

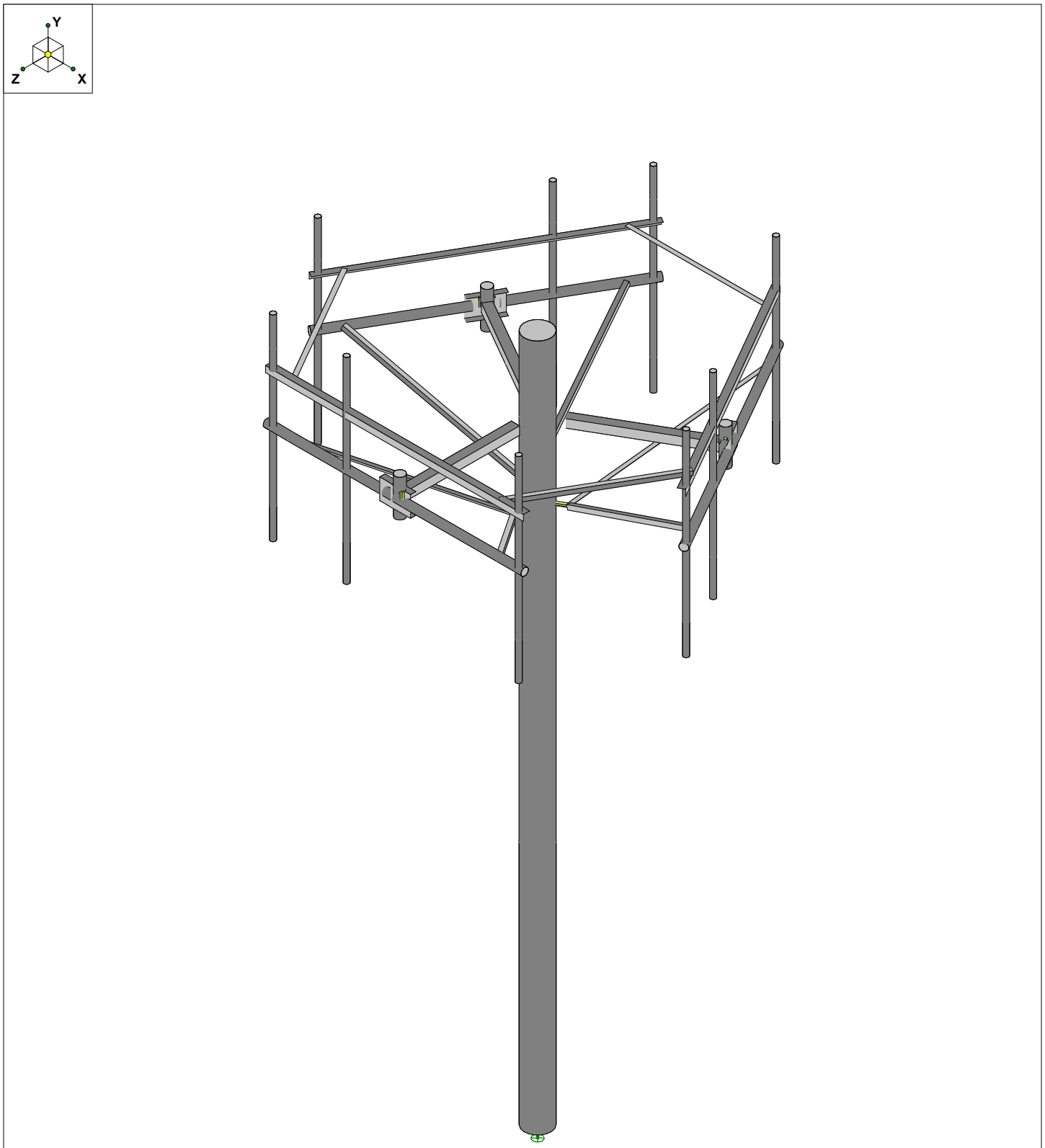

Envelope Only Solution

Paul J Ford & Company	Orange Overland Drive	SK - 3
CEC		Apr 26, 2019 at 4:34 PM
A80619-0001.001.6190		80619-0001.001.6000 - Mast.r3d

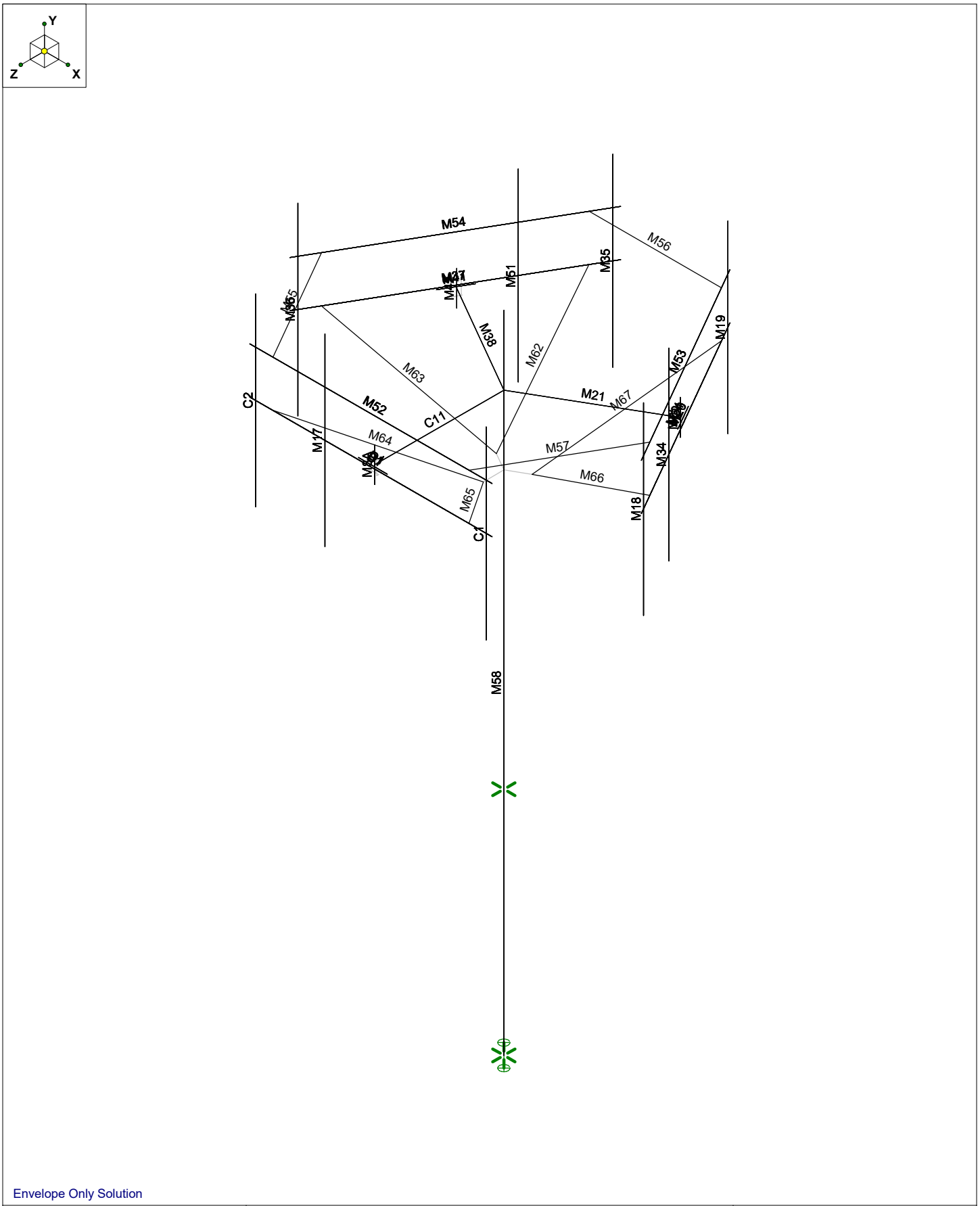

Envelope Only Solution

Paul J Ford & Company	Orange Overland Drive	SK - 5
CEC		Apr 26, 2019 at 4:36 PM
A80619-0001.001.6190		80619-0001.001.6000 - Mast.r3d

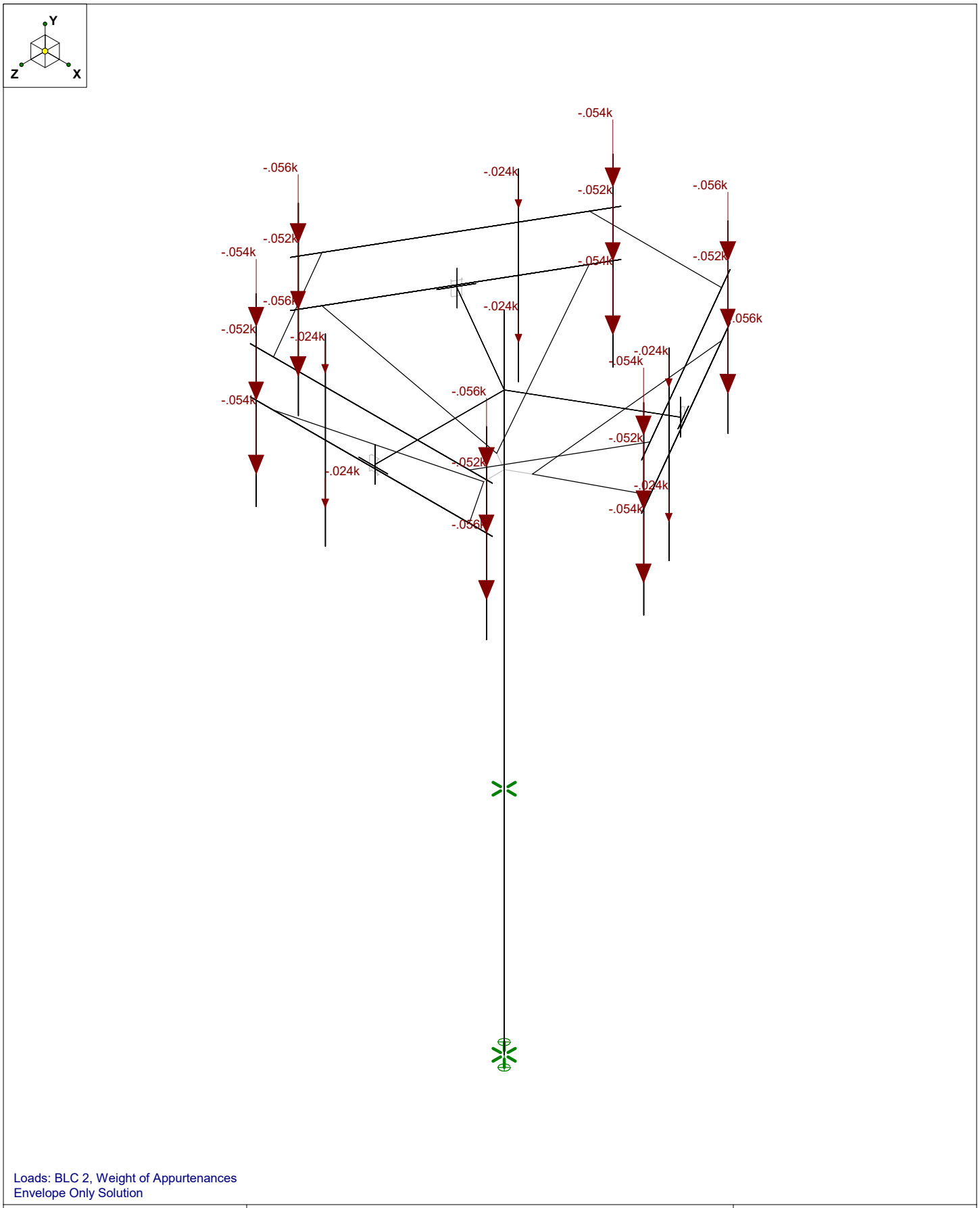

Loads: BLC 2, Weight of Appurtenances
Envelope Only Solution

Paul J Ford & Company	Orange Overland Drive	SK - 6
CEC		Apr 26, 2019 at 4:37 PM
A80619-0001.001.6190		80619-0001.001.6000 - Mast.r3d

(Global) Model Settings

Display Sections for Member Calcs	5
Max Internal Sections for Member Calcs	97
Include Shear Deformation?	Yes
Increase Nailing Capacity for Wind?	Yes
Include Warping?	Yes
Trans Load Btwn Intersecting Wood Wall?	Yes
Area Load Mesh (in^2)	144
Merge Tolerance (in)	.12
P-Delta Analysis Tolerance	0.50%
Include P-Delta for Walls?	Yes
Automatically Iterate Stiffness for Walls?	Yes
Max Iterations for Wall Stiffness	3
Gravity Acceleration (in/sec^2)	386.4
Wall Mesh Size (in)	24
Eigensolution Convergence Tol. (1.E-)	4
Vertical Axis	Y
Global Member Orientation Plane	XZ
Static Solver	Sparse Accelerated
Dynamic Solver	Accelerated Solver

Hot Rolled Steel Code	AISC 14th(360-10): LRFD
Adjust Stiffness?	Yes(Iterative)
RISAConnection Code	None
Cold Formed Steel Code	None
Wood Code	None
Wood Temperature	< 100F
Concrete Code	None
Masonry Code	None
Aluminum Code	None - Building

Number of Shear Regions	4
Region Spacing Increment (in)	4
Biaxial Column Method	Exact Integration
Parme Beta Factor (PCA)	.65
Concrete Stress Block	Rectangular
Use Cracked Sections?	Yes
Use Cracked Sections Slab?	Yes
Bad Framing Warnings?	No
Unused Force Warnings?	Yes
Min 1 Bar Diam. Spacing?	No
Concrete Rebar Set	REBAR_SET_ASTMA615
Min % Steel for Column	1
Max % Steel for Column	8

(Global) Model Settings, Continued

Seismic Code	ASCE 7-10
Seismic Base Elevation (in)	Not Entered
Add Base Weight?	Yes
Ct X	.02
Ct Z	.02
T X (sec)	Not Entered
T Z (sec)	Not Entered
R X	3
R Z	3
Ct Exp. X	.75
Ct Exp. Z	.75
SD1	1
SDS	1
S1	1
TL (sec)	5
Risk Cat	I or II
Drift Cat	Other
Om Z	1
Om X	1
Cd Z	4
Cd X	4
Rho Z	1
Rho X	1

Hot Rolled Steel Properties

	Label	E [ksi]	G [ksi]	Nu	Therm (\1...	Density[k/...	Yield[ksi]	Ry	Fu[ksi]	Rt
1	A992	29000	11154	.3	.65	.49	50	1.1	65	1.1
2	A36 Gr.36	29000	11154	.3	.65	.49	36	1.5	58	1.2
3	A572 Gr.50	29000	11154	.3	.65	.49	50	1.1	65	1.1
4	A500 Gr.B RND	29000	11154	.3	.65	.527	42	1.4	58	1.3
5	A500 Gr.B Rect	29000	11154	.3	.65	.527	46	1.4	58	1.3
6	A53 Gr.B	29000	11154	.3	.65	.49	35	1.6	60	1.2
7	A1085	29000	11154	.3	.65	.49	50	1.4	65	1.3

Member Primary Data

	Label	I Joint	J Joint	K Joint	Rotate(d...	Section/Shape	Type	Design List	Material	Design Ru...
1	C2	A4	A6			PIPE_2.0	None	None	A53 Gr.B	Typical
2	C1	A7	A9			PIPE_2.0	None	None	A53 Gr.B	Typical
3	B1	B1	B2			PIPE_3.0	None	None	A53 Gr.B	Typical
4	C11	N144	C2			HSS4x4x3	None	None	A500 Gr.B Rect	Typical
5	M7A	N18A	N16			RIGID	None	None	RIGID	Typical
6	M8	N19	N17A			RIGID	None	None	RIGID	Typical
7	D1	N20	N21		180	C10x15.3	None	None	A36 Gr.36	Typical
8	M8A	N18	N17			PIPE_4.0	None	None	A53 Gr.B	Typical
9	M9	N21A	N19A			RIGID	None	None	RIGID	Typical
10	M10	N22	N20A			RIGID	None	None	RIGID	Typical
11	M11	N27A	N21A			RIGID	None	None	RIGID	Typical
12	M12	N25	N19A			RIGID	None	None	RIGID	Typical
13	M13	N26	N20A			RIGID	None	None	RIGID	Typical
14	M14	N28	N22			RIGID	None	None	RIGID	Typical
15	M15	N28	N27A			RIGID	None	None	RIGID	Typical
16	M16	N26	N25			RIGID	None	None	RIGID	Typical
17	M17	N32	N33			PIPE_2.0	None	None	A53 Gr.B	Typical
18	M18	N41	N42			PIPE_2.0	None	None	A53 Gr.B	Typical
19	M19	N43	N45			PIPE_2.0	None	None	A53 Gr.B	Typical

Member Primary Data (Continued)

	Label	I Joint	J Joint	K Joint	Rotate(d...	Section/Shape	Type	Design List	Material	Design Ru...
20	M20	N46	N47			PIPE_3.0	None	None	A53 Gr.B	Typical
21	M21	N144	N49			HSS4x4x3	None	None	A500 Gr.B Rect	Typical
22	M22	N52	N50			RIGID	None	None	RIGID	Typical
23	M23	N53	N51			RIGID	None	None	RIGID	Typical
24	M24	N54	N55		180	C10x15.3	None	None	A36 Gr.36	Typical
25	M25	N58	N57			PIPE_4.0	None	None	A53 Gr.B	Typical
26	M26	N61	N59			RIGID	None	None	RIGID	Typical
27	M27	N62	N60			RIGID	None	None	RIGID	Typical
28	M28	N67	N61			RIGID	None	None	RIGID	Typical
29	M29	N65	N59			RIGID	None	None	RIGID	Typical
30	M30	N66	N60			RIGID	None	None	RIGID	Typical
31	M31	N68	N62			RIGID	None	None	RIGID	Typical
32	M32	N68	N67			RIGID	None	None	RIGID	Typical
33	M33	N66	N65			RIGID	None	None	RIGID	Typical
34	M34	N72	N73			PIPE_2.0	None	None	A53 Gr.B	Typical
35	M35	N81A	N82A			PIPE_2.0	None	None	A53 Gr.B	Typical
36	M36	N83	N85			PIPE_2.0	None	None	A53 Gr.B	Typical
37	M37	N86	N87			PIPE_3.0	None	None	A53 Gr.B	Typical
38	M38	N144	N89			HSS4x4x3	None	None	A500 Gr.B Rect	Typical
39	M39	N92	N90			RIGID	None	None	RIGID	Typical
40	M40	N93	N91			RIGID	None	None	RIGID	Typical
41	M41	N94	N95		180	C10x15.3	None	None	A36 Gr.36	Typical
42	M42	N98	N97			PIPE_4.0	None	None	A53 Gr.B	Typical
43	M43	N101	N99			RIGID	None	None	RIGID	Typical
44	M44	N102	N100			RIGID	None	None	RIGID	Typical
45	M45	N107	N101			RIGID	None	None	RIGID	Typical
46	M46	N105	N99			RIGID	None	None	RIGID	Typical
47	M47	N106	N100			RIGID	None	None	RIGID	Typical
48	M48	N108	N102			RIGID	None	None	RIGID	Typical
49	M49	N108	N107			RIGID	None	None	RIGID	Typical
50	M50	N106	N105			RIGID	None	None	RIGID	Typical
51	M51	N112	N113			PIPE_2.0	None	None	A53 Gr.B	Typical
52	M52	N131A	N139		180	L3x3x4	None	None	A36 Gr.36	Typical
53	M53	N140	N141		180	L3x3x4	None	None	A36 Gr.36	Typical
54	M54	N142	N143		180	L3x3x4	None	None	A36 Gr.36	Typical
55	M55	N138A	N143A		90	L2x2x3	None	None	A36 Gr.36	Typical
56	M56	N140A	N142A		90	L2x2x3	None	None	A36 Gr.36	Typical
57	M57	N139A	N141A		90	L2x2x3	None	None	A36 Gr.36	Typical
58	M58	N146	N145			PIPE_12.0X	None	None	A53 Gr.B	Typical
59	M59	N157	N154			RIGID	None	None	RIGID	Typical
60	M60	N157	N156			RIGID	None	None	RIGID	Typical
61	M61	N157	N155			RIGID	None	None	RIGID	Typical
62	M62	N156	N150		180	L2x2x3	None	None	A36 Gr.36	Typical
63	M63	N156	N153		90	L2x2x3	None	None	A36 Gr.36	Typical
64	M64	N154	N148		180	L2x2x3	None	None	A36 Gr.36	Typical
65	M65	N154	N151		90	L2x2x3	None	None	A36 Gr.36	Typical
66	M66	N155	N149		180	L2x2x3	None	None	A36 Gr.36	Typical
67	M67	N155	N152		90	L2x2x3	None	None	A36 Gr.36	Typical

Member Advanced Data

	Label	I Release	J Release	I Offset[in]	J Offset[in]	T/C Only	Physical	Analysis ...	Inactive	Seismic Design ...
1	C2						Yes		Exclude	None
2	C1						Yes		Exclude	None
3	B1						Yes		Exclude	None
4	C11			10.75			Yes		Exclude	None

Member Advanced Data (Continued)

	Label	I Release	J Release	I Offset[in]	J Offset[in]	T/C Only	Physical	Analysis ...	Inactive	Seismic Design ...
5	M7A						Yes		Exclude	None
6	M8						Yes		Exclude	None
7	D1						Yes		Exclude	None
8	M8A						Yes		Exclude	None
9	M9						Yes		Exclude	None
10	M10						Yes		Exclude	None
11	M11						Yes		Exclude	None
12	M12						Yes		Exclude	None
13	M13						Yes		Exclude	None
14	M14						Yes		Exclude	None
15	M15						Yes		Exclude	None
16	M16						Yes		Exclude	None
17	M17						Yes		Exclude	None
18	M18						Yes		Exclude	None
19	M19						Yes		Exclude	None
20	M20						Yes		Exclude	None
21	M21			10.75			Yes		Exclude	None
22	M22						Yes		Exclude	None
23	M23						Yes		Exclude	None
24	M24						Yes		Exclude	None
25	M25						Yes		Exclude	None
26	M26						Yes		Exclude	None
27	M27						Yes		Exclude	None
28	M28						Yes		Exclude	None
29	M29						Yes		Exclude	None
30	M30						Yes		Exclude	None
31	M31						Yes		Exclude	None
32	M32						Yes		Exclude	None
33	M33						Yes		Exclude	None
34	M34						Yes		Exclude	None
35	M35						Yes		Exclude	None
36	M36						Yes		Exclude	None
37	M37						Yes		Exclude	None
38	M38			10.75			Yes		Exclude	None
39	M39						Yes		Exclude	None
40	M40						Yes		Exclude	None
41	M41						Yes		Exclude	None
42	M42						Yes		Exclude	None
43	M43						Yes		Exclude	None
44	M44						Yes		Exclude	None
45	M45						Yes		Exclude	None
46	M46						Yes		Exclude	None
47	M47						Yes		Exclude	None
48	M48						Yes		Exclude	None
49	M49						Yes		Exclude	None
50	M50						Yes		Exclude	None
51	M51						Yes		Exclude	None
52	M52						Yes		Exclude	None
53	M53						Yes		Exclude	None
54	M54						Yes		Exclude	None
55	M55	OOOOOX	OOOOOX				Yes		Exclude	None
56	M56	OOOOOX	OOOOOX				Yes		Exclude	None
57	M57	OOOOOX	OOOOOX				Yes		Exclude	None
58	M58						Yes			None
59	M59						Yes		Exclude	None
60	M60						Yes		Exclude	None
61	M61						Yes		Exclude	None

Member Advanced Data (Continued)

	Label	I Release	J Release	I Offset[in]	J Offset[in]	T/C Only	Physical	Analysis ...	Inactive	Seismic Design ...
62	M62	BenPIN	BenPIN				Yes		Exclude	None
63	M63	BenPIN	BenPIN				Yes		Exclude	None
64	M64	BenPIN	BenPIN				Yes		Exclude	None
65	M65	BenPIN	BenPIN				Yes		Exclude	None
66	M66	BenPIN	BenPIN				Yes		Exclude	None
67	M67	BenPIN	BenPIN				Yes		Exclude	None

Hot Rolled Steel Design Parameters

	Label	Shape	Length[in]	Lbyy[in]	Lbzz[in]	Lcomp top[in]	Lcomp bot[in]	L-torqu...	Kyy	Kzz	Cb	Function
1	C2	PIPE_2.0	96			Lbyy						Lateral
2	C1	PIPE_2.0	96			Lbyy						Lateral
3	B1	PIPE_3.0	126			Lbyy						Lateral
4	C11	HSS4x4x3	67.25			Lbyy						Lateral
5	D1	C10x15.3	15			Lbyy						Lateral
6	M8A	PIPE_4.0	18			Lbyy						Lateral
7	M17	PIPE_2.0	96			Lbyy						Lateral
8	M18	PIPE_2.0	96			Lbyy						Lateral
9	M19	PIPE_2.0	96			Lbyy						Lateral
10	M20	PIPE_3.0	126			Lbyy						Lateral
11	M21	HSS4x4x3	67.25			Lbyy						Lateral
12	M24	C10x15.3	15			Lbyy						Lateral
13	M25	PIPE_4.0	18			Lbyy						Lateral
14	M34	PIPE_2.0	96			Lbyy						Lateral
15	M35	PIPE_2.0	96			Lbyy						Lateral
16	M36	PIPE_2.0	96			Lbyy						Lateral
17	M37	PIPE_3.0	126			Lbyy						Lateral
18	M38	HSS4x4x3	67.25			Lbyy						Lateral
19	M41	C10x15.3	15			Lbyy						Lateral
20	M42	PIPE_4.0	18			Lbyy						Lateral
21	M51	PIPE_2.0	96			Lbyy						Lateral
22	M52	L3x3x4	126			Lbyy						Lateral
23	M53	L3x3x4	126			Lbyy						Lateral
24	M54	L3x3x4	126			Lbyy						Lateral
25	M55	L2x2x3	68.945									Lateral
26	M56	L2x2x3	68.945									Lateral
27	M57	L2x2x3	68.945									Lateral
28	M58	PIPE_12.0X	336									Lateral
29	M62	L2x2x3	85.553									Lateral
30	M63	L2x2x3	85.553									Lateral
31	M64	L2x2x3	85.553									Lateral
32	M65	L2x2x3	85.553									Lateral
33	M66	L2x2x3	85.553									Lateral
34	M67	L2x2x3	85.553									Lateral

Joint Loads and Enforced Displacements (BLC 2 : Weight of Appurtenances)

	Joint Label	L,D,M	Direction	Magnitude[(k,k-ft), (in,rad), (k*s^2/i...
1	EQUIP_A_1(TOP)	L	Y	-.054
2	EQUIP_A_1(BOT)	L	Y	-.054
3	EQUIP_A_2	L	Y	-.052
4	EQUIP_A_4(TOP)	L	Y	-.024
5	EQUIP_A_4(BOT)	L	Y	-.024
6	EQUIP_A_5(TOP)	L	Y	-.056
7	EQUIP_A_5(BOT)	L	Y	-.056
8	EQUIP_A_3	L	Y	-.052

Joint Loads and Enforced Displacements (BLC 2 : Weight of Appurtenances) (Continued)

	Joint Label	L,D,M	Direction	Magnitude[(k,k-ft), (in,rad), (k*s^2/i...
9	EQUIP_B_2	L	Y	-.052
10	EQUIP_B_3	L	Y	-.052
11	EQUIP_B_1(TOP)	L	Y	-.054
12	EQUIP_B_1(BOT)	L	Y	-.054
13	EQUIP_B_4(TOP)	L	Y	-.024
14	EQUIP_B_4(BOT)	L	Y	-.024
15	EQUIP_B_5(TOP)	L	Y	-.056
16	EQUIP_B_5(BOT)	L	Y	-.056
17	EQUIP_C_2	L	Y	-.052
18	EQUIP_C_3	L	Y	-.052
19	EQUIP_C_1(TOP)	L	Y	-.054
20	EQUIP_C_1(BOT)	L	Y	-.054
21	EQUIP_C_4(TOP)	L	Y	-.024
22	EQUIP_C_4(BOT)	L	Y	-.024
23	EQUIP_C_5(TOP)	L	Y	-.056
24	EQUIP_C_5(BOT)	L	Y	-.056

Joint Loads and Enforced Displacements (BLC 3 : Weight of Ice Only)

	Joint Label	L,D,M	Direction	Magnitude[(k,k-ft), (in,rad), (k*s^2/i...
1	EQUIP_A_1(TOP)	L	Y	-.194
2	EQUIP_A_1(BOT)	L	Y	-.194
3	EQUIP_A_2	L	Y	-.099
4	EQUIP_A_4(TOP)	L	Y	-.134
5	EQUIP_A_4(BOT)	L	Y	-.134
6	EQUIP_A_5(TOP)	L	Y	-.148
7	EQUIP_A_5(BOT)	L	Y	-.148
8	EQUIP_A_3	L	Y	-.093
9	EQUIP_B_2	L	Y	-.099
10	EQUIP_B_3	L	Y	-.093
11	EQUIP_B_1(TOP)	L	Y	-.194
12	EQUIP_B_1(BOT)	L	Y	-.194
13	EQUIP_B_4(TOP)	L	Y	-.134
14	EQUIP_B_4(BOT)	L	Y	-.134
15	EQUIP_B_5(TOP)	L	Y	-.148
16	EQUIP_B_5(BOT)	L	Y	-.148
17	EQUIP_C_2	L	Y	-.099
18	EQUIP_C_3	L	Y	-.093
19	EQUIP_C_1(TOP)	L	Y	-.194
20	EQUIP_C_1(BOT)	L	Y	-.194
21	EQUIP_C_4(TOP)	L	Y	-.134
22	EQUIP_C_4(BOT)	L	Y	-.134
23	EQUIP_C_5(TOP)	L	Y	-.148
24	EQUIP_C_5(BOT)	L	Y	-.148

Joint Loads and Enforced Displacements (BLC 4 : TIA Wind with Ice - X)

	Joint Label	L,D,M	Direction	Magnitude[(k,k-ft), (in,rad), (k*s^2/i...
1	EQUIP_A_1(TOP)	L	X	.044
2	EQUIP_A_1(BOT)	L	X	.044
3	EQUIP_A_2	L	X	.021
4	EQUIP_A_4(TOP)	L	X	.041
5	EQUIP_A_4(BOT)	L	X	.041
6	EQUIP_A_5(BOT)	L	X	.046
7	EQUIP_A_5(TOP)	L	X	.046
8	EQUIP_A_3	L	X	.018
9	EQUIP_B_2	L	X	.021
10	EQUIP_B_3	L	X	.018

Joint Loads and Enforced Displacements (BLC 4 : TIA Wind with Ice - X) (Continued)

	Joint Label	L,D,M	Direction	Magnitude[(k,k-ft), (in,rad), (k*s^2/i...
11	EQUIP_B_1(TOP)	L	X	.044
12	EQUIP_B_1(BOT)	L	X	.044
13	EQUIP_B_4(TOP)	L	X	.041
14	EQUIP_B_4(BOT)	L	X	.041
15	EQUIP_B_5(TOP)	L	X	.046
16	EQUIP_B_5(BOT)	L	X	.046
17	EQUIP_C_2	L	X	.021
18	EQUIP_C_3	L	X	.018
19	EQUIP_C_1(TOP)	L	X	.044
20	EQUIP_C_1(BOT)	L	X	.044
21	EQUIP_C_4(TOP)	L	X	.041
22	EQUIP_C_4(BOT)	L	X	.041
23	EQUIP_C_5(TOP)	L	X	.046
24	EQUIP_C_5(BOT)	L	X	.046

Joint Loads and Enforced Displacements (BLC 5 : TIA Wind with Ice - Z)

	Joint Label	L,D,M	Direction	Magnitude[(k,k-ft), (in,rad), (k*s^2/i...
1	EQUIP_A_1(TOP)	L	Z	.077
2	EQUIP_A_1(BOT)	L	Z	.077
3	EQUIP_A_2	L	Z	.033
4	EQUIP_A_4(TOP)	L	Z	.052
5	EQUIP_A_4(BOT)	L	Z	.052
6	EQUIP_A_5(TOP)	L	Z	.051
7	EQUIP_A_5(BOT)	L	Z	.051
8	EQUIP_A_3	L	Z	.033
9	EQUIP_B_2	L	Z	.033
10	EQUIP_B_3	L	Z	.033
11	EQUIP_B_1(TOP)	L	Z	.077
12	EQUIP_B_1(BOT)	L	Z	.077
13	EQUIP_B_4(TOP)	L	Z	.052
14	EQUIP_B_4(BOT)	L	Z	.052
15	EQUIP_B_5(TOP)	L	Z	.051
16	EQUIP_B_5(BOT)	L	Z	.051
17	EQUIP_C_2	L	Z	.033
18	EQUIP_C_3	L	Z	.033
19	EQUIP_C_1(TOP)	L	Z	.077
20	EQUIP_C_1(BOT)	L	Z	.077
21	EQUIP_C_4(TOP)	L	Z	.052
22	EQUIP_C_4(BOT)	L	Z	.052
23	EQUIP_C_5(TOP)	L	Z	.051
24	EQUIP_C_5(BOT)	L	Z	.051

Joint Loads and Enforced Displacements (BLC 6 : TIA Wind - X)

	Joint Label	L,D,M	Direction	Magnitude[(k,k-ft), (in,rad), (k*s^2/i...
1	EQUIP_A_1(TOP)	L	X	.111
2	EQUIP_A_1(BOT)	L	X	.111
3	EQUIP_A_2	L	X	.035
4	EQUIP_A_4(TOP)	L	X	.102
5	EQUIP_A_4(BOT)	L	X	.102
6	EQUIP_A_5(TOP)	L	X	.129
7	EQUIP_A_5(BOT)	L	X	.129
8	EQUIP_A_3	L	X	.026
9	EQUIP_B_2	L	X	.035
10	EQUIP_B_3	L	X	.026
11	EQUIP_B_1(TOP)	L	X	.111
12	EQUIP_B_1(BOT)	L	X	.111

Joint Loads and Enforced Displacements (BLC 6 : TIA Wind - X) (Continued)

	Joint Label	L,D,M	Direction	Magnitude[(k,k-ft), (in,rad), (k*s^2/i...
13	EQUIP_B_4(TOP)	L	X	.102
14	EQUIP_B_4(BOT)	L	X	.102
15	EQUIP_B_5(TOP)	L	X	.129
16	EQUIP_B_5(BOT)	L	X	.129
17	EQUIP_C_2	L	X	.035
18	EQUIP_C_3	L	X	.026
19	EQUIP_C_1(TOP)	L	X	.111
20	EQUIP_C_1(BOT)	L	X	.111
21	EQUIP_C_4(TOP)	L	X	.102
22	EQUIP_C_4(BOT)	L	X	.102
23	EQUIP_C_5(TOP)	L	X	.129
24	EQUIP_C_5(BOT)	L	X	.129

Joint Loads and Enforced Displacements (BLC 7 : TIA Wind - Z)

	Joint Label	L,D,M	Direction	Magnitude[(k,k-ft), (in,rad), (k*s^2/i...
1	EQUIP_A_1(TOP)	L	Z	.263
2	EQUIP_A_1(BOT)	L	Z	.263
3	EQUIP_A_2	L	Z	.073
4	EQUIP_A_4(TOP)	L	Z	.155
5	EQUIP_A_4(BOT)	L	Z	.155
6	EQUIP_A_5(TOP)	L	Z	.154
7	EQUIP_A_5(BOT)	L	Z	.154
8	EQUIP_A_3	L	Z	.074
9	EQUIP_B_2	L	Z	.073
10	EQUIP_B_3	L	Z	.074
11	EQUIP_B_1(TOP)	L	Z	.263
12	EQUIP_B_1(BOT)	L	Z	.263
13	EQUIP_B_4(TOP)	L	Z	.155
14	EQUIP_B_4(BOT)	L	Z	.155
15	EQUIP_B_5(TOP)	L	Z	.154
16	EQUIP_B_5(BOT)	L	Z	.154
17	EQUIP_C_2	L	Z	.073
18	EQUIP_C_3	L	Z	.074
19	EQUIP_C_1(TOP)	L	Z	.263
20	EQUIP_C_1(BOT)	L	Z	.263
21	EQUIP_C_4(TOP)	L	Z	.155
22	EQUIP_C_4(BOT)	L	Z	.155
23	EQUIP_C_5(TOP)	L	Z	.154
24	EQUIP_C_5(BOT)	L	Z	.154

Member Distributed Loads (BLC 3 : Weight of Ice Only)

	Member Label	Direction	Start Magnitude[lb/ft,F,ksf]	End Magnitude[lb/ft,F,ksf]	Start Location[in,%]	End Location[in,%]
1	C2	Y	-12.7	-12.7	0	0
2	C1	Y	-12.7	-12.7	0	0
3	M17	Y	-12.7	-12.7	0	0
4	B1	Y	-15.7	-15.7	0	0
5	C11	Y	-24.2	-24.2	0	0
6	M8A	Y	-23.5	-23.5	0	0
7	M18	Y	-12.7	-12.7	0	0
8	M19	Y	-12.7	-12.7	0	0
9	M20	Y	-15.7	-15.7	0	0
10	M21	Y	-24.2	-24.2	0	0
11	M25	Y	-23.5	-23.5	0	0
12	M34	Y	-12.7	-12.7	0	0
13	M35	Y	-12.7	-12.7	0	0

Member Distributed Loads (BLC 3 : Weight of Ice Only) (Continued)

	Member Label	Direction	Start Magnitude[lb/ft,F,ksf]	End Magnitude[lb/ft,F,ksf]	Start Location[in,%]	End Location[in,%]
14	M36	Y	-12.7	-12.7	0	0
15	M37	Y	-15.7	-15.7	0	0
16	M38	Y	-24.2	-24.2	0	0
17	M42	Y	-23.5	-23.5	0	0
18	M51	Y	-12.7	-12.7	0	0
19	M55	Y	-15.1	-15.1	0	0
20	M56	Y	-15.1	-15.1	0	0
21	M57	Y	-15.1	-15.1	0	0
22	M52	Y	-18.3	-18.3	0	0
23	M53	Y	-18.3	-18.3	0	0
24	M54	Y	-18.3	-18.3	0	0
25	M58	Y	-41	-41	0	0
26	M62	Y	-14.9	-14.9	0	0
27	M63	Y	-14.9	-14.9	0	0
28	M64	Y	-14.9	-14.9	0	0
29	M65	Y	-14.9	-14.9	0	0
30	M66	Y	-14.9	-14.9	0	0
31	M67	Y	-14.9	-14.9	0	0

Member Distributed Loads (BLC 4 : TIA Wind with Ice - X)

	Member Label	Direction	Start Magnitude[lb/ft,F,ksf]	End Magnitude[lb/ft,F,ksf]	Start Location[in,%]	End Location[in,%]
1	C2	X	6.156	6.156	0	0
2	C1	X	6.156	6.156	0	0
3	M17	X	6.156	6.156	0	0
4	C11	X	9.936	9.936	0	0
5	M8A	X	5.832	5.832	0	0
6	M18	X	6.156	6.156	0	0
7	M19	X	6.156	6.156	0	0
8	M21	X	9.936	9.936	0	0
9	M25	X	5.832	5.832	0	0
10	M34	X	6.156	6.156	0	0
11	M35	X	6.156	6.156	0	0
12	M36	X	6.156	6.156	0	0
13	M38	X	9.936	9.936	0	0
14	M42	X	5.832	5.832	0	0
15	M51	X	6.156	6.156	0	0
16	M53	X	11.016	11.016	0	0
17	M54	X	11.016	11.016	0	0
18	M55	X	11.34	11.34	0	0
19	M57	X	11.34	11.34	0	0
20	M20	X	7.02	7.02	0	0
21	M37	X	7.02	7.02	0	0
22	M58	X	19	19	0	0
23	M62	X	9.7	9.7	0	0
24	M63	X	9.7	9.7	0	0
25	M64	X	9.7	9.7	0	0
26	M65	X	9.7	9.7	0	0
27	M66	X	9.7	9.7	0	0
28	M67	X	9.7	9.7	0	0

Member Distributed Loads (BLC 5 : TIA Wind with Ice - Z)

	Member Label	Direction	Start Magnitude[lb/ft,F,ksf]	End Magnitude[lb/ft,F,ksf]	Start Location[in,%]	End Location[in,%]
1	C2	Z	6.156	6.156	0	0
2	C1	Z	6.156	6.156	0	0
3	M17	Z	6.156	6.156	0	0
4	B1	Z	7.02	7.02	0	0

Member Distributed Loads (BLC 5 : TIA Wind with Ice - Z) (Continued)

	Member Label	Direction	Start Magnitude[lb/ft,F,ksf]	End Magnitude[lb/ft,F,ksf]	Start Location[in,%]	End Location[in,%]
5	M8A	Z	5.832	5.832	0	0
6	M18	Z	6.156	6.156	0	0
7	M19	Z	6.156	6.156	0	0
8	M20	Z	7.02	7.02	0	0
9	M25	Z	5.832	5.832	0	0
10	M34	Z	6.156	6.156	0	0
11	M35	Z	6.156	6.156	0	0
12	M36	Z	6.156	6.156	0	0
13	M37	Z	7.02	7.02	0	0
14	M42	Z	5.832	5.832	0	0
15	M51	Z	6.156	6.156	0	0
16	M52	Z	11.016	11.016	0	0
17	M53	Z	11.016	11.016	0	0
18	M54	Z	11.016	11.016	0	0
19	M55	Z	11.34	11.34	0	0
20	M56	Z	11.34	11.34	0	0
21	M57	Z	11.34	11.34	0	0
22	M21	Z	9.936	9.936	0	0
23	M38	Z	9.936	9.936	0	0
24	M58	Z	19	19	0	0
25	M62	Z	9.7	9.7	0	0
26	M63	Z	9.7	9.7	0	0
27	M64	Z	9.7	9.7	0	0
28	M65	Z	9.7	9.7	0	0
29	M66	Z	9.7	9.7	0	0
30	M67	Z	9.7	9.7	0	0

Member Distributed Loads (BLC 6 : TIA Wind - X)

	Member Label	Direction	Start Magnitude[lb/ft,F,ksf]	End Magnitude[lb/ft,F,ksf]	Start Location[in,%]	End Location[in,%]
1	C2	X	9.072	9.072	0	0
2	C1	X	9.072	9.072	0	0
3	M17	X	9.072	9.072	0	0
4	C11	X	18.576	18.576	0	0
5	M8A	X	10.476	10.476	0	0
6	M18	X	9.072	9.072	0	0
7	M19	X	9.072	9.072	0	0
8	M21	X	18.576	18.576	0	0
9	M25	X	10.476	10.476	0	0
10	M34	X	9.072	9.072	0	0
11	M35	X	9.072	9.072	0	0
12	M36	X	9.072	9.072	0	0
13	M38	X	18.576	18.576	0	0
14	M42	X	10.476	10.476	0	0
15	M51	X	9.072	9.072	0	0
16	M53	X	19.008	19.008	0	0
17	M54	X	19.008	19.008	0	0
18	M55	X	14.688	14.688	0	0
19	M57	X	14.688	14.688	0	0
20	M20	X	13.284	13.284	0	0
21	M37	X	13.284	13.284	0	0
22	M58	X	60.6	60.6	0	0

Member Distributed Loads (BLC 7 : TIA Wind - Z)

	Member Label	Direction	Start Magnitude[lb/ft,F,ksf]	End Magnitude[lb/ft,F,ksf]	Start Location[in,%]	End Location[in,%]
1	C2	Z	9.072	9.072	0	0
2	C1	Z	9.072	9.072	0	0

Member Distributed Loads (BLC 7 : TIA Wind - Z) (Continued)

	Member Label	Direction	Start Magnitude[lb/ft,F,ksf]	End Magnitude[lb/ft,F,ksf]	Start Location[in,%]	End Location[in,%]
3	M17	Z	9.072	9.072	0	0
4	B1	Z	13.284	13.284	0	0
5	M8A	Z	10.476	10.476	0	0
6	M18	Z	9.072	9.072	0	0
7	M19	Z	9.072	9.072	0	0
8	M20	Z	13.284	13.284	0	0
9	M25	Z	10.476	10.476	0	0
10	M34	Z	9.072	9.072	0	0
11	M35	Z	9.072	9.072	0	0
12	M36	Z	9.072	9.072	0	0
13	M37	Z	13.284	13.284	0	0
14	M42	Z	10.476	10.476	0	0
15	M51	Z	9.072	9.072	0	0
16	M52	Z	19.008	19.008	0	0
17	M53	Z	19.008	19.008	0	0
18	M54	Z	19.008	19.008	0	0
19	M55	Z	14.688	14.688	0	0
20	M56	Z	14.688	14.688	0	0
21	M57	Z	14.688	14.688	0	0
22	M21	Z	18.576	18.576	0	0
23	M38	Z	18.576	18.576	0	0
24	M58	Z	60.6	60.6	0	0

Basic Load Cases

	BLC Description	Category	X Grav...	Y Grav...	Z Grav...	Joint	Point	Distrib...	Area(...	Surfac...
1	Self Weight	None		-1.1						
2	Weight of Appurtenances	None				24				
3	Weight of Ice Only	None				24		31		
4	TIA Wind with Ice - X	None				24		28		
5	TIA Wind with Ice - Z	None				24		30		
6	TIA Wind - X	None				24		22		
7	TIA Wind - Z	None				24		24		

Load Combinations

	Description	S...	PDelta	SRSS	B...	Fa...	B...	Fac...	B...	Fa...	B...	Fa...	B...	Fa...	B...	Fa...	B...	Fa...	B...	Fa...	B...	Fa...	B...	Fa...
1	1.2D + 1.6W (0 deg)	Y...	Y		1	1.2	2	1.2	6	1.6														
2	1.2D + 1.6W (30 deg)	Y...	Y		1	1.2	2	1.2	6	1.39	7	.8												
3	1.2D + 1.6W (60 deg)	Y...	Y		1	1.2	2	1.2	6	.8	7	1.39												
4	1.2D + 1.6W (90 deg)	Y...	Y		1	1.2	2	1.2	7	1.6														
5	1.2D + 1.6W (120 deg)	Y...	Y		1	1.2	2	1.2	6	-.8	7	1.39												
6	1.2D + 1.6W (150 deg)	Y...	Y		1	1.2	2	1.2	6	-1....	7	.8												
7	1.2D + 1.6W (180 deg)	Y...	Y		1	1.2	2	1.2	6	-1.6														
8	1.2D + 1.6W (210 deg)	Y...	Y		1	1.2	2	1.2	6	-1....	7	-.8												
9	1.2D + 1.6W (240 deg)	Y...	Y		1	1.2	2	1.2	6	-.8	7	-1....												
10	1.2D + 1.6W (270 deg)	Y...	Y		1	1.2	2	1.2	7	-1.6														
11	1.2D + 1.6W (300 deg)	Y...	Y		1	1.2	2	1.2	6	.8	7	-1....												
12	1.2D + 1.6W (330 deg)	Y...	Y		1	1.2	2	1.2	6	1.39	7	-.8												
13	1.2D + 1.0Di + 1.0Wi (0 deg)	Y...	Y		1	1.2	2	1.2	3	1	4	1												
14	1.2D + 1.0Di + 1.0Wi (30 deg)	Y...	Y		1	1.2	2	1.2	3	1	4	.866	5	.5										
15	1.2D + 1.0Di + 1.0Wi (60 deg)	Y...	Y		1	1.2	2	1.2	3	1	4	.5	5	.866										
16	1.2D + 1.0Di + 1.0Wi (90 deg)	Y...	Y		1	1.2	2	1.2	3	1	5	1												
17	1.2D + 1.0Di + 1.0Wi (120 deg)	Y...	Y		1	1.2	2	1.2	3	1	4	-.5	5	.866										
18	1.2D + 1.0Di + 1.0Wi (150 deg)	Y...	Y		1	1.2	2	1.2	3	1	4	-.8...	5	.5										
19	1.2D + 1.0Di + 1.0Wi (180 deg)	Y...	Y		1	1.2	2	1.2	3	1	4	-1												

Load Combinations (Continued)

	Description	S...	PDelta	SRSS	B...	Fa...	B...	Fac...	B...	Fa...	B...	Fa...	B...	Fa...	B...	Fa...	B...	Fa...	B...	Fa...	B...	Fa...	B...	Fa...
20	1.2D + 1.0Di + 1.0Wi (210 deg)	Y...	Y		1	1.2	2	1.2	3	1	4	-.8...	5	-.5										
21	1.2D + 1.0Di + 1.0Wi (240 deg)	Y...	Y		1	1.2	2	1.2	3	1	4	-.5	5	-.8...										
22	1.2D + 1.0Di + 1.0Wi (270 deg)	Y...	Y		1	1.2	2	1.2	3	1	5	-1												
23	1.2D + 1.0Di + 1.0Wi (300 deg)	Y...	Y		1	1.2	2	1.2	3	1	4	.5	5	-.8...										
24	1.2D + 1.0Di + 1.0Wi (330 deg)	Y...	Y		1	1.2	2	1.2	3	1	4	.866	5	-.5										
25	1.2D + 1.6W (0 deg) Service Wind	Y...	Y		1	1.2	2	1.2	7	.48														

Envelope AISC 14th(360-10): LRFD Steel Code Checks

	Mem...	Shape	Code Check	Loc[in]	LC	Shear ...	Loc[...	Dir	LC	phi*Pn...	phi*Pn...	phi*Mn ...	phi*Mn...	Cb	Eqn
1	M58	PIPE_12....	.890	119	10	.103	119		9	409.076	551.25	184.275	184.275	1...	H...

Envelope Joint Reactions

	Joint		X [k]	LC	Y [k]	LC	Z [k]	LC	MX [k-ft]	LC	MY [k-ft]	LC	MZ [k-ft]	LC
1	N147	max	20.255	7	0	1	28.315	10	0	1	0	1	0	1
2		min	-20.257	1	0	1	-28.233	4	0	1	0	1	0	1
3	N146	max	11.063	1	12.777	15	15.882	4	0	1	2.235	1	0	1
4		min	-11.061	7	4.869	9	-15.964	10	0	1	-2.237	7	0	1
5	Totals:	max	9.194	7	12.777	15	12.351	10						
6		min	-9.194	1	4.869	9	-12.351	4						

Joint Deflections (By Combination)

	LC	Joint Label	X [in]	Y [in]	Z [in]	X Rotation [rad]	Y Rotation [rad]	Z Rotation [rad]
1	25	A4	.145	-.924	1.001	7.188e-03	6.729e-03	2.477e-03
2	25	A6	-.074	-.924	1.998	1.316e-02	4.945e-03	2.135e-03
3	25	A7	.056	-.746	.691	1.077e-02	-4.092e-03	6.286e-04
4	25	EQUIP_A_2	.025	-.746	1.231	1.3e-02	-4.092e-03	6.299e-04
5	25	A9	-.075	-.746	1.914	1.457e-02	-2.693e-03	2.207e-03
6	25	B1	.026	-.931	1.413	1.143e-02	6.729e-03	2.484e-03
7	25	B2	.025	-.744	1.243	1.3e-02	-4.093e-03	6.299e-04
8	25	C1	0	-.087	1.087	7.872e-03	-3.097e-06	1.906e-06
9	25	C2	.024	-.755	1.088	1.368e-02	1.093e-03	1.496e-03
10	25	N16	.025	-.777	1.095	1.367e-02	1.663e-03	1.53e-03
11	25	N17A	.025	-.761	1.083	1.366e-02	8.05e-04	1.508e-03
12	25	N18A	.026	-.79	1.095	1.367e-02	1.663e-03	1.53e-03
13	25	N19	.026	-.775	1.083	1.366e-02	8.05e-04	1.508e-03
14	25	N20	.025	-.78	1.099	1.367e-02	1.663e-03	1.53e-03
15	25	N21	.025	-.758	1.081	1.366e-02	8.05e-04	1.508e-03
16	25	EQUIP_A_3	.026	-.924	1.393	1.143e-02	6.729e-03	2.484e-03
17	25	N17	.01	-.755	1.212	1.368e-02	1.16e-03	1.517e-03
18	25	N18	.037	-.755	.965	1.368e-02	1.16e-03	1.517e-03
19	25	N19A	.018	-.752	1.134	1.368e-02	1.16e-03	1.517e-03
20	25	N20A	.029	-.752	1.038	1.368e-02	1.16e-03	1.517e-03
21	25	N21A	.018	-.758	1.139	1.368e-02	1.16e-03	1.517e-03
22	25	N22	.029	-.758	1.043	1.368e-02	1.16e-03	1.517e-03
23	25	N23	.018	-.755	1.136	1.368e-02	1.16e-03	1.517e-03
24	25	N24	.029	-.755	1.041	1.368e-02	1.16e-03	1.517e-03
25	25	N25	.019	-.766	1.134	1.368e-02	1.16e-03	1.517e-03
26	25	N26	.03	-.766	1.038	1.368e-02	1.16e-03	1.517e-03
27	25	N27A	.019	-.772	1.139	1.368e-02	1.16e-03	1.517e-03
28	25	N28	.03	-.772	1.043	1.368e-02	1.16e-03	1.517e-03
29	25	N29	.025	-.772	1.091	1.368e-02	1.16e-03	1.517e-03
30	25	N30	.025	-.766	1.086	1.368e-02	1.16e-03	1.517e-03
31	25	N31	.003	-.329	1.088	1.18e-02	2.88e-04	6.367e-04
32	25	N32	.144	-.832	.603	1.122e-02	5.057e-03	2.458e-03
33	25	N33	-.067	-.832	1.975	1.765e-02	2.707e-03	1.834e-03
34	25	N34	.026	-.832	1.165	1.349e-02	5.057e-03	2.461e-03
35	25	EQUIP_A_1(TOP)	-.043	-.924	1.805	1.315e-02	4.945e-03	2.135e-03
36	25	EQUIP_A_1(BOT)	.109	-.924	1.106	7.198e-03	6.729e-03	2.477e-03
37	25	EQUIP_A_4(TOP)	-.034	-.832	1.664	1.763e-02	2.707e-03	1.833e-03
38	25	EQUIP_A_4(BOT)	.101	-.832	.801	1.124e-02	5.057e-03	2.458e-03
39	25	EQUIP_A_5(TOP)	-.035	-.746	1.652	1.455e-02	-2.693e-03	2.207e-03
40	25	EQUIP_A_5(BOT)	.044	-.746	.885	1.079e-02	-4.092e-03	6.286e-04
41	25	N41	.011	-.214	1.015	4.825e-03	-1.511e-03	6.946e-04
42	25	N42	-.11	-.214	1.794	1.093e-02	-1.427e-03	2.109e-03
43	25	N43	.497	.66	.72	8.516e-03	-1.879e-03	5.711e-03
44	25	EQUIP_B_2	.223	.66	1.151	1.074e-02	-1.879e-03	5.723e-03
45	25	N45	-.199	.66	1.855	1.551e-02	-2.875e-03	9.391e-03
46	25	N46	-.026	-.236	1.296	9.061e-03	-1.511e-03	6.962e-04
47	25	N47	.228	.679	1.148	1.074e-02	-1.879e-03	5.723e-03
48	25	N48	0	.04	1.087	7.872e-03	-3.118e-06	1.898e-06
49	25	N49	.08	.239	1.226	8.481e-03	-3.583e-03	-1.829e-04
50	25	N50	.067	.206	1.237	8.591e-03	-3.347e-03	-1.964e-05
51	25	N51	.096	.28	1.22	8.641e-03	-3.422e-03	8.34e-05
52	25	N52	.068	.21	1.24	8.591e-03	-3.347e-03	-1.964e-05
53	25	N53	.098	.285	1.223	8.641e-03	-3.422e-03	8.34e-05
54	25	N54	.059	.187	1.241	8.591e-03	-3.347e-03	-1.964e-05
55	25	N55	.104	.299	1.216	8.641e-03	-3.422e-03	8.34e-05
56	25	EQUIP_B_3	-.023	-.214	1.293	9.061e-03	-1.511e-03	6.963e-04

Joint Deflections (By Combination) (Continued)

	LC	Joint Label	X [in]	Y [in]	Z [in]	X Rotation [rad]	Y Rotation [rad]	Z Rotation [rad]
57	25	N57	.081	.239	1.302	8.521e-03	-3.501e-03	-1.321e-04
58	25	N58	.078	.239	1.149	8.521e-03	-3.501e-03	-1.321e-04
59	25	N59	.086	.254	1.252	8.521e-03	-3.501e-03	-1.321e-04
60	25	N60	.085	.254	1.192	8.521e-03	-3.501e-03	-1.321e-04
61	25	N61	.074	.224	1.259	8.521e-03	-3.501e-03	-1.321e-04
62	25	N62	.073	.224	1.199	8.521e-03	-3.501e-03	-1.321e-04
63	25	N63	.08	.239	1.255	8.521e-03	-3.501e-03	-1.321e-04
64	25	N64	.079	.239	1.196	8.521e-03	-3.501e-03	-1.321e-04
65	25	N65	.088	.258	1.255	8.521e-03	-3.501e-03	-1.321e-04
66	25	N66	.087	.258	1.195	8.521e-03	-3.501e-03	-1.321e-04
67	25	N67	.076	.228	1.262	8.521e-03	-3.501e-03	-1.321e-04
68	25	N68	.075	.228	1.202	8.521e-03	-3.501e-03	-1.321e-04
69	25	N69	.075	.228	1.232	8.521e-03	-3.501e-03	-1.321e-04
70	25	N70	.087	.258	1.225	8.521e-03	-3.501e-03	-1.321e-04
71	25	N71	.02	.124	1.123	7.792e-03	-2.96e-03	-6.643e-04
72	25	N72	.051	.064	.909	6.94e-03	-1.998e-03	5.402e-04
73	25	N73	-.095	.064	1.766	1.061e-02	-8.915e-04	2.973e-03
74	25	N74	.025	.064	1.266	9.207e-03	-1.998e-03	5.409e-04
75	25	EQUIP_B_1(TOP)	-.079	-.214	1.634	1.092e-02	-1.427e-03	2.109e-03
76	25	EQUIP_B_1(BOT)	0	-.214	1.086	4.835e-03	-1.511e-03	6.946e-04
77	25	EQUIP_B_4(TOP)	-.042	.064	1.579	1.059e-02	-8.915e-04	2.973e-03
78	25	EQUIP_B_4(BOT)	.041	.064	1.032	6.958e-03	-1.998e-03	5.402e-04
79	25	EQUIP_B_5(TOP)	-.03	.66	1.576	1.549e-02	-2.875e-03	9.39e-03
80	25	EQUIP_B_5(BOT)	.394	.66	.873	8.536e-03	-1.879e-03	5.712e-03
81	25	N81A	-.464	.682	.797	6.445e-03	1.589e-03	-5.689e-03
82	25	N82A	.208	.682	1.813	1.445e-02	1.414e-03	-8.94e-03
83	25	N83	-.094	-.188	.864	8.294e-03	2.115e-03	-2.741e-03
84	25	EQUIP_C_2	.038	-.188	1.285	1.052e-02	2.115e-03	-2.746e-03
85	25	N85	.277	-.188	1.837	1.171e-02	1.485e-03	-5.454e-03
86	25	N86	-.195	.702	1.15	1.069e-02	1.589e-03	-5.703e-03
87	25	N87	.043	-.211	1.288	1.052e-02	2.115e-03	-2.746e-03
88	25	N88	0	.04	1.087	7.872e-03	-3.078e-06	1.908e-06
89	25	N89	-.073	.261	1.214	8.617e-03	3.063e-03	-6.625e-04
90	25	N90	-.087	.302	1.209	8.821e-03	2.822e-03	-1.013e-03
91	25	N91	-.062	.231	1.224	8.747e-03	2.825e-03	-8.673e-04
92	25	N92	-.088	.307	1.212	8.821e-03	2.822e-03	-1.013e-03
93	25	N93	-.063	.236	1.226	8.747e-03	2.825e-03	-8.673e-04
94	25	N94	-.093	.32	1.206	8.821e-03	2.822e-03	-1.013e-03
95	25	N95	-.056	.213	1.227	8.747e-03	2.825e-03	-8.673e-04
96	25	EQUIP_C_3	-.191	.682	1.153	1.069e-02	1.589e-03	-5.703e-03
97	25	N97	-.066	.261	1.292	8.662e-03	2.957e-03	-7.311e-04
98	25	N98	-.08	.261	1.136	8.662e-03	2.957e-03	-7.311e-04
99	25	N99	-.065	.247	1.247	8.662e-03	2.957e-03	-7.311e-04
100	25	N100	-.07	.247	1.186	8.662e-03	2.957e-03	-7.311e-04
101	25	N101	-.076	.276	1.241	8.662e-03	2.957e-03	-7.311e-04
102	25	N102	-.081	.276	1.181	8.662e-03	2.957e-03	-7.311e-04
103	25	N103	-.07	.261	1.244	8.662e-03	2.957e-03	-7.311e-04
104	25	N104	-.076	.261	1.183	8.662e-03	2.957e-03	-7.311e-04
105	25	N105	-.067	.252	1.25	8.662e-03	2.957e-03	-7.311e-04
106	25	N106	-.072	.252	1.189	8.662e-03	2.957e-03	-7.311e-04
107	25	N107	-.077	.281	1.244	8.662e-03	2.957e-03	-7.311e-04
108	25	N108	-.082	.281	1.183	8.662e-03	2.957e-03	-7.311e-04
109	25	N109	-.08	.281	1.213	8.662e-03	2.957e-03	-7.311e-04
110	25	N110	-.069	.252	1.219	8.662e-03	2.957e-03	-7.311e-04
111	25	N111	-.019	.128	1.121	7.85e-03	2.766e-03	3.07e-04
112	25	N112	-.297	.439	.794	7.724e-03	2.258e-03	-3.496e-03
113	25	N113	.181	.439	1.781	1.271e-02	1.135e-03	-7.163e-03

Joint Deflections (By Combination) (Continued)

	LC	Joint Label	X [in]	Y [in]	Z [in]	X Rotation [rad]	Y Rotation [rad]	Z Rotation [rad]
114	25	N114	-.129	.439	1.188	9.992e-03	2.258e-03	-3.5e-03
115	25	EQUIP_C_1(TOP)	.077	.682	1.601	1.444e-02	1.414e-03	-8.94e-03
116	25	EQUIP_C_1(BOT)	-.381	.682	.891	6.455e-03	1.589e-03	-5.689e-03
117	25	EQUIP_C_4(TOP)	.055	.439	1.557	1.27e-02	1.135e-03	-7.163e-03
118	25	EQUIP_C_4(BOT)	-.235	.439	.931	7.742e-03	2.258e-03	-3.496e-03
119	25	EQUIP_C_5(TOP)	.179	-.188	1.626	1.169e-02	1.485e-03	-5.454e-03
120	25	EQUIP_C_5(BOT)	-.044	-.188	1.014	8.314e-03	2.115e-03	-2.741e-03
121	25	N121	.026	-.783	1.088	1.367e-02	1.202e-03	1.521e-03
122	25	N128	-.023	-.924	1.683	1.281e-02	4.945e-03	2.135e-03
123	25	N129	-.022	-.746	1.565	1.445e-02	-2.693e-03	2.207e-03
124	25	N130	-.023	-.832	1.552	1.752e-02	2.707e-03	1.833e-03
125	25	N131	-.06	-.214	1.533	1.058e-02	-1.427e-03	2.108e-03
126	25	N132	.026	.66	1.483	1.539e-02	-2.875e-03	9.39e-03
127	25	N133	-.023	.064	1.512	1.048e-02	-8.915e-04	2.972e-03
128	25	N134	-.006	.682	1.467	1.41e-02	1.414e-03	-8.938e-03
129	25	N135	.146	-.188	1.556	1.159e-02	1.485e-03	-5.454e-03
130	25	N136	.01	.439	1.476	1.258e-02	1.135e-03	-7.162e-03
131	25	N131A	-.023	-.93	1.698	1.281e-02	4.945e-03	2.135e-03
132	25	N138	-.022	-.803	1.51	1.46e-02	8.707e-04	7.382e-04
133	25	N139	-.022	-.739	1.573	1.445e-02	-2.693e-03	2.207e-03
134	25	N140	-.063	-.238	1.535	1.058e-02	-1.427e-03	2.108e-03
135	25	N141	.033	.686	1.479	1.539e-02	-2.875e-03	9.39e-03
136	25	N142	-.01	.706	1.465	1.41e-02	1.414e-03	-8.938e-03
137	25	N143	.15	-.21	1.558	1.159e-02	1.485e-03	-5.454e-03
138	25	N138A	-.023	-.902	1.642	8.211e-03	4.193e-03	2.672e-03
139	25	N139A	-.049	-.142	1.527	9.565e-03	-1.237e-03	9.654e-04
140	25	N140A	.002	.616	1.472	1.191e-02	7.054e-04	-6.788e-03
141	25	N141A	-.022	-.763	1.543	8.404e-03	-2.073e-03	1.565e-03
142	25	N142A	.004	.583	1.496	1.352e-02	-2.515e-03	6.758e-03
143	25	N143A	.135	-.123	1.55	9.702e-03	1.414e-03	-2.577e-03
144	25	N144	0	-.003	1.087	7.872e-03	-3.097e-06	1.904e-06
145	25	N145	0	-.003	1.371	7.874e-03	-3.097e-06	1.904e-06
146	25	N146	0	0	0	-1.136e-03	0	-1.035e-07
147	25	N147	0	-.001	0	2.431e-03	1.74e-07	2.197e-07
148	25	N148	.026	-.901	1.332	1.195e-02	6.752e-03	2.58e-03
149	25	N149	-.011	-.145	1.286	9.237e-03	-1.433e-03	5.769e-04
150	25	N150	-.178	.624	1.16	1.057e-02	1.763e-03	-5.118e-03
151	25	N151	.026	-.75	1.194	1.311e-02	-4.083e-03	3.432e-04
152	25	N152	.208	.602	1.159	1.028e-02	-2.012e-03	4.867e-03
153	25	N153	.021	-.117	1.275	1.044e-02	2.039e-03	-2.315e-03
154	25	N154	0	-.084	.808	7.577e-03	3.828e-07	1.022e-06
155	25	N155	0	.038	.808	7.577e-03	3.828e-07	1.022e-06
156	25	N156	0	.038	.808	7.577e-03	3.828e-07	1.022e-06
157	25	N157	0	-.003	.808	7.577e-03	3.828e-07	1.022e-06

Paul J. Ford and Company, Project: "80619-0001.001.6000"
PLS-POLE Version 15.52, 4:47:04 PM Friday, April 26, 2019
Undeformed geometry displayed

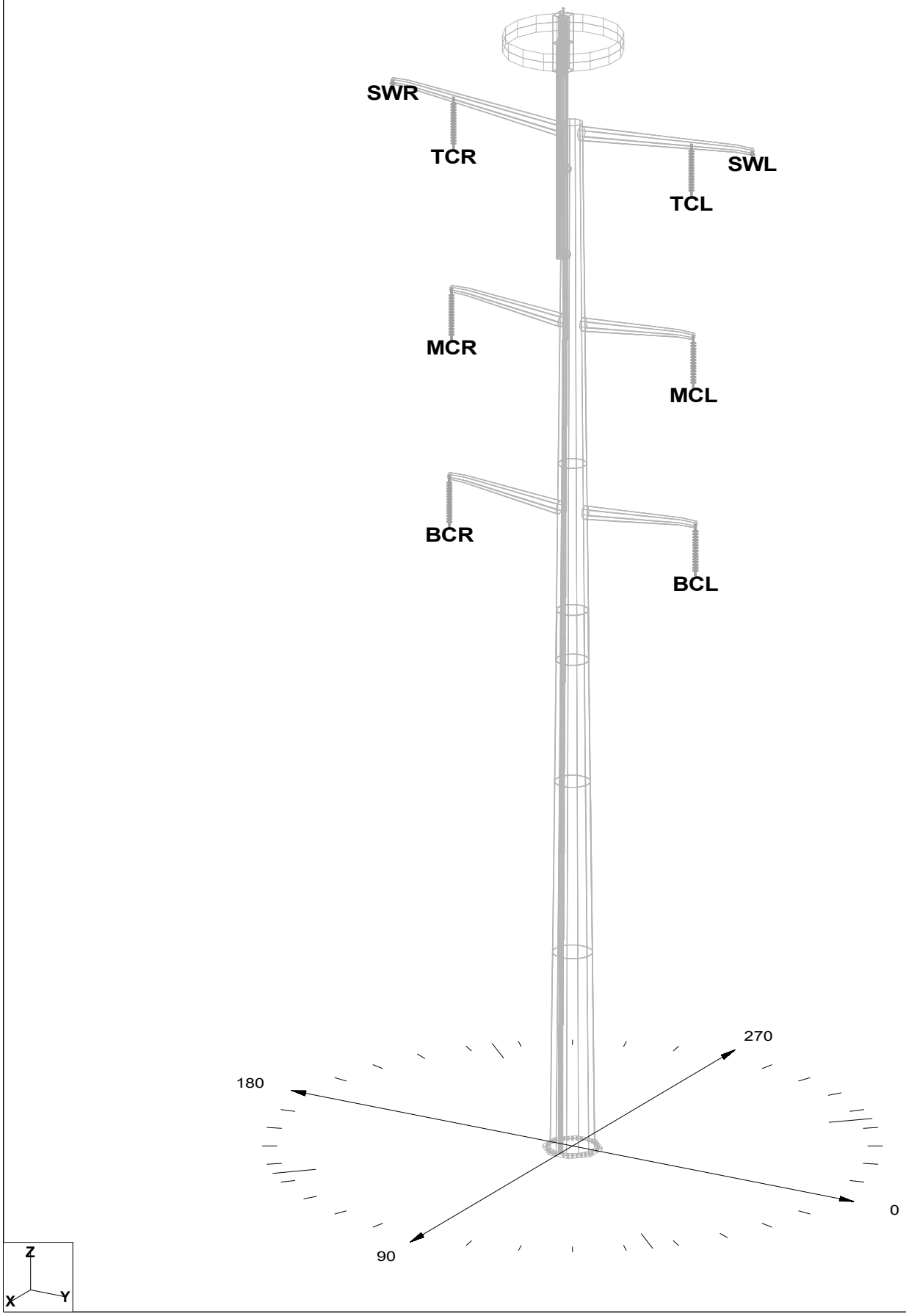

Paul J. Ford and Company, Project: "80619-0001.001.6000"
PLS-POLE Version 15.52, 4:48:30 PM Friday, April 26, 2019
Undeformed geometry displayed

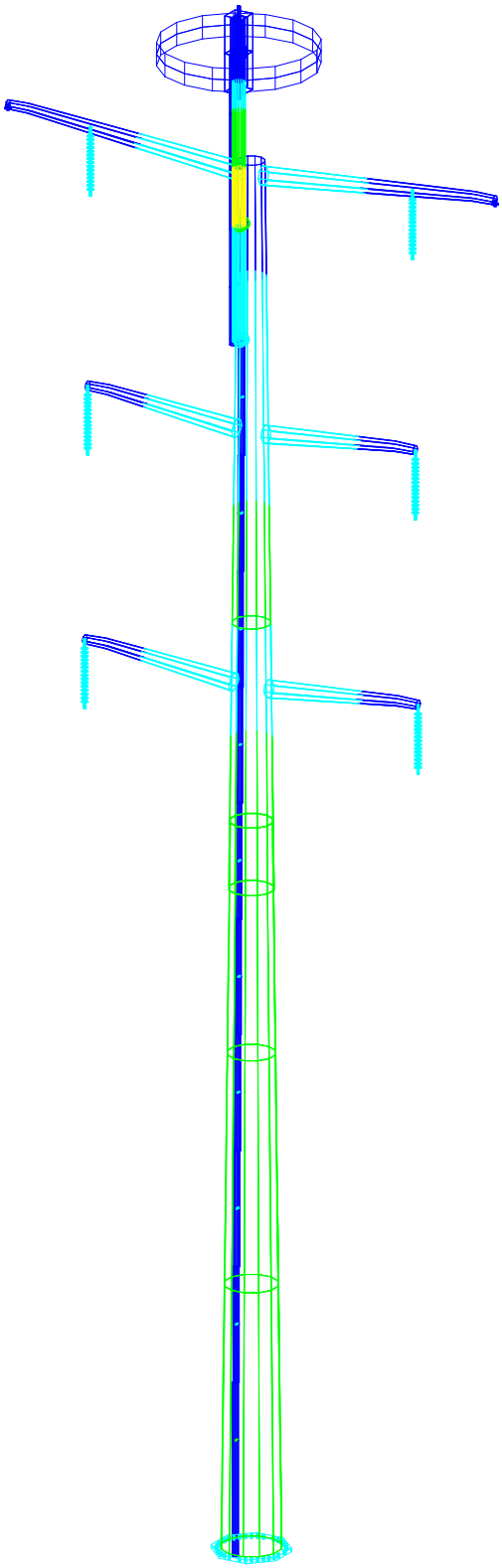

% Usage Legend
0 <= % < 25
25 <= % < 50
50 <= % < 75
75 <= % < 100
100 <= %

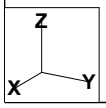

```
***********************************************************************
*                                                                     *
*                              PLS-POLE                               *
*                   POLE AND FRAME ANALYSIS AND DESIGN                *
*              Copyright Power Line Systems, Inc. 1999-2018           *
*                                                                     *
***********************************************************************
```

Project Name : Pole 24063
Project Notes: AT&T - Orange
Project File : G:\Transmission\Eversource\2019\806_Smartlink\80619-0001 Tower 24063 AT&T CTL02343\001.6000 - SA (Rev 1)\PLS-Pole\80619-0001.001.6000.pol
Date run : 3:57:49 PM Friday, April 26, 2019
by : PLS-POLE Version 15.52
Licensed to : Paul J. Ford and Company

Successfully performed nonlinear analysis

The model has 0 warnings.

Modeling options:
- Offset Arms from Pole/Mast: Yes
- Offset Braces from Pole/Mast: Yes
- Offset Guys from Pole/Mast: Yes
- Offset Posts from Pole/Mast: Yes
- Offset Strains from Pole/Mast: Yes
- Use Alternate Convergence Process: No
- Steel poles and tubular arms checked with ASCE/SEI 48-05

Default Modulus of Elasticity for Steel = 29000.00 (ksi)
Default Weight Density for Steel = 490.00 (lbs/ft^3)

Steel Pole Properties:

Steel Pole Property Label	Stock Number	Length (ft)	Default Embedded Length (ft)	Base Plate	Shape	Tip Diameter (in)	Base Diameter (in)	Taper (in/ft)	Default Drag Coef.	Tubes	Modulus of Elasticity Override (ksi)	Weight Density Override (lbs/ft^3)	Shape At Base	Strength Check Type	Distance From Tip (ft)	Ultimate Trans. Load (kips)	Ultimate Long. Load (kips)	Texture
P24063		120.00	0	Yes	12F	26.68	59.46	0	1.6	5 tubes	0	0		Calculated	0.000	0.0000	0.0000	Galvanized Steel

Steel Tubes Properties:

Pole Property	Tube No.	Length (ft)	Thickness (in)	Lap Length (ft)	Lap Factor	Lap Butt Offset (in)	Gap or Stress (ksi)	Yield Override (ft-k)	Moment Cap. Weight (lbs)	Tube Center of Gravity (ft)	Calculated Taper (in/ft)	Tube Top Diameter (in)	Tube Bot. Diameter (in)	1.5x Diam. Lap Length (ft)	Actual Overlap (ft)
P24063	1	40	0.375	0.000	0.000	0.000	65.000	0.000	5232	21.16	0.27838	26.68	37.82	4.634	0.000
P24063	2	23	0.5	5.833	0.000	0.000	65.000	0.000	5130	11.80	0.27838	38.07	44.47	5.434	5.833
P24063	3	20.083	0.5625	0.000	0.000	0.000	65.000	0.000	5448	10.25	0.27838	41.85	47.44	5.789	0.000

P24063	4	20	0.625	0.000	0.000	0.000	65.000	0.000	6800	10.19	0.27838	47.56	53.13	6.485	0.000
P24063	5	22.75	0.625	0.000	0.000	0.000	65.000	0.000	8661	11.59	0.27838	53.13	59.46	0.000	0.000

Base Plate Properties:

Pole Property	Plate Diam. (in)	Plate Shape	Plate Thick. (in)	Plate Weight (lbs)	Bend Line Length Override (in)	Hole Diam. (in)	Hole Shape	Steel Density (lbs/ft^3)	Steel Yield Stress (ksi)	Bolt Diam. (in)	Bolt Pattern Diam. (in)	Num. Of Bolts	Bolt Cage X Inertia (in^4)	Bolt Cage Y Inertia (in^4)
P24063	73.000	8F	3.750	4559	0.000	0.000		490.00	60.000	2.250	68.000	32	73541.54	73541.54

Base Plate Bolt Coordinates for Property "P24063":

Bolt X Coord.	Bolt Y Coord.	Bolt Angle (deg)
0	0	9.7025
0	0	19.7875
0	0	29.8725
0	0	39.9575
0	0	50.0425
0	0	60.1275
0	0	70.2125
0	0	80.2975

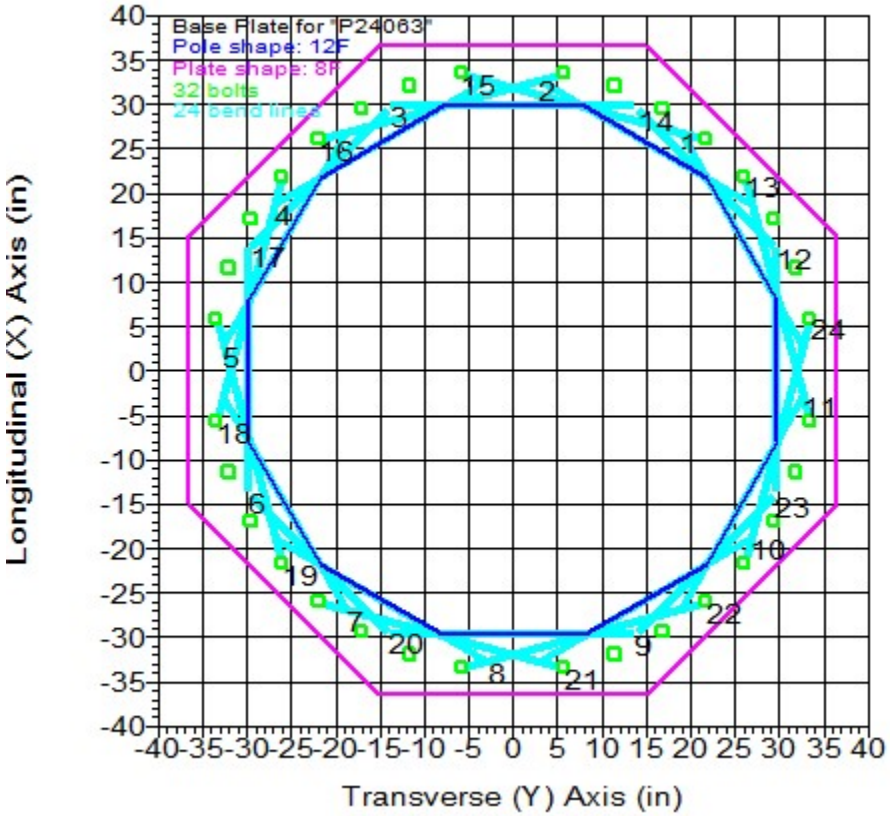

Steel Pole Connectivity:

Pole Label	Tip Joint	Base Joint	X of Base (ft)	Y of Base (ft)	Z of Base (ft)	Inclin. About X (deg)	Inclin. About Y (deg)	Property Set	Attach. Labels	Base Connect	Embed % Override	Embed C. Override (ft)
P			0	0	0	0	0	P24063 15 labels		Fixed	0.00	0

Relative Attachment Labels for Steel Pole "P":

Joint Label	Distance From Origin/Top Joint (ft)	Global Z of Attach (ft)
P:tc	1.10	0.00
P:mc	23.46	0.00
P:bc	45.46	0.00
P:CX1	0.00	10.00
P:CX2	0.00	20.00
P:CX3	0.00	30.00
P:CX4	0.00	40.00
P:CX5	0.00	50.00
P:CX6	0.00	60.00
P:CX7	0.00	70.00
P:CX8	0.00	80.00
P:CX9	0.00	90.00
P:CX10	0.00	100.00
P:Clamp-B	0.00	105.00
P:Clamp-T	0.00	115.00

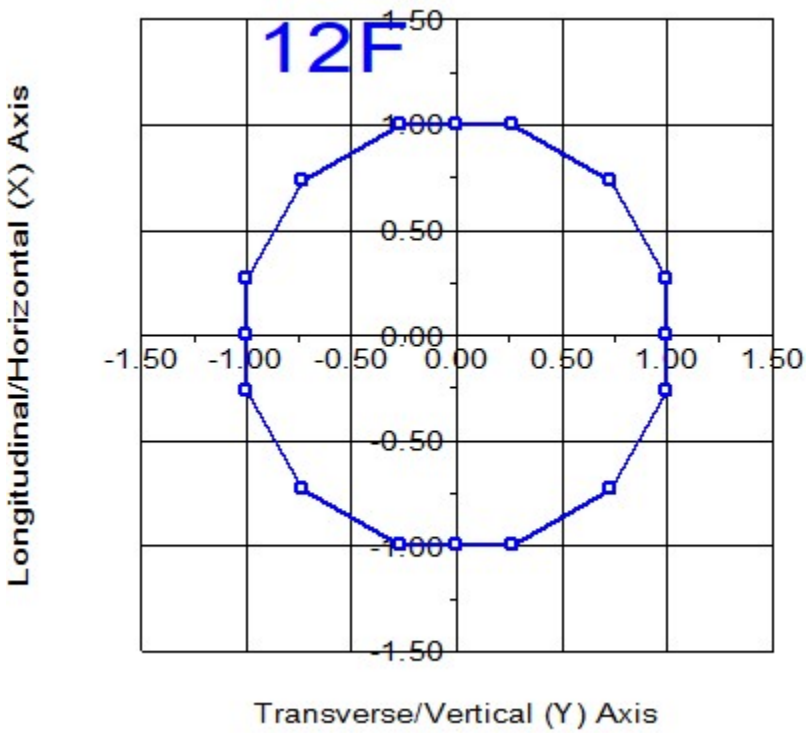

Pole Steel Properties:

Warning: Capacities and usages printed in splices are listed for the inner tube except at the splice top which uses the outer tube. ??

Element Label	Joint Label	Joint Position	Rel. Dist. (ft)	Outer Diam. (in)	Area (in^2)	T-Moment Inertia (in^4)	L-Moment Inertia (in^4)	D/t	W/t Max.	Fy (ksi)	Fa Min. (ksi)	T-Moment Capacity (ft-k)	L-Moment Capacity (ft-k)
P	P:t	P:t Ori	0.00	26.68	31.72	2810.90	2810.90	0.00	16.4	65.00	65.00	1141.18	1141.18
P	P:tc	P:tc End	1.10	26.99	32.09	2910.55	2910.55	0.00	16.6	65.00	65.00	1168.19	1168.19
P	P:tc	P:tc Ori	1.10	26.99	32.09	2910.55	2910.55	0.00	16.6	65.00	65.00	1168.19	1168.19
P	P:Clamp-T	P:Clamp-T End	5.00	28.08	33.40	3281.00	3281.00	0.00	17.4	65.00	65.00	1266.00	1266.00
P	P:Clamp-T	P:Clamp-T Ori	5.00	28.08	33.40	3281.00	3281.00	0.00	17.4	65.00	65.00	1266.00	1266.00
P	#P:0	Tube 1 End	10.00	29.47	35.08	3800.80	3800.80	0.00	18.4	65.00	65.00	1397.29	1397.29
P	#P:0	Tube 1 Ori	10.00	29.47	35.08	3800.80	3800.80	0.00	18.4	65.00	65.00	1397.29	1397.29
P	P:Clamp-B	P:Clamp-B End	15.00	30.86	36.76	4372.79	4372.79	0.00	19.4	65.00	65.00	1535.07	1535.07
P	P:Clamp-B	P:Clamp-B Ori	15.00	30.86	36.76	4372.79	4372.79	0.00	19.4	65.00	65.00	1535.07	1535.07
P	P:CX10	P:CX10 End	20.00	32.25	38.44	4999.46	4999.46	0.00	20.4	65.00	65.00	1679.32	1679.32
P	P:CX10	P:CX10 Ori	20.00	32.25	38.44	4999.47	4999.47	0.00	20.4	65.00	65.00	1679.32	1679.32
P	P:mc	P:mc End	23.46	33.21	39.60	5466.18	5466.18	0.00	21.1	65.00	65.00	1782.87	1782.87
P	P:mc	P:mc Ori	23.46	33.21	39.60	5466.18	5466.18	0.00	21.1	65.00	65.00	1782.87	1782.87
P	#P:1	Tube 1 End	26.73	34.12	40.69	5933.57	5933.57	0.00	21.7	65.00	65.00	1883.68	1883.68
P	#P:1	Tube 1 Ori	26.73	34.12	40.69	5933.57	5933.57	0.00	21.7	65.00	65.00	1883.68	1883.68
P	P:CX9	P:CX9 End	30.00	35.04	41.79	6426.88	6426.88	0.00	22.4	65.00	65.00	1987.25	1987.25
P	P:CX9	P:CX9 Ori	30.00	35.04	41.79	6426.88	6426.88	0.00	22.4	65.00	65.00	1987.25	1987.25
P	#P:2	Tube 1 End	35.00	36.43	43.47	7232.61	7232.61	0.00	23.3	65.00	65.00	2150.94	2150.94
P	#P:2	Tube 1 Ori	35.00	36.43	43.47	7232.61	7232.61	0.00	23.3	65.00	65.00	2150.94	2150.94
P	P:CX8	P:CX8 End	40.00	37.82	45.15	8103.02	8103.02	0.00	24.3	65.00	65.00	2321.10	2321.10
P	P:CX8	P:CX8 Ori	40.00	38.07	60.40	10913.41	10913.41	0.00	17.7	65.00	65.00	3105.61	3105.61
P	#P:3	Tube 2 End	42.73	38.83	61.62	11588.86	11588.86	0.00	18.1	65.00	65.00	3233.30	3233.30
P	#P:3	Tube 2 Ori	42.73	38.83	61.62	11588.86	11588.86	0.00	18.1	65.00	65.00	3233.30	3233.30
P	P:bc	P:bc End	45.46	39.59	62.84	12291.63	12291.63	0.00	18.5	65.00	65.00	3363.56	3363.56
P	P:bc	P:bc Ori	45.46	39.59	62.84	12291.63	12291.63	0.00	18.5	65.00	65.00	3363.56	3363.56
P	P:CX7	P:CX7 End	50.00	40.85	64.88	13523.30	13523.30	0.00	19.2	65.00	65.00	3586.07	3586.07
P	P:CX7	P:CX7 Ori	50.00	40.85	64.88	13523.31	13523.31	0.00	19.2	65.00	65.00	3586.07	3586.07
P	#P:4	Tube 2 End	53.58	41.85	66.48	14551.14	14551.14	0.00	19.7	65.00	65.00	3766.65	3766.65
P	#P:4	Tube 2 Ori	53.58	41.85	66.48	14551.15	14551.15	0.00	19.7	65.00	65.00	3766.65	3766.65
P	#P:5	SpliceT End	57.17	42.85	68.08	15629.79	15629.79	0.00	20.3	65.00	65.00	3951.67	3951.67
P	#P:5	SpliceT Ori	57.17	42.85	68.08	15629.79	15629.79	0.00	20.3	65.00	65.00	3951.67	3951.67
P	P:CX6	P:CX6 End	60.00	42.64	76.10	17245.27	17245.27	0.00	17.6	65.00	65.00	4381.72	4381.72
P	P:CX6	P:CX6 Ori	60.00	42.64	76.10	17245.27	17245.27	0.00	17.6	65.00	65.00	4381.72	4381.72
P	#P:6	SpliceB End	63.00	43.47	77.61	18292.59	18292.59	0.00	18.0	65.00	65.00	4558.54	4558.54
P	#P:6	SpliceB Ori	63.00	43.47	77.61	18292.59	18292.59	0.00	18.0	65.00	65.00	4558.54	4558.54
P	#P:7	Tube 3 End	66.50	44.45	79.37	19567.05	19567.05	0.00	18.5	65.00	65.00	4769.24	4769.24
P	#P:7	Tube 3 Ori	66.50	44.45	79.37	19567.05	19567.05	0.00	18.5	65.00	65.00	4769.24	4769.24
P	P:CX5	P:CX5 End	70.00	45.42	81.13	20899.38	20899.38	0.00	19.0	65.00	65.00	4984.71	4984.71
P	P:CX5	P:CX5 Ori	70.00	45.42	81.13	20899.38	20899.38	0.00	19.0	65.00	65.00	4984.71	4984.71
P	#P:8	Tube 3 End	73.63	46.43	82.96	22341.67	22341.67	0.00	19.4	65.00	65.00	5212.89	5212.89
P	#P:8	Tube 3 Ori	73.63	46.43	82.96	22341.67	22341.67	0.00	19.4	65.00	65.00	5212.89	5212.89
P	#P:9	SpliceT End	77.25	47.44	84.78	23848.83	23848.83	0.00	19.9	65.00	65.00	5446.18	5446.18
P	#P:9	SpliceT Ori	77.25	47.56	94.33	26605.70	26605.70	0.00	17.7	65.00	65.00	6059.78	6059.78
P	P:CX4	P:CX4 End	80.00	48.33	95.87	27928.67	27928.67	0.00	18.0	65.00	65.00	6260.34	6260.34
P	P:CX4	P:CX4 Ori	80.00	48.33	95.87	27928.67	27928.67	0.00	18.0	65.00	65.00	6260.34	6260.34
P	#P:10	Tube 4 End	85.00	49.72	98.67	30445.10	30445.10	0.00	18.6	65.00	65.00	6633.36	6633.36
P	#P:10	Tube 4 Ori	85.00	49.72	98.67	30445.10	30445.10	0.00	18.6	65.00	65.00	6633.36	6633.36
P	P:CX3	P:CX3 End	90.00	51.11	101.46	33108.33	33108.33	0.00	19.2	65.00	65.00	7017.19	7017.19
P	P:CX3	P:CX3 Ori	90.00	51.11	101.46	33108.33	33108.33	0.00	19.2	65.00	65.00	7017.19	7017.19
P	#P:11	Tube 4 End	93.63	52.12	103.49	35133.33	35133.33	0.00	19.7	65.00	65.00	7302.21	7302.21
P	#P:11	Tube 4 Ori	93.63	52.12	103.49	35133.33	35133.33	0.00	19.7	65.00	65.00	7302.21	7302.21
P	#P:12	SpliceT End	97.25	53.13	105.52	37239.27	37239.27	0.00	20.1	65.00	65.00	7592.91	7592.91
P	#P:12	SpliceT Ori	97.25	53.13	105.52	37239.27	37239.27	0.00	20.1	65.00	65.00	7592.91	7592.91
P	P:CX2	P:CX2 End	100.00	53.90	107.06	38891.83	38891.83	0.00	20.4	65.00	65.00	7817.22	7817.22
P	P:CX2	P:CX2 Ori	100.00	53.90	107.06	38891.84	38891.84	0.00	20.4	65.00	65.00	7817.23	7817.23
P	#P:13	Tube 5 End	105.00	55.29	109.85	42020.43	42020.43	0.00	21.0	65.00	65.00	8233.44	8233.44
P	#P:13	Tube 5 Ori	105.00	55.29	109.85	42020.44	42020.44	0.00	21.0	65.00	65.00	8233.44	8233.44
P	P:CX1	P:CX1 End	110.00	56.68	112.65	45312.48	45312.48	0.00	21.6	65.00	65.00	8660.45	8660.45
P	P:CX1	P:CX1 Ori	110.00	56.68	112.65	45312.48	45312.48	0.00	21.6	65.00	65.00	8660.45	8660.45
P	#P:14	Tube 5 End	115.00	58.07	115.45	48772.13	48772.13	0.00	22.2	65.00	65.00	9098.26	9098.26
P	#P:14	Tube 5 Ori	115.00	58.07	115.45	48772.14	48772.14	0.00	22.2	65.00	65.00	9098.26	9098.26
P	P:g	P:g End	120.00	59.46	118.25	52403.56	52403.56	0.00	22.8	65.00	65.00	9546.87	9546.87

Equipment Library:

Equipment Property Label	Stock Number	Weight (lbs)	Wind Area (ft^2)	Ice Area (ft^2)	Shape or EIA Antenna Type	Drag Coef.	Diameter (ft)	Height (ft)	Vertical Offset (ft)
Existing Mounting Pipe #1	2.375"O.D. x 8` Mount Pipe	29.2	1.58	5.04	Circle	1.63	0.20	8.00	0.00
Proposed Antenna #1	800 10965	108.6	10.93	31.32	Square	2.00	1.67	6.56	0.00
Proposed TMA #1	TMABPD7823VG12A	26.0	0.81	2.75	Square	2.00	0.89	0.92	0.00
Existing Antenna #1	SBNH-1D6565B	47.4	5.98	20.31	Square	2.00	0.99	6.06	0.00
Existing Antenna #2	QS66512-2	111.0	6.00	23.20	Square	2.00	1.00	6.00	0.00

Existing TMA #1	TMA2117F00V1-1	26.0	0.81	3.01	Square	2.00	0.82	0.98	0.00
Existing Mount #1 (1) 802738 Triple Arm w/ Prop HR	815.0	26.30	110.14	Circle	2.00	13.15	2.00	0.00
CR-1 - CX1:1 - 0-15ft	CR-1 - CX1:1	405.0	7.43	233.26	Circle	1.60	0.50	15.00	-2.50
CR-1 - CX2:1 - 15-25ft	CR-1 - CX2:1	270.0	4.95	155.51	Circle	1.60	0.50	10.00	0.00
CR-1 - CX3:1 - 25-35ft	CR-1 - CX3:1	270.0	4.95	155.51	Circle	1.60	0.50	10.00	0.00
CR-1 - CX4:1 - 35-45ft	CR-1 - CX4:1	270.0	4.95	155.51	Circle	1.60	0.50	10.00	0.00
CR-1 - CX5:1 - 45-55ft	CR-1 - CX5:1	270.0	4.95	155.51	Circle	1.60	0.50	10.00	0.00
CR-1 - CX6:1 - 55-65ft	CR-1 - CX6:1	270.0	4.95	155.51	Circle	1.60	0.50	10.00	0.00
CR-1 - CX7:1 - 65-75ft	CR-1 - CX7:1	270.0	4.95	155.51	Circle	1.60	0.50	10.00	0.00
CR-1 - CX8:1 - 75-85ft	CR-1 - CX8:1	270.0	4.95	155.51	Circle	1.60	0.50	10.00	0.00
CR-1 - CX9:1 - 85-95ft	CR-1 - CX9:1	270.0	4.95	155.51	Circle	1.60	0.50	10.00	0.00
CR-1 - CX10:1 - 95-105ft	CR-1 - CX10:1	270.0	4.95	155.51	Circle	1.60	0.50	10.00	0.00
CR-1 - CX11:1 - 105-115ft	CR-1 - CX11:1	270.0	4.95	155.51	Circle	1.60	0.50	10.00	0.00
CR-1 - CX12:1 - 115-125ft	CR-1 - CX12:1	270.0	4.95	155.51	Circle	2.00	0.50	10.00	0.00
CR-1 - CX13:1 - 125-130ft	CR-1 - CX13:1	135.0	2.48	77.75	Circle	2.00	0.50	5.00	-2.50

Equipment Connectivity:

Equipment Label	Attach Label	Equipment Property Set	Azimuth (deg)	Offset (ft)	Measured Relative To	EIA Antenna Orientation Angle (deg)
Exist_Mnt-1	Mast:ANT	Existing Mount #1	0	0	Center	0.00
Ex_Mnt-1	Mast:ANT	Existing Mounting Pipe #1	0	0	Center	0.00
Ex_Mnt-2	Mast:ANT	Existing Mounting Pipe #1	0	0	Center	0.00
Ex_Mnt-3	Mast:ANT	Existing Mounting Pipe #1	0	0	Center	0.00
Ex_Mnt-4	Mast:ANT	Existing Mounting Pipe #1	0	0	Center	0.00
Ex_Mnt-5	Mast:ANT	Existing Mounting Pipe #1	0	0	Center	0.00
Ex_Mnt-6	Mast:ANT	Existing Mounting Pipe #1	0	0	Center	0.00
Ex_Mnt-7	Mast:ANT	Existing Mounting Pipe #1	0	0	Center	0.00
Ex_Mnt-8	Mast:ANT	Existing Mounting Pipe #1	0	0	Center	0.00
Ex_Mnt-9	Mast:ANT	Existing Mounting Pipe #1	0	0	Center	0.00
Prop_Ant_1-1	Mast:ANT	Proposed Antenna #1	0	0	Center	0.00
Prop_Ant_1-2	Mast:ANT	Proposed Antenna #1	0	0	Center	0.00
Prop_Ant_1-3	Mast:ANT	Proposed Antenna #1	0	0	Center	0.00
Prop_TMA_1-1	Mast:ANT	Proposed TMA #1	0	0	Center	0.00
Prop_TMA_1-2	Mast:ANT	Proposed TMA #1	0	0	Center	0.00
Prop_TMA_1-3	Mast:ANT	Proposed TMA #1	0	0	Center	0.00
Prop_TMA_1-4	Mast:ANT	Proposed TMA #1	0	0	Center	0.00
Prop_TMA_1-5	Mast:ANT	Proposed TMA #1	0	0	Center	0.00
Prop_TMA_1-6	Mast:ANT	Proposed TMA #1	0	0	Center	0.00
Ex_Ant_1-1	Mast:ANT	Existing Antenna #1	0	0	Center	0.00
Ex_Ant_1-2	Mast:ANT	Existing Antenna #1	0	0	Center	0.00
Ex_Ant_1-3	Mast:ANT	Existing Antenna #1	0	0	Center	0.00
Ex_Ant_2-1	Mast:ANT	Existing Antenna #2	0	0	Center	0.00
Ex_Ant_2-2	Mast:ANT	Existing Antenna #2	0	0	Center	0.00
Ex_Ant_2-3	Mast:ANT	Existing Antenna #2	0	0	Center	0.00
Ex_TMA_1-1	Mast:ANT	Existing TMA #1	0	0	Center	0.00
Ex_TMA_1-2	Mast:ANT	Existing TMA #1	0	0	Center	0.00
Ex_TMA_1-3	Mast:ANT	Existing TMA #1	0	0	Center	0.00
Ex_TMA_1-4	Mast:ANT	Existing TMA #1	0	0	Center	0.00
Ex_TMA_1-5	Mast:ANT	Existing TMA #1	0	0	Center	0.00
Ex_TMA_1-6	Mast:ANT	Existing TMA #1	0	0	Center	0.00
CR1-1	CX1:1	CR-1 - CX1:1 - 0-15ft	0	0	Center	0.00
CR1-2	CX2:1	CR-1 - CX2:1 - 15-25ft	0	0	Center	0.00
CR1-3	CX3:1	CR-1 - CX3:1 - 25-35ft	0	0	Center	0.00
CR1-4	CX4:1	CR-1 - CX4:1 - 35-45ft	0	0	Center	0.00
CR1-5	CX5:1	CR-1 - CX5:1 - 45-55ft	0	0	Center	0.00
CR1-6	CX6:1	CR-1 - CX6:1 - 55-65ft	0	0	Center	0.00
CR1-7	CX7:1	CR-1 - CX7:1 - 65-75ft	0	0	Center	0.00
CR1-8	CX8:1	CR-1 - CX8:1 - 75-85ft	0	0	Center	0.00
CR1-9	CX9:1	CR-1 - CX9:1 - 85-95ft	0	0	Center	0.00
CR1-10	CX10:1	CR-1 - CX10:1 - 95-105ft	0	0	Center	0.00
CR1-11	CX11:1	CR-1 - CX11:1 - 105-115ft	0	0	Center	0.00
CR1-12	CX12:1	CR-1 - CX12:1 - 115-125ft	0	0	Center	0.00
CR1-13	CX13:1	CR-1 - CX13:1 - 125-130ft	0	0	Center	0.00

Tubular Davit Properties:

Davit Property Label	Stock Number	Steel Shape	Thickness (in)	Base Diameter or Depth (in)	Tip Diameter or Depth (in)	Taper (in/ft)	Drag Coef.	Modulus of Elasticity (ksi)	Geometry	Strength Check Type	Vertical Capacity (lbs)	Tension Capacity (lbs)	Compres. Capacity (lbs)	Long. Capacity (lbs)	Yield Stress (ksi)	Weight Density Override (lbs/ft^3)	Steel Shape At End	Texture
3" coax post		0	0.25	1	1	0	1	29000	1 point	Calculated	0	0	0	0	65	0		
20707-E		8T	0.3125	19	9	0	1.3	29000	3 points	Calculated	0	0	0	0	65	0		
20707-F		8T	0.3125	18	9	0	1.3	29000	2 points	Calculated	0	0	0	0	65	0		
12" antpost top		0	0.375	12.75	12.75	0	1	29000	1 point	Calculated	0	0	0	0	65	0		
12" antpost		0	0.375	12.75	12.75	0	1	29000	1 point	Calculated	0	0	0	0	65	0		

12" coax post	0	0.25	3	3	0	1	29000	1 point	Calculated	0	0	0	0	65	0

Intermediate Joints for Davit Property "3" coax post":

Joint Label	Horz. Offset (ft)	Vert. Offset (ft)
1	0.25	0

Intermediate Joints for Davit Property "20707-E":

Joint Label	Horz. Offset (ft)	Vert. Offset (ft)
1	14	-1.2865
2	19.75	-1.8125
3	21.75	-1.8125

Intermediate Joints for Davit Property "20707-F":

Joint Label	Horz. Offset (ft)	Vert. Offset (ft)
1	12	-1.167
2	14	-1.167

Intermediate Joints for Davit Property "12" antpost top":

Joint Label	Horz. Offset (ft)	Vert. Offset (ft)
1	0.873	0

Intermediate Joints for Davit Property "12" antpost":

Joint Label	Horz. Offset (ft)	Vert. Offset (ft)
1	0.753	0

Intermediate Joints for Davit Property "12" coax post":

Joint Label	Horz. Offset (ft)	Vert. Offset (ft)
1	1	0

Tubular Davit Arm Connectivity:

Davit Label	Attach Label	Davit Property Set	Azimuth (deg)
TL	P:tc	20707-E	0
TR	P:tc	20707-E	180
ML	P:mc	20707-F	0
MR	P:mc	20707-F	180
BL	P:bc	20707-F	0
BR	P:bc	20707-F	180
CX1	P:CX1	3" coax post	90
CX2	P:CX2	3" coax post	90
CX3	P:CX3	3" coax post	90
CX4	P:CX4	3" coax post	90
CX5	P:CX5	3" coax post	90
CX6	P:CX6	3" coax post	90
CX7	P:CX7	3" coax post	90
CX8	P:CX8	3" coax post	90
CX9	P:CX9	3" coax post	90
CX10	P:CX10	3" coax post	90
Clamp-B	P:Clamp-B	12" antpost	90
Clamp-T	P:Clamp-T	12" antpost top	90
CX11	Mast:CX11	12" coax post	90
CX12	Mast:CX12	12" coax post	90

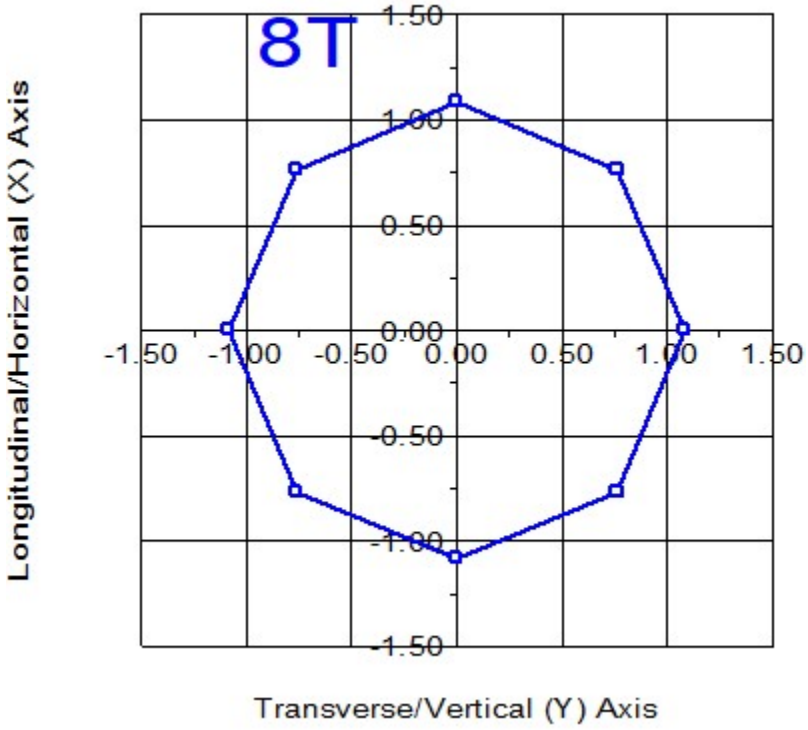
8T
1.50
1.00
0.50
0.00
-0.50
-1.00
-1.50
-1.50
-1.00
-0.50
0.00
0.50
1.00
1.50
Longitudinal/Horizontal (X) Axis
Transverse/Vertical (Y) Axis

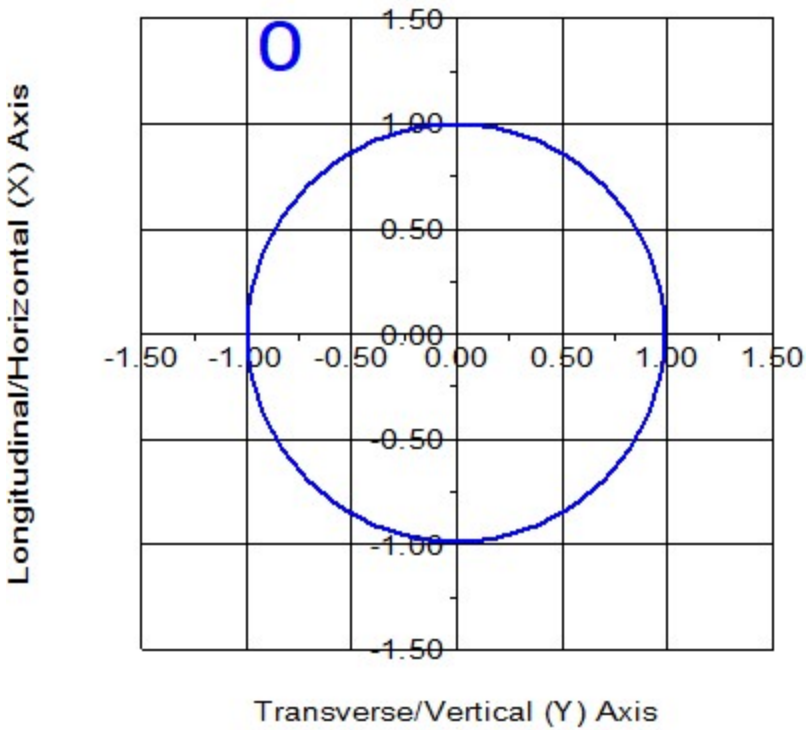

Tubular Davit Arm Steel Properties:

Element Label	Joint Label	Joint Position	Rel. Dist. (ft)	Outer Diam. (in)	Area (in^2)	V-Moment Inertia (in^4)	H-Moment Inertia (in^4)	D/t	W/t Max.	Fy (ksi)	Fa Min. (ksi)	V-Moment Capacity (ft-k)	H-Moment Capacity (ft-k)
TL	TL:O	Origin	0.00	19.00	19.35	893.31	893.31	0.00	21.0	65.00	65.00	470.57	470.57
TL	#TL:0	End	5.00	16.71	16.98	603.54	603.54	0.00	18.0	65.00	65.00	361.50	361.50
TL	#TL:0	Origin	5.00	16.71	16.98	603.54	603.54	0.00	18.0	65.00	65.00	361.50	361.50
TL	#TL:1	End	9.53	14.64	14.83	402.27	402.27	0.00	15.3	65.00	65.00	275.10	275.10
TL	#TL:1	Origin	9.53	14.64	14.83	402.27	402.27	0.00	15.3	65.00	65.00	275.10	275.10
TL	TL:1	End	14.06	12.56	12.68	251.60	251.60	0.00	12.5	65.00	65.00	200.49	200.49
TL	TL:1	Origin	14.06	12.56	12.68	251.60	251.60	0.00	12.5	65.00	65.00	200.49	200.49
TL	#TL:2	End	16.95	11.24	11.31	178.62	178.62	0.00	10.8	65.00	65.00	159.08	159.08
TL	#TL:2	Origin	16.95	11.24	11.31	178.62	178.62	0.00	10.8	65.00	65.00	159.08	159.08
TL	TL:2	End	19.83	9.92	9.94	121.33	121.33	0.00	9.0	65.00	65.00	122.46	122.46
TL	TL:2	Origin	19.83	9.92	9.94	121.33	121.33	0.00	9.0	65.00	65.00	122.46	122.46
TL	TL:3	End	21.83	9.00	9.00	89.84	89.84	0.00	7.8	65.00	65.00	99.91	99.91
TR	TR:O	Origin	0.00	19.00	19.35	893.31	893.31	0.00	21.0	65.00	65.00	470.57	470.57
TR	#TR:0	End	5.00	16.71	16.98	603.54	603.54	0.00	18.0	65.00	65.00	361.50	361.50
TR	#TR:0	Origin	5.00	16.71	16.98	603.54	603.54	0.00	18.0	65.00	65.00	361.50	361.50
TR	#TR:1	End	9.53	14.64	14.83	402.27	402.27	0.00	15.3	65.00	65.00	275.10	275.10
TR	#TR:1	Origin	9.53	14.64	14.83	402.27	402.27	0.00	15.3	65.00	65.00	275.10	275.10
TR	TR:1	End	14.06	12.56	12.68	251.60	251.60	0.00	12.5	65.00	65.00	200.49	200.49
TR	TR:1	Origin	14.06	12.56	12.68	251.60	251.60	0.00	12.5	65.00	65.00	200.49	200.49
TR	#TR:2	End	16.95	11.24	11.31	178.62	178.62	0.00	10.8	65.00	65.00	159.08	159.08
TR	#TR:2	Origin	16.95	11.24	11.31	178.62	178.62	0.00	10.8	65.00	65.00	159.08	159.08
TR	TR:2	End	19.83	9.92	9.94	121.33	121.33	0.00	9.0	65.00	65.00	122.46	122.46
TR	TR:2	Origin	19.83	9.92	9.94	121.33	121.33	0.00	9.0	65.00	65.00	122.46	122.46
TR	TR:3	End	21.83	9.00	9.00	89.84	89.84	0.00	7.8	65.00	65.00	99.91	99.91

ML	ML:O	Origin	0.00	18.00	18.32	757.46	757.46	0.00	19.7	65.00	65.00	421.18	421.18
ML	#ML:0	End	5.00	14.80	15.00	416.19	416.19	0.00	15.5	65.00	65.00	281.48	281.48
ML	#ML:0	Origin	5.00	14.80	15.00	416.19	416.19	0.00	15.5	65.00	65.00	281.48	281.48
ML	#ML:1	End	8.53	12.54	12.66	250.31	250.31	0.00	12.5	65.00	65.00	199.79	199.79
ML	#ML:1	Origin	8.53	12.54	12.66	250.31	250.31	0.00	12.5	65.00	65.00	199.79	199.79
ML	ML:1	End	12.06	10.28	10.32	135.67	135.67	0.00	9.5	65.00	65.00	132.08	132.08
ML	ML:1	Origin	12.06	10.28	10.32	135.67	135.67	0.00	9.5	65.00	65.00	132.08	132.08
ML	ML:2	End	14.06	9.00	9.00	89.84	89.84	0.00	7.8	65.00	65.00	99.91	99.91
MR	MR:O	Origin	0.00	18.00	18.32	757.46	757.46	0.00	19.7	65.00	65.00	421.18	421.18
MR	#MR:0	End	5.00	14.80	15.00	416.19	416.19	0.00	15.5	65.00	65.00	281.48	281.48
MR	#MR:0	Origin	5.00	14.80	15.00	416.19	416.19	0.00	15.5	65.00	65.00	281.48	281.48
MR	#MR:1	End	8.53	12.54	12.66	250.31	250.31	0.00	12.5	65.00	65.00	199.79	199.79
MR	#MR:1	Origin	8.53	12.54	12.66	250.31	250.31	0.00	12.5	65.00	65.00	199.79	199.79
MR	MR:1	End	12.06	10.28	10.32	135.67	135.67	0.00	9.5	65.00	65.00	132.08	132.08
MR	MR:1	Origin	12.06	10.28	10.32	135.67	135.67	0.00	9.5	65.00	65.00	132.08	132.08
MR	MR:2	End	14.06	9.00	9.00	89.84	89.84	0.00	7.8	65.00	65.00	99.91	99.91
BL	BL:O	Origin	0.00	18.00	18.32	757.46	757.46	0.00	19.7	65.00	65.00	421.18	421.18
BL	#BL:0	End	5.00	14.80	15.00	416.19	416.19	0.00	15.5	65.00	65.00	281.48	281.48
BL	#BL:0	Origin	5.00	14.80	15.00	416.19	416.19	0.00	15.5	65.00	65.00	281.48	281.48
BL	#BL:1	End	8.53	12.54	12.66	250.31	250.31	0.00	12.5	65.00	65.00	199.79	199.79
BL	#BL:1	Origin	8.53	12.54	12.66	250.31	250.31	0.00	12.5	65.00	65.00	199.79	199.79
BL	BL:1	End	12.06	10.28	10.32	135.67	135.67	0.00	9.5	65.00	65.00	132.08	132.08
BL	BL:1	Origin	12.06	10.28	10.32	135.67	135.67	0.00	9.5	65.00	65.00	132.08	132.08
BL	BL:2	End	14.06	9.00	9.00	89.84	89.84	0.00	7.8	65.00	65.00	99.91	99.91
BR	BR:O	Origin	0.00	18.00	18.32	757.46	757.46	0.00	19.7	65.00	65.00	421.18	421.18
BR	#BR:0	End	5.00	14.80	15.00	416.19	416.19	0.00	15.5	65.00	65.00	281.48	281.48
BR	#BR:0	Origin	5.00	14.80	15.00	416.19	416.19	0.00	15.5	65.00	65.00	281.48	281.48
BR	#BR:1	End	8.53	12.54	12.66	250.31	250.31	0.00	12.5	65.00	65.00	199.79	199.79
BR	#BR:1	Origin	8.53	12.54	12.66	250.31	250.31	0.00	12.5	65.00	65.00	199.79	199.79
BR	BR:1	End	12.06	10.28	10.32	135.67	135.67	0.00	9.5	65.00	65.00	132.08	132.08
BR	BR:1	Origin	12.06	10.28	10.32	135.67	135.67	0.00	9.5	65.00	65.00	132.08	132.08
BR	BR:2	End	14.06	9.00	9.00	89.84	89.84	0.00	7.8	65.00	65.00	99.91	99.91
CX1	CX1:O	Origin	0.00	1.00	0.59	0.05	0.05	4.00	0.0	65.00	65.00	0.50	0.50
CX1	CX1:1	End	0.25	1.00	0.59	0.05	0.05	4.00	0.0	65.00	65.00	0.50	0.50
CX2	CX2:O	Origin	0.00	1.00	0.59	0.05	0.05	4.00	0.0	65.00	65.00	0.50	0.50
CX2	CX2:1	End	0.25	1.00	0.59	0.05	0.05	4.00	0.0	65.00	65.00	0.50	0.50
CX3	CX3:O	Origin	0.00	1.00	0.59	0.05	0.05	4.00	0.0	65.00	65.00	0.50	0.50
CX3	CX3:1	End	0.25	1.00	0.59	0.05	0.05	4.00	0.0	65.00	65.00	0.50	0.50
CX4	CX4:O	Origin	0.00	1.00	0.59	0.05	0.05	4.00	0.0	65.00	65.00	0.50	0.50
CX4	CX4:1	End	0.25	1.00	0.59	0.05	0.05	4.00	0.0	65.00	65.00	0.50	0.50
CX5	CX5:O	Origin	0.00	1.00	0.59	0.05	0.05	4.00	0.0	65.00	65.00	0.50	0.50
CX5	CX5:1	End	0.25	1.00	0.59	0.05	0.05	4.00	0.0	65.00	65.00	0.50	0.50
CX6	CX6:O	Origin	0.00	1.00	0.59	0.05	0.05	4.00	0.0	65.00	65.00	0.50	0.50
CX6	CX6:1	End	0.25	1.00	0.59	0.05	0.05	4.00	0.0	65.00	65.00	0.50	0.50
CX7	CX7:O	Origin	0.00	1.00	0.59	0.05	0.05	4.00	0.0	65.00	65.00	0.50	0.50
CX7	CX7:1	End	0.25	1.00	0.59	0.05	0.05	4.00	0.0	65.00	65.00	0.50	0.50
CX8	CX8:O	Origin	0.00	1.00	0.59	0.05	0.05	4.00	0.0	65.00	65.00	0.50	0.50
CX8	CX8:1	End	0.25	1.00	0.59	0.05	0.05	4.00	0.0	65.00	65.00	0.50	0.50
CX9	CX9:O	Origin	0.00	1.00	0.59	0.05	0.05	4.00	0.0	65.00	65.00	0.50	0.50
CX9	CX9:1	End	0.25	1.00	0.59	0.05	0.05	4.00	0.0	65.00	65.00	0.50	0.50
CX10	CX10:O	Origin	0.00	1.00	0.59	0.05	0.05	4.00	0.0	65.00	65.00	0.50	0.50
CX10	CX10:1	End	0.25	1.00	0.59	0.05	0.05	4.00	0.0	65.00	65.00	0.50	0.50
Clamp-B	Clamp-B:O	Origin	0.00	12.75	14.58	279.34	279.34	34.00	0.0	65.00	65.00	237.34	237.34
Clamp-B	Clamp-B:1	End	0.75	12.75	14.58	279.34	279.34	34.00	0.0	65.00	65.00	237.34	237.34
Clamp-T	Clamp-T:O	Origin	0.00	12.75	14.58	279.34	279.34	34.00	0.0	65.00	65.00	237.34	237.34
Clamp-T	Clamp-T:1	End	0.87	12.75	14.58	279.34	279.34	34.00	0.0	65.00	65.00	237.34	237.34
CX11	Mast:CX11	Origin	0.00	3.00	2.16	2.06	2.06	12.00	0.0	65.00	65.00	7.43	7.43
CX11	CX11:1	End	1.00	3.00	2.16	2.06	2.06	12.00	0.0	65.00	65.00	7.43	7.43
CX12	Mast:CX12	Origin	0.00	3.00	2.16	2.06	2.06	12.00	0.0	65.00	65.00	7.43	7.43
CX12	CX12:1	End	1.00	3.00	2.16	2.06	2.06	12.00	0.0	65.00	65.00	7.43	7.43
CX13	Mast:ANT	Origin	0.00	3.00	2.16	2.06	2.06	12.00	0.0	65.00	65.00	7.43	7.43
CX13	CX13:1	End	1.00	3.00	2.16	2.06	2.06	12.00	0.0	65.00	65.00	7.43	7.43

Tubular X-Arm Properties:

Cross Arm Property Label	Stock Number	Steel Shape	Thickness (in)	Diameter or Depth (in)	Length (ft)	Modulus of Elasticity (ksi)	Drag Coef.	Geometry	Strength Check Type	Vertical Capacity (lbs)	Trans. Capacity (lbs)	Long. Capacity (lbs)	Steel Yield Stress (ksi)	Weight Density Override (lbs/ft^3)	Texture
12"x28` Sch 80 Pipe (12XS)		0	0.465	12.75	28	29000	1.6	4 points	Calculated	0	0	0	35	0	

Joints Relative to the Origin for Cross Arm Property "12"x28` Sch 80 Pipe (12XS)":

Joint Label	Offset (ft)
CX11	5
Top	10
CX12	15
ANT	25

Tubular X-Arm Connectivity:

X-Arm Label	X-Arm Property Set	Azimuth (deg)	Slope (deg)	Attach. Labels	Connects
Mast	12"x28` Sch 80 Pipe (12XS)	0	0		6 connections

X-Arm Connections for "Mast":

Attach Label	Offset (ft)	Connect At	Connection Code Type
Mast:O	0.000	Clamp-B:1	Fixed
Mast:CX11	5.000		
Mast:Top	10.000	Clamp-T:1	Fixed
Mast:CX12	15.000		
Mast:ANT	25.000		
Mast:E	28.000		

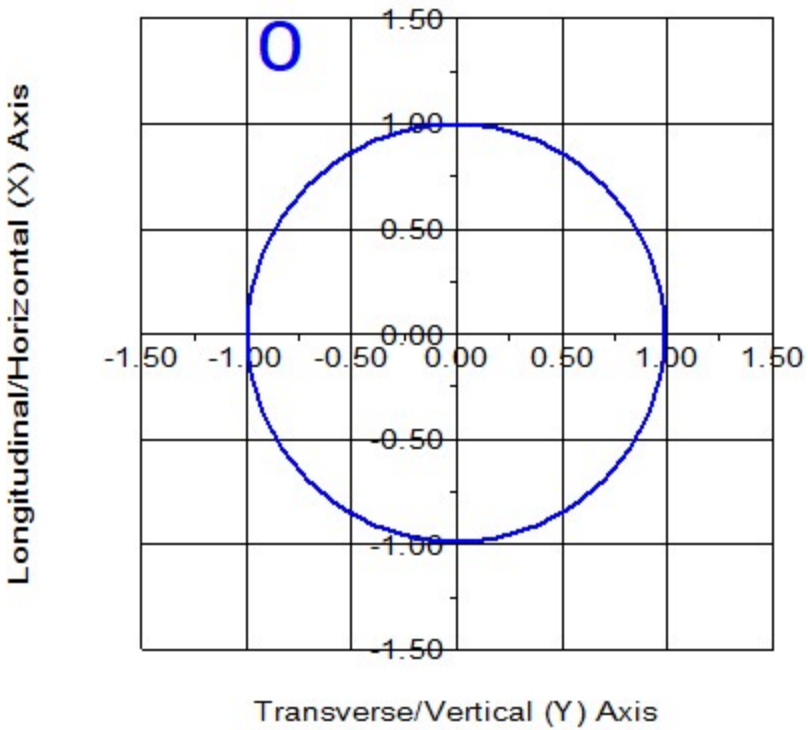

Tubular X-Arm Steel Properties:

Element Label	Joint Label	Joint Position	Rel. Dist. (ft)	Outer Diam. (in)	Area (in^2)	V-Moment Inertia (in^4)	H-Moment Inertia (in^4)	D/t	W/t Max.	Fy (ksi)	Fa Min. (ksi)	V-Moment Capacity (ft-k)	H-Moment Capacity (ft-k)
Mast	Mast:O	Origin	0.00	12.75	17.95	339.05	339.05	27.42	0.0	35.00	35.00	155.12	155.12
Mast	#sMast:0	End	2.50	12.75	17.95	339.05	339.05	27.42	0.0	35.00	35.00	155.12	155.12
Mast	#sMast:0	Origin	2.50	12.75	17.95	339.05	339.05	27.42	0.0	35.00	35.00	155.12	155.12
Mast	Mast:CX11	End	5.00	12.75	17.95	339.05	339.05	27.42	0.0	35.00	35.00	155.12	155.12
Mast	Mast:CX11	Origin	5.00	12.75	17.95	339.05	339.05	27.42	0.0	35.00	35.00	155.12	155.12
Mast	#sMast:1	End	7.50	12.75	17.95	339.05	339.05	27.42	0.0	35.00	35.00	155.12	155.12
Mast	#sMast:1	Origin	7.50	12.75	17.95	339.05	339.05	27.42	0.0	35.00	35.00	155.12	155.12
Mast	Mast:Top	End	10.00	12.75	17.95	339.05	339.05	27.42	0.0	35.00	35.00	155.12	155.12
Mast	Mast:Top	Origin	10.00	12.75	17.95	339.05	339.05	27.42	0.0	35.00	35.00	155.12	155.12
Mast	Mast:CX12	End	15.00	12.75	17.95	339.05	339.05	27.42	0.0	35.00	35.00	155.12	155.12
Mast	Mast:CX12	Origin	15.00	12.75	17.95	339.05	339.05	27.42	0.0	35.00	35.00	155.12	155.12
Mast	#sMast:2	End	20.00	12.75	17.95	339.05	339.05	27.42	0.0	35.00	35.00	155.12	155.12
Mast	#sMast:2	Origin	20.00	12.75	17.95	339.05	339.05	27.42	0.0	35.00	35.00	155.12	155.12
Mast	#sMast:3	End	22.50	12.75	17.95	339.05	339.05	27.42	0.0	35.00	35.00	155.12	155.12
Mast	#sMast:3	Origin	22.50	12.75	17.95	339.05	339.05	27.42	0.0	35.00	35.00	155.12	155.12
Mast	Mast:ANT	End	25.00	12.75	17.95	339.05	339.05	27.42	0.0	35.00	35.00	155.12	155.12
Mast	Mast:ANT	Origin	25.00	12.75	17.95	339.05	339.05	27.42	0.0	35.00	35.00	155.12	155.12
Mast	Mast:E	End	28.00	12.75	17.95	339.05	339.05	27.42	0.0	35.00	35.00	155.12	155.12

*** Insulator Data

Suspension Properties:

Label	Stock Number	Length (ft)	Weight (lbs)	Wind Area (ft^2)	Tension Capacity (lbs)	Top Rect Width (ft)	Top Rect Height (ft)	Bot. Rect Width (ft)	Bot. Rect Height (ft)	Vert. Rect Width (ft)	Vert. Rect Height (ft)	Hardware Capacity (lbs)	Notes	Draw	Rigid

Cond	6	120	1	2e+04	0.25	0.25	0.25	0.25	0.25	0.25	0	Sheds	No
sw	0.5	25	0.25	2e+04	0	0	0	0	0	0	0	Sheds	No

Suspension Insulator Connectivity:

Suspension Label	Structure Attach	Tip Label	Property Set	Cond. 1 Minimum Swing (deg)	Cond. 1 Maximum Swing (deg)	Cond. 2 Minimum Swing (deg)	Cond. 2 Maximum Swing (deg)	Cond. 3 Minimum Swing (deg)	Cond. 3 Maximum Swing (deg)	Cond. 4 Minimum Swing (deg)	Cond. 4 Maximum Swing (deg)	Min. Required Vertical Load (uplift) (lbs)
SWL	TL:3	SWL	sw	0.00	0.00	0.00	0.00	0.00	0.00	0.00	0.00	No Limit
SWR	TR:3	SWR	sw	0.00	0.00	0.00	0.00	0.00	0.00	0.00	0.00	No Limit
TCL	TL:1	TCL	Cond	0.00	0.00	0.00	0.00	0.00	0.00	0.00	0.00	No Limit
TCR	TR:1	TCR	Cond	0.00	0.00	0.00	0.00	0.00	0.00	0.00	0.00	No Limit
MCL	ML:2	MCL	Cond	0.00	0.00	0.00	0.00	0.00	0.00	0.00	0.00	No Limit
MCR	MR:2	MCR	Cond	0.00	0.00	0.00	0.00	0.00	0.00	0.00	0.00	No Limit
BCL	BL:2	BCL	Cond	0.00	0.00	0.00	0.00	0.00	0.00	0.00	0.00	No Limit
BCR	BR:2	BCR	Cond	0.00	0.00	0.00	0.00	0.00	0.00	0.00	0.00	No Limit

Material List Options:
Show Parts: YES
Decompose Assemblies: NO
Show Assemblies: YES

Material List

	Stock Number	Item Description	Quantity	Unit of Measure
(1)	802738	Triple Arm w/ Prop HR Equipment property: Existing Mount #1	1.00	Each
	2.375"O.D. x 8` Mount Pipe	Equipment property: Existing Mounting Pipe #1	9.00	Each
	800 10965	Equipment property: Proposed Antenna #1	3.00	Each
	TMABPD7823VG12A	Equipment property: Proposed TMA #1	6.00	Each
	SBNH-1D6565B	Equipment property: Existing Antenna #1	3.00	Each
	QS66512-2	Equipment property: Existing Antenna #2	3.00	Each
	TMA2117F00V1-1	Equipment property: Existing TMA #1	6.00	Each
	CR-1 - CX1:1	Equipment property: CR-1 - CX1:1 - 0-15ft	1.00	Each
	CR-1 - CX2:1	Equipment property: CR-1 - CX2:1 - 15-25ft	1.00	Each
	CR-1 - CX3:1	Equipment property: CR-1 - CX3:1 - 25-35ft	1.00	Each
	CR-1 - CX4:1	Equipment property: CR-1 - CX4:1 - 35-45ft	1.00	Each
	CR-1 - CX5:1	Equipment property: CR-1 - CX5:1 - 45-55ft	1.00	Each
	CR-1 - CX6:1	Equipment property: CR-1 - CX6:1 - 55-65ft	1.00	Each
	CR-1 - CX7:1	Equipment property: CR-1 - CX7:1 - 65-75ft	1.00	Each
	CR-1 - CX8:1	Equipment property: CR-1 - CX8:1 - 75-85ft	1.00	Each
	CR-1 - CX9:1	Equipment property: CR-1 - CX9:1 - 85-95ft	1.00	Each
	CR-1 - CX10:1	Equipment property: CR-1 - CX10:1 - 95-105ft	1.00	Each
	CR-1 - CX11:1	Equipment property: CR-1 - CX11:1 - 105-115ft	1.00	Each
	CR-1 - CX12:1	Equipment property: CR-1 - CX12:1 - 115-125ft	1.00	Each
	CR-1 - CX13:1	Equipment property: CR-1 - CX13:1 - 125-130ft	1.00	Each

*** Loads Data

Loads from file: G:\Transmission\Eversource\2019\806_Smartlink\80619-0001 Tower 24063 AT&T CTL02343\001.6000 - SA (Rev 1)\PLS-Pole\80619-0001.001.6000.lca

Insulator dead and wind loads are already included in the point loads printed below.

Loading Method Parameters:

Structure Height Summary (used for calculating wind/ice adjust with height):
  Z of ground for wind height adjust 0.00 (ft) and structure Z coordinate that will be put on the centerline ground profile in PLS-CADD.
  Ground elevation shift 0.00 (ft)
  Z of ground with shift 0.00 (ft)
  Z of structure top (highest joint) 133.00 (ft)
  Structure height 133.00 (ft)
  Structure height above ground 133.00 (ft)

Vector Load Cases:

Load Case Description	Dead Load Factor	Wind Area Factor	SF for Steel Tubular Poles and Towers	SF for Wood Arms	SF for Poles	SF for Conc. Ult.	SF for Conc. First Crack	SF for Conc. Zero Tens.	SF for Guys and Cables	SF for Non Tubular Arms	SF for Braces	SF for Insuls.	SF For Hardware	SF for Found.	Point Loads	Wind/Ice Model	Trans. Wind Pressure (psf)	Longit. Wind Pressure (psf)	Ice Thick. (in)	Ice Density (lbs/ft^3)	Temperature (deg F)	Pole Deflection Check	Pole Deflection Limit % or (ft)
NESC 250B (Heavy)	1.5000	2.5000	1.00000	0.0000	0.0000	1.0000	0.0000	1.0000	1.0000	1.0000	1.0000	0.0000	1.0000	8 loads	Wind on All	4	0	0.500	57.000	0.0	No Limit	0
NESC 250C (Extreme Wind)	1.0000	1.0000	1.00000	0.0000	0.0000	1.0000	0.0000	1.0000	1.0000	1.0000	1.0000	0.0000	1.0000	8 loads	NESC 2007	31	0	0.000	57.000	60.0	No Limit	0
NESC 250D (Extreme Ice w/Wind)	1.0000	1.0000	1.00000	0.0000	0.0000	1.0000	0.0000	1.0000	1.0000	1.0000	1.0000	0.0000	1.0000	8 loads	Wind on All	6.4	0	0.750	57.000	15.0	No Limit	0

Point Loads for Load Case "NESC 250B (Heavy)":

Joint Label	Vertical Load (lbs)	Transverse Load (lbs)	Longitudinal Load (lbs)	Load Comment
SWR	1544	790	2	Shield Wire
SWL	1468	736	1	Shield Wire
TCR	8477	2443	3	Conductor
TCL	8477	2443	3	Conductor
MCR	8477	2443	3	Conductor
MCL	8477	2443	3	Conductor
BCR	8477	2443	3	Conductor
BCL	8477	2443	3	Conductor

Equipment Loads for "NESC 250B (Heavy)":

Equipment Label	Equipment Property Set	Elevation Above Ground (ft)	qzGh (psf)	Ice Thick. (in)	Total Wind Drag Area (ft^2)	Long. Load (lbs)	Trans. Load (lbs)	Vert. Load (lbs)
Exist_Mnt-1	Existing Mount #1	130.00	10.00	0.50	53.86	5.62	538.62	1484.08
Ex_Mnt-1	Existing Mounting Pipe #1	130.00	10.00	0.50	3.25	0.34	32.51	55.77
Ex_Mnt-2	Existing Mounting Pipe #1	130.00	10.00	0.50	3.25	0.34	32.51	55.77
Ex_Mnt-3	Existing Mounting Pipe #1	130.00	10.00	0.50	3.25	0.34	32.51	55.77
Ex_Mnt-4	Existing Mounting Pipe #1	130.00	10.00	0.50	3.25	0.34	32.51	55.77
Ex_Mnt-5	Existing Mounting Pipe #1	130.00	10.00	0.50	3.25	0.34	32.51	55.77
Ex_Mnt-6	Existing Mounting Pipe #1	130.00	10.00	0.50	3.25	0.34	32.51	55.77
Ex_Mnt-7	Existing Mounting Pipe #1	130.00	10.00	0.50	3.25	0.34	32.51	55.77
Ex_Mnt-8	Existing Mounting Pipe #1	130.00	10.00	0.50	3.25	0.34	32.51	55.77
Ex_Mnt-9	Existing Mounting Pipe #1	130.00	10.00	0.50	3.25	0.34	32.51	55.77
Prop_Ant_1-1	Proposed Antenna #1	130.00	10.00	0.50	22.55	2.35	225.46	237.28
Prop_Ant_1-2	Proposed Antenna #1	130.00	10.00	0.50	22.55	2.35	225.46	237.28
Prop_Ant_1-3	Proposed Antenna #1	130.00	10.00	0.50	22.55	2.35	225.46	237.28
Prop_TMA_1-1	Proposed TMA #1	130.00	10.00	0.50	1.77	0.18	17.71	45.53
Prop_TMA_1-2	Proposed TMA #1	130.00	10.00	0.50	1.77	0.18	17.71	45.53
Prop_TMA_1-3	Proposed TMA #1	130.00	10.00	0.50	1.77	0.18	17.71	45.53
Prop_TMA_1-4	Proposed TMA #1	130.00	10.00	0.50	1.77	0.18	17.71	45.53
Prop_TMA_1-5	Proposed TMA #1	130.00	10.00	0.50	1.77	0.18	17.71	45.53

Prop_TMA_1-6	Proposed TMA #1	130.00	10.00	0.50	1.77	0.18	17.71	45.53
Ex_Ant_1-1	Existing Antenna #1	130.00	10.00	0.50	12.55	1.31	125.47	119.34
Ex_Ant_1-2	Existing Antenna #1	130.00	10.00	0.50	12.55	1.31	125.47	119.34
Ex_Ant_1-3	Existing Antenna #1	130.00	10.00	0.50	12.55	1.31	125.47	119.34
Ex_Ant_2-1	Existing Antenna #2	130.00	10.00	0.50	12.58	1.31	125.83	221.60
Ex_Ant_2-2	Existing Antenna #2	130.00	10.00	0.50	12.58	1.31	125.83	221.60
Ex_Ant_2-3	Existing Antenna #2	130.00	10.00	0.50	12.58	1.31	125.83	221.60
Ex_TMA_1-1	Existing TMA #1	130.00	10.00	0.50	1.77	0.18	17.70	46.15
Ex_TMA_1-2	Existing TMA #1	130.00	10.00	0.50	1.77	0.18	17.70	46.15
Ex_TMA_1-3	Existing TMA #1	130.00	10.00	0.50	1.77	0.18	17.70	46.15
Ex_TMA_1-4	Existing TMA #1	130.00	10.00	0.50	1.77	0.18	17.70	46.15
Ex_TMA_1-5	Existing TMA #1	130.00	10.00	0.50	1.77	0.18	17.70	46.15
Ex_TMA_1-6	Existing TMA #1	130.00	10.00	0.50	1.77	0.18	17.70	46.15
CR1-1	CR-1 - CX1:1 - 0-15ft	10.00	10.00	0.50	13.18	1.38	131.80	1161.49
CR1-2	CR-1 - CX2:1 - 15-25ft	20.00	10.00	0.50	8.80	0.92	87.95	774.34
CR1-3	CR-1 - CX3:1 - 25-35ft	30.00	10.00	0.50	8.80	0.92	87.95	774.34
CR1-4	CR-1 - CX4:1 - 35-45ft	40.00	10.00	0.50	8.80	0.92	87.95	774.34
CR1-5	CR-1 - CX5:1 - 45-55ft	50.00	10.00	0.50	8.80	0.92	87.95	774.34
CR1-6	CR-1 - CX6:1 - 55-65ft	60.00	10.00	0.50	8.80	0.92	87.95	774.34
CR1-7	CR-1 - CX7:1 - 65-75ft	70.00	10.00	0.50	8.80	0.92	87.95	774.34
CR1-8	CR-1 - CX8:1 - 75-85ft	80.00	10.00	0.50	8.80	0.92	87.95	774.34
CR1-9	CR-1 - CX9:1 - 85-95ft	90.00	10.00	0.50	8.80	0.92	87.95	774.34
CR1-10	CR-1 - CX10:1 - 95-105ft	100.00	10.00	0.50	8.80	0.92	87.95	774.34
CR1-11	CR-1 - CX11:1 - 105-115ft	110.00	10.00	0.50	8.80	0.92	87.95	774.34
CR1-12	CR-1 - CX12:1 - 115-125ft	120.00	10.00	0.50	10.78	1.13	107.75	774.34
CR1-13	CR-1 - CX13:1 - 125-130ft	130.00	10.00	0.50	5.42	0.57	54.18	387.16

Detailed Pole Loading Data for Load Case "NESC 250B (Heavy)":

Notes: Does not include loads from equipment, arms, guys, braces, etc. or user input loads.
Wind load is calculated for the undeformed shape of a pole.

Pole Label	Top Joint	Bottom Joint	Section Top Z (ft)	Section Bottom Z (ft)	Section Average Elevation (ft)	Outer Diameter (in)	Reynolds Number	Drag Coef.	Adjusted Wind Pressure (psf)	Adjusted Ice Thickness (in)	Pole Vert. Load (lbs)	Pole Wind Load (lbs)	Pole Ice Vertical Load (lbs)	Pole Ice Wind Load (lbs)	Tran. Wind Load (lbs)	Long. Wind Load (lbs)
P	P:t	P:tc	120.00	118.90	119.45	26.838	1.27e+06	1.600	10.00	0.50	179.80	39.51	18.86	1.47	40.98	0.00
P	P:tc	P:Clamp-T	118.90	115.00	116.95	27.534	1.3e+06	1.600	10.00	0.50	651.20	143.04	68.27	5.19	148.23	0.00
P	P:Clamp-T		115.00	110.00	112.50	28.772	1.36e+06	1.600	10.00	0.50	873.84	191.82	91.55	6.67	198.49	0.00
P		P:Clamp-B	110.00	105.00	107.50	30.164	1.43e+06	1.600	10.00	0.50	916.67	201.10	95.98	6.67	207.77	0.00
P	P:Clamp-B	P:CX10	105.00	100.00	102.50	31.556	1.49e+06	1.600	10.00	0.50	959.50	210.38	100.41	6.67	217.05	0.00
P	P:CX10	P:mc	100.00	96.54	98.27	32.733	1.55e+06	1.600	10.00	0.50	688.65	150.93	72.03	4.61	155.54	0.00
P	P:mc		96.54	93.27	94.91	33.670	1.59e+06	1.600	10.00	0.50	670.26	146.85	70.09	4.36	151.21	0.00
P		P:CX9	93.27	90.00	91.64	34.580	1.64e+06	1.600	10.00	0.50	688.59	150.82	71.98	4.36	155.19	0.00
P	P:CX9		90.00	85.00	87.50	35.731	1.69e+06	1.600	10.00	0.50	1088.00	238.22	113.69	6.67	244.89	0.00
P		P:CX8	85.00	80.00	82.50	37.123	1.76e+06	1.600	10.00	0.50	1130.83	247.50	118.12	6.67	254.17	0.00
P	P:CX8		80.00	77.27	78.64	38.449	1.82e+06	1.600	10.00	0.50	849.77	139.91	66.77	3.64	143.55	0.00
P		P:bc	77.27	74.54	75.91	39.209	1.86e+06	1.600	10.00	0.50	866.85	142.68	68.09	3.64	146.31	0.00
P	P:bc	P:CX7	74.54	70.00	72.27	40.221	1.9e+06	1.600	10.00	0.50	1480.46	243.59	116.26	6.06	249.65	0.00
P	P:CX7		70.00	66.42	68.21	41.352	1.96e+06	1.600	10.00	0.50	1201.29	197.59	94.30	4.78	202.37	0.00
P			66.42	62.83	64.62	42.350	2.01e+06	1.600	10.00	0.50	1230.63	202.36	96.58	4.78	207.14	0.00
P		P:CX6	62.83	60.00	61.42	42.743	2.02e+06	1.600	10.00	0.50	2083.73	161.46	77.06	3.78	165.24	0.00
P	P:CX6		60.00	57.00	58.50	43.055	2.04e+06	1.600	10.00	0.50	2249.04	172.23	82.20	4.00	176.23	0.00
P			57.00	53.50	55.25	43.959	2.08e+06	1.600	10.00	0.50	1402.19	205.15	97.91	4.67	209.82	0.00
P		P:CX5	53.50	50.00	51.75	44.934	2.13e+06	1.600	10.00	0.50	1433.67	209.70	100.08	4.67	214.37	0.00
P	P:CX5		50.00	46.38	48.19	45.925	2.17e+06	1.600	10.00	0.50	1518.06	221.98	105.94	4.83	226.82	0.00
P			46.38	42.75	44.56	46.935	2.22e+06	1.600	10.00	0.50	1551.87	226.86	108.27	4.83	231.70	0.00
P		P:CX4	42.75	40.00	41.38	47.947	2.27e+06	1.600	10.00	0.50	1334.81	175.81	83.91	3.67	179.48	0.00
P	P:CX4		40.00	35.00	37.50	49.026	2.32e+06	1.600	10.00	0.50	2482.33	326.85	155.99	6.67	333.52	0.00
P		P:CX3	35.00	30.00	32.50	50.418	2.39e+06	1.600	10.00	0.50	2553.72	336.13	160.42	6.67	342.80	0.00
P	P:CX3		30.00	26.38	28.19	51.618	2.44e+06	1.600	10.00	0.50	1896.08	249.50	119.08	4.83	254.33	0.00
P			26.38	22.75	24.56	52.627	2.49e+06	1.600	10.00	0.50	1933.61	254.38	121.40	4.83	259.21	0.00
P		P:CX2	22.75	20.00	21.38	53.515	2.53e+06	1.600	10.00	0.50	1491.90	196.23	93.65	3.67	199.90	0.00
P	P:CX2		20.00	15.00	17.50	54.593	2.58e+06	1.600	10.00	0.50	2767.88	363.97	173.71	6.67	370.64	0.00
P		P:CX1	15.00	10.00	12.50	55.985	2.65e+06	1.600	10.00	0.50	2839.27	373.25	178.14	6.67	379.92	0.00
P	P:CX1		10.00	5.00	7.50	57.377	2.72e+06	1.600	10.00	0.50	2910.65	382.53	182.57	6.67	389.20	0.00
P		P:g	5.00	0.00	2.50	58.769	2.78e+06	1.600	10.00	0.50	2982.04	391.81	187.00	6.67	398.48	0.00

Point Loads for Load Case "NESC 250C (Extreme Wind)":

Joint Label	Vertical Load (lbs)	Transverse Load (lbs)	Longitudinal Load (lbs)	Load Comment
SWR	749	1068	5	Shield Wire
SWL	710	877	4	Shield Wire
TCR	4797	5184	21	Conductor
TCL	4801	5184	21	Conductor
MCR	4797	5184	21	Conductor

MCL	4801	5184	21	Conductor
BCR	4797	5184	21	Conductor
BCL	4801	5184	21	Conductor

Equipment Loads for "NESC 250C (Extreme Wind)":

Equipment Label	Equipment Property Set	Elevation Above Ground (ft)	qzGh (psf)	Ice Thick. (in)	Total Wind Drag Area (ft^2)	Long. Load (lbs)	Trans. Load (lbs)	Vert. Load (lbs)
Exist_Mnt-1	Existing Mount #1	130.00	32.40	0.00	52.60	6.78	1704.36	815.00
Ex_Mnt-1	Existing Mounting Pipe #1	130.00	32.40	0.00	2.57	0.33	83.19	29.20
Ex_Mnt-2	Existing Mounting Pipe #1	130.00	32.40	0.00	2.57	0.33	83.19	29.20
Ex_Mnt-3	Existing Mounting Pipe #1	130.00	32.40	0.00	2.57	0.33	83.19	29.20
Ex_Mnt-4	Existing Mounting Pipe #1	130.00	32.40	0.00	2.57	0.33	83.19	29.20
Ex_Mnt-5	Existing Mounting Pipe #1	130.00	32.40	0.00	2.57	0.33	83.19	29.20
Ex_Mnt-6	Existing Mounting Pipe #1	130.00	32.40	0.00	2.57	0.33	83.19	29.20
Ex_Mnt-7	Existing Mounting Pipe #1	130.00	32.40	0.00	2.57	0.33	83.19	29.20
Ex_Mnt-8	Existing Mounting Pipe #1	130.00	32.40	0.00	2.57	0.33	83.19	29.20
Ex_Mnt-9	Existing Mounting Pipe #1	130.00	32.40	0.00	2.57	0.33	83.19	29.20
Prop_Ant_1-1	Proposed Antenna #1	130.00	32.40	0.00	21.86	2.82	708.31	108.60
Prop_Ant_1-2	Proposed Antenna #1	130.00	32.40	0.00	21.86	2.82	708.31	108.60
Prop_Ant_1-3	Proposed Antenna #1	130.00	32.40	0.00	21.86	2.82	708.31	108.60
Prop_TMA_1-1	Proposed TMA #1	130.00	32.40	0.00	1.62	0.21	52.49	26.00
Prop_TMA_1-2	Proposed TMA #1	130.00	32.40	0.00	1.62	0.21	52.49	26.00
Prop_TMA_1-3	Proposed TMA #1	130.00	32.40	0.00	1.62	0.21	52.49	26.00
Prop_TMA_1-4	Proposed TMA #1	130.00	32.40	0.00	1.62	0.21	52.49	26.00
Prop_TMA_1-5	Proposed TMA #1	130.00	32.40	0.00	1.62	0.21	52.49	26.00
Prop_TMA_1-6	Proposed TMA #1	130.00	32.40	0.00	1.62	0.21	52.49	26.00
Ex_Ant_1-1	Existing Antenna #1	130.00	32.40	0.00	11.96	1.54	387.53	47.40
Ex_Ant_1-2	Existing Antenna #1	130.00	32.40	0.00	11.96	1.54	387.53	47.40
Ex_Ant_1-3	Existing Antenna #1	130.00	32.40	0.00	11.96	1.54	387.53	47.40
Ex_Ant_2-1	Existing Antenna #2	130.00	32.40	0.00	12.00	1.55	388.83	111.00
Ex_Ant_2-2	Existing Antenna #2	130.00	32.40	0.00	12.00	1.55	388.83	111.00
Ex_Ant_2-3	Existing Antenna #2	130.00	32.40	0.00	12.00	1.55	388.83	111.00
Ex_TMA_1-1	Existing TMA #1	130.00	32.40	0.00	1.62	0.21	52.49	26.00
Ex_TMA_1-2	Existing TMA #1	130.00	32.40	0.00	1.62	0.21	52.49	26.00
Ex_TMA_1-3	Existing TMA #1	130.00	32.40	0.00	1.62	0.21	52.49	26.00
Ex_TMA_1-4	Existing TMA #1	130.00	32.40	0.00	1.62	0.21	52.49	26.00
Ex_TMA_1-5	Existing TMA #1	130.00	32.40	0.00	1.62	0.21	52.49	26.00
Ex_TMA_1-6	Existing TMA #1	130.00	32.40	0.00	1.62	0.21	52.49	26.00
CR1-1	CR-1 - CX1:1 - 0-15ft	10.00	32.40	0.00	11.89	1.53	385.20	405.00
CR1-2	CR-1 - CX2:1 - 15-25ft	20.00	32.40	0.00	7.92	1.02	256.63	270.00
CR1-3	CR-1 - CX3:1 - 25-35ft	30.00	32.40	0.00	7.92	1.02	256.63	270.00
CR1-4	CR-1 - CX4:1 - 35-45ft	40.00	32.40	0.00	7.92	1.02	256.63	270.00
CR1-5	CR-1 - CX5:1 - 45-55ft	50.00	32.40	0.00	7.92	1.02	256.63	270.00
CR1-6	CR-1 - CX6:1 - 55-65ft	60.00	32.40	0.00	7.92	1.02	256.63	270.00
CR1-7	CR-1 - CX7:1 - 65-75ft	70.00	32.40	0.00	7.92	1.02	256.63	270.00
CR1-8	CR-1 - CX8:1 - 75-85ft	80.00	32.40	0.00	7.92	1.02	256.63	270.00
CR1-9	CR-1 - CX9:1 - 85-95ft	90.00	32.40	0.00	7.92	1.02	256.63	270.00
CR1-10	CR-1 - CX10:1 - 95-105ft	100.00	32.40	0.00	7.92	1.02	256.63	270.00
CR1-11	CR-1 - CX11:1 - 105-115ft	110.00	32.40	0.00	7.92	1.02	256.63	270.00
CR1-12	CR-1 - CX12:1 - 115-125ft	120.00	32.40	0.00	9.90	1.28	320.78	270.00
CR1-13	CR-1 - CX13:1 - 125-130ft	130.00	32.40	0.00	4.96	0.64	160.71	135.00

Detailed Pole Loading Data for Load Case "NESC 250C (Extreme Wind)":

Notes: Does not include loads from equipment, arms, guys, braces, etc. or user input loads.
Wind load is calculated for the undeformed shape of a pole.

Pole Label	Top Joint	Bottom Joint	Section Top Z (ft)	Section Bottom Z (ft)	Section Average Elevation (ft)	Outer Diameter (in)	Reynolds Number	Drag Coef.	Adjusted Wind Pressure (psf)	Adjusted Ice Thickness (in)	Pole Vert. Load (lbs)	Pole Wind Load (lbs)	Pole Vertical Load (lbs)	Pole Ice Wind Load (lbs)	Tran. Wind Load (lbs)	Long. Wind Load (lbs)
P	P:t	P:tc	120.00	118.90	119.45	26.838	2.29e+06	1.000	32.40	0.00	119.87	80.00	0.00	0.00	80.00	0.00
P	P:tc	P:Clamp-T	118.90	115.00	116.95	27.534	2.35e+06	1.000	32.40	0.00	434.14	289.65	0.00	0.00	289.65	0.00
P	P:Clamp-T		115.00	110.00	112.50	28.772	2.45e+06	1.000	32.40	0.00	582.56	388.45	0.00	0.00	388.45	0.00
P		P:Clamp-B	110.00	105.00	107.50	30.164	2.57e+06	1.000	32.40	0.00	611.11	407.24	0.00	0.00	407.24	0.00
P	P:Clamp-B	P:CX10	105.00	100.00	102.50	31.556	2.69e+06	1.000	32.40	0.00	639.67	426.03	0.00	0.00	426.03	0.00
P	P:CX10	P:mc	100.00	96.54	98.27	32.733	2.79e+06	1.000	32.40	0.00	459.10	305.64	0.00	0.00	305.64	0.00
P	P:mc		96.54	93.27	94.91	33.670	2.87e+06	1.000	32.40	0.00	446.84	297.38	0.00	0.00	297.38	0.00
P		P:CX9	93.27	90.00	91.64	34.580	2.95e+06	1.000	32.40	0.00	459.06	305.43	0.00	0.00	305.43	0.00
P	P:CX9		90.00	85.00	87.50	35.731	3.05e+06	1.000	32.40	0.00	725.33	482.41	0.00	0.00	482.41	0.00
P		P:CX8	85.00	80.00	82.50	37.123	3.16e+06	1.000	32.40	0.00	753.89	501.20	0.00	0.00	501.20	0.00
P	P:CX8		80.00	77.27	78.64	38.449	3.28e+06	1.000	32.40	0.00	566.51	283.33	0.00	0.00	283.33	0.00
P		P:bc	77.27	74.54	75.91	39.209	3.34e+06	1.000	32.40	0.00	577.90	288.92	0.00	0.00	288.92	0.00
P	P:bc	P:CX7	74.54	70.00	72.27	40.221	3.43e+06	1.000	32.40	0.00	986.97	493.28	0.00	0.00	493.28	0.00
P	P:CX7		70.00	66.42	68.21	41.352	3.52e+06	1.000	32.40	0.00	800.86	400.13	0.00	0.00	400.13	0.00

P		66.42	62.83	64.62	42.350	3.61e+06	1.000	32.40	0.00	820.42	409.78	0.00	0.00	409.78	0.00
P	P:CX6	62.83	60.00	61.42	42.743	3.64e+06	1.000	32.40	0.00	1389.16	326.97	0.00	0.00	326.97	0.00
P	P:CX6	60.00	57.00	58.50	43.055	3.67e+06	1.000	32.40	0.00	1499.36	348.77	0.00	0.00	348.77	0.00
P		57.00	53.50	55.25	43.959	3.75e+06	1.000	32.40	0.00	934.79	415.45	0.00	0.00	415.45	0.00
P	P:CX5	53.50	50.00	51.75	44.934	3.83e+06	1.000	32.40	0.00	955.78	424.66	0.00	0.00	424.66	0.00
P	P:CX5	50.00	46.38	48.19	45.925	3.91e+06	1.000	32.40	0.00	1012.04	449.53	0.00	0.00	449.53	0.00
P		46.38	42.75	44.56	46.935	4e+06	1.000	32.40	0.00	1034.58	459.41	0.00	0.00	459.41	0.00
P	P:CX4	42.75	40.00	41.38	47.947	4.09e+06	1.000	32.40	0.00	889.87	356.03	0.00	0.00	356.03	0.00
P	P:CX4	40.00	35.00	37.50	49.026	4.18e+06	1.000	32.40	0.00	1654.89	661.90	0.00	0.00	661.90	0.00
P	P:CX3	35.00	30.00	32.50	50.418	4.3e+06	1.000	32.40	0.00	1702.48	680.69	0.00	0.00	680.69	0.00
P	P:CX3	30.00	26.38	28.19	51.618	4.4e+06	1.000	32.40	0.00	1264.06	505.25	0.00	0.00	505.25	0.00
P		26.38	22.75	24.56	52.627	4.49e+06	1.000	32.40	0.00	1289.07	515.13	0.00	0.00	515.13	0.00
P	P:CX2	22.75	20.00	21.38	53.515	4.56e+06	1.000	32.40	0.00	994.60	397.38	0.00	0.00	397.38	0.00
P	P:CX2	20.00	15.00	17.50	54.593	4.65e+06	1.000	32.40	0.00	1845.25	737.07	0.00	0.00	737.07	0.00
P	P:CX1	15.00	10.00	12.50	55.985	4.77e+06	1.000	32.40	0.00	1892.84	755.86	0.00	0.00	755.86	0.00
P	P:CX1	10.00	5.00	7.50	57.377	4.89e+06	1.000	32.40	0.00	1940.44	774.65	0.00	0.00	774.65	0.00
P	P:g	5.00	0.00	2.50	58.769	5.01e+06	1.000	32.40	0.00	1988.03	793.44	0.00	0.00	793.44	0.00

Point Loads for Load Case "NESC 250D (Extreme Ice w/Wind)":

Joint Label	Vertical Load (lbs)	Transverse Load (lbs)	Longitudinal Load (lbs)	Load Comment
SWR	1655	728	2	Shield Wire
SWL	1579	690	2	Shield Wire
TCR	7599	2064	4	Conductor
TCL	7603	2064	4	Conductor
MCR	7599	2064	4	Conductor
MCL	7603	2064	4	Conductor
BCR	7599	2064	4	Conductor
BCL	7603	2064	4	Conductor

Equipment Loads for "NESC 250D (Extreme Ice w/Wind)":

Equipment Label	Equipment Property Set	Elevation Above Ground (ft)	qzGh (psf)	Ice Thick. (in)	Total Wind Drag Area (ft^2)	Long. Load (lbs)	Trans. Load (lbs)	Vert. Load (lbs)
Exist_Mnt-1	Existing Mount #1	130.00	6.40	0.75	54.49	5.69	348.76	1207.37
Ex_Mnt-1	Existing Mounting Pipe #1	130.00	6.40	0.75	3.59	0.38	22.99	47.16
Ex_Mnt-2	Existing Mounting Pipe #1	130.00	6.40	0.75	3.59	0.38	22.99	47.16
Ex_Mnt-3	Existing Mounting Pipe #1	130.00	6.40	0.75	3.59	0.38	22.99	47.16
Ex_Mnt-4	Existing Mounting Pipe #1	130.00	6.40	0.75	3.59	0.38	22.99	47.16
Ex_Mnt-5	Existing Mounting Pipe #1	130.00	6.40	0.75	3.59	0.38	22.99	47.16
Ex_Mnt-6	Existing Mounting Pipe #1	130.00	6.40	0.75	3.59	0.38	22.99	47.16
Ex_Mnt-7	Existing Mounting Pipe #1	130.00	6.40	0.75	3.59	0.38	22.99	47.16
Ex_Mnt-8	Existing Mounting Pipe #1	130.00	6.40	0.75	3.59	0.38	22.99	47.16
Ex_Mnt-9	Existing Mounting Pipe #1	130.00	6.40	0.75	3.59	0.38	22.99	47.16
Prop_Ant_1-1	Proposed Antenna #1	130.00	6.40	0.75	22.89	2.39	146.49	220.18
Prop_Ant_1-2	Proposed Antenna #1	130.00	6.40	0.75	22.89	2.39	146.49	220.18
Prop_Ant_1-3	Proposed Antenna #1	130.00	6.40	0.75	22.89	2.39	146.49	220.18
Prop_TMA_1-1	Proposed TMA #1	130.00	6.40	0.75	1.85	0.19	11.82	35.80
Prop_TMA_1-2	Proposed TMA #1	130.00	6.40	0.75	1.85	0.19	11.82	35.80
Prop_TMA_1-3	Proposed TMA #1	130.00	6.40	0.75	1.85	0.19	11.82	35.80
Prop_TMA_1-4	Proposed TMA #1	130.00	6.40	0.75	1.85	0.19	11.82	35.80
Prop_TMA_1-5	Proposed TMA #1	130.00	6.40	0.75	1.85	0.19	11.82	35.80
Prop_TMA_1-6	Proposed TMA #1	130.00	6.40	0.75	1.85	0.19	11.82	35.80
Ex_Ant_1-1	Existing Antenna #1	130.00	6.40	0.75	12.84	1.34	82.18	119.75
Ex_Ant_1-2	Existing Antenna #1	130.00	6.40	0.75	12.84	1.34	82.18	119.75
Ex_Ant_1-3	Existing Antenna #1	130.00	6.40	0.75	12.84	1.34	82.18	119.75
Ex_Ant_2-1	Existing Antenna #2	130.00	6.40	0.75	12.88	1.34	82.40	193.65
Ex_Ant_2-2	Existing Antenna #2	130.00	6.40	0.75	12.88	1.34	82.40	193.65
Ex_Ant_2-3	Existing Antenna #2	130.00	6.40	0.75	12.88	1.34	82.40	193.65
Ex_TMA_1-1	Existing TMA #1	130.00	6.40	0.75	1.84	0.19	11.81	36.72
Ex_TMA_1-2	Existing TMA #1	130.00	6.40	0.75	1.84	0.19	11.81	36.72
Ex_TMA_1-3	Existing TMA #1	130.00	6.40	0.75	1.84	0.19	11.81	36.72
Ex_TMA_1-4	Existing TMA #1	130.00	6.40	0.75	1.84	0.19	11.81	36.72
Ex_TMA_1-5	Existing TMA #1	130.00	6.40	0.75	1.84	0.19	11.81	36.72
Ex_TMA_1-6	Existing TMA #1	130.00	6.40	0.75	1.84	0.19	11.81	36.72
CR1-1	CR-1 - CX1:1 - 0-15ft	10.00	6.40	0.75	13.83	1.44	88.48	1235.99
CR1-2	CR-1 - CX2:1 - 15-25ft	20.00	6.40	0.75	9.23	0.96	59.09	824.00
CR1-3	CR-1 - CX3:1 - 25-35ft	30.00	6.40	0.75	9.23	0.96	59.09	824.00
CR1-4	CR-1 - CX4:1 - 35-45ft	40.00	6.40	0.75	9.23	0.96	59.09	824.00
CR1-5	CR-1 - CX5:1 - 45-55ft	50.00	6.40	0.75	9.23	0.96	59.09	824.00
CR1-6	CR-1 - CX6:1 - 55-65ft	60.00	6.40	0.75	9.23	0.96	59.09	824.00
CR1-7	CR-1 - CX7:1 - 65-75ft	70.00	6.40	0.75	9.23	0.96	59.09	824.00
CR1-8	CR-1 - CX8:1 - 75-85ft	80.00	6.40	0.75	9.23	0.96	59.09	824.00
CR1-9	CR-1 - CX9:1 - 85-95ft	90.00	6.40	0.75	9.23	0.96	59.09	824.00

CR1-10	CR-1 - CX10:1 - 95-105ft	100.00	6.40	0.75	9.23	0.96	59.09	824.00
CR1-11	CR-1 - CX11:1 - 105-115ft	110.00	6.40	0.75	9.23	0.96	59.09	824.00
CR1-12	CR-1 - CX12:1 - 115-125ft	120.00	6.40	0.75	11.21	1.17	71.76	824.00
CR1-13	CR-1 - CX13:1 - 125-130ft	130.00	6.40	0.75	5.65	0.59	36.14	411.98

Detailed Pole Loading Data for Load Case "NESC 250D (Extreme Ice w/Wind)":

Notes: Does not include loads from equipment, arms, guys, braces, etc. or user input loads.
Wind load is calculated for the undeformed shape of a pole.

Pole Label	Top Joint	Bottom Joint	Section Top Z (ft)	Section Bottom Z (ft)	Section Average Elevation (ft)	Outer Diameter (in)	Reynolds Number	Drag Coef.	Adjusted Wind Pressure (psf)	Adjusted Ice Thickness (in)	Pole Vert. Load (lbs)	Pole Wind Load (lbs)	Pole Ice Vertical Load (lbs)	Pole Ice Wind Load (lbs)	Tran. Wind Load (lbs)	Long. Wind Load (lbs)
P	P:t	P:tc	120.00	118.90	119.45	26.838	1.02e+06	1.600	6.40	0.75	119.87	25.29	28.28	1.41	26.70	0.00
P	P:tc	P:Clamp-T	118.90	115.00	116.95	27.534	1.04e+06	1.600	6.40	0.75	434.14	91.55	102.40	4.99	96.54	0.00
P	P:Clamp-T		115.00	110.00	112.50	28.772	1.09e+06	1.600	6.40	0.75	582.56	122.78	137.32	6.40	129.18	0.00
P		P:Clamp-B	110.00	105.00	107.50	30.164	1.14e+06	1.600	6.40	0.75	611.11	128.72	143.97	6.40	135.12	0.00
P	P:Clamp-B	P:CX10	105.00	100.00	102.50	31.556	1.2e+06	1.600	6.40	0.75	639.67	134.66	150.61	6.40	141.06	0.00
P	P:CX10	P:mc	100.00	96.54	98.27	32.733	1.24e+06	1.600	6.40	0.75	459.10	96.60	108.05	4.43	101.03	0.00
P	P:mc		96.54	93.27	94.91	33.670	1.28e+06	1.600	6.40	0.75	446.84	93.99	105.13	4.19	98.18	0.00
P		P:CX9	93.27	90.00	91.64	34.580	1.31e+06	1.600	6.40	0.75	459.06	96.53	107.97	4.19	100.72	0.00
P	P:CX9		90.00	85.00	87.50	35.731	1.35e+06	1.600	6.40	0.75	725.33	152.47	170.54	6.40	158.88	0.00
P		P:CX8	85.00	80.00	82.50	37.123	1.41e+06	1.600	6.40	0.75	753.89	158.41	177.18	6.40	164.81	0.00
P	P:CX8		80.00	77.27	78.64	38.449	1.46e+06	1.600	6.40	0.75	566.51	89.55	100.16	3.49	93.04	0.00
P		P:bc	77.27	74.54	75.91	39.209	1.49e+06	1.600	6.40	0.75	577.90	91.32	102.14	3.49	94.81	0.00
P	P:bc	P:CX7	74.54	70.00	72.27	40.221	1.52e+06	1.600	6.40	0.75	986.97	155.91	174.38	5.81	161.73	0.00
P	P:CX7		70.00	66.42	68.21	41.352	1.57e+06	1.600	6.40	0.75	800.86	126.47	141.45	4.59	131.06	0.00
P			66.42	62.83	64.62	42.350	1.6e+06	1.600	6.40	0.75	820.42	129.52	144.86	4.59	134.11	0.00
P		P:CX6	62.83	60.00	61.42	42.743	1.62e+06	1.600	6.40	0.75	1389.16	103.34	115.59	3.63	106.97	0.00
P	P:CX6		60.00	57.00	58.50	43.055	1.63e+06	1.600	6.40	0.75	1499.36	110.23	123.30	3.84	114.07	0.00
P			57.00	53.50	55.25	43.959	1.67e+06	1.600	6.40	0.75	934.79	131.31	146.87	4.48	135.79	0.00
P		P:CX5	53.50	50.00	51.75	44.934	1.7e+06	1.600	6.40	0.75	955.78	134.22	150.12	4.48	138.70	0.00
P	P:CX5		50.00	46.38	48.19	45.925	1.74e+06	1.600	6.40	0.75	1012.04	142.08	158.92	4.64	146.72	0.00
P			46.38	42.75	44.56	46.935	1.78e+06	1.600	6.40	0.75	1034.58	145.20	162.41	4.64	149.84	0.00
P		P:CX4	42.75	40.00	41.38	47.947	1.82e+06	1.600	6.40	0.75	889.87	112.53	125.86	3.52	116.05	0.00
P	P:CX4		40.00	35.00	37.50	49.026	1.86e+06	1.600	6.40	0.75	1654.89	209.20	233.99	6.40	215.60	0.00
P		P:CX3	35.00	30.00	32.50	50.418	1.91e+06	1.600	6.40	0.75	1702.48	215.14	240.64	6.40	221.54	0.00
P	P:CX3		30.00	26.38	28.19	51.618	1.96e+06	1.600	6.40	0.75	1264.06	159.69	178.61	4.64	164.33	0.00
P			26.38	22.75	24.56	52.627	1.99e+06	1.600	6.40	0.75	1289.07	162.81	182.11	4.64	167.46	0.00
P		P:CX2	22.75	20.00	21.38	53.515	2.03e+06	1.600	6.40	0.75	994.60	125.60	140.48	3.52	129.12	0.00
P	P:CX2		20.00	15.00	17.50	54.593	2.07e+06	1.600	6.40	0.75	1845.25	232.96	260.57	6.40	239.36	0.00
P		P:CX1	15.00	10.00	12.50	55.985	2.12e+06	1.600	6.40	0.75	1892.84	238.90	267.21	6.40	245.30	0.00
P	P:CX1		10.00	5.00	7.50	57.377	2.17e+06	1.600	6.40	0.75	1940.44	244.84	273.85	6.40	251.24	0.00
P		P:g	5.00	0.00	2.50	58.769	2.23e+06	1.600	6.40	0.75	1988.03	250.78	280.50	6.40	257.18	0.00

*** Analysis Results:

Maximum element usage is 84.03% for Tubular X-Arm "Mast" in load case "NESC 250C (Extreme Wind)"
Maximum insulator usage is 44.11% for Suspension "TCL" in load case "NESC 250B (Heavy)"

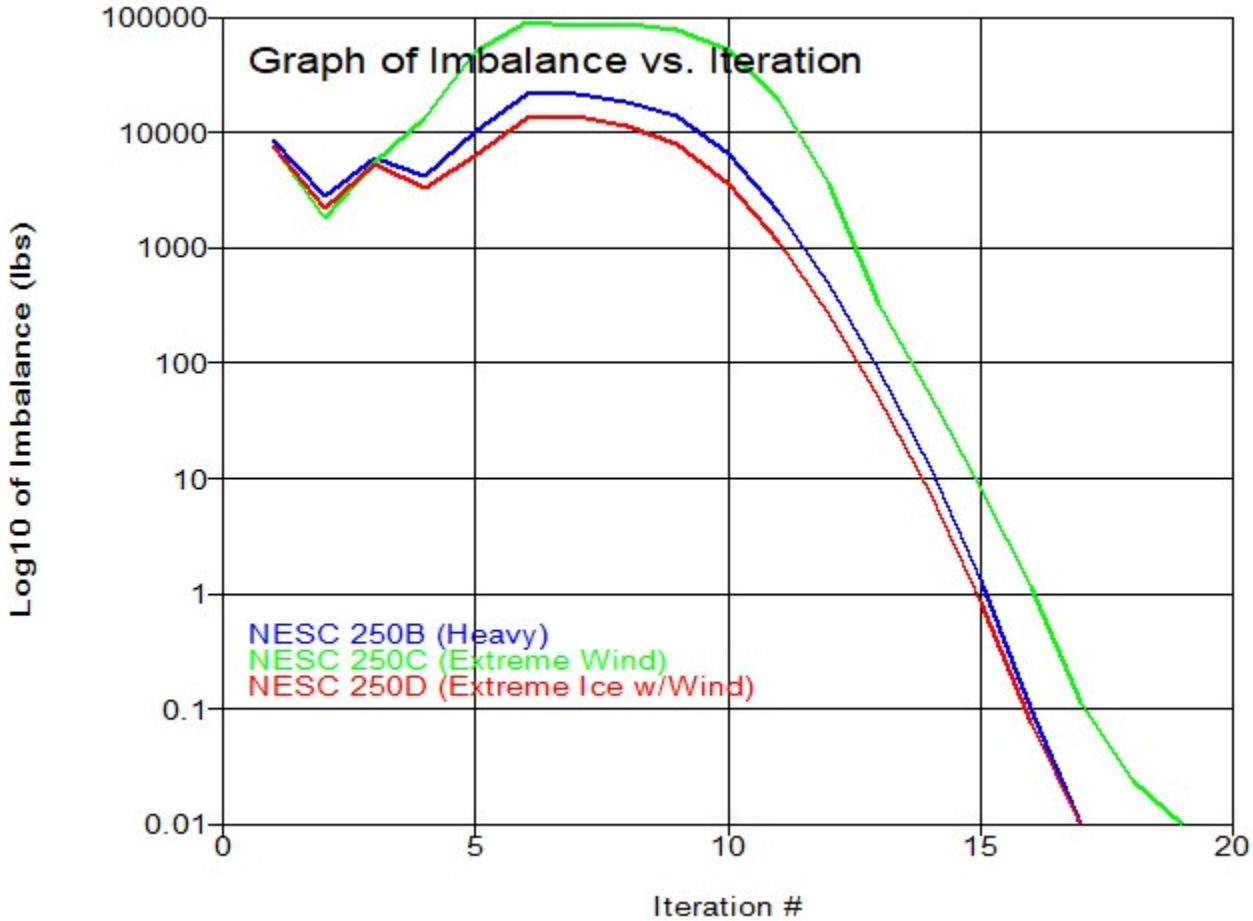

*** Analysis Results for Load Case No. 1 "NESC 250B (Heavy)" - Number of iterations in SAPS 17

Equilibrium Joint Positions and Rotations for Load Case "NESC 250B (Heavy)":

Joint Label	X-Displ (ft)	Y-Displ (ft)	Z-Displ (ft)	X-Rot (deg)	Y-Rot (deg)	Z-Rot (deg)	X-Pos (ft)	Y-Pos (ft)	Z-Pos (ft)
P:g	0	0	0	0.0000	0.0000	0.0000	0	0	0
P:t	0.0606	1.968	-0.02629	-1.7801	0.0575	0.0313	0.0606	1.968	120
P:tc	0.05952	1.934	-0.02575	-1.7801	0.0575	0.0313	0.05952	1.934	118.9
P:Clamp-T	0.05568	1.813	-0.02378	-1.7723	0.0574	0.0312	0.05568	1.813	115
P:Clamp-B	0.04507	1.51	-0.01903	-1.6833	0.0677	0.0224	0.04507	1.51	105
P:CX10	0.03957	1.366	-0.01678	-1.6173	0.0611	0.0196	0.03957	1.366	99.98
P:mc	0.0361	1.27	-0.01533	-1.5673	0.0566	0.0178	0.0361	1.27	96.53
P:CX9	0.03019	1.097	-0.01272	-1.4584	0.0490	0.0148	0.03019	1.097	89.99
P:CX8	0.0227	0.8582	-0.009395	-1.2654	0.0384	0.0109	0.0227	0.8582	79.99
P:bc	0.01927	0.7415	-0.007955	-1.1810	0.0344	0.0095	0.01927	0.7415	74.53

P:CX7	0.01669	0.6506	-0.00684	-1.1070	0.0314	0.0085	0.01669	0.6506	69.99
P:CX6	0.0118	0.4719	-0.0048	-0.9353	0.0252	0.0065	0.0118	0.4719	60
P:CX5	0.007923	0.3233	-0.003282	-0.7631	0.0197	0.0049	0.007923	0.3233	50
P:CX4	0.00494	0.2049	-0.00218	-0.5943	0.0148	0.0035	0.00494	0.2049	40
P:CX3	0.00272	0.1143	-0.001401	-0.4402	0.0107	0.0025	0.00272	0.1143	30
P:CX2	0.001188	0.0505	-0.0008273	-0.2891	0.0069	0.0015	0.001188	0.0505	20
P:CX1	0.0002929	0.01263	-0.0003837	-0.1422	0.0034	0.0007	0.0002929	0.01263	10
TL:O	0.05887	1.934	-0.06069	-1.7801	0.0575	0.0313	0.05887	3.058	118.8
TL:1	0.05202	1.972	-0.5856	-2.4152	0.0572	0.0309	0.05202	17.1	119.6
TL:2	0.04919	1.989	-0.8325	-2.4846	0.0571	0.0308	0.04919	22.86	119.9
TL:3	0.04803	1.987	-0.9194	-2.4926	0.0571	0.0308	0.04803	24.86	119.8
TR:O	0.06016	1.935	0.009181	-1.7801	0.0575	0.0313	0.06016	0.8101	118.9
TR:1	0.0695	1.971	0.3583	-1.1712	0.0579	0.0318	0.0695	-13.15	120.5
TR:2	0.07334	1.983	0.4717	-1.1014	0.0580	0.0319	0.07334	-18.89	121.2
TR:3	0.07449	1.983	0.5099	-1.0929	0.0580	0.0319	0.07449	-20.89	121.2
ML:O	0.03563	1.269	-0.05318	-1.5673	0.0566	0.0178	0.03563	2.653	96.49
ML:1	0.03268	1.301	-0.4493	-2.1787	0.0564	0.0175	0.03268	14.69	97.26
ML:2	0.032	1.3	-0.5264	-2.2212	0.0564	0.0175	0.032	16.68	97.18
MR:O	0.03656	1.27	0.02252	-1.5673	0.0566	0.0178	0.03656	-0.1135	96.56
MR:1	0.04173	1.299	0.2859	-0.9778	0.0569	0.0181	0.04173	-12.08	97.99
MR:2	0.04239	1.299	0.3189	-0.9350	0.0569	0.0181	0.04239	-14.08	98.03
BL:O	0.01898	0.7412	-0.04195	-1.1810	0.0344	0.0095	0.01898	2.391	74.5
BL:1	0.01752	0.7676	-0.357	-1.7934	0.0344	0.0093	0.01752	14.42	75.35
BL:2	0.01715	0.7666	-0.4208	-1.8360	0.0344	0.0093	0.01715	16.42	75.29
BR:O	0.01957	0.7419	0.02604	-1.1810	0.0344	0.0095	0.01957	-0.9077	74.57
BR:1	0.0224	0.7612	0.2085	-0.5900	0.0346	0.0098	0.0224	-12.89	75.92
BR:2	0.02275	0.7613	0.228	-0.5471	0.0346	0.0098	0.02275	-14.89	75.94
CX1:O	0.0002929	0.01266	-0.0005227	-0.1422	0.0034	0.0007	2.362	0.01266	9.999
CX1:1	0.000292	0.01274	-0.001235	-0.1422	0.2278	0.0262	2.612	0.01274	9.999
CX2:O	0.001188	0.05056	-0.001098	-0.2891	0.0069	0.0015	2.247	0.05056	20
CX2:1	0.001187	0.05062	-0.001594	-0.2891	0.1566	0.0186	2.497	0.05062	20
CX3:O	0.00272	0.1144	-0.0018	-0.4402	0.0107	0.0025	2.132	0.1144	30
CX3:1	0.00272	0.1145	-0.002312	-0.4402	0.1604	0.0195	2.382	0.1145	30
CX4:O	0.00494	0.205	-0.002702	-0.5943	0.0148	0.0035	2.019	0.205	40
CX4:1	0.004939	0.2051	-0.003232	-0.5943	0.1645	0.0206	2.269	0.2051	40
CX5:O	0.007923	0.3235	-0.003932	-0.7631	0.0197	0.0049	1.9	0.3235	50
CX5:1	0.007923	0.3236	-0.004484	-0.7631	0.1694	0.0219	2.15	0.3236	50
CX6:O	0.0118	0.4721	-0.005598	-0.9353	0.0252	0.0065	1.83	0.4721	59.99
CX6:1	0.0118	0.4722	-0.006174	-0.9353	0.1748	0.0235	2.08	0.4722	59.99
CX7:O	0.01669	0.6509	-0.007774	-1.1070	0.0314	0.0085	1.719	0.6509	69.99
CX7:1	0.01669	0.6509	-0.008377	-1.1070	0.1811	0.0255	1.969	0.6509	69.99
CX8:O	0.0227	0.8585	-0.01045	-1.2654	0.0384	0.0109	1.599	0.8585	79.99
CX8:1	0.0227	0.8586	-0.01109	-1.2654	0.1881	0.0279	1.849	0.8586	79.99
CX9:O	0.03019	1.097	-0.01397	-1.4584	0.0490	0.0148	1.49	1.097	89.99
CX9:1	0.03019	1.097	-0.01465	-1.4584	0.1986	0.0318	1.74	1.097	89.99
CX10:O	0.03957	1.367	-0.01822	-1.6173	0.0611	0.0196	1.383	1.367	99.98
CX10:1	0.03957	1.367	-0.01895	-1.6173	0.2107	0.0366	1.633	1.367	99.98
Clamp-B:O	0.04507	1.511	-0.02055	-1.6833	0.0677	0.0224	1.331	1.511	105
Clamp-B:1	0.04507	1.511	-0.02176	-1.6908	0.0711	0.0227	2.084	1.511	105
Clamp-T:O	0.05568	1.814	-0.02495	-1.7723	0.0574	0.0312	1.226	1.814	115
Clamp-T:1	0.05567	1.814	-0.02669	-1.8012	0.0565	0.0325	2.099	1.814	115
Mast:O	0.04507	1.511	-0.02176	-1.6908	0.0711	0.0227	2.084	1.511	105
Mast:CX11	0.05069	1.66	-0.02416	-1.7336	0.0633	0.0279	2.092	1.66	110
Mast:Top	0.05567	1.814	-0.02669	-1.8012	0.0565	0.0325	2.099	1.814	115
Mast:CX12	0.06079	1.979	-0.02947	-1.9542	0.0635	0.0336	2.106	1.979	120
Mast:ANT	0.07211	2.334	-0.03589	-2.0737	0.0684	0.0344	2.121	2.334	130
Mast:E	0.07563	2.442	-0.03786	-2.0738	0.0684	0.0344	2.126	2.442	133
CX11:1	0.05069	1.661	-0.02594	-1.7337	0.1172	0.0341	3.092	1.661	110
CX12:1	0.06079	1.979	-0.03126	-1.9543	0.1174	0.0411	3.106	1.979	120
CX13:1	0.07211	2.334	-0.03743	-2.0737	0.0955	0.0382	3.121	2.334	130

Joint Support Reactions for Load Case "NESC 250B (Heavy)":

Joint Label	X Force (kips)	X Usage %	Y Force (kips)	Y Usage %	H-Shear Usage %	Z Force (kips)	Comp. Usage %	Uplift Usage %	Result. Force (kips)	Result. Usage %	X Moment (ft-k)	X-M. Usage %	Y Moment (ft-k)	Y-M. Usage %	H-Bend-M Usage %	Z Moment (ft-k)	Z-M. Usage %	Max. Usage %
P:g	-0.26	0.0	-27.39	0.0	0.0	-132.88	0.0	0.0	135.68	0.0	2575.42	0.0	-59.1	0.0	0.0	-9.63	0.0	0.0

Detailed Steel Pole Usages for Load Case "NESC 250B (Heavy)":

Element Label	Joint Label	Joint Position	Rel. Dist. (ft)	Trans. Defl. (in)	Long. Defl. (in)	Vert. Defl. (in)	Trans. Mom. (Local Mx) (ft-k)	Long. Mom. (Local My) (ft-k)	Tors. Mom. (ft-k)	Axial Force (kips)	Tran. Shear (kips)	Long. Shear (kips)	P/A (ksi)	M/S. (ksi)	V/Q. (ksi)	T/R. (ksi)	Res. (ksi)	Max. Usage %	At Pt.
P	P:t	Origin	0.00	23.62	0.73	-0.32	-0.00	0.00	0.0	-0.10	0.02	-0.00	-0.00	0.00	0.00	0.00	0.00	0.0	5
P	P:tc	End	1.10	23.21	0.71	-0.31	0.03	-0.00	0.0	-0.10	0.02	-0.00	-0.00	0.00	0.00	0.00	0.00	0.0	2
P	P:tc	Origin	1.10	23.21	0.71	-0.31	7.60	-0.05	0.0	-23.47	7.26	-0.04	-0.73	0.31	0.33	0.00	1.19	1.8	3
P	P:Clamp-T	End	5.00	21.76	0.67	-0.29	35.88	-0.21	0.0	-23.47	7.26	-0.04	-0.70	1.84	0.12	0.00	2.56	3.9	2

P	P:Clamp-T	Origin	5.00	21.76	0.67	-0.29	60.85	15.16	8.6	-15.40	11.95	-0.31	-0.46	3.33	0.19	0.23	3.86	5.9	2
P	Tube 1	End	10.00	19.92	0.61	-0.26	120.61	13.64	8.6	-15.40	11.95	-0.31	-0.44	5.78	0.18	0.21	6.26	9.6	2
P	Tube 1	Origin	10.00	19.92	0.61	-0.26	120.62	13.63	8.6	-16.39	12.17	-0.31	-0.47	5.78	0.18	0.21	6.29	9.7	2
P	P:Clamp-B	End	15.00	18.12	0.54	-0.23	181.48	12.08	8.6	-16.39	12.17	-0.31	-0.45	7.82	0.18	0.19	8.29	12.8	2
P	P:Clamp-B	Origin	15.00	18.12	0.54	-0.23	189.01	-21.77	7.4	-35.20	11.36	-0.11	-0.96	8.25	0.16	0.16	9.23	14.2	2
P	P:CX10	End	20.00	16.39	0.47	-0.20	245.81	-22.32	7.4	-35.20	11.36	-0.11	-0.92	9.75	0.16	0.15	10.67	16.4	2
P	P:CX10	Origin	20.00	16.39	0.47	-0.20	245.81	-23.56	7.6	-36.89	11.64	-0.12	-0.96	9.76	0.16	0.15	10.73	16.5	2
P	P:mc	End	23.46	15.24	0.43	-0.18	286.08	-23.95	7.6	-36.89	11.64	-0.12	-0.93	10.66	0.16	0.14	11.61	17.9	2
P	P:mc	Origin	23.46	15.24	0.43	-0.18	291.90	-23.99	7.6	-56.43	17.18	-0.15	-1.42	10.88	0.23	0.14	12.32	19.0	2
P	Tube 1	End	26.73	14.18	0.40	-0.17	348.10	-24.45	7.6	-56.43	17.18	-0.15	-1.39	12.24	0.22	0.14	13.64	21.0	2
P	Tube 1	Origin	26.73	14.18	0.40	-0.17	348.10	-24.46	7.6	-57.19	17.30	-0.15	-1.41	12.24	0.23	0.14	13.66	21.0	2
P	P:CX9	End	30.00	13.16	0.36	-0.15	404.68	-24.93	7.6	-57.19	17.30	-0.15	-1.37	13.45	0.22	0.13	14.84	22.8	2
P	P:CX9	Origin	30.00	13.16	0.36	-0.15	404.68	-26.26	7.8	-58.97	17.56	-0.15	-1.41	13.47	0.22	0.13	14.89	22.9	2
P	Tube 1	End	35.00	11.68	0.31	-0.13	492.45	-26.98	7.8	-58.97	17.56	-0.15	-1.36	15.10	0.21	0.12	16.47	25.3	2
P	Tube 1	Origin	35.00	11.68	0.31	-0.13	492.45	-26.99	7.8	-60.22	17.73	-0.15	-1.39	15.10	0.22	0.12	16.50	25.4	2
P	P:CX8	End	40.00	10.30	0.27	-0.11	581.12	-27.72	7.8	-60.22	17.73	-0.15	-1.33	16.48	0.21	0.11	17.82	27.4	2
P	P:CX8	Origin	40.00	10.30	0.27	-0.11	581.12	-29.14	8.0	-62.10	17.99	-0.15	-1.03	12.33	0.16	0.09	13.36	20.6	2
P	Tube 2	End	42.73	9.59	0.25	-0.10	630.20	-29.55	8.0	-62.10	17.99	-0.15	-1.01	12.83	0.15	0.08	13.84	21.3	2
P	Tube 2	Origin	42.73	9.59	0.25	-0.10	630.20	-29.56	8.0	-63.04	18.10	-0.15	-1.02	12.83	0.16	0.08	13.86	21.3	2
P	P:bc	End	45.46	8.90	0.23	-0.10	679.60	-29.97	8.0	-63.04	18.10	-0.15	-1.00	13.29	0.15	0.08	14.30	22.0	2
P	P:bc	Origin	45.46	8.90	0.23	-0.10	685.30	-30.00	8.0	-83.13	23.53	-0.18	-1.32	13.40	0.20	0.08	14.73	22.7	2
P	P:CX7	End	50.00	7.81	0.20	-0.08	792.16	-30.79	8.0	-83.13	23.53	-0.18	-1.28	14.51	0.19	0.07	15.80	24.3	2
P	P:CX7	Origin	50.00	7.81	0.20	-0.08	792.16	-32.31	8.2	-85.38	23.79	-0.18	-1.32	14.52	0.19	0.08	15.84	24.4	2
P	Tube 2	End	53.58	7.00	0.18	-0.07	877.39	-32.94	8.2	-85.38	23.79	-0.18	-1.28	15.29	0.19	0.07	16.58	25.5	2
P	Tube 2	Origin	53.58	7.00	0.18	-0.07	877.39	-32.95	8.2	-86.72	23.92	-0.18	-1.30	15.29	0.19	0.07	16.60	25.5	2
P	SpliceT	End	57.17	6.23	0.16	-0.06	963.11	-33.59	8.2	-86.72	23.92	-0.18	-1.27	15.99	0.19	0.07	17.27	26.6	2
P	SpliceT	Origin	57.17	6.23	0.16	-0.06	963.11	-33.60	8.2	-88.48	24.05	-0.19	-1.30	15.99	0.19	0.07	17.30	26.6	2
P	P:CX6	End	60.00	5.66	0.14	-0.06	1031.25	-34.11	8.2	-88.48	24.05	-0.19	-1.16	15.43	0.17	0.06	16.60	25.5	2
P	P:CX6	Origin	60.00	5.66	0.14	-0.06	1031.25	-35.72	8.4	-91.52	24.28	-0.19	-1.20	15.44	0.17	0.06	16.65	25.6	2
P	SpliceB	End	63.00	5.09	0.13	-0.05	1104.09	-36.28	8.4	-91.52	24.28	-0.19	-1.18	15.88	0.17	0.06	17.07	26.3	2
P	SpliceB	Origin	63.00	5.09	0.13	-0.05	1104.09	-36.28	8.4	-93.46	24.41	-0.19	-1.20	15.88	0.17	0.06	17.09	26.3	2
P	Tube 3	End	66.50	4.46	0.11	-0.05	1189.54	-36.94	8.4	-93.46	24.41	-0.19	-1.18	16.35	0.16	0.06	17.53	27.0	2
P	Tube 3	Origin	66.50	4.46	0.11	-0.05	1189.54	-36.95	8.4	-95.01	24.55	-0.19	-1.20	16.35	0.16	0.06	17.55	27.0	2
P	P:CX5	End	70.00	3.88	0.10	-0.04	1275.46	-37.62	8.4	-95.01	24.55	-0.19	-1.17	16.76	0.16	0.06	17.94	27.6	2
P	P:CX5	Origin	70.00	3.88	0.10	-0.04	1275.46	-39.29	8.6	-97.39	24.79	-0.20	-1.20	16.77	0.16	0.06	17.97	27.7	2
P	Tube 3	End	73.63	3.32	0.08	-0.03	1365.30	-39.99	8.6	-97.39	24.79	-0.20	-1.17	17.16	0.16	0.06	18.34	28.2	2
P	Tube 3	Origin	73.63	3.32	0.08	-0.03	1365.30	-40.00	8.6	-99.06	24.93	-0.20	-1.19	17.16	0.16	0.06	18.36	28.2	2
P	SpliceT	End	77.25	2.81	0.07	-0.03	1455.66	-40.72	8.6	-99.06	24.93	-0.20	-1.17	17.50	0.16	0.05	18.68	28.7	2
P	SpliceT	Origin	77.25	2.81	0.07	-0.03	1455.66	-40.73	8.6	-100.62	25.06	-0.20	-1.07	15.73	0.14	0.05	16.80	25.8	2
P	P:CX4	End	80.00	2.46	0.06	-0.03	1524.56	-41.28	8.6	-100.62	25.06	-0.20	-1.05	15.94	0.14	0.05	17.00	26.1	2
P	P:CX4	Origin	80.00	2.46	0.06	-0.03	1524.56	-43.05	8.8	-103.45	25.32	-0.21	-1.08	15.95	0.14	0.05	17.03	26.2	2
P	Tube 4	End	85.00	1.88	0.04	-0.02	1651.17	-44.08	8.8	-103.45	25.32	-0.21	-1.05	16.30	0.14	0.04	17.35	26.7	2
P	Tube 4	Origin	85.00	1.88	0.04	-0.02	1651.17	-44.09	8.8	-106.16	25.54	-0.22	-1.08	16.30	0.14	0.04	17.37	26.7	2
P	P:CX3	End	90.00	1.37	0.03	-0.02	1778.89	-45.15	8.8	-106.16	25.54	-0.22	-1.05	16.59	0.13	0.04	17.64	27.1	2
P	P:CX3	Origin	90.00	1.37	0.03	-0.02	1778.89	-47.01	9.0	-109.33	25.83	-0.22	-1.08	16.59	0.13	0.04	17.67	27.2	2
P	Tube 4	End	93.63	1.06	0.03	-0.01	1872.53	-47.80	9.0	-109.33	25.83	-0.22	-1.06	16.78	0.13	0.04	17.84	27.4	2
P	Tube 4	Origin	93.63	1.06	0.03	-0.01	1872.53	-47.81	9.0	-111.39	26.00	-0.23	-1.08	16.78	0.13	0.04	17.86	27.5	2
P	SpliceT	End	97.25	0.79	0.02	-0.01	1966.76	-48.61	9.0	-111.39	26.00	-0.23	-1.06	16.95	0.13	0.04	18.01	27.7	2
P	SpliceT	Origin	97.25	0.79	0.02	-0.01	1966.76	-48.62	9.0	-113.23	26.14	-0.23	-1.07	16.95	0.13	0.04	18.02	27.7	2
P	P:CX2	End	100.00	0.61	0.01	-0.01	2038.65	-49.24	9.0	-113.23	26.14	-0.23	-1.06	17.06	0.13	0.04	18.12	27.9	2
P	P:CX2	Origin	100.00	0.61	0.01	-0.01	2038.65	-51.18	9.3	-116.29	26.42	-0.24	-1.09	17.07	0.13	0.04	18.15	27.9	2
P	Tube 5	End	105.00	0.34	0.01	-0.01	2170.72	-52.34	9.3	-116.29	26.42	-0.24	-1.06	17.25	0.13	0.04	18.31	28.2	2
P	Tube 5	Origin	105.00	0.34	0.01	-0.01	2170.72	-52.36	9.3	-119.31	26.65	-0.24	-1.09	17.25	0.13	0.04	18.34	28.2	2
P	P:CX1	End	110.00	0.15	0.00	-0.00	2303.97	-53.55	9.3	-119.31	26.65	-0.24	-1.06	17.40	0.13	0.04	18.46	28.4	2
P	P:CX1	Origin	110.00	0.15	0.00	-0.00	2303.97	-56.59	9.6	-123.56	27.02	-0.25	-1.10	17.41	0.13	0.04	18.50	28.5	2
P	Tube 5	End	115.00	0.04	0.00	-0.00	2439.09	-57.82	9.6	-123.56	27.02	-0.25	-1.07	17.54	0.12	0.04	18.61	28.6	2
P	Tube 5	Origin	115.00	0.04	0.00	-0.00	2439.09	-57.84	9.6	-126.72	27.27	-0.26	-1.10	17.54	0.13	0.04	18.64	28.7	2
P	P:g	End	120.00	0.00	0.00	0.00	2575.42	-59.10	9.6	-126.72	27.27	-0.26	-1.07	17.64	0.12	0.03	18.72	28.8	2

Detailed Tubular Davit Arm Usages for Load Case "NESC 250B (Heavy)":

Element Label	Joint Label	Joint Position	Rel. Dist. (ft)	Trans. Defl. (in)	Long. Defl. (in)	Vert. Defl. (in)	Vert. Mom. (ft-k)	Horz. Mom. (ft-k)	Tors. Mom. (ft-k)	Axial Force (kips)	Vert. Shear (kips)	Horz. Shear (kips)	P/A (ksi)	M/S. (ksi)	V/Q. (ksi)	T/R. (ksi)	Res. (ksi)	Max. Usage %	At Pt.
TL	TL:O	Origin	0.00	23.20	0.71	-0.73	-168.78	-0.26	-0.0	2.52	11.46	0.02	0.13	23.31	0.00	0.00	23.44	36.1	1
TL	#TL:0	End	5.00	23.35	0.68	-2.74	-111.48	-0.18	-0.0	2.52	11.46	0.02	0.15	20.04	0.00	0.00	20.19	31.1	1
TL	#TL:0	Origin	5.00	23.35	0.68	-2.74	-111.48	-0.18	-0.0	2.59	11.03	0.02	0.15	20.04	0.00	0.00	20.20	31.1	1
TL	#TL:1	End	9.53	23.50	0.65	-4.79	-61.51	-0.10	-0.0	2.59	11.03	0.02	0.17	14.53	0.00	0.00	14.71	22.6	1
TL	#TL:1	Origin	9.53	23.50	0.65	-4.79	-61.51	-0.10	-0.0	2.64	10.68	0.02	0.18	14.53	0.00	0.00	14.71	22.6	1
TL	TL:1	End	14.06	23.66	0.62	-7.03	-13.13	-0.02	-0.0	2.64	10.68	0.02	0.21	4.26	0.00	0.00	4.46	6.9	1
TL	TL:1	Origin	14.06	23.66	0.62	-7.03	-13.13	-0.02	-0.0	0.65	1.84	0.00	0.05	4.26	0.00	0.00	4.31	6.6	1
TL	#TL:2	End	16.95	23.77	0.61	-8.50	-7.81	-0.01	-0.0	0.65	1.84	0.00	0.06	3.19	0.00	0.00	3.25	5.0	1
TL	#TL:2	Origin	16.95	23.77	0.61	-8.50	-7.81	-0.01	-0.0	0.66	1.68	0.00	0.06	3.19	0.00	0.00	3.25	5.0	1
TL	TL:2	End	19.83	23.87	0.59	-9.99	-2.97	-0.01	-0.0	0.66	1.68	0.00	0.07	1.57	0.00	0.00	1.64	2.5	1
TL	TL:2	Origin	19.83	23.87	0.59	-9.99	-2.97	-0.01	0.0	0.80	1.48	0.00	0.08	1.57	0.00	0.00	1.65	2.5	1
TL	TL:3	End	21.83	23.85	0.58	-11.03	-0.00	0.00	0.0	0.80	1.48	0.00	0.09	0.00	0.34	0.00	0.60	0.9	3
TR	TR:O	Origin	0.00	23.22	0.72	0.11	-161.13	0.27	0.0	-4.57	10.90	-0.02	-0.24	22.26	0.00	0.00	22.49	34.6	1

TR	#TR:0	End	5.00	23.40	0.76	1.82	-106.65	0.18	0.0	-4.57	10.90	-0.02	-0.27	19.18	0.00	0.00	19.45	29.9	1
TR	#TR:0	Origin	5.00	23.40	0.76	1.82	-106.65	0.18	0.0	-4.48	10.50	-0.02	-0.26	19.18	0.00	0.00	19.44	29.9	1
TR	#TR:1	End	9.53	23.54	0.80	3.15	-59.08	0.11	0.0	-4.48	10.50	-0.02	-0.30	13.96	0.00	0.00	14.26	21.9	1
TR	#TR:1	Origin	9.53	23.54	0.80	3.15	-59.08	0.11	0.0	-4.41	10.18	-0.02	-0.30	13.96	0.00	0.00	14.26	21.9	1
TR	TR:1	End	14.06	23.66	0.83	4.30	-12.99	0.03	0.0	-4.41	10.18	-0.02	-0.35	4.21	0.00	0.00	4.56	7.0	1
TR	TR:1	Origin	14.06	23.66	0.83	4.30	-12.99	0.03	0.0	-0.99	1.79	-0.00	-0.08	4.21	0.00	0.00	4.29	6.6	1
TR	#TR:2	End	16.95	23.73	0.86	4.99	-7.83	0.02	0.0	-0.99	1.79	-0.00	-0.09	3.20	0.00	0.00	3.29	5.1	1
TR	#TR:2	Origin	16.95	23.73	0.86	4.99	-7.83	0.02	0.0	-0.97	1.62	-0.00	-0.09	3.20	0.00	0.00	3.29	5.1	1
TR	TR:2	End	19.83	23.79	0.88	5.66	-3.15	0.01	0.0	-0.97	1.62	-0.00	-0.10	1.67	0.00	0.00	1.77	2.7	1
TR	TR:2	Origin	19.83	23.79	0.88	5.66	-3.15	0.01	-0.0	-0.82	1.58	-0.00	-0.08	1.67	0.00	0.00	1.76	2.7	1
TR	TR:3	End	21.83	23.80	0.89	6.12	0.00	0.00	-0.0	-0.82	1.58	-0.00	-0.09	0.00	0.36	0.00	0.64	1.0	3
ML	ML:O	Origin	0.00	15.23	0.43	-0.64	-126.79	-0.18	-0.0	1.82	9.39	0.01	0.10	19.57	0.00	0.00	19.67	30.3	1
ML	#ML:0	End	5.00	15.38	0.41	-2.42	-79.85	-0.11	-0.0	1.82	9.39	0.01	0.12	18.44	0.00	0.00	18.56	28.6	1
ML	#ML:0	Origin	5.00	15.38	0.41	-2.42	-79.85	-0.11	-0.0	1.87	9.04	0.01	0.12	18.44	0.00	0.00	18.56	28.6	1
ML	#ML:1	End	8.53	15.49	0.40	-3.84	-47.94	-0.07	-0.0	1.87	9.04	0.01	0.15	15.60	0.00	0.00	15.74	24.2	1
ML	#ML:1	Origin	8.53	15.49	0.40	-3.84	-47.94	-0.07	-0.0	1.92	8.81	0.01	0.15	15.60	0.00	0.00	15.75	24.2	1
ML	ML:1	End	12.06	15.62	0.39	-5.39	-16.85	-0.02	-0.0	1.92	8.81	0.01	0.19	8.29	0.00	0.00	8.48	13.0	1
ML	ML:1	Origin	12.06	15.62	0.39	-5.39	-16.85	-0.02	-0.0	2.77	8.43	0.01	0.27	8.29	0.00	0.00	8.56	13.2	1
ML	ML:2	End	14.06	15.60	0.38	-6.32	-0.00	0.00	-0.0	2.77	8.43	0.01	0.31	0.00	1.95	0.00	3.39	5.2	3
MR	MR:O	Origin	0.00	15.25	0.44	0.27	-120.96	0.17	0.0	-3.55	8.88	-0.01	-0.19	18.67	0.00	0.00	18.86	29.0	1
MR	#MR:0	End	5.00	15.41	0.46	1.76	-76.58	0.11	0.0	-3.55	8.88	-0.01	-0.24	17.69	0.00	0.00	17.92	27.6	1
MR	#MR:0	Origin	5.00	15.41	0.46	1.76	-76.58	0.11	0.0	-3.48	8.56	-0.01	-0.23	17.69	0.00	0.00	17.92	27.6	1
MR	#MR:1	End	8.53	15.51	0.48	2.66	-46.40	0.06	0.0	-3.48	8.56	-0.01	-0.27	15.10	0.00	0.00	15.37	23.6	1
MR	#MR:1	Origin	8.53	15.51	0.48	2.66	-46.40	0.06	0.0	-3.42	8.34	-0.01	-0.27	15.10	0.00	0.00	15.37	23.6	1
MR	MR:1	End	12.06	15.59	0.50	3.43	-16.97	0.02	0.0	-3.42	8.34	-0.01	-0.33	8.35	0.00	0.00	8.68	13.4	1
MR	MR:1	Origin	12.06	15.59	0.50	3.43	-16.97	0.02	-0.0	-2.58	8.48	-0.01	-0.25	8.35	0.00	0.00	8.60	13.2	1
MR	MR:2	End	14.06	15.59	0.51	3.83	0.00	0.00	-0.0	-2.58	8.48	-0.01	-0.29	0.00	1.96	0.00	3.41	5.2	3
BL	BL:O	Origin	0.00	8.89	0.23	-0.50	-126.97	-0.13	-0.0	1.75	9.40	0.01	0.10	19.60	0.00	0.00	19.69	30.3	1
BL	#BL:0	End	5.00	9.01	0.22	-1.88	-79.97	-0.08	-0.0	1.75	9.40	0.01	0.12	18.47	0.00	0.00	18.58	28.6	1
BL	#BL:0	Origin	5.00	9.01	0.22	-1.88	-79.97	-0.08	-0.0	1.81	9.06	0.01	0.12	18.47	0.00	0.00	18.59	28.6	1
BL	#BL:1	End	8.53	9.11	0.22	-3.01	-48.02	-0.05	-0.0	1.81	9.06	0.01	0.14	15.62	0.00	0.00	15.77	24.3	1
BL	#BL:1	Origin	8.53	9.11	0.22	-3.01	-48.02	-0.05	-0.0	1.86	8.82	0.01	0.15	15.62	0.00	0.00	15.77	24.3	1
BL	BL:1	End	12.06	9.21	0.21	-4.28	-16.89	-0.02	-0.0	1.86	8.82	0.01	0.18	8.31	0.00	0.00	8.49	13.1	1
BL	BL:1	Origin	12.06	9.21	0.21	-4.28	-16.89	-0.02	-0.0	2.71	8.44	0.01	0.26	8.31	0.00	0.00	8.57	13.2	1
BL	BL:2	End	14.06	9.20	0.21	-5.05	-0.00	0.00	-0.0	2.71	8.44	0.01	0.30	0.00	1.95	0.00	3.39	5.2	3
BR	BR:O	Origin	0.00	8.90	0.23	0.31	-121.28	0.12	0.0	-3.49	8.90	-0.01	-0.19	18.72	0.00	0.00	18.91	29.1	1
BR	#BR:0	End	5.00	9.02	0.25	1.40	-76.78	0.08	0.0	-3.49	8.90	-0.01	-0.23	17.73	0.00	0.00	17.96	27.6	1
BR	#BR:0	Origin	5.00	9.02	0.25	1.40	-76.78	0.08	0.0	-3.42	8.58	-0.01	-0.23	17.73	0.00	0.00	17.96	27.6	1
BR	#BR:1	End	8.53	9.08	0.26	2.02	-46.51	0.05	0.0	-3.42	8.58	-0.01	-0.27	15.13	0.00	0.00	15.40	23.7	1
BR	#BR:1	Origin	8.53	9.08	0.26	2.02	-46.51	0.05	0.0	-3.37	8.36	-0.01	-0.27	15.13	0.00	0.00	15.40	23.7	1
BR	BR:1	End	12.06	9.13	0.27	2.50	-17.00	0.02	0.0	-3.37	8.36	-0.01	-0.33	8.37	0.00	0.00	8.69	13.4	1
BR	BR:1	Origin	12.06	9.13	0.27	2.50	-17.00	0.02	-0.0	-2.53	8.50	-0.01	-0.24	8.37	0.00	0.00	8.61	13.3	1
BR	BR:2	End	14.06	9.14	0.27	2.74	0.00	0.00	-0.0	-2.53	8.50	-0.01	-0.28	0.00	1.96	0.00	3.41	5.3	3
CX1	CX1:O	Origin	0.00	0.15	0.00	-0.01	-0.29	0.03	0.0	0.00	1.16	-0.13	0.01	38.11	3.97	0.00	38.74	59.6	1
CX1	CX1:1	End	0.25	0.15	0.00	-0.01	-0.00	0.00	0.0	0.00	1.16	-0.13	0.01	0.00	3.97	0.00	6.88	10.6	1
CX2	CX2:O	Origin	0.00	0.61	0.01	-0.01	-0.19	0.02	0.0	0.00	0.77	-0.09	0.00	25.41	2.65	0.00	25.83	39.7	1
CX2	CX2:1	End	0.25	0.61	0.01	-0.02	-0.00	-0.00	0.0	0.00	0.77	-0.09	0.00	0.00	2.65	0.00	4.59	7.1	1
CX3	CX3:O	Origin	0.00	1.37	0.03	-0.02	-0.19	0.02	0.0	0.00	0.77	-0.09	0.00	25.41	2.65	0.00	25.83	39.7	1
CX3	CX3:1	End	0.25	1.37	0.03	-0.03	-0.00	-0.00	0.0	0.00	0.77	-0.09	0.00	0.00	2.65	0.00	4.59	7.1	1
CX4	CX4:O	Origin	0.00	2.46	0.06	-0.03	-0.19	0.02	0.0	0.00	0.77	-0.10	0.00	25.41	2.65	0.00	25.83	39.7	1
CX4	CX4:1	End	0.25	2.46	0.06	-0.04	-0.00	-0.00	0.0	0.00	0.77	-0.10	0.00	0.00	2.65	0.00	4.59	7.1	1
CX5	CX5:O	Origin	0.00	3.88	0.10	-0.05	-0.19	0.02	0.0	0.00	0.77	-0.10	0.00	25.41	2.65	0.00	25.83	39.7	1
CX5	CX5:1	End	0.25	3.88	0.10	-0.05	-0.00	-0.00	0.0	0.00	0.77	-0.10	0.00	0.00	2.65	0.00	4.59	7.1	1
CX6	CX6:O	Origin	0.00	5.67	0.14	-0.07	-0.19	0.03	0.0	0.00	0.77	-0.10	0.00	25.41	2.65	0.00	25.83	39.7	1
CX6	CX6:1	End	0.25	5.67	0.14	-0.07	-0.00	-0.00	0.0	0.00	0.77	-0.10	0.00	0.00	2.65	0.00	4.59	7.1	1
CX7	CX7:O	Origin	0.00	7.81	0.20	-0.09	-0.19	0.03	-0.0	0.00	0.77	-0.10	0.00	25.41	2.65	0.00	25.83	39.7	1
CX7	CX7:1	End	0.25	7.81	0.20	-0.10	-0.00	-0.00	-0.0	0.00	0.77	-0.10	0.00	0.00	2.65	0.00	4.59	7.1	1
CX8	CX8:O	Origin	0.00	10.30	0.27	-0.13	-0.19	0.03	-0.0	0.00	0.77	-0.11	0.00	25.41	2.65	0.00	25.83	39.7	1
CX8	CX8:1	End	0.25	10.30	0.27	-0.13	-0.00	-0.00	-0.0	0.00	0.77	-0.11	0.00	0.00	2.65	0.00	4.59	7.1	1
CX9	CX9:O	Origin	0.00	13.17	0.36	-0.17	-0.19	0.03	-0.0	0.00	0.77	-0.11	0.01	25.41	2.65	0.00	25.83	39.7	1
CX9	CX9:1	End	0.25	13.17	0.36	-0.18	-0.00	-0.00	-0.0	0.00	0.77	-0.11	0.01	0.00	2.65	0.00	4.59	7.1	1
CX10	CX10:O	Origin	0.00	16.40	0.47	-0.22	-0.19	0.03	-0.0	0.00	0.77	-0.11	0.01	25.41	2.65	0.00	25.83	39.7	1
CX10	CX10:1	End	0.25	16.40	0.47	-0.23	-0.00	-0.00	-0.0	0.00	0.77	-0.11	0.01	0.00	2.65	0.00	4.59	7.1	1
Clamp-B	Clamp-B:O	Origin	0.00	18.13	0.54	-0.25	-11.01	0.12	-7.5	-0.20	17.73	1.03	-0.01	3.01	2.44	1.03	6.73	10.3	1
Clamp-B	Clamp-B:1	End	0.75	18.13	0.54	-0.26	2.34	0.90	-7.5	-0.20	17.73	1.03	-0.01	0.69	2.44	1.03	6.05	9.3	1

Clamp-T	Clamp-T:O	Origin	0.00	21.77	0.67	-0.30	4.94	3.32	-25.0	0.25	-8.95	-4.49	0.02	1.63	1.37	3.42	8.47	13.0	1
Clamp-T	Clamp-T:1	End	0.87	21.77	0.67	-0.32	-2.88	-0.60	-25.0	0.25	-8.95	-4.49	0.02	0.81	1.37	3.42	8.35	12.8	1
CX11	Mast:CX11	Origin	0.00	19.92	0.61	-0.29	-0.78	0.11	0.0	0.00	0.78	-0.11	0.00	6.86	0.73	0.00	6.98	10.7	1
CX11	CX11:1	End	1.00	19.93	0.61	-0.31	-0.00	-0.00	0.0	0.00	0.78	-0.11	0.00	0.00	0.73	0.00	1.26	1.9	1
CX12	Mast:CX12	Origin	0.00	23.74	0.73	-0.35	-0.78	0.14	0.0	0.00	0.78	-0.14	0.00	6.89	0.73	0.00	7.00	10.8	1
CX12	CX12:1	End	1.00	23.75	0.73	-0.38	-0.00	-0.00	0.0	0.00	0.78	-0.14	0.00	0.00	0.73	0.00	1.26	1.9	1
CX13	Mast:ANT	Origin	0.00	28.01	0.87	-0.43	-0.39	0.07	0.0	0.00	0.39	-0.07	0.00	3.47	0.37	0.00	3.53	5.4	1
CX13	CX13:1	End	1.00	28.01	0.87	-0.45	-0.00	-0.00	0.0	0.00	0.39	-0.07	0.00	0.00	0.37	0.00	0.64	1.0	1

Detailed Tubular X-Arm Usages for Load Case "NESC 250B (Heavy)":

Element Label	Joint Label	Joint Position	Rel. Dist. (ft)	Trans. Defl. (in)	Long. Defl. (in)	Vert. Defl. (in)	Vert. Mom. (ft-k)	Horz. Mom. (ft-k)	Tors. Mom. (ft-k)	Axial Force (kips)	Vert. Shear (kips)	Horz. Shear (kips)	P/A (ksi)	M/S. (ksi)	V/Q. (ksi)	T/R. (ksi)	Res. (ksi)	Max. Usage %	At Pt.
Mast	Mast:O	Origin	0.00	18.13	0.54	-0.26	-7.53	2.34	0.9	-17.59	-1.06	-0.20	-0.98	1.78	0.12	0.10	2.79	8.0	1
Mast	#sMast:0	End	2.50	19.02	0.58	-0.28	-10.18	1.85	0.9	-17.59	-1.06	-0.20	-0.98	2.33	0.12	0.10	3.34	9.5	1
Mast	#sMast:0	Origin	2.50	19.02	0.58	-0.28	-10.18	1.85	0.9	-17.36	-1.10	-0.20	-0.97	2.33	0.12	0.10	3.33	9.5	1
Mast	Mast:CX11	End	5.00	19.92	0.61	-0.29	-12.94	1.34	0.9	-17.36	-1.10	-0.20	-0.97	2.93	0.12	0.10	3.92	11.2	1
Mast	Mast:CX11	Origin	5.00	19.92	0.61	-0.29	-12.94	2.12	0.8	-16.35	-1.26	-0.21	-0.91	2.96	0.14	0.09	3.89	11.1	1
Mast	#sMast:1	End	7.50	20.84	0.64	-0.30	-16.08	1.60	0.8	-16.35	-1.26	-0.21	-0.91	3.65	0.14	0.09	4.57	13.1	1
Mast	#sMast:1	Origin	7.50	20.84	0.64	-0.30	-16.08	1.60	0.8	-16.12	-1.30	-0.21	-0.90	3.65	0.15	0.09	4.56	13.0	1
Mast	Mast:Top	End	10.00	21.77	0.67	-0.32	-19.32	1.08	0.8	-16.12	-1.30	-0.21	-0.90	4.37	0.15	0.09	5.28	15.1	1
Mast	Mast:Top	Origin	10.00	21.77	0.67	-0.32	-44.30	-1.80	0.2	-6.78	3.13	0.05	-0.38	10.00	0.35	0.02	10.40	29.7	1
Mast	Mast:CX12	End	15.00	23.74	0.73	-0.35	-28.66	-1.57	0.2	-6.78	3.13	0.05	-0.38	6.48	0.35	0.02	6.88	19.7	1
Mast	Mast:CX12	Origin	15.00	23.74	0.73	-0.35	-28.66	-0.79	0.1	-5.54	2.90	0.04	-0.31	6.47	0.32	0.01	6.80	19.4	1
Mast	#sMast:2	End	20.00	25.84	0.80	-0.39	-14.13	-0.59	0.1	-5.54	2.90	0.04	-0.31	3.19	0.32	0.01	3.55	10.1	1
Mast	#sMast:2	Origin	20.00	25.84	0.80	-0.39	-14.13	-0.59	0.1	-5.19	2.83	0.04	-0.29	3.19	0.32	0.01	3.53	10.1	1
Mast	#sMast:3	End	22.50	26.92	0.83	-0.41	-7.05	-0.49	0.1	-5.19	2.83	0.04	-0.29	1.59	0.32	0.01	1.97	5.6	1
Mast	#sMast:3	Origin	22.50	26.92	0.83	-0.41	-7.05	-0.49	0.1	-4.96	2.78	0.04	-0.28	1.59	0.31	0.01	1.95	5.6	1
Mast	Mast:ANT	End	25.00	28.01	0.87	-0.43	-0.09	-0.39	0.1	-4.96	2.78	0.04	-0.28	0.09	0.31	0.01	0.66	1.9	1
Mast	Mast:ANT	Origin	25.00	28.01	0.87	-0.43	-0.09	-0.00	0.0	-0.14	0.03	0.00	-0.01	0.02	0.00	0.00	0.03	0.1	1
Mast	Mast:E	End	28.00	29.31	0.91	-0.45	0.00	0.00	0.0	-0.14	0.03	0.00	-0.01	0.00	0.00	0.00	0.01	0.0	1

Summary of Suspension Capacities and Usages for Load Case "NESC 250B (Heavy)":

Suspension Label	Tension (kips)	Input Tension Capacity (kips)	Factored Tension Capacity (kips)	Tension Usage %	Input Hardware Capacity (kips)	Factored Hardware Capacity (kips)	Hardware Usage %	Max. Usage %
SWL	1.642	20.00	20.00	8.21	0.00	0.00	0.00	8.21
SWR	1.734	20.00	20.00	8.67	0.00	0.00	0.00	8.67
TCL	8.822	20.00	20.00	44.11	0.00	0.00	0.00	44.11
TCR	8.822	20.00	20.00	44.11	0.00	0.00	0.00	44.11
MCL	8.822	20.00	20.00	44.11	0.00	0.00	0.00	44.11
MCR	8.822	20.00	20.00	44.11	0.00	0.00	0.00	44.11
BCL	8.822	20.00	20.00	44.11	0.00	0.00	0.00	44.11
BCR	8.822	20.00	20.00	44.11	0.00	0.00	0.00	44.11

*** Analysis Results for Load Case No. 2 "NESC 250C (Extreme Wind)" - Number of iterations in SAPS 19

Equilibrium Joint Positions and Rotations for Load Case "NESC 250C (Extreme Wind)":

Joint Label	X-Displ (ft)	Y-Displ (ft)	Z-Displ (ft)	X-Rot (deg)	Y-Rot (deg)	Z-Rot (deg)	X-Pos (ft)	Y-Pos (ft)	Z-Pos (ft)
P:g	0	0	0	0.0000	0.0000	0.0000	0	0	0
P:t	0.01822	4.276	-0.1054	-3.9016	-0.0383	0.0942	0.01822	4.276	119.9
P:tc	0.01908	4.201	-0.1028	-3.9016	-0.0383	0.0942	0.01908	4.201	118.8
P:Clamp-T	0.02212	3.936	-0.09376	-3.8861	-0.0384	0.0942	0.02212	3.936	114.9
P:Clamp-B	0.02435	3.274	-0.0722	-3.6781	0.0388	0.0640	0.02435	3.274	104.9
P:CX10	0.0219	2.959	-0.0622	-3.5270	0.0355	0.0557	0.0219	2.959	99.94
P:mc	0.02028	2.749	-0.05578	-3.4135	0.0333	0.0505	0.02028	2.749	96.49
P:CX9	0.01741	2.373	-0.04476	-3.1694	0.0293	0.0418	0.01741	2.373	89.96
P:CX8	0.01354	1.855	-0.03109	-2.7425	0.0236	0.0307	0.01354	1.855	79.97
P:bc	0.01164	1.602	-0.02513	-2.5572	0.0214	0.0268	0.01164	1.602	74.52
P:CX7	0.01017	1.406	-0.02075	-2.3955	0.0197	0.0239	0.01017	1.406	69.98
P:CX6	0.007329	1.019	-0.01303	-2.0218	0.0160	0.0182	0.007329	1.019	59.99
P:CX5	0.004991	0.6984	-0.007631	-1.6484	0.0126	0.0137	0.004991	0.6984	49.99
P:CX4	0.003148	0.4426	-0.004121	-1.2836	0.0096	0.0099	0.003148	0.4426	40
P:CX3	0.001749	0.247	-0.00199	-0.9506	0.0070	0.0069	0.001749	0.247	30
P:CX2	0.000769	0.1091	-0.0008179	-0.6244	0.0045	0.0043	0.000769	0.1091	20
P:CX1	0.000191	0.02728	-0.0002616	-0.3072	0.0022	0.0020	0.000191	0.02728	10
TL:O	0.01728	4.199	-0.1793	-3.9016	-0.0383	0.0942	0.01728	5.323	118.7
TL:1	-0.005785	4.255	-1.185	-4.2528	-0.0389	0.0921	-0.005785	19.38	119
TL:2	-0.01515	4.278	-1.615	-4.2865	-0.0389	0.0919	-0.01515	25.15	119.1
TL:3	-0.01825	4.272	-1.764	-4.2901	-0.0389	0.0919	-0.01825	27.15	118.9
TR:O	0.02087	4.204	-0.0263	-3.9016	-0.0383	0.0942	0.02087	3.079	118.9
TR:1	0.04259	4.317	0.8828	-3.6119	-0.0375	0.0964	0.04259	-10.81	121.1
TR:2	0.05164	4.362	1.242	-3.5812	-0.0374	0.0966	0.05164	-16.51	122
TR:3	0.05494	4.366	1.367	-3.5774	-0.0374	0.0967	0.05494	-18.51	122.1
ML:O	0.01901	2.747	-0.1382	-3.4135	0.0333	0.0505	0.01901	4.131	96.4
ML:1	0.008803	2.797	-0.8933	-3.7597	0.0329	0.0487	0.008803	16.18	96.82
ML:2	0.007029	2.792	-1.025	-3.7823	0.0329	0.0486	0.007029	18.18	96.68
MR:O	0.02154	2.752	0.02662	-3.4135	0.0333	0.0505	0.02154	1.368	96.57
MR:1	0.03334	2.838	0.7068	-3.1155	0.0337	0.0523	0.03334	-10.55	98.42
MR:2	0.03523	2.841	0.8149	-3.0925	0.0338	0.0524	0.03523	-12.54	98.52
BL:O	0.01084	1.601	-0.09872	-2.5572	0.0214	0.0268	0.01084	3.25	74.44
BL:1	0.005608	1.643	-0.6744	-2.9087	0.0213	0.0251	0.005608	15.29	75.03
BL:2	0.004695	1.64	-0.7765	-2.9317	0.0212	0.0250	0.004695	17.29	74.93
BR:O	0.01244	1.604	0.04847	-2.5572	0.0214	0.0268	0.01244	-0.04545	74.59
BR:1	0.01883	1.664	0.5498	-2.2532	0.0217	0.0284	0.01883	-11.99	76.26
BR:2	0.01985	1.665	0.6278	-2.2298	0.0217	0.0285	0.01985	-13.98	76.34
CX1:O	0.000191	0.02737	-0.0003521	-0.3072	0.0022	0.0020	2.362	0.02737	10
CX1:1	0.0001907	0.02761	-0.0006062	-0.3072	0.0805	0.0765	2.612	0.02761	9.999
CX2:O	0.000769	0.1093	-0.0009946	-0.6244	0.0045	0.0043	2.246	0.1093	20
CX2:1	0.0007689	0.1094	-0.001178	-0.6244	0.0567	0.0540	2.496	0.1094	20
CX3:O	0.001749	0.2472	-0.002249	-0.9506	0.0070	0.0069	2.131	0.2472	30
CX3:1	0.001748	0.2474	-0.002445	-0.9506	0.0592	0.0566	2.381	0.2474	30
CX4:O	0.003148	0.4429	-0.004458	-1.2836	0.0096	0.0099	2.017	0.4429	40
CX4:1	0.003148	0.4431	-0.004666	-1.2836	0.0618	0.0596	2.267	0.4431	40
CX5:O	0.004991	0.6988	-0.008049	-1.6484	0.0126	0.0137	1.898	0.6988	49.99
CX5:1	0.004991	0.699	-0.008272	-1.6484	0.0648	0.0633	2.148	0.699	49.99
CX6:O	0.007329	1.02	-0.01354	-2.0218	0.0160	0.0182	1.826	1.02	59.99
CX6:1	0.007329	1.02	-0.01378	-2.0218	0.0682	0.0679	2.076	1.02	59.99
CX7:O	0.01017	1.406	-0.02134	-2.3955	0.0197	0.0239	1.712	1.406	69.98
CX7:1	0.01017	1.407	-0.0216	-2.3955	0.0719	0.0735	1.962	1.407	69.98
CX8:O	0.01354	1.856	-0.03174	-2.7425	0.0236	0.0307	1.589	1.856	79.97
CX8:1	0.01354	1.856	-0.03201	-2.7425	0.0758	0.0803	1.839	1.856	79.97
CX9:O	0.0174	2.374	-0.04551	-3.1694	0.0293	0.0418	1.477	2.374	89.95
CX9:1	0.0174	2.374	-0.04582	-3.1694	0.0815	0.0915	1.727	2.374	89.95
CX10:O	0.02189	2.96	-0.06303	-3.5270	0.0355	0.0557	1.366	2.96	99.94
CX10:1	0.02189	2.961	-0.06337	-3.5270	0.0877	0.1054	1.616	2.961	99.94
Clamp-B:O	0.02435	3.275	-0.07307	-3.6781	0.0388	0.0640	1.31	3.275	104.9
Clamp-B:1	0.02435	3.276	-0.07486	-3.6929	0.0488	0.0644	2.063	3.276	104.9
Clamp-T:O	0.02212	3.938	-0.09298	-3.8861	-0.0384	0.0942	1.192	3.938	114.9
Clamp-T:1	0.0221	3.939	-0.09808	-3.9739	-0.0480	0.0986	2.065	3.939	114.9
Mast:O	0.02435	3.276	-0.07486	-3.6929	0.0488	0.0644	2.063	3.276	104.9
Mast:CX11	0.02539	3.601	-0.08606	-3.7929	0.0035	0.0820	2.066	3.601	109.9
Mast:Top	0.0221	3.939	-0.09808	-3.9739	-0.0480	0.0986	2.065	3.939	114.9
Mast:CX12	0.01722	4.307	-0.1116	-4.4209	-0.0448	0.1009	2.062	4.307	119.9
Mast:ANT	0.008063	5.119	-0.1447	-4.7699	-0.0424	0.1025	2.057	5.119	129.9
Mast:E	0.005398	5.368	-0.1551	-4.7703	-0.0424	0.1025	2.055	5.368	132.8
CX11:1	0.02539	3.603	-0.08647	-3.7930	0.0225	0.1000	3.066	3.603	109.9
CX12:1	0.01722	4.309	-0.1112	-4.4210	-0.0259	0.1234	3.062	4.309	119.9
CX13:1	0.008061	5.121	-0.1442	-4.7700	-0.0329	0.1138	3.057	5.121	129.9

Joint Support Reactions for Load Case "NESC 250C (Extreme Wind)":

Joint Label	X Force (kips)	X Usage %	Y Force (kips)	Y Usage %	H-Shear Usage %	Z Force (kips)	Comp. Usage %	Uplift Usage %	Result. Force (kips)	Result. Usage %	X Moment (ft-k)	X-M. Usage %	Y Moment (ft-k)	Y-M. Usage %	H-Bend-M Usage %	Z Moment (ft-k)	Z-M. Usage %	Max. Usage %
P:g	-0.23	0.0	-59.57	0.0	0.0	-78.82	0.0	0.0	98.80	0.0	5565.62	0.0	-38.9	0.0	0.0	-26.90	0.0	0.0

Detailed Steel Pole Usages for Load Case "NESC 250C (Extreme Wind)":

Element Label	Joint Label	Joint Position	Rel. Dist. (ft)	Trans. Defl. (in)	Long. Defl. (in)	Vert. Defl. (in)	Trans. Mom. (Local Mx) (ft-k)	Long. Mom. (Local My) (ft-k)	Tors. Mom. (ft-k)	Axial Force (kips)	Tran. Shear (kips)	Long. Shear (kips)	P/A (ksi)	M/S. (ksi)	V/Q. (ksi)	T/R. (ksi)	Res. (ksi)	Max. Usage %	At Pt.
P	P:t	Origin	0.00	51.31	0.22	-1.26	-0.00	0.00	-0.0	-0.06	0.04	-0.00	-0.00	0.00	0.00	0.00	0.01	0.0	5
P	P:tc	End	1.10	50.41	0.23	-1.23	0.05	-0.00	-0.0	-0.06	0.04	-0.00	-0.00	0.00	0.00	0.00	0.01	0.0	4
P	P:tc	Origin	1.10	50.41	0.23	-1.23	17.05	-0.09	0.0	-12.61	13.43	-0.06	-0.39	0.26	0.82	0.00	1.57	2.4	4
P	P:Clamp-T	End	5.00	47.24	0.27	-1.13	69.36	-0.34	0.0	-12.61	13.43	-0.06	-0.38	3.57	0.21	0.00	3.96	6.1	2
P	P:Clamp-T	Origin	5.00	47.24	0.27	-1.13	145.28	102.29	25.7	43.87	27.31	0.08	1.31	9.31	1.18	0.68	11.10	17.1	3
P	Tube 1	End	10.00	43.20	0.30	-0.99	281.83	102.75	25.7	43.87	27.31	0.08	1.25	14.39	0.41	0.62	15.74	24.2	2
P	Tube 1	Origin	10.00	43.20	0.30	-0.99	281.85	102.70	25.7	43.22	27.83	0.11	1.23	14.39	0.42	0.62	15.73	24.2	2
P	P:Clamp-B	End	15.00	39.28	0.29	-0.87	420.98	103.35	25.7	43.22	27.83	0.11	1.18	19.00	0.40	0.56	20.24	31.1	2
P	P:Clamp-B	Origin	15.00	39.28	0.29	-0.87	435.81	-11.19	21.2	-18.57	24.79	-0.13	-0.51	18.58	0.36	0.46	19.14	29.4	2
P	P:CX10	End	20.00	35.51	0.26	-0.75	559.75	-11.77	21.2	-18.57	24.79	-0.13	-0.48	21.79	0.34	0.42	22.31	34.3	2
P	P:CX10	Origin	20.00	35.51	0.26	-0.75	559.75	-12.22	21.6	-19.43	25.42	-0.13	-0.51	21.79	0.35	0.43	22.34	34.4	2
P	P:mc	End	23.46	32.99	0.24	-0.67	647.64	-12.62	21.6	-19.43	25.42	-0.13	-0.49	23.73	0.34	0.41	24.26	37.3	2
P	P:mc	Origin	23.46	32.99	0.24	-0.67	660.08	-12.73	21.6	-30.19	36.70	-0.19	-0.76	24.19	0.49	0.41	25.00	38.5	2
P	Tube 1	End	26.73	30.69	0.23	-0.60	780.11	-13.28	21.6	-30.19	36.70	-0.19	-0.74	27.04	0.48	0.39	27.82	42.8	2
P	Tube 1	Origin	26.73	30.69	0.23	-0.60	780.11	-13.32	21.6	-30.73	36.96	-0.19	-0.76	27.04	0.48	0.39	27.84	42.8	2
P	P:CX9	End	30.00	28.47	0.21	-0.54	900.99	-13.86	21.6	-30.73	36.96	-0.19	-0.74	29.59	0.47	0.37	30.36	46.7	2
P	P:CX9	Origin	30.00	28.47	0.21	-0.54	900.99	-14.36	22.0	-31.68	37.56	-0.18	-0.76	29.60	0.48	0.37	30.39	46.8	2
P	Tube 1	End	35.00	25.26	0.18	-0.45	1088.81	-15.17	22.0	-31.68	37.56	-0.18	-0.73	33.03	0.46	0.34	33.78	52.0	2
P	Tube 1	Origin	35.00	25.26	0.18	-0.45	1088.81	-15.25	22.0	-32.56	37.97	-0.18	-0.75	33.03	0.46	0.34	33.80	52.0	2
P	P:CX8	End	40.00	22.26	0.16	-0.37	1278.67	-16.04	22.0	-32.56	37.97	-0.18	-0.72	35.93	0.44	0.32	36.67	56.4	2
P	P:CX8	Origin	40.00	22.26	0.16	-0.37	1278.67	-16.57	22.5	-33.58	38.57	-0.18	-0.56	26.86	0.34	0.24	27.43	42.2	2
P	Tube 2	End	42.73	20.72	0.15	-0.34	1383.94	-17.02	22.5	-33.58	38.57	-0.18	-0.54	27.91	0.33	0.23	28.48	43.8	2
P	Tube 2	Origin	42.73	20.72	0.15	-0.34	1383.93	-17.06	22.5	-34.22	38.83	-0.18	-0.56	27.91	0.33	0.23	28.49	43.8	2
P	P:bc	End	45.46	19.23	0.14	-0.30	1489.90	-17.50	22.5	-34.22	38.83	-0.18	-0.54	28.88	0.33	0.22	29.44	45.3	2
P	P:bc	Origin	45.46	19.23	0.14	-0.30	1502.16	-17.61	22.5	-45.52	50.01	-0.23	-0.72	29.12	0.42	0.22	29.87	45.9	2
P	P:CX7	End	50.00	16.87	0.12	-0.25	1729.32	-18.57	22.5	-45.52	50.01	-0.23	-0.70	31.44	0.41	0.21	32.15	49.5	2
P	P:CX7	Origin	50.00	16.87	0.12	-0.25	1729.32	-19.13	23.0	-46.80	50.65	-0.23	-0.72	31.44	0.41	0.22	32.18	49.5	2
P	Tube 2	End	53.58	15.12	0.11	-0.21	1910.80	-19.89	23.0	-46.80	50.65	-0.23	-0.70	33.07	0.40	0.21	33.79	52.0	2
P	Tube 2	Origin	53.58	15.12	0.11	-0.21	1910.80	-19.94	23.0	-47.73	50.97	-0.23	-0.72	33.07	0.41	0.21	33.80	52.0	2
P	SpliceT	End	57.17	13.47	0.10	-0.18	2093.45	-20.69	23.0	-47.73	50.97	-0.23	-0.70	34.53	0.40	0.20	35.24	54.2	2
P	SpliceT	Origin	57.17	13.47	0.10	-0.18	2093.45	-20.73	23.0	-48.94	51.28	-0.23	-0.72	34.53	0.40	0.20	35.26	54.2	2
P	P:CX6	End	60.00	12.23	0.09	-0.16	2238.72	-21.33	23.0	-48.94	51.28	-0.23	-0.64	33.29	0.36	0.18	33.95	52.2	2
P	P:CX6	Origin	60.00	12.23	0.09	-0.16	2238.72	-21.91	23.5	-50.75	51.84	-0.23	-0.67	33.30	0.36	0.18	33.98	52.3	2
P	SpliceB	End	63.00	11.00	0.08	-0.13	2394.23	-22.54	23.5	-50.75	51.84	-0.23	-0.65	34.23	0.35	0.17	34.89	53.7	2
P	SpliceB	Origin	63.00	11.00	0.08	-0.13	2394.23	-22.58	23.5	-52.07	52.15	-0.23	-0.67	34.23	0.36	0.17	34.91	53.7	2
P	Tube 3	End	66.50	9.64	0.07	-0.11	2576.76	-23.31	23.5	-52.07	52.15	-0.23	-0.66	35.20	0.35	0.17	35.87	55.2	2
P	Tube 3	Origin	66.50	9.64	0.07	-0.11	2576.76	-23.37	23.5	-53.14	52.48	-0.23	-0.67	35.20	0.35	0.17	35.88	55.2	2
P	P:CX5	End	70.00	8.38	0.06	-0.09	2760.44	-24.09	23.5	-53.14	52.48	-0.23	-0.65	36.08	0.34	0.16	36.75	56.5	2
P	P:CX5	Origin	70.00	8.38	0.06	-0.09	2760.44	-24.71	24.1	-54.51	53.09	-0.23	-0.67	36.08	0.35	0.16	36.76	56.6	2
P	Tube 3	End	73.63	7.18	0.05	-0.07	2952.87	-25.46	24.1	-54.51	53.09	-0.23	-0.66	36.90	0.34	0.16	37.57	57.8	2
P	Tube 3	Origin	73.63	7.18	0.05	-0.07	2952.87	-25.52	24.1	-55.66	53.44	-0.23	-0.67	36.90	0.34	0.16	37.59	57.8	2
P	SpliceT	End	77.25	6.08	0.04	-0.06	3146.57	-26.27	24.1	-55.66	53.44	-0.23	-0.66	37.64	0.33	0.15	38.30	58.9	2
P	SpliceT	Origin	77.25	6.08	0.04	-0.06	3146.57	-26.31	24.0	-56.73	53.75	-0.23	-0.60	33.83	0.30	0.13	34.44	53.0	2
P	P:CX4	End	80.00	5.31	0.04	-0.05	3294.39	-26.89	24.0	-56.73	53.75	-0.23	-0.59	34.28	0.30	0.13	34.88	53.7	2
P	P:CX4	Origin	80.00	5.31	0.04	-0.05	3294.39	-27.54	24.6	-58.38	54.42	-0.23	-0.61	34.28	0.30	0.13	34.90	53.7	2
P	Tube 4	End	85.00	4.05	0.03	-0.03	3566.50	-28.59	24.6	-58.38	54.42	-0.23	-0.59	35.02	0.29	0.12	35.62	54.8	2
P	Tube 4	Origin	85.00	4.05	0.03	-0.03	3566.50	-28.66	24.6	-60.22	54.96	-0.23	-0.61	35.02	0.30	0.12	35.64	54.8	2
P	P:CX3	End	90.00	2.96	0.02	-0.02	3841.27	-29.71	24.6	-60.22	54.96	-0.23	-0.59	35.66	0.29	0.12	36.26	55.8	2
P	P:CX3	Origin	90.00	2.96	0.02	-0.02	3841.27	-30.40	25.2	-62.11	55.68	-0.23	-0.61	35.66	0.29	0.12	36.28	55.8	2
P	Tube 4	End	93.63	2.28	0.02	-0.02	4043.11	-31.16	25.2	-62.11	55.68	-0.23	-0.60	36.06	0.29	0.12	36.67	56.4	2
P	Tube 4	Origin	93.63	2.28	0.02	-0.02	4043.11	-31.21	25.2	-63.50	56.08	-0.23	-0.61	36.06	0.29	0.12	36.68	56.4	2
P	SpliceT	End	97.25	1.70	0.01	-0.01	4246.40	-31.98	25.2	-63.50	56.08	-0.23	-0.60	36.43	0.28	0.11	37.03	57.0	2
P	SpliceT	Origin	97.25	1.70	0.01	-0.01	4246.40	-32.02	25.2	-64.74	56.44	-0.23	-0.61	36.43	0.28	0.11	37.05	57.0	2
P	P:CX2	End	100.00	1.31	0.01	-0.01	4401.60	-32.60	25.2	-64.74	56.44	-0.23	-0.60	36.67	0.28	0.11	37.28	57.4	2
P	P:CX2	Origin	100.00	1.31	0.01	-0.01	4401.60	-33.32	25.9	-66.55	57.14	-0.23	-0.62	36.67	0.28	0.11	37.30	57.4	2
P	Tube 5	End	105.00	0.74	0.01	-0.01	4687.27	-34.38	25.9	-66.55	57.14	-0.23	-0.61	37.08	0.28	0.11	37.69	58.0	2
P	Tube 5	Origin	105.00	0.74	0.01	-0.01	4687.27	-34.45	25.9	-68.58	57.71	-0.23	-0.62	37.08	0.28	0.11	37.71	58.0	2
P	P:CX1	End	110.00	0.33	0.00	-0.00	4975.82	-35.51	25.9	-68.58	57.71	-0.23	-0.61	37.42	0.27	0.10	38.03	58.5	2
P	P:CX1	Origin	110.00	0.33	0.00	-0.00	4975.82	-36.64	26.9	-71.06	58.68	-0.23	-0.63	37.42	0.28	0.10	38.06	58.5	2
P	Tube 5	End	115.00	0.08	0.00	-0.00	5269.23	-37.70	26.9	-71.06	58.68	-0.23	-0.62	37.72	0.27	0.10	38.34	59.0	2
P	Tube 5	Origin	115.00	0.08	0.00	-0.00	5269.23	-37.77	26.9	-73.18	59.28	-0.23	-0.63	37.72	0.27	0.10	38.36	59.0	2
P	P:g	End	120.00	0.00	0.00	0.00	5565.62	-38.84	26.9	-73.18	59.28	-0.23	-0.62	37.96	0.27	0.09	38.59	59.4	2

Detailed Tubular Davit Arm Usages for Load Case "NESC 250C (Extreme Wind)":

Element Label	Joint Label	Joint Position	Rel. Dist. (ft)	Trans. Defl. (in)	Long. Defl. (in)	Vert. Defl. (in)	Vert. Mom. (ft-k)	Horz. Mom. (ft-k)	Tors. Mom. (ft-k)	Axial Force (kips)	Vert. Shear (kips)	Horz. Shear (kips)	P/A (ksi)	M/S. (ksi)	V/Q. (ksi)	T/R. (ksi)	Res. (ksi)	Max. Usage %	At Pt.
TL	TL:O	Origin	0.00	50.38	0.21	-2.15	-94.77	-0.47	-0.0	5.92	6.54	0.03	0.31	13.09	0.00	0.00	13.40	20.6	1
TL	#TL:0	End	5.00	50.62	0.11	-6.32	-62.06	-0.32	-0.0	5.92	6.54	0.03	0.35	11.16	0.00	0.00	11.51	17.7	1
TL	#TL:0	Origin	5.00	50.62	0.11	-6.32	-62.06	-0.32	-0.0	5.94	6.25	0.03	0.35	11.16	0.00	0.00	11.51	17.7	1
TL	#TL:1	End	9.53	50.84	0.02	-10.22	-33.75	-0.18	-0.0	5.94	6.25	0.03	0.40	7.97	0.00	0.00	8.38	12.9	1
TL	#TL:1	Origin	9.53	50.84	0.02	-10.22	-33.75	-0.18	-0.0	5.95	6.01	0.03	0.40	7.97	0.00	0.00	8.38	12.9	1
TL	TL:1	End	14.06	51.06	-0.07	-14.22	-6.52	-0.04	-0.0	5.95	6.01	0.03	0.47	2.12	0.01	0.00	2.58	4.0	1
TL	TL:1	Origin	14.06	51.06	-0.07	-14.22	-6.52	-0.04	-0.0	0.86	0.95	0.00	0.07	2.12	0.00	0.00	2.18	3.4	1
TL	#TL:2	End	16.95	51.20	-0.13	-16.79	-3.78	-0.02	-0.0	0.86	0.95	0.00	0.08	1.54	0.00	0.00	1.62	2.5	1
TL	#TL:2	Origin	16.95	51.20	-0.13	-16.79	-3.78	-0.02	-0.0	0.86	0.84	0.00	0.08	1.54	0.00	0.00	1.62	2.5	1
TL	TL:2	End	19.83	51.34	-0.18	-19.38	-1.35	-0.01	-0.0	0.86	0.84	0.00	0.09	0.72	0.00	0.00	0.80	1.2	1
TL	TL:2	Origin	19.83	51.34	-0.18	-19.38	-1.35	-0.01	0.0	0.93	0.67	0.00	0.09	0.72	0.00	0.00	0.81	1.2	1
TL	TL:3	End	21.83	51.27	-0.22	-21.17	-0.00	-0.00	0.0	0.93	0.67	0.00	0.10	0.00	0.16	0.00	0.29	0.4	3
TR	TR:O	Origin	0.00	50.44	0.25	-0.32	-77.78	0.49	0.0	-7.19	5.36	-0.03	-0.37	10.74	0.00	0.00	11.11	17.1	1
TR	#TR:0	End	5.00	50.95	0.34	3.67	-51.00	0.33	0.0	-7.19	5.36	-0.03	-0.42	9.17	0.00	0.00	9.59	14.8	1
TR	#TR:0	Origin	5.00	50.95	0.34	3.67	-51.00	0.33	0.0	-7.14	5.10	-0.03	-0.42	9.17	0.00	0.00	9.59	14.8	1
TR	#TR:1	End	9.53	51.38	0.43	7.17	-27.88	0.19	0.0	-7.14	5.10	-0.03	-0.48	6.59	0.00	0.00	7.07	10.9	1
TR	#TR:1	Origin	9.53	51.38	0.43	7.17	-27.88	0.19	0.0	-7.09	4.89	-0.03	-0.48	6.59	0.00	0.00	7.07	10.9	1
TR	TR:1	End	14.06	51.81	0.51	10.59	-5.72	0.05	0.0	-7.09	4.89	-0.03	-0.56	1.85	0.01	0.00	2.41	3.7	1
TR	TR:1	Origin	14.06	51.81	0.51	10.59	-5.72	0.05	0.0	-1.21	0.80	-0.01	-0.10	1.85	0.00	0.00	1.95	3.0	1
TR	#TR:2	End	16.95	52.08	0.57	12.75	-3.42	0.03	0.0	-1.21	0.80	-0.01	-0.11	1.40	0.00	0.00	1.50	2.3	1
TR	#TR:2	Origin	16.95	52.08	0.57	12.75	-3.42	0.03	0.0	-1.19	0.69	-0.01	-0.11	1.40	0.00	0.00	1.50	2.3	1
TR	TR:2	End	19.83	52.34	0.62	14.91	-1.43	0.01	0.0	-1.19	0.69	-0.01	-0.12	0.76	0.00	0.00	0.88	1.3	1
TR	TR:2	Origin	19.83	52.34	0.62	14.91	-1.43	0.01	0.0	-1.11	0.71	-0.01	-0.11	0.76	0.00	0.00	0.87	1.3	1
TR	TR:3	End	21.83	52.39	0.66	16.40	0.00	-0.00	0.0	-1.11	0.71	-0.01	-0.12	0.00	0.16	0.00	0.31	0.5	3
ML	ML:O	Origin	0.00	32.96	0.23	-1.66	-72.99	-0.40	-0.0	4.99	5.50	0.03	0.27	11.26	0.00	0.00	11.54	17.7	1
ML	#ML:0	End	5.00	33.21	0.18	-5.31	-45.51	-0.26	-0.0	4.99	5.50	0.03	0.33	10.51	0.00	0.00	10.84	16.7	1
ML	#ML:0	Origin	5.00	33.21	0.18	-5.31	-45.51	-0.26	-0.0	5.01	5.26	0.03	0.33	10.51	0.00	0.00	10.84	16.7	1
ML	#ML:1	End	8.53	33.38	0.14	-7.97	-26.95	-0.16	-0.0	5.01	5.26	0.03	0.40	8.77	0.00	0.00	9.16	14.1	1
ML	#ML:1	Origin	8.53	33.38	0.14	-7.97	-26.95	-0.16	-0.0	5.02	5.10	0.03	0.40	8.77	0.00	0.00	9.17	14.1	1
ML	ML:1	End	12.06	33.56	0.11	-10.72	-8.96	-0.06	-0.0	5.02	5.10	0.03	0.49	4.41	0.01	0.00	4.90	7.5	1
ML	ML:1	Origin	12.06	33.56	0.11	-10.72	-8.96	-0.06	0.0	5.49	4.48	0.03	0.53	4.41	0.01	0.00	4.94	7.6	1
ML	ML:2	End	14.06	33.51	0.08	-12.30	0.00	0.00	0.0	5.49	4.48	0.03	0.61	0.00	1.04	0.00	1.89	2.9	3
MR	MR:O	Origin	0.00	33.02	0.26	0.32	-60.58	0.39	0.0	-5.94	4.43	-0.03	-0.32	9.35	0.00	0.00	9.67	14.9	1
MR	#MR:0	End	5.00	33.46	0.32	3.80	-38.42	0.25	0.0	-5.94	4.43	-0.03	-0.40	8.87	0.00	0.00	9.27	14.3	1
MR	#MR:0	Origin	5.00	33.46	0.32	3.80	-38.42	0.25	0.0	-5.90	4.23	-0.03	-0.39	8.87	0.00	0.00	9.27	14.3	1
MR	#MR:1	End	8.53	33.76	0.36	6.17	-23.51	0.15	0.0	-5.90	4.23	-0.03	-0.47	7.65	0.00	0.00	8.11	12.5	1
MR	#MR:1	Origin	8.53	33.76	0.36	6.17	-23.51	0.15	0.0	-5.87	4.09	-0.03	-0.46	7.65	0.00	0.00	8.11	12.5	1
MR	MR:1	End	12.06	34.05	0.40	8.48	-9.08	0.06	0.0	-5.87	4.09	-0.03	-0.57	4.47	0.01	0.00	5.04	7.8	1
MR	MR:1	Origin	12.06	34.05	0.40	8.48	-9.08	0.06	0.0	-5.44	4.54	-0.03	-0.53	4.47	0.01	0.00	5.00	7.7	1
MR	MR:2	End	14.06	34.09	0.42	9.78	-0.00	0.00	0.0	-5.44	4.54	-0.03	-0.60	0.00	1.05	0.00	1.92	2.9	3
BL	BL:O	Origin	0.00	19.21	0.13	-1.18	-74.05	-0.36	-0.0	4.91	5.57	0.03	0.27	11.43	0.00	0.00	11.70	18.0	1
BL	#BL:0	End	5.00	19.41	0.10	-3.94	-46.20	-0.23	-0.0	4.91	5.57	0.03	0.33	10.67	0.00	0.00	11.00	16.9	1
BL	#BL:0	Origin	5.00	19.41	0.10	-3.94	-46.20	-0.23	-0.0	4.93	5.33	0.03	0.33	10.67	0.00	0.00	11.00	16.9	1
BL	#BL:1	End	8.53	19.56	0.09	-5.98	-27.38	-0.14	-0.0	4.93	5.33	0.03	0.39	8.91	0.00	0.00	9.30	14.3	1
BL	#BL:1	Origin	8.53	19.56	0.09	-5.98	-27.38	-0.14	-0.0	4.95	5.17	0.03	0.39	8.91	0.00	0.00	9.30	14.3	1
BL	BL:1	End	12.06	19.72	0.07	-8.09	-9.13	-0.05	-0.0	4.95	5.17	0.03	0.48	4.49	0.01	0.00	4.97	7.6	1
BL	BL:1	Origin	12.06	19.72	0.07	-8.09	-9.13	-0.05	0.0	5.42	4.56	0.03	0.53	4.49	0.01	0.00	5.02	7.7	1
BL	BL:2	End	14.06	19.69	0.06	-9.32	-0.00	0.00	0.0	5.42	4.56	0.03	0.60	0.00	1.05	0.00	1.92	3.0	3
BR	BR:O	Origin	0.00	19.25	0.15	0.58	-61.82	0.35	0.0	-5.88	4.52	-0.03	-0.32	9.54	0.00	0.00	9.86	15.2	1
BR	#BR:0	End	5.00	19.56	0.18	3.17	-39.21	0.23	0.0	-5.88	4.52	-0.03	-0.39	9.05	0.00	0.00	9.45	14.5	1
BR	#BR:0	Origin	5.00	19.56	0.18	3.17	-39.21	0.23	0.0	-5.84	4.31	-0.03	-0.39	9.05	0.00	0.00	9.44	14.5	1
BR	#BR:1	End	8.53	19.77	0.20	4.92	-23.98	0.14	0.0	-5.84	4.31	-0.03	-0.46	7.80	0.00	0.00	8.26	12.7	1
BR	#BR:1	Origin	8.53	19.77	0.20	4.92	-23.98	0.14	0.0	-5.81	4.18	-0.03	-0.46	7.80	0.00	0.00	8.26	12.7	1
BR	BR:1	End	12.06	19.96	0.23	6.60	-9.25	0.05	0.0	-5.81	4.18	-0.03	-0.56	4.55	0.01	0.00	5.11	7.9	1
BR	BR:1	Origin	12.06	19.96	0.23	6.60	-9.25	0.05	0.0	-5.37	4.62	-0.03	-0.52	4.55	0.01	0.00	5.07	7.8	1
BR	BR:2	End	14.06	19.98	0.24	7.53	-0.00	0.00	0.0	-5.37	4.62	-0.03	-0.60	0.00	1.07	0.00	1.94	3.0	3
CX1	CX1:O	Origin	0.00	0.33	0.00	-0.00	-0.10	0.10	0.0	0.00	0.40	-0.39	0.00	18.23	1.90	0.00	18.53	28.5	1
CX1	CX1:1	End	0.25	0.33	0.00	-0.01	-0.00	0.00	0.0	0.00	0.40	-0.39	0.00	0.00	1.90	0.00	3.29	5.1	1
CX2	CX2:O	Origin	0.00	1.31	0.01	-0.01	-0.07	0.06	0.0	0.00	0.27	-0.26	0.00	12.16	1.27	0.00	12.35	19.0	1
CX2	CX2:1	End	0.25	1.31	0.01	-0.01	-0.00	-0.00	0.0	0.00	0.27	-0.26	0.00	0.00	1.27	0.00	2.19	3.4	1
CX3	CX3:O	Origin	0.00	2.97	0.02	-0.03	-0.07	0.07	0.0	0.00	0.27	-0.26	0.00	12.16	1.27	0.00	12.35	19.0	1
CX3	CX3:1	End	0.25	2.97	0.02	-0.03	-0.00	-0.00	0.0	0.00	0.27	-0.26	0.00	0.00	1.27	0.00	2.19	3.4	1
CX4	CX4:O	Origin	0.00	5.31	0.04	-0.05	-0.07	0.07	0.0	0.00	0.26	-0.26	0.00	12.16	1.27	0.00	12.35	19.0	1
CX4	CX4:1	End	0.25	5.32	0.04	-0.06	-0.00	-0.00	0.0	0.00	0.26	-0.26	0.00	0.00	1.27	0.00	2.19	3.4	1
CX5	CX5:O	Origin	0.00	8.39	0.06	-0.10	-0.07	0.07	0.0	0.00	0.26	-0.26	0.00	12.16	1.27	0.00	12.35	19.0	1

CX5	CX5:1	End	0.25	8.39	0.06	-0.10	-0.00	-0.00	0.0	0.00	0.26	-0.26	0.00	0.00	1.27	0.00	2.19	3.4	1
CX6	CX6:O	Origin	0.00	12.24	0.09	-0.16	-0.07	0.07	0.0	0.00	0.26	-0.27	0.00	12.16	1.27	0.00	12.35	19.0	1
CX6	CX6:1	End	0.25	12.24	0.09	-0.17	-0.00	-0.00	0.0	0.00	0.26	-0.27	0.00	0.00	1.27	0.00	2.19	3.4	1
CX7	CX7:O	Origin	0.00	16.88	0.12	-0.26	-0.06	0.07	0.0	0.00	0.26	-0.27	0.00	12.16	1.27	0.00	12.35	19.0	1
CX7	CX7:1	End	0.25	16.88	0.12	-0.26	-0.00	-0.00	0.0	0.00	0.26	-0.27	0.00	0.00	1.27	0.00	2.19	3.4	1
CX8	CX8:O	Origin	0.00	22.27	0.16	-0.38	-0.06	0.07	-0.0	0.00	0.26	-0.27	0.00	12.16	1.27	0.00	12.35	19.0	1
CX8	CX8:1	End	0.25	22.28	0.16	-0.38	-0.00	-0.00	-0.0	0.00	0.26	-0.27	0.00	0.00	1.27	0.00	2.19	3.4	1
CX9	CX9:O	Origin	0.00	28.49	0.21	-0.55	-0.06	0.07	-0.0	0.00	0.26	-0.27	0.00	12.16	1.27	0.00	12.35	19.0	1
CX9	CX9:1	End	0.25	28.49	0.21	-0.55	-0.00	-0.00	-0.0	0.00	0.26	-0.27	0.00	0.00	1.27	0.00	2.19	3.4	1
CX10	CX10:O	Origin	0.00	35.52	0.26	-0.76	-0.06	0.07	-0.0	0.00	0.25	-0.27	0.00	12.16	1.27	0.00	12.35	19.0	1
CX10	CX10:1	End	0.25	35.53	0.26	-0.76	-0.00	-0.00	-0.0	0.00	0.25	-0.27	0.00	0.00	1.27	0.00	2.19	3.4	1
Clamp-B	Clamp-B:O	Origin	0.00	39.30	0.29	-0.88	-35.92	-0.00	-14.8	0.38	61.08	3.54	0.03	9.84	8.39	2.03	20.57	31.6	1
Clamp-B	Clamp-B:1	End	0.75	39.31	0.29	-0.90	10.08	2.66	-14.8	0.38	61.08	3.54	0.03	2.85	8.39	2.03	18.28	28.1	1
Clamp-T	Clamp-T:O	Origin	0.00	47.26	0.27	-1.12	35.96	9.39	-76.0	-0.51	-57.02	-13.47	-0.03	10.18	8.04	10.40	33.54	51.6	1
Clamp-T	Clamp-T:1	End	0.87	47.27	0.27	-1.18	-13.82	-2.35	-76.0	-0.51	-57.02	-13.47	-0.03	3.84	8.04	10.40	32.18	49.5	1
CX11	Mast:CX11	Origin	0.00	43.22	0.30	-1.03	-0.26	0.28	0.0	0.00	0.26	-0.28	0.00	3.30	0.35	0.00	3.36	5.2	1
CX11	CX11:1	End	1.00	43.24	0.30	-1.04	-0.00	-0.00	0.0	0.00	0.26	-0.28	0.00	0.00	0.35	0.00	0.61	0.9	1
CX12	Mast:CX12	Origin	0.00	51.68	0.21	-1.34	-0.25	0.34	0.0	0.00	0.25	-0.34	0.00	3.71	0.39	0.00	3.78	5.8	1
CX12	CX12:1	End	1.00	51.71	0.21	-1.33	-0.00	-0.00	0.0	0.00	0.25	-0.34	0.00	0.00	0.39	0.00	0.68	1.0	1
CX13	Mast:ANT	Origin	0.00	61.42	0.10	-1.74	-0.12	0.18	0.0	0.00	0.12	-0.18	0.00	1.88	0.20	0.00	1.91	2.9	1
CX13	CX13:1	End	1.00	61.45	0.10	-1.73	-0.00	-0.00	0.0	0.00	0.12	-0.18	0.00	0.00	0.20	0.00	0.35	0.5	1

Detailed Tubular X-Arm Usages for Load Case "NESC 250C (Extreme Wind)":

Element Label	Joint Label	Joint Position	Rel. Dist. (ft)	Trans. Defl. (in)	Long. Defl. (in)	Vert. Defl. (in)	Vert. Mom. (ft-k)	Horz. Mom. (ft-k)	Tors. Mom. (ft-k)	Axial Force (kips)	Vert. Shear (kips)	Horz. Shear (kips)	P/A (ksi)	M/S. (ksi)	V/Q. (ksi)	T/R. (ksi)	Res. (ksi)	Max. Usage %	At Pt.
Mast	Mast:O	Origin	0.00	39.31	0.29	-0.90	-14.82	10.08	2.7	-60.99	-3.59	0.28	-3.40	4.04	0.40	0.30	7.54	21.5	1
Mast	#sMast:0	End	2.50	41.25	0.30	-0.96	-23.80	10.78	2.7	-60.99	-3.59	0.28	-3.40	5.90	0.40	0.30	9.37	26.8	1
Mast	#sMast:0	Origin	2.50	41.25	0.30	-0.96	-23.80	10.79	2.7	-60.84	-3.69	0.26	-3.39	5.90	0.41	0.30	9.37	26.8	1
Mast	Mast:CX11	End	5.00	43.22	0.30	-1.03	-33.02	11.43	2.7	-60.84	-3.69	0.26	-3.39	7.88	0.41	0.30	11.34	32.4	1
Mast	Mast:CX11	Origin	5.00	43.22	0.30	-1.03	-33.01	11.68	2.4	-60.43	-4.04	0.23	-3.37	7.90	0.45	0.27	11.34	32.4	1
Mast	#sMast:1	End	7.50	45.22	0.29	-1.10	-43.12	12.25	2.4	-60.43	-4.04	0.23	-3.37	10.11	0.45	0.27	13.54	38.7	1
Mast	#sMast:1	Origin	7.50	45.22	0.29	-1.10	-43.12	12.26	2.4	-60.29	-4.09	0.20	-3.36	10.11	0.46	0.27	13.53	38.7	1
Mast	Mast:Top	End	10.00	47.27	0.27	-1.18	-53.36	12.75	2.4	-60.29	-4.09	0.20	-3.36	12.38	0.46	0.27	15.79	45.1	1
Mast	Mast:Top	Origin	10.00	47.27	0.27	-1.18	-129.35	-1.06	0.5	-2.96	9.12	0.05	-0.17	29.19	1.02	0.06	29.41	84.0	1
Mast	Mast:CX12	End	15.00	51.68	0.21	-1.34	-83.74	-0.83	0.5	-2.96	9.12	0.05	-0.17	18.89	1.02	0.06	19.15	54.7	1
Mast	Mast:CX12	Origin	15.00	51.68	0.21	-1.34	-83.74	-0.58	0.2	-2.35	8.49	0.05	-0.13	18.89	0.95	0.02	19.10	54.6	1
Mast	#sMast:2	End	20.00	56.46	0.15	-1.53	-41.27	-0.35	0.2	-2.35	8.49	0.05	-0.13	9.31	0.95	0.02	9.59	27.4	1
Mast	#sMast:2	Origin	20.00	56.46	0.15	-1.53	-41.27	-0.35	0.2	-2.10	8.27	0.04	-0.12	9.31	0.92	0.02	9.57	27.3	1
Mast	#sMast:3	End	22.50	58.93	0.12	-1.63	-20.59	-0.24	0.2	-2.10	8.27	0.04	-0.12	4.65	0.92	0.02	5.03	14.4	1
Mast	#sMast:3	Origin	22.50	58.93	0.12	-1.63	-20.59	-0.24	0.2	-1.94	8.13	0.04	-0.11	4.65	0.91	0.02	5.02	14.3	1
Mast	Mast:ANT	End	25.00	61.42	0.10	-1.74	-0.27	-0.13	0.2	-1.94	8.13	0.04	-0.11	0.07	0.91	0.02	1.61	4.6	1
Mast	Mast:ANT	Origin	25.00	61.42	0.10	-1.74	-0.27	-0.00	-0.0	-0.09	0.09	0.00	-0.01	0.06	0.01	0.00	0.07	0.2	1
Mast	Mast:E	End	28.00	64.42	0.06	-1.86	0.00	0.00	-0.0	-0.09	0.09	0.00	-0.01	0.00	0.01	0.00	0.02	0.1	1

Summary of Suspension Capacities and Usages for Load Case "NESC 250C (Extreme Wind)":

Suspension Label	Tension (kips)	Input Tension Capacity (kips)	Factored Tension Capacity (kips)	Tension Usage %	Input Hardware Capacity (kips)	Factored Hardware Capacity (kips)	Hardware Usage %	Max. Usage %
SWL	1.128	20.00	20.00	5.64	0.00	0.00	0.00	5.64
SWR	1.304	20.00	20.00	6.52	0.00	0.00	0.00	6.52
TCL	7.066	20.00	20.00	35.33	0.00	0.00	0.00	35.33
TCR	7.063	20.00	20.00	35.31	0.00	0.00	0.00	35.31
MCL	7.066	20.00	20.00	35.33	0.00	0.00	0.00	35.33
MCR	7.063	20.00	20.00	35.31	0.00	0.00	0.00	35.31
BCL	7.066	20.00	20.00	35.33	0.00	0.00	0.00	35.33
BCR	7.063	20.00	20.00	35.31	0.00	0.00	0.00	35.31

*** Analysis Results for Load Case No. 3 "NESC 250D (Extreme Ice w/Wind)" - Number of iterations in SAPS 17

Equilibrium Joint Positions and Rotations for Load Case "NESC 250D (Extreme Ice w/Wind)":

Joint Label	X-Displ (ft)	Y-Displ (ft)	Z-Displ (ft)	X-Rot (deg)	Y-Rot (deg)	Z-Rot (deg)	X-Pos (ft)	Y-Pos (ft)	Z-Pos (ft)
P:g	0	0	0	0.0000	0.0000	0.0000	0	0	0
P:t	0.05398	1.538	-0.01714	-1.3870	0.0546	0.0204	0.05398	1.538	120
P:tc	0.05294	1.511	-0.01682	-1.3870	0.0546	0.0204	0.05294	1.511	118.9
P:Clamp-T	0.04926	1.417	-0.01559	-1.3804	0.0546	0.0204	0.04926	1.417	115
P:Clamp-B	0.03948	1.181	-0.01263	-1.3127	0.0591	0.0148	0.03948	1.181	105
P:CX10	0.03463	1.068	-0.01123	-1.2622	0.0534	0.0129	0.03463	1.068	99.99
P:mc	0.03156	0.9933	-0.01031	-1.2239	0.0495	0.0118	0.03156	0.9933	96.53
P:CX9	0.02636	0.8581	-0.008636	-1.1397	0.0428	0.0098	0.02636	0.8581	89.99
P:CX8	0.01978	0.6715	-0.006483	-0.9899	0.0335	0.0072	0.01978	0.6715	79.99
P:bc	0.01677	0.5802	-0.005553	-0.9242	0.0300	0.0063	0.01677	0.5802	74.54
P:CX7	0.01451	0.5091	-0.004819	-0.8665	0.0274	0.0056	0.01451	0.5091	70
P:CX6	0.01024	0.3692	-0.00346	-0.7322	0.0219	0.0043	0.01024	0.3692	60
P:CX5	0.00686	0.2529	-0.002432	-0.5972	0.0171	0.0033	0.00686	0.2529	50
P:CX4	0.004268	0.1602	-0.001664	-0.4650	0.0128	0.0024	0.004268	0.1602	40
P:CX3	0.002346	0.08937	-0.001103	-0.3442	0.0093	0.0016	0.002346	0.08937	30
P:CX2	0.001022	0.03945	-0.0006689	-0.2260	0.0060	0.0010	0.001022	0.03945	20
P:CX1	0.0002514	0.009858	-0.0003159	-0.1111	0.0029	0.0005	0.0002514	0.009858	10
TL:O	0.05251	1.511	-0.04404	-1.3870	0.0546	0.0204	0.05251	2.636	118.9
TL:1	0.04841	1.543	-0.4655	-1.9757	0.0545	0.0199	0.04841	16.67	119.7
TL:2	0.04672	1.558	-0.6683	-2.0481	0.0544	0.0198	0.04672	22.43	120
TL:3	0.04596	1.557	-0.74	-2.0566	0.0544	0.0198	0.04596	24.43	120
TR:O	0.05336	1.512	0.0104	-1.3870	0.0546	0.0204	0.05336	0.3869	118.9
TR:1	0.05988	1.538	0.2702	-0.8200	0.0549	0.0209	0.05988	-13.59	120.5
TR:2	0.06256	1.546	0.3482	-0.7470	0.0550	0.0210	0.06256	-19.33	121.1
TR:3	0.06332	1.546	0.3741	-0.7380	0.0550	0.0210	0.06332	-21.33	121.1
ML:O	0.03126	0.993	-0.03987	-1.2239	0.0495	0.0118	0.03126	2.377	96.5
ML:1	0.02955	1.02	-0.3564	-1.7688	0.0494	0.0114	0.02955	14.4	97.35
ML:2	0.0291	1.019	-0.4192	-1.8070	0.0494	0.0114	0.0291	16.4	97.29
MR:O	0.03187	0.9937	0.01925	-1.2239	0.0495	0.0118	0.03187	-0.3903	96.56
MR:1	0.03555	1.015	0.2179	-0.6977	0.0496	0.0121	0.03555	-12.37	97.93
MR:2	0.03599	1.015	0.2412	-0.6593	0.0496	0.0121	0.03599	-14.37	97.95
BL:O	0.01658	0.58	-0.03216	-0.9242	0.0300	0.0063	0.01658	2.23	74.51
BL:1	0.01576	0.602	-0.2859	-1.4698	0.0300	0.0060	0.01576	14.25	75.42
BL:2	0.01553	0.6013	-0.3382	-1.5080	0.0300	0.0060	0.01553	16.25	75.37
BR:O	0.01697	0.5804	0.02105	-0.9242	0.0300	0.0063	0.01697	-1.069	74.56
BR:1	0.01901	0.5946	0.1569	-0.3971	0.0301	0.0066	0.01901	-13.05	75.87
BR:2	0.01925	0.5946	0.1697	-0.3586	0.0302	0.0066	0.01925	-15.05	75.88
CX1:O	0.0002514	0.009878	-0.0004357	-0.1111	0.0029	0.0005	2.362	0.009878	10
CX1:1	0.0002503	0.009932	-0.00119	-0.1111	0.2417	0.0176	2.612	0.009932	9.999
CX2:O	0.001022	0.03949	-0.0009027	-0.2260	0.0060	0.0010	2.247	0.03949	20
CX2:1	0.001022	0.03953	-0.001423	-0.2260	0.1652	0.0125	2.497	0.03953	20
CX3:O	0.002345	0.08943	-0.001447	-0.3442	0.0093	0.0016	2.132	0.08943	30
CX3:1	0.002345	0.08947	-0.001983	-0.3442	0.1685	0.0131	2.382	0.08947	30
CX4:O	0.004268	0.1603	-0.002116	-0.4650	0.0128	0.0024	2.018	0.1603	40
CX4:1	0.004267	0.1603	-0.002667	-0.4650	0.1721	0.0138	2.268	0.1603	40
CX5:O	0.00686	0.253	-0.002996	-0.5972	0.0171	0.0033	1.899	0.253	50
CX5:1	0.006859	0.253	-0.003566	-0.5972	0.1763	0.0147	2.149	0.253	50
CX6:O	0.01024	0.3693	-0.004155	-0.7322	0.0219	0.0043	1.828	0.3693	60
CX6:1	0.01024	0.3694	-0.004745	-0.7322	0.1811	0.0158	2.078	0.3694	60
CX7:O	0.01451	0.5092	-0.005633	-0.8665	0.0274	0.0056	1.717	0.5092	69.99
CX7:1	0.01451	0.5093	-0.006248	-0.8665	0.1866	0.0171	1.967	0.5093	69.99
CX8:O	0.01978	0.6717	-0.007405	-0.9899	0.0335	0.0072	1.596	0.6717	79.99
CX8:1	0.01978	0.6718	-0.008046	-0.9899	0.1928	0.0186	1.846	0.6718	79.99
CX9:O	0.02636	0.8583	-0.009726	-1.1397	0.0428	0.0098	1.486	0.8583	89.99
CX9:1	0.02636	0.8584	-0.01041	-1.1398	0.2020	0.0212	1.736	0.8584	89.99
CX10:O	0.03463	1.069	-0.01248	-1.2622	0.0534	0.0129	1.378	1.069	99.99
CX10:1	0.03463	1.069	-0.01321	-1.2622	0.2126	0.0244	1.628	1.069	99.99
Clamp-B:O	0.03948	1.181	-0.01396	-1.3127	0.0591	0.0148	1.325	1.181	105
Clamp-B:1	0.03947	1.182	-0.01495	-1.3189	0.0615	0.0150	2.078	1.182	105
Clamp-T:O	0.04926	1.417	-0.01671	-1.3804	0.0546	0.0204	1.219	1.417	115
Clamp-T:1	0.04926	1.418	-0.01797	-1.3988	0.0545	0.0212	2.092	1.418	115
Mast:O	0.03947	1.182	-0.01495	-1.3189	0.0615	0.0150	2.078	1.182	105
Mast:CX11	0.04452	1.298	-0.01642	-1.3514	0.0574	0.0183	2.085	1.298	110
Mast:Top	0.04926	1.418	-0.01797	-1.3988	0.0545	0.0212	2.092	1.418	115
Mast:CX12	0.05426	1.545	-0.01964	-1.4994	0.0616	0.0219	2.099	1.545	120
Mast:ANT	0.06537	1.815	-0.02341	-1.5780	0.0665	0.0224	2.114	1.815	130
Mast:E	0.06882	1.898	-0.02455	-1.5781	0.0665	0.0224	2.119	1.898	133
CX11:1	0.04452	1.298	-0.01813	-1.3514	0.1146	0.0225	3.085	1.298	110
CX12:1	0.05426	1.545	-0.02142	-1.4995	0.1188	0.0269	3.099	1.545	120
CX13:1	0.06537	1.816	-0.02493	-1.5780	0.0953	0.0250	3.114	1.816	130

Joint Support Reactions for Load Case "NESC 250D (Extreme Ice w/Wind)":

Joint Label	X Force (kips)	X Usage %	Y Force (kips)	Y Usage %	H-Shear Usage %	Z Force (kips)	Comp. Usage %	Uplift Usage %	Result. Force (kips)	Result. Usage %	X Moment (ft-k)	X-M. Usage %	Y Moment (ft-k)	Y-M. Usage %	H-Bend-M Usage %	Z Moment (ft-k)	Z-M. Usage %	Max. Usage %
P:g	-0.15	0.0	-21.11	0.0	0.0	-110.58	0.0	0.0	112.57	0.0	2010.31	0.0	-50.6	0.0	0.0	-6.41	0.0	0.0

Detailed Steel Pole Usages for Load Case "NESC 250D (Extreme Ice w/Wind)":

Element Label	Joint Label	Joint Position	Rel. Dist. (ft)	Trans. Defl. (in)	Long. Defl. (in)	Vert. Defl. (in)	Trans. Mom. (Local Mx) (ft-k)	Long. Mom. (Local My) (ft-k)	Tors. Mom. (ft-k)	Axial Force (kips)	Tran. Shear (kips)	Long. Shear (kips)	P/A (ksi)	M/S. (ksi)	V/Q. (ksi)	T/R. (ksi)	Res. (ksi)	Max. Usage %	At Pt.
P	P:t	Origin	0.00	18.46	0.65	-0.21	-0.00	0.00	0.0	-0.07	0.02	-0.00	-0.00	0.00	0.00	0.00	0.00	0.0	5
P	P:tc	End	1.10	18.13	0.64	-0.20	0.02	-0.00	0.0	-0.07	0.02	-0.00	-0.00	0.00	0.00	0.00	0.00	0.0	2
P	P:tc	Origin	1.10	18.13	0.64	-0.20	6.32	-0.05	0.0	-20.82	6.13	-0.04	-0.65	0.26	0.28	0.00	1.03	1.6	3
P	P:Clamp-T	End	5.00	17.00	0.59	-0.19	30.19	-0.18	0.0	-20.82	6.13	-0.04	-0.62	1.55	0.10	0.00	2.18	3.4	2
P	P:Clamp-T	Origin	5.00	17.00	0.59	-0.19	46.08	7.55	5.6	-16.72	9.14	-0.30	-0.50	2.47	0.15	0.15	3.01	4.6	2
P	Tube 1	End	10.00	15.57	0.53	-0.17	91.78	6.03	5.6	-16.72	9.14	-0.30	-0.48	4.34	0.14	0.13	4.84	7.5	2
P	Tube 1	Origin	10.00	15.57	0.53	-0.17	91.78	6.03	5.6	-17.46	9.28	-0.31	-0.50	4.34	0.14	0.13	4.87	7.5	2
P	P:Clamp-B	End	15.00	14.17	0.47	-0.15	138.19	4.50	5.6	-17.46	9.28	-0.31	-0.48	5.90	0.13	0.12	6.39	9.8	2
P	P:Clamp-B	Origin	15.00	14.17	0.47	-0.15	144.36	-18.89	4.9	-30.46	8.81	-0.09	-0.83	6.33	0.13	0.11	7.17	11.0	2
P	P:CX10	End	20.00	12.82	0.42	-0.13	188.41	-19.32	4.9	-30.46	8.81	-0.09	-0.79	7.49	0.12	0.10	8.29	12.8	2
P	P:CX10	Origin	20.00	12.82	0.42	-0.13	188.41	-20.63	5.0	-31.97	9.00	-0.09	-0.83	7.51	0.12	0.10	8.35	12.8	2
P	P:mc	End	23.46	11.92	0.38	-0.12	219.53	-20.93	5.0	-31.97	9.00	-0.09	-0.81	8.21	0.12	0.09	9.02	13.9	2
P	P:mc	Origin	23.46	11.92	0.38	-0.12	224.47	-20.96	5.0	-48.95	13.56	-0.11	-1.24	8.39	0.18	0.09	9.64	14.8	2
P	Tube 1	End	26.73	11.09	0.35	-0.11	268.83	-21.32	5.0	-48.95	13.56	-0.11	-1.20	9.47	0.18	0.09	10.69	16.4	2
P	Tube 1	Origin	26.73	11.09	0.35	-0.11	268.83	-21.32	5.0	-49.52	13.64	-0.11	-1.22	9.47	0.18	0.09	10.70	16.5	2
P	P:CX9	End	30.00	10.30	0.32	-0.10	313.44	-21.67	5.0	-49.52	13.64	-0.11	-1.18	10.44	0.17	0.09	11.64	17.9	2
P	P:CX9	Origin	30.00	10.30	0.32	-0.10	313.44	-23.09	5.1	-51.09	13.81	-0.11	-1.22	10.45	0.17	0.09	11.69	18.0	2
P	Tube 1	End	35.00	9.14	0.27	-0.09	382.47	-23.63	5.1	-51.09	13.81	-0.11	-1.18	11.75	0.17	0.08	12.93	19.9	2
P	Tube 1	Origin	35.00	9.14	0.27	-0.09	382.47	-23.63	5.1	-52.02	13.92	-0.11	-1.20	11.75	0.17	0.08	12.95	19.9	2
P	P:CX8	End	40.00	8.06	0.24	-0.08	452.06	-24.17	5.1	-52.02	13.92	-0.11	-1.15	12.84	0.16	0.07	14.00	21.5	2
P	P:CX8	Origin	40.00	8.06	0.24	-0.08	452.06	-25.68	5.3	-53.66	14.08	-0.11	-0.89	9.61	0.12	0.06	10.50	16.2	2
P	Tube 2	End	42.73	7.50	0.22	-0.07	490.49	-25.97	5.3	-53.66	14.08	-0.11	-0.87	10.00	0.12	0.05	10.88	16.7	2
P	Tube 2	Origin	42.73	7.50	0.22	-0.07	490.49	-25.98	5.3	-54.34	14.16	-0.11	-0.88	10.00	0.12	0.05	10.89	16.7	2
P	P:bc	End	45.46	6.96	0.20	-0.07	529.12	-26.27	5.3	-54.34	14.16	-0.11	-0.86	10.36	0.12	0.05	11.23	17.3	2
P	P:bc	Origin	45.46	6.96	0.20	-0.07	533.97	-26.29	5.3	-71.71	18.64	-0.13	-1.14	10.46	0.16	0.05	11.60	17.8	2
P	P:CX7	End	50.00	6.11	0.17	-0.06	618.65	-26.87	5.3	-71.71	18.64	-0.13	-1.11	11.34	0.15	0.05	12.45	19.2	2
P	P:CX7	Origin	50.00	6.11	0.17	-0.06	618.65	-28.48	5.4	-73.61	18.81	-0.13	-1.13	11.35	0.15	0.05	12.49	19.2	2
P	Tube 2	End	53.58	5.48	0.15	-0.05	686.06	-28.93	5.4	-73.61	18.81	-0.13	-1.11	11.97	0.15	0.05	13.08	20.1	2
P	Tube 2	Origin	53.58	5.48	0.15	-0.05	686.06	-28.94	5.4	-74.58	18.89	-0.13	-1.12	11.97	0.15	0.05	13.10	20.2	2
P	SpliceT	End	57.17	4.88	0.14	-0.05	753.76	-29.39	5.4	-74.58	18.89	-0.13	-1.10	12.53	0.15	0.05	13.63	21.0	2
P	SpliceT	Origin	57.17	4.88	0.14	-0.05	753.76	-29.40	5.4	-75.82	18.97	-0.13	-1.11	12.53	0.15	0.05	13.65	21.0	2
P	P:CX6	End	60.00	4.43	0.12	-0.04	807.52	-29.76	5.4	-75.82	18.97	-0.13	-1.00	12.10	0.13	0.04	13.10	20.1	2
P	P:CX6	Origin	60.00	4.43	0.12	-0.04	807.52	-31.46	5.6	-78.23	19.12	-0.13	-1.03	12.10	0.13	0.04	13.14	20.2	2
P	SpliceB	End	63.00	3.98	0.11	-0.04	864.88	-31.85	5.6	-78.23	19.12	-0.13	-1.01	12.45	0.13	0.04	13.47	20.7	2
P	SpliceB	Origin	63.00	3.98	0.11	-0.04	864.88	-31.85	5.6	-79.59	19.20	-0.13	-1.03	12.45	0.13	0.04	13.48	20.7	2
P	Tube 3	End	66.50	3.49	0.10	-0.03	932.09	-32.30	5.6	-79.59	19.20	-0.13	-1.00	12.82	0.13	0.04	13.83	21.3	2
P	Tube 3	Origin	66.50	3.49	0.10	-0.03	932.09	-32.31	5.6	-80.70	19.29	-0.13	-1.02	12.82	0.13	0.04	13.84	21.3	2
P	P:CX5	End	70.00	3.03	0.08	-0.03	999.59	-32.76	5.6	-80.70	19.29	-0.13	-0.99	13.15	0.13	0.04	14.15	21.8	2
P	P:CX5	Origin	70.00	3.03	0.08	-0.03	999.59	-34.53	5.7	-82.68	19.44	-0.13	-1.02	13.16	0.13	0.04	14.18	21.8	2
P	Tube 3	End	73.63	2.60	0.07	-0.03	1070.06	-35.00	5.7	-82.68	19.44	-0.13	-1.00	13.46	0.12	0.04	14.46	22.2	2
P	Tube 3	Origin	73.63	2.60	0.07	-0.03	1070.06	-35.00	5.7	-83.88	19.53	-0.13	-1.01	13.46	0.12	0.04	14.47	22.3	2
P	SpliceT	End	77.25	2.20	0.06	-0.02	1140.84	-35.48	5.7	-83.88	19.53	-0.13	-0.99	13.73	0.12	0.04	14.72	22.6	2
P	SpliceT	Origin	77.25	2.20	0.06	-0.02	1140.84	-35.48	5.7	-85.00	19.61	-0.13	-0.90	12.34	0.11	0.03	13.24	20.4	2
P	P:CX4	End	80.00	1.92	0.05	-0.02	1194.76	-35.84	5.7	-85.00	19.61	-0.13	-0.89	12.50	0.11	0.03	13.39	20.6	2
P	P:CX4	Origin	80.00	1.92	0.05	-0.02	1194.76	-37.71	5.9	-87.29	19.78	-0.13	-0.91	12.51	0.11	0.03	13.42	20.7	2
P	Tube 4	End	85.00	1.47	0.04	-0.02	1293.67	-38.38	5.9	-87.29	19.78	-0.13	-0.88	12.78	0.11	0.03	13.66	21.0	2
P	Tube 4	Origin	85.00	1.47	0.04	-0.02	1293.67	-38.38	5.9	-89.23	19.92	-0.14	-0.90	12.78	0.11	0.03	13.68	21.1	2
P	P:CX3	End	90.00	1.07	0.03	-0.01	1393.27	-39.05	5.9	-89.23	19.92	-0.14	-0.88	13.00	0.10	0.03	13.88	21.4	2
P	P:CX3	Origin	90.00	1.07	0.03	-0.01	1393.27	-41.02	6.0	-91.77	20.11	-0.14	-0.90	13.01	0.11	0.03	13.91	21.4	2
P	Tube 4	End	93.63	0.83	0.02	-0.01	1466.15	-41.51	6.0	-91.77	20.11	-0.14	-0.89	13.15	0.10	0.03	14.04	21.6	2
P	Tube 4	Origin	93.63	0.83	0.02	-0.01	1466.15	-41.52	6.0	-93.24	20.21	-0.14	-0.90	13.15	0.10	0.03	14.05	21.6	2
P	SpliceT	End	97.25	0.61	0.02	-0.01	1539.41	-42.01	6.0	-93.24	20.21	-0.14	-0.88	13.27	0.10	0.03	14.16	21.8	2
P	SpliceT	Origin	97.25	0.61	0.02	-0.01	1539.41	-42.02	6.0	-94.55	20.30	-0.14	-0.90	13.27	0.10	0.03	14.17	21.8	2
P	P:CX2	End	100.00	0.47	0.01	-0.01	1595.24	-42.40	6.0	-94.55	20.30	-0.14	-0.88	13.36	0.10	0.03	14.24	21.9	2
P	P:CX2	Origin	100.00	0.47	0.01	-0.01	1595.24	-44.46	6.2	-97.01	20.48	-0.14	-0.91	13.36	0.10	0.03	14.27	22.0	2
P	Tube 5	End	105.00	0.27	0.01	-0.01	1697.64	-45.16	6.2	-97.01	20.48	-0.14	-0.88	13.50	0.10	0.03	14.38	22.1	2
P	Tube 5	Origin	105.00	0.27	0.01	-0.01	1697.64	-45.17	6.2	-99.17	20.63	-0.14	-0.90	13.50	0.10	0.03	14.40	22.2	2
P	P:CX1	End	110.00	0.12	0.00	-0.00	1800.79	-45.87	6.2	-99.17	20.63	-0.14	-0.88	13.61	0.10	0.02	14.49	22.3	2
P	P:CX1	Origin	110.00	0.12	0.00	-0.00	1800.79	-49.11	6.4	-102.61	20.87	-0.15	-0.91	13.61	0.10	0.02	14.53	22.3	2
P	Tube 5	End	115.00	0.03	0.00	-0.00	1905.16	-49.83	6.4	-102.61	20.87	-0.15	-0.89	13.71	0.10	0.02	14.60	22.5	2
P	Tube 5	Origin	115.00	0.03	0.00	-0.00	1905.16	-49.84	6.4	-104.87	21.03	-0.15	-0.91	13.71	0.10	0.02	14.62	22.5	2
P	P:g	End	120.00	0.00	0.00	0.00	2010.31	-50.56	6.4	-104.87	21.03	-0.15	-0.89	13.78	0.09	0.02	14.67	22.6	2

Detailed Tubular Davit Arm Usages for Load Case "NESC 250D (Extreme Ice w/Wind)":

Element Label	Joint Label	Joint Position	Rel. Dist. (ft)	Trans. Defl. (in)	Long. Defl. (in)	Vert. Defl. (in)	Vert. Mom. (ft-k)	Horz. Mom. (ft-k)	Tors. Mom. (ft-k)	Axial Force (kips)	Vert. Shear (kips)	Horz. Shear (kips)	P/A (ksi)	M/S. (ksi)	V/Q. (ksi)	T/R. (ksi)	Res. (ksi)	Max. Usage %	At Pt.
TL	TL:O	Origin	0.00	18.13	0.63	-0.53	-153.79	-0.26	-0.0	2.09	10.24	0.02	0.11	21.24	0.00	0.00	21.35	32.8	1
TL	#TL:0	End	5.00	18.26	0.61	-2.12	-102.60	-0.18	-0.0	2.09	10.24	0.02	0.12	18.45	0.00	0.00	18.57	28.6	1
TL	#TL:0	Origin	5.00	18.26	0.61	-2.12	-102.60	-0.18	-0.0	2.15	9.95	0.02	0.13	18.45	0.00	0.00	18.57	28.6	1
TL	#TL:1	End	9.53	18.38	0.60	-3.77	-57.51	-0.10	-0.0	2.15	9.95	0.02	0.14	13.59	0.00	0.00	13.73	21.1	1
TL	#TL:1	Origin	9.53	18.38	0.60	-3.77	-57.51	-0.10	-0.0	2.19	9.72	0.02	0.15	13.59	0.00	0.00	13.74	21.1	1
TL	TL:1	End	14.06	18.52	0.58	-5.59	-13.49	-0.03	-0.0	2.19	9.72	0.02	0.17	4.37	0.00	0.00	4.55	7.0	1
TL	TL:1	Origin	14.06	18.52	0.58	-5.59	-13.49	-0.03	-0.0	0.59	1.84	0.00	0.05	4.37	0.00	0.00	4.42	6.8	1
TL	#TL:2	End	16.95	18.61	0.57	-6.79	-8.17	-0.02	-0.0	0.59	1.84	0.00	0.05	3.34	0.00	0.00	3.39	5.2	1
TL	#TL:2	Origin	16.95	18.61	0.57	-6.79	-8.17	-0.02	-0.0	0.59	1.73	0.00	0.05	3.34	0.00	0.00	3.39	5.2	1
TL	TL:2	End	19.83	18.70	0.56	-8.02	-3.17	-0.01	-0.0	0.59	1.73	0.00	0.06	1.68	0.00	0.00	1.74	2.7	1
TL	TL:2	Origin	19.83	18.70	0.56	-8.02	-3.17	-0.01	0.0	0.75	1.59	0.00	0.08	1.68	0.00	0.00	1.76	2.7	1
TL	TL:3	End	21.83	18.68	0.55	-8.88	0.00	0.00	0.0	0.75	1.59	0.00	0.08	0.00	0.37	0.00	0.64	1.0	3
TR	TR:O	Origin	0.00	18.14	0.64	0.12	-147.41	0.25	0.0	-3.93	9.77	-0.02	-0.20	20.36	0.00	0.00	20.56	31.6	1
TR	#TR:0	End	5.00	18.27	0.67	1.44	-98.57	0.17	0.0	-3.93	9.77	-0.02	-0.23	17.72	0.00	0.00	17.95	27.6	1
TR	#TR:0	Origin	5.00	18.27	0.67	1.44	-98.57	0.17	0.0	-3.86	9.51	-0.02	-0.23	17.72	0.00	0.00	17.95	27.6	1
TR	#TR:1	End	9.53	18.37	0.69	2.42	-55.50	0.10	0.0	-3.86	9.51	-0.02	-0.26	13.11	0.00	0.00	13.37	20.6	1
TR	#TR:1	Origin	9.53	18.37	0.69	2.42	-55.50	0.10	0.0	-3.80	9.29	-0.02	-0.26	13.11	0.00	0.00	13.37	20.6	1
TR	TR:1	End	14.06	18.46	0.72	3.24	-13.41	0.03	0.0	-3.80	9.29	-0.02	-0.30	4.35	0.00	0.00	4.65	7.1	1
TR	TR:1	Origin	14.06	18.46	0.72	3.24	-13.41	0.03	0.0	-0.92	1.80	-0.00	-0.07	4.35	0.00	0.00	4.42	6.8	1
TR	#TR:2	End	16.95	18.50	0.73	3.72	-8.22	0.02	0.0	-0.92	1.80	-0.00	-0.08	3.36	0.00	0.00	3.44	5.3	1
TR	#TR:2	Origin	16.95	18.50	0.73	3.72	-8.22	0.02	0.0	-0.91	1.69	-0.00	-0.08	3.36	0.00	0.00	3.44	5.3	1
TR	TR:2	End	19.83	18.55	0.75	4.18	-3.36	0.01	0.0	-0.91	1.69	-0.00	-0.09	1.78	0.00	0.00	1.87	2.9	1
TR	TR:2	Origin	19.83	18.55	0.75	4.18	-3.36	0.01	0.0	-0.75	1.68	-0.00	-0.08	1.78	0.00	0.00	1.86	2.9	1
TR	TR:3	End	21.83	18.55	0.76	4.49	-0.00	0.00	0.0	-0.75	1.68	-0.00	-0.08	0.00	0.39	0.00	0.68	1.0	3
ML	ML:O	Origin	0.00	11.92	0.38	-0.48	-112.37	-0.16	-0.0	1.46	8.24	0.01	0.08	17.34	0.00	0.00	17.42	26.8	1
ML	#ML:0	End	5.00	12.04	0.37	-1.88	-71.14	-0.10	-0.0	1.46	8.24	0.01	0.10	16.43	0.00	0.00	16.53	25.4	1
ML	#ML:0	Origin	5.00	12.04	0.37	-1.88	-71.14	-0.10	-0.0	1.51	8.02	0.01	0.10	16.43	0.00	0.00	16.53	25.4	1
ML	#ML:1	End	8.53	12.13	0.36	-3.02	-42.86	-0.06	-0.0	1.51	8.02	0.01	0.12	13.95	0.00	0.00	14.06	21.6	1
ML	#ML:1	Origin	8.53	12.13	0.36	-3.02	-42.86	-0.06	-0.0	1.54	7.86	0.01	0.12	13.95	0.00	0.00	14.07	21.6	1
ML	ML:1	End	12.06	12.24	0.35	-4.28	-15.13	-0.02	-0.0	1.54	7.86	0.01	0.15	7.45	0.00	0.00	7.60	11.7	1
ML	ML:1	Origin	12.06	12.24	0.35	-4.28	-15.13	-0.02	0.0	2.30	7.57	0.01	0.22	7.45	0.00	0.00	7.67	11.8	1
ML	ML:2	End	14.06	12.22	0.35	-5.03	0.00	0.00	0.0	2.30	7.57	0.01	0.26	0.00	1.75	0.00	3.04	4.7	3
MR	MR:O	Origin	0.00	11.92	0.38	0.23	-107.43	0.15	0.0	-2.99	7.82	-0.01	-0.16	16.58	0.00	0.00	16.74	25.8	1
MR	#MR:0	End	5.00	12.05	0.40	1.38	-68.36	0.10	0.0	-2.99	7.82	-0.01	-0.20	15.79	0.00	0.00	15.98	24.6	1
MR	#MR:0	Origin	5.00	12.05	0.40	1.38	-68.36	0.10	0.0	-2.94	7.60	-0.01	-0.20	15.79	0.00	0.00	15.98	24.6	1
MR	#MR:1	End	8.53	12.12	0.41	2.06	-41.53	0.06	0.0	-2.94	7.60	-0.01	-0.23	13.51	0.00	0.00	13.75	21.1	1
MR	#MR:1	Origin	8.53	12.12	0.41	2.06	-41.53	0.06	0.0	-2.90	7.46	-0.01	-0.23	13.51	0.00	0.00	13.74	21.1	1
MR	MR:1	End	12.06	12.18	0.43	2.61	-15.21	0.02	0.0	-2.90	7.46	-0.01	-0.28	7.49	0.00	0.00	7.77	12.0	1
MR	MR:1	Origin	12.06	12.18	0.43	2.61	-15.21	0.02	0.0	-2.15	7.61	-0.01	-0.21	7.49	0.00	0.00	7.70	11.8	1
MR	MR:2	End	14.06	12.18	0.43	2.89	-0.00	0.00	0.0	-2.15	7.61	-0.01	-0.24	0.00	1.76	0.00	3.05	4.7	3
BL	BL:O	Origin	0.00	6.96	0.20	-0.39	-112.48	-0.12	-0.0	1.42	8.25	0.01	0.08	17.36	0.00	0.00	17.44	26.8	1
BL	#BL:0	End	5.00	7.06	0.19	-1.48	-71.22	-0.08	-0.0	1.42	8.25	0.01	0.09	16.45	0.00	0.00	16.54	25.4	1
BL	#BL:0	Origin	5.00	7.06	0.19	-1.48	-71.22	-0.08	-0.0	1.46	8.02	0.01	0.10	16.45	0.00	0.00	16.54	25.5	1
BL	#BL:1	End	8.53	7.14	0.19	-2.39	-42.91	-0.05	-0.0	1.46	8.02	0.01	0.12	13.96	0.00	0.00	14.08	21.7	1
BL	#BL:1	Origin	8.53	7.14	0.19	-2.39	-42.91	-0.05	-0.0	1.50	7.87	0.01	0.12	13.96	0.00	0.00	14.08	21.7	1
BL	BL:1	End	12.06	7.22	0.19	-3.43	-15.16	-0.02	-0.0	1.50	7.87	0.01	0.15	7.46	0.00	0.00	7.61	11.7	1
BL	BL:1	Origin	12.06	7.22	0.19	-3.43	-15.16	-0.02	0.0	2.26	7.58	0.01	0.22	7.46	0.00	0.00	7.68	11.8	1
BL	BL:2	End	14.06	7.22	0.19	-4.06	-0.00	0.00	0.0	2.26	7.58	0.01	0.25	0.00	1.75	0.00	3.04	4.7	3
BR	BR:O	Origin	0.00	6.97	0.20	0.25	-107.64	0.12	0.0	-2.95	7.83	-0.01	-0.16	16.61	0.00	0.00	16.77	25.8	1
BR	#BR:0	End	5.00	7.05	0.21	1.09	-68.49	0.07	0.0	-2.95	7.83	-0.01	-0.20	15.82	0.00	0.00	16.01	24.6	1
BR	#BR:0	Origin	5.00	7.05	0.21	1.09	-68.49	0.07	0.0	-2.90	7.62	-0.01	-0.19	15.82	0.00	0.00	16.01	24.6	1
BR	#BR:1	End	8.53	7.10	0.22	1.55	-41.61	0.04	0.0	-2.90	7.62	-0.01	-0.23	13.54	0.00	0.00	13.77	21.2	1
BR	#BR:1	Origin	8.53	7.10	0.22	1.55	-41.61	0.04	0.0	-2.86	7.47	-0.01	-0.23	13.54	0.00	0.00	13.76	21.2	1
BR	BR:1	End	12.06	7.13	0.23	1.88	-15.24	0.02	0.0	-2.86	7.47	-0.01	-0.28	7.50	0.00	0.00	7.78	12.0	1
BR	BR:1	Origin	12.06	7.13	0.23	1.88	-15.24	0.02	0.0	-2.11	7.62	-0.01	-0.20	7.50	0.00	0.00	7.70	11.9	1
BR	BR:2	End	14.06	7.14	0.23	2.04	-0.00	0.00	0.0	-2.11	7.62	-0.01	-0.23	0.00	1.76	0.00	3.06	4.7	3
CX1	CX1:O	Origin	0.00	0.12	0.00	-0.01	-0.31	0.02	0.0	0.01	1.24	-0.09	0.01	40.40	4.21	0.00	41.06	63.2	1
CX1	CX1:1	End	0.25	0.12	0.00	-0.01	-0.00	0.00	0.0	0.01	1.24	-0.09	0.01	0.00	4.21	0.00	7.29	11.2	1
CX2	CX2:O	Origin	0.00	0.47	0.01	-0.01	-0.21	0.02	0.0	0.00	0.82	-0.06	0.00	26.94	2.81	0.00	27.37	42.1	1
CX2	CX2:1	End	0.25	0.47	0.01	-0.02	-0.00	-0.00	0.0	0.00	0.82	-0.06	0.00	0.00	2.81	0.00	4.86	7.5	1
CX3	CX3:O	Origin	0.00	1.07	0.03	-0.02	-0.21	0.02	0.0	0.00	0.82	-0.06	0.00	26.94	2.81	0.00	27.38	42.1	1
CX3	CX3:1	End	0.25	1.07	0.03	-0.02	-0.00	-0.00	0.0	0.00	0.82	-0.06	0.00	0.00	2.81	0.00	4.86	7.5	1
CX4	CX4:O	Origin	0.00	1.92	0.05	-0.03	-0.21	0.02	0.0	0.00	0.82	-0.07	0.00	26.94	2.81	0.00	27.38	42.1	1
CX4	CX4:1	End	0.25	1.92	0.05	-0.03	-0.00	-0.00	0.0	0.00	0.82	-0.07	0.00	0.00	2.81	0.00	4.86	7.5	1
CX5	CX5:O	Origin	0.00	3.04	0.08	-0.04	-0.21	0.02	0.0	0.00	0.82	-0.07	0.00	26.94	2.81	0.00	27.38	42.1	1

CX5	CX5:1	End	0.25	3.04	0.08	-0.04	-0.00	-0.00	0.0	0.00	0.82	-0.07	0.00	0.00	2.81	0.00	4.86	7.5	1
CX6	CX6:O	Origin	0.00	4.43	0.12	-0.05	-0.21	0.02	0.0	0.00	0.82	-0.07	0.00	26.94	2.81	0.00	27.38	42.1	1
CX6	CX6:1	End	0.25	4.43	0.12	-0.06	-0.00	-0.00	0.0	0.00	0.82	-0.07	0.00	0.00	2.81	0.00	4.86	7.5	1
CX7	CX7:O	Origin	0.00	6.11	0.17	-0.07	-0.21	0.02	0.0	0.00	0.82	-0.07	0.01	26.94	2.81	0.00	27.38	42.1	1
CX7	CX7:1	End	0.25	6.11	0.17	-0.07	-0.00	-0.00	0.0	0.00	0.82	-0.07	0.01	0.00	2.81	0.00	4.86	7.5	1
CX8	CX8:O	Origin	0.00	8.06	0.24	-0.09	-0.21	0.02	0.0	0.00	0.82	-0.07	0.01	26.94	2.81	0.00	27.38	42.1	1
CX8	CX8:1	End	0.25	8.06	0.24	-0.10	-0.00	-0.00	0.0	0.00	0.82	-0.07	0.01	0.00	2.81	0.00	4.86	7.5	1
CX9	CX9:O	Origin	0.00	10.30	0.32	-0.12	-0.21	0.02	0.0	0.00	0.82	-0.08	0.01	26.94	2.81	0.00	27.38	42.1	1
CX9	CX9:1	End	0.25	10.30	0.32	-0.12	-0.00	-0.00	0.0	0.00	0.82	-0.08	0.01	0.00	2.81	0.00	4.86	7.5	1
CX10	CX10:O	Origin	0.00	12.83	0.42	-0.15	-0.21	0.02	0.0	0.00	0.82	-0.08	0.01	26.94	2.81	0.00	27.38	42.1	1
CX10	CX10:1	End	0.25	12.83	0.42	-0.16	-0.00	-0.00	0.0	0.00	0.82	-0.08	0.01	0.00	2.81	0.00	4.86	7.5	1
Clamp-B	Clamp-B:O	Origin	0.00	14.18	0.47	-0.17	-7.67	0.12	-6.2	-0.22	12.20	0.61	-0.02	2.10	1.68	0.85	4.85	7.5	1
Clamp-B	Clamp-B:1	End	0.75	14.18	0.47	-0.18	1.52	0.58	-6.2	-0.22	12.20	0.61	-0.02	0.45	1.68	0.85	4.39	6.8	1
Clamp-T	Clamp-T:O	Origin	0.00	17.01	0.59	-0.20	2.21	2.16	-15.9	0.26	-4.75	-2.89	0.02	0.85	0.76	2.18	5.16	7.9	1
Clamp-T	Clamp-T:1	End	0.87	17.01	0.59	-0.22	-1.94	-0.36	-15.9	0.26	-4.75	-2.89	0.02	0.54	0.76	2.18	5.12	7.9	1
CX11	Mast:CX11	Origin	0.00	15.57	0.53	-0.20	-0.83	0.08	0.0	0.00	0.83	-0.08	0.00	7.26	0.77	0.00	7.38	11.4	1
CX11	CX11:1	End	1.00	15.58	0.53	-0.22	-0.00	-0.00	0.0	0.00	0.83	-0.08	0.00	0.00	0.77	0.00	1.33	2.0	1
CX12	Mast:CX12	Origin	0.00	18.53	0.65	-0.24	-0.83	0.09	0.0	0.00	0.83	-0.09	0.00	7.26	0.77	0.00	7.39	11.4	1
CX12	CX12:1	End	1.00	18.54	0.65	-0.26	-0.00	-0.00	0.0	0.00	0.83	-0.09	0.00	0.00	0.77	0.00	1.33	2.1	1
CX13	Mast:ANT	Origin	0.00	21.79	0.78	-0.28	-0.41	0.05	0.0	0.00	0.41	-0.05	0.00	3.65	0.39	0.00	3.71	5.7	1
CX13	CX13:1	End	1.00	21.79	0.78	-0.30	-0.00	-0.00	0.0	0.00	0.41	-0.05	0.00	0.00	0.39	0.00	0.67	1.0	1

Detailed Tubular X-Arm Usages for Load Case "NESC 250D (Extreme Ice w/Wind)":

Element Label	Joint Label	Joint Position	Rel. Dist. (ft)	Trans. Defl. (in)	Long. Defl. (in)	Vert. Defl. (in)	Vert. Mom. (ft-k)	Horz. Mom. (ft-k)	Tors. Mom. (ft-k)	Axial Force (kips)	Vert. Shear (kips)	Horz. Shear (kips)	P/A (ksi)	M/S. (ksi)	V/Q. (ksi)	T/R. (ksi)	Res. (ksi)	Max. Usage %	At Pt.
Mast	Mast:O	Origin	0.00	14.18	0.47	-0.18	-6.17	1.52	0.6	-12.11	-0.63	-0.22	-0.67	1.43	0.07	0.07	2.12	6.1	1
Mast	#sMast:0	End	2.50	14.87	0.50	-0.19	-7.74	0.98	0.6	-12.11	-0.63	-0.22	-0.67	1.76	0.07	0.07	2.45	7.0	1
Mast	#sMast:0	Origin	2.50	14.87	0.50	-0.19	-7.74	0.98	0.6	-11.96	-0.65	-0.22	-0.67	1.76	0.08	0.07	2.44	7.0	1
Mast	Mast:CX11	End	5.00	15.57	0.53	-0.20	-9.37	0.43	0.6	-11.96	-0.65	-0.22	-0.67	2.12	0.08	0.07	2.79	8.0	1
Mast	Mast:CX11	Origin	5.00	15.57	0.53	-0.20	-9.37	1.25	0.5	-10.97	-0.76	-0.22	-0.61	2.13	0.09	0.06	2.76	7.9	1
Mast	#sMast:1	End	7.50	16.29	0.56	-0.21	-11.28	0.70	0.5	-10.97	-0.76	-0.22	-0.61	2.55	0.09	0.06	3.17	9.1	1
Mast	#sMast:1	Origin	7.50	16.29	0.56	-0.21	-11.28	0.70	0.5	-10.82	-0.79	-0.22	-0.60	2.55	0.09	0.06	3.16	9.0	1
Mast	Mast:Top	End	10.00	17.01	0.59	-0.22	-13.25	0.14	0.5	-10.82	-0.79	-0.22	-0.60	2.99	0.09	0.06	3.60	10.3	1
Mast	Mast:Top	Origin	10.00	17.01	0.59	-0.22	-29.13	-1.80	0.1	-5.82	2.06	0.04	-0.32	6.59	0.23	0.02	6.92	19.8	1
Mast	Mast:CX12	End	15.00	18.53	0.65	-0.24	-18.84	-1.60	0.1	-5.82	2.06	0.04	-0.32	4.27	0.23	0.02	4.61	13.2	1
Mast	Mast:CX12	Origin	15.00	18.53	0.65	-0.24	-18.84	-0.78	0.0	-4.68	1.91	0.04	-0.26	4.26	0.21	0.01	4.53	12.9	1
Mast	#sMast:2	End	20.00	20.14	0.72	-0.26	-9.30	-0.59	0.0	-4.68	1.91	0.04	-0.26	2.10	0.21	0.01	2.39	6.8	1
Mast	#sMast:2	Origin	20.00	20.14	0.72	-0.26	-9.30	-0.59	0.0	-4.45	1.86	0.04	-0.25	2.10	0.21	0.01	2.38	6.8	1
Mast	#sMast:3	End	22.50	20.96	0.75	-0.27	-4.64	-0.50	0.0	-4.45	1.86	0.04	-0.25	1.05	0.21	0.01	1.35	3.9	1
Mast	#sMast:3	Origin	22.50	20.96	0.75	-0.27	-4.64	-0.50	0.0	-4.30	1.83	0.04	-0.24	1.05	0.20	0.01	1.34	3.8	1
Mast	Mast:ANT	End	25.00	21.79	0.78	-0.28	-0.06	-0.42	0.0	-4.30	1.83	0.04	-0.24	0.09	0.20	0.01	0.49	1.4	1
Mast	Mast:ANT	Origin	25.00	21.79	0.78	-0.28	-0.06	-0.00	0.0	-0.09	0.02	0.00	-0.01	0.01	0.00	0.00	0.02	0.1	1
Mast	Mast:E	End	28.00	22.78	0.83	-0.29	0.00	0.00	0.0	-0.09	0.02	0.00	-0.01	0.00	0.00	0.00	0.01	0.0	1

Summary of Suspension Capacities and Usages for Load Case "NESC 250D (Extreme Ice w/Wind)":

Suspension Label	Tension (kips)	Input Tension Capacity (kips)	Factored Tension Capacity (kips)	Tension Usage %	Input Hardware Capacity (kips)	Factored Hardware Capacity (kips)	Hardware Usage %	Max. Usage %
SWL	1.723	20.00	20.00	8.62	0.00	0.00	0.00	8.62
SWR	1.808	20.00	20.00	9.04	0.00	0.00	0.00	9.04
TCL	7.878	20.00	20.00	39.39	0.00	0.00	0.00	39.39
TCR	7.874	20.00	20.00	39.37	0.00	0.00	0.00	39.37
MCL	7.878	20.00	20.00	39.39	0.00	0.00	0.00	39.39
MCR	7.874	20.00	20.00	39.37	0.00	0.00	0.00	39.37
BCL	7.878	20.00	20.00	39.39	0.00	0.00	0.00	39.39
BCR	7.874	20.00	20.00	39.37	0.00	0.00	0.00	39.37

*** Overall summary for all load cases - Usage = Maximum Stress / Allowable Stress

Summary of Steel Pole Usages:

Steel Pole Label	Maximum Usage %	Load Case	Segment Number	Weight (lbs)
P	59.37	NESC 250C (Extreme Wind)	31	35830.6

Base Plate Results by Bend Line:

Pole Label	Load Case	Bend Line #	Start X (ft)	Start Y (ft)	End X (ft)	End Y (ft)	Length (in)	Bending Stress (ksi)	Bolt Mom. Sum (ft-k)	# Bolts Acting	Bolt Max Load (kips)	Min Plate Thickness (in)	Actual Thickness (in)	Usage %
P	NESC 250B (Heavy)	1	2.239	1.568	0.232	2.727	27.811	12.715	69.066	5	59.789	1.726	3.750	21.19
P	NESC 250B (Heavy)	2	2.727	0.232	1.568	2.239	27.811	7.566	41.096	5	46.720	1.332	3.750	12.61
P	NESC 250B (Heavy)	3	2.478	-1.148	2.478	1.148	27.540	2.468	13.278	4	22.016	0.761	3.750	4.11
P	NESC 250B (Heavy)	4	1.568	-2.239	2.727	-0.232	27.811	6.128	33.286	5	-40.374	1.198	3.750	10.21
P	NESC 250B (Heavy)	5	0.232	-2.727	2.239	-1.568	27.811	11.046	60.002	5	-52.208	1.609	3.750	18.41
P	NESC 250B (Heavy)	6	-1.148	-2.478	1.148	-2.478	27.540	9.553	51.387	4	-52.208	1.496	3.750	15.92
P	NESC 250B (Heavy)	7	-2.239	-1.568	-0.232	-2.727	27.811	10.732	58.295	5	-51.768	1.586	3.750	17.89
P	NESC 250B (Heavy)	8	-2.727	-0.232	-1.568	-2.239	27.811	5.583	30.325	5	-38.699	1.144	3.750	9.30
P	NESC 250B (Heavy)	9	-2.478	1.148	-2.478	-1.148	27.540	2.468	13.278	4	24.469	0.761	3.750	4.11
P	NESC 250B (Heavy)	10	-1.568	2.239	-2.727	0.232	27.811	8.111	44.058	5	48.394	1.379	3.750	13.52
P	NESC 250B (Heavy)	11	-0.232	2.727	-2.239	1.568	27.811	13.029	70.773	5	60.228	1.747	3.750	21.72
P	NESC 250B (Heavy)	12	1.148	2.478	-1.148	2.478	27.540	11.055	59.462	4	60.228	1.610	3.750	18.42
P	NESC 250B (Heavy)	13	1.822	2.167	-0.488	2.786	28.706	7.112	39.873	5	60.228	1.291	3.750	11.85
P	NESC 250B (Heavy)	14	2.457	1.171	1.171	2.457	21.827	8.545	36.429	4	52.623	1.415	3.750	14.24
P	NESC 250B (Heavy)	15	2.786	-0.488	2.167	1.822	28.706	2.577	14.446	5	39.496	0.777	3.750	4.29
P	NESC 250B (Heavy)	16	2.167	-1.822	2.786	0.488	28.706	1.898	10.640	5	-33.474	0.667	3.750	3.16
P	NESC 250B (Heavy)	17	1.171	-2.457	2.457	-1.171	21.827	7.301	31.125	4	-45.902	1.308	3.750	12.17
P	NESC 250B (Heavy)	18	-0.488	-2.786	1.822	-2.167	28.706	6.211	34.824	5	-52.208	1.207	3.750	10.35
P	NESC 250B (Heavy)	19	-1.822	-2.167	0.488	-2.786	28.706	6.110	34.256	5	-52.208	1.197	3.750	10.18
P	NESC 250B (Heavy)	20	-2.457	-1.171	-1.171	-2.457	21.827	6.937	29.575	4	-44.603	1.275	3.750	11.56
P	NESC 250B (Heavy)	21	-2.786	0.488	-2.167	-1.822	28.706	1.600	8.972	5	-31.476	0.612	3.750	2.67
P	NESC 250B (Heavy)	22	-2.167	1.822	-2.786	-0.488	28.706	2.874	16.114	5	41.494	0.821	3.750	4.79
P	NESC 250B (Heavy)	23	-1.171	2.457	-2.457	1.171	21.827	8.909	37.979	4	53.922	1.445	3.750	14.85
P	NESC 250B (Heavy)	24	0.488	2.786	-1.822	2.167	28.706	7.213	40.441	5	60.228	1.300	3.750	12.02
P	NESC 250C (Extreme Wind)	1	2.239	1.568	0.232	2.727	27.811	26.145	142.017	5	123.191	2.475	3.750	43.57
P	NESC 250C (Extreme Wind)	2	2.727	0.232	1.568	2.239	27.811	15.191	82.515	5	95.877	1.887	3.750	25.32
P	NESC 250C (Extreme Wind)	3	2.478	-1.148	2.478	1.148	27.540	5.335	28.694	4	43.076	1.118	3.750	8.89
P	NESC 250C (Extreme Wind)	4	1.568	-2.239	2.727	-0.232	27.811	14.402	78.229	5	-92.336	1.837	3.750	24.00
P	NESC 250C (Extreme Wind)	5	0.232	-2.727	2.239	-1.568	27.811	25.204	136.906	5	-118.839	2.430	3.750	42.01
P	NESC 250C (Extreme Wind)	6	-1.148	-2.478	1.148	-2.478	27.540	21.833	117.439	4	-118.839	2.262	3.750	36.39
P	NESC 250C (Extreme Wind)	7	-2.239	-1.568	-0.232	-2.727	27.811	24.997	135.784	5	-118.550	2.420	3.750	41.66
P	NESC 250C (Extreme Wind)	8	-2.727	-0.232	-1.568	-2.239	27.811	14.043	76.282	5	-91.236	1.814	3.750	23.41
P	NESC 250C (Extreme Wind)	9	-2.478	1.148	-2.478	-1.148	27.540	5.335	28.694	4	44.689	1.118	3.750	8.89
P	NESC 250C (Extreme Wind)	10	-1.568	2.239	-2.727	0.232	27.811	15.549	84.462	5	96.977	1.909	3.750	25.92
P	NESC 250C (Extreme Wind)	11	-0.232	2.727	-2.239	1.568	27.811	26.351	143.139	5	123.480	2.485	3.750	43.92
P	NESC 250C (Extreme Wind)	12	1.148	2.478	-1.148	2.478	27.540	22.702	122.112	4	123.480	2.307	3.750	37.84
P	NESC 250C (Extreme Wind)	13	1.822	2.167	-0.488	2.786	28.706	14.652	82.151	5	123.480	1.853	3.750	24.42
P	NESC 250C (Extreme Wind)	14	2.457	1.171	1.171	2.457	21.827	17.468	74.468	4	108.353	2.023	3.750	29.11
P	NESC 250C (Extreme Wind)	15	2.786	-0.488	2.167	1.822	28.706	5.019	28.142	5	80.510	1.085	3.750	8.37
P	NESC 250C (Extreme Wind)	16	2.167	-1.822	2.786	0.488	28.706	4.650	26.071	5	-77.182	1.044	3.750	7.75
P	NESC 250C (Extreme Wind)	17	1.171	-2.457	2.457	-1.171	21.827	16.777	71.520	4	-104.565	1.983	3.750	27.96
P	NESC 250C (Extreme Wind)	18	-0.488	-2.786	1.822	-2.167	28.706	14.139	79.274	5	-118.839	1.820	3.750	23.57
P	NESC 250C (Extreme Wind)	19	-1.822	-2.167	0.488	-2.786	28.706	14.073	78.901	5	-118.839	1.816	3.750	23.45
P	NESC 250C (Extreme Wind)	20	-2.457	-1.171	-1.171	-2.457	21.827	16.538	70.501	4	-103.712	1.969	3.750	27.56
P	NESC 250C (Extreme Wind)	21	-2.786	0.488	-2.167	-1.822	28.706	4.454	24.974	5	-75.869	1.022	3.750	7.42
P	NESC 250C (Extreme Wind)	22	-2.167	1.822	-2.786	-0.488	28.706	5.215	29.238	5	81.823	1.106	3.750	8.69
P	NESC 250C (Extreme Wind)	23	-1.171	2.457	-2.457	1.171	21.827	17.707	75.486	4	109.207	2.037	3.750	29.51
P	NESC 250C (Extreme Wind)	24	0.488	2.786	-1.822	2.167	28.706	14.719	82.524	5	123.480	1.857	3.750	24.53
P	NESC 250D (Extreme Ice w/Wind)	1	2.239	1.568	0.232	2.727	27.811	9.958	54.093	5	46.836	1.528	3.750	16.60
P	NESC 250D (Extreme Ice w/Wind)	2	2.727	0.232	1.568	2.239	27.811	5.930	32.213	5	36.588	1.179	3.750	9.88
P	NESC 250D (Extreme Ice w/Wind)	3	2.478	-1.148	2.478	1.148	27.540	1.927	10.364	4	17.276	0.672	3.750	3.21
P	NESC 250D (Extreme Ice w/Wind)	4	1.568	-2.239	2.727	-0.232	27.811	4.759	25.848	5	-31.395	1.056	3.750	7.93
P	NESC 250D (Extreme Ice w/Wind)	5	0.232	-2.727	2.239	-1.568	27.811	8.589	46.654	5	-40.586	1.419	3.750	14.31
P	NESC 250D (Extreme Ice w/Wind)	6	-1.148	-2.478	1.148	-2.478	27.540	7.423	39.927	4	-40.586	1.319	3.750	12.37
P	NESC 250D (Extreme Ice w/Wind)	7	-2.239	-1.568	-0.232	-2.727	27.811	8.320	45.194	5	-40.210	1.396	3.750	13.87
P	NESC 250D (Extreme Ice w/Wind)	8	-2.727	-0.232	-1.568	-2.239	27.811	4.292	23.314	5	-29.962	1.003	3.750	7.15
P	NESC 250D (Extreme Ice w/Wind)	9	-2.478	1.148	-2.478	-1.148	27.540	1.927	10.364	4	19.375	0.672	3.750	3.21
P	NESC 250D (Extreme Ice w/Wind)	10	-1.568	2.239	-2.727	0.232	27.811	6.397	34.747	5	38.021	1.224	3.750	10.66
P	NESC 250D (Extreme Ice w/Wind)	11	-0.232	2.727	-2.239	1.568	27.811	10.227	55.553	5	47.212	1.548	3.750	17.05
P	NESC 250D (Extreme Ice w/Wind)	12	1.148	2.478	-1.148	2.478	27.540	8.663	46.599	4	47.212	1.425	3.750	14.44
P	NESC 250D (Extreme Ice w/Wind)	13	1.822	2.167	-0.488	2.786	28.706	5.570	31.231	5	47.212	1.143	3.750	9.28

P	NESC 250D (Extreme Ice w/Wind)	14	2.457	1.171	1.171	2.457	21.827	6.693	28.534	4	41.211	1.252	3.750	11.16
P	NESC 250D (Extreme Ice w/Wind)	15	2.786	-0.488	2.167	1.822	28.706	2.022	11.338	5	30.937	0.688	3.750	3.37
P	NESC 250D (Extreme Ice w/Wind)	16	2.167	-1.822	2.786	0.488	28.706	1.470	8.243	5	-26.021	0.587	3.750	2.45
P	NESC 250D (Extreme Ice w/Wind)	17	1.171	-2.457	2.457	-1.171	21.827	5.676	24.197	4	-35.696	1.153	3.750	9.46
P	NESC 250D (Extreme Ice w/Wind)	18	-0.488	-2.786	1.822	-2.167	28.706	4.829	27.076	5	-40.586	1.064	3.750	8.05
P	NESC 250D (Extreme Ice w/Wind)	19	-1.822	-2.167	0.488	-2.786	28.706	4.743	26.590	5	-40.586	1.054	3.750	7.90
P	NESC 250D (Extreme Ice w/Wind)	20	-2.457	-1.171	-1.171	-2.457	21.827	5.365	22.871	4	-34.585	1.121	3.750	8.94
P	NESC 250D (Extreme Ice w/Wind)	21	-2.786	0.488	-2.167	-1.822	28.706	1.216	6.816	5	-24.311	0.534	3.750	2.03
P	NESC 250D (Extreme Ice w/Wind)	22	-2.167	1.822	-2.786	-0.488	28.706	2.277	12.765	5	32.647	0.731	3.750	3.79
P	NESC 250D (Extreme Ice w/Wind)	23	-1.171	2.457	-2.457	1.171	21.827	7.004	29.860	4	42.322	1.281	3.750	11.67
P	NESC 250D (Extreme Ice w/Wind)	24	0.488	2.786	-1.822	2.167	28.706	5.657	31.717	5	47.212	1.151	3.750	9.43

Summary of Tubular Davit Usages:

Tubular Davit Label	Maximum Usage %	Load Case	Segment Number	Weight (lbs)
TL	36.07	NESC 250B (Heavy)	1	1053.0
TR	34.60	NESC 250B (Heavy)	1	1053.0
ML	30.26	NESC 250B (Heavy)	1	653.2
MR	29.02	NESC 250B (Heavy)	1	653.2
BL	30.29	NESC 250B (Heavy)	1	653.2
BR	29.09	NESC 250B (Heavy)	1	653.2
CX1	63.17	NESC 250D (Extreme Ice w/Wind)	1	0.5
CX2	42.12	NESC 250D (Extreme Ice w/Wind)	1	0.5
CX3	42.12	NESC 250D (Extreme Ice w/Wind)	1	0.5
CX4	42.12	NESC 250D (Extreme Ice w/Wind)	1	0.5
CX5	42.12	NESC 250D (Extreme Ice w/Wind)	1	0.5
CX6	42.12	NESC 250D (Extreme Ice w/Wind)	1	0.5
CX7	42.12	NESC 250D (Extreme Ice w/Wind)	1	0.5
CX8	42.12	NESC 250D (Extreme Ice w/Wind)	1	0.5
CX9	42.12	NESC 250D (Extreme Ice w/Wind)	1	0.5
CX10	42.12	NESC 250D (Extreme Ice w/Wind)	1	0.5
Clamp-B	31.65	NESC 250C (Extreme Wind)	1	37.4
Clamp-T	51.59	NESC 250C (Extreme Wind)	1	43.3
CX11	11.35	NESC 250D (Extreme Ice w/Wind)	1	7.3
CX12	11.36	NESC 250D (Extreme Ice w/Wind)	1	7.3
CX13	5.71	NESC 250D (Extreme Ice w/Wind)	1	7.3

Summary of Tubular X-Arm Usages:

Tubular X-Arm Label	Maximum Usage %	Load Case	Segment Number	Weight (lbs)
Mast	84.03	NESC 250C (Extreme Wind)	5	1709.9

*** Maximum Stress Summary for Each Load Case

Summary of Maximum Usages by Load Case:

Load Case	Maximum Usage %	Element Label	Element Type
NESC 250B (Heavy)	59.60	CX1	Tubular Davit
NESC 250C (Extreme Wind)	84.03	Mast	Tubular X-Arm
NESC 250D (Extreme Ice w/Wind)	63.17	CX1	Tubular Davit

Summary of Steel Pole Usages by Load Case:

Load Case	Maximum Usage %	Steel Pole Label	Segment Number
NESC 250B (Heavy)	28.79	P	31
NESC 250C (Extreme Wind)	59.37	P	31
NESC 250D (Extreme Ice w/Wind)	22.65	P	21

Summary of Base Plate Usages by Load Case:

Load Case	Pole Label	Bend Line #	Length (in)	Vertical Load (kips)	X Moment (ft-k)	Y Moment (ft-k)	Bending Stress (ksi)	Bolt Moment Sum (ft-k)	# Bolts Acting On Bend Line	Max Bolt Load For Bend Line (kips)	Minimum Plate Thickness (in)	Usage %
NESC 250B (Heavy)	P	11	27.811	128.324	2575.423	-59.098	13.029	70.773	5	60.228	1.747	21.72
NESC 250C (Extreme Wind)	P	11	27.811	74.260	5565.621	-38.844	26.351	143.139	5	123.480	2.485	43.92
NESC 250D (Extreme Ice w/Wind)	P	11	27.811	106.019	2010.308	-50.565	10.227	55.553	5	47.212	1.548	17.05

Summary of Tubular Davit Usages by Load Case:

Load Case	Maximum Usage %	Tubular Davit Label	Segment Number
NESC 250B (Heavy)	59.60	CX1	1
NESC 250C (Extreme Wind)	51.59	Clamp-T	1
NESC 250D (Extreme Ice w/Wind)	63.17	CX1	1

Summary of Tubular X-Arm Usages by Load Case:

Load Case	Maximum Usage %	Tubular X-Arm Label	Segment Number
NESC 250B (Heavy)	29.72	Mast	5
NESC 250C (Extreme Wind)	84.03	Mast	5
NESC 250D (Extreme Ice w/Wind)	19.78	Mast	5

Summary of Insulator Usages:

Insulator Label	Insulator Type	Maximum Usage %	Load Case	Weight (lbs)
SWL	Suspension	8.62	NESC 250D (Extreme Ice w/Wind)	25.0
SWR	Suspension	9.04	NESC 250D (Extreme Ice w/Wind)	25.0
TCL	Suspension	44.11	NESC 250B (Heavy)	120.0
TCR	Suspension	44.11	NESC 250B (Heavy)	120.0
MCL	Suspension	44.11	NESC 250B (Heavy)	120.0
MCR	Suspension	44.11	NESC 250B (Heavy)	120.0
BCL	Suspension	44.11	NESC 250B (Heavy)	120.0
BCR	Suspension	44.11	NESC 250B (Heavy)	120.0

Loads At Insulator Attachments For All Load Cases:

Load Case	Insulator Label	Insulator Type	Structure Attach Label	Structure Attach Load X (kips)	Structure Attach Load Y (kips)	Structure Attach Load Z (kips)	Structure Attach Load Res. (kips)
NESC 250B (Heavy)	SWL	Suspension	TL:3	0.001	0.736	1.468	1.642
NESC 250B (Heavy)	SWR	Suspension	TR:3	0.002	0.790	1.544	1.734
NESC 250B (Heavy)	TCL	Suspension	TL:1	0.003	2.443	8.477	8.822
NESC 250B (Heavy)	TCR	Suspension	TR:1	0.003	2.443	8.477	8.822
NESC 250B (Heavy)	MCL	Suspension	ML:2	0.003	2.443	8.477	8.822
NESC 250B (Heavy)	MCR	Suspension	MR:2	0.003	2.443	8.477	8.822
NESC 250B (Heavy)	BCL	Suspension	BL:2	0.003	2.443	8.477	8.822
NESC 250B (Heavy)	BCR	Suspension	BR:2	0.003	2.443	8.477	8.822
NESC 250C (Extreme Wind)	SWL	Suspension	TL:3	0.004	0.877	0.710	1.128
NESC 250C (Extreme Wind)	SWR	Suspension	TR:3	0.005	1.068	0.749	1.304
NESC 250C (Extreme Wind)	TCL	Suspension	TL:1	0.021	5.184	4.801	7.066
NESC 250C (Extreme Wind)	TCR	Suspension	TR:1	0.021	5.184	4.797	7.063
NESC 250C (Extreme Wind)	MCL	Suspension	ML:2	0.021	5.184	4.801	7.066
NESC 250C (Extreme Wind)	MCR	Suspension	MR:2	0.021	5.184	4.797	7.063
NESC 250C (Extreme Wind)	BCL	Suspension	BL:2	0.021	5.184	4.801	7.066
NESC 250C (Extreme Wind)	BCR	Suspension	BR:2	0.021	5.184	4.797	7.063
NESC 250D (Extreme Ice w/Wind)	SWL	Suspension	TL:3	0.002	0.690	1.579	1.723
NESC 250D (Extreme Ice w/Wind)	SWR	Suspension	TR:3	0.002	0.728	1.655	1.808
NESC 250D (Extreme Ice w/Wind)	TCL	Suspension	TL:1	0.004	2.064	7.603	7.878
NESC 250D (Extreme Ice w/Wind)	TCR	Suspension	TR:1	0.004	2.064	7.599	7.874
NESC 250D (Extreme Ice w/Wind)	MCL	Suspension	ML:2	0.004	2.064	7.603	7.878
NESC 250D (Extreme Ice w/Wind)	MCR	Suspension	MR:2	0.004	2.064	7.599	7.874
NESC 250D (Extreme Ice w/Wind)	BCL	Suspension	BL:2	0.004	2.064	7.603	7.878
NESC 250D (Extreme Ice w/Wind)	BCR	Suspension	BR:2	0.004	2.064	7.599	7.874

Overturning Moments For User Input Concentrated Loads:

Moments are static equivalents based on central axis of 0,0 (i.e. a single pole).

Load Case	Total Tran. Load (kips)	Total Long. Load (kips)	Total Vert. Load (kips)	Transverse Overturning Moment (ft-k)	Longitudinal Overturning Moment (ft-k)	Torsional Moment (ft-k)
NESC 250B (Heavy)	16.184	0.021	53.874	1616.995	-2.124	-0.023
NESC 250C (Extreme Wind)	33.049	0.135	30.253	3278.121	-13.418	-0.023
NESC 250D (Extreme Ice w/Wind)	13.802	0.028	48.840	1381.594	-2.832	0.000

*** Weight of structure (lbs):

Weight of Tubular Davit Arms:	4826.5
Weight of Tubular X-Arms:	1709.9
Weight of Steel Poles:	35830.6
Weight of Equipment:	5700.8
Weight of Suspensions:	770.0
Total:	48837.9

*** End of Report

APPENDIX D

SUPPLEMENTAL CALCULATIONS

Mast Connection - AISC / TIA-222-G

Bottom Connection - Pipe Riser Base Plate - Bolt Check

Risa 3D Reactions:

$Shear_{bottom} := 16\ kip$ — Worst Case (from Risa 3D)

$Torque_{bottom} := 2.2\ kip \cdot ft$ — Worst Case (from Risa 3D)

Clamping Collar Input:

$F_{u_b_collar} := 58\ ksi$ — Minimum tensile strength of bottom collar horizontal seat plate

$t_{b_collar} := 0.75\ in$ — Thickness of bottom collar horizontal seat plate

$L_{c_b_collar} := 0.90625\ in$ — Minimum clear distance in bottom collar vertical seat plate

Bolt Input: (ASTM A325):

$F_{u_bolt} := 120\ ksi$ — Minimum tensile strength of bolt

$BoltSpacing := 13.07 \cdot in$ — Bolt spacing

$N := 4$ — Number of Bolts per Connection

$D_{bolt} := 1.125 \cdot in$ — Nominal Diameter of Bolt

$A_b := \frac{\pi}{4} \cdot (D_{bolt})^2 = 0.994\ in^2$ — Nominal Area of Bolt

$A_n := 0.75 \cdot A_b = 0.746\ in^2$ — Area of Bolt in Tension (as per TIA-222-G Section 4.9.6.1

Available Bolt Strengths:

$\phi_{tension} := 0.75$ $\phi_{bearing} := 0.80$ $\phi_{shear} := 0.75$

$F_{t.bolt} := \phi_{tension} \cdot F_{u_bolt} \cdot A_n = 67.1\ kip$ Available Tensile Strength (as per TIA-222G Section 4.9.6.1)

$F_{b.bolt} := \phi_{bearing} \cdot 1.2 \cdot \left(L_{c_b_collar} + \frac{D_{bolt}}{4}\right) \cdot t_{b_collar} \cdot F_{u_b_collar} = 49.59\ kip$ Available Bearing Strength (as per TIA-222-G Section 4.9.6.2)

$F_{v.bolt} := \phi_{shear} \cdot 0.45 \cdot F_{u_bolt} \cdot A_b = 40.26\ kip$ Available Shear Strength (as per TIA-222G Section 4.9.6.3)

Check Bolt Shear:

$f_v := \frac{Shear_{bottom}}{N} + \frac{Torque_{bottom}}{BoltSpacing \cdot \frac{N}{2}} = 5.01\ kip$ Actual Shear Load

$Usage_{shear} := \frac{f_v}{F_{v.bolt}} = 0.12$

$Status_{shear} := \begin{cases} \text{if } Usage_{shear} \le 1 \\ \quad \text{"OK"} \\ \text{else} \\ \quad \text{"NG"} \end{cases} = \text{"OK"}$

Check Bolt Bearing:

$f_b := \frac{Shear_{bottom}}{N} + \frac{Torque_{bottom}}{BoltSpacing \cdot \frac{N}{2}} = 5.01\ kip$ Actual Bearing Load

$Usage_{bearing} := \frac{f_b}{F_{b.bolt}} = 0.101$

$Status_{bearing} := \begin{cases} \text{if } Usage_{bearing} \le 1 \\ \quad \text{"OK"} \\ \text{else} \\ \quad \text{"NG"} \end{cases} = \text{"OK"}$

Bottom Connection - Horizontal Plate to Collar - Weld Check

Risa 3D Reactions:

$Shear_{bottom} := 16\ kip$ — Worst Case (from Risa 3D)

Weld Input:

$F_{EXX} := 70\ ksi$

$Weld_{size} := 0.3125\ in$

$l_{weld} := 50.3\ in$ — Length of Weld (Pole)

$n_{weld} := 2$ — Conservatively assumed top plate only

Available Weld Strength:

$\phi_{weld} := 0.75$

$R_n := \phi_{weld} \cdot 0.6 \cdot F_{EXX} \cdot \frac{\sqrt{2}}{2} \cdot Weld_{size} \cdot l_{weld} = 350.12\ kip$ — AISC eqn. 8-1 (per weld)

$R_{n_total} := R_n \cdot n_{weld} = 700.23\ kip$ — Total Available Weld Strength

Check Weld:

$Weld_{load} := Shear_{bottom} = 16\ kip$ — Actual Weld Load

$Usage_{weld} := \frac{Weld_{load}}{R_{n_total}} = 0.02$

$Status_{weld} := \left\| \begin{array}{l} \text{if } Usage_{weld} \le 1 \\ \quad \text{"OK"} \\ \text{else} \\ \quad \text{"NG"} \end{array} \right. = \text{"OK"}$

From Previous Analysis - For Reference Only

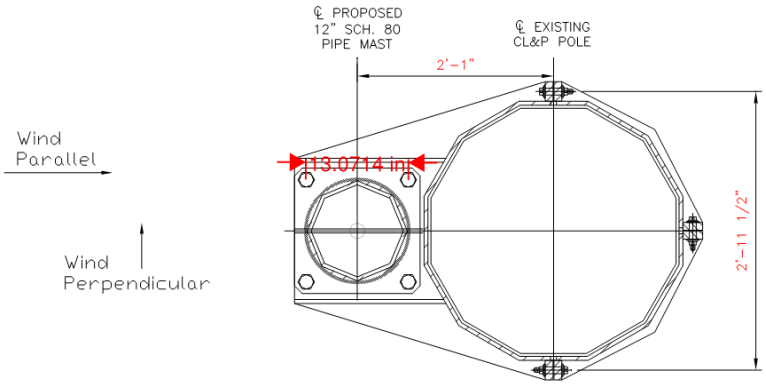

Mast Connection - AISC / TIA-222-G

Bottom Connection - Clamping Collar Bolts at Pole - Bolt Check

Risa 3D Reactions:

$Axial := 12.8 \cdot kip$ Worst Case (from Risa 3D)

$Shear_{bottom} := 16\ kip$ Worst Case (from Risa 3D)

Clamping Collar Input:

$F_{u_b_collar} := 58\ ksi$ Minimum tensile strength of bottom collar vertical plate

$t_{b_collar} := 1\ in$ Thickness of clamping plate

$moment_{arm} := 25\ in$ Moment arm to clamping collar connection

$distance_{plates} := 10.5\ in$ Moment arm bottom of collar to upper horizontal plate

Bolt Input: (ASTM A325):

$F_{u_bolt} := 120\ ksi$ Minimum tensile strength of bolt

$N := 2$ Number of Bolts per Connection

$n := 2$ Number of Connections

$D_{bolt} := 0.875 \cdot in$ Nominal Diameter of Bolt

$A_b := \frac{\pi}{4} \cdot (D_{bolt})^2 = 0.601\ in^2$ Nominal Area of Bolt

$A_n := 0.75 \cdot A_b = 0.451\ in^2$ Area of Bolt in Tension (as per TIA-222-G Section 4.9.6.1

Available Bolt Strengths:

$\phi_{tension} := 0.75$ $\phi_{bearing} := 0.80$ $\phi_{shear} := 0.75$

$F_{t.bolt} := \phi_{tension} \cdot F_{u_bolt} \cdot A_n = 40.59\ kip$ Available Tensile Strength (as per TIA-222G Section 4.9.6.1)

$F_{b.bolt} := \phi_{bearing} \cdot 1.2 \cdot \left(L_{c_b_collar} + \frac{D_{bolt}}{4}\right) \cdot t_{b_collar} \cdot F_{u_b_collar} = 62.64\ kip$ Available Bearing Strength (as per TIA-222-G Section 4.9.6.2)

$F_{v.bolt} := \phi_{shear} \cdot 0.45 \cdot F_{u_bolt} \cdot A_b = 24.35\ kip$ Available Shear Strength (as per TIA-222G Section 4.9.6.3)

Check Bolt Tension:

$f_t := \frac{Shear_{bottom}}{N \cdot n} + Axial \cdot \frac{moment_{arm}}{distance_{plates} \cdot N} = 19.24\ kip$ Actual Tension Load

$Usage_{tension} := \frac{f_t}{F_{t.bolt}} = 0.47$

$Status_{tension} := \left\| \begin{array}{l} \text{if } Usage_{tension} \le 1 \\ \quad \text{"OK"} \\ \text{else} \\ \quad \text{"NG"} \end{array} \right. = \text{"OK"}$

Check Bolt Bearing:

$f_b := \frac{\sqrt{Shear_{bottom}^{\ 2} + Axial^2}}{N \cdot n} = 5.12\ kip$ Actual Bearing Load

$Usage_{bearing} := \frac{f_b}{F_{b.bolt}} = 0.082$

$Status_{bearing} := \left\| \begin{array}{l} \text{if } Usage_{bearing} \le 1 \\ \quad \text{"OK"} \\ \text{else} \\ \quad \text{"NG"} \end{array} \right. = \text{"OK"}$

Check Bolt Shear:

$f_v := \frac{\sqrt{Shear_{bottom}^{\ 2} + Axial^2}}{N \cdot n} = 5.12\ kip$ Actual Shear Load

$Usage_{shear} := \frac{f_v}{F_{v.bolt}} = 0.21$

Bottom Connection - 1/2" Thick Gusset

Risa 3D Reactions:

$Axial := 12.8 \cdot kip$

$MomentArm := 9.2 \cdot in$

Worst Case (from Risa 3D)

Available Stiffener Strength:

$h := 7.25\ in$

$t := 0.5\ in$

$Z_x := \frac{h^2 \cdot t}{4} = 6.57\ in^3$

$F_y := 36\ ksi$

$E := 29000\ ksi$

$\phi_{bending} := 0.9$

$M_n := \phi_{bending} \cdot F_y \cdot Z_x = 17.74\ ft \cdot kip$

AISC eqn. F11-1

$M_u := \frac{Axial \cdot MomentArm}{2} = 4.91\ ft \cdot kip$

Half of total axial load to middle stiffener

$d := 7.25\ in$

$t := 0.5\ in$

$l_b := 7.25\ in$

$F_y := 36\ ksi$

$C_b := 1$

Cb=1.0 for doubly symmetric members with no transverse loading between bracing points.

$\frac{l_b \cdot d}{t^2} = 210.25$ $\quad \frac{0.08 \cdot E}{F_y} = 64.44$ $\quad \frac{1.9 \cdot E}{F_y} = 1530.56$

$M_y := \frac{F_y \cdot h^2 \cdot t}{6} = 13.14\ ft \cdot kip$

$M_n := \phi_{bending} \cdot C_b \cdot \left(1.52 - 0.274 \cdot \left(\frac{l_b \cdot d}{t^2}\right) \cdot \frac{F_y}{E}\right) \cdot M_y = 17.13\ ft \cdot kip$

AISC eqn. F11-2

Check Bending of Stiffener:

$Usage_{bending} := \frac{M_u}{M_n} = 0.29$

$Status_{weld} := \left\| \begin{array}{l} \text{if } Usage_{bending} \le 1 \\ \quad \text{"OK"} \\ \text{else} \\ \quad \text{"NG"} \end{array} \right. = \text{"OK"}$

The stiffener plates are adequate in yielding and lateral-torsional buckling; therefore there is no need to check the horizontal tabs in bending (ok).

Top Connection - Horizontal Plate to Collar - Weld Check

Risa 3D Reactions:

$Shear_{top} := 28.3\ kip$ — Worst Case (from Risa 3D)

Weld Input:

$F_{EXX} := 70\ ksi$

$Weld_{size} := 0.3125\ in$

$l_{weld} := 50.3\ in$ — Shortest Length of Weld (Mast)

$n_{weld} := 4$ — Total # of welds

Available Weld Strength:

$\phi_{weld} := 0.75$

$R_n := \phi_{weld} \cdot 0.6 \cdot F_{EXX} \cdot \frac{\sqrt{2}}{2} \cdot Weld_{size} \cdot l_{weld} = 350.12\ kip$ — AISC eqn. 8-1 (per weld)

$R_{n_total} := R_n \cdot n_{weld} = 1400.47\ kip$ — Total Available Weld Strength

Check Weld:

$Weld_{load} := Shear_{top} = 28.3\ kip$ — Actual Weld Load

$Usage_{weld} := \frac{Weld_{load}}{R_{n_total}} = 0.02$

$Status_{weld} := \left\| \begin{array}{l} \text{if } Usage_{weld} \le 1 \\ \quad \text{"OK"} \\ \text{else} \\ \quad \text{"NG"} \end{array} \right. = \text{"OK"}$

From Previous Analysis - For Reference Only

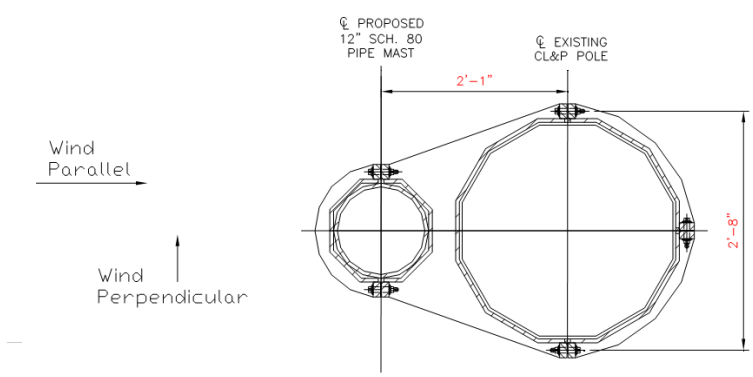

Top Connection - Bolt Check

$Shear_{top} = 28.3\ kip$

Clamping Collar Tab Input:

$F_{u_tab} := 58\ ksi$	Minimum tensile strength of tab
$t_{tab} := 1\ in$	Thickness of tab
$L_{c_tab} := 1.09375\ in$	Minimum clear distance in tab
$moment_{arm} := 25\ in$	Moment arm to clamping collar connection
$distance_{bolts} := 32.2\ in$	Distance between outer bolts of clamping collar

Bolt Input: (ASTM A325):

$F_{u_bolt} := 120\ ksi$	Minimum tensile strength of bolt
$N := 3$	Number of Bolts per Connection
$n := 2$	Number of Connections
$D_{bolt} := 0.75 \cdot in$	Nominal Diameter of Bolt
$A_b := \frac{\pi}{4} \cdot (D_{bolt})^2 = 0.442\ in^2$	Nominal Area of Bolt
$A_n := 0.75 \cdot A_b = 0.331\ in^2$	Area of Bolt in Tension (as per TIA-222-G Section 4.9.6.1

Available Bolt Strengths:

$\phi_{tension} := 0.75$ $\phi_{bearing} := 0.80$ $\phi_{shear} := 0.75$

$F_{t.bolt} := \phi_{tension} \cdot F_{u_bolt} \cdot A_n = 29.82\ kip$ Available Tensile Strength (as per TIA-222G Section 4.9.6.1)

$F_{b.bolt} := \phi_{bearing} \cdot 1.2 \cdot \left(L_{c_tab} + \frac{D_{bolt}}{4}\right) \cdot t_{tab} \cdot F_{u_tab} = 71.34\ kip$ Available Bearing Strength (as per TIA-222-G Section 4.9.6.2)

$F_{v.bolt} := \phi_{shear} \cdot 0.45 \cdot F_{u_bolt} \cdot A_b = 17.89\ kip$ Available Shear Strength (as per TIA-222G Section 4.9.6.3)

Check Bolt Tension 1: Wind Parallel to Transmission Lines

$f_{t1} := \frac{Shear_{top}}{N \cdot n} = 4.72\ kip$ Actual Tension Load

$Usage_{tension} := \frac{f_{t1}}{F_{t.bolt}} = 0.16$

$Status_{tension} := \left\| \begin{array}{l} \text{if } Usage_{tension} \le 1 \\ \quad \text{"OK"} \\ \text{else} \\ \quad \text{"NG"} \end{array} \right. = \text{"OK"}$

Check Bolt Tension 2: Wind Perpendicular to Transmission Lines

$f_{t2} := \frac{Shear_{top} \cdot moment_{arm}}{N \cdot distance_{bolts}} = 7.32\ kip$ Actual Tension Load

$Usage_{tension} := \frac{f_{t2}}{F_{t.bolt}} = 0.25$

$Status_{tension} := \left\| \begin{array}{l} \text{if } Usage_{tension} \le 1 \\ \quad \text{"OK"} \\ \text{else} \\ \quad \text{"NG"} \end{array} \right. = \text{"OK"}$

Check Bolt Bearing:

$f_b := \frac{Shear_{top}}{N \cdot n} = 4.72\ kip$ Actual Bearing Load

$Usage_{bearing} := \frac{f_b}{F_{b.bolt}} = 0.066$

$Status_{bearing} := \left\| \begin{array}{l} \text{if } Usage_{bearing} \le 1 \\ \quad \text{"OK"} \\ \text{else} \\ \quad \text{"NG"} \end{array} \right. = \text{"OK"}$

Check Bolt Shear:

$$f_v := \frac{Shear_{top}}{N \cdot n} = 4.72\ kip$$

Actual Shear Load

$$Usage_{shear} := \frac{f_v}{F_{v.bolt}} = 0.264$$

$$Status_{shear} := \left\| \begin{array}{l} \text{if } Usage_{shear} \le 1 \\ \quad \text{"OK"} \\ \text{else} \\ \quad \text{"NG"} \end{array} \right. = \text{"OK"}$$

Anchor Bolt Analysis - ASCE 48-05

Max Flange Loads

Anchor Bolt Load (Max Tension):	$T := 123.5 \cdot kip$	User Input - from PLS-Pole
Pole Shear (Max):	$V := 59.6\ kip$	User Input - from PLS-Pole
Pole Axial Load (Max):	$A := 78.8 \cdot kip$	User Input - from PLS-Pole

Anchor Bolt Input:

Bolt Type:	ASTM A615 Grade 75	User Input
Bolt Quantity:	$N := 32$	User Input
Bolt Ultimate Strength:	$Fu_{bolt} := 100 \cdot ksi$	User Input
Bolt Yield Strength:	$Fy_{bolt} := 75\ ksi$	User Input
Bolt Nominal Diameter:	$D_{bolt} := 2.25 \cdot in$	User Input
Bolt Threads per Inch:	$n := 4.5$	User Input

Anchor Bolt Tension Check:

$$A_g := \frac{\pi \cdot D_{bolt}^2}{4} = 3.98\ in^2$$

Gross Area of Anchor Bolt Shank

$$A_s := \frac{\pi}{4} \cdot \left(D_{bolt} - \frac{0.9743\ in}{n}\right)^2 = 3.25\ in^2$$

Stress Area of Anchor Bolt through the threads

$$f_t := \frac{T}{A_s} = 38.027\ ksi$$

$$F_t := 0.75 \cdot Fu_{bolt} = 75\ ksi$$

As per ASCE 48-05 Section 6.2.3

$$Bolt_{usage_tension} := \frac{f_t}{F_t} = 50.7\%$$

$$Status_{bolt_tension} := \left\| \begin{array}{l} \text{if } Bolt_{usage_tension} \le 1 \\ \quad \text{"OK"} \\ \text{else} \\ \quad \text{"NG"} \end{array} \right. = \text{"OK"}$$

Anchor Bolt Shear Check:

$$V_{max} := \frac{V}{N} = 1.863\ \textbf{\textit{kip}}$$

$$f_v := \frac{V_{max}}{A_g} = 0.468\ \textbf{\textit{ksi}}$$

$$F_v := 0.45\ Fu_{bolt} = 45\ \textbf{\textit{ksi}}$$

As per ASCE 48-05 Section 6.2.2

$$Bolt_{usage_shear} := \frac{f_v}{F_v} = 1\%$$

$$Status_{bolt_shear} := \left\| \begin{array}{l} \text{if } Bolt_{usage_shear} \le 1 \\ \quad \text{"OK"} \\ \text{else} \\ \quad \text{"NG"} \end{array} \right. = \text{"OK"}$$

Anchor Bolt Combined Shear and Tension Check:

$$F_{t_v} := F_t \cdot \sqrt{\left(1 - \left(\frac{f_v}{F_v}\right)^2\right)} = 75\ \textbf{\textit{ksi}}$$

As per ASCE 48-05 Section 6.2.4

$$Bolt_{usage_combined} := \frac{f_t}{F_{t_v}} = 50.7\%$$

$$Status_{bolt_combined} := \left\| \begin{array}{l} \text{if } Bolt_{usage_combined} \le 1 \\ \quad \text{"OK"} \\ \text{else} \\ \quad \text{"NG"} \end{array} \right. = \text{"OK"}$$

==========

LPile Plus for Windows, Version 6 (6.0.22)

Analysis of Individual Piles and Drilled Shafts
Subjected to Lateral Loading Using the p-y Method

© 1985-2011 by Ensoft, Inc.
All Rights Reserved

==========

This program is licensed to:

Charles Carrillo
PJF

Files Used for Analysis

Path to file locations: G:\Transmission\Eversource\2019\806_Smartlink\80619-0001 Tower 24063 AT&T CTL02343\001.6000 - SA (Rev 1)\LPile\
Name of input data file: A80619-0001.001.6000 Foundation Analysis.lp6d
Name of output report file: A80619-0001.001.6000 Foundation Analysis.lp6o
Name of plot output file: A80619-0001.001.6000 Foundation Analysis.lp6p
Name of runtime messeage file: A80619-0001.001.6000 Foundation Analysis.lp6r

---

Date and Time of Analysis

Date: April 26, 2019 Time: 16:14:18

Problem Title

Project Name: Structure #24063 / Orange Overland Drive

Job Number: A80619-0001.001.6050

Client: ATT

Engineer: CEC

Description: 7.5'x28' Caisson

Program Options

Engineering units are US Customary Units: pounds, inches, feet

Basic Program Options:

This analysis computes nonlinear bending stiffness and nominal moment
capacity with pile response computed using nonlinear EI

Computation Options:
- Only internally-generated p-y curves used in analysis
- Analysis does not use p-y multipliers (individual pile or shaft action only)
- Analysis assumes no shear resistance at pile tip
- Analysis for fixed-length pile or shaft only
- No computation of foundation stiffness matrix elements
- Output pile response for full length of pile
- Analysis assumes no soil movements acting on pile
- No p-y curves to be computed and output for user-specified depths

Solution Control Parameters:

- Number of pile increments	=	100	
- Maximum number of iterations allowed	=	500	
- Deflection tolerance for convergence	=	1.0000E-05	in
- Maximum allowable deflection	=	100.0000	in

Pile Response Output Options:
- Values of pile-head deflection, bending moment, shear force, and
  soil reaction are printed for full length of pile.
- Printing Increment (nodal spacing of output points) = 1

Pile Structural Properties and Geometry

Total Number of Sections	=	1	
Total Pile Length	=	28.00	ft

Depth of ground surface below top of pile = 1.00 ft

Slope angle of ground surface = 0.00 deg.

Pile dimensions used for p-y curve computations defined using 2 points.
p-y curves are computed using values of pile diameter interpolated over
the length of the pile.

Point	Depth X ft	Pile Diameter in
1	0.00000	90.0000000
2	28.000000	90.0000000

Input Structural Properties:

Pile Section No. 1:

Section Type = Drilled Shaft (Bored Pile)
Section Length = 28.000 ft
Section Diameter = 90.000 in

Ground Slope and Pile Batter Angles

Ground Slope Angle = 0.000 degrees
= 0.000 radians

Pile Batter Angle = 0.000 degrees
= 0.000 radians

Soil and Rock Layering Information

The soil profile is modelled using 5 layers

```
Layer 1 is soft clay, p-y criteria by Matlock, 1970

Distance from top of pile to top of layer              =        1.000 ft
Distance from top of pile to bottom of layer           =        4.333 ft

Layer 2 is sand, p-y criteria by Reese et al., 1974

Distance from top of pile to top of layer              =        4.333 ft
Distance from top of pile to bottom of layer           =        6.000 ft
p-y subgrade modulus k for top of soil layer           =        0.000 lbs/in**3
p-y subgrade modulus k for bottom of layer             =        0.000 lbs/in**3

NOTE:  Internal default values for p-y subgrade modulus will be computed for
the above soil layer.

Layer 3 is sand, p-y criteria by Reese et al., 1974

Distance from top of pile to top of layer              =        6.000 ft
Distance from top of pile to bottom of layer           =       11.000 ft
p-y subgrade modulus k for top of soil layer           =        0.000 lbs/in**3
p-y subgrade modulus k for bottom of layer             =        0.000 lbs/in**3

NOTE:  Internal default values for p-y subgrade modulus will be computed for
the above soil layer.

Layer 4 is sand, p-y criteria by Reese et al., 1974

Distance from top of pile to top of layer              =       11.000 ft
Distance from top of pile to bottom of layer           =       21.000 ft
p-y subgrade modulus k for top of soil layer           =        0.000 lbs/in**3
p-y subgrade modulus k for bottom of layer             =        0.000 lbs/in**3

NOTE:  Internal default values for p-y subgrade modulus will be computed for
the above soil layer.

Layer 5 is weak rock, p-y criteria by Reese, 1997

Distance from top of pile to top of layer              =       21.000 ft
Distance from top of pile to bottom of layer           =       29.000 ft
Initial modulus of rock at top of layer                =   5.0000E+04 lbs/in**2
Initial modulus of rock at bottom of layer             =   5.0000E+04 lbs/in**2


(Depth of lowest layer extends    1.00 ft below pile tip)


--------------------------------------------------------------------------------
                     Effective Unit Weight of Soil vs. Depth
```

Effective unit weight of soil with depth defined using 10 points

Point No.	Depth X ft	Eff. Unit Weight pcf
1	1.00	100.00000
2	4.33	100.00000
3	4.33	110.00000
4	6.00	110.00000
5	6.00	115.00000
6	11.00	115.00000
7	11.00	120.00000
8	21.00	120.00000
9	21.00	135.00000
10	29.00	135.00000

Summary of Soil Properties

Layer Num.	Soil Type	RQD percent	Epsilon 50 (p-y Curve Criteria)	kpy pci	Rock Emass psi	Depth ft	Eff. Unit Wt., pcf	krm	Cohesion psf	Test Type	Friction Ang., deg.	Test Prop.	Elas. Subgr. pci	qu psi
1	Soft Clay	--	0.00	--	--	1.000	100.000	--	1.000	--	--	--	--	--
		--	0.00	--	--	4.333	100.000	--	1.000	--	--	--	--	--
2	Sand (Reese, et al.)	--	--	default	--	4.333	110.000	--	--	--	30.000	--	--	--
		--	--	default	--	6.000	110.000	--	--	--	30.000	--	--	--
3	Sand (Reese, et al.)	--	--	default	--	6.000	115.000	--	--	--	32.000	--	--	--
		--	--	default	--	11.000	115.000	--	--	--	32.000	--	--	--
4	Sand (Reese, et al.)	--	--	default	--	11.000	120.000	--	--	--	33.000	--	--	--
		--	--	default	--	21.000	120.000	--	--	--	33.000	--	--	--
5	Weak Rock	0.00	--	--	50000.	21.000	135.000	5.00E-04	--	--	--	--	--	556.000
						29.000	135.000	--	--	--	--	--	--	556.000

```
       0.00       --           --           50000.     5.00E-04       --           --           --
```

Loading Type

Static loading criteria were used when computing p-y curves for all analyses.

Pile-head Loading and Pile-head Fixity Conditions

Number of loads specified = 2

Load No.	Load Type	Condition 1	Condition 2	Axial Thrust Force, lbs
1	1	V = 30140.000 lbs	M = 33995280.000 in-lbs	146190.000
2	1	V = 65560.000 lbs	M = 73465920.000 in-lbs	86680.000

V = perpendicular shear force applied to pile head
M = bending moment applied to pile head
y = lateral deflection relative to pile axis
S = pile slope relative to original pile batter angle
R = rotational stiffness applie to pile head
Axial thrust is assumed to be acting axially

Computations of Nominal Moment Capacity and Nonlinear Bending Stiffness

---

Axial thrust force values were determined from pile-head loading conditions

Number of Pile Sections Analyzed = 1

Pile Section No. 1:

Dimensions and Properties of Drilled Shaft:

Length of Section = 28.00000000 ft

```
Shaft Diameter                                          =     90.00000000 in
Concrete Cover Thickness                                =      3.00000000 in
Number of Reinforcing Bars                              =              45 bars
Yield Stress of Reinforcing Bars                        =     60.00000000 ksi
Modulus of Elasticity of Reinforcing Bars               =          29000. ksi
Gross Area of Shaft                                     =   6361.72512352 sq. in.
Total Area of Reinforcing Steel                         =     70.20000000 sq. in.
Area Ratio of Steel Reinforcement                       =            1.10 percent
Edge-to-Edge Bar Spacing                                =      4.35118717 in

Axial Structural Capacities:
----------------------------

Nom. Axial Structural Capacity = 0.85 Fc Ac + Fy As     =       22929.288 kips
Tensile Load for Cracking of Concrete                   =       -2688.636 kips
Nominal Axial Tensile Capacity                          =       -4212.000 kips
```

Reinforcing Bar Dimensions and Positions Used in Computations:

Bar Number	Bar Diam. inches	Bar Area sq. in.	X inches	Y inches
1	1.41000	1.56000	41.29500	0.00000
2	1.41000	1.56000	40.89312	5.74715
3	1.41000	1.56000	39.69530	11.38244
4	1.41000	1.56000	37.72486	16.79619
5	1.41000	1.56000	35.02015	21.88302
6	1.41000	1.56000	31.63381	26.54391
7	1.41000	1.56000	27.63175	30.68817
8	1.41000	1.56000	23.09187	34.23511
9	1.41000	1.56000	18.10254	37.11570
10	1.41000	1.56000	12.76086	39.27388
11	1.41000	1.56000	7.17080	40.66764
12	1.41000	1.56000	1.44117	41.26984
13	1.41000	1.56000	-4.31650	41.06878
14	1.41000	1.56000	-9.99016	40.06836
15	1.41000	1.56000	-15.46938	38.28806
16	1.41000	1.56000	-20.64750	35.76252
17	1.41000	1.56000	-25.42374	32.54090
18	1.41000	1.56000	-29.70514	28.68592
19	1.41000	1.56000	-33.40836	24.27259
20	1.41000	1.56000	-36.46132	19.38683
21	1.41000	1.56000	-38.80461	14.12372
22	1.41000	1.56000	-40.39261	8.58571
23	1.41000	1.56000	-41.19441	2.88059
24	1.41000	1.56000	-41.19441	-2.88059
25	1.41000	1.56000	-40.39261	-8.58571

26	1.41000	1.56000	-38.80461	-14.12372
27	1.41000	1.56000	-36.46132	-19.38683
28	1.41000	1.56000	-33.40836	-24.27259
29	1.41000	1.56000	-29.70514	-28.68592
30	1.41000	1.56000	-25.42374	-32.54090
31	1.41000	1.56000	-20.64750	-35.76252
32	1.41000	1.56000	-15.46938	-38.28806
33	1.41000	1.56000	-9.99016	-40.06836
34	1.41000	1.56000	-4.31650	-41.06878
35	1.41000	1.56000	1.44117	-41.26984
36	1.41000	1.56000	7.17080	-40.66764
37	1.41000	1.56000	12.76086	-39.27388
38	1.41000	1.56000	18.10254	-37.11570
39	1.41000	1.56000	23.09187	-34.23511
40	1.41000	1.56000	27.63175	-30.68817
41	1.41000	1.56000	31.63381	-26.54391
42	1.41000	1.56000	35.02015	-21.88302
43	1.41000	1.56000	37.72486	-16.79619
44	1.41000	1.56000	39.69530	-11.38244
45	1.41000	1.56000	40.89312	-5.74715

Concrete Properties:

Compressive Strength of Concrete	=	3.5000000	ksi
Modulus of Elasticity of Concrete	=	3372.1654764	ksi
Modulus of Rupture of Concrete	=	-0.4437060	ksi
Compression Strain at Peak Stress	=	0.0017644	
Tensile Strain at Fracture of Concrete	=	-0.0001156	
Maximum Coarse Aggregate Size	=	0.7500000	in

Number of Axial Thrust Force Values Determined from Pile-head Loadings = 2

Number	Axial Thrust Force kips
1	86.680
2	146.190

Definitions of Run Messages and Notes:

C = concrete in section has cracked in tension
Y = stress in reinforcing steel has reached yield stress

T = tensile strain in reinforcement exceeds 0.005 when compressive strain
in concrete is less than 0.003.
Z = depth of tensile zone in concrete section is less than 10 percent of section depth
Bending Stiffness (EI) = Bending Moment / Curvature
Position of neutral axis is computed from compression side of pile
Compressive stresses are positive in sign. Tensile stresses are negative in sign.

Axial Thrust Force = 86.680 kips

Bending Curvature rad/in.	Bending Moment in-kip	Bending Stiffness kip-in2	Depth to N Axis in	Max Comp Strain in/in	Max Tens Strain in/in	Max Concrete Stress ksi	Max Steel Stress ksi	Run Msg
0.000000313	4449.7900140	14239328045.	55.3076837	0.0000173	-0.0000108	0.0676803	0.4971478	
0.000000625	8879.7800808	14207648129.	50.1697718	0.0000314	-0.0000249	0.1221962	0.9011709	
0.000000938	13289.	14174536580.	48.4572952	0.0000454	-0.0000389	0.1762763	1.3051983	
0.000001250	17676.	14141059575.	47.6011256	0.0000595	-0.0000530	0.2299203	1.7092283	
0.000001563	22043.	14107435650.	47.0874710	0.0000736	-0.0000671	0.2831281	2.1132604	
0.000001875	26388.	14073738089.	46.7450715	0.0000876	-0.0000811	0.3358997	2.5172945	
0.000002188	30712.	14039998415.	46.5005316	0.0001017	-0.0000952	0.3882352	2.9213306	
0.000002500	35016.	14006232419.	46.3171543	0.0001158	-0.0001092	0.4401345	3.3253687	
0.000002813	35016.	12449984373.	26.8649774	0.0000756	-0.0001776	0.2885307	-5.1127471	C
0.000003125	35016.	11204985936.	26.4981413	0.0000828	-0.0001984	0.3154871	-5.7140747	C
0.000003438	35016.	10186350851.	26.1897626	0.0000900	-0.0002193	0.3422230	-6.3162237	C
0.000003750	35016.	9337488280.	25.9339711	0.0000973	-0.0002402	0.3688630	-6.9182431	C
0.000004063	35016.	8619219950.	25.7186347	0.0001045	-0.0002611	0.3954069	-7.5201327	C
0.000004375	35016.	8003561383.	25.5307576	0.0001117	-0.0002821	0.4217841	-8.1224414	C
0.000004688	35016.	7469990624.	25.3666736	0.0001189	-0.0003030	0.4480268	-8.7249209	C

```
   0.000005000        35016.   7003116210.    25.2240231     0.0001261    -0.0003239     0.4741743
-9.3272666  C
   0.000005313        35016.   6591168197.    25.0990265     0.0001333    -0.0003448     0.5002263
-9.9294781  C
   0.000005625        35016.   6224992186.    24.9887442     0.0001406    -0.0003657     0.5261826
-10.5315548  C
   0.000005938        35016.   5897361019.    24.8908555     0.0001478    -0.0003866     0.5520431
-11.1334964  C
   0.000006250        35016.   5602492968.    24.8035038     0.0001550    -0.0004075     0.5778076
-11.7353024  C
   0.000006563        35016.   5335707588.    24.7242049     0.0001623    -0.0004284     0.6034528
-12.3371591  C
   0.000006875        35016.   5093175425.    24.6508980     0.0001695    -0.0004493     0.6289548
-12.9392584  C
   0.000007188        35016.   4871733015.    24.5846418     0.0001767    -0.0004702     0.6543615
-13.5412168  C
   0.000007500        35016.   4668744140.    24.5245570     0.0001839    -0.0004911     0.6796726
-14.1430338  C
   0.000007813        35016.   4481994374.    24.4699053     0.0001912    -0.0005120     0.7048880
-14.7447089  C
   0.000008125        35016.   4309609975.    24.4200620     0.0001984    -0.0005328     0.7300075
-15.3462416  C
   0.000008438        35016.   4149994791.    24.3744947     0.0002057    -0.0005537     0.7550309
-15.9476314  C
   0.000008750        35016.   4001780691.    24.3327475     0.0002129    -0.0005746     0.7799581
-16.5488778  C
   0.000009063        35016.   3863788254.    24.2944269     0.0002202    -0.0005955     0.8047888
-17.1499803  C
   0.000009375        35016.   3734995312.    24.2591922     0.0002274    -0.0006163     0.8295230
-17.7509383  C
   0.000009688        35016.   3614511592.    24.2267467     0.0002347    -0.0006372     0.8541603
-18.3517514  C
     0.0000100        35062.   3506201414.    24.1968306     0.0002420    -0.0006580     0.8787008
-18.9524191  C
     0.0000103        36089.   3499491026.    24.1692157     0.0002492    -0.0006789     0.9031440
-19.5529408  C
     0.0000106        37114.   3493122346.    24.1437007     0.0002565    -0.0006997     0.9274900
-20.1533159  C
     0.0000109        38140.   3487065926.    24.1201072     0.0002638    -0.0007206     0.9517385
-20.7535441  C
     0.0000113        39165.   3481295587.    24.0982768     0.0002711    -0.0007414     0.9758893
-21.3536247  C
     0.0000116        40189.   3475787979.    24.0780681     0.0002784    -0.0007622     0.9999422
-21.9535571  C
     0.0000119        41212.   3470522073.    24.0593546     0.0002857    -0.0007830     1.0238970
-22.5533413  C
     0.0000122        42236.   3465479410.    24.0420229     0.0002930    -0.0008039     1.0477536
-23.1529759  C
```

```
     0.0000128        44280.   3455997581.    24.0111061     0.0003076    -0.0008455     1.0951715
-24.3517952  C
     0.0000134        46322.   3447225717.    23.9846136     0.0003223    -0.0008871     1.1421941
-25.5500115  C
     0.0000141        48362.   3439068212.    23.9619664     0.0003370    -0.0009287     1.1888200
-26.7476199  C
     0.0000147        50399.   3431445619.    23.9426841     0.0003517    -0.0009702     1.2350477
-27.9446161  C
     0.0000153        52434.   3424291317.    23.9263653     0.0003664    -0.0010118     1.2808755
-29.1409956  C
     0.0000159        54467.   3417549539.    23.9126712     0.0003811    -0.0010533     1.3263021
-30.3367532  C
     0.0000166        56498.   3411172489.    23.9013146     0.0003959    -0.0010948     1.3713256
-31.5318844  C
     0.0000172        58525.   3405119464.    23.8920502     0.0004106    -0.0011362     1.4159446
-32.7263845  C
     0.0000178        60551.   3399355464.    23.8846670     0.0004254    -0.0011777     1.4601575
-33.9202486  C
     0.0000184        62574.   3393850223.    23.8789830     0.0004403    -0.0012191     1.5039625
-35.1134719  C
     0.0000191        64595.   3388577431.    23.8748402     0.0004551    -0.0012605     1.5473581
-36.3060493  C
     0.0000197        66613.   3383514111.    23.8721005     0.0004700    -0.0013019     1.5903425
-37.4979757  C
     0.0000203        68629.   3378640103.    23.8706432     0.0004849    -0.0013433     1.6329140
-38.6892461  C
     0.0000209        70642.   3373937641.    23.8703621     0.0004998    -0.0013846     1.6750710
-39.8798551  C
     0.0000216        72652.   3369391010.    23.8711633     0.0005147    -0.0014259     1.7168117
-41.0697975  C
     0.0000222        74661.   3364986256.    23.8729638     0.0005297    -0.0014672     1.7581344
-42.2590679  C
     0.0000228        76666.   3360710943.    23.8756896     0.0005447    -0.0015085     1.7990373
-43.4476610  C
     0.0000234        78669.   3356553950.    23.8792748     0.0005597    -0.0015497     1.8395185
-44.6355710  C
     0.0000241        80670.   3352505304.    23.8836605     0.0005747    -0.0015909     1.8795763
-45.8227925  C
     0.0000247        82667.   3348556030.    23.8887939     0.0005898    -0.0016321     1.9192088
-47.0093197  C
     0.0000253        84663.   3344698028.    23.8946275     0.0006048    -0.0016733     1.9584143
-48.1951469  C
     0.0000259        86655.   3340923973.    23.9011185     0.0006199    -0.0017144     1.9971907
-49.3802682  C
     0.0000266        88645.   3337227214.    23.9082281     0.0006351    -0.0017556     2.0355361
-50.5646776  C
     0.0000272        90632.   3333601706.    23.9159214     0.0006502    -0.0017967     2.0734488
-51.7483691  C
```

```
     0.0000278        92617.   3330041935.    23.9241667     0.0006654    -0.0018377     2.1109266
-52.9313365  C
     0.0000284        94599.   3326542862.    23.9329351     0.0006806    -0.0018788     2.1479676
-54.1135736  C
     0.0000291        96578.   3323099872.    23.9422004     0.0006958    -0.0019198     2.1845699
-55.2950740  C
     0.0000297        98554.   3319708729.    23.9519387     0.0007111    -0.0019608     2.2207313
-56.4758313  C
     0.0000303       100527.   3316365536.    23.9621282     0.0007264    -0.0020018     2.2564499
-57.6558391  C
     0.0000309       102498.   3313066700.    23.9727490     0.0007417    -0.0020427     2.2917235
-58.8350905  C
     0.0000316       104466.   3309808904.    23.9837827     0.0007570    -0.0020836     2.3265501
-60.0000000  CY
     0.0000322       106431.   3306589079.    23.9952128     0.0007723    -0.0021245     2.3609275
-60.0000000  CY
     0.0000328       108393.   3303404520.    24.0070238     0.0007877    -0.0021654     2.3948536
-60.0000000  CY
     0.0000334       110287.   3298289590.    24.0142962     0.0008030    -0.0022064     2.4279660
-60.0000000  CY
     0.0000341       111905.   3285290862.    24.0017671     0.0008176    -0.0022481     2.4591357
-60.0000000  CY
     0.0000347       113363.   3268129079.    23.9785068     0.0008318    -0.0022901     2.4890186
-60.0000000  CY
     0.0000353       114708.   3248362054.    23.9483175     0.0008457    -0.0023325     2.5178910
-60.0000000  CY
     0.0000359       115955.   3226577666.    23.9125660     0.0008594    -0.0023750     2.5458531
-60.0000000  CY
     0.0000366       117122.   3203336022.    23.8726134     0.0008728    -0.0024178     2.5730064
-60.0000000  CY
     0.0000372       118212.   3178802079.    23.8277762     0.0008861    -0.0024608     2.5993018
-60.0000000  CY
     0.0000397       122043.   3075098512.    23.6234029     0.0009376    -0.0026343     2.6977518
-60.0000000  CY
     0.0000422       125199.   2967669575.    23.3991152     0.0009872    -0.0028097     2.7871757
-60.0000000  CY
     0.0000447       127882.   2861696299.    23.1698851     0.0010354    -0.0029865     2.8690580
-60.0000000  CY
     0.0000472       130199.   2759187672.    22.9416740     0.0010826    -0.0031643     2.9442115
-60.0000000  CY
     0.0000497       132219.   2661004989.    22.7071723     0.0011283    -0.0033436     3.0124509
-60.0000000  CY
     0.0000522       133981.   2567297594.    22.4782724     0.0011731    -0.0035238     3.0750065
-60.0000000  CY
     0.0000547       135555.   2478722770.    22.2586781     0.0012173    -0.0037046     3.1324520
-60.0000000  CY
     0.0000572       136977.   2395232131.    22.0492861     0.0012609    -0.0038859     3.1851163
-60.0000000  CY
```

0.0000597	138263.	2316451331.	21.8385969	0.0013035	-0.0040684	3.2324785	-60.0000000 CY
0.0000622	139404.	2241671230.	21.6350469	0.0013454	-0.0042514	3.2753707	-60.0000000 CY
0.0000647	140485.	2171752478.	21.4452033	0.0013872	-0.0044346	3.3143977	-60.0000000 CY
0.0000672	141439.	2105135843.	21.2608136	0.0014285	-0.0046184	3.3492241	-60.0000000 CY
0.0000697	142359.	2042818374.	21.0861146	0.0014694	-0.0048024	3.3802541	-60.0000000 CY
0.0000722	143157.	1983120560.	20.9081061	0.0015093	-0.0049876	3.4069950	-60.0000000 CY
0.0000747	143930.	1927095427.	20.7424868	0.0015492	-0.0051727	3.4303812	-60.0000000 CY
0.0000772	144640.	1873883091.	20.5838658	0.0015888	-0.0053581	3.4502507	-60.0000000 CY
0.0000797	145290.	1823252975.	20.4316825	0.0016281	-0.0055437	3.4666812	-60.0000000 CY
0.0000822	145929.	1775565738.	20.2902839	0.0016676	-0.0057293	3.4798672	-60.0000000 CY
0.0000847	146502.	1729916685.	20.1465450	0.0017062	-0.0059157	3.4895540	-60.0000000 CY
0.0000872	147018.	1686225836.	20.0045417	0.0017441	-0.0061027	3.4960155	-60.0000000 CY
0.0000897	147527.	1644894879.	19.8721248	0.0017823	-0.0062896	3.4994297	-60.0000000 CY
0.0000922	148008.	1605505979.	19.7462688	0.0018204	-0.0064765	3.4962783	-60.0000000 CY
0.0000947	148447.	1567761414.	19.6247339	0.0018582	-0.0066637	3.4986961	-60.0000000 CY
0.0000972	148858.	1531653144.	19.5081388	0.0018959	-0.0068509	3.4999228	-60.0000000 CY
0.0000997	149261.	1497289154.	19.3994336	0.0019339	-0.0070380	3.4966164	-60.0000000 CY
0.0001022	149642.	1464389322.	19.2912306	0.0019713	-0.0072256	3.4994030	-60.0000000 CY
0.0001047	149994.	1432774924.	19.1829226	0.0020082	-0.0074137	3.4978798	-60.0000000 CY
0.0001072	150308.	1402285943.	19.0770549	0.0020448	-0.0076021	3.4963135	-60.0000000 CY
0.0001097	150616.	1373136505.	18.9767553	0.0020815	-0.0077904	3.4990902	-60.0000000 CY
0.0001122	150920.	1345251016.	18.8818908	0.0021183	-0.0079786	3.4998771	-60.0000000 CY
0.0001147	151214.	1318491078.	18.7920923	0.0021552	-0.0081667	3.4938917	60.0000000 CY
0.0001172	151499.	1292788674.	18.7059785	0.0021921	-0.0083548	3.4975221	60.0000000 CY

```
     0.0001197       151748.   1267869899.    18.6198775     0.0022286    -0.0085433     3.4995223
60.0000000  CY
     0.0001222       151994.   1243939108.    18.5381145     0.0022651    -0.0087317     3.4984985
60.0000000  CY
     0.0001247       152230.   1220892374.    18.4600357     0.0023017    -0.0089201     3.4928207
60.0000000  CY
     0.0001272       152456.   1198671074.    18.3790861     0.0023376    -0.0091093     3.4964197
60.0000000  CY
     0.0001297       152677.   1177270487.    18.3006486     0.0023734    -0.0092985     3.4987733
60.0000000  CY
     0.0001322       152897.   1156668734.    18.2258576     0.0024092    -0.0094876     3.4998976
60.0000000  CY
     0.0001347       153094.   1136660592.    18.1516272     0.0024448    -0.0096771     3.4964796
60.0000000  CY
     0.0001372       153278.   1117288867.    18.0791882     0.0024802    -0.0098666     3.4915390
60.0000000  CY
     0.0001522       154259.   1013612843.    17.7126249     0.0026956    -0.0110012     3.4896240
60.0000000  CY
     0.0001672       154887.    926425367.    17.4380030     0.0029154    -0.0121315     3.4942084
60.0000000  CY
     0.0001822       155332.    852591489.    17.2197295     0.0031372    -0.0132597     3.4995061
60.0000000  CY
     0.0001972       155621.    789205185.    17.0508347     0.0033622    -0.0143847     3.4912571
60.0000000  CY
     0.0002122       155826.    734380009.    16.9168049     0.0035895    -0.0155073     3.4971922
60.0000000  CY
     0.0002272       155985.    686593569.    16.8149757     0.0038202    -0.0166267     3.4906464
60.0000000  CY


Axial Thrust Force =    146.190 kips

    Bending       Bending       Bending       Depth to      Max Comp      Max Tens    Max Concrete   Max
Steel    Run
   Curvature      Moment       Stiffness       N Axis        Strain        Strain        Stress
Stress     Msg
    rad/in.       in-kip        kip-in2          in          in/in         in/in          ksi           ksi

 ------------- ------------- ------------- ------------- ------------- ------------- -------------
-------------  ---
   0.000000313  4447.3445844  14231502670.    62.3870476     0.0000195  -0.000008629     0.0763663
0.5613045
   0.000000625  8877.2234022  14203557444.    53.7197547     0.0000336    -0.0000227     0.1308380
0.9655143
   0.000000938        13286.  14171773015.    50.8312124     0.0000477    -0.0000367     0.1848748
1.3697392
   0.000001250        17674.  14138968709.    49.3871112     0.0000617    -0.0000508     0.2384756
1.7739703
```

```
   0.000001563        22040.  14105750460.    48.5207473     0.0000758    -0.0000648     0.2916402
2.1782057
   0.000001875        26386.  14072323999.    47.9432414     0.0000899    -0.0000789     0.3443683
2.5824450
   0.000002188        30710.  14038778149.    47.5307929     0.0001040    -0.0000929     0.3966600
2.9866878
   0.000002500        35013.  14005157603.    47.2215050     0.0001181    -0.0001069     0.4485153
3.3909341
   0.000002813        35013.  12449028980.    29.3435319     0.0000825    -0.0001706     0.3149671
-4.9105900  C
   0.000003125        35013.  11204126082.    28.7670976     0.0000899    -0.0001914     0.3422626
-5.5084505  C
   0.000003438        35013.  10185569166.    28.2921701     0.0000973    -0.0002121     0.3693980
-6.1066399  C
   0.000003750        35013.   9336771735.    27.8854890     0.0001046    -0.0002329     0.3962635
-6.7060156  C
   0.000004063        35013.   8618558525.    27.5424602     0.0001119    -0.0002537     0.4230296
-7.3052633  C
   0.000004375        35013.   8002947201.    27.2421805     0.0001192    -0.0002746     0.4495785
-7.9053046  C
   0.000004688        35013.   7469417388.    26.9799931     0.0001265    -0.0002954     0.4759787
-8.5056103  C
   0.000005000        35013.   7002578801.    26.7514765     0.0001338    -0.0003162     0.5022806
-9.1057859  C
   0.000005313        35013.   6590662401.    26.5506914     0.0001411    -0.0003371     0.5284841
-9.7058310  C
   0.000005625        35013.   6224514490.    26.3663829     0.0001483    -0.0003579     0.5544532
-10.3068275  C
   0.000005938        35013.   5896908464.    26.2022263     0.0001556    -0.0003788     0.5803245
-10.9076948  C
   0.000006250        35013.   5602063041.    26.0552231     0.0001628    -0.0003997     0.6060982
-11.5084283  C
   0.000006563        35013.   5335298134.    25.9229251     0.0001701    -0.0004205     0.6317744
-12.1090277  C
   0.000006875        35013.   5092784583.    25.8033293     0.0001774    -0.0004414     0.6573527
-12.7094925  C
   0.000007188        35013.   4871359166.    25.6947809     0.0001847    -0.0004622     0.6828330
-13.3098222  C
   0.000007500        35013.   4668385868.    25.5938328     0.0001920    -0.0004830     0.7081602
-13.9104663  C
   0.000007813        35013.   4481650433.    25.5000010     0.0001992    -0.0005039     0.7333466
-14.5113279  C
   0.000008125        35013.   4309279262.    25.4139786     0.0002065    -0.0005248     0.7584357
-15.1120500  C
   0.000008438        35013.   4149676327.    25.3349000     0.0002138    -0.0005456     0.7834274
-15.7126323  C
   0.000008750        35013.   4001473601.    25.2620229     0.0002210    -0.0005665     0.8083215
-16.3130742  C
```

0.000009063	35013.	3863491752.	25.1947078	0.0002283	-0.0005873	0.8331179	-16.9133752 C
0.000009375	35013.	3734708694.	25.1324002	0.0002356	-0.0006081	0.8578163	-17.5135349 C
0.000009688	35326.	3646593343.	25.0746171	0.0002429	-0.0006290	0.8824166	-18.1135528 C
0.0000100	36353.	3635265453.	25.0209362	0.0002502	-0.0006498	0.9069186	-18.7134285 C
0.0000103	37378.	3624568730.	24.9709862	0.0002575	-0.0006706	0.9313221	-19.3131613 C
0.0000106	38404.	3614447321.	24.9244394	0.0002648	-0.0006914	0.9556269	-19.9127508 C
0.0000109	39428.	3604851753.	24.8810058	0.0002721	-0.0007122	0.9798329	-20.5121966 C
0.0000113	40452.	3595738052.	24.8404274	0.0002795	-0.0007330	1.0039399	-21.1114980 C
0.0000116	41475.	3587066995.	24.8024743	0.0002868	-0.0007538	1.0279477	-21.7106547 C
0.0000119	42498.	3578803488.	24.7669406	0.0002941	-0.0007746	1.0518561	-22.3096660 C
0.0000122	43520.	3570909833.	24.7329784	0.0003014	-0.0007954	1.0756382	-22.9087660 C
0.0000128	45563.	3556130242.	24.6699731	0.0003161	-0.0008370	1.1228520	-24.1069850 C
0.0000134	47603.	3542552448.	24.6143903	0.0003308	-0.0008786	1.1696695	-25.3045954 C
0.0000141	49641.	3530015146.	24.5652515	0.0003454	-0.0009202	1.2160892	-26.5015927 C
0.0000147	51676.	3518384476.	24.5217449	0.0003602	-0.0009617	1.2621094	-27.6979724 C
0.0000153	53709.	3507548420.	24.4831913	0.0003749	-0.0010032	1.3077286	-28.8937297 C
0.0000159	55740.	3497412520.	24.4490183	0.0003897	-0.0010447	1.3529452	-30.0888599 C
0.0000166	57768.	3487896561.	24.4187400	0.0004044	-0.0010862	1.3977576	-31.2833583 C
0.0000172	59794.	3478931987.	24.3919412	0.0004192	-0.0011276	1.4421643	-32.4772199 C
0.0000178	61818.	3470459851.	24.3682653	0.0004341	-0.0011691	1.4861635	-33.6704398 C
0.0000184	63839.	3462429188.	24.3474041	0.0004489	-0.0012105	1.5297536	-34.8630129 C
0.0000191	65857.	3454795705.	24.3290899	0.0004638	-0.0012519	1.5729329	-36.0549343 C
0.0000197	67873.	3447520723.	24.3130891	0.0004787	-0.0012932	1.6156997	-37.2461988 C
0.0000203	69887.	3440570185.	24.2991971	0.0004936	-0.0013345	1.6580524	-38.4368016 C

```
     0.0000209        71898.   3433914486.    24.2872337     0.0005085    -0.0013759     1.6999891
-39.6267362  C
     0.0000216        73906.   3427527028.    24.2770400     0.0005235    -0.0014172     1.7415083
-40.8159981  C
     0.0000222        75912.   3421384347.    24.2684747     0.0005385    -0.0014584     1.7826079
-42.0045816  C
     0.0000228        77915.   3415465536.    24.2614125     0.0005535    -0.0014997     1.8232863
-43.1924813  C
     0.0000234        79916.   3409751911.    24.2557414     0.0005685    -0.0015409     1.8635417
-44.3796914  C
     0.0000241        81914.   3404226718.    24.2513612     0.0005835    -0.0015821     1.9033722
-45.5662064  C
     0.0000247        83910.   3398874886.    24.2481819     0.0005986    -0.0016232     1.9427759
-46.7520204  C
     0.0000253        85903.   3393682827.    24.2461226     0.0006137    -0.0016644     1.9817511
-47.9371275  C
     0.0000259        87893.   3388638249.    24.2451102     0.0006289    -0.0017055     2.0202956
-49.1215217  C
     0.0000266        89880.   3383730007.    24.2450789     0.0006440    -0.0017466     2.0584077
-50.3051970  C
     0.0000272        91865.   3378947973.    24.2459686     0.0006592    -0.0017877     2.0960854
-51.4881472  C
     0.0000278        93847.   3374282916.    24.2477250     0.0006744    -0.0018287     2.1333267
-52.6703661  C
     0.0000284        95827.   3369726408.    24.2502989     0.0006896    -0.0018698     2.1701296
-53.8518472  C
     0.0000291        97803.   3365270736.    24.2536449     0.0007049    -0.0019108     2.2064920
-55.0325842  C
     0.0000297        99777.   3360908825.    24.2577221     0.0007202    -0.0019517     2.2424120
-56.2125705  C
     0.0000303       101748.   3356634174.    24.2624927     0.0007355    -0.0019927     2.2778874
-57.3917994  C
     0.0000309       103716.   3352440798.    24.2679223     0.0007508    -0.0020336     2.3129162
-58.5702642  C
     0.0000316       105681.   3348323174.    24.2739792     0.0007661    -0.0020745     2.3474961
-59.7479579  C
     0.0000322       107644.   3344276199.    24.2806345     0.0007815    -0.0021153     2.3816251
-60.0000000  CY
     0.0000328       109603.   3340295148.    24.2878613     0.0007969    -0.0021562     2.4153010
-60.0000000  CY
     0.0000334       111522.   3335236381.    24.2927804     0.0008123    -0.0021971     2.4483139
-60.0000000  CY
     0.0000341       113219.   3323858158.    24.2819559     0.0008271    -0.0022385     2.4796813
-60.0000000  CY
     0.0000347       114701.   3306709685.    24.2563773     0.0008414    -0.0022805     2.5094656
-60.0000000  CY
     0.0000353       116066.   3286810692.    24.2235676     0.0008554    -0.0023227     2.5382112
-60.0000000  CY
```

0.0000359	117332.	3264888990.	24.1852605	0.0008692	-0.0023652	2.5660447	-60.0000000 CY
0.0000366	118519.	3241547028.	24.1429426	0.0008827	-0.0024079	2.5930767	-60.0000000 CY
0.0000372	119630.	3216939302.	24.0968979	0.0008961	-0.0024508	2.6193307	-60.0000000 CY
0.0000397	123521.	3112333010.	23.8920166	0.0009482	-0.0026237	2.7178726	-60.0000000 CY
0.0000422	126710.	3003499888.	23.6589079	0.0009981	-0.0027988	2.8066633	-60.0000000 CY
0.0000447	129426.	2896251205.	23.4200489	0.0010466	-0.0029753	2.8877480	-60.0000000 CY
0.0000472	131770.	2792487023.	23.1832974	0.0010940	-0.0031529	2.9620904	-60.0000000 CY
0.0000497	133809.	2693019885.	22.9514885	0.0011404	-0.0033315	3.0302601	-60.0000000 CY
0.0000522	135594.	2598211264.	22.7148509	0.0011854	-0.0035114	3.0919033	-60.0000000 CY
0.0000547	137183.	2508483577.	22.4875147	0.0012298	-0.0036921	3.1483649	-60.0000000 CY
0.0000572	138624.	2424019870.	22.2715681	0.0012737	-0.0038732	3.2000611	-60.0000000 CY
0.0000597	139927.	2344330829.	22.0658722	0.0013171	-0.0040548	3.2471506	-60.0000000 CY
0.0000622	141084.	2268686518.	21.8572636	0.0013592	-0.0042376	3.2890449	-60.0000000 CY
0.0000647	142174.	2197862542.	21.6614095	0.0014012	-0.0044207	3.3269550	-60.0000000 CY
0.0000672	143134.	2130361885.	21.4711292	0.0014426	-0.0046043	3.3606350	-60.0000000 CY
0.0000697	144062.	2067262604.	21.2948793	0.0014840	-0.0047879	3.3906919	-60.0000000 CY
0.0000722	144886.	2007073681.	21.1222236	0.0015248	-0.0049721	3.4167224	-60.0000000 CY
0.0000747	145655.	1950192040.	20.9506563	0.0015648	-0.0051571	3.4388088	-60.0000000 CY
0.0000772	146376.	1896374305.	20.7880618	0.0016046	-0.0053423	3.4574264	-60.0000000 CY
0.0000797	147030.	1845083749.	20.6314069	0.0016441	-0.0055278	3.4725570	-60.0000000 CY
0.0000822	147665.	1796682756.	20.4850514	0.0016836	-0.0057133	3.4843956	-60.0000000 CY
0.0000847	148255.	1750614794.	20.3452528	0.0017230	-0.0058989	3.4928829	-60.0000000 CY
0.0000872	148789.	1706537399.	20.2073119	0.0017618	-0.0060850	3.4980306	-60.0000000 CY
0.0000897	149293.	1664595660.	20.0704289	0.0018001	-0.0062718	3.4999748	-60.0000000 CY

0.0000922	149777.	1624703898.	19.9413895	0.0018383	-0.0064585	3.4971271	-60.0000000 CY
0.0000947	150228.	1586565304.	19.8175424	0.0018765	-0.0066454	3.4997194	-60.0000000 CY
0.0000972	150633.	1549922355.	19.6973214	0.0019143	-0.0068325	3.4951808	-60.0000000 CY
0.0000997	151033.	1515065404.	19.5848597	0.0019524	-0.0070195	3.4985124	-60.0000000 CY
0.0001022	151422.	1481801579.	19.4784326	0.0019905	-0.0072064	3.4999828	-60.0000000 CY
0.0001047	151797.	1449998588.	19.3781390	0.0020286	-0.0073932	3.4951677	-60.0000000 CY
0.0001072	152111.	1419114396.	19.2712176	0.0020656	-0.0075812	3.4985062	-60.0000000 CY
0.0001097	152418.	1389566085.	19.1676354	0.0021025	-0.0077694	3.4999366	-60.0000000 CY
0.0001122	152718.	1361275514.	19.0699782	0.0021394	-0.0079575	3.4944348	60.0000000 CY
0.0001147	153011.	1334159547.	18.9771877	0.0021764	-0.0081454	3.4969034	60.0000000 CY
0.0001172	153301.	1308165744.	18.8890593	0.0022136	-0.0083333	3.4992694	60.0000000 CY
0.0001197	153556.	1282972244.	18.8011057	0.0022503	-0.0085216	3.4997219	60.0000000 CY
0.0001222	153799.	1258710375.	18.7170469	0.0022870	-0.0087099	3.4928597	60.0000000 CY
0.0001247	154034.	1235363500.	18.6363127	0.0023237	-0.0088982	3.4962269	60.0000000 CY
0.0001272	154267.	1212908268.	18.5592559	0.0023605	-0.0090864	3.4987370	60.0000000 CY
0.0001297	154496.	1191298138.	18.4857567	0.0023974	-0.0092745	3.4999084	60.0000000 CY
0.0001322	154718.	1170441889.	18.4123911	0.0024339	-0.0094630	3.4961017	60.0000000 CY
0.0001347	154928.	1150278357.	18.3382177	0.0024699	-0.0096519	3.4923598	60.0000000 CY
0.0001372	155109.	1130636306.	18.2633805	0.0025055	-0.0098414	3.4957501	60.0000000 CY
0.0001522	156049.	1025374623.	17.8932599	0.0027231	-0.0109737	3.4947125	60.0000000 CY
0.0001672	156678.	937138509.	17.6303667	0.0029476	-0.0120993	3.4896710	60.0000000 CY
0.0001822	157107.	862339462.	17.4184114	0.0031734	-0.0132235	3.4960700	60.0000000 CY
0.0001972	157404.	798242825.	17.2440192	0.0034003	-0.0143466	3.4971790	60.0000000 CY
0.0002122	157590.	742693370.	17.1086056	0.0036302	-0.0154666	3.4866957	60.0000000 CY

0.0002272 157732. 694283249. 17.0041650 0.0038631 -0.0165837 3.4973846
60.0000000 CY

Summary of Results for Nominal (Unfactored) Moment Capacity for Section 1

Moment values interpolated at maximum compressive strain = 0.003
or maximum developed moment if pile fails at smaller strains.

Load No.	Axial Thrust kips	Nominal Mom. Cap. in-kip	Max. Comp. Strain
1	86.680	155056.353	0.00300000
2	146.190	156777.571	0.00300000

Note note that the values of moment capacity in the table above are not
factored by a strength reduction factor (phi-factor).

In ACI 318-08, the value of the strength reduction factor depends on whether
the transverse reinforcing steel bars are spirals or tied hoops.

The above values should be multiplied by the appropriate strength reduction
factor to compute ultimate moment capacity according to ACI 318-08, Section
9.3.2.2 or the value required by the design standard being followed.

Computed Values of Pile Loading and Deflection
for Lateral Loading for Load Case Number 1

Pile-head conditions are Shear and Moment (Loading Type 1)

Horizontal shear force at pile head = 30140.000 lbs
Applied moment at pile head = 33995280.000 in-lbs
Axial thrust load on pile head = 146190.000 lbs

Depth X	Deflect. y	Bending Moment	Shear Force	Slope S	Total Stress	Bending Stiffness	Soil Res. p	Soil Spr. Es*h	Distrib. Lat. Load
inches	inches	in-lbs	lbs	radians	psi*	lb-in^2	lb/in	lb/inch	lb/inch

0.00	0.3838	33995280.	30140.	-0.002487	0.000	1.401E+13	0.000	0.000	0.000
3.360	0.3754	34097770.	30140.	-0.002479	0.000	1.401E+13	0.000	0.000	0.000
6.720	0.3671	34200256.	30140.	-0.002471	0.000	1.401E+13	0.000	0.000	0.000
10.080	0.3588	34302738.	30140.	-0.002462	0.000	1.401E+13	0.000	0.000	0.000
13.440	0.3506	34405216.	30138.	-0.002454	0.000	1.401E+13	-1.2012	11.5130	0.000
16.800	0.3423	34507676.	30134.	-0.002446	0.000	1.401E+13	-1.1917	11.6968	0.000
20.160	0.3341	34610119.	30130.	-0.002438	0.000	1.401E+13	-1.1821	11.8875	0.000
23.520	0.3259	34712544.	30126.	-0.002429	0.000	1.401E+13	-1.1724	12.0855	0.000
26.880	0.3178	34814952.	30122.	-0.002421	0.000	1.401E+13	-1.1625	12.2912	0.000
30.240	0.3097	34917343.	30118.	-0.002413	0.000	1.401E+13	-1.1525	12.5051	0.000
33.600	0.3016	35019717.	30114.	-0.002404	0.000	1.366E+13	-1.1424	12.7278	0.000
36.960	0.2935	35122074.	30111.	-0.002393	0.000	8.798E+12	-1.1321	12.9598	0.000
40.320	0.2855	35224411.	30107.	-0.002376	0.000	5.672E+12	-1.1217	13.2013	0.000
43.680	0.2776	35326725.	30103.	-0.002349	0.000	3.690E+12	-1.1112	13.4521	0.000
47.040	0.2697	35429011.	30099.	-0.002317	0.000	3.645E+12	-1.1007	13.7116	0.000
50.400	0.2620	35531268.	30096.	-0.002284	0.000	3.644E+12	-1.0900	13.9800	0.000
53.760	0.2544	35633498.	30028.	-0.002252	0.000	3.643E+12	-39.1690	517.3985	0.000
57.120	0.2469	35735268.	29855.	-0.002219	0.000	3.642E+12	-63.8902	869.6252	0.000
60.480	0.2395	35836302.	29601.	-0.002186	0.000	3.641E+12	-87.0771	1221.8519	0.000
63.840	0.2322	35936335.	29272.	-0.002152	0.000	3.640E+12	-108.7647	1574.0786	0.000
67.200	0.2250	36035125.	28873.	-0.002119	0.000	3.639E+12	-128.9883	1926.3054	0.000
70.560	0.2179	36132442.	28408.	-0.002086	0.000	3.638E+12	-147.7830	2278.5321	0.000
73.920	0.2110	36228075.	27785.	-0.002053	0.000	3.637E+12	-223.0832	3552.8673	0.000
77.280	0.2041	36321172.	26995.	-0.002019	0.000	3.636E+12	-246.7536	4061.5313	

0.000									
	80.640	0.1974	36411467.	26130.	-0.001985	0.000	3.635E+12	-268.5064	4570.1952
0.000									
	84.000	0.1908	36498715.	25194.	-0.001952	0.000	3.634E+12	-288.3932	5078.8592
0.000									
	87.360	0.1843	36582689.	24195.	-0.001918	0.000	3.633E+12	-306.4659	5587.5232
0.000									
	90.720	0.1779	36663188.	23138.	-0.001884	0.000	3.632E+12	-322.7766	6096.1871
0.000									
	94.080	0.1716	36740025.	22029.	-0.001850	0.000	3.631E+12	-337.3774	6604.8511
0.000									
	97.440	0.1655	36813038.	20873.	-0.001816	0.000	3.630E+12	-350.3206	7113.5151
0.000									
	100.800	0.1594	36882078.	19677.	-0.001782	0.000	3.630E+12	-361.6587	7622.1791
0.000									
	104.160	0.1535	36947019.	18446.	-0.001748	0.000	3.629E+12	-371.4442	8130.8430
0.000									
	107.520	0.1477	37007749.	17184.	-0.001713	0.000	3.628E+12	-379.7299	8639.5070
0.000									
	110.880	0.1420	37064176.	15896.	-0.001679	0.000	3.628E+12	-386.5684	9148.1710
0.000									
	114.240	0.1364	37116221.	14588.	-0.001645	0.000	3.627E+12	-392.0127	9656.8349
0.000									
	117.600	0.1309	37163824.	13264.	-0.001610	0.000	3.627E+12	-396.1157	10165.
0.000									
	120.960	0.1256	37206938.	11928.	-0.001576	0.000	3.626E+12	-398.9303	10674.
0.000									
	124.320	0.1203	37245532.	10585.	-0.001541	0.000	3.626E+12	-400.5097	11183.
0.000									
	127.680	0.1152	37279586.	9239.0100	-0.001507	0.000	3.626E+12	-400.9068	11691.
0.000									
	131.040	0.1102	37309098.	7893.1931	-0.001472	0.000	3.625E+12	-400.1747	12200.
0.000									
	134.400	0.1053	37334075.	6456.5100	-0.001438	0.000	3.625E+12	-454.9938	14515.
0.000									
	137.760	0.1005	37353898.	4931.9006	-0.001403	0.000	3.625E+12	-452.5118	15121.
0.000									
	141.120	0.0959	37368596.	3417.6084	-0.001369	0.000	3.625E+12	-448.8526	15728.
0.000									
	144.480	0.0914	37378209.	1917.4830	-0.001334	0.000	3.625E+12	-444.0792	16334.
0.000									
	147.840	0.0869	37382792.	435.1619	-0.001299	0.000	3.625E+12	-438.2548	16940.
0.000									
	151.200	0.0826	37382410.	-1025.9299	-0.001265	0.000	3.625E+12	-431.4426	17546.
0.000									
	154.560	0.0784	37377140.	-2462.5788	-0.001230	0.000	3.625E+12	-423.7055	18152.
0.000									
	157.920	0.0744	37367070.	-3871.7829	-0.001195	0.000	3.625E+12	-415.1065	18758.

0.000									
	161.280	0.0704	37352296.	-5250.7516	-0.001161	0.000	3.625E+12	-405.7082	19364.
0.000									
	164.640	0.0666	37332925.	-6596.9050	-0.001126	0.000	3.625E+12	-395.5735	19970.
0.000									
	168.000	0.0628	37309071.	-7907.8735	-0.001091	0.000	3.625E+12	-384.7649	20576.
0.000									
	171.360	0.0592	37280856.	-9181.4974	-0.001057	0.000	3.626E+12	-373.3447	21182.
0.000									
	174.720	0.0557	37248410.	-10416.	-0.001022	0.000	3.626E+12	-361.3752	21788.
0.000									
	178.080	0.0524	37211866.	-11609.	-0.000988	0.000	3.626E+12	-348.9184	22394.
0.000									
	181.440	0.0491	37171367.	-12760.	-0.000953	0.000	3.627E+12	-336.0364	23001.
0.000									
	184.800	0.0459	37127057.	-13867.	-0.000919	0.000	3.627E+12	-322.7908	23607.
0.000									
	188.160	0.0429	37079086.	-14928.	-0.000885	0.000	3.628E+12	-309.2430	24213.
0.000									
	191.520	0.0400	37027606.	-15944.	-0.000850	0.000	3.628E+12	-295.4545	24819.
0.000									
	194.880	0.0372	36972775.	-16914.	-0.000816	0.000	3.629E+12	-281.4864	25425.
0.000									
	198.240	0.0345	36914748.	-17836.	-0.000782	0.000	3.629E+12	-267.3994	26031.
0.000									
	201.600	0.0319	36853686.	-18710.	-0.000748	0.000	3.630E+12	-253.2544	26637.
0.000									
	204.960	0.0295	36789748.	-19538.	-0.000714	0.000	3.631E+12	-239.1116	27243.
0.000									
	208.320	0.0272	36723094.	-20317.	-0.000680	0.000	3.631E+12	-225.0314	27849.
0.000									
	211.680	0.0249	36653883.	-21050.	-0.000646	0.000	3.632E+12	-211.0737	28455.
0.000									
	215.040	0.0228	36582272.	-21736.	-0.000612	0.000	3.633E+12	-197.2982	29061.
0.000									
	218.400	0.0208	36508417.	-22376.	-0.000578	0.000	3.634E+12	-183.7644	29667.
0.000									
	221.760	0.0189	36432471.	-22972.	-0.000544	0.000	3.634E+12	-170.5315	30273.
0.000									
	225.120	0.0172	36354583.	-23523.	-0.000511	0.000	3.635E+12	-157.6585	30880.
0.000									
	228.480	0.0155	36274899.	-24032.	-0.000477	0.000	3.636E+12	-145.2041	31486.
0.000									
	231.840	0.0139	36193559.	-24499.	-0.000444	0.000	3.637E+12	-133.2269	32092.
0.000									
	235.200	0.0125	36110699.	-24928.	-0.000410	0.000	3.638E+12	-121.7850	32698.
0.000									
	238.560	0.0112	36026447.	-25319.	-0.000377	0.000	3.639E+12	-110.9365	33304.

0.000									
	241.920	0.009982	35940926.	-25674.	-0.000344	0.000	3.640E+12	-100.7390	33910.
0.000									
	245.280	0.008883	35854252.	-25997.	-0.000311	0.000	3.641E+12	-91.2500	34516.
0.000									
	248.640	0.007895	35766531.	-26289.	-0.000277	0.000	3.642E+12	-82.5267	35122.
0.000									
	252.000	0.007018	35677863.	-52842.	-0.000245	0.000	3.643E+12	-15723.	7527618.
0.000									
	255.360	0.006252	35411671.	-106260.	-0.000212	0.000	3.646E+12	-16074.	8638732.
0.000									
	258.720	0.005595	34964000.	-160833.	-0.000188	0.000	8.054E+12	-16410.	9854953.
0.000									
	262.080	0.004987	34331056.	-216459.	-0.000177	0.000	1.401E+13	-16700.	11250805.
0.000									
	265.440	0.004407	33509572.	-272946.	-0.000169	0.000	1.402E+13	-16923.	12901675.
0.000									
	268.800	0.003854	32497027.	-330059.	-0.000161	0.000	1.402E+13	-17073.	14883254.
0.000									
	272.160	0.003327	31291734.	-387534.	-0.000153	0.000	1.403E+13	-17139.	17306449.
0.000									
	275.520	0.002826	29892946.	-445068.	-0.000146	0.000	1.404E+13	-17107.	20341622.
0.000									
	278.880	0.002348	28301021.	-501387.	-0.000139	0.000	1.406E+13	-16416.	23490133.
0.000									
	282.240	0.001893	26523764.	-551992.	-0.000132	0.000	1.407E+13	-13707.	24326400.
0.000									
	285.600	0.001460	24591763.	-593382.	-0.000126	0.000	1.408E+13	-10930.	25162667.
0.000									
	288.960	0.001046	22536362.	-625337.	-0.000121	0.000	1.410E+13	-8090.4732	25998933.
0.000									
	292.320	0.000650	20389620.	-647646.	-0.000115	0.000	1.412E+13	-5188.8258	26835200.
0.000									
	295.680	0.000270	18184295.	-660100.	-0.000111	0.000	1.413E+13	-2224.4025	27671467.
0.000									
	299.040	-9.497E-05	15953856.	-662483.	-0.000107	0.000	1.415E+13	805.7389	28507733.
0.000									
	302.400	-0.000447	13732512.	-654567.	-0.000103	0.000	1.417E+13	3906.4334	29344000.
0.000									
	305.760	-0.000789	11555268.	-636103.	-0.000100	0.000	1.418E+13	7084.2201	30180267.
0.000									
	309.120	-0.001121	9458001.	-606818.	-9.775E-05	0.000	1.420E+13	10347.	31016533.
0.000									
	312.480	-0.001446	7477546.	-566413.	-9.574E-05	0.000	1.421E+13	13704.	31852800.
0.000									
	315.840	-0.001764	5651802.	-514554.	-9.419E-05	0.000	1.422E+13	17165.	32689067.
0.000									
	319.200	-0.002079	4019839.	-450875.	-9.305E-05	0.000	1.423E+13	20739.	33525333.

```
0.000
   322.560  -0.002390   2622011.   -374979. -9.227E-05      0.000  1.423E+13     24438.  34361600.
0.000
   325.920  -0.002699   1500074.   -289205. -9.178E-05      0.000  1.423E+13     26618.  33142820.
0.000
   329.280  -0.003006    678647.   -197426. -9.152E-05      0.000  1.423E+13     28012.  31307015.
0.000
   332.640  -0.003314    173463.   -101003. -9.142E-05      0.000  1.423E+13     29383.  29794359.
0.000
   336.000  -0.003621      0.000      0.000 -9.140E-05      0.000  1.423E+13     30738.  14262242.
0.000

* This analysis makes computations of pile response using nonlinear moment-curvature relationships.
  The above values of total stress are computed for combined axial stress and do not equal the
  actual stresses in concrete and steel in the range of nonlinear bending.


Output Verification: Computed forces and moments are within specified convergence limits.


Output Summary for Load Case No. 1:

Pile-head deflection             =      0.3837665 inches
Computed slope at pile head      =     -0.0024870 radians
Maximum bending moment           =      37382792. inch-lbs
Maximum shear force              =       -662483. lbs
Depth of maximum bending moment  =    147.8400000 inches below pile head
Depth of maximum shear force     =    299.0400000 inches below pile head
Number of iterations             =            153
Number of zero deflection points =              1


--------------------------------------------------------------------------------
                  Computed Values of Pile Loading and Deflection
                    for Lateral Loading for Load Case Number 2
--------------------------------------------------------------------------------

Pile-head conditions are Shear and Moment (Loading Type 1)

Horizontal shear force at pile head                    =       65560.000 lbs
Applied moment at pile head                            =    73465920.000 in-lbs
Axial thrust load on pile head                         =       86680.000 lbs

   Depth    Deflect.    Bending    Shear       Slope      Total    Bending   Soil Res.  Soil Spr.   Distrib.

     X         y        Moment     Force         S       Stress   Stiffness      p         Es*h    Lat. Load
```

inches	inches	in-lbs	lbs	radians	psi*	lb-in^2	lb/in	lb/inch	lb/inch
0.00	1.1447	73465920.	65560.	-0.007239	0.000	3.367E+12	0.000	0.000	0.000
3.360	1.1205	73688299.	65560.	-0.007166	0.000	3.367E+12	0.000	0.000	0.000
6.720	1.0965	73910657.	65560.	-0.007092	0.000	3.367E+12	0.000	0.000	0.000
10.080	1.0728	74132994.	65560.	-0.007018	0.000	3.366E+12	0.000	0.000	0.000
13.440	1.0494	74355308.	65557.	-0.006944	0.000	3.366E+12	-1.7311	5.5430	0.000
16.800	1.0261	74577582.	65551.	-0.006870	0.000	3.365E+12	-1.7183	5.6263	0.000
20.160	1.0032	74799815.	65546.	-0.006795	0.000	3.365E+12	-1.7054	5.7118	0.000
23.520	0.9805	75022006.	65540.	-0.006720	0.000	3.364E+12	-1.6924	5.7996	0.000
26.880	0.9580	75244157.	65534.	-0.006645	0.000	3.364E+12	-1.6794	5.8899	0.000
30.240	0.9358	75466267.	65529.	-0.006570	0.000	3.363E+12	-1.6663	5.9827	0.000
33.600	0.9139	75688336.	65523.	-0.006495	0.000	3.363E+12	-1.6532	6.0781	0.000
36.960	0.8922	75910364.	65517.	-0.006419	0.000	3.362E+12	-1.6400	6.1762	0.000
40.320	0.8707	76132352.	65512.	-0.006343	0.000	3.362E+12	-1.6267	6.2772	0.000
43.680	0.8496	76354299.	65507.	-0.006267	0.000	3.361E+12	-1.6134	6.3811	0.000
47.040	0.8286	76576206.	65501.	-0.006190	0.000	3.361E+12	-1.6001	6.4881	0.000
50.400	0.8080	76798072.	65496.	-0.006113	0.000	3.360E+12	-1.5867	6.5983	0.000
53.760	0.7875	77019898.	65289.	-0.006037	0.000	3.360E+12	-121.2729	517.3985	0.000
57.120	0.7674	77240333.	64752.	-0.005959	0.000	3.359E+12	-198.6152	869.6252	0.000
60.480	0.7475	77458503.	63962.	-0.005882	0.000	3.359E+12	-271.8265	1221.8519	0.000
63.840	0.7279	77673581.	62932.	-0.005804	0.000	3.359E+12	-340.9888	1574.0786	0.000
67.200	0.7085	77884787.	61677.	-0.005727	0.000	3.358E+12	-406.1844	1926.3054	0.000
70.560	0.6894	78091385.	60209.	-0.005649	0.000	3.358E+12	-467.4960	2278.5321	0.000

73.920	0.6705	78292682.	58232.	-0.005570	0.000	3.357E+12	-709.0267	3552.8673	0.000
77.280	0.6520	78485952.	55717.	-0.005492	0.000	3.357E+12	-788.0728	4061.5313	0.000
80.640	0.6336	78670302.	52945.	-0.005413	0.000	3.357E+12	-861.8509	4570.1952	0.000
84.000	0.6156	78844899.	49934.	-0.005334	0.000	3.356E+12	-930.4819	5078.8592	0.000
87.360	0.5978	79008968.	46701.	-0.005255	0.000	3.356E+12	-994.0869	5587.5232	0.000
90.720	0.5803	79161791.	43262.	-0.005176	0.000	3.356E+12	-1052.7874	6096.1871	0.000
94.080	0.5630	79302706.	39634.	-0.005097	0.000	3.355E+12	-1106.7052	6604.8511	0.000
97.440	0.5460	79431103.	35833.	-0.005017	0.000	3.355E+12	-1155.9623	7113.5151	0.000
100.800	0.5293	79546427.	31874.	-0.004938	0.000	3.355E+12	-1200.6810	7622.1791	0.000
104.160	0.5128	79648172.	27772.	-0.004858	0.000	3.355E+12	-1240.9836	8130.8430	0.000
107.520	0.4966	79735884.	23542.	-0.004778	0.000	3.354E+12	-1276.9926	8639.5070	0.000
110.880	0.4807	79809156.	19198.	-0.004698	0.000	3.354E+12	-1308.8305	9148.1710	0.000
114.240	0.4651	79867629.	14753.	-0.004618	0.000	3.354E+12	-1336.6201	9656.8349	0.000
117.600	0.4497	79910988.	10222.	-0.004538	0.000	3.354E+12	-1360.4840	10165.	0.000
120.960	0.4346	79938965.	5617.1471	-0.004458	0.000	3.354E+12	-1380.5446	10674.	0.000
124.320	0.4197	79951332.	950.9988	-0.004378	0.000	3.354E+12	-1396.9246	11183.	0.000
127.680	0.4051	79947906.	-3764.2081	-0.004298	0.000	3.354E+12	-1409.7462	11691.	0.000
131.040	0.3908	79928540.	-8516.7229	-0.004218	0.000	3.354E+12	-1419.1317	12200.	0.000
134.400	0.3768	79893130.	-13636.	-0.004138	0.000	3.354E+12	-1627.7932	14515.	0.000
137.760	0.3630	79839320.	-19115.	-0.004058	0.000	3.354E+12	-1633.7945	15121.	0.000
141.120	0.3495	79767041.	-24608.	-0.003978	0.000	3.354E+12	-1636.0863	15728.	0.000
144.480	0.3363	79676268.	-30104.	-0.003898	0.000	3.354E+12	-1634.8127	16334.	0.000
147.840	0.3233	79567016.	-35589.	-0.003818	0.000	3.355E+12	-1630.1175	16940.	0.000
151.200	0.3106	79439337.	-41052.	-0.003739	0.000	3.355E+12	-1622.1438	17546.	0.000

154.560	0.2982	79293321.	-46484.	-0.003659	0.000	3.355E+12	-1611.0340	18152.	0.000
157.920	0.2860	79129095.	-51874.	-0.003580	0.000	3.356E+12	-1596.9298	18758.	0.000
161.280	0.2742	78946816.	-57211.	-0.003501	0.000	3.356E+12	-1579.9725	19364.	0.000
164.640	0.2625	78746678.	-62486.	-0.003422	0.000	3.356E+12	-1560.3020	19970.	0.000
168.000	0.2512	78528901.	-67692.	-0.003343	0.000	3.357E+12	-1538.0580	20576.	0.000
171.360	0.2401	78293737.	-72818.	-0.003265	0.000	3.357E+12	-1513.3788	21182.	0.000
174.720	0.2292	78041466.	-77858.	-0.003186	0.000	3.358E+12	-1486.4021	21788.	0.000
178.080	0.2186	77772390.	-82803.	-0.003109	0.000	3.358E+12	-1457.2643	22394.	0.000
181.440	0.2083	77486840.	-87647.	-0.003031	0.000	3.359E+12	-1426.1010	23001.	0.000
184.800	0.1983	77185167.	-92383.	-0.002954	0.000	3.360E+12	-1393.0465	23607.	0.000
188.160	0.1885	76867745.	-97005.	-0.002876	0.000	3.360E+12	-1358.2343	24213.	0.000
191.520	0.1789	76534966.	-101508.	-0.002800	0.000	3.361E+12	-1321.7962	24819.	0.000
194.880	0.1697	76187243.	-105885.	-0.002723	0.000	3.362E+12	-1283.8633	25425.	0.000
198.240	0.1606	75825003.	-110133.	-0.002648	0.000	3.362E+12	-1244.5652	26031.	0.000
201.600	0.1519	75448690.	-114247.	-0.002572	0.000	3.363E+12	-1204.0302	26637.	0.000
204.960	0.1434	75058763.	-118222.	-0.002497	0.000	3.364E+12	-1162.3854	27243.	0.000
208.320	0.1351	74655690.	-122056.	-0.002422	0.000	3.365E+12	-1119.7564	27849.	0.000
211.680	0.1271	74239955.	-125746.	-0.002348	0.000	3.366E+12	-1076.2676	28455.	0.000
215.040	0.1193	73812047.	-129288.	-0.002274	0.000	3.367E+12	-1032.0418	29061.	0.000
218.400	0.1118	73372466.	-132680.	-0.002200	0.000	3.368E+12	-987.2005	29667.	0.000
221.760	0.1045	72921719.	-135921.	-0.002127	0.000	3.369E+12	-941.8638	30273.	0.000
225.120	0.0975	72460318.	-139009.	-0.002055	0.000	3.370E+12	-896.1502	30880.	0.000
228.480	0.0907	71988778.	-141942.	-0.001983	0.000	3.371E+12	-850.1767	31486.	0.000
231.840	0.0842	71507619.	-144722.	-0.001911	0.000	3.372E+12	-804.0589	32092.	0.000

235.200	0.0779	71017362.	-147346.	-0.001840	0.000	3.373E+12	-757.9109	32698.	0.000
238.560	0.0718	70518528.	-149815.	-0.001770	0.000	3.374E+12	-711.8452	33304.	0.000
241.920	0.0660	70011637.	-152130.	-0.001700	0.000	3.375E+12	-665.9727	33910.	0.000
245.280	0.0604	69497207.	-154291.	-0.001631	0.000	3.377E+12	-620.4028	34516.	0.000
248.640	0.0550	68975753.	-156299.	-0.001562	0.000	3.378E+12	-575.2434	35122.	0.000
252.000	0.0499	68447785.	-200399.	-0.001493	0.000	3.379E+12	-25674.	1728800.	0.000
255.360	0.0450	67629942.	-287761.	-0.001426	0.000	3.381E+12	-26327.	1965893.	0.000
258.720	0.0403	66514862.	-377159.	-0.001359	0.000	3.384E+12	-26886.	2240595.	0.000
262.080	0.0359	65096226.	-468270.	-0.001294	0.000	3.387E+12	-27346.	2562035.	0.000
265.440	0.0316	63368842.	-560743.	-0.001230	0.000	3.392E+12	-27697.	2942682.	0.000
268.800	0.0276	61328750.	-654191.	-0.001168	0.000	3.397E+12	-27927.	3400119.	0.000
272.160	0.0238	58973356.	-748182.	-0.001109	0.000	3.404E+12	-28020.	3960103.	0.000
275.520	0.0201	56301613.	-842217.	-0.001052	0.000	3.412E+12	-27953.	4662188.	0.000
278.880	0.0167	53314274.	-935705.	-0.000998	0.000	3.421E+12	-27695.	5570874.	0.000
282.240	0.0134	50014256.	-1027921.	-0.000948	0.000	3.433E+12	-27196.	6799951.	0.000
285.600	0.0103	46407197.	-1117918.	-0.000900	0.000	3.447E+12	-26374.	8573261.	0.000
288.960	0.007387	42502371.	-1204364.	-0.000857	0.000	3.464E+12	-25082.	11408608.	0.000
292.320	0.004576	38314367.	-1285127.	-0.000818	0.000	3.486E+12	-22991.	16880983.	0.000
295.680	0.001889	33866794.	-1349892.	-0.000796	0.000	1.401E+13	-15559.	27671467.	0.000
299.040	-0.000770	29243560.	-1365052.	-0.000788	0.000	1.405E+13	6535.1683	28507733.	0.000
302.400	-0.003406	24694103.	-1314743.	-0.000782	0.000	1.409E+13	23411.	23092300.	0.000
305.760	-0.006023	20408939.	-1228732.	-0.000776	0.000	1.412E+13	27787.	15502289.	0.000
309.120	-0.008622	16437475.	-1129533.	-0.000772	0.000	1.415E+13	31260.	12181483.	0.000
312.480	-0.0112	12818927.	-1019386.	-0.000768	0.000	1.418E+13	34304.	10282506.	0.000

```
   315.840    -0.0138   9587652.   -899432.  -0.000766      0.000  1.420E+13     37098.   9041672.
0.000
   319.200    -0.0164   6775192.   -770358.  -0.000764      0.000  1.422E+13     39732.   8162679.
0.000
   322.560    -0.0189   4411292.   -632614.  -0.000762      0.000  1.424E+13     42258.   7505209.
0.000
   325.920    -0.0215   2524470.   -486512.  -0.000762      0.000  1.424E+13     44707.   6993790.
0.000
   329.280    -0.0240   1142377.   -332274.  -0.000761      0.000  1.424E+13     47101.   6584053.
0.000
   332.640    -0.0266    292035.   -170063.  -0.000761      0.000  1.424E+13     49453.   6248138.
0.000
   336.000    -0.0292      0.000      0.000  -0.000761      0.000  1.424E+13     51774.   2983820.
0.000

* This analysis makes computations of pile response using nonlinear moment-curvature relationships.
  The above values of total stress are computed for combined axial stress and do not equal the
  actual stresses in concrete and steel in the range of nonlinear bending.


Output Verification: Computed forces and moments are within specified convergence limits.


Output Summary for Load Case No. 2:

Pile-head deflection             =      1.1446705 inches
Computed slope at pile head      =     -0.0072392 radians
Maximum bending moment           =      79951332. inch-lbs
Maximum shear force              =      -1365052. lbs
Depth of maximum bending moment  =    124.3200000 inches below pile head
Depth of maximum shear force     =    299.0400000 inches below pile head
Number of iterations             =             27
Number of zero deflection points =              1



--------------------------------------------------------------------------------
                           Summary of Pile Response(s)
--------------------------------------------------------------------------------


Definitions of Pile-head Loading Conditions:

Load Type 1: Load 1 = Shear, lbs, and Load 2 = Moment, in-lbs
Load Type 2: Load 1 = Shear, lbs, and Load 2 = Slope, radians
Load Type 3: Load 1 = Shear, lbs, and Load 2 = Rotational Stiffness, in-lbs/radian
Load Type 4: Load 1 = Top Deflection, inches, and Load 2 = Moment, in-lbs
```

Load Type 5: Load 1 = Top Deflection, inches, and Load 2 = Slope, radians

Load Case No.	Load Type No.	Pile-head Condition 1 V(lbs) or y(inches)	Pile-head Condition 2 in-lb, rad., or in-lb/rad.	Axial Loading lbs	Pile-head Deflection inches	Maximum Moment in-lbs	Maximum Shear lbs	Pile-head Rotation radians
1	1	V = 30140.	M = 33995280.	146190.	0.38376653	37382792.	-662483.	-0.00248702
2	1	V = 65560.	M = 73465920.	86680.	1.14467046	79951332.	-1365052.	-0.00723915

The analysis ended normally.

Foundation Analysis - Pole Caisson (OTRM 059.1 / OTRM 051)

Analysis Data Input

Overturning Moment (Governing Cases):	$OM_{250B} := 2575.4 \cdot ft \cdot kip$	User Input - from PLS-Pole (NESC 250B)
	$OM_{250B_Lpile} := OM_{250B} \cdot 1.1 = 33995280\ in \cdot lbf$	Includes NEU 1.1 Factor - to be used in LPile
	$OM_{250C} := 5565.6 \cdot ft \cdot kip$	User Input - from PLS-Pole (NESC 250C)
	$OM_{250C_Lpile} := OM_{250C} \cdot 1.1 = 73465920\ in \cdot lbf$	Includes NEU 1.1 Factor - to be used in LPile
Shear (Governing Cases:	$V_{250B} := 27.4 \cdot kip$	User Input - from PLS-Pole (NESC 250B)
	$V_{250B_Lpile} := V_{250B} \cdot 1.1 = 30140\ lbf$	Includes NEU 1.1 Factor - to be used in LPile
	$V_{250C} := 59.6 \cdot kip$	User Input - from PLS-Pole (NESC 250C)
	$V_{250C_Lpile} := V_{250C} \cdot 1.1 = 65560\ lbf$	Includes NEU 1.1 Factor - to be used in LPile
Axial (Governing Cases):	$A_{250B} := 132.9 \cdot kip$	User Input - from PLS-Pole (NESC 250B)
	$A_{250B_Lpile} := A_{250B} \cdot 1.1 = 146190\ lbf$	Includes NEU 1.1 Factor - to be used in LPile
	$A_{250C} := 78.8 \cdot kip$	User Input - from PLS-Pole (NESC 250C)
	$A_{250C_Lpile} := A_{250C} \cdot 1.1 = 86680\ lbf$	Includes NEU 1.1 Factor - to be used in LPile
Bending Moment Capacity:	$Mn := 156777.51\ in \cdot kip$	User Input - from LPILE
Bending Moment:	$Mu := 79951332\ in \cdot lbf$	User Input - from LPILE
Caisson Diameter:	$C_{dia} := 7.5\ ft$	User Input
Caisson Overall Length:	$C_L := 28\ ft$	User Input
Caisson Reveal:	$C_R := 1.0\ ft$	User Input
Rebar Quantity:	$n := 45$	User Input
Rebar Area:	$A_{reb} := 1.56\ in^2$	User Input (Assumed)
Rebar Yield Strength:	$fy := 60\ ksi$	User Input (Assumed)
Concrete Weight:	$WT_{conc} := 150\ pcf$	User Input (Assumed)
Concrete Compressive Strength:	$f'c := 3.5\ ksi$	User Input (Assumed)
Coefficient of Friction between concrete and granular soil / rock:	$\mu := 0.45$	User Input (Assumed)
Rock Ultimate Bearing Pressure:	$RUB := 80\ ksf$	OTRM Section 4.E.3.e.ii.ii

Caisson Moment Capacity (Worst Case = 250C):

Factor of Safety Required: $FS_{moment_req} := 1.0$

NOTE: 1.1 - as per OTMR 051 Section 6 - Foundation Design Criteria - included with loads applied in LPile

Factor of Safety Provided: $FS_{moment} := \frac{Mn}{Mu} = 1.96$

$FS_{moment_check} := \text{if}\left(FS_{moment} \geq FS_{moment_req}, \text{"OK"}, \text{"NG"}\right) = \text{"OK"}$

Moment Usage: $Usage_{moment} := \frac{FS_{moment_req}}{FS_{moment}} = 51\%$

Caisson Axial Capacity (Worst Case = 250B):

Factor of Safety Required: $FS_{axial_req} := 1.1$

OTMR 051 Section 6 - Foundation Design Criteria

Caisson Area: $C_{area} := \pi \cdot \frac{(C_{dia})^2}{4} = 44.2\ ft^2$

Caisson Volume: $C_{volume} := C_{area} \cdot C_L = 1237\ ft^3$

Caisson Weight: $C_{weight} := C_{volume} \cdot WT_{conc} = 185.6\ kip$

Total Axial Load: $A_{total_250B} := \left(A_{250B} + C_{weight}\right) = 318.5\ kip$

Axial Capacity Provided: $A_{cap} := n \cdot A_{reb} \cdot fy + \left(C_{area} - n \cdot A_{reb}\right) \cdot 0.85 \cdot f'c = 22929.3\ kip$

Factor of Safety Provided: $FS_{axial} := \frac{A_{cap}}{A_{total_250B}} = 72$

$FS_{axial_check} := \text{if}\left(FS_{axial} \geq FS_{axial_req}, \text{"OK"}, \text{"NG"}\right) = \text{"OK"}$

Axial Usage: $Usage_{axial} := \frac{FS_{axial_req}}{FS_{axial}} = 1.53\%$

Caisson Shear Capacity (Worst Case = 250C):

Factor of Safety Required: $FS_{shear_req} := 1.1$

OTMR 051 Section 6 - Foundation Design Criteria

Total Shear Load: $V_{250C} = 59.6\ kip$

Total Axial Load: $A_{total_250C} := A_{250C} + C_{weight} = 264.4\ kip$

Shear Capacity Provided: $V_{cap} := A_{total_250C} \cdot \mu = 119\ kip$

Factor of Safety Provided: $FS_{shear} := \frac{V_{cap}}{V_{250C}} = 2$

$FS_{shear_check} := \text{if}\left(FS_{shear} \geq FS_{shear_req}, \text{"OK"}, \text{"NG"}\right) = \text{"OK"}$

Axial Usage: $Usage_{axial} := \frac{FS_{shear_req}}{FS_{shear}} = 55.1\%$

Rock Axial Capacity (Worst Case = 250B):

Factor of Safety Required: $FS_{axial_rock_req} := 1.1$ OTMR 051 Section 6 - Foundation Design Criteria

Rock Ultimate Bearing Capacity: $RUB_{cap} := RUB \cdot C_{area} = 3534\ kip$ Ultimate Bearing Pressure * Caisson Area

Factor of Safety Provided: $FS_{axial_rock} := \frac{RUB_{cap}}{A_{total_250B}} = 11.1$ $FS_{axial_soil_check} := \text{if}\left(FS_{axial_rock} \geq FS_{axial_rock_req}, \text{"OK"}, \text{"NG"}\right) = \text{"OK"}$

Axial Usage: $Usage_{axial_soil} := \frac{FS_{axial_rock_req}}{FS_{axial_rock}} = 9.9\%$

Pile Deflection:

250C Pile Deflection: 1.14"

By engineering judgement, deflections are acceptable.

APPENDIX E

SUPPLEMENTAL INFORMATION

Amplifiers

Triple Band Twin TMA (AWS/PCS/WCS) with AWS-3 and 700/850 Bypass

DATA SHEET

TMABPD7823VG12A

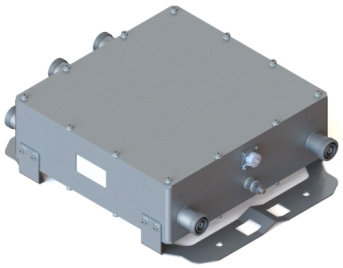

- Triple Band Twin TMA (AWS/PCS/WCS) which includes AWS-3 and 700/850 Bypass
- Each TMA has independent gain control of 6 to 12dB
- Fail-safe bypass mode and multi-strike lightning protection
- Small lightweight unit offers high reliability of >500K Hours MTBF
- Highly linear amplifier with low intermodulation

Overview

CCI's Triple Band Twin TMA (AWS/PCS/WCS), which includes AWS-3 and 700/850 bypass, contains two triple band TMA's in a single housing. Each TMA in the housing is fully duplexed and shares a single LNA for all three bands. The bypass path provides excellent isolation to the TMA path. Separate antenna ports for the bypass path and TMA path are combined onto a single BTS port. The Twin TMA's low noise, highly linear amplifiers improve the uplink sensitivity and the receive performance of the base station. The TMA is fully compliant with the AISG 2.0 specification and supports CDMA, EDGE/GSM, UMTS and LTE BTS equipment. The unit is ideally suited for sites upgraded to quad-band using the existing infrastructure. The TMA allows the sharing of feeder lines for all bands thus reducing tower loading, leasing, and installation costs. The input and output connectors are located inline for ease of installation in space constrained areas such as uni-pole structures and stealth antennas.

Technical Description:

The TMA system is an outdoor triple band twin tower mount unit which provides low noise amplification of PCS, AWS, AWS-3, and WCS uplink signals combined with 700/850 bypassed signals from separate antenna ports to a common BTS port. The tower mount unit consists of 14 band-pass filters, two redundant low noise amplifiers (LNA) with bypass failure circuitry, two bias tees, AISG control circuitry, and lightning protection circuitry all housed in an IP67 enclosure suited to long life masthead mounting. The AWS, PCS and WCS paths are dual duplexed to separate the low power uplink signals from the high power down link signals at the BTS and antenna ports. The AWS, PCS, and WCS uplink signals are amplified with a dedicated ultra-low noise PHEMT LNA with adjustable gain control. The unit provides protection against lightning strikes via a multistage surge protection circuit. DC power and AISG 2.0 control is provided via the BTS feeder cable. The unit operates in current window alarm (CWA) mode until a valid AISG message is detected, at which point it automatically switches to AISG mode. Once in AISG mode, the unit can only switch back to CWA mode with the receipt of an AISG CCI vendor defined command. In CWA mode, the unit requires 12VDC at each BTS port and follows typical current window convention. In AISG mode, the unit will accept 10-30 VDC from either BTS port. In AISG mode, the unit does not require an AISG 2.0 compatible site control unit (SCU) and may also be powered by a standard power distribution unit (PDU).
An optional Site Control Unit (SCU) is available to power up to 32 AISG modules per sector and to provide the monitoring and alarm functions for the system. The SCU is housed in a single (1U) 1.75" x 19" rack and contains dual redundant power supplies capable of being "hot swapped" that provide a regulated DC supply voltage on the RF coax for the tower mount amplifiers.

© 2017 CCI All rights reserved. Specifications are subject to change.

Triple Band Twin TMA (AWS/PCS/WCS) with AWS-3 and 700/850 Bypass

TMABPD7823VG12A

SPECIFICATIONS

Electrical

RF Parameters	Ports	Frequency(MHz)	Specification
Return Loss (minimum)	700/850 ANT	698 - 894	18 dB
	PCS/AWS/WCS ANT	1850 - 1910	18 dB (10 dB bypass mode)
		1930 - 1990	18 dB
		1710 - 1780	18 dB (10 dB bypass mode)
		2110 - 2180	18 dB
		2305 - 2320	18 dB (10 dB bypass mode)
		2345 - 2360	18 dB
	BTS	698 - 894	18 dB
		1850 - 1910	18 dB (10 dB bypass mode)
		1930 - 1990	18 dB
		1710 - 1780	18 dB (10 dB bypass mode)
		2110 - 2180	18 dB
		2305 - 2320	18 dB (10 dB bypass mode)
		2345 - 2360	18 dB
Gain Setting	PCS/AWS/WCS ANT to BTS	1710 - 1780, 1850 - 1910, 2305 - 2320	6 to 12 dB adjustable in 0.25 dB steps via AISG (± 1.0 dB)
Gain, Actual (when set for 6 dB)	PCS/AWS/WCS ANT to BTS	1710 - 1780, 1850 - 1910	6 ± 1.0 dB
		2305 - 2320	5 ± 1.0 dB
Gain, Actual (when set for 9 dB)	PCS/AWS/WCS ANT to BTS	1710 - 1780, 1850 - 1910	9 ± 1.0 dB
		2305 - 2320	8 ± 1.0 dB
Gain, Actual (when set for 12 dB)	PCS/AWS/WCS ANT to BTS	1710 - 1780, 1850 - 1910	12 ± 1.0 dB
		2305 - 2320	11 ± 1.0 dB
Insertion Loss	700/850 ANT - BTS	698 - 894	0.25 dB typical
	PCS/AWS/WCS ANT to BTS (RX Bypass mode)	1850 - 1910	2.5 dB typical
		1710 - 1780	2.5 dB typical
		2305 - 2320	4.5 dB typical
	PCS/AWS/WCS ANT to BTS (TX)	1930 - 1990	0.5 dB typical
		2110 - 2180	0.4 dB typical
		2345 - 2360	0.7 dB typical
Isolation	700/850 ANT to PCS/AWS/WCS ANT	698 - 894	70 dB
		1710 - 2360	70 dB
Noise Figure	PCS/AWS/WCS ANT to BTS	1850 - 1910	1.5 dB typical
		1710 - 1780	1.3 dB typical
		2305 - 2320	2.3 dB typical
Input Third Order Intercept Point (minimum)	PCS/AWS/WCS ANT to BTS	1710 - 1780	+12 dBm at maximum gain
		1850 - 1910	+12 dBm at maximum gain
		2305 - 2320	+12 dBm at maximum gain

General Characteristics	
Impedance	50 ohms
Continuous Average Power	200 W max.
Peak Envelope Power	2 kW max.
Intermodulation Performance(all ports)	<-117 dBm (-160 dBc) typical (2 × +43 dBm tones) all bands
Operating Voltage	+10V to +30V DC provided via coax or AISG
Power Consumption	< 2.0 W

© 2017 CCI All rights reserved. Specifications are subject to change.

Triple Band Twin TMA (AWS/PCS/WCS) with AWS-3 and 700/850 Bypass

TMABPD7823VG12A

SPECIFICATIONS

Environmental

Operating Temperature	-40˚C to +65˚C
Ingress Protection	IP67
MTBF	>500,000 hours
Lightning Protection	8/20us, ±10KA max, 10 strikes each per IEC61000-4-5

Mechanical

Connectors	6 x 7-16 DIN female 1 x AISG
Dimensions enclosure (HxWxD)	10.63 x 11.04 x 3.75 in. (270.0 x 280.3 x 95.2 mm)
Dimensions with brackets (HxWxD)	14.22 x 11.56 x 4.24 in. (361.8 x 293.5 x 107.6 mm)
Weight enclosure	25.0 lbs (11.3 kg)
Weight with brackets	26.0 lbs (11.8 kg)
Mounting	Pole/Wall mounting bracket

© 2017 CCI All rights reserved. Specifications are subject to change.

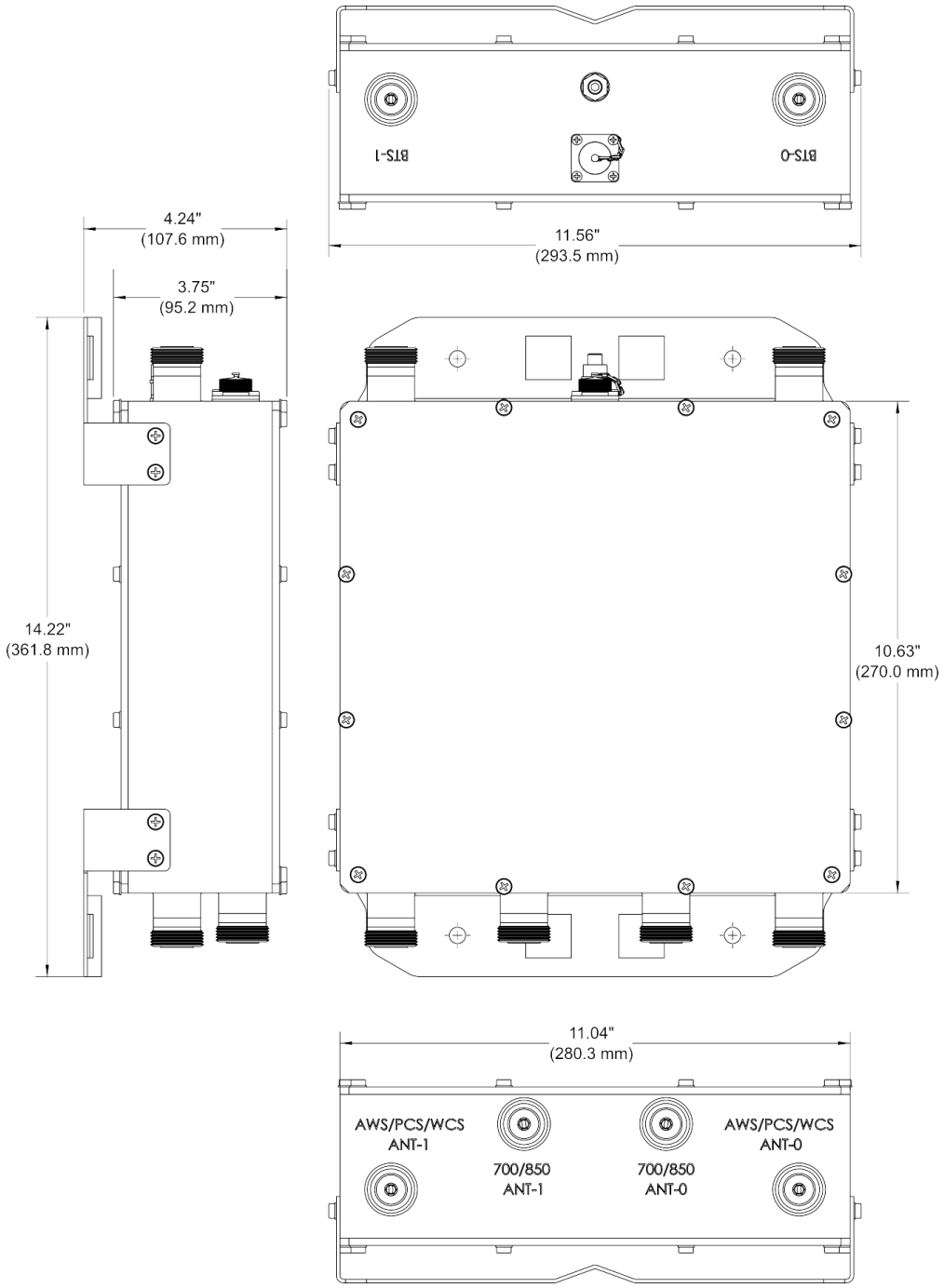

TMABPD7823VG12A Outline Drawing

© 2017 CCI All rights reserved. Specifications are subject to change.

Triple Band Twin TMA (AWS/PCS/WCS) with AWS-3 and 700/850 Bypass

SPECIFICATIONS

TMABPD7823VG12A

Block Diagram

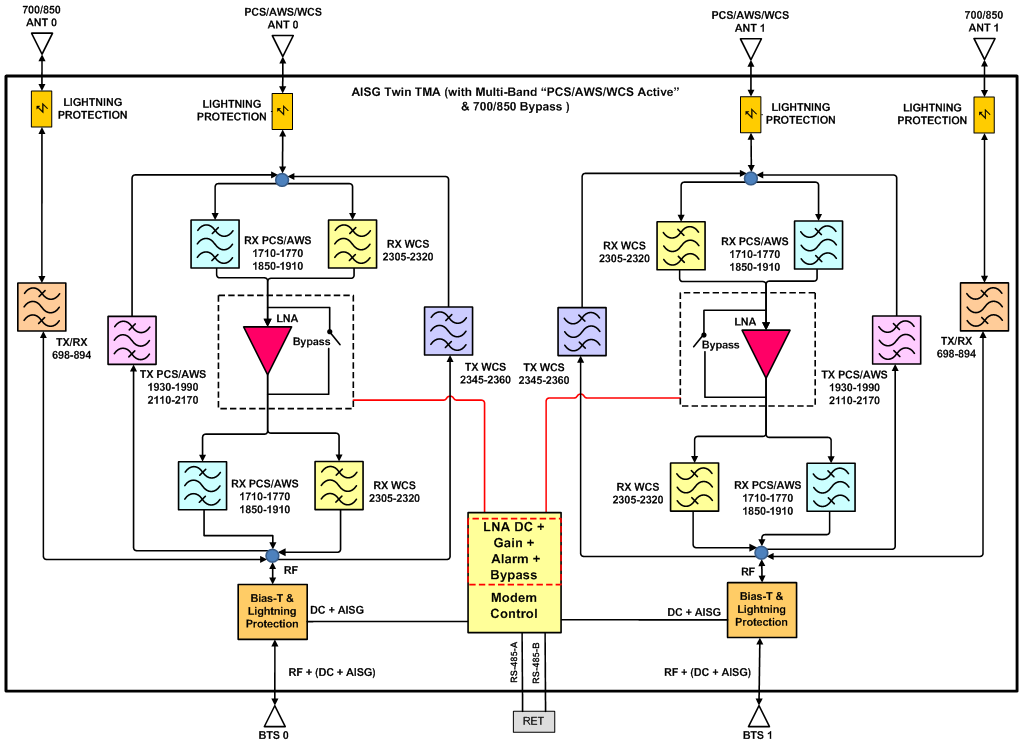

TMABPD7823VG12A Block Diagram

© 2017 CCI All rights reserved. Specifications are subject to change.

STANDARDS & CERTIFICATIONS

Parts & Accessories

TMABPD7823VG12A	Triple Band Twin TMA (PCS/AWS/WCS) with 700/850 Bypass with 7/16 DIN connectors

Standards & Compliance

Safety	EN 60950-1, UL 60950-1
Emission	EN 55022
Immunity	EN 55024
Environmental	IEC 60068-2-1, IEC 60068-2-2, IEC 60068-2-5, IEC 60068-2-6, IEC-60068-2-11, IEC 60068-2-14, IEC 60068-2-18, IEC 60068-2-27, IEC 60068-2-29, IEC 60068-02-30, IEC 60068-2-52, IEC 60068-2-64, IEC61000-4-5, GR-63-CORE 4.3.1, EN 60529 IP68

Certifications

Antenna Interface Standards Group (AISG), Federal Communication Commission (FCC) Part 15 Class B, CE, CSA US, ISO 9001:2008

© 2017 CCI All rights reserved. Specifications are subject to change.

TMA2117F00V1-1

TWIN TMA 1900/WCS, LOWPASS

Designed to be deployed in co-located 1900 & WCS systems with wideband antennas, the Kaelus TMA provides internal diplexing and gain in both bands while allowing 700/850 services to pass through to a separate antenna, thereby saving hardware costs.

FEATURES

- Improved base station sensitivity through gain in 1900 and WCS bands
- High Linearity and low noise performance; Bypass provided for 700/850MHz services
- Hardware and software configuration using AISG “Personality” upload
- Fail safe bypass mode with lightning protection

TECHNICAL SPECIFICATIONS

BAND NAME	1900	WCS
DOWNLINK		
Passband	1930 - 1990MHz	2350 - 2360MHz
Insertion loss	0.5dB typical	
Return loss	18dB minimum	
Maximum input power	160W (average) / 2kW (PEP)	120W (average) / 1.2kW (PEP)
UPLINK		
Passband	1850 - 1910MHz	2305 - 2315MHz
Gain	13dB	12dB
Variable gain	3dB to 13dB in 1dB steps (controlled by AISG commands)	2dB to 12dB in 1dB steps (controlled by AISG commands)
Gain variation	±1dB maximum	
Return loss	18dB minimum operating, 12dB in bypass	
Bypass loss	2.5dB typical	3.3dB typical
Noise figure	1.4dB typical	1.7dB typical
Output IP3	+30dBm typical	
Maximum input power with no damage	+12dBm maximum	
Rejection	27.5dB minimum@2324.54 - 2341.285MHz	
LOW BAND PATH		
Passband	698 - 896MHz	
Return loss	18dB minimum	
Insertion loss	0.35dB typical	
Maximum input power with no damage	200W (average) / 2kW (PEP)	
ELECTRICAL		
Impedance	50Ohms	
Intermodulation products	-153dBc maximum in RX band with 2 x 20W carriers	

POWER SUPPLY AND ALARM (CURRENT WINDOW ALARM MODE, DEFAULT)	
Current window alarm mode (CWA) is the default TMA operating mode and can be configured to specific customer requirements. The generic personality (F00V1) is configured so that both channels are independently powered and monitored via the respective BTS port. The BTS port sinks additional current to indicate an alarm state in its uplink path. Normal operating and alarm current values are configured independently via a field-loadable personality file, Please contact Kaelus for more information.	
DC supply voltage	8.5 to 30V DC, case is DC ground
DC supply	Each BTS powered individually (programmable)
DC supply current, normal mode	200 ± 20mA per port (programmable)
DC supply current, alarm mode	300 ± 30mA per port(programmable)

AISG MODE OF OPERATION (AUTO SELECTED ON VALID AISG 2.0 FRAMES)	
AISG signals can be applied to either port 7 or port 8. The TMA2117FxxVx-1 unit switches to AISG mode when valid frames are detected on one of the BTS ports. Both LNAs take DC power from the port with AISG frames or, if DC is present on both ports, both channels supply equal power to the TMA2117FxxVx-1.	
DC supply voltage	+8.5V to +30V DC
AISG version	2.0 (1.1 optional)
Supply current, AISG mode	400mA @ 8.5V, 120mA @ 30V typical
AISG connector, current rating	IEC60130-9, 8-pin female ,< 4A peak, 2A continuous, pin 6
Field firmware upgradable	Yes

ENVIRONMENTAL	
For further details of environmental compliance, please contact Kaelus.	
Temperature range	-40ºC to +65ºC | -40°F to +149°F
Ingress protection	IP67
Lightning protection	IEC61312-1, RF: ±5kA maximum (8/20us), AISG: ±2kA maximum (8/20us)
MTBF	>1,000,000 hours
Compliance	FCC Part 15 subpart B, ETSI EN 300 019 class 4.1, RoHS

MECHANICAL	
Dimensions H x D x W	300 x 250 x 118mm | 11.81 x 9.84 x 4.65in
Weight	11.8kg | 26lbs
Finish	Painted, light grey (RAL7035)
Connectors	DIN 4.3-10 (F) x 8 long shank, AISG (F) x 1
Mounting	Pole/wall bracket supplied with two metal clamps 45-178mm diameter poles

ORDERING INFORMATION

PART NUMBER	DESCRIPTION
TMA2117F00V1-1	TWIN TMA 1900/WCS, 698-896 LOWPASS, 6 ANT

ELECTRICAL BLOCK DIAGRAM

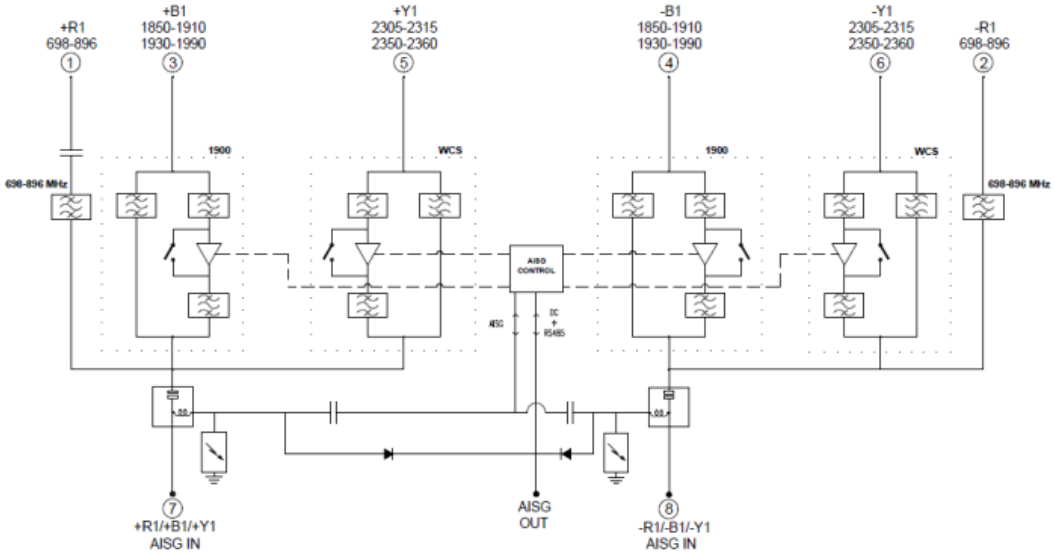

MECHANICAL BLOCK DIAGRAM

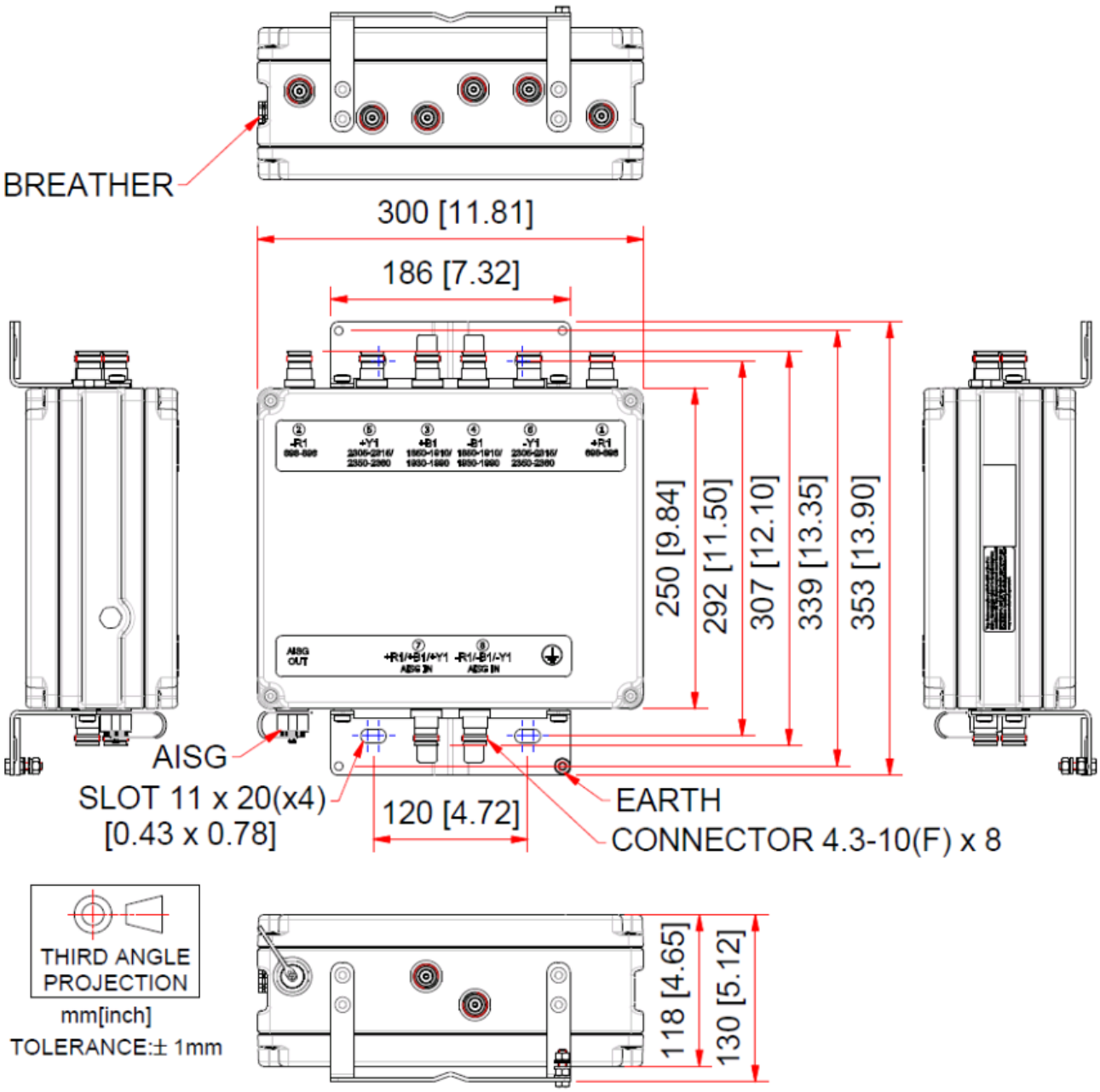

PARTS LIST						
ITEM	QTY	PART NO.	PART DESCRIPTION	LENGTH	UNIT WT.	NET WT.
1	3	X-LWRM	RING MOUNT WELDMENT		68.81	206.42
2	3	X-TBW	T-BRACKET WELDMENT		13.60	40.80
3	6	X-254924	DIAGONAL ANGLE - SITE PRO 1	72 in	19.71	118.24
4	12	X-STU	STIFF ARM CHANNEL BRACKET	8 1/2 in	1.37	16.46
5	6	SHCM-T	CHAIN MOUNT TIGHTENER BRACKET	3 in	1.86	11.15
6	12	G12112	1/2" x 1-1/2" HDG HEX BOLT GR5	1/2 in	0.15	1.77
7	3	G12212	1/2" x 2-1/2" HDG HEX BOLT GR5	2 1/2 in	0.20	0.61
8	12	G12065	1/2" x 6-1/2" HDG HEX BOLT GR5 FULL THREAD	6 1/2 in	0.41	4.91
9	24	G12FW	1/2" HDG USS FLATWASHER	3/32 in	0.03	0.82
10	27	G12LW	1/2" HDG LOCKWASHER	1/8 in	0.01	0.38
11	27	G12NUT	1/2" HDG HEAVY 2H HEX NUT		0.07	1.93
12	12	A582114	5/8" x 2-1/4" HDG A325 HEX BOLT	2 1/4 in	0.31	3.75
13	9	G58R-24	5/8" x 24" THREADED ROD (HDG.)	24 in	0.40	3.59
13	9	G58R-48	5/8" x 48" THREADED ROD (HDG.)	48 in	0.40	3.59
14	30	G58LW	5/8" HDG LOCKWASHER		0.03	0.78
15	30	G58NUT	5/8" HDG HEAVY 2H HEX NUT		0.13	3.90
					TOTAL WT. #	642.04

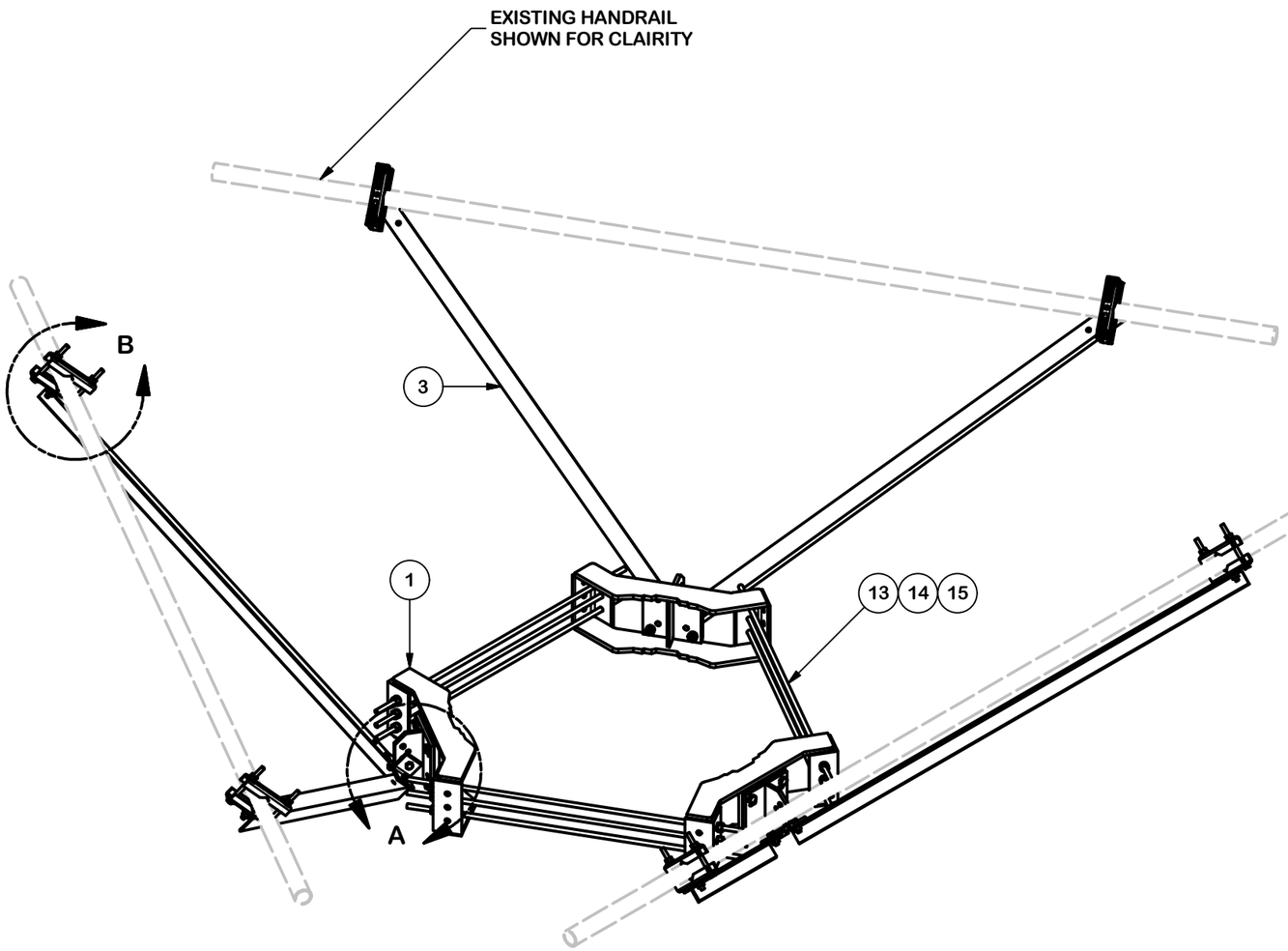

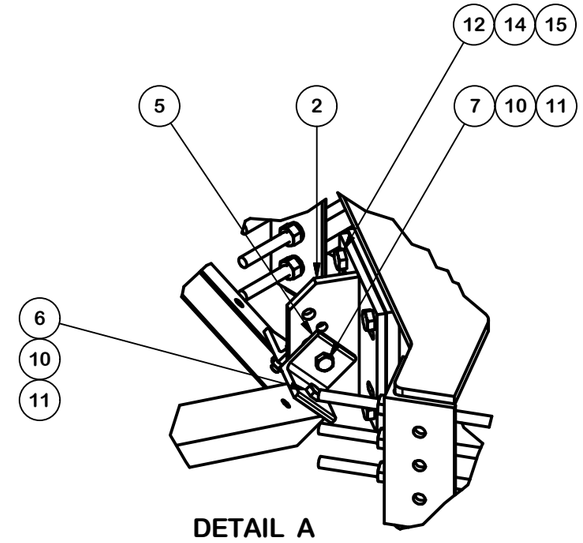

DETAIL A

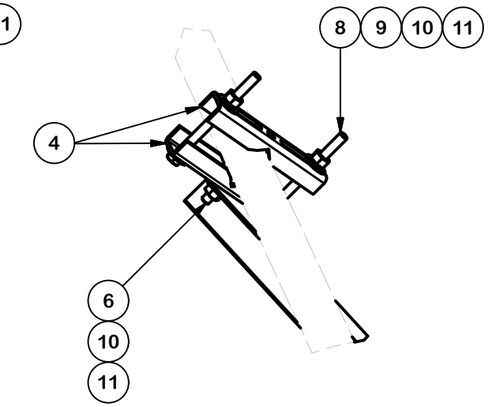

DETAIL B

REV	DESCRIPTION OF REVISIONS	CPD	BY	DATE
A	CHANGED MAX. DIA. FOR HANDRAIL CONNECTION	SP1	BC	10/25/2017

REVISION HISTORY

TOLERANCE NOTES

TOLERANCES ON DIMENSIONS, UNLESS OTHERWISE NOTED ARE:
SAWED, SHEARED AND GAS CUT EDGES (± 0.030")
DRILLED AND GAS CUT HOLES (± 0.030") - NO CONING OF HOLES
LASER CUT EDGES AND HOLES (± 0.010") - NO CONING OF HOLES
BENDS ARE ± 1/2 DEGREE
ALL OTHER MACHINING (± 0.030")
ALL OTHER ASSEMBLY (± 0.060")

PROPRIETARY NOTE:
THE DATA AND TECHNIQUES CONTAINED IN THIS DRAWING ARE PROPRIETARY INFORMATION OF VALMONT INDUSTRIES AND CONSIDERED A TRADE SECRET. ANY USE OR DISCLOSURE WITHOUT THE CONSENT OF VALMONT INDUSTRIES IS STRICTLY PROHIBITED.

DESCRIPTION
HANDRAIL REINFORCEMENT KIT (LONG)

CPD NO.	DRAWN BY	ENG. APPROVAL	PART NO.
SP1	CSL3 2/23/2017	3RD PARTY	PRK-SFS-L

CLASS	SUB	DRAWING USAGE	CHECKED BY	DWG. NO.
81	02	SHOP	BMC 9/8/2017	PRK-SFS-L

SITE PRO 1
A valmont COMPANY
Engineering Support Team:
1-888-753-7446
Locations:
New York, NY
Atlanta, GA
Los Angeles, CA
Plymouth, IN
Salem, OR
Dallas, TX

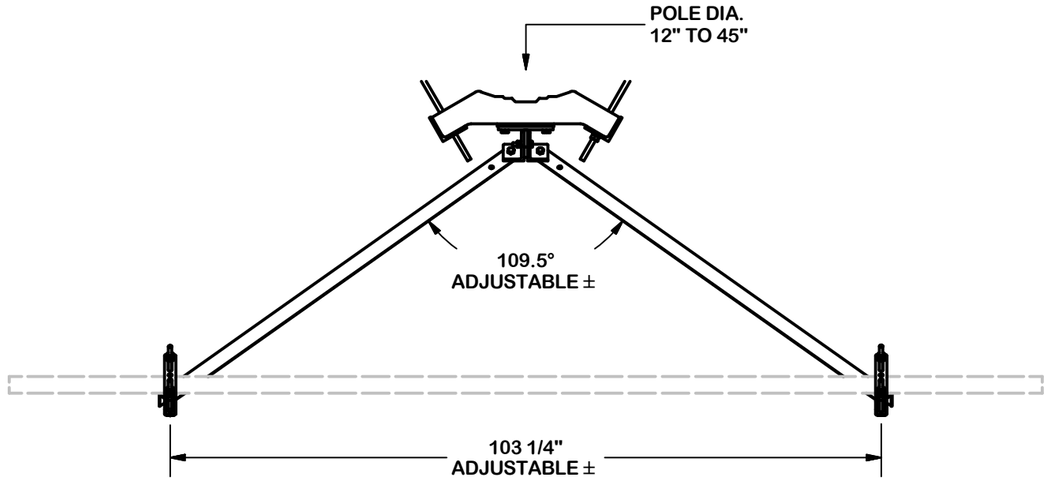

PARTIAL VIEW C-C

VERTICAL POSITION

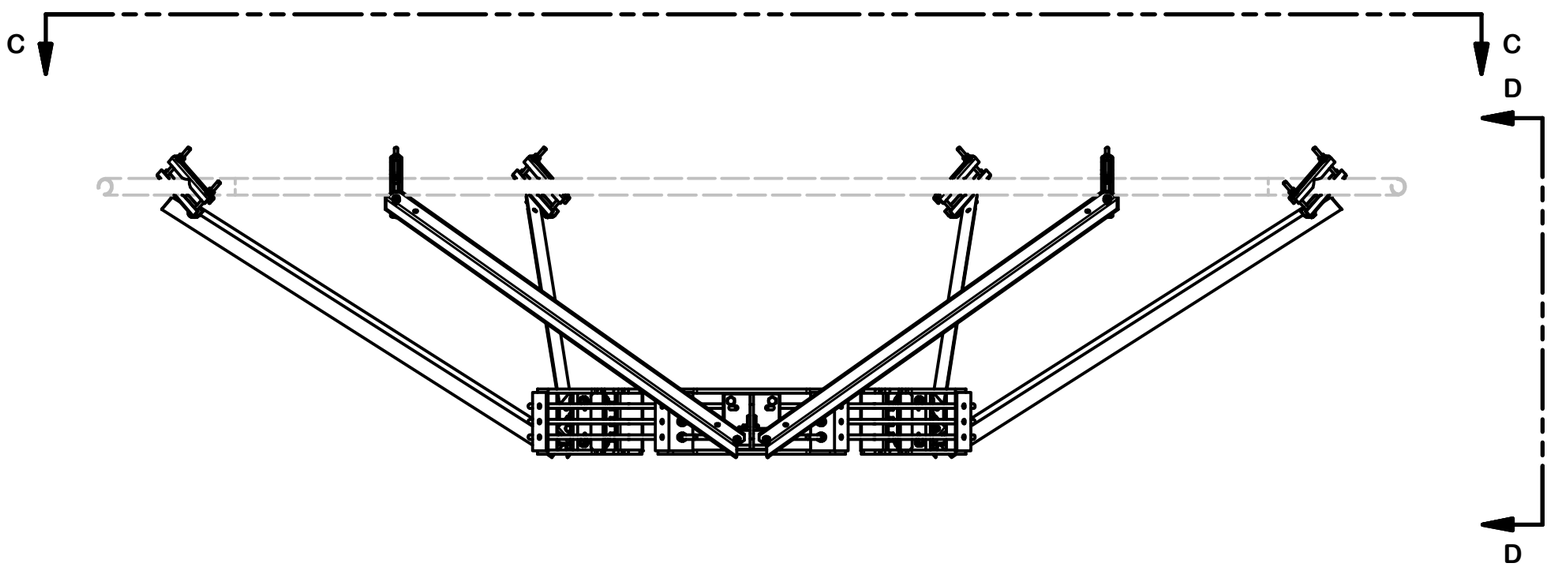

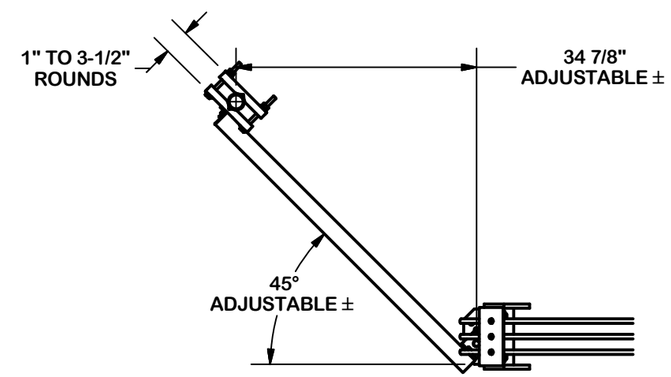

PARTIAL VIEW D-D

REV	DESCRIPTION OF REVISIONS	CPD	BY	DATE
A	CHANGED MAX. DIA. FOR HANDRAIL CONNECTION	SP1	BC	10/25/2017

REVISION HISTORY

TOLERANCE NOTES

TOLERANCES ON DIMENSIONS, UNLESS OTHERWISE NOTED ARE:
SAWED, SHEARED AND GAS CUT EDGES (± 0.030")
DRILLED AND GAS CUT HOLES (± 0.030") - NO CONING OF HOLES
LASER CUT EDGES AND HOLES (± 0.010") - NO CONING OF HOLES
BENDS ARE ± 1/2 DEGREE
ALL OTHER MACHINING (± 0.030")
ALL OTHER ASSEMBLY (± 0.060")

PROPRIETARY NOTE:
THE DATA AND TECHNIQUES CONTAINED IN THIS DRAWING ARE PROPRIETARY INFORMATION OF VALMONT INDUSTRIES AND CONSIDERED A TRADE SECRET. ANY USE OR DISCLOSURE WITHOUT THE CONSENT OF VALMONT INDUSTRIES IS STRICTLY PROHIBITED.

DESCRIPTION
HANDRAIL REINFORCEMENT KIT (LONG)

SITE PRO 1
A valmont COMPANY
Engineering Support Team:
1-888-753-7446
Locations:
New York, NY
Atlanta, GA
Los Angeles, CA
Plymouth, IN
Salem, OR
Dallas, TX

CPD NO.	DRAWN BY	ENG. APPROVAL	PART NO.
SP1	CSL3 2/23/2017	3RD PARTY	PRK-SFS-L

CLASS	SUB	DRAWING USAGE	CHECKED BY	DWG. NO.
81	02	SHOP	BMC 9/8/2017	PRK-SFS-L

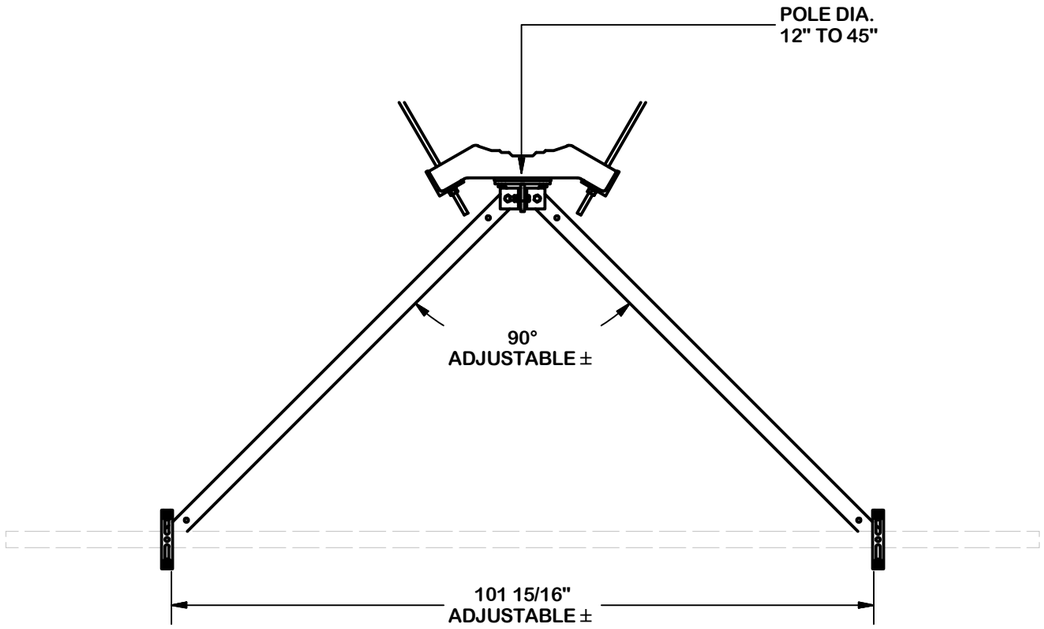

PARTIAL VIEW E-E

HORIZONTAL POSITION

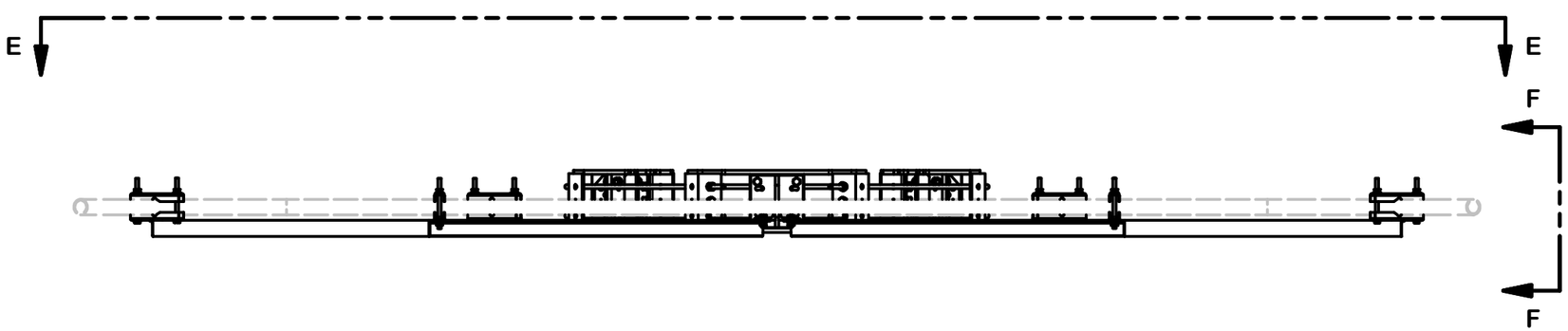

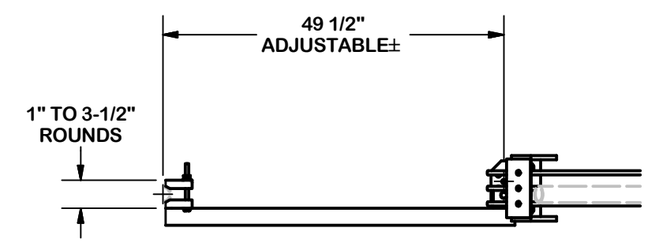

PARTIAL VIEW F-F

REV	DESCRIPTION OF REVISIONS	CPD	BY	DATE
A	CHANGED MAX. DIA. FOR HANDRAIL CONNECTION	SP1	BC	10/25/2017

REVISION HISTORY

TOLERANCE NOTES

TOLERANCES ON DIMENSIONS, UNLESS OTHERWISE NOTED ARE:
SAWED, SHEARED AND GAS CUT EDGES (± 0.030")
DRILLED AND GAS CUT HOLES (± 0.030") - NO CONING OF HOLES
LASER CUT EDGES AND HOLES (± 0.010") - NO CONING OF HOLES
BENDS ARE ± 1/2 DEGREE
ALL OTHER MACHINING (± 0.030")
ALL OTHER ASSEMBLY (± 0.060")

PROPRIETARY NOTE:
THE DATA AND TECHNIQUES CONTAINED IN THIS DRAWING ARE PROPRIETARY INFORMATION OF VALMONT INDUSTRIES AND CONSIDERED A TRADE SECRET. ANY USE OR DISCLOSURE WITHOUT THE CONSENT OF VALMONT INDUSTRIES IS STRICTLY PROHIBITED.

DESCRIPTION
HANDRAIL REINFORCEMENT KIT (LONG)

CPD NO.	DRAWN BY	ENG. APPROVAL	PART NO.
SP1	CSL3 2/23/2017	3RD PARTY	PRK-SFS-L

CLASS	SUB	DRAWING USAGE	CHECKED BY	DWG. NO.
81	02	SHOP	BMC 9/8/2017	PRK-SFS-L

SITE PRO 1
A valmont COMPANY
Engineering Support Team:
1-888-753-7446
Locations:
New York, NY
Atlanta, GA
Los Angeles, CA
Plymouth, IN
Salem, OR
Dallas, TX

QS66512-2

6ft 65° XXX MultiServ™ 12-Port Antenna

2x698-806*MHz / 2x824-894MHz / 4x1850-1990MHz / 4x1695-1780+2110-2400MHz

- Provides 12 antenna Ports in a slim-line form factor
- Optimized Azimuth patterns for Min Inter-Sector Interference
- Industry leading Minimal Wind-Load design

- 700, 850, PCS, AWS & WCS bands in one antenna
- AISG & 3GPP compliant internal remote electrical tilt (RET)
- AWS & PCS Cross band PIM >159dBc

The Quintel MultiServ™ Multiband 12 Port Antenna with patented QTilt™ technology uniquely delivers four independent services in a single slim-line antenna. This enables existing antenna network sites to be upgraded constraint free to add new services such as LTE for 700, 850, PCS, AWS and WCS bands with the replacement of one antenna. The QS66512-2 also provides 4x1695-1780+2110-2400MHz & 4x1850-1990MHz ports as two side-by-side (CLA-2X) arrays, each set of 4 ports having independent tilt for connection to 2T4R/4T4R services.

Electrical Characteristics	2x Ports 1&2	2x Ports 3&4	4x Ports 5-8			4 Ports 9-12
Operating Frequency (MHz)	**698-806***	**824-894**	**1695-1780 and 2110-2400**			**1850-1990**
	698-806	824-894	1695-1780	2110-2180	2300-2400	1850-1990
Azimuth beamwidth[1]	67°	64°	68°	63°	58°	69°
Elevation beamwidth[1]	12°	10°	6.5°	5.5°	4.5°	5.5°
Gain[1] (dBi)	13.2	13.5	16.2	16.5	17.0	16.0
Polarization	±45°	±45°	±45° ±45°			±45° ±45°
Electrical down-tilt range	2°-10°	2°-10°	2° – 7°			2° – 7°
Upper SLL (20° > mainbeam)[1]	-17dB	-19dB	-18dB	-18B	-18dB	-16dB
Front to Back Ratio(180°±10°)[1]	≥27dB	≥29dB	≥28dB	≥28dB	≥28dB	≥27dB
Port to Port isolation[1]	≥28dB	≥30dB	≥30dB	≥30dB	≥30dB	≥30dB
Return loss (VSWR)	14dB(1.5)	14dB(1.5)	14dB(1.5)	14dB(1.5)	14dB (1.5)	14dB(1.5)
X Polar Discrimination (at 0°)	>18dB	>16dB	>20dB	>20dB	>18dB	>20dB
Max Power handling (per any port)	500 watts	500 watts	250 watts			250 watts
Total Composite Power (all ports)	1750 watts					
PIM (3rd Order) (2x43dBm)	>153dBc	>153dBc	>153dBc			>153dBc
XBand PIM (3rd Order) (2x43dBm)			>159dBc			

*[1] Typical Performance across frequency and Downtilt. *Products Ordered after Jan 2016 will be 698-806MHz*

Mechanical Characteristics	
Dimensions	L 72"(1828mm) x W 12"(304mm) x D 9.6"(245mm)
Weight (excl mounting brackets)	111lbs (50.3kg)
No. of Connectors	12x 4.3-10.0 DIN Female Long Neck
Max Wind Speed	150mph (67m/s)
Effective Projected Area	Front: 2.6ft² (0.24m²) Side: 5.0ft²(0.46m²)
Wind Load @160km/h (45m/s)	Front: 284.7N (64 lbs), Side: 535.5N (120.4 lbs)
Operating Temperature	-40°C to +65°C

Fully Integrated RET Characteristics	
AISG Standards	V1.1,V 2.0 and 3GPP
Factory Default	AISG 2.0
Surge immunity	IEC 61000-4-5:2005 4KV(AISG PIN)
Device Type	SRET Type 1
AISG Data rate	9.6 kbps
No of connectors	1in/1out.
Connector type	IEC 60130-9 (Ed 3.0)
MTBF	36,000 Operational moves

All specifications are subject to change without notice. Please contact your Quintel representative for complete information.

QS66512-2

6ft 65º XXX MultiServ™ 12-Port Antenna

2x698-806*MHz / 2x824-894MHz / 4x1850-1990MHz / 4x1695-1780+2110-2400MHz

RET Configuration

The Quintel MultiServ™ Multiband 12 Port Antenna has the following Array, RF Port and AISG I/O Configurations.

The 12-Port array topology consists of 3 radiating arrays:

R1/R2 – 698-894MHz
Y1/B1 – 1695-2400MHz
Y2/B2 – 1695-2400MHz

RF Connector Port Configuration

	Ports	Freq (MHz)
R1	1-2	698-806
R2	3-4	824-894
Y1	5-6	1695-1780+ 2110-2400
Y2	7-8	1695-1780+ 2110-2400
B1	9-10	1850-1990
B2	11-12	1850-1990

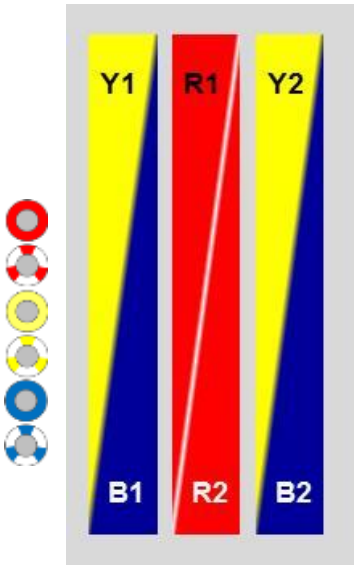

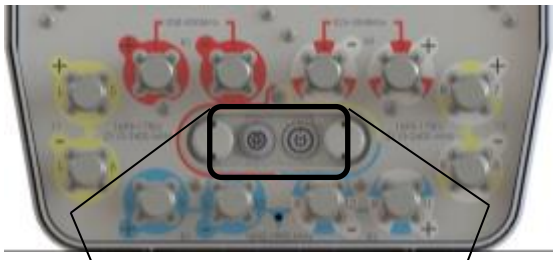

AISG I/O Configuration

RET Device	Band	RF Ports
1	698-806	1-2
2	824-894	3-4
3	AWS/WCS	5-8
4	PCS	9-12

Multiband Optimization

The Quintel MultiServ™ Multiband 12 Port Antenna is an ideal solution for independently optimizing multiple services when rapidly introducing new technologies. Technology agnostic, each pair of ports provides flexibility for existing and future technologies such as CDMA/EVDO, UMTS/HSPA, and LTE and advanced 2T4R and 4T4R MIMO implementations at high-bands.

The tilt of each service is controlled independently via internal RET actuators compliant to AISG1.1, AISG2.0 and 3GPP protocols. The QS66512-2 provides a total of 4 independent tilts:

- 1x(698-806MHz)
- 1x(824-894MHz)
- 1x Left & Right Array (1695-1780 and 2110-2400MHz)
- 1x Left & Right Array (1850-1990MHz)

Design Optimization

All Quintel antennas use the same mechanical mounting brackets thus making maintenance swaps easy and future proof. All Quintel Antennas also have Azimuth patterns optimized with network design and deployment in mind. The 3dB Azimuth beamwidth is ~65º as with most Antennas, but we have optimized how the pattern rolls-off and where the sidelobes emerge such that there is minimal Inter-Sector Interference when 3x sectors are deployed. For interference limited networks, we can deliver 25% more capacity.

The QS66512-2 12-Port antenna has been designed for delivering best in class, maximum PIM performance. This includes using 4.3-10.0 connectors externally and internally for all array diplexing filters used with our QTilt™ technology.

About Quintel

Quintel is a leading innovator in the design, development, and delivery of network-efficient antenna solutions for wireless operators worldwide. The company's products enable global wireless operators to independently deploy and optimize multiple air interfaces or services on a single standard antenna platform. Quintel is the only antenna maker whose products can increase a wireless network's capacity and provide additional services, without increasing the number or size of antennas. Quintel is headquartered in Rochester, New York with additional offices throughout North America and Europe. More information about Quintel is available at www.quintelsolutions.com.

Tel (Americas): +1 (585) 420-8720
info@quintelsolutions.com

THIS DOCUMENT PROVIDES A GENERAL DESCRIPTION OF THE PRODUCT AND SHALL NOT FORM PART OF ANY CONTRACT.
© 2017 Quintel Technology Limited. All rights reserved. Quintel and the Quintel logo are registered trademarks Quintel Technology Limited. All other trademarks are the property of their respective owners.

Product Specifications

COMMSCOPE®

POWERED BY ANDREW®

SBNH-1D6565B

Andrew® Dual Band Antenna, 698–896 MHz and 1710–2180 MHz, 65° horizontal beamwidth, internal RET

- Interleaved dipole technology providing for attractive, low wind load mechanical package
- Internal next generation actuator eliminates field installation and defines new standards for reliability
- The values presented on this datasheet have been calculated based on N-P-BASTA White Paper version 9.6 by the NGMN Alliance

This product will be discontinued on: December 31, 2014

Replaced By

DBXNH-6565B-VTM	Andrew® Dual Band Teletilt® Antenna, 698–896 MHz and 1710–2180 MHz, 65° horizontal beamwidth, RET compatible
SBNHH-1D65B	Andrew® Tri-band Antenna, 698–896 and 2 x 1710–2360 MHz, 65° horizontal beamwidth, internal RET. Both high bands share the same electrical tilt.
SBNH-1D65B	Andrew® Dualband Antenna, 698–896 MHz and 1710–2360 MHz, 65° horizontal beamwidth, internal RET.

Electrical Specifications

Frequency Band, MHz	**698–806**	**806–896**	**1710–1880**	**1850–1990**	**1920–2180**
Gain by all Beam Tilts, average, dBi	14.9	15.2	18.3	18.2	17.9
Gain by all Beam Tilts Tolerance, dB	±0.5	±0.4	±0.4	±0.3	±0.7
Gain by Beam Tilt, average, dBi	0 ° | 15.1 5 ° | 15.1 10 ° | 14.6	0 ° | 15.2 5 ° | 15.3 10 ° | 15.1	0 ° | 18.5 3 ° | 18.4 6 ° | 18.1	0 ° | 18.3 3 ° | 18.3 6 ° | 18.0	0 ° | 18.2 3 ° | 18.0 6 ° | 17.5
Beamwidth, Horizontal, degrees	71	67	59	57	63
Beamwidth, Horizontal Tolerance, degrees	±2.2	±2.3	±2.6	±1.4	±10.2
Beamwidth, Vertical, degrees	12.3	10.9	5.5	5.1	4.8
Beamwidth, Vertical Tolerance, degrees	±0.9	±0.5	±0.3	±0.2	±0.4
Beam Tilt, degrees	0–10	0–10	0–6	0–6	0–6
USLS, dB	16	17	16	17	15
Front-to-Back Total Power at 180° ± 30°, dB	21	20	29	29	27
CPR at Boresight, dB	26	22	25	26	24
CPR at Sector, dB	11	7	10	10	8
Isolation, dB	30	30	30	30	30
Isolation, Intersystem, dB	30	30	30	30	30
VSWR | Return Loss, dB	1.5 | 14.0	1.5 | 14.0	1.5 | 14.0	1.5 | 14.0	1.5 | 14.0
PIM, 3rd Order, 2 x 20 W, dBc	-153	-153	-153	-153	-153
Input Power per Port, maximum, watts	400	400	300	300	300
Polarization	±45°	±45°	±45°	±45°	±45°
Impedance	50 ohm	50 ohm	50 ohm	50 ohm	50 ohm

General Specifications

Antenna Brand	Andrew®
Antenna Type	DualPol® multiband with internal RET
Band	Multiband

©2014 CommScope, Inc. All rights reserved. All trademarks identified by ® or ™ are registered trademarks, respectively, of CommScope. All specifications are subject to change without notice. See www.commscope.com for the most current information. Revised: September 11, 2014

Product Specifications

SBNH-1D6565B

Brand	DualPol® | Teletilt®
Operating Frequency Band	1710 – 2180 MHz | 698 – 896 MHz

Mechanical Specifications

Color	Light gray
Lightning Protection	dc Ground
Radiator Material	Aluminum
Radome Material	Fiberglass, UV resistant
RF Connector Interface	7-16 DIN Female
RF Connector Location	Bottom
RF Connector Quantity, total	4
Wind Loading, maximum	618.0 N @ 150 km/h 138.9 lbf @ 150 km/h
Wind Speed, maximum	241.0 km/h | 149.8 mph

Dimensions

Depth	181.0 mm | 7.1 in
Length	1847.0 mm | 72.7 in
Width	301.0 mm | 11.9 in
Net Weight	21.5 kg | 47.4 lb

Remote Electrical Tilt (RET) Information

Input Voltage	10–30 Vdc
Power Consumption, idle state, maximum	2.0 W
Power Consumption, normal conditions, maximum	11.0 W
Protocol	3GPP/AISG 2.0 Multi-RET
RET Interface	8-pin DIN Female | 8-pin DIN Male
RET Interface, quantity	1 female | 1 male
RET System	Teletilt®

Regulatory Compliance/Certifications

Agency	Classification
RoHS 2011/65/EU	Compliant by Exemption
China RoHS SJ/T 11364-2006	Above Maximum Concentration Value (MCV)
ISO 9001:2008	Designed, manufactured and/or distributed under this quality management system

Included Products

DB380 — Pipe Mounting Kit for 2.4"-4.5" (60-115mm) OD round members on wide panel antennas. Includes 2 clamp sets and double nuts.

DB5083 — Downtilt Mounting Kit for 2.4"-4.5" (60 - 115 mm) OD round members. Includes a heavy-duty, galvanized steel

©2014 CommScope, Inc. All rights reserved. All trademarks identified by ® or ™ are registered trademarks, respectively, of CommScope. All specifications are subject to change without notice. See www.commscope.com for the most current information. Revised: September 11, 2014

downtilt mounting bracket assembly and associated hardware. This kit is compatible with the DB380 pipe mount kit for panel antennas that are equipped with two mounting brackets.

©2014 CommScope, Inc. All rights reserved. All trademarks identified by ® or ™ are registered trademarks, respectively, of CommScope. All specifications are subject to change without notice. See www.commscope.com for the most current information. Revised: September 11, 2014

PAUL J. FORD & COMPANY

Report Date: July 3, 2019

Client: Smartlink, LLC
85 Rangeway Rd
North Billerica, MA 01862-2105
Attn: David Barbagallo
860-681-7708

Utility Name: Eversource Energy
Structure: Existing 120-ft Transmission Pole #24063
Line Reference: Middletown - Norwalk - 345kV Line
Carrier-Technology: AT&T – 2019 LTE Next Carrier
Carrier Site Name: Orange Overland Drive
Carrier Site Number: CTL02343
Site Address: 525 Overland Dr
City, County, State: Orange, New Haven County, CT
Latitude, Longitude: 41.289361, -73.001083

PJF Project: A80619-0001.003.6190

Paul J. Ford and Company is pleased to submit this "**Mount Modification Report**". The purpose of this analysis is to determine if the mount has sufficient capacity to support the equipment described herein. Analysis of the existing supporting tower structure is to be completed by others and therefore is not part of this analysis. Analysis of the antenna mounting system as a tie-off point is not part of this document.

Analysis Criteria:

Reference Standard:	2018 Connecticut State Building Code with the ANSI/TIA-222-G-2005 Standard, "Structural Standard for Antenna Supporting Structures and Antennas", with ANSI/TIA-222-G-1-2007 and ANSI/TIA-222-G-2-2009 Addenda per Exception #5 of Section 1609.1.1.
Ultimate Wind Speed:	125 mph 3-second gust wind speed without ice
Nominal Wind Speed:	97 mph 3-second gust wind speed without ice
Ice Wind Speed:	50 mph 3-second gust wind speed with 0.75" ice
IBC Site Criteria:	Structure Class III, Topographic Category 1, Exposure Category C

Summary of Analysis Results:

Antenna Mount: **96%** **SUFFICIENT***

***Sufficient upon completion of the modifications listed in the 'Recommendations' section of this report.**

We at Paul J. Ford and Company appreciate the opportunity of providing our continuing professional services to you and Smartlink, LLC. If you have any questions or need further assistance on this or any other projects please give us a call.

Respectfully Submitted by:
Paul J. Ford and Company

Charles E. Carrillo, P.E.
Project Engineer
ccarrillo@pauljford.com

STATE OF CONNECTICUT
JAMES R. ANTOSZEWSKI
31499
LICENSED
PROFESSIONAL ENGINEER

07/03/2019

TABLE OF CONTENTS

1) INTRODUCTION

2) ANALYSIS CRITERIA

Reference Standard
Table 1 – Proposed Antenna Information
Table 2 – Existing Antenna Information

3) ANALYSIS PROCEDURE

Table 3 – Documents Provided
3.1) Analysis Method
3.2) Assumptions

4) ANALYSIS RESULTS

Table 4 - Mount Component Capacity
4.1) Recommendations

5) CONCLUSION

STANDARD CONDITIONS

APPENDIX A – LOAD CALCULATIONS

APPENDIX B – RISA 3D OUTPUT

1) INTRODUCTION

This tower is a 120 ft transmission pole with an existing Valmont 802738 mount at the 130'-0" centerline.

2) ANALYSIS CRITERIA

This analysis has been performed in accordance with the 2018 Connecticut State Building Code based upon a nominal 3-second gust wind speed of 97 mph per section 1609.3.1 as required for use in the ANSI/TIA-222-G-2005 Standard, "Structural Standard for Antenna Supporting Structures and Antennas", with ANSI/TIA-222-G-1-2007 and ANSI/TIA-222-G-2-2009 Addenda per Exception #5 of Section 1609.1.1. Structure Class III, Exposure Category C and Topographic Category 1 with a maximum Topographic Factor, Kzt, of 1.0 were used in this analysis.

Table 1 – Proposed Antenna Information

Mounting Level (feet)	Center Line Elevation (feet)	Number of Antennas	Antenna Manufacturer	Antenna Model	Note
130	130	3	Kathrein	800-10965 (Antenna)	1
		6	CCI	TMABPD7823VG12A (TMA)	
		1	-	10'-6" Custom Handrail	-
		1	SitePro1	PRK-SFS-L	

Notes:
1. Proposed equipment

Table 2 – Existing Antenna Information

Mounting Level (feet)	Center Line Elevation (feet)	Number of Antennas	Antenna Manufacturer	Antenna Model	Note
130	130	3	Andrew	SBNH-1D6565B (Antenna)	1
		3	Quintel	QS66512-2 (Antenna)	
		6	Kaelus	TMA2117F00V1-1 (TMA)	

Notes:
1. Existing equipment

3) ANALYSIS PROCEDURE

Table 3 – Documents Provided

Document	Remarks	Reference	Source
Site Photos	-	-	
RF Data Sheet	AT&T, 07/10/2018	Orange Overland Drive	AT&T
Mount Modification Drawings	PJF, 06/21/2019	80619-0001.003.6190	PJF

3.1) Analysis Method

RISA-3D (version 15.0.4), a commercially available analysis software package, was used to create a three-dimensional model of the mount and calculate member stresses for various loading cases. Selected output from the analysis is included in Appendix C.

3.2) Assumptions

1) *The analysis of the existing transmission pole tower or the effect of the mount attachment to the tower is not within the current scope of work.*
2) *The antenna mounting system was properly fabricated, installed and maintained in good condition, twist free and plumb in accordance with its original design and manufacturer's specifications and all bolts are tightened as specified by the manufacturer and AISC requirements.*
3) *The configuration of antennas, mounts, and other appurtenances are as specified in Table 1 and 2 and the referenced drawings.*
4) *All member connections have been designed to meet or exceed the load carrying capacity of the connected member unless otherwise specified in this report.*
5) *This analysis will be required to be revised if the existing conditions in the field differ from those shown in the above referenced documents or assumed in this analysis. No allowance was made for any damaged, missing, or rusted members.*
6) *Steel grades have been assumed as follows:*
   a) *Channel, Solid Round, Angle, Plate, Unistrut* — *ASTM A36 (GR 36)*
   b) *Pipe* — *ASTM A53 (GR 35)*
   c) *HSS (Rectangular)* — *ASTM 500 (GR B-46)*
   d) *Connection Bolts* — *ASTM A325*
7) *Mount will be modified in conformance with the attached proposed modification drawings.*
8) *No Man Live loads have been considered in this analysis since these frames are not man rated. AT&T policy forbids the addition of live loads to this type of mount.*

This analysis may be affected if any assumptions are not valid or have been made in error. Paul J Ford and Company should be notified to determine the effect on the structural integrity of the tower.

4) ANALYSIS RESULTS

Table 4 – Mount Component Stresses vs. Capacity

Notes	Component	Elevation (ft)	% Capacity	Pass / Fail
1	Mount Pipes	130.0	82	Pass
1	Face Horizontal		96	Pass
1	Vertical Pipes		21	Pass
1	Vertical Kicker		13	Pass
1	Standoff		96	Pass
1	Threaded Rods		2	Pass
1	Handrail		67	Pass

Mount Rating (max from all components) =	96%

Notes:
1. See additional documentation in "Appendix C – Software analysis Output" for calculations supporting the % capacity consumed.

4.1) Recommendations

- Install the proposed modifications referenced in Table 3 of this report.

5) CONCLUSION

The mount will have sufficient capacity to carry the proposed loading configuration once the recommendations are met and properly installed.

This analysis is presented based upon the assumptions listed herein and information provided by the wireless carrier. If the existing conditions are different than those presented here, Paul J. Ford and Company should be contacted to verify the validity of the conclusions presented here.

STANDARD CONDITIONS FOR FURNISHING OF PROFESSIONAL ENGINEERING SERVICES ON EXISTING MOUNTS BY PAUL J. FORD AND COMPANY

1) It is the responsibility of the client to ensure that the information provided to Paul J. Ford and Company is accurate and complete. Paul J. Ford and Company will rely on the accuracy and completeness of such information in performing or furnishing services under this project.

2) If the existing conditions are not as represented on the referenced drawings and/or documents, Paul J. Ford and Company should be contacted immediately to evaluate the significance of the deviation.

3) The mount has been analyzed according to the minimum design loads recommended by the Reference Standard. If additional design loads are required, Paul J. Ford and Company should be made aware of this prior to the start of the project.

4) The standard of care for all Professional Engineering Services performed or furnished by Paul J. Ford and Company under this project will be the skill and care used by members of the Consultant's profession practicing under similar circumstances at the same time and in the same locality.

5) All Services are performed, results obtained, and recommendations made in accordance with generally accepted engineering principles and practices. Paul J. Ford and Company is not responsible for the conclusions, opinions and/or recommendations made by others based on the information supplied herein.

****

APPENDIX A

LOAD CALCULATIONS

Equipment Loads - TIA-222-G Calculations

Design Data as per TIA-222-G

Wind Speed w/o Ice:	$V := 97$	mph	User Input - See 2016 CT State Building Code - Appendix N
Wind Speed w/ Ice:	$Vi := 50$	mph	User Input - See Annex B of TIA-222-G
Service Wind Speed:	$V_{service_loads} := 60$	mph	Section 2.8.3 - TIA-222-G
Service Importance Factor:	$I_{service_loads} := 1$		Section 2.8.3 - TIA-222-G
Directionality Factor:	$Kd_{service_loads} := 0.85$		Section 2.8.3 - TIA-222-G
Radial Ice Thickness:	$ti := 0.75\ in$		User Input - See Annex B of TIA-222-G
Radial Ice Density:	$Id := 57\ pcf$		User Input - See Annex B of TIA-222-G
Height to Center of Antennas:	$z_{carrier_1} := 130\ ft$		User Input
Structure Type:	$ST :=$ "Pole"		User Input
Structure Class:	$SC :=$ "III"		User Input - Table 2-1 - TIA-222-G
Exposure Category:	$Exp :=$ "C"		User Input - Section 2.6.5.1 - TIA-222-G
Wind Direction Probability Factor:	$Kd := 0.95$		User Input - Table 2-2 - TIA-222-G
Importance Factor, Wind:	$I_{wind} := 1.15$		User Input - Table 2-3 - TIA-222-G
Importance Factor, Ice:	$I_{Ice} := 1.25$		User Input - Table 2-3 - TIA-222-G
Importance Factor, Ice With Wind:	$I_{IcewWind} := 1$		User Input - Table 2-3 - TIA-222-G
Exposure Category Coefficient:	$Zg := 900\ ft$		User Input - Table 2-4 - TIA-222-G
Exposure Category Coefficient:	$\alpha := 9.5$		User Input - Table 2-4 - TIA-222-G
Gust Response Factor:	$G_H := 1$		
Velocity Pressure Coefficient:	$Kz_{carrier_1} := 2.01 \left(\frac{z_{carrier_1}}{Zg}\right)^{\frac{2}{\alpha}} = 1.34$		Section 2.6.5.2 - TIA-222-G
	$Kzt := 1.0$		Section 2.6.6.4 - TIA-222-G
Velocity Pressure w/o Ice:	$qz_{carrier_1} := 0.00256 \cdot Kd \cdot Kz_{carrier_1} \cdot Kzt \cdot V^2 \cdot I_{wind} \cdot psf = 35.2\ psf$		
Velocity Pressure w/ Ice:	$qz_{ice_carrier_1} := 0.00256 \cdot Kd \cdot Kz_{carrier_1} \cdot Kzt \cdot Vi^2 \cdot I_{IcewWind} \cdot psf = 8.13\ psf$		
Height Escalation Factor for Ice Thickness:	$Kiz := \left(\frac{z_{carrier_1}}{33\ ft}\right)^{0.1} = 1.15$		
Factored Ice Thickness:	$tiz := 2.0 \cdot ti \cdot I_{Ice} \cdot Kiz \cdot Kzt^{0.35} = 2.15\ in$		Section 2.6.8 - TIA-222-G

Standard Equipment Calculations - Equipment 1 (Front Wind)

Equipment Properties

Antenna Carrier:	AT&T	User Defined
Equipment Model:	Proposed Antenna Kathrein - 800-10965	User Defined
Equipment Shape:	Flat	User Defined
Equipment Height:	$L_{eq_1} := 78.7 \cdot in$	User Defined
Equipment Width:	$W_{eq_1} := 20 \cdot in$	User Defined
Equipment Depth:	$D_{eq_1} := 6.9\ in$	User Defined
Equipment Weight:	$WT_{eq_1} := 108.6 \cdot lbf$	User Defined
Equipment Volume:	$V_{eq_1} := L_{eq_1} \cdot W_{eq_1} \cdot D_{eq_1} = 6.29\ ft^3$	
Equipment Quantity:	$N_{eq_1} := 1$	User Defined
Equippment Aspect Ratio:	$Ar_{eq_1} := \frac{L_{eq_1}}{W_{eq_1}} = 3.94$	
Mast Force Coefficient:	$Ca_{eq_1} := 1.2 + \frac{(Ar_{eq_1} - 2.5)}{4.5} \cdot 0.2 = 1.26$	As per Table 2-8 (Flat) - TIA-222-G

Equipment Wind Loads

Equipment Projected Area:	$SA_{eq_1} := L_{eq_1} \cdot W_{eq_1} = 10.93\ ft^2$	
Equipment Wind Force (All):	$F_{eq_1} := qz_{carrier_1} \cdot G_H \cdot Ca_{eq_1} \cdot SA_{eq_1} \cdot N_{eq_1} = 486\ lbf$	BLC 7 Member Point Load

Equipment Wind Loads (w/ Ice)

Equipment Projected Area (w/ Ice):	$A_ice_{eq_1} := (L_{eq_1} + 2 \cdot tiz) \cdot (W_{eq_1} + 2 \cdot tiz) = 14\ ft^2$	
Equipment Wind Force (w/ Ice) (All):	$Fi_{eq_1} := qz_{ice_carrier_1} \cdot G_H \cdot Ca_{eq_1} \cdot A_ice_{eq_1} \cdot N_{eq_1} = 144\ lbf$	BLC 5 Member Point Load

Equipment Vertical Loads

Weight of Equipment (All):	$WT_{eq_1} \cdot N_{eq_1} = 108.6\ lbf$	BLC 2 Member Point Load

Equipment Vertical Loads (Ice Only)

Volume of Ice on Equipment:	$V_{ice_eq_1} := (L_{eq_1} + 2 \cdot tiz) \cdot (W_{eq_1} + 2 \cdot tiz) \cdot (D_{eq_1} + 2 \cdot tiz) - V_{eq_1} = 6.79\ ft^3$	
Weight of Ice on Equipment (All):	$WT_{ice_eq_1} := V_{ice_eq_1} \cdot Id \cdot N_{eq_1} = 387\ lbf$	BLC 3 Member Point Load

Standard Equipment Calculations - Equipment 1 (Side Wind)

Equipment Properties

Antenna Carrier:	AT&T	User Defined
Equipment Model:	Proposed Antenna Kathrein - 800-10965	User Defined
Equipment Shape:	Flat	User Defined
Equipment Height:	$L_{eq_1} := 78.7 \cdot in$	User Defined
Equipment Width:	$W_{eq_1} := 20 \cdot in$	User Defined
Equipment Depth:	$D_{eq_1} := 6.9\ in$	User Defined
Equipment Weight:	$WT_{eq_1} := 108.6 \cdot lbf$	User Defined
Equipment Volume:	$V_{eq_1} := L_{eq_1} \cdot W_{eq_1} \cdot D_{eq_1} = 6.29\ ft^3$	
Equipment Quantity:	$N_{eq_1} := 1$	User Defined
Equippment Aspect Ratio:	$Ar_{eq_1} := \frac{L_{eq_1}}{D_{eq_1}} = 11.41$	
Mast Force Coefficient:	$Ca_{eq_1} := 1.4 + \frac{(Ar_{eq_1} - 7)}{18} \cdot 0.6 = 1.55$	As per Table 2-8 (Flat) - TIA-222-G

Equipment Wind Loads

Equipment Projected Area:	$SA_{eq_1} := L_{eq_1} \cdot D_{eq_1} = 3.77\ ft^2$	
Equipment Wind Force (All):	$F_{eq_1} := qz_{carrier_1} \cdot G_H \cdot Ca_{eq_1} \cdot SA_{eq_1} \cdot N_{eq_1} = 205\ lbf$	BLC 6 Member Point Load

Equipment Wind Loads (w/ Ice)

Equipment Projected Area (w/ Ice):	$A_ice_{eq_1} := (L_{eq_1} + 2 \cdot tiz) \cdot (D_{eq_1} + 2 \cdot tiz) = 6\ ft^2$	
Equipment Wind Force (w/ Ice) (All):	$Fi_{eq_1} := qz_{ice_carrier_1} \cdot G_H \cdot Ca_{eq_1} \cdot A_ice_{eq_1} \cdot N_{eq_1} = 81\ lbf$	BLC 4 Member Point Load

Equipment Vertical Loads

Weight of Equipment (All):	$WT_{eq_1} \cdot N_{eq_1} = 108.6\ lbf$	BLC 2 Member Point Load

Standard Equipment Calculations - Equipment 2 (Front Wind)

Equipment Properties

Antenna Carrier:	AT&T	User Defined
Equipment Model:	Existing TMA Kaelus - TMA2117F00V1-1	User Defined
Equipment Shape:	Flat	User Defined
Equipment Height:	$L_{eq_2} := 11.8 \cdot in$	User Defined
Equipment Width:	$W_{eq_2} := 9.8 \cdot in$	User Defined
Equipment Depth:	$D_{eq_2} := 4.7\ in$	User Defined
Equipment Weight:	$WT_{eq_2} := 26 \cdot lbf$	User Defined
Equipment Volume:	$V_{eq_2} := L_{eq_2} \cdot W_{eq_2} \cdot D_{eq_2} = 0.31\ ft^3$	
Equipment Quantity:	$N_{eq_2} := 2$	User Defined
Equippment Aspect Ratio:	$Ar_{eq_2} := \frac{L_{eq_2}}{W_{eq_2}} = 1.2$	
Mast Force Coefficient:	$Ca_{eq_2} := 1.2$	As per Table 2-8 (Flat) - TIA-222-G

Equipment Wind Loads

Equipment Projected Area:	$SA_{eq_2} := L_{eq_2} \cdot W_{eq_2} = 0.8\ ft^2$	
Equipment Wind Force (All):	$F_{eq_2} := qz_{carrier_1} \cdot G_H \cdot Ca_{eq_2} \cdot SA_{eq_2} \cdot N_{eq_2} = 68\ lbf$	BLC 7 Member Point Load

Equipment Wind Loads (w/ Ice)

Equipment Projected Area (w/ Ice):	$A_ice_{eq_2} := (L_{eq_2} + 2 \cdot tiz) \cdot (W_{eq_2} + 2 \cdot tiz) = 2\ ft^2$	
Equipment Wind Force (w/ Ice) (All):	$Fi_{eq_2} := qz_{ice_carrier_1} \cdot G_H \cdot Ca_{eq_2} \cdot A_ice_{eq_2} \cdot N_{eq_2} = 31\ lbf$	BLC 5 Member Point Load

Equipment Vertical Loads

Weight of Equipment (All):	$WT_{eq_2} \cdot N_{eq_2} = 52\ lbf$	BLC 2 Member Point Load

Equipment Vertical Loads (Ice Only)

Volume of Ice on Equipment:	$V_{ice_eq_2} := (L_{eq_2} + 2 \cdot tiz) \cdot (W_{eq_2} + 2 \cdot tiz) \cdot (D_{eq_2} + 2 \cdot tiz) - V_{eq_2} = 0.87\ ft^3$	
Weight of Ice on Equipment (All):	$WT_{ice_eq_2} := V_{ice_eq_2} \cdot Id \cdot N_{eq_2} = 99\ lbf$	BLC 3 Member Point Load

Standard Equipment Calculations - Equipment 2 (Side Wind)

Equipment Properties

Antenna Carrier:	AT&T	User Defined
Equipment Model:	Existing TMA Kaelus - TMA2117F00V1-1	User Defined
Equipment Shape:	Flat	User Defined
Equipment Height:	$L_{eq_2} := 11.8 \cdot in$	User Defined
Equipment Width:	$W_{eq_2} := 9.8 \cdot in$	User Defined
Equipment Depth:	$D_{eq_2} := 4.7\ in$	User Defined
Equipment Weight:	$WT_{eq_2} := 26 \cdot lbf$	User Defined
Equipment Volume:	$V_{eq_2} := L_{eq_2} \cdot W_{eq_2} \cdot D_{eq_2} = 0.31\ ft^3$	
Equipment Quantity:	$N_{eq_2} := 2$	User Defined
Equippment Aspect Ratio:	$Ar_{eq_2} := \frac{L_{eq_2}}{D_{eq_2}} = 2.51$	
Mast Force Coefficient:	$Ca_{eq_2} := 1.2$	As per Table 2-8 (Flat) - TIA-222-G

Equipment Wind Loads

Equipment Projected Area:	$SA_{eq_2} := L_{eq_2} \cdot D_{eq_2} = 0.39\ ft^2$	
Equipment Wind Force (All):	$F_{eq_2} := qz_{carrier_1} \cdot G_H \cdot Ca_{eq_2} \cdot SA_{eq_2} \cdot N_{eq_2} = 33\ lbf$	**BLC 6** Member Point Load

Equipment Wind Loads (w/ Ice)

Equipment Projected Area (w/ Ice):	$A_ice_{eq_2} := (L_{eq_2} + 2 \cdot tiz) \cdot (D_{eq_2} + 2 \cdot tiz) = 1\ ft^2$	
Equipment Wind Force (w/ Ice) (All):	$Fi_{eq_2} := qz_{ice_carrier_1} \cdot G_H \cdot Ca_{eq_2} \cdot A_ice_{eq_2} \cdot N_{eq_2} = 20\ lbf$	**BLC 4** Member Point Load

Equipment Vertical Loads

Weight of Equipment (All):	$WT_{eq_2} \cdot N_{eq_2} = 52\ lbf$	**BLC 2** Member Point Load

Standard Equipment Calculations - Equipment 3 (Front Wind)

Equipment Properties

Antenna Carrier:	AT&T	User Defined
Equipment Model:	Proposed TMA CCI - TMABPD7823VG12A	User Defined
Equipment Shape:	Flat	User Defined
Equipment Height:	$L_{eq_3} := 10.6 \cdot in$	User Defined
Equipment Width:	$W_{eq_3} := 11 \cdot in$	User Defined
Equipment Depth:	$D_{eq_3} := 3.8\ in$	User Defined
Equipment Weight:	$WT_{eq_3} := 26 \cdot lbf$	User Defined
Equipment Volume:	$V_{eq_3} := L_{eq_3} \cdot W_{eq_3} \cdot D_{eq_3} = 0.26\ ft^3$	
Equipment Quantity:	$N_{eq_3} := 2$	User Defined
Equippment Aspect Ratio:	$Ar_{eq_3} := \frac{L_{eq_3}}{W_{eq_3}} = 0.96$	
Mast Force Coefficient:	$Ca_{eq_3} := 1.2$	As per Table 2-8 (Flat) - TIA-222-G

Equipment Wind Loads

Equipment Projected Area: $SA_{eq_3} := L_{eq_3} \cdot W_{eq_3} = 0.81\ ft^2$

Equipment Wind Force (All): $F_{eq_3} := qz_{carrier_1} \cdot G_H \cdot Ca_{eq_3} \cdot SA_{eq_3} \cdot N_{eq_3} = 68\ lbf$ — **BLC 7** Member Point Load

Equipment Wind Loads (w/ Ice)

Equipment Projected Area (w/ Ice): $A_ice_{eq_3} := (L_{eq_3} + 2 \cdot tiz) \cdot (W_{eq_3} + 2 \cdot tiz) = 2\ ft^2$

Equipment Wind Force (w/ Ice) (All): $Fi_{eq_3} := qz_{ice_carrier_1} \cdot G_H \cdot Ca_{eq_3} \cdot A_ice_{eq_3} \cdot N_{eq_3} = 31\ lbf$ — **BLC 5** Member Point Load

Equipment Vertical Loads

Weight of Equipment (All): $WT_{eq_3} \cdot N_{eq_3} = 52\ lbf$ — **BLC 2** Member Point Load

Equipment Vertical Loads (Ice Only)

Volume of Ice on Equipment: $V_{ice_eq_3} := (L_{eq_3} + 2 \cdot tiz) \cdot (W_{eq_3} + 2 \cdot tiz) \cdot (D_{eq_3} + 2 \cdot tiz) - V_{eq_3} = 0.81\ ft^3$

Weight of Ice on Equipment (All): $WT_{ice_eq_3} := V_{ice_eq_3} \cdot Id \cdot N_{eq_3} = 93\ lbf$ — **BLC 3** Member Point Load

Standard Equipment Calculations - Equipment 3 (Side Wind)

Standard Equipment Calculations - Equipment 3 (Side Wind)

Equipment Properties

Antenna Carrier:	AT&T	User Defined
Equipment Model:	Proposed TMA CCI - TMABPD7823VG12A	User Defined
Equipment Shape:	Flat	User Defined
Equipment Height:	$L_{eq_3} := 10.6 \cdot in$	User Defined
Equipment Width:	$W_{eq_3} := 11 \cdot in$	User Defined
Equipment Depth:	$D_{eq_3} := 3.8\ in$	User Defined
Equipment Weight:	$WT_{eq_3} := 26 \cdot lbf$	User Defined
Equipment Volume:	$V_{eq_3} := L_{eq_3} \cdot W_{eq_3} \cdot D_{eq_3} = 0.26\ ft^3$	
Equipment Quantity:	$N_{eq_3} := 2$	User Defined
Equippment Aspect Ratio:	$Ar_{eq_3} := \frac{L_{eq_3}}{D_{eq_3}} = 2.79$	
Mast Force Coefficient:	$Ca_{eq_3} := 1.2 + \frac{(Ar_{eq_3} - 2.5)}{4.5} \cdot 0.6 = 1.24$	As per Table 2-8 (Flat) - TIA-222-G

Equipment Wind Loads

Equipment Projected Area:	$SA_{eq_3} := L_{eq_3} \cdot D_{eq_3} = 0.28\ ft^2$	
Equipment Wind Force (All):	$F_{eq_3} := qz_{carrier_1} \cdot G_H \cdot Ca_{eq_3} \cdot SA_{eq_3} \cdot N_{eq_3} = 24\ lbf$	BLC 6 Member Point Load

Equipment Wind Loads (w/ Ice)

Equipment Projected Area (w/ Ice):	$A_ice_{eq_3} := (L_{eq_3} + 2 \cdot tiz) \cdot (D_{eq_3} + 2 \cdot tiz) = 1\ ft^2$	
Equipment Wind Force (w/ Ice) (All):	$Fi_{eq_3} := qz_{ice_carrier_1} \cdot G_H \cdot Ca_{eq_3} \cdot A_ice_{eq_3} \cdot N_{eq_3} = 17\ lbf$	BLC 4 Member Point Load

Equipment Vertical Loads

Weight of Equipment (All):	$WT_{eq_3} \cdot N_{eq_3} = 52\ lbf$	BLC 2 Member Point Load

Standard Equipment Calculations - Equipment 4 (Front Wind)

Equipment Properties

Antenna Carrier:	AT&T	User Defined
Equipment Model:	Existing Antenna Andrew SBNH-1D6565B	User Defined
Equipment Shape:	Flat	User Defined
Equipment Height:	$L_{eq_4} := 72.7 \cdot in$	User Defined
Equipment Width:	$W_{eq_4} := 11.9 \cdot in$	User Defined
Equipment Depth:	$D_{eq_4} := 7.1\ in$	User Defined
Equipment Weight:	$WT_{eq_4} := 47.4 \cdot lbf$	User Defined
Equipment Volume:	$V_{eq_4} := L_{eq_4} \cdot W_{eq_4} \cdot D_{eq_4} = 3.55\ ft^3$	
Equipment Quantity:	$N_{eq_4} := 1$	User Defined
Equippment Aspect Ratio:	$Ar_{eq_4} := \frac{L_{eq_4}}{W_{eq_4}} = 6.11$	
Mast Force Coefficient:	$Ca_{eq_4} := 1.2 + \frac{(Ar_{eq_4} - 2.5)}{4.5} \cdot 0.2 = 1.36$	As per Table 2-8 (Flat) - TIA-222-G

Equipment Wind Loads

Equipment Projected Area:	$SA_{eq_4} := L_{eq_4} \cdot W_{eq_4} = 6.01\ ft^2$	
Equipment Wind Force (All):	$F_{eq_2} := qz_{carrier_1} \cdot G_H \cdot Ca_{eq_4} \cdot SA_{eq_4} \cdot N_{eq_4} = 288\ lbf$	**BLC 7** Member Point Load

Equipment Wind Loads (w/ Ice)

Equipment Projected Area (w/ Ice):	$A_ice_{eq_4} := (L_{eq_4} + 2 \cdot tiz) \cdot (W_{eq_4} + 2 \cdot tiz) = 9\ ft^2$	
Equipment Wind Force (w/ Ice) (All):	$Fi_{eq_2} := qz_{ice_carrier_1} \cdot G_H \cdot Ca_{eq_4} \cdot A_ice_{eq_4} \cdot N_{eq_4} = 96\ lbf$	**BLC 5** Member Point Load

Equipment Vertical Loads

Weight of Equipment (All):	$WT_{eq_4} \cdot N_{eq_4} = 47.4\ lbf$	**BLC 2** Member Point Load

Equipment Vertical Loads (Ice Only)

Volume of Ice on Equipment:	$V_{ice_eq_4} := (L_{eq_4} + 2 \cdot tiz) \cdot (W_{eq_4} + 2 \cdot tiz) \cdot (D_{eq_4} + 2 \cdot tiz) - V_{eq_4} = 4.68\ ft^3$	
Weight of Ice on Equipment (All):	$WT_{ice_eq_4} := V_{ice_eq_4} \cdot Id \cdot N_{eq_4} = 267\ lbf$	**BLC 3** Member Point Load

Standard Equipment Calculations - Equipment 4 (Side Wind)

Standard Equipment Calculations - Equipment 4 (Side Wind)

Equipment Properties

Antenna Carrier:	AT&T	User Defined
Equipment Model:	Existing Antenna Andrew SBNH-1D6565B	User Defined
Equipment Shape:	Flat	User Defined
Equipment Height:	$L_{eq_4} := 72.7 \cdot in$	User Defined
Equipment Width:	$W_{eq_4} := 11.9 \cdot in$	User Defined
Equipment Depth:	$D_{eq_4} := 7.1\ in$	User Defined
Equipment Weight:	$WT_{eq_4} := 47.4 \cdot lbf$	User Defined
Equipment Volume:	$V_{eq_4} := L_{eq_4} \cdot W_{eq_4} \cdot D_{eq_4} = 3.55\ ft^3$	
Equipment Quantity:	$N_{eq_4} := 1$	User Defined
Equippment Aspect Ratio:	$Ar_{eq_4} := \frac{L_{eq_4}}{D_{eq_4}} = 10.24$	
Mast Force Coefficient:	$Ca_{eq_4} := 1.4 + \frac{(Ar_{eq_4} - 7)}{18} \cdot 0.6 = 1.51$	As per Table 2-8 (Flat) - TIA-222-G

Equipment Wind Loads

Equipment Projected Area:	$SA_{eq_4} := L_{eq_4} \cdot D_{eq_4} = 3.58\ ft^2$	
Equipment Wind Force (All):	$F_{eq_2} := qz_{carrier_1} \cdot G_H \cdot Ca_{eq_4} \cdot SA_{eq_4} \cdot N_{eq_4} = 190\ lbf$	**BLC 6** Member Point Load

Equipment Wind Loads (w/ Ice)

Equipment Projected Area (w/ Ice):	$A_ice_{eq_4} := (L_{eq_4} + 2 \cdot tiz) \cdot (D_{eq_4} + 2 \cdot tiz) = 6\ ft^2$	
Equipment Wind Force (w/ Ice) (All):	$Fi_{eq_2} := qz_{ice_carrier_1} \cdot G_H \cdot Ca_{eq_4} \cdot A_ice_{eq_4} \cdot N_{eq_4} = 75\ lbf$	**BLC 4** Member Point Load

Equipment Vertical Loads

Weight of Equipment (All):	$WT_{eq_4} \cdot N_{eq_4} = 47.4\ lbf$	**BLC 2** Member Point Load

Standard Equipment Calculations - Equipment 5 (Front Wind)

Standard Equipment Calculations - Equipment 5 (Front Wind)

Equipment Properties

Antenna Carrier:	AT&T	User Defined
Equipment Model:	Existing Antenna Quintel QS66512-2	User Defined
Equipment Shape:	Flat	User Defined
Equipment Height:	$L_{eq_5} := 72 \cdot in$	User Defined
Equipment Width:	$W_{eq_5} := 12 \cdot in$	User Defined
Equipment Depth:	$D_{eq_5} := 9.6\ in$	User Defined
Equipment Weight:	$WT_{eq_5} := 111 \cdot lbf$	User Defined
Equipment Volume:	$V_{eq_5} := L_{eq_5} \cdot W_{eq_5} \cdot D_{eq_5} = 4.8\ ft^3$	
Equipment Quantity:	$N_{eq_5} := 1$	User Defined
Equipment Aspect Ratio:	$Ar_{eq_5} := \frac{L_{eq_5}}{W_{eq_5}} = 6$	
Mast Force Coefficient:	$Ca_{eq_5} := 1.2 + \frac{(Ar_{eq_5} - 2.5)}{4.5} \cdot 0.2 = 1.36$	As per Table 2-8 (Flat) - TIA-222-G

Equipment Wind Loads

Equipment Projected Area:	$SA_{eq_5} := L_{eq_5} \cdot W_{eq_5} = 6\ ft^2$	
Equipment Wind Force (All):	$F_{eq_5} := qz_{carrier_1} \cdot G_H \cdot Ca_{eq_5} \cdot SA_{eq_5} \cdot N_{eq_5} = 286\ lbf$	**BLC 7** Member Point Load

Equipment Wind Loads (w/ Ice)

Equipment Projected Area (w/ Ice):	$A_ice_{eq_5} := (L_{eq_5} + 2 \cdot tiz) \cdot (W_{eq_5} + 2 \cdot tiz) = 9\ ft^2$	
Equipment Wind Force (w/ Ice) (All):	$Fi_{eq_6} := qz_{ice_carrier_1} \cdot G_H \cdot Ca_{eq_5} \cdot A_ice_{eq_5} \cdot N_{eq_5} = 95\ lbf$	**BLC 5** Member Point Load

Equipment Vertical Loads

Weight of Equipment (All):	$WT_{eq_5} \cdot N_{eq_5} = 111\ lbf$	**BLC 2** Member Point Load

Equipment Vertical Loads (Ice Only)

Volume of Ice on Equipment:	$V_{ice_eq_5} := (L_{eq_5} + 2 \cdot tiz) \cdot (W_{eq_5} + 2 \cdot tiz) \cdot (D_{eq_5} + 2 \cdot tiz) - V_{eq_5} = 5.21\ ft^3$	
Weight of Ice on Equipment (All):	$WT_{ice_eq_5} := V_{ice_eq_5} \cdot Id \cdot N_{eq_5} = 297\ lbf$	**BLC 3** Member Point Load

Standard Equipment Calculations - Equipment 5 (Side Wind)

Standard Equipment Calculations - Equipment 5 (Side Wind)

Equipment Properties

Antenna Carrier:	AT&T	User Defined
Equipment Model:	Existing Antenna Quintel QS66512-2	User Defined
Equipment Shape:	Flat	User Defined
Equipment Height:	$L_{eq_5} := 72 \cdot in$	User Defined
Equipment Width:	$W_{eq_5} := 12 \cdot in$	User Defined
Equipment Depth:	$D_{eq_5} := 9.6\ in$	User Defined
Equipment Weight:	$WT_{eq_5} := 111 \cdot lbf$	User Defined
Equipment Volume:	$V_{eq_5} := L_{eq_5} \cdot W_{eq_5} \cdot D_{eq_5} = 4.8\ ft^3$	
Equipment Quantity:	$N_{eq_5} := 1$	User Defined
Equippment Aspect Ratio:	$Ar_{eq_5} := \frac{L_{eq_5}}{D_{eq_5}} = 7.5$	
Mast Force Coefficient:	$Ca_{eq_5} := 1.4 + \frac{(Ar_{eq_5} - 7)}{18} \cdot 0.6 = 1.42$	As per Table 2-8 (Flat) - TIA-222-G

Equipment Wind Loads

Equipment Projected Area:	$SA_{eq_5} := L_{eq_5} \cdot D_{eq_5} = 4.8\ ft^2$	
Equipment Wind Force (All):	$F_{eq_5} := qz_{carrier_1} \cdot G_H \cdot Ca_{eq_5} \cdot SA_{eq_5} \cdot N_{eq_5} = 239\ lbf$	BLC 6 Member Point Load

Equipment Wind Loads (w/ Ice)

Equipment Projected Area (w/ Ice):	$A_ice_{eq_5} := (L_{eq_5} + 2 \cdot tiz) \cdot (D_{eq_5} + 2 \cdot tiz) = 7\ ft^2$	
Equipment Wind Force (w/ Ice) (All):	$Fi_{eq_5} := qz_{ice_carrier_1} \cdot G_H \cdot Ca_{eq_5} \cdot A_ice_{eq_5} \cdot N_{eq_5} = 85\ lbf$	BLC 4 Member Point Load

Equipment Vertical Loads

Weight of Equipment (All):	$WT_{eq_5} \cdot N_{eq_5} = 111\ lbf$	BLC 2 Member Point Load

Standard Equipment Calculations - Mount Member 1 (Front/Side Wind)

Standard Equipment Calculations - Mount Member 1 (Front/Side Wind)

Pipe Properties

Antenna Carrier:	AT&T	User Defined
Equipment Model:	Mounting Pipes: P2.0	User Defined
Pipe Height:	$L_{pipe_1} := 96 \cdot in$	User Defined
Pipe Diameter:	$W_{pipe_1} := 2.375 \cdot in$	User Defined
Pipe Weight:	$WT_{pipe_1} := 29.3 \cdot lbf$	User Defined
Pipe Volume:	$V_{pipe_1} := L_{pipe_1} \cdot \frac{\left(\left(W_{pipe_1}\right)^2 \cdot \pi\right)}{4} = 0.25\ ft^3$	
Pipe Quantity:	$N_{pipe_1} := 1$	User Defined
Pipe Aspect Ratio:	$Ar_{pipe_1} := \frac{L_{pipe_1}}{W_{pipe_1}} = 40.42$	
Pipe Force Coefficient:	$Ca_{pipe_1} := 1.2$	As per Table 2-8 (Round)-TIA-222-G

Pipe Wind Loads

Pipe Projected Area:	$SA_{pipe_1} := L_{pipe_1} \cdot W_{pipe_1} = 1.58\ ft^2$	
Pipe Wind Force (All):	$F_{pipe_1} := qz_{carrier_1} \cdot G_H \cdot Ca_{pipe_1} \cdot SA_{pipe_1} = 67\ lbf$	BLC 6/7
Pipe Wind Force (Distributed):	$\frac{F_{pipe_1}}{L_{pipe_1}} = 8.4\ plf$	BLC 6/7

Pipe Wind Loads (w/ Ice)

Pipe Projected Area (w/ Ice):	$A_ice_{pipe_1} := \left(L_{pipe_1} + 2 \cdot tiz\right) \cdot \left(W_{pipe_1} + 2 \cdot tiz\right) = 4.65\ ft^2$	
Pipe Wind Force (w/ Ice) (All):	$Fi_{pipe_1} := qz_{ice_carrier_1} \cdot G_H \cdot Ca_{pipe_1} \cdot A_ice_{pipe_1} = 45\ lbf$	BLC 4/5
Pipe Wind Force (w/ Ice) (Distributed):	$\frac{Fi_{pipe_1}}{L_{pipe_1}} = 5.7\ plf$	BLC 4/5

Pipe Vertical Loads

Weight of Pipe (All):	$WT_{pipe_1} = 29\ lbf$	BLC 2
Weight of Pipe (Distributed):	$\frac{WT_{pipe_1}}{L_{pipe_1}} = 3.7\ plf$	BLC 2

Pipe Vertical Loads (Ice Only)

Volume of Ice on Pipe:	$V_{ice_pipe_1} := \left(L_{pipe_1} + 2 \cdot tiz\right) \cdot \left(\frac{\left(W_{pipe_1} + 2 \cdot tiz\right)^2 \cdot \pi}{4}\right) - V_{pipe_1} = 1.79\ ft^3$	
Weight of Ice on Pipe (All):	$WT_{ice_pipe_1} := V_{ice_pipe_1} \cdot Id = 102\ lbf$	BLC 3
Weight of Ice on Pipe (Distributed):	$\frac{WT_{ice_pipe_1}}{L_{pipe_1}} = 12.7\ plf$	BLC 3

Standard Equipment Calculations - Mount Member 2 (Front/Side Wind)

Pipe Properties

Antenna Carrier:	AT&T	User Defined
Equipment Model:	Pipe Boom: P3.0	User Defined
Pipe Height:	$L_{pipe_2} := 150 \cdot in$	User Defined
Pipe Diameter:	$W_{pipe_2} := 3.5 \cdot in$	User Defined
Pipe Weight:	$WT_{pipe_2} := 94.8 \cdot lbf$	User Defined
Pipe Volume:	$V_{pipe_2} := L_{pipe_2} \cdot \frac{\left(\left(W_{pipe_2}\right)^2 \cdot \pi\right)}{4} = 0.84\ ft^3$	
Pipe Aspect Ratio:	$Ar_{pipe_2} := \frac{L_{pipe_2}}{W_{pipe_2}} = 42.86$	
Pipe Force Coefficient:	$Ca_{pipe_2} := 1.2$	As per Table 2-8 (Round)-TIA-222-G

Pipe Wind Loads

Pipe Projected Area:	$SA_{pipe_2} := L_{pipe_2} \cdot W_{pipe_2} = 3.65\ ft^2$	
Pipe Wind Force (All):	$F_{pipe_2} := qz_{carrier_1} \cdot G_H \cdot Ca_{pipe_2} \cdot SA_{pipe_2} = 154\ lbf$	BLC 6/7
Pipe Wind Force (Distributed):	$\frac{F_{pipe_2}}{L_{pipe_2}} = 12.3\ plf$	BLC 6/7

Pipe Wind Loads (w/ Ice)

Pipe Projected Area (w/ Ice):	$A_ice_{pipe_2} := \left(L_{pipe_2} + 2 \cdot tiz\right) \cdot \left(W_{pipe_2} + 2 \cdot tiz\right) = 8.36\ ft^2$	
Pipe Wind Force (w/ Ice) (All):	$Fi_{pipe_2} := qz_{ice_carrier_1} \cdot G_H \cdot Ca_{pipe_2} \cdot A_ice_{pipe_2} = 82\ lbf$	BLC 4/5
Pipe Wind Force (w/ Ice) (Distributed):	$\frac{Fi_{pipe_2}}{L_{pipe_2}} = 6.5\ plf$	BLC 4/5

Pipe Vertical Loads

Weight of Pipe (All):	$WT_{pipe_2} = 95\ lbf$	BLC 2
Weight of Pipe (Distributed):	$\frac{WT_{pipe_2}}{L_{pipe_2}} = 7.6\ plf$	BLC 2

Pipe Vertical Loads (Ice Only)

Volume of Ice on Pipe:	$V_{ice_pipe_2} := \left(L_{pipe_2} + 2 \cdot tiz\right) \cdot \left(\frac{\left(W_{pipe_2} + 2 \cdot tiz\right)^2 \cdot \pi}{4}\right) - V_{pipe_2} = 3.43\ ft^3$	
Weight of Ice on Pipe (All):	$WT_{ice_pipe_2} := V_{ice_pipe_2} \cdot Id = 196\ lbf$	BLC 3
Weight of Ice on Pipe (Distributed):	$\frac{WT_{ice_pipe_2}}{L_{pipe_2}} = 15.7\ plf$	BLC 3

Standard Equipment Calculations - Mount Member 2 (Front/Side Wind)

Standard Equipment Calculations - Mount Member 3 (Front/Side Wind)

Pipe Properties

Antenna Carrier:	AT&T	User Defined
Equipment Model:	Vertical Pipe: P4.0	User Defined
Pipe Height:	$L_{pipe_3} := 18 \cdot in$	User Defined
Pipe Diameter:	$W_{pipe_3} := 4.5 \cdot in$	User Defined
Pipe Weight:	$WT_{pipe_3} := 15.75 \cdot lbf$	User Defined
Pipe Volume:	$V_{pipe_3} := L_{pipe_3} \cdot \frac{\left(\left(W_{pipe_3}\right)^2 \cdot \pi\right)}{4} = 0.17\ ft^3$	
Pipe Aspect Ratio:	$Ar_{pipe_3} := \frac{L_{pipe_3}}{W_{pipe_3}} = 4$	
Pipe Force Coefficient:	$Ca_{pipe_3} := 0.7 + \frac{\left(Ar_{pipe_3} - 2.5\right)}{4.5} \cdot 0.1 = 0.73$	As per Table 2-8 (Round)-TIA-222-G

Pipe Wind Loads

Pipe Projected Area:	$SA_{pipe_3} := L_{pipe_3} \cdot W_{pipe_3} = 0.56\ ft^2$	
Pipe Wind Force (All):	$F_{pipe_3} := qz_{carrier_1} \cdot G_H \cdot Ca_{pipe_3} \cdot SA_{pipe_3} = 15\ lbf$	BLC 6/7
Pipe Wind Force (Distributed):	$\frac{F_{pipe_3}}{L_{pipe_3}} = 9.7\ plf$	BLC 6/7

Pipe Wind Loads (w/ Ice)

Pipe Projected Area (w/ Ice):	$A_ice_{pipe_3} := \left(L_{pipe_3} + 2 \cdot tiz\right) \cdot \left(W_{pipe_3} + 2 \cdot tiz\right) = 1.36\ ft^2$	
Pipe Wind Force (w/ Ice) (All):	$Fi_{pipe_3} := qz_{ice_carrier_1} \cdot G_H \cdot Ca_{pipe_3} \cdot A_ice_{pipe_3} = 8\ lbf$	BLC 4/5
Pipe Wind Force (w/ Ice) (Distributed):	$\frac{Fi_{pipe_3}}{L_{pipe_3}} = 5.4\ plf$	BLC 4/5

Pipe Vertical Loads

Weight of Pipe (All):	$WT_{pipe_3} = 16\ lbf$	BLC 2
Weight of Pipe (Distributed):	$\frac{WT_{pipe_3}}{L_{pipe_3}} = 10.5\ plf$	BLC 2

Pipe Vertical Loads (Ice Only)

Volume of Ice on Pipe:	$V_{ice_pipe_3} := \left(L_{pipe_3} + 2 \cdot tiz\right) \cdot \left(\frac{\left(W_{pipe_3} + 2 \cdot tiz\right)^2 \cdot \pi}{4}\right) - V_{pipe_3} = 0.62\ ft^3$	
Weight of Ice on Pipe (All):	$WT_{ice_pipe_3} := V_{ice_pipe_3} \cdot Id = 35\ lbf$	BLC 3
Weight of Ice on Pipe (Distributed):	$\frac{WT_{ice_pipe_3}}{L_{pipe_3}} = 23.5\ plf$	BLC 3

Standard Equipment Calculations - Mount Member 4 (Front/Side Wind)

Pipe Properties

Antenna Carrier:	AT&T	User Defined
Equipment Model:	HSS Arm Member: HSS4x4x3/16	User Defined
Arm Length:	$L_{member_4} := 36 \cdot in$	User Defined
Arm Width:	$W_{member_4} := 4 \cdot in$	User Defined
Arm Weight:	$WT_{member_4} := 28.3 \cdot lbf$	User Defined
Arm Volume:	$V_{member_4} := L_{member_4} \cdot W_{member_4}^{2} = 0.33\ ft^3$	
Arm Aspect Ratio:	$Ar_{member_4} := \frac{L_{member_4}}{W_{member_4}} = 9$	
Arm Force Coefficient:	$Ca_{member_4} := 1.4 + \frac{(Ar_{member_4} - 7)}{18} \cdot 0.6 = 1.47$	As per Table 2-8 (Flat)-TIA-222-G

Arm Wind Loads

Arm Projected Area:	$SA_{member_4} := L_{member_4} \cdot W_{member_4} = 1\ ft^2$	
Arm Wind Force (All):	$F_{member_4} := qz_{carrier_1} \cdot G_H \cdot Ca_{member_4} \cdot SA_{member_4} = 52\ lbf$	BLC 6/7
Arm Wind Force (All):	$\frac{F_{member_4}}{L_{member_4}} = 17.2\ plf$	BLC 6/7

Arm Wind Loads (w/ Ice)

Arm Projected Area (w/ Ice):	$A_ice_{member_4} := (L_{member_4} + 2 \cdot tiz) \cdot (W_{member_4} + 2 \cdot tiz) = 2.32\ ft^2$	
Arm Wind Force (w/ Ice) (All):	$Fi_{member_4} := qz_{ice_carrier_1} \cdot G_H \cdot Ca_{member_4} \cdot A_ice_{member_4} = 28\ lbf$	BLC 4/5
Arm Wind Force (w/ Ice) (Distributed):	$\frac{Fi_{member_4}}{L_{member_4}} = 9.2\ plf$	BLC 4/5

Arm Vertical Loads

Weight of Arm (All):	$WT_{member_4} = 28\ lbf$	BLC 2
Weight of Arm (Distributed):	$\frac{WT_{member_4}}{L_{member_4}} = 9.4\ plf$	BLC 2

Arm Vertical Loads (Ice Only)

Volume of Ice on HSS Arm:	$V_{ice_member_4} := (L_{member_4} + 2 \cdot tiz) \cdot (W_{member_4} + 2 \cdot tiz)^2 - V_{member_4} = 1.27\ ft^3$	
Weight of Ice on Arm (All):	$WT_{ice_member_4} := V_{ice_member_4} \cdot Id = 73\ lbf$	BLC 3
Weight of Ice on Arm (Distributed):	$\frac{WT_{ice_member_4}}{L_{member_4}} = 24.2\ plf$	BLC 3

Standard Equipment Calculations - Mount Member 5 (Front/Side Wind)

Pipe Properties

Antenna Carrier:	AT&T	User Defined
Equipment Model:	Single Angle Handrail Member 1: L3x3x1/4	User Defined
Handrail Length:	$L_{member_5} := 126 \cdot in$	User Defined
Handrail Width:	$W_{member_5} := 3 \cdot in$	User Defined
Handrail Weight:	$WT_{member_5} := 51.45 \cdot lbf$	User Defined
Handrail Volume:	$V_{member_5} := L_{member_5} \cdot W_{member_5}^{2} = 0.66\ ft^3$	
Handrail Aspect Ratio:	$Ar_{member_5} := \frac{L_{member_5}}{W_{member_5}} = 42$	
Handrail Force Coefficient:	$Ca_{member_5} := 2$	As per Table 2-8 (Flat)-TIA-222-G

Arm Wind Loads

Handrail Projected Area:	$SA_{member_5} := L_{member_5} \cdot W_{member_5} = 2.63\ ft^2$	
Handrail Wind Force (All):	$F_{member_5} := qz_{carrier_1} \cdot G_H \cdot Ca_{member_5} \cdot SA_{member_5} = 185\ lbf$	BLC 6/7
Handrail Wind Force (All):	$\frac{F_{member_5}}{L_{member_5}} = 17.6\ plf$	BLC 6/7

Arm Wind Loads (w/ Ice)

Handrail Projected Area (w/ Ice):	$A_ice_{member_5} := (L_{member_5} + 2 \cdot tiz) \cdot (W_{member_5} + 2 \cdot tiz) = 6.61\ ft^2$	
Handrail Wind Force (w/ Ice) (All):	$Fi_{member_5} := qz_{ice_carrier_1} \cdot G_H \cdot Ca_{member_5} \cdot A_ice_{member_5} = 107\ lbf$	BLC 4/5
Handrail Wind Force (w/ Ice) (Distributed):	$\frac{Fi_{member_5}}{L_{member_5}} = 10.2\ plf$	BLC 4/5

Arm Vertical Loads

Weight of Handrail (All):	$WT_{member_5} = 51\ lbf$	BLC 2
Weight of Handrail (Distributed):	$\frac{WT_{member_5}}{L_{member_5}} = 4.9\ plf$	BLC 2

Arm Vertical Loads (Ice Only)

Volume of Ice on Handrail:	$V_{ice_member_5} := (L_{member_5} + 2 \cdot tiz) \cdot (W_{member_5} + 2 \cdot tiz)^2 - V_{member_5} = 3.36\ ft^3$	
Weight of Ice on Handrail:	$WT_{ice_member_5} := V_{ice_member_5} \cdot Id = 192\ lbf$	BLC 3
Weight of Ice on Handrail:	$\frac{WT_{ice_member_5}}{L_{member_5}} = 18.3\ plf$	BLC 3

Standard Equipment Calculations - Mount Member 6 (Front/Side Wind)

Pipe Properties

Antenna Carrier:	AT&T	User Defined
Equipment Model:	Single Angle Handrail Member 2: L2x2x3/16	User Defined
Handrail Length:	$L_{member_6} := 69 \cdot in$	User Defined
Handrail Width:	$W_{member_6} := 2 \cdot in$	User Defined
Handrail Weight:	$WT_{member_6} := 28.3 \cdot lbf$	User Defined
Handrail Volume:	$V_{member_6} := L_{member_6} \cdot W_{member_6}^2 = 0.16\ ft^3$	
Handrail Aspect Ratio:	$Ar_{member_6} := \frac{L_{member_6}}{W_{member_6}} = 34.5$	
Handrail Force Coefficient:	$Ca_{member_6} := 2$	As per Table 2-8 (Flat)-TIA-222-G

Arm Wind Loads

Handrail Projected Area:	$SA_{member_6} := L_{member_6} \cdot W_{member_6} = 0.96\ ft^2$	
Handrail Wind Force (All):	$F_{member_6} := qz_{carrier_1} \cdot G_H \cdot Ca_{member_6} \cdot SA_{member_6} = 67\ lbf$	BLC 6/7
Handrail Wind Force (All):	$\frac{F_{member_6}}{L_{member_6}} = 11.7\ plf$	BLC 6/7

Arm Wind Loads (w/ Ice)

Handrail Projected Area (w/ Ice):	$A_ice_{member_6} := (L_{member_6} + 2 \cdot tiz) \cdot (W_{member_6} + 2 \cdot tiz) = 3.21\ ft^2$	
Handrail Wind Force (w/ Ice) (All):	$Fi_{member_6} := qz_{ice_carrier_1} \cdot G_H \cdot Ca_{member_6} \cdot A_ice_{member_6} = 52\ lbf$	BLC 4/5
Handrail Wind Force (w/ Ice) (Distributed):	$\frac{Fi_{member_6}}{L_{member_6}} = 9.1\ plf$	BLC 4/5

Arm Vertical Loads

Weight of Handrail (All):	$WT_{member_6} = 28\ lbf$	BLC 2
Weight of Handrail (Distributed):	$\frac{WT_{member_6}}{L_{member_6}} = 4.9\ plf$	BLC 2

Arm Vertical Loads (Ice Only)

Volume of Ice on Handrail:	$V_{ice_member_6} := (L_{member_6} + 2 \cdot tiz) \cdot (W_{member_6} + 2 \cdot tiz)^2 - V_{member_6} = 1.52\ ft^3$	
Weight of Ice on Handrail:	$WT_{ice_member_6} := V_{ice_member_6} \cdot Id = 87\ lbf$	BLC 3
Weight of Ice on Handrail:	$\frac{WT_{ice_member_6}}{L_{member_6}} = 15.1\ plf$	BLC 3

Standard Equipment Calculations - Mount Member 7 (Front/Side Wind)

Pipe Properties

Antenna Carrier:	AT&T	User Defined
Equipment Model:	Single Angle Vertical Kicker Member: L2x2x3/16	User Defined
Handrail Length:	$L_{member_7} := 85.5 \cdot in$	User Defined
Handrail Width:	$W_{member_7} := 2 \cdot in$	User Defined
Handrail Weight:	$WT_{member_7} := 28.3 \cdot lbf$	User Defined
Handrail Volume:	$V_{member_7} := L_{member_7} \cdot W_{member_7}^2 = 0.2\ ft^3$	
Handrail Aspect Ratio:	$Ar_{member_7} := \frac{L_{member_7}}{W_{member_7}} = 42.75$	
Handrail Force Coefficient:	$Ca_{member_7} := 2$	As per Table 2-8 (Flat)-TIA-222-G

Arm Wind Loads

Handrail Projected Area:	$SA_{member_7} := L_{member_7} \cdot W_{member_7} = 1.19\ ft^2$	
Handrail Wind Force (All):	$F_{member_7} := qz_{carrier_1} \cdot G_H \cdot Ca_{member_7} \cdot SA_{member_7} = 84\ lbf$	BLC 6/7
Handrail Wind Force (All):	$\frac{F_{member_7}}{L_{member_7}} = 11.7\ plf$	BLC 6/7

Arm Wind Loads (w/ Ice)

Handrail Projected Area (w/ Ice):	$A_ice_{member_7} := (L_{member_7} + 2 \cdot tiz) \cdot (W_{member_7} + 2 \cdot tiz) = 3.93\ ft^2$	
Handrail Wind Force (w/ Ice) (All):	$Fi_{member_7} := qz_{ice_carrier_1} \cdot G_H \cdot Ca_{member_7} \cdot A_ice_{member_7} = 64\ lbf$	BLC 4/5
Handrail Wind Force (w/ Ice) (Distributed):	$\frac{Fi_{member_7}}{L_{member_7}} = 9\ plf$	BLC 4/5

Arm Vertical Loads

Weight of Handrail (All):	$WT_{member_7} = 28\ lbf$	BLC 2
Weight of Handrail (Distributed):	$\frac{WT_{member_7}}{L_{member_7}} = 4\ plf$	BLC 2

Arm Vertical Loads (Ice Only)

Volume of Ice on Handrail:	$V_{ice_member_7} := (L_{member_7} + 2 \cdot tiz) \cdot (W_{member_7} + 2 \cdot tiz)^2 - V_{member_7} = 1.87\ ft^3$	
Weight of Ice on Handrail:	$WT_{ice_member_7} := V_{ice_member_7} \cdot Id = 106\ lbf$	BLC 3
Weight of Ice on Handrail:	$\frac{WT_{ice_member_7}}{L_{member_7}} = 14.9\ plf$	BLC 3

Standard Equipment Calculations - Mount Member 8 (Front/Side Wind)

Pipe Properties

Antenna Carrier:	AT&T	User Defined
Equipment Model:	Existing Mast: P12.0 XS	User Defined
Pipe Height:	$L_{pipe_8} := 336 \cdot in$	User Defined
Pipe Diameter:	$W_{pipe_8} := 12.75 \cdot in$	User Defined
Pipe Weight:	$WT_{pipe_8} := 1834 \cdot lbf$	User Defined
Pipe Volume:	$V_{pipe_8} := L_{pipe_8} \cdot \frac{\left(\left(W_{pipe_8}\right)^2 \cdot \pi\right)}{4} = 24.83\ ft^3$	
Pipe Aspect Ratio:	$Ar_{pipe_8} := \frac{L_{pipe_8}}{W_{pipe_8}} = 26.35$	
Pipe Force Coefficient:	$Ca_{pipe_8} := 1.2$	As per Table 2-8 (Round)-TIA-222-G

Pipe Wind Loads

Pipe Projected Area:	$SA_{pipe_8} := L_{pipe_8} \cdot W_{pipe_8} = 29.75\ ft^2$	
Pipe Wind Force (All):	$F_{pipe_8} := qz_{carrier_1} \cdot G_H \cdot Ca_{pipe_8} \cdot SA_{pipe_8} = 1257\ lbf$	BLC 6/7
Pipe Wind Force (Distributed):	$\frac{F_{pipe_8}}{L_{pipe_8}} = 44.9\ plf$	BLC 6/7

Pipe Wind Loads (w/ Ice)

Pipe Projected Area (w/ Ice):	$A_ice_{pipe_8} := \left(L_{pipe_8} + 2 \cdot tiz\right) \cdot \left(W_{pipe_8} + 2 \cdot tiz\right) = 40.3\ ft^2$	
Pipe Wind Force (w/ Ice) (All):	$Fi_{pipe_8} := qz_{ice_carrier_1} \cdot G_H \cdot Ca_{pipe_8} \cdot A_ice_{pipe_8} = 393\ lbf$	BLC 4/5
Pipe Wind Force (w/ Ice) (Distributed):	$\frac{Fi_{pipe_8}}{L_{pipe_8}} = 14\ plf$	BLC 4/5

Pipe Vertical Loads

Weight of Pipe (All):	$WT_{pipe_8} = 1834\ lbf$	BLC 2
Weight of Pipe (Distributed):	$\frac{WT_{pipe_8}}{L_{pipe_8}} = 65.5\ plf$	BLC 2

Pipe Vertical Loads (Ice Only)

Volume of Ice on Pipe:	$V_{ice_pipe_8} := \left(L_{pipe_8} + 2 \cdot tiz\right) \cdot \left(\frac{\left(W_{pipe_8} + 2 \cdot tiz\right)^2 \cdot \pi}{4}\right) - V_{pipe_8} = 20.14\ ft^3$	
Weight of Ice on Pipe (All):	$WT_{ice_pipe_8} := V_{ice_pipe_8} \cdot Id = 1148\ lbf$	BLC 3
Weight of Ice on Pipe (Distributed):	$\frac{WT_{ice_pipe_8}}{L_{pipe_8}} = 41\ plf$	BLC 3

General Information for use in Risa-3D

Risa-3D Basic Load Cases	Description
1	Self Weight (Mast)
2	Weight of Appurtenances
3	Weight of Ice Only
4	TIA Wind with Ice - X
5	TIA Wind with Ice - Z
6	TIA Wind - X
7	TIA Wind - Z

Where:
BLC = Basic Load Case
D = Dead Load
Di = Dead Load of Ice
W = Wind Load
Wi = Wind Load w/ Ice

Load Combination	Description	Wind Factor	P-Delta	BLC	Factor	BLC	Factor	BLC	Factor	BLC	Factor	BLC	Factor
1	1.2D + 1.6W (0)	1.6	Y	1	1.2	2	1.2	6	1.6				
2	1.2D + 1.6W (30)	1.6	Y	1	1.2	2	1.2	6	1.39	7	0.8		
3	1.2D + 1.6W (60)	1.6	Y	1	1.2	2	1.2	6	0.8	7	1.39		
4	1.2D + 1.6W (90)	1.6	Y	1	1.2	2	1.2	7	1.6				
5	1.2D + 1.6W (120)	1.6	Y	1	1.2	2	1.2	6	-0.8	7	1.39		
6	1.2D + 1.6W (150)	1.6	Y	1	1.2	2	1.2	6	-1.39	7	0.8		
7	1.2D + 1.6W (180)	1.6	Y	1	1.2	2	1.2	6	-1.6				
8	1.2D + 1.6W (210)	1.6	Y	1	1.2	2	1.2	6	-1.39	7	-0.8		
9	1.2D + 1.6W (240)	1.6	Y	1	1.2	2	1.2	6	-0.8	7	-1.39		
10	1.2D + 1.6W (270	1.6	Y	1	1.2	2	1.2	7	-1.6				
11	1.2D + 1.6W (300)	1.6	Y	1	1.2	2	1.2	6	0.8	7	-1.39		
12	1.2D + 1.6W (330)	1.6	Y	1	1.2	2	1.2	6	1.39	7	-0.8		
13	1.2D+1.0Di+1.0Wi (0)	1.0	Y	1	1.2	2	1.2	3	1.0	4	1.0		
14	1.2D+1.0Di+1.0Wi (30)	1.0	Y	1	1.2	2	1.2	3	1.0	4	0.866	5	0.5
15	1.2D+1.0Di+1.0Wi (60)	1.0	Y	1	1.2	2	1.2	3	1.0	4	0.5	5	0.866
16	1.2D+1.0Di+1.0Wi (90)	1.0	Y	1	1.2	2	1.2	3	1.0	5	1.0		
17	1.2D+1.0Di+1.0Wi (120)	1.0	Y	1	1.2	2	1.2	3	1.0	4	-0.5	5	0.866
18	1.2D+1.0Di+1.0Wi (150)	1.0	Y	1	1.2	2	1.2	3	1.0	4	-0.866	5	0.5
19	1.2D+1.0Di+1.0Wi (180)	1.0	Y	1	1.2	2	1.2	3	1.0	4	-1.0		
20	1.2D+1.0Di+1.0Wi (210)	1.0	Y	1	1.2	2	1.2	3	1.0	4	-0.866	5	-0.5
21	1.2D+1.0Di+1.0Wi (240)	1.0	Y	1	1.2	2	1.2	3	1.0	4	-0.5	5	-0.866
22	1.2D+1.0Di+1.0Wi (270)	1.0	Y	1	1.2	2	1.2	3	1.0	5	-1.0		
23	1.2D+1.0Di+1.0Wi (300)	1.0	Y	1	1.2	2	1.2	3	1.0	4	0.5	5	-0.866
24	1.2D+1.0Di+1.0Wi (330)	1.0	Y	1	1.2	2	1.2	3	1.0	4	0.866	5	-0.5
25	1.2D + 1.6W (0) Service Wind	1.0	Y	1	1.2	2	1.2	7	0.48				

Service Load Conversion Factor: $$SLCF := \frac{(V_{service_loads})^2}{(V)^2} \cdot \frac{I_{service_loads}}{I_{wind}} \cdot \frac{Kd_{service_loads}}{Kd} = 0.3$$

Note: For this site - 270 wind direction is worst case. Therefore, service loads only checked for this direction.

APPENDIX B

RISA 3D OUTPUT

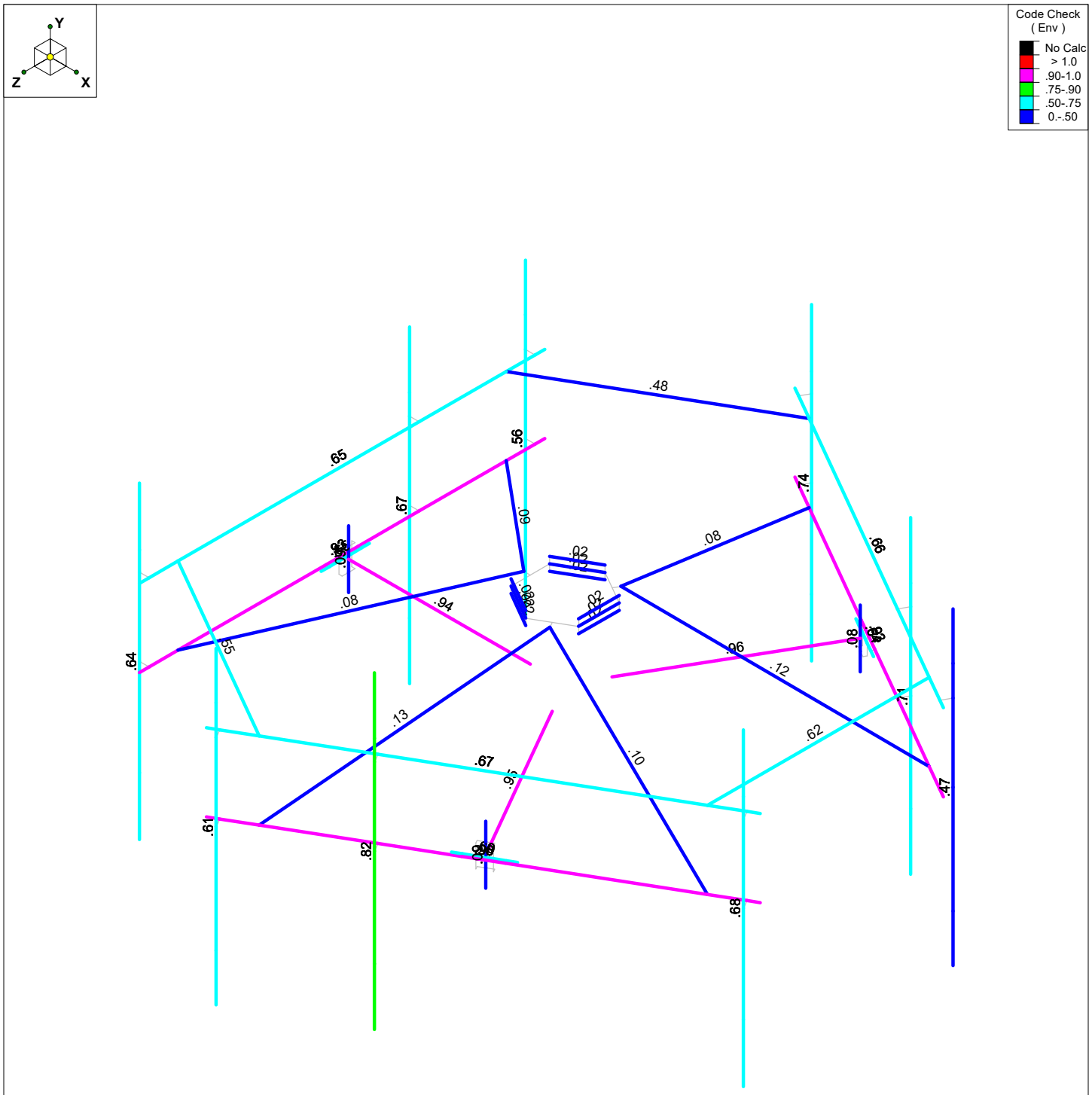

Member Code Checks Displayed (Enveloped)
Envelope Only Solution

Paul J Ford & Company	Orange Overland Drive	SK - 1
CEC		June 21, 2019 at 10:37 AM
A80619-0001.003.6190		80619-0001.003.6190.r3d

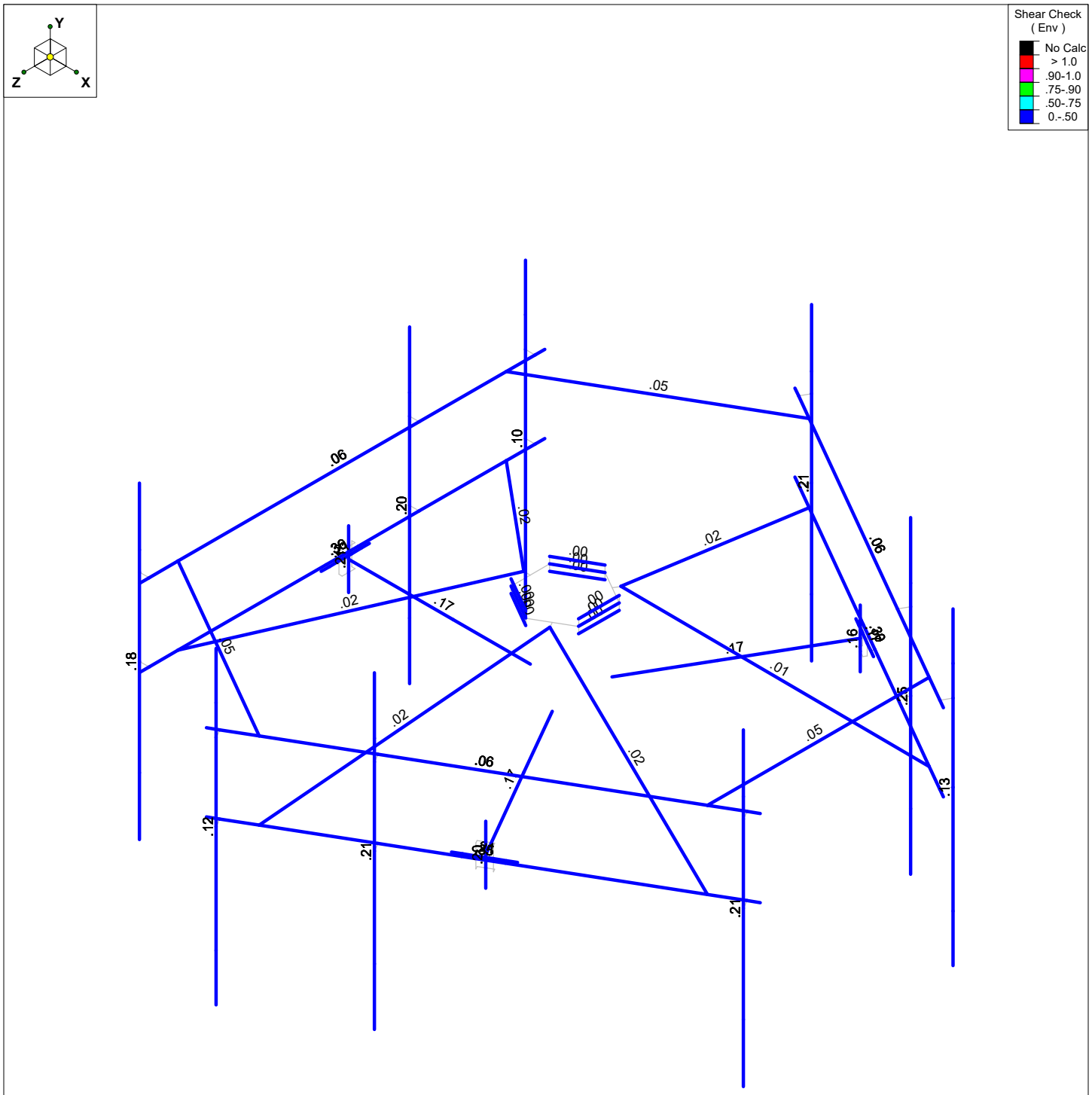

Member Shear Checks Displayed (Enveloped)
Envelope Only Solution

Paul J Ford & Company	Orange Overland Drive	SK - 2
CEC		June 21, 2019 at 10:37 AM
A80619-0001.003.6190		80619-0001.003.6190.r3d

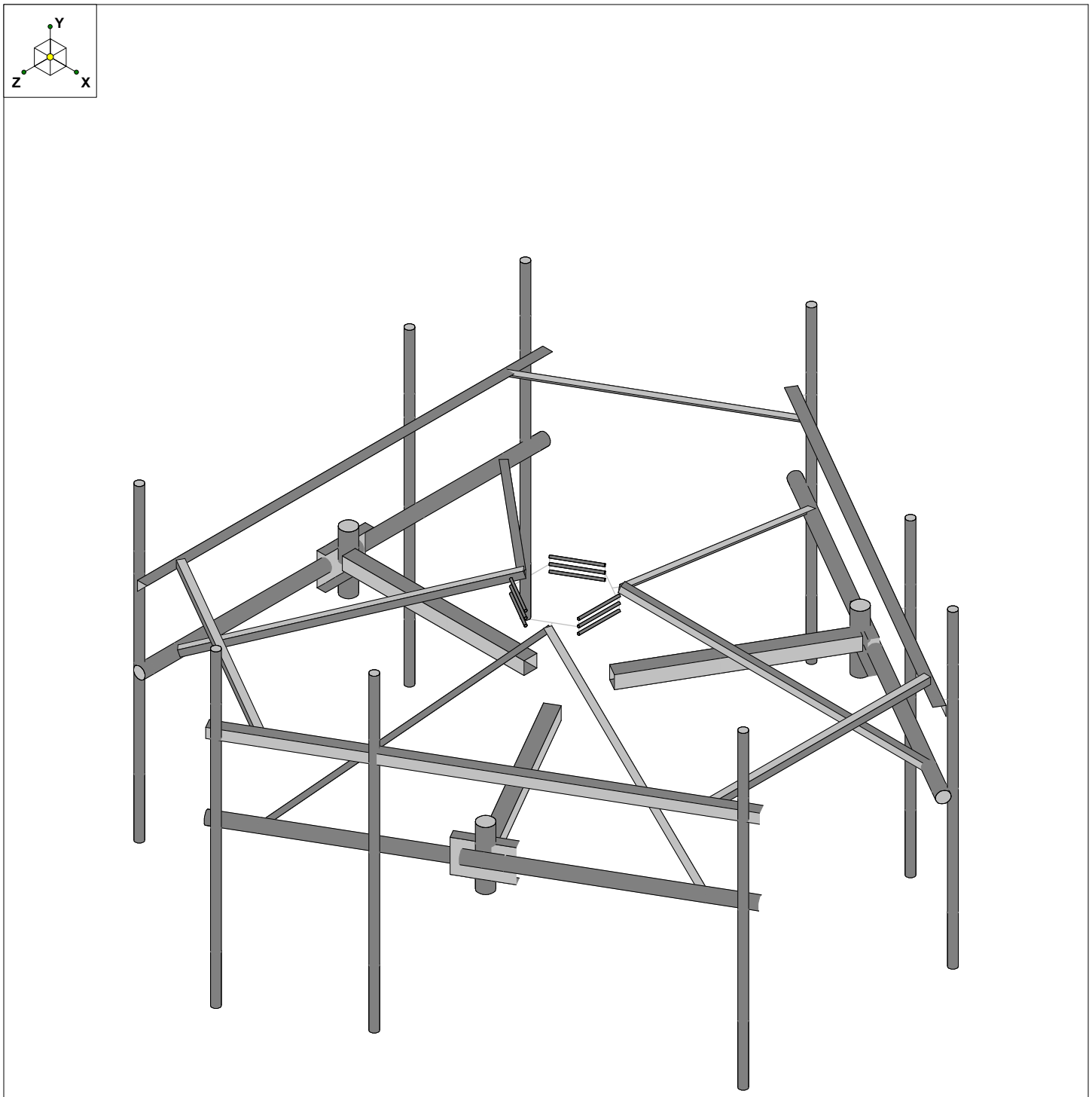

Envelope Only Solution

Paul J Ford & Company	Orange Overland Drive	SK - 4
CEC		June 21, 2019 at 10:38 AM
A80619-0001.003.6190		80619-0001.003.6190.r3d

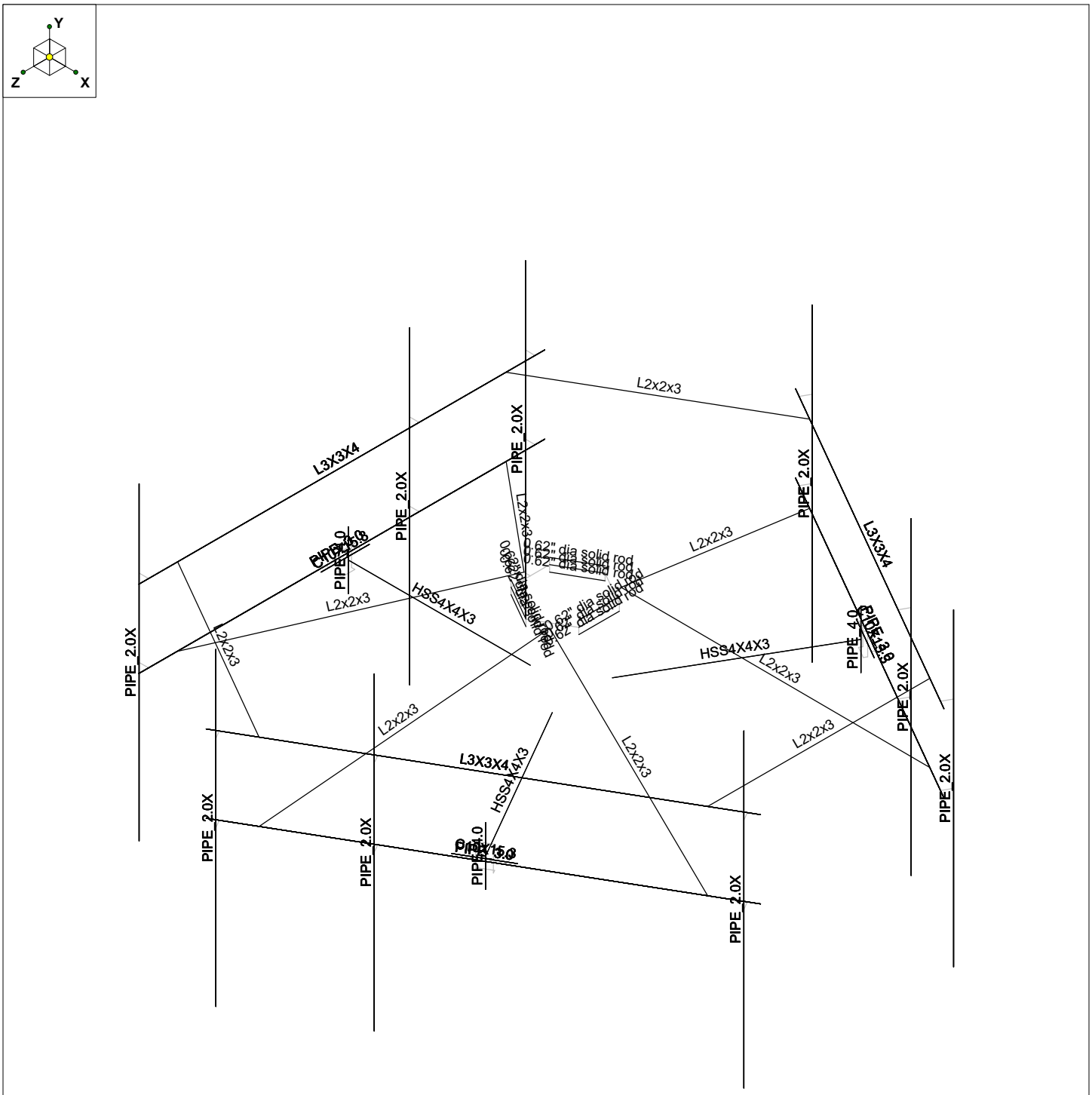

Envelope Only Solution

Paul J Ford & Company	Orange Overland Drive	SK - 5
CEC		June 21, 2019 at 10:38 AM
A80619-0001.003.6190		80619-0001.003.6190.r3d

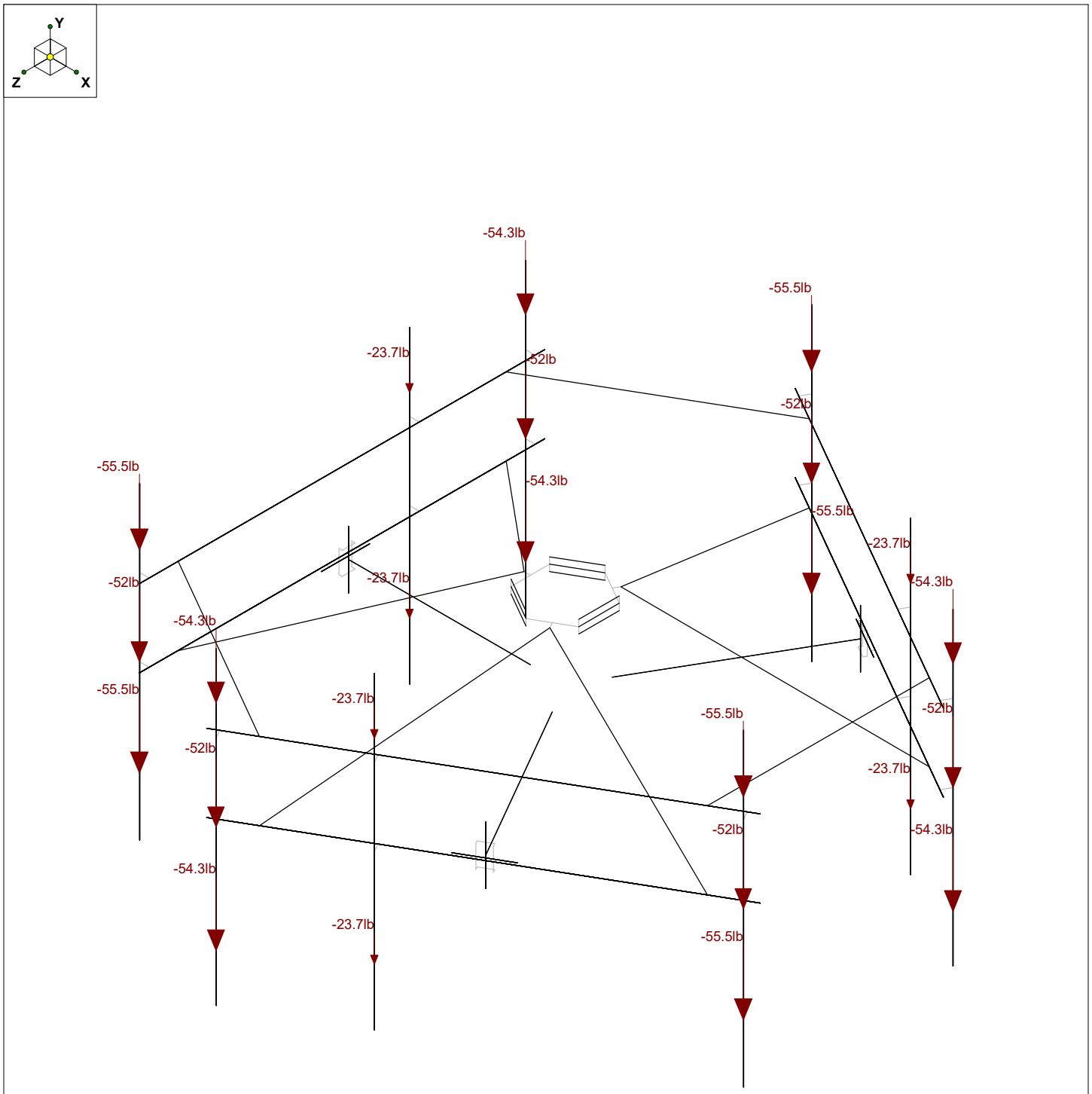

Loads: BLC 2, Weight of Appurtenances
Envelope Only Solution

Paul J Ford & Company	Orange Overland Drive	SK - 6
CEC		June 21, 2019 at 10:39 AM
A80619-0001.003.6190		80619-0001.003.6190.r3d

(Global) Model Settings

Display Sections for Member Calcs	5
Max Internal Sections for Member Calcs	97
Include Shear Deformation?	Yes
Increase Nailing Capacity for Wind?	Yes
Include Warping?	Yes
Trans Load Btwn Intersecting Wood Wall?	Yes
Area Load Mesh (in^2)	144
Merge Tolerance (in)	.12
P-Delta Analysis Tolerance	0.50%
Include P-Delta for Walls?	Yes
Automatically Iterate Stiffness for Walls?	Yes
Max Iterations for Wall Stiffness	3
Gravity Acceleration (in/sec^2)	386.4
Wall Mesh Size (in)	24
Eigensolution Convergence Tol. (1.E-)	4
Vertical Axis	Y
Global Member Orientation Plane	XZ
Static Solver	Sparse Accelerated
Dynamic Solver	Accelerated Solver

Hot Rolled Steel Code	AISC 14th(360-10): LRFD
Adjust Stiffness?	Yes(Iterative)
RISAConnection Code	None
Cold Formed Steel Code	None
Wood Code	None
Wood Temperature	< 100F
Concrete Code	None
Masonry Code	None
Aluminum Code	None - Building
Stainless Steel Code	AISC 14th(360-10): ASD
Adjust Stiffness?	Yes(Iterative)

Number of Shear Regions	4
Region Spacing Increment (in)	4
Biaxial Column Method	Exact Integration
Parme Beta Factor (PCA)	.65
Concrete Stress Block	Rectangular
Use Cracked Sections?	Yes
Use Cracked Sections Slab?	No
Bad Framing Warnings?	No
Unused Force Warnings?	Yes
Min 1 Bar Diam. Spacing?	No
Concrete Rebar Set	REBAR_SET_ASTMA615
Min % Steel for Column	1
Max % Steel for Column	8

(Global) Model Settings, Continued

Seismic Code	ASCE 7-10
Seismic Base Elevation (in)	Not Entered
Add Base Weight?	Yes
Ct X	.02
Ct Z	.02
T X (sec)	Not Entered
T Z (sec)	Not Entered
R X	3
R Z	3
Ct Exp. X	.75
Ct Exp. Z	.75
SD1	1
SDS	1
S1	1
TL (sec)	5
Risk Cat	I or II
Drift Cat	Other
Om Z	1
Om X	1
Cd Z	4
Cd X	4
Rho Z	1
Rho X	1

Hot Rolled Steel Properties

	Label	E [ksi]	G [ksi]	Nu	Therm (\1...	Density[k/...	Yield[ksi]	Ry	Fu[ksi]	Rt
1	A992	29000	11154	.3	.65	.49	50	1.1	65	1.1
2	A36 Gr.36	29000	11154	.3	.65	.49	36	1.5	58	1.2
3	A572 Gr.50	29000	11154	.3	.65	.49	50	1.1	65	1.1
4	A500 Gr.B RND	29000	11154	.3	.65	.527	42	1.4	58	1.3
5	A500 Gr.B Rect	29000	11154	.3	.65	.527	46	1.4	58	1.3
6	A53 Gr.B	29000	11154	.3	.65	.49	35	1.6	60	1.2
7	A1085	29000	11154	.3	.65	.49	50	1.4	65	1.3

Member Primary Data

	Label	I Joint	J Joint	K Joint	Rotate(d...	Section/Shape	Type	Design List	Material	Design Ru...
1	A1	N127	N130		150	PIPE_2.0X	Column	None	A53 Gr.B	Typical
2	A4	N126	N129		150	PIPE_2.0X	Column	None	A53 Gr.B	Typical
3	B11	N2	N3			PIPE_3.0	None	None	A53 Gr.B	Typical
4	C11	N4	N5			HSS4X4X3	None	None	A500 Gr.B Rect	Typical
5	M7A	N8	N6			RIGID	None	None	RIGID	Typical
6	M8	N9	N7			RIGID	None	None	RIGID	Typical
7	D1	N10	N11		180	C10X15.3	None	None	A36 Gr.36	Typical
8	M8A	N14	N13			PIPE_4.0	None	None	A53 Gr.B	Typical
9	M9	N17	N15			RIGID	None	None	RIGID	Typical
10	M10	N18	N16			RIGID	None	None	RIGID	Typical
11	M11	N23	N17			RIGID	None	None	RIGID	Typical
12	M12	N21	N15			RIGID	None	None	RIGID	Typical
13	M13	N22	N16			RIGID	None	None	RIGID	Typical
14	M14	N24	N18			RIGID	None	None	RIGID	Typical
15	M15	N24	N23			RIGID	None	None	RIGID	Typical
16	M16	N22	N21			RIGID	None	None	RIGID	Typical
17	A2	N128	N131		150	PIPE_2.0X	Column	None	A53 Gr.B	Typical
18	B1	N133	N136		30	PIPE_2.0X	Column	None	A53 Gr.B	Typical
19	B4	N132	N135		30	PIPE_2.0X	Column	None	A53 Gr.B	Typical

Member Primary Data (Continued)

	Label	I Joint	J Joint	K Joint	Rotate(d...	Section/Shape	Type	Design List	Material	Design Ru...
20	M20	N30	N31			PIPE_3.0	None	None	A53 Gr.B	Typical
21	M21	N32	N33			HSS4X4X3	None	None	A500 Gr.B Rect	Typical
22	M22	N36	N34			RIGID	None	None	RIGID	Typical
23	M23	N37	N35			RIGID	None	None	RIGID	Typical
24	M24	N38	N39		180	C10X15.3	None	None	A36 Gr.36	Typical
25	M25	N42	N41			PIPE_4.0	None	None	A53 Gr.B	Typical
26	M26	N45	N43			RIGID	None	None	RIGID	Typical
27	M27	N46	N44			RIGID	None	None	RIGID	Typical
28	M28	N51	N45			RIGID	None	None	RIGID	Typical
29	M29	N49	N43			RIGID	None	None	RIGID	Typical
30	M30	N50	N44			RIGID	None	None	RIGID	Typical
31	M31	N52	N46			RIGID	None	None	RIGID	Typical
32	M32	N52	N51			RIGID	None	None	RIGID	Typical
33	M33	N50	N49			RIGID	None	None	RIGID	Typical
34	B2	N134	N137		30	PIPE_2.0X	Column	None	A53 Gr.B	Typical
35	C1	N121	N124		270	PIPE_2.0X	Column	None	A53 Gr.B	Typical
36	C4	N120	N123		270	PIPE_2.0X	Column	None	A53 Gr.B	Typical
37	M37	N58	N59			PIPE_3.0	None	None	A53 Gr.B	Typical
38	M38	N60	N61			HSS4X4X3	None	None	A500 Gr.B Rect	Typical
39	M39	N64	N62			RIGID	None	None	RIGID	Typical
40	M40	N65	N63			RIGID	None	None	RIGID	Typical
41	M41	N66	N67		180	C10X15.3	None	None	A36 Gr.36	Typical
42	M42	N70	N69			PIPE_4.0	None	None	A53 Gr.B	Typical
43	M43	N73	N71			RIGID	None	None	RIGID	Typical
44	M44	N74	N72			RIGID	None	None	RIGID	Typical
45	M45	N79	N73			RIGID	None	None	RIGID	Typical
46	M46	N77	N71			RIGID	None	None	RIGID	Typical
47	M47	N78	N72			RIGID	None	None	RIGID	Typical
48	M48	N80	N74			RIGID	None	None	RIGID	Typical
49	M49	N80	N79			RIGID	None	None	RIGID	Typical
50	M50	N78	N77			RIGID	None	None	RIGID	Typical
51	C2	N122	N125		270	PIPE_2.0X	Column	None	A53 Gr.B	Typical
52	M52	N88	N89		180	L3X3X4	None	None	A36 Gr.36	Typical
53	M53	N93	N94		180	L3X3X4	None	None	A36 Gr.36	Typical
54	M54	N98	N99		180	L3X3X4	None	None	A36 Gr.36	Typical
55	M55	N102	N107		90	L2x2x3	None	None	A36 Gr.36	Typical
56	M56	N104	N106		90	L2x2x3	None	None	A36 Gr.36	Typical
57	M57	N103	N105		90	L2x2x3	None	None	A36 Gr.36	Typical
58	M58	N57	EQUIP_...			RIGID	None	None	RIGID	Typical
59	M59	N97	N117			RIGID	None	None	RIGID	Typical
60	M60	N84	N116			RIGID	None	None	RIGID	Typical
61	M61	N101	N119			RIGID	None	None	RIGID	Typical
62	M62	N68	EQUIP_...			RIGID	None	None	RIGID	Typical
63	M63	N100	N118			RIGID	None	None	RIGID	Typical
64	M64	N29	EQUIP_...			RIGID	None	None	RIGID	Typical
65	M65	N92	N147			RIGID	None	None	RIGID	Typical
66	M66	N96	N149			RIGID	None	None	RIGID	Typical
67	M67	N56	N146			RIGID	None	None	RIGID	Typical
68	M68	N40	EQUIP_...			RIGID	None	None	RIGID	Typical
69	M69	N95	N148			RIGID	None	None	RIGID	Typical
70	M70	N1	EQUIP_...			RIGID	None	None	RIGID	Typical
71	M71	N87	N141			RIGID	None	None	RIGID	Typical
72	M72	N28	N140			RIGID	None	None	RIGID	Typical
73	M73	N91	N143			RIGID	None	None	RIGID	Typical
74	M74	N12	EQUIP_...			RIGID	None	None	RIGID	Typical
75	M75	N90	N142			RIGID	None	None	RIGID	Typical
76	M76	N189	N112		90	L2x2x3	Beam	Single Angle	A36 Gr.36	Typical

Member Primary Data (Continued)

	Label	I Joint	J Joint	K Joint	Rotate(d...	Section/Shape	Type	Design List	Material	Design Ru...
77	M77	N189	N113		180	L2x2x3	Beam	Single Angle	A36 Gr.36	Typical
78	M78	N193	N110		90	L2x2x3	Beam	Single Angle	A36 Gr.36	Typical
79	M79	N193	N111		180	L2x2x3	Beam	Single Angle	A36 Gr.36	Typical
80	M80	N191	N108		90	L2x2x3	Beam	Single Angle	A36 Gr.36	Typical
81	M81	N191	N109		180	L2x2x3	Beam	Single Angle	A36 Gr.36	Typical
82	M82	N171	N172			RIGID	None	None	RIGID	Typical
83	M83	N176	N174			RIGID	None	None	RIGID	Typical
84	M84	N175	N173			RIGID	None	None	RIGID	Typical
85	M85	N177	N178			RIGID	None	None	RIGID	Typical
86	M86	N182	N180			RIGID	None	None	RIGID	Typical
87	M87	N181	N179			RIGID	None	None	RIGID	Typical
88	M88	N183	N184			RIGID	None	None	RIGID	Typical
89	M89	N188	N186			RIGID	None	None	RIGID	Typical
90	M90	N187	N185			RIGID	None	None	RIGID	Typical
91	M91	N174	N179			0.62" dia solid rod	Beam	BAR	A36 Gr.36	Typical
92	M92	N172	N177			0.62" dia solid rod	Beam	BAR	A36 Gr.36	Typical
93	M93	N176	N181			0.62" dia solid rod	Beam	BAR	A36 Gr.36	Typical
94	M94	N180	N185			0.62" dia solid rod	Beam	BAR	A36 Gr.36	Typical
95	M95	N178	N183			0.62" dia solid rod	Beam	BAR	A36 Gr.36	Typical
96	M96	N182	N187			0.62" dia solid rod	Beam	BAR	A36 Gr.36	Typical
97	M97	N186	N173			0.62" dia solid rod	Beam	BAR	A36 Gr.36	Typical
98	M98	N184	N171			0.62" dia solid rod	Beam	BAR	A36 Gr.36	Typical
99	M99	N188	N175			0.62" dia solid rod	Beam	BAR	A36 Gr.36	Typical
100	M100	N170	N189			RIGID	None	None	RIGID	Typical
101	M101	N168	N191			RIGID	None	None	RIGID	Typical
102	M102	N169	N193			RIGID	None	None	RIGID	Typical

Member Advanced Data

	Label	I Release	J Release	I Offset[in]	J Offset[in]	T/C Only	Physical	Defl Rat...	Analysis ...	Inactive	Seismic...
1	A1						Yes	** NA **			None
2	A4						Yes	** NA **			None
3	B11						Yes	** NA **			None
4	C11						Yes	** NA **			None
5	M7A						Yes	** NA **			None
6	M8						Yes	** NA **			None
7	D1						Yes	** NA **			None
8	M8A						Yes	** NA **			None
9	M9						Yes	** NA **			None
10	M10						Yes	** NA **			None
11	M11						Yes	** NA **			None
12	M12						Yes	** NA **			None
13	M13						Yes	** NA **			None
14	M14						Yes	** NA **			None
15	M15						Yes	** NA **			None
16	M16						Yes	** NA **			None
17	A2						Yes	** NA **			None
18	B1						Yes	** NA **			None
19	B4						Yes	** NA **			None
20	M20						Yes	** NA **			None
21	M21						Yes	** NA **			None
22	M22						Yes	** NA **			None
23	M23						Yes	** NA **			None
24	M24						Yes	** NA **			None
25	M25						Yes	** NA **			None
26	M26						Yes	** NA **			None

Member Advanced Data (Continued)

	Label	I Release	J Release	I Offset[in]	J Offset[in]	T/C Only	Physical	Defl Rat...	Analysis ...	Inactive	Seismic...
27	M27						Yes	** NA **			None
28	M28						Yes	** NA **			None
29	M29						Yes	** NA **			None
30	M30						Yes	** NA **			None
31	M31						Yes	** NA **			None
32	M32						Yes	** NA **			None
33	M33						Yes	** NA **			None
34	B2						Yes	** NA **			None
35	C1						Yes	** NA **			None
36	C4						Yes	** NA **			None
37	M37						Yes	** NA **			None
38	M38						Yes	** NA **			None
39	M39						Yes	** NA **			None
40	M40						Yes	** NA **			None
41	M41						Yes	** NA **			None
42	M42						Yes	** NA **			None
43	M43						Yes	** NA **			None
44	M44						Yes	** NA **			None
45	M45						Yes	** NA **			None
46	M46						Yes	** NA **			None
47	M47						Yes	** NA **			None
48	M48						Yes	** NA **			None
49	M49						Yes	** NA **			None
50	M50						Yes	** NA **			None
51	C2						Yes	** NA **			None
52	M52						Yes	** NA **			None
53	M53						Yes	** NA **			None
54	M54						Yes	** NA **			None
55	M55						Yes	** NA **			None
56	M56						Yes	** NA **			None
57	M57						Yes	** NA **			None
58	M58						Yes	** NA **			None
59	M59	OOOXOX					Yes	** NA **			None
60	M60						Yes	** NA **			None
61	M61	OOOXOX					Yes	** NA **			None
62	M62						Yes	** NA **			None
63	M63	OOOXOX					Yes	** NA **			None
64	M64						Yes	** NA **			None
65	M65	OOOXOX					Yes	** NA **			None
66	M66	OOOXOX					Yes	** NA **			None
67	M67						Yes	** NA **			None
68	M68						Yes	** NA **			None
69	M69	OOOXOX					Yes	** NA **			None
70	M70						Yes	** NA **			None
71	M71	OOOXOX					Yes	** NA **			None
72	M72						Yes	** NA **			None
73	M73	OOOXOX					Yes	** NA **			None
74	M74						Yes	** NA **			None
75	M75	OOOXOX					Yes	** NA **			None
76	M76	BenPIN	BenPIN				Yes	Default			None
77	M77	BenPIN	BenPIN				Yes				None
78	M78	BenPIN	BenPIN				Yes				None
79	M79	BenPIN	BenPIN				Yes				None
80	M80	BenPIN	BenPIN				Yes				None
81	M81	BenPIN	BenPIN				Yes				None
82	M82						Yes	** NA **			None
83	M83						Yes	** NA **			None

Member Advanced Data (Continued)

	Label	I Release	J Release	I Offset[in]	J Offset[in]	T/C Only	Physical	Defl Rat...	Analysis ...	Inactive	Seismic...
84	M84						Yes	** NA **			None
85	M85						Yes	** NA **			None
86	M86						Yes	** NA **			None
87	M87						Yes	** NA **			None
88	M88						Yes	** NA **			None
89	M89						Yes	** NA **			None
90	M90						Yes	** NA **			None
91	M91	BenPIN	BenPIN				Yes	XX			None
92	M92	BenPIN	BenPIN				Yes	XX			None
93	M93	BenPIN	BenPIN				Yes	XX			None
94	M94	BenPIN	BenPIN				Yes	XX			None
95	M95	BenPIN	BenPIN				Yes	XX			None
96	M96	BenPIN	BenPIN				Yes	XX			None
97	M97	BenPIN	BenPIN				Yes	XX			None
98	M98	BenPIN	BenPIN				Yes	XX			None
99	M99	BenPIN	BenPIN				Yes	XX			None
100	M100						Yes	** NA **			None
101	M101						Yes	** NA **			None
102	M102						Yes	** NA **			None

Hot Rolled Steel Design Parameters

	Label	Shape	Length[in]	Lbyy[in]	Lbzz[in]	Lcomp top[in]	Lcomp bot[in]	L-torqu...	Kyy	Kzz	Cb	Function
1	A1	PIPE_2.0X	96			Lbyy						Lateral
2	A4	PIPE_2.0X	96			Lbyy						Lateral
3	B11	PIPE_3.0	126			Lbyy						Lateral
4	C11	HSS4X4X3	56.5			Lbyy						Lateral
5	D1	C10X15.3	15			Lbyy						Lateral
6	M8A	PIPE_4.0	18			Lbyy						Lateral
7	A2	PIPE_2.0X	96			Lbyy						Lateral
8	B1	PIPE_2.0X	96			Lbyy						Lateral
9	B4	PIPE_2.0X	96			Lbyy						Lateral
10	M20	PIPE_3.0	126			Lbyy						Lateral
11	M21	HSS4X4X3	56.5			Lbyy						Lateral
12	M24	C10X15.3	15			Lbyy						Lateral
13	M25	PIPE_4.0	18			Lbyy						Lateral
14	B2	PIPE_2.0X	96			Lbyy						Lateral
15	C1	PIPE_2.0X	96			Lbyy						Lateral
16	C4	PIPE_2.0X	96			Lbyy						Lateral
17	M37	PIPE_3.0	126			Lbyy						Lateral
18	M38	HSS4X4X3	56.5			Lbyy						Lateral
19	M41	C10X15.3	15			Lbyy						Lateral
20	M42	PIPE_4.0	18			Lbyy						Lateral
21	C2	PIPE_2.0X	96			Lbyy						Lateral
22	M52	L3X3X4	126			Lbyy						Lateral
23	M53	L3X3X4	126			Lbyy						Lateral
24	M54	L3X3X4	126			Lbyy						Lateral
25	M55	L2x2x3	68.945									Lateral
26	M56	L2x2x3	68.945									Lateral
27	M57	L2x2x3	68.945									Lateral
28	M76	L2x2x3	79.808			Lbyy						Lateral
29	M77	L2x2x3	79.808			Lbyy						Lateral
30	M78	L2x2x3	79.808			Lbyy						Lateral
31	M79	L2x2x3	79.808			Lbyy						Lateral
32	M80	L2x2x3	79.808			Lbyy						Lateral
33	M81	L2x2x3	79.808			Lbyy						Lateral

Hot Rolled Steel Design Parameters (Continued)

	Label	Shape	Length[in]	Lbyy[in]	Lbzz[in]	Lcomp top[in]	Lcomp bot[in]	L-torqu...	Kyy	Kzz	Cb	Function
34	M91	0.62" dia sol...	12.62			Lbyy						Lateral
35	M92	0.62" dia sol...	12.62			Lbyy						Lateral
36	M93	0.62" dia sol...	12.62			Lbyy						Lateral
37	M94	0.62" dia sol...	12.62			Lbyy						Lateral
38	M95	0.62" dia sol...	12.62			Lbyy						Lateral
39	M96	0.62" dia sol...	12.62			Lbyy						Lateral
40	M97	0.62" dia sol...	12.62			Lbyy						Lateral
41	M98	0.62" dia sol...	12.62			Lbyy						Lateral
42	M99	0.62" dia sol...	12.62			Lbyy						Lateral

Joint Loads and Enforced Displacements (BLC 2 : Weight of Appurtenances)

	Joint Label	L,D,M	Direction	Magnitude[(lb,k-ft), (in,rad), (lb*s^2/...
1	EQUIP_A_1(TOP)	L	Y	-54.3
2	EQUIP_A_1(BOT)	L	Y	-54.3
3	EQUIP_A_2	L	Y	-52
4	EQUIP_A_4(TOP)	L	Y	-23.7
5	EQUIP_A_4(BOT)	L	Y	-23.7
6	EQUIP_A_5(TOP)	L	Y	-55.5
7	EQUIP_A_5(BOT)	L	Y	-55.5
8	EQUIP_A_3	L	Y	-52
9	EQUIP_B_2	L	Y	-52
10	EQUIP_B_3	L	Y	-52
11	EQUIP_B_1(TOP)	L	Y	-54.3
12	EQUIP_B_1(BOT)	L	Y	-54.3
13	EQUIP_B_4(TOP)	L	Y	-23.7
14	EQUIP_B_4(BOT)	L	Y	-23.7
15	EQUIP_B_5(TOP)	L	Y	-55.5
16	EQUIP_B_5(BOT)	L	Y	-55.5
17	EQUIP_C_2	L	Y	-52
18	EQUIP_C_3	L	Y	-52
19	EQUIP_C_1(TOP)	L	Y	-54.3
20	EQUIP_C_1(BOT)	L	Y	-54.3
21	EQUIP_C_4(TOP)	L	Y	-23.7
22	EQUIP_C_4(BOT)	L	Y	-23.7
23	EQUIP_C_5(TOP)	L	Y	-55.5
24	EQUIP_C_5(BOT)	L	Y	-55.5

Joint Loads and Enforced Displacements (BLC 3 : Weight of Ice Only)

	Joint Label	L,D,M	Direction	Magnitude[(lb,k-ft), (in,rad), (lb*s^2/...
1	EQUIP_A_1(TOP)	L	Y	-193.5
2	EQUIP_A_1(BOT)	L	Y	-193.5
3	EQUIP_A_2	L	Y	-99
4	EQUIP_A_4(TOP)	L	Y	-133.5
5	EQUIP_A_4(BOT)	L	Y	-133.5
6	EQUIP_A_5(TOP)	L	Y	-148.5
7	EQUIP_A_5(BOT)	L	Y	-148.5
8	EQUIP_A_3	L	Y	-93
9	EQUIP_B_2	L	Y	-99
10	EQUIP_B_3	L	Y	-93
11	EQUIP_B_1(TOP)	L	Y	-193.5
12	EQUIP_B_1(BOT)	L	Y	-193.5
13	EQUIP_B_4(TOP)	L	Y	-133.5
14	EQUIP_B_4(BOT)	L	Y	-133.5
15	EQUIP_B_5(TOP)	L	Y	-148.5
16	EQUIP_B_5(BOT)	L	Y	-148.5

Joint Loads and Enforced Displacements (BLC 3 : Weight of Ice Only) (Continued)

	Joint Label	L,D,M	Direction	Magnitude[(lb,k-ft), (in,rad), (lb*s^2/...
17	EQUIP_C_2	L	Y	-99
18	EQUIP_C_3	L	Y	-93
19	EQUIP_C_1(TOP)	L	Y	-193.5
20	EQUIP_C_1(BOT)	L	Y	-193.5
21	EQUIP_C_4(TOP)	L	Y	-133.5
22	EQUIP_C_4(BOT)	L	Y	-133.5
23	EQUIP_C_5(TOP)	L	Y	-148.5
24	EQUIP_C_5(BOT)	L	Y	-148.5

Joint Loads and Enforced Displacements (BLC 4 : TIA Wind with Ice - X)

	Joint Label	L,D,M	Direction	Magnitude[(lb,k-ft), (in,rad), (lb*s^2/...
1	EQUIP_A_1(TOP)	L	X	40.5
2	EQUIP_A_1(BOT)	L	X	40.5
3	EQUIP_A_2	L	X	20
4	EQUIP_A_4(TOP)	L	X	37.5
5	EQUIP_A_4(BOT)	L	X	37.5
6	EQUIP_A_5(BOT)	L	X	42.5
7	EQUIP_A_5(TOP)	L	X	42.5
8	EQUIP_A_3	L	X	17
9	EQUIP_B_2	L	X	20
10	EQUIP_B_3	L	X	17
11	EQUIP_B_1(TOP)	L	X	40.5
12	EQUIP_B_1(BOT)	L	X	40.5
13	EQUIP_B_4(TOP)	L	X	37.5
14	EQUIP_B_4(BOT)	L	X	37.5
15	EQUIP_B_5(TOP)	L	X	42.5
16	EQUIP_B_5(BOT)	L	X	42.5
17	EQUIP_C_2	L	X	20
18	EQUIP_C_3	L	X	17
19	EQUIP_C_1(TOP)	L	X	40.5
20	EQUIP_C_1(BOT)	L	X	40.5
21	EQUIP_C_4(TOP)	L	X	37.5
22	EQUIP_C_4(BOT)	L	X	37.5
23	EQUIP_C_5(TOP)	L	X	42.5
24	EQUIP_C_5(BOT)	L	X	42.5

Joint Loads and Enforced Displacements (BLC 5 : TIA Wind with Ice - Z)

	Joint Label	L,D,M	Direction	Magnitude[(lb,k-ft), (in,rad), (lb*s^2/...
1	EQUIP_A_1(TOP)	L	Z	72
2	EQUIP_A_1(BOT)	L	Z	72
3	EQUIP_A_2	L	Z	31
4	EQUIP_A_4(TOP)	L	Z	48
5	EQUIP_A_4(BOT)	L	Z	48
6	EQUIP_A_5(TOP)	L	Z	47.5
7	EQUIP_A_5(BOT)	L	Z	47.5
8	EQUIP_A_3	L	Z	31
9	EQUIP_B_2	L	Z	31
10	EQUIP_B_3	L	Z	31
11	EQUIP_B_1(TOP)	L	Z	72
12	EQUIP_B_1(BOT)	L	Z	72
13	EQUIP_B_4(TOP)	L	Z	48
14	EQUIP_B_4(BOT)	L	Z	48
15	EQUIP_B_5(TOP)	L	Z	47.5
16	EQUIP_B_5(BOT)	L	Z	47.5
17	EQUIP_C_2	L	Z	31
18	EQUIP_C_3	L	Z	31

Joint Loads and Enforced Displacements (BLC 5 : TIA Wind with Ice - Z) (Continued)

	Joint Label	L,D,M	Direction	Magnitude[(lb,k-ft), (in,rad), (lb*s^2/...
19	EQUIP_C_1(TOP)	L	Z	72
20	EQUIP_C_1(BOT)	L	Z	72
21	EQUIP_C_4(TOP)	L	Z	48
22	EQUIP_C_4(BOT)	L	Z	48
23	EQUIP_C_5(TOP)	L	Z	47.5
24	EQUIP_C_5(BOT)	L	Z	47.5

Joint Loads and Enforced Displacements (BLC 6 : TIA Wind - X)

	Joint Label	L,D,M	Direction	Magnitude[(lb,k-ft), (in,rad), (lb*s^2/...
1	EQUIP_A_1(TOP)	L	X	102.5
2	EQUIP_A_1(BOT)	L	X	102.5
3	EQUIP_A_2	L	X	33
4	EQUIP_A_4(TOP)	L	X	95
5	EQUIP_A_4(BOT)	L	X	95
6	EQUIP_A_5(TOP)	L	X	119.5
7	EQUIP_A_5(BOT)	L	X	119.5
8	EQUIP_A_3	L	X	24
9	EQUIP_B_2	L	X	33
10	EQUIP_B_3	L	X	24
11	EQUIP_B_1(TOP)	L	X	102.5
12	EQUIP_B_1(BOT)	L	X	102.5
13	EQUIP_B_4(TOP)	L	X	95
14	EQUIP_B_4(BOT)	L	X	95
15	EQUIP_B_5(TOP)	L	X	119.5
16	EQUIP_B_5(BOT)	L	X	119.5
17	EQUIP_C_2	L	X	33
18	EQUIP_C_3	L	X	24
19	EQUIP_C_1(TOP)	L	X	102.5
20	EQUIP_C_1(BOT)	L	X	102.5
21	EQUIP_C_4(TOP)	L	X	95
22	EQUIP_C_4(BOT)	L	X	95
23	EQUIP_C_5(TOP)	L	X	119.5
24	EQUIP_C_5(BOT)	L	X	119.5

Joint Loads and Enforced Displacements (BLC 7 : TIA Wind - Z)

	Joint Label	L,D,M	Direction	Magnitude[(lb,k-ft), (in,rad), (lb*s^2/...
1	EQUIP_A_1(TOP)	L	Z	243
2	EQUIP_A_1(BOT)	L	Z	243
3	EQUIP_A_2	L	Z	68
4	EQUIP_A_4(TOP)	L	Z	144
5	EQUIP_A_4(BOT)	L	Z	144
6	EQUIP_A_5(TOP)	L	Z	143
7	EQUIP_A_5(BOT)	L	Z	143
8	EQUIP_A_3	L	Z	68
9	EQUIP_B_2	L	Z	68
10	EQUIP_B_3	L	Z	68
11	EQUIP_B_1(TOP)	L	Z	243
12	EQUIP_B_1(BOT)	L	Z	243
13	EQUIP_B_4(TOP)	L	Z	144
14	EQUIP_B_4(BOT)	L	Z	144
15	EQUIP_B_5(TOP)	L	Z	143
16	EQUIP_B_5(BOT)	L	Z	143
17	EQUIP_C_2	L	Z	68
18	EQUIP_C_3	L	Z	68
19	EQUIP_C_1(TOP)	L	Z	243
20	EQUIP_C_1(BOT)	L	Z	243

Joint Loads and Enforced Displacements (BLC 7 : TIA Wind - Z) (Continued)

	Joint Label	L,D,M	Direction	Magnitude[(lb,k-ft), (in,rad), (lb*s^2/...
21	EQUIP_C_4(TOP)	L	Z	144
22	EQUIP_C_4(BOT)	L	Z	144
23	EQUIP_C_5(TOP)	L	Z	143
24	EQUIP_C_5(BOT)	L	Z	143

Member Distributed Loads (BLC 3 : Weight of Ice Only)

	Member Label	Direction	Start Magnitude[lb/ft,F,psf]	End Magnitude[lb/ft,F,psf]	Start Location[in,%]	End Location[in,%]
1	A1	Y	-12.7	-12.7	0	0
2	A4	Y	-12.7	-12.7	0	0
3	A2	Y	-12.7	-12.7	0	0
4	B1	Y	-12.7	-12.7	0	0
5	B4	Y	-12.7	-12.7	0	0
6	B2	Y	-12.7	-12.7	0	0
7	C1	Y	-12.7	-12.7	0	0
8	C4	Y	-12.7	-12.7	0	0
9	C2	Y	-12.7	-12.7	0	0
10	B11	Y	-15.7	-15.7	0	0
11	M20	Y	-15.7	-15.7	0	0
12	M37	Y	-15.7	-15.7	0	0
13	M8A	Y	-23.5	-23.5	0	0
14	M25	Y	-23.5	-23.5	0	0
15	M42	Y	-23.5	-23.5	0	0
16	C11	Y	-24.2	-24.2	0	0
17	M21	Y	-24.2	-24.2	0	0
18	M38	Y	-24.2	-24.2	0	0
19	M52	Y	-18.3	-18.3	0	0
20	M53	Y	-18.3	-18.3	0	0
21	M54	Y	-18.3	-18.3	0	0
22	M55	Y	-15.1	-15.1	0	0
23	M56	Y	-15.1	-15.1	0	0
24	M57	Y	-15.1	-15.1	0	0

Member Distributed Loads (BLC 4 : TIA Wind with Ice - X)

	Member Label	Direction	Start Magnitude[lb/ft,F,psf]	End Magnitude[lb/ft,F,psf]	Start Location[in,%]	End Location[in,%]
1	A1	X	5.7	5.7	0	0
2	A4	X	5.7	5.7	0	0
3	A2	X	5.7	5.7	0	0
4	B1	X	5.7	5.7	0	0
5	B4	X	5.7	5.7	0	0
6	B2	X	5.7	5.7	0	0
7	C1	X	5.7	5.7	0	0
8	C4	X	5.7	5.7	0	0
9	C2	X	5.7	5.7	0	0
10	B11	X	6.5	6.5	0	0
11	M20	X	6.5	6.5	0	0
12	M37	X	6.5	6.5	0	0
13	M8A	X	5.4	5.4	0	0
14	M25	X	5.4	5.4	0	0
15	M42	X	5.4	5.4	0	0
16	C11	X	9.2	9.2	0	0
17	M21	X	9.2	9.2	0	0
18	M52	X	10.2	10.2	0	0
19	M53	X	10.2	10.2	0	0
20	M54	X	10.2	10.2	0	0
21	M55	X	9.1	9.1	0	0

Member Distributed Loads (BLC 4 : TIA Wind with Ice - X) (Continued)

	Member Label	Direction	Start Magnitude[lb/ft,F,psf]	End Magnitude[lb/ft,F,psf]	Start Location[in,%]	End Location[in,%]
22	M56	X	9.1	9.1	0	0
23	M57	X	9.1	9.1	0	0

Member Distributed Loads (BLC 5 : TIA Wind with Ice - Z)

	Member Label	Direction	Start Magnitude[lb/ft,F,psf]	End Magnitude[lb/ft,F,psf]	Start Location[in,%]	End Location[in,%]
1	A1	Z	5.7	5.7	0	0
2	A4	Z	5.7	5.7	0	0
3	A2	Z	5.7	5.7	0	0
4	B1	Z	5.7	5.7	0	0
5	B4	Z	5.7	5.7	0	0
6	B2	Z	5.7	5.7	0	0
7	C1	Z	5.7	5.7	0	0
8	C4	Z	5.7	5.7	0	0
9	C2	Z	5.7	5.7	0	0
10	B11	Z	6.5	6.5	0	0
11	M20	Z	6.5	6.5	0	0
12	M8A	Z	5.4	5.4	0	0
13	M25	Z	5.4	5.4	0	0
14	M42	Z	5.4	5.4	0	0
15	C11	Z	9.2	9.2	0	0
16	M21	Z	9.2	9.2	0	0
17	M38	Z	9.2	9.2	0	0
18	M52	Z	10.2	10.2	0	0
19	M53	Z	10.2	10.2	0	0
20	M55	Z	9.1	9.1	0	0
21	M56	Z	9.1	9.1	0	0

Member Distributed Loads (BLC 6 : TIA Wind - X)

	Member Label	Direction	Start Magnitude[lb/ft,F,psf]	End Magnitude[lb/ft,F,psf]	Start Location[in,%]	End Location[in,%]
1	A1	X	8.4	8.4	0	0
2	A4	X	8.4	8.4	0	0
3	A2	X	8.4	8.4	0	0
4	B1	X	8.4	8.4	0	0
5	B4	X	8.4	8.4	0	0
6	B2	X	8.4	8.4	0	0
7	C1	X	8.4	8.4	0	0
8	C4	X	8.4	8.4	0	0
9	C2	X	8.4	8.4	0	0
10	B11	X	12.3	12.3	0	0
11	M20	X	12.3	12.3	0	0
12	M37	X	12.3	12.3	0	0
13	M8A	X	9.7	9.7	0	0
14	M25	X	9.7	9.7	0	0
15	M42	X	9.7	9.7	0	0
16	C11	X	17.2	17.2	0	0
17	M21	X	17.2	17.2	0	0
18	M52	X	17.6	17.6	0	0
19	M53	X	17.6	17.6	0	0
20	M54	X	17.6	17.6	0	0
21	M55	X	11.7	11.7	0	0
22	M56	X	11.7	11.7	0	0
23	M57	X	11.7	11.7	0	0

Member Distributed Loads (BLC 7 : TIA Wind - Z)

	Member Label	Direction	Start Magnitude[lb/ft,F,psf]	End Magnitude[lb/ft,F,psf]	Start Location[in,%]	End Location[in,%]

Member Distributed Loads (BLC 7 : TIA Wind - Z) (Continued)

	Member Label	Direction	Start Magnitude[lb/ft,F,psf]	End Magnitude[lb/ft,F,psf]	Start Location[in,%]	End Location[in,%]
1	A1	Z	8.4	8.4	0	0
2	A4	Z	8.4	8.4	0	0
3	A2	Z	8.4	8.4	0	0
4	B1	Z	8.4	8.4	0	0
5	B4	Z	8.4	8.4	0	0
6	B2	Z	8.4	8.4	0	0
7	C1	Z	8.4	8.4	0	0
8	C4	Z	8.4	8.4	0	0
9	C2	Z	8.4	8.4	0	0
10	B11	Z	12.3	12.3	0	0
11	M20	Z	12.3	12.3	0	0
12	M8A	Z	9.7	9.7	0	0
13	M25	Z	9.7	9.7	0	0
14	M42	Z	9.7	9.7	0	0
15	C11	Z	17.2	17.2	0	0
16	M21	Z	17.2	17.2	0	0
17	M38	Z	17.2	17.2	0	0
18	M52	Z	17.6	17.6	0	0
19	M53	Z	17.6	17.6	0	0
20	M55	Z	11.7	11.7	0	0
21	M56	Z	11.7	11.7	0	0

Basic Load Cases

	BLC Description	Category	X Grav...	Y Grav...	Z Grav...	Joint	Point	Distrib...	Area(...	Surfac...
1	Self Weight	None		-1						
2	Weight of Appurtenances	None				24				
3	Weight of Ice Only	None				24		24		
4	TIA Wind with Ice - X	None				24		23		
5	TIA Wind with Ice - Z	None				24		21		
6	TIA Wind - X	None				24		23		
7	TIA Wind - Z	None				24		21		

Load Combinations

	Description	Sol...	PDelta	SRSS	B...	Fa...	B...	Fac...	B...	Fa...	B...	Fa...	B...	Fa...	B...	Fa...	B...	Fa...	B...	Fa...	B...	Fa...	B...	Fa...
1	1.2D + 1.6W (0 deg)	Yes	Y		1	1.2	2	1.2	6	1.6														
2	1.2D + 1.6W (30 deg)	Yes	Y		1	1.2	2	1.2	6	1.39	7	.8												
3	1.2D + 1.6W (60 deg)	Yes	Y		1	1.2	2	1.2	6	.8	7	1.39												
4	1.2D + 1.6W (90 deg)	Yes	Y		1	1.2	2	1.2	7	1.6														
5	1.2D + 1.6W (120 deg)	Yes	Y		1	1.2	2	1.2	6	-.8	7	1.39												
6	1.2D + 1.6W (150 deg)	Yes	Y		1	1.2	2	1.2	6	-1....	7	.8												
7	1.2D + 1.6W (180 deg)	Yes	Y		1	1.2	2	1.2	6	-1.6														
8	1.2D + 1.6W (210 deg)	Yes	Y		1	1.2	2	1.2	6	-1....	7	-.8												
9	1.2D + 1.6W (240 deg)	Yes	Y		1	1.2	2	1.2	6	-.8	7	-1....												
10	1.2D + 1.6W (270 deg)	Yes	Y		1	1.2	2	1.2	7	-1.6														
11	1.2D + 1.6W (300 deg)	Yes	Y		1	1.2	2	1.2	6	.8	7	-1....												
12	1.2D + 1.6W (330 deg)	Yes	Y		1	1.2	2	1.2	6	1.39	7	-.8												
13	1.2D + 1.0Di + 1.0Wi (0 deg)	Yes	Y		1	1.2	2	1.2	3	1	4	1												
14	1.2D + 1.0Di + 1.0Wi (30 deg)	Yes	Y		1	1.2	2	1.2	3	1	4	.866	5	.5										
15	1.2D + 1.0Di + 1.0Wi (60 deg)	Yes	Y		1	1.2	2	1.2	3	1	4	.5	5	.866										
16	1.2D + 1.0Di + 1.0Wi (90 deg)	Yes	Y		1	1.2	2	1.2	3	1	5	1												
17	1.2D + 1.0Di + 1.0Wi (120 deg)	Yes	Y		1	1.2	2	1.2	3	1	4	-.5	5	.866										
18	1.2D + 1.0Di + 1.0Wi (150 deg)	Yes	Y		1	1.2	2	1.2	3	1	4	-.8...	5	.5										
19	1.2D + 1.0Di + 1.0Wi (180 deg)	Yes	Y		1	1.2	2	1.2	3	1	4	-1												
20	1.2D + 1.0Di + 1.0Wi (210 deg)	Yes	Y		1	1.2	2	1.2	3	1	4	-.8...	5	-.5										

Load Combinations (Continued)

	Description	Sol...	PDelta	SRSS	B...	Fa...	B...	Fac...	B...	Fa...	B...	Fa...	B...	Fa...	B...	Fa...	B...	Fa...	B...	Fa...	B...	Fa...	B...	Fa...
21	1.2D + 1.0Di + 1.0Wi (240 deg)	Yes	Y		1	1.2	2	1.2	3	1	4	-.5	5	-.8...										
22	1.2D + 1.0Di + 1.0Wi (270 deg)	Yes	Y		1	1.2	2	1.2	3	1	5	-1												
23	1.2D + 1.0Di + 1.0Wi (300 deg)	Yes	Y		1	1.2	2	1.2	3	1	4	.5	5	-.8...										
24	1.2D + 1.0Di + 1.0Wi (330 deg)	Yes	Y		1	1.2	2	1.2	3	1	4	.866	5	-.5										
25	1.2D + 1.6W (0 deg) Service Wind	Yes	Y		1	1.2	2	1.2	7	.48														

Envelope AISC 14th(360-10): LRFD Steel Code Checks

	Mem...	Shape	Code Check	Loc[in]	LC	Shear ...	Loc[...	Dir	LC	phi*Pn...	phi*Pn...	phi*Mn ...	phi*Mn...	Cb	Eqn
1	A1	PIPE_2.0X	.613	48	11	.115	48		9	19844....	44100	2.531	2.531	1...	H...
2	A4	PIPE_2.0X	.680	48	8	.212	48		9	19844....	44100	2.531	2.531	1...	H...
3	B11	PIPE_3.0	.960	57.75	10	.352	57.75		10	36138.4	65205	5.749	5.749	2...	H...
4	C11	HSS4X4X3	.949	0	24	.167	0	y	20	97695....	106812	12.662	12.662	1...	H...
5	D1	C10X15.3	.686	5.469	10	.209	5.469	z	10	141798...	145152	4.988	42.93	1...	H...
6	M8A	PIPE_4.0	.093	9	9	.204	9		11	92571....	93240	10.631	10.631	1...	H...
7	A2	PIPE_2.0X	.816	48	10	.211	48		8	19844....	44100	2.531	2.531	1...	H...
8	B1	PIPE_2.0X	.473	48	4	.134	48		4	19844....	44100	2.531	2.531	1...	H...
9	B4	PIPE_2.0X	.742	48	4	.211	48		5	19844....	44100	2.531	2.531	1...	H...
10	M20	PIPE_3.0	.925	57.75	18	.303	57.75		6	36138.4	65205	5.749	5.749	3...	H...
11	M21	HSS4X4X3	.957	0	14	.168	0	y	15	97695....	106812	12.662	12.662	1...	H...
12	M24	C10X15.3	.643	5.469	18	.173	5.469	z	7	141798...	145152	4.988	42.93	1...	H...
13	M25	PIPE_4.0	.079	9	5	.163	9		7	92571....	93240	10.631	10.631	1...	H...
14	B2	PIPE_2.0X	.706	48	5	.251	48		4	19844....	44100	2.531	2.531	1...	H...
15	C1	PIPE_2.0X	.560	48	3	.102	48		11	19844....	44100	2.531	2.531	1...	H...
16	C4	PIPE_2.0X	.643	48	12	.184	48		1	19844....	44100	2.531	2.531	1...	H...
17	M37	PIPE_3.0	.928	57.75	14	.363	57.75		2	36138.4	65205	5.749	5.749	3...	H...
18	M38	HSS4X4X3	.936	0	22	.172	0	y	16	97695....	106812	12.662	12.662	1...	H...
19	M41	C10X15.3	.647	5.469	14	.212	5.469	z	2	141798...	145152	4.988	42.93	1...	H...
20	M42	PIPE_4.0	.087	9	2	.209	9		4	92571....	93240	10.631	10.631	1...	H...
21	C2	PIPE_2.0X	.668	48	2	.196	48		12	19844....	44100	2.531	2.531	1...	H...
22	M52	L3X3X4	.670	39.3...	9	.056	38.0...	z	22	7012.5...	46656	1.688	3.136	1...	H...
23	M53	L3X3X4	.657	39.3...	5	.058	38.0...	z	18	7012.5...	46656	1.688	3.128	1...	H...
24	M54	L3X3X4	.646	39.3...	13	.059	38.0...	z	15	7012.5...	46656	1.688	2.987	1...	H...
25	M55	L2x2x3	.552	68.9...	3	.050	68.9...	z	15	5192.5...	23392.8	.558	1.184	2...	H...
26	M56	L2x2x3	.477	68.9...	6	.050	68.9...	z	17	5192.5...	23392.8	.558	1.183	2...	H...
27	M57	L2x2x3	.619	0	4	.048	68.9...	z	23	5192.5...	23392.8	.558	1.18	2...	H...
28	M76	L2x2x3	.083	39.9...	19	.020	0	z	5	3875.1...	23392.8	.558	.967	1...	H...
29	M77	L2x2x3	.091	39.9...	19	.022	0	y	9	3875.1...	23392.8	.558	.967	1...	H...
30	M78	L2x2x3	.082	39.9...	23	.020	79.8...	z	10	3875.1...	23392.8	.558	.967	1...	H...
31	M79	L2x2x3	.123	40.7...	5	.014	0	y	1	3875.1...	23392.8	.558	.967	1...	H...
32	M80	L2x2x3	.098	40.7...	9	.017	79.8...	z	2	3875.1...	23392.8	.558	.967	1...	H...
33	M81	L2x2x3	.127	40.7...	10	.015	79.8...	y	4	3875.1...	23392.8	.558	.967	1...	H...
34	M91	0.62" dia ...	.018	6.31	17	.000	0		25	6900.1...	9781....	.101	.101	1...	H...
35	M92	0.62" dia ...	.018	6.31	17	.000	0		25	6900.1...	9781....	.101	.101	1...	H...
36	M93	0.62" dia ...	.018	6.31	17	.000	0		25	6900.1...	9781....	.101	.101	1...	H...
37	M94	0.62" dia ...	.018	6.31	14	.000	0		25	6900.1...	9781....	.101	.101	1...	H...
38	M95	0.62" dia ...	.018	6.31	14	.000	0		25	6900.1...	9781....	.101	.101	1...	H...
39	M96	0.62" dia ...	.018	6.31	14	.000	0		25	6900.1...	9781....	.101	.101	1...	H...
40	M97	0.62" dia ...	.018	6.31	21	.000	12.62		25	6900.1...	9781....	.101	.101	1...	H...
41	M98	0.62" dia ...	.018	6.31	21	.000	12.62		25	6900.1...	9781....	.101	.101	1...	H...
42	M99	0.62" dia ...	.018	6.31	21	.000	12.62		25	6900.1...	9781....	.101	.101	1...	H...