1/14/2020

Melanie A. Bachman
Executive Director
Connecticut Siting Council
10 Franklin Square
New Britain, CT 06051

Regarding: Notice of Exempt Modification
Property Address: 525 Overland Drive, Orange, CT 06477
AT&T Site: CTL02343 / FA: 10152334

Dear Ms. Bachman:

On behalf of AT&T, please accept this application as notification pursuant to R.C.S.A. §16-50j-73, for construction that constitutes an exempt modification pursuant to R.C.S.A. §16- 50j-72(b) (2).

AT&T currently maintains a wireless telecommunications facility on an existing utility structure at the above-referenced address. Eversource owns said facility, while Thomas and Frances Castiello own the property. The site consists of nine (9) wireless telecommunication antennas at an antenna centerline height of 130 ft. AT&T now intends to remove (3) Andrew SBNH-1D6565B panel antennas on position 1 all sectors, while retaining three (3) Andrew SBNH-1D6565B panel antennas on positions 3, all sectors, and install three (3) new Kathrien 800-10965 panel antennas, position 4 all sectors (for a total of (9) panel antennas), at the 130-foot level. AT&T also intends to install (6) CCI TMABPD7823VG12A tower-mounted amplifiers on the existing antenna masts.

Please accept this letter pursuant to Regulation of Connecticut State Agencies §16-50j-73, for construction that constitutes an exempt modification pursuant to R.C.S.A. § 16-5I0j-72(b) (2). In accordance with R.C.S.A., a copy of this letter is being sent to James Zeoli, First Selectman and Paul Dinice, Zoning Administrator & Enforcement Officer for the town of Orange; Eversource, Inc., facility owner; and Thomas and Frances Castiello, property owners.

The planned modifications to AT&T's facility fall squarely within those activities explicitly provided for in R.C.S.A. §16-50j-72(b) (2).

1. The proposed modifications will not result in an increase in the height of the existing tower. AT&T's replacement antennas will be installed at the 130-foot level on the tower.
2. The proposed modifications will not involve any changes to ground-mounted equipment and, therefore, will not require and extension of the site boundary.
3. The proposed modifications will not increase the noise levels at the facility by six decibels or more, or to levels that exceed state and local criteria.
4. The operation of the modified facility will not increase radio frequency (RF) emissions at the facility to a level at or above the Federal Communications Commission (FCC) safety standard. A

cumulative worst-case RF emissions calculation for AT&T's modified facility is provided in the RF Emissions Compliance Report, included,

5. The proposed modifications will not cause a change or alteration in the physical or environmental characteristics of the site.
6. The tower and its foundation can support AT&T's proposed modifications. (See Structural Analysis Report included).

For the foregoing reasons, AT&T respectfully submits that the proposed modifications to the above referenced telecommunications facility constitutes an exempt modification under R.C.S.A. §16-50j-72(b)(2).

Sincerely,

Ryan Lynch
Real Estate & Construction Specialist
Smartlink
85 Rangeway Rd.
Building 3, Suite 102
North Billerica, MA 01862

Enclosures

CC w/ enclosures:

James Zeoli, First Selectman, Town of Orange
Paul Dinice, Zoning Administrator & Enforcement Officer, Town of Orange
Eversource, Inc., Facility Owner
Thomas and Frances Castiello, Property Owners

From: TrackingUpdates@fedex.com
To: Ryan Lynch
Subject: FedEx Shipment 777473176243 Delivered
Date: Thursday, January 16, 2020 1:44:51 PM

FedEx®

Your package has been delivered

Tracking # 777473176243

Ship date:
Wed, 1/15/2020

Ryan Lynch
Smartlink LLC
North Billerica, MA 01862
US

Delivered

Delivery date:
Thu, 1/16/2020 1:42 pm

ATTN: James Zeoli, First Selectman
TOWN OF ORANGE
617 ORANGE CENTER RD
ORANGE, CT 06477243217
US

Shipment Facts

Our records indicate that the following package has been delivered.

Tracking number:	777473176243
Status:	Delivered: 01/16/2020 1:42 PM Signed for By: MMARY
Reference:	CTL02343
Signed for by:	MMARY
Delivery location:	Orange, CT
Service type:	FedEx Ground
Packaging type:	Package
Number of pieces:	1
Weight:	1.00 lb.
Standard transit:	1/16/2020

Please do not respond to this message. This email was sent from an unattended mailbox. This report was generated at approximately 12:44 PM CST on 01/16/2020.

All weights are estimated.

To track the latest status of your shipment, click on the tracking number above.

Standard transit is the date the package should be delivered by, based on the selected service, destination, and ship date. Limitations and exceptions may apply.Please see the FedEx Service Guide for terms and conditions of service, including the FedEx Money-Back Guarantee, or contact your FedEx Customer Support representative.

© 2020 Federal Express Corporation. The content of this message is protected by copyright and trademark laws under U.S. and international law. Review our privacy policy. All rights reserved.

Thank you for your business.

From: TrackingUpdates@fedex.com
To: Ryan Lynch
Subject: FedEx Shipment 777473228759 Delivered
Date: Thursday, January 16, 2020 11:22:35 AM

FedEx®

Your package has been delivered

Tracking # 777473228759

Ship date:
Wed, 1/15/2020

Ryan Lynch
Smartlink LLC
North Billerica, MA 01862
US

Delivered

Delivery date:
Thu, 1/16/2020 11:21 am

ATTN: Joel Szarkowicz
EVERSOURCE
107 SELDEN ST
BERLIN, CT 06037161607
US

Shipment Facts

Our records indicate that the following package has been delivered.

Tracking number:	777473228759
Status:	Delivered: 01/16/2020 11:21 AM Signed for By: Signature Not Req
Reference:	CTL02343
Signed for by:	Signature Not Req
Service type:	FedEx Ground
Packaging type:	Package
Number of pieces:	1
Weight:	1.00 lb.
Standard transit:	1/16/2020

Please do not respond to this message. This email was sent from an unattended mailbox. This report was generated at approximately 10:22 AM CST on 01/16/2020.

All weights are estimated.

To track the latest status of your shipment, click on the tracking number above.

Standard transit is the date the package should be delivered by, based on the selected service, destination, and ship date. Limitations and exceptions may apply.Please see the FedEx Service Guide for terms and conditions of service, including the FedEx Money-Back Guarantee, or contact your FedEx Customer Support representative.

© 2020 Federal Express Corporation. The content of this message is protected by copyright and trademark laws under U.S. and international law. Review our privacy policy. All rights reserved.

Thank you for your business.

From: TrackingUpdates@fedex.com
To: Ryan Lynch
Subject: FedEx Shipment 777473248658 Delivered
Date: Thursday, January 16, 2020 12:15:15 PM

FedEx®

Your package has been delivered

Tracking # 777473248658

Ship date:
Wed, 1/15/2020

Ryan Lynch
Smartlink LLC
North Billerica, MA 01862
US

Delivered

Delivery date:
Thu, 1/16/2020 12:13 pm

Thomas and Frances Castiello
THOMAS AND FRANCES CASTIELLO
525 OVERLAND DR
ORANGE, CT 06477263525
US

Shipment Facts

Our records indicate that the following package has been delivered.

Tracking number:	777473248658
Status:	Delivered: 01/16/2020 12:13 PM Signed for By: Signature Not Req
Reference:	CTL02343
Signed for by:	Signature Not Req
Service type:	FedEx Ground
Packaging type:	Package
Number of pieces:	1
Weight:	1.00 lb.
Standard transit:	1/16/2020

Please do not respond to this message. This email was sent from an unattended mailbox. This report was generated at approximately 11:15 AM CST on 01/16/2020.

All weights are estimated.

To track the latest status of your shipment, click on the tracking number above.

Standard transit is the date the package should be delivered by, based on the selected service, destination, and ship date. Limitations and exceptions may apply.Please see the FedEx Service Guide for terms and conditions of service, including the FedEx Money-Back Guarantee, or contact your FedEx Customer Support representative.

© 2020 Federal Express Corporation. The content of this message is protected by copyright and trademark laws under U.S. and international law. Review our privacy policy. All rights reserved.

Thank you for your business.

From: TrackingUpdates@fedex.com
To: Ryan Lynch
Subject: FedEx Shipment 777473204670 Delivered
Date: Thursday, January 16, 2020 1:44:47 PM

FedEx®

Your package has been delivered

Tracking # 777473204670

Ship date:
Wed, 1/15/2020

Delivery date:
Thu, 1/16/2020 1:42 pm

Ryan Lynch
Smartlink LLC
North Billerica, MA 01862
US

Delivered

ATTN: Paul Dinice, Zoning
TOWN OF ORANGE
617 ORANGE CENTER RD
ORANGE, CT 06477243217
US

Shipment Facts

Our records indicate that the following package has been delivered.

Tracking number:	777473204670
Status:	Delivered: 01/16/2020 1:42 PM Signed for By: MMARY
Reference:	CTL02343
Signed for by:	MMARY
Delivery location:	Orange, CT
Service type:	FedEx Ground
Packaging type:	Package
Number of pieces:	1
Weight:	1.00 lb.
Standard transit:	1/16/2020

Please do not respond to this message. This email was sent from an unattended mailbox. This report was generated at approximately 12:44 PM CST on 01/16/2020.

All weights are estimated.

To track the latest status of your shipment, click on the tracking number above.

Standard transit is the date the package should be delivered by, based on the selected service, destination, and ship date. Limitations and exceptions may apply.Please see the FedEx Service Guide for terms and conditions of service, including the FedEx Money-Back Guarantee, or contact your FedEx Customer Support representative.

© 2020 Federal Express Corporation. The content of this message is protected by copyright and trademark laws under U.S. and international law. Review our privacy policy. All rights reserved.

Thank you for your business.

525 OVERLAND DR

Location	525 OVERLAND DR	**Mblu**	74/ 1/ 18/ /
Acct#	373500	**Owner**	CASTIELLO THOMAS J & FRANCES
Assessment	$318,100	**Appraisal**	$454,400
PID	3972	**Building Count**	1

Current Value

Appraisal			
Valuation Year	**Improvements**	**Land**	**Total**
2017	$283,400	$171,000	$454,400
Assessment			
Valuation Year	**Improvements**	**Land**	**Total**
2017	$198,400	$119,700	$318,100

Owner of Record

Owner	CASTIELLO THOMAS J & FRANCES	**Sale Price**	$0
Co-Owner		**Certificate**	
Address	525 OVERLAND DR ORANGE, CT 06477	**Book & Page**	300/ 31
		Sale Date	11/27/1985
		Instrument	00

Ownership History

Ownership History					
Owner	**Sale Price**	**Certificate**	**Book & Page**	**Instrument**	**Sale Date**
CASTIELLO THOMAS J & FRANCES	$0		300/ 31	00	11/27/1985

Building Information

Building 1 : Section 1

Year Built: 1973
Living Area: 3,049
Replacement Cost Less Depreciation: $283,400

Building Attributes	
Field	**Description**
Style	Colonial

Model	Residential
Stories	2
Exterior Wall 1	Clapboard
Exterior Wall 2	
Roof Structure	Gable
Roof Cover	Asphalt
Interior Wall 1	Drywall
Interior Wall 2	
Interior Floor 1	Hardwood
Interior Floor 2	
Heat Fuel	Oil
Heat Type	Hot Water
AC Type	Central
Bedrooms	4 Bedrooms
Full Baths	3
Half Baths	1
Extra Fixtures	1
Total Rooms	12
Stacks	1
Fireplace(s)	1
Gas Fireplace(s)	0
Attic	Unfinished
Frame	Wood
Traffic	Light
Bsmt Gar(s)	0
SF FBM	0
Basement	Full
Bsmt Floor	None

Building Photo

74-1-18 03/09/2017

(http://images.vgsi.com/photos/OrangeCTPhotos//\00\01\54/56.

Building Layout

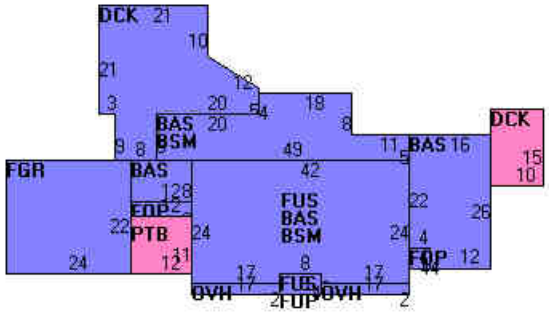

(http://images.vgsi.com/photos/OrangeCTPhotos//Sketches/3972

Building Sub-Areas (sq ft)			Legend
Code	**Description**	**Gross Area**	**Living Area**
BAS	First Floor	1,957	1,957
FUS	Finished Upper Story	1,024	1,024
OVH	Overhang	68	68
BSM	Basement	1,461	0
DCK	Deck	743	0
FGR	Garage	528	0
FOP	Open Porch	84	0
PTB	Brick Patio	132	0
		5,997	3,049

Extra Features

Extra Features	Legend

No Data for Extra Features

Land

Land Use

Use Code	101
Description	Res Dwelling
Zone	RES
Neighborhood	010
Alt Land Appr	No
Category	

Land Line Valuation

Size (Acres)	1.18
Frontage	
Depth	
Assessed Value	$119,700
Appraised Value	$171,000

Outbuildings

Outbuildings	Legend
No Data for Outbuildings	

Valuation History

Appraisal			
Valuation Year	**Improvements**	**Land**	**Total**
2017	$283,400	$171,000	$454,400
2016	$277,700	$166,400	$444,100
2015	$277,700	$166,400	$444,100

Assessment			
Valuation Year	**Improvements**	**Land**	**Total**
2017	$198,400	$119,700	$318,100
2016	$194,400	$116,500	$310,900
2015	$194,400	$116,500	$310,900

(c) 2020 Vision Government Solutions, Inc. All rights reserved.

Petition No. 1043
New Cingular Wireless PCS, LLC
525 Overland Road, Orange
Staff Report
December 27, 2012

On November 8, 2012, the Connecticut Siting Council (Council) received a petition (Petition) from New Cingular Wireless PCS, LLC (CL&P) for a declaratory ruling that no Certificate of Environmental Compatibility and Public Need is required to install a wireless telecommunications facility on an existing CL&P transmission line structure located at 525 Overland Road, Orange. This Petition was field reviewed by Council member Dr. Barbara Bell and Michael Perrone of the Council staff on December 5, 2012. The following representatives also attended the field review: Attorney Lucia Chiocchio from Cuddy and Feder LLP; Michael Libertine and Dean Gustafson from All Points Technology Corp.; and Peter Fales from Centerline Communications Inc.

In order to fill a coverage gap, AT&T investigated existing structures in the area. With no buildings in the area, AT&T contacted The Connecticut Light and Power Company (CL&P) to investigate co-locating on existing transmission structures. After analyzing 10 possible structures offered by CL&P, AT&T chose the existing 120-foot 345-kV monopole transmission structure #24063.

AT&T seeks to install a ten-foot antenna support structure on top of this structure. AT&T would attach nine panel antennas and three tower mounted amplifiers to the antenna support structure at a centerline height of 130 feet above ground level. Cables would be mounted to the exterior of the pole. The existing structure is made of corten steel, which weathers to a dark brown color. The antenna support structure is only available in galvanized steel; however, AT&T would paint the structure to match the corten steel. AT&T would also paint the antennas and cables to match.

A 12-foot by 20-foot equipment shelter would be placed near the base of the structure. The shelter would have a pitched roof and siding for aesthetic purposes. A 50-kW diesel backup generator would be located on a concrete pad. The compound area would be surrounded by a 9-foot tall wood stockade fence.

No lighting or marking of the tower is required per the TOWAIR report. The nearest wetland is approximately 550 feet to the southeast. There would not be an adverse impact to wetland or watercourse resources. No trees greater than 6 inches diameter at breast height would be removed. The site is not located with the shaded area of the Natural Diversity Database of threatened, endangered, or special concern species. Noise absorbing barriers in the vicinity of the backup generator would ensure compliance with State noise regulations at the property lines. The maximum worst-case power density would be 8.04 percent of the applicable limit. A Professional Engineer duly licensed in the State of Connecticut has certified that the transmission tower is structurally adequate to support the proposed loading.

The visibility areas would remain approximately the same. Only areas with existing visibility of the transmission structure would be able to see AT&T's installation. In addition, the color of AT&T's antenna co-location would match the structure. Thus, the visual impact is not expected to be significant.

Notice was provided to the property owner and abutters on or about the date of filing (November 7, 2012). One abutter attended the field review and expressed concerns about whether alternative sites were considered. After the field review, AT&T filed the site search and alternatives details showing that only one of the ten sites offered by CL&P would meet coverage needs, have useable access, ease of utility connections, no wetlands on the site, and a landowner willing to lease ground space.

SHEET INDEX

NO.	DESCRIPTION
T1	TITLE SHEET
C1	GENERAL NOTES
C2	OVERALL & ENLARGED SITE PLAN
C3	ELEVATION VIEW
C4	ANTENNA ORIENTATION PLAN
C5	EQUIPMENT DETAILS
C6	PLUMBING DIAGRAM
C7	GROUNDING DETAILS
T-1	TITLE SHEET (MODIFICATION DRAWINGS BY PJF)
N-1	GENERAL NOTES (MODIFICATION DRAWINGS BY PJF)
MI-1	INSPECTION NOTES (MODIFICATION DRAWINGS BY PJF)
S-1	TOWER ELEVATIONS AND MATERIAL LIST (MODIFICATION DRAWINGS BY PJF)
S-2	TOWER ELEVATIONS AND SECTIONS (MODIFICATION DRAWINGS BY PJF)

DRIVING DIRECTIONS

FROM 550 COCHITUATE RD.:

GET ON I-90 WEST MASSACHUSETTS TURNPIKE FROM SPEEN STREET. HEAD NORTHEAST TOWARD SPEEN STREET. TURN RIGHT TOWARD SPEEN STREET. TURN RIGHT ONTO SPEEN STREET. TURN RIGHT ONTO SPEEN STREET. TURN RIGHT ONTO COCHITUATE ROAD. USE THE RIGHT LANE TO TAKE THE RAMP TO I-90/MASSPIKE/SPRINGFIELD/BOSTON. KEEP LEFT AT THE FORK, FOLLOW SIGNS FOR I-90 WEST/MASSACHUSETTS TURNPIKE/WORCESTER/SPRINGFIELD AND MERGE ONTO I-90 WEST/MASSACHUSETTS TURNPIKE. CONTINUE ON I-90 WEST/MASSACHUSETTS TURNPIKE. TAKE I-84, I-91 SOUTH AND CT-15 SOUTH/WILBUR CROSS PKWY TO CT-34 EAST/DERBY AVE/DERBY TURNPIKE IN ORANGE. TAKE EXIT 57 FROM CT-15 SOUTH/WILBUR CROSS PKWY. MERGE ONTO I-90 WEST/MASSACHUSETTS TURNPIKE. USE THE RIGHT 2 LANES TO TAKE EXIT 9 FOR I-84 TOWARD US-20/HARTFORD/NEW YORK CITY. CONTINUE ONTO I-84. USE THE LEFT 2 LANES TO TAKE EXIT 57 FOR CT-15 SOUTH TOWARD I-91 SOUTH/CHARTER OAK BRIDGE/N.Y. CITY. CONTINUE ONTO CT-15 SOUTH. CONTINUE ONTO CT-15 SOUTH/US-5 SOUTH. TAKE EXIT 86 TO MERGE ONTO I-91 SOUTH TOWARD NEW HAVEN/NEW YORK CITY. TAKE EXIT 17 TO MERGE ONTO CT-15 SOUTH/WILBUR CROSS PKWY. TAKE EXIT 57 TO MERGE ONTO CT-34 EAST/DERBY AVE/DERBY TURNPIKE TOWARD ORANGE. CONTINUE ON CT-34 EAST/DERBY AVE/DERBY TURNPIKE. TAKE RACEBROOK ROAD TO OVERLAND DRIVE. MERGE ONTO CT-34 EAST/DERBY AVE/DERBY TURNPIKE. TURN RIGHT ONTO RACEBROOK ROAD. TURN LEFT ONTO RUSSELL AVE. TURN LEFT ONTO NEW ENGLAND LANE. TURN LEFT ONTO OVERLAND DRIVE.

LOCATION MAP

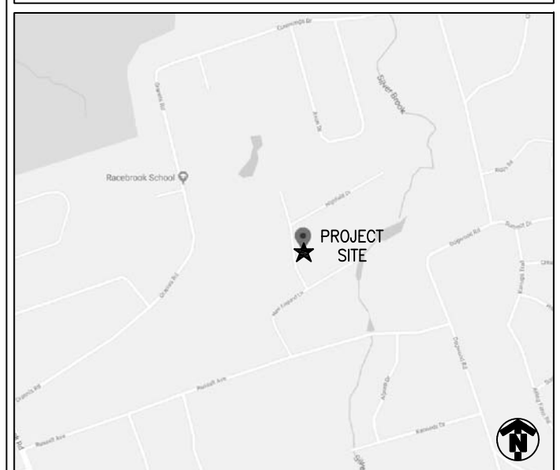

at&t

PROJECT

LTE 6C/7C/RETROFIT/5G NR

SITE NAME

ORANGE OVERLAND DRIVE

CELL SITE ID

CTL02343

FA SITE NUMBER

10152334

PACE ID

MRCTB033651/MRCTB033891/MRCTB033812
MRCTB033815/MRCTB034882

SITE ADDRESS

525 OVERLAND DRIVE
ORANGE, CT 06477

STRUCTURE TYPE

MONOPOLE

PROJECT TEAM

smartlink

PROJECT MANAGER

INFINIGY

1033 Watervliet Shaker Rd
Albany, NY 12205
Office # (518) 690-0790
Fax # (518) 690-0793

ENGINEER

SCOPE OF WORK (PER LTE RFDS, DATED: 12/26/2018, V3.00):

- HANDICAP ACCESS REQUIREMENTS ARE NOT REQUIRED.
- FACILITY IS UNMANNED AND NOT FOR HUMAN HABITATION.
- FACILITY HAS NO PLUMBING OR REFRIGERANTS.
- THIS FACILITY SHALL MEET OR EXCEED ALL FAA AND FCC REGULATORY REQUIREMENTS.
- ALL NEW MATERIAL SHALL BE FURNISHED AND INSTALLED BY CONTRACTOR UNLESS NOTED OTHERWISE. EQUIPMENT, ANTENNAS/RRU AND CABLES FURNISHED BY OWNER AND INSTALLED BY CONTRACTOR.

TOWER SCOPE

- REMOVE (3) PANEL ANTENNAS
- INSTALL (3) PANEL ANTENNAS
- REPLACE (6) TMA UNITS
- INSTALL MOUNT MODIFICATIONS

GROUND SCOPE

- SWAP (2) DUS WITH (2) 5216
- SWAP IDL2 WITH IDLe
- ADD 6630
- REMOVE (6) RRUS-12
- REMOVE (3) RRUS-11
- INSTALL (3) B5/B12 4449
- INSTALL (3) B2/B66A 8843
- INSTALL (2) B14 4478

PROJECT SUMMARY

SITE NAME:	ORANGE OVERLAND DRIVE	
CELL SITE ID:	CTL02343	
FA SITE #:	10152334	
SITE ADDRESS:	525 OVERLAND DRIVE ORANGE, CT 06477	
COUNTY:	NEW HAVEN	
SITE COORDINATES: LATITUDE:	41.2893611° N	(NAD 83)
LONGITUDE:	73.0010833° W	(NAD 83)
ELEVATION:	±249'	(AMSL)
RAD CENTER	±130'	(AGL)
LANDLORD:	THOMAS AND FRANCES CASTILLO – GROUND CL&P/EVERSOURCE ENERGY-POLE/SHELTER 107 SELDON STREET BERLIN, CT 06037 EVERSOURCE STRUCTURE 24063	
APPLICANT:	AT&T MOBILITY 550 COCHITUATE RD. FRAMINGHAM, MA 01701	
CLIENT REPRESENTATIVE:	SMARTLINK, LLC 85 RANGEWAY RD. SUITE 102 NORTH BILLERICA, MA 01862	
CONTACT:	ED WEISSMAN (917) 528-1857	
ENGINEER:	INFINIGY 1033 WATERVLIET SHAKER ROAD ALBANY, NY 12205	
CONTACT:	ALEX WELLER (518) 690-0790	
BUILDING CODE:	CT BUILDING CODE UNIFORM BUILDING CODE BUILDING OFFICIALS & CODE ADMINISTRATORS UNIFORM MECHANICAL CODE UNIFORM PLUMBING CODE LOCAL BUILDING CODE CITY/COUNTY ORDINANCES	
ELECTRICAL CODE:	NATIONAL ELECTRICAL CODE (LATEST EDITION)	

811 Know what's below. Call before you dig.

TO OBTAIN LOCATION OF PARTICIPANTS UNDERGROUND FACILITIES BEFORE YOU DIG IN CONNECTICUT, CONTACT CALL BEFORE YOU DIG
TOLL FREE: 1-800-922-4455 OR
www.cbyd.com
CONNECTICUT STATUTE REQUIRES MIN OF 2 WORKING DAYS NOTICE BEFORE YOU EXCAVATE

INFINIGY
1033 Watervliet Shaker Rd
Albany, NY 12205
Office # (518) 690-0790
Fax # (518) 690-0793

at&t

STATE OF CONNECTICUT · JOHN C. STEVENS · 24765 · LICENSED PROFESSIONAL ENGINEER
10/29/2019

UNAUTHORIZED ALTERATION OR ADDITION TO THIS DOCUMENT IS A VIOLATION OF APPLICABLE STATE AND/OR LOCAL LAWS

No.	Submittal / Revision	App'd	Date
4	ISSUED FOR PERMIT	ASW	10/29/19
3	ISSUED FOR PERMIT	ASW	07/29/19
2	ISSUED FOR PERMIT	ASW	04/17/19
1	ISSUED FOR PERMIT	ASW	03/26/19
0	ISSUED FOR REVIEW	BMM	01/03/19

Drawn: BMM Date: 01/03/19
Designed: ASW Date: 01/03/19
Checked: ASW Date: 01/03/19

Project Number: 1106-A0001-C

Project Title:
ORANGE OVERLAND DRIVE
CTL02343
FA# 10152334
525 OVERLAND DRIVE
ORANGE, CT 06477

Prepared For: smartlink

Drawing Scale: AS NOTED
Date: 10/29/19
CD

Drawing Title
TITLE PAGE

Drawing Number
T1

GENERAL NOTES

PART 1 – GENERAL REQUIREMENTS

1.1 THE WORK SHALL COMPLY WITH APPLICABLE NATIONAL CODES AND STANDARDS, LATEST EDITION, AND PORTIONS THEREOF, INCLUDED BUT NOT LIMITED TO THE FOLLOWING:
A. GR-63-CORE NEBS REQUIREMENTS: PHYSICAL PROTECTION
B. GR-78-CORE GENERIC REQUIREMENTS FOR THE PHYSICAL DESIGN AND MANUFACTURE OF TELECOMMUNICATIONS EQUIPMENT.
C. NATIONAL FIRE PROTECTION ASSOCIATION CODES AND STANDARDS (NFPA) INCLUDING NFPA 70 (NATIONAL ELECTRICAL CODE – "NEC").
D. AND NFPA 101 (LIFE SAFETY CODE).
E. AMERICAN SOCIETY FOR TESTING OF MATERIALS (ASTM).
F. INSTITUTE OF ELECTRONIC AND ELECTRICAL ENGINEERS (IEEE).

1.2 DEFINITIONS:
A: WORK: THE SUM OF TASKS AND RESPONSIBILITIES IDENTIFIED IN THE CONTRACT DOCUMENTS.
B: COMPANY: AT&T CORPORATION
C. ENGINEER: SYNONYMOUS WITH ARCHITECT & ENGINEER AND "A&E". THE DESIGN PROFESSIONAL HAVING PROFESSIONAL RESPONSIBILITY FOR DESIGN OF THE PROJECT.
D: CONTRACTOR: CONSTRUCTION CONTRACTOR; CONSTRUCTION VENDOR; INDIVIDUAL OR ENTITY WHO AFTER EXECUTION OF A CONTRACT IS BOUND TO ACCOMPLISH THE WORK.
E: THIRD PARTY VENDOR OR AGENCY: A VENDOR OR AGENCY ENGAGED SEPARATELY BY THE COMPANY, A&E, OR CONTRACTOR TO PROVIDE MATERIALS OR TO ACCOMPLISH SPECIFIC TASKS RELATED TO BUT NOT INCLUDED IN THE WORK.

1.3 POINT OF CONTACT: COMMUNICATION BETWEEN THE COMPANY AND THE CONTRACTOR SHALL FLOW THROUGH THE SINGLE COMPANY SITE DEVELOPMENT SPECIALIST OR OTHER PROJECT COORDINATOR APPOINTED TO MANAGE THE PROJECT FOR THE COMPANY.

1.4 ON-SITE SUPERVISION: THE CONTRACTOR SHALL SUPERVISE AND DIRECT THE WORK AND SHALL BE RESPONSIBLE FOR CONSTRUCTION MEANS, METHODS, TECHNIQUES, SEQUENCES, AND PROCEDURES IN ACCORDANCE WITH THE CONTRACT DOCUMENTS. THE CONTRACTOR SHALL EMPLOY A COMPETENT SUPERINTENDENT WHO SHALL BE IN ATTENDANCE AT THE SITE AT ALL TIMES DURING PERFORMANCE OF THE WORK.

1.5 DRAWINGS, SPECIFICATIONS AND DETAILS REQUIRED AT JOBSITE: THE CONSTRUCTION CONTRACTOR SHALL MAINTAIN A FULL SET OF THE CONSTRUCTION DRAWINGS, STANDARD CONSTRUCTION DETAILS FOR WIRELESS SITES, AND THE STANDARD CONSTRUCTION SPECIFICATIONS FOR WIRELESS SITES AT THE JOBSITE FROM MOBILIZATION THROUGH CONSTRUCTION COMPLETION.
A. THE JOBSITE DRAWINGS, SPECIFICATIONS AND DETAILS SHALL BE CLEARLY MARKED DAILY IN PENCIL WITH ANY CHANGES IN CONSTRUCTION OVER WHAT IS DEPICTED IN THE DOCUMENTS. AT CONSTRUCTION COMPLETION, THIS JOBSITE MARKUP SET SHALL BE DELIVERED TO THE COMPANY OR COMPANY'S DESIGNATED REPRESENTATIVE TO BE FORWARDED TO THE COMPANY'S A&E VENDOR FOR PRODUCTION OF "AS-BUILT" DRAWINGS.

1.6 USE OF JOB SITE: THE CONTRACTOR SHALL CONFINE ALL CONSTRUCTION AND RELATED OPERATIONS INCLUDING STAGING AND STORAGE OF MATERIALS AND EQUIPMENT, PARKING, TEMPORARY FACILITIES, AND WASTE STORAGE TO THE LEASE PARCEL UNLESS OTHERWISE PERMITTED BY THE CONTRACT DOCUMENTS.

1.7 NOTICE TO PROCEED:
A. NO WORK SHALL COMMENCE PRIOR TO COMPANY'S WRITTEN NOTICE TO PROCEED.
B. UPON RECEIVING NOTICE TO PROCEED, CONTRACTOR SHALL FULLY PERFORM ALL WORK NECESSARY TO PROVIDE AT&T WITH AN OPERATIONAL WIRELESS FACILITY.

PART 2 – EXECUTION

2.1 TEMPORARY UTILITIES AND FACILITIES: THE CONTRACTOR SHALL BE RESPONSIBLE FOR ALL TEMPORARY UTILITIES AND FACILITIES NECESSARY EXCEPT AS OTHERWISE INDICATED IN THE CONSTRUCTION DOCUMENTS. TEMPORARY UTILITIES AND FACILITIES INCLUDE, POTABLE WATER, HEAT, HVAC, ELECTRICITY, SANITARY FACILITIES, WASTE DISPOSAL FACILITIES, AND TELEPHONE/COMMUNICATION SERVICES. PROVIDE TEMPORARY UTILITIES AND FACILITIES IN ACCORDANCE WITH OSHA AND THE AUTHORITY HAVING JURISDICTION. CONTRACTOR MAY UTILIZE THE COMPANY ELECTRICAL SERVICE IN THE COMPLETION OF THE WORK WHEN IT BECOMES AVAILABLE. USE OF THE LESSORS OR SITE OWNER'S UTILITIES OR FACILITIES IS EXPRESSLY FORBIDDEN EXCEPT AS OTHERWISE ALLOWED IN THE CONTRACT DOCUMENTS.

2.2 ACCESS TO WORK: THE CONTRACTOR SHALL PROVIDE ACCESS TO THE JOB SITE FOR AUTHORIZED COMPANY PERSONNEL AND AUTHORIZED REPRESENTATIVES OF THE ARCHITECT/ENGINEER DURING ALL PHASES OF THE WORK.

2.3 TESTING: REQUIREMENTS FOR TESTING BY THIS CONTRACTOR SHALL BE AS INDICATED HEREWITH, ON THE CONSTRUCTION DRAWINGS, AND IN THE INDIVIDUAL SECTIONS OF THESE SPECIFICATIONS. SHOULD COMPANY CHOOSE TO ENGAGE ANY THIRD-PARTY TO CONDUCT ADDITIONAL TESTING, THE CONTRACTOR SHALL COOPERATE WITH AND PROVIDE A WORK AREA FOR COMPANY'S TEST AGENCY.

2.4 COMPANY FURNISHED MATERIAL AND EQUIPMENT: ALL HANDLING, STORAGE AND INSTALLATION OF COMPANY FURNISHED MATERIAL AND EQUIPMENT SHALL BE IN ACCORDANCE WITH THE REQUIREMENTS OF THE CONTRACT DOCUMENTS AND WITH THE MANUFACTURER'S INSTRUCTIONS AND RECOMMENDATIONS.
A. CONTRACTOR SHALL PROCURE ALL OTHER REQUIRED WORK RELATED MATERIALS NOT PROVIDED BY AT&T TO SUCCESSFULLY CONSTRUCT A WIRELESS FACILITY.

2.5 DIMENSIONS: VERIFY DIMENSIONS INDICATED ON DRAWINGS WITH FIELD DIMENSIONS BEFORE FABRICATION OR ORDERING OF MATERIALS. DO NOT SCALE DRAWINGS.

2.6 EXISTING CONDITIONS: NOTIFY THE COMPANY REPRESENTATIVE OF EXISTING CONDITIONS DIFFERING FROM THOSE INDICATED ON THE DRAWINGS. DO NOT REMOVE OR ALTER STRUCTURAL COMPONENTS WITHOUT PRIOR WRITTEN APPROVAL FROM THE ARCHITECT AND ENGINEER.

PART 3 – RECEIPT OF MATERIAL & EQUIPMENT

3.1 RECEIPT OF MATERIAL AND EQUIPMENT: CONTRACTOR IS RESPONSIBLE FOR AT&T PROVIDED MATERIAL AND EQUIPMENT AND UPON RECEIPT SHALL:
A. ACCEPT DELIVERIES AS SHIPPED AND TAKE RECEIPT.
B. VERIFY COMPLETENESS AND CONDITION OF ALL DELIVERIES.
C. TAKE RESPONSIBILITY FOR EQUIPMENT AND PROVIDE INSURANCE PROTECTION AS REQUIRED IN AGREEMENT.
D. RECORD ANY DEFECTS OR DAMAGES AND WITHIN TWENTY-FOUR HOURS AFTER RECEIPT, REPORT TO AT&T OR ITS DESIGNATED PROJECT REPRESENTATIVE OF SUCH.
E. PROVIDE SECURE AND NECESSARY WEATHER PROTECTED WAREHOUSING.
F. COORDINATE SAFE AND SECURE TRANSPORTATION OF MATERIAL AND EQUIPMENT, DELIVERING AND OFF-LOADING FROM CONTRACTOR'S WAREHOUSE TO SITE.

PART 4 – GENERAL REQUIREMENTS FOR CONSTRUCTION

4.1 CONTRACTOR SHALL KEEP THE SITE FREE FROM ACCUMULATING WASTE MATERIAL, DEBRIS, AND TRASH. AT THE COMPLETION OF THE WORK, CONTRACTOR SHALL REMOVE FROM THE SITE ALL REMAINING RUBBISH, IMPLEMENTS, TEMPORARY FACILITIES, AND SURPLUS MATERIALS.

4.2 EQUIPMENT ROOMS SHALL AT ALL TIMES BE MAINTAINED "BROOM CLEAN" AND CLEAR OF DEBRIS.

4.3 CONTRACTOR SHALL TAKE ALL REASONABLE PRECAUTIONS TO DISCOVER AND LOCATE ANY HAZARDOUS CONDITION.
A. IN THE EVENT CONTRACTOR ENCOUNTERS ANY HAZARDOUS CONDITION WHICH HAS NOT BEEN ABATED OR OTHERWISE MITIGATED, CONTRACTOR AND ALL OTHER PERSONS SHALL IMMEDIATELY STOP WORK IN THE AFFECTED AREA AND NOTIFY COMPANY IN WRITING. THE WORK IN THE AFFECTED AREA SHALL NOT BE RESUMED EXCEPT BY WRITTEN NOTIFICATION BY COMPANY.
B. CONTRACTOR AGREES TO USE CARE WHILE ON THE SITE AND SHALL NOT TAKE ANY ACTION THAT WILL OR MAY RESULT IN OR CAUSE THE HAZARDOUS CONDITION TO BE FURTHER RELEASED IN THE ENVIRONMENT, OR TO FURTHER EXPOSE INDIVIDUALS TO THE HAZARD.

4.4 CONTRACTOR'S ACTIVITIES SHALL BE RESTRICTED TO THE PROJECT LIMITS. SHOULD AREAS OUTSIDE THE PROJECT LIMITS BE AFFECTED BY CONTRACTOR'S ACTIVITIES, CONTRACTOR SHALL IMMEDIATELY RETURN THEM TO ORIGINAL CONDITION.

4.5 CONDUCT TESTING AS REQUIRED HEREIN.

PART 5 – TESTS AND INSPECTIONS

5.1 TESTS AND INSPECTIONS:
A. THE CONTRACTOR SHALL BE RESPONSIBLE FOR ALL CONSTRUCTION TESTS, INSPECTIONS AND PROJECT DOCUMENTATION.

B. CONTRACTOR SHALL COORDINATE TEST AND INSPECTION SCHEDULES WITH COMPANY'S REPRESENTATIVE WHO MUST BE ON SITE TO WITNESS SUCH TESTS AND INSPECTIONS.

C. WHEN THE USE OF A THIRD PARTY INDEPENDENT TESTING AGENCY IS REQUIRED, THE AGENCY THAT IS SELECTED MUST PERFORM SUCH WORK ON A REGULAR BASIS IN THE STATE WHERE THE PROJECT IS LOCATED AND HAVE A THOROUGH UNDERSTANDING OF LOCAL AVAILABLE MATERIALS, INCLUDING THE SOIL, ROCK, AND GROUNDWATER CONDITIONS.

D. THE THIRD PARTY TESTING AGENCY IS TO BE FAMILIAR WITH THE APPLICABLE REQUIREMENTS FOR THE TESTS TO BE DONE, EQUIPMENT TO BE USED, AND ASSOCIATED HEALTH AND SAFETY ISSUES.

E. SITE RESISTANCE TO EARTH TESTING PER EXHIBIT: CELL SITE GROUNDING SYSTEM DESIGN.

F. ANTENNA AND COAX SWEEP TESTS PER EXHIBIT: ANTENNA TRANSMISSION LINE ACCEPTANCE STANDARDS.

G. ALL OTHER TESTS REQUIRED BY COMPANY OR JURISDICTION.

PART 6 – TRENCHING AND BACKFILLING

6.1 TRENCHING AND BACKFILLING: THE CONTRACTOR SHALL PERFORM ALL EXCAVATION OF EVERY DESCRIPTION AND OF WHATEVER SUBSTANCES ENCOUNTERED, TO THE DEPTHS INDICATED ON THE CONSTRUCTION DRAWINGS OR AS OTHERWISE SPECIFIED.

A. PROTECTION OF EXISTING UTILITIES: THE CONTRACTOR SHALL CHECK WITH THE LOCAL UTILITIES AND THE RESPECTIVE UTILITY LOCATOR COMPANIES PRIOR TO STARTING EXCAVATION OPERATIONS IN EACH RESPECTIVE AREA TO ASCERTAIN THE LOCATIONS OF KNOWN UTILITY LINES. THE LOCATIONS, NUMBER AND TYPES OF EXISTING UTILITY LINES DETAILED ON THE CONSTRUCTION DRAWINGS ARE APPROXIMATE AND DO NOT REPRESENT EXACT INFORMATION. THE CONTRACTOR SHALL BE RESPONSIBLE FOR REPAIRING ALL LINES DAMAGED DURING EXCAVATION AND ALL ASSOCIATED OPERATIONS. ALL UTILITY LINES UNCOVERED DURING THE EXCAVATION OPERATIONS, SHALL BE PROTECTED FROM DAMAGE DURING EXCAVATION AND ASSOCIATED OPERATIONS. ALL REPAIRS SHALL BE APPROVED BY THE UTILITY COMPANY.

B. HAND DIGGING: UNLESS APPROVED IN WRITING OTHERWISE, ALL DIGGING WITHIN AN EXISTING CELL SITE COMPOUND IS TO BE DONE BY HAND.

C. DURING EXCAVATION, MATERIAL SUITABLE FOR BACKFILLING SHALL BE STOCKPILED IN AN ORDERLY MANNER A SUFFICIENT DISTANCE FROM THE BANKS OF THE TRENCH TO AVOID OVERLOADING AND TO PREVENT SLIDES OR CAVE-INS. ALL EXCAVATED MATERIALS NOT REQUIRED OR SUITABLE FOR BACKFILL SHALL BE REMOVED AND DISPOSED OF AT THE CONTRACTOR'S EXPENSE.

D. GRADING SHALL BE DONE AS MAY BE NECESSARY TO PREVENT SURFACE WATER FROM FLOWING INTO TRENCHES OR OTHER EXCAVATIONS, AND ANY WATER ACCUMULATING THEREIN SHALL BE REMOVED BY PUMPING OR BY OTHER APPROVED METHOD.

E. SHEETING AND SHORING SHALL BE DONE AS NECESSARY FOR THE PROTECTION OF THE WORK AND FOR THE SAFETY OF PERSONNEL. UNLESS OTHERWISE INDICATED, EXCAVATION SHALL BE BY OPEN CUT, EXCEPT THAT SHORT SECTIONS OF A TRENCH MAY BE TUNNELED IF, THE CONDUIT CAN BE SAFELY AND PROPERLY INSTALLED AND BACKFILL CAN BE PROPERLY TAMPED IN SUCH TUNNEL SECTIONS. EARTH EXCAVATION SHALL COMPRISE ALL MATERIALS AND SHALL INCLUDE CLAY, SILT, SAND, MUCK, GRAVEL, HARDPAN, LOOSE SHALE, AND LOOSE STONE.

F. TRENCHES SHALL BE OF NECESSARY WIDTH FOR THE PROPER LAYING OF THE CONDUIT OR CABLE, AND THE BANKS SHALL BE AS NEARLY VERTICAL AS PRACTICABLE. THE BOTTOM OF THE TRENCHES SHALL BE ACCURATELY GRADED TO PROVIDE UNIFORM BEARING AND SUPPORT FOR EACH SECTION OF THE CONDUIT OR CABLE ON UNDISTURBED SOIL AT EVERY POINT ALONG ITS ENTIRE LENGTH. EXCEPT WHERE ROCK IS ENCOUNTERED, CARE SHALL BE TAKEN NOT TO EXCAVATE BELOW THE DEPTHS INDICATED. WHERE ROCK EXCAVATIONS ARE NECESSARY, THE ROCK SHALL BE EXCAVATED TO A MINIMUM OVER DEPTH OF 6 INCHES BELOW THE TRENCH DEPTHS INDICATED ON THE CONSTRUCTION DRAWINGS OR SPECIFIED. OVER DEPTHS IN THE ROCK EXCAVATION AND UNAUTHORIZED OVER DEPTHS SHALL BE THOROUGHLY BACK FILLED AND TAMPED TO THE APPROPRIATE GRADE. WHENEVER WET OR OTHERWISE UNSTABLE SOIL THAT IS INCAPABLE OF PROPERLY SUPPORTING THE CONDUIT OR CABLE IS ENCOUNTERED IN THE BOTTOM OF THE TRENCH, SUCH SOLID SHALL BE REMOVED TO A MINIMUM OVER DEPTH OF 6 INCHES AND THE TRENCH BACKFILLED TO THE PROPER GRADE WITH EARTH OF OTHER SUITABLE MATERIAL, AS HEREINAFTER SPECIFIED.

G. BACKFILLING OF TRENCHES. TRENCHES SHALL NOT BE BACKFILLED UNTIL ALL SPECIFIED TESTS HAVE BEEN PERFORMED AND ACCEPTED. WHERE COMPACTED BACKFILL IS NOT INDICATED THE TRENCHES SHALL BE CAREFULLY BACKFILLED WITH SELECT MATERIAL SUCH AS EXCAVATED SOILS THAT ARE FREE OF ROOTS, SOD, RUBBISH OR STONES, DEPOSITED IN 6 INCH LAYERS AND THOROUGHLY AND CAREFULLY RAMMED UNTIL THE CONDUIT OR CABLE HAS A COVER OF NOT LESS THAN 1 FOOT. THE REMAINDER OF THE BACKFILL MATERIAL SHALL BE GRANULAR IN NATURE AND SHALL NOT CONTAIN ROOTS, SOD, RUBBING, OR STONES OF 2-1/2 INCH MAXIMUM DIMENSION. BACKFILL SHALL BE CAREFULLY PLACED IN THE TRENCH AND IN 1 FOOT LAYERS AND EACH LAYER TAMPED. SETTLING THE BACKFILL WITH WATER WILL BE PERMITTED. THE SURFACE SHALL BE GRADED TO A REASONABLE UNIFORMITY AND THE MOUNDING OVER THE TRENCHES LEFT IN A UNIFORM AND NEAT CONDITION.

SYMBOL	DESCRIPTION
	CIRCUIT BREAKER
	NON-FUSIBLE DISCONNECT SWITCH
F	FUSIBLE DISCONNECT SWITCH
	SURFACE MOUNTED PANEL BOARD
T	TRANSFORMER
M	KILOWATT HOUR METER
JB	JUNCTION BOX
PB	PULL BOX TO NEC/TELCO STANDARDS
	UNDERGROUND UTILITIES
	EXOTHERMIC WELD CONNECTION
	MECHANICAL CONNECTION
OR	GROUND ROD
OR	GROUND ROD WITH INSPECTION SLEEVE
	GROUND BAR
	120AC DUPLEX RECEPTACLE
G	GROUND CONDUCTOR
	DC POWER AND FIBER OPTIC TRUNK CABLES
	DC POWER CABLES
# / #	REPRESENTS DETAIL NUMBER / REF. DRAWING NUMBER

ABBREVIATIONS

CIGBE	COAX ISOLATED GROUND BAR EXTERNAL
MIGB	MASTER ISOLATED GROUND BAR
SST	SELF SUPPORTING TOWER
GPS	GLOBAL POSITIONING SYSTEM
TYP.	TYPICAL
DWG	DRAWING
BCW	BARE COPPER WIRE
BFG	BELOW FINISH GRADE
PVC	POLYVINYL CHLORIDE
CAB	CABINET
C	CONDUIT
SS	STAINLESS STEEL
G	GROUND
AWG	AMERICAN WIRE GAUGE
RGS	RIGID GALVANIZED STEEL
AHJ	AUTHORITY HAVING JURISDICTION
TTLNA	TOWER TOP LOW NOISE AMPLIFIER
UNO	UNLESS NOTED OTHERWISE
EMT	ELECTRICAL METALLIC TUBING
AGL	ABOVE GROUND LEVEL

INFINIGY
1033 Watervliet Shaker Rd
Albany, NY 12205
Office # (518) 690-0790
Fax # (518) 690-0793

at&t

STATE OF CONNECTICUT
JOHN S. STEVENS
24705
10/29/2019
LICENSED PROFESSIONAL ENGINEER

UNAUTHORIZED ALTERATION OR ADDITION TO THIS DOCUMENT IS A VIOLATION OF APPLICABLE STATE AND/OR LOCAL LAWS

No.	Submittal / Revision	App'd	Date
4	ISSUED FOR PERMIT	ASW	10/29/19
3	ISSUED FOR PERMIT	ASW	07/29/19
2	ISSUED FOR PERMIT	ASW	04/17/19
1	ISSUED FOR PERMIT	ASW	03/26/19
0	ISSUED FOR REVIEW	BMM	01/03/19

Drawn: BMM Date: 01/03/19
Designed: ASW Date: 01/03/19
Checked: ASW Date: 01/03/19

Project Number: 1106-A0001-C

Project Title:
ORANGE
OVERLAND DRIVE
CTL02343
FA# 10152334
525 OVERLAND DRIVE
ORANGE, CT 06477

Prepared For: smartlink

Drawing Scale: AS NOTED
Date: 10/29/19
CD

Drawing Title
GENERAL NOTES

Drawing Number
C1

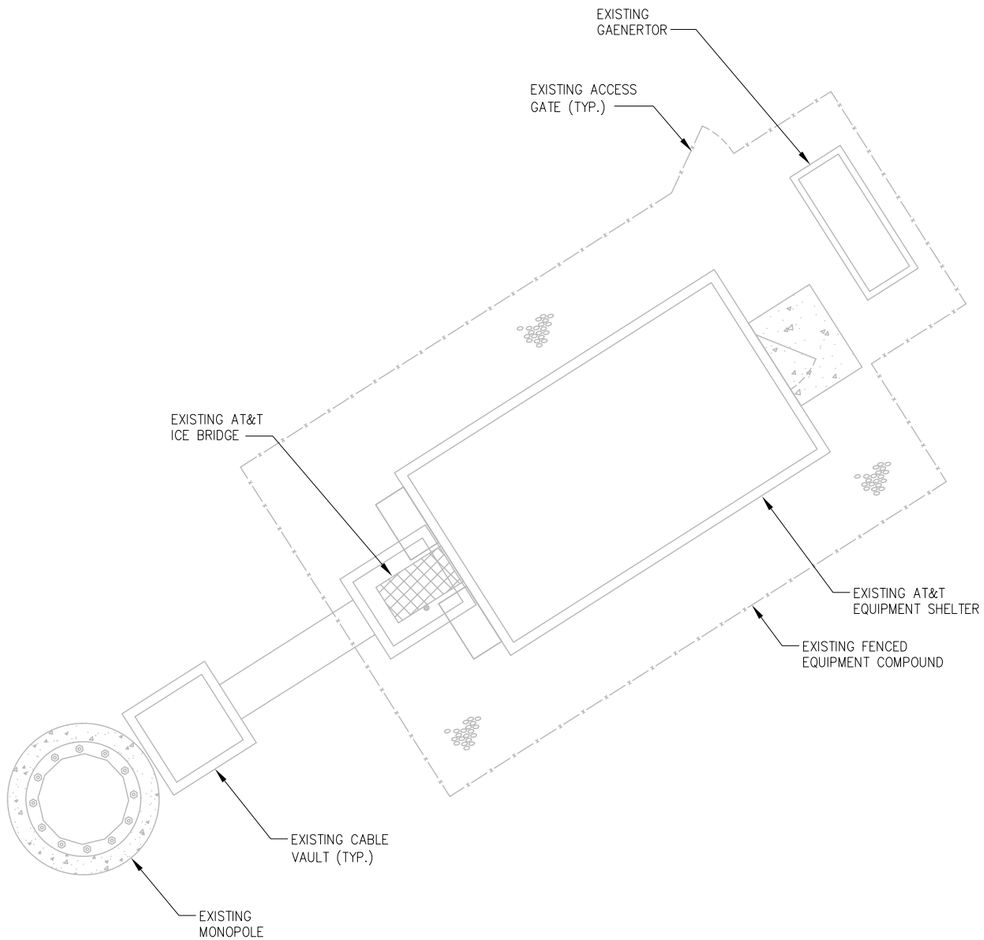

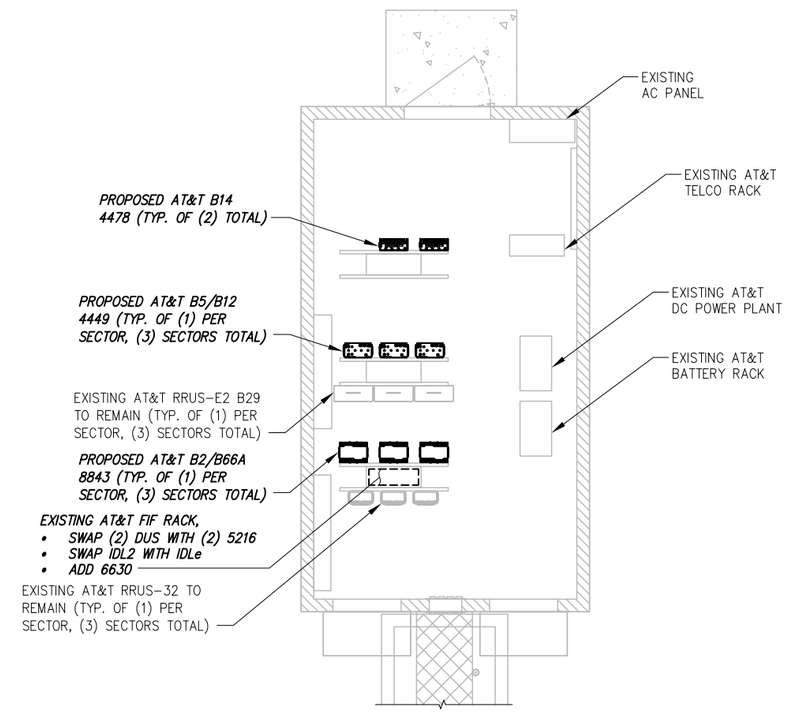

BASEMAPPING PREPARED FROM A SITE WALK PERFORMED BY INFINIGY ENGINEERING ON 12/10/18 AND PROVIDED INFORMATION, AND DOES NOT REPRESENT AN ACTUAL FIELD SURVEY.

TRUE NORTH

1 OVERALL COMPOUND PLAN
SCALE: AS NOTED

GRAPHIC SCALE:
10' 5' 0 5' 10'
SCALE (11x17): 1" = 10'-0"
SCALE (22x34): 1" = 5'-0"

TRUE NORTH

2 ENLARGED EQUIPMENT PLAN
SCALE: AS NOTED

GRAPHIC SCALE:
6' 3' 0 3' 6'
SCALE (11x17): 1" = 6'-0"
SCALE (22x34): 1" = 3'-0"

INFINIGY
1033 Watervliet Shaker Rd
Albany, NY 12205
Office # (518) 690-0790
Fax # (518) 690-0793

at&t

STATE OF CONNECTICUT
JOHN S. STEVENS
24725
LICENSED PROFESSIONAL ENGINEER
10/29/2019

ANY ALTERATION OR ADDITION TO THIS DOCUMENT IS A VIOLATION OF APPLICABLE STATE AND/OR LOCAL LAWS

No.	Submittal / Revision	App'd	Date
4	ISSUED FOR PERMIT	ASW	10/29/19
3	ISSUED FOR PERMIT	ASW	07/29/19
2	ISSUED FOR PERMIT	ASW	04/17/19
1	ISSUED FOR PERMIT	ASW	03/26/19
0	ISSUED FOR REVIEW	BMM	01/03/19

Drawn: BMM Date: 01/03/19
Designed: ASW Date: 01/03/19
Checked: ASW Date: 01/03/19

Project Number: 1106-A0001-C

Project Title:
ORANGE
OVERLAND DRIVE
CTL02343
FA# 10152334
525 OVERLAND DRIVE
ORANGE, CT 06477

Prepared For: smartlink

Drawing Scale: AS NOTED
Date: 10/29/19
CD

Drawing Title
OVERALL & ENLARGED SITE PLAN

Drawing Number
C2

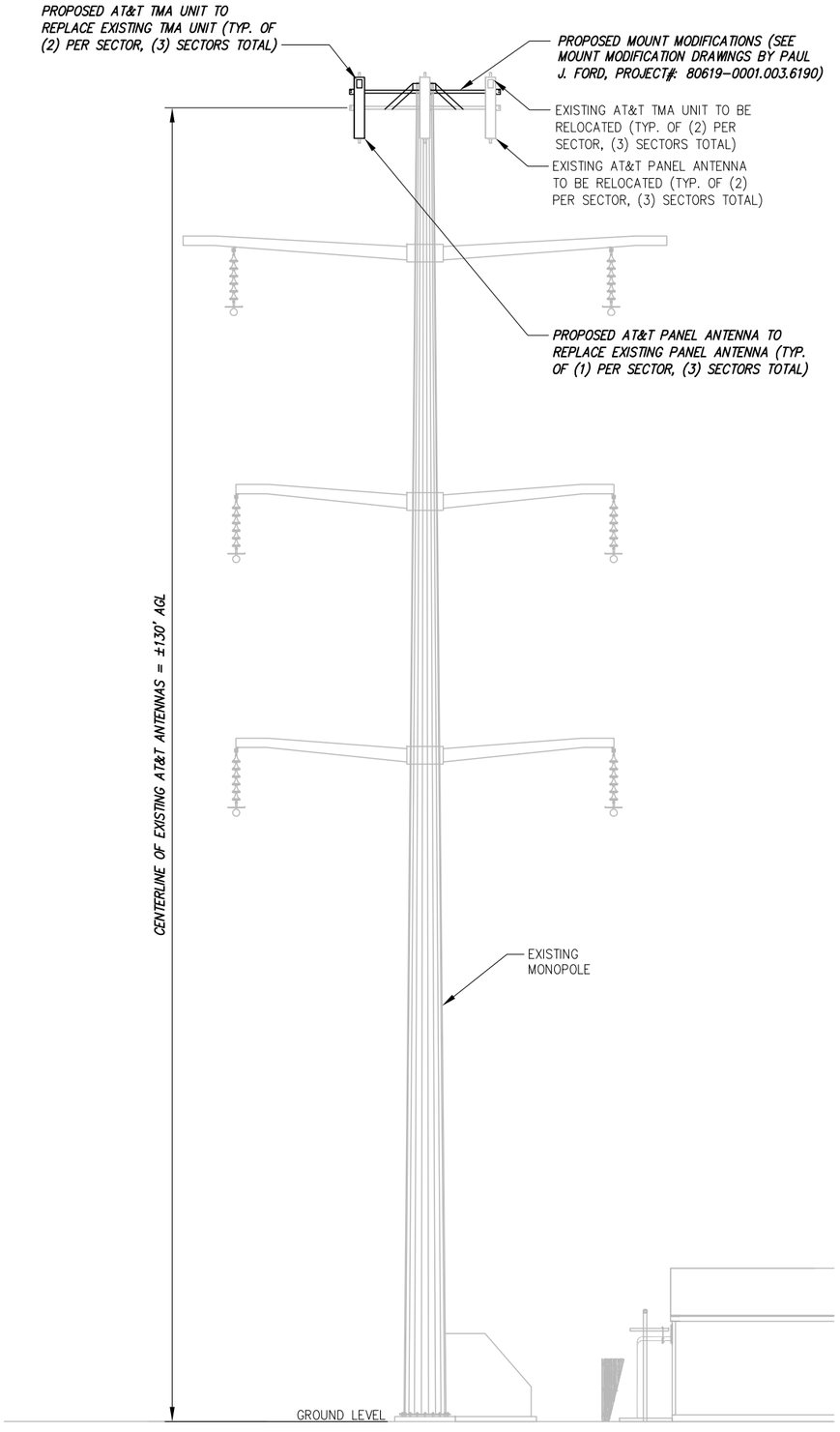

1 ELEVATION VIEW
-- NOT TO SCALE

NOTE:
- FOR ADDITIONAL STRUCTURAL INFORMATION PERTAINING TO THE TOWER STRUCTURE, SEE 'STRUCTURAL ANALYSIS REPORT' COMPLETED BY PAUL J. FORD, DATED 5/24/19
- FOR ADDITIONAL STRUCTURAL INFORMATION PERTAINING TO THE ANTENNA MOUNT, SEE 'MOUNT STRUCTURAL ANALYSIS REPORT' COMPLETED BY PAUL J. FORD, DATED 7/3/19. MOUNT TO BE MODIFIED PRIOR TO THE INSTALLATION OF THE PROPOSED EQUIPMENT. SEE MOUNT MODIFICATION DRAWINGS BY PAUL J. FORD, PROJECT#: 80619-0001.003.6190

SEPARATION NOTE:
- 3 FEET MINIMUM SEPARATION BETWEEN LTE ANTENNA
- 6 FEET MINIMUM SEPARATION BETWEEN 700BC & 700 DE

FINAL ANTENNA CONFIGURATION & CABLE SCHEDULE BASED ON LTE RFDS DATED 12/26/18, V 3.00

SECTOR	ANTENNA POSITION	ANTENNA STATUS & TECHNOLOGY	ANTENNA MANF/MODEL	TMA/ DIPLEXER	RRUS	AZIMUTH	ANTENNA ℄ HEIGHT	CABLE FEEDER TYPE	CABLE FEEDER LENGTH	RAYCAP UNIT
ALPHA	A-1	(E) LTE 700/1900/WCS UMTS 850	QUINTEL QS66512-2	(2) (E) TMA2117F00V1-1	(1) (E) RRUS-E2 B29 (G) (1) (E) RRUS-32 (G)	30°	±130'	(4) (E) 1-5/8" COAX	±150'	--
	A-2	--	--	--	--	--	--	--	--	
	A-3	(E) LTE 700	ANDREW SBNH-1D6565B	--	*(1) (P) B14 4478 (G)*	30°	±130'	(2) (E) 1-5/8" COAX	±150'	
	A-4	*(P) LTE 700/850/AWS /5G 850*	*KATHREIN 800-10965*	*(2) (P) TMABPD7823VG12A*	*(1) (P) B5/B12 4449 (G) (1) (P) B2/B66A 8843 (G)*	*30°*	*±130'*	(4) (E) 1-5/8" COAX	±150'	
BETA	B-1	(E) LTE 700/1900/WCS UMTS 850	QUINTEL QS66512-2	(2) (E) TMA2117F00V1-1	(1) (E) RRUS-E2 B29 (G) (1) (E) RRUS-32 (G)	150°	±130'	(4) (E) 1-5/8" COAX	±150'	
	B-2	--	--	--	--	--	--	--	--	
	B-3	(E) LTE 700	ANDREW SBNH-1D6565B	--	*(1) (P) B14 4478 (G)*	150°	±130'	(2) (E) 1-5/8" COAX	±150'	
	B-4	*(P) LTE 700/850/AWS /5G 850*	*KATHREIN 800-10965*	*(2) (P) TMABPD7823VG12A*	*(1) (P) B5/B12 4449 (G) (1) (P) B2/B66A 8843 (G)*	*150°*	*±130'*	(4) (E) 1-5/8" COAX	±150'	
GAMMA	G-1	(E) LTE 700/1900/WCS UMTS 850	QUINTEL QS66512-2	(2) (E) TMA2117F00V1-1	(1) (E) RRUS-E2 B29 (G) (1) (E) RRUS-32 (G)	270°	±130'	(4) (E) 1-5/8" COAX	±150'	
	G-2	--	--	--	--	--	--	--	--	
	G-3	(E) LTE 700	ANDREW SBNH-1D6565B	--	--	270°	±130'	(2) (E) 1-5/8" COAX	±150'	
	G-4	*(P) LTE 700/850/AWS /5G 850*	*KATHREIN 800-10965*	*(2) (P) TMABPD7823VG12A*	*(1) (P) B5/B12 4449 (G) (1) (P) B2/B66A 8843 (G)*	*270°*	*±130'*	(4) (E) 1-5/8" COAX	±150'	

2 AT&T ANTENNA SCHEDULE
-- NOT TO SCALE

INFINIGY
1033 Watervliet Shaker Rd
Albany, NY 12205
Office # (518) 690-0790
Fax # (518) 690-0793

at&t

STATE OF CONNECTICUT
JOHN S. STEVENS
24709
10/29/2019
LICENSED PROFESSIONAL ENGINEER

UNAUTHORIZED ALTERATION OR ADDITION TO THIS DOCUMENT IS A VIOLATION OF APPLICABLE STATE AND/OR LOCAL LAWS

No.	Submittal / Revision	App'd	Date
4	ISSUED FOR PERMIT	ASW	10/29/19
3	ISSUED FOR PERMIT	ASW	07/29/19
2	ISSUED FOR PERMIT	ASW	04/17/19
1	ISSUED FOR PERMIT	ASW	03/26/19
0	ISSUED FOR REVIEW	BMM	01/03/19

Drawn: BMM Date: 01/03/19
Designed: ASW Date: 01/03/19
Checked: ASW Date: 01/03/19

Project Number: 1106-A0001-C

Project Title:
ORANGE
OVERLAND DRIVE
CTL02343
FA# 10152334
525 OVERLAND DRIVE
ORANGE, CT 06477

Prepared For: smartlink

Drawing Scale: AS NOTED
Date: 10/29/19
CD

Drawing Title
ELEVATION VIEW

Drawing Number
C3

NOTE:
- FOR ADDITIONAL STRUCTURAL INFORMATION PERTAINING TO THE TOWER STRUCTURE, SEE 'STRUCTURAL ANALYSIS REPORT' COMPLETED BY PAUL J. FORD, DATED 5/24/19
- FOR ADDITIONAL STRUCTURAL INFORMATION PERTAINING TO THE ANTENNA MOUNT, SEE 'MOUNT STRUCTURAL ANALYSIS REPORT' COMPLETED BY PAUL J. FORD, DATED 7/3/19. MOUNT TO BE MODIFIED PRIOR TO THE INSTALLATION OF THE PROPOSED EQUIPMENT. SEE MOUNT MODIFICATION DRAWINGS BY PAUL J. FORD, PROJECT#: 80619-0001.003.6190

SEPARATION NOTE:
- 3 FEET MINIMUM SEPARATION BETWEEN LTE ANTENNA
- 6 FEET MINIMUM SEPARATION BETWEEN 700BC & 700 DE

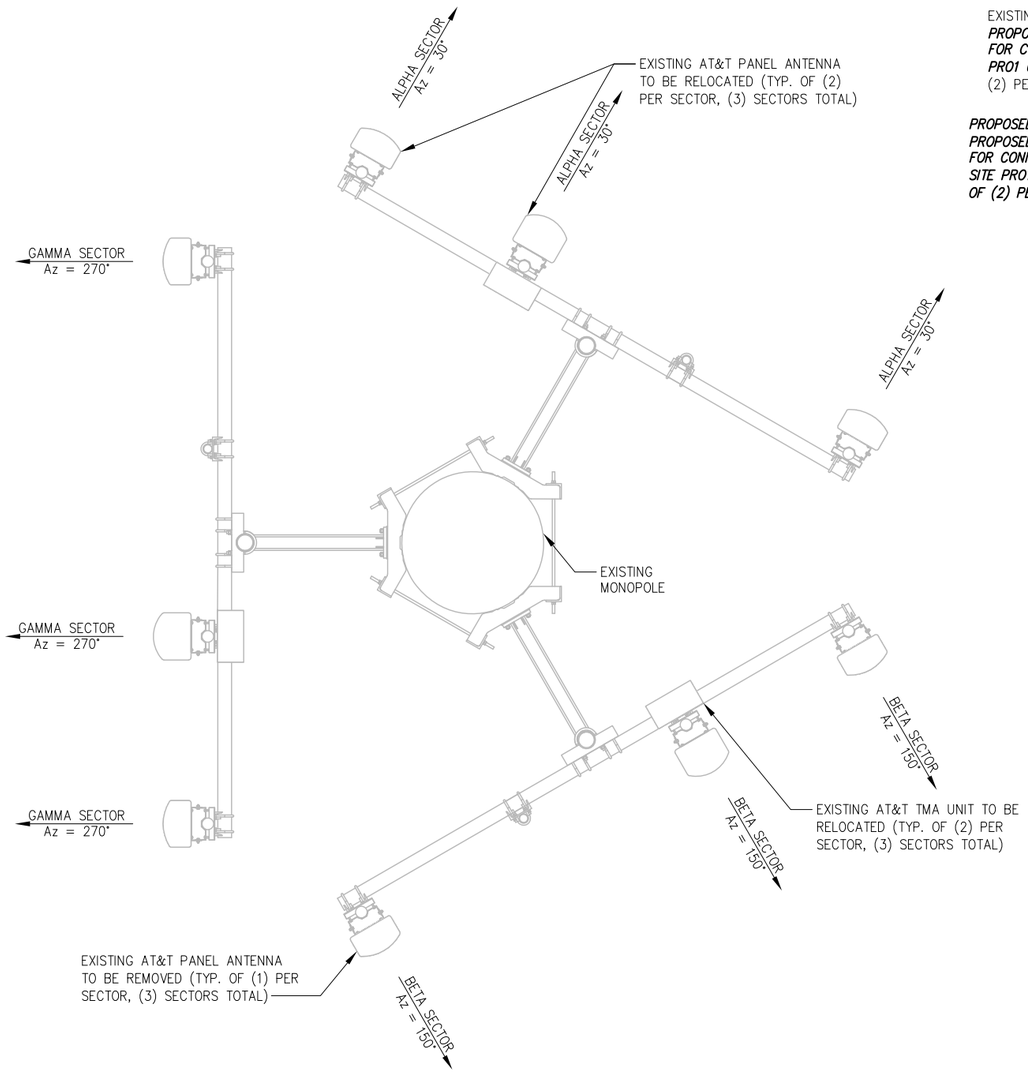

1 ANTENNA ORIENTATION PLAN (EXISTING)
NOT TO SCALE

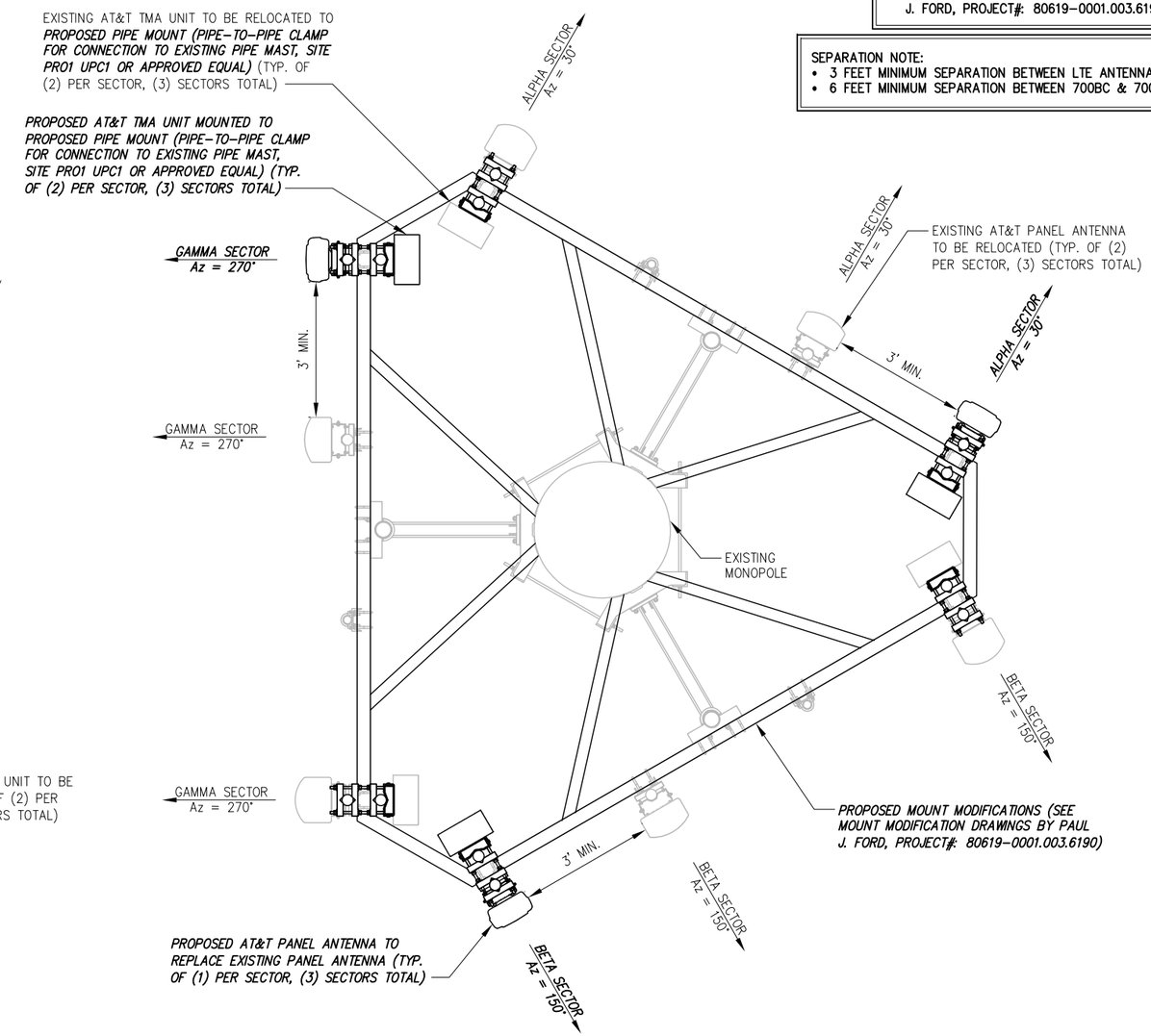

2 ANTENNA ORIENTATION PLAN (PROPOSED)
NOT TO SCALE

INFINIGY
1033 Watervliet Shaker Rd
Albany, NY 12205
Office # (518) 690-0790
Fax # (518) 690-0793

at&t

STATE OF CONNECTICUT
JOHN S. STEVENS
24705
LICENSED PROFESSIONAL ENGINEER
10/29/2019

UNAUTHORIZED ALTERATION OR ADDITION TO THIS DOCUMENT IS A VIOLATION OF APPLICABLE STATE AND/OR LOCAL LAWS

No.	Submittal / Revision	App'd	Date
4	ISSUED FOR PERMIT	ASW	10/29/19
3	ISSUED FOR PERMIT	ASW	07/29/19
2	ISSUED FOR PERMIT	ASW	04/17/19
1	ISSUED FOR PERMIT	ASW	03/26/19
0	ISSUED FOR REVIEW	BMM	01/03/19

Drawn: BMM Date: 01/03/19
Designed: ASW Date: 01/03/19
Checked: ASW Date: 01/03/19

Project Number: 1106-A0001-C

Project Title:
ORANGE
OVERLAND DRIVE
CTL02343
FA# 10152334
525 OVERLAND DRIVE
ORANGE, CT 06477

Prepared For: smartlink

Drawing Scale: AS NOTED
Date: 10/29/19
CD

Drawing Title
ANTENNA ORIENTATION PLAN

Drawing Number
C4

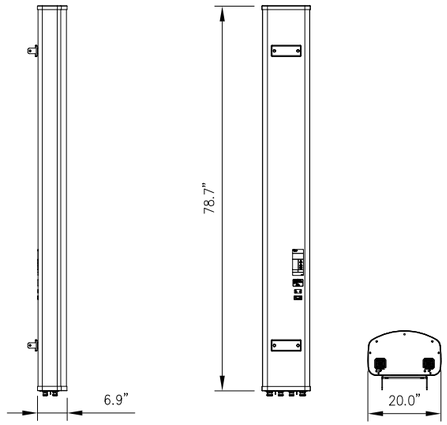

KATHREIN MODEL NO.:	800-10965
RADOME MATERIAL:	FIBERGLASS
RADOME COLOR:	LIGHT GRAY
DIMENSIONS, HxWxD:	(78.7"x20.0"x6.9")
WEIGHT, W/ PRE-MOUNTED BRACKETS:	108.6 LBS
CONNECTOR:	7-16 DIN FEMALE

1 ANTENNA DETAIL
NOT TO SCALE

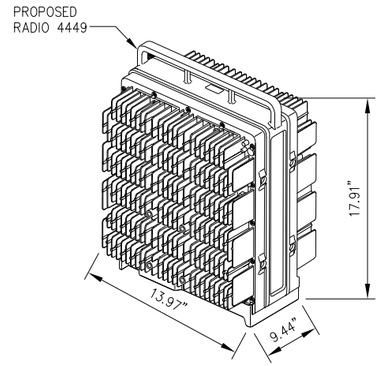

RADIO 4449 SPECIFICATIONS
- HxWxD, (INCHES) : 17.91"x13.97"x9.44"
- WEIGHT (LBS) : 70.54
- COLOR : GRAY

2 ERICSSON RADIO 4449 DETAIL
NOT TO SCALE

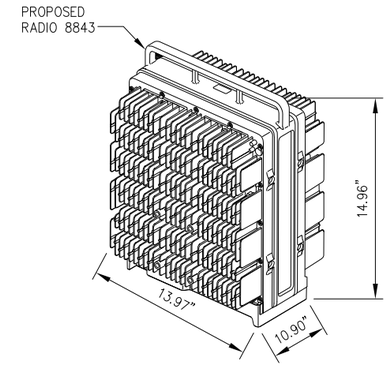

RADIO 8843 SPECIFICATIONS
- HxWxD, (INCHES) : 14.96"x13.97"x10.90"
- WEIGHT (LBS) : 71.87
- COLOR : GRAY

3 ERICSSON RADIO 8843 DETAIL
NOT TO SCALE

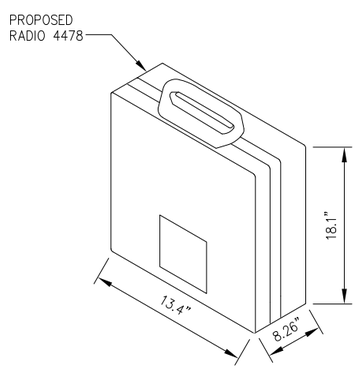

RADIO 4478-B14 SPECIFICATIONS
- HxWxD, (INCHES) : 18.1"x13.4"x8.26"
- WEIGHT (LBS) : 59.5
- COLOR : GRAY
- MOUNTING BRACKET: SXK1250244/1

4 ERICSSON RADIO 4478-B14 DETAIL
NOT TO SCALE

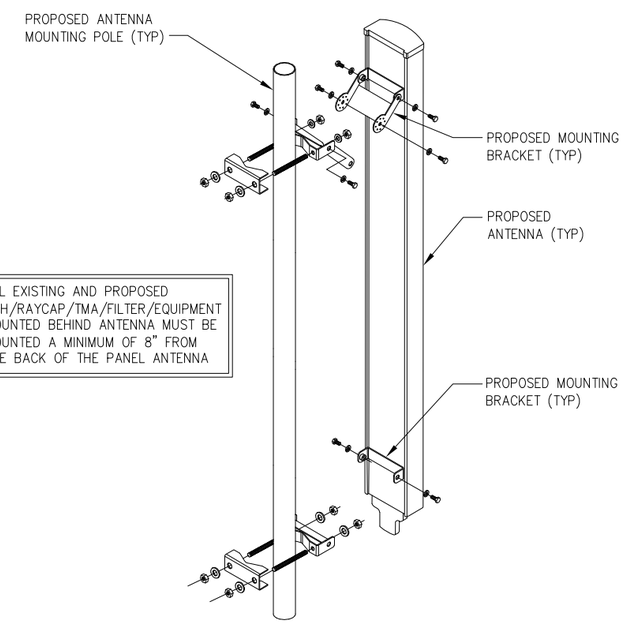

ALL EXISTING AND PROPOSED RRH/RAYCAP/TMA/FILTER/EQUIPMENT MOUNTED BEHIND ANTENNA MUST BE MOUNTED A MINIMUM OF 8" FROM THE BACK OF THE PANEL ANTENNA

5 MOUNTING DETAIL
NOT TO SCALE

INFINIGY
1033 Watervliet Shaker Rd
Albany, NY 12205
Office # (518) 690-0790
Fax # (518) 690-0793

at&t

STATE OF CONNECTICUT
THAD S. STEVENS
24703
10/29/2019
LICENSED PROFESSIONAL ENGINEER

UNAUTHORIZED ALTERATION OR ADDITION TO THIS DOCUMENT IS A VIOLATION OF APPLICABLE STATE AND/OR LOCAL LAWS

No.	Submittal / Revision	App'd	Date
4	ISSUED FOR PERMIT	ASW	10/29/19
3	ISSUED FOR PERMIT	ASW	07/29/19
2	ISSUED FOR PERMIT	ASW	04/17/19
1	ISSUED FOR PERMIT	ASW	03/26/19
0	ISSUED FOR REVIEW	BMM	01/03/19

Drawn: BMM Date: 01/03/19
Designed: ASW Date: 01/03/19
Checked: ASW Date: 01/03/19

Project Number: 1106-A0001-C

Project Title:
ORANGE
OVERLAND DRIVE
CTL02343
FA# 10152334
525 OVERLAND DRIVE
ORANGE, CT 06477

Prepared For: smartlink

Drawing Scale: AS NOTED
Date: 10/29/19
CD

Drawing Title
EQUIPMENT DETAILS

Drawing Number
C5

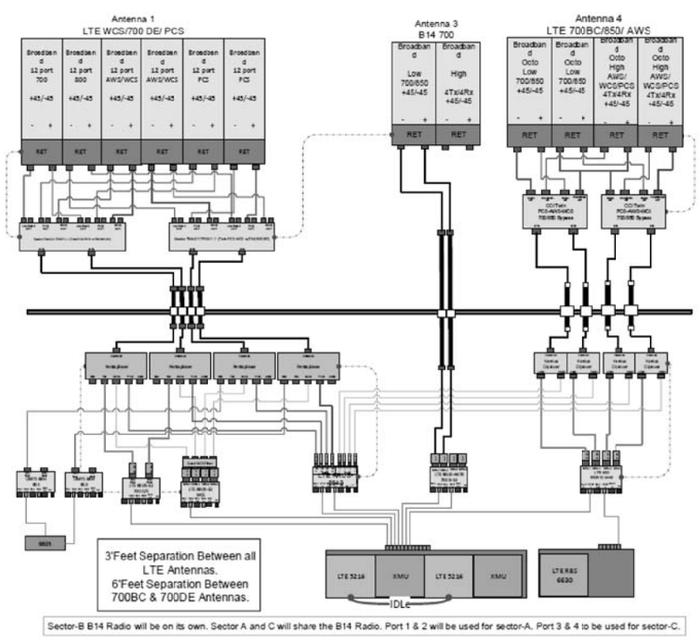

ALPHA

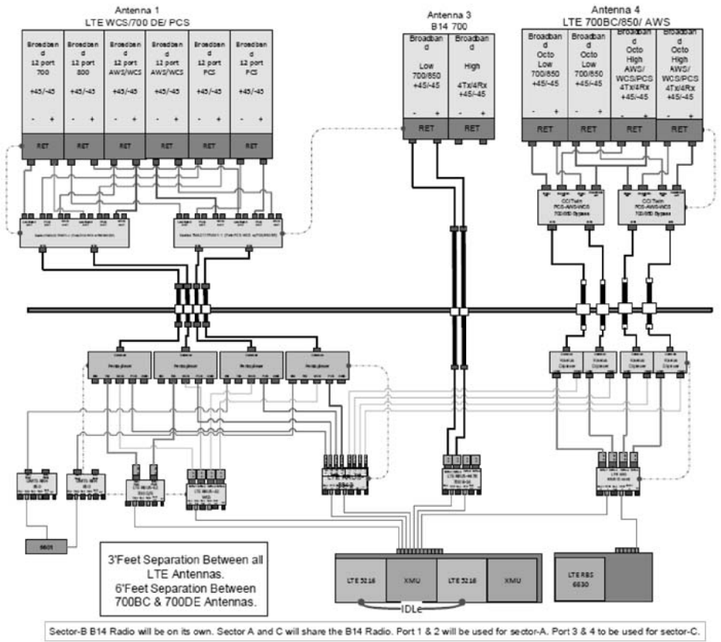

BETA

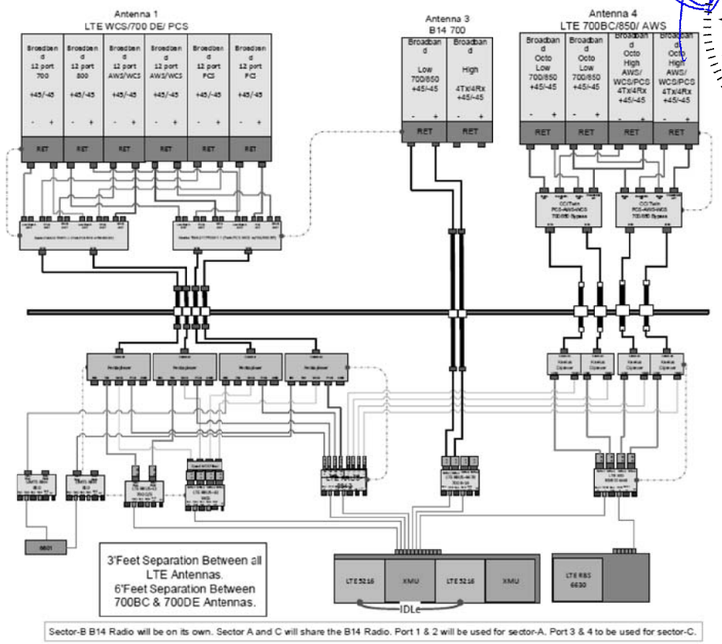

GAMMA

1 PLUMBING DIAGRAM (FINAL CONFIGURATION)
NOT TO SCALE

*BASED ON LTE RFDS, V. 3.0, DATED 12/26/18

INFINIGY
1033 Watervliet Shaker Rd
Albany, NY 12205
Office # (518) 690-0790
Fax # (518) 690-0793

at&t

STATE OF CONNECTICUT
JOHN S. STEVENS
24705
10/29/2019
LICENSED PROFESSIONAL ENGINEER

UNAUTHORIZED ALTERATION, OR ADDITION TO THIS DOCUMENT IS A VIOLATION OF APPLICABLE STATE AND/OR LOCAL LAWS

No.	Submittal / Revision	App'd	Date
4	ISSUED FOR PERMIT	ASW	10/29/19
3	ISSUED FOR PERMIT	ASW	07/29/19
2	ISSUED FOR PERMIT	ASW	04/17/19
1	ISSUED FOR PERMIT	ASW	03/26/19
0	ISSUED FOR REVIEW	BMM	01/03/19

Drawn: BMM Date: 01/03/19
Designed: ASW Date: 01/03/19
Checked: ASW Date: 01/03/19

Project Number: 1106-A0001-C

Project Title:
ORANGE
OVERLAND DRIVE
CTL02343
FA# 10152334
525 OVERLAND DRIVE
ORANGE, CT 06477

Prepared For: smartlink

Drawing Scale: AS NOTED
Date: 10/29/19
CD

Drawing Title
PLUMBING DIAGRAM

Drawing Number
C6

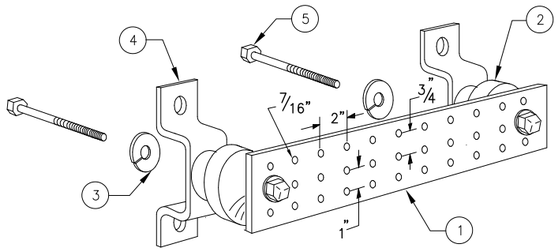

LEGEND

1 – SOLID TINNED COPPER GROUND BAR, 1/4"x 4"x 20" MIN., NEWTON INSTRUMENT CO. HOLE CENTERS TO MATCH NEMA DOUBLE LUG CONFIGURATION
2 – INSULATORS, NEWTON INSTRUMENT CAT. NO. 3061–4
3 – 5/8" LOCKWASHERS, NEWTON INSTRUMENT CO. CAT. NO. 3015–8
4 – WALL MOUNTING BRACKET, NEWTON INSTRUMENT CO. CAT NO. A–6056
5 – 5/8–11 X 1" H.H.C.S. BOLTS, NEWTON INSTRUMENT CO. CAT NO. 3012–1
6 – GROUND BAR SHALL BE SIZED TO ACCOMODATE ALL GROUNDING CONNECTIONS REQUIRED PLUS PROVIDE 50% SPARE CAPACITY
7 – GROUND BARS SHALL NEITHER BE FIELD FABRICATED NOR NEW HOLES DRILLED
8 – GROUND LUGS SHALL MATCH THE HOLE SPACING ON THE BAR
9 – HARDWARE DIAMETER SHALL BE MINIMUM 3/8"

1 / -- GROUND BAR
NOT TO SCALE

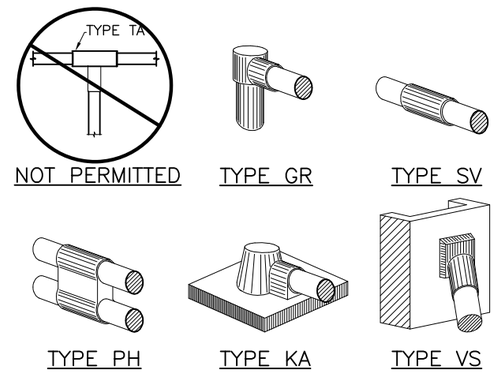

2 / -- CADWELDS (TYPICAL)
NOT TO SCALE

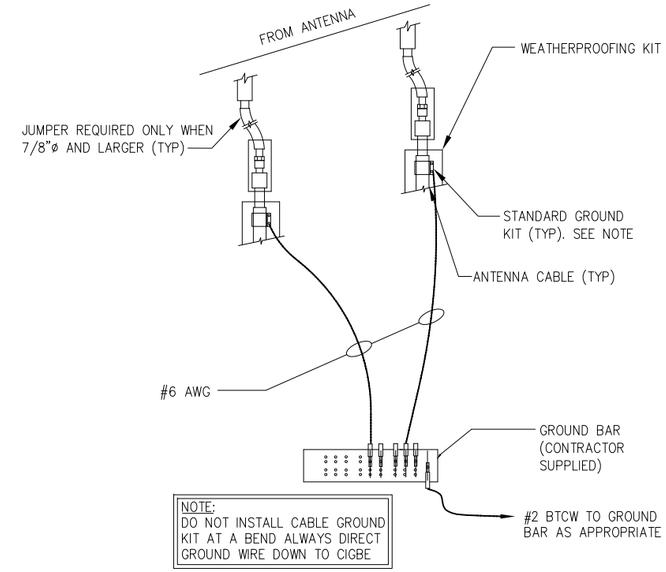

3 / -- CONNECTION OF GROUND WIRES TO GROUNDING BARS @ ANTENNAS
NOT TO SCALE

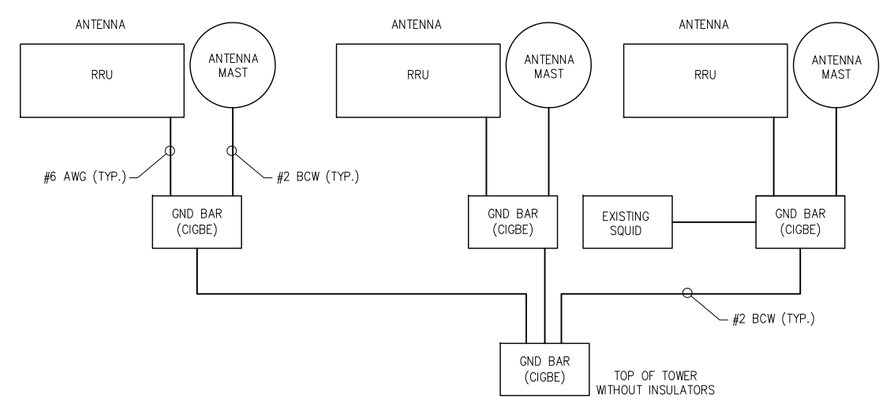

5 / 4 SCHEMATIC DIAGRAM GROUNDING SYSTEM
NOT TO SCALE

INFINIGY
1033 Watervliet Shaker Rd
Albany, NY 12205
Office # (518) 690-0790
Fax # (518) 690-0793

at&t

STATE OF CONNECTICUT
JOHN S. STEVENS
10/29/2019
24705
LICENSED PROFESSIONAL ENGINEER

UNAUTHORIZED ALTERATION OR ADDITION TO THIS DOCUMENT IS A VIOLATION OF APPLICABLE STATE LAWS AND LOCAL LAWS

No.	Submittal / Revision	App'd	Date
4	ISSUED FOR PERMIT	ASW	10/29/19
3	ISSUED FOR PERMIT	ASW	07/29/19
2	ISSUED FOR PERMIT	ASW	04/17/19
1	ISSUED FOR PERMIT	ASW	03/26/19
0	ISSUED FOR REVIEW	BMM	01/03/19

Drawn: BMM Date: 01/03/19
Designed: ASW Date: 01/03/19
Checked: ASW Date: 01/03/19

Project Number: 1106-A0001-C

Project Title:
ORANGE
OVERLAND DRIVE
CTL02343
FA# 10152334
525 OVERLAND DRIVE
ORANGE, CT 06477

Prepared For: smartlink

Drawing Scale: AS NOTED
Date: 10/29/19
CD

Drawing Title
GROUNDING DETAILS

Drawing Number
C7

MODIFIED MOUNT ON 120'-0" TRANSMISSION POLE
EVERSOURCE STRUCTURE #24063
MIDDLETOWN - NORWALK 345kV LINE

AT&T ORANGE OVERLAND DRIVE - SITE #CTL02343

525 OVERLAND DRIVE
ORANGE, NEW HAVEN COUNTY, CONNECTICUT
LAT: 41.289361°; LONG: -73.001083°

PROJECT CONTACTS

STRUCTURE OWNER:
EVERSOURCE
CONTACT: JOEL SZARKOWICZ AT JOEL.SZARKOWICZ@EVERSOURCE.COM
PH: (860) 728-4503

CARRIER INFO:
AT&T
CONTACT: DAVID BARBAGALLO AT
DAVID.BARBAGALLO@SMARTLINKLLC.COM
PH: (860) 681-7708

ENGINEER OF RECORD:
PJFMOD@PAULJFORD.COM

THIS PROJECT INCLUDES THE FOLLOWING ITEMS
INSTALLATION OF NEW HANDRAIL
INSTALLATION OF NEW MOUNT REINFORCEMENT KICKER KIT

SHEET INDEX

SHEET NUMBER	DESCRIPTION
T-1	TITLE SHEET
N-1	GENERAL NOTES
MI-1	INSPECTION NOTES
S-1	TOWER ELEVATIONS AND MATERIAL LIST
S-2	TOWER ELEVATIONS AND SECTIONS

DESIGN DATA - ANTENNA MOUNT

REFERENCE STANDARD	TIA/EIA-222-G (W/ ALL ADDENDUMS)	
STRUCTURE CLASS	III	
EXPOSURE CATEGORY	C	
TOPOGRAPHIC CATEGORY	1	
LOAD CASE DESCRIPTION	WIND WITHOUT ICE	WIND WITH ICE
BASIC WIND SPEED (MPH)	97	50
ICE THICKNESS (IN)	0	0.75

DESIGN DATA - TOWER

REFERENCE STANDARD(S)	NESC C2-2007			
STRUCTURE OWNER STANDARD	EVERSOURCE OTRM 059			
NESC SECTION	250B			250C
LOAD CASE DESCRIPTION	HEAVY	MEDIUM	LIGHT	EXTREME WIND
LOAD CASE USED	X			X
RADIAL ICE (IN)	0.5	0.25	0	0
WIND SPEED (3-SEC GUST) MPH	40	40	60	110
TEMPERATURE (DEG F)	0	15	30	60

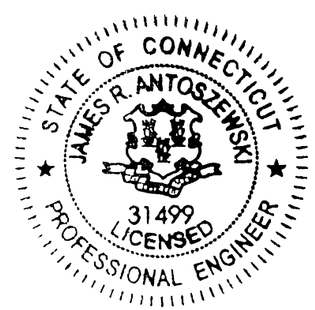

07/03/2019

© Copyright 2019, by Paul J. Ford and Company, All Rights Reserved. This document and the data contained herein, is proprietary to Paul J. Ford and Company, issued in strict confidence and shall not, without the prior written permission of Paul J. Ford and Company, be reproduced, copied or used for any purpose other than the intended use for this specific project.

PJF PAUL J. FORD & COMPANY
250 E Broad St, Ste 600 · Columbus, OH 43215
Phone 614.221.6679 www.pauljford.com

AT&T
99 EAST RIVER ROAD, 9TH FLOOR EAST HARTFORD, CONNECTICUT 06108

EVERSOURCE STRUCTURE #24063
MIDDLETOWN - NORWALK 345kV LINE
525 OVERLAND DRIVE
ORANGE, NEW HAVEN COUNTY, CONNECTICUT
AT&T ORANGE OVERLAND DRIVE - SITE #CTL02343

PROJECT No:	80619-0001.003.6190
DRAWN BY:	FE
DESIGNED BY:	CEC
CHECKED BY:	CEC
DATE:	7-3-2019

TITLE SHEET

T-1

SHEET #1 OF 5

80619-0001.003.6190.DWG

EVERSOURCE PROJECT: 525 OVERLAND DRIVE; ORANGE, NEW HAVEN COUNTY, CONNECTICUT
UTILITY PROJECT MASTER NOTES DOCUMENT (REV. 1, 6/21/2018)

1. GENERAL NOTES

1.1. THE STRUCTURAL ANALYSIS ASSUMES THAT ALL TOWER COMPONENTS ARE IN BRAND-NEW CONDITION. NO ALLOWANCE WAS MADE FOR ANY DAMAGED, MISSING OR RUSTED MEMBERS. IF ANY OF THESE CONDITIONS ARE DISCOVERED, THE CONTRACTOR SHALL BRING THEM TO THE ATTENTION OF THE OWNERS REPRESENTATIVE.

1.2. THESE DRAWINGS WERE PREPARED FROM INFORMATION AND DOCUMENTS PROVIDED BY OWNER. THE INFORMATION PROVIDED HAS NOT BEEN FIELD VERIFIED BY THE ENGINEER OF RECORD (EOR) FOR ACCURACY AND THEREFORE DISCREPANCIES BETWEEN THESE DRAWINGS AND ACTUAL SITE CONDITIONS SHOULD BE ANTICIPATED. IT IS THE CONTRACTOR'S RESPONSIBILITY TO FIELD VERIFY ALL EXISTING CONDITIONS AND DIMENSIONS AND COORDINATE WITH THE AVAILABLE SOURCES OF INFORMATION ABOVE AND WITH THE PROJECT DRAWINGS BEFORE PROCEEDING WITH THE WORK. CONTRACTOR SHALL IMMEDIATELY REPORT ANY AND ALL DISCREPANCIES TO THE EOR AND OWNER FIELD PERSONNEL BEFORE PROCEEDING WITH THE WORK.

1.3. IF MATERIALS, QUANTITIES, STRENGTHS OR SIZES INDICATED BY THE DRAWINGS OR SPECIFICATIONS ARE NOT IN AGREEMENT WITH THESE NOTES, THE BETTER QUALITY AND/OR GREATER QUANTITY, STRENGTH OR SIZE INDICATED, SPECIFIED OR NOTED SHALL BE PROVIDED.

1.4. THIS STRUCTURE IS DESIGNED TO BE SELF-SUPPORTING AND STABLE AFTER THE INSTALLATION OF THE MODIFICATIONS DESCRIBED HEREIN. IT IS THE CONTRACTOR'S SOLE RESPONSIBILITY TO ENSURE THE SAFETY AND STABILITY OF THE STRUCTURE AND ITS COMPONENT PARTS DURING FIELD MODIFICATIONS. THIS INCLUDES, BUT IS NOT LIMITED TO, THE ADDITION OF WHATEVER TEMPORARY BRACING, GUYS OR TIE DOWNS THAT MAY BE NECESSARY. SUCH MATERIAL SHALL BE REMOVED AND SHALL REMAIN THE PROPERTY OF THE CONTRACTOR AFTER THE COMPLETION OF THE PROJECT.

1.5. ALL CONSTRUCTION MEANS AND METHODS; INCLUDING BUT NOT LIMITED TO, ERECTION PLANS, RIGGING PLANS, CLIMBING PLANS AND RESCUE PLANS SHALL BE THE RESPONSIBILITY OF THE GENERAL CONTRACTOR RESPONSIBLE FOR THE EXECUTION OF THE WORK CONTAINED HEREIN AND SHALL MEET OSHA AND GENERAL INDUSTRY STANDARDS.

1.6. OBSERVATION VISITS TO THE SITE BY OWNER AND/OR THE EOR SHALL NOT INCLUDE INSPECTIONS OF THE PROTECTIVE MEASURES OR THE CONSTRUCTION PROCEDURES.

1.7. ANY SUPPORT SERVICES PERFORMED BY THE EOR DURING CONSTRUCTION ARE SOLELY FOR THE PURPOSE OF ASSISTING IN QUALITY CONTROL AND IN ACHIEVING GENERAL CONFORMANCE WITH CONTRACT DOCUMENTS. THEY DO NOT GUARANTEE CONTRACTOR'S PERFORMANCE AND SHALL NOT BE CONSTRUED AS SUPERVISION OF CONSTRUCTION.

1.8. ALL MATERIALS AND EQUIPMENT FURNISHED SHALL BE NEW AND OF GOOD QUALITY, FREE FROM FAULTS AND DEFECTS AND IN CONFORMANCE WITH THE CONTRACT DOCUMENTS. ANY AND ALL SUBSTITUTIONS MUST BE PROPERLY APPROVED AND AUTHORIZED IN WRITING BY OWNER AND EOR PRIOR TO INSTALLATION. THE CONTRACTOR SHALL FURNISH SATISFACTORY EVIDENCE AS TO THE KIND AND QUALITY OF MATERIALS AND EQUIPMENT BEING SUBSTITUTED.

1.9. THE CONTRACTOR SHALL BE RESPONSIBLE FOR INITIATING, MAINTAINING, AND SUPERVISING ALL SAFETY PRECAUTIONS AND PROGRAMS IN CONNECTION WITH THE WORK. THE CONTRACTOR IS RESPONSIBLE TO ENSURE THAT THIS PROJECT AND RELATED WORK COMPLIES WITH ALL APPLICABLE LOCAL, STATE, AND FEDERAL SAFETY CODES AND REGULATIONS GOVERNING THIS WORK AS WELL AS OWNER SAFETY GUIDELINES.

1.10. THE CONTRACTOR SHALL BE RESPONSIBLE FOR PROTECTING ALL EXISTING AND NEW EQUIPMENT DURING CONSTRUCTION.

1.11. ANY EXISTING ATTACHMENTS AND/OR PROJECTIONS ON THE STRUCTURE THAT MAY INTERFERE WITH THE INSTALLATION OF THE MODIFICATION SYSTEM WILL HAVE TO BE REMOVED AND RELOCATED, REPLACED, OR RE-INSTALLED AS REQUIRED AFTER THE MODIFICATION IS SUCCESSFULLY COMPLETED. THE CONTRACTOR SHALL IDENTIFY AND COORDINATE THESE ITEMS PRIOR TO CONSTRUCTION WITH OWNER, TESTING AGENCY, AND EOR.

1.12. THE CLIMBING FACILITIES, SAFETY CLIMB AND ALL PARTS THEREOF SHALL NOT BE IMPEDED, MODIFIED OR ALTERED WITHOUT THE EXPRESS APPROVAL OF THE EOR.

2. STRUCTURAL STEEL

2.1. SHOP DRAWINGS SHALL BE SUBMITTED TO ENGINEER FOR APPROVAL. DRAWINGS MUST BEAR THE CHECKERS INITIALS BEFORE SUBMITTING TO ENGINEER. CONTRACTOR SHALL REVIEW THE SHOP DRAWINGS FOR GENERAL CONFORMANCE TO THE PLANS PRIOR TO SUBMITTING TO ENGINEER. SHOP DRAWINGS SHALL INCLUDE ERECTION DRAWINGS, ELEVATIONS AND SECTIONS. SHOP DRAWINGS SHALL ALSO INCLUDE SECTION PROFILES, SIZES, CONNECTIONS, ATTACHMENTS, REINFORCING, ANCHORAGE SIZE AND TYPE OF FASTENERS AND ASSEMBLIES.

2.2. STRUCTURAL STEEL MATERIALS, FABRICATION, DETAILING, AND WORKMANSHIP SHALL CONFORM TO THE LATEST EDITION OF THE FOLLOWING REFERENCE STANDARDS:

2.2.1. BY THE AMERICAN INSTITUTE OF STEEL CONSTRUCTION (AISC):

2.2.1.1. "SPECIFICATION FOR STRUCTURAL STEEL BUILDINGS."

2.2.1.2. SPECIFICATION FOR STRUCTURAL JOINTS USING ASTM HIGH STRENGTH BOLTS," AS APPROVED BY THE RESEARCH COUNCIL ON STRUCTURAL CONNECTIONS.

2.2.1.3. "CODE OF STANDARD PRACTICE FOR STEEL BUILDINGS AND BRIDGES"

2.2.2. BY THE AMERICAN WELDING SOCIETY (AWS):

2.2.2.1. "STRUCTURAL WELDING CODE – STEEL D1.1."

2.2.2.2. "STANDARD SYMBOLS FOR WELDING, BRAZING, AND NONDESTRUCTIVE EXAMINATION"

2.2.3. BY THE AMERICAN SOCIETY OF CIVIL ENGINEERS:

2.2.3.1. DESIGN OF LATTICED STEEL TRANSMISSION STRUCTURES (ASCE 10-XX)

2.2.3.2. DESIGN OF STEEL TRANSMISSION POLE STRUCTURES (ASCE 48-XX)

2.3. NEW STEEL (UNLESS NOTED OTHERWISE) SHALL CONFORM TO THE REQUIREMENTS OF THE ASTM STANDARD SPECIFICATION FOR STRUCTURAL STEEL AS NOTED BELOW:
M, S, C, MC, L, PLATES & BARS - ASTM A36 (36 KSI YIELD POINT MATERIAL)
W - ASTM A992 (50 KSI YIELD POINT MATERIAL)
HSS RECTANGULAR - ASTM A500, GRADE B (46 KSI YIELD POINT MATERIAL)
HSS ROUND - ASTM A500, GRADE B (42 KSI YIELD POINT MATERIAL)
PIPE - ASTM A53, GRADE B (35 KSI YIELD POINT MATERIAL)

2.4. NEW BOLTS SHALL CONFORM TO THE REQUIREMENTS OF ASTM A325, TYPE "X" UNLESS NOTED OTHERWISE. ALL HOLES FOR BOLTS SHALL BE 1/16" LARGER THAN THE BOLT DIAMETER WITH AN EDGE DISTANCE OF AT LEAST 1 3/4 TIMES THE BOLT DIAMETER AND A SPACING OF AT LEAST 3 TIMES THE BOLT DIAMETER UNLESS NOTED OTHERWISE. ALL BOLTS SHALL BE PROVIDED WITH LOCK WASHERS, PALNUTS, OR LOCK NUTS.

2.5. ALL STRUCTURAL BOLTS SHALL BE INSTALLED AND TIGHTENED TO A SNUG TIGHT CONDITION ACCORDING TO THE REQUIREMENTS OF THE AISC 'SPECIFICATION FOR STRUCTURAL JOINTS USING HIGH-STRENGTH BOLTS',UNLESS NOTED OTHERWISE ON DRAWINGS.

2.6. ALL U-BOLTS SHALL BE A307 UNLESS NOTED OTHERWISE.

2.7. ANY MATERIAL OR WORKMANSHIP WHICH IS OBSERVED TO BE DEFECTIVE OR INCONSISTENT WITH THE CONTRACT DOCUMENTS SHALL BE CORRECTED, MODIFIED, OR REPLACED AT THE CONTRACTOR'S EXPENSE.

2.8. WELDED CONNECTIONS SHALL CONFORM TO THE LATEST REVISED CODE OF THE AMERICAN WELDING SOCIETY, AWS D1.1. ALL WELD ELECTRODES SHALL BE E70XX UNLESS NOTED OTHERWISE ON THE DRAWINGS.

2.9. ALL WELDED CONNECTIONS SHALL BE MADE BY WELDERS CERTIFIED BY AWS. CONTRACTOR SHALL SUBMIT WELDERS' CERTIFICATION AND QUALIFICATION DOCUMENTATION TO OWNER'S TESTING AGENCY FOR REVIEW AND APPROVAL PRIOR TO CONSTRUCTION.

2.10. ALL SURFACES MUST BE CLEAN AND FREE OF WELD SPATTER. ALL EDGES SHALL BE DEBURRED.

2.11. ALL PARTS ARE TO BE MARKED WITH ITEM NUMBERS USING 3/4" HIGH STEEL STENCILS.

2.12. SHOP SHALL ASSEMBLE AND VERIFY FIT AND GAPS BEFORE BREAKDOWN FOR GALVANIZING.

2.13. NO FIELD WELDING SHALL BE DONE TO THE EXISTING STRUCTURE WITHOUT THE PRIOR APPROVAL OF THE OWNER AND SUPERVISION BY THE INSPECTION/TESTING AGENCY.

2.14. FIELD CUTTING OF STEEL:

2.14.1. IMPORTANT CUTTING AND WELDING SAFETY GUIDELINES: THE CONTRACTOR SHALL FOLLOW ALL OWNER CUTTING, WELDING, FIRE PREVENTION AND SAFETY GUIDELINES. PRIOR TO CONSTRUCTION, THE CONTRACTOR SHALL OBTAIN A COPY OF THE CURRENT OWNER GUIDELINES. ANY DAMAGE TO THE COAX CABLES, AND/OR OTHER EQUIPMENT AND/OR THE STRUCTURE, RESULTING FROM THE CONTRACTOR'S ACTIVITIES SHALL BE REPAIRED AT THE CONTRACTOR'S EXPENSE. THE INSPECTION/TESTING AGENCY SHALL CLOSELY AND CONTINUOUSLY MONITOR THIS ACTIVITY.

2.14.2. ALL REQUIRED CUTS SHALL BE CUT WITHIN THE DIMENSIONS SHOWN ON THE DRAWINGS. NO CUTS SHALL EXTEND BEYOND THE OUTLINE OF THE DIMENSIONS SHOWN ON THE DRAWINGS. ALL CUT EDGES SHALL BE GROUND SMOOTH AND DE-BURRED. CONTRACTOR TO AVOID 90 DEGREE CORNERS. IT MAY BE NECESSARY TO DRILL STARTER HOLES AS REQUIRED TO MAKE THE CUTS.

2.14.3. FIELD HOLES SHALL BE PUNCHED OR DRILLED. BURNING OF MEMBERS SHALL NOT BE PERMITTED.

3. BASE PLATE GROUT - NOT REQUIRED)

4. FOUNDATION WORK - NOT REQUIRED)

5. CAST-IN-PLACE CONCRETE - (NOT REQUIRED)

6. EPOXY GROUTED REINFORCING ANCHOR RODS - (NOT REQUIRED)

7. TOUCH UP OF GALVANIZING

7.1. THE CONTRACTOR SHALL TOUCH UP ANY AND ALL AREAS OF GALVANIZING ON THE EXISTING STRUCTURE OR NEW COMPONENTS THAT ARE DAMAGED OR ABRADED DURING CONSTRUCTION. GALVANIZED SURFACES DAMAGED DURING TRANSPORTATION OR ERECTION AND ASSEMBLY AS WELL AS ANY AND ALL ABRASIONS, CUTS AND FIELD DRILLING SHALL BE TOUCHED UP WITH TWO (2) COATS OF ZRC COLD GALVANIZING COMPOUND. FILM THICKNESS PER COAT SHALL BE: WET 3.0 MILS; DRY 1.5 MILS. APPLY PER ZRC (MANUFACTURER) RECOMMENDED PROCEDURES. CONTACT ZRC AT 1-800-831-3275 FOR PRODUCT INFORMATION.

7.2. CONTRACTOR SHALL CLEAN AND PREPARE ALL FIELD WELDS ON GALVANIZED AND PRIME PAINTED SURFACES FOR TOUCH-UP COATING IN ACCORDANCE WITH AWS D1.1. OWNER'S TESTING AGENCY SHALL VERIFY THE PREPARED SURFACE PRIOR TO APPLICATION OF THE TOUCH-UP COATING.

7.3. OWNER'S TESTING AGENCY SHALL TEST AND VERIFY THE COATING THICKNESS AFTER THE CONTRACTOR HAS APPLIED THE ZRC COLD GALVANIZING COMPOUND AND IT HAS SUFFICIENTLY DRIED. AREAS FOUND TO BE ADEQUATELY COATED, SHALL BE RE-COATED BY THE CONTRACTOR AND RE-TESTED BY THE TESTING AGENCY.

8. HOT-DIP GALVANIZING

8.1. HOT-DIP GALVANIZE ALL STRUCTURAL STEEL MEMBERS AND ALL STEEL ACCESSORIES, BOLTS, WASHERS, ETC. PER ASTM A123, ASTM A386 OR PER ASTM A153, AS APPROPRIATE.

8.2. PROPERLY PREPARE STEEL ITEMS FOR GALVANIZING.

8.3. DRILL OR PUNCH WEEP AND/OR DRAINAGE HOLES WITH EOR APPROVAL OF LOCATIONS.

8.4. ALL GALVANIZING SHALL BE DONE AFTER FABRICATION IS COMPLETED AND PRIOR TO FIELD INSTALLATION.

9. PERPETUAL INSPECTION AND MAINTENANCE BY THE OWNER

9.1. AFTER THE CONTRACTOR HAS SUCCESSFULLY COMPLETED THE INSTALLATION OF THE MODIFICATION SYSTEM AND THE WORK HAS BEEN ACCEPTED BY OWNER, OWNER WILL BE RESPONSIBLE FOR THE LONG TERM AND PERPETUAL INSPECTION AND MAINTENANCE OF THE STRUCTURE AND MODIFICATION SYSTEM.

STATE OF CONNECTICUT
JAMES R. ANTOSZEWSKI
31499
LICENSED
PROFESSIONAL ENGINEER

07/03/2019

© Copyright 2019, by Paul J. Ford and Company, All Rights Reserved. This document and the data contained herein, is proprietary to Paul J. Ford and Company, issued in strict confidence and shall not, without the prior written permission of Paul J. Ford and Company, be reproduced, copied or used for any purpose other than the intended use for this specific project.

PJF PAUL J. FORD & COMPANY
250 E Broad St, Ste 600 · Columbus, OH 43215
Phone 614.221.6679 www.pauljford.com

AT&T
99 EAST RIVER ROAD, 9TH FLOOR EAST HARTFORD, CONNECTICUT 06108

EVERSOURCE STRUCTURE #24063
MIDDLETOWN - NORWALK 345kV LINE
525 OVERLAND DRIVE
ORANGE, NEW HAVEN COUNTY, CONNECTICUT
AT&T ORANGE OVERLAND DRIVE - SITE #CTL02343

PROJECT No:	80619-0001.003.6190
DRAWN BY:	FE
DESIGNED BY:	CEC
CHECKED BY:	CEC
DATE:	7-3-2019

GENERAL NOTES

N-1

SHEET #2 OF 5

80619-0001.003.6190.DWG

MODIFICATION INSPECTION NOTES:

1. INSPECTION AND TESTING

1.1. INSPECTION SERVICES WHICH ARE FURNISHED BY OTHERS ARE STILL REQUIRED WHEN THE EOR PERFORMS SUPPORT SERVICES DURING CONSTRUCTION.

1.2. OBSERVED DISCREPANCIES BETWEEN THE WORK AND THE CONTRACT DOCUMENTS SHALL BE CORRECTED BY THE CONTRACTOR AT NO ADDITIONAL COST.

1.3. AN INDEPENDENT QUALIFIED INSPECTION/TESTING AGENCY SHALL BE SELECTED, RETAINED AND PAID FOR BY OWNER FOR THE SOLE PURPOSE OF INSPECTING, TESTING, DOCUMENTING, AND APPROVING ALL WELDING AND FIELD WORK PERFORMED BY THE CONTRACTOR.

1.3.1. ACCESS TO ANY PLACE WHERE WORK IS BEING DONE SHALL BE PERMITTED AT ALL TIMES.

1.3.2. THE INSPECTION AGENCY SHALL SO SCHEDULE THIS WORK AS TO CAUSE A MINIMUM OF INTERRUPTION TO, AND COORDINATE WITH, THE WORK IN PROGRESS. IT IS THE CONTRACTOR'S RESPONSIBILITY TO COORDINATE THE WORK SCHEDULE WITH THE TESTING AGENCY. THE CONTRACTOR SHALL ALLOW FOR ADEQUATE TIME AND ACCESS FOR THE TESTING AGENCY TO PERFORM THEIR DUTIES.

1.4. GENERAL

1.4.1. PERFORM PERIODIC ON-SITE OBSERVATION, INSPECTION, VERIFICATION, AND TESTING DURING THE TIME THE CONTRACTOR IS WORKING ON-SITE. AGENCY SHALL NOTIFY OWNER AND THE EOR IMMEDIATELY WHEN FIELD PROBLEMS OR DISCREPANCIES OCCUR.

1.5. FOUNDATIONS AND SOIL PREPARATION

1.5.1. VERIFY MATERIALS AT BOTTOM OF EXCAVATION ARE ADEQUATE TO ACHIEVE THE DESIGN BEARING CAPACITY.

1.5.2. VERIFY THAT EXCAVATIONS HAVE EXTENDED TO PROPER DEPTH AND ARE FOUNDED ON PROPER MATERIAL.

1.5.3. PERFORM CLASSIFICATION AND TESTING OF COMPACTED FILL MATERIALS AS SPECIFIED.

1.5.4. VERIFY USE OF PROPER MATERIALS, DENSITIES AND LIFT THICKNESS DURING PLACEMENT AND COMPACTION OF COMPACTED FILL.

1.5.5. PRIOR TO PLACEMENT OF COMPACTED FILL, OBSERVE SUBGRADE AND VERIFY SITE HAS BEEN PREPARED PROPERLY.

1.6. CONCRETE TESTING PER ACI

1.6.1. INSPECT PLACEMENT OF REINFORCING STEEL.

1.6.2. INSPECT BOLTS TO BE INSTALLED IN CONCRETE PRIOR TO AND DURING PLACEMENT OF CONCRETE.

1.6.3. VERIFY USE OF REQUIRED MIX DESIGN.

1.6.4. AT THE TIME FRESH CONCRETE IS SAMPLED FABRICATE SPECIMENS FOR STRENGTH TEST, PERFORM SLUMP AND AIR CONTENT TEST AND DETERMINE TEMPERATURE OF THE CONCRETE.

1.6.5. INSPECT CONCRETE PLACEMENT FOR PROPER APPLICATION TECHNIQUE.

1.6.6. INSPECT SPECIFIED CURING AND TEMPERATURE TECHNIQUES.

1.7. STRUCTURAL STEEL

1.7.1. CHECK STEEL ON THE JOB WITH THE PLANS.

1.7.2. CHECK MILL CERTIFICATIONS. CALL FOR LABORATORY TEST REPORTS WHEN MILL CERTIFICATION IS IN QUESTION.

1.7.3. CHECK GRADE OF STEEL MEMBERS, AND BOLTS FOR CONFORMANCE WITH DRAWINGS.

1.7.4. INSPECT STEEL MEMBERS FOR DISTORTION, EXCESSIVE RUST, FLAWS AND BURNED HOLES.

1.7.5. CHECK STEEL MEMBERS FOR SIZES, SWEEP AND DIMENSIONAL TOLERANCES.

1.7.6. CHECK FOR SURFACE FINISH SPECIFIED, GALVANIZED.

1.7.7. CHECK THAT BOLTS HAVE BEEN TIGHTENED PROPERLY.

1.7.8. PRIOR TO ANY FIELD CUTTING THE CONTRACTOR SHALL MARK THE CUTOUT LINES ON THE STEEL AND THE INSPECTION/TESTING AGENCY SHALL VERIFY PROPOSED LAYOUT, LOCATION, AND DIMENSIONS. THE INSPECTION/TESTING AGENCY SHALL CLOSELY AND CONTINUOUSLY MONITOR THIS ACTIVITY.

1.8. WELDING:

1.8.1. VERIFY FIELD WELDING PROCEDURES, WELDERS, AND WELDING OPERATORS, NOT DEEMED PREQUALIFIED, IN ACCORDANCE WITH AWS D1.1.

1.8.2. INSPECT FIELD WELDED CONNECTIONS IN ACCORDANCE WITH THE REQUIREMENTS SPECIFIED AND WITH AWS D1.1.

1.8.3. APPROVE FIELD WELDING SEQUENCE.

1.8.4. INSPECT WELDED CONNECTIONS AS FOLLOWS AND IN ACCORDANCE WITH AWS D1.1:

1.8.4.1. INSPECT WELDING EQUIPMENT FOR CAPACITY, MAINTENANCE, AND WORKING CONDITIONS.

1.8.4.2. VERIFY SPECIFIED ELECTRODES AND HANDLING AND STORAGE OF ELECTRODES FOR CONFORMANCE TO SPECIFICATIONS.

1.8.4.3. INSPECT PREHEATING AND INTERPASS TEMPERATURES FOR CONFORMANCE WITH AWS D1.1.

1.8.4.4. VISUALLY INSPECT ALL WELDS AND VERIFY THAT QUALITY OF WELDS MEETS THE REQUIREMENTS OF AWS D1.1. OTHER TESTS MAY ALSO BE PERFORMED ON THE WELDS BY THE TESTING AGENCY IN ORDER FOR THEM TO PERFORM THEIR DUTIES FOR THIS PROJECT.

1.8.4.5. SPOT TEST AT LEAST ONE FILLET WELD OF EACH MEMBER USING MAGNETIC PARTICLE.

1.8.4.6. INSPECT FOR SIZE, SPACING, TYPE AND LOCATION AS PER APPROVED DRAWINGS.

1.8.4.7. VERIFY THAT THE BASE METAL CONFORMS TO THE DRAWINGS.

1.8.4.8. REVIEW THE REPORTS BY TESTING LABS.

1.8.4.9. CHECK TO SEE THAT WELDS ARE CLEAN AND FREE FROM SLAG.

1.8.4.10. INSPECT RUST PROTECTION OF WELDS AS PER SPECIFICATIONS.

1.8.4.11. CHECK THAT DEFECTIVE WELDS ARE CLEARLY MARKED AND HAVE BEEN ADEQUATELY REPAIRED.

1.8.4.12. FULL PENETRATION WELDS IN THE VICINITY OF THE BASE OF THE TOWER ARE REQUIRED TO BE 100% NDE INSPECTED BY UT IN ACCORDANCE WITH AWS D1.1.

1.8.4.13. PARTIAL PENETRATION AND FILLET WELDS IN THE VICINITY OF THE BASE OF THE TOWER ARE REQUIRED TO BE 50% NDE INSPECTED BY MP IN ACCORDANCE WITH AWS D1.1.

1.9. REPORTS:

1.9.1. COMPILE AND PERIODICALLY SUBMIT DAILY INSPECTION REPORTS TO OWNER.

1.9.2. THE INSPECTION PLAN OUTLINED HEREIN IS INTENDED AS A DESCRIPTION OF GENERAL AND SPECIFIC ITEMS OF CONCERN. IT IS NOT INTENDED TO BE ALL-INCLUSIVE. IT DOES NOT LIMIT THE TESTING AND INSPECTION AGENCY TO THE ITEMS LISTED. ADDITIONAL TESTING, INSPECTION, AND CHECKING MAY BE REQUIRED AND SHOULD BE ANTICIPATED. THE TESTING AGENCY SHALL USE THEIR PROFESSIONAL JUDGMENT AND KNOWLEDGE OF THE JOB SITE CONDITIONS AND THE CONTRACTOR'S PERFORMANCE TO DECIDE WHAT OTHER ITEMS REQUIRE ADDITIONAL ATTENTION. THE TESTING AGENCY'S JUDGMENT MUST PREVAIL ON ITEMS NOT SPECIFICALLY COVERED. ANY DISCREPANCIES OR PROBLEMS SHALL BE BROUGHT IMMEDIATELY TO OWNER'S ATTENTION. RESOLUTIONS ARE NOT TO BE MADE WITHOUT OWNER'S REVIEW AND SPECIFIC WRITTEN CONSENT. OWNER RESERVES THE RIGHT TO DETERMINE WHETHER OR NOT A RESOLUTION IS ACCEPTABLE.

1.9.3. AFTER EACH INSPECTION, THE TESTING AGENCY WILL PREPARE A WRITTEN ACCEPTANCE OR REJECTION WHICH WILL BE GIVEN TO THE CONTRACTOR AND FILED AS DAILY REPORTS TO OWNER. THIS WRITTEN ACTION WILL GIVE THE CONTRACTOR A LIST OF ITEMS TO BE CORRECTED, PRIOR TO CONTINUING CONSTRUCTION, AND/OR LOADING OF STRUCTURAL ITEMS.

1.9.4. THE TESTING AGENCY DOES NOT RELIEVE THE CONTRACTOR'S CONTRACTUAL OR STATUTORY OBLIGATIONS. THE CONTRACTOR HAS THE SOLE RESPONSIBILITY FOR ANY DEVIATIONS FROM THE OFFICIAL CONTRACT DOCUMENTS. THE TESTING AGENCY WILL NOT REPLACE THE CONTRACTOR'S QUALITY CONTROL PERSONNEL.

1.10. CORRECTION OF FAILING MI'S

1.10.1. IF THE MODIFICATION INSTALLATION WOULD FAIL THE MI ("FAILED MI"), THE GC SHALL WORK WITH THE OWNER TO COORDINATE A REMEDIATION PLAN IN ONE OF TWO WAYS:

1.10.1.1. CORRECT FAILING ISSUES TO COMPLY WITH THE SPECIFICATIONS CONTAINED IN THE ORIGINAL CONTRACT DOCUMENTS AND COORDINATE A SUPPLEMENT MI.

1.10.1.2. OR, WITH THE OWNERS APPROVAL, THE GC MAY WORK WITH THE EOR TO RE-ANALYZE THE MODIFICATION/REINFORCEMENT USING THE AS-BUILT CONDITION

1.11. PHOTOGRAPHS

1.11.1. BETWEEN THE GC AND THE MI INSPECTOR THE FOLLOWING PHOTOGRAPHS, AT A MINIMUM, ARE TO BE TAKEN AND INCLUDED IN THE MI REPORT:

1.11.1.1. PRE-CONSTRUCTION GENERAL SITE CONDITION

1.11.1.2. PHOTOGRAPHS DURING THE REINFORCEMENT MODIFICATION CONSTRUCTION/ERECTION AND INSPECTION

1.11.1.2.1. RAW MATERIALS

1.11.1.2.2. PHOTOS OF ALL CRITICAL DETAILS

1.11.1.2.3. FOUNDATION MODIFICATIONS

1.11.1.2.4. WELD PREPARATION

1.11.1.2.5. BOLT INSTALLATION AND TORQUE

1.11.1.2.6. FINAL INSTALLED CONDITION

1.11.1.2.7. SURFACE COATING REPAIR

1.11.1.3. POST CONSTRUCTION PHOTOGRAPHS

1.11.1.3.1. FINAL INFIELD CONDITION

1.11.2. PHOTOS OF ELEVATED MODIFICATIONS TAKEN FROM THE GROUND SHALL BE CONSIDERED INADEQUATE.

POST-MODIFICATION CHECKLIST

REQUIRED	REPORT ITEM	BRIEF DESCRIPTION
	PRE-CONSTRUCTION	
X	MI CHECKLIST DRAWING	THIS CHECKLIST SHALL BE INCLUDED IN THE MI REPORT
X	EOR APPROVED SHOP DRAWINGS	FABRICATION DRAWINGS SHALL BE SUBMITTED TO THE ENGINEER OF RECORD FOR REVIEW. THE CONTRACTOR SHALL PROVIDE THE APPROVED SHOP DRAWINGS TO THE MI INSPECTOR FOR INCLUSION IN THE MI REPORT.
X	FABRICATION INSPECTION	A LETTER FROM THE FABRICATOR, STATING THAT THE WORK WAS PERFORMED IN ACCORDANCE WITH INDUSTRY STANDARDS AND THE CONTRACT DOCUMENTS SHALL BE PROVIDED TO THE MI INSPECTOR FOR INCLUSION IN THE MI REPORT.
NA	FABRICATOR CERTIFIED WELD INSPECTION	CRITICAL SHOP WELDS THAT REQUIRE TESTING ARE NOTED ON THESE CONTRACT DRAWINGS. A CERTIFIED WELD INSPECTOR SHALL PERFORM NON-DESTRUCTIVE TESTING AND A REPORT SHALL BE PROVIDED TO THE MI INSPECTOR FOR INCLUSION IN THE MI REPORT.
NA	MATERIAL TEST REPORT (MTR)	MILL CERTIFICATION SHALL BE PROVIDED FOR ALL STEEL WITH A YIELD STRENGTH GREATER THAN 36 KSI AND THIS DOCUMENTATION SHALL BE PROVIDED TO THE MI INSPECTOR FOR INCLUSION IN THE MI REPORT.
X	FABRICATOR NDE INSPECTION	A VISUAL OBSERVATION OF A PORTION OF THE EXISTING STRUCTURE (AS NOTED ON THESE DRAWINGS) IS REQUIRED AND A WRITTEN REPORT SHALL BE PROVIDED TO THE MI INSPECTOR FOR INCLUSION IN THE MI REPORT.
NA	NDE REPORT OF MONOPOLE BASE PLATE (AS REQUIRED)	A VISUAL OBSERVATION OF THE POLE TO BASE PLATE CONNECTION IS REQUIRED AND A WRITTEN REPORT SHALL BE PROVIDED TO THE MI INSPECTOR FOR INCLUSION IN THE MI REPORT.
X	PACKING SLIPS	THE MATERIAL SHIPPING LIST SHALL BE PROVIDED TO THE MI INSPECTOR FOR INCLUSION IN THE MI REPORT.
	CONSTRUCTION	
X	CONSTRUCTION INSPECTIONS	A LETTER FROM THE GENERAL CONTRACTOR STATING THAT THE WORKMANSHIP WAS PERFORMED IN ACCORDANCE WITH INDUSTRY STANDARDS AND THESE CONTRACT DRAWINGS SHALL BE PROVIDED TO THE MI INSPECTOR FOR INCLUSION IN THE MI REPORT.
NA	FOUNDATION INSPECTIONS	A VISUAL OBSERVATION OF THE EXCAVATION AND REBAR SHALL BE PERFORMED BEFORE PLACING THE CONCRETE. A WRITTEN REPORT SHALL BE PROVIDED TO THE MI INSPECTOR FOR INCLUSION IN THE MI REPORT.
NA	CONCRETE COMP. STRENGTH AND SLUMP TESTS	THE CONCRETE MIX DESIGN, SLUMP TEST, AND COMPRESSIVE STRENGTH TESTS SHALL BE PROVIDED TO THE MI INSPECTOR FOR INCLUSION IN THE MI REPORT.
NA	POST INSTALLED ANCHOR ROD VERIFICATION	ANCHOR ROD INSTALLATION SHALL INCLUDE VERIFICATION BY LETTER AND PHOTOGRAPHIC DOCUMENTATION.
NA	BASE PLATE GROUT VERIFICATION	A LETTER FROM THE GENERAL CONTRACTOR SHALL BE PROVIDED TO THE MI INSPECTOR THAT CERTIFIES THAT THE GROUT WAS INSTALLED IN ACCORDANCE WITH SPECIFICATIONS FOR INCLUSION IN THE MI REPORT.
NA	CONTRACTOR'S CERTIFIED WELD INSPECTION	A CERTIFIED WELD INSPECTOR SHALL INSPECT AND TEST AS NECESSARY ALL FIELD WELDS AND A REPORT SHALL BE PROVIDED TO THE MI INSPECTOR FOR INCLUSION IN THE MI REPORT. PRE, DURING AND POST WELD INSPECTION IS REQUIRED.
NA	EARTHWORK: LIFT AND DENSITY	FOUNDATION SUB-GRADES SHALL BE INSPECTED AND APPROVED BY A GEOTECHNICAL ENGINEER AND A REPORT SHALL BE PROVIDED TO THE MI INSPECTOR FOR INCLUSION IN THE MI REPORT.
X	ON SITE COLD GALVANIZING VERIFICATION	THE GENERAL CONTRACTOR SHALL PROVIDE DOCUMENTATION TO THE MI INSPECTOR VERIFYING THAT ANY ON-SITE COLD GALVANIZING WAS APPLIED IN ACCORDANCE WITH SPECIFICATIONS.
NA	GUY WIRE TENSION REPORT	THE GENERAL CONTRACTOR SHALL PROVIDE A REPORT TO THE MI INSPECTOR INDICATING THE TEMPERATURE AND TENSION IN EVERY GUY CABLE FOR INCLUSION IN THE MI REPORT.
X	GC AS-BUILT DOCUMENTS	THE GENERAL CONTRACTOR SHALL SUBMIT A COPY OF THE CONTRACT DRAWINGS EITHER STATING "INSTALLED AS DESIGNED" OR NOTING ANY CHANGES THAT WERE REQUIRED AND APPROVED BY THE ENGINEER OF RECORD DUE TO FIELD CONDITIONS.
NA	MICROPILE / ROCK ANCHOR	THE GENERAL CONTRACTOR SHALL PROVIDE INSTALLER'S DRILLING AND INSTALLATION LOGS AND QA/QC DOCUMENTATION TO THE MI INSPECTOR FOR INCLUSION IN THE MI REPORT.
	POST-CONSTRUCTION	
X	MI INSPECTOR REDLINE OR RECORD DRAWING(S)	THE MI INSPECTOR SHALL OBSERVE AND REPORT ANY DISCREPANCIES BETWEEN THE CONTRACTORS REDLINE DRAWING AND THE ACTUAL COMPLETED INSTALLATION.
NA	POST INSTALLED ANCHOR ROD PULL TESTING	POST INSTALLED ANCHOR RODS SHALL BE TESTED IN ACCORDANCE WITH SPECIFICATIONS AND A REPORT SHALL BE PROVIDED TO THE MI INSPECTOR FOR INCLUSION IN THE MI REPORT.
X	PHOTOGRAPHS	PHOTOGRAPHS SHALL BE SUBMITTED TO THE MI WHICH DOCUMENT ALL PHASES OF THE CONSTRUCTION. THE PHOTOS SHALL BE ORGANIZED IN A MANNER THAT EASILY IDENTIFIES THE EXACT LOCATION OF THE PHOTO.
NA	POST INSTALLED MICROPILE / ROCK ANCHOR TESTING	POST INSTALLED ANCHORS SHALL BE TESTED AND INSPECTED IN ACCORDANCE WITH SPECIFICATION STATED ON MICROPILE/ROCK ANCHOR NOTES.

NOTE: X DENOTES A DOCUMENT NEEDED FROM THE CONTRACTOR FOR THE MI REPORT
NA DENOTES A DOCUMENT THAT IS NOT REQUIRED FOR THE MI REPORT

STATE OF CONNECTICUT
JAMES R. ANTOSZEWSKI
31499
LICENSED
PROFESSIONAL ENGINEER

07/03/2019

© Copyright 2019, by Paul J. Ford and Company, All Rights Reserved. This document and the data contained herein, is proprietary to Paul J. Ford and Company, issued in strict confidence and shall not, without the prior written permission of Paul J. Ford and Company, be reproduced, copied or used for any purpose other than the intended use for this specific project.

PJF PAUL J. FORD & COMPANY
250 E Broad St, Ste 600 · Columbus, OH 43215
Phone 614.221.6679 www.pauljford.com

AT&T
99 EAST RIVER ROAD, 9TH FLOOR EAST HARTFORD, CONNECTICUT 06108

EVERSOURCE STRUCTURE #24063
MIDDLETOWN - NORWALK 345kV LINE
525 OVERLAND DRIVE
ORANGE, NEW HAVEN COUNTY, CONNECTICUT
AT&T ORANGE OVERLAND DRIVE - SITE #CTL02343

PROJECT No:	80619-0001.003.6190
DRAWN BY:	FE
DESIGNED BY:	CEC
CHECKED BY:	CEC
DATE:	7-3-2019

INSPECTION NOTES

MI-1

SHEET #3 OF 5

80619-0001.003.6190.DWG

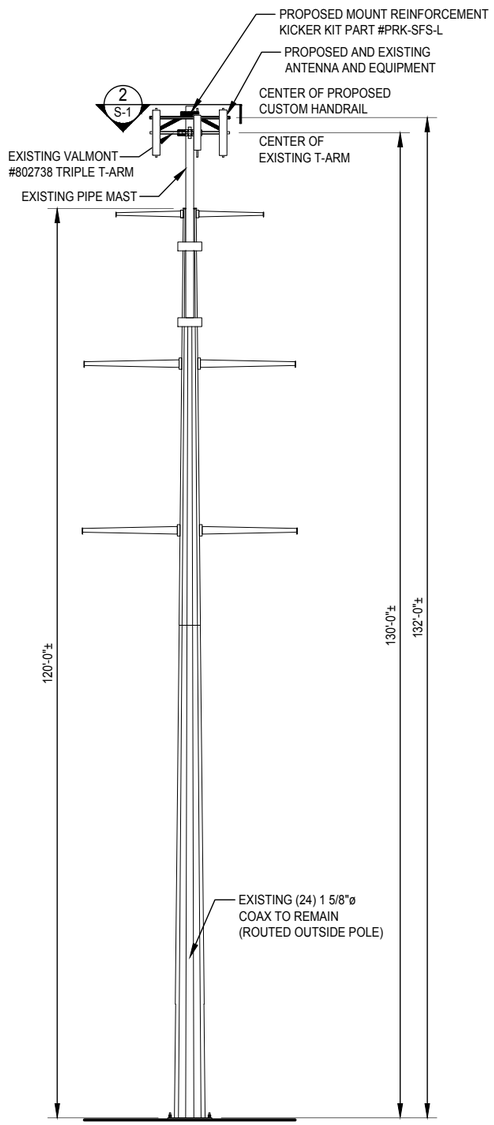

POLE ELEVATION 1 / S-1

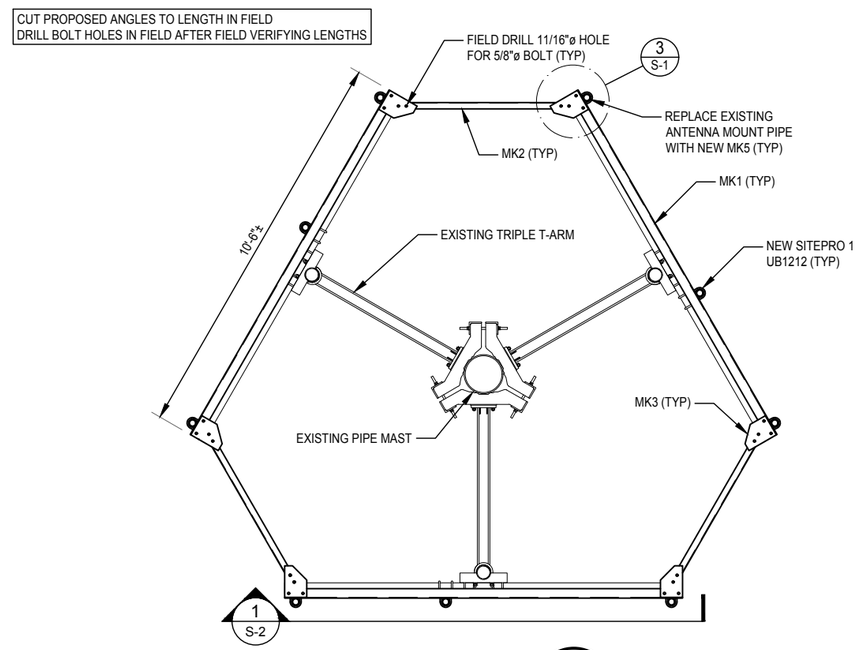

SECTION 2 / S-1

NOTE:
PROPOSED MOUNT REINFORCEMENT KICKER KIT PART #PRK-SFS-L NOT SHOWN IN THIS VIEW FOR CLARITY

MATERIAL LIST				
ELEVATION	MARK NO	QTY	MATERIAL	LENGTH
132'±	MK1	3	L3 x 3 x 1/4	14'-0"±
	MK2	3	L2 x 2 x 3/16	8'-0"±
	MK3	6	CONNECTION PLATE 1/4" x 7"	0'-10"
	MK4	6	L2 x 2 x 3/16	9'-0"±
	MK5	9	PIPE 2.0 XS	8'-0"
		1	SITEPRO 1 PRK-SFS-L	
		27	SITEPRO 1 UB1212	
		24	5/8"ø A325N BOLTS	

THE ABOVE MATERIAL LIST IS PROVIDED TO CLEARLY IDENTIFY MEMBER SIZES. THE CONTRACTOR SHALL BE SOLELY RESPONSIBLE FOR THE PROPER FIT AND CLEARANCE OF THE REINFORCING MATERIAL IN THE FIELD. THE CONTRACTOR IS EXPECTED TO PERFORM A SITE VISIT BEFORE FABRICATING ANY MATERIAL.

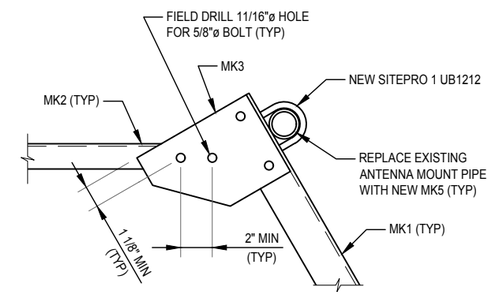

CONNECTION DETAIL (TYP) 3 / S-1

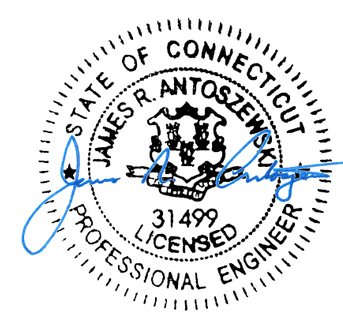

07/03/2019

© Copyright 2019, by Paul J. Ford and Company, All Rights Reserved. This document and the data contained herein, is proprietary to Paul J. Ford and Company, issued in strict confidence and shall not, without the prior written permission of Paul J. Ford and Company, be reproduced, copied or used for any purpose other than the intended use for this specific project.

PJF PAUL J. FORD & COMPANY
250 E Broad St, Ste 600 · Columbus, OH 43215
Phone 614.221.6679 www.pauljford.com

AT&T
99 EAST RIVER ROAD, 9TH FLOOR EAST HARTFORD, CONNECTICUT 06108

EVERSOURCE STRUCTURE #24063
MIDDLETOWN - NORWALK 345kV LINE
525 OVERLAND DRIVE
ORANGE, NEW HAVEN COUNTY, CONNECTICUT
AT&T ORANGE OVERLAND DRIVE - SITE #CTL02343

PROJECT No:	80619-0001.003.6190
DRAWN BY:	FE
DESIGNED BY:	CEC
CHECKED BY:	CEC
DATE:	7-3-2019

TOWER ELEVATIONS AND MATERIAL LIST

S-1
SHEET #4 OF 5

80619-0001.003.6190.DWG

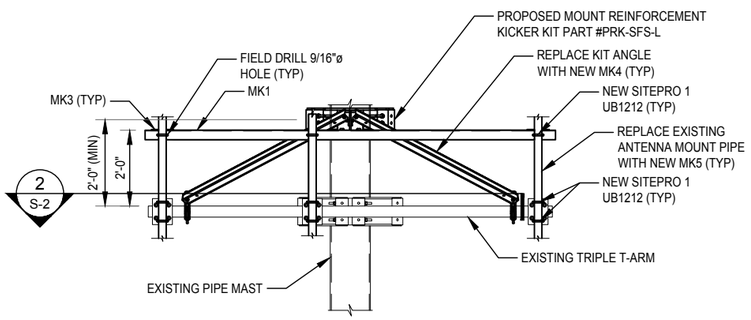

ELEVATION 1 / S-2

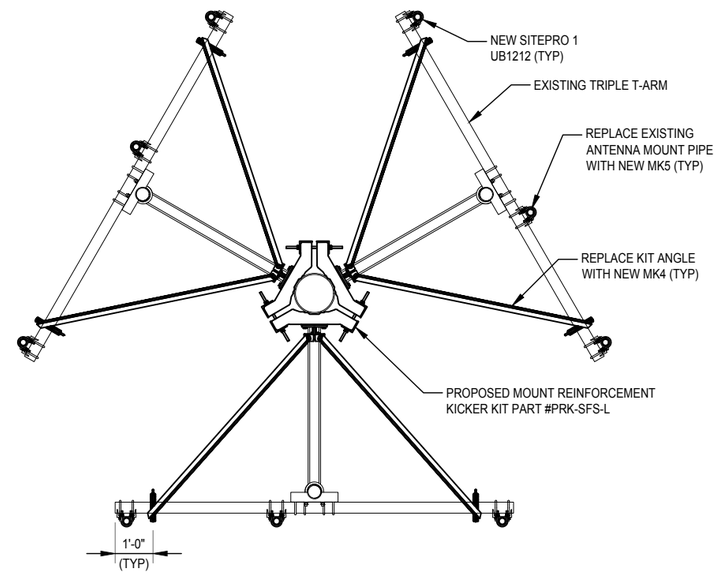

SECTION 2 / S-2

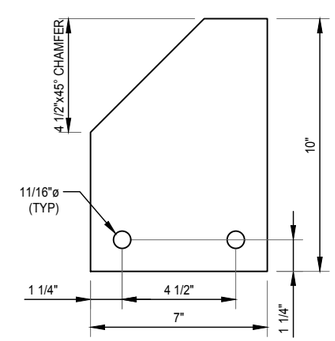

MK3

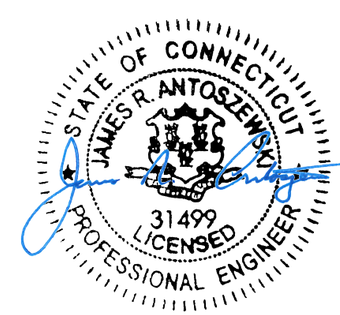

07/03/2019

© Copyright 2019, by Paul J. Ford and Company, All Rights Reserved. This document and the data contained herein, is proprietary to Paul J. Ford and Company, issued in strict confidence and shall not, without the prior written permission of Paul J. Ford and Company, be reproduced, copied or used for any purpose other than the intended use for this specific project.

PJF PAUL J. FORD & COMPANY
250 E Broad St, Ste 600 · Columbus, OH 43215
Phone 614.221.6679 www.pauljford.com

AT&T

99 EAST RIVER ROAD, 9TH FLOOR EAST HARTFORD, CONNECTICUT 06108

EVERSOURCE STRUCTURE #24063

MIDDLETOWN - NORWALK 345kV LINE
525 OVERLAND DRIVE
ORANGE, NEW HAVEN COUNTY, CONNECTICUT
AT&T ORANGE OVERLAND DRIVE - SITE #CTL02343

PROJECT No:	80619-0001.003.6190
DRAWN BY:	FE
DESIGNED BY:	CEC
CHECKED BY:	CEC
DATE:	7-3-2019

TOWER ELEVATIONS AND SECTIONS

S-2

SHEET #5 OF 5

80619-0001.003.6190.DWG

PAUL J. FORD & COMPANY

EVERSOURCE

Structural Analysis Report

Transmission Pole #24063
Middletown - Norwalk - 345 Line

Orange Overland Drive Site #CTL02343

Prepared on behalf of:

at&t

99 East River Road, 9th Floor
East Hartford, CT 06108

PJF Project #A80619-0001.001.6000_6050

REVISION	DATE	DESCRIPTION	ENGINEER	PJF TRACKING
0	02/12/2019	ORIGINAL ISSUE DATE	CEC	.001.6000_6050

Columbus
250 E Broad St, Suite 600
Columbus, OH 43215
Phone 614.221.6679

Orlando
1801 Lee Rd, Suite 230
Winter Park, FL 32789
Phone 407.898.9039

PAUL J. FORD & COMPANY

EVERSOURCE

Report Date:	February 12, 2019
Client:	Smartlink, LLC 85 Rangeway Rd North Billerica, MA 01862-2105 Attn: David Barbagallo 860-681-7708 david.barbagallo@smartlinkllc.com
Utility Name:	Eversource Energy
Structure:	Existing 120-ft Transmission Pole #24063
Line Reference:	Middletown - Norwalk - 345kV Line
Site Name:	Orange Overland Drive AT&T - CTL02343
Site Address:	525 Overland Dr
City, County, State:	Orange, New Haven County, CT
Latitude, Longitude:	41.289361, -73.001083
PJF Project:	A80619-0001.001.6000_6050

Paul J. Ford and Company is pleased to submit this "**Structural Analysis Report**". The purpose of this analysis is to determine if the structure has sufficient capacity to support the existing and proposed equipment described herein.

Analysis Criteria:

Reference Standard:	IEEE Standards Association, "National Electrical Safety Code" (NESC) C2-2007 ANSI/TIA-222-G-2-2009 Standard, "Structural Standard for Antenna Supporting Structures and Antennas – Addendum 2" ASCE Standard 48-05, "Design of Steel Transmission Pole Structures"
Utility Specification:	Northeast Utilities OTRM 059 Rev. 0 (06/07/2018)

Proposed Appurtenance Loads:

The structure was analyzed with the addition of the proposed appurtenances loads shown in Table 1 combined with the existing and reserved loads shown in Table 2 and 3 of this report.

Summary of Analysis Results:

Existing Structure:	**Pass**
Existing Foundation:	**Pass**
Existing Antenna Mast:	**Pass**

We at Paul J. Ford and Company appreciate the opportunity of providing our continuing professional services to you and Smartlink, LLC. If you have any questions or need further assistance on this or any other projects please give us a call.

Respectfully Submitted by:
Paul J. Ford and Company

Charles E. Carrillo, P.E.
Project Engineer
ccarrillo@pauljford.com

STATE OF CONNECTICUT
JAMES R. ANTOSZEWSKI
31499
LICENSED
PROFESSIONAL ENGINEER
2/12/2019

TABLE OF CONTENTS

1) INTRODUCTION

2) ANALYSIS CRITERIA

Reference Standard
Utility Specification
Table 1 – Proposed Antenna and Cable Information
Table 2 – Existing and Reserved Antenna and Cable Information
Table 3 – Existing Electrical Utility Wire Information
Table 4a – Utility Tower Analysis - Load Case Information
Table 4b – Antenna Mount Analysis – Load Case Information

3) ANALYSIS PROCEDURE

Table 5 – Documents Provided
3.1) Analysis Method
3.2) Assumptions

4) ANALYSIS RESULTS

Table 6 – Maximum Structure Element Usage
Table 7 – Maximum Foundation Usages
Table 8 – Maximum Antenna Mount Usages
4.1) Recommendations

5) CONCLUSION

STANDARD CONDITIONS

APPENDIX A – STRUCTURE PHOTOS / PROFILE SHEET

APPENDIX B – LOAD CALCULATIONS

Wire Load Sheets (Provided by NU)
TIA-222-G - Load Calculations for Mast Analysis

APPENDIX C – COMPUTER OUTPUT

C1 - TIA-222-G – Risa 3D Mast Analysis – Output
C2 - PLS Software
PLS Software – Structure Model Node Diagram
PLS Software – Structure Usage Diagram (Color Coded by Usage)
PLS Software – Output

APPENDIX D – SUPPLEMENTAL CALCULATIONS

TIA-222-G - Mast Connection to CL&P Tower Analysis
ASCE 48-05 - Anchor Bolt Check
Foundation Analysis

APPENDIX E – SUPPLEMENTAL INFORMATION

1) INTRODUCTION

The purpose of this analysis is to determine if the existing structure and existing foundations have sufficient capacity to support the existing and proposed equipment along with the existing wire loads described herein. The existing structure is a 120' tall double circuit steel transmission pole designated as a 345kV type "33-CDCSP-001-UWX.120". The existing pole consists of a 12-sided round polygonal pole shaft and base plate.

The modified antenna mounting system consists of one (1) 10'-6" triple t-arm assembly installed on an existing 12" pipe mast. Refer to Tables 1 and 2 below and drawing SK-1 located in Appendix A for further antenna equipment and mount information.

The proposed modifications, as shown on the drawings referenced in Table 5 of this report have been taken into account as part of this analysis.

2) ANALYSIS CRITERIA

Reference Standard: IEEE Standards Association, "National Electrical Safety Code" (NESC) C2-2007
ANSI/TIA-222-G-2-2009 Standard, "Structural Standard for Antenna Supporting Structures and Antennas – Addendum 2"
ASCE Standard 48-05, "Design of Steel Transmission Pole Structures"

Utility Specification: Northeast Utilities OTRM 059 Rev. 0 (06/07/2018)

Table 1 – Proposed Antenna and Cable Information[1]

Mounting Level (feet)	Center Line Elevation (feet)	Quantity	Manufacturer	Model	Number of Feed Lines[2]	Feed Line Size (inches)	Note
130	130	3	Kathrein	800-10965 (Antenna)	-	-	-
		6	CCI	TMABPD7823VG12A (TMA)			
		1	-	10'-6" Custom Handrail			
		1	SitePro1	PRK-SFS-L			

Notes:
1. See drawing SK-1 in "Appendix A – Structure Profile Sheet" for further details.
2. (E) – Coax mounted externally and exposed to the wind.

Table 2 – Existing and Reserved Antenna and Cable Information[1]

Mounting Level (feet)	Center Line Elevation (feet)	Quantity	Manufacturer	Model	Number of Feed Lines[2]	Feed Line Size (inches)	Note
130	130	3	Andrew	SBNH-1D6565B (Antenna)	30 (E)	1-5/8	3
		3	Quintel	QS66512-2 (Antenna)			
		6	Kaelus	TMA2117F00V1-1 (TMA)			
		1	Valmont	802378 (10'-6" Triple T-Arm Assembly)			

Notes:
1. See drawing SK-1 in "Appendix A – Structure Profile Sheet" for further details.
2. (E) – Coax mounted externally and exposed to the wind.
3. Existing equipment to remain. All other existing equipment to be removed.

Table 3 – Existing Electrical Utility Wire Information[1]

Wire Designation	Wire Type	Tension Angle (degrees)	Wind Span		Weight Span	
			Back (feet)	Ahead (feet)	Back (feet)	Ahead (feet)
Shield Wire #1	(1) - Brugg_86AY62ACS-2C_345	0	-	-	-	-
Shield Wire #2	(1) - 19#10 Alumoweld					
Conductor	(6) - Lapwing					

Notes:
1. Wire loads provided by the utility. See "Appendix B – Load Calculations" for further details.

Table 4a – Utility Tower Analysis - Load Case Information[1]

Load Case Name	Radial Ice (inches)	Wind Speed (mph)	Overload Capacity Factors				Note
			Vertical	Wind	Wire Tension		
					Long.	Trans.	
NESC 250B (Heavy)	0.5	39.5	1.5	2.5	1.1	1.65	-
NESC 250C (Extreme Wind)	0	110	1.0	1.0	1.0	1.0	2
NESC 250D (Extreme Wind w/Ice)	0.75	50	1.0	1.0	1.0	1.0	-

Notes:
1. As per the requirements of NU Design Criteria Table, NESC C2-2017 – Construction Grade B, and ASCE 48-05, "Design of Steel Transmission Pole Structures".
2. Apply a 1.25 X Gust Response Factor to all telecommunication equipment projected above top of pole and a 1.0 X Gust Response Factor to the pole structure as per NU Design Criteria Table.

Table 4b – Antenna Mount Analysis - Load Case Information[1]

Load Case Name	Radial Ice (inches)	Wind Speed (mph)	Note
TIA/EIA – High Wind	0	97	-
TIA/EIA – Wind and Ice	0.75	50	-

Notes:
1. As per the requirements of the CT State Building Code, V. ultimate = 125mph (Risk Cat. II) converted to V. nominal = 97mph for use with TIA/EIA-222-G, Structure Class III, Exposure C and Topographic Category 1.

3) ANALYSIS PROCEDURE

Table 5 – Documents Provided

Document	Remarks	Reference	Source
Structure Erection Drawings	Thomas&Betts, 09/04/2007	20707-ND1117AT	Eversource
Structure Fabrication Drawings	Thomas&Betts, Varies	20707-3040-3041, 20707-E, F	
Structure Anchor Bolts	Thomas&Betts, 08/06/2007	20707-ND1117AA	
Structure Foundation Drawings/Schedule	Northeast Utilities Service Co., 03/20/2006	01229-60001, 01007-40001	
Geotechnical Report	Haley & Aldrich, 03/30/2006	32500-100	
Previous SA Report	Centek, 02/23/2016	15267.006	
RF Data Sheet	AT&T, 07/10/2018	CTL02343	Smartlink, LLC
Mount Modification Drawings	PJF, 02/12/2019	80619-0001.001.6190	PJF

3.1) Analysis Method

Risa-3D is a commercially available analysis software package made by Risa Technologies, LLC. Risa-3D was used to create a three-dimensional model of the mast extension and calculate member stresses for various load cases. Selected output from the analysis is included in Appendix C.

PLS-Pole™ is a commercially available analysis software package made by Powerline Systems, Inc. PLS-Pole™ was used to create a three-dimensional model of the pole and calculate member stresses for various load cases. Equipment and wire load calculations were completed using Microsoft Excel or MathCAD and applied to the structure model as point loads. Load Calculations are included in Appendix B. Selected output from the analysis is included in Appendix C.

LPILE (version 6.0.22) is a commonly available software package by Ensoft, Inc. LPILE was used to create a model of the foundation. Additional calculations were completed using MathCAD. Load Calculations and selected output from the analysis is included in Appendix D.

3.2) Assumptions

1) *The structure was built in accordance with the manufacturer's specifications.*
2) *The structure has been maintained in accordance with the manufacturer's specifications.*
3) *The analysis assumes that no physical deterioration has occurred in any of the structural components and that all members have the same load carrying capacity as the day the structure was erected. No allowance was made for any damaged, missing, or rusted members.*
4) *All bolts have been torqued to the snug-tight condition as defined by AISC.*
5) *No residual stresses exist due to incorrect tower erection.*
6) *All welds conform to the requirements of AWS D1.1.*
7) *The configuration of antennas, cables, mounts and other appurtenances are as specified in Tables 1 and 2 of this report and as per the referenced documents in Table 5.*
8) *The wind loads applied to the structure, due to the antenna installations, are based on the full projected area of all antenna equipment in all directions (i.e. no shielding used).*
9) *Pipe riser and utility tower are in plumb condition.*
10) *Pole shaft steel material assumed to be A871 (weathering steel) with minimum yield stress of 65ksi.*
11) *Pole base plate steel material assumed to be A871 (weathering steel) with a minimum yield stress of 60ksi.*
12) *The mount modifications, as shown in the referenced PJF documents, have been installed.*
13) *No further modifications to the structure have been made other than those referenced herein.*
14) *For the NESC analysis of the structure, a modified shape factor (drag coefficient) has been used for all equipment located above the top of the structure. The modified shape factor is determined by multiplying any applicable shape factors, as required by OTRM 059 Section 4.E.2.c.ii & iii, by 1.25.*

This analysis may be affected if any assumptions are not valid or have been made in error. Paul J Ford and Company should be notified to determine the effect on the structural integrity of the tower.

4) ANALYSIS RESULTS

The following table provides the maximum usages for each structure element type and the loading condition in which they occur:

Table 6 – Maximum Structure Element Usages

Pole – Analysis		
Element Type	**Load Case**	**Usage (%)**
Pole Shaft	NESC 250C (Extreme Wind)	59
Base Plate	NESC 250C (Extreme Wind)	44
Davit Arms	NESC 250D (Extreme Ice w/Wind)	63
Mast	NESC 250C (Extreme Wind)	84
Pole – Supplemental Analysis		
Element Type	**Load Case**	**Usage (%)**
Anchor Bolts	NESC 250C (Extreme Wind)	51
	Maximum Structure Element Usage =	**84**
	Existing Structure Result =	**Pass**

Notes:
1. See "Appendix C – Computer Output" for further detailed information.
2. See "Appendix D – Supplemental Calculations" for calculations supporting the % capacity used.

Table 7 – Maximum Structure Foundation Usages

Foundation Analysis		
	Load Case	**Usage (%)**
Axial Check	NESC 250B (Heavy)	2
Moment Check	NESC 250C (Extreme Wind)	52
Shear Check	NESC 250C (Extreme Wind)	55
Bearing Check	NESC 250B (Heavy)	10
	Maximum Foundation Usage =	**55**
	Existing Foundation Result =	**Pass**

Notes:
1. See "Appendix D – Supplemental Calculations" for calculations supporting the % capacity used.

Table 8 – Maximum Antenna Mast Usages

Antenna Mast – Analysis			
Member		**Load Case**	**Usage (%)**
12" Schedule 28' Mast		TIA/EIA – High Wind	89
Mast Connection to CL&P Tower (See Note 3 Below)		TIA/EIA – High Wind	26
Limit State Deformations(1)			
Limit State	**Analysis Value**	**Maximum Allowable Value**	**Result**
Twist	0.00014°	4°	OK
Sway (Tilt)	0.451°	4°	OK
Horizontal Displacement	1.37"	3.24" (2)	OK
		Maximum Antenna Mast Usage =	**89**
		Existing Antenna Mast Result =	**Pass**

Notes:
1. As per the requirements of ANSI/TIA-222-G - Section 2.8.2
2. 1.5% of cantilevered mast height = 18' *12"/ft x 0.015 = 3.24"
3. See "Appendix D – Supplemental Calculations" for calculations supporting the % capacity used.

5) CONCLUSION

The existing transmission pole has **sufficient** capacity to support the existing and proposed equipment along with the existing wire loads described herein.

The existing foundation(s) have **sufficient** capacity to support the existing and proposed equipment along with the existing wire loads described herein.

The modified antenna mast has **sufficient** capacity to support the existing and proposed equipment described herein.

This analysis is presented based upon the assumptions listed herein and information provided by the utility and the wireless carrier. If the existing conditions are different than those presented here, Paul J. Ford and Company should be contacted to verify the validity of the conclusions presented here.

STANDARD CONDITIONS FOR FURNISHING OF PROFESSIONAL ENGINEERING SERVICES ON EXISTING STRUCTURES BY PAUL J. FORD AND COMPANY

1) It is the responsibility of the client to ensure that the information provided to Paul J. Ford and Company is accurate and complete. Paul J. Ford and Company will rely on the accuracy and completeness of such information in performing or furnishing services under this project.

2) If the existing conditions are not as represented on the referenced drawings and/or documents, Paul J. Ford and Company should be contacted immediately to evaluate the significance of the deviation.

3) The structure has been analyzed according to the minimum design loads recommended by the Reference Standard. If additional design loads are required, Paul J. Ford and Company should be made aware of this prior to the start of the project.

4) The standard of care for all Professional Engineering Services performed or furnished by Paul J. Ford and Company under this project will be the skill and care used by members of the Consultant's profession practicing under similar circumstances at the same time and in the same locality.

5) All Services are performed, results obtained, and recommendations made in accordance with generally accepted engineering principles and practices. Paul J. Ford and Company is not responsible for the conclusions, opinions and/or recommendations made by others based on the information supplied herein.

****

APPENDIX A

STRUCTURE PHOTOS / PROFILE SHEET

FINAL ANTENNA INFORMATION

RAD ℄	STATUS	QUANITY	MANUFACTURER	MODEL
130'-0"±	PROPOSED	3	KATHREIN	800-10965 (ANTENNA)
		6	CCI	TMABPD7823VG12A (TMA)
		1	PJF	CUSTOM HANDRAIL
		1	SITEPRO 1	PRK-SFS-L (MOUNT KICKER KIT)
	EXISTING	3	ANDREW	SBNH-1D6565B (ANTENNA)
		3	QUINTEL	QS66512-2 (ANTENNA)
		6	KAELUS	TMA2117F00V1-1 (TMA)
		1	VALMONT	802738 (10'-6" TRIPLE T-ARM)

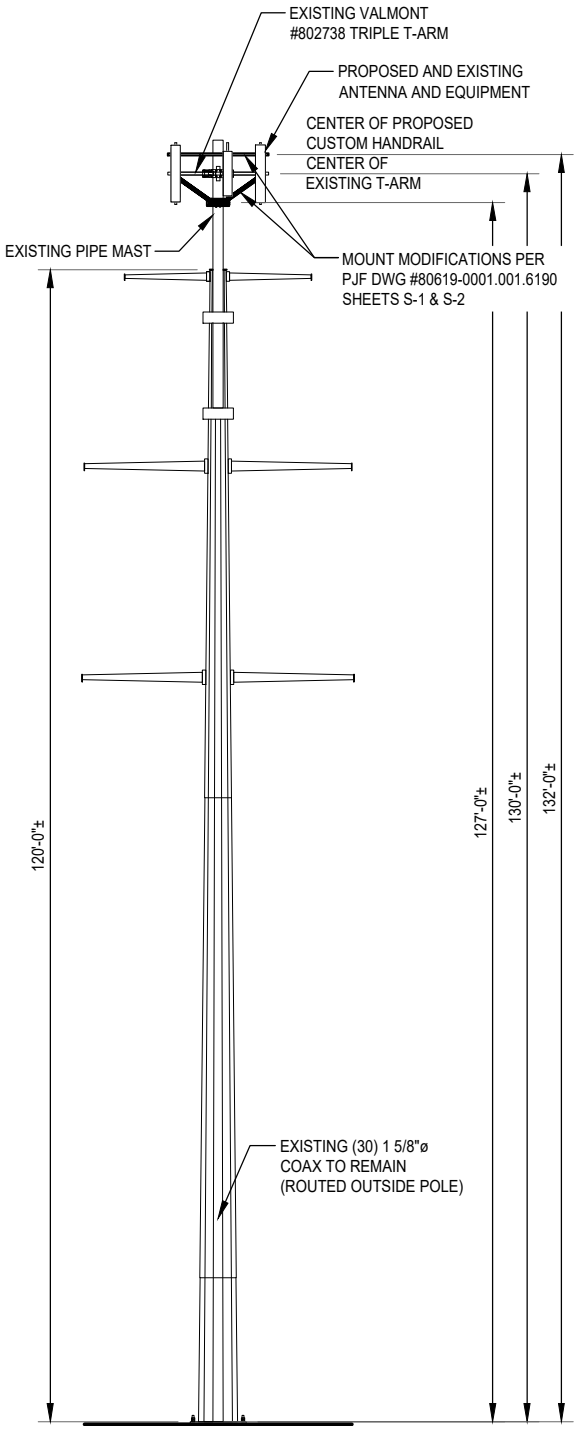

ELEVATION

TRANSVERSE FACE
LOOKING SOUTHWEST

NOTE:
INFORMATION PROVIDED ON THIS DRAWING IS INTENDED SOLELY FOR THE PURPOSES OF THIS STRUCTURAL ANALYSIS REPORT. PJF WILL NOT BE RESPONSIBLE FOR ITEMS FABRICATED, PURCHASED OR INSTALLED BASED ON THIS DRAWING.

PAUL J. FORD & COMPANY
250 E Broad St, Ste 600 · Columbus, OH 43215
Phone 614.221.6679 www.pauljford.com

AT&T
99 EAST RIVER ROAD, 9TH FLOOR EAST HARTFORD, CT 06108

Description:
TRANSMISSION POLE WITH ANTENNA MOUNT - ELEVATIONS AND SECTIONS

Utility:
EVERSOURCE

Structure Info: TOWER #24063; MIDDLETOWN - NORWALK 345kV LINE

Site Info: 525 OVERLAND DRIVE, ORANGE, NEW HAVEN COUNTY, CONNECTICUT
ORANGE OVERLAND DRIVE SITE #CTL02343

Job No.	80619-0001.001.6000
Drawn by:	FE
Designed by:	CEC
Checked by:	JRA
Date	2-12-2019

SK-1

80619-0001.001.6000.dwg

APPENDIX B

LOAD CALCULATIONS

PLS-CADD Version 11.16x64 10:25:52 AM Wednesday, September 28, 2011
Northeast Utilities System
Project Name: 'c:\cps\pls-cadd\prj-dev\xyz files\peaserd_eastdevon_final_pls.DON'
Line Title: '345-kV/115-kV 3827, 1640, 1685, 1776, 1497, & 1350'

Criteria notes:
NESC Heavy per Rule 250B, Page 161
Extreme Wind Loading per Rule 250C, Page 161, Coefficients and Gust Response Factors per Equations in Tables 250-2, 250-3
90 MPH Basic Wind Speed, 3 second Gust Wind Speed, Figure 250-2 Beginning on Page 166
Grade B Construction "Method A" per Table 253-1, Page 173 and Table 261-1A, Page 182
Tension Limits per Rule 261H1, Page 179
Insulator Strength Reduction per Rule 277, Page 188 Should be applied to Insulator Strengths when Modeling Insulators
2002 NESC C2-2002 Criteria File for PLS-CADD Created December 21, 2001
Structure 24277 (just North of Durham Rd) moved 50` south per homeowner request. Structure height increased 5 ft. to maintain ground clearance.
1-27-06 Moved structure 24257 100` NE to accomodate homeowner request.
Homeowner request - Structures 24102 & 3915 were moved 100 ft. North for aesthetic purposes.
Homeowner request - Structure 3910 moved 90 ft. South out of line of sight.
Homeowner requests - Neighborhoods of Salem Rd, Country Ct., & Brookwood Ct. requested 135` typ. split phase.
do not change these areas structure heights.
Homeowner request - Structures 24098 & 3911 moved South to property line.
Structure 3808 raised 10 ft. to meet road clearance requirements
12-5-06: Structure 3807 moved 15 ft. South to avoid existing 3808 guy wires.
3848: Moved 5 ft. South towards 3847 per field request, too close to rock wall and distribution lines.
3848: Moved 5 ft. North back to original spot per email from Jason Cabral. Rock wall will be moved, PAR said there should be no
impact to adjacent distribution lines.
3807: (1-24-07) Moved approx. 20 ft. southwest to get structure away from existing 1640 guy locations to accomodate construction.
3849: (1-24-07) Moved approx. 14 ft. southwest to get structure away from existing 1640 guy locations to accomodate construction.
3888: (1-24-07) Moved approx. 20 ft. north to get structure away from existing 1640 guy locations to accomodate construction.
5-22-07 : Moved structure 24043 20 ft. northeast per homeowner request. This was a field call from Tim Arvin.
6-11-07: Moved structure 3911 5 ft. South to avoid underground utilities to two residences.
10-17-07: Moved structure 24002 46.5 ft. north per field request.
10-24-07: Moved structure 24045 11.75 ft. east per field request.
1-4-08: Moved structure 24091 17 ft. south to avoid underground storm water drainage pipe.

Weather Cases

WC #	Description	Air Density Factor (psf/mph^2)	Wind Vel. (mph)	Wind Pres. (psf)	Wire Ice Thick (in)	Wire Ice Density (lbs/ft^3)	Wire Ice Load (lbs/ft)	Wire Temp (deg F)	Ambient Temp (deg F)	Weather Load Factor	NESC Constant (lbs/ft)	Wire Wind Height Adjust Model	Wire Gust Response Factor
1	NESC Heavy	0.00256	40	4.0	0.50	57.000	0.00	0	0	1.00	0.30	None	1
2	0F 4psf w/ ice	0.00256	40	4.0	0.50	57.000	0.00	0	0	1.00	0.00	None	1
3	0F 4psf w/o ice	0.00256	40	4.0	0.00	0.000	0.00	0	0	1.00	0.00	None	1
4	NESC Ext Wind	0.00256	112	32.1	0.00	0.000	0.00	60	60	1.00	0.00	None	1
5	ASCE Ice/Wind	0.00256	50	6.4	0.75	57.000	0.00	32	32	1.00	0.00	None	1
6	Maximum Operating	0.00256	0	0.0	0.00	0.000	0.00	285	285	1.00	0.00	None	1
7	NESC Blowout 6PSF	0.00256	48	6.0	0.00	0.000	0.00	60	60	1.00	0.00	None	1
8	3# Wind (SWING 1)	0.00256	34	3.0	0.00	0.000	0.00	60	60	1.00	0.00	None	1
9	6# Wind (SWING 2)	0.00256	48	6.0	0.00	0.000	0.00	60	60	1.00	0.00	None	1
10	60 mph Wind (SWING 3)	0.00256	60	9.2	0.00	0.000	0.00	60	60	1.00	0.00	None	1
11	GALLOPING (SWING)	0.00256	28	2.0	0.50	57.000	0.00	32	32	1.00	0.00	None	1
12	GALLOPING (SAG)	0.00256	0	0.0	0.50	57.000	0.00	32	32	1.00	0.00	None	1
13	-20 Deg F	0.00256	0	0.0	0.00	0.000	0.00	-20	-20	1.00	0.00	None	1
14	0 Deg F	0.00256	0	0.0	0.00	0.000	0.00	0	0	1.00	0.00	None	1
15	50 Deg F	0.00256	0	0.0	0.00	0.000	0.00	50	50	1.00	0.00	None	1
16	60 Deg F	0.00256	0	0.0	0.00	0.000	0.00	60	60	1.00	0.00	None	1
17	120 Deg F	0.00256	0	0.0	0.00	0.000	0.00	120	120	1.00	0.00	None	1
18	NU Ice	0.00256	0	0.0	1.00	57.000	0.00	0	0	1.00	0.00	None	1
19	NU Blowout	0.00256	60	9.2	0.00	0.000	0.00	60	60	1.00	0.00	None	1
20	Construction	0.00256	30	2.3	0.00	0.000	0.00	30	30	1.00	0.00	None	1
21	UI Ice	0.00256	56	8.0	0.50	57.000	0.00	0	0	1.00	0.00	None	1
22	NU Extreme Wind 90mph	0.00256	90	20.7	0.00	0.000	0.00	60	60	1.00	0.00	None	1
23	9psf Wind 60 deg F	0.00256	59	9.0	0.00	0.000	0.00	60	60	1.00	0.00	None	1
24	Tower High Wind	0.00256	80	16.4	0.00	0.000	0.00	60	60	1.00	0.00	None	1
25	UI Heavy Ice (Tower)	0.00256	0	0.0	1.50	57.000	0.00	32	32	1.00	0.00	None	1
26	ADSS Survey Temp	0.00256	0	0.0	0.00	0.000	0.00	85	85	1.00	0.00	None	1
27	ADSS 90 Deg Case	0.00256	0	0.0	0.00	0.000	0.00	90	90	1.00	0.00	None	1

Structure Loads Criteria

LC #	WC Load Case #	Description	Cable Condition	Wind Dir.	Bisect Wind Angle	Wire Vert. Load Factor	Wire + Struct. Wind Load Factor	Wire Tension Load Factor	Struct Weight Load Factor	Struct Wind Area Factor	Struct. Wind Load Model	Struct. Ice Thick (in)	Struct. Ice Density (lbs/ft^3)	Pole Tip Deflection Check	Pole Tip Deflect Limit % or (ft)
1	1	NESC Heavy NA+	Load RS	NA+		1.50	2.50	1.65	1.50	1.00	Pre V7 Standard	0.00	0.000	No Limit	0.00
2	1	NESC Heavy NA-	Load RS	NA-		1.50	2.50	1.65	1.50	1.00	Pre V7 Standard	0.00	0.000	No Limit	0.00
3	1	NESC Uplift NA+	Load RS	NA+		1.00	2.50	1.65	1.00	1.00	Pre V7 Standard	0.00	0.000	No Limit	0.00
4	1	NESC Uplift NA-	Load RS	NA-		1.00	2.50	1.65	1.00	1.00	Pre V7 Standard	0.00	0.000	No Limit	0.00
5	4	NESC Ext Wind NA	Load RS	NA+		1.10	1.10	1.10	1.10	1.00	Pre V7 Standard	0.00	0.000	No Limit	0.00
6	4	NESC Ext Wind NA	Load RS	NA-		1.10	1.10	1.10	1.10	1.00	Pre V7 Standard	0.00	0.000	No Limit	0.00
7	1	NESC Ins NA+	Load RS	NA+		1.00	1.00	1.00	1.00	1.00	Pre V7 Standard	0.00	0.000	No Limit	0.00
8	1	NESC Ins NA-	Load RS	NA-		1.00	1.00	1.00	1.00	1.00	Pre V7 Standard	0.00	0.000	No Limit	0.00

9	5	ASCE Ice/Wind NA	Load RS	NA+	1.10	1.10	1.10	1.10	1.00	Pre V7 Standard	0.00	0.000	No Limit	0.00
10	5	ASCE Ice/Wind NA	Load RS	NA-	1.10	1.10	1.10	1.10	1.00	Pre V7 Standard	0.00	0.000	No Limit	0.00
11	18	NU Ice	Load RS	NA+	1.10	1.10	1.10	1.10	1.00	Pre V7 Standard	0.00	0.000	No Limit	0.00
12	24	Tower High Wind	Load RS	NA+	1.10	1.10	1.10	1.10	1.00	Pre V7 Standard	0.00	0.000	No Limit	0.00
13	24	Tower High Wind	Load RS	NA-	1.10	1.10	1.10	1.10	1.00	Pre V7 Standard	0.00	0.000	No Limit	0.00
14	1	Broken SW NA+	Load RS	NA+	1.10	1.10	1.10	1.10	1.00	Pre V7 Standard	0.00	0.000	No Limit	0.00
15	1	Broken SW NA-	Load RS	NA-	1.10	1.10	1.10	1.10	1.00	Pre V7 Standard	0.00	0.000	No Limit	0.00
16	1	Cond SW NA+	Load RS	NA+	1.10	1.10	1.10	1.10	1.00	Pre V7 Standard	0.00	0.000	No Limit	0.00
17	1	Cond SW NA-	Load RS	NA-	1.10	1.10	1.10	1.10	1.00	Pre V7 Standard	0.00	0.000	No Limit	0.00
18	1	Deadend Tower NA	Load RS	NA+	1.00	1.00	1.00	1.00	1.00	Pre V7 Standard	0.00	0.000	No Limit	0.00
19	1	Deadend Tower NA	Load RS	NA-	1.00	1.00	1.00	1.00	1.00	Pre V7 Standard	0.00	0.000	No Limit	0.00
20	25	UI Havey Ice Tow	Load RS	NA+	1.10	1.10	1.10	1.10	1.00	Pre V7 Standard	0.00	0.000	No Limit	0.00
21	25	UI Havey Ice Tow	Load RS	NA-	1.10	1.10	1.10	1.10	1.00	Pre V7 Standard	0.00	0.000	No Limit	0.00

Cable Load Adjustments for each Load Case

LC #	WC #	Load Case Description	Struct Types On Which To Apply	Command 1 Wire(s) Set: Phase: Side:	Command 1 Value (lbs) or %	Command 1
1	1	NESC Heavy NA+	All			
2	1	NESC Heavy NA-	All			
3	1	NESC Uplift NA+	All			
4	1	NESC Uplift NA-	All			
5	4	NESC Ext Wind NA	All			
6	4	NESC Ext Wind NA	All			
7	1	NESC Ins NA+	All			
8	1	NESC Ins NA-	All			
9	5	ASCE Ice/Wind NA	All			
10	5	ASCE Ice/Wind NA	All			
11	18	NU Ice	All			
12	24	Tower High Wind	All TOWER			
13	24	Tower High Wind	All TOWER			
14	1	Broken SW NA+	Non-DeadEnd TOWER	1:1:Ahead # Broken Subconductors	1	
15	1	Broken SW NA-	Non-DeadEnd TOWER	1:1:Ahead # Broken Subconductors	1	
16	1	Cond SW NA+	Non-DeadEnd TOWER	2:1:Ahead # Broken Subconductors	1	
17	1	Cond SW NA-	Non-DeadEnd TOWER	2:1:Ahead # Broken Subconductors	1	
18	1	Deadend Tower NA	DeadEnd TOWER	Ahead Spans # Broken Subconductors	1	
19	1	Deadend Tower NA	DeadEnd TOWER	Ahead Spans # Broken Subconductors	1	
20	25	UI Havey Ice Tow	All TOWER			
21	25	UI Havey Ice Tow	All TOWER			

Span and Wire Summary For Structure Range

Span azimuth is measured clockwise from structure transverse axis (0=transverse, 90=back, 270=ahead)
Azimuth of structure transverse axis is 147.8322 (deg) measured clockwise from North.

Str. No.	Str. Name	LC #	WC #	Load Case Description	Set No.	Phase No.	Attach. Joint Labels	Back span Cable Name	Len. (ft)	Azi. (deg)	Horiz. Load (lbs/ft)	Vert. Load (lbs/ft)	Horiz. Tension (lbs)	Ahead span Cable Name	Len. (ft)	Azi. (deg)	Horiz. Load (lbs/ft)	Vert. Load (lbs/ft)	Horiz. Tension (lbs)
24063	33-cdcsp-01-uwx.120	1	1	NESC Heavy NA+	1	1	TL:SW	brugg_86ay62acs-2c_345_tight.wir	459	90	1.35	1.70	10156	brugg_86ay62acs-2c_345_tight.wir	708	270	1.35	1.70	10155
24063	33-cdcsp-01-uwx.120	1	1		2	1	X1	lapwing_tight.wir	459	90	2.09	4.56	45159	lapwing_tight.wir	708	270	2.09	4.56	45156
24063	33-cdcsp-01-uwx.120	1	1		3	1	Y1	lapwing_tight.wir	459	90	2.09	4.56	45159	lapwing_tight.wir	708	270	2.09	4.56	45156
24063	33-cdcsp-01-uwx.120	1	1		4	1	Z1	lapwing_tight.wir	459	90	2.09	4.56	45159	lapwing_tight.wir	708	270	2.09	4.56	45156
24063	33-cdcsp-01-uwx.120	1	1		5	1	TR:SW	19#10_alumoweld_tight.wir	459	90	1.26	1.61	9773	19#10_alumoweld_tight.wir	708	270	1.26	1.61	9772
24063	33-cdcsp-01-uwx.120	1	1		6	1	X2	lapwing_tight.wir	459	90	2.09	4.56	45168	lapwing_tight.wir	708	270	2.09	4.56	45166
24063	33-cdcsp-01-uwx.120	1	1		7	1	Y2	lapwing_tight.wir	459	90	2.09	4.56	45168	lapwing_tight.wir	708	270	2.09	4.56	45166
24063	33-cdcsp-01-uwx.120	1	1		8	1	Z2	lapwing_tight.wir	459	90	2.09	4.56	45168	lapwing_tight.wir	708	270	2.09	4.56	45166
24063	33-cdcsp-01-uwx.120	2	1	NESC Heavy NA-	1	1	TL:SW	brugg_86ay62acs-2c_345_tight.wir	459	90	1.35	1.70	10156	brugg_86ay62acs-2c_345_tight.wir	708	270	1.35	1.70	10155
24063	33-cdcsp-01-uwx.120	2	1		2	1	X1	lapwing_tight.wir	459	90	2.09	4.56	45159	lapwing_tight.wir	708	270	2.09	4.56	45156
24063	33-cdcsp-01-uwx.120	2	1		3	1	Y1	lapwing_tight.wir	459	90	2.09	4.56	45159	lapwing_tight.wir	708	270	2.09	4.56	45156
24063	33-cdcsp-01-uwx.120	2	1		4	1	Z1	lapwing_tight.wir	459	90	2.09	4.56	45159	lapwing_tight.wir	708	270	2.09	4.56	45156
24063	33-cdcsp-01-uwx.120	2	1		5	1	TR:SW	19#10_alumoweld_tight.wir	459	90	1.26	1.61	9773	19#10_alumoweld_tight.wir	708	270	1.26	1.61	9772
24063	33-cdcsp-01-uwx.120	2	1		6	1	X2	lapwing_tight.wir	459	90	2.09	4.56	45168	lapwing_tight.wir	708	270	2.09	4.56	45166
24063	33-cdcsp-01-uwx.120	2	1		7	1	Y2	lapwing_tight.wir	459	90	2.09	4.56	45168	lapwing_tight.wir	708	270	2.09	4.56	45166
24063	33-cdcsp-01-uwx.120	2	1		8	1	Z2	lapwing_tight.wir	459	90	2.09	4.56	45168	lapwing_tight.wir	708	270	2.09	4.56	45166
24063	33-cdcsp-01-uwx.120	3	1	NESC Uplift NA+	1	1	TL:SW	brugg_86ay62acs-2c_345_tight.wir	459	90	1.35	1.13	10156	brugg_86ay62acs-2c_345_tight.wir	708	270	1.35	1.13	10155
24063	33-cdcsp-01-uwx.120	3	1		2	1	X1	lapwing_tight.wir	459	90	2.09	3.04	45159	lapwing_tight.wir	708	270	2.09	3.04	45156
24063	33-cdcsp-01-uwx.120	3	1		3	1	Y1	lapwing_tight.wir	459	90	2.09	3.04	45159	lapwing_tight.wir	708	270	2.09	3.04	45156
24063	33-cdcsp-01-uwx.120	3	1		4	1	Z1	lapwing_tight.wir	459	90	2.09	3.04	45159	lapwing_tight.wir	708	270	2.09	3.04	45156
24063	33-cdcsp-01-uwx.120	3	1		5	1	TR:SW	19#10_alumoweld_tight.wir	459	90	1.26	1.08	9773	19#10_alumoweld_tight.wir	708	270	1.26	1.08	9772
24063	33-cdcsp-01-uwx.120	3	1		6	1	X2	lapwing_tight.wir	459	90	2.09	3.04	45168	lapwing_tight.wir	708	270	2.09	3.04	45166
24063	33-cdcsp-01-uwx.120	3	1		7	1	Y2	lapwing_tight.wir	459	90	2.09	3.04	45168	lapwing_tight.wir	708	270	2.09	3.04	45166
24063	33-cdcsp-01-uwx.120	3	1		8	1	Z2	lapwing_tight.wir	459	90	2.09	3.04	45168	lapwing_tight.wir	708	270	2.09	3.04	45166
24063	33-cdcsp-01-uwx.120	4	1	NESC Uplift NA-	1	1	TL:SW	brugg_86ay62acs-2c_345_tight.wir	459	90	1.35	1.13	10156	brugg_86ay62acs-2c_345_tight.wir	708	270	1.35	1.13	10155
24063	33-cdcsp-01-uwx.120	4	1		2	1	X1	lapwing_tight.wir	459	90	2.09	3.04	45159	lapwing_tight.wir	708	270	2.09	3.04	45156
24063	33-cdcsp-01-uwx.120	4	1		3	1	Y1	lapwing_tight.wir	459	90	2.09	3.04	45159	lapwing_tight.wir	708	270	2.09	3.04	45156
24063	33-cdcsp-01-uwx.120	4	1		4	1	Z1	lapwing_tight.wir	459	90	2.09	3.04	45159	lapwing_tight.wir	708	270	2.09	3.04	45156
24063	33-cdcsp-01-uwx.120	4	1		5	1	TR:SW	19#10_alumoweld_tight.wir	459	90	1.26	1.08	9773	19#10_alumoweld_tight.wir	708	270	1.26	1.08	9772
24063	33-cdcsp-01-uwx.120	4	1		6	1	X2	lapwing_tight.wir	459	90	2.09	3.04	45168	lapwing_tight.wir	708	270	2.09	3.04	45166
24063	33-cdcsp-01-uwx.120	4	1		7	1	Y2	lapwing_tight.wir	459	90	2.09	3.04	45168	lapwing_tight.wir	708	270	2.09	3.04	45166
24063	33-cdcsp-01-uwx.120	4	1		8	1	Z2	lapwing_tight.wir	459	90	2.09	3.04	45168	lapwing_tight.wir	708	270	2.09	3.04	45166

24063	33-cdcsp-01-uwx.120	5	4	NESC Ext Wind NA	1	1	TL:SW	brugg_86ay62acs-2c_345_tight.wir	459	90	1.83	0.48	6344	brugg_86ay62acs-2c_345_tight.wir	708	270	1.83	0.48	6339
24063	33-cdcsp-01-uwx.120	5	4		2	1	X1	lapwing_tight.wir	459	90	4.43	1.97	30015	lapwing_tight.wir	708	270	4.43	1.97	29995
24063	33-cdcsp-01-uwx.120	5	4		3	1	Y1	lapwing_tight.wir	459	90	4.43	1.97	30015	lapwing_tight.wir	708	270	4.43	1.97	29995
24063	33-cdcsp-01-uwx.120	5	4		4	1	Z1	lapwing_tight.wir	459	90	4.43	1.97	30015	lapwing_tight.wir	708	270	4.43	1.97	29995
24063	33-cdcsp-01-uwx.120	5	4		5	1	TR:SW	19#10_alumoweld_tight.wir	459	90	1.50	0.49	5716	19#10_alumoweld_tight.wir	708	270	1.50	0.49	5712
24063	33-cdcsp-01-uwx.120	5	4		6	1	X2	lapwing_tight.wir	459	90	4.43	1.97	30065	lapwing_tight.wir	708	270	4.43	1.97	30044
24063	33-cdcsp-01-uwx.120	5	4		7	1	Y2	lapwing_tight.wir	459	90	4.43	1.97	30065	lapwing_tight.wir	708	270	4.43	1.97	30044
24063	33-cdcsp-01-uwx.120	5	4		8	1	Z2	lapwing_tight.wir	459	90	4.43	1.97	30065	lapwing_tight.wir	708	270	4.43	1.97	30044
24063	33-cdcsp-01-uwx.120	6	4	NESC Ext Wind NA	1	1	TL:SW	brugg_86ay62acs-2c_345_tight.wir	459	90	1.83	0.48	6344	brugg_86ay62acs-2c_345_tight.wir	708	270	1.83	0.48	6339
24063	33-cdcsp-01-uwx.120	6	4		2	1	X1	lapwing_tight.wir	459	90	4.43	1.97	30015	lapwing_tight.wir	708	270	4.43	1.97	29995
24063	33-cdcsp-01-uwx.120	6	4		3	1	Y1	lapwing_tight.wir	459	90	4.43	1.97	30015	lapwing_tight.wir	708	270	4.43	1.97	29995
24063	33-cdcsp-01-uwx.120	6	4		4	1	Z1	lapwing_tight.wir	459	90	4.43	1.97	30015	lapwing_tight.wir	708	270	4.43	1.97	29995
24063	33-cdcsp-01-uwx.120	6	4		5	1	TR:SW	19#10_alumoweld_tight.wir	459	90	1.50	0.49	5716	19#10_alumoweld_tight.wir	708	270	1.50	0.49	5712
24063	33-cdcsp-01-uwx.120	6	4		6	1	X2	lapwing_tight.wir	459	90	4.43	1.97	30065	lapwing_tight.wir	708	270	4.43	1.97	30044
24063	33-cdcsp-01-uwx.120	6	4		7	1	Y2	lapwing_tight.wir	459	90	4.43	1.97	30065	lapwing_tight.wir	708	270	4.43	1.97	30044
24063	33-cdcsp-01-uwx.120	6	4		8	1	Z2	lapwing_tight.wir	459	90	4.43	1.97	30065	lapwing_tight.wir	708	270	4.43	1.97	30044
24063	33-cdcsp-01-uwx.120	7	1	NESC Ins NA+	1	1	TL:SW	brugg_86ay62acs-2c_345_tight.wir	459	90	0.54	1.13	6155	brugg_86ay62acs-2c_345_tight.wir	708	270	0.54	1.13	6154
24063	33-cdcsp-01-uwx.120	7	1		2	1	X1	lapwing_tight.wir	459	90	0.83	3.04	27369	lapwing_tight.wir	708	270	0.83	3.04	27367
24063	33-cdcsp-01-uwx.120	7	1		3	1	Y1	lapwing_tight.wir	459	90	0.83	3.04	27369	lapwing_tight.wir	708	270	0.83	3.04	27367
24063	33-cdcsp-01-uwx.120	7	1		4	1	Z1	lapwing_tight.wir	459	90	0.83	3.04	27369	lapwing_tight.wir	708	270	0.83	3.04	27367
24063	33-cdcsp-01-uwx.120	7	1		5	1	TR:SW	19#10_alumoweld_tight.wir	459	90	0.50	1.08	5923	19#10_alumoweld_tight.wir	708	270	0.50	1.08	5922
24063	33-cdcsp-01-uwx.120	7	1		6	1	X2	lapwing_tight.wir	459	90	0.83	3.04	27375	lapwing_tight.wir	708	270	0.83	3.04	27373
24063	33-cdcsp-01-uwx.120	7	1		7	1	Y2	lapwing_tight.wir	459	90	0.83	3.04	27375	lapwing_tight.wir	708	270	0.83	3.04	27373
24063	33-cdcsp-01-uwx.120	7	1		8	1	Z2	lapwing_tight.wir	459	90	0.83	3.04	27375	lapwing_tight.wir	708	270	0.83	3.04	27373
24063	33-cdcsp-01-uwx.120	8	1	NESC Ins NA-	1	1	TL:SW	brugg_86ay62acs-2c_345_tight.wir	459	90	0.54	1.13	6155	brugg_86ay62acs-2c_345_tight.wir	708	270	0.54	1.13	6154
24063	33-cdcsp-01-uwx.120	8	1		2	1	X1	lapwing_tight.wir	459	90	0.83	3.04	27369	lapwing_tight.wir	708	270	0.83	3.04	27367
24063	33-cdcsp-01-uwx.120	8	1		3	1	Y1	lapwing_tight.wir	459	90	0.83	3.04	27369	lapwing_tight.wir	708	270	0.83	3.04	27367
24063	33-cdcsp-01-uwx.120	8	1		4	1	Z1	lapwing_tight.wir	459	90	0.83	3.04	27369	lapwing_tight.wir	708	270	0.83	3.04	27367
24063	33-cdcsp-01-uwx.120	8	1		5	1	TR:SW	19#10_alumoweld_tight.wir	459	90	0.50	1.08	5923	19#10_alumoweld_tight.wir	708	270	0.50	1.08	5922
24063	33-cdcsp-01-uwx.120	8	1		6	1	X2	lapwing_tight.wir	459	90	0.83	3.04	27375	lapwing_tight.wir	708	270	0.83	3.04	27373
24063	33-cdcsp-01-uwx.120	8	1		7	1	Y2	lapwing_tight.wir	459	90	0.83	3.04	27375	lapwing_tight.wir	708	270	0.83	3.04	27373
24063	33-cdcsp-01-uwx.120	8	1		8	1	Z2	lapwing_tight.wir	459	90	0.83	3.04	27375	lapwing_tight.wir	708	270	0.83	3.04	27373
24063	33-cdcsp-01-uwx.120	9	5	ASCE Ice/Wind NA	1	1	TL:SW	brugg_86ay62acs-2c_345_tight.wir	459	90	1.24	1.89	7462	brugg_86ay62acs-2c_345_tight.wir	708	270	1.24	1.89	7461
24063	33-cdcsp-01-uwx.120	9	5		2	1	X1	lapwing_tight.wir	459	90	1.76	4.28	31255	lapwing_tight.wir	708	270	1.76	4.28	31251
24063	33-cdcsp-01-uwx.120	9	5		3	1	Y1	lapwing_tight.wir	459	90	1.76	4.28	31255	lapwing_tight.wir	708	270	1.76	4.28	31251
24063	33-cdcsp-01-uwx.120	9	5		4	1	Z1	lapwing_tight.wir	459	90	1.76	4.28	31255	lapwing_tight.wir	708	270	1.76	4.28	31251
24063	33-cdcsp-01-uwx.120	9	5		5	1	TR:SW	19#10_alumoweld_tight.wir	459	90	1.18	1.79	7236	19#10_alumoweld_tight.wir	708	270	1.18	1.79	7234
24063	33-cdcsp-01-uwx.120	9	5		6	1	X2	lapwing_tight.wir	459	90	1.76	4.28	31304	lapwing_tight.wir	708	270	1.76	4.28	31301
24063	33-cdcsp-01-uwx.120	9	5		7	1	Y2	lapwing_tight.wir	459	90	1.76	4.28	31304	lapwing_tight.wir	708	270	1.76	4.28	31301
24063	33-cdcsp-01-uwx.120	9	5		8	1	Z2	lapwing_tight.wir	459	90	1.76	4.28	31304	lapwing_tight.wir	708	270	1.76	4.28	31301
24063	33-cdcsp-01-uwx.120	10	5	ASCE Ice/Wind NA	1	1	TL:SW	brugg_86ay62acs-2c_345_tight.wir	459	90	1.24	1.89	7462	brugg_86ay62acs-2c_345_tight.wir	708	270	1.24	1.89	7461
24063	33-cdcsp-01-uwx.120	10	5		2	1	X1	lapwing_tight.wir	459	90	1.76	4.28	31255	lapwing_tight.wir	708	270	1.76	4.28	31251
24063	33-cdcsp-01-uwx.120	10	5		3	1	Y1	lapwing_tight.wir	459	90	1.76	4.28	31255	lapwing_tight.wir	708	270	1.76	4.28	31251
24063	33-cdcsp-01-uwx.120	10	5		4	1	Z1	lapwing_tight.wir	459	90	1.76	4.28	31255	lapwing_tight.wir	708	270	1.76	4.28	31251
24063	33-cdcsp-01-uwx.120	10	5		5	1	TR:SW	19#10_alumoweld_tight.wir	459	90	1.18	1.79	7236	19#10_alumoweld_tight.wir	708	270	1.18	1.79	7234
24063	33-cdcsp-01-uwx.120	10	5		6	1	X2	lapwing_tight.wir	459	90	1.76	4.28	31304	lapwing_tight.wir	708	270	1.76	4.28	31301
24063	33-cdcsp-01-uwx.120	10	5		7	1	Y2	lapwing_tight.wir	459	90	1.76	4.28	31304	lapwing_tight.wir	708	270	1.76	4.28	31301
24063	33-cdcsp-01-uwx.120	10	5		8	1	Z2	lapwing_tight.wir	459	90	1.76	4.28	31304	lapwing_tight.wir	708	270	1.76	4.28	31301
24063	33-cdcsp-01-uwx.120	11	18	NU Ice	1	1	TL:SW	brugg_86ay62acs-2c_345_tight.wir	459	90	0.00	2.70	8737	brugg_86ay62acs-2c_345_tight.wir	708	270	0.00	2.70	8737
24063	33-cdcsp-01-uwx.120	11	18		2	1	X1	lapwing_tight.wir	459	90	0.00	5.40	38032	lapwing_tight.wir	708	270	0.00	5.40	38032
24063	33-cdcsp-01-uwx.120	11	18		3	1	Y1	lapwing_tight.wir	459	90	0.00	5.40	38032	lapwing_tight.wir	708	270	0.00	5.40	38032
24063	33-cdcsp-01-uwx.120	11	18		4	1	Z1	lapwing_tight.wir	459	90	0.00	5.40	38032	lapwing_tight.wir	708	270	0.00	5.40	38032
24063	33-cdcsp-01-uwx.120	11	18		5	1	TR:SW	19#10_alumoweld_tight.wir	459	90	0.00	2.56	8429	19#10_alumoweld_tight.wir	708	270	0.00	2.56	8429
24063	33-cdcsp-01-uwx.120	11	18		6	1	X2	lapwing_tight.wir	459	90	0.00	5.40	38081	lapwing_tight.wir	708	270	0.00	5.40	38081
24063	33-cdcsp-01-uwx.120	11	18		7	1	Y2	lapwing_tight.wir	459	90	0.00	5.40	38081	lapwing_tight.wir	708	270	0.00	5.40	38081
24063	33-cdcsp-01-uwx.120	11	18		8	1	Z2	lapwing_tight.wir	459	90	0.00	5.40	38081	lapwing_tight.wir	708	270	0.00	5.40	38081

Wire Loads In Span Coordinate System For Structure Range

Wire loads expressed in span coordinate system (Longitudinal axis is line connecting attach. points)
Note: Loads in this report do not include load from counter weights, insulator weight or insulator wind area.

Str. No.	Str. Name	LC #	WC #	Load Case Description	Set No.	Phase No.	Attach. Joint Labels	--Loads from back span-- Vert. (lbs)	Trans. (lbs)	Long. (lbs)	-Loads from ahead span- Vert. (lbs)	Trans. (lbs)	Long. (lbs)	Warnings
24063	33-cdcsp-01-uwx.120	1	1	NESC Heavy NA+	1	1	TL:SW	582	310	10156	962	480	10155	
24063	33-cdcsp-01-uwx.120	1	1		2	1	X1	3061	960	45159	5041	1483	45156	
24063	33-cdcsp-01-uwx.120	1	1		3	1	Y1	3061	960	45159	5041	1483	45156	
24063	33-cdcsp-01-uwx.120	1	1		4	1	Z1	3061	960	45159	5041	1483	45156	
24063	33-cdcsp-01-uwx.120	1	1		5	1	TR:SW	554	289	9773	915	447	9772	
24063	33-cdcsp-01-uwx.120	1	1		6	1	X2	3061	960	45168	5041	1483	45166	
24063	33-cdcsp-01-uwx.120	1	1		7	1	Y2	3061	960	45168	5041	1483	45166	
24063	33-cdcsp-01-uwx.120	1	1		8	1	Z2	3061	960	45168	5041	1483	45166	
24063	33-cdcsp-01-uwx.120	2	1	NESC Heavy NA-	1	1	TL:SW	582	-310	10156	962	-480	10155	
24063	33-cdcsp-01-uwx.120	2	1		2	1	X1	3061	-960	45159	5041	-1483	45156	
24063	33-cdcsp-01-uwx.120	2	1		3	1	Y1	3061	-960	45159	5041	-1483	45156	
24063	33-cdcsp-01-uwx.120	2	1		4	1	Z1	3061	-960	45159	5041	-1483	45156	
24063	33-cdcsp-01-uwx.120	2	1		5	1	TR:SW	554	-289	9773	915	-447	9772	
24063	33-cdcsp-01-uwx.120	2	1		6	1	X2	3061	-960	45168	5041	-1483	45166	
24063	33-cdcsp-01-uwx.120	2	1		7	1	Y2	3061	-960	45168	5041	-1483	45166	
24063	33-cdcsp-01-uwx.120	2	1		8	1	Z2	3061	-960	45168	5041	-1483	45166	
24063	33-cdcsp-01-uwx.120	3	1	NESC Uplift NA+	1	1	TL:SW	388	310	10156	641	480	10155	
24063	33-cdcsp-01-uwx.120	3	1		2	1	X1	2040	960	45159	3361	1483	45156	
24063	33-cdcsp-01-uwx.120	3	1		3	1	Y1	2040	960	45159	3361	1483	45156	
24063	33-cdcsp-01-uwx.120	3	1		4	1	Z1	2040	960	45159	3361	1483	45156	
24063	33-cdcsp-01-uwx.120	3	1		5	1	TR:SW	369	289	9773	610	447	9772	

24063	33-cdcsp-01-uwx.120	3	1		6	1	X2	2040	960	45168	3361	1483	45166	
24063	33-cdcsp-01-uwx.120	3	1		7	1	Y2	2040	960	45168	3361	1483	45166	
24063	33-cdcsp-01-uwx.120	3	1		8	1	Z2	2040	960	45168	3361	1483	45166	
24063	33-cdcsp-01-uwx.120	4	1	NESC Uplift NA-	1	1	TL:SW	388	-310	10156	641	-480	10155	
24063	33-cdcsp-01-uwx.120	4	1		2	1	X1	2040	-960	45159	3361	-1483	45156	
24063	33-cdcsp-01-uwx.120	4	1		3	1	Y1	2040	-960	45159	3361	-1483	45156	
24063	33-cdcsp-01-uwx.120	4	1		4	1	Z1	2040	-960	45159	3361	-1483	45156	
24063	33-cdcsp-01-uwx.120	4	1		5	1	TR:SW	369	-289	9773	610	-447	9772	
24063	33-cdcsp-01-uwx.120	4	1		6	1	X2	2040	-960	45168	3361	-1483	45166	
24063	33-cdcsp-01-uwx.120	4	1		7	1	Y2	2040	-960	45168	3361	-1483	45166	
24063	33-cdcsp-01-uwx.120	4	1		8	1	Z2	2040	-960	45168	3361	-1483	45166	
24063	33-cdcsp-01-uwx.120	5	4	NESC Ext Wind NA	1	1	TL:SW	274	420	6344	475	648	6339	
24063	33-cdcsp-01-uwx.120	5	4		2	1	X1	1679	2036	30015	2843	3148	29995	
24063	33-cdcsp-01-uwx.120	5	4		3	1	Y1	1679	2036	30015	2843	3148	29995	
24063	33-cdcsp-01-uwx.120	5	4		4	1	Z1	1679	2036	30015	2843	3148	29995	
24063	33-cdcsp-01-uwx.120	5	4		5	1	TR:SW	261	344	5716	450	532	5712	
24063	33-cdcsp-01-uwx.120	5	4		6	1	X2	1680	2036	30065	2846	3148	30044	
24063	33-cdcsp-01-uwx.120	5	4		7	1	Y2	1680	2036	30065	2846	3148	30044	
24063	33-cdcsp-01-uwx.120	5	4		8	1	Z2	1680	2036	30065	2846	3148	30044	
24063	33-cdcsp-01-uwx.120	6	4	NESC Ext Wind NA	1	1	TL:SW	274	-420	6344	475	-648	6339	
24063	33-cdcsp-01-uwx.120	6	4		2	1	X1	1679	-2036	30015	2843	-3148	29995	
24063	33-cdcsp-01-uwx.120	6	4		3	1	Y1	1679	-2036	30015	2843	-3148	29995	
24063	33-cdcsp-01-uwx.120	6	4		4	1	Z1	1679	-2036	30015	2843	-3148	29995	
24063	33-cdcsp-01-uwx.120	6	4		5	1	TR:SW	261	-344	5716	450	-532	5712	
24063	33-cdcsp-01-uwx.120	6	4		6	1	X2	1680	-2036	30065	2846	-3148	30044	
24063	33-cdcsp-01-uwx.120	6	4		7	1	Y2	1680	-2036	30065	2846	-3148	30044	
24063	33-cdcsp-01-uwx.120	6	4		8	1	Z2	1680	-2036	30065	2846	-3148	30044	
24063	33-cdcsp-01-uwx.120	7	1	NESC Ins NA+	1	1	TL:SW	388	124	6155	641	192	6154	
24063	33-cdcsp-01-uwx.120	7	1		2	1	X1	2040	384	27369	3361	593	27367	
24063	33-cdcsp-01-uwx.120	7	1		3	1	Y1	2040	384	27369	3361	593	27367	
24063	33-cdcsp-01-uwx.120	7	1		4	1	Z1	2040	384	27369	3361	593	27367	
24063	33-cdcsp-01-uwx.120	7	1		5	1	TR:SW	369	116	5923	610	179	5922	
24063	33-cdcsp-01-uwx.120	7	1		6	1	X2	2040	384	27375	3361	593	27373	
24063	33-cdcsp-01-uwx.120	7	1		7	1	Y2	2040	384	27375	3361	593	27373	
24063	33-cdcsp-01-uwx.120	7	1		8	1	Z2	2040	384	27375	3361	593	27373	
24063	33-cdcsp-01-uwx.120	8	1	NESC Ins NA-	1	1	TL:SW	388	-124	6155	641	-192	6154	
24063	33-cdcsp-01-uwx.120	8	1		2	1	X1	2040	-384	27369	3361	-593	27367	
24063	33-cdcsp-01-uwx.120	8	1		3	1	Y1	2040	-384	27369	3361	-593	27367	
24063	33-cdcsp-01-uwx.120	8	1		4	1	Z1	2040	-384	27369	3361	-593	27367	
24063	33-cdcsp-01-uwx.120	8	1		5	1	TR:SW	369	-116	5923	610	-179	5922	
24063	33-cdcsp-01-uwx.120	8	1		6	1	X2	2040	-384	27375	3361	-593	27373	
24063	33-cdcsp-01-uwx.120	8	1		7	1	Y2	2040	-384	27375	3361	-593	27373	
24063	33-cdcsp-01-uwx.120	8	1		8	1	Z2	2040	-384	27375	3361	-593	27373	
24063	33-cdcsp-01-uwx.120	9	5	ASCE Ice/Wind NA	1	1	TL:SW	626	286	7462	1029	442	7461	
24063	33-cdcsp-01-uwx.120	9	5		2	1	X1	2775	811	31255	4549	1254	31251	
24063	33-cdcsp-01-uwx.120	9	5		3	1	Y1	2775	811	31255	4549	1254	31251	
24063	33-cdcsp-01-uwx.120	9	5		4	1	Z1	2775	811	31255	4549	1254	31251	
24063	33-cdcsp-01-uwx.120	9	5		5	1	TR:SW	597	271	7236	983	419	7234	
24063	33-cdcsp-01-uwx.120	9	5		6	1	X2	2776	811	31304	4552	1254	31301	
24063	33-cdcsp-01-uwx.120	9	5		7	1	Y2	2776	811	31304	4552	1254	31301	
24063	33-cdcsp-01-uwx.120	9	5		8	1	Z2	2776	811	31304	4552	1254	31301	
24063	33-cdcsp-01-uwx.120	10	5	ASCE Ice/Wind NA	1	1	TL:SW	626	-286	7462	1029	-442	7461	
24063	33-cdcsp-01-uwx.120	10	5		2	1	X1	2775	-811	31255	4549	-1254	31251	
24063	33-cdcsp-01-uwx.120	10	5		3	1	Y1	2775	-811	31255	4549	-1254	31251	
24063	33-cdcsp-01-uwx.120	10	5		4	1	Z1	2775	-811	31255	4549	-1254	31251	
24063	33-cdcsp-01-uwx.120	10	5		5	1	TR:SW	597	-271	7236	983	-419	7234	
24063	33-cdcsp-01-uwx.120	10	5		6	1	X2	2776	-811	31304	4552	-1254	31301	
24063	33-cdcsp-01-uwx.120	10	5		7	1	Y2	2776	-811	31304	4552	-1254	31301	
24063	33-cdcsp-01-uwx.120	10	5		8	1	Z2	2776	-811	31304	4552	-1254	31301	
24063	33-cdcsp-01-uwx.120	11	18	NU Ice	1	1	TL:SW	845	0	8737	1379	0	8737	
24063	33-cdcsp-01-uwx.120	11	18		2	1	X1	3461	0	38032	5666	0	38032	
24063	33-cdcsp-01-uwx.120	11	18		3	1	Y1	3461	0	38032	5666	0	38032	
24063	33-cdcsp-01-uwx.120	11	18		4	1	Z1	3461	0	38032	5666	0	38032	
24063	33-cdcsp-01-uwx.120	11	18		5	1	TR:SW	805	0	8429	1315	0	8429	
24063	33-cdcsp-01-uwx.120	11	18		6	1	X2	3462	0	38081	5669	0	38081	
24063	33-cdcsp-01-uwx.120	11	18		7	1	Y2	3462	0	38081	5669	0	38081	
24063	33-cdcsp-01-uwx.120	11	18		8	1	Z2	3462	0	38081	5669	0	38081	

Wire Loads In Structure Coordinate System For Structure Range

Note: Loads in this report include load from counter weights, insulator weight and insulator wind area.

Str. No.	Str. Name	LC #	WC #	Load Case Description	Set No.	Phase No.	Attach. Joint Labels	----Structure Loads---- Vert. (lbs)	Trans. (lbs)	Long. (lbs)	--Loads from back span- Vert. (lbs)	Trans. (lbs)	Long. (lbs)	-Loads from ahead span- Vert. (lbs)	Trans. (lbs)	Long. (lbs)	Warnings
24063	33-cdcsp-01-uwx.120	1	1	NESC Heavy NA+	1	1	TL:SW	1544	790	2	582	310	10156	962	480	-10155	
24063	33-cdcsp-01-uwx.120	1	1		2	1	X1	8477	2443	3	3248	960	45159	5229	1483	-45156	
24063	33-cdcsp-01-uwx.120	1	1		3	1	Y1	8477	2443	3	3248	960	45159	5229	1483	-45156	
24063	33-cdcsp-01-uwx.120	1	1		4	1	Z1	8477	2443	3	3248	960	45159	5229	1483	-45156	
24063	33-cdcsp-01-uwx.120	1	1		5	1	TR:SW	1468	736	1	554	289	9773	915	447	-9772	
24063	33-cdcsp-01-uwx.120	1	1		6	1	X2	8477	2443	3	3248	960	45168	5229	1483	-45166	
24063	33-cdcsp-01-uwx.120	1	1		7	1	Y2	8477	2443	3	3248	960	45168	5229	1483	-45166	
24063	33-cdcsp-01-uwx.120	1	1		8	1	Z2	8477	2443	3	3248	960	45168	5229	1483	-45166	
24063	33-cdcsp-01-uwx.120	2	1	NESC Heavy NA-	1	1	TL:SW	1544	-790	2	582	-310	10156	962	-480	-10155	
24063	33-cdcsp-01-uwx.120	2	1		2	1	X1	8477	-2443	3	3248	-960	45159	5229	-1483	-45156	
24063	33-cdcsp-01-uwx.120	2	1		3	1	Y1	8477	-2443	3	3248	-960	45159	5229	-1483	-45156	

24063	33-cdcsp-01-uwx.120	2	1		4	1	Z1	8477	-2443	3	3248	-960	45159	5229	-1483	-45156
24063	33-cdcsp-01-uwx.120	2	1		5	1	TR:SW	1468	-736	1	554	-289	9773	915	-447	-9772
24063	33-cdcsp-01-uwx.120	2	1		6	1	X2	8477	-2443	3	3248	-960	45168	5229	-1483	-45166
24063	33-cdcsp-01-uwx.120	2	1		7	1	Y2	8477	-2443	3	3248	-960	45168	5229	-1483	-45166
24063	33-cdcsp-01-uwx.120	2	1		8	1	Z2	8477	-2443	3	3248	-960	45168	5229	-1483	-45166
24063	33-cdcsp-01-uwx.120	3	1	NESC Uplift NA+	1	1	TL:SW	1029	790	2	388	310	10156	641	480	-10155
24063	33-cdcsp-01-uwx.120	3	1		2	1	X1	5651	2443	3	2165	960	45159	3486	1483	-45156
24063	33-cdcsp-01-uwx.120	3	1		3	1	Y1	5651	2443	3	2165	960	45159	3486	1483	-45156
24063	33-cdcsp-01-uwx.120	3	1		4	1	Z1	5651	2443	3	2165	960	45159	3486	1483	-45156
24063	33-cdcsp-01-uwx.120	3	1		5	1	TR:SW	979	736	1	369	289	9773	610	447	-9772
24063	33-cdcsp-01-uwx.120	3	1		6	1	X2	5651	2443	3	2165	960	45168	3486	1483	-45166
24063	33-cdcsp-01-uwx.120	3	1		7	1	Y2	5651	2443	3	2165	960	45168	3486	1483	-45166
24063	33-cdcsp-01-uwx.120	3	1		8	1	Z2	5651	2443	3	2165	960	45168	3486	1483	-45166
24063	33-cdcsp-01-uwx.120	4	1	NESC Uplift NA-	1	1	TL:SW	1029	-790	2	388	-310	10156	641	-480	-10155
24063	33-cdcsp-01-uwx.120	4	1		2	1	X1	5651	-2443	3	2165	-960	45159	3486	-1483	-45156
24063	33-cdcsp-01-uwx.120	4	1		3	1	Y1	5651	-2443	3	2165	-960	45159	3486	-1483	-45156
24063	33-cdcsp-01-uwx.120	4	1		4	1	Z1	5651	-2443	3	2165	-960	45159	3486	-1483	-45156
24063	33-cdcsp-01-uwx.120	4	1		5	1	TR:SW	979	-736	1	369	-289	9773	610	-447	-9772
24063	33-cdcsp-01-uwx.120	4	1		6	1	X2	5651	-2443	3	2165	-960	45168	3486	-1483	-45166
24063	33-cdcsp-01-uwx.120	4	1		7	1	Y2	5651	-2443	3	2165	-960	45168	3486	-1483	-45166
24063	33-cdcsp-01-uwx.120	4	1		8	1	Z2	5651	-2443	3	2165	-960	45168	3486	-1483	-45166
24063	33-cdcsp-01-uwx.120	5	4	NESC Ext Wind NA	1	1	TL:SW	749	1068	5	274	420	6344	475	648	-6339
24063	33-cdcsp-01-uwx.120	5	4		2	1	X1	4797	5184	21	1817	2036	30015	2981	3148	-29995
24063	33-cdcsp-01-uwx.120	5	4		3	1	Y1	4797	5184	21	1817	2036	30015	2981	3148	-29995
24063	33-cdcsp-01-uwx.120	5	4		4	1	Z1	4797	5184	21	1817	2036	30015	2981	3148	-29995
24063	33-cdcsp-01-uwx.120	5	4		5	1	TR:SW	710	877	4	261	344	5716	450	532	-5712
24063	33-cdcsp-01-uwx.120	5	4		6	1	X2	4801	5184	21	1818	2036	30065	2983	3148	-30044
24063	33-cdcsp-01-uwx.120	5	4		7	1	Y2	4801	5184	21	1818	2036	30065	2983	3148	-30044
24063	33-cdcsp-01-uwx.120	5	4		8	1	Z2	4801	5184	21	1818	2036	30065	2983	3148	-30044
24063	33-cdcsp-01-uwx.120	6	4	NESC Ext Wind NA	1	1	TL:SW	749	-1068	5	274	-420	6344	475	-648	-6339
24063	33-cdcsp-01-uwx.120	6	4		2	1	X1	4797	-5184	21	1817	-2036	30015	2981	-3148	-29995
24063	33-cdcsp-01-uwx.120	6	4		3	1	Y1	4797	-5184	21	1817	-2036	30015	2981	-3148	-29995
24063	33-cdcsp-01-uwx.120	6	4		4	1	Z1	4797	-5184	21	1817	-2036	30015	2981	-3148	-29995
24063	33-cdcsp-01-uwx.120	6	4		5	1	TR:SW	710	-877	4	261	-344	5716	450	-532	-5712
24063	33-cdcsp-01-uwx.120	6	4		6	1	X2	4801	-5184	21	1818	-2036	30065	2983	-3148	-30044
24063	33-cdcsp-01-uwx.120	6	4		7	1	Y2	4801	-5184	21	1818	-2036	30065	2983	-3148	-30044
24063	33-cdcsp-01-uwx.120	6	4		8	1	Z2	4801	-5184	21	1818	-2036	30065	2983	-3148	-30044
24063	33-cdcsp-01-uwx.120	7	1	NESC Ins NA+	1	1	TL:SW	1029	316	1	388	124	6155	641	192	-6154
24063	33-cdcsp-01-uwx.120	7	1		2	1	X1	5651	977	2	2165	384	27369	3486	593	-27367
24063	33-cdcsp-01-uwx.120	7	1		3	1	Y1	5651	977	2	2165	384	27369	3486	593	-27367
24063	33-cdcsp-01-uwx.120	7	1		4	1	Z1	5651	977	2	2165	384	27369	3486	593	-27367
24063	33-cdcsp-01-uwx.120	7	1		5	1	TR:SW	979	294	1	369	116	5923	610	179	-5922
24063	33-cdcsp-01-uwx.120	7	1		6	1	X2	5651	977	2	2165	384	27375	3486	593	-27373
24063	33-cdcsp-01-uwx.120	7	1		7	1	Y2	5651	977	2	2165	384	27375	3486	593	-27373
24063	33-cdcsp-01-uwx.120	7	1		8	1	Z2	5651	977	2	2165	384	27375	3486	593	-27373
24063	33-cdcsp-01-uwx.120	8	1	NESC Ins NA-	1	1	TL:SW	1029	-316	1	388	-124	6155	641	-192	-6154
24063	33-cdcsp-01-uwx.120	8	1		2	1	X1	5651	-977	2	2165	-384	27369	3486	-593	-27367
24063	33-cdcsp-01-uwx.120	8	1		3	1	Y1	5651	-977	2	2165	-384	27369	3486	-593	-27367
24063	33-cdcsp-01-uwx.120	8	1		4	1	Z1	5651	-977	2	2165	-384	27369	3486	-593	-27367
24063	33-cdcsp-01-uwx.120	8	1		5	1	TR:SW	979	-294	1	369	-116	5923	610	-179	-5922
24063	33-cdcsp-01-uwx.120	8	1		6	1	X2	5651	-977	2	2165	-384	27375	3486	-593	-27373
24063	33-cdcsp-01-uwx.120	8	1		7	1	Y2	5651	-977	2	2165	-384	27375	3486	-593	-27373
24063	33-cdcsp-01-uwx.120	8	1		8	1	Z2	5651	-977	2	2165	-384	27375	3486	-593	-27373
24063	33-cdcsp-01-uwx.120	9	5	ASCE Ice/Wind NA	1	1	TL:SW	1655	728	2	626	286	7462	1029	442	-7461
24063	33-cdcsp-01-uwx.120	9	5		2	1	X1	7599	2064	4	2912	811	31255	4687	1254	-31251
24063	33-cdcsp-01-uwx.120	9	5		3	1	Y1	7599	2064	4	2912	811	31255	4687	1254	-31251
24063	33-cdcsp-01-uwx.120	9	5		4	1	Z1	7599	2064	4	2912	811	31255	4687	1254	-31251
24063	33-cdcsp-01-uwx.120	9	5		5	1	TR:SW	1579	690	2	597	271	7236	983	419	-7234
24063	33-cdcsp-01-uwx.120	9	5		6	1	X2	7603	2064	4	2914	811	31304	4689	1254	-31301
24063	33-cdcsp-01-uwx.120	9	5		7	1	Y2	7603	2064	4	2914	811	31304	4689	1254	-31301
24063	33-cdcsp-01-uwx.120	9	5		8	1	Z2	7603	2064	4	2914	811	31304	4689	1254	-31301
24063	33-cdcsp-01-uwx.120	10	5	ASCE Ice/Wind NA	1	1	TL:SW	1655	-728	2	626	-286	7462	1029	-442	-7461
24063	33-cdcsp-01-uwx.120	10	5		2	1	X1	7599	-2064	4	2912	-811	31255	4687	-1254	-31251
24063	33-cdcsp-01-uwx.120	10	5		3	1	Y1	7599	-2064	4	2912	-811	31255	4687	-1254	-31251
24063	33-cdcsp-01-uwx.120	10	5		4	1	Z1	7599	-2064	4	2912	-811	31255	4687	-1254	-31251
24063	33-cdcsp-01-uwx.120	10	5		5	1	TR:SW	1579	-690	2	597	-271	7236	983	-419	-7234
24063	33-cdcsp-01-uwx.120	10	5		6	1	X2	7603	-2064	4	2914	-811	31304	4689	-1254	-31301
24063	33-cdcsp-01-uwx.120	10	5		7	1	Y2	7603	-2064	4	2914	-811	31304	4689	-1254	-31301
24063	33-cdcsp-01-uwx.120	10	5		8	1	Z2	7603	-2064	4	2914	-811	31304	4689	-1254	-31301
24063	33-cdcsp-01-uwx.120	11	18	NU Ice	1	1	TL:SW	2224	0	0	845	0	8737	1379	0	-8737
24063	33-cdcsp-01-uwx.120	11	18		2	1	X1	9403	0	-0	3599	0	38032	5804	0	-38032
24063	33-cdcsp-01-uwx.120	11	18		3	1	Y1	9403	0	0	3599	0	38032	5804	0	-38032
24063	33-cdcsp-01-uwx.120	11	18		4	1	Z1	9403	0	0	3599	0	38032	5804	0	-38032
24063	33-cdcsp-01-uwx.120	11	18		5	1	TR:SW	2120	0	0	805	0	8429	1315	0	-8429
24063	33-cdcsp-01-uwx.120	11	18		6	1	X2	9406	0	0	3600	0	38081	5806	0	-38081
24063	33-cdcsp-01-uwx.120	11	18		7	1	Y2	9406	0	0	3600	0	38081	5806	0	-38081
24063	33-cdcsp-01-uwx.120	11	18		8	1	Z2	9406	0	0	3600	0	38081	5806	0	-38081

Wire Load Induced Ground Line Moments For Single Pole Centered At Structure Origin For Structure Range

Note: not applicable to guyed structures or frames. These approximate values do not include nonlinear (P-delta) effects or wind on pole. ??

Str. No.	Str. Name	LC #	WC #	Load Case Description	Vert. Load (kips)	Trans. Shear (kips)	Long. Shear (kips)	Resultant Shear (kips)	Trans. Moment (ft-k)	Long. Moment (ft-k)	Resultant Moment (ft-k)
24063	33-cdcsp-01-uwx.120	1	1	NESC Heavy NA+	53.873	16.184	0.019	16.184	1603.269	1.879	1603.270

24063	33-cdcsp-01-uwx.120	2	1	NESC Heavy NA-	53.873	-16.184	0.019	16.184	-1606.647	1.879	1606.649
24063	33-cdcsp-01-uwx.120	3	1	NESC Uplift NA+	35.915	16.184	0.019	16.184	1603.832	1.879	1603.833
24063	33-cdcsp-01-uwx.120	4	1	NESC Uplift NA-	35.915	-16.184	0.019	16.184	-1606.084	1.879	1606.085
24063	33-cdcsp-01-uwx.120	5	4	NESC Ext Wind NA	30.255	33.050	0.133	33.050	3249.858	13.098	3249.884
24063	33-cdcsp-01-uwx.120	6	4	NESC Ext Wind NA	30.255	-33.050	0.133	33.050	-3251.257	13.098	3251.284
24063	33-cdcsp-01-uwx.120	7	1	NESC Ins NA+	35.915	6.474	0.011	6.474	640.857	1.139	640.858
24063	33-cdcsp-01-uwx.120	8	1	NESC Ins NA-	35.915	-6.474	0.011	6.474	-643.109	1.139	643.111
24063	33-cdcsp-01-uwx.120	9	5	ASCE Ice/Wind NA	48.840	13.805	0.026	13.805	1370.138	2.612	1370.140
24063	33-cdcsp-01-uwx.120	10	5	ASCE Ice/Wind NA	48.840	-13.805	0.026	13.805	-1373.218	2.612	1373.220
24063	33-cdcsp-01-uwx.120	11	18	NU Ice	60.771	0.000	-0.000	0.000	-2.180	-0.000	2.180

Basic factored design wind pressure on structure For Structure Range

Str. No.	Str. Name	LC #	WC #	Load Case Description	Trans. Wind Press. (psf)	Long. Wind Press. (psf)	Notes
24063	33-cdcsp-01-uwx.120	1	1	NESC Heavy NA+	10.0	0.0	
24063	33-cdcsp-01-uwx.120	2	1	NESC Heavy NA-	-10.0	-0.0	
24063	33-cdcsp-01-uwx.120	3	1	NESC Uplift NA+	10.0	0.0	
24063	33-cdcsp-01-uwx.120	4	1	NESC Uplift NA-	-10.0	-0.0	
24063	33-cdcsp-01-uwx.120	5	4	NESC Ext Wind NA	35.3	0.0	
24063	33-cdcsp-01-uwx.120	6	4	NESC Ext Wind NA	-35.3	-0.0	
24063	33-cdcsp-01-uwx.120	7	1	NESC Ins NA+	4.0	0.0	
24063	33-cdcsp-01-uwx.120	8	1	NESC Ins NA-	-4.0	-0.0	
24063	33-cdcsp-01-uwx.120	9	5	ASCE Ice/Wind NA	7.0	0.0	
24063	33-cdcsp-01-uwx.120	10	5	ASCE Ice/Wind NA	-7.0	-0.0	
24063	33-cdcsp-01-uwx.120	11	18	NU Ice	0.0	0.0	

Equipment Loads - TIA-222-G Calculations

Design Data as per TIA-222-G

Wind Speed w/o Ice:	$V := 97$	mph	User Input - See 2016 CT State Building Code - Appendix N
Wind Speed w/ Ice:	$Vi := 50$	mph	User Input - See Annex B of TIA-222-G
Service Wind Speed:	$V_{service_loads} := 60$	mph	Section 2.8.3 - TIA-222-G
Service Importance Factor:	$I_{service_loads} := 1$		Section 2.8.3 - TIA-222-G
Directionality Factor:	$Kd_{service_loads} := 0.85$		Section 2.8.3 - TIA-222-G
Radial Ice Thickness:	$ti := 0.75\ in$		User Input - See Annex B of TIA-222-G
Radial Ice Density:	$Id := 57\ pcf$		User Input - See Annex B of TIA-222-G
Height to Center of Antennas:	$z_{carrier_1} := 130\ ft$		User Input
Structure Type:	$ST :=$ "Pole"		User Input
Structure Class:	$SC :=$ "III"		User Input - Table 2-1 - TIA-222-G
Exposure Category:	$Exp :=$ "C"		User Input - Section 2.6.5.1 - TIA-222-G
Wind Direction Probability Factor:	$Kd := 0.95$		User Input - Table 2-2 - TIA-222-G
Importance Factor, Wind:	$I_{wind} := 1.15$		User Input - Table 2-3 - TIA-222-G
Importance Factor, Ice:	$I_{Ice} := 1.25$		User Input - Table 2-3 - TIA-222-G
Importance Factor, Ice With Wind:	$I_{IcewWind} := 1$		User Input - Table 2-3 - TIA-222-G
Exposure Category Coefficient:	$Zg := 900\ ft$		User Input - Table 2-4 - TIA-222-G
Exposure Category Coefficient:	$\alpha := 9.5$		User Input - Table 2-4 - TIA-222-G
Gust Response Factor:	$G_H := 1.35$		User Input - Section 2.6.7.4 - TIA-222-G - Tubular Spine
Shielding Factor:	$K_a := 0.8$		User Input - Section 2.6.9.2.2 - TIA-222-G
Velocity Pressure Coefficient:	$Kz_{carrier_1} := 2.01 \left(\frac{z_{carrier_1}}{Zg}\right)^{\frac{2}{\alpha}} = 1.34$		Section 2.6.5.2 - TIA-222-G
	$Kzt := 1.0$		Section 2.6.6.4 - TIA-222-G
Velocity Pressure w/o Ice:	$qz_{carrier_1} := 0.00256 \cdot Kd \cdot Kz_{carrier_1} \cdot Kzt \cdot V^2 \cdot I_{wind} \cdot psf = 35.2\ psf$		
Velocity Pressure w/ Ice:	$qz_{ice_carrier_1} := 0.00256 \cdot Kd \cdot Kz_{carrier_1} \cdot Kzt \cdot Vi^2 \cdot I_{IcewWind} \cdot psf = 8.13\ psf$		
Height Escalation Factor for Ice Thickness:	$Kiz := \left(\frac{z_{carrier_1}}{33\ ft}\right)^{0.1} = 1.15$		
Factored Ice Thickness:	$tiz := 2.0 \cdot ti \cdot I_{Ice} \cdot Kiz \cdot Kzt^{0.35} = 2.15\ in$		Section 2.6.8 - TIA-222-G

Standard Equipment Calculations - Equipment 1 (Front Wind)

Equipment Properties

Antenna Carrier:	AT&T	User Defined
Equipment Model:	Proposed Antenna Kathrein - 800-10965	User Defined
Equipment Shape:	Flat	User Defined
Equipment Height:	$L_{eq_1} := 78.7 \cdot in$	User Defined
Equipment Width:	$W_{eq_1} := 20 \cdot in$	User Defined
Equipment Depth:	$D_{eq_1} := 6.9\ in$	User Defined
Equipment Weight:	$WT_{eq_1} := 108.6 \cdot lbf$	User Defined
Equipment Volume:	$V_{eq_1} := L_{eq_1} \cdot W_{eq_1} \cdot D_{eq_1} = 6.29\ ft^3$	
Equipment Quantity:	$N_{eq_1} := 1$	User Defined
Equippment Aspect Ratio:	$Ar_{eq_1} := \frac{L_{eq_1}}{W_{eq_1}} = 3.94$	
Mast Force Coefficient:	$Ca_{eq_1} := 1.2 + \frac{(Ar_{eq_1} - 2.5)}{4.5} \cdot 0.2 = 1.26$	As per Table 2-8 (Flat) - TIA-222-G

Equipment Wind Loads

Equipment Projected Area:	$SA_{eq_1} := L_{eq_1} \cdot W_{eq_1} = 10.93\ ft^2$	
Equipment Wind Force (All):	$F_{eq_1} := qz_{carrier_1} \cdot G_H \cdot Ca_{eq_1} \cdot SA_{eq_1} \cdot N_{eq_1} \cdot K_a = 525\ lbf$	BLC 7 Member Point Load

Equipment Wind Loads (w/ Ice)

Equipment Projected Area (w/ Ice):	$A_ice_{eq_1} := (L_{eq_1} + 2 \cdot tiz) \cdot (W_{eq_1} + 2 \cdot tiz) = 14\ ft^2$	
Equipment Wind Force (w/ Ice) (All):	$Fi_{eq_1} := qz_{ice_carrier_1} \cdot G_H \cdot Ca_{eq_1} \cdot A_ice_{eq_1} \cdot N_{eq_1} \cdot K_a = 155\ lbf$	BLC 5 Member Point Load

Equipment Vertical Loads

Weight of Equipment (All):	$WT_{eq_1} \cdot N_{eq_1} = 108.6\ lbf$	BLC 2 Member Point Load

Equipment Vertical Loads (Ice Only)

Volume of Ice on Equipment:	$V_{ice_eq_1} := (L_{eq_1} + 2 \cdot tiz) \cdot (W_{eq_1} + 2 \cdot tiz) \cdot (D_{eq_1} + 2 \cdot tiz) - V_{eq_1} = 6.79\ ft^3$	
Weight of Ice on Equipment (All):	$WT_{ice_eq_1} := V_{ice_eq_1} \cdot Id \cdot N_{eq_1} = 387\ lbf$	BLC 3 Member Point Load

Standard Equipment Calculations - Equipment 1 (Side Wind)

Equipment Properties

Antenna Carrier:	AT&T	User Defined
Equipment Model:	Proposed Antenna Kathrein - 800-10965	User Defined
Equipment Shape:	Flat	User Defined
Equipment Height:	$L_{eq_1} := 78.7 \cdot in$	User Defined
Equipment Width:	$W_{eq_1} := 20 \cdot in$	User Defined
Equipment Depth:	$D_{eq_1} := 6.9\ in$	User Defined
Equipment Weight:	$WT_{eq_1} := 108.6 \cdot lbf$	User Defined
Equipment Volume:	$V_{eq_1} := L_{eq_1} \cdot W_{eq_1} \cdot D_{eq_1} = 6.29\ ft^3$	
Equipment Quantity:	$N_{eq_1} := 1$	User Defined
Equippment Aspect Ratio:	$Ar_{eq_1} := \frac{L_{eq_1}}{D_{eq_1}} = 11.41$	
Mast Force Coefficient:	$Ca_{eq_1} := 1.4 + \frac{(Ar_{eq_1} - 7)}{18} \cdot 0.6 = 1.55$	As per Table 2-8 (Flat) - TIA-222-G

Equipment Wind Loads

Equipment Projected Area:	$SA_{eq_1} := L_{eq_1} \cdot D_{eq_1} = 3.77\ ft^2$	
Equipment Wind Force (All):	$F_{eq_1} := qz_{carrier_1} \cdot G_H \cdot Ca_{eq_1} \cdot SA_{eq_1} \cdot N_{eq_1} \cdot K_a = 222\ lbf$	**BLC 6** Member Point Load

Equipment Wind Loads (w/ Ice)

Equipment Projected Area (w/ Ice):	$A_ice_{eq_1} := (L_{eq_1} + 2 \cdot tiz) \cdot (D_{eq_1} + 2 \cdot tiz) = 6\ ft^2$	
Equipment Wind Force (w/ Ice) (All):	$Fi_{eq_1} := qz_{ice_carrier_1} \cdot G_H \cdot Ca_{eq_1} \cdot A_ice_{eq_1} \cdot N_{eq_1} \cdot K_a = 88\ lbf$	**BLC 4** Member Point Load

Equipment Vertical Loads

Weight of Equipment (All):	$WT_{eq_1} \cdot N_{eq_1} = 108.6\ lbf$	**BLC 2** Member Point Load

Standard Equipment Calculations - Equipment 2 (Front Wind)

Equipment Properties

Antenna Carrier:	AT&T	User Defined
Equipment Model:	Existing TMA Kaelus - TMA2117F00V1-1	User Defined
Equipment Shape:	Flat	User Defined
Equipment Height:	$L_{eq_2} := 11.8 \cdot in$	User Defined
Equipment Width:	$W_{eq_2} := 9.8 \cdot in$	User Defined
Equipment Depth:	$D_{eq_2} := 4.7\ in$	User Defined
Equipment Weight:	$WT_{eq_2} := 26 \cdot lbf$	User Defined
Equipment Volume:	$V_{eq_2} := L_{eq_2} \cdot W_{eq_2} \cdot D_{eq_2} = 0.31\ ft^3$	
Equipment Quantity:	$N_{eq_2} := 2$	User Defined
Equippment Aspect Ratio:	$Ar_{eq_2} := \frac{L_{eq_2}}{W_{eq_2}} = 1.2$	
Mast Force Coefficient:	$Ca_{eq_2} := 1.2$	As per Table 2-8 (Flat) - TIA-222-G

Equipment Wind Loads

Equipment Projected Area:	$SA_{eq_2} := L_{eq_2} \cdot W_{eq_2} = 0.8\ ft^2$	
Equipment Wind Force (All):	$F_{eq_2} := qz_{carrier_1} \cdot G_H \cdot Ca_{eq_2} \cdot SA_{eq_2} \cdot N_{eq_2} \cdot K_a = 73\ lbf$	**BLC 7** Member Point Load

Equipment Wind Loads (w/ Ice)

Equipment Projected Area (w/ Ice):	$A_ice_{eq_2} := (L_{eq_2} + 2 \cdot tiz) \cdot (W_{eq_2} + 2 \cdot tiz) = 2\ ft^2$	
Equipment Wind Force (w/ Ice) (All):	$Fi_{eq_2} := qz_{ice_carrier_1} \cdot G_H \cdot Ca_{eq_2} \cdot A_ice_{eq_2} \cdot N_{eq_2} \cdot K_a = 33\ lbf$	**BLC 5** Member Point Load

Equipment Vertical Loads

Weight of Equipment (All):	$WT_{eq_2} \cdot N_{eq_2} = 52\ lbf$	**BLC 2** Member Point Load

Equipment Vertical Loads (Ice Only)

Volume of Ice on Equipment:	$V_{ice_eq_2} := (L_{eq_2} + 2 \cdot tiz) \cdot (W_{eq_2} + 2 \cdot tiz) \cdot (D_{eq_2} + 2 \cdot tiz) - V_{eq_2} = 0.87\ ft^3$	
Weight of Ice on Equipment (All):	$WT_{ice_eq_2} := V_{ice_eq_2} \cdot Id \cdot N_{eq_2} = 99\ lbf$	**BLC 3** Member Point Load

Standard Equipment Calculations - Equipment 2 (Side Wind)

Equipment Properties

Antenna Carrier:	AT&T	User Defined
Equipment Model:	Existing TMA Kaelus - TMA2117F00V1-1	User Defined
Equipment Shape:	Flat	User Defined
Equipment Height:	$L_{eq_2} := 11.8 \cdot in$	User Defined
Equipment Width:	$W_{eq_2} := 9.8 \cdot in$	User Defined
Equipment Depth:	$D_{eq_2} := 4.7\ in$	User Defined
Equipment Weight:	$WT_{eq_2} := 26 \cdot lbf$	User Defined
Equipment Volume:	$V_{eq_2} := L_{eq_2} \cdot W_{eq_2} \cdot D_{eq_2} = 0.31\ ft^3$	
Equipment Quantity:	$N_{eq_2} := 2$	User Defined
Equippment Aspect Ratio:	$Ar_{eq_2} := \frac{L_{eq_2}}{D_{eq_2}} = 2.51$	
Mast Force Coefficient:	$Ca_{eq_2} := 1.2$	As per Table 2-8 (Flat) - TIA-222-G

Equipment Wind Loads

Equipment Projected Area:	$SA_{eq_2} := L_{eq_2} \cdot D_{eq_2} = 0.39\ ft^2$	
Equipment Wind Force (All):	$F_{eq_2} := qz_{carrier_1} \cdot G_H \cdot Ca_{eq_2} \cdot SA_{eq_2} \cdot N_{eq_2} \cdot K_a = 35\ lbf$	**BLC 6** Member Point Load

Equipment Wind Loads (w/ Ice)

Equipment Projected Area (w/ Ice):	$A_ice_{eq_2} := (L_{eq_2} + 2 \cdot tiz) \cdot (D_{eq_2} + 2 \cdot tiz) = 1\ ft^2$	
Equipment Wind Force (w/ Ice) (All):	$Fi_{eq_2} := qz_{ice_carrier_1} \cdot G_H \cdot Ca_{eq_2} \cdot A_ice_{eq_2} \cdot N_{eq_2} \cdot K_a = 21\ lbf$	**BLC 4** Member Point Load

Equipment Vertical Loads

Weight of Equipment (All):	$WT_{eq_2} \cdot N_{eq_2} = 52\ lbf$	**BLC 2** Member Point Load

Standard Equipment Calculations - Equipment 3 (Front Wind)

Equipment Properties

Antenna Carrier:	AT&T	User Defined
Equipment Model:	Proposed TMA CCI - TMABPD7823VG12A	User Defined
Equipment Shape:	Flat	User Defined
Equipment Height:	$L_{eq_3} := 10.6 \cdot in$	User Defined
Equipment Width:	$W_{eq_3} := 11 \cdot in$	User Defined
Equipment Depth:	$D_{eq_3} := 3.8\ in$	User Defined
Equipment Weight:	$WT_{eq_3} := 26 \cdot lbf$	User Defined
Equipment Volume:	$V_{eq_3} := L_{eq_3} \cdot W_{eq_3} \cdot D_{eq_3} = 0.26\ ft^3$	
Equipment Quantity:	$N_{eq_3} := 2$	User Defined
Equippment Aspect Ratio:	$Ar_{eq_3} := \frac{L_{eq_3}}{W_{eq_3}} = 0.96$	
Mast Force Coefficient:	$Ca_{eq_3} := 1.2$	As per Table 2-8 (Flat) - TIA-222-G

Equipment Wind Loads

Equipment Projected Area: $SA_{eq_3} := L_{eq_3} \cdot W_{eq_3} = 0.81\ ft^2$

Equipment Wind Force (All): $F_{eq_3} := qz_{carrier_1} \cdot G_H \cdot Ca_{eq_3} \cdot SA_{eq_3} \cdot N_{eq_3} \cdot K_a = 74\ lbf$ — **BLC 7** Member Point Load

Equipment Wind Loads (w/ Ice)

Equipment Projected Area (w/ Ice): $A_ice_{eq_3} := (L_{eq_3} + 2 \cdot tiz) \cdot (W_{eq_3} + 2 \cdot tiz) = 2\ ft^2$

Equipment Wind Force (w/ Ice) (All): $Fi_{eq_3} := qz_{ice_carrier_1} \cdot G_H \cdot Ca_{eq_3} \cdot A_ice_{eq_3} \cdot N_{eq_3} \cdot K_a = 33\ lbf$ — **BLC 5** Member Point Load

Equipment Vertical Loads

Weight of Equipment (All): $WT_{eq_3} \cdot N_{eq_3} = 52\ lbf$ — **BLC 2** Member Point Load

Equipment Vertical Loads (Ice Only)

Volume of Ice on Equipment: $V_{ice_eq_3} := (L_{eq_3} + 2 \cdot tiz) \cdot (W_{eq_3} + 2 \cdot tiz) \cdot (D_{eq_3} + 2 \cdot tiz) - V_{eq_3} = 0.81\ ft^3$

Weight of Ice on Equipment (All): $WT_{ice_eq_3} := V_{ice_eq_3} \cdot Id \cdot N_{eq_3} = 93\ lbf$ — **BLC 3** Member Point Load

Standard Equipment Calculations - Equipment 3 (Side Wind)

Equipment Properties

Antenna Carrier:	AT&T	User Defined
Equipment Model:	Proposed TMA CCI - TMABPD7823VG12A	User Defined
Equipment Shape:	Flat	User Defined
Equipment Height:	$L_{eq_3} := 10.6 \cdot in$	User Defined
Equipment Width:	$W_{eq_3} := 11 \cdot in$	User Defined
Equipment Depth:	$D_{eq_3} := 3.8\ in$	User Defined
Equipment Weight:	$WT_{eq_3} := 26 \cdot lbf$	User Defined
Equipment Volume:	$V_{eq_3} := L_{eq_3} \cdot W_{eq_3} \cdot D_{eq_3} = 0.26\ ft^3$	
Equipment Quantity:	$N_{eq_3} := 2$	User Defined
Equippment Aspect Ratio:	$Ar_{eq_3} := \frac{L_{eq_3}}{D_{eq_3}} = 2.79$	
Mast Force Coefficient:	$Ca_{eq_3} := 1.2 + \frac{(Ar_{eq_3} - 2.5)}{4.5} \cdot 0.6 = 1.24$	As per Table 2-8 (Flat) - TIA-222-G

Equipment Wind Loads

Equipment Projected Area:	$SA_{eq_3} := L_{eq_3} \cdot D_{eq_3} = 0.28\ ft^2$	
Equipment Wind Force (All):	$F_{eq_3} := qz_{carrier_1} \cdot G_H \cdot Ca_{eq_3} \cdot SA_{eq_3} \cdot N_{eq_3} \cdot K_a = 26\ lbf$	BLC 6 Member Point Load

Equipment Wind Loads (w/ Ice)

Equipment Projected Area (w/ Ice):	$A_ice_{eq_3} := (L_{eq_3} + 2 \cdot tiz) \cdot (D_{eq_3} + 2 \cdot tiz) = 1\ ft^2$	
Equipment Wind Force (w/ Ice) (All):	$Fi_{eq_3} := qz_{ice_carrier_1} \cdot G_H \cdot Ca_{eq_3} \cdot A_ice_{eq_3} \cdot N_{eq_3} \cdot K_a = 18\ lbf$	BLC 4 Member Point Load

Equipment Vertical Loads

Weight of Equipment (All):	$WT_{eq_3} \cdot N_{eq_3} = 52\ lbf$	BLC 2 Member Point Load

Standard Equipment Calculations - Equipment 4 (Front Wind)

Equipment Properties

Antenna Carrier:	AT&T	User Defined
Equipment Model:	Existing Antenna Andrew SBNH-1D6565B	User Defined
Equipment Shape:	Flat	User Defined
Equipment Height:	$L_{eq_4} := 72.7 \cdot in$	User Defined
Equipment Width:	$W_{eq_4} := 11.9 \cdot in$	User Defined
Equipment Depth:	$D_{eq_4} := 7.1\ in$	User Defined
Equipment Weight:	$WT_{eq_4} := 47.4 \cdot lbf$	User Defined
Equipment Volume:	$V_{eq_4} := L_{eq_4} \cdot W_{eq_4} \cdot D_{eq_4} = 3.55\ ft^3$	
Equipment Quantity:	$N_{eq_4} := 1$	User Defined
Equippment Aspect Ratio:	$Ar_{eq_4} := \frac{L_{eq_4}}{W_{eq_4}} = 6.11$	
Mast Force Coefficient:	$Ca_{eq_4} := 1.2 + \frac{(Ar_{eq_4} - 2.5)}{4.5} \cdot 0.2 = 1.36$	As per Table 2-8 (Flat) - TIA-222-G

Equipment Wind Loads

Equipment Projected Area:	$SA_{eq_4} := L_{eq_4} \cdot W_{eq_4} = 6.01\ ft^2$	
Equipment Wind Force (All):	$F_{eq_2} := qz_{carrier_1} \cdot G_H \cdot Ca_{eq_4} \cdot SA_{eq_4} \cdot N_{eq_4} \cdot K_a = 311\ lbf$	**BLC 7** Member Point Load

Equipment Wind Loads (w/ Ice)

Equipment Projected Area (w/ Ice):	$A_ice_{eq_4} := (L_{eq_4} + 2 \cdot tiz) \cdot (W_{eq_4} + 2 \cdot tiz) = 9\ ft^2$	
Equipment Wind Force (w/ Ice) (All):	$Fi_{eq_2} := qz_{ice_carrier_1} \cdot G_H \cdot Ca_{eq_4} \cdot A_ice_{eq_4} \cdot N_{eq_4} \cdot K_a = 104\ lbf$	**BLC 5** Member Point Load

Equipment Vertical Loads

Weight of Equipment (All):	$WT_{eq_4} \cdot N_{eq_4} = 47.4\ lbf$	**BLC 2** Member Point Load

Equipment Vertical Loads (Ice Only)

Volume of Ice on Equipment:	$V_{ice_eq_4} := (L_{eq_4} + 2 \cdot tiz) \cdot (W_{eq_4} + 2 \cdot tiz) \cdot (D_{eq_4} + 2 \cdot tiz) - V_{eq_4} = 4.68\ ft^3$	
Weight of Ice on Equipment (All):	$WT_{ice_eq_4} := V_{ice_eq_4} \cdot Id \cdot N_{eq_4} = 267\ lbf$	**BLC 3** Member Point Load

Standard Equipment Calculations - Equipment 4 (Side Wind)

Equipment Properties

Antenna Carrier:	AT&T	User Defined
Equipment Model:	Existing Antenna Andrew SBNH-1D6565B	User Defined
Equipment Shape:	Flat	User Defined
Equipment Height:	$L_{eq_4} := 72.7 \cdot in$	User Defined
Equipment Width:	$W_{eq_4} := 11.9 \cdot in$	User Defined
Equipment Depth:	$D_{eq_4} := 7.1\ in$	User Defined
Equipment Weight:	$WT_{eq_4} := 47.4 \cdot lbf$	User Defined
Equipment Volume:	$V_{eq_4} := L_{eq_4} \cdot W_{eq_4} \cdot D_{eq_4} = 3.55\ ft^3$	
Equipment Quantity:	$N_{eq_4} := 1$	User Defined
Equippment Aspect Ratio:	$Ar_{eq_4} := \frac{L_{eq_4}}{D_{eq_4}} = 10.24$	
Mast Force Coefficient:	$Ca_{eq_4} := 1.4 + \frac{(Ar_{eq_4} - 7)}{18} \cdot 0.6 = 1.51$	As per Table 2-8 (Flat) - TIA-222-G

Equipment Wind Loads

Equipment Projected Area:	$SA_{eq_4} := L_{eq_4} \cdot D_{eq_4} = 3.58\ ft^2$	
Equipment Wind Force (All):	$F_{eq_2} := qz_{carrier_1} \cdot G_H \cdot Ca_{eq_4} \cdot SA_{eq_4} \cdot N_{eq_4} \cdot K_a = 205\ lbf$	**BLC 6** Member Point Load

Equipment Wind Loads (w/ Ice)

Equipment Projected Area (w/ Ice):	$A_ice_{eq_4} := (L_{eq_4} + 2 \cdot tiz) \cdot (D_{eq_4} + 2 \cdot tiz) = 6\ ft^2$	
Equipment Wind Force (w/ Ice) (All):	$Fi_{eq_2} := qz_{ice_carrier_1} \cdot G_H \cdot Ca_{eq_4} \cdot A_ice_{eq_4} \cdot N_{eq_4} \cdot K_a = 81\ lbf$	**BLC 4** Member Point Load

Equipment Vertical Loads

Weight of Equipment (All):	$WT_{eq_4} \cdot N_{eq_4} = 47.4\ lbf$	**BLC 2** Member Point Load

Standard Equipment Calculations - Equipment 5 (Front Wind)

Equipment Properties

Antenna Carrier:	AT&T	User Defined
Equipment Model:	Existing Antenna Quintel QS66512-2	User Defined
Equipment Shape:	Flat	User Defined
Equipment Height:	$L_{eq_5} := 72 \cdot in$	User Defined
Equipment Width:	$W_{eq_5} := 12 \cdot in$	User Defined
Equipment Depth:	$D_{eq_5} := 9.6\ in$	User Defined
Equipment Weight:	$WT_{eq_5} := 111 \cdot lbf$	User Defined
Equipment Volume:	$V_{eq_5} := L_{eq_5} \cdot W_{eq_5} \cdot D_{eq_5} = 4.8\ ft^3$	
Equipment Quantity:	$N_{eq_5} := 1$	User Defined
Equipment Aspect Ratio:	$Ar_{eq_5} := \frac{L_{eq_5}}{W_{eq_5}} = 6$	
Mast Force Coefficient:	$Ca_{eq_5} := 1.2 + \frac{(Ar_{eq_5} - 2.5)}{4.5} \cdot 0.2 = 1.36$	As per Table 2-8 (Flat) - TIA-222-G

Equipment Wind Loads

Equipment Projected Area: $SA_{eq_5} := L_{eq_5} \cdot W_{eq_5} = 6\ ft^2$

Equipment Wind Force (All): $F_{eq_5} := qz_{carrier_1} \cdot G_H \cdot Ca_{eq_5} \cdot SA_{eq_5} \cdot N_{eq_5} \cdot K_a = 309\ lbf$ — **BLC 7** Member Point Load

Equipment Wind Loads (w/ Ice)

Equipment Projected Area (w/ Ice): $A_ice_{eq_5} := (L_{eq_5} + 2 \cdot tiz) \cdot (W_{eq_5} + 2 \cdot tiz) = 9\ ft^2$

Equipment Wind Force (w/ Ice) (All): $Fi_{eq_6} := qz_{ice_carrier_1} \cdot G_H \cdot Ca_{eq_5} \cdot A_ice_{eq_5} \cdot N_{eq_5} \cdot K_a = 103\ lbf$ — **BLC 5** Member Point Load

Equipment Vertical Loads

Weight of Equipment (All): $WT_{eq_5} \cdot N_{eq_5} = 111\ lbf$ — **BLC 2** Member Point Load

Equipment Vertical Loads (Ice Only)

Volume of Ice on Equipment: $V_{ice_eq_5} := (L_{eq_5} + 2 \cdot tiz) \cdot (W_{eq_5} + 2 \cdot tiz) \cdot (D_{eq_5} + 2 \cdot tiz) - V_{eq_5} = 5.21\ ft^3$

Weight of Ice on Equipment (All): $WT_{ice_eq_5} := V_{ice_eq_5} \cdot Id \cdot N_{eq_5} = 297\ lbf$ — **BLC 3** Member Point Load

Standard Equipment Calculations - Equipment 5 (Side Wind)

Equipment Properties

Antenna Carrier:	AT&T	User Defined
Equipment Model:	Existing Antenna Quintel QS66512-2	User Defined
Equipment Shape:	Flat	User Defined
Equipment Height:	$L_{eq_5} := 72 \cdot in$	User Defined
Equipment Width:	$W_{eq_5} := 12 \cdot in$	User Defined
Equipment Depth:	$D_{eq_5} := 9.6\ in$	User Defined
Equipment Weight:	$WT_{eq_5} := 111 \cdot lbf$	User Defined
Equipment Volume:	$V_{eq_5} := L_{eq_5} \cdot W_{eq_5} \cdot D_{eq_5} = 4.8\ ft^3$	
Equipment Quantity:	$N_{eq_5} := 1$	User Defined
Equippment Aspect Ratio:	$Ar_{eq_5} := \frac{L_{eq_5}}{D_{eq_5}} = 7.5$	
Mast Force Coefficient:	$Ca_{eq_5} := 1.4 + \frac{(Ar_{eq_5} - 7)}{18} \cdot 0.6 = 1.42$	As per Table 2-8 (Flat) - TIA-222-G

Equipment Wind Loads

Equipment Projected Area:	$SA_{eq_5} := L_{eq_5} \cdot D_{eq_5} = 4.8\ ft^2$	
Equipment Wind Force (All):	$F_{eq_5} := qz_{carrier_1} \cdot G_H \cdot Ca_{eq_5} \cdot SA_{eq_5} \cdot N_{eq_5} \cdot K_a = 258\ lbf$	BLC 6 Member Point Load

Equipment Wind Loads (w/ Ice)

Equipment Projected Area (w/ Ice):	$A_ice_{eq_5} := (L_{eq_5} + 2 \cdot tiz) \cdot (D_{eq_5} + 2 \cdot tiz) = 7\ ft^2$	
Equipment Wind Force (w/ Ice) (All):	$Fi_{eq_5} := qz_{ice_carrier_1} \cdot G_H \cdot Ca_{eq_5} \cdot A_ice_{eq_5} \cdot N_{eq_5} \cdot K_a = 92\ lbf$	BLC 4 Member Point Load

Equipment Vertical Loads

Weight of Equipment (All):	$WT_{eq_5} \cdot N_{eq_5} = 111\ lbf$	BLC 2 Member Point Load

Standard Equipment Calculations - Mount Member 1 (Front/Side Wind)

Pipe Properties

Antenna Carrier:	AT&T	User Defined
Equipment Model:	Mounting Pipes: P2.0	User Defined
Pipe Height:	$L_{pipe_1} := 96 \cdot in$	User Defined
Pipe Diameter:	$W_{pipe_1} := 2.375 \cdot in$	User Defined
Pipe Weight:	$WT_{pipe_1} := 29.3 \cdot lbf$	User Defined
Pipe Volume:	$V_{pipe_1} := L_{pipe_1} \cdot \frac{\left(\left(W_{pipe_1}\right)^2 \cdot \pi\right)}{4} = 0.25\ ft^3$	
Pipe Quantity:	$N_{pipe_1} := 1$	User Defined
Pipe Aspect Ratio:	$Ar_{pipe_1} := \frac{L_{pipe_1}}{W_{pipe_1}} = 40.42$	
Pipe Force Coefficient:	$Ca_{pipe_1} := 1.2$	As per Table 2-8 (Round)-TIA-222-G

Pipe Wind Loads

Pipe Projected Area:	$SA_{pipe_1} := L_{pipe_1} \cdot W_{pipe_1} = 1.58\ ft^2$	
Pipe Wind Force (All):	$F_{pipe_1} := qz_{carrier_1} \cdot G_H \cdot K_a \cdot Ca_{pipe_1} \cdot SA_{pipe_1} = 72\ lbf$	BLC 6/7
Pipe Wind Force (Distributed):	$\frac{F_{pipe_1}}{L_{pipe_1}} = 9\ plf$	BLC 6/7

Pipe Wind Loads (w/ Ice)

Pipe Projected Area (w/ Ice):	$A_ice_{pipe_1} := \left(L_{pipe_1} + 2 \cdot tiz\right) \cdot \left(W_{pipe_1} + 2 \cdot tiz\right) = 4.65\ ft^2$	
Pipe Wind Force (w/ Ice) (All):	$Fi_{pipe_1} := qz_{ice_carrier_1} \cdot G_H \cdot K_a \cdot Ca_{pipe_1} \cdot A_ice_{pipe_1} = 49\ lbf$	BLC 4/5
Pipe Wind Force (w/ Ice) (Distributed):	$\frac{Fi_{pipe_1}}{L_{pipe_1}} = 6.1\ plf$	BLC 4/5

Pipe Vertical Loads

Weight of Pipe (All):	$WT_{pipe_1} = 29\ lbf$	BLC 2
Weight of Pipe (Distributed):	$\frac{WT_{pipe_1}}{L_{pipe_1}} = 3.7\ plf$	BLC 2

Pipe Vertical Loads (Ice Only)

Volume of Ice on Pipe:	$V_{ice_pipe_1} := \left(L_{pipe_1} + 2 \cdot tiz\right) \cdot \left(\frac{\left(W_{pipe_1} + 2 \cdot tiz\right)^2 \cdot \pi}{4}\right) - V_{pipe_1} = 1.79\ ft^3$	
Weight of Ice on Pipe (All):	$WT_{ice_pipe_1} := V_{ice_pipe_1} \cdot Id = 102\ lbf$	BLC 3
Weight of Ice on Pipe (Distributed):	$\frac{WT_{ice_pipe_1}}{L_{pipe_1}} = 12.7\ plf$	BLC 3

Standard Equipment Calculations - Mount Member 2 (Front/Side Wind)

Pipe Properties

Antenna Carrier:	AT&T	User Defined
Equipment Model:	Pipe Boom: P3.0	User Defined
Pipe Height:	$L_{pipe_2} := 150 \cdot in$	User Defined
Pipe Diameter:	$W_{pipe_2} := 3.5 \cdot in$	User Defined
Pipe Weight:	$WT_{pipe_2} := 94.8 \cdot lbf$	User Defined
Pipe Volume:	$V_{pipe_2} := L_{pipe_2} \cdot \frac{\left(\left(W_{pipe_2}\right)^2 \cdot \pi\right)}{4} = 0.84\ ft^3$	
Pipe Aspect Ratio:	$Ar_{pipe_2} := \frac{L_{pipe_2}}{W_{pipe_2}} = 42.86$	
Pipe Force Coefficient:	$Ca_{pipe_2} := 1.2$	As per Table 2-8 (Round)-TIA-222-G

Pipe Wind Loads

Pipe Projected Area:	$SA_{pipe_2} := L_{pipe_2} \cdot W_{pipe_2} = 3.65\ ft^2$	
Pipe Wind Force (All):	$F_{pipe_2} := qz_{carrier_1} \cdot G_H \cdot K_a \cdot Ca_{pipe_2} \cdot SA_{pipe_2} = 166\ lbf$	BLC 6/7
Pipe Wind Force (Distributed):	$\frac{F_{pipe_2}}{L_{pipe_2}} = 13.3\ plf$	BLC 6/7

Pipe Wind Loads (w/ Ice)

Pipe Projected Area (w/ Ice):	$A_ice_{pipe_2} := \left(L_{pipe_2} + 2 \cdot tiz\right) \cdot \left(W_{pipe_2} + 2 \cdot tiz\right) = 8.36\ ft^2$	
Pipe Wind Force (w/ Ice) (All):	$Fi_{pipe_2} := qz_{ice_carrier_1} \cdot G_H \cdot K_a \cdot Ca_{pipe_2} \cdot A_ice_{pipe_2} = 88\ lbf$	BLC 4/5
Pipe Wind Force (w/ Ice) (Distributed):	$\frac{Fi_{pipe_2}}{L_{pipe_2}} = 7\ plf$	BLC 4/5

Pipe Vertical Loads

Weight of Pipe (All):	$WT_{pipe_2} = 95\ lbf$	BLC 2
Weight of Pipe (Distributed):	$\frac{WT_{pipe_2}}{L_{pipe_2}} = 7.6\ plf$	BLC 2

Pipe Vertical Loads (Ice Only)

Volume of Ice on Pipe:	$V_{ice_pipe_2} := \left(L_{pipe_2} + 2 \cdot tiz\right) \cdot \left(\frac{\left(W_{pipe_2} + 2 \cdot tiz\right)^2 \cdot \pi}{4}\right) - V_{pipe_2} = 3.43\ ft^3$	
Weight of Ice on Pipe (All):	$WT_{ice_pipe_2} := V_{ice_pipe_2} \cdot Id = 196\ lbf$	BLC 3
Weight of Ice on Pipe (Distributed):	$\frac{WT_{ice_pipe_2}}{L_{pipe_2}} = 15.7\ plf$	BLC 3

Standard Equipment Calculations - Mount Member 3 (Front/Side Wind)

Pipe Properties

Antenna Carrier:	AT&T	User Defined
Equipment Model:	Vertical Pipe: P4.0	User Defined
Pipe Height:	$L_{pipe_3} := 18 \cdot in$	User Defined
Pipe Diameter:	$W_{pipe_3} := 4.5 \cdot in$	User Defined
Pipe Weight:	$WT_{pipe_3} := 15.75 \cdot lbf$	User Defined
Pipe Volume:	$V_{pipe_3} := L_{pipe_3} \cdot \frac{\left(\left(W_{pipe_3}\right)^2 \cdot \pi\right)}{4} = 0.17\ ft^3$	
Pipe Aspect Ratio:	$Ar_{pipe_3} := \frac{L_{pipe_3}}{W_{pipe_3}} = 4$	
Pipe Force Coefficient:	$Ca_{pipe_3} := 0.7 + \frac{\left(Ar_{pipe_3} - 2.5\right)}{4.5} \cdot 0.1 = 0.73$	As per Table 2-8 (Round)-TIA-222-G

Pipe Wind Loads

Pipe Projected Area:	$SA_{pipe_3} := L_{pipe_3} \cdot W_{pipe_3} = 0.56\ ft^2$	
Pipe Wind Force (All):	$F_{pipe_3} := qz_{carrier_1} \cdot G_H \cdot K_a \cdot Ca_{pipe_3} \cdot SA_{pipe_3} = 16\ lbf$	BLC 6/7
Pipe Wind Force (Distributed):	$\frac{F_{pipe_3}}{L_{pipe_3}} = 10.5\ plf$	BLC 6/7

Pipe Wind Loads (w/ Ice)

Pipe Projected Area (w/ Ice):	$A_ice_{pipe_3} := \left(L_{pipe_3} + 2 \cdot tiz\right) \cdot \left(W_{pipe_3} + 2 \cdot tiz\right) = 1.36\ ft^2$	
Pipe Wind Force (w/ Ice) (All):	$Fi_{pipe_3} := qz_{ice_carrier_1} \cdot G_H \cdot K_a \cdot Ca_{pipe_3} \cdot A_ice_{pipe_3} = 9\ lbf$	BLC 4/5
Pipe Wind Force (w/ Ice) (Distributed):	$\frac{Fi_{pipe_3}}{L_{pipe_3}} = 5.9\ plf$	BLC 4/5

Pipe Vertical Loads

Weight of Pipe (All):	$WT_{pipe_3} = 16\ lbf$	BLC 2
Weight of Pipe (Distributed):	$\frac{WT_{pipe_3}}{L_{pipe_3}} = 10.5\ plf$	BLC 2

Pipe Vertical Loads (Ice Only)

Volume of Ice on Pipe:	$V_{ice_pipe_3} := \left(L_{pipe_3} + 2 \cdot tiz\right) \cdot \left(\frac{\left(W_{pipe_3} + 2 \cdot tiz\right)^2 \cdot \pi}{4}\right) - V_{pipe_3} = 0.62\ ft^3$	
Weight of Ice on Pipe (All):	$WT_{ice_pipe_3} := V_{ice_pipe_3} \cdot Id = 35\ lbf$	BLC 3
Weight of Ice on Pipe (Distributed):	$\frac{WT_{ice_pipe_3}}{L_{pipe_3}} = 23.5\ plf$	BLC 3

Standard Equipment Calculations - Mount Member 4 (Front/Side Wind)

Pipe Properties

Antenna Carrier:	AT&T	User Defined
Equipment Model:	HSS Arm Member: HSS4x4x3/16	User Defined
Arm Length:	$L_{member_4} := 36 \cdot in$	User Defined
Arm Width:	$W_{member_4} := 4 \cdot in$	User Defined
Arm Weight:	$WT_{member_4} := 28.3 \cdot lbf$	User Defined
Arm Volume:	$V_{member_4} := L_{member_4} \cdot W_{member_4}^{2} = 0.33\ ft^3$	
Arm Aspect Ratio:	$Ar_{member_4} := \frac{L_{member_4}}{W_{member_4}} = 9$	
Arm Force Coefficient:	$Ca_{member_4} := 1.4 + \frac{(Ar_{member_4} - 7)}{18} \cdot 0.6 = 1.47$	As per Table 2-8 (Flat)-TIA-222-G

Arm Wind Loads

Arm Projected Area:	$SA_{member_4} := L_{member_4} \cdot W_{member_4} = 1\ ft^2$	
Arm Wind Force (All):	$F_{member_4} := qz_{carrier_1} \cdot G_H \cdot K_a \cdot Ca_{member_4} \cdot SA_{member_4} = 56\ lbf$	BLC 6/7
Arm Wind Force (All):	$\frac{F_{member_4}}{L_{member_4}} = 18.6\ plf$	BLC 6/7

Arm Wind Loads (w/ Ice)

Arm Projected Area (w/ Ice):	$A_ice_{member_4} := (L_{member_4} + 2 \cdot tiz) \cdot (W_{member_4} + 2 \cdot tiz) = 2.32\ ft^2$	
Arm Wind Force (w/ Ice) (All):	$Fi_{member_4} := qz_{ice_carrier_1} \cdot G_H \cdot K_a \cdot Ca_{member_4} \cdot A_ice_{member_4} = 30\ lbf$	BLC 4/5
Arm Wind Force (w/ Ice) (Distributed):	$\frac{Fi_{member_4}}{L_{member_4}} = 10\ plf$	BLC 4/5

Arm Vertical Loads

Weight of Arm (All):	$WT_{member_4} = 28\ lbf$	BLC 2
Weight of Arm (Distributed):	$\frac{WT_{member_4}}{L_{member_4}} = 9.4\ plf$	BLC 2

Arm Vertical Loads (Ice Only)

Volume of Ice on HSS Arm:	$V_{ice_member_4} := (L_{member_4} + 2 \cdot tiz) \cdot (W_{member_4} + 2 \cdot tiz)^{2} - V_{member_4} = 1.27\ ft^3$	
Weight of Ice on Arm (All):	$WT_{ice_member_4} := V_{ice_member_4} \cdot Id = 73\ lbf$	BLC 3
Weight of Ice on Arm (Distributed):	$\frac{WT_{ice_member_4}}{L_{member_4}} = 24.2\ plf$	BLC 3

Standard Equipment Calculations - Mount Member 5 (Front/Side Wind)

Pipe Properties

Antenna Carrier:	AT&T	User Defined
Equipment Model:	Single Angle Handrail Member 1: L3x3x1/4	User Defined
Handrail Length:	$L_{member_5} := 126 \cdot in$	User Defined
Handrail Width:	$W_{member_5} := 3 \cdot in$	User Defined
Handrail Weight:	$WT_{member_5} := 51.45 \cdot lbf$	User Defined
Handrail Volume:	$V_{member_5} := L_{member_5} \cdot W_{member_5}^{2} = 0.66\ ft^3$	
Handrail Aspect Ratio:	$Ar_{member_5} := \frac{L_{member_5}}{W_{member_5}} = 42$	
Handrail Force Coefficient:	$Ca_{member_5} := 2$	As per Table 2-8 (Flat)-TIA-222-G

Handrail Wind Loads

Handrail Projected Area:	$SA_{member_5} := L_{member_5} \cdot W_{member_5} = 2.63\ ft^2$	
Handrail Wind Force (All):	$F_{member_5} := qz_{carrier_1} \cdot G_H \cdot K_a \cdot Ca_{member_5} \cdot SA_{member_5} = 200\ lbf$	BLC 6/7
Handrail Wind Force (All):	$\frac{F_{member_5}}{L_{member_5}} = 19\ plf$	BLC 6/7

Handrail Wind Loads (w/ Ice)

Handrail Projected Area (w/ Ice):	$A_ice_{member_5} := (L_{member_5} + 2 \cdot tiz) \cdot (W_{member_5} + 2 \cdot tiz) = 6.61\ ft^2$	
Handrail Wind Force (w/ Ice) (All):	$Fi_{member_5} := qz_{ice_carrier_1} \cdot G_H \cdot K_a \cdot Ca_{member_5} \cdot A_ice_{member_5} = 116\ lbf$	BLC 4/5
Handrail Wind Force (w/ Ice) (Distributed):	$\frac{Fi_{member_5}}{L_{member_5}} = 11.1\ plf$	BLC 4/5

Handrail Vertical Loads

Weight of Handrail (All):	$WT_{member_5} = 51\ lbf$	BLC 2
Weight of Handrail (Distributed):	$\frac{WT_{member_5}}{L_{member_5}} = 4.9\ plf$	BLC 2

Handrail Vertical Loads (Ice Only)

Volume of Ice on Handrail:	$V_{ice_member_5} := (L_{member_5} + 2 \cdot tiz) \cdot (W_{member_5} + 2 \cdot tiz)^2 - V_{member_5} = 3.36\ ft^3$	
Weight of Ice on Handrail:	$WT_{ice_member_5} := V_{ice_member_5} \cdot Id = 192\ lbf$	BLC 3
Weight of Ice on Handrail:	$\frac{WT_{ice_member_5}}{L_{member_5}} = 18.3\ plf$	BLC 3

Standard Equipment Calculations - Mount Member 6 (Front/Side Wind)

Pipe Properties

Antenna Carrier:	AT&T	User Defined
Equipment Model:	Single Angle Handrail Member 2: L2x2x3/16	User Defined
Handrail Length:	$L_{member_6} := 69 \cdot in$	User Defined
Handrail Width:	$W_{member_6} := 2 \cdot in$	User Defined
Handrail Weight:	$WT_{member_6} := 28.3 \cdot lbf$	User Defined
Handrail Volume:	$V_{member_6} := L_{member_6} \cdot W_{member_6}^2 = 0.16\ ft^3$	
Handrail Aspect Ratio:	$Ar_{member_6} := \frac{L_{member_6}}{W_{member_6}} = 34.5$	
Handrail Force Coefficient:	$Ca_{member_6} := 2$	As per Table 2-8 (Flat)-TIA-222-G

Handrail Wind Loads

Handrail Projected Area:	$SA_{member_6} := L_{member_6} \cdot W_{member_6} = 0.96\ ft^2$	
Handrail Wind Force (All):	$F_{member_6} := qz_{carrier_1} \cdot G_H \cdot K_a \cdot Ca_{member_6} \cdot SA_{member_6} = 73\ lbf$	BLC 6/7
Handrail Wind Force (All):	$\frac{F_{member_6}}{L_{member_6}} = 12.7\ plf$	BLC 6/7

Handrail Wind Loads (w/ Ice)

Handrail Projected Area (w/ Ice):	$A_ice_{member_6} := (L_{member_6} + 2 \cdot tiz) \cdot (W_{member_6} + 2 \cdot tiz) = 3.21\ ft^2$	
Handrail Wind Force (w/ Ice) (All):	$Fi_{member_6} := qz_{ice_carrier_1} \cdot G_H \cdot K_a \cdot Ca_{member_6} \cdot A_ice_{member_6} = 56\ lbf$	BLC 4/5
Handrail Wind Force (w/ Ice) (Distributed):	$\frac{Fi_{member_6}}{L_{member_6}} = 9.8\ plf$	BLC 4/5

Handrail Vertical Loads

Weight of Handrail (All):	$WT_{member_6} = 28\ lbf$	BLC 2
Weight of Handrail (Distributed):	$\frac{WT_{member_6}}{L_{member_6}} = 4.9\ plf$	BLC 2

Handrail Vertical Loads (Ice Only)

Volume of Ice on Handrail:	$V_{ice_member_6} := (L_{member_6} + 2 \cdot tiz) \cdot (W_{member_6} + 2 \cdot tiz)^2 - V_{member_6} = 1.52\ ft^3$	
Weight of Ice on Handrail:	$WT_{ice_member_6} := V_{ice_member_6} \cdot Id = 87\ lbf$	BLC 3
Weight of Ice on Handrail:	$\frac{WT_{ice_member_6}}{L_{member_6}} = 15.1\ plf$	BLC 3

Standard Equipment Calculations - Mount Member 7 (Front/Side Wind)

Pipe Properties

Antenna Carrier:	AT&T	User Defined
Equipment Model:	Single Angle Vertical Kicker Member: L2x2x3/16	User Defined
Handrail Length:	$L_{member_7} := 85.5 \cdot in$	User Defined
Handrail Width:	$W_{member_7} := 2 \cdot in$	User Defined
Handrail Weight:	$WT_{member_7} := 28.3 \cdot lbf$	User Defined
Handrail Volume:	$V_{member_7} := L_{member_7} \cdot W_{member_7}^2 = 0.2\ ft^3$	
Handrail Aspect Ratio:	$Ar_{member_7} := \frac{L_{member_7}}{W_{member_7}} = 42.75$	
Handrail Force Coefficient:	$Ca_{member_7} := 2$	As per Table 2-8 (Flat)-TIA-222-G

Arm Wind Loads

Handrail Projected Area:	$SA_{member_7} := L_{member_7} \cdot W_{member_7} = 1.19\ ft^2$	
Handrail Wind Force (All):	$F_{member_7} := qz_{carrier_1} \cdot G_H \cdot K_a \cdot Ca_{member_7} \cdot SA_{member_7} = 90\ lbf$	BLC 6/7
Handrail Wind Force (All):	$\frac{F_{member_7}}{L_{member_7}} = 12.7\ plf$	BLC 6/7

Arm Wind Loads (w/ Ice)

Handrail Projected Area (w/ Ice):	$A_ice_{member_7} := (L_{member_7} + 2 \cdot tiz) \cdot (W_{member_7} + 2 \cdot tiz) = 3.93\ ft^2$	
Handrail Wind Force (w/ Ice) (All):	$Fi_{member_7} := qz_{ice_carrier_1} \cdot G_H \cdot K_a \cdot Ca_{member_7} \cdot A_ice_{member_7} = 69\ lbf$	BLC 4/5
Handrail Wind Force (w/ Ice) (Distributed):	$\frac{Fi_{member_7}}{L_{member_7}} = 9.7\ plf$	BLC 4/5

Arm Vertical Loads

Weight of Handrail (All):	$WT_{member_7} = 28\ lbf$	BLC 2
Weight of Handrail (Distributed):	$\frac{WT_{member_7}}{L_{member_7}} = 4\ plf$	BLC 2

Arm Vertical Loads (Ice Only)

Volume of Ice on Handrail:	$V_{ice_member_7} := (L_{member_7} + 2 \cdot tiz) \cdot (W_{member_7} + 2 \cdot tiz)^2 - V_{member_7} = 1.87\ ft^3$	
Weight of Ice on Handrail:	$WT_{ice_member_7} := V_{ice_member_7} \cdot Id = 106\ lbf$	BLC 3
Weight of Ice on Handrail:	$\frac{WT_{ice_member_7}}{L_{member_7}} = 14.9\ plf$	BLC 3

Standard Equipment Calculations - Mount Member 8 (Front/Side Wind)

Pipe Properties

Antenna Carrier:	AT&T	User Defined
Equipment Model:	Existing Mast: P12.0 XS	User Defined
Pipe Height:	$L_{pipe_8} := 336 \cdot in$	User Defined
Pipe Diameter:	$W_{pipe_8} := 12.75 \cdot in$	User Defined
Pipe Weight:	$WT_{pipe_8} := 1834 \cdot lbf$	User Defined
Pipe Volume:	$V_{pipe_8} := L_{pipe_8} \cdot \frac{\left(\left(W_{pipe_8}\right)^2 \cdot \pi\right)}{4} = 24.83\ ft^3$	
Pipe Aspect Ratio:	$Ar_{pipe_8} := \frac{L_{pipe_8}}{W_{pipe_8}} = 26.35$	
Pipe Force Coefficient:	$Ca_{pipe_8} := 1.2$	As per Table 2-8 (Round)-TIA-222-G

Pipe Wind Loads

Pipe Projected Area:	$SA_{pipe_8} := L_{pipe_8} \cdot W_{pipe_8} = 29.75\ ft^2$	
Pipe Wind Force (All):	$F_{pipe_8} := qz_{carrier_1} \cdot G_H \cdot Ca_{pipe_8} \cdot SA_{pipe_8} = 1696\ lbf$	BLC 6/7
Pipe Wind Force (Distributed):	$\frac{F_{pipe_8}}{L_{pipe_8}} = 60.6\ plf$	BLC 6/7

Pipe Wind Loads (w/ Ice)

Pipe Projected Area (w/ Ice):	$A_ice_{pipe_8} := \left(L_{pipe_8} + 2 \cdot tiz\right) \cdot \left(W_{pipe_8} + 2 \cdot tiz\right) = 40.3\ ft^2$	
Pipe Wind Force (w/ Ice) (All):	$Fi_{pipe_8} := qz_{ice_carrier_1} \cdot G_H \cdot Ca_{pipe_8} \cdot A_ice_{pipe_8} = 531\ lbf$	BLC 4/5
Pipe Wind Force (w/ Ice) (Distributed):	$\frac{Fi_{pipe_8}}{L_{pipe_8}} = 19\ plf$	BLC 4/5

Pipe Vertical Loads

Weight of Pipe (All):	$WT_{pipe_8} = 1834\ lbf$	BLC 2
Weight of Pipe (Distributed):	$\frac{WT_{pipe_8}}{L_{pipe_8}} = 65.5\ plf$	BLC 2

Pipe Vertical Loads (Ice Only)

Volume of Ice on Pipe:	$V_{ice_pipe_8} := \left(L_{pipe_8} + 2 \cdot tiz\right) \cdot \left(\frac{\left(W_{pipe_8} + 2 \cdot tiz\right)^2 \cdot \pi}{4}\right) - V_{pipe_8} = 20.14\ ft^3$	
Weight of Ice on Pipe (All):	$WT_{ice_pipe_8} := V_{ice_pipe_8} \cdot Id = 1148\ lbf$	BLC 3
Weight of Ice on Pipe (Distributed):	$\frac{WT_{ice_pipe_8}}{L_{pipe_8}} = 41\ plf$	BLC 3

General Information for use in Risa-3D

Risa-3D Basic Load Cases	Description
1	Self Weight (Mast)
2	Weight of Appurtenances
3	Weight of Ice Only
4	TIA Wind with Ice - X
5	TIA Wind with Ice - Z
6	TIA Wind - X
7	TIA Wind - Z

Where:
BLC = Basic Load Case
D = Dead Load
Di = Dead Load of Ice
W = Wind Load
Wi = Wind Load w/ Ice

Load Combination	Description	Wind Factor	P-Delta	BLC	Factor	BLC	Factor	BLC	Factor	BLC	Factor	BLC	Factor
1	1.2D + 1.6W (0)	1.6	Y	1	1.2	2	1.2	6	1.6				
2	1.2D + 1.6W (30)	1.6	Y	1	1.2	2	1.2	6	1.39	7	0.8		
3	1.2D + 1.6W (60)	1.6	Y	1	1.2	2	1.2	6	0.8	7	1.39		
4	1.2D + 1.6W (90)	1.6	Y	1	1.2	2	1.2	7	1.6				
5	1.2D + 1.6W (120)	1.6	Y	1	1.2	2	1.2	6	-0.8	7	1.39		
6	1.2D + 1.6W (150)	1.6	Y	1	1.2	2	1.2	6	-1.39	7	0.8		
7	1.2D + 1.6W (180)	1.6	Y	1	1.2	2	1.2	6	-1.6				
8	1.2D + 1.6W (210)	1.6	Y	1	1.2	2	1.2	6	-1.39	7	-0.8		
9	1.2D + 1.6W (240)	1.6	Y	1	1.2	2	1.2	6	-0.8	7	-1.39		
10	1.2D + 1.6W (270	1.6	Y	1	1.2	2	1.2	7	-1.6				
11	1.2D + 1.6W (300)	1.6	Y	1	1.2	2	1.2	6	0.8	7	-1.39		
12	1.2D + 1.6W (330)	1.6	Y	1	1.2	2	1.2	6	1.39	7	-0.8		
13	1.2D+1.0Di+1.0Wi (0)	1.0	Y	1	1.2	2	1.2	3	1.0	4	1.0		
14	1.2D+1.0Di+1.0Wi (30)	1.0	Y	1	1.2	2	1.2	3	1.0	4	0.866	5	0.5
15	1.2D+1.0Di+1.0Wi (60)	1.0	Y	1	1.2	2	1.2	3	1.0	4	0.5	5	0.866
16	1.2D+1.0Di+1.0Wi (90)	1.0	Y	1	1.2	2	1.2	3	1.0	5	1.0		
17	1.2D+1.0Di+1.0Wi (120)	1.0	Y	1	1.2	2	1.2	3	1.0	4	-0.5	5	0.866
18	1.2D+1.0Di+1.0Wi (150)	1.0	Y	1	1.2	2	1.2	3	1.0	4	-0.866	5	0.5
19	1.2D+1.0Di+1.0Wi (180)	1.0	Y	1	1.2	2	1.2	3	1.0	4	-1.0		
20	1.2D+1.0Di+1.0Wi (210)	1.0	Y	1	1.2	2	1.2	3	1.0	4	-0.866	5	-0.5
21	1.2D+1.0Di+1.0Wi (240)	1.0	Y	1	1.2	2	1.2	3	1.0	4	-0.5	5	-0.866
22	1.2D+1.0Di+1.0Wi (270)	1.0	Y	1	1.2	2	1.2	3	1.0	5	-1.0		
23	1.2D+1.0Di+1.0Wi (300)	1.0	Y	1	1.2	2	1.2	3	1.0	4	0.5	5	-0.866
24	1.2D+1.0Di+1.0Wi (330)	1.0	Y	1	1.2	2	1.2	3	1.0	4	0.866	5	-0.5
25	1.2D + 1.6W (0) Service Wind	1.0	Y	1	1.2	2	1.2	7	0.48				

Service Load Conversion Factor: $$SLCF := \frac{(V_{service_loads})^2}{(V)^2} \cdot \frac{I_{service_loads}}{I_{wind}} \cdot \frac{Kd_{service_loads}}{Kd} = 0.3$$

Note: For this site - 270 wind direction is worst case. Therefore, service loads only checked for this direction.

APPENDIX C

COMPUTER OUTPUT

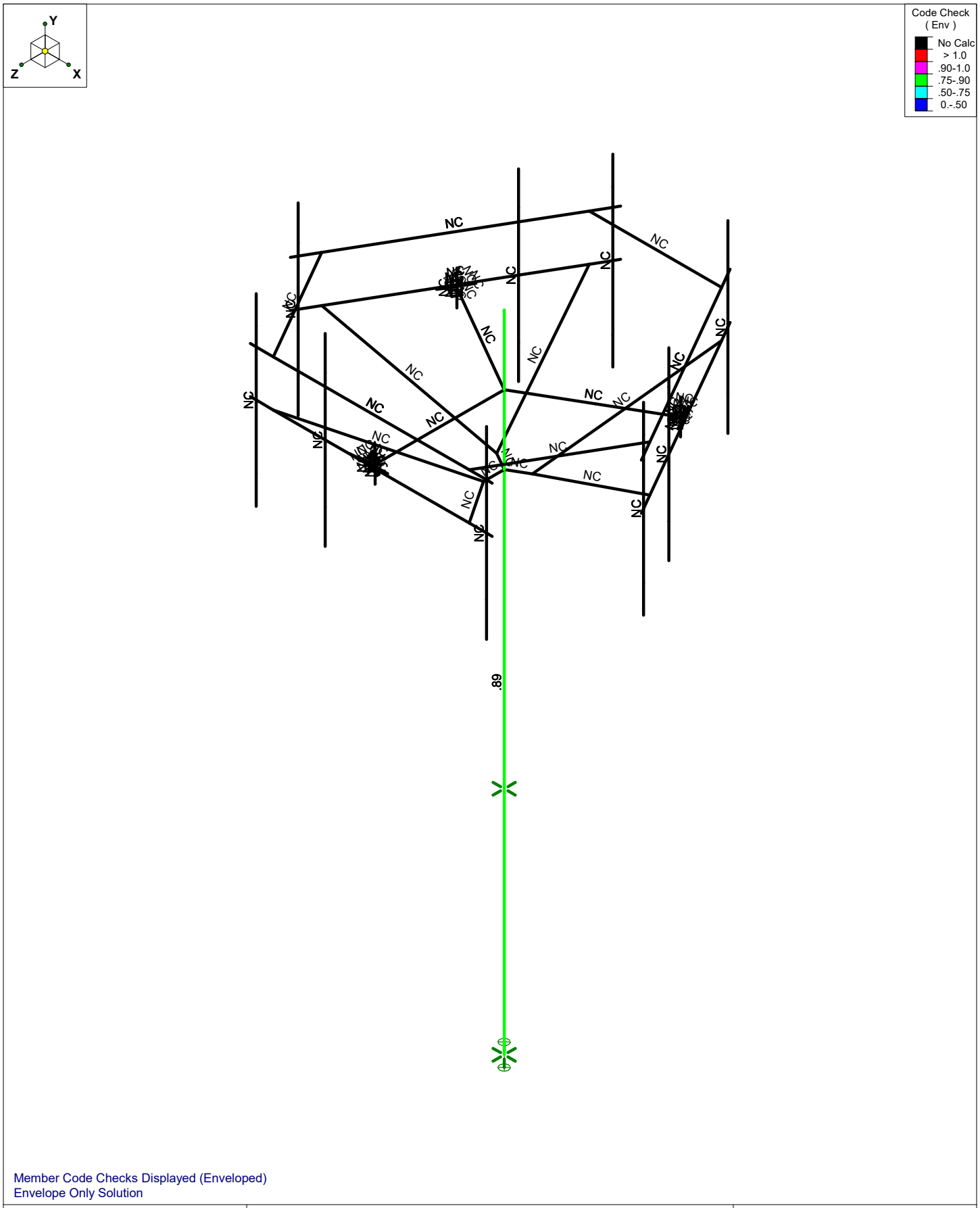

Member Code Checks Displayed (Enveloped)
Envelope Only Solution

Paul J Ford & Company	Orange Overland Drive	Page - 1
CEC		Feb 11, 2019 at 5:20 PM
A80619-0001.001.6190		80619-0001.001.6000 - Mast.r3d

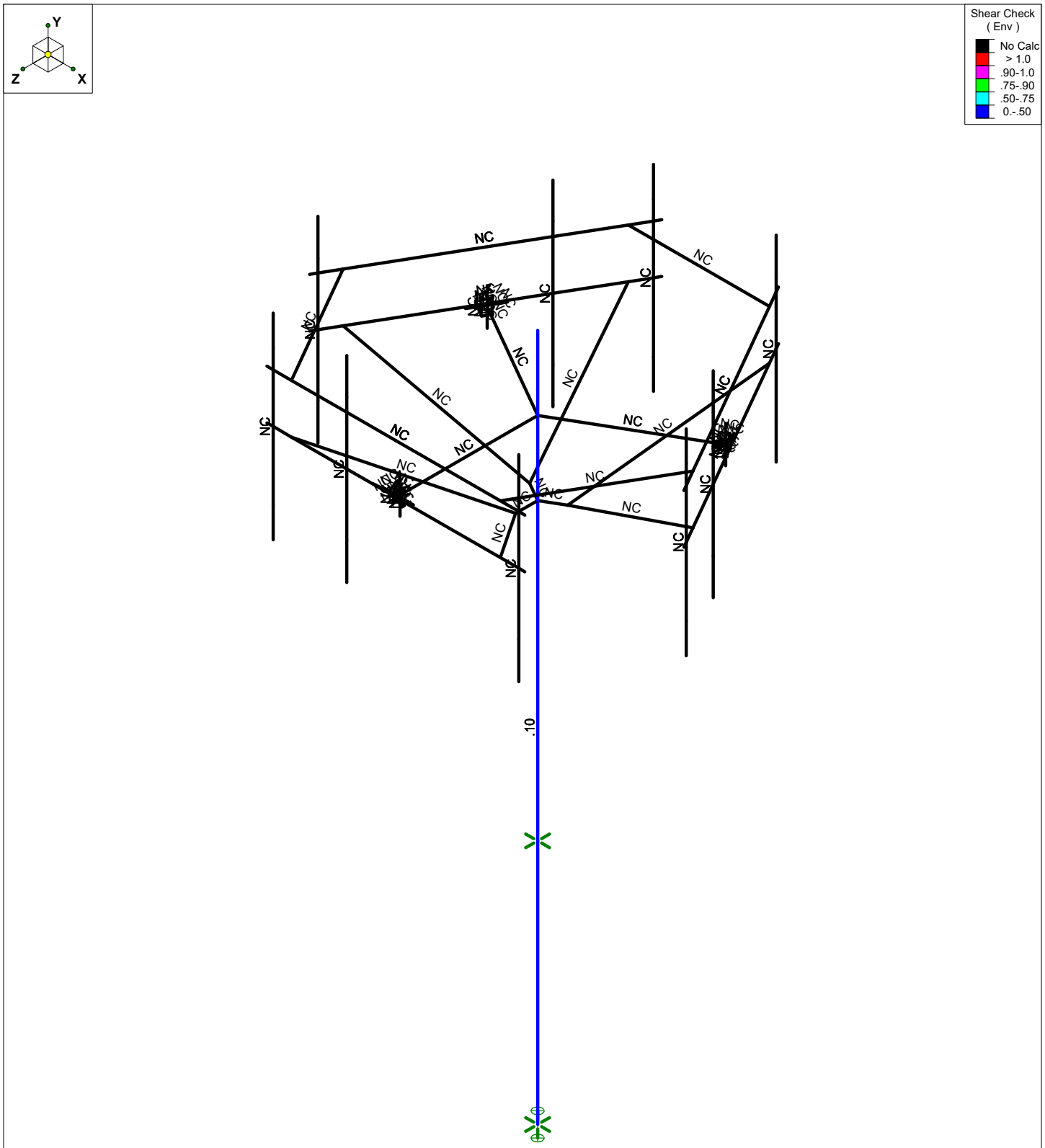

Member Shear Checks Displayed (Enveloped)
Envelope Only Solution

Paul J Ford & Company	Orange Overland Drive	Page - 2
CEC		Feb 11, 2019 at 5:20 PM
A80619-0001.001.6190		80619-0001.001.6000 - Mast.r3d

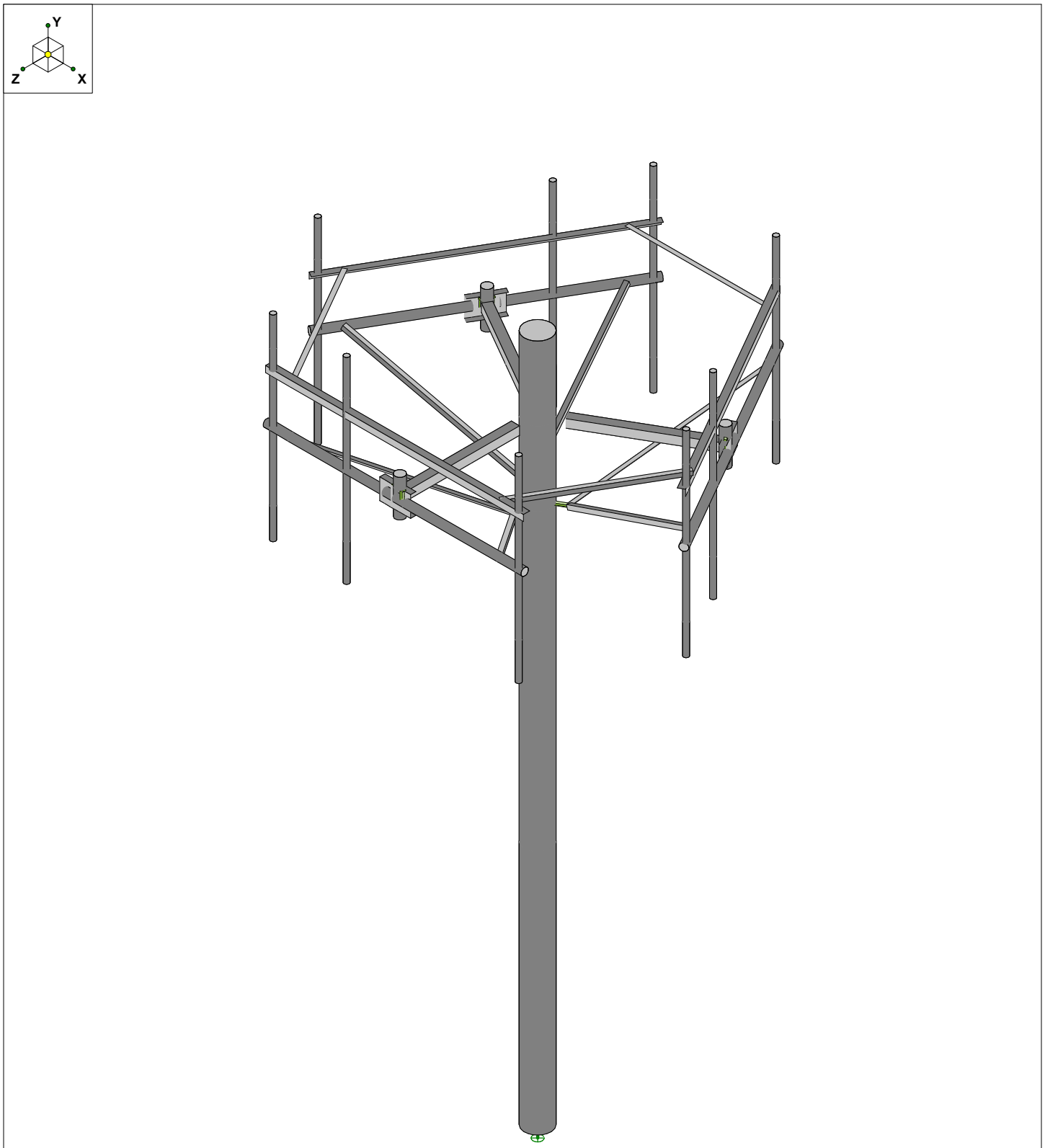

Envelope Only Solution

Paul J Ford & Company	Orange Overland Drive	Page - 3
CEC		Feb 11, 2019 at 5:21 PM
A80619-0001.001.6190		80619-0001.001.6000 - Mast.r3d

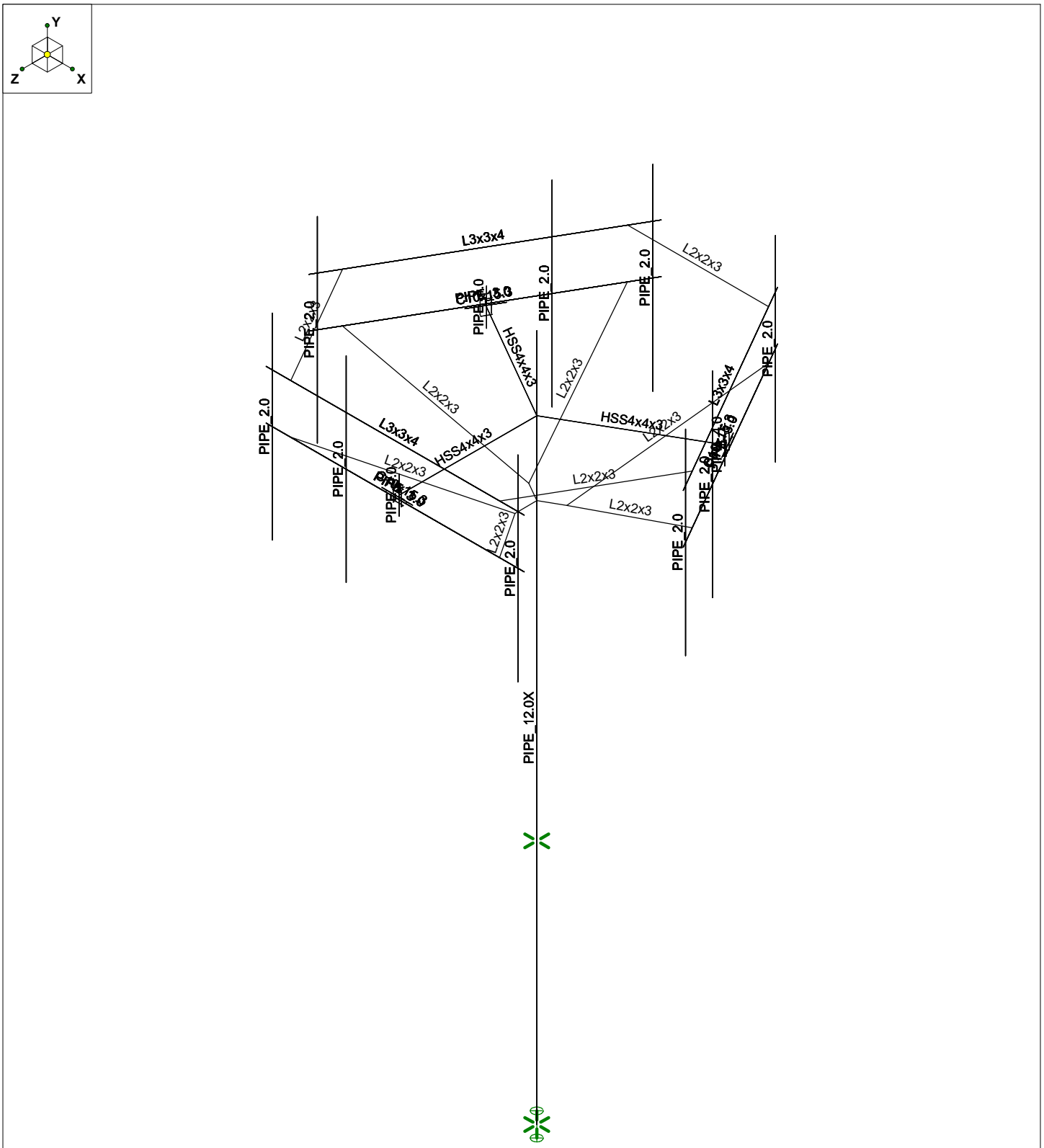

Envelope Only Solution

Paul J Ford & Company	Orange Overland Drive	Page - 4
CEC		Feb 11, 2019 at 5:21 PM
A80619-0001.001.6190		80619-0001.001.6000 - Mast.r3d

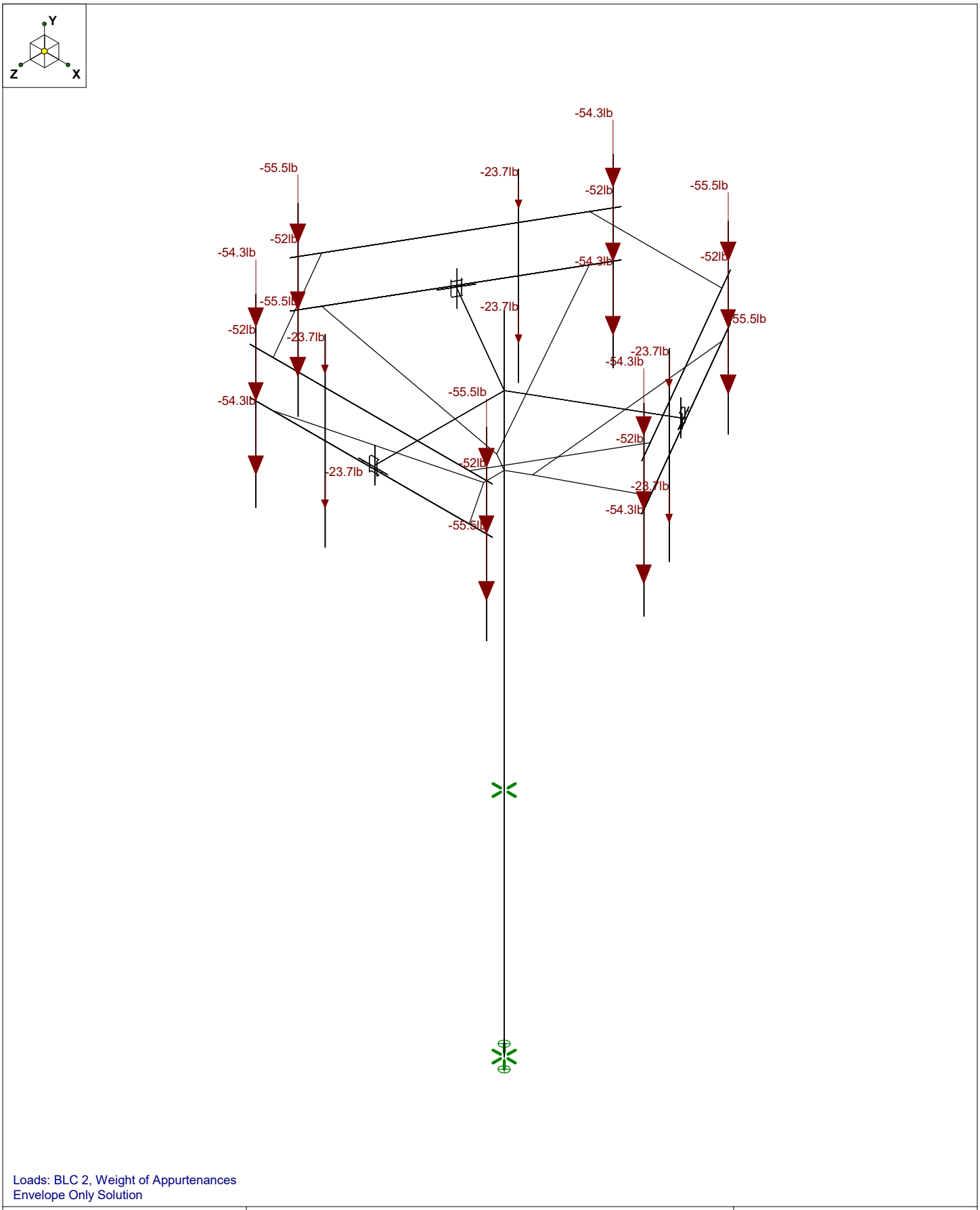

Loads: BLC 2, Weight of Appurtenances
Envelope Only Solution

Paul J Ford & Company	Orange Overland Drive	Page - 5
CEC		Feb 11, 2019 at 5:22 PM
A80619-0001.001.6190		80619-0001.001.6000 - Mast.r3d

(Global) Model Settings

Display Sections for Member Calcs	5
Max Internal Sections for Member Calcs	97
Include Shear Deformation?	Yes
Increase Nailing Capacity for Wind?	Yes
Include Warping?	Yes
Trans Load Btwn Intersecting Wood Wall?	Yes
Area Load Mesh (in^2)	144
Merge Tolerance (in)	.12
P-Delta Analysis Tolerance	0.50%
Include P-Delta for Walls?	Yes
Automatically Iterate Stiffness for Walls?	Yes
Max Iterations for Wall Stiffness	3
Gravity Acceleration (in/sec^2)	386.4
Wall Mesh Size (in)	24
Eigensolution Convergence Tol. (1.E-)	4
Vertical Axis	Y
Global Member Orientation Plane	XZ
Static Solver	Sparse Accelerated
Dynamic Solver	Accelerated Solver

Hot Rolled Steel Code	AISC 14th(360-10): LRFD
Adjust Stiffness?	Yes(Iterative)
RISAConnection Code	None
Cold Formed Steel Code	None
Wood Code	None
Wood Temperature	< 100F
Concrete Code	None
Masonry Code	None
Aluminum Code	None - Building

Number of Shear Regions	4
Region Spacing Increment (in)	4
Biaxial Column Method	Exact Integration
Parme Beta Factor (PCA)	.65
Concrete Stress Block	Rectangular
Use Cracked Sections?	Yes
Use Cracked Sections Slab?	Yes
Bad Framing Warnings?	No
Unused Force Warnings?	Yes
Min 1 Bar Diam. Spacing?	No
Concrete Rebar Set	REBAR_SET_ASTMA615
Min % Steel for Column	1
Max % Steel for Column	8

(Global) Model Settings, Continued

Seismic Code	ASCE 7-10
Seismic Base Elevation (in)	Not Entered
Add Base Weight?	Yes
Ct X	.02
Ct Z	.02
T X (sec)	Not Entered
T Z (sec)	Not Entered
R X	3
R Z	3
Ct Exp. X	.75
Ct Exp. Z	.75
SD1	1
SDS	1
S1	1
TL (sec)	5
Risk Cat	I or II
Drift Cat	Other
Om Z	1
Om X	1
Cd Z	4
Cd X	4
Rho Z	1
Rho X	1

Hot Rolled Steel Properties

	Label	E [ksi]	G [ksi]	Nu	Therm (\1...	Density[k/...	Yield[ksi]	Ry	Fu[ksi]	Rt
1	A992	29000	11154	.3	.65	.49	50	1.1	65	1.1
2	A36 Gr.36	29000	11154	.3	.65	.49	36	1.5	58	1.2
3	A572 Gr.50	29000	11154	.3	.65	.49	50	1.1	65	1.1
4	A500 Gr.B RND	29000	11154	.3	.65	.527	42	1.4	58	1.3
5	A500 Gr.B Rect	29000	11154	.3	.65	.527	46	1.4	58	1.3
6	A53 Gr.B	29000	11154	.3	.65	.49	35	1.6	60	1.2
7	A1085	29000	11154	.3	.65	.49	50	1.4	65	1.3

Member Primary Data

	Label	I Joint	J Joint	K Joint	Rotate(d...	Section/Shape	Type	Design List	Material	Design Ru...
1	C2	A4	A6			PIPE_2.0	None	None	A53 Gr.B	Typical
2	C1	A7	A9			PIPE_2.0	None	None	A53 Gr.B	Typical
3	B1	B1	B2			PIPE_3.0	None	None	A53 Gr.B	Typical
4	C11	N144	C2			HSS4x4x3	None	None	A500 Gr.B Rect	Typical
5	M7A	N18A	N16			RIGID	None	None	RIGID	Typical
6	M8	N19	N17A			RIGID	None	None	RIGID	Typical
7	D1	N20	N21		180	C10x15.3	None	None	A36 Gr.36	Typical
8	M8A	N18	N17			PIPE_4.0	None	None	A53 Gr.B	Typical
9	M9	N21A	N19A			RIGID	None	None	RIGID	Typical
10	M10	N22	N20A			RIGID	None	None	RIGID	Typical
11	M11	N27A	N21A			RIGID	None	None	RIGID	Typical
12	M12	N25	N19A			RIGID	None	None	RIGID	Typical
13	M13	N26	N20A			RIGID	None	None	RIGID	Typical
14	M14	N28	N22			RIGID	None	None	RIGID	Typical
15	M15	N28	N27A			RIGID	None	None	RIGID	Typical
16	M16	N26	N25			RIGID	None	None	RIGID	Typical
17	M17	N32	N33			PIPE_2.0	None	None	A53 Gr.B	Typical
18	M18	N41	N42			PIPE_2.0	None	None	A53 Gr.B	Typical
19	M19	N43	N45			PIPE_2.0	None	None	A53 Gr.B	Typical

Member Primary Data (Continued)

	Label	I Joint	J Joint	K Joint	Rotate(d...	Section/Shape	Type	Design List	Material	Design Ru...
20	M20	N46	N47			PIPE_3.0	None	None	A53 Gr.B	Typical
21	M21	N144	N49			HSS4x4x3	None	None	A500 Gr.B Rect	Typical
22	M22	N52	N50			RIGID	None	None	RIGID	Typical
23	M23	N53	N51			RIGID	None	None	RIGID	Typical
24	M24	N54	N55		180	C10x15.3	None	None	A36 Gr.36	Typical
25	M25	N58	N57			PIPE_4.0	None	None	A53 Gr.B	Typical
26	M26	N61	N59			RIGID	None	None	RIGID	Typical
27	M27	N62	N60			RIGID	None	None	RIGID	Typical
28	M28	N67	N61			RIGID	None	None	RIGID	Typical
29	M29	N65	N59			RIGID	None	None	RIGID	Typical
30	M30	N66	N60			RIGID	None	None	RIGID	Typical
31	M31	N68	N62			RIGID	None	None	RIGID	Typical
32	M32	N68	N67			RIGID	None	None	RIGID	Typical
33	M33	N66	N65			RIGID	None	None	RIGID	Typical
34	M34	N72	N73			PIPE_2.0	None	None	A53 Gr.B	Typical
35	M35	N81A	N82A			PIPE_2.0	None	None	A53 Gr.B	Typical
36	M36	N83	N85			PIPE_2.0	None	None	A53 Gr.B	Typical
37	M37	N86	N87			PIPE_3.0	None	None	A53 Gr.B	Typical
38	M38	N144	N89			HSS4x4x3	None	None	A500 Gr.B Rect	Typical
39	M39	N92	N90			RIGID	None	None	RIGID	Typical
40	M40	N93	N91			RIGID	None	None	RIGID	Typical
41	M41	N94	N95		180	C10x15.3	None	None	A36 Gr.36	Typical
42	M42	N98	N97			PIPE_4.0	None	None	A53 Gr.B	Typical
43	M43	N101	N99			RIGID	None	None	RIGID	Typical
44	M44	N102	N100			RIGID	None	None	RIGID	Typical
45	M45	N107	N101			RIGID	None	None	RIGID	Typical
46	M46	N105	N99			RIGID	None	None	RIGID	Typical
47	M47	N106	N100			RIGID	None	None	RIGID	Typical
48	M48	N108	N102			RIGID	None	None	RIGID	Typical
49	M49	N108	N107			RIGID	None	None	RIGID	Typical
50	M50	N106	N105			RIGID	None	None	RIGID	Typical
51	M51	N112	N113			PIPE_2.0	None	None	A53 Gr.B	Typical
52	M52	N131A	N139		180	L3x3x4	None	None	A36 Gr.36	Typical
53	M53	N140	N141		180	L3x3x4	None	None	A36 Gr.36	Typical
54	M54	N142	N143		180	L3x3x4	None	None	A36 Gr.36	Typical
55	M55	N138A	N143A		90	L2x2x3	None	None	A36 Gr.36	Typical
56	M56	N140A	N142A		90	L2x2x3	None	None	A36 Gr.36	Typical
57	M57	N139A	N141A		90	L2x2x3	None	None	A36 Gr.36	Typical
58	M58	N146	N145			PIPE_12.0X	None	None	A53 Gr.B	Typical
59	M59	N157	N154			RIGID	None	None	RIGID	Typical
60	M60	N157	N156			RIGID	None	None	RIGID	Typical
61	M61	N157	N155			RIGID	None	None	RIGID	Typical
62	M62	N156	N150		180	L2x2x3	None	None	A36 Gr.36	Typical
63	M63	N156	N153		90	L2x2x3	None	None	A36 Gr.36	Typical
64	M64	N154	N148		180	L2x2x3	None	None	A36 Gr.36	Typical
65	M65	N154	N151		90	L2x2x3	None	None	A36 Gr.36	Typical
66	M66	N155	N149		180	L2x2x3	None	None	A36 Gr.36	Typical
67	M67	N155	N152		90	L2x2x3	None	None	A36 Gr.36	Typical

Member Advanced Data

	Label	I Release	J Release	I Offset[in]	J Offset[in]	T/C Only	Physical	Analysis ...	Inactive	Seismic Design ...
1	C2						Yes		Exclude	None
2	C1						Yes		Exclude	None
3	B1						Yes		Exclude	None
4	C11			10.75			Yes		Exclude	None

Member Advanced Data (Continued)

	Label	I Release	J Release	I Offset[in]	J Offset[in]	T/C Only	Physical	Analysis ...	Inactive	Seismic Design ...
5	M7A						Yes		Exclude	None
6	M8						Yes		Exclude	None
7	D1						Yes		Exclude	None
8	M8A						Yes		Exclude	None
9	M9						Yes		Exclude	None
10	M10						Yes		Exclude	None
11	M11						Yes		Exclude	None
12	M12						Yes		Exclude	None
13	M13						Yes		Exclude	None
14	M14						Yes		Exclude	None
15	M15						Yes		Exclude	None
16	M16						Yes		Exclude	None
17	M17						Yes		Exclude	None
18	M18						Yes		Exclude	None
19	M19						Yes		Exclude	None
20	M20						Yes		Exclude	None
21	M21			10.75			Yes		Exclude	None
22	M22						Yes		Exclude	None
23	M23						Yes		Exclude	None
24	M24						Yes		Exclude	None
25	M25						Yes		Exclude	None
26	M26						Yes		Exclude	None
27	M27						Yes		Exclude	None
28	M28						Yes		Exclude	None
29	M29						Yes		Exclude	None
30	M30						Yes		Exclude	None
31	M31						Yes		Exclude	None
32	M32						Yes		Exclude	None
33	M33						Yes		Exclude	None
34	M34						Yes		Exclude	None
35	M35						Yes		Exclude	None
36	M36						Yes		Exclude	None
37	M37						Yes		Exclude	None
38	M38			10.75			Yes		Exclude	None
39	M39						Yes		Exclude	None
40	M40						Yes		Exclude	None
41	M41						Yes		Exclude	None
42	M42						Yes		Exclude	None
43	M43						Yes		Exclude	None
44	M44						Yes		Exclude	None
45	M45						Yes		Exclude	None
46	M46						Yes		Exclude	None
47	M47						Yes		Exclude	None
48	M48						Yes		Exclude	None
49	M49						Yes		Exclude	None
50	M50						Yes		Exclude	None
51	M51						Yes		Exclude	None
52	M52						Yes		Exclude	None
53	M53						Yes		Exclude	None
54	M54						Yes		Exclude	None
55	M55	OOOOOX	OOOOOX				Yes		Exclude	None
56	M56	OOOOOX	OOOOOX				Yes		Exclude	None
57	M57	OOOOOX	OOOOOX				Yes		Exclude	None
58	M58						Yes			None
59	M59						Yes		Exclude	None
60	M60						Yes		Exclude	None
61	M61						Yes		Exclude	None

Member Advanced Data (Continued)

	Label	I Release	J Release	I Offset[in]	J Offset[in]	T/C Only	Physical	Analysis ...	Inactive	Seismic Design ...
62	M62	BenPIN	BenPIN				Yes		Exclude	None
63	M63	BenPIN	BenPIN				Yes		Exclude	None
64	M64	BenPIN	BenPIN				Yes		Exclude	None
65	M65	BenPIN	BenPIN				Yes		Exclude	None
66	M66	BenPIN	BenPIN				Yes		Exclude	None
67	M67	BenPIN	BenPIN				Yes		Exclude	None

Hot Rolled Steel Design Parameters

	Label	Shape	Length[in]	Lbyy[in]	Lbzz[in]	Lcomp top[in]	Lcomp bot[in]	L-torqu...	Kyy	Kzz	Cb	Function
1	C2	PIPE_2.0	96			Lbyy						Lateral
2	C1	PIPE_2.0	96			Lbyy						Lateral
3	B1	PIPE_3.0	126			Lbyy						Lateral
4	C11	HSS4x4x3	67.25			Lbyy						Lateral
5	D1	C10x15.3	15			Lbyy						Lateral
6	M8A	PIPE_4.0	18			Lbyy						Lateral
7	M17	PIPE_2.0	96			Lbyy						Lateral
8	M18	PIPE_2.0	96			Lbyy						Lateral
9	M19	PIPE_2.0	96			Lbyy						Lateral
10	M20	PIPE_3.0	126			Lbyy						Lateral
11	M21	HSS4x4x3	67.25			Lbyy						Lateral
12	M24	C10x15.3	15			Lbyy						Lateral
13	M25	PIPE_4.0	18			Lbyy						Lateral
14	M34	PIPE_2.0	96			Lbyy						Lateral
15	M35	PIPE_2.0	96			Lbyy						Lateral
16	M36	PIPE_2.0	96			Lbyy						Lateral
17	M37	PIPE_3.0	126			Lbyy						Lateral
18	M38	HSS4x4x3	67.25			Lbyy						Lateral
19	M41	C10x15.3	15			Lbyy						Lateral
20	M42	PIPE_4.0	18			Lbyy						Lateral
21	M51	PIPE_2.0	96			Lbyy						Lateral
22	M52	L3x3x4	126			Lbyy						Lateral
23	M53	L3x3x4	126			Lbyy						Lateral
24	M54	L3x3x4	126			Lbyy						Lateral
25	M55	L2x2x3	68.945									Lateral
26	M56	L2x2x3	68.945									Lateral
27	M57	L2x2x3	68.945									Lateral
28	M58	PIPE_12.0X	336									Lateral
29	M62	L2x2x3	85.553									Lateral
30	M63	L2x2x3	85.553									Lateral
31	M64	L2x2x3	85.553									Lateral
32	M65	L2x2x3	85.553									Lateral
33	M66	L2x2x3	85.553									Lateral
34	M67	L2x2x3	85.553									Lateral

Joint Loads and Enforced Displacements (BLC 2 : Weight of Appurtenances)

	Joint Label	L,D,M	Direction	Magnitude[(lb,k-ft), (in,rad), ...
1	EQUIP_A_1(TOP)	L	Y	-54.3
2	EQUIP_A_1(BOT)	L	Y	-54.3
3	EQUIP_A_2	L	Y	-52
4	EQUIP_A_4(TOP)	L	Y	-23.7
5	EQUIP_A_4(BOT)	L	Y	-23.7
6	EQUIP_A_5(TOP)	L	Y	-55.5
7	EQUIP_A_5(BOT)	L	Y	-55.5
8	EQUIP_A_3	L	Y	-52

Joint Loads and Enforced Displacements (BLC 2 : Weight of Appurtenances) (Continued)

	Joint Label	L,D,M	Direction	Magnitude[(lb,k-ft), (in,rad), ...
9	EQUIP_B_2	L	Y	-52
10	EQUIP_B_3	L	Y	-52
11	EQUIP_B_1(TOP)	L	Y	-54.3
12	EQUIP_B_1(BOT)	L	Y	-54.3
13	EQUIP_B_4(TOP)	L	Y	-23.7
14	EQUIP_B_4(BOT)	L	Y	-23.7
15	EQUIP_B_5(TOP)	L	Y	-55.5
16	EQUIP_B_5(BOT)	L	Y	-55.5
17	EQUIP_C_2	L	Y	-52
18	EQUIP_C_3	L	Y	-52
19	EQUIP_C_1(TOP)	L	Y	-54.3
20	EQUIP_C_1(BOT)	L	Y	-54.3
21	EQUIP_C_4(TOP)	L	Y	-23.7
22	EQUIP_C_4(BOT)	L	Y	-23.7
23	EQUIP_C_5(TOP)	L	Y	-55.5
24	EQUIP_C_5(BOT)	L	Y	-55.5

Joint Loads and Enforced Displacements (BLC 3 : Weight of Ice Only)

	Joint Label	L,D,M	Direction	Magnitude[(lb,k-ft), (in,rad), ...
1	EQUIP_A_1(TOP)	L	Y	-193.5
2	EQUIP_A_1(BOT)	L	Y	-193.5
3	EQUIP_A_2	L	Y	-99
4	EQUIP_A_4(TOP)	L	Y	-133.5
5	EQUIP_A_4(BOT)	L	Y	-133.5
6	EQUIP_A_5(TOP)	L	Y	-148.5
7	EQUIP_A_5(BOT)	L	Y	-148.5
8	EQUIP_A_3	L	Y	-93
9	EQUIP_B_2	L	Y	-99
10	EQUIP_B_3	L	Y	-93
11	EQUIP_B_1(TOP)	L	Y	-193.5
12	EQUIP_B_1(BOT)	L	Y	-193.5
13	EQUIP_B_4(TOP)	L	Y	-133.5
14	EQUIP_B_4(BOT)	L	Y	-133.5
15	EQUIP_B_5(TOP)	L	Y	-148.5
16	EQUIP_B_5(BOT)	L	Y	-148.5
17	EQUIP_C_2	L	Y	-99
18	EQUIP_C_3	L	Y	-93
19	EQUIP_C_1(TOP)	L	Y	-193.5
20	EQUIP_C_1(BOT)	L	Y	-193.5
21	EQUIP_C_4(TOP)	L	Y	-133.5
22	EQUIP_C_4(BOT)	L	Y	-133.5
23	EQUIP_C_5(TOP)	L	Y	-148.5
24	EQUIP_C_5(BOT)	L	Y	-148.5

Joint Loads and Enforced Displacements (BLC 4 : TIA Wind with Ice - X)

	Joint Label	L,D,M	Direction	Magnitude[(lb,k-ft), (in,rad), ...
1	EQUIP_A_1(TOP)	L	X	44
2	EQUIP_A_1(BOT)	L	X	44
3	EQUIP_A_2	L	X	21
4	EQUIP_A_4(TOP)	L	X	40.5
5	EQUIP_A_4(BOT)	L	X	40.5
6	EQUIP_A_5(BOT)	L	X	46
7	EQUIP_A_5(TOP)	L	X	46
8	EQUIP_A_3	L	X	18
9	EQUIP_B_2	L	X	21
10	EQUIP_B_3	L	X	18

Joint Loads and Enforced Displacements (BLC 4 : TIA Wind with Ice - X) (Continued)

	Joint Label	L,D,M	Direction	Magnitude[(lb,k-ft), (in,rad), ...
11	EQUIP_B_1(TOP)	L	X	44
12	EQUIP_B_1(BOT)	L	X	44
13	EQUIP_B_4(TOP)	L	X	40.5
14	EQUIP_B_4(BOT)	L	X	40.5
15	EQUIP_B_5(TOP)	L	X	46
16	EQUIP_B_5(BOT)	L	X	46
17	EQUIP_C_2	L	X	21
18	EQUIP_C_3	L	X	18
19	EQUIP_C_1(TOP)	L	X	44
20	EQUIP_C_1(BOT)	L	X	44
21	EQUIP_C_4(TOP)	L	X	40.5
22	EQUIP_C_4(BOT)	L	X	40.5
23	EQUIP_C_5(TOP)	L	X	46
24	EQUIP_C_5(BOT)	L	X	46

Joint Loads and Enforced Displacements (BLC 5 : TIA Wind with Ice - Z)

	Joint Label	L,D,M	Direction	Magnitude[(lb,k-ft), (in,rad), ...
1	EQUIP_A_1(TOP)	L	Z	77.5
2	EQUIP_A_1(BOT)	L	Z	77.5
3	EQUIP_A_2	L	Z	33
4	EQUIP_A_4(TOP)	L	Z	52
5	EQUIP_A_4(BOT)	L	Z	52
6	EQUIP_A_5(TOP)	L	Z	51.5
7	EQUIP_A_5(BOT)	L	Z	51.5
8	EQUIP_A_3	L	Z	33
9	EQUIP_B_2	L	Z	33
10	EQUIP_B_3	L	Z	33
11	EQUIP_B_1(TOP)	L	Z	77.5
12	EQUIP_B_1(BOT)	L	Z	77.5
13	EQUIP_B_4(TOP)	L	Z	52
14	EQUIP_B_4(BOT)	L	Z	52
15	EQUIP_B_5(TOP)	L	Z	51.5
16	EQUIP_B_5(BOT)	L	Z	51.5
17	EQUIP_C_2	L	Z	33
18	EQUIP_C_3	L	Z	33
19	EQUIP_C_1(TOP)	L	Z	77.5
20	EQUIP_C_1(BOT)	L	Z	77.5
21	EQUIP_C_4(TOP)	L	Z	52
22	EQUIP_C_4(BOT)	L	Z	52
23	EQUIP_C_5(TOP)	L	Z	51.5
24	EQUIP_C_5(BOT)	L	Z	51.5

Joint Loads and Enforced Displacements (BLC 6 : TIA Wind - X)

	Joint Label	L,D,M	Direction	Magnitude[(lb,k-ft), (in,rad), ...
1	EQUIP_A_1(TOP)	L	X	111
2	EQUIP_A_1(BOT)	L	X	111
3	EQUIP_A_2	L	X	35
4	EQUIP_A_4(TOP)	L	X	102.5
5	EQUIP_A_4(BOT)	L	X	102.5
6	EQUIP_A_5(TOP)	L	X	129
7	EQUIP_A_5(BOT)	L	X	129
8	EQUIP_A_3	L	X	26
9	EQUIP_B_2	L	X	35
10	EQUIP_B_3	L	X	26
11	EQUIP_B_1(TOP)	L	X	111
12	EQUIP_B_1(BOT)	L	X	111

Joint Loads and Enforced Displacements (BLC 6 : TIA Wind - X) (Continued)

	Joint Label	L,D,M	Direction	Magnitude[(lb,k-ft), (in,rad), ...
13	EQUIP_B_4(TOP)	L	X	102.5
14	EQUIP_B_4(BOT)	L	X	102.5
15	EQUIP_B_5(TOP)	L	X	129
16	EQUIP_B_5(BOT)	L	X	129
17	EQUIP_C_2	L	X	35
18	EQUIP_C_3	L	X	26
19	EQUIP_C_1(TOP)	L	X	111
20	EQUIP_C_1(BOT)	L	X	111
21	EQUIP_C_4(TOP)	L	X	102.5
22	EQUIP_C_4(BOT)	L	X	102.5
23	EQUIP_C_5(TOP)	L	X	129
24	EQUIP_C_5(BOT)	L	X	129

Joint Loads and Enforced Displacements (BLC 7 : TIA Wind - Z)

	Joint Label	L,D,M	Direction	Magnitude[(lb,k-ft), (in,rad), ...
1	EQUIP_A_1(TOP)	L	Z	262.5
2	EQUIP_A_1(BOT)	L	Z	262.5
3	EQUIP_A_2	L	Z	73
4	EQUIP_A_4(TOP)	L	Z	155.5
5	EQUIP_A_4(BOT)	L	Z	155.5
6	EQUIP_A_5(TOP)	L	Z	154.5
7	EQUIP_A_5(BOT)	L	Z	154.5
8	EQUIP_A_3	L	Z	74
9	EQUIP_B_2	L	Z	73
10	EQUIP_B_3	L	Z	74
11	EQUIP_B_1(TOP)	L	Z	262.5
12	EQUIP_B_1(BOT)	L	Z	262.5
13	EQUIP_B_4(TOP)	L	Z	155.5
14	EQUIP_B_4(BOT)	L	Z	155.5
15	EQUIP_B_5(TOP)	L	Z	154.5
16	EQUIP_B_5(BOT)	L	Z	154.5
17	EQUIP_C_2	L	Z	73
18	EQUIP_C_3	L	Z	74
19	EQUIP_C_1(TOP)	L	Z	262.5
20	EQUIP_C_1(BOT)	L	Z	262.5
21	EQUIP_C_4(TOP)	L	Z	155.5
22	EQUIP_C_4(BOT)	L	Z	155.5
23	EQUIP_C_5(TOP)	L	Z	154.5
24	EQUIP_C_5(BOT)	L	Z	154.5

Member Distributed Loads (BLC 3 : Weight of Ice Only)

	Member Label	Direction	Start Magnitude[lb/ft,F,ksf]	End Magnitude[lb/ft,F,ksf]	Start Location[in..	End Location[in,...
1	C2	Y	-12.7	-12.7	0	0
2	C1	Y	-12.7	-12.7	0	0
3	M17	Y	-12.7	-12.7	0	0
4	B1	Y	-15.7	-15.7	0	0
5	C11	Y	-24.2	-24.2	0	0
6	M8A	Y	-23.5	-23.5	0	0
7	M18	Y	-12.7	-12.7	0	0
8	M19	Y	-12.7	-12.7	0	0
9	M20	Y	-15.7	-15.7	0	0
10	M21	Y	-24.2	-24.2	0	0
11	M25	Y	-23.5	-23.5	0	0
12	M34	Y	-12.7	-12.7	0	0
13	M35	Y	-12.7	-12.7	0	0

Member Distributed Loads (BLC 3 : Weight of Ice Only) (Continued)

	Member Label	Direction	Start Magnitude[lb/ft,F,ksf]	End Magnitude[lb/ft,F,ksf]	Start Location[in..	End Location[in,...
14	M36	Y	-12.7	-12.7	0	0
15	M37	Y	-15.7	-15.7	0	0
16	M38	Y	-24.2	-24.2	0	0
17	M42	Y	-23.5	-23.5	0	0
18	M51	Y	-12.7	-12.7	0	0
19	M55	Y	-15.1	-15.1	0	0
20	M56	Y	-15.1	-15.1	0	0
21	M57	Y	-15.1	-15.1	0	0
22	M52	Y	-18.3	-18.3	0	0
23	M53	Y	-18.3	-18.3	0	0
24	M54	Y	-18.3	-18.3	0	0
25	M58	Y	-41	-41	0	0
26	M62	Y	-14.9	-14.9	0	0
27	M63	Y	-14.9	-14.9	0	0
28	M64	Y	-14.9	-14.9	0	0
29	M65	Y	-14.9	-14.9	0	0
30	M66	Y	-14.9	-14.9	0	0
31	M67	Y	-14.9	-14.9	0	0

Member Distributed Loads (BLC 4 : TIA Wind with Ice - X)

	Member Label	Direction	Start Magnitude[lb/ft,F,ksf]	End Magnitude[lb/ft,F,ksf]	Start Location[in..	End Location[in,...
1	C2	X	6.156	6.156	0	0
2	C1	X	6.156	6.156	0	0
3	M17	X	6.156	6.156	0	0
4	C11	X	9.936	9.936	0	0
5	M8A	X	5.832	5.832	0	0
6	M18	X	6.156	6.156	0	0
7	M19	X	6.156	6.156	0	0
8	M21	X	9.936	9.936	0	0
9	M25	X	5.832	5.832	0	0
10	M34	X	6.156	6.156	0	0
11	M35	X	6.156	6.156	0	0
12	M36	X	6.156	6.156	0	0
13	M38	X	9.936	9.936	0	0
14	M42	X	5.832	5.832	0	0
15	M51	X	6.156	6.156	0	0
16	M53	X	11.016	11.016	0	0
17	M54	X	11.016	11.016	0	0
18	M55	X	11.34	11.34	0	0
19	M57	X	11.34	11.34	0	0
20	M20	X	7.02	7.02	0	0
21	M37	X	7.02	7.02	0	0
22	M58	X	19	19	0	0
23	M62	X	9.7	9.7	0	0
24	M63	X	9.7	9.7	0	0
25	M64	X	9.7	9.7	0	0
26	M65	X	9.7	9.7	0	0
27	M66	X	9.7	9.7	0	0
28	M67	X	9.7	9.7	0	0

Member Distributed Loads (BLC 5 : TIA Wind with Ice - Z)

	Member Label	Direction	Start Magnitude[lb/ft,F,ksf]	End Magnitude[lb/ft,F,ksf]	Start Location[in..	End Location[in,...
1	C2	Z	6.156	6.156	0	0
2	C1	Z	6.156	6.156	0	0
3	M17	Z	6.156	6.156	0	0
4	B1	Z	7.02	7.02	0	0

Member Distributed Loads (BLC 5 : TIA Wind with Ice - Z) (Continued)

	Member Label	Direction	Start Magnitude[lb/ft,F,ksf]	End Magnitude[lb/ft,F,ksf]	Start Location[in...	End Location[in,...
5	M8A	Z	5.832	5.832	0	0
6	M18	Z	6.156	6.156	0	0
7	M19	Z	6.156	6.156	0	0
8	M20	Z	7.02	7.02	0	0
9	M25	Z	5.832	5.832	0	0
10	M34	Z	6.156	6.156	0	0
11	M35	Z	6.156	6.156	0	0
12	M36	Z	6.156	6.156	0	0
13	M37	Z	7.02	7.02	0	0
14	M42	Z	5.832	5.832	0	0
15	M51	Z	6.156	6.156	0	0
16	M52	Z	11.016	11.016	0	0
17	M53	Z	11.016	11.016	0	0
18	M54	Z	11.016	11.016	0	0
19	M55	Z	11.34	11.34	0	0
20	M56	Z	11.34	11.34	0	0
21	M57	Z	11.34	11.34	0	0
22	M21	Z	9.936	9.936	0	0
23	M38	Z	9.936	9.936	0	0
24	M58	Z	19	19	0	0
25	M62	Z	9.7	9.7	0	0
26	M63	Z	9.7	9.7	0	0
27	M64	Z	9.7	9.7	0	0
28	M65	Z	9.7	9.7	0	0
29	M66	Z	9.7	9.7	0	0
30	M67	Z	9.7	9.7	0	0

Member Distributed Loads (BLC 6 : TIA Wind - X)

	Member Label	Direction	Start Magnitude[lb/ft,F,ksf]	End Magnitude[lb/ft,F,ksf]	Start Location[in...	End Location[in,...
1	C2	X	9.072	9.072	0	0
2	C1	X	9.072	9.072	0	0
3	M17	X	9.072	9.072	0	0
4	C11	X	18.576	18.576	0	0
5	M8A	X	10.476	10.476	0	0
6	M18	X	9.072	9.072	0	0
7	M19	X	9.072	9.072	0	0
8	M21	X	18.576	18.576	0	0
9	M25	X	10.476	10.476	0	0
10	M34	X	9.072	9.072	0	0
11	M35	X	9.072	9.072	0	0
12	M36	X	9.072	9.072	0	0
13	M38	X	18.576	18.576	0	0
14	M42	X	10.476	10.476	0	0
15	M51	X	9.072	9.072	0	0
16	M53	X	19.008	19.008	0	0
17	M54	X	19.008	19.008	0	0
18	M55	X	14.688	14.688	0	0
19	M57	X	14.688	14.688	0	0
20	M20	X	13.284	13.284	0	0
21	M37	X	13.284	13.284	0	0
22	M58	X	60.6	60.6	0	0

Member Distributed Loads (BLC 7 : TIA Wind - Z)

	Member Label	Direction	Start Magnitude[lb/ft,F,ksf]	End Magnitude[lb/ft,F,ksf]	Start Location[in...	End Location[in,...
1	C2	Z	9.072	9.072	0	0
2	C1	Z	9.072	9.072	0	0

Member Distributed Loads (BLC 7 : TIA Wind - Z) (Continued)

	Member Label	Direction	Start Magnitude[lb/ft,F,ksf]	End Magnitude[lb/ft,F,ksf]	Start Location[in...	End Location[in,...
3	M17	Z	9.072	9.072	0	0
4	B1	Z	13.284	13.284	0	0
5	M8A	Z	10.476	10.476	0	0
6	M18	Z	9.072	9.072	0	0
7	M19	Z	9.072	9.072	0	0
8	M20	Z	13.284	13.284	0	0
9	M25	Z	10.476	10.476	0	0
10	M34	Z	9.072	9.072	0	0
11	M35	Z	9.072	9.072	0	0
12	M36	Z	9.072	9.072	0	0
13	M37	Z	13.284	13.284	0	0
14	M42	Z	10.476	10.476	0	0
15	M51	Z	9.072	9.072	0	0
16	M52	Z	19.008	19.008	0	0
17	M53	Z	19.008	19.008	0	0
18	M54	Z	19.008	19.008	0	0
19	M55	Z	14.688	14.688	0	0
20	M56	Z	14.688	14.688	0	0
21	M57	Z	14.688	14.688	0	0
22	M21	Z	18.576	18.576	0	0
23	M38	Z	18.576	18.576	0	0
24	M58	Z	60.6	60.6	0	0

Basic Load Cases

	BLC Description	Category	X Gravity	Y Gravity	Z Gravity	Joint	Point	Distribut...	Area(M...	Surface...
1	Self Weight	None		-1.1						
2	Weight of Appurtenances	None				24				
3	Weight of Ice Only	None				24		31		
4	TIA Wind with Ice - X	None				24		28		
5	TIA Wind with Ice - Z	None				24		30		
6	TIA Wind - X	None				24		22		
7	TIA Wind - Z	None				24		24		

Load Combinations

	Description	S...	PDelta	SRSS	B...	Fa...	B...	Fact...	B...	Fa...	B...	Fa...	B...	Fa...	B...	Fa...	B...	Fa...	B...	Fa...	B...	Fa...	B...	Fa...
1	1.2D + 1.6W (0 deg)	Yes	Y		1	1.2	2	1.2	6	1.6														
2	1.2D + 1.6W (30 deg)	Yes	Y		1	1.2	2	1.2	6	1.39	7	.8												
3	1.2D + 1.6W (60 deg)	Yes	Y		1	1.2	2	1.2	6	.8	7	1.39												
4	1.2D + 1.6W (90 deg)	Yes	Y		1	1.2	2	1.2	7	1.6														
5	1.2D + 1.6W (120 deg)	Yes	Y		1	1.2	2	1.2	6	-.8	7	1.39												
6	1.2D + 1.6W (150 deg)	Yes	Y		1	1.2	2	1.2	6	-1....	7	.8												
7	1.2D + 1.6W (180 deg)	Yes	Y		1	1.2	2	1.2	6	-1.6														
8	1.2D + 1.6W (210 deg)	Yes	Y		1	1.2	2	1.2	6	-1....	7	-.8												
9	1.2D + 1.6W (240 deg)	Yes	Y		1	1.2	2	1.2	6	-.8	7	-1....												
10	1.2D + 1.6W (270 deg)	Yes	Y		1	1.2	2	1.2	7	-1.6														
11	1.2D + 1.6W (300 deg)	Yes	Y		1	1.2	2	1.2	6	.8	7	-1....												
12	1.2D + 1.6W (330 deg)	Yes	Y		1	1.2	2	1.2	6	1.39	7	-.8												
13	1.2D + 1.0Di + 1.0Wi (0...	Yes	Y		1	1.2	2	1.2	3	1	4	1												
14	1.2D + 1.0Di + 1.0Wi (3...	Yes	Y		1	1.2	2	1.2	3	1	4	.866	5	.5										
15	1.2D + 1.0Di + 1.0Wi (6...	Yes	Y		1	1.2	2	1.2	3	1	4	.5	5	.866										
16	1.2D + 1.0Di + 1.0Wi (9...	Yes	Y		1	1.2	2	1.2	3	1	5	1												
17	1.2D + 1.0Di + 1.0Wi (1...	Yes	Y		1	1.2	2	1.2	3	1	4	-.5	5	.866										
18	1.2D + 1.0Di + 1.0Wi (1...	Yes	Y		1	1.2	2	1.2	3	1	4	-.8...	5	.5										
19	1.2D + 1.0Di + 1.0Wi (1...	Yes	Y		1	1.2	2	1.2	3	1	4	-1												

Load Combinations (Continued)

	Description	S...	PDelta	SRSS	B...	Fa...	B...	Fact...	B...	Fa...	B...	Fa...	B...	Fa...	B...	Fa...	B...	Fa...	B...	Fa...	B...	Fa...	B...	Fa...
20	1.2D + 1.0Di + 1.0Wi (2...	Yes	Y		1	1.2	2	1.2	3	1	4	-.8...	5	-.5										
21	1.2D + 1.0Di + 1.0Wi (2...	Yes	Y		1	1.2	2	1.2	3	1	4	-.5	5	-.8...										
22	1.2D + 1.0Di + 1.0Wi (2...	Yes	Y		1	1.2	2	1.2	3	1	5	-1												
23	1.2D + 1.0Di + 1.0Wi (3...	Yes	Y		1	1.2	2	1.2	3	1	4	.5	5	-.8...										
24	1.2D + 1.0Di + 1.0Wi (3...	Yes	Y		1	1.2	2	1.2	3	1	4	.866	5	-.5										
25	1.2D + 1.6W (0 deg) Se...	Yes	Y		1	1.2	2	1.2	7	.48														

Envelope AISC 14th(360-10): LRFD Steel Code Checks

	Mem...	Shape	Code Check	Loc[in]	LC	Shear ...	Loc[...	Dir	LC	phi*Pn...	phi*Pn...	phi*Mn ...	phi*Mn...	Cb	Eqn
1	M58	PIPE_12....	.890	119	10	.103	119		9	409076...	551250	184.275	184.275	1...	H...

270 deg. Service Wind for Deflections

Joint Deflections (By Combination)

	LC	Joint Label	X [in]	Y [in]	Z [in]	X Rotation [rad]	Y Rotation [rad]	Z Rotation [rad]
1	25	A4	.145	-.924	1.001	7.188e-03	6.729e-03	2.477e-03
2	25	A6	-.074	-.924	1.998	1.316e-02	4.945e-03	2.135e-03
3	25	A7	.056	-.746	.691	1.077e-02	-4.092e-03	6.286e-04
4	25	EQUIP_A_2	.025	-.746	1.231	1.3e-02	-4.092e-03	6.299e-04
5	25	A9	-.075	-.746	1.914	1.457e-02	-2.693e-03	2.207e-03
6	25	B1	.026	-.931	1.413	1.143e-02	6.729e-03	2.484e-03
7	25	B2	.025	-.744	1.243	1.3e-02	-4.093e-03	6.299e-04
8	25	C1	0	-.087	1.087	7.872e-03	-3.097e-06	1.906e-06
9	25	C2	.024	-.755	1.088	1.368e-02	1.093e-03	1.496e-03
10	25	N16	.025	-.777	1.095	1.367e-02	1.663e-03	1.53e-03
11	25	N17A	.025	-.761	1.083	1.366e-02	8.05e-04	1.508e-03
12	25	N18A	.026	-.79	1.095	1.367e-02	1.663e-03	1.53e-03
13	25	N19	.026	-.775	1.083	1.366e-02	8.05e-04	1.508e-03
14	25	N20	.025	-.78	1.099	1.367e-02	1.663e-03	1.53e-03
15	25	N21	.025	-.758	1.081	1.366e-02	8.05e-04	1.508e-03
16	25	EQUIP_A_3	.026	-.924	1.393	1.143e-02	6.729e-03	2.484e-03
17	25	N17	.01	-.755	1.212	1.368e-02	1.16e-03	1.517e-03
18	25	N18	.037	-.755	.965	1.368e-02	1.16e-03	1.517e-03
19	25	N19A	.018	-.752	1.134	1.368e-02	1.16e-03	1.517e-03
20	25	N20A	.029	-.752	1.038	1.368e-02	1.16e-03	1.517e-03
21	25	N21A	.018	-.758	1.139	1.368e-02	1.16e-03	1.517e-03
22	25	N22	.029	-.758	1.043	1.368e-02	1.16e-03	1.517e-03
23	25	N23	.018	-.755	1.136	1.368e-02	1.16e-03	1.517e-03
24	25	N24	.029	-.755	1.041	1.368e-02	1.16e-03	1.517e-03
25	25	N25	.019	-.766	1.134	1.368e-02	1.16e-03	1.517e-03
26	25	N26	.03	-.766	1.038	1.368e-02	1.16e-03	1.517e-03
27	25	N27A	.019	-.772	1.139	1.368e-02	1.16e-03	1.517e-03
28	25	N28	.03	-.772	1.043	1.368e-02	1.16e-03	1.517e-03
29	25	N29	.025	-.772	1.091	1.368e-02	1.16e-03	1.517e-03
30	25	N30	.025	-.766	1.086	1.368e-02	1.16e-03	1.517e-03
31	25	N31	.003	-.329	1.088	1.18e-02	2.88e-04	6.367e-04
32	25	N32	.144	-.832	.603	1.122e-02	5.057e-03	2.458e-03
33	25	N33	-.067	-.832	1.975	1.765e-02	2.707e-03	1.834e-03
34	25	N34	.026	-.832	1.165	1.349e-02	5.057e-03	2.461e-03
35	25	EQUIP_A_1(TOP)	-.043	-.924	1.805	1.315e-02	4.945e-03	2.135e-03
36	25	EQUIP_A_1(BOT)	.109	-.924	1.106	7.198e-03	6.729e-03	2.477e-03
37	25	EQUIP_A_4(TOP)	-.034	-.832	1.664	1.763e-02	2.707e-03	1.833e-03
38	25	EQUIP_A_4(BOT)	.101	-.832	.801	1.124e-02	5.057e-03	2.458e-03
39	25	EQUIP_A_5(TOP)	-.035	-.746	1.652	1.455e-02	-2.693e-03	2.207e-03
40	25	EQUIP_A_5(BOT)	.044	-.746	.885	1.079e-02	-4.092e-03	6.286e-04
41	25	N41	.011	-.214	1.015	4.825e-03	-1.511e-03	6.946e-04
42	25	N42	-.11	-.214	1.794	1.093e-02	-1.427e-03	2.109e-03
43	25	N43	.497	.66	.72	8.516e-03	-1.879e-03	5.711e-03
44	25	EQUIP_B_2	.223	.66	1.151	1.074e-02	-1.879e-03	5.723e-03
45	25	N45	-.199	.66	1.855	1.551e-02	-2.875e-03	9.391e-03
46	25	N46	-.026	-.236	1.296	9.061e-03	-1.511e-03	6.962e-04
47	25	N47	.228	.679	1.148	1.074e-02	-1.879e-03	5.723e-03
48	25	N48	0	.04	1.087	7.872e-03	-3.118e-06	1.898e-06
49	25	N49	.08	.239	1.226	8.481e-03	-3.583e-03	-1.829e-04
50	25	N50	.067	.206	1.237	8.591e-03	-3.347e-03	-1.964e-05
51	25	N51	.096	.28	1.22	8.641e-03	-3.422e-03	8.34e-05
52	25	N52	.068	.21	1.24	8.591e-03	-3.347e-03	-1.964e-05
53	25	N53	.098	.285	1.223	8.641e-03	-3.422e-03	8.34e-05
54	25	N54	.059	.187	1.241	8.591e-03	-3.347e-03	-1.964e-05
55	25	N55	.104	.299	1.216	8.641e-03	-3.422e-03	8.34e-05
56	25	EQUIP_B_3	-.023	-.214	1.293	9.061e-03	-1.511e-03	6.963e-04

Joint Deflections (By Combination) (Continued)

	LC	Joint Label	X [in]	Y [in]	Z [in]	X Rotation [rad]	Y Rotation [rad]	Z Rotation [rad]
57	25	N57	.081	.239	1.302	8.521e-03	-3.501e-03	-1.321e-04
58	25	N58	.078	.239	1.149	8.521e-03	-3.501e-03	-1.321e-04
59	25	N59	.086	.254	1.252	8.521e-03	-3.501e-03	-1.321e-04
60	25	N60	.085	.254	1.192	8.521e-03	-3.501e-03	-1.321e-04
61	25	N61	.074	.224	1.259	8.521e-03	-3.501e-03	-1.321e-04
62	25	N62	.073	.224	1.199	8.521e-03	-3.501e-03	-1.321e-04
63	25	N63	.08	.239	1.255	8.521e-03	-3.501e-03	-1.321e-04
64	25	N64	.079	.239	1.196	8.521e-03	-3.501e-03	-1.321e-04
65	25	N65	.088	.258	1.255	8.521e-03	-3.501e-03	-1.321e-04
66	25	N66	.087	.258	1.195	8.521e-03	-3.501e-03	-1.321e-04
67	25	N67	.076	.228	1.262	8.521e-03	-3.501e-03	-1.321e-04
68	25	N68	.075	.228	1.202	8.521e-03	-3.501e-03	-1.321e-04
69	25	N69	.075	.228	1.232	8.521e-03	-3.501e-03	-1.321e-04
70	25	N70	.087	.258	1.225	8.521e-03	-3.501e-03	-1.321e-04
71	25	N71	.02	.124	1.123	7.792e-03	-2.96e-03	-6.643e-04
72	25	N72	.051	.064	.909	6.94e-03	-1.998e-03	5.402e-04
73	25	N73	-.095	.064	1.766	1.061e-02	-8.915e-04	2.973e-03
74	25	N74	.025	.064	1.266	9.207e-03	-1.998e-03	5.409e-04
75	25	EQUIP_B_1(TOP)	-.079	-.214	1.634	1.092e-02	-1.427e-03	2.109e-03
76	25	EQUIP_B_1(BOT)	0	-.214	1.086	4.835e-03	-1.511e-03	6.946e-04
77	25	EQUIP_B_4(TOP)	-.042	.064	1.579	1.059e-02	-8.915e-04	2.973e-03
78	25	EQUIP_B_4(BOT)	.041	.064	1.032	6.958e-03	-1.998e-03	5.402e-04
79	25	EQUIP_B_5(TOP)	-.03	.66	1.576	1.549e-02	-2.875e-03	9.39e-03
80	25	EQUIP_B_5(BOT)	.394	.66	.873	8.536e-03	-1.879e-03	5.712e-03
81	25	N81A	-.464	.682	.797	6.445e-03	1.589e-03	-5.689e-03
82	25	N82A	.208	.682	1.813	1.445e-02	1.414e-03	-8.94e-03
83	25	N83	-.094	-.188	.864	8.294e-03	2.115e-03	-2.741e-03
84	25	EQUIP_C_2	.038	-.188	1.285	1.052e-02	2.115e-03	-2.746e-03
85	25	N85	.277	-.188	1.837	1.171e-02	1.485e-03	-5.454e-03
86	25	N86	-.195	.702	1.15	1.069e-02	1.589e-03	-5.703e-03
87	25	N87	.043	-.211	1.288	1.052e-02	2.115e-03	-2.746e-03
88	25	N88	0	.04	1.087	7.872e-03	-3.078e-06	1.908e-06
89	25	N89	-.073	.261	1.214	8.617e-03	3.063e-03	-6.625e-04
90	25	N90	-.087	.302	1.209	8.821e-03	2.822e-03	-1.013e-03
91	25	N91	-.062	.231	1.224	8.746e-03	2.825e-03	-8.673e-04
92	25	N92	-.088	.307	1.212	8.821e-03	2.822e-03	-1.013e-03
93	25	N93	-.063	.236	1.226	8.746e-03	2.825e-03	-8.673e-04
94	25	N94	-.093	.32	1.206	8.821e-03	2.822e-03	-1.013e-03
95	25	N95	-.056	.213	1.227	8.747e-03	2.825e-03	-8.673e-04
96	25	EQUIP_C_3	-.191	.682	1.153	1.069e-02	1.589e-03	-5.703e-03
97	25	N97	-.066	.261	1.292	8.662e-03	2.957e-03	-7.311e-04
98	25	N98	-.08	.261	1.136	8.662e-03	2.957e-03	-7.311e-04
99	25	N99	-.065	.247	1.247	8.662e-03	2.957e-03	-7.311e-04
100	25	N100	-.07	.247	1.186	8.662e-03	2.957e-03	-7.311e-04
101	25	N101	-.076	.276	1.241	8.662e-03	2.957e-03	-7.311e-04
102	25	N102	-.081	.276	1.181	8.662e-03	2.957e-03	-7.311e-04
103	25	N103	-.07	.261	1.244	8.662e-03	2.957e-03	-7.311e-04
104	25	N104	-.076	.261	1.183	8.662e-03	2.957e-03	-7.311e-04
105	25	N105	-.067	.252	1.25	8.662e-03	2.957e-03	-7.311e-04
106	25	N106	-.072	.252	1.189	8.662e-03	2.957e-03	-7.311e-04
107	25	N107	-.077	.281	1.244	8.662e-03	2.957e-03	-7.311e-04
108	25	N108	-.082	.281	1.183	8.662e-03	2.957e-03	-7.311e-04
109	25	N109	-.08	.281	1.213	8.662e-03	2.957e-03	-7.311e-04
110	25	N110	-.069	.252	1.219	8.662e-03	2.957e-03	-7.311e-04
111	25	N111	-.019	.128	1.121	7.85e-03	2.766e-03	3.07e-04
112	25	N112	-.297	.439	.794	7.724e-03	2.258e-03	-3.496e-03
113	25	N113	.181	.439	1.781	1.271e-02	1.135e-03	-7.163e-03

Joint Deflections (By Combination) (Continued)

	LC	Joint Label	X [in]	Y [in]	Z [in]	X Rotation [rad]	Y Rotation [rad]	Z Rotation [rad]
114	25	N114	-.129	.439	1.188	9.992e-03	2.258e-03	-3.5e-03
115	25	EQUIP_C_1(TOP)	.077	.682	1.601	1.444e-02	1.414e-03	-8.94e-03
116	25	EQUIP_C_1(BOT)	-.381	.682	.891	6.455e-03	1.589e-03	-5.689e-03
117	25	EQUIP_C_4(TOP)	.055	.439	1.557	1.27e-02	1.135e-03	-7.163e-03
118	25	EQUIP_C_4(BOT)	-.235	.439	.931	7.742e-03	2.258e-03	-3.496e-03
119	25	EQUIP_C_5(TOP)	.179	-.188	1.626	1.169e-02	1.485e-03	-5.454e-03
120	25	EQUIP_C_5(BOT)	-.044	-.188	1.014	8.314e-03	2.115e-03	-2.741e-03
121	25	N121	.026	-.783	1.088	1.367e-02	1.202e-03	1.521e-03
122	25	N128	-.023	-.924	1.683	1.281e-02	4.945e-03	2.135e-03
123	25	N129	-.022	-.746	1.565	1.445e-02	-2.693e-03	2.207e-03
124	25	N130	-.023	-.832	1.552	1.752e-02	2.707e-03	1.833e-03
125	25	N131	-.06	-.214	1.533	1.058e-02	-1.427e-03	2.108e-03
126	25	N132	.026	.66	1.483	1.539e-02	-2.875e-03	9.39e-03
127	25	N133	-.023	.064	1.512	1.048e-02	-8.915e-04	2.972e-03
128	25	N134	-.006	.682	1.467	1.41e-02	1.414e-03	-8.938e-03
129	25	N135	.146	-.188	1.556	1.159e-02	1.485e-03	-5.454e-03
130	25	N136	.01	.439	1.476	1.258e-02	1.135e-03	-7.162e-03
131	25	N131A	-.023	-.93	1.698	1.281e-02	4.945e-03	2.135e-03
132	25	N138	-.022	-.803	1.51	1.46e-02	8.707e-04	7.382e-04
133	25	N139	-.022	-.739	1.573	1.445e-02	-2.693e-03	2.207e-03
134	25	N140	-.063	-.238	1.535	1.058e-02	-1.427e-03	2.108e-03
135	25	N141	.033	.686	1.479	1.539e-02	-2.875e-03	9.39e-03
136	25	N142	-.01	.706	1.465	1.41e-02	1.414e-03	-8.938e-03
137	25	N143	.15	-.21	1.558	1.159e-02	1.485e-03	-5.454e-03
138	25	N138A	-.023	-.902	1.642	8.211e-03	4.193e-03	2.672e-03
139	25	N139A	-.049	-.142	1.527	9.565e-03	-1.237e-03	9.654e-04
140	25	N140A	.002	.616	1.472	1.191e-02	7.054e-04	-6.788e-03
141	25	N141A	-.022	-.763	1.543	8.404e-03	-2.073e-03	1.565e-03
142	25	N142A	.004	.583	1.496	1.352e-02	-2.515e-03	6.758e-03
143	25	N143A	.135	-.123	1.55	9.702e-03	1.414e-03	-2.577e-03
144	25	N144	0	-.003	1.087	7.872e-03	-3.097e-06	1.904e-06
145	25	N145	0	-.003	1.371	7.874e-03	-3.097e-06	1.904e-06
146	25	N146	0	0	0	-1.136e-03	0	-1.035e-07
147	25	N147	0	-.001	0	2.431e-03	1.739e-07	2.197e-07
148	25	N148	.026	-.901	1.332	1.195e-02	6.752e-03	2.58e-03
149	25	N149	-.011	-.145	1.286	9.237e-03	-1.433e-03	5.769e-04
150	25	N150	-.178	.624	1.16	1.057e-02	1.763e-03	-5.118e-03
151	25	N151	.026	-.75	1.194	1.311e-02	-4.083e-03	3.432e-04
152	25	N152	.208	.602	1.159	1.028e-02	-2.012e-03	4.867e-03
153	25	N153	.021	-.117	1.275	1.044e-02	2.039e-03	-2.315e-03
154	25	N154	0	-.084	.808	7.577e-03	3.827e-07	1.022e-06
155	25	N155	0	.038	.808	7.577e-03	3.827e-07	1.022e-06
156	25	N156	0	.038	.808	7.577e-03	3.827e-07	1.022e-06
157	25	N157	0	-.003	.808	7.577e-03	3.827e-07	1.022e-06

Top of 12XS Pipe Mast

Paul J. Ford and Company, Project: "80619-0001.001.6000"
PLS-POLE Version 15.30, 5:26:37 PM Monday, February 11, 2019
Undeformed geometry displayed

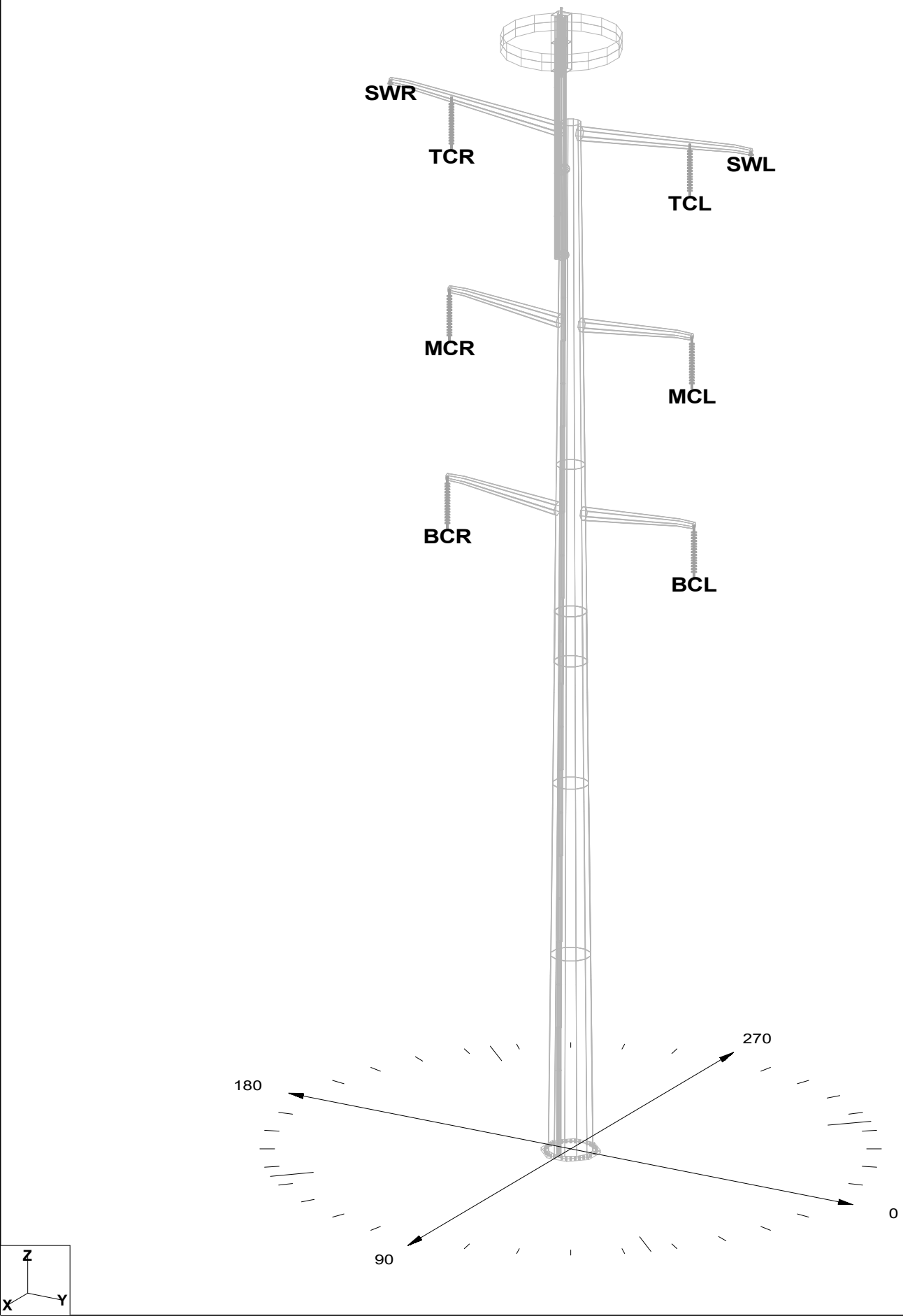

Paul J. Ford and Company, Project: "80619-0001.001.6000"
PLS-POLE Version 15.30, 5:27:15 PM Monday, February 11, 2019
Undeformed geometry displayed

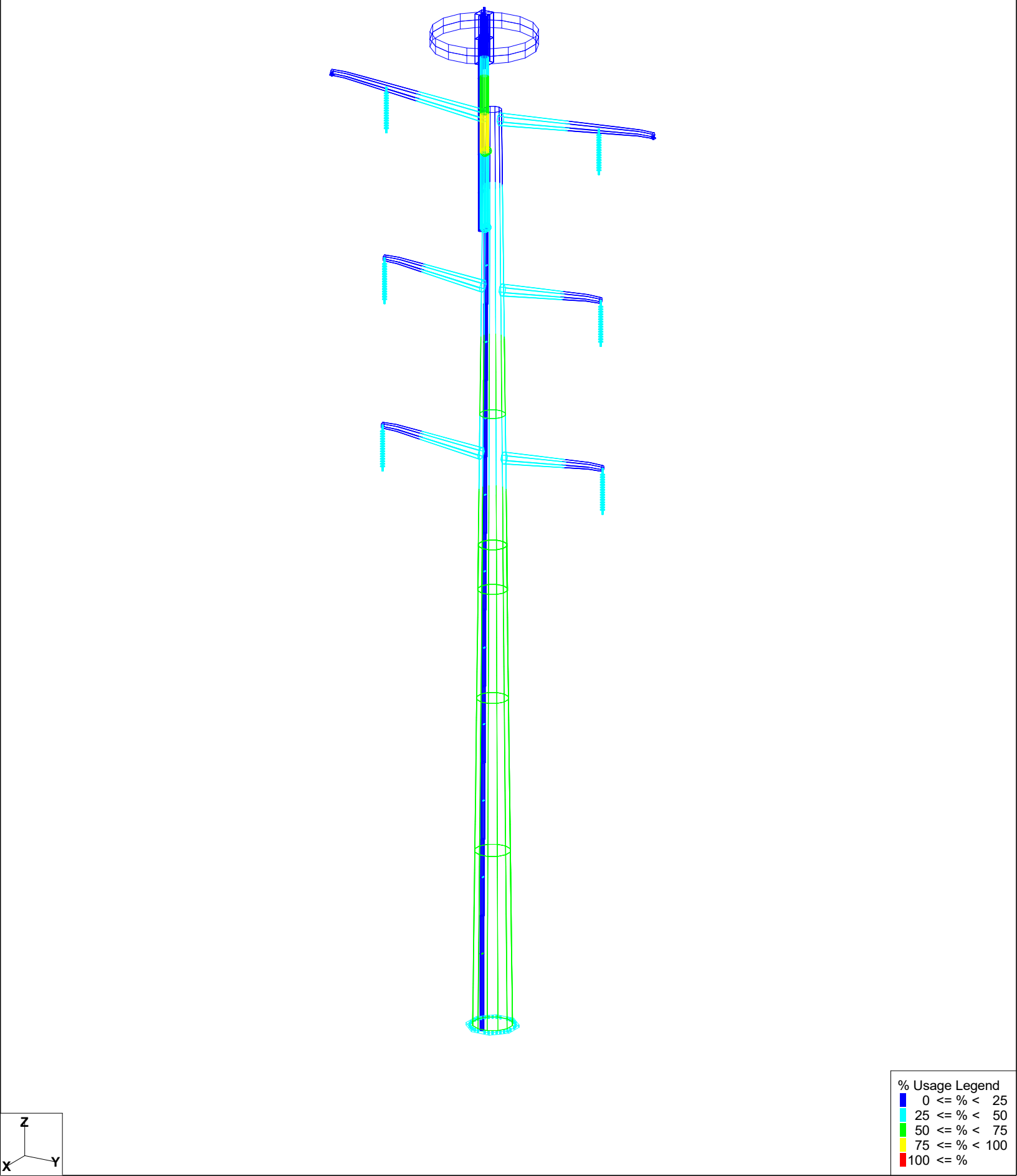

```
***********************************************************************
*                                                                     *
*                              PLS-POLE                               *
*                   POLE AND FRAME ANALYSIS AND DESIGN                *
*              Copyright Power Line Systems, Inc. 1999-2018           *
*                                                                     *
***********************************************************************
```

Project Name : Pole 24063
Project Notes: AT&T - Orange
Project File : G:\Transmission\Eversource\2019\806_Smartlink\80619-0001 Tower 24063 AT&T CTL02343\001.6000 - SA\PLS-Pole\80619-0001.001.6000.pol
Date run : 11:46:16 AM Monday, February 11, 2019
by : PLS-POLE Version 15.30
Licensed to : Paul J. Ford and Company

Successfully performed nonlinear analysis

The model has 0 warnings.

Modeling options:
- Offset Arms from Pole/Mast: Yes
- Offset Braces from Pole/Mast: Yes
- Offset Guys from Pole/Mast: Yes
- Offset Posts from Pole/Mast: Yes
- Offset Strains from Pole/Mast: Yes
- Use Alternate Convergence Process: No
- Steel poles and tubular arms checked with ASCE/SEI 48-05

Default Modulus of Elasticity for Steel = 29000.00 (ksi)
Default Weight Density for Steel = 490.00 (lbs/ft^3)

Steel Pole Properties:

Steel Pole Property Label	Stock Number	Length (ft)	Default Embedded Length (ft)	Base Plate	Shape	Tip Diameter (in)	Base Diameter (in)	Taper (in/ft)	Default Drag Coef.	Tubes	Modulus of Elasticity Override (ksi)	Weight Density Override (lbs/ft^3)	Shape At Base	Strength Check Type	Distance From Tip (ft)	Ultimate Trans. Load (kips)	Ultimate Long. Load (kips)	Texture
P24063		120.00	0	Yes	12F	26.68	59.46	0	1.6	5 tubes	0	0		Calculated	0.000	0.0000	0.0000	Galvanized Steel

Steel Tubes Properties:

Pole Property	Tube No.	Length (ft)	Thickness (in)	Lap Length (ft)	Lap Factor	Lap Butt Offset (in)	Gap or Stress (ksi)	Yield Override (ft-k)	Moment Cap. Weight (lbs)	Tube Center of Gravity (ft)	Calculated Taper (in/ft)	Tube Top Diameter (in)	Tube Bot. Diameter (in)	1.5x Diam. Lap Length (ft)	Actual Overlap (ft)
P24063	1	40	0.375	0.000	0.000	0.000	65.000	0.000	5232	21.16	0.27838	26.68	37.82	4.634	0.000
P24063	2	23	0.5	5.833	0.000	0.000	65.000	0.000	5130	11.80	0.27838	38.07	44.47	5.434	5.833
P24063	3	20.083	0.5625	0.000	0.000	0.000	65.000	0.000	5448	10.25	0.27838	41.85	47.44	5.789	0.000

P24063	4	20	0.625	0.000	0.000	0.000	65.000	0.000	6800	10.19	0.27838	47.56	53.13	6.485	0.000
P24063	5	22.75	0.625	0.000	0.000	0.000	65.000	0.000	8661	11.59	0.27838	53.13	59.46	0.000	0.000

Base Plate Properties:

Pole Property	Plate Diam. (in)	Plate Shape	Plate Thick. (in)	Plate Weight (lbs)	Bend Line Length Override (in)	Hole Diam. (in)	Hole Shape	Steel Density (lbs/ft^3)	Steel Yield Stress (ksi)	Bolt Diam. (in)	Bolt Pattern Diam. (in)	Num. Of Bolts	Bolt Cage X Inertia (in^4)	Bolt Cage Y Inertia (in^4)
P24063	73.000	8F	3.750	4559	0.000	0.000		490.00	60.000	2.250	68.000	32	73541.54	73541.54

Base Plate Bolt Coordinates for Property "P24063":

Bolt X Coord.	Bolt Y Coord.	Bolt Angle (deg)
0	0	9.7025
0	0	19.7875
0	0	29.8725
0	0	39.9575
0	0	50.0425
0	0	60.1275
0	0	70.2125
0	0	80.2975

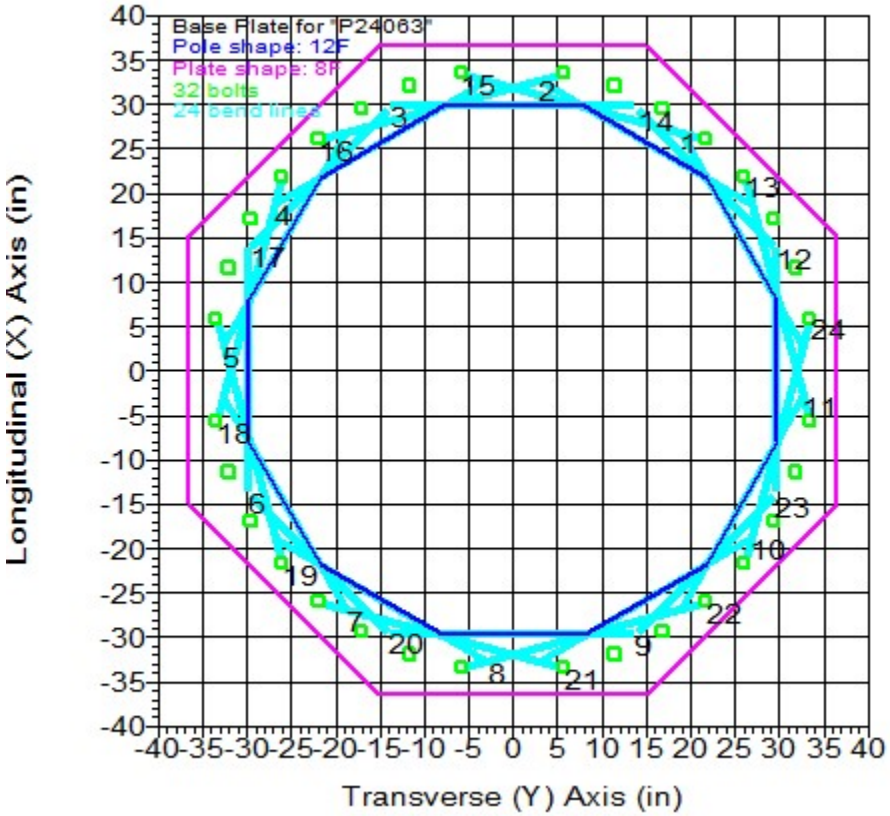

Steel Pole Connectivity:

Pole Label	Tip Joint	Base Joint	X of Base (ft)	Y of Base (ft)	Z of Base (ft)	Inclin. About X (deg)	Inclin. About Y (deg)	Property Set	Attach. Labels	Base Connect	Embed % Override	Embed C. Override (ft)
P			0	0	0	0	0	P24063 15 labels		Fixed	0.00	0

Relative Attachment Labels for Steel Pole "P":

Joint Label	Distance From Origin/Top Joint (ft)	Global Z of Attach (ft)
P:tc	1.10	0.00
P:mc	23.46	0.00
P:bc	45.46	0.00
P:CX1	0.00	10.00
P:CX2	0.00	20.00
P:CX3	0.00	30.00
P:CX4	0.00	40.00
P:CX5	0.00	50.00
P:CX6	0.00	60.00
P:CX7	0.00	70.00
P:CX8	0.00	80.00
P:CX9	0.00	90.00
P:CX10	0.00	100.00
P:Clamp-B	0.00	105.00
P:Clamp-T	0.00	115.00

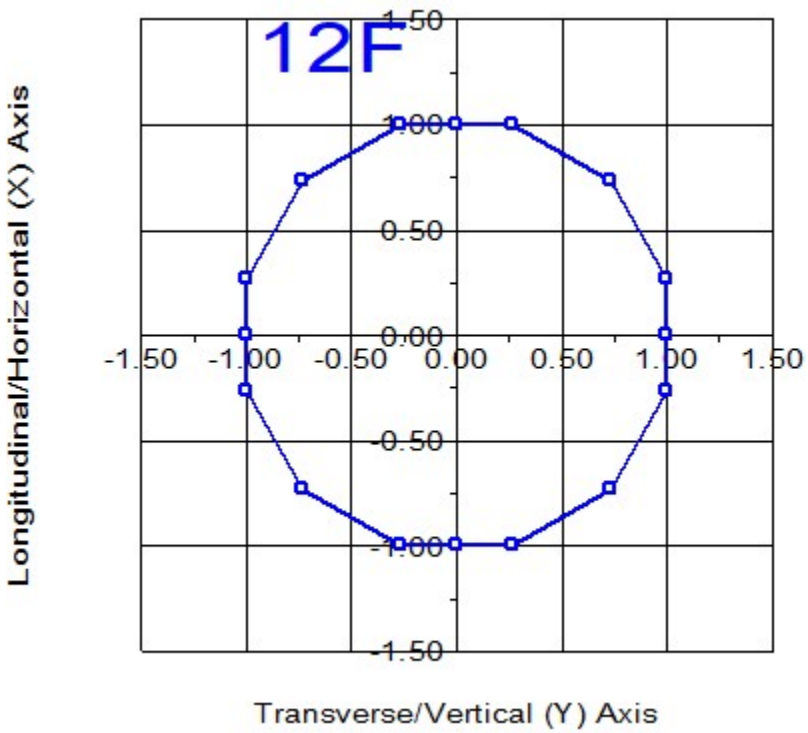

Pole Steel Properties:

Warning: Capacities and usages printed in splices are listed for the inner tube except at the splice top which uses the outer tube. ??

Element Label	Joint Label	Joint Position	Rel. Dist. (ft)	Outer Diam. (in)	Area (in^2)	T-Moment Inertia (in^4)	L-Moment Inertia (in^4)	D/t	W/t Max.	Fy (ksi)	Fa Min. (ksi)	T-Moment Capacity (ft-k)	L-Moment Capacity (ft-k)
P	P:t	P:t Ori	0.00	26.68	31.72	2810.90	2810.90	0.00	16.4	65.00	65.00	1141.18	1141.18
P	P:tc	P:tc End	1.10	26.99	32.09	2910.55	2910.55	0.00	16.6	65.00	65.00	1168.19	1168.19
P	P:tc	P:tc Ori	1.10	26.99	32.09	2910.55	2910.55	0.00	16.6	65.00	65.00	1168.19	1168.19
P	P:Clamp-T	P:Clamp-T End	5.00	28.08	33.40	3281.00	3281.00	0.00	17.4	65.00	65.00	1266.00	1266.00
P	P:Clamp-T	P:Clamp-T Ori	5.00	28.08	33.40	3281.00	3281.00	0.00	17.4	65.00	65.00	1266.00	1266.00
P	#P:0	Tube 1 End	10.00	29.47	35.08	3800.80	3800.80	0.00	18.4	65.00	65.00	1397.29	1397.29
P	#P:0	Tube 1 Ori	10.00	29.47	35.08	3800.80	3800.80	0.00	18.4	65.00	65.00	1397.29	1397.29
P	P:Clamp-B	P:Clamp-B End	15.00	30.86	36.76	4372.79	4372.79	0.00	19.4	65.00	65.00	1535.07	1535.07
P	P:Clamp-B	P:Clamp-B Ori	15.00	30.86	36.76	4372.79	4372.79	0.00	19.4	65.00	65.00	1535.07	1535.07
P	P:CX10	P:CX10 End	20.00	32.25	38.44	4999.46	4999.46	0.00	20.4	65.00	65.00	1679.32	1679.32
P	P:CX10	P:CX10 Ori	20.00	32.25	38.44	4999.47	4999.47	0.00	20.4	65.00	65.00	1679.32	1679.32
P	P:mc	P:mc End	23.46	33.21	39.60	5466.18	5466.18	0.00	21.1	65.00	65.00	1782.87	1782.87
P	P:mc	P:mc Ori	23.46	33.21	39.60	5466.18	5466.18	0.00	21.1	65.00	65.00	1782.87	1782.87
P	#P:1	Tube 1 End	26.73	34.12	40.69	5933.57	5933.57	0.00	21.7	65.00	65.00	1883.68	1883.68
P	#P:1	Tube 1 Ori	26.73	34.12	40.69	5933.57	5933.57	0.00	21.7	65.00	65.00	1883.68	1883.68
P	P:CX9	P:CX9 End	30.00	35.04	41.79	6426.88	6426.88	0.00	22.4	65.00	65.00	1987.25	1987.25
P	P:CX9	P:CX9 Ori	30.00	35.04	41.79	6426.88	6426.88	0.00	22.4	65.00	65.00	1987.25	1987.25
P	#P:2	Tube 1 End	35.00	36.43	43.47	7232.61	7232.61	0.00	23.3	65.00	65.00	2150.94	2150.94
P	#P:2	Tube 1 Ori	35.00	36.43	43.47	7232.61	7232.61	0.00	23.3	65.00	65.00	2150.94	2150.94
P	P:CX8	P:CX8 End	40.00	37.82	45.15	8103.02	8103.02	0.00	24.3	65.00	65.00	2321.10	2321.10
P	P:CX8	P:CX8 Ori	40.00	38.07	60.40	10913.41	10913.41	0.00	17.7	65.00	65.00	3105.61	3105.61
P	#P:3	Tube 2 End	42.73	38.83	61.62	11588.86	11588.86	0.00	18.1	65.00	65.00	3233.30	3233.30
P	#P:3	Tube 2 Ori	42.73	38.83	61.62	11588.86	11588.86	0.00	18.1	65.00	65.00	3233.30	3233.30
P	P:bc	P:bc End	45.46	39.59	62.84	12291.63	12291.63	0.00	18.5	65.00	65.00	3363.56	3363.56
P	P:bc	P:bc Ori	45.46	39.59	62.84	12291.63	12291.63	0.00	18.5	65.00	65.00	3363.56	3363.56
P	P:CX7	P:CX7 End	50.00	40.85	64.88	13523.30	13523.30	0.00	19.2	65.00	65.00	3586.07	3586.07
P	P:CX7	P:CX7 Ori	50.00	40.85	64.88	13523.31	13523.31	0.00	19.2	65.00	65.00	3586.07	3586.07
P	#P:4	Tube 2 End	53.58	41.85	66.48	14551.14	14551.14	0.00	19.7	65.00	65.00	3766.65	3766.65
P	#P:4	Tube 2 Ori	53.58	41.85	66.48	14551.15	14551.15	0.00	19.7	65.00	65.00	3766.65	3766.65
P	#P:5	SpliceT End	57.17	42.85	68.08	15629.79	15629.79	0.00	20.3	65.00	65.00	3951.67	3951.67
P	#P:5	SpliceT Ori	57.17	42.85	68.08	15629.79	15629.79	0.00	20.3	65.00	65.00	3951.67	3951.67
P	P:CX6	P:CX6 End	60.00	42.64	76.10	17245.27	17245.27	0.00	17.6	65.00	65.00	4381.72	4381.72
P	P:CX6	P:CX6 Ori	60.00	42.64	76.10	17245.27	17245.27	0.00	17.6	65.00	65.00	4381.72	4381.72
P	#P:6	SpliceB End	63.00	43.47	77.61	18292.59	18292.59	0.00	18.0	65.00	65.00	4558.54	4558.54
P	#P:6	SpliceB Ori	63.00	43.47	77.61	18292.59	18292.59	0.00	18.0	65.00	65.00	4558.54	4558.54
P	#P:7	Tube 3 End	66.50	44.45	79.37	19567.05	19567.05	0.00	18.5	65.00	65.00	4769.24	4769.24
P	#P:7	Tube 3 Ori	66.50	44.45	79.37	19567.05	19567.05	0.00	18.5	65.00	65.00	4769.24	4769.24
P	P:CX5	P:CX5 End	70.00	45.42	81.13	20899.38	20899.38	0.00	19.0	65.00	65.00	4984.71	4984.71
P	P:CX5	P:CX5 Ori	70.00	45.42	81.13	20899.38	20899.38	0.00	19.0	65.00	65.00	4984.71	4984.71
P	#P:8	Tube 3 End	73.63	46.43	82.96	22341.67	22341.67	0.00	19.4	65.00	65.00	5212.89	5212.89
P	#P:8	Tube 3 Ori	73.63	46.43	82.96	22341.67	22341.67	0.00	19.4	65.00	65.00	5212.89	5212.89
P	#P:9	SpliceT End	77.25	47.44	84.78	23848.83	23848.83	0.00	19.9	65.00	65.00	5446.18	5446.18
P	#P:9	SpliceT Ori	77.25	47.56	94.33	26605.70	26605.70	0.00	17.7	65.00	65.00	6059.78	6059.78
P	P:CX4	P:CX4 End	80.00	48.33	95.87	27928.67	27928.67	0.00	18.0	65.00	65.00	6260.34	6260.34
P	P:CX4	P:CX4 Ori	80.00	48.33	95.87	27928.67	27928.67	0.00	18.0	65.00	65.00	6260.34	6260.34
P	#P:10	Tube 4 End	85.00	49.72	98.67	30445.10	30445.10	0.00	18.6	65.00	65.00	6633.36	6633.36
P	#P:10	Tube 4 Ori	85.00	49.72	98.67	30445.10	30445.10	0.00	18.6	65.00	65.00	6633.36	6633.36
P	P:CX3	P:CX3 End	90.00	51.11	101.46	33108.33	33108.33	0.00	19.2	65.00	65.00	7017.19	7017.19
P	P:CX3	P:CX3 Ori	90.00	51.11	101.46	33108.33	33108.33	0.00	19.2	65.00	65.00	7017.19	7017.19
P	#P:11	Tube 4 End	93.63	52.12	103.49	35133.33	35133.33	0.00	19.7	65.00	65.00	7302.21	7302.21
P	#P:11	Tube 4 Ori	93.63	52.12	103.49	35133.33	35133.33	0.00	19.7	65.00	65.00	7302.21	7302.21
P	#P:12	SpliceT End	97.25	53.13	105.52	37239.27	37239.27	0.00	20.1	65.00	65.00	7592.91	7592.91
P	#P:12	SpliceT Ori	97.25	53.13	105.52	37239.27	37239.27	0.00	20.1	65.00	65.00	7592.91	7592.91
P	P:CX2	P:CX2 End	100.00	53.90	107.06	38891.83	38891.83	0.00	20.4	65.00	65.00	7817.22	7817.22
P	P:CX2	P:CX2 Ori	100.00	53.90	107.06	38891.84	38891.84	0.00	20.4	65.00	65.00	7817.23	7817.23
P	#P:13	Tube 5 End	105.00	55.29	109.85	42020.43	42020.43	0.00	21.0	65.00	65.00	8233.44	8233.44
P	#P:13	Tube 5 Ori	105.00	55.29	109.85	42020.44	42020.44	0.00	21.0	65.00	65.00	8233.44	8233.44
P	P:CX1	P:CX1 End	110.00	56.68	112.65	45312.48	45312.48	0.00	21.6	65.00	65.00	8660.45	8660.45
P	P:CX1	P:CX1 Ori	110.00	56.68	112.65	45312.48	45312.48	0.00	21.6	65.00	65.00	8660.45	8660.45
P	#P:14	Tube 5 End	115.00	58.07	115.45	48772.13	48772.13	0.00	22.2	65.00	65.00	9098.26	9098.26
P	#P:14	Tube 5 Ori	115.00	58.07	115.45	48772.14	48772.14	0.00	22.2	65.00	65.00	9098.26	9098.26
P	P:g	P:g End	120.00	59.46	118.25	52403.56	52403.56	0.00	22.8	65.00	65.00	9546.87	9546.87

Equipment Library:

Equipment Property Label	Stock Number	Weight (lbs)	Wind Area (ft^2)	Ice Area (ft^2)	Shape or EIA Antenna Type	Drag Coef.	Diameter (ft)	Height (ft)	Vertical Offset (ft)
Existing Mounting Pipe #1	2.375"O.D. x 8` Mount Pipe	29.2	1.58	5.04	Circle	1.63	0.20	8.00	0.00
Proposed Antenna #1	800 10965	97.6	10.93	31.32	Square	2.00	1.67	6.56	0.00
Proposed TMA #1	TMABPD7823VG12A	23.1	0.81	2.75	Square	2.00	0.89	0.92	0.00
Existing Antenna #1	SBNH-1D6565B	47.4	5.98	20.31	Square	2.00	0.99	6.06	0.00
Existing Antenna #2	QS66512-2	111.0	6.00	23.20	Square	2.00	1.00	6.00	0.00

Existing TMA #1	TMA2117F00V1-1	26.0	0.81	3.01	Square	2.00	0.82	0.98	0.00
Existing Mount #1 (1) 802738 Triple Arm w/ Prop HR	815.0	26.30	110.14	Circle	2.00	13.15	2.00	0.00
CR-1 - CX1:1 - 0-15ft	CR-1 - CX1:1	405.0	7.43	233.26	Circle	1.60	0.50	15.00	-2.50
CR-1 - CX2:1 - 15-25ft	CR-1 - CX2:1	270.0	4.95	155.51	Circle	1.60	0.50	10.00	0.00
CR-1 - CX3:1 - 25-35ft	CR-1 - CX3:1	270.0	4.95	155.51	Circle	1.60	0.50	10.00	0.00
CR-1 - CX4:1 - 35-45ft	CR-1 - CX4:1	270.0	4.95	155.51	Circle	1.60	0.50	10.00	0.00
CR-1 - CX5:1 - 45-55ft	CR-1 - CX5:1	270.0	4.95	155.51	Circle	1.60	0.50	10.00	0.00
CR-1 - CX6:1 - 55-65ft	CR-1 - CX6:1	270.0	4.95	155.51	Circle	1.60	0.50	10.00	0.00
CR-1 - CX7:1 - 65-75ft	CR-1 - CX7:1	270.0	4.95	155.51	Circle	1.60	0.50	10.00	0.00
CR-1 - CX8:1 - 75-85ft	CR-1 - CX8:1	270.0	4.95	155.51	Circle	1.60	0.50	10.00	0.00
CR-1 - CX9:1 - 85-95ft	CR-1 - CX9:1	270.0	4.95	155.51	Circle	1.60	0.50	10.00	0.00
CR-1 - CX10:1 - 95-105ft	CR-1 - CX10:1	270.0	4.95	155.51	Circle	1.60	0.50	10.00	0.00
CR-1 - CX11:1 - 105-115ft	CR-1 - CX11:1	270.0	4.95	155.51	Circle	1.60	0.50	10.00	0.00
CR-1 - CX12:1 - 115-125ft	CR-1 - CX12:1	270.0	4.95	155.51	Circle	2.00	0.50	10.00	0.00
CR-1 - CX13:1 - 125-130ft	CR-1 - CX13:1	135.0	2.48	77.75	Circle	2.00	0.50	5.00	-2.50

Equipment Connectivity:

Equipment Label	Attach Label	Equipment Property Set	Azimuth (deg)	Offset (ft)	Measured Relative To	EIA Antenna Orientation Angle (deg)
Exist_Mnt-1	Mast:ANT	Existing Mount #1	0	0	Center	0.00
Ex_Mnt-1	Mast:ANT	Existing Mounting Pipe #1	0	0	Center	0.00
Ex_Mnt-2	Mast:ANT	Existing Mounting Pipe #1	0	0	Center	0.00
Ex_Mnt-3	Mast:ANT	Existing Mounting Pipe #1	0	0	Center	0.00
Ex_Mnt-4	Mast:ANT	Existing Mounting Pipe #1	0	0	Center	0.00
Ex_Mnt-5	Mast:ANT	Existing Mounting Pipe #1	0	0	Center	0.00
Ex_Mnt-6	Mast:ANT	Existing Mounting Pipe #1	0	0	Center	0.00
Ex_Mnt-7	Mast:ANT	Existing Mounting Pipe #1	0	0	Center	0.00
Ex_Mnt-8	Mast:ANT	Existing Mounting Pipe #1	0	0	Center	0.00
Ex_Mnt-9	Mast:ANT	Existing Mounting Pipe #1	0	0	Center	0.00
Prop_Ant_1-1	Mast:ANT	Proposed Antenna #1	0	0	Center	0.00
Prop_Ant_1-2	Mast:ANT	Proposed Antenna #1	0	0	Center	0.00
Prop_Ant_1-3	Mast:ANT	Proposed Antenna #1	0	0	Center	0.00
Prop_TMA_1-1	Mast:ANT	Proposed TMA #1	0	0	Center	0.00
Prop_TMA_1-2	Mast:ANT	Proposed TMA #1	0	0	Center	0.00
Prop_TMA_1-3	Mast:ANT	Proposed TMA #1	0	0	Center	0.00
Prop_TMA_1-4	Mast:ANT	Proposed TMA #1	0	0	Center	0.00
Prop_TMA_1-5	Mast:ANT	Proposed TMA #1	0	0	Center	0.00
Prop_TMA_1-6	Mast:ANT	Proposed TMA #1	0	0	Center	0.00
Ex_Ant_1-1	Mast:ANT	Existing Antenna #1	0	0	Center	0.00
Ex_Ant_1-2	Mast:ANT	Existing Antenna #1	0	0	Center	0.00
Ex_Ant_1-3	Mast:ANT	Existing Antenna #1	0	0	Center	0.00
Ex_Ant_2-1	Mast:ANT	Existing Antenna #2	0	0	Center	0.00
Ex_Ant_2-2	Mast:ANT	Existing Antenna #2	0	0	Center	0.00
Ex_Ant_2-3	Mast:ANT	Existing Antenna #2	0	0	Center	0.00
Ex_TMA_1-1	Mast:ANT	Existing TMA #1	0	0	Center	0.00
Ex_TMA_1-2	Mast:ANT	Existing TMA #1	0	0	Center	0.00
Ex_TMA_1-3	Mast:ANT	Existing TMA #1	0	0	Center	0.00
Ex_TMA_1-4	Mast:ANT	Existing TMA #1	0	0	Center	0.00
Ex_TMA_1-5	Mast:ANT	Existing TMA #1	0	0	Center	0.00
Ex_TMA_1-6	Mast:ANT	Existing TMA #1	0	0	Center	0.00
CR1-1	CX1:1	CR-1 - CX1:1 - 0-15ft	0	0	Center	0.00
CR1-2	CX2:1	CR-1 - CX2:1 - 15-25ft	0	0	Center	0.00
CR1-3	CX3:1	CR-1 - CX3:1 - 25-35ft	0	0	Center	0.00
CR1-4	CX4:1	CR-1 - CX4:1 - 35-45ft	0	0	Center	0.00
CR1-5	CX5:1	CR-1 - CX5:1 - 45-55ft	0	0	Center	0.00
CR1-6	CX6:1	CR-1 - CX6:1 - 55-65ft	0	0	Center	0.00
CR1-7	CX7:1	CR-1 - CX7:1 - 65-75ft	0	0	Center	0.00
CR1-8	CX8:1	CR-1 - CX8:1 - 75-85ft	0	0	Center	0.00
CR1-9	CX9:1	CR-1 - CX9:1 - 85-95ft	0	0	Center	0.00
CR1-10	CX10:1	CR-1 - CX10:1 - 95-105ft	0	0	Center	0.00
CR1-11	CX11:1	CR-1 - CX11:1 - 105-115ft	0	0	Center	0.00
CR1-12	CX12:1	CR-1 - CX12:1 - 115-125ft	0	0	Center	0.00
CR1-13	CX13:1	CR-1 - CX13:1 - 125-130ft	0	0	Center	0.00

Tubular Davit Properties:

Davit Property Label	Stock Number	Steel Shape	Thickness (in)	Base Diameter or Depth (in)	Tip Diameter or Depth (in)	Taper (in/ft)	Drag Coef.	Modulus of Elasticity (ksi)	Geometry	Strength Check Type	Vertical Capacity (lbs)	Tension Capacity (lbs)	Compres. Capacity (lbs)	Long. Capacity (lbs)	Yield Stress (ksi)	Weight Density Override (lbs/ft^3)	Steel Shape At End	Texture
3" coax post		0	0.25	1	1	0	1	29000	1 point	Calculated	0	0	0	0	65	0		
20707-E		8T	0.3125	19	9	0	1.3	29000	3 points	Calculated	0	0	0	0	65	0		
20707-F		8T	0.3125	18	9	0	1.3	29000	2 points	Calculated	0	0	0	0	65	0		
12" antpost top		0	0.375	12.75	12.75	0	1	29000	1 point	Calculated	0	0	0	0	65	0		
12" antpost		0	0.375	12.75	12.75	0	1	29000	1 point	Calculated	0	0	0	0	65	0		

12" coax post	0	0.25	3	3	0	1	29000	1 point	Calculated	0	0	0	0	65	0

Intermediate Joints for Davit Property "3" coax post":

Joint Label	Horz. Offset (ft)	Vert. Offset (ft)
1	0.25	0

Intermediate Joints for Davit Property "20707-E":

Joint Label	Horz. Offset (ft)	Vert. Offset (ft)
1	14	-1.2865
2	19.75	-1.8125
3	21.75	-1.8125

Intermediate Joints for Davit Property "20707-F":

Joint Label	Horz. Offset (ft)	Vert. Offset (ft)
1	12	-1.167
2	14	-1.167

Intermediate Joints for Davit Property "12" antpost top":

Joint Label	Horz. Offset (ft)	Vert. Offset (ft)
1	0.873	0

Intermediate Joints for Davit Property "12" antpost":

Joint Label	Horz. Offset (ft)	Vert. Offset (ft)
1	0.753	0

Intermediate Joints for Davit Property "12" coax post":

Joint Label	Horz. Offset (ft)	Vert. Offset (ft)
1	1	0

Tubular Davit Arm Connectivity:

Davit Label	Attach Label	Davit Property Set	Azimuth (deg)
TL	P:tc	20707-E	0
TR	P:tc	20707-E	180
ML	P:mc	20707-F	0
MR	P:mc	20707-F	180
BL	P:bc	20707-F	0
BR	P:bc	20707-F	180
CX1	P:CX1	3" coax post	90
CX2	P:CX2	3" coax post	90
CX3	P:CX3	3" coax post	90
CX4	P:CX4	3" coax post	90
CX5	P:CX5	3" coax post	90
CX6	P:CX6	3" coax post	90
CX7	P:CX7	3" coax post	90
CX8	P:CX8	3" coax post	90
CX9	P:CX9	3" coax post	90
CX10	P:CX10	3" coax post	90
Clamp-B	P:Clamp-B	12" antpost	90
Clamp-T	P:Clamp-T	12" antpost top	90
CX11	Mast:CX11	12" coax post	90
CX12	Mast:CX12	12" coax post	90

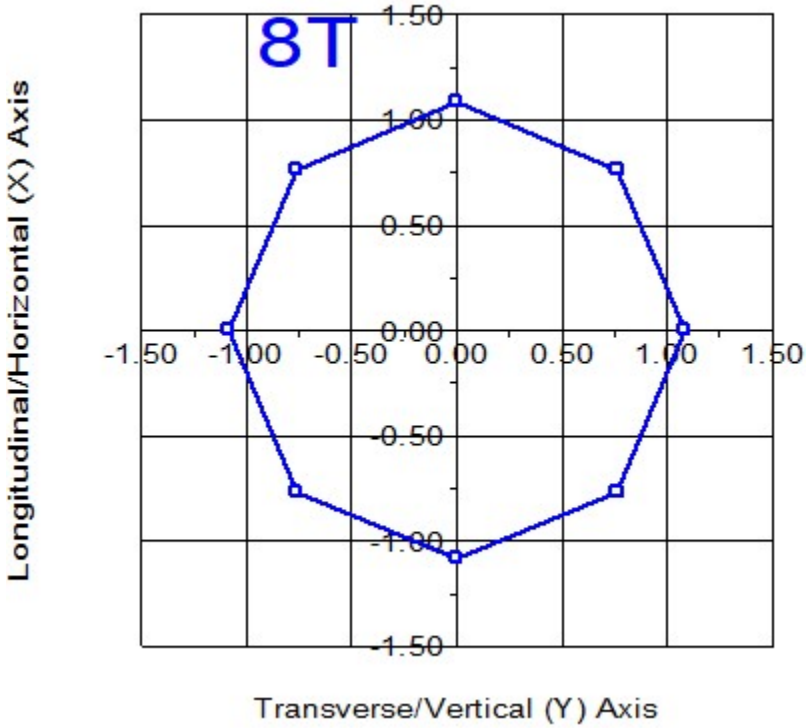
8T
1.50
1.00
0.50
0.00
-0.50
-1.00
-1.50
-1.50
-1.00
-0.50
0.00
0.50
1.00
1.50
Longitudinal/Horizontal (X) Axis
Transverse/Vertical (Y) Axis

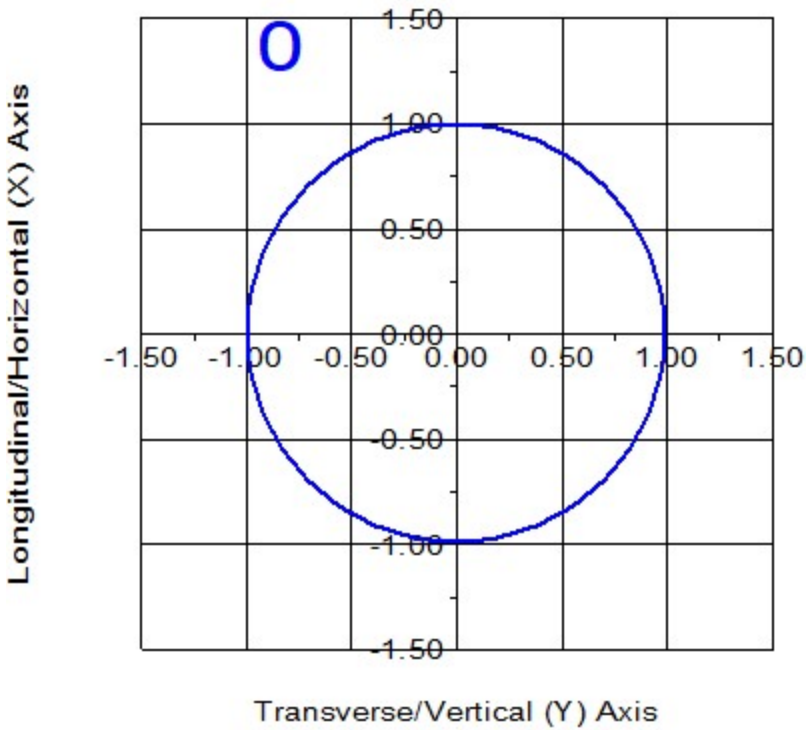

Tubular Davit Arm Steel Properties:

Element Label	Joint Label	Joint Position	Rel. Dist. (ft)	Outer Diam. (in)	Area (in^2)	V-Moment Inertia (in^4)	H-Moment Inertia (in^4)	D/t	W/t Max.	Fy (ksi)	Fa Min. (ksi)	V-Moment Capacity (ft-k)	H-Moment Capacity (ft-k)
TL	TL:O	Origin	0.00	19.00	19.35	893.31	893.31	0.00	21.0	65.00	65.00	470.57	470.57
TL	#TL:0	End	5.00	16.71	16.98	603.54	603.54	0.00	18.0	65.00	65.00	361.50	361.50
TL	#TL:0	Origin	5.00	16.71	16.98	603.54	603.54	0.00	18.0	65.00	65.00	361.50	361.50
TL	#TL:1	End	9.53	14.64	14.83	402.27	402.27	0.00	15.3	65.00	65.00	275.10	275.10
TL	#TL:1	Origin	9.53	14.64	14.83	402.27	402.27	0.00	15.3	65.00	65.00	275.10	275.10
TL	TL:1	End	14.06	12.56	12.68	251.60	251.60	0.00	12.5	65.00	65.00	200.49	200.49
TL	TL:1	Origin	14.06	12.56	12.68	251.60	251.60	0.00	12.5	65.00	65.00	200.49	200.49
TL	#TL:2	End	16.95	11.24	11.31	178.62	178.62	0.00	10.8	65.00	65.00	159.08	159.08
TL	#TL:2	Origin	16.95	11.24	11.31	178.62	178.62	0.00	10.8	65.00	65.00	159.08	159.08
TL	TL:2	End	19.83	9.92	9.94	121.33	121.33	0.00	9.0	65.00	65.00	122.46	122.46
TL	TL:2	Origin	19.83	9.92	9.94	121.33	121.33	0.00	9.0	65.00	65.00	122.46	122.46
TL	TL:3	End	21.83	9.00	9.00	89.84	89.84	0.00	7.8	65.00	65.00	99.91	99.91
TR	TR:O	Origin	0.00	19.00	19.35	893.31	893.31	0.00	21.0	65.00	65.00	470.57	470.57
TR	#TR:0	End	5.00	16.71	16.98	603.54	603.54	0.00	18.0	65.00	65.00	361.50	361.50
TR	#TR:0	Origin	5.00	16.71	16.98	603.54	603.54	0.00	18.0	65.00	65.00	361.50	361.50
TR	#TR:1	End	9.53	14.64	14.83	402.27	402.27	0.00	15.3	65.00	65.00	275.10	275.10
TR	#TR:1	Origin	9.53	14.64	14.83	402.27	402.27	0.00	15.3	65.00	65.00	275.10	275.10
TR	TR:1	End	14.06	12.56	12.68	251.60	251.60	0.00	12.5	65.00	65.00	200.49	200.49
TR	TR:1	Origin	14.06	12.56	12.68	251.60	251.60	0.00	12.5	65.00	65.00	200.49	200.49
TR	#TR:2	End	16.95	11.24	11.31	178.62	178.62	0.00	10.8	65.00	65.00	159.08	159.08
TR	#TR:2	Origin	16.95	11.24	11.31	178.62	178.62	0.00	10.8	65.00	65.00	159.08	159.08
TR	TR:2	End	19.83	9.92	9.94	121.33	121.33	0.00	9.0	65.00	65.00	122.46	122.46
TR	TR:2	Origin	19.83	9.92	9.94	121.33	121.33	0.00	9.0	65.00	65.00	122.46	122.46
TR	TR:3	End	21.83	9.00	9.00	89.84	89.84	0.00	7.8	65.00	65.00	99.91	99.91

ML	ML:O	Origin	0.00	18.00	18.32	757.46	757.46	0.00	19.7	65.00	65.00	421.18	421.18
ML	#ML:0	End	5.00	14.80	15.00	416.19	416.19	0.00	15.5	65.00	65.00	281.48	281.48
ML	#ML:0	Origin	5.00	14.80	15.00	416.19	416.19	0.00	15.5	65.00	65.00	281.48	281.48
ML	#ML:1	End	8.53	12.54	12.66	250.31	250.31	0.00	12.5	65.00	65.00	199.79	199.79
ML	#ML:1	Origin	8.53	12.54	12.66	250.31	250.31	0.00	12.5	65.00	65.00	199.79	199.79
ML	ML:1	End	12.06	10.28	10.32	135.67	135.67	0.00	9.5	65.00	65.00	132.08	132.08
ML	ML:1	Origin	12.06	10.28	10.32	135.67	135.67	0.00	9.5	65.00	65.00	132.08	132.08
ML	ML:2	End	14.06	9.00	9.00	89.84	89.84	0.00	7.8	65.00	65.00	99.91	99.91
MR	MR:O	Origin	0.00	18.00	18.32	757.46	757.46	0.00	19.7	65.00	65.00	421.18	421.18
MR	#MR:0	End	5.00	14.80	15.00	416.19	416.19	0.00	15.5	65.00	65.00	281.48	281.48
MR	#MR:0	Origin	5.00	14.80	15.00	416.19	416.19	0.00	15.5	65.00	65.00	281.48	281.48
MR	#MR:1	End	8.53	12.54	12.66	250.31	250.31	0.00	12.5	65.00	65.00	199.79	199.79
MR	#MR:1	Origin	8.53	12.54	12.66	250.31	250.31	0.00	12.5	65.00	65.00	199.79	199.79
MR	MR:1	End	12.06	10.28	10.32	135.67	135.67	0.00	9.5	65.00	65.00	132.08	132.08
MR	MR:1	Origin	12.06	10.28	10.32	135.67	135.67	0.00	9.5	65.00	65.00	132.08	132.08
MR	MR:2	End	14.06	9.00	9.00	89.84	89.84	0.00	7.8	65.00	65.00	99.91	99.91
BL	BL:O	Origin	0.00	18.00	18.32	757.46	757.46	0.00	19.7	65.00	65.00	421.18	421.18
BL	#BL:0	End	5.00	14.80	15.00	416.19	416.19	0.00	15.5	65.00	65.00	281.48	281.48
BL	#BL:0	Origin	5.00	14.80	15.00	416.19	416.19	0.00	15.5	65.00	65.00	281.48	281.48
BL	#BL:1	End	8.53	12.54	12.66	250.31	250.31	0.00	12.5	65.00	65.00	199.79	199.79
BL	#BL:1	Origin	8.53	12.54	12.66	250.31	250.31	0.00	12.5	65.00	65.00	199.79	199.79
BL	BL:1	End	12.06	10.28	10.32	135.67	135.67	0.00	9.5	65.00	65.00	132.08	132.08
BL	BL:1	Origin	12.06	10.28	10.32	135.67	135.67	0.00	9.5	65.00	65.00	132.08	132.08
BL	BL:2	End	14.06	9.00	9.00	89.84	89.84	0.00	7.8	65.00	65.00	99.91	99.91
BR	BR:O	Origin	0.00	18.00	18.32	757.46	757.46	0.00	19.7	65.00	65.00	421.18	421.18
BR	#BR:0	End	5.00	14.80	15.00	416.19	416.19	0.00	15.5	65.00	65.00	281.48	281.48
BR	#BR:0	Origin	5.00	14.80	15.00	416.19	416.19	0.00	15.5	65.00	65.00	281.48	281.48
BR	#BR:1	End	8.53	12.54	12.66	250.31	250.31	0.00	12.5	65.00	65.00	199.79	199.79
BR	#BR:1	Origin	8.53	12.54	12.66	250.31	250.31	0.00	12.5	65.00	65.00	199.79	199.79
BR	BR:1	End	12.06	10.28	10.32	135.67	135.67	0.00	9.5	65.00	65.00	132.08	132.08
BR	BR:1	Origin	12.06	10.28	10.32	135.67	135.67	0.00	9.5	65.00	65.00	132.08	132.08
BR	BR:2	End	14.06	9.00	9.00	89.84	89.84	0.00	7.8	65.00	65.00	99.91	99.91
CX1	CX1:O	Origin	0.00	1.00	0.59	0.05	0.05	4.00	0.0	65.00	65.00	0.50	0.50
CX1	CX1:1	End	0.25	1.00	0.59	0.05	0.05	4.00	0.0	65.00	65.00	0.50	0.50
CX2	CX2:O	Origin	0.00	1.00	0.59	0.05	0.05	4.00	0.0	65.00	65.00	0.50	0.50
CX2	CX2:1	End	0.25	1.00	0.59	0.05	0.05	4.00	0.0	65.00	65.00	0.50	0.50
CX3	CX3:O	Origin	0.00	1.00	0.59	0.05	0.05	4.00	0.0	65.00	65.00	0.50	0.50
CX3	CX3:1	End	0.25	1.00	0.59	0.05	0.05	4.00	0.0	65.00	65.00	0.50	0.50
CX4	CX4:O	Origin	0.00	1.00	0.59	0.05	0.05	4.00	0.0	65.00	65.00	0.50	0.50
CX4	CX4:1	End	0.25	1.00	0.59	0.05	0.05	4.00	0.0	65.00	65.00	0.50	0.50
CX5	CX5:O	Origin	0.00	1.00	0.59	0.05	0.05	4.00	0.0	65.00	65.00	0.50	0.50
CX5	CX5:1	End	0.25	1.00	0.59	0.05	0.05	4.00	0.0	65.00	65.00	0.50	0.50
CX6	CX6:O	Origin	0.00	1.00	0.59	0.05	0.05	4.00	0.0	65.00	65.00	0.50	0.50
CX6	CX6:1	End	0.25	1.00	0.59	0.05	0.05	4.00	0.0	65.00	65.00	0.50	0.50
CX7	CX7:O	Origin	0.00	1.00	0.59	0.05	0.05	4.00	0.0	65.00	65.00	0.50	0.50
CX7	CX7:1	End	0.25	1.00	0.59	0.05	0.05	4.00	0.0	65.00	65.00	0.50	0.50
CX8	CX8:O	Origin	0.00	1.00	0.59	0.05	0.05	4.00	0.0	65.00	65.00	0.50	0.50
CX8	CX8:1	End	0.25	1.00	0.59	0.05	0.05	4.00	0.0	65.00	65.00	0.50	0.50
CX9	CX9:O	Origin	0.00	1.00	0.59	0.05	0.05	4.00	0.0	65.00	65.00	0.50	0.50
CX9	CX9:1	End	0.25	1.00	0.59	0.05	0.05	4.00	0.0	65.00	65.00	0.50	0.50
CX10	CX10:O	Origin	0.00	1.00	0.59	0.05	0.05	4.00	0.0	65.00	65.00	0.50	0.50
CX10	CX10:1	End	0.25	1.00	0.59	0.05	0.05	4.00	0.0	65.00	65.00	0.50	0.50
Clamp-B	Clamp-B:O	Origin	0.00	12.75	14.58	279.34	279.34	34.00	0.0	65.00	65.00	237.34	237.34
Clamp-B	Clamp-B:1	End	0.75	12.75	14.58	279.34	279.34	34.00	0.0	65.00	65.00	237.34	237.34
Clamp-T	Clamp-T:O	Origin	0.00	12.75	14.58	279.34	279.34	34.00	0.0	65.00	65.00	237.34	237.34
Clamp-T	Clamp-T:1	End	0.87	12.75	14.58	279.34	279.34	34.00	0.0	65.00	65.00	237.34	237.34
CX11	Mast:CX11	Origin	0.00	3.00	2.16	2.06	2.06	12.00	0.0	65.00	65.00	7.43	7.43
CX11	CX11:1	End	1.00	3.00	2.16	2.06	2.06	12.00	0.0	65.00	65.00	7.43	7.43
CX12	Mast:CX12	Origin	0.00	3.00	2.16	2.06	2.06	12.00	0.0	65.00	65.00	7.43	7.43
CX12	CX12:1	End	1.00	3.00	2.16	2.06	2.06	12.00	0.0	65.00	65.00	7.43	7.43
CX13	Mast:ANT	Origin	0.00	3.00	2.16	2.06	2.06	12.00	0.0	65.00	65.00	7.43	7.43
CX13	CX13:1	End	1.00	3.00	2.16	2.06	2.06	12.00	0.0	65.00	65.00	7.43	7.43

Tubular X-Arm Properties:

Cross Arm Property Label	Stock Number	Steel Shape	Thickness (in)	Diameter or Depth (in)	Length (ft)	Modulus of Elasticity (ksi)	Drag Coef.	Geometry	Strength Check Type	Vertical Capacity (lbs)	Trans. Capacity (lbs)	Long. Capacity (lbs)	Steel Yield Stress (ksi)	Weight Density Override (lbs/ft^3)	Texture
12"x28` Sch 80 Pipe (12XS)		0	0.465	12.75	28	29000	1.6	4 points	Calculated	0	0	0	35	0	

Joints Relative to the Origin for Cross Arm Property "12"x28` Sch 80 Pipe (12XS)":

Joint Label	Offset (ft)
CX11	5
Top	10
CX12	15
ANT	25

Tubular X-Arm Connectivity:

X-Arm Label	X-Arm Property Set	Azimuth (deg)	Slope (deg)	Attach. Labels	Connects
Mast	12"x28` Sch 80 Pipe (12XS)	0	0		6 connections

X-Arm Connections for "Mast":

Attach Label	Offset (ft)	Connect At	Connection Code Type
Mast:O	0.000	Clamp-B:1	Fixed
Mast:CX11	5.000		
Mast:Top	10.000	Clamp-T:1	Fixed
Mast:CX12	15.000		
Mast:ANT	25.000		
Mast:E	28.000		

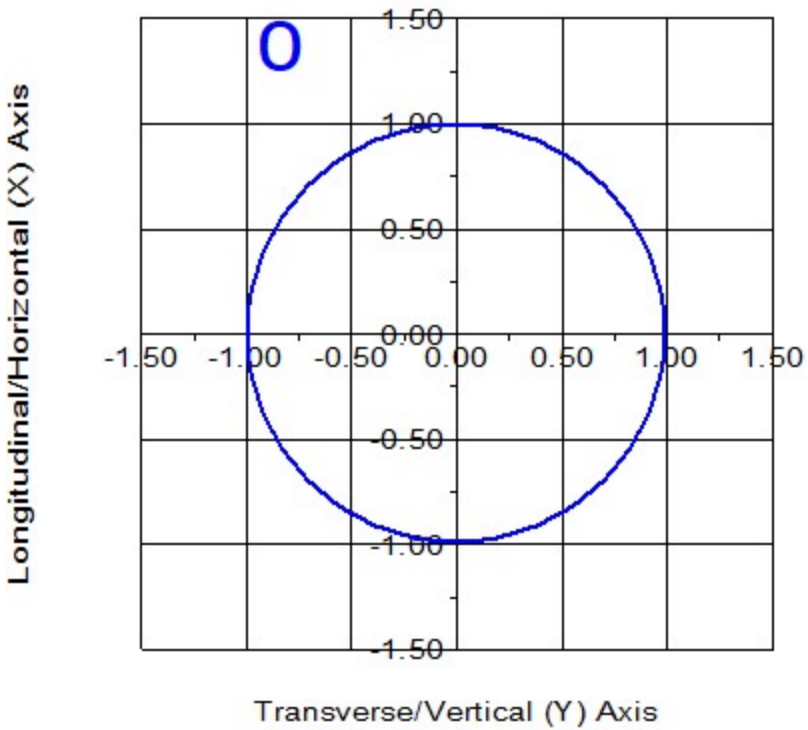

Tubular X-Arm Steel Properties:

Element Label	Joint Label	Joint Position	Rel. Dist. (ft)	Outer Diam. (in)	Area (in^2)	V-Moment Inertia (in^4)	H-Moment Inertia (in^4)	D/t	W/t Max.	Fy (ksi)	Fa Min. (ksi)	V-Moment Capacity (ft-k)	H-Moment Capacity (ft-k)
Mast	Mast:O	Origin	0.00	12.75	17.95	339.05	339.05	27.42	0.0	35.00	35.00	155.12	155.12
Mast	#sMast:0	End	2.50	12.75	17.95	339.05	339.05	27.42	0.0	35.00	35.00	155.12	155.12
Mast	#sMast:0	Origin	2.50	12.75	17.95	339.05	339.05	27.42	0.0	35.00	35.00	155.12	155.12
Mast	Mast:CX11	End	5.00	12.75	17.95	339.05	339.05	27.42	0.0	35.00	35.00	155.12	155.12
Mast	Mast:CX11	Origin	5.00	12.75	17.95	339.05	339.05	27.42	0.0	35.00	35.00	155.12	155.12
Mast	#sMast:1	End	7.50	12.75	17.95	339.05	339.05	27.42	0.0	35.00	35.00	155.12	155.12
Mast	#sMast:1	Origin	7.50	12.75	17.95	339.05	339.05	27.42	0.0	35.00	35.00	155.12	155.12
Mast	Mast:Top	End	10.00	12.75	17.95	339.05	339.05	27.42	0.0	35.00	35.00	155.12	155.12
Mast	Mast:Top	Origin	10.00	12.75	17.95	339.05	339.05	27.42	0.0	35.00	35.00	155.12	155.12
Mast	Mast:CX12	End	15.00	12.75	17.95	339.05	339.05	27.42	0.0	35.00	35.00	155.12	155.12
Mast	Mast:CX12	Origin	15.00	12.75	17.95	339.05	339.05	27.42	0.0	35.00	35.00	155.12	155.12
Mast	#sMast:2	End	20.00	12.75	17.95	339.05	339.05	27.42	0.0	35.00	35.00	155.12	155.12
Mast	#sMast:2	Origin	20.00	12.75	17.95	339.05	339.05	27.42	0.0	35.00	35.00	155.12	155.12
Mast	#sMast:3	End	22.50	12.75	17.95	339.05	339.05	27.42	0.0	35.00	35.00	155.12	155.12
Mast	#sMast:3	Origin	22.50	12.75	17.95	339.05	339.05	27.42	0.0	35.00	35.00	155.12	155.12
Mast	Mast:ANT	End	25.00	12.75	17.95	339.05	339.05	27.42	0.0	35.00	35.00	155.12	155.12
Mast	Mast:ANT	Origin	25.00	12.75	17.95	339.05	339.05	27.42	0.0	35.00	35.00	155.12	155.12
Mast	Mast:E	End	28.00	12.75	17.95	339.05	339.05	27.42	0.0	35.00	35.00	155.12	155.12

*** Insulator Data

Suspension Properties:

Label	Stock Number	Length (ft)	Weight (lbs)	Wind Area (ft^2)	Tension Capacity (lbs)	Top Rect Width (ft)	Top Rect Height (ft)	Bot. Rect Width (ft)	Bot. Rect Height (ft)	Vert. Rect Width (ft)	Vert. Rect Height (ft)	Hardware Capacity (lbs)	Notes	Draw	Rigid

Cond	6	120	1	2e+04	0.25	0.25	0.25	0.25	0.25	0.25	0	Sheds	No
sw	0.5	25	0.25	2e+04	0	0	0	0	0	0	0	Sheds	No

Suspension Insulator Connectivity:

Suspension Label	Structure Attach	Tip Label	Property Set	Cond. 1 Minimum Swing (deg)	Cond. 1 Maximum Swing (deg)	Cond. 2 Minimum Swing (deg)	Cond. 2 Maximum Swing (deg)	Cond. 3 Minimum Swing (deg)	Cond. 3 Maximum Swing (deg)	Cond. 4 Minimum Swing (deg)	Cond. 4 Maximum Swing (deg)	Min. Required Vertical Load (uplift) (lbs)
SWL	TL:3	SWL	sw	0.00	0.00	0.00	0.00	0.00	0.00	0.00	0.00	No Limit
SWR	TR:3	SWR	sw	0.00	0.00	0.00	0.00	0.00	0.00	0.00	0.00	No Limit
TCL	TL:1	TCL	Cond	0.00	0.00	0.00	0.00	0.00	0.00	0.00	0.00	No Limit
TCR	TR:1	TCR	Cond	0.00	0.00	0.00	0.00	0.00	0.00	0.00	0.00	No Limit
MCL	ML:2	MCL	Cond	0.00	0.00	0.00	0.00	0.00	0.00	0.00	0.00	No Limit
MCR	MR:2	MCR	Cond	0.00	0.00	0.00	0.00	0.00	0.00	0.00	0.00	No Limit
BCL	BL:2	BCL	Cond	0.00	0.00	0.00	0.00	0.00	0.00	0.00	0.00	No Limit
BCR	BR:2	BCR	Cond	0.00	0.00	0.00	0.00	0.00	0.00	0.00	0.00	No Limit

Material List Options:
Show Parts: YES
Decompose Assemblies: NO
Show Assemblies: YES

Material List

	Stock Number	Item Description	Quantity	Unit of Measure
(1)	802738 Triple Arm w/ Prop HR	Equipment property: Existing Mount #1	1.00	Each
	2.375"O.D. x 8` Mount Pipe	Equipment property: Proposed Mounting Pipe #1	9.00	Each
	800 10965	Equipment property: Proposed Antenna #1	3.00	Each
	TMABPD7823VG12A	Equipment property: Proposed Other #1	6.00	Each
	SBNH-1D6565B	Equipment property: Existing Antenna #1	3.00	Each
	QS66512-2	Equipment property: Existing Antenna #1	3.00	Each
	TMA2117F00V1-1	Equipment property: Existing Other #1	6.00	Each
	CR-1 - CX1:1	Equipment property: CR-1 - CX1:1 - 0-10ft	1.00	Each
	CR-1 - CX2:1	Equipment property: CR-1 - CX2:1 - 10-20ft	1.00	Each
	CR-1 - CX3:1	Equipment property: CR-1 - CX3:1 - 20-30ft	1.00	Each
	CR-1 - CX4:1	Equipment property: CR-1 - CX4:1 - 30-40ft	1.00	Each
	CR-1 - CX5:1	Equipment property: CR-1 - CX5:1 - 40-50ft	1.00	Each
	CR-1 - CX6:1	Equipment property: CR-1 - CX6:1 - 50-60ft	1.00	Each
	CR-1 - CX7:1	Equipment property: CR-1 - CX7:1 - 60-70ft	1.00	Each
	CR-1 - CX8:1	Equipment property: CR-1 - CX8:1 - 70-80ft	1.00	Each
	CR-1 - CX9:1	Equipment property: CR-1 - CX9:1 - 80-90ft	1.00	Each
	CR-1 - CX10:1	Equipment property: CR-1 - CX10:1 - 90-100ft	1.00	Each
	CR-1 - CX11:1	Equipment property: CR-1 - CX11:1 - 100-110ft	1.00	Each
	CR-1 - CX12:1	Equipment property: CR-1 - CX12:1 - 110-120ft	1.00	Each
	CR-1 - CX13:1	Equipment property: CR-1 - CX13:1 - 120-135ft	1.00	Each

*** Loads Data

Loads from file: G:\Transmission\Eversource\2019\806_Smartlink\80619-0001 Tower 24063 AT&T CTL02343\001.6000 - SA\PLS-Pole\80619-0001.001.6000.lca

Insulator dead and wind loads are already included in the point loads printed below.

Loading Method Parameters:

Structure Height Summary (used for calculating wind/ice adjust with height):

Z of ground for wind height adjust	0.00	(ft) and structure Z coordinate that will be put on the centerline ground profile in PLS-CADD.
Ground elevation shift	0.00	(ft)
Z of ground with shift	0.00	(ft)
Z of structure top (highest joint)	133.00	(ft)
Structure height	133.00	(ft)
Structure height above ground	133.00	(ft)

Vector Load Cases:

Load Case Description	Dead Load Factor	Wind Area Factor	SF for Steel Poles Tubular Arms and Towers	SF for Wood Poles	SF for Conc. Ult.	SF for Conc. First Crack	SF for Conc. Zero Tens.	SF for Guys and Cables	SF for Non Tubular Arms	SF for Braces	SF for Insuls.	SF for Hardware	SF For Found.	Point Loads	Wind/Ice Model	Trans. Wind Pressure (psf)	Longit. Wind Pressure (psf)	Ice Thick. (in)	Ice Density (lbs/ft^3)	Temperature (deg F)	Pole Check Limit % or (ft)	Pole Deflection Limit
NESC 250B (Heavy)	1.5000	2.5000	1.00000	0.0000	0.0000	1.0000	0.0000	1.0000	1.0000	1.0000	1.0000	0.0000	1.0000	8 loads	Wind on All	4	0	0.500	57.000	0.0	No Limit	0
NESC 250C (Extreme Wind)	1.0000	1.0000	1.00000	0.0000	0.0000	1.0000	0.0000	1.0000	1.0000	1.0000	1.0000	0.0000	1.0000	8 loads	NESC 2007	31	0	0.000	57.000	60.0	No Limit	0
NESC 250D (Extreme Ice w/Wind)	1.0000	1.0000	1.00000	0.0000	0.0000	1.0000	0.0000	1.0000	1.0000	1.0000	1.0000	0.0000	1.0000	8 loads	Wind on All	6.4	0	0.750	57.000	15.0	No Limit	0

Point Loads for Load Case "NESC 250B (Heavy)":

Joint Label	Vertical Load (lbs)	Transverse Load (lbs)	Longitudinal Load (lbs)	Load Comment
SWR	1544	790	2	Shield Wire
SWL	1468	736	1	Shield Wire
TCR	8477	2443	3	Conductor
TCL	8477	2443	3	Conductor
MCR	8477	2443	3	Conductor
MCL	8477	2443	3	Conductor
BCR	8477	2443	3	Conductor
BCL	8477	2443	3	Conductor

Detailed Pole Loading Data for Load Case "NESC 250B (Heavy)":

Notes: Does not include loads from equipment, arms, guys, braces, etc. or user input loads.
Wind load is calculated for the undeformed shape of a pole.

Pole Label	Top Joint	Bottom Joint	Section Top Z (ft)	Section Bottom Z (ft)	Section Average Elevation (ft)	Outer Diameter (in)	Reynolds Number	Drag Coef.	Adjusted Wind Pressure (psf)	Adjusted Ice Thickness (in)	Pole Vert. Load (lbs)	Pole Wind Load (lbs)	Pole Ice Vertical Load (lbs)	Pole Ice Wind Load (lbs)	Tran. Wind Load (lbs)	Long. Wind Load (lbs)
P	P:t	P:tc	120.00	118.90	119.45	26.838	1.27e+06	1.600	10.00	0.50	179.80	39.51	18.86	1.47	40.98	0.00
P	P:tc	P:Clamp-T	118.90	115.00	116.95	27.534	1.3e+06	1.600	10.00	0.50	651.20	143.04	68.27	5.19	148.23	0.00
P	P:Clamp-T		115.00	110.00	112.50	28.772	1.36e+06	1.600	10.00	0.50	873.84	191.82	91.55	6.67	198.49	0.00
P		P:Clamp-B	110.00	105.00	107.50	30.164	1.43e+06	1.600	10.00	0.50	916.67	201.10	95.98	6.67	207.77	0.00
P	P:Clamp-B	P:CX10	105.00	100.00	102.50	31.556	1.49e+06	1.600	10.00	0.50	959.50	210.38	100.41	6.67	217.05	0.00
P	P:CX10	P:mc	100.00	96.54	98.27	32.733	1.55e+06	1.600	10.00	0.50	688.65	150.93	72.03	4.61	155.54	0.00
P	P:mc		96.54	93.27	94.91	33.670	1.59e+06	1.600	10.00	0.50	670.26	146.85	70.09	4.36	151.21	0.00
P		P:CX9	93.27	90.00	91.64	34.580	1.64e+06	1.600	10.00	0.50	688.59	150.82	71.98	4.36	155.19	0.00
P	P:CX9		90.00	85.00	87.50	35.731	1.69e+06	1.600	10.00	0.50	1088.00	238.22	113.69	6.67	244.89	0.00
P		P:CX8	85.00	80.00	82.50	37.123	1.76e+06	1.600	10.00	0.50	1130.83	247.50	118.12	6.67	254.17	0.00
P	P:CX8		80.00	77.27	78.64	38.449	1.82e+06	1.600	10.00	0.50	849.77	139.91	66.77	3.64	143.55	0.00
P		P:bc	77.27	74.54	75.91	39.209	1.86e+06	1.600	10.00	0.50	866.85	142.68	68.09	3.64	146.31	0.00
P	P:bc	P:CX7	74.54	70.00	72.27	40.221	1.9e+06	1.600	10.00	0.50	1480.46	243.59	116.26	6.06	249.65	0.00
P	P:CX7		70.00	66.42	68.21	41.352	1.96e+06	1.600	10.00	0.50	1201.29	197.59	94.30	4.78	202.37	0.00
P			66.42	62.83	64.62	42.350	2.01e+06	1.600	10.00	0.50	1230.63	202.36	96.58	4.78	207.14	0.00

P		P:CX6	62.83	60.00	61.42	42.743	2.02e+06	1.600	10.00	0.50	2083.73	161.46	77.06	3.78	165.24	0.00
P	P:CX6		60.00	57.00	58.50	43.055	2.04e+06	1.600	10.00	0.50	2249.04	172.23	82.20	4.00	176.23	0.00
P			57.00	53.50	55.25	43.959	2.08e+06	1.600	10.00	0.50	1402.19	205.15	97.91	4.67	209.82	0.00
P		P:CX5	53.50	50.00	51.75	44.934	2.13e+06	1.600	10.00	0.50	1433.67	209.70	100.08	4.67	214.37	0.00
P	P:CX5		50.00	46.38	48.19	45.925	2.17e+06	1.600	10.00	0.50	1518.06	221.98	105.94	4.83	226.82	0.00
P			46.38	42.75	44.56	46.935	2.22e+06	1.600	10.00	0.50	1551.87	226.86	108.27	4.83	231.70	0.00
P		P:CX4	42.75	40.00	41.38	47.947	2.27e+06	1.600	10.00	0.50	1334.81	175.81	83.91	3.67	179.48	0.00
P	P:CX4		40.00	35.00	37.50	49.026	2.32e+06	1.600	10.00	0.50	2482.33	326.85	155.99	6.67	333.52	0.00
P		P:CX3	35.00	30.00	32.50	50.418	2.39e+06	1.600	10.00	0.50	2553.72	336.13	160.42	6.67	342.80	0.00
P	P:CX3		30.00	26.38	28.19	51.618	2.44e+06	1.600	10.00	0.50	1896.08	249.50	119.08	4.83	254.33	0.00
P			26.38	22.75	24.56	52.627	2.49e+06	1.600	10.00	0.50	1933.61	254.38	121.40	4.83	259.21	0.00
P		P:CX2	22.75	20.00	21.38	53.515	2.53e+06	1.600	10.00	0.50	1491.90	196.23	93.65	3.67	199.90	0.00
P	P:CX2		20.00	15.00	17.50	54.593	2.58e+06	1.600	10.00	0.50	2767.88	363.97	173.71	6.67	370.64	0.00
P		P:CX1	15.00	10.00	12.50	55.985	2.65e+06	1.600	10.00	0.50	2839.27	373.25	178.14	6.67	379.92	0.00
P	P:CX1		10.00	5.00	7.50	57.377	2.72e+06	1.600	10.00	0.50	2910.65	382.53	182.57	6.67	389.20	0.00
P		P:g	5.00	0.00	2.50	58.769	2.78e+06	1.600	10.00	0.50	2982.04	391.81	187.00	6.67	398.48	0.00

Point Loads for Load Case "NESC 250C (Extreme Wind)":

Joint Label	Vertical Load (lbs)	Transverse Load (lbs)	Longitudinal Load (lbs)	Load Comment
SWR	749	1068	5	Shield Wire
SWL	710	877	4	Shield Wire
TCR	4797	5184	21	Conductor
TCL	4801	5184	21	Conductor
MCR	4797	5184	21	Conductor
MCL	4801	5184	21	Conductor
BCR	4797	5184	21	Conductor
BCL	4801	5184	21	Conductor

Detailed Pole Loading Data for Load Case "NESC 250C (Extreme Wind)":

Notes: Does not include loads from equipment, arms, guys, braces, etc. or user input loads.
Wind load is calculated for the undeformed shape of a pole.

Pole Label	Top Joint	Bottom Joint	Section Top Z (ft)	Section Bottom Z (ft)	Section Average Elevation (ft)	Outer Diameter (in)	Reynolds Number	Drag Coef.	Adjusted Wind Pressure (psf)	Adjusted Ice Thickness (in)	Pole Vert. Load (lbs)	Pole Wind Load (lbs)	Pole Ice Vertical Load (lbs)	Pole Ice Wind Load (lbs)	Tran. Wind Load (lbs)	Long. Wind Load (lbs)
P	P:t	P:tc	120.00	118.90	119.45	26.838	2.29e+06	1.000	32.40	0.00	119.87	80.00	0.00	0.00	80.00	0.00
P	P:tc	P:Clamp-T	118.90	115.00	116.95	27.534	2.35e+06	1.000	32.40	0.00	434.14	289.65	0.00	0.00	289.65	0.00
P	P:Clamp-T		115.00	110.00	112.50	28.772	2.45e+06	1.000	32.40	0.00	582.56	388.45	0.00	0.00	388.45	0.00
P		P:Clamp-B	110.00	105.00	107.50	30.164	2.57e+06	1.000	32.40	0.00	611.11	407.24	0.00	0.00	407.24	0.00
P	P:Clamp-B	P:CX10	105.00	100.00	102.50	31.556	2.69e+06	1.000	32.40	0.00	639.67	426.03	0.00	0.00	426.03	0.00
P	P:CX10	P:mc	100.00	96.54	98.27	32.733	2.79e+06	1.000	32.40	0.00	459.10	305.64	0.00	0.00	305.64	0.00
P	P:mc		96.54	93.27	94.91	33.670	2.87e+06	1.000	32.40	0.00	446.84	297.38	0.00	0.00	297.38	0.00
P		P:CX9	93.27	90.00	91.64	34.580	2.95e+06	1.000	32.40	0.00	459.06	305.43	0.00	0.00	305.43	0.00
P	P:CX9		90.00	85.00	87.50	35.731	3.05e+06	1.000	32.40	0.00	725.33	482.41	0.00	0.00	482.41	0.00
P		P:CX8	85.00	80.00	82.50	37.123	3.16e+06	1.000	32.40	0.00	753.89	501.20	0.00	0.00	501.20	0.00
P	P:CX8		80.00	77.27	78.64	38.449	3.28e+06	1.000	32.40	0.00	566.51	283.33	0.00	0.00	283.33	0.00
P		P:bc	77.27	74.54	75.91	39.209	3.34e+06	1.000	32.40	0.00	577.90	288.92	0.00	0.00	288.92	0.00
P	P:bc	P:CX7	74.54	70.00	72.27	40.221	3.43e+06	1.000	32.40	0.00	986.97	493.28	0.00	0.00	493.28	0.00
P	P:CX7		70.00	66.42	68.21	41.352	3.52e+06	1.000	32.40	0.00	800.86	400.13	0.00	0.00	400.13	0.00
P			66.42	62.83	64.62	42.350	3.61e+06	1.000	32.40	0.00	820.42	409.78	0.00	0.00	409.78	0.00
P		P:CX6	62.83	60.00	61.42	42.743	3.64e+06	1.000	32.40	0.00	1389.16	326.97	0.00	0.00	326.97	0.00
P	P:CX6		60.00	57.00	58.50	43.055	3.67e+06	1.000	32.40	0.00	1499.36	348.77	0.00	0.00	348.77	0.00
P			57.00	53.50	55.25	43.959	3.75e+06	1.000	32.40	0.00	934.79	415.45	0.00	0.00	415.45	0.00
P		P:CX5	53.50	50.00	51.75	44.934	3.83e+06	1.000	32.40	0.00	955.78	424.66	0.00	0.00	424.66	0.00
P	P:CX5		50.00	46.38	48.19	45.925	3.91e+06	1.000	32.40	0.00	1012.04	449.53	0.00	0.00	449.53	0.00
P			46.38	42.75	44.56	46.935	4e+06	1.000	32.40	0.00	1034.58	459.41	0.00	0.00	459.41	0.00
P		P:CX4	42.75	40.00	41.38	47.947	4.09e+06	1.000	32.40	0.00	889.87	356.03	0.00	0.00	356.03	0.00
P	P:CX4		40.00	35.00	37.50	49.026	4.18e+06	1.000	32.40	0.00	1654.89	661.90	0.00	0.00	661.90	0.00
P		P:CX3	35.00	30.00	32.50	50.418	4.3e+06	1.000	32.40	0.00	1702.48	680.69	0.00	0.00	680.69	0.00
P	P:CX3		30.00	26.38	28.19	51.618	4.4e+06	1.000	32.40	0.00	1264.06	505.25	0.00	0.00	505.25	0.00
P			26.38	22.75	24.56	52.627	4.49e+06	1.000	32.40	0.00	1289.07	515.13	0.00	0.00	515.13	0.00
P		P:CX2	22.75	20.00	21.38	53.515	4.56e+06	1.000	32.40	0.00	994.60	397.38	0.00	0.00	397.38	0.00
P	P:CX2		20.00	15.00	17.50	54.593	4.65e+06	1.000	32.40	0.00	1845.25	737.07	0.00	0.00	737.07	0.00
P		P:CX1	15.00	10.00	12.50	55.985	4.77e+06	1.000	32.40	0.00	1892.84	755.86	0.00	0.00	755.86	0.00
P	P:CX1		10.00	5.00	7.50	57.377	4.89e+06	1.000	32.40	0.00	1940.44	774.65	0.00	0.00	774.65	0.00
P		P:g	5.00	0.00	2.50	58.769	5.01e+06	1.000	32.40	0.00	1988.03	793.44	0.00	0.00	793.44	0.00

Point Loads for Load Case "NESC 250D (Extreme Ice w/Wind)":

Joint Label	Vertical Load (lbs)	Transverse Load (lbs)	Longitudinal Load (lbs)	Load Comment

SWR	1655	728	2	Shield Wire
SWL	1579	690	2	Shield Wire
TCR	7599	2064	4	Conductor
TCL	7603	2064	4	Conductor
MCR	7599	2064	4	Conductor
MCL	7603	2064	4	Conductor
BCR	7599	2064	4	Conductor
BCL	7603	2064	4	Conductor

Detailed Pole Loading Data for Load Case "NESC 250D (Extreme Ice w/Wind)":

Notes: Does not include loads from equipment, arms, guys, braces, etc. or user input loads.
Wind load is calculated for the undeformed shape of a pole.

Pole Label	Top Joint	Bottom Joint	Section Top Z (ft)	Section Bottom Z (ft)	Section Average Elevation (ft)	Outer Diameter (in)	Reynolds Number	Drag Coef.	Adjusted Wind Pressure (psf)	Adjusted Ice Thickness (in)	Pole Vert. Load (lbs)	Pole Wind Load (lbs)	Pole Ice Vertical Load (lbs)	Pole Ice Wind Load (lbs)	Tran. Wind Load (lbs)	Long. Wind Load (lbs)
P	P:t	P:tc	120.00	118.90	119.45	26.838	1.02e+06	1.600	6.40	0.75	119.87	25.29	28.28	1.41	26.70	0.00
P	P:tc	P:Clamp-T	118.90	115.00	116.95	27.534	1.04e+06	1.600	6.40	0.75	434.14	91.55	102.40	4.99	96.54	0.00
P	P:Clamp-T		115.00	110.00	112.50	28.772	1.09e+06	1.600	6.40	0.75	582.56	122.78	137.32	6.40	129.18	0.00
P		P:Clamp-B	110.00	105.00	107.50	30.164	1.14e+06	1.600	6.40	0.75	611.11	128.72	143.97	6.40	135.12	0.00
P	P:Clamp-B	P:CX10	105.00	100.00	102.50	31.556	1.2e+06	1.600	6.40	0.75	639.67	134.66	150.61	6.40	141.06	0.00
P	P:CX10	P:mc	100.00	96.54	98.27	32.733	1.24e+06	1.600	6.40	0.75	459.10	96.60	108.05	4.43	101.03	0.00
P	P:mc		96.54	93.27	94.91	33.670	1.28e+06	1.600	6.40	0.75	446.84	93.99	105.13	4.19	98.18	0.00
P		P:CX9	93.27	90.00	91.64	34.580	1.31e+06	1.600	6.40	0.75	459.06	96.53	107.97	4.19	100.72	0.00
P	P:CX9		90.00	85.00	87.50	35.731	1.35e+06	1.600	6.40	0.75	725.33	152.47	170.54	6.40	158.88	0.00
P		P:CX8	85.00	80.00	82.50	37.123	1.41e+06	1.600	6.40	0.75	753.89	158.41	177.18	6.40	164.81	0.00
P	P:CX8		80.00	77.27	78.64	38.449	1.46e+06	1.600	6.40	0.75	566.51	89.55	100.16	3.49	93.04	0.00
P		P:bc	77.27	74.54	75.91	39.209	1.49e+06	1.600	6.40	0.75	577.90	91.32	102.14	3.49	94.81	0.00
P	P:bc	P:CX7	74.54	70.00	72.27	40.221	1.52e+06	1.600	6.40	0.75	986.97	155.91	174.38	5.81	161.73	0.00
P	P:CX7		70.00	66.42	68.21	41.352	1.57e+06	1.600	6.40	0.75	800.86	126.47	141.45	4.59	131.06	0.00
P			66.42	62.83	64.62	42.350	1.6e+06	1.600	6.40	0.75	820.42	129.52	144.86	4.59	134.11	0.00
P		P:CX6	62.83	60.00	61.42	42.743	1.62e+06	1.600	6.40	0.75	1389.16	103.34	115.59	3.63	106.97	0.00
P	P:CX6		60.00	57.00	58.50	43.055	1.63e+06	1.600	6.40	0.75	1499.36	110.23	123.30	3.84	114.07	0.00
P			57.00	53.50	55.25	43.959	1.67e+06	1.600	6.40	0.75	934.79	131.31	146.87	4.48	135.79	0.00
P		P:CX5	53.50	50.00	51.75	44.934	1.7e+06	1.600	6.40	0.75	955.78	134.22	150.12	4.48	138.70	0.00
P	P:CX5		50.00	46.38	48.19	45.925	1.74e+06	1.600	6.40	0.75	1012.04	142.08	158.92	4.64	146.72	0.00
P			46.38	42.75	44.56	46.935	1.78e+06	1.600	6.40	0.75	1034.58	145.20	162.41	4.64	149.84	0.00
P		P:CX4	42.75	40.00	41.38	47.947	1.82e+06	1.600	6.40	0.75	889.87	112.53	125.86	3.52	116.05	0.00
P	P:CX4		40.00	35.00	37.50	49.026	1.86e+06	1.600	6.40	0.75	1654.89	209.20	233.99	6.40	215.60	0.00
P		P:CX3	35.00	30.00	32.50	50.418	1.91e+06	1.600	6.40	0.75	1702.48	215.14	240.64	6.40	221.54	0.00
P	P:CX3		30.00	26.38	28.19	51.618	1.96e+06	1.600	6.40	0.75	1264.06	159.69	178.61	4.64	164.33	0.00
P			26.38	22.75	24.56	52.627	1.99e+06	1.600	6.40	0.75	1289.07	162.81	182.11	4.64	167.46	0.00
P		P:CX2	22.75	20.00	21.38	53.515	2.03e+06	1.600	6.40	0.75	994.60	125.60	140.48	3.52	129.12	0.00
P	P:CX2		20.00	15.00	17.50	54.593	2.07e+06	1.600	6.40	0.75	1845.25	232.96	260.57	6.40	239.36	0.00
P		P:CX1	15.00	10.00	12.50	55.985	2.12e+06	1.600	6.40	0.75	1892.84	238.90	267.21	6.40	245.30	0.00
P	P:CX1		10.00	5.00	7.50	57.377	2.17e+06	1.600	6.40	0.75	1940.44	244.84	273.85	6.40	251.24	0.00
P		P:g	5.00	0.00	2.50	58.769	2.23e+06	1.600	6.40	0.75	1988.03	250.78	280.50	6.40	257.18	0.00

*** Analysis Results:

Maximum element usage is 83.98% for Tubular X-Arm "Mast" in load case "NESC 250C (Extreme Wind)"
Maximum insulator usage is 44.11% for Suspension "TCL" in load case "NESC 250B (Heavy)"

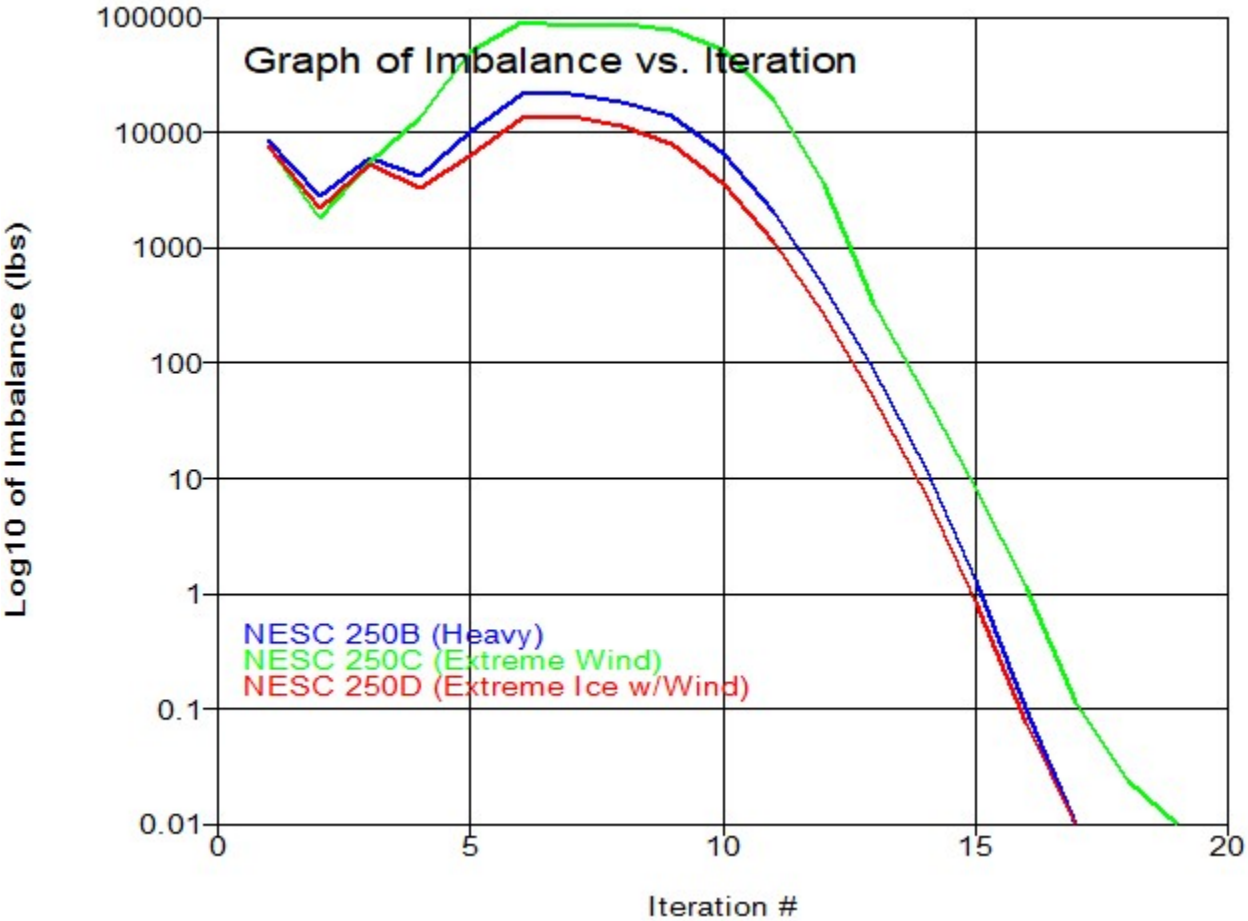

*** Analysis Results for Load Case No. 1 "NESC 250B (Heavy)" - Number of iterations in SAPS 17

Equilibrium Joint Positions and Rotations for Load Case "NESC 250B (Heavy)":

Joint Label	X-Displ (ft)	Y-Displ (ft)	Z-Displ (ft)	X-Rot (deg)	Y-Rot (deg)	Z-Rot (deg)	X-Pos (ft)	Y-Pos (ft)	Z-Pos (ft)
P:g	0	0	0	0.0000	0.0000	0.0000	0	0	0
P:t	0.0603	1.968	-0.02628	-1.7798	0.0571	0.0312	0.0603	1.968	120
P:tc	0.05922	1.934	-0.02574	-1.7798	0.0571	0.0312	0.05922	1.934	118.9
P:Clamp-T	0.05541	1.813	-0.02377	-1.7720	0.0570	0.0312	0.05541	1.813	115
P:Clamp-B	0.04487	1.51	-0.01902	-1.6830	0.0674	0.0224	0.04487	1.51	105
P:CX10	0.0394	1.366	-0.01678	-1.6171	0.0607	0.0196	0.0394	1.366	99.98
P:mc	0.03594	1.27	-0.01532	-1.5671	0.0563	0.0178	0.03594	1.27	96.53
P:CX9	0.03006	1.097	-0.01271	-1.4582	0.0487	0.0148	0.03006	1.097	89.99
P:CX8	0.02261	0.8581	-0.009391	-1.2652	0.0382	0.0109	0.02261	0.8581	79.99
P:bc	0.0192	0.7414	-0.007952	-1.1808	0.0343	0.0095	0.0192	0.7414	74.53

P:CX7	0.01662	0.6505	-0.006838	-1.1069	0.0313	0.0085	0.01662	0.6505	69.99
P:CX6	0.01176	0.4719	-0.004798	-0.9352	0.0251	0.0065	0.01176	0.4719	60
P:CX5	0.007896	0.3233	-0.00328	-0.7630	0.0196	0.0049	0.007896	0.3233	50
P:CX4	0.004923	0.2049	-0.002179	-0.5943	0.0148	0.0035	0.004923	0.2049	40
P:CX3	0.002711	0.1143	-0.001401	-0.4401	0.0107	0.0025	0.002711	0.1143	30
P:CX2	0.001184	0.05049	-0.0008268	-0.2891	0.0069	0.0015	0.001184	0.05049	20
P:CX1	0.0002921	0.01262	-0.0003834	-0.1422	0.0034	0.0007	0.0002921	0.01262	10
TL:O	0.05857	1.933	-0.06067	-1.7798	0.0571	0.0312	0.05857	3.058	118.8
TL:1	0.05172	1.972	-0.5856	-2.4149	0.0568	0.0309	0.05172	17.1	119.6
TL:2	0.04889	1.989	-0.8323	-2.4843	0.0567	0.0308	0.04889	22.86	119.9
TL:3	0.04773	1.987	-0.9192	-2.4923	0.0567	0.0308	0.04773	24.86	119.8
TR:O	0.05987	1.934	0.009185	-1.7798	0.0571	0.0312	0.05987	0.8098	118.9
TR:1	0.06919	1.971	0.3582	-1.1709	0.0575	0.0318	0.06919	-13.15	120.5
TR:2	0.07302	1.983	0.4716	-1.1011	0.0576	0.0319	0.07302	-18.89	121.2
TR:3	0.07418	1.983	0.5098	-1.0926	0.0576	0.0319	0.07418	-20.89	121.2
ML:O	0.03548	1.269	-0.05317	-1.5671	0.0563	0.0178	0.03548	2.653	96.49
ML:1	0.03253	1.301	-0.4492	-2.1785	0.0561	0.0175	0.03253	14.69	97.26
ML:2	0.03184	1.3	-0.5264	-2.2210	0.0561	0.0175	0.03184	16.68	97.18
MR:O	0.03641	1.27	0.02252	-1.5671	0.0563	0.0178	0.03641	-0.1136	96.56
MR:1	0.04156	1.299	0.2859	-0.9776	0.0566	0.0181	0.04156	-12.08	97.99
MR:2	0.04223	1.299	0.3189	-0.9348	0.0566	0.0181	0.04223	-14.08	98.03
BL:O	0.0189	0.7411	-0.04195	-1.1808	0.0343	0.0095	0.0189	2.391	74.5
BL:1	0.01744	0.7676	-0.357	-1.7932	0.0342	0.0093	0.01744	14.42	75.35
BL:2	0.01708	0.7666	-0.4207	-1.8359	0.0342	0.0093	0.01708	16.42	75.29
BR:O	0.01949	0.7418	0.02604	-1.1808	0.0343	0.0095	0.01949	-0.9077	74.57
BR:1	0.02232	0.7611	0.2085	-0.5899	0.0344	0.0098	0.02232	-12.89	75.92
BR:2	0.02268	0.7612	0.2279	-0.5470	0.0345	0.0098	0.02268	-14.89	75.94
CX1:O	0.0002921	0.01266	-0.0005221	-0.1422	0.0034	0.0007	2.362	0.01266	9.999
CX1:1	0.0002911	0.01274	-0.001234	-0.1422	0.2278	0.0262	2.612	0.01274	9.999
CX2:O	0.001184	0.05055	-0.001097	-0.2891	0.0069	0.0015	2.247	0.05055	20
CX2:1	0.001184	0.05061	-0.001592	-0.2891	0.1566	0.0186	2.497	0.05061	20
CX3:O	0.002711	0.1144	-0.001798	-0.4401	0.0107	0.0025	2.132	0.1144	30
CX3:1	0.002711	0.1145	-0.00231	-0.4401	0.1604	0.0195	2.382	0.1145	30
CX4:O	0.004923	0.205	-0.002699	-0.5943	0.0148	0.0035	2.019	0.205	40
CX4:1	0.004923	0.2051	-0.003229	-0.5943	0.1645	0.0206	2.269	0.2051	40
CX5:O	0.007896	0.3235	-0.003928	-0.7630	0.0196	0.0049	1.9	0.3235	50
CX5:1	0.007895	0.3235	-0.00448	-0.7630	0.1693	0.0219	2.15	0.3235	50
CX6:O	0.01176	0.4721	-0.005593	-0.9352	0.0251	0.0065	1.83	0.4721	59.99
CX6:1	0.01176	0.4722	-0.006168	-0.9352	0.1747	0.0235	2.08	0.4722	59.99
CX7:O	0.01662	0.6508	-0.007767	-1.1069	0.0313	0.0085	1.719	0.6508	69.99
CX7:1	0.01662	0.6509	-0.00837	-1.1069	0.1810	0.0255	1.969	0.6509	69.99
CX8:O	0.02261	0.8584	-0.01044	-1.2652	0.0382	0.0109	1.598	0.8584	79.99
CX8:1	0.02261	0.8585	-0.01108	-1.2652	0.1879	0.0279	1.848	0.8585	79.99
CX9:O	0.03006	1.097	-0.01396	-1.4582	0.0487	0.0148	1.49	1.097	89.99
CX9:1	0.03006	1.097	-0.01464	-1.4582	0.1984	0.0318	1.74	1.097	89.99
CX10:O	0.0394	1.366	-0.0182	-1.6171	0.0607	0.0196	1.383	1.366	99.98
CX10:1	0.0394	1.367	-0.01893	-1.6171	0.2104	0.0366	1.633	1.367	99.98
Clamp-B:O	0.04486	1.511	-0.02053	-1.6830	0.0674	0.0224	1.331	1.511	105
Clamp-B:1	0.04486	1.511	-0.02174	-1.6905	0.0707	0.0227	2.084	1.511	105
Clamp-T:O	0.05541	1.814	-0.02494	-1.7720	0.0570	0.0312	1.225	1.814	115
Clamp-T:1	0.05541	1.814	-0.02667	-1.8009	0.0562	0.0325	2.098	1.814	115
Mast:O	0.04486	1.511	-0.02174	-1.6905	0.0707	0.0227	2.084	1.511	105
Mast:CX11	0.05046	1.66	-0.02414	-1.7334	0.0629	0.0279	2.091	1.66	110
Mast:Top	0.05541	1.814	-0.02667	-1.8009	0.0562	0.0325	2.098	1.814	115
Mast:CX12	0.06049	1.978	-0.02944	-1.9538	0.0631	0.0336	2.105	1.978	120
Mast:ANT	0.07174	2.333	-0.03585	-2.0731	0.0680	0.0344	2.121	2.333	130
Mast:E	0.07524	2.442	-0.03782	-2.0733	0.0680	0.0344	2.125	2.442	133
CX11:1	0.05045	1.661	-0.02591	-1.7334	0.1168	0.0341	3.091	1.661	110
CX12:1	0.06049	1.979	-0.03122	-1.9538	0.1170	0.0411	3.105	1.979	120
CX13:1	0.07174	2.334	-0.03739	-2.0732	0.0951	0.0382	3.121	2.334	130

Joint Support Reactions for Load Case "NESC 250B (Heavy)":

Joint Label	X Force (kips)	X Usage %	Y Force (kips)	Y Usage %	H-Shear Usage %	Z Force (kips)	Comp. Usage %	Uplift Usage %	Result. Force (kips)	Result. Usage %	X Moment (ft-k)	X-M. Usage %	Y Moment (ft-k)	Y-M. Usage %	H-Bend-M Usage %	Z Moment (ft-k)	Z-M. Usage %	Max. Usage %
P:g	-0.26	0.0	-27.39	0.0	0.0	-132.81	0.0	0.0	135.60	0.0	2575.23	0.0	-58.9	0.0	0.0	-9.63	0.0	0.0

Detailed Steel Pole Usages for Load Case "NESC 250B (Heavy)":

Element Label	Joint Label	Joint Position	Rel. Dist. (ft)	Trans. Defl. (in)	Long. Defl. (in)	Vert. Defl. (in)	Trans. Mom. (Local Mx) (ft-k)	Long. Mom. (Local My) (ft-k)	Tors. Mom. (ft-k)	Axial Force (kips)	Tran. Shear (kips)	Long. Shear (kips)	P/A (ksi)	M/S. (ksi)	V/Q. (ksi)	T/R. (ksi)	Res. (ksi)	Max. Usage %	At Pt.
P	P:t	Origin	0.00	23.62	0.72	-0.32	-0.00	0.00	0.0	-0.10	0.02	-0.00	-0.00	0.00	0.00	0.00	0.00	0.0	5
P	P:tc	End	1.10	23.21	0.71	-0.31	0.03	-0.00	0.0	-0.10	0.02	-0.00	-0.00	0.00	0.00	0.00	0.00	0.0	2
P	P:tc	Origin	1.10	23.21	0.71	-0.31	7.60	-0.05	0.0	-23.47	7.26	-0.04	-0.73	0.31	0.33	0.00	1.19	1.8	3
P	P:Clamp-T	End	5.00	21.76	0.66	-0.29	35.88	-0.21	0.0	-23.47	7.26	-0.04	-0.70	1.84	0.12	0.00	2.56	3.9	2

P	P:Clamp-T	Origin	5.00	21.76	0.66	-0.29	60.83	15.18	8.6	-15.39	11.95	-0.30	-0.46	3.33	0.19	0.23	3.86	5.9	2
P	Tube 1	End	10.00	19.92	0.60	-0.26	120.57	13.66	8.6	-15.39	11.95	-0.30	-0.44	5.78	0.18	0.21	6.25	9.6	2
P	Tube 1	Origin	10.00	19.92	0.60	-0.26	120.57	13.65	8.6	-16.39	12.17	-0.31	-0.47	5.78	0.18	0.21	6.28	9.7	2
P	P:Clamp-B	End	15.00	18.12	0.54	-0.23	181.41	12.11	8.6	-16.39	12.17	-0.31	-0.45	7.82	0.18	0.19	8.29	12.8	2
P	P:Clamp-B	Origin	15.00	18.12	0.54	-0.23	188.95	-21.61	7.4	-35.12	11.36	-0.11	-0.96	8.25	0.16	0.16	9.22	14.2	2
P	P:CX10	End	20.00	16.39	0.47	-0.20	245.73	-22.16	7.4	-35.12	11.36	-0.11	-0.91	9.74	0.16	0.15	10.67	16.4	2
P	P:CX10	Origin	20.00	16.39	0.47	-0.20	245.73	-23.40	7.6	-36.82	11.64	-0.12	-0.96	9.75	0.16	0.15	10.73	16.5	2
P	P:mc	End	23.46	15.24	0.43	-0.18	285.99	-23.79	7.6	-36.82	11.64	-0.12	-0.93	10.66	0.16	0.14	11.60	17.8	2
P	P:mc	Origin	23.46	15.24	0.43	-0.18	291.82	-23.83	7.6	-56.35	17.18	-0.14	-1.42	10.87	0.23	0.14	12.31	18.9	2
P	Tube 1	End	26.73	14.18	0.39	-0.17	348.01	-24.29	7.6	-56.35	17.18	-0.14	-1.38	12.23	0.22	0.14	13.63	21.0	2
P	Tube 1	Origin	26.73	14.18	0.39	-0.17	348.00	-24.30	7.6	-57.12	17.30	-0.15	-1.40	12.23	0.23	0.14	13.65	21.0	2
P	P:CX9	End	30.00	13.16	0.36	-0.15	404.58	-24.76	7.6	-57.12	17.30	-0.15	-1.37	13.45	0.22	0.13	14.83	22.8	2
P	P:CX9	Origin	30.00	13.16	0.36	-0.15	404.58	-26.09	7.8	-58.89	17.55	-0.15	-1.41	13.46	0.22	0.13	14.88	22.9	2
P	Tube 1	End	35.00	11.68	0.31	-0.13	492.35	-26.81	7.8	-58.89	17.55	-0.15	-1.35	15.10	0.21	0.12	16.46	25.3	2
P	Tube 1	Origin	35.00	11.68	0.31	-0.13	492.34	-26.82	7.8	-60.15	17.73	-0.15	-1.38	15.10	0.22	0.12	16.49	25.4	2
P	P:CX8	End	40.00	10.30	0.27	-0.11	581.00	-27.55	7.8	-60.15	17.73	-0.15	-1.33	16.48	0.21	0.11	17.82	27.4	2
P	P:CX8	Origin	40.00	10.30	0.27	-0.11	581.00	-28.97	8.0	-62.02	17.98	-0.15	-1.03	12.32	0.16	0.09	13.36	20.5	2
P	Tube 2	End	42.73	9.59	0.25	-0.10	630.08	-29.38	8.0	-62.02	17.98	-0.15	-1.01	12.82	0.15	0.08	13.84	21.3	2
P	Tube 2	Origin	42.73	9.59	0.25	-0.10	630.08	-29.39	8.0	-62.96	18.10	-0.15	-1.02	12.82	0.16	0.08	13.85	21.3	2
P	P:bc	End	45.46	8.90	0.23	-0.10	679.48	-29.80	8.0	-62.96	18.10	-0.15	-1.00	13.29	0.15	0.08	14.29	22.0	2
P	P:bc	Origin	45.46	8.90	0.23	-0.10	685.17	-29.83	8.0	-83.06	23.53	-0.18	-1.32	13.40	0.20	0.08	14.72	22.7	2
P	P:CX7	End	50.00	7.81	0.20	-0.08	792.02	-30.62	8.0	-83.06	23.53	-0.18	-1.28	14.50	0.19	0.07	15.79	24.3	2
P	P:CX7	Origin	50.00	7.81	0.20	-0.08	792.02	-32.13	8.2	-85.31	23.78	-0.18	-1.31	14.51	0.19	0.08	15.83	24.4	2
P	Tube 2	End	53.58	7.00	0.18	-0.07	877.25	-32.77	8.2	-85.31	23.78	-0.18	-1.28	15.29	0.19	0.07	16.58	25.5	2
P	Tube 2	Origin	53.58	7.00	0.18	-0.07	877.25	-32.78	8.2	-86.64	23.92	-0.18	-1.30	15.29	0.19	0.07	16.60	25.5	2
P	SpliceT	End	57.17	6.23	0.16	-0.06	962.96	-33.42	8.2	-86.64	23.92	-0.18	-1.27	15.99	0.19	0.07	17.27	26.6	2
P	SpliceT	Origin	57.17	6.23	0.16	-0.06	962.96	-33.43	8.2	-88.41	24.05	-0.18	-1.30	15.99	0.19	0.07	17.29	26.6	2
P	P:CX6	End	60.00	5.66	0.14	-0.06	1031.10	-33.94	8.2	-88.41	24.05	-0.18	-1.16	15.43	0.17	0.06	16.60	25.5	2
P	P:CX6	Origin	60.00	5.66	0.14	-0.06	1031.10	-35.55	8.4	-91.45	24.28	-0.19	-1.20	15.44	0.17	0.06	16.64	25.6	2
P	SpliceB	End	63.00	5.09	0.13	-0.05	1103.94	-36.10	8.4	-91.45	24.28	-0.19	-1.18	15.88	0.17	0.06	17.06	26.2	2
P	SpliceB	Origin	63.00	5.09	0.13	-0.05	1103.94	-36.11	8.4	-93.39	24.41	-0.19	-1.20	15.88	0.17	0.06	17.09	26.3	2
P	Tube 3	End	66.50	4.46	0.11	-0.05	1189.38	-36.77	8.4	-93.39	24.41	-0.19	-1.18	16.34	0.16	0.06	17.53	27.0	2
P	Tube 3	Origin	66.50	4.46	0.11	-0.05	1189.38	-36.78	8.4	-94.93	24.55	-0.19	-1.20	16.34	0.16	0.06	17.54	27.0	2
P	P:CX5	End	70.00	3.88	0.09	-0.04	1275.29	-37.45	8.4	-94.93	24.55	-0.19	-1.17	16.76	0.16	0.06	17.93	27.6	2
P	P:CX5	Origin	70.00	3.88	0.09	-0.04	1275.29	-39.11	8.6	-97.31	24.78	-0.20	-1.20	16.77	0.16	0.06	17.97	27.6	2
P	Tube 3	End	73.63	3.32	0.08	-0.03	1365.13	-39.82	8.6	-97.31	24.78	-0.20	-1.17	17.16	0.16	0.06	18.33	28.2	2
P	Tube 3	Origin	73.63	3.32	0.08	-0.03	1365.13	-39.83	8.6	-98.98	24.93	-0.20	-1.19	17.16	0.16	0.06	18.35	28.2	2
P	SpliceT	End	77.25	2.81	0.07	-0.03	1455.48	-40.55	8.6	-98.98	24.93	-0.20	-1.17	17.50	0.16	0.05	18.67	28.7	2
P	SpliceT	Origin	77.25	2.81	0.07	-0.03	1455.48	-40.55	8.6	-100.54	25.06	-0.20	-1.07	15.73	0.14	0.05	16.80	25.8	2
P	P:CX4	End	80.00	2.46	0.06	-0.03	1524.39	-41.11	8.6	-100.54	25.06	-0.20	-1.05	15.94	0.14	0.05	16.99	26.1	2
P	P:CX4	Origin	80.00	2.46	0.06	-0.03	1524.38	-42.87	8.8	-103.37	25.32	-0.21	-1.08	15.95	0.14	0.05	17.03	26.2	2
P	Tube 4	End	85.00	1.87	0.04	-0.02	1650.99	-43.90	8.8	-103.37	25.32	-0.21	-1.05	16.29	0.14	0.04	17.34	26.7	2
P	Tube 4	Origin	85.00	1.87	0.04	-0.02	1650.99	-43.92	8.8	-106.08	25.54	-0.22	-1.08	16.29	0.14	0.04	17.37	26.7	2
P	P:CX3	End	90.00	1.37	0.03	-0.02	1778.71	-44.98	8.8	-106.08	25.54	-0.22	-1.05	16.59	0.13	0.04	17.64	27.1	2
P	P:CX3	Origin	90.00	1.37	0.03	-0.02	1778.71	-46.83	9.0	-109.25	25.83	-0.22	-1.08	16.59	0.13	0.04	17.67	27.2	2
P	Tube 4	End	93.63	1.06	0.02	-0.01	1872.34	-47.62	9.0	-109.25	25.83	-0.22	-1.06	16.78	0.13	0.04	17.84	27.4	2
P	Tube 4	Origin	93.63	1.06	0.02	-0.01	1872.34	-47.63	9.0	-111.31	26.00	-0.23	-1.08	16.78	0.13	0.04	17.86	27.5	2
P	SpliceT	End	97.25	0.79	0.02	-0.01	1966.57	-48.43	9.0	-111.31	26.00	-0.23	-1.05	16.95	0.13	0.04	18.00	27.7	2
P	SpliceT	Origin	97.25	0.79	0.02	-0.01	1966.57	-48.44	9.0	-113.15	26.14	-0.23	-1.07	16.95	0.13	0.04	18.02	27.7	2
P	P:CX2	End	100.00	0.61	0.01	-0.01	2038.46	-49.06	9.0	-113.15	26.14	-0.23	-1.06	17.06	0.13	0.04	18.12	27.9	2
P	P:CX2	Origin	100.00	0.61	0.01	-0.01	2038.46	-51.01	9.3	-116.22	26.42	-0.24	-1.09	17.06	0.13	0.04	18.15	27.9	2
P	Tube 5	End	105.00	0.34	0.01	-0.01	2170.53	-52.17	9.3	-116.22	26.42	-0.24	-1.06	17.25	0.13	0.04	18.31	28.2	2
P	Tube 5	Origin	105.00	0.34	0.01	-0.01	2170.53	-52.18	9.3	-119.23	26.65	-0.24	-1.09	17.25	0.13	0.04	18.33	28.2	2
P	P:CX1	End	110.00	0.15	0.00	-0.00	2303.78	-53.37	9.3	-119.23	26.65	-0.24	-1.06	17.40	0.13	0.04	18.46	28.4	2
P	P:CX1	Origin	110.00	0.15	0.00	-0.00	2303.78	-56.42	9.6	-123.48	27.02	-0.25	-1.10	17.40	0.13	0.04	18.50	28.5	2
P	Tube 5	End	115.00	0.04	0.00	-0.00	2438.90	-57.65	9.6	-123.48	27.02	-0.25	-1.07	17.53	0.12	0.04	18.61	28.6	2
P	Tube 5	Origin	115.00	0.04	0.00	-0.00	2438.90	-57.66	9.6	-126.65	27.27	-0.26	-1.10	17.53	0.13	0.04	18.63	28.7	2
P	P:g	End	120.00	0.00	0.00	0.00	2575.23	-58.92	9.6	-126.65	27.27	-0.26	-1.07	17.64	0.12	0.03	18.71	28.8	2

Detailed Tubular Davit Arm Usages for Load Case "NESC 250B (Heavy)":

Element Label	Joint Label	Joint Position	Rel. Dist. (ft)	Trans. Defl. (in)	Long. Defl. (in)	Vert. Defl. (in)	Vert. Mom. (ft-k)	Horz. Mom. (ft-k)	Tors. Mom. (ft-k)	Axial Force (kips)	Vert. Shear (kips)	Horz. Shear (kips)	P/A (ksi)	M/S. (ksi)	V/Q. (ksi)	T/R. (ksi)	Res. (ksi)	Max. Usage %	At Pt.
TL	TL:O	Origin	0.00	23.20	0.70	-0.73	-168.78	-0.26	-0.0	2.52	11.46	0.02	0.13	23.31	0.00	0.00	23.44	36.1	1
TL	#TL:0	End	5.00	23.35	0.67	-2.74	-111.48	-0.17	-0.0	2.52	11.46	0.02	0.15	20.04	0.00	0.00	20.19	31.1	1
TL	#TL:0	Origin	5.00	23.35	0.67	-2.74	-111.48	-0.17	-0.0	2.59	11.03	0.02	0.15	20.04	0.00	0.00	20.20	31.1	1
TL	#TL:1	End	9.53	23.50	0.65	-4.79	-61.51	-0.10	-0.0	2.59	11.03	0.02	0.17	14.53	0.00	0.00	14.71	22.6	1
TL	#TL:1	Origin	9.53	23.50	0.65	-4.79	-61.51	-0.10	-0.0	2.64	10.68	0.02	0.18	14.53	0.00	0.00	14.71	22.6	1
TL	TL:1	End	14.06	23.66	0.62	-7.03	-13.13	-0.02	-0.0	2.64	10.68	0.02	0.21	4.26	0.00	0.00	4.46	6.9	1
TL	TL:1	Origin	14.06	23.66	0.62	-7.03	-13.13	-0.02	-0.0	0.65	1.84	0.00	0.05	4.26	0.00	0.00	4.31	6.6	1
TL	#TL:2	End	16.95	23.76	0.60	-8.50	-7.81	-0.01	-0.0	0.65	1.84	0.00	0.06	3.19	0.00	0.00	3.25	5.0	1
TL	#TL:2	Origin	16.95	23.76	0.60	-8.50	-7.81	-0.01	-0.0	0.66	1.68	0.00	0.06	3.19	0.00	0.00	3.25	5.0	1
TL	TL:2	End	19.83	23.87	0.59	-9.99	-2.97	-0.01	-0.0	0.66	1.68	0.00	0.07	1.57	0.00	0.00	1.64	2.5	1
TL	TL:2	Origin	19.83	23.87	0.59	-9.99	-2.97	-0.01	0.0	0.80	1.48	0.00	0.08	1.57	0.00	0.00	1.65	2.5	1
TL	TL:3	End	21.83	23.84	0.57	-11.03	-0.00	0.00	0.0	0.80	1.48	0.00	0.09	0.00	0.34	0.00	0.60	0.9	3
TR	TR:O	Origin	0.00	23.21	0.72	0.11	-161.13	0.27	0.0	-4.57	10.90	-0.02	-0.24	22.26	0.00	0.00	22.49	34.6	1

TR	#TR:0	End	5.00	23.40	0.76	1.82	-106.65	0.18	0.0	-4.57	10.90	-0.02	-0.27	19.18	0.00	0.00	19.45	29.9	1
TR	#TR:0	Origin	5.00	23.40	0.76	1.82	-106.65	0.18	0.0	-4.48	10.50	-0.02	-0.26	19.18	0.00	0.00	19.44	29.9	1
TR	#TR:1	End	9.53	23.53	0.79	3.14	-59.08	0.11	0.0	-4.48	10.50	-0.02	-0.30	13.96	0.00	0.00	14.26	21.9	1
TR	#TR:1	Origin	9.53	23.53	0.79	3.14	-59.08	0.11	0.0	-4.41	10.18	-0.02	-0.30	13.96	0.00	0.00	14.26	21.9	1
TR	TR:1	End	14.06	23.65	0.83	4.30	-12.99	0.03	0.0	-4.41	10.18	-0.02	-0.35	4.21	0.00	0.00	4.56	7.0	1
TR	TR:1	Origin	14.06	23.65	0.83	4.30	-12.99	0.03	0.0	-0.99	1.79	-0.00	-0.08	4.21	0.00	0.00	4.29	6.6	1
TR	#TR:2	End	16.95	23.72	0.85	4.99	-7.83	0.02	0.0	-0.99	1.79	-0.00	-0.09	3.20	0.00	0.00	3.29	5.1	1
TR	#TR:2	Origin	16.95	23.72	0.85	4.99	-7.83	0.02	0.0	-0.97	1.62	-0.00	-0.09	3.20	0.00	0.00	3.29	5.1	1
TR	TR:2	End	19.83	23.79	0.88	5.66	-3.15	0.01	0.0	-0.97	1.62	-0.00	-0.10	1.67	0.00	0.00	1.77	2.7	1
TR	TR:2	Origin	19.83	23.79	0.88	5.66	-3.15	0.01	-0.0	-0.82	1.58	-0.00	-0.08	1.67	0.00	0.00	1.76	2.7	1
TR	TR:3	End	21.83	23.80	0.89	6.12	0.00	0.00	-0.0	-0.82	1.58	-0.00	-0.09	0.00	0.36	0.00	0.64	1.0	3
ML	ML:O	Origin	0.00	15.23	0.43	-0.64	-126.79	-0.18	-0.0	1.82	9.39	0.01	0.10	19.57	0.00	0.00	19.67	30.3	1
ML	#ML:0	End	5.00	15.38	0.41	-2.42	-79.85	-0.11	-0.0	1.82	9.39	0.01	0.12	18.44	0.00	0.00	18.56	28.6	1
ML	#ML:0	Origin	5.00	15.38	0.41	-2.42	-79.85	-0.11	-0.0	1.87	9.04	0.01	0.12	18.44	0.00	0.00	18.56	28.6	1
ML	#ML:1	End	8.53	15.49	0.40	-3.84	-47.94	-0.07	-0.0	1.87	9.04	0.01	0.15	15.60	0.00	0.00	15.74	24.2	1
ML	#ML:1	Origin	8.53	15.49	0.40	-3.84	-47.94	-0.07	-0.0	1.92	8.81	0.01	0.15	15.60	0.00	0.00	15.75	24.2	1
ML	ML:1	End	12.06	15.61	0.39	-5.39	-16.85	-0.02	-0.0	1.92	8.81	0.01	0.19	8.29	0.00	0.00	8.48	13.0	1
ML	ML:1	Origin	12.06	15.61	0.39	-5.39	-16.85	-0.02	-0.0	2.77	8.43	0.01	0.27	8.29	0.00	0.00	8.56	13.2	1
ML	ML:2	End	14.06	15.60	0.38	-6.32	-0.00	0.00	-0.0	2.77	8.43	0.01	0.31	0.00	1.95	0.00	3.39	5.2	3
MR	MR:O	Origin	0.00	15.24	0.44	0.27	-120.96	0.17	0.0	-3.55	8.88	-0.01	-0.19	18.67	0.00	0.00	18.86	29.0	1
MR	#MR:0	End	5.00	15.41	0.46	1.76	-76.58	0.11	0.0	-3.55	8.88	-0.01	-0.24	17.69	0.00	0.00	17.92	27.6	1
MR	#MR:0	Origin	5.00	15.41	0.46	1.76	-76.58	0.11	0.0	-3.48	8.56	-0.01	-0.23	17.69	0.00	0.00	17.92	27.6	1
MR	#MR:1	End	8.53	15.51	0.48	2.66	-46.40	0.06	0.0	-3.48	8.56	-0.01	-0.27	15.10	0.00	0.00	15.37	23.6	1
MR	#MR:1	Origin	8.53	15.51	0.48	2.66	-46.40	0.06	0.0	-3.42	8.34	-0.01	-0.27	15.10	0.00	0.00	15.37	23.6	1
MR	MR:1	End	12.06	15.59	0.50	3.43	-16.97	0.02	0.0	-3.42	8.34	-0.01	-0.33	8.35	0.00	0.00	8.68	13.4	1
MR	MR:1	Origin	12.06	15.59	0.50	3.43	-16.97	0.02	-0.0	-2.58	8.48	-0.01	-0.25	8.35	0.00	0.00	8.60	13.2	1
MR	MR:2	End	14.06	15.59	0.51	3.83	0.00	0.00	-0.0	-2.58	8.48	-0.01	-0.29	0.00	1.96	0.00	3.41	5.2	3
BL	BL:O	Origin	0.00	8.89	0.23	-0.50	-126.97	-0.13	-0.0	1.75	9.40	0.01	0.10	19.60	0.00	0.00	19.69	30.3	1
BL	#BL:0	End	5.00	9.01	0.22	-1.88	-79.97	-0.08	-0.0	1.75	9.40	0.01	0.12	18.47	0.00	0.00	18.58	28.6	1
BL	#BL:0	Origin	5.00	9.01	0.22	-1.88	-79.97	-0.08	-0.0	1.81	9.06	0.01	0.12	18.47	0.00	0.00	18.59	28.6	1
BL	#BL:1	End	8.53	9.11	0.21	-3.01	-48.02	-0.05	-0.0	1.81	9.06	0.01	0.14	15.62	0.00	0.00	15.77	24.3	1
BL	#BL:1	Origin	8.53	9.11	0.21	-3.01	-48.02	-0.05	-0.0	1.86	8.82	0.01	0.15	15.62	0.00	0.00	15.77	24.3	1
BL	BL:1	End	12.06	9.21	0.21	-4.28	-16.89	-0.02	-0.0	1.86	8.82	0.01	0.18	8.31	0.00	0.00	8.49	13.1	1
BL	BL:1	Origin	12.06	9.21	0.21	-4.28	-16.89	-0.02	-0.0	2.71	8.44	0.01	0.26	8.31	0.00	0.00	8.57	13.2	1
BL	BL:2	End	14.06	9.20	0.20	-5.05	-0.00	0.00	-0.0	2.71	8.44	0.01	0.30	0.00	1.95	0.00	3.39	5.2	3
BR	BR:O	Origin	0.00	8.90	0.23	0.31	-121.28	0.12	0.0	-3.49	8.90	-0.01	-0.19	18.72	0.00	0.00	18.91	29.1	1
BR	#BR:0	End	5.00	9.02	0.25	1.40	-76.78	0.08	0.0	-3.49	8.90	-0.01	-0.23	17.73	0.00	0.00	17.96	27.6	1
BR	#BR:0	Origin	5.00	9.02	0.25	1.40	-76.78	0.08	0.0	-3.42	8.58	-0.01	-0.23	17.73	0.00	0.00	17.96	27.6	1
BR	#BR:1	End	8.53	9.08	0.26	2.02	-46.51	0.05	0.0	-3.42	8.58	-0.01	-0.27	15.13	0.00	0.00	15.40	23.7	1
BR	#BR:1	Origin	8.53	9.08	0.26	2.02	-46.51	0.05	0.0	-3.37	8.36	-0.01	-0.27	15.13	0.00	0.00	15.40	23.7	1
BR	BR:1	End	12.06	9.13	0.27	2.50	-17.00	0.02	0.0	-3.37	8.36	-0.01	-0.33	8.37	0.00	0.00	8.69	13.4	1
BR	BR:1	Origin	12.06	9.13	0.27	2.50	-17.00	0.02	-0.0	-2.53	8.50	-0.01	-0.24	8.37	0.00	0.00	8.61	13.3	1
BR	BR:2	End	14.06	9.13	0.27	2.74	0.00	0.00	-0.0	-2.53	8.50	-0.01	-0.28	0.00	1.96	0.00	3.41	5.3	3
CX1	CX1:O	Origin	0.00	0.15	0.00	-0.01	-0.29	0.03	0.0	0.00	1.16	-0.13	0.01	38.11	3.97	0.00	38.74	59.6	1
CX1	CX1:1	End	0.25	0.15	0.00	-0.01	-0.00	0.00	0.0	0.00	1.16	-0.13	0.01	0.00	3.97	0.00	6.88	10.6	1
CX2	CX2:O	Origin	0.00	0.61	0.01	-0.01	-0.19	0.02	0.0	0.00	0.77	-0.09	0.00	25.41	2.65	0.00	25.83	39.7	1
CX2	CX2:1	End	0.25	0.61	0.01	-0.02	-0.00	-0.00	0.0	0.00	0.77	-0.09	0.00	0.00	2.65	0.00	4.59	7.1	1
CX3	CX3:O	Origin	0.00	1.37	0.03	-0.02	-0.19	0.02	0.0	0.00	0.77	-0.09	0.00	25.41	2.65	0.00	25.83	39.7	1
CX3	CX3:1	End	0.25	1.37	0.03	-0.03	-0.00	-0.00	0.0	0.00	0.77	-0.09	0.00	0.00	2.65	0.00	4.59	7.1	1
CX4	CX4:O	Origin	0.00	2.46	0.06	-0.03	-0.19	0.02	0.0	0.00	0.77	-0.10	0.00	25.41	2.65	0.00	25.83	39.7	1
CX4	CX4:1	End	0.25	2.46	0.06	-0.04	-0.00	-0.00	0.0	0.00	0.77	-0.10	0.00	0.00	2.65	0.00	4.59	7.1	1
CX5	CX5:O	Origin	0.00	3.88	0.09	-0.05	-0.19	0.02	0.0	0.00	0.77	-0.10	0.00	25.41	2.65	0.00	25.83	39.7	1
CX5	CX5:1	End	0.25	3.88	0.09	-0.05	-0.00	-0.00	0.0	0.00	0.77	-0.10	0.00	0.00	2.65	0.00	4.59	7.1	1
CX6	CX6:O	Origin	0.00	5.67	0.14	-0.07	-0.19	0.03	0.0	0.00	0.77	-0.10	0.00	25.41	2.65	0.00	25.83	39.7	1
CX6	CX6:1	End	0.25	5.67	0.14	-0.07	-0.00	-0.00	0.0	0.00	0.77	-0.10	0.00	0.00	2.65	0.00	4.59	7.1	1
CX7	CX7:O	Origin	0.00	7.81	0.20	-0.09	-0.19	0.03	-0.0	0.00	0.77	-0.10	0.00	25.41	2.65	0.00	25.83	39.7	1
CX7	CX7:1	End	0.25	7.81	0.20	-0.10	-0.00	-0.00	-0.0	0.00	0.77	-0.10	0.00	0.00	2.65	0.00	4.59	7.1	1
CX8	CX8:O	Origin	0.00	10.30	0.27	-0.13	-0.19	0.03	-0.0	0.00	0.77	-0.11	0.00	25.41	2.65	0.00	25.83	39.7	1
CX8	CX8:1	End	0.25	10.30	0.27	-0.13	-0.00	-0.00	-0.0	0.00	0.77	-0.11	0.00	0.00	2.65	0.00	4.59	7.1	1
CX9	CX9:O	Origin	0.00	13.16	0.36	-0.17	-0.19	0.03	-0.0	0.00	0.77	-0.11	0.01	25.41	2.65	0.00	25.83	39.7	1
CX9	CX9:1	End	0.25	13.17	0.36	-0.18	-0.00	-0.00	-0.0	0.00	0.77	-0.11	0.01	0.00	2.65	0.00	4.59	7.1	1
CX10	CX10:O	Origin	0.00	16.40	0.47	-0.22	-0.19	0.03	-0.0	0.00	0.77	-0.11	0.01	25.41	2.65	0.00	25.83	39.7	1
CX10	CX10:1	End	0.25	16.40	0.47	-0.23	-0.00	-0.00	-0.0	0.00	0.77	-0.11	0.01	0.00	2.65	0.00	4.59	7.1	1
Clamp-B	Clamp-B:O	Origin	0.00	18.13	0.54	-0.25	-10.96	0.12	-7.5	-0.20	17.66	1.03	-0.01	3.00	2.43	1.03	6.71	10.3	1
Clamp-B	Clamp-B:1	End	0.75	18.13	0.54	-0.26	2.34	0.90	-7.5	-0.20	17.66	1.03	-0.01	0.69	2.43	1.03	6.03	9.3	1

Clamp-T	Clamp-T:O	Origin	0.00	21.76	0.66	-0.30	4.94	3.32	-25.0	0.25	-8.96	-4.49	0.02	1.63	1.37	3.42	8.46	13.0	1
Clamp-T	Clamp-T:1	End	0.87	21.77	0.66	-0.32	-2.88	-0.60	-25.0	0.25	-8.96	-4.49	0.02	0.81	1.37	3.42	8.34	12.8	1
CX11	Mast:CX11	Origin	0.00	19.92	0.61	-0.29	-0.78	0.11	0.0	0.00	0.78	-0.11	0.00	6.86	0.73	0.00	6.98	10.7	1
CX11	CX11:1	End	1.00	19.93	0.61	-0.31	-0.00	-0.00	0.0	0.00	0.78	-0.11	0.00	0.00	0.73	0.00	1.26	1.9	1
CX12	Mast:CX12	Origin	0.00	23.74	0.73	-0.35	-0.78	0.14	0.0	0.00	0.78	-0.14	0.00	6.89	0.73	0.00	7.00	10.8	1
CX12	CX12:1	End	1.00	23.75	0.73	-0.37	-0.00	-0.00	0.0	0.00	0.78	-0.14	0.00	0.00	0.73	0.00	1.26	1.9	1
CX13	Mast:ANT	Origin	0.00	28.00	0.86	-0.43	-0.39	0.07	0.0	0.00	0.39	-0.07	0.00	3.47	0.37	0.00	3.53	5.4	1
CX13	CX13:1	End	1.00	28.01	0.86	-0.45	-0.00	-0.00	0.0	0.00	0.39	-0.07	0.00	0.00	0.37	0.00	0.64	1.0	1

Detailed Tubular X-Arm Usages for Load Case "NESC 250B (Heavy)":

Element Label	Joint Label	Joint Position	Rel. Dist. (ft)	Trans. Defl. (in)	Long. Defl. (in)	Vert. Defl. (in)	Vert. Mom. (ft-k)	Horz. Mom. (ft-k)	Tors. Mom. (ft-k)	Axial Force (kips)	Vert. Shear (kips)	Horz. Shear (kips)	P/A (ksi)	M/S. (ksi)	V/Q. (ksi)	T/R. (ksi)	Res. (ksi)	Max. Usage %	At Pt.
Mast	Mast:O	Origin	0.00	18.13	0.54	-0.26	-7.53	2.34	0.9	-17.52	-1.06	-0.20	-0.98	1.78	0.12	0.10	2.78	8.0	1
Mast	#sMast:0	End	2.50	19.02	0.57	-0.28	-10.18	1.84	0.9	-17.52	-1.06	-0.20	-0.98	2.33	0.12	0.10	3.33	9.5	1
Mast	#sMast:0	Origin	2.50	19.02	0.57	-0.28	-10.18	1.84	0.9	-17.29	-1.10	-0.20	-0.96	2.33	0.12	0.10	3.32	9.5	1
Mast	Mast:CX11	End	5.00	19.92	0.61	-0.29	-12.93	1.34	0.9	-17.29	-1.10	-0.20	-0.96	2.93	0.12	0.10	3.92	11.2	1
Mast	Mast:CX11	Origin	5.00	19.92	0.61	-0.29	-12.93	2.12	0.8	-16.28	-1.26	-0.20	-0.91	2.96	0.14	0.09	3.88	11.1	1
Mast	#sMast:1	End	7.50	20.84	0.64	-0.30	-16.07	1.61	0.8	-16.28	-1.26	-0.20	-0.91	3.64	0.14	0.09	4.57	13.1	1
Mast	#sMast:1	Origin	7.50	20.84	0.64	-0.30	-16.07	1.61	0.8	-16.05	-1.30	-0.21	-0.89	3.64	0.15	0.09	4.56	13.0	1
Mast	Mast:Top	End	10.00	21.77	0.66	-0.32	-19.31	1.09	0.8	-16.05	-1.30	-0.21	-0.89	4.36	0.15	0.09	5.27	15.1	1
Mast	Mast:Top	Origin	10.00	21.77	0.66	-0.32	-44.26	-1.79	0.2	-6.71	3.13	0.05	-0.37	9.99	0.35	0.02	10.39	29.7	1
Mast	Mast:CX12	End	15.00	23.74	0.73	-0.35	-28.63	-1.57	0.2	-6.71	3.13	0.05	-0.37	6.47	0.35	0.02	6.87	19.6	1
Mast	Mast:CX12	Origin	15.00	23.74	0.73	-0.35	-28.63	-0.79	0.1	-5.46	2.90	0.04	-0.30	6.46	0.32	0.01	6.79	19.4	1
Mast	#sMast:2	End	20.00	25.84	0.79	-0.39	-14.12	-0.58	0.1	-5.46	2.90	0.04	-0.30	3.19	0.32	0.01	3.54	10.1	1
Mast	#sMast:2	Origin	20.00	25.84	0.79	-0.39	-14.12	-0.58	0.1	-5.12	2.83	0.04	-0.29	3.19	0.32	0.01	3.52	10.1	1
Mast	#sMast:3	End	22.50	26.92	0.83	-0.41	-7.04	-0.49	0.1	-5.12	2.83	0.04	-0.29	1.59	0.32	0.01	1.96	5.6	1
Mast	#sMast:3	Origin	22.50	26.92	0.83	-0.41	-7.04	-0.49	0.1	-4.89	2.78	0.04	-0.27	1.59	0.31	0.01	1.95	5.6	1
Mast	Mast:ANT	End	25.00	28.00	0.86	-0.43	-0.09	-0.39	0.1	-4.89	2.78	0.04	-0.27	0.09	0.31	0.01	0.66	1.9	1
Mast	Mast:ANT	Origin	25.00	28.00	0.86	-0.43	-0.09	-0.00	0.0	-0.14	0.03	0.00	-0.01	0.02	0.00	0.00	0.03	0.1	1
Mast	Mast:E	End	28.00	29.30	0.90	-0.45	0.00	0.00	0.0	-0.14	0.03	0.00	-0.01	0.00	0.00	0.00	0.01	0.0	1

Summary of Suspension Capacities and Usages for Load Case "NESC 250B (Heavy)":

Suspension Label	Tension (kips)	Input Tension Capacity (kips)	Factored Tension Capacity (kips)	Tension Usage %	Input Hardware Capacity (kips)	Factored Hardware Capacity (kips)	Hardware Usage %	Max. Usage %
SWL	1.642	20.00	20.00	8.21	0.00	0.00	0.00	8.21
SWR	1.734	20.00	20.00	8.67	0.00	0.00	0.00	8.67
TCL	8.822	20.00	20.00	44.11	0.00	0.00	0.00	44.11
TCR	8.822	20.00	20.00	44.11	0.00	0.00	0.00	44.11
MCL	8.822	20.00	20.00	44.11	0.00	0.00	0.00	44.11
MCR	8.822	20.00	20.00	44.11	0.00	0.00	0.00	44.11
BCL	8.822	20.00	20.00	44.11	0.00	0.00	0.00	44.11
BCR	8.822	20.00	20.00	44.11	0.00	0.00	0.00	44.11

Equilibrium Joint Positions and Rotations for Load Case "NESC 250C (Extreme Wind)":

Joint Label	X-Displ (ft)	Y-Displ (ft)	Z-Displ (ft)	X-Rot (deg)	Y-Rot (deg)	Z-Rot (deg)	X-Pos (ft)	Y-Pos (ft)	Z-Pos (ft)
P:g	0	0	0	0.0000	0.0000	0.0000	0	0	0
P:t	0.01804	4.276	-0.1054	-3.9012	-0.0385	0.0942	0.01804	4.276	119.9
P:tc	0.0189	4.201	-0.1028	-3.9012	-0.0385	0.0942	0.0189	4.201	118.8
P:Clamp-T	0.02196	3.936	-0.09374	-3.8857	-0.0386	0.0942	0.02196	3.936	114.9
P:Clamp-B	0.02423	3.273	-0.07219	-3.6777	0.0386	0.0639	0.02423	3.273	104.9
P:CX10	0.02179	2.959	-0.06219	-3.5267	0.0353	0.0557	0.02179	2.959	99.94
P:mc	0.02018	2.749	-0.05577	-3.4132	0.0331	0.0505	0.02018	2.749	96.49
P:CX9	0.01733	2.373	-0.04475	-3.1691	0.0291	0.0418	0.01733	2.373	89.96
P:CX8	0.01348	1.855	-0.03108	-2.7423	0.0235	0.0306	0.01348	1.855	79.97
P:bc	0.01159	1.602	-0.02512	-2.5570	0.0213	0.0268	0.01159	1.602	74.52
P:CX7	0.01014	1.406	-0.02075	-2.3953	0.0196	0.0239	0.01014	1.406	69.98
P:CX6	0.007303	1.019	-0.01303	-2.0217	0.0159	0.0182	0.007303	1.019	59.99
P:CX5	0.004974	0.6983	-0.00763	-1.6483	0.0126	0.0137	0.004974	0.6983	49.99
P:CX4	0.003138	0.4425	-0.00412	-1.2835	0.0096	0.0099	0.003138	0.4425	40
P:CX3	0.001743	0.247	-0.00199	-0.9505	0.0069	0.0069	0.001743	0.247	30
P:CX2	0.0007667	0.1091	-0.0008176	-0.6244	0.0045	0.0043	0.0007667	0.1091	20
P:CX1	0.0001904	0.02728	-0.0002615	-0.3072	0.0022	0.0020	0.0001904	0.02728	10
TL:O	0.01711	4.198	-0.1793	-3.9012	-0.0385	0.0942	0.01711	5.323	118.7
TL:1	-0.005954	4.254	-1.185	-4.2524	-0.0391	0.0921	-0.005954	19.38	119
TL:2	-0.01531	4.278	-1.614	-4.2861	-0.0391	0.0919	-0.01531	25.15	119.1
TL:3	-0.01842	4.272	-1.764	-4.2897	-0.0391	0.0919	-0.01842	27.15	118.9
TR:O	0.0207	4.203	-0.02629	-3.9012	-0.0385	0.0942	0.0207	3.079	118.9
TR:1	0.0424	4.317	0.8827	-3.6115	-0.0377	0.0963	0.0424	-10.81	121.1
TR:2	0.05145	4.361	1.242	-3.5808	-0.0376	0.0966	0.05145	-16.51	122
TR:3	0.05474	4.365	1.367	-3.5769	-0.0376	0.0967	0.05474	-18.51	122.1
ML:O	0.01892	2.747	-0.1382	-3.4132	0.0331	0.0505	0.01892	4.131	96.4
ML:1	0.008709	2.796	-0.8932	-3.7594	0.0328	0.0487	0.008709	16.18	96.82
ML:2	0.006936	2.792	-1.025	-3.7820	0.0327	0.0486	0.006936	18.18	96.68
MR:O	0.02145	2.752	0.02662	-3.4132	0.0331	0.0505	0.02145	1.368	96.57
MR:1	0.03324	2.837	0.7068	-3.1151	0.0336	0.0523	0.03324	-10.55	98.42
MR:2	0.03513	2.84	0.8148	-3.0922	0.0336	0.0524	0.03513	-12.54	98.52
BL:O	0.0108	1.601	-0.09871	-2.5570	0.0213	0.0268	0.0108	3.25	74.44
BL:1	0.005563	1.643	-0.6743	-2.9085	0.0212	0.0251	0.005563	15.29	75.03
BL:2	0.004651	1.64	-0.7764	-2.9315	0.0211	0.0250	0.004651	17.29	74.93
BR:O	0.01239	1.604	0.04847	-2.5570	0.0213	0.0268	0.01239	-0.04556	74.59
BR:1	0.01878	1.664	0.5497	-2.2530	0.0216	0.0284	0.01878	-11.99	76.26
BR:2	0.0198	1.665	0.6277	-2.2296	0.0216	0.0285	0.0198	-13.98	76.34
CX1:O	0.0001904	0.02736	-0.0003517	-0.3072	0.0022	0.0020	2.362	0.02736	10
CX1:1	0.0001902	0.0276	-0.0006057	-0.3072	0.0805	0.0765	2.612	0.0276	9.999
CX2:O	0.0007667	0.1093	-0.0009938	-0.6244	0.0045	0.0043	2.246	0.1093	20
CX2:1	0.0007666	0.1094	-0.001177	-0.6244	0.0567	0.0540	2.496	0.1094	20
CX3:O	0.001743	0.2472	-0.002248	-0.9505	0.0069	0.0069	2.131	0.2472	30
CX3:1	0.001743	0.2474	-0.002443	-0.9505	0.0592	0.0566	2.381	0.2474	30
CX4:O	0.003138	0.4429	-0.004456	-1.2835	0.0096	0.0099	2.017	0.4429	40
CX4:1	0.003138	0.4431	-0.004664	-1.2835	0.0618	0.0596	2.267	0.4431	40
CX5:O	0.004974	0.6988	-0.008046	-1.6483	0.0126	0.0137	1.898	0.6988	49.99
CX5:1	0.004974	0.699	-0.008269	-1.6483	0.0648	0.0633	2.148	0.699	49.99
CX6:O	0.007303	1.02	-0.01353	-2.0217	0.0159	0.0182	1.826	1.02	59.99
CX6:1	0.007302	1.02	-0.01377	-2.0217	0.0681	0.0679	2.076	1.02	59.99
CX7:O	0.01014	1.406	-0.02133	-2.3953	0.0196	0.0239	1.712	1.406	69.98
CX7:1	0.01014	1.407	-0.02159	-2.3953	0.0718	0.0735	1.962	1.407	69.98
CX8:O	0.01348	1.856	-0.03173	-2.7423	0.0235	0.0306	1.589	1.856	79.97
CX8:1	0.01348	1.856	-0.03201	-2.7423	0.0757	0.0803	1.839	1.856	79.97
CX9:O	0.01733	2.374	-0.0455	-3.1691	0.0291	0.0418	1.477	2.374	89.95
CX9:1	0.01733	2.374	-0.0458	-3.1691	0.0813	0.0914	1.727	2.374	89.95
CX10:O	0.02179	2.96	-0.06302	-3.5267	0.0353	0.0557	1.366	2.96	99.94
CX10:1	0.02179	2.96	-0.06336	-3.5267	0.0875	0.1054	1.616	2.96	99.94
Clamp-B:O	0.02423	3.275	-0.07305	-3.6777	0.0386	0.0639	1.31	3.275	104.9
Clamp-B:1	0.02423	3.275	-0.07483	-3.6925	0.0485	0.0643	2.063	3.275	104.9
Clamp-T:O	0.02196	3.938	-0.09296	-3.8857	-0.0386	0.0942	1.192	3.938	114.9
Clamp-T:1	0.02194	3.939	-0.09805	-3.9734	-0.0482	0.0985	2.065	3.939	114.9
Mast:O	0.02423	3.275	-0.07483	-3.6925	0.0485	0.0643	2.063	3.275	104.9
Mast:CX11	0.02525	3.601	-0.08604	-3.7925	0.0033	0.0820	2.066	3.601	109.9
Mast:Top	0.02194	3.939	-0.09805	-3.9734	-0.0482	0.0985	2.065	3.939	114.9
Mast:CX12	0.01704	4.307	-0.1116	-4.4202	-0.0450	0.1009	2.062	4.307	119.9
Mast:ANT	0.007851	5.118	-0.1446	-4.7691	-0.0426	0.1024	2.057	5.118	129.9
Mast:E	0.005176	5.368	-0.155	-4.7694	-0.0426	0.1024	2.055	5.368	132.8
CX11:1	0.02525	3.603	-0.08644	-3.7926	0.0222	0.1000	3.066	3.603	109.9
CX12:1	0.01704	4.309	-0.1112	-4.4203	-0.0260	0.1233	3.062	4.309	119.9
CX13:1	0.007849	5.12	-0.1442	-4.7691	-0.0331	0.1138	3.057	5.12	129.9

Joint Support Reactions for Load Case "NESC 250C (Extreme Wind)":

Joint Label	X Force (kips)	X Usage %	Y Force (kips)	Y Usage %	H-Shear Usage %	Z Force (kips)	Comp. Usage %	Uplift Usage %	Result. Force (kips)	Result. Usage %	X Moment (ft-k)	X-M. Usage %	Y Moment (ft-k)	Y-M. Usage %	H-Bend-M Usage %	Z Moment (ft-k)	Z-M. Usage %	Max. Usage %
P:g	-0.23	0.0	-59.57	0.0	0.0	-78.77	0.0	0.0	98.76	0.0	5565.35	0.0	-38.8	0.0	0.0	-26.89	0.0	0.0

Detailed Steel Pole Usages for Load Case "NESC 250C (Extreme Wind)":

Element Label	Joint Label	Joint Position	Rel. Dist. (ft)	Trans. Defl. (in)	Long. Defl. (in)	Vert. Defl. (in)	Trans. Mom. (Local Mx) (ft-k)	Long. Mom. (Local My) (ft-k)	Tors. Mom. (ft-k)	Axial Force (kips)	Tran. Shear (kips)	Long. Shear (kips)	P/A (ksi)	M/S. (ksi)	V/Q. (ksi)	T/R. (ksi)	Res. (ksi)	Max. Usage %	At Pt.
P	P:t	Origin	0.00	51.31	0.22	-1.26	-0.00	0.00	-0.0	-0.06	0.04	-0.00	-0.00	0.00	0.00	0.00	0.01	0.0	5
P	P:tc	End	1.10	50.41	0.23	-1.23	0.05	-0.00	-0.0	-0.06	0.04	-0.00	-0.00	0.00	0.00	0.00	0.01	0.0	4
P	P:tc	Origin	1.10	50.41	0.23	-1.23	17.05	-0.09	0.0	-12.61	13.43	-0.06	-0.39	0.26	0.82	0.00	1.57	2.4	4
P	P:Clamp-T	End	5.00	47.23	0.26	-1.12	69.36	-0.34	0.0	-12.61	13.43	-0.06	-0.38	3.57	0.21	0.00	3.96	6.1	2
P	P:Clamp-T	Origin	5.00	47.23	0.26	-1.12	145.25	102.25	25.7	43.84	27.31	0.08	1.31	9.30	1.18	0.68	11.10	17.1	3
P	Tube 1	End	10.00	43.20	0.30	-0.99	281.77	102.70	25.7	43.84	27.31	0.08	1.25	14.39	0.41	0.62	15.74	24.2	2
P	Tube 1	Origin	10.00	43.20	0.30	-0.99	281.79	102.66	25.7	43.20	27.82	0.11	1.23	14.39	0.42	0.62	15.72	24.2	2
P	P:Clamp-B	End	15.00	39.28	0.29	-0.87	420.89	103.31	25.7	43.20	27.82	0.11	1.18	18.99	0.40	0.56	20.24	31.1	2
P	P:Clamp-B	Origin	15.00	39.28	0.29	-0.87	435.72	-11.08	21.2	-18.52	24.79	-0.13	-0.50	18.58	0.36	0.46	19.13	29.4	2
P	P:CX10	End	20.00	35.50	0.26	-0.75	559.64	-11.66	21.2	-18.52	24.79	-0.13	-0.48	21.78	0.34	0.42	22.30	34.3	2
P	P:CX10	Origin	20.00	35.50	0.26	-0.75	559.64	-12.12	21.6	-19.38	25.41	-0.13	-0.50	21.79	0.35	0.43	22.33	34.4	2
P	P:mc	End	23.46	32.99	0.24	-0.67	647.52	-12.51	21.6	-19.38	25.41	-0.13	-0.49	23.73	0.34	0.41	24.25	37.3	2
P	P:mc	Origin	23.46	32.99	0.24	-0.67	659.96	-12.62	21.6	-30.14	36.69	-0.19	-0.76	24.18	0.49	0.41	24.99	38.5	2
P	Tube 1	End	26.73	30.69	0.22	-0.60	779.98	-13.17	21.6	-30.14	36.69	-0.19	-0.74	27.04	0.48	0.39	27.82	42.8	2
P	Tube 1	Origin	26.73	30.69	0.22	-0.60	779.98	-13.22	21.6	-30.68	36.95	-0.19	-0.75	27.04	0.48	0.39	27.83	42.8	2
P	P:CX9	End	30.00	28.47	0.21	-0.54	900.85	-13.76	21.6	-30.68	36.95	-0.19	-0.73	29.59	0.47	0.37	30.35	46.7	2
P	P:CX9	Origin	30.00	28.47	0.21	-0.54	900.85	-14.26	22.0	-31.63	37.56	-0.18	-0.76	29.59	0.48	0.37	30.38	46.7	2
P	Tube 1	End	35.00	25.25	0.18	-0.45	1088.65	-15.07	22.0	-31.63	37.56	-0.18	-0.73	33.02	0.46	0.34	33.78	52.0	2
P	Tube 1	Origin	35.00	25.25	0.18	-0.45	1088.65	-15.15	22.0	-32.51	37.97	-0.18	-0.75	33.02	0.46	0.34	33.80	52.0	2
P	P:CX8	End	40.00	22.26	0.16	-0.37	1278.50	-15.94	22.0	-32.51	37.97	-0.18	-0.72	35.92	0.44	0.32	36.67	56.4	2
P	P:CX8	Origin	40.00	22.26	0.16	-0.37	1278.50	-16.47	22.5	-33.53	38.57	-0.18	-0.56	26.85	0.34	0.24	27.42	42.2	2
P	Tube 2	End	42.73	20.72	0.15	-0.34	1383.76	-16.91	22.5	-33.53	38.57	-0.18	-0.54	27.91	0.33	0.23	28.47	43.8	2
P	Tube 2	Origin	42.73	20.72	0.15	-0.34	1383.76	-16.95	22.5	-34.17	38.83	-0.18	-0.55	27.91	0.33	0.23	28.48	43.8	2
P	P:bc	End	45.46	19.23	0.14	-0.30	1489.72	-17.39	22.5	-34.17	38.83	-0.18	-0.54	28.88	0.33	0.22	29.44	45.3	2
P	P:bc	Origin	45.46	19.23	0.14	-0.30	1501.98	-17.50	22.5	-45.47	50.01	-0.23	-0.72	29.12	0.42	0.22	29.86	45.9	2
P	P:CX7	End	50.00	16.87	0.12	-0.25	1729.12	-18.46	22.5	-45.47	50.01	-0.23	-0.70	31.43	0.41	0.21	32.15	49.5	2
P	P:CX7	Origin	50.00	16.87	0.12	-0.25	1729.12	-19.02	23.0	-46.75	50.64	-0.23	-0.72	31.43	0.41	0.22	32.17	49.5	2
P	Tube 2	End	53.58	15.12	0.11	-0.21	1910.60	-19.78	23.0	-46.75	50.64	-0.23	-0.70	33.06	0.40	0.21	33.78	52.0	2
P	Tube 2	Origin	53.58	15.12	0.11	-0.21	1910.60	-19.83	23.0	-47.68	50.97	-0.23	-0.72	33.06	0.41	0.21	33.80	52.0	2
P	SpliceT	End	57.17	13.47	0.10	-0.18	2093.24	-20.58	23.0	-47.68	50.97	-0.23	-0.70	34.52	0.40	0.20	35.24	54.2	2
P	SpliceT	Origin	57.17	13.47	0.10	-0.18	2093.24	-20.63	23.0	-48.89	51.28	-0.23	-0.72	34.52	0.40	0.20	35.26	54.2	2
P	P:CX6	End	60.00	12.23	0.09	-0.16	2238.50	-21.22	23.0	-48.89	51.28	-0.23	-0.64	33.29	0.36	0.18	33.95	52.2	2
P	P:CX6	Origin	60.00	12.23	0.09	-0.16	2238.50	-21.80	23.5	-50.70	51.84	-0.23	-0.67	33.29	0.36	0.18	33.97	52.3	2
P	SpliceB	End	63.00	10.99	0.08	-0.13	2394.01	-22.43	23.5	-50.70	51.84	-0.23	-0.65	34.22	0.35	0.17	34.89	53.7	2
P	SpliceB	Origin	63.00	10.99	0.08	-0.13	2394.01	-22.48	23.5	-52.02	52.15	-0.23	-0.67	34.22	0.36	0.17	34.90	53.7	2
P	Tube 3	End	66.50	9.64	0.07	-0.11	2576.53	-23.20	23.5	-52.02	52.15	-0.23	-0.66	35.20	0.35	0.17	35.87	55.2	2
P	Tube 3	Origin	66.50	9.64	0.07	-0.11	2576.53	-23.26	23.5	-53.09	52.48	-0.23	-0.67	35.20	0.35	0.17	35.88	55.2	2
P	P:CX5	End	70.00	8.38	0.06	-0.09	2760.21	-23.98	23.5	-53.09	52.48	-0.23	-0.65	36.08	0.34	0.16	36.74	56.5	2
P	P:CX5	Origin	70.00	8.38	0.06	-0.09	2760.21	-24.60	24.1	-54.46	53.08	-0.23	-0.67	36.08	0.35	0.16	36.76	56.6	2
P	Tube 3	End	73.63	7.18	0.05	-0.07	2952.63	-25.35	24.1	-54.46	53.08	-0.23	-0.66	36.90	0.34	0.16	37.57	57.8	2
P	Tube 3	Origin	73.63	7.18	0.05	-0.07	2952.63	-25.41	24.0	-55.61	53.43	-0.23	-0.67	36.90	0.34	0.16	37.58	57.8	2
P	SpliceT	End	77.25	6.08	0.04	-0.06	3146.32	-26.16	24.0	-55.61	53.43	-0.23	-0.66	37.63	0.33	0.15	38.30	58.9	2
P	SpliceT	Origin	77.25	6.08	0.04	-0.06	3146.32	-26.21	24.0	-56.67	53.75	-0.23	-0.60	33.82	0.30	0.13	34.43	53.0	2
P	P:CX4	End	80.00	5.31	0.04	-0.05	3294.14	-26.78	24.0	-56.67	53.75	-0.23	-0.59	34.28	0.30	0.13	34.88	53.7	2
P	P:CX4	Origin	80.00	5.31	0.04	-0.05	3294.14	-27.43	24.6	-58.33	54.42	-0.23	-0.61	34.28	0.30	0.13	34.90	53.7	2
P	Tube 4	End	85.00	4.05	0.03	-0.03	3566.25	-28.48	24.6	-58.33	54.42	-0.23	-0.59	35.02	0.29	0.12	35.62	54.8	2
P	Tube 4	Origin	85.00	4.05	0.03	-0.03	3566.25	-28.55	24.6	-60.17	54.95	-0.23	-0.61	35.02	0.30	0.12	35.64	54.8	2
P	P:CX3	End	90.00	2.96	0.02	-0.02	3841.01	-29.60	24.6	-60.17	54.95	-0.23	-0.59	35.65	0.29	0.12	36.25	55.8	2
P	P:CX3	Origin	90.00	2.96	0.02	-0.02	3841.01	-30.29	25.2	-62.06	55.68	-0.23	-0.61	35.65	0.29	0.12	36.27	55.8	2
P	Tube 4	End	93.63	2.28	0.02	-0.02	4042.85	-31.05	25.2	-62.06	55.68	-0.23	-0.60	36.06	0.29	0.12	36.67	56.4	2
P	Tube 4	Origin	93.63	2.28	0.02	-0.02	4042.85	-31.11	25.2	-63.45	56.08	-0.23	-0.61	36.06	0.29	0.12	36.68	56.4	2
P	SpliceT	End	97.25	1.70	0.01	-0.01	4246.14	-31.87	25.2	-63.45	56.08	-0.23	-0.60	36.42	0.28	0.11	37.03	57.0	2
P	SpliceT	Origin	97.25	1.70	0.01	-0.01	4246.14	-31.91	25.2	-64.69	56.43	-0.23	-0.61	36.42	0.28	0.11	37.04	57.0	2
P	P:CX2	End	100.00	1.31	0.01	-0.01	4401.33	-32.49	25.2	-64.69	56.43	-0.23	-0.60	36.67	0.28	0.11	37.28	57.4	2
P	P:CX2	Origin	100.00	1.31	0.01	-0.01	4401.33	-33.21	25.9	-66.50	57.14	-0.23	-0.62	36.67	0.28	0.11	37.30	57.4	2
P	Tube 5	End	105.00	0.74	0.01	-0.01	4687.00	-34.27	25.9	-66.50	57.14	-0.23	-0.61	37.07	0.28	0.11	37.69	58.0	2
P	Tube 5	Origin	105.00	0.74	0.01	-0.01	4687.00	-34.34	25.9	-68.53	57.71	-0.23	-0.62	37.07	0.28	0.11	37.70	58.0	2
P	P:CX1	End	110.00	0.33	0.00	-0.00	4975.55	-35.40	25.9	-68.53	57.71	-0.23	-0.61	37.41	0.27	0.10	38.03	58.5	2
P	P:CX1	Origin	110.00	0.33	0.00	-0.00	4975.55	-36.53	26.9	-71.01	58.68	-0.23	-0.63	37.42	0.28	0.10	38.05	58.5	2
P	Tube 5	End	115.00	0.08	0.00	-0.00	5268.96	-37.59	26.9	-71.01	58.68	-0.23	-0.62	37.71	0.27	0.10	38.33	59.0	2
P	Tube 5	Origin	115.00	0.08	0.00	-0.00	5268.96	-37.66	26.9	-73.13	59.28	-0.23	-0.63	37.71	0.27	0.10	38.35	59.0	2
P	P:g	End	120.00	0.00	0.00	0.00	5565.35	-38.73	26.9	-73.13	59.28	-0.23	-0.62	37.96	0.27	0.09	38.59	59.4	2

Detailed Tubular Davit Arm Usages for Load Case "NESC 250C (Extreme Wind)":

Element Label	Joint Label	Joint Position	Rel. Dist. (ft)	Trans. Defl. (in)	Long. Defl. (in)	Vert. Defl. (in)	Vert. Mom. (ft-k)	Horz. Mom. (ft-k)	Tors. Mom. (ft-k)	Axial Force (kips)	Vert. Shear (kips)	Horz. Shear (kips)	P/A (ksi)	M/S. (ksi)	V/Q. (ksi)	T/R. (ksi)	Res. (ksi)	Max. Usage %	At Pt.
TL	TL:O	Origin	0.00	50.38	0.21	-2.15	-94.78	-0.47	-0.0	5.92	6.54	0.03	0.31	13.09	0.00	0.00	13.40	20.6	1
TL	#TL:0	End	5.00	50.62	0.11	-6.31	-62.06	-0.32	-0.0	5.92	6.54	0.03	0.35	11.16	0.00	0.00	11.51	17.7	1
TL	#TL:0	Origin	5.00	50.62	0.11	-6.31	-62.06	-0.32	-0.0	5.94	6.25	0.03	0.35	11.16	0.00	0.00	11.51	17.7	1
TL	#TL:1	End	9.53	50.83	0.02	-10.22	-33.75	-0.18	-0.0	5.94	6.25	0.03	0.40	7.97	0.00	0.00	8.38	12.9	1
TL	#TL:1	Origin	9.53	50.83	0.02	-10.22	-33.75	-0.18	-0.0	5.95	6.01	0.03	0.40	7.97	0.00	0.00	8.38	12.9	1
TL	TL:1	End	14.06	51.05	-0.07	-14.22	-6.52	-0.04	-0.0	5.95	6.01	0.03	0.47	2.12	0.01	0.00	2.58	4.0	1
TL	TL:1	Origin	14.06	51.05	-0.07	-14.22	-6.52	-0.04	-0.0	0.86	0.95	0.00	0.07	2.12	0.00	0.00	2.18	3.4	1
TL	#TL:2	End	16.95	51.19	-0.13	-16.79	-3.78	-0.02	-0.0	0.86	0.95	0.00	0.08	1.54	0.00	0.00	1.62	2.5	1
TL	#TL:2	Origin	16.95	51.19	-0.13	-16.79	-3.78	-0.02	-0.0	0.86	0.84	0.00	0.08	1.54	0.00	0.00	1.62	2.5	1
TL	TL:2	End	19.83	51.33	-0.18	-19.37	-1.35	-0.01	-0.0	0.86	0.84	0.00	0.09	0.72	0.00	0.00	0.80	1.2	1
TL	TL:2	Origin	19.83	51.33	-0.18	-19.37	-1.35	-0.01	0.0	0.93	0.67	0.00	0.09	0.72	0.00	0.00	0.81	1.2	1
TL	TL:3	End	21.83	51.27	-0.22	-21.17	-0.00	-0.00	0.0	0.93	0.67	0.00	0.10	0.00	0.16	0.00	0.29	0.4	3
TR	TR:O	Origin	0.00	50.44	0.25	-0.32	-77.78	0.49	0.0	-7.19	5.36	-0.03	-0.37	10.74	0.00	0.00	11.12	17.1	1
TR	#TR:0	End	5.00	50.94	0.34	3.67	-51.00	0.33	0.0	-7.19	5.36	-0.03	-0.42	9.17	0.00	0.00	9.59	14.8	1
TR	#TR:0	Origin	5.00	50.94	0.34	3.67	-51.00	0.33	0.0	-7.14	5.10	-0.03	-0.42	9.17	0.00	0.00	9.59	14.8	1
TR	#TR:1	End	9.53	51.38	0.42	7.17	-27.89	0.19	0.0	-7.14	5.10	-0.03	-0.48	6.59	0.00	0.00	7.07	10.9	1
TR	#TR:1	Origin	9.53	51.38	0.42	7.17	-27.89	0.19	0.0	-7.09	4.89	-0.03	-0.48	6.59	0.00	0.00	7.07	10.9	1
TR	TR:1	End	14.06	51.81	0.51	10.59	-5.72	0.05	0.0	-7.09	4.89	-0.03	-0.56	1.85	0.01	0.00	2.41	3.7	1
TR	TR:1	Origin	14.06	51.81	0.51	10.59	-5.72	0.05	0.0	-1.21	0.80	-0.01	-0.10	1.85	0.00	0.00	1.95	3.0	1
TR	#TR:2	End	16.95	52.07	0.56	12.75	-3.42	0.03	0.0	-1.21	0.80	-0.01	-0.11	1.40	0.00	0.00	1.50	2.3	1
TR	#TR:2	Origin	16.95	52.07	0.56	12.75	-3.42	0.03	0.0	-1.19	0.69	-0.01	-0.11	1.40	0.00	0.00	1.50	2.3	1
TR	TR:2	End	19.83	52.34	0.62	14.91	-1.43	0.01	0.0	-1.19	0.69	-0.01	-0.12	0.76	0.00	0.00	0.88	1.3	1
TR	TR:2	Origin	19.83	52.34	0.62	14.91	-1.43	0.01	0.0	-1.11	0.71	-0.01	-0.11	0.76	0.00	0.00	0.87	1.3	1
TR	TR:3	End	21.83	52.38	0.66	16.40	0.00	-0.00	0.0	-1.11	0.71	-0.01	-0.12	0.00	0.16	0.00	0.31	0.5	3
ML	ML:O	Origin	0.00	32.96	0.23	-1.66	-72.99	-0.40	-0.0	4.99	5.50	0.03	0.27	11.26	0.00	0.00	11.54	17.7	1
ML	#ML:0	End	5.00	33.20	0.18	-5.31	-45.51	-0.26	-0.0	4.99	5.50	0.03	0.33	10.51	0.00	0.00	10.84	16.7	1
ML	#ML:0	Origin	5.00	33.20	0.18	-5.31	-45.51	-0.26	-0.0	5.01	5.26	0.03	0.33	10.51	0.00	0.00	10.84	16.7	1
ML	#ML:1	End	8.53	33.38	0.14	-7.97	-26.95	-0.16	-0.0	5.01	5.26	0.03	0.40	8.77	0.00	0.00	9.16	14.1	1
ML	#ML:1	Origin	8.53	33.38	0.14	-7.97	-26.95	-0.16	-0.0	5.02	5.10	0.03	0.40	8.77	0.00	0.00	9.17	14.1	1
ML	ML:1	End	12.06	33.56	0.10	-10.72	-8.96	-0.06	-0.0	5.02	5.10	0.03	0.49	4.41	0.01	0.00	4.90	7.5	1
ML	ML:1	Origin	12.06	33.56	0.10	-10.72	-8.96	-0.06	0.0	5.49	4.48	0.03	0.53	4.41	0.01	0.00	4.94	7.6	1
ML	ML:2	End	14.06	33.50	0.08	-12.30	0.00	0.00	0.0	5.49	4.48	0.03	0.61	0.00	1.04	0.00	1.89	2.9	3
MR	MR:O	Origin	0.00	33.02	0.26	0.32	-60.58	0.39	0.0	-5.94	4.43	-0.03	-0.32	9.35	0.00	0.00	9.67	14.9	1
MR	#MR:0	End	5.00	33.46	0.32	3.80	-38.42	0.25	0.0	-5.94	4.43	-0.03	-0.40	8.87	0.00	0.00	9.27	14.3	1
MR	#MR:0	Origin	5.00	33.46	0.32	3.80	-38.42	0.25	0.0	-5.90	4.23	-0.03	-0.39	8.87	0.00	0.00	9.27	14.3	1
MR	#MR:1	End	8.53	33.76	0.36	6.17	-23.51	0.15	0.0	-5.90	4.23	-0.03	-0.47	7.65	0.00	0.00	8.12	12.5	1
MR	#MR:1	Origin	8.53	33.76	0.36	6.17	-23.51	0.15	0.0	-5.87	4.09	-0.03	-0.46	7.65	0.00	0.00	8.11	12.5	1
MR	MR:1	End	12.06	34.05	0.40	8.48	-9.09	0.06	0.0	-5.87	4.09	-0.03	-0.57	4.47	0.01	0.00	5.04	7.8	1
MR	MR:1	Origin	12.06	34.05	0.40	8.48	-9.09	0.06	0.0	-5.44	4.54	-0.03	-0.53	4.47	0.01	0.00	5.00	7.7	1
MR	MR:2	End	14.06	34.08	0.42	9.78	-0.00	0.00	0.0	-5.44	4.54	-0.03	-0.60	0.00	1.05	0.00	1.92	2.9	3
BL	BL:O	Origin	0.00	19.21	0.13	-1.18	-74.05	-0.36	-0.0	4.91	5.57	0.03	0.27	11.43	0.00	0.00	11.70	18.0	1
BL	#BL:0	End	5.00	19.41	0.10	-3.94	-46.20	-0.23	-0.0	4.91	5.57	0.03	0.33	10.67	0.00	0.00	11.00	16.9	1
BL	#BL:0	Origin	5.00	19.41	0.10	-3.94	-46.20	-0.23	-0.0	4.93	5.33	0.03	0.33	10.67	0.00	0.00	11.00	16.9	1
BL	#BL:1	End	8.53	19.56	0.08	-5.98	-27.38	-0.14	-0.0	4.93	5.33	0.03	0.39	8.91	0.00	0.00	9.30	14.3	1
BL	#BL:1	Origin	8.53	19.56	0.08	-5.98	-27.38	-0.14	-0.0	4.95	5.17	0.03	0.39	8.91	0.00	0.00	9.30	14.3	1
BL	BL:1	End	12.06	19.72	0.07	-8.09	-9.13	-0.05	-0.0	4.95	5.17	0.03	0.48	4.49	0.01	0.00	4.97	7.6	1
BL	BL:1	Origin	12.06	19.72	0.07	-8.09	-9.13	-0.05	0.0	5.42	4.56	0.03	0.53	4.49	0.01	0.00	5.02	7.7	1
BL	BL:2	End	14.06	19.68	0.06	-9.32	-0.00	0.00	0.0	5.42	4.56	0.03	0.60	0.00	1.05	0.00	1.92	3.0	3
BR	BR:O	Origin	0.00	19.25	0.15	0.58	-61.82	0.35	0.0	-5.88	4.52	-0.03	-0.32	9.54	0.00	0.00	9.86	15.2	1
BR	#BR:0	End	5.00	19.56	0.18	3.17	-39.21	0.23	0.0	-5.88	4.52	-0.03	-0.39	9.05	0.00	0.00	9.45	14.5	1
BR	#BR:0	Origin	5.00	19.56	0.18	3.17	-39.21	0.23	0.0	-5.84	4.31	-0.03	-0.39	9.05	0.00	0.00	9.44	14.5	1
BR	#BR:1	End	8.53	19.76	0.20	4.92	-23.98	0.14	0.0	-5.84	4.31	-0.03	-0.46	7.80	0.00	0.00	8.26	12.7	1
BR	#BR:1	Origin	8.53	19.76	0.20	4.92	-23.98	0.14	0.0	-5.81	4.18	-0.03	-0.46	7.80	0.00	0.00	8.26	12.7	1
BR	BR:1	End	12.06	19.96	0.23	6.60	-9.25	0.05	0.0	-5.81	4.18	-0.03	-0.56	4.55	0.01	0.00	5.11	7.9	1
BR	BR:1	Origin	12.06	19.96	0.23	6.60	-9.25	0.05	0.0	-5.37	4.62	-0.03	-0.52	4.55	0.01	0.00	5.07	7.8	1
BR	BR:2	End	14.06	19.98	0.24	7.53	-0.00	0.00	0.0	-5.37	4.62	-0.03	-0.60	0.00	1.07	0.00	1.94	3.0	3
CX1	CX1:O	Origin	0.00	0.33	0.00	-0.00	-0.10	0.10	0.0	0.00	0.40	-0.39	0.00	18.23	1.90	0.00	18.53	28.5	1
CX1	CX1:1	End	0.25	0.33	0.00	-0.01	-0.00	0.00	0.0	0.00	0.40	-0.39	0.00	0.00	1.90	0.00	3.29	5.1	1
CX2	CX2:O	Origin	0.00	1.31	0.01	-0.01	-0.07	0.06	0.0	0.00	0.27	-0.26	0.00	12.16	1.27	0.00	12.35	19.0	1
CX2	CX2:1	End	0.25	1.31	0.01	-0.01	-0.00	-0.00	0.0	0.00	0.27	-0.26	0.00	0.00	1.27	0.00	2.19	3.4	1
CX3	CX3:O	Origin	0.00	2.97	0.02	-0.03	-0.07	0.07	0.0	0.00	0.27	-0.26	0.00	12.16	1.27	0.00	12.35	19.0	1
CX3	CX3:1	End	0.25	2.97	0.02	-0.03	-0.00	-0.00	0.0	0.00	0.27	-0.26	0.00	0.00	1.27	0.00	2.19	3.4	1
CX4	CX4:O	Origin	0.00	5.31	0.04	-0.05	-0.07	0.07	0.0	0.00	0.26	-0.26	0.00	12.16	1.27	0.00	12.35	19.0	1
CX4	CX4:1	End	0.25	5.32	0.04	-0.06	-0.00	-0.00	0.0	0.00	0.26	-0.26	0.00	0.00	1.27	0.00	2.19	3.4	1
CX5	CX5:O	Origin	0.00	8.39	0.06	-0.10	-0.07	0.07	0.0	0.00	0.26	-0.26	0.00	12.16	1.27	0.00	12.35	19.0	1

CX5	CX5:1	End	0.25	8.39	0.06	-0.10	-0.00	-0.00	0.0	0.00	0.26	-0.26	0.00	0.00	1.27	0.00	2.19	3.4	1
CX6	CX6:O	Origin	0.00	12.24	0.09	-0.16	-0.07	0.07	0.0	0.00	0.26	-0.27	0.00	12.16	1.27	0.00	12.35	19.0	1
CX6	CX6:1	End	0.25	12.24	0.09	-0.17	-0.00	-0.00	0.0	0.00	0.26	-0.27	0.00	0.00	1.27	0.00	2.19	3.4	1
CX7	CX7:O	Origin	0.00	16.88	0.12	-0.26	-0.06	0.07	0.0	0.00	0.26	-0.27	0.00	12.16	1.27	0.00	12.35	19.0	1
CX7	CX7:1	End	0.25	16.88	0.12	-0.26	-0.00	-0.00	0.0	0.00	0.26	-0.27	0.00	0.00	1.27	0.00	2.19	3.4	1
CX8	CX8:O	Origin	0.00	22.27	0.16	-0.38	-0.06	0.07	-0.0	0.00	0.26	-0.27	0.00	12.16	1.27	0.00	12.35	19.0	1
CX8	CX8:1	End	0.25	22.27	0.16	-0.38	-0.00	-0.00	-0.0	0.00	0.26	-0.27	0.00	0.00	1.27	0.00	2.19	3.4	1
CX9	CX9:O	Origin	0.00	28.48	0.21	-0.55	-0.06	0.07	-0.0	0.00	0.26	-0.27	0.00	12.16	1.27	0.00	12.35	19.0	1
CX9	CX9:1	End	0.25	28.49	0.21	-0.55	-0.00	-0.00	-0.0	0.00	0.26	-0.27	0.00	0.00	1.27	0.00	2.19	3.4	1
CX10	CX10:O	Origin	0.00	35.52	0.26	-0.76	-0.06	0.07	-0.0	0.00	0.25	-0.27	0.00	12.16	1.27	0.00	12.35	19.0	1
CX10	CX10:1	End	0.25	35.52	0.26	-0.76	-0.00	-0.00	-0.0	0.00	0.25	-0.27	0.00	0.00	1.27	0.00	2.19	3.4	1
Clamp-B	Clamp-B:O	Origin	0.00	39.30	0.29	-0.88	-35.87	-0.00	-14.8	0.38	61.01	3.54	0.03	9.82	8.38	2.03	20.55	31.6	1
Clamp-B	Clamp-B:1	End	0.75	39.31	0.29	-0.90	10.07	2.66	-14.8	0.38	61.01	3.54	0.03	2.85	8.38	2.03	18.26	28.1	1
Clamp-T	Clamp-T:O	Origin	0.00	47.25	0.26	-1.12	35.95	9.38	-75.9	-0.51	-57.00	-13.47	-0.03	10.17	8.03	10.40	33.52	51.6	1
Clamp-T	Clamp-T:1	End	0.87	47.27	0.26	-1.18	-13.82	-2.35	-75.9	-0.51	-57.00	-13.47	-0.03	3.84	8.03	10.40	32.16	49.5	1
CX11	Mast:CX11	Origin	0.00	43.21	0.30	-1.03	-0.26	0.28	0.0	0.00	0.26	-0.28	0.00	3.30	0.35	0.00	3.36	5.2	1
CX11	CX11:1	End	1.00	43.23	0.30	-1.04	-0.00	-0.00	0.0	0.00	0.26	-0.28	0.00	0.00	0.35	0.00	0.61	0.9	1
CX12	Mast:CX12	Origin	0.00	51.68	0.20	-1.34	-0.25	0.34	0.0	0.00	0.25	-0.34	0.00	3.71	0.39	0.00	3.78	5.8	1
CX12	CX12:1	End	1.00	51.70	0.20	-1.33	-0.00	-0.00	0.0	0.00	0.25	-0.34	0.00	0.00	0.39	0.00	0.68	1.0	1
CX13	Mast:ANT	Origin	0.00	61.42	0.09	-1.74	-0.12	0.18	0.0	0.00	0.12	-0.18	0.00	1.88	0.20	0.00	1.91	2.9	1
CX13	CX13:1	End	1.00	61.44	0.09	-1.73	-0.00	-0.00	0.0	0.00	0.12	-0.18	0.00	0.00	0.20	0.00	0.35	0.5	1

Detailed Tubular X-Arm Usages for Load Case "NESC 250C (Extreme Wind)":

Element Label	Joint Label	Joint Position	Rel. Dist. (ft)	Trans. Defl. (in)	Long. Defl. (in)	Vert. Defl. (in)	Vert. Mom. (ft-k)	Horz. Mom. (ft-k)	Tors. Mom. (ft-k)	Axial Force (kips)	Vert. Shear (kips)	Horz. Shear (kips)	P/A (ksi)	M/S. (ksi)	V/Q. (ksi)	T/R. (ksi)	Res. (ksi)	Max. Usage %	At Pt.
Mast	Mast:O	Origin	0.00	39.31	0.29	-0.90	-14.82	10.07	2.7	-60.92	-3.59	0.28	-3.39	4.04	0.40	0.30	7.54	21.5	1
Mast	#sMast:0	End	2.50	41.25	0.30	-0.96	-23.80	10.78	2.7	-60.92	-3.59	0.28	-3.39	5.89	0.40	0.30	9.37	26.8	1
Mast	#sMast:0	Origin	2.50	41.25	0.30	-0.96	-23.79	10.78	2.7	-60.77	-3.68	0.26	-3.39	5.89	0.41	0.30	9.36	26.7	1
Mast	Mast:CX11	End	5.00	43.21	0.30	-1.03	-33.00	11.42	2.7	-60.77	-3.68	0.26	-3.39	7.88	0.41	0.30	11.33	32.4	1
Mast	Mast:CX11	Origin	5.00	43.21	0.30	-1.03	-33.00	11.68	2.4	-60.36	-4.04	0.23	-3.36	7.90	0.45	0.27	11.33	32.4	1
Mast	#sMast:1	End	7.50	45.22	0.29	-1.10	-43.10	12.25	2.4	-60.36	-4.04	0.23	-3.36	10.11	0.45	0.27	13.53	38.7	1
Mast	#sMast:1	Origin	7.50	45.22	0.29	-1.10	-43.10	12.25	2.4	-60.22	-4.09	0.20	-3.36	10.11	0.46	0.27	13.52	38.6	1
Mast	Mast:Top	End	10.00	47.27	0.26	-1.18	-53.33	12.75	2.4	-60.22	-4.09	0.20	-3.36	12.37	0.46	0.27	15.78	45.1	1
Mast	Mast:Top	Origin	10.00	47.27	0.26	-1.18	-129.29	-1.06	0.5	-2.91	9.12	0.05	-0.16	29.17	1.02	0.06	29.39	84.0	1
Mast	Mast:CX12	End	15.00	51.68	0.20	-1.34	-83.70	-0.83	0.5	-2.91	9.12	0.05	-0.16	18.89	1.02	0.06	19.14	54.7	1
Mast	Mast:CX12	Origin	15.00	51.68	0.20	-1.34	-83.70	-0.58	0.2	-2.30	8.49	0.05	-0.13	18.88	0.95	0.02	19.09	54.5	1
Mast	#sMast:2	End	20.00	56.46	0.15	-1.53	-41.25	-0.35	0.2	-2.30	8.49	0.05	-0.13	9.31	0.95	0.02	9.58	27.4	1
Mast	#sMast:2	Origin	20.00	56.46	0.15	-1.53	-41.25	-0.35	0.2	-2.05	8.27	0.04	-0.11	9.31	0.92	0.02	9.56	27.3	1
Mast	#sMast:3	End	22.50	58.93	0.12	-1.63	-20.58	-0.24	0.2	-2.05	8.27	0.04	-0.11	4.64	0.92	0.02	5.03	14.4	1
Mast	#sMast:3	Origin	22.50	58.93	0.12	-1.63	-20.58	-0.24	0.2	-1.89	8.12	0.04	-0.11	4.64	0.91	0.02	5.01	14.3	1
Mast	Mast:ANT	End	25.00	61.42	0.09	-1.74	-0.27	-0.13	0.2	-1.89	8.12	0.04	-0.11	0.07	0.91	0.02	1.61	4.6	1
Mast	Mast:ANT	Origin	25.00	61.42	0.09	-1.74	-0.27	-0.00	-0.0	-0.09	0.09	0.00	-0.01	0.06	0.01	0.00	0.07	0.2	1
Mast	Mast:E	End	28.00	64.41	0.06	-1.86	0.00	0.00	-0.0	-0.09	0.09	0.00	-0.01	0.00	0.01	0.00	0.02	0.1	1

Summary of Suspension Capacities and Usages for Load Case "NESC 250C (Extreme Wind)":

Suspension Label	Tension (kips)	Input Tension Capacity (kips)	Factored Tension Capacity (kips)	Tension Usage %	Input Hardware Capacity (kips)	Factored Hardware Capacity (kips)	Hardware Usage %	Max. Usage %
SWL	1.128	20.00	20.00	5.64	0.00	0.00	0.00	5.64
SWR	1.304	20.00	20.00	6.52	0.00	0.00	0.00	6.52
TCL	7.066	20.00	20.00	35.33	0.00	0.00	0.00	35.33
TCR	7.063	20.00	20.00	35.31	0.00	0.00	0.00	35.31
MCL	7.066	20.00	20.00	35.33	0.00	0.00	0.00	35.33
MCR	7.063	20.00	20.00	35.31	0.00	0.00	0.00	35.31
BCL	7.066	20.00	20.00	35.33	0.00	0.00	0.00	35.33
BCR	7.063	20.00	20.00	35.31	0.00	0.00	0.00	35.31

*** Analysis Results for Load Case No. 3 "NESC 250D (Extreme Ice w/Wind)" - Number of iterations in SAPS 17

Equilibrium Joint Positions and Rotations for Load Case "NESC 250D (Extreme Ice w/Wind)":

Joint Label	X-Displ (ft)	Y-Displ (ft)	Z-Displ (ft)	X-Rot (deg)	Y-Rot (deg)	Z-Rot (deg)	X-Pos (ft)	Y-Pos (ft)	Z-Pos (ft)
P:g	0	0	0	0.0000	0.0000	0.0000	0	0	0
P:t	0.05378	1.538	-0.01714	-1.3868	0.0544	0.0204	0.05378	1.538	120
P:tc	0.05274	1.511	-0.01681	-1.3868	0.0544	0.0204	0.05274	1.511	118.9
P:Clamp-T	0.04908	1.417	-0.01559	-1.3803	0.0543	0.0204	0.04908	1.417	115
P:Clamp-B	0.03934	1.181	-0.01263	-1.3126	0.0589	0.0148	0.03934	1.181	105
P:CX10	0.03452	1.068	-0.01122	-1.2621	0.0532	0.0129	0.03452	1.068	99.99
P:mc	0.03146	0.9933	-0.01031	-1.2237	0.0493	0.0117	0.03146	0.9933	96.53
P:CX9	0.02628	0.858	-0.008633	-1.1396	0.0426	0.0098	0.02628	0.858	89.99
P:CX8	0.01972	0.6715	-0.006481	-0.9898	0.0334	0.0072	0.01972	0.6715	79.99
P:bc	0.01672	0.5802	-0.005551	-0.9241	0.0299	0.0063	0.01672	0.5802	74.54
P:CX7	0.01447	0.509	-0.004818	-0.8664	0.0273	0.0056	0.01447	0.509	70
P:CX6	0.01021	0.3692	-0.003458	-0.7321	0.0218	0.0043	0.01021	0.3692	60
P:CX5	0.006842	0.2529	-0.002431	-0.5972	0.0170	0.0032	0.006842	0.2529	50
P:CX4	0.004257	0.1602	-0.001663	-0.4650	0.0128	0.0024	0.004257	0.1602	40
P:CX3	0.00234	0.08936	-0.001102	-0.3442	0.0092	0.0016	0.00234	0.08936	30
P:CX2	0.00102	0.03945	-0.0006686	-0.2259	0.0059	0.0010	0.00102	0.03945	20
P:CX1	0.0002508	0.009857	-0.0003158	-0.1111	0.0029	0.0005	0.0002508	0.009857	10
TL:O	0.05232	1.511	-0.04403	-1.3868	0.0544	0.0204	0.05232	2.635	118.9
TL:1	0.04821	1.543	-0.4655	-1.9755	0.0542	0.0199	0.04821	16.67	119.7
TL:2	0.04652	1.558	-0.6682	-2.0479	0.0542	0.0198	0.04652	22.43	120
TL:3	0.04576	1.557	-0.7399	-2.0565	0.0542	0.0198	0.04576	24.43	120
TR:O	0.05317	1.511	0.0104	-1.3868	0.0544	0.0204	0.05317	0.3868	118.9
TR:1	0.05968	1.538	0.2701	-0.8198	0.0547	0.0209	0.05968	-13.59	120.5
TR:2	0.06235	1.546	0.3482	-0.7469	0.0547	0.0210	0.06235	-19.33	121.1
TR:3	0.06311	1.546	0.374	-0.7378	0.0547	0.0210	0.06311	-21.33	121.1
ML:O	0.03115	0.993	-0.03986	-1.2237	0.0493	0.0117	0.03115	2.377	96.5
ML:1	0.02945	1.02	-0.3564	-1.7687	0.0492	0.0114	0.02945	14.4	97.35
ML:2	0.029	1.019	-0.4191	-1.8069	0.0492	0.0114	0.029	16.4	97.29
MR:O	0.03177	0.9936	0.01925	-1.2237	0.0493	0.0117	0.03177	-0.3903	96.56
MR:1	0.03544	1.015	0.2179	-0.6976	0.0494	0.0121	0.03544	-12.37	97.93
MR:2	0.03588	1.015	0.2412	-0.6592	0.0494	0.0121	0.03588	-14.37	97.95
BL:O	0.01653	0.58	-0.03216	-0.9241	0.0299	0.0063	0.01653	2.23	74.51
BL:1	0.01571	0.6019	-0.2859	-1.4697	0.0299	0.0060	0.01571	14.25	75.42
BL:2	0.01548	0.6013	-0.3382	-1.5080	0.0299	0.0060	0.01548	16.25	75.37
BR:O	0.01692	0.5804	0.02105	-0.9241	0.0299	0.0063	0.01692	-1.069	74.56
BR:1	0.01896	0.5945	0.1569	-0.3970	0.0300	0.0066	0.01896	-13.06	75.87
BR:2	0.01919	0.5946	0.1697	-0.3585	0.0301	0.0066	0.01919	-15.05	75.88
CX1:O	0.0002508	0.009877	-0.0004353	-0.1111	0.0029	0.0005	2.362	0.009877	10
CX1:1	0.0002497	0.009931	-0.00119	-0.1111	0.2417	0.0176	2.612	0.009931	9.999
CX2:O	0.00102	0.03949	-0.0009018	-0.2259	0.0059	0.0010	2.247	0.03949	20
CX2:1	0.001019	0.03952	-0.001422	-0.2259	0.1652	0.0125	2.497	0.03952	20
CX3:O	0.00234	0.08942	-0.001446	-0.3442	0.0092	0.0016	2.132	0.08942	30
CX3:1	0.002339	0.08946	-0.001981	-0.3442	0.1685	0.0131	2.382	0.08946	30
CX4:O	0.004257	0.1603	-0.002114	-0.4650	0.0128	0.0024	2.018	0.1603	40
CX4:1	0.004256	0.1603	-0.002664	-0.4650	0.1721	0.0138	2.268	0.1603	40
CX5:O	0.006841	0.253	-0.002994	-0.5972	0.0170	0.0032	1.899	0.253	50
CX5:1	0.006841	0.253	-0.003563	-0.5972	0.1763	0.0147	2.149	0.253	50
CX6:O	0.01021	0.3693	-0.004151	-0.7321	0.0218	0.0043	1.828	0.3693	60
CX6:1	0.01021	0.3694	-0.004742	-0.7321	0.1811	0.0158	2.078	0.3694	60
CX7:O	0.01447	0.5092	-0.005629	-0.8664	0.0273	0.0056	1.717	0.5092	69.99
CX7:1	0.01447	0.5093	-0.006243	-0.8664	0.1865	0.0171	1.967	0.5093	69.99
CX8:O	0.01972	0.6717	-0.007399	-0.9898	0.0334	0.0072	1.596	0.6717	79.99
CX8:1	0.01972	0.6717	-0.008041	-0.9898	0.1926	0.0186	1.846	0.6717	79.99
CX9:O	0.02628	0.8582	-0.009719	-1.1396	0.0426	0.0098	1.486	0.8582	89.99
CX9:1	0.02628	0.8583	-0.0104	-1.1397	0.2019	0.0212	1.736	0.8583	89.99
CX10:O	0.03452	1.069	-0.01247	-1.2621	0.0532	0.0129	1.378	1.069	99.99
CX10:1	0.03451	1.069	-0.0132	-1.2621	0.2124	0.0244	1.628	1.069	99.99
Clamp-B:O	0.03934	1.181	-0.01395	-1.3126	0.0589	0.0148	1.325	1.181	105
Clamp-B:1	0.03934	1.181	-0.01494	-1.3187	0.0613	0.0150	2.078	1.181	105
Clamp-T:O	0.04908	1.417	-0.0167	-1.3803	0.0543	0.0204	1.219	1.417	115
Clamp-T:1	0.04908	1.418	-0.01796	-1.3986	0.0542	0.0212	2.092	1.418	115
Mast:O	0.03934	1.181	-0.01494	-1.3187	0.0613	0.0150	2.078	1.181	105
Mast:CX11	0.04437	1.298	-0.01641	-1.3513	0.0572	0.0183	2.085	1.298	110
Mast:Top	0.04908	1.418	-0.01796	-1.3986	0.0542	0.0212	2.092	1.418	115
Mast:CX12	0.05406	1.544	-0.01962	-1.4992	0.0613	0.0219	2.099	1.544	120
Mast:ANT	0.06512	1.815	-0.02339	-1.5777	0.0663	0.0224	2.114	1.815	130
Mast:E	0.06856	1.898	-0.02453	-1.5778	0.0663	0.0224	2.119	1.898	133
CX11:1	0.04437	1.298	-0.01812	-1.3513	0.1144	0.0224	3.085	1.298	110
CX12:1	0.05406	1.545	-0.0214	-1.4992	0.1185	0.0269	3.099	1.545	120
CX13:1	0.06512	1.816	-0.02491	-1.5777	0.0950	0.0250	3.114	1.816	130

Joint Support Reactions for Load Case "NESC 250D (Extreme Ice w/Wind)":

Joint Label	X Force (kips)	X Usage %	Y Force (kips)	Y Usage %	H-Shear Usage %	Z Force (kips)	Comp. Usage %	Uplift Usage %	Result. Force (kips)	Result. Usage %	X Moment (ft-k)	X-M. Usage %	Y Moment (ft-k)	Y-M. Usage %	H-Bend-M Usage %	Z Moment (ft-k)	Z-M. Usage %	Max. Usage %
P:g	-0.15	0.0	-21.11	0.0	0.0	-110.53	0.0	0.0	112.52	0.0	2010.21	0.0	-50.5	0.0	0.0	-6.40	0.0	0.0

Detailed Steel Pole Usages for Load Case "NESC 250D (Extreme Ice w/Wind)":

Element Label	Joint Label	Joint Position	Rel. Dist. (ft)	Trans. Defl. (in)	Long. Defl. (in)	Vert. Defl. (in)	Trans. Mom. (Local Mx) (ft-k)	Long. Mom. (Local My) (ft-k)	Tors. Mom. (ft-k)	Axial Force (kips)	Tran. Shear (kips)	Long. Shear (kips)	P/A (ksi)	M/S. (ksi)	V/Q. (ksi)	T/R. (ksi)	Res. (ksi)	Max. Usage %	At Pt.
P	P:t	Origin	0.00	18.45	0.65	-0.21	-0.00	0.00	0.0	-0.07	0.02	-0.00	-0.00	0.00	0.00	0.00	0.00	0.0	5
P	P:tc	End	1.10	18.13	0.63	-0.20	0.02	-0.00	0.0	-0.07	0.02	-0.00	-0.00	0.00	0.00	0.00	0.00	0.0	2
P	P:tc	Origin	1.10	18.13	0.63	-0.20	6.32	-0.05	0.0	-20.82	6.13	-0.04	-0.65	0.26	0.28	0.00	1.03	1.6	3
P	P:Clamp-T	End	5.00	17.00	0.59	-0.19	30.19	-0.18	0.0	-20.82	6.13	-0.04	-0.62	1.55	0.10	0.00	2.18	3.4	2
P	P:Clamp-T	Origin	5.00	17.00	0.59	-0.19	46.06	7.57	5.6	-16.71	9.14	-0.30	-0.50	2.47	0.15	0.15	3.01	4.6	2
P	Tube 1	End	10.00	15.57	0.53	-0.17	91.76	6.05	5.6	-16.71	9.14	-0.30	-0.48	4.34	0.14	0.13	4.84	7.5	2
P	Tube 1	Origin	10.00	15.57	0.53	-0.17	91.76	6.05	5.6	-17.45	9.28	-0.31	-0.50	4.34	0.14	0.13	4.86	7.5	2
P	P:Clamp-B	End	15.00	14.17	0.47	-0.15	138.16	4.52	5.6	-17.45	9.28	-0.31	-0.47	5.90	0.13	0.12	6.39	9.8	2
P	P:Clamp-B	Origin	15.00	14.17	0.47	-0.15	144.33	-18.78	4.9	-30.41	8.81	-0.09	-0.83	6.32	0.13	0.11	7.16	11.0	2
P	P:CX10	End	20.00	12.82	0.41	-0.13	188.37	-19.21	4.9	-30.41	8.81	-0.09	-0.79	7.49	0.12	0.10	8.29	12.8	2
P	P:CX10	Origin	20.00	12.82	0.41	-0.13	188.37	-20.52	5.0	-31.92	9.00	-0.09	-0.83	7.50	0.12	0.10	8.34	12.8	2
P	P:mc	End	23.46	11.92	0.38	-0.12	219.48	-20.82	5.0	-31.92	9.00	-0.09	-0.81	8.21	0.12	0.09	9.02	13.9	2
P	P:mc	Origin	23.46	11.92	0.38	-0.12	224.42	-20.85	5.0	-48.90	13.56	-0.11	-1.24	8.39	0.18	0.09	9.63	14.8	2
P	Tube 1	End	26.73	11.09	0.35	-0.11	268.78	-21.21	5.0	-48.90	13.56	-0.11	-1.20	9.47	0.18	0.09	10.68	16.4	2
P	Tube 1	Origin	26.73	11.09	0.35	-0.11	268.78	-21.21	5.0	-49.47	13.64	-0.11	-1.22	9.47	0.18	0.09	10.70	16.5	2
P	P:CX9	End	30.00	10.30	0.32	-0.10	313.39	-21.56	5.0	-49.47	13.64	-0.11	-1.18	10.44	0.17	0.08	11.63	17.9	2
P	P:CX9	Origin	30.00	10.30	0.32	-0.10	313.39	-22.98	5.1	-51.04	13.81	-0.11	-1.22	10.45	0.17	0.09	11.68	18.0	2
P	Tube 1	End	35.00	9.14	0.27	-0.09	382.41	-23.52	5.1	-51.04	13.81	-0.11	-1.17	11.75	0.17	0.08	12.93	19.9	2
P	Tube 1	Origin	35.00	9.14	0.27	-0.09	382.41	-23.52	5.1	-51.97	13.92	-0.11	-1.20	11.75	0.17	0.08	12.95	19.9	2
P	P:CX8	End	40.00	8.06	0.24	-0.08	452.00	-24.06	5.1	-51.97	13.92	-0.11	-1.15	12.84	0.16	0.07	14.00	21.5	2
P	P:CX8	Origin	40.00	8.06	0.24	-0.08	452.00	-25.57	5.3	-53.61	14.08	-0.11	-0.89	9.60	0.12	0.06	10.50	16.1	2
P	Tube 2	End	42.73	7.50	0.22	-0.07	490.43	-25.86	5.3	-53.61	14.08	-0.11	-0.87	10.00	0.12	0.05	10.87	16.7	2
P	Tube 2	Origin	42.73	7.50	0.22	-0.07	490.43	-25.86	5.3	-54.29	14.16	-0.11	-0.88	10.00	0.12	0.05	10.88	16.7	2
P	P:bc	End	45.46	6.96	0.20	-0.07	529.06	-26.16	5.3	-54.29	14.16	-0.11	-0.86	10.36	0.12	0.05	11.23	17.3	2
P	P:bc	Origin	45.46	6.96	0.20	-0.07	533.91	-26.18	5.3	-71.66	18.64	-0.13	-1.14	10.45	0.16	0.05	11.60	17.8	2
P	P:CX7	End	50.00	6.11	0.17	-0.06	618.58	-26.75	5.3	-71.66	18.64	-0.13	-1.10	11.34	0.15	0.05	12.45	19.2	2
P	P:CX7	Origin	50.00	6.11	0.17	-0.06	618.58	-28.37	5.4	-73.56	18.81	-0.13	-1.13	11.35	0.15	0.05	12.49	19.2	2
P	Tube 2	End	53.58	5.47	0.15	-0.05	685.98	-28.82	5.4	-73.56	18.81	-0.13	-1.11	11.97	0.15	0.05	13.08	20.1	2
P	Tube 2	Origin	53.58	5.47	0.15	-0.05	685.98	-28.83	5.4	-74.52	18.89	-0.13	-1.12	11.97	0.15	0.05	13.10	20.1	2
P	SpliceT	End	57.17	4.88	0.14	-0.05	753.69	-29.28	5.4	-74.52	18.89	-0.13	-1.09	12.53	0.15	0.05	13.62	21.0	2
P	SpliceT	Origin	57.17	4.88	0.14	-0.05	753.69	-29.28	5.4	-75.77	18.97	-0.13	-1.11	12.53	0.15	0.05	13.64	21.0	2
P	P:CX6	End	60.00	4.43	0.12	-0.04	807.44	-29.64	5.4	-75.77	18.97	-0.13	-1.00	12.10	0.13	0.04	13.09	20.1	2
P	P:CX6	Origin	60.00	4.43	0.12	-0.04	807.44	-31.35	5.6	-78.17	19.12	-0.13	-1.03	12.10	0.13	0.04	13.13	20.2	2
P	SpliceB	End	63.00	3.98	0.11	-0.04	864.80	-31.73	5.6	-78.17	19.12	-0.13	-1.01	12.45	0.13	0.04	13.46	20.7	2
P	SpliceB	Origin	63.00	3.98	0.11	-0.04	864.80	-31.74	5.6	-79.54	19.20	-0.13	-1.02	12.45	0.13	0.04	13.48	20.7	2
P	Tube 3	End	66.50	3.49	0.10	-0.03	932.01	-32.19	5.6	-79.54	19.20	-0.13	-1.00	12.82	0.13	0.04	13.83	21.3	2
P	Tube 3	Origin	66.50	3.49	0.10	-0.03	932.01	-32.19	5.6	-80.65	19.29	-0.13	-1.02	12.82	0.13	0.04	13.84	21.3	2
P	P:CX5	End	70.00	3.03	0.08	-0.03	999.51	-32.64	5.6	-80.65	19.29	-0.13	-0.99	13.15	0.13	0.04	14.14	21.8	2
P	P:CX5	Origin	70.00	3.03	0.08	-0.03	999.51	-34.41	5.7	-82.63	19.44	-0.13	-1.02	13.15	0.13	0.04	14.18	21.8	2
P	Tube 3	End	73.63	2.60	0.07	-0.03	1069.97	-34.89	5.7	-82.63	19.44	-0.13	-1.00	13.46	0.12	0.04	14.46	22.2	2
P	Tube 3	Origin	73.63	2.60	0.07	-0.03	1069.97	-34.89	5.7	-83.83	19.53	-0.13	-1.01	13.46	0.12	0.04	14.47	22.3	2
P	SpliceT	End	77.25	2.20	0.06	-0.02	1140.75	-35.36	5.7	-83.83	19.53	-0.13	-0.99	13.73	0.12	0.04	14.72	22.6	2
P	SpliceT	Origin	77.25	2.20	0.06	-0.02	1140.75	-35.37	5.7	-84.95	19.61	-0.13	-0.90	12.34	0.11	0.03	13.24	20.4	2
P	P:CX4	End	80.00	1.92	0.05	-0.02	1194.67	-35.73	5.7	-84.95	19.61	-0.13	-0.89	12.50	0.11	0.03	13.39	20.6	2
P	P:CX4	Origin	80.00	1.92	0.05	-0.02	1194.67	-37.60	5.9	-87.24	19.78	-0.13	-0.91	12.51	0.11	0.03	13.42	20.6	2
P	Tube 4	End	85.00	1.47	0.04	-0.02	1293.58	-38.26	5.9	-87.24	19.78	-0.13	-0.88	12.78	0.11	0.03	13.66	21.0	2
P	Tube 4	Origin	85.00	1.47	0.04	-0.02	1293.58	-38.27	5.9	-89.18	19.92	-0.14	-0.90	12.78	0.11	0.03	13.68	21.0	2
P	P:CX3	End	90.00	1.07	0.03	-0.01	1393.17	-38.94	5.9	-89.18	19.92	-0.14	-0.88	13.00	0.10	0.03	13.88	21.4	2
P	P:CX3	Origin	90.00	1.07	0.03	-0.01	1393.17	-40.90	6.0	-91.72	20.11	-0.14	-0.90	13.01	0.11	0.03	13.91	21.4	2
P	Tube 4	End	93.63	0.83	0.02	-0.01	1466.05	-41.40	6.0	-91.72	20.11	-0.14	-0.89	13.15	0.10	0.03	14.04	21.6	2
P	Tube 4	Origin	93.63	0.83	0.02	-0.01	1466.05	-41.40	6.0	-93.19	20.21	-0.14	-0.90	13.15	0.10	0.03	14.05	21.6	2
P	SpliceT	End	97.25	0.61	0.02	-0.01	1539.31	-41.90	6.0	-93.19	20.21	-0.14	-0.88	13.27	0.10	0.03	14.16	21.8	2
P	SpliceT	Origin	97.25	0.61	0.02	-0.01	1539.31	-41.90	6.0	-94.50	20.30	-0.14	-0.90	13.27	0.10	0.03	14.17	21.8	2
P	P:CX2	End	100.00	0.47	0.01	-0.01	1595.14	-42.28	6.0	-94.50	20.30	-0.14	-0.88	13.36	0.10	0.03	14.24	21.9	2
P	P:CX2	Origin	100.00	0.47	0.01	-0.01	1595.14	-44.34	6.2	-96.96	20.48	-0.14	-0.91	13.36	0.10	0.03	14.27	22.0	2
P	Tube 5	End	105.00	0.27	0.01	-0.01	1697.54	-45.04	6.2	-96.96	20.48	-0.14	-0.88	13.50	0.10	0.03	14.38	22.1	2
P	Tube 5	Origin	105.00	0.27	0.01	-0.01	1697.54	-45.05	6.2	-99.12	20.63	-0.14	-0.90	13.50	0.10	0.03	14.40	22.2	2
P	P:CX1	End	110.00	0.12	0.00	-0.00	1800.69	-45.76	6.2	-99.12	20.63	-0.14	-0.88	13.61	0.10	0.02	14.49	22.3	2
P	P:CX1	Origin	110.00	0.12	0.00	-0.00	1800.69	-48.99	6.4	-102.56	20.87	-0.15	-0.91	13.61	0.10	0.02	14.53	22.3	2
P	Tube 5	End	115.00	0.03	0.00	-0.00	1905.06	-49.71	6.4	-102.56	20.87	-0.15	-0.89	13.71	0.10	0.02	14.60	22.5	2
P	Tube 5	Origin	115.00	0.03	0.00	-0.00	1905.06	-49.72	6.4	-104.82	21.03	-0.15	-0.91	13.71	0.10	0.02	14.61	22.5	2
P	P:g	End	120.00	0.00	0.00	0.00	2010.21	-50.45	6.4	-104.82	21.03	-0.15	-0.89	13.78	0.09	0.02	14.67	22.6	2

Detailed Tubular Davit Arm Usages for Load Case "NESC 250D (Extreme Ice w/Wind)":

Element Label	Joint Label	Joint Position	Rel. Dist. (ft)	Trans. Defl. (in)	Long. Defl. (in)	Vert. Defl. (in)	Vert. Mom. (ft-k)	Horz. Mom. (ft-k)	Tors. Mom. (ft-k)	Axial Force (kips)	Vert. Shear (kips)	Horz. Shear (kips)	P/A (ksi)	M/S. (ksi)	V/Q. (ksi)	T/R. (ksi)	Res. (ksi)	Max. Usage %	At Pt.
TL	TL:O	Origin	0.00	18.13	0.63	-0.53	-153.79	-0.26	-0.0	2.09	10.24	0.02	0.11	21.24	0.00	0.00	21.35	32.8	1
TL	#TL:0	End	5.00	18.25	0.61	-2.11	-102.60	-0.18	-0.0	2.09	10.24	0.02	0.12	18.45	0.00	0.00	18.57	28.6	1
TL	#TL:0	Origin	5.00	18.25	0.61	-2.11	-102.60	-0.18	-0.0	2.15	9.95	0.02	0.13	18.45	0.00	0.00	18.57	28.6	1
TL	#TL:1	End	9.53	18.38	0.59	-3.77	-57.51	-0.10	-0.0	2.15	9.95	0.02	0.14	13.59	0.00	0.00	13.73	21.1	1
TL	#TL:1	Origin	9.53	18.38	0.59	-3.77	-57.51	-0.10	-0.0	2.19	9.72	0.02	0.15	13.59	0.00	0.00	13.74	21.1	1
TL	TL:1	End	14.06	18.52	0.58	-5.59	-13.49	-0.03	-0.0	2.19	9.72	0.02	0.17	4.37	0.00	0.00	4.55	7.0	1
TL	TL:1	Origin	14.06	18.52	0.58	-5.59	-13.49	-0.03	-0.0	0.59	1.84	0.00	0.05	4.37	0.00	0.00	4.42	6.8	1
TL	#TL:2	End	16.95	18.61	0.57	-6.79	-8.17	-0.02	-0.0	0.59	1.84	0.00	0.05	3.34	0.00	0.00	3.39	5.2	1
TL	#TL:2	Origin	16.95	18.61	0.57	-6.79	-8.17	-0.02	-0.0	0.59	1.73	0.00	0.05	3.34	0.00	0.00	3.39	5.2	1
TL	TL:2	End	19.83	18.70	0.56	-8.02	-3.17	-0.01	-0.0	0.59	1.73	0.00	0.06	1.68	0.00	0.00	1.74	2.7	1
TL	TL:2	Origin	19.83	18.70	0.56	-8.02	-3.17	-0.01	0.0	0.75	1.59	0.00	0.08	1.68	0.00	0.00	1.76	2.7	1
TL	TL:3	End	21.83	18.68	0.55	-8.88	0.00	0.00	0.0	0.75	1.59	0.00	0.08	0.00	0.37	0.00	0.64	1.0	3
TR	TR:O	Origin	0.00	18.14	0.64	0.12	-147.41	0.25	0.0	-3.92	9.77	-0.02	-0.20	20.36	0.00	0.00	20.56	31.6	1
TR	#TR:0	End	5.00	18.27	0.67	1.44	-98.57	0.17	0.0	-3.92	9.77	-0.02	-0.23	17.72	0.00	0.00	17.95	27.6	1
TR	#TR:0	Origin	5.00	18.27	0.67	1.44	-98.57	0.17	0.0	-3.86	9.51	-0.02	-0.23	17.72	0.00	0.00	17.95	27.6	1
TR	#TR:1	End	9.53	18.37	0.69	2.42	-55.50	0.10	0.0	-3.86	9.51	-0.02	-0.26	13.11	0.00	0.00	13.37	20.6	1
TR	#TR:1	Origin	9.53	18.37	0.69	2.42	-55.50	0.10	0.0	-3.80	9.29	-0.02	-0.26	13.11	0.00	0.00	13.37	20.6	1
TR	TR:1	End	14.06	18.45	0.72	3.24	-13.41	0.03	0.0	-3.80	9.29	-0.02	-0.30	4.35	0.00	0.00	4.65	7.1	1
TR	TR:1	Origin	14.06	18.45	0.72	3.24	-13.41	0.03	0.0	-0.92	1.80	-0.00	-0.07	4.35	0.00	0.00	4.42	6.8	1
TR	#TR:2	End	16.95	18.50	0.73	3.72	-8.22	0.02	0.0	-0.92	1.80	-0.00	-0.08	3.36	0.00	0.00	3.44	5.3	1
TR	#TR:2	Origin	16.95	18.50	0.73	3.72	-8.22	0.02	0.0	-0.91	1.69	-0.00	-0.08	3.36	0.00	0.00	3.44	5.3	1
TR	TR:2	End	19.83	18.55	0.75	4.18	-3.36	0.01	0.0	-0.91	1.69	-0.00	-0.09	1.78	0.00	0.00	1.87	2.9	1
TR	TR:2	Origin	19.83	18.55	0.75	4.18	-3.36	0.01	0.0	-0.75	1.68	-0.00	-0.08	1.78	0.00	0.00	1.86	2.9	1
TR	TR:3	End	21.83	18.55	0.76	4.49	-0.00	0.00	0.0	-0.75	1.68	-0.00	-0.08	0.00	0.39	0.00	0.68	1.0	3
ML	ML:O	Origin	0.00	11.92	0.37	-0.48	-112.37	-0.16	-0.0	1.46	8.24	0.01	0.08	17.34	0.00	0.00	17.42	26.8	1
ML	#ML:0	End	5.00	12.04	0.37	-1.88	-71.14	-0.10	-0.0	1.46	8.24	0.01	0.10	16.43	0.00	0.00	16.53	25.4	1
ML	#ML:0	Origin	5.00	12.04	0.37	-1.88	-71.14	-0.10	-0.0	1.51	8.02	0.01	0.10	16.43	0.00	0.00	16.53	25.4	1
ML	#ML:1	End	8.53	12.13	0.36	-3.02	-42.86	-0.06	-0.0	1.51	8.02	0.01	0.12	13.95	0.00	0.00	14.06	21.6	1
ML	#ML:1	Origin	8.53	12.13	0.36	-3.02	-42.86	-0.06	-0.0	1.54	7.86	0.01	0.12	13.95	0.00	0.00	14.07	21.6	1
ML	ML:1	End	12.06	12.23	0.35	-4.28	-15.13	-0.02	-0.0	1.54	7.86	0.01	0.15	7.45	0.00	0.00	7.60	11.7	1
ML	ML:1	Origin	12.06	12.23	0.35	-4.28	-15.13	-0.02	0.0	2.30	7.57	0.01	0.22	7.45	0.00	0.00	7.67	11.8	1
ML	ML:2	End	14.06	12.22	0.35	-5.03	0.00	0.00	0.0	2.30	7.57	0.01	0.26	0.00	1.75	0.00	3.04	4.7	3
MR	MR:O	Origin	0.00	11.92	0.38	0.23	-107.43	0.15	0.0	-2.99	7.82	-0.01	-0.16	16.58	0.00	0.00	16.74	25.8	1
MR	#MR:0	End	5.00	12.05	0.40	1.38	-68.36	0.10	0.0	-2.99	7.82	-0.01	-0.20	15.79	0.00	0.00	15.98	24.6	1
MR	#MR:0	Origin	5.00	12.05	0.40	1.38	-68.36	0.10	0.0	-2.94	7.60	-0.01	-0.20	15.79	0.00	0.00	15.98	24.6	1
MR	#MR:1	End	8.53	12.12	0.41	2.06	-41.53	0.06	0.0	-2.94	7.60	-0.01	-0.23	13.51	0.00	0.00	13.75	21.1	1
MR	#MR:1	Origin	8.53	12.12	0.41	2.06	-41.53	0.06	0.0	-2.90	7.46	-0.01	-0.23	13.51	0.00	0.00	13.74	21.1	1
MR	MR:1	End	12.06	12.18	0.43	2.61	-15.21	0.02	0.0	-2.90	7.46	-0.01	-0.28	7.49	0.00	0.00	7.77	12.0	1
MR	MR:1	Origin	12.06	12.18	0.43	2.61	-15.21	0.02	0.0	-2.15	7.61	-0.01	-0.21	7.49	0.00	0.00	7.70	11.8	1
MR	MR:2	End	14.06	12.18	0.43	2.89	-0.00	0.00	0.0	-2.15	7.61	-0.01	-0.24	0.00	1.76	0.00	3.05	4.7	3
BL	BL:O	Origin	0.00	6.96	0.20	-0.39	-112.48	-0.12	-0.0	1.42	8.25	0.01	0.08	17.36	0.00	0.00	17.44	26.8	1
BL	#BL:0	End	5.00	7.06	0.19	-1.48	-71.22	-0.08	-0.0	1.42	8.25	0.01	0.09	16.45	0.00	0.00	16.54	25.4	1
BL	#BL:0	Origin	5.00	7.06	0.19	-1.48	-71.22	-0.08	-0.0	1.46	8.02	0.01	0.10	16.45	0.00	0.00	16.54	25.5	1
BL	#BL:1	End	8.53	7.14	0.19	-2.39	-42.91	-0.05	-0.0	1.46	8.02	0.01	0.12	13.96	0.00	0.00	14.08	21.7	1
BL	#BL:1	Origin	8.53	7.14	0.19	-2.39	-42.91	-0.05	-0.0	1.50	7.87	0.01	0.12	13.96	0.00	0.00	14.08	21.7	1
BL	BL:1	End	12.06	7.22	0.19	-3.43	-15.16	-0.02	-0.0	1.50	7.87	0.01	0.15	7.46	0.00	0.00	7.61	11.7	1
BL	BL:1	Origin	12.06	7.22	0.19	-3.43	-15.16	-0.02	0.0	2.26	7.58	0.01	0.22	7.46	0.00	0.00	7.68	11.8	1
BL	BL:2	End	14.06	7.22	0.19	-4.06	-0.00	0.00	0.0	2.26	7.58	0.01	0.25	0.00	1.75	0.00	3.04	4.7	3
BR	BR:O	Origin	0.00	6.96	0.20	0.25	-107.64	0.12	0.0	-2.95	7.83	-0.01	-0.16	16.61	0.00	0.00	16.77	25.8	1
BR	#BR:0	End	5.00	7.05	0.21	1.09	-68.49	0.07	0.0	-2.95	7.83	-0.01	-0.20	15.82	0.00	0.00	16.01	24.6	1
BR	#BR:0	Origin	5.00	7.05	0.21	1.09	-68.49	0.07	0.0	-2.90	7.62	-0.01	-0.19	15.82	0.00	0.00	16.01	24.6	1
BR	#BR:1	End	8.53	7.10	0.22	1.55	-41.61	0.04	0.0	-2.90	7.62	-0.01	-0.23	13.54	0.00	0.00	13.77	21.2	1
BR	#BR:1	Origin	8.53	7.10	0.22	1.55	-41.61	0.04	0.0	-2.86	7.47	-0.01	-0.23	13.54	0.00	0.00	13.76	21.2	1
BR	BR:1	End	12.06	7.13	0.23	1.88	-15.24	0.02	0.0	-2.86	7.47	-0.01	-0.28	7.50	0.00	0.00	7.78	12.0	1
BR	BR:1	Origin	12.06	7.13	0.23	1.88	-15.24	0.02	0.0	-2.11	7.62	-0.01	-0.20	7.50	0.00	0.00	7.70	11.9	1
BR	BR:2	End	14.06	7.13	0.23	2.04	-0.00	0.00	0.0	-2.11	7.62	-0.01	-0.23	0.00	1.76	0.00	3.06	4.7	3
CX1	CX1:O	Origin	0.00	0.12	0.00	-0.01	-0.31	0.02	0.0	0.01	1.24	-0.09	0.01	40.40	4.21	0.00	41.06	63.2	1
CX1	CX1:1	End	0.25	0.12	0.00	-0.01	-0.00	0.00	0.0	0.01	1.24	-0.09	0.01	0.00	4.21	0.00	7.29	11.2	1
CX2	CX2:O	Origin	0.00	0.47	0.01	-0.01	-0.21	0.02	0.0	0.00	0.82	-0.06	0.00	26.94	2.81	0.00	27.37	42.1	1
CX2	CX2:1	End	0.25	0.47	0.01	-0.02	-0.00	-0.00	0.0	0.00	0.82	-0.06	0.00	0.00	2.81	0.00	4.86	7.5	1
CX3	CX3:O	Origin	0.00	1.07	0.03	-0.02	-0.21	0.02	0.0	0.00	0.82	-0.06	0.00	26.94	2.81	0.00	27.38	42.1	1
CX3	CX3:1	End	0.25	1.07	0.03	-0.02	-0.00	-0.00	0.0	0.00	0.82	-0.06	0.00	0.00	2.81	0.00	4.86	7.5	1
CX4	CX4:O	Origin	0.00	1.92	0.05	-0.03	-0.21	0.02	0.0	0.00	0.82	-0.07	0.00	26.94	2.81	0.00	27.38	42.1	1
CX4	CX4:1	End	0.25	1.92	0.05	-0.03	-0.00	-0.00	0.0	0.00	0.82	-0.07	0.00	0.00	2.81	0.00	4.86	7.5	1
CX5	CX5:O	Origin	0.00	3.04	0.08	-0.04	-0.21	0.02	0.0	0.00	0.82	-0.07	0.00	26.94	2.81	0.00	27.38	42.1	1

CX5	CX5:1	End	0.25	3.04	0.08	-0.04	-0.00	-0.00	0.0	0.00	0.82	-0.07	0.00	0.00	2.81	0.00	4.86	7.5	1
CX6	CX6:O	Origin	0.00	4.43	0.12	-0.05	-0.21	0.02	0.0	0.00	0.82	-0.07	0.00	26.94	2.81	0.00	27.38	42.1	1
CX6	CX6:1	End	0.25	4.43	0.12	-0.06	-0.00	-0.00	0.0	0.00	0.82	-0.07	0.00	0.00	2.81	0.00	4.86	7.5	1
CX7	CX7:O	Origin	0.00	6.11	0.17	-0.07	-0.21	0.02	0.0	0.00	0.82	-0.07	0.01	26.94	2.81	0.00	27.38	42.1	1
CX7	CX7:1	End	0.25	6.11	0.17	-0.07	-0.00	-0.00	0.0	0.00	0.82	-0.07	0.01	0.00	2.81	0.00	4.86	7.5	1
CX8	CX8:O	Origin	0.00	8.06	0.24	-0.09	-0.21	0.02	0.0	0.00	0.82	-0.07	0.01	26.94	2.81	0.00	27.38	42.1	1
CX8	CX8:1	End	0.25	8.06	0.24	-0.10	-0.00	-0.00	0.0	0.00	0.82	-0.07	0.01	0.00	2.81	0.00	4.86	7.5	1
CX9	CX9:O	Origin	0.00	10.30	0.32	-0.12	-0.21	0.02	0.0	0.00	0.82	-0.08	0.01	26.94	2.81	0.00	27.38	42.1	1
CX9	CX9:1	End	0.25	10.30	0.32	-0.12	-0.00	-0.00	0.0	0.00	0.82	-0.08	0.01	0.00	2.81	0.00	4.86	7.5	1
CX10	CX10:O	Origin	0.00	12.82	0.41	-0.15	-0.21	0.02	0.0	0.00	0.82	-0.08	0.01	26.94	2.81	0.00	27.38	42.1	1
CX10	CX10:1	End	0.25	12.83	0.41	-0.16	-0.00	-0.00	0.0	0.00	0.82	-0.08	0.01	0.00	2.81	0.00	4.86	7.5	1
Clamp-B	Clamp-B:O	Origin	0.00	14.17	0.47	-0.17	-7.64	0.12	-6.2	-0.22	12.16	0.61	-0.02	2.09	1.67	0.85	4.84	7.4	1
Clamp-B	Clamp-B:1	End	0.75	14.18	0.47	-0.18	1.52	0.58	-6.2	-0.22	12.16	0.61	-0.02	0.45	1.67	0.85	4.38	6.7	1
Clamp-T	Clamp-T:O	Origin	0.00	17.01	0.59	-0.20	2.21	2.16	-15.9	0.26	-4.76	-2.89	0.02	0.85	0.76	2.17	5.16	7.9	1
Clamp-T	Clamp-T:1	End	0.87	17.01	0.59	-0.22	-1.94	-0.36	-15.9	0.26	-4.76	-2.89	0.02	0.54	0.76	2.17	5.12	7.9	1
CX11	Mast:CX11	Origin	0.00	15.57	0.53	-0.20	-0.83	0.08	0.0	0.00	0.83	-0.08	0.00	7.26	0.77	0.00	7.38	11.4	1
CX11	CX11:1	End	1.00	15.58	0.53	-0.22	-0.00	-0.00	0.0	0.00	0.83	-0.08	0.00	0.00	0.77	0.00	1.33	2.0	1
CX12	Mast:CX12	Origin	0.00	18.53	0.65	-0.24	-0.83	0.09	0.0	0.00	0.83	-0.09	0.00	7.26	0.77	0.00	7.39	11.4	1
CX12	CX12:1	End	1.00	18.54	0.65	-0.26	-0.00	-0.00	0.0	0.00	0.83	-0.09	0.00	0.00	0.77	0.00	1.33	2.1	1
CX13	Mast:ANT	Origin	0.00	21.78	0.78	-0.28	-0.41	0.05	0.0	0.00	0.41	-0.05	0.00	3.65	0.39	0.00	3.71	5.7	1
CX13	CX13:1	End	1.00	21.79	0.78	-0.30	-0.00	-0.00	0.0	0.00	0.41	-0.05	0.00	0.00	0.39	0.00	0.67	1.0	1

Detailed Tubular X-Arm Usages for Load Case "NESC 250D (Extreme Ice w/Wind)":

Element Label	Joint Label	Joint Position	Rel. Dist. (ft)	Trans. Defl. (in)	Long. Defl. (in)	Vert. Defl. (in)	Vert. Mom. (ft-k)	Horz. Mom. (ft-k)	Tors. Mom. (ft-k)	Axial Force (kips)	Vert. Shear (kips)	Horz. Shear (kips)	P/A (ksi)	M/S. (ksi)	V/Q. (ksi)	T/R. (ksi)	Res. (ksi)	Max. Usage %	At Pt.
Mast	Mast:O	Origin	0.00	14.18	0.47	-0.18	-6.17	1.52	0.6	-12.07	-0.63	-0.22	-0.67	1.43	0.07	0.07	2.12	6.1	1
Mast	#sMast:0	End	2.50	14.87	0.50	-0.19	-7.74	0.98	0.6	-12.07	-0.63	-0.22	-0.67	1.76	0.07	0.07	2.44	7.0	1
Mast	#sMast:0	Origin	2.50	14.87	0.50	-0.19	-7.74	0.98	0.6	-11.92	-0.65	-0.22	-0.66	1.76	0.08	0.07	2.44	7.0	1
Mast	Mast:CX11	End	5.00	15.57	0.53	-0.20	-9.37	0.43	0.6	-11.92	-0.65	-0.22	-0.66	2.12	0.08	0.07	2.79	8.0	1
Mast	Mast:CX11	Origin	5.00	15.57	0.53	-0.20	-9.37	1.25	0.5	-10.93	-0.76	-0.22	-0.61	2.13	0.09	0.06	2.75	7.9	1
Mast	#sMast:1	End	7.50	16.29	0.56	-0.21	-11.27	0.70	0.5	-10.93	-0.76	-0.22	-0.61	2.55	0.09	0.06	3.17	9.0	1
Mast	#sMast:1	Origin	7.50	16.29	0.56	-0.21	-11.27	0.70	0.5	-10.78	-0.79	-0.22	-0.60	2.55	0.09	0.06	3.16	9.0	1
Mast	Mast:Top	End	10.00	17.01	0.59	-0.22	-13.24	0.14	0.5	-10.78	-0.79	-0.22	-0.60	2.99	0.09	0.06	3.60	10.3	1
Mast	Mast:Top	Origin	10.00	17.01	0.59	-0.22	-29.11	-1.80	0.1	-5.77	2.06	0.04	-0.32	6.58	0.23	0.02	6.92	19.8	1
Mast	Mast:CX12	End	15.00	18.53	0.65	-0.24	-18.83	-1.60	0.1	-5.77	2.06	0.04	-0.32	4.26	0.23	0.02	4.60	13.2	1
Mast	Mast:CX12	Origin	15.00	18.53	0.65	-0.24	-18.83	-0.78	0.0	-4.63	1.91	0.04	-0.26	4.25	0.21	0.01	4.53	12.9	1
Mast	#sMast:2	End	20.00	20.14	0.71	-0.26	-9.29	-0.59	0.0	-4.63	1.91	0.04	-0.26	2.10	0.21	0.01	2.39	6.8	1
Mast	#sMast:2	Origin	20.00	20.14	0.71	-0.26	-9.29	-0.59	0.0	-4.40	1.86	0.04	-0.25	2.10	0.21	0.01	2.38	6.8	1
Mast	#sMast:3	End	22.50	20.96	0.75	-0.27	-4.64	-0.50	0.0	-4.40	1.86	0.04	-0.25	1.05	0.21	0.01	1.35	3.9	1
Mast	#sMast:3	Origin	22.50	20.96	0.75	-0.27	-4.64	-0.50	0.0	-4.25	1.83	0.04	-0.24	1.05	0.20	0.01	1.34	3.8	1
Mast	Mast:ANT	End	25.00	21.78	0.78	-0.28	-0.06	-0.42	0.0	-4.25	1.83	0.04	-0.24	0.09	0.20	0.01	0.49	1.4	1
Mast	Mast:ANT	Origin	25.00	21.78	0.78	-0.28	-0.06	-0.00	0.0	-0.09	0.02	0.00	-0.01	0.01	0.00	0.00	0.02	0.1	1
Mast	Mast:E	End	28.00	22.77	0.82	-0.29	0.00	0.00	0.0	-0.09	0.02	0.00	-0.01	0.00	0.00	0.00	0.01	0.0	1

Summary of Suspension Capacities and Usages for Load Case "NESC 250D (Extreme Ice w/Wind)":

Suspension Label	Tension (kips)	Input Tension Capacity (kips)	Factored Tension Capacity (kips)	Tension Usage %	Input Hardware Capacity (kips)	Factored Hardware Capacity (kips)	Hardware Usage %	Max. Usage %
SWL	1.723	20.00	20.00	8.62	0.00	0.00	0.00	8.62
SWR	1.808	20.00	20.00	9.04	0.00	0.00	0.00	9.04
TCL	7.878	20.00	20.00	39.39	0.00	0.00	0.00	39.39
TCR	7.874	20.00	20.00	39.37	0.00	0.00	0.00	39.37
MCL	7.878	20.00	20.00	39.39	0.00	0.00	0.00	39.39
MCR	7.874	20.00	20.00	39.37	0.00	0.00	0.00	39.37
BCL	7.878	20.00	20.00	39.39	0.00	0.00	0.00	39.39
BCR	7.874	20.00	20.00	39.37	0.00	0.00	0.00	39.37

*** Overall summary for all load cases - Usage = Maximum Stress / Allowable Stress

Summary of Steel Pole Usages:

Steel Pole Label	Maximum Usage %	Load Case	Segment Number	Weight (lbs)
P	59.36	NESC 250C (Extreme Wind)	31	35830.6

Base Plate Results by Bend Line:

Pole Label	Load Case	Bend Line #	Start X (ft)	Start Y (ft)	End X (ft)	End Y (ft)	Length (in)	Bending Stress (ksi)	Bolt Mom. Sum (ft-k)	# Bolts Acting	Bolt Max Load (kips)	Min Plate Thickness (in)	Actual Thickness (in)	Usage %
P	NESC 250B (Heavy)	1	2.239	1.568	0.232	2.727	27.811	12.714	69.061	5	59.783	1.726	3.750	21.19
P	NESC 250B (Heavy)	2	2.727	0.232	1.568	2.239	27.811	7.565	41.095	5	46.716	1.332	3.750	12.61
P	NESC 250B (Heavy)	3	2.478	-1.148	2.478	1.148	27.540	2.468	13.277	4	22.016	0.761	3.750	4.11
P	NESC 250B (Heavy)	4	1.568	-2.239	2.727	-0.232	27.811	6.127	33.282	5	-40.370	1.198	3.750	10.21
P	NESC 250B (Heavy)	5	0.232	-2.727	2.239	-1.568	27.811	11.045	59.998	5	-52.205	1.609	3.750	18.41
P	NESC 250B (Heavy)	6	-1.148	-2.478	1.148	-2.478	27.540	9.553	51.385	4	-52.205	1.496	3.750	15.92
P	NESC 250B (Heavy)	7	-2.239	-1.568	-0.232	-2.727	27.811	10.732	58.296	5	-51.767	1.586	3.750	17.89
P	NESC 250B (Heavy)	8	-2.727	-0.232	-1.568	-2.239	27.811	5.584	30.329	5	-38.701	1.144	3.750	9.31
P	NESC 250B (Heavy)	9	-2.478	1.148	-2.478	-1.148	27.540	2.468	13.277	4	24.462	0.761	3.750	4.11
P	NESC 250B (Heavy)	10	-1.568	2.239	-2.727	0.232	27.811	8.109	44.047	5	48.386	1.379	3.750	13.51
P	NESC 250B (Heavy)	11	-0.232	2.727	-2.239	1.568	27.811	13.027	70.763	5	60.221	1.747	3.750	21.71
P	NESC 250B (Heavy)	12	1.148	2.478	-1.148	2.478	27.540	11.053	59.456	4	60.221	1.610	3.750	18.42
P	NESC 250B (Heavy)	13	1.822	2.167	-0.488	2.786	28.706	7.111	39.870	5	60.221	1.291	3.750	11.85
P	NESC 250B (Heavy)	14	2.457	1.171	1.171	2.457	21.827	8.545	36.427	4	52.619	1.415	3.750	14.24
P	NESC 250B (Heavy)	15	2.786	-0.488	2.167	1.822	28.706	2.577	14.446	5	39.494	0.777	3.750	4.29
P	NESC 250B (Heavy)	16	2.167	-1.822	2.786	0.488	28.706	1.897	10.639	5	-33.471	0.667	3.750	3.16
P	NESC 250B (Heavy)	17	1.171	-2.457	2.457	-1.171	21.827	7.300	31.122	4	-45.899	1.308	3.750	12.17
P	NESC 250B (Heavy)	18	-0.488	-2.786	1.822	-2.167	28.706	6.211	34.822	5	-52.205	1.207	3.750	10.35
P	NESC 250B (Heavy)	19	-1.822	-2.167	0.488	-2.786	28.706	6.110	34.256	5	-52.205	1.197	3.750	10.18
P	NESC 250B (Heavy)	20	-2.457	-1.171	-1.171	-2.457	21.827	6.938	29.577	4	-44.604	1.275	3.750	11.56
P	NESC 250B (Heavy)	21	-2.786	0.488	-2.167	-1.822	28.706	1.601	8.975	5	-31.478	0.613	3.750	2.67
P	NESC 250B (Heavy)	22	-2.167	1.822	-2.786	-0.488	28.706	2.873	16.109	5	41.486	0.821	3.750	4.79
P	NESC 250B (Heavy)	23	-1.171	2.457	-2.457	1.171	21.827	8.907	37.972	4	53.914	1.445	3.750	14.85
P	NESC 250B (Heavy)	24	0.488	2.786	-1.822	2.167	28.706	7.212	40.436	5	60.221	1.300	3.750	12.02
P	NESC 250C (Extreme Wind)	1	2.239	1.568	0.232	2.727	27.811	26.144	142.010	5	123.184	2.475	3.750	43.57
P	NESC 250C (Extreme Wind)	2	2.727	0.232	1.568	2.239	27.811	15.190	82.512	5	95.872	1.887	3.750	25.32
P	NESC 250C (Extreme Wind)	3	2.478	-1.148	2.478	1.148	27.540	5.334	28.693	4	43.075	1.118	3.750	8.89
P	NESC 250C (Extreme Wind)	4	1.568	-2.239	2.727	-0.232	27.811	14.401	78.224	5	-92.332	1.837	3.750	24.00
P	NESC 250C (Extreme Wind)	5	0.232	-2.727	2.239	-1.568	27.811	25.203	136.899	5	-118.834	2.430	3.750	42.00
P	NESC 250C (Extreme Wind)	6	-1.148	-2.478	1.148	-2.478	27.540	21.832	117.435	4	-118.834	2.262	3.750	36.39
P	NESC 250C (Extreme Wind)	7	-2.239	-1.568	-0.232	-2.727	27.811	24.997	135.781	5	-118.546	2.420	3.750	41.66
P	NESC 250C (Extreme Wind)	8	-2.727	-0.232	-1.568	-2.239	27.811	14.043	76.283	5	-91.234	1.814	3.750	23.41
P	NESC 250C (Extreme Wind)	9	-2.478	1.148	-2.478	-1.148	27.540	5.334	28.693	4	44.683	1.118	3.750	8.89
P	NESC 250C (Extreme Wind)	10	-1.568	2.239	-2.727	0.232	27.811	15.548	84.453	5	96.970	1.909	3.750	25.91
P	NESC 250C (Extreme Wind)	11	-0.232	2.727	-2.239	1.568	27.811	26.350	143.128	5	123.472	2.485	3.750	43.92
P	NESC 250C (Extreme Wind)	12	1.148	2.478	-1.148	2.478	27.540	22.701	122.105	4	123.472	2.307	3.750	37.83
P	NESC 250C (Extreme Wind)	13	1.822	2.167	-0.488	2.786	28.706	14.652	82.147	5	123.472	1.853	3.750	24.42
P	NESC 250C (Extreme Wind)	14	2.457	1.171	1.171	2.457	21.827	17.467	74.464	4	108.348	2.023	3.750	29.11
P	NESC 250C (Extreme Wind)	15	2.786	-0.488	2.167	1.822	28.706	5.019	28.141	5	80.506	1.085	3.750	8.37
P	NESC 250C (Extreme Wind)	16	2.167	-1.822	2.786	0.488	28.706	4.650	26.069	5	-77.178	1.044	3.750	7.75
P	NESC 250C (Extreme Wind)	17	1.171	-2.457	2.457	-1.171	21.827	16.776	71.516	4	-104.561	1.983	3.750	27.96
P	NESC 250C (Extreme Wind)	18	-0.488	-2.786	1.822	-2.167	28.706	14.139	79.271	5	-118.834	1.820	3.750	23.56
P	NESC 250C (Extreme Wind)	19	-1.822	-2.167	0.488	-2.786	28.706	14.072	78.898	5	-118.834	1.816	3.750	23.45
P	NESC 250C (Extreme Wind)	20	-2.457	-1.171	-1.171	-2.457	21.827	16.538	70.500	4	-103.709	1.969	3.750	27.56
P	NESC 250C (Extreme Wind)	21	-2.786	0.488	-2.167	-1.822	28.706	4.455	24.976	5	-75.868	1.022	3.750	7.42
P	NESC 250C (Extreme Wind)	22	-2.167	1.822	-2.786	-0.488	28.706	5.214	29.234	5	81.816	1.105	3.750	8.69
P	NESC 250C (Extreme Wind)	23	-1.171	2.457	-2.457	1.171	21.827	17.706	75.480	4	109.199	2.037	3.750	29.51
P	NESC 250C (Extreme Wind)	24	0.488	2.786	-1.822	2.167	28.706	14.718	82.519	5	123.472	1.857	3.750	24.53
P	NESC 250D (Extreme Ice w/Wind)	1	2.239	1.568	0.232	2.727	27.811	9.958	54.090	5	46.833	1.528	3.750	16.60
P	NESC 250D (Extreme Ice w/Wind)	2	2.727	0.232	1.568	2.239	27.811	5.930	32.212	5	36.587	1.179	3.750	9.88
P	NESC 250D (Extreme Ice w/Wind)	3	2.478	-1.148	2.478	1.148	27.540	1.927	10.364	4	17.276	0.672	3.750	3.21
P	NESC 250D (Extreme Ice w/Wind)	4	1.568	-2.239	2.727	-0.232	27.811	4.758	25.846	5	-31.393	1.056	3.750	7.93
P	NESC 250D (Extreme Ice w/Wind)	5	0.232	-2.727	2.239	-1.568	27.811	8.589	46.652	5	-40.585	1.419	3.750	14.31
P	NESC 250D (Extreme Ice w/Wind)	6	-1.148	-2.478	1.148	-2.478	27.540	7.423	39.927	4	-40.585	1.319	3.750	12.37
P	NESC 250D (Extreme Ice w/Wind)	7	-2.239	-1.568	-0.232	-2.727	27.811	8.320	45.195	5	-40.210	1.396	3.750	13.87
P	NESC 250D (Extreme Ice w/Wind)	8	-2.727	-0.232	-1.568	-2.239	27.811	4.293	23.317	5	-29.964	1.003	3.750	7.15
P	NESC 250D (Extreme Ice w/Wind)	9	-2.478	1.148	-2.478	-1.148	27.540	1.927	10.364	4	19.370	0.672	3.750	3.21
P	NESC 250D (Extreme Ice w/Wind)	10	-1.568	2.239	-2.727	0.232	27.811	6.396	34.741	5	38.016	1.224	3.750	10.66
P	NESC 250D (Extreme Ice w/Wind)	11	-0.232	2.727	-2.239	1.568	27.811	10.226	55.547	5	47.208	1.548	3.750	17.04
P	NESC 250D (Extreme Ice w/Wind)	12	1.148	2.478	-1.148	2.478	27.540	8.663	46.595	4	47.208	1.425	3.750	14.44
P	NESC 250D (Extreme Ice w/Wind)	13	1.822	2.167	-0.488	2.786	28.706	5.570	31.229	5	47.208	1.143	3.750	9.28

P	NESC 250D (Extreme Ice w/Wind)	14	2.457	1.171	1.171	2.457	21.827	6.693	28.533	4	41.209	1.252	3.750	11.15
P	NESC 250D (Extreme Ice w/Wind)	15	2.786	-0.488	2.167	1.822	28.706	2.022	11.338	5	30.936	0.688	3.750	3.37
P	NESC 250D (Extreme Ice w/Wind)	16	2.167	-1.822	2.786	0.488	28.706	1.470	8.242	5	-26.019	0.587	3.750	2.45
P	NESC 250D (Extreme Ice w/Wind)	17	1.171	-2.457	2.457	-1.171	21.827	5.676	24.196	4	-35.694	1.153	3.750	9.46
P	NESC 250D (Extreme Ice w/Wind)	18	-0.488	-2.786	1.822	-2.167	28.706	4.829	27.075	5	-40.585	1.064	3.750	8.05
P	NESC 250D (Extreme Ice w/Wind)	19	-1.822	-2.167	0.488	-2.786	28.706	4.743	26.590	5	-40.585	1.054	3.750	7.90
P	NESC 250D (Extreme Ice w/Wind)	20	-2.457	-1.171	-1.171	-2.457	21.827	5.365	22.872	4	-34.586	1.121	3.750	8.94
P	NESC 250D (Extreme Ice w/Wind)	21	-2.786	0.488	-2.167	-1.822	28.706	1.216	6.818	5	-24.313	0.534	3.750	2.03
P	NESC 250D (Extreme Ice w/Wind)	22	-2.167	1.822	-2.786	-0.488	28.706	2.276	12.762	5	32.642	0.730	3.750	3.79
P	NESC 250D (Extreme Ice w/Wind)	23	-1.171	2.457	-2.457	1.171	21.827	7.003	29.856	4	42.317	1.281	3.750	11.67
P	NESC 250D (Extreme Ice w/Wind)	24	0.488	2.786	-1.822	2.167	28.706	5.656	31.714	5	47.208	1.151	3.750	9.43

Summary of Tubular Davit Usages:

Tubular Davit Label	Maximum Usage %	Load Case	Segment Number	Weight (lbs)
TL	36.07	NESC 250B (Heavy)	1	1053.0
TR	34.60	NESC 250B (Heavy)	1	1053.0
ML	30.26	NESC 250B (Heavy)	1	653.2
MR	29.02	NESC 250B (Heavy)	1	653.2
BL	30.29	NESC 250B (Heavy)	1	653.2
BR	29.09	NESC 250B (Heavy)	1	653.2
CX1	63.17	NESC 250D (Extreme Ice w/Wind)	1	0.5
CX2	42.12	NESC 250D (Extreme Ice w/Wind)	1	0.5
CX3	42.12	NESC 250D (Extreme Ice w/Wind)	1	0.5
CX4	42.12	NESC 250D (Extreme Ice w/Wind)	1	0.5
CX5	42.12	NESC 250D (Extreme Ice w/Wind)	1	0.5
CX6	42.12	NESC 250D (Extreme Ice w/Wind)	1	0.5
CX7	42.12	NESC 250D (Extreme Ice w/Wind)	1	0.5
CX8	42.12	NESC 250D (Extreme Ice w/Wind)	1	0.5
CX9	42.12	NESC 250D (Extreme Ice w/Wind)	1	0.5
CX10	42.12	NESC 250D (Extreme Ice w/Wind)	1	0.5
Clamp-B	31.62	NESC 250C (Extreme Wind)	1	37.4
Clamp-T	51.57	NESC 250C (Extreme Wind)	1	43.3
CX11	11.35	NESC 250D (Extreme Ice w/Wind)	1	7.3
CX12	11.36	NESC 250D (Extreme Ice w/Wind)	1	7.3
CX13	5.71	NESC 250D (Extreme Ice w/Wind)	1	7.3

Summary of Tubular X-Arm Usages:

Tubular X-Arm Label	Maximum Usage %	Load Case	Segment Number	Weight (lbs)
Mast	83.98	NESC 250C (Extreme Wind)	5	1709.9

*** Maximum Stress Summary for Each Load Case

Summary of Maximum Usages by Load Case:

Load Case	Maximum Usage %	Element Label	Element Type
NESC 250B (Heavy)	59.60	CX1	Tubular Davit
NESC 250C (Extreme Wind)	83.98	Mast	Tubular X-Arm
NESC 250D (Extreme Ice w/Wind)	63.17	CX1	Tubular Davit

Summary of Steel Pole Usages by Load Case:

Load Case	Maximum Usage %	Steel Pole Label	Segment Number
NESC 250B (Heavy)	28.79	P	31
NESC 250C (Extreme Wind)	59.36	P	31
NESC 250D (Extreme Ice w/Wind)	22.64	P	21

Summary of Base Plate Usages by Load Case:

Load Case	Pole Label	Bend Line #	Length (in)	Vertical Load (kips)	X Moment (ft-k)	Y Moment (ft-k)	Bending Stress (ksi)	Bolt Moment Sum (ft-k)	# Bolts Acting On Bend Line	Max Bolt Load For Bend Line (kips)	Minimum Plate Thickness (in)	Usage %
NESC 250B (Heavy)	P	11	27.811	128.248	2575.231	-58.921	13.027	70.763	5	60.221	1.747	21.71
NESC 250C (Extreme Wind)	P	11	27.811	74.210	5565.352	-38.734	26.350	143.128	5	123.472	2.485	43.92
NESC 250D (Extreme Ice w/Wind)	P	11	27.811	105.968	2010.210	-50.449	10.226	55.547	5	47.208	1.548	17.04

Summary of Tubular Davit Usages by Load Case:

Load Case	Maximum Usage %	Tubular Davit Label	Segment Number
NESC 250B (Heavy)	59.60	CX1	1
NESC 250C (Extreme Wind)	51.57	Clamp-T	1
NESC 250D (Extreme Ice w/Wind)	63.17	CX1	1

Summary of Tubular X-Arm Usages by Load Case:

Load Case	Maximum Usage %	Tubular X-Arm Label	Segment Number
NESC 250B (Heavy)	29.68	Mast	5
NESC 250C (Extreme Wind)	83.98	Mast	5
NESC 250D (Extreme Ice w/Wind)	19.76	Mast	5

Summary of Insulator Usages:

Insulator Label	Insulator Type	Maximum Usage %	Load Case	Weight (lbs)
SWL	Suspension	8.62	NESC 250D (Extreme Ice w/Wind)	25.0
SWR	Suspension	9.04	NESC 250D (Extreme Ice w/Wind)	25.0
TCL	Suspension	44.11	NESC 250B (Heavy)	120.0
TCR	Suspension	44.11	NESC 250B (Heavy)	120.0
MCL	Suspension	44.11	NESC 250B (Heavy)	120.0
MCR	Suspension	44.11	NESC 250B (Heavy)	120.0
BCL	Suspension	44.11	NESC 250B (Heavy)	120.0
BCR	Suspension	44.11	NESC 250B (Heavy)	120.0

Loads At Insulator Attachments For All Load Cases:

Load Case	Insulator Label	Insulator Type	Structure Attach Label	Structure Attach Load X (kips)	Structure Attach Load Y (kips)	Structure Attach Load Z (kips)	Structure Attach Load Res. (kips)
NESC 250B (Heavy)	SWL	Suspension	TL:3	0.001	0.736	1.468	1.642
NESC 250B (Heavy)	SWR	Suspension	TR:3	0.002	0.790	1.544	1.734
NESC 250B (Heavy)	TCL	Suspension	TL:1	0.003	2.443	8.477	8.822
NESC 250B (Heavy)	TCR	Suspension	TR:1	0.003	2.443	8.477	8.822
NESC 250B (Heavy)	MCL	Suspension	ML:2	0.003	2.443	8.477	8.822
NESC 250B (Heavy)	MCR	Suspension	MR:2	0.003	2.443	8.477	8.822
NESC 250B (Heavy)	BCL	Suspension	BL:2	0.003	2.443	8.477	8.822
NESC 250B (Heavy)	BCR	Suspension	BR:2	0.003	2.443	8.477	8.822
NESC 250C (Extreme Wind)	SWL	Suspension	TL:3	0.004	0.877	0.710	1.128
NESC 250C (Extreme Wind)	SWR	Suspension	TR:3	0.005	1.068	0.749	1.304
NESC 250C (Extreme Wind)	TCL	Suspension	TL:1	0.021	5.184	4.801	7.066
NESC 250C (Extreme Wind)	TCR	Suspension	TR:1	0.021	5.184	4.797	7.063
NESC 250C (Extreme Wind)	MCL	Suspension	ML:2	0.021	5.184	4.801	7.066
NESC 250C (Extreme Wind)	MCR	Suspension	MR:2	0.021	5.184	4.797	7.063
NESC 250C (Extreme Wind)	BCL	Suspension	BL:2	0.021	5.184	4.801	7.066
NESC 250C (Extreme Wind)	BCR	Suspension	BR:2	0.021	5.184	4.797	7.063
NESC 250D (Extreme Ice w/Wind)	SWL	Suspension	TL:3	0.002	0.690	1.579	1.723
NESC 250D (Extreme Ice w/Wind)	SWR	Suspension	TR:3	0.002	0.728	1.655	1.808
NESC 250D (Extreme Ice w/Wind)	TCL	Suspension	TL:1	0.004	2.064	7.603	7.878
NESC 250D (Extreme Ice w/Wind)	TCR	Suspension	TR:1	0.004	2.064	7.599	7.874
NESC 250D (Extreme Ice w/Wind)	MCL	Suspension	ML:2	0.004	2.064	7.603	7.878
NESC 250D (Extreme Ice w/Wind)	MCR	Suspension	MR:2	0.004	2.064	7.599	7.874
NESC 250D (Extreme Ice w/Wind)	BCL	Suspension	BL:2	0.004	2.064	7.603	7.878
NESC 250D (Extreme Ice w/Wind)	BCR	Suspension	BR:2	0.004	2.064	7.599	7.874

Overturning Moments For User Input Concentrated Loads:

Moments are static equivalents based on central axis of 0,0 (i.e. a single pole).

Load Case	Total Tran. Load (kips)	Total Long. Load (kips)	Total Vert. Load (kips)	Transverse Overturning Moment (ft-k)	Longitudinal Overturning Moment (ft-k)	Torsional Moment (ft-k)
NESC 250B (Heavy)	16.184	0.021	53.874	1616.995	-2.124	-0.023
NESC 250C (Extreme Wind)	33.049	0.135	30.253	3278.121	-13.418	-0.023
NESC 250D (Extreme Ice w/Wind)	13.802	0.028	48.840	1381.594	-2.832	0.000

*** Weight of structure (lbs):

Weight of Tubular Davit Arms:	4826.5
Weight of Tubular X-Arms:	1709.9
Weight of Steel Poles:	35830.6
Weight of Equipment:	5650.4
Weight of Suspensions:	770.0
Total:	48787.5

*** End of Report

APPENDIX D

SUPPLEMENTAL CALCULATIONS

Mast Connection - AISC / TIA-222-G

Bottom Connection - Pipe Riser Base Plate - Bolt Check

Risa 3D Reactions:

$Shear_{bottom} := 15.9\ kip$ — Worst Case (from Risa 3D)

Clamping Collar Input:

$F_{u_b_collar} := 58\ ksi$ — Minimum tensile strength of bottom collar horizontal seat plate

$t_{b_collar} := 0.75\ in$ — Thickness of bottom collar horizontal seat plate

$L_{c_b_collar} := 0.90625\ in$ — Minimum clear distance in bottom collar vertical seat plate

Bolt Input: (ASTM A325):

$F_{u_bolt} := 120\ ksi$ — Minimum tensile strength of bolt

$N := 4$ — Number of Bolts per Connection

$D_{bolt} := 1.125 \cdot in$ — Nominal Diameter of Bolt

$A_b := \frac{\pi}{4} \cdot (D_{bolt})^2 = 0.994\ in^2$ — Nominal Area of Bolt

$A_n := 0.75 \cdot A_b = 0.746\ in^2$ — Area of Bolt in Tension (as per TIA-222-G Section 4.9.6.1

Available Bolt Strengths:

$\phi_{tension} := 0.75$ $\phi_{bearing} := 0.80$ $\phi_{shear} := 0.75$

$F_{t.bolt} := \phi_{tension} \cdot F_{u_bolt} \cdot A_n = 67.1\ kip$ Available Tensile Strength (as per TIA-222G Section 4.9.6.1)

$F_{b.bolt} := \phi_{bearing} \cdot 1.2 \cdot \left(L_{c_b_collar} + \frac{D_{bolt}}{4}\right) \cdot t_{b_collar} \cdot F_{u_b_collar} = 49.59\ kip$ Available Bearing Strength (as per TIA-222-G Section 4.9.6.2)

$F_{v.bolt} := \phi_{shear} \cdot 0.45 \cdot F_{u_bolt} \cdot A_b = 40.26\ kip$ Available Shear Strength (as per TIA-222G Section 4.9.6.3)

Check Bolt Shear:

$f_v := \frac{Shear_{bottom}}{N} = 3.98\ kip$ Actual Shear Load

$Usage_{shear} := \frac{f_v}{F_{v.bolt}} = 0.1$

$Status_{shear} := \left\| \begin{array}{l} \text{if } Usage_{shear} \le 1 \\ \quad \text{"OK"} \\ \text{else} \\ \quad \text{"NG"} \end{array} \right. = \text{"OK"}$

Check Bolt Bearing:

$f_b := \frac{Shear_{bottom}}{N} = 3.98\ kip$ Actual Bearing Load

$Usage_{bearing} := \frac{f_b}{F_{b.bolt}} = 0.08$

$Status_{bearing} := \left\| \begin{array}{l} \text{if } Usage_{bearing} \le 1 \\ \quad \text{"OK"} \\ \text{else} \\ \quad \text{"NG"} \end{array} \right. = \text{"OK"}$

Bottom Connection - Horizontal Plate to Collar - Weld Check

Risa 3D Reactions:

$Shear_{bottom} := 15.9\ kip$ — Worst Case (from Risa 3D)

Weld Input:

$F_{EXX} := 70\ ksi$

$Weld_{size} := 0.3125\ in$

$l_{weld} := 50.3\ in$ — Length of Weld (Pole)

$n_{weld} := 2$ — Conservatively assumed top plate only

Available Weld Strength:

$\phi_{weld} := 0.75$

$R_n := \phi_{weld} \cdot 0.6 \cdot F_{EXX} \cdot \frac{\sqrt{2}}{2} \cdot Weld_{size} \cdot l_{weld} = 350.12\ kip$ — AISC eqn. 8-1 (per weld)

$R_{n_total} := R_n \cdot n_{weld} = 700.23\ kip$ — Total Available Weld Strength

Check Weld:

$Weld_{load} := Shear_{bottom} = 15.9\ kip$ — Actual Weld Load

$Usage_{weld} := \frac{Weld_{load}}{R_{n_total}} = 0.02$

$$Status_{weld} := \left\| \begin{array}{l} \text{if } Usage_{weld} \le 1 \\ \quad \text{"OK"} \\ \text{else} \\ \quad \text{"NG"} \end{array} \right. = \text{"OK"}$$

Mast Connection - AISC / TIA-222-G

Bottom Connection - Clamping Collar Bolts at Pole - Bolt Check

Risa 3D Reactions:

$Axial := 4.72 \cdot kip$ — Worst Case (from Risa 3D)

$Shear_{bottom} := 15.9\ kip$ — Worst Case (from Risa 3D)

Clamping Collar Input:

$F_{u_b_collar} := 58\ ksi$ — Minimum tensile strength of bottom collar vertical plate

$t_{b_collar} := 1\ in$ — Thickness of clamping plate

$moment_{arm} := 25\ in$ — Moment arm to clamping collar connection

$distance_{plates} := 10.5\ in$ — Moment arm bottom of collar to upper horizontal plate

Bolt Input: (ASTM A325):

$F_{u_bolt} := 120\ ksi$ — Minimum tensile strength of bolt

$N := 4$ — Number of Bolts per Connection

$n := 2$ — Number of Connections

$D_{bolt} := 0.875 \cdot in$ — Nominal Diameter of Bolt

$A_b := \frac{\pi}{4} \cdot (D_{bolt})^2 = 0.601\ in^2$ — Nominal Area of Bolt

$A_n := 0.75 \cdot A_b = 0.451\ in^2$ — Area of Bolt in Tension (as per TIA-222-G Section 4.9.6.1

Available Bolt Strengths:

$\phi_{tension} := 0.75$ $\phi_{bearing} := 0.80$ $\phi_{shear} := 0.75$

$F_{t.bolt} := \phi_{tension} \cdot F_{u_bolt} \cdot A_n = 40.59\ kip$ Available Tensile Strength (as per TIA-222G Section 4.9.6.1)

$F_{b.bolt} := \phi_{bearing} \cdot 1.2 \cdot \left(L_{c_b_collar} + \frac{D_{bolt}}{4}\right) \cdot t_{b_collar} \cdot F_{u_b_collar} = 62.64\ kip$ Available Bearing Strength (as per TIA-222-G Section 4.9.6.2)

$F_{v.bolt} := \phi_{shear} \cdot 0.45 \cdot F_{u_bolt} \cdot A_b = 24.35\ kip$ Available Shear Strength (as per TIA-222G Section 4.9.6.3)

Check Bolt Tension:

$f_t := \frac{Shear_{bottom}}{N \cdot n} + Axial \cdot \frac{moment_{arm}}{distance_{plates} \cdot N} = 4.8\ kip$ Actual Tension Load

$Usage_{tension} := \frac{f_t}{F_{t.bolt}} = 0.12$

$Status_{tension} := \left\| \begin{array}{l} \text{if } Usage_{tension} \le 1 \\ \quad \text{"OK"} \\ \text{else} \\ \quad \text{"NG"} \end{array} \right. = \text{"OK"}$

Check Bolt Bearing:

$f_b := \frac{\sqrt{Shear_{bottom}^{\ 2} + Axial^2}}{N \cdot n} = 2.07\ kip$ Actual Bearing Load

$Usage_{bearing} := \frac{f_b}{F_{b.bolt}} = 0.033$

$Status_{bearing} := \left\| \begin{array}{l} \text{if } Usage_{bearing} \le 1 \\ \quad \text{"OK"} \\ \text{else} \\ \quad \text{"NG"} \end{array} \right. = \text{"OK"}$

Check Bolt Shear:

$f_v := \frac{\sqrt{Shear_{bottom}^{\ 2} + Axial^2}}{N \cdot n} = 2.07\ kip$ Actual Shear Load

$Usage_{shear} := \frac{f_v}{F_{v.bolt}} = 0.09$

Bottom Connection - 1/2" Thick Gusset

Risa 3D Reactions:

$Axial := 4.72 \cdot kip$

$MomentArm := 9.2 \cdot in$

Worst Case (from Risa 3D)

Available Stiffener Strength:

$h := 7.25\ in$

$t := 0.5\ in$

$Z_x := \frac{h^2 \cdot t}{4} = 6.57\ in^3$

$F_y := 36\ ksi$

$E := 29000\ ksi$

$\phi_{bending} := 0.9$

$M_n := \phi_{bending} \cdot F_y \cdot Z_x = 17.74\ ft \cdot kip$

AISC eqn. F11-1

$M_u := \frac{Axial \cdot MomentArm}{2} = 1.81\ ft \cdot kip$

Half of total axial load to middle stiffener

$d := 7.25\ in$

$t := 0.5\ in$

$F_y := 36\ ksi$

$l_b := 7.25\ in$

$C_b := 1$

Cb=1.0 for doubly symmetric members with no transverse loading between bracing points.

$\frac{l_b \cdot d}{t^2} = 210.25 \qquad \frac{0.08 \cdot E}{F_y} = 64.44 \qquad \frac{1.9 \cdot E}{F_y} = 1530.56$

$M_y := \frac{F_y \cdot h^2 \cdot t}{6} = 13.14\ ft \cdot kip$

$M_n := \phi_{bending} \cdot C_b \cdot \left(1.52 - 0.274 \cdot \left(\frac{l_b \cdot d}{t^2}\right) \cdot \frac{F_y}{E}\right) \cdot M_y = 17.13\ ft \cdot kip$

AISC eqn. F11-2

Check Bending of Stiffener:

$Usage_{bending} := \frac{M_u}{M_n} = 0.11$

$Status_{weld} := \left\| \begin{array}{l} \text{if } Usage_{bending} \le 1 \\ \quad \text{"OK"} \\ \text{else} \\ \quad \text{"NG"} \end{array} \right. = \text{"OK"}$

The stiffener plates are adequate in yielding and lateral-torsional buckling; therefore there is no need to check the horizontal tabs in bending (ok).

Top Connection - Horizontal Plate to Collar - Weld Check

Risa 3D Reactions:

$Shear_{top} := 28.2\ kip$ — Worst Case (from Risa 3D)

Weld Input:

$F_{EXX} := 70\ ksi$

$Weld_{size} := 0.3125\ in$

$l_{weld} := 50.3\ in$ — Shortest Length of Weld (Mast)

$n_{weld} := 4$ — Total # of welds

Available Weld Strength:

$\phi_{weld} := 0.75$

$R_n := \phi_{weld} \cdot 0.6 \cdot F_{EXX} \cdot \frac{\sqrt{2}}{2} \cdot Weld_{size} \cdot l_{weld} = 350.12\ kip$ — AISC eqn. 8-1 (per weld)

$R_{n_total} := R_n \cdot n_{weld} = 1400.47\ kip$ — Total Available Weld Strength

Check Weld:

$Weld_{load} := Shear_{top} = 28.2\ kip$ — Actual Weld Load

$Usage_{weld} := \frac{Weld_{load}}{R_{n_total}} = 0.02$

$$Status_{weld} := \left\| \begin{array}{l} \text{if } Usage_{weld} \le 1 \\ \quad \text{"OK"} \\ \text{else} \\ \quad \text{"NG"} \end{array} \right. = \text{"OK"}$$

Top Connection - - Bolt Check

$Shear_{top} = 28.2\ kip$

Clamping Collar Tab Input:

$F_{u_tab} := 58\ ksi$	Minimum tensile strength of tab
$t_{tab} := 1\ in$	Thickness of tab
$L_{c_tab} := 1.09375\ in$	Minimum clear distance in tab
$moment_{arm} := 25\ in$	Moment arm to clamping collar connection
$distance_{bolts} := 32.2\ in$	Distance between outer bolts of clamping collar

Bolt Input: (ASTM A325):

$F_{u_bolt} := 120\ ksi$	Minimum tensile strength of bolt
$N := 3$	Number of Bolts per Connection
$n := 2$	Number of Connections
$D_{bolt} := 0.75 \cdot in$	Nominal Diameter of Bolt
$A_b := \frac{\pi}{4} \cdot (D_{bolt})^2 = 0.442\ in^2$	Nominal Area of Bolt
$A_n := 0.75 \cdot A_b = 0.331\ in^2$	Area of Bolt in Tension (as per TIA-222-G Section 4.9.6.1

Available Bolt Strengths:

$\phi_{tension} := 0.75$ $\phi_{bearing} := 0.80$ $\phi_{shear} := 0.75$

$F_{t.bolt} := \phi_{tension} \cdot F_{u_bolt} \cdot A_n = 29.82\ kip$ Available Tensile Strength (as per TIA-222G Section 4.9.6.1)

$F_{b.bolt} := \phi_{bearing} \cdot 1.2 \cdot \left(L_{c_tab} + \frac{D_{bolt}}{4}\right) \cdot t_{tab} \cdot F_{u_tab} = 71.34\ kip$ Available Bearing Strength (as per TIA-222-G Section 4.9.6.2)

$F_{v.bolt} := \phi_{shear} \cdot 0.45 \cdot F_{u_bolt} \cdot A_b = 17.89\ kip$ Available Shear Strength (as per TIA-222G Section 4.9.6.3)

Check Bolt Tension 1: Wind Parallel to Transmission Lines

$f_{t1} := \frac{Shear_{top}}{N \cdot n} = 4.7\ kip$ Actual Tension Load

$Usage_{tension} := \frac{f_{t1}}{F_{t.bolt}} = 0.16$

$Status_{tension} := \left\| \begin{array}{l} \text{if } Usage_{tension} \le 1 \\ \quad \text{"OK"} \\ \text{else} \\ \quad \text{"NG"} \end{array} \right. = \text{"OK"}$

Check Bolt Tension 2: Wind Perpendicular to Transmission Lines

$f_{t2} := \frac{Shear_{top} \cdot moment_{arm}}{N \cdot distance_{bolts}} = 7.3\ kip$ Actual Tension Load

$Usage_{tension} := \frac{f_{t2}}{F_{t.bolt}} = 0.24$

$Status_{tension} := \left\| \begin{array}{l} \text{if } Usage_{tension} \le 1 \\ \quad \text{"OK"} \\ \text{else} \\ \quad \text{"NG"} \end{array} \right. = \text{"OK"}$

Check Bolt Bearing:

$f_b := \frac{Shear_{top}}{N \cdot n} = 4.7\ kip$ Actual Bearing Load

$Usage_{bearing} := \frac{f_b}{F_{b.bolt}} = 0.066$

$Status_{bearing} := \left\| \begin{array}{l} \text{if } Usage_{bearing} \le 1 \\ \quad \text{"OK"} \\ \text{else} \\ \quad \text{"NG"} \end{array} \right. = \text{"OK"}$

Check Bolt Shear:

$$f_v := \frac{Shear_{top}}{N \cdot n} = 4.7\ kip$$

Actual Shear Load

$$Usage_{shear} := \frac{f_v}{F_{v.bolt}} = 0.263$$

$$Status_{shear} := \left\| \begin{array}{l} \text{if } Usage_{shear} \le 1 \\ \quad \text{"OK"} \\ \text{else} \\ \quad \text{"NG"} \end{array} \right. = \text{"OK"}$$

Anchor Bolt Analysis - ASCE 48-05

Max Flange Loads

Anchor Bolt Load (Max Tension):	$T := 123.5 \cdot kip$	User Input - from PLS-Pole
Pole Shear (Max):	$V := 59.6\ kip$	User Input - from PLS-Pole
Pole Axial Load (Max):	$A := 78.8 \cdot kip$	User Input - from PLS-Pole

Anchor Bolt Input:

Bolt Type:	ASTM A615 Grade 75	User Input
Bolt Quantity:	$N := 32$	User Input
Bolt Ultimate Strength:	$Fu_{bolt} := 100 \cdot ksi$	User Input
Bolt Yield Strength:	$Fy_{bolt} := 75\ ksi$	User Input
Bolt Nominal Diameter:	$D_{bolt} := 2.25 \cdot in$	User Input
Bolt Threads per Inch:	$n := 4.5$	User Input

Anchor Bolt Tension Check:

$$A_g := \frac{\pi \cdot D_{bolt}^2}{4} = 3.98\ in^2$$

Gross Area of Anchor Bolt Shank

$$A_s := \frac{\pi}{4} \cdot \left(D_{bolt} - \frac{0.9743\ in}{n}\right)^2 = 3.25\ in^2$$

Stress Area of Anchor Bolt through the threads

$$f_t := \frac{T}{A_s} = 38.027\ ksi$$

$$F_t := 0.75 \cdot Fu_{bolt} = 75\ ksi$$

As per ASCE 48-05 Section 6.2.3

$$Bolt_{usage_tension} := \frac{f_t}{F_t} = 50.7\%$$

$$Status_{bolt_tension} := \left\| \begin{array}{l} \text{if } Bolt_{usage_tension} \le 1 \\ \quad \text{"OK"} \\ \text{else} \\ \quad \text{"NG"} \end{array} \right. = \text{"OK"}$$

Anchor Bolt Shear Check:

$$V_{max} := \frac{V}{N} = 1.863\ kip$$

$$f_v := \frac{V_{max}}{A_g} = 0.468\ ksi$$

$$F_v := 0.45\ Fu_{bolt} = 45\ ksi$$

As per ASCE 48-05 Section 6.2.2

$$Bolt_{usage_shear} := \frac{f_v}{F_v} = 1\%$$

$$Status_{bolt_shear} := \left\| \begin{array}{l} \text{if } Bolt_{usage_shear} \le 1 \\ \quad \text{"OK"} \\ \text{else} \\ \quad \text{"NG"} \end{array} \right. = \text{"OK"}$$

Anchor Bolt Combined Shear and Tension Check:

$$F_{t_v} := F_t \cdot \sqrt{\left(1 - \left(\frac{f_v}{F_v}\right)^2\right)} = 75\ ksi$$

As per ASCE 48-05 Section 6.2.4

$$Bolt_{usage_combined} := \frac{f_t}{F_{t_v}} = 50.7\%$$

$$Status_{bolt_combined} := \left\| \begin{array}{l} \text{if } Bolt_{usage_combined} \le 1 \\ \quad \text{"OK"} \\ \text{else} \\ \quad \text{"NG"} \end{array} \right. = \text{"OK"}$$

==========

LPile Plus for Windows, Version 6 (6.0.22)

Analysis of Individual Piles and Drilled Shafts
Subjected to Lateral Loading Using the p-y Method

© 1985-2011 by Ensoft, Inc.
All Rights Reserved

==========

This program is licensed to:

Charles Carrillo
PJF

Files Used for Analysis

Path to file locations: G:\Transmission\Eversource\2019\806_Smartlink\80619-0001 Tower 24063 AT&T CTL02343\001.6000 - SA\LPile\
Name of input data file: A80619-0001.001.6000 Foundation Analysis.lp6d
Name of output report file: A80619-0001.001.6000 Foundation Analysis.lp6o
Name of plot output file: A80619-0001.001.6000 Foundation Analysis.lp6p
Name of runtime messeage file: A80619-0001.001.6000 Foundation Analysis.lp6r

---

Date and Time of Analysis

Date: February 12, 2019 Time: 13:10:16

Problem Title

Project Name: Structure #24063 / Orange Overland Drive

Job Number: A80619-0001.001.6050

Client: ATT

Engineer: CEC

Description: 7.5'x28' Caisson

Program Options

Engineering units are US Customary Units: pounds, inches, feet

Basic Program Options:

This analysis computes nonlinear bending stiffness and nominal moment
capacity with pile response computed using nonlinear EI

Computation Options:
- Only internally-generated p-y curves used in analysis
- Analysis does not use p-y multipliers (individual pile or shaft action only)
- Analysis assumes no shear resistance at pile tip
- Analysis for fixed-length pile or shaft only
- No computation of foundation stiffness matrix elements
- Output pile response for full length of pile
- Analysis assumes no soil movements acting on pile
- No p-y curves to be computed and output for user-specified depths

Solution Control Parameters:

- Number of pile increments	=	100	
- Maximum number of iterations allowed	=	500	
- Deflection tolerance for convergence	=	1.0000E-05	in
- Maximum allowable deflection	=	100.0000	in

Pile Response Output Options:
- Values of pile-head deflection, bending moment, shear force, and
  soil reaction are printed for full length of pile.
- Printing Increment (nodal spacing of output points) = 1

Pile Structural Properties and Geometry

Total Number of Sections	=	1	
Total Pile Length	=	28.00	ft

```
Depth of ground surface below top of pile              =       1.00 ft

Slope angle of ground surface                          =       0.00 deg.

Pile dimensions used for p-y curve computations defined using 2 points.
p-y curves are computed using values of pile diameter interpolated over
the length of the pile.

Point         Depth              Pile
                X              Diameter
                ft               in
-----       ---------        -----------
  1           0.00000         90.0000000
  2          28.000000        90.0000000


Input Structural Properties:
----------------------------

Pile Section No. 1:

   Section Type                                        = Drilled Shaft (Bored Pile)
   Section Length                                      =          28.000 ft
   Section Diameter                                    =          90.000 in




--------------------------------------------------------------------------------
                      Ground Slope and Pile Batter Angles
--------------------------------------------------------------------------------

Ground Slope Angle                                     =        0.000 degrees
                                                       =        0.000 radians

Pile Batter Angle                                      =        0.000 degrees
                                                       =        0.000 radians



--------------------------------------------------------------------------------
                       Soil and Rock Layering Information
--------------------------------------------------------------------------------

The soil profile is modelled using 5 layers
```

```
Layer 1 is soft clay, p-y criteria by Matlock, 1970

Distance from top of pile to top of layer              =        1.000 ft
Distance from top of pile to bottom of layer           =        4.333 ft

Layer 2 is sand, p-y criteria by Reese et al., 1974

Distance from top of pile to top of layer              =        4.333 ft
Distance from top of pile to bottom of layer           =        6.000 ft
p-y subgrade modulus k for top of soil layer           =        0.000 lbs/in**3
p-y subgrade modulus k for bottom of layer             =        0.000 lbs/in**3

NOTE:  Internal default values for p-y subgrade modulus will be computed for
the above soil layer.

Layer 3 is sand, p-y criteria by Reese et al., 1974

Distance from top of pile to top of layer              =        6.000 ft
Distance from top of pile to bottom of layer           =       11.000 ft
p-y subgrade modulus k for top of soil layer           =        0.000 lbs/in**3
p-y subgrade modulus k for bottom of layer             =        0.000 lbs/in**3

NOTE:  Internal default values for p-y subgrade modulus will be computed for
the above soil layer.

Layer 4 is sand, p-y criteria by Reese et al., 1974

Distance from top of pile to top of layer              =       11.000 ft
Distance from top of pile to bottom of layer           =       21.000 ft
p-y subgrade modulus k for top of soil layer           =        0.000 lbs/in**3
p-y subgrade modulus k for bottom of layer             =        0.000 lbs/in**3

NOTE:  Internal default values for p-y subgrade modulus will be computed for
the above soil layer.

Layer 5 is weak rock, p-y criteria by Reese, 1997

Distance from top of pile to top of layer              =       21.000 ft
Distance from top of pile to bottom of layer           =       29.000 ft
Initial modulus of rock at top of layer                =   5.0000E+05 lbs/in**2
Initial modulus of rock at bottom of layer             =   5.0000E+05 lbs/in**2


(Depth of lowest layer extends    1.00 ft below pile tip)


--------------------------------------------------------------------------------
                     Effective Unit Weight of Soil vs. Depth
```

Effective unit weight of soil with depth defined using 10 points

Point No.	Depth X ft	Eff. Unit Weight pcf
1	1.00	100.00000
2	4.33	100.00000
3	4.33	110.00000
4	6.00	110.00000
5	6.00	115.00000
6	11.00	115.00000
7	11.00	120.00000
8	21.00	120.00000
9	21.00	135.00000
10	29.00	135.00000

Summary of Soil Properties

Layer Num.	Soil Type	RQD percent	Epsilon 50 (p-y Curve Criteria)	kpy pci	Rock Emass psi	Depth ft	Eff. Unit Wt., pcf	krm	Cohesion psf	Test Type	Friction Ang., deg.	Test Prop.	Elas. Subgr. pci	qu psi
1	Soft Clay	--	0.00	--	--	1.000	100.000	--	1.000	--	--	--	--	--
		--	0.00	--	--	4.333	100.000	--	1.000	--	--	--	--	--
2	Sand (Reese, et al.)	--	--	default	--	4.333	110.000	--	--	--	30.000	--	--	--
		--	--	default	--	6.000	110.000	--	--	--	30.000	--	--	--
3	Sand (Reese, et al.)	--	--	default	--	6.000	115.000	--	--	--	32.000	--	--	--
		--	--	default	--	11.000	115.000	--	--	--	32.000	--	--	--
4	Sand (Reese, et al.)	--	--	default	--	11.000	120.000	--	--	--	33.000	--	--	--
		--	--	default	--	21.000	120.000	--	--	--	33.000	--	--	--
5	Weak Rock	0.00	--	--	500000.	21.000	135.000	5.00E-04	--	--	--	--	--	556.000
						29.000	135.000	--	--	--	--	--	--	556.000

```
       0.00       --           --          500000.     5.00E-04       --           --           --
```

Loading Type

Static loading criteria were used when computing p-y curves for all analyses.

Pile-head Loading and Pile-head Fixity Conditions

Number of loads specified = 2

Load No.	Load Type	Condition 1	Condition 2	Axial Thrust Force, lbs
1	1	V = 30140.000 lbs	M = 34001880.000 in-lbs	132810.000
2	1	V = 65560.000 lbs	M = 73464600.000 in-lbs	78770.000

V = perpendicular shear force applied to pile head
M = bending moment applied to pile head
y = lateral deflection relative to pile axis
S = pile slope relative to original pile batter angle
R = rotational stiffness applie to pile head
Axial thrust is assumed to be acting axially

Computations of Nominal Moment Capacity and Nonlinear Bending Stiffness

---

Axial thrust force values were determined from pile-head loading conditions

Number of Pile Sections Analyzed = 1

Pile Section No. 1:

Dimensions and Properties of Drilled Shaft:

Length of Section = 28.00000000 ft

Shaft Diameter	=	90.00000000	in
Concrete Cover Thickness	=	3.00000000	in
Number of Reinforcing Bars	=	45	bars
Yield Stress of Reinforcing Bars	=	60.00000000	ksi
Modulus of Elasticity of Reinforcing Bars	=	29000.	ksi
Gross Area of Shaft	=	6361.72512352	sq. in.
Total Area of Reinforcing Steel	=	70.20000000	sq. in.
Area Ratio of Steel Reinforcement	=	1.10	percent
Edge-to-Edge Bar Spacing	=	4.35118717	in

Axial Structural Capacities:

Nom. Axial Structural Capacity = 0.85 Fc Ac + Fy As	=	22929.288	kips
Tensile Load for Cracking of Concrete	=	-2688.636	kips
Nominal Axial Tensile Capacity	=	-4212.000	kips

Reinforcing Bar Dimensions and Positions Used in Computations:

Bar Number	Bar Diam. inches	Bar Area sq. in.	X inches	Y inches
1	1.41000	1.56000	41.29500	0.00000
2	1.41000	1.56000	40.89312	5.74715
3	1.41000	1.56000	39.69530	11.38244
4	1.41000	1.56000	37.72486	16.79619
5	1.41000	1.56000	35.02015	21.88302
6	1.41000	1.56000	31.63381	26.54391
7	1.41000	1.56000	27.63175	30.68817
8	1.41000	1.56000	23.09187	34.23511
9	1.41000	1.56000	18.10254	37.11570
10	1.41000	1.56000	12.76086	39.27388
11	1.41000	1.56000	7.17080	40.66764
12	1.41000	1.56000	1.44117	41.26984
13	1.41000	1.56000	-4.31650	41.06878
14	1.41000	1.56000	-9.99016	40.06836
15	1.41000	1.56000	-15.46938	38.28806
16	1.41000	1.56000	-20.64750	35.76252
17	1.41000	1.56000	-25.42374	32.54090
18	1.41000	1.56000	-29.70514	28.68592
19	1.41000	1.56000	-33.40836	24.27259
20	1.41000	1.56000	-36.46132	19.38683
21	1.41000	1.56000	-38.80461	14.12372
22	1.41000	1.56000	-40.39261	8.58571
23	1.41000	1.56000	-41.19441	2.88059
24	1.41000	1.56000	-41.19441	-2.88059
25	1.41000	1.56000	-40.39261	-8.58571

26	1.41000	1.56000	-38.80461	-14.12372
27	1.41000	1.56000	-36.46132	-19.38683
28	1.41000	1.56000	-33.40836	-24.27259
29	1.41000	1.56000	-29.70514	-28.68592
30	1.41000	1.56000	-25.42374	-32.54090
31	1.41000	1.56000	-20.64750	-35.76252
32	1.41000	1.56000	-15.46938	-38.28806
33	1.41000	1.56000	-9.99016	-40.06836
34	1.41000	1.56000	-4.31650	-41.06878
35	1.41000	1.56000	1.44117	-41.26984
36	1.41000	1.56000	7.17080	-40.66764
37	1.41000	1.56000	12.76086	-39.27388
38	1.41000	1.56000	18.10254	-37.11570
39	1.41000	1.56000	23.09187	-34.23511
40	1.41000	1.56000	27.63175	-30.68817
41	1.41000	1.56000	31.63381	-26.54391
42	1.41000	1.56000	35.02015	-21.88302
43	1.41000	1.56000	37.72486	-16.79619
44	1.41000	1.56000	39.69530	-11.38244
45	1.41000	1.56000	40.89312	-5.74715

Concrete Properties:

Compressive Strength of Concrete	=	3.5000000	ksi
Modulus of Elasticity of Concrete	=	3372.1654764	ksi
Modulus of Rupture of Concrete	=	-0.4437060	ksi
Compression Strain at Peak Stress	=	0.0017644	
Tensile Strain at Fracture of Concrete	=	-0.0001156	
Maximum Coarse Aggregate Size	=	0.7500000	in

Number of Axial Thrust Force Values Determined from Pile-head Loadings = 2

Number	Axial Thrust Force kips
1	78.770
2	132.810

Definitions of Run Messages and Notes:

C = concrete in section has cracked in tension
Y = stress in reinforcing steel has reached yield stress

T = tensile strain in reinforcement exceeds 0.005 when compressive strain
in concrete is less than 0.003.
Z = depth of tensile zone in concrete section is less than 10 percent of section depth
Bending Stiffness (EI) = Bending Moment / Curvature
Position of neutral axis is computed from compression side of pile
Compressive stresses are positive in sign. Tensile stresses are negative in sign.

Axial Thrust Force = 78.770 kips

Bending Curvature rad/in.	Bending Moment in-kip	Bending Stiffness kip-in2	Depth to N Axis in	Max Comp Strain in/in	Max Tens Strain in/in	Max Concrete Stress ksi	Max Steel Stress ksi	Run Msg
0.000000313	4450.0271630	14240086922.	54.3669177	0.0000170	-0.0000111	0.0665252	0.4886221	
0.000000625	8880.0230759	14208036921.	49.6979673	0.0000311	-0.0000252	0.1210469	0.8926194	
0.000000938	13289.	14174798269.	48.1417818	0.0000451	-0.0000392	0.1751326	1.2966203	
0.000001250	17677.	14141257303.	47.3637486	0.0000592	-0.0000533	0.2287823	1.7006234	
0.000001563	22043.	14107594920.	46.8969707	0.0000733	-0.0000673	0.2819959	2.1046284	
0.000001875	26389.	14073871693.	46.5858185	0.0000873	-0.0000814	0.3347733	2.5086351	
0.000002188	30713.	14040113693.	46.3635954	0.0001014	-0.0000955	0.3871146	2.9126437	
0.000002500	35016.	14006333946.	46.1969529	0.0001155	-0.0001095	0.4390197	3.3166541	
0.000002813	35016.	12450074619.	26.5208413	0.0000746	-0.0001785	0.2848515	-5.1408158	C
0.000003125	35016.	11205067157.	26.1776004	0.0000818	-0.0001994	0.3116953	-5.7431237	C
0.000003438	35016.	10186424688.	25.8980607	0.0000890	-0.0002204	0.3384433	-6.3453027	C
0.000003750	35016.	9337555964.	25.6663006	0.0000962	-0.0002413	0.3650954	-6.9473523	C
0.000004063	35016.	8619282428.	25.4645737	0.0001034	-0.0002622	0.3915493	-7.5500643	C
0.000004375	35016.	8003619398.	25.2921867	0.0001107	-0.0002831	0.4178995	-8.1527100	C
0.000004688	35016.	7470044771.	25.1437650	0.0001179	-0.0003040	0.4441547	-8.7552226	C

```
   0.000005000        35016.   7003166973.    25.0148181     0.0001251    -0.0003249     0.4703146
-9.3576014  C
   0.000005313        35016.   6591215975.    24.9019121     0.0001323    -0.0003458     0.4963790
-9.9598460  C
   0.000005625        35016.   6225037309.    24.8023761     0.0001395    -0.0003667     0.5223478
-10.5619561  C
   0.000005938        35016.   5897403767.    24.7126859     0.0001467    -0.0003876     0.5481901
-11.1641750  C
   0.000006250        35016.   5602533578.    24.6308766     0.0001539    -0.0004086     0.5738952
-11.7665911  C
   0.000006563        35016.   5335746265.    24.5575931     0.0001612    -0.0004295     0.5995053
-12.3688674  C
   0.000006875        35016.   5093212344.    24.4916754     0.0001684    -0.0004504     0.6250202
-12.9710035  C
   0.000007188        35016.   4871768329.    24.4321649     0.0001756    -0.0004713     0.6504397
-13.5729987  C
   0.000007500        35016.   4668777982.    24.3782632     0.0001828    -0.0004922     0.6757638
-14.1748527  C
   0.000007813        35016.   4482026863.    24.3292992     0.0001901    -0.0005131     0.7009921
-14.7765650  C
   0.000008125        35016.   4309641214.    24.2847054     0.0001973    -0.0005339     0.7261246
-15.3781350  C
   0.000008438        35016.   4150024873.    24.2439982     0.0002046    -0.0005548     0.7511611
-15.9795623  C
   0.000008750        35016.   4001809699.    24.2067631     0.0002118    -0.0005757     0.7761013
-16.5808463  C
   0.000009063        35016.   3863816261.    24.1726431     0.0002191    -0.0005966     0.8009452
-17.1819866  C
   0.000009375        35016.   3735022386.    24.1413283     0.0002263    -0.0006174     0.8256924
-17.7829826  C
   0.000009688        35016.   3614537793.    24.1125492     0.0002336    -0.0006383     0.8503430
-18.3838338  C
     0.0000100        35016.   3501583487.    24.0860698     0.0002409    -0.0006591     0.8748966
-18.9845397  C
     0.0000103        35917.   3482839939.    24.0616828     0.0002481    -0.0006800     0.8993531
-19.5850998  C
     0.0000106        36943.   3476973047.    24.0392052     0.0002554    -0.0007008     0.9237124
-20.1855136  C
     0.0000109        37968.   3471389783.    24.0184752     0.0002627    -0.0007217     0.9479741
-20.7857805  C
     0.0000113        38993.   3466066219.    23.9993486     0.0002700    -0.0007425     0.9721382
-21.3859003  C
     0.0000116        40018.   3460981423.    23.9816970     0.0002773    -0.0007633     0.9962046
-21.9858718  C
     0.0000119        41041.   3456116251.    23.9654057     0.0002846    -0.0007842     1.0201728
-22.5856949  C
     0.0000122        42065.   3451453663.    23.9503713     0.0002919    -0.0008050     1.0440429
-23.1853689  C
```

0.0000128	44109.	3442676451.	23.9237119	0.0003065	-0.0008466	1.0914878	-24.3842676 C
0.0000134	46152.	3434543831.	23.9010788	0.0003212	-0.0008882	1.1385376	-25.5825639 C
0.0000141	48192.	3426968886.	23.8819463	0.0003358	-0.0009298	1.1851909	-26.7802531 C
0.0000147	50229.	3419879286.	23.8658780	0.0003505	-0.0009713	1.2314460	-27.9773310 C
0.0000153	52265.	3413214881.	23.8525091	0.0003652	-0.0010129	1.2773016	-29.1737923 C
0.0000159	54298.	3406923956.	23.8411754	0.0003800	-0.0010544	1.3227381	-30.3697973 C
0.0000166	56328.	3400963834.	23.8319547	0.0003947	-0.0010959	1.3677699	-31.5651988 C
0.0000172	58357.	3395297852.	23.8247208	0.0004095	-0.0011374	1.4124005	-32.7599439 C
0.0000178	60382.	3389894062.	23.8192747	0.0004243	-0.0011788	1.4566282	-33.9540278 C
0.0000184	62406.	3384724894.	23.8154447	0.0004391	-0.0012203	1.5004512	-35.1474450 C
0.0000191	64427.	3379766380.	23.8130816	0.0004539	-0.0012617	1.5438680	-36.3401902 C
0.0000197	66445.	3374997584.	23.8120553	0.0004688	-0.0013031	1.5868767	-37.5322578 C
0.0000203	68461.	3370400136.	23.8122518	0.0004837	-0.0013444	1.6294757	-38.7236422 C
0.0000209	70475.	3365957848.	23.8135710	0.0004986	-0.0013858	1.6716631	-39.9143379 C
0.0000216	72486.	3361656397.	23.8159245	0.0005135	-0.0014271	1.7134373	-41.1043390 C
0.0000222	74494.	3357483062.	23.8192339	0.0005285	-0.0014684	1.7547963	-42.2936398 C
0.0000228	76500.	3353426505.	23.8234295	0.0005435	-0.0015097	1.7957385	-43.4822343 C
0.0000234	78503.	3349476588.	23.8284494	0.0005585	-0.0015509	1.8362618	-44.6701164 C
0.0000241	80504.	3345624213.	23.8342380	0.0005735	-0.0015921	1.8763645	-45.8572802 C
0.0000247	82502.	3341861192.	23.8407457	0.0005886	-0.0016333	1.9160446	-47.0437194 C
0.0000253	84498.	3338180138.	23.8479276	0.0006037	-0.0016745	1.9553003	-48.2294277 C
0.0000259	86491.	3334574942.	23.8555013	0.0006188	-0.0017156	1.9941133	-49.4145806 C
0.0000266	88481.	3331039264.	23.8635585	0.0006339	-0.0017567	2.0324896	-50.5990872 C
0.0000272	90468.	3327567572.	23.8721546	0.0006490	-0.0017979	2.0704334	-51.7828765 C

```
     0.0000278        92453.   3324154801.    23.8812610     0.0006642    -0.0018389     2.1079425
-52.9659427  C
     0.0000284        94435.   3320796364.    23.8908514     0.0006794    -0.0018800     2.1450151
-54.1482795  C
     0.0000291        96414.   3317488057.    23.9009022     0.0006946    -0.0019210     2.1816491
-55.3298807  C
     0.0000297        98391.   3314226021.    23.9113918     0.0007099    -0.0019620     2.2178425
-56.5107398  C
     0.0000303       100365.   3311006705.    23.9223004     0.0007251    -0.0020030     2.2535933
-57.6908503  C
     0.0000309       102336.   3307826836.    23.9336100     0.0007404    -0.0020439     2.2888994
-58.8702056  C
     0.0000316       104304.   3304683525.    23.9453042     0.0007558    -0.0020849     2.3237587
-60.0000000  CY
     0.0000322       106269.   3301573713.    23.9573680     0.0007711    -0.0021257     2.3581690
-60.0000000  CY
     0.0000328       108232.   3298494928.    23.9697873     0.0007865    -0.0021666     2.3921282
-60.0000000  CY
     0.0000334       110116.   3293197543.    23.9769308     0.0008017    -0.0022076     2.4252210
-60.0000000  CY
     0.0000341       111730.   3280159263.    23.9646234     0.0008163    -0.0022493     2.4563966
-60.0000000  CY
     0.0000347       113185.   3262995974.    23.9416724     0.0008305    -0.0022914     2.4862924
-60.0000000  CY
     0.0000353       114527.   3243246697.    23.9118321     0.0008444    -0.0023337     2.5151816
-60.0000000  CY
     0.0000359       115772.   3221476822.    23.8764104     0.0008581    -0.0023763     2.5431596
-60.0000000  CY
     0.0000366       116934.   3198197667.    23.8360016     0.0008715    -0.0024191     2.5702713
-60.0000000  CY
     0.0000372       118021.   3173686113.    23.7904408     0.0008847    -0.0024622     2.5965054
-60.0000000  CY
     0.0000397       121846.   3070139542.    23.5875284     0.0009361    -0.0026357     2.6950453
-60.0000000  CY
     0.0000422       124997.   2962894019.    23.3646653     0.0009857    -0.0028112     2.7845713
-60.0000000  CY
     0.0000447       127677.   2857100131.    23.1367481     0.0010339    -0.0029880     2.8665612
-60.0000000  CY
     0.0000472       129988.   2754719439.    22.9079592     0.0010810    -0.0031659     2.9416936
-60.0000000  CY
     0.0000497       132005.   2656695886.    22.6745893     0.0011266    -0.0033452     3.0100508
-60.0000000  CY
     0.0000522       133766.   2563185841.    22.4469515     0.0011715    -0.0035254     3.0727438
-60.0000000  CY
     0.0000547       135339.   2474764450.    22.2283854     0.0012156    -0.0037063     3.1303191
-60.0000000  CY
     0.0000572       136756.   2391362614.    22.0180345     0.0012592    -0.0038877     3.1829860
-60.0000000  CY
```

```
     0.0000597       138042.   2312740154.    21.8083920     0.0013017    -0.0040702     3.2304975
-60.0000000  CY
     0.0000622       139180.   2238078026.    21.6056485     0.0013436    -0.0042533     3.2735295
-60.0000000  CY
     0.0000647       140260.   2168263785.    21.4165025     0.0013854    -0.0044365     3.3126977
-60.0000000  CY
     0.0000672       141213.   2101780683.    21.2329956     0.0014266    -0.0046203     3.3476811
-60.0000000  CY
     0.0000697       142129.   2039519325.    21.0570314     0.0014674    -0.0048045     3.3787622
-60.0000000  CY
     0.0000722       142927.   1979934525.    20.8798026     0.0015073    -0.0049896     3.4056690
-60.0000000  CY
     0.0000747       143700.   1924023248.    20.7149714     0.0015471    -0.0051747     3.4292266
-60.0000000  CY
     0.0000772       144409.   1870891501.    20.5568798     0.0015867    -0.0053601     3.4492606
-60.0000000  CY
     0.0000797       145059.   1820349232.    20.4052904     0.0016260    -0.0055458     3.4658622
-60.0000000  CY
     0.0000822       145698.   1772748962.    20.2644773     0.0016655    -0.0057314     3.4792240
-60.0000000  CY
     0.0000847       146268.   1727146943.    20.1193237     0.0017039    -0.0059180     3.4890484
-60.0000000  CY
     0.0000872       146782.   1683523907.    19.9777717     0.0017418    -0.0061051     3.4956970
-60.0000000  CY
     0.0000897       147291.   1642274132.    19.8459466     0.0017799    -0.0062919     3.4993046
-60.0000000  CY
     0.0000922       147772.   1602952205.    19.7205130     0.0018180    -0.0064789     3.4968907
-60.0000000  CY
     0.0000947       148211.   1565260116.    19.5992886     0.0018558    -0.0066661     3.4985051
-60.0000000  CY
     0.0000972       148621.   1529221509.    19.4832052     0.0018935    -0.0068534     3.4999949
-60.0000000  CY
     0.0000997       149025.   1494924573.    19.3749635     0.0019314    -0.0070404     3.4963088
-60.0000000  CY
     0.0001022       149404.   1462052844.    19.2650222     0.0019686    -0.0072282     3.4992562
-60.0000000  CY
     0.0001047       149753.   1430479229.    19.1568440     0.0020055    -0.0074164     3.4985840
-60.0000000  CY
     0.0001072       150068.   1400047386.    19.0514592     0.0020421    -0.0076048     3.4959518
-60.0000000  CY
     0.0001097       150376.   1370950968.    18.9515950     0.0020788    -0.0077931     3.4989051
-60.0000000  CY
     0.0001122       150681.   1343115569.    18.8571157     0.0021155    -0.0079813     3.4999940
-60.0000000  CY
     0.0001147       150975.   1316406907.    18.7676934     0.0021524    -0.0081695     3.4934192
60.0000000  CY
     0.0001172       151258.   1290734029.    18.6816975     0.0021893    -0.0083576     3.4972127
60.0000000  CY
```

```
     0.0001197       151508.   1265860980.    18.5960003     0.0022257    -0.0085462     3.4993807
60.0000000  CY
     0.0001222       151754.   1241972632.    18.5145004     0.0022622    -0.0087346     3.4992427
60.0000000  CY
     0.0001247       151988.   1218953581.    18.4354491     0.0022987    -0.0089232     3.4924584
60.0000000  CY
     0.0001272       152213.   1196761145.    18.3538447     0.0023344    -0.0091125     3.4960008
60.0000000  CY
     0.0001297       152435.   1175399550.    18.2757884     0.0023701    -0.0093017     3.4985222
60.0000000  CY
     0.0001322       152655.   1154835342.    18.2013617     0.0024060    -0.0094909     3.4998164
60.0000000  CY
     0.0001347       152850.   1134849405.    18.1270703     0.0024415    -0.0096804     3.4973327
60.0000000  CY
     0.0001372       153034.   1115512335.    18.0549973     0.0024769    -0.0098700     3.4913864
60.0000000  CY
     0.0001522       154021.   1012048122.    17.6888832     0.0026920    -0.0110048     3.4903836
60.0000000  CY
     0.0001672       154647.    924992297.    17.4112604     0.0029109    -0.0121359     3.4953615
60.0000000  CY
     0.0001822       155094.    851287974.    17.1941467     0.0031326    -0.0132643     3.4992620
60.0000000  CY
     0.0001972       155384.    788002359.    17.0255920     0.0033572    -0.0143896     3.4902423
60.0000000  CY
     0.0002122       155591.    733273619.    16.8917569     0.0035842    -0.0155127     3.4985630
60.0000000  CY
     0.0002272       155753.    685569830.    16.7903183     0.0038146    -0.0166323     3.4894622
60.0000000  CY


Axial Thrust Force =    132.810 kips

    Bending       Bending       Bending       Depth to      Max Comp      Max Tens    Max Concrete   Max
Steel    Run
   Curvature      Moment       Stiffness       N Axis        Strain        Strain        Stress
Stress     Msg
    rad/in.       in-kip        kip-in2          in          in/in         in/in          ksi           ksi

 ------------- ------------- ------------- ------------- ------------- ------------- -------------
-------------  ---
   0.000000313  4447.9915507  14233572962.    60.7950600     0.0000190  -0.000009127     0.0744140
0.5468771
   0.000000625  8877.9091358  14204654617.    52.9215157     0.0000331    -0.0000232     0.1288958
0.9510462
   0.000000938        13287.  14172516064.    50.2974363     0.0000472    -0.0000372     0.1829424
1.3552272
   0.000001250        17674.  14139531388.    48.9855381     0.0000612    -0.0000513     0.2365530
1.7594133
```

```
   0.000001563        22041.  14106204129.    48.1984825     0.0000753    -0.0000653     0.2897272
2.1636031
   0.000001875        26386.  14072704763.    47.6738405     0.0000894    -0.0000794     0.3424652
2.5677963
   0.000002188        30711.  14039106774.    47.2991465     0.0001035    -0.0000934     0.3947668
2.9719927
   0.000002500        35014.  14005447090.    47.0181693     0.0001175    -0.0001075     0.4466319
3.3761923
   0.000002813        35014.  12449286303.    28.8037198     0.0000810    -0.0001721     0.3092188
-4.9546185  C
   0.000003125        35014.  11204357672.    28.2754240     0.0000884    -0.0001929     0.3364700
-5.5530084  C
   0.000003438        35014.  10185779702.    27.8315745     0.0000957    -0.0002137     0.3634545
-6.1525555  C
   0.000003750        35014.   9336964727.    27.4628713     0.0001030    -0.0002345     0.3903399
-6.7519752  C
   0.000004063        35014.   8618736671.    27.1411960     0.0001103    -0.0002554     0.4169629
-7.3525372  C
   0.000004375        35014.   8003112623.    26.8660937     0.0001175    -0.0002762     0.4434814
-7.9530206  C
   0.000004688        35014.   7469571782.    26.6286246     0.0001248    -0.0002971     0.4699019
-8.5533745  C
   0.000005000        35014.   7002723545.    26.4169406     0.0001321    -0.0003179     0.4961361
-9.1542936  C
   0.000005313        35014.   6590798631.    26.2284291     0.0001393    -0.0003388     0.5222226
-9.7554795  C
   0.000005625        35014.   6224643151.    26.0616766     0.0001466    -0.0003597     0.5482119
-10.3565327  C
   0.000005938        35014.   5897030354.    25.9132500     0.0001539    -0.0003805     0.5741040
-10.9574529  C
   0.000006250        35014.   5602178836.    25.7804026     0.0001611    -0.0004014     0.5998987
-11.5582395  C
   0.000006563        35014.   5335408415.    25.6609112     0.0001684    -0.0004222     0.6255958
-12.1588922  C
   0.000006875        35014.   5092889851.    25.5492576     0.0001757    -0.0004431     0.6511040
-12.7601480  C
   0.000007188        35014.   4871459858.    25.4475947     0.0001829    -0.0004640     0.6765058
-13.3613451  C
   0.000007500        35014.   4668482363.    25.3550393     0.0001902    -0.0004848     0.7018108
-13.9624039  C
   0.000007813        35014.   4481743069.    25.2705005     0.0001974    -0.0005057     0.7270187
-14.5633241  C
   0.000008125        35014.   4309368336.    25.1930554     0.0002047    -0.0005266     0.7521295
-15.1641051  C
   0.000008438        35014.   4149762101.    25.1219176     0.0002120    -0.0005474     0.7771429
-15.7647464  C
   0.000008750        35014.   4001556312.    25.0564132     0.0002192    -0.0005683     0.8020587
-16.3652476  C
```

0.000009063	35014.	3863571611.	24.9959614	0.0002265	-0.0005891	0.8268768	-16.9656083 C
0.000009375	35014.	3734785891.	24.9400585	0.0002338	-0.0006099	0.8515971	-17.5658278 C
0.000009688	35037.	3616685188.	24.8882663	0.0002411	-0.0006308	0.8762192	-18.1659058 C
0.0000100	36063.	3606312954.	24.8402008	0.0002484	-0.0006516	0.9007432	-18.7658417 C
0.0000103	37089.	3596514041.	24.7955250	0.0002557	-0.0006724	0.9251687	-19.3656351 C
0.0000106	38114.	3587237697.	24.7539415	0.0002630	-0.0006932	0.9494956	-19.9652855 C
0.0000109	39139.	3578425041.	24.7137828	0.0002703	-0.0007141	0.9736720	-20.5652376 C
0.0000113	40163.	3570049843.	24.6761605	0.0002776	-0.0007349	0.9977447	-21.1650901 C
0.0000116	41187.	3562077941.	24.6410165	0.0002849	-0.0007557	1.0217194	-21.7647935 C
0.0000119	42209.	3554477344.	24.6081566	0.0002922	-0.0007765	1.0455958	-22.3643473 C
0.0000122	43232.	3547219343.	24.5774066	0.0002995	-0.0007973	1.0693738	-22.9637509 C
0.0000128	45275.	3533630284.	24.5216252	0.0003142	-0.0008389	1.1166336	-24.1621055 C
0.0000134	47315.	3521132521.	24.4725912	0.0003289	-0.0008805	1.1634973	-25.3598527 C
0.0000141	49353.	3509579487.	24.4294162	0.0003435	-0.0009221	1.2099634	-26.5569880 C
0.0000147	51389.	3498849551.	24.3913630	0.0003582	-0.0009636	1.2560303	-27.7535069 C
0.0000153	53423.	3488840926.	24.3578149	0.0003730	-0.0010051	1.3016965	-28.9494046 C
0.0000159	55454.	3479467780.	24.3282521	0.0003877	-0.0010466	1.3469605	-30.1446766 C
0.0000166	57483.	3470657225.	24.3022334	0.0004025	-0.0010881	1.3918205	-31.3393178 C
0.0000172	59509.	3462346963.	24.2793819	0.0004173	-0.0011296	1.4362749	-32.5333236 C
0.0000178	61533.	3454483428.	24.2593738	0.0004321	-0.0011710	1.4803223	-33.7266890 C
0.0000184	63554.	3447020306.	24.2419292	0.0004470	-0.0012124	1.5239608	-34.9194090 C
0.0000191	65573.	3439917205.	24.2268052	0.0004618	-0.0012538	1.5671888	-36.1114791 C
0.0000197	67590.	3433139290.	24.2137896	0.0004767	-0.0012952	1.6100047	-37.3028930 C
0.0000203	69604.	3426655544.	24.2026968	0.0004916	-0.0013365	1.6524067	-38.4936460 C

```
     0.0000209        71615.   3420438804.    24.1933633     0.0005065    -0.0013778     1.6943931
-39.6837330  C
     0.0000216        73624.   3414465045.    24.1856446     0.0005215    -0.0014191     1.7359621
-40.8731486  C
     0.0000222        75631.   3408712938.    24.1794128     0.0005365    -0.0014604     1.7771120
-42.0618873  C
     0.0000228        77635.   3403163481.    24.1745539     0.0005515    -0.0015016     1.8178410
-43.2499435  C
     0.0000234        79636.   3397799690.    24.1709665     0.0005665    -0.0015429     1.8581473
-44.4373118  C
     0.0000241        81635.   3392606333.    24.1685595     0.0005816    -0.0015841     1.8980290
-45.6239864  C
     0.0000247        83631.   3387569711.    24.1672514     0.0005966    -0.0016252     1.9374843
-46.8099615  C
     0.0000253        85624.   3382677469.    24.1669688     0.0006117    -0.0016664     1.9765113
-47.9952312  C
     0.0000259        87615.   3377918429.    24.1676455     0.0006268    -0.0017075     2.0151081
-49.1797897  C
     0.0000266        89603.   3373282459.    24.1692215     0.0006420    -0.0017486     2.0532728
-50.3636309  C
     0.0000272        91588.   3368760347.    24.1716427     0.0006572    -0.0017897     2.0910035
-51.5467485  C
     0.0000278        93571.   3364343697.    24.1748598     0.0006724    -0.0018308     2.1282981
-52.7291365  C
     0.0000284        95551.   3360024843.    24.1788279     0.0006876    -0.0018718     2.1651546
-53.9107885  C
     0.0000291        97528.   3355796768.    24.1835063     0.0007028    -0.0019128     2.2015712
-55.0916980  C
     0.0000297        99502.   3351653035.    24.1888578     0.0007181    -0.0019538     2.2375456
-56.2718585  C
     0.0000303       101474.   3347587729.    24.1948481     0.0007334    -0.0019947     2.2730758
-57.4512634  C
     0.0000309       103442.   3343595402.    24.2014461     0.0007487    -0.0020356     2.3081597
-58.6299059  C
     0.0000316       105408.   3339671027.    24.2086232     0.0007641    -0.0020765     2.3427953
-59.8077792  C
     0.0000322       107371.   3335809957.    24.2163532     0.0007795    -0.0021174     2.3769803
-60.0000000  CY
     0.0000328       109332.   3332007890.    24.2246117     0.0007949    -0.0021583     2.4107125
-60.0000000  CY
     0.0000334       111247.   3327016885.    24.2302634     0.0008102    -0.0021992     2.4437629
-60.0000000  CY
     0.0000341       112924.   3315193056.    24.2188447     0.0008250    -0.0022407     2.4750714
-60.0000000  CY
     0.0000347       114401.   3298041200.    24.1937860     0.0008392    -0.0022827     2.5048781
-60.0000000  CY
     0.0000353       115760.   3278171637.    24.1615646     0.0008532    -0.0023249     2.5336524
-60.0000000  CY
```

0.0000359	117023.	3256280574.	24.1238313	0.0008670	-0.0023674	2.5615150	-60.0000000 CY
0.0000366	118207.	3232998974.	24.0821514	0.0008805	-0.0024101	2.5885825	-60.0000000 CY
0.0000372	119314.	3208432854.	24.0366763	0.0008939	-0.0024530	2.6148684	-60.0000000 CY
0.0000397	123190.	3103999903.	23.8331522	0.0009459	-0.0026260	2.7134851	-60.0000000 CY
0.0000422	126370.	2995448742.	23.6003662	0.0009956	-0.0028012	2.8022956	-60.0000000 CY
0.0000447	129079.	2888485702.	23.3636699	0.0010441	-0.0029778	2.8835604	-60.0000000 CY
0.0000472	131417.	2785005685.	23.1289370	0.0010914	-0.0031555	2.9580935	-60.0000000 CY
0.0000497	133452.	2685827925.	22.8964824	0.0011377	-0.0033342	3.0262794	-60.0000000 CY
0.0000522	135232.	2591263948.	22.6615142	0.0011826	-0.0035142	3.0881239	-60.0000000 CY
0.0000547	136817.	2501795241.	22.4359195	0.0012270	-0.0036949	3.1448078	-60.0000000 CY
0.0000572	138254.	2417550270.	22.2214558	0.0012708	-0.0038761	3.1967236	-60.0000000 CY
0.0000597	139554.	2338082521.	22.0153925	0.0013140	-0.0040578	3.2439275	-60.0000000 CY
0.0000622	140706.	2262615260.	21.8071399	0.0013561	-0.0042407	3.2859980	-60.0000000 CY
0.0000647	141797.	2192028763.	21.6128552	0.0013981	-0.0044238	3.3241733	-60.0000000 CY
0.0000672	142753.	2124692659.	21.4236830	0.0014394	-0.0046075	3.3581000	-60.0000000 CY
0.0000697	143682.	2061806288.	21.2488399	0.0014808	-0.0047911	3.3884309	-60.0000000 CY
0.0000722	144497.	2001690694.	21.0738991	0.0015213	-0.0049756	3.4145739	-60.0000000 CY
0.0000747	145267.	1945001661.	20.9036721	0.0015612	-0.0051606	3.4369541	-60.0000000 CY
0.0000772	145986.	1891319900.	20.7419695	0.0016010	-0.0053459	3.4558554	-60.0000000 CY
0.0000797	146639.	1840177764.	20.5863205	0.0016405	-0.0055314	3.4712804	-60.0000000 CY
0.0000822	147275.	1791937249.	20.4410819	0.0016800	-0.0057169	3.4834237	-60.0000000 CY
0.0000847	147864.	1745991521.	20.3020716	0.0017193	-0.0059025	3.4922136	-60.0000000 CY
0.0000872	148391.	1701973141.	20.1615088	0.0017578	-0.0060890	3.4976369	-60.0000000 CY
0.0000897	148896.	1660168719.	20.0256322	0.0017960	-0.0062758	3.4999138	-60.0000000 CY

0.0000922	149380.	1620389863.	19.8973094	0.0018343	-0.0064626	3.4966467	-60.0000000 CY
0.0000947	149828.	1582339742.	19.7739783	0.0018723	-0.0066495	3.4995537	-60.0000000 CY
0.0000972	150234.	1545816854.	19.6545777	0.0019102	-0.0068367	3.4962522	-60.0000000 CY
0.0000997	150635.	1511070747.	19.5429626	0.0019482	-0.0070237	3.4981512	-60.0000000 CY
0.0001022	151023.	1477903242.	19.4372201	0.0019862	-0.0072106	3.4999258	-60.0000000 CY
0.0001047	151394.	1446155017.	19.3360070	0.0020242	-0.0073976	3.4944957	-60.0000000 CY
0.0001072	151706.	1415332790.	19.2273138	0.0020609	-0.0075859	3.4980956	-60.0000000 CY
0.0001097	152013.	1385874159.	19.1244710	0.0020977	-0.0077742	3.4998314	-60.0000000 CY
0.0001122	152314.	1357675034.	19.0274588	0.0021346	-0.0079622	3.4956651	60.0000000 CY
0.0001147	152608.	1330638512.	18.9353326	0.0021716	-0.0081502	3.4963110	60.0000000 CY
0.0001172	152897.	1304724937.	18.8479008	0.0022087	-0.0083381	3.4989668	60.0000000 CY
0.0001197	153150.	1279578948.	18.7600949	0.0022453	-0.0085265	3.4999835	60.0000000 CY
0.0001222	153393.	1255393233.	18.6766243	0.0022821	-0.0087148	3.4941335	60.0000000 CY
0.0001247	153629.	1232111319.	18.5964438	0.0023187	-0.0089031	3.4955516	60.0000000 CY
0.0001272	153862.	1209724000.	18.5200124	0.0023555	-0.0090914	3.4983328	60.0000000 CY
0.0001297	154091.	1188174708.	18.4467763	0.0023923	-0.0092796	3.4997771	60.0000000 CY
0.0001322	154309.	1167348117.	18.3701113	0.0024283	-0.0094686	3.4975431	60.0000000 CY
0.0001347	154516.	1147217919.	18.2959779	0.0024642	-0.0096576	3.4914652	60.0000000 CY
0.0001372	154699.	1127644076.	18.2213956	0.0024997	-0.0098471	3.4949165	60.0000000 CY
0.0001522	155647.	1022731751.	17.8523307	0.0027169	-0.0109800	3.4937084	60.0000000 CY
0.0001672	156278.	934747190.	17.5899518	0.0029408	-0.0121061	3.4881634	60.0000000 CY
0.0001822	156709.	860152022.	17.3730668	0.0031652	-0.0132317	3.4982007	60.0000000 CY
0.0001972	157003.	796212953.	17.2000431	0.0033916	-0.0143552	3.4961177	60.0000000 CY
0.0002122	157194.	740825878.	17.0649510	0.0036210	-0.0154759	3.4890847	60.0000000 CY

0.0002272 157340. 692556285. 16.9610438 0.0038533 -0.0165935 3.4962143
60.0000000 CY

Summary of Results for Nominal (Unfactored) Moment Capacity for Section 1

Moment values interpolated at maximum compressive strain = 0.003
or maximum developed moment if pile fails at smaller strains.

Load No.	Axial Thrust kips	Nominal Mom. Cap. in-kip	Max. Comp. Strain
1	78.770	154826.727	0.00300000
2	132.810	156391.718	0.00300000

Note note that the values of moment capacity in the table above are not
factored by a strength reduction factor (phi-factor).

In ACI 318-08, the value of the strength reduction factor depends on whether
the transverse reinforcing steel bars are spirals or tied hoops.

The above values should be multiplied by the appropriate strength reduction
factor to compute ultimate moment capacity according to ACI 318-08, Section
9.3.2.2 or the value required by the design standard being followed.

Computed Values of Pile Loading and Deflection
for Lateral Loading for Load Case Number 1

Pile-head conditions are Shear and Moment (Loading Type 1)

Horizontal shear force at pile head = 30140.000 lbs
Applied moment at pile head = 34001880.000 in-lbs
Axial thrust load on pile head = 132810.000 lbs

Depth X	Deflect. y	Bending Moment	Shear Force	Slope S	Total Stress	Bending Stiffness	Soil Res. p	Soil Spr. Es*h	Distrib. Lat. Load
inches	inches	in-lbs	lbs	radians	psi*	lb-in^2	lb/in	lb/inch	lb/inch

0.00	0.3846	34001880.	30140.	-0.002516	0.000	1.401E+13	0.000	0.000	0.000
3.360	0.3762	34104272.	30140.	-0.002508	0.000	1.401E+13	0.000	0.000	0.000
6.720	0.3677	34206659.	30140.	-0.002500	0.000	1.401E+13	0.000	0.000	0.000
10.080	0.3594	34309044.	30140.	-0.002492	0.000	1.401E+13	0.000	0.000	0.000
13.440	0.3510	34411424.	30138.	-0.002484	0.000	1.401E+13	-1.2017	11.5036	0.000
16.800	0.3427	34513787.	30134.	-0.002475	0.000	1.401E+13	-1.1921	11.6893	0.000
20.160	0.3344	34616134.	30130.	-0.002467	0.000	1.401E+13	-1.1824	11.8820	0.000
23.520	0.3261	34718463.	30126.	-0.002459	0.000	1.401E+13	-1.1726	12.0822	0.000
26.880	0.3178	34820775.	30122.	-0.002450	0.000	1.401E+13	-1.1626	12.2903	0.000
30.240	0.3096	34923070.	30118.	-0.002442	0.000	1.401E+13	-1.1525	12.5068	0.000
33.600	0.3014	35025349.	30114.	-0.002433	0.000	1.304E+13	-1.1422	12.7324	0.000
36.960	0.2933	35127610.	30111.	-0.002420	0.000	6.755E+12	-1.1318	12.9675	0.000
40.320	0.2852	35229851.	30107.	-0.002395	0.000	3.615E+12	-1.1213	13.2120	0.000
43.680	0.2772	35332065.	30103.	-0.002362	0.000	3.614E+12	-1.1107	13.4648	0.000
47.040	0.2693	35434251.	30099.	-0.002329	0.000	3.613E+12	-1.1001	13.7262	0.000
50.400	0.2615	35536411.	30096.	-0.002296	0.000	3.612E+12	-1.0894	13.9968	0.000
53.760	0.2539	35638543.	30028.	-0.002263	0.000	3.611E+12	-39.0916	517.3985	0.000
57.120	0.2463	35740220.	29855.	-0.002230	0.000	3.610E+12	-63.7502	869.6252	0.000
60.480	0.2389	35841161.	29602.	-0.002197	0.000	3.609E+12	-86.8668	1221.8519	0.000
63.840	0.2316	35941107.	29274.	-0.002163	0.000	3.608E+12	-108.4767	1574.0786	0.000
67.200	0.2243	36039814.	28876.	-0.002130	0.000	3.607E+12	-128.6155	1926.3054	0.000
70.560	0.2172	36137053.	28412.	-0.002096	0.000	3.606E+12	-147.3187	2278.5321	0.000
73.920	0.2103	36232615.	27791.	-0.002062	0.000	3.605E+12	-222.3238	3552.8673	0.000
77.280	0.2034	36325651.	27005.	-0.002028	0.000	3.604E+12	-245.8464	4061.5313	

0.000									
	80.640	0.1966	36415897.	26142.	-0.001995	0.000	3.603E+12	-267.4428	4570.1952
0.000									
	84.000	0.1900	36503108.	25211.	-0.001961	0.000	3.602E+12	-287.1653	5078.8592
0.000									
	87.360	0.1834	36587062.	24216.	-0.001926	0.000	3.601E+12	-305.0662	5587.5232
0.000									
	90.720	0.1770	36667556.	23164.	-0.001892	0.000	3.600E+12	-321.1980	6096.1871
0.000									
	94.080	0.1707	36744410.	22060.	-0.001858	0.000	3.600E+12	-335.6132	6604.8511
0.000									
	97.440	0.1645	36817459.	20911.	-0.001824	0.000	3.599E+12	-348.3648	7113.5151
0.000									
	100.800	0.1585	36886559.	19722.	-0.001789	0.000	3.598E+12	-359.5056	7622.1791
0.000									
	104.160	0.1525	36951586.	18498.	-0.001755	0.000	3.598E+12	-369.0886	8130.8430
0.000									
	107.520	0.1467	37012431.	17244.	-0.001720	0.000	3.597E+12	-377.1669	8639.5070
0.000									
	110.880	0.1410	37069002.	15966.	-0.001686	0.000	3.597E+12	-383.7938	9148.1710
0.000									
	114.240	0.1354	37121224.	14667.	-0.001651	0.000	3.596E+12	-389.0226	9656.8349
0.000									
	117.600	0.1299	37169039.	13354.	-0.001616	0.000	3.596E+12	-392.9067	10165.
0.000									
	120.960	0.1245	37212403.	12029.	-0.001582	0.000	3.595E+12	-395.4996	10674.
0.000									
	124.320	0.1192	37251287.	10698.	-0.001547	0.000	3.595E+12	-396.8547	11183.
0.000									
	127.680	0.1141	37285674.	9364.2773	-0.001512	0.000	3.595E+12	-397.0255	11691.
0.000									
	131.040	0.1091	37315564.	8031.8841	-0.001477	0.000	3.594E+12	-396.0657	12200.
0.000									
	134.400	0.1042	37340967.	6610.4277	-0.001442	0.000	3.594E+12	-450.0393	14515.
0.000									
	137.760	0.0994	37361273.	5102.9202	-0.001407	0.000	3.594E+12	-447.2866	15121.
0.000									
	141.120	0.0947	37376515.	3606.6401	-0.001372	0.000	3.594E+12	-443.3563	15728.
0.000									
	144.480	0.0902	37386735.	2125.4372	-0.001337	0.000	3.594E+12	-438.3121	16334.
0.000									
	147.840	0.0857	37391991.	662.9473	-0.001302	0.000	3.594E+12	-432.2177	16940.
0.000									
	151.200	0.0814	37392352.	-777.4081	-0.001267	0.000	3.594E+12	-425.1367	17546.
0.000									
	154.560	0.0772	37387898.	-2192.4211	-0.001232	0.000	3.594E+12	-417.1329	18152.
0.000									
	157.920	0.0731	37378719.	-3579.0971	-0.001198	0.000	3.594E+12	-408.2695	18758.

0.000									
	161.280	0.0692	37364915.	-4934.6548	-0.001163	0.000	3.594E+12	-398.6101	19364.
0.000									
	164.640	0.0653	37346596.	-6256.5256	-0.001128	0.000	3.594E+12	-388.2178	19970.
0.000									
	168.000	0.0616	37323878.	-7542.3532	-0.001093	0.000	3.594E+12	-377.1558	20576.
0.000									
	171.360	0.0580	37296887.	-8789.9932	-0.001058	0.000	3.595E+12	-365.4871	21182.
0.000									
	174.720	0.0545	37265753.	-9997.5127	-0.001023	0.000	3.595E+12	-353.2745	21788.
0.000									
	178.080	0.0511	37230616.	-11163.	-0.000988	0.000	3.595E+12	-340.5807	22394.
0.000									
	181.440	0.0478	37191619.	-12286.	-0.000953	0.000	3.596E+12	-327.4682	23001.
0.000									
	184.800	0.0447	37148909.	-13363.	-0.000919	0.000	3.596E+12	-313.9994	23607.
0.000									
	188.160	0.0417	37102638.	-14395.	-0.000884	0.000	3.596E+12	-300.2362	24213.
0.000									
	191.520	0.0388	37052963.	-15380.	-0.000849	0.000	3.597E+12	-286.2408	24819.
0.000									
	194.880	0.0360	37000040.	-16318.	-0.000815	0.000	3.597E+12	-272.0748	25425.
0.000									
	198.240	0.0333	36944031.	-17209.	-0.000780	0.000	3.598E+12	-257.7998	26031.
0.000									
	201.600	0.0307	36885095.	-18051.	-0.000746	0.000	3.598E+12	-243.4770	26637.
0.000									
	204.960	0.0283	36823396.	-18845.	-0.000711	0.000	3.599E+12	-229.1676	27243.
0.000									
	208.320	0.0259	36759094.	-19591.	-0.000677	0.000	3.600E+12	-214.9324	27849.
0.000									
	211.680	0.0237	36692350.	-20289.	-0.000643	0.000	3.600E+12	-200.8321	28455.
0.000									
	215.040	0.0216	36623323.	-20941.	-0.000609	0.000	3.601E+12	-186.9270	29061.
0.000									
	218.400	0.0196	36552171.	-21546.	-0.000574	0.000	3.602E+12	-173.2773	29667.
0.000									
	221.760	0.0178	36479048.	-22106.	-0.000540	0.000	3.602E+12	-159.9430	30273.
0.000									
	225.120	0.0160	36404103.	-22621.	-0.000506	0.000	3.603E+12	-146.9837	30880.
0.000									
	228.480	0.0143	36327484.	-23094.	-0.000472	0.000	3.604E+12	-134.4590	31486.
0.000									
	231.840	0.0128	36249332.	-23526.	-0.000439	0.000	3.604E+12	-122.4279	32092.
0.000									
	235.200	0.0114	36169783.	-23918.	-0.000405	0.000	3.605E+12	-110.9495	32698.
0.000									
	238.560	0.0101	36088966.	-24272.	-0.000371	0.000	3.606E+12	-100.0826	33304.

0.000									
	241.920	0.008906	36007004.	-24591.	-0.000338	0.000	3.607E+12	-89.8855	33910.
0.000									
	245.280	0.007828	35924013.	-24878.	-0.000304	0.000	3.608E+12	-80.4166	34516.
0.000									
	248.640	0.006862	35840098.	-25133.	-0.000271	0.000	3.609E+12	-71.7338	35122.
0.000									
	252.000	0.006009	35755359.	-50663.	-0.000237	0.000	3.609E+12	-15125.	8457282.
0.000									
	255.360	0.005267	35499854.	-101943.	-0.000204	0.000	3.612E+12	-15399.	9823486.
0.000									
	258.720	0.004636	35070483.	-154117.	-0.000172	0.000	3.656E+12	-15656.	11346463.
0.000									
	262.080	0.004114	34464342.	-207156.	-0.000151	0.000	1.401E+13	-15914.	12998287.
0.000									
	265.440	0.003619	33678529.	-260956.	-0.000143	0.000	1.401E+13	-16109.	14955892.
0.000									
	268.800	0.003151	32710848.	-315292.	-0.000135	0.000	1.402E+13	-16234.	17308302.
0.000									
	272.160	0.002710	31559887.	-369918.	-0.000128	0.000	1.403E+13	-16281.	20184618.
0.000									
	275.520	0.002294	30225115.	-424550.	-0.000120	0.000	1.404E+13	-16238.	23780695.
0.000									
	278.880	0.001903	28707015.	-478861.	-0.000113	0.000	1.405E+13	-16089.	28411033.
0.000									
	282.240	0.001534	27007272.	-532448.	-0.000106	0.000	1.407E+13	-15808.	34619516.
0.000									
	285.600	0.001187	25129061.	-584800.	-0.000100	0.000	1.408E+13	-15354.	43447050.
0.000									
	288.960	0.000861	23077505.	-635213.	-9.448E-05	0.000	1.410E+13	-14654.	57203186.
0.000									
	292.320	0.000553	20860514.	-682598.	-8.925E-05	0.000	1.411E+13	-13552.	82411278.
0.000									
	295.680	0.000261	18490528.	-724845.	-8.456E-05	0.000	1.413E+13	-11595.	1.493E+08
0.000									
	299.040	-1.576E-05	15989633.	-742079.	-8.047E-05	0.000	1.415E+13	1337.1161	2.851E+08
0.000									
	302.400	-0.000280	13503832.	-718776.	-7.697E-05	0.000	1.417E+13	12533.	1.505E+08
0.000									
	305.760	-0.000533	11159527.	-672258.	-7.405E-05	0.000	1.418E+13	15156.	95545630.
0.000									
	309.120	-0.000777	8986327.	-618017.	-7.166E-05	0.000	1.420E+13	17130.	74041804.
0.000									
	312.480	-0.001015	7006514.	-557629.	-6.977E-05	0.000	1.421E+13	18816.	62313929.
0.000									
	315.840	-0.001246	5239122.	-491845.	-6.832E-05	0.000	1.422E+13	20342.	54845519.
0.000									
	319.200	-0.001474	3701379.	-421099.	-6.727E-05	0.000	1.423E+13	21769.	49632900.

```
0.000
   322.560  -0.001698   2409398.   -345667. -6.655E-05      0.000  1.423E+13     23131.  45764923.
0.000
   325.920  -0.001921   1378554.   -265734. -6.610E-05      0.000  1.423E+13     24449.  42765668.
0.000
   329.280  -0.002142    623726.   -181424. -6.586E-05      0.000  1.423E+13     25736.  40362002.
0.000
   332.640  -0.002363    159445.    -92825. -6.577E-05      0.000  1.423E+13     27001.  38386233.
0.000
   336.000  -0.002584      0.000      0.000 -6.575E-05      0.000  1.423E+13     28252.  18365069.
0.000

* This analysis makes computations of pile response using nonlinear moment-curvature relationships.
  The above values of total stress are computed for combined axial stress and do not equal the
  actual stresses in concrete and steel in the range of nonlinear bending.


Output Verification: Computed forces and moments are within specified convergence limits.


Output Summary for Load Case No. 1:

Pile-head deflection             =      0.3845985 inches
Computed slope at pile head      =     -0.0025164 radians
Maximum bending moment           =      37392352. inch-lbs
Maximum shear force              =       -742079. lbs
Depth of maximum bending moment  =    151.2000000 inches below pile head
Depth of maximum shear force     =    299.0400000 inches below pile head
Number of iterations             =            228
Number of zero deflection points =              1


--------------------------------------------------------------------------------
                  Computed Values of Pile Loading and Deflection
                    for Lateral Loading for Load Case Number 2
--------------------------------------------------------------------------------

Pile-head conditions are Shear and Moment (Loading Type 1)

Horizontal shear force at pile head                    =       65560.000 lbs
Applied moment at pile head                            =    73464600.000 in-lbs
Axial thrust load on pile head                         =       78770.000 lbs

   Depth    Deflect.    Bending    Shear       Slope      Total    Bending   Soil Res.  Soil Spr.   Distrib.

     X         y        Moment     Force         S       Stress   Stiffness      p         Es*h    Lat. Load
```

inches	inches	in-lbs	lbs	radians	psi*	lb-in^2	lb/in	lb/inch	lb/inch
0.00	1.1459	73464600.	65560.	-0.007250	0.000	3.359E+12	0.000	0.000	0.000
3.360	1.1216	73686791.	65560.	-0.007176	0.000	3.359E+12	0.000	0.000	0.000
6.720	1.0976	73908962.	65560.	-0.007102	0.000	3.359E+12	0.000	0.000	0.000
10.080	1.0739	74131113.	65560.	-0.007028	0.000	3.358E+12	0.000	0.000	0.000
13.440	1.0504	74353245.	65557.	-0.006954	0.000	3.358E+12	-1.7317	5.5393	0.000
16.800	1.0272	74575338.	65551.	-0.006879	0.000	3.357E+12	-1.7188	5.6226	0.000
20.160	1.0042	74797391.	65546.	-0.006805	0.000	3.357E+12	-1.7059	5.7080	0.000
23.520	0.9814	75019406.	65540.	-0.006730	0.000	3.356E+12	-1.6929	5.7959	0.000
26.880	0.9589	75241381.	65534.	-0.006654	0.000	3.356E+12	-1.6799	5.8861	0.000
30.240	0.9367	75463318.	65529.	-0.006579	0.000	3.355E+12	-1.6668	5.9789	0.000
33.600	0.9147	75685216.	65523.	-0.006503	0.000	3.355E+12	-1.6537	6.0743	0.000
36.960	0.8930	75907075.	65517.	-0.006427	0.000	3.355E+12	-1.6405	6.1724	0.000
40.320	0.8715	76128895.	65512.	-0.006351	0.000	3.354E+12	-1.6272	6.2733	0.000
43.680	0.8503	76350677.	65506.	-0.006275	0.000	3.354E+12	-1.6139	6.3772	0.000
47.040	0.8294	76572420.	65501.	-0.006198	0.000	3.353E+12	-1.6006	6.4842	0.000
50.400	0.8087	76794125.	65496.	-0.006121	0.000	3.353E+12	-1.5871	6.5944	0.000
53.760	0.7882	77015792.	65289.	-0.006044	0.000	3.352E+12	-121.3794	517.3985	0.000
57.120	0.7681	77236068.	64751.	-0.005967	0.000	3.352E+12	-198.7875	869.6252	0.000
60.480	0.7481	77454079.	63960.	-0.005889	0.000	3.352E+12	-272.0595	1221.8519	0.000
63.840	0.7285	77668998.	62930.	-0.005812	0.000	3.351E+12	-341.2774	1574.0786	0.000
67.200	0.7091	77880044.	61674.	-0.005734	0.000	3.351E+12	-406.5239	1926.3054	0.000
70.560	0.6900	78086479.	60205.	-0.005656	0.000	3.350E+12	-467.8816	2278.5321	0.000

73.920	0.6711	78287612.	58226.	-0.005577	0.000	3.350E+12	-709.6038	3552.8673	0.000
77.280	0.6525	78480713.	55709.	-0.005498	0.000	3.350E+12	-788.7056	4061.5313	0.000
80.640	0.6341	78664888.	52935.	-0.005420	0.000	3.349E+12	-862.5334	4570.1952	0.000
84.000	0.6161	78839305.	49922.	-0.005341	0.000	3.349E+12	-931.2083	5078.8592	0.000
87.360	0.5982	79003189.	46686.	-0.005261	0.000	3.348E+12	-994.8517	5587.5232	0.000
90.720	0.5807	79155819.	43244.	-0.005182	0.000	3.348E+12	-1053.5855	6096.1871	0.000
94.080	0.5634	79296535.	39614.	-0.005103	0.000	3.348E+12	-1107.5316	6604.8511	0.000
97.440	0.5464	79424725.	35810.	-0.005023	0.000	3.348E+12	-1156.8123	7113.5151	0.000
100.800	0.5297	79539835.	31848.	-0.004943	0.000	3.347E+12	-1201.5501	7622.1791	0.000
104.160	0.5132	79641358.	27743.	-0.004863	0.000	3.347E+12	-1241.8676	8130.8430	0.000
107.520	0.4970	79728840.	23510.	-0.004783	0.000	3.347E+12	-1277.8875	8639.5070	0.000
110.880	0.4810	79801874.	19162.	-0.004703	0.000	3.347E+12	-1309.7328	9148.1710	0.000
114.240	0.4654	79860100.	14715.	-0.004623	0.000	3.347E+12	-1337.5262	9656.8349	0.000
117.600	0.4500	79903205.	10181.	-0.004543	0.000	3.347E+12	-1361.3907	10165.	0.000
120.960	0.4349	79930920.	5572.7780	-0.004463	0.000	3.347E+12	-1381.4490	10674.	0.000
124.320	0.4200	79943017.	903.5994	-0.004382	0.000	3.347E+12	-1397.8240	11183.	0.000
127.680	0.4054	79939312.	-3814.6170	-0.004302	0.000	3.347E+12	-1410.6381	11691.	0.000
131.040	0.3911	79919660.	-8570.1125	-0.004222	0.000	3.347E+12	-1420.0140	12200.	0.000
134.400	0.3770	79883955.	-13692.	-0.004142	0.000	3.347E+12	-1628.7877	14515.	0.000
137.760	0.3632	79829841.	-19175.	-0.004061	0.000	3.347E+12	-1634.7754	15121.	0.000
141.120	0.3497	79757250.	-24672.	-0.003981	0.000	3.347E+12	-1637.0518	15728.	0.000
144.480	0.3365	79666156.	-30170.	-0.003901	0.000	3.347E+12	-1635.7613	16334.	0.000
147.840	0.3235	79556573.	-35658.	-0.003821	0.000	3.347E+12	-1631.0479	16940.	0.000
151.200	0.3108	79428556.	-41125.	-0.003742	0.000	3.348E+12	-1623.0550	17546.	0.000

154.560	0.2984	79282194.	-46560.	-0.003662	0.000	3.348E+12	-1611.9254	18152.	0.000
157.920	0.2862	79117613.	-51952.	-0.003583	0.000	3.348E+12	-1597.8011	18758.	0.000
161.280	0.2743	78934972.	-57292.	-0.003503	0.000	3.349E+12	-1580.8234	19364.	0.000
164.640	0.2627	78734464.	-62571.	-0.003424	0.000	3.349E+12	-1561.1329	19970.	0.000
168.000	0.2513	78516309.	-67779.	-0.003345	0.000	3.349E+12	-1538.8692	20576.	0.000
171.360	0.2402	78280761.	-72908.	-0.003267	0.000	3.350E+12	-1514.1712	21182.	0.000
174.720	0.2293	78028098.	-77950.	-0.003188	0.000	3.350E+12	-1487.1767	21788.	0.000
178.080	0.2188	77758625.	-82898.	-0.003110	0.000	3.351E+12	-1458.0224	22394.	0.000
181.440	0.2084	77472670.	-87745.	-0.003032	0.000	3.351E+12	-1426.8442	23001.	0.000
184.800	0.1984	77170586.	-92483.	-0.002955	0.000	3.352E+12	-1393.7768	23607.	0.000
188.160	0.1886	76852747.	-97108.	-0.002878	0.000	3.353E+12	-1358.9537	24213.	0.000
191.520	0.1790	76519545.	-101613.	-0.002801	0.000	3.353E+12	-1322.5074	24819.	0.000
194.880	0.1698	76171392.	-105993.	-0.002724	0.000	3.354E+12	-1284.5689	25425.	0.000
198.240	0.1607	75808717.	-110243.	-0.002648	0.000	3.355E+12	-1245.2681	26031.	0.000
201.600	0.1520	75431963.	-114359.	-0.002572	0.000	3.356E+12	-1204.7338	26637.	0.000
204.960	0.1434	75041588.	-118337.	-0.002497	0.000	3.356E+12	-1163.0932	27243.	0.000
208.320	0.1352	74638063.	-122173.	-0.002422	0.000	3.357E+12	-1120.4723	27849.	0.000
211.680	0.1272	74221868.	-125865.	-0.002348	0.000	3.358E+12	-1076.9956	28455.	0.000
215.040	0.1194	73793494.	-129409.	-0.002274	0.000	3.359E+12	-1032.7863	29061.	0.000
218.400	0.1119	73353441.	-132804.	-0.002200	0.000	3.360E+12	-987.9662	29667.	0.000
221.760	0.1046	72902215.	-136048.	-0.002127	0.000	3.361E+12	-942.6556	30273.	0.000
225.120	0.0976	72440328.	-139138.	-0.002054	0.000	3.362E+12	-896.9732	30880.	0.000
228.480	0.0908	71968295.	-142075.	-0.001982	0.000	3.363E+12	-851.0364	31486.	0.000
231.840	0.0843	71486635.	-144857.	-0.001911	0.000	3.364E+12	-804.9610	32092.	0.000

235.200	0.0780	70995868.	-147484.	-0.001839	0.000	3.365E+12	-758.8613	32698.	0.000
238.560	0.0719	70496516.	-149957.	-0.001769	0.000	3.366E+12	-712.8500	33304.	0.000
241.920	0.0661	69989097.	-152275.	-0.001699	0.000	3.367E+12	-667.0385	33910.	0.000
245.280	0.0605	69474129.	-154440.	-0.001629	0.000	3.368E+12	-621.5364	34516.	0.000
248.640	0.0551	68952125.	-156452.	-0.001560	0.000	3.369E+12	-576.4518	35122.	0.000
252.000	0.0500	68423596.	-200580.	-0.001492	0.000	3.370E+12	-25690.	1725672.	0.000
255.360	0.0451	67605015.	-288001.	-0.001424	0.000	3.372E+12	-26346.	1961747.	0.000
258.720	0.0405	66488984.	-377469.	-0.001357	0.000	3.375E+12	-26909.	2235044.	0.000
262.080	0.0360	65069141.	-468664.	-0.001292	0.000	3.378E+12	-27374.	2554517.	0.000
265.440	0.0318	63340243.	-561239.	-0.001228	0.000	3.382E+12	-27730.	2932359.	0.000
268.800	0.0278	61298265.	-654811.	-0.001166	0.000	3.388E+12	-27967.	3385706.	0.000
272.160	0.0239	58940531.	-748953.	-0.001106	0.000	3.394E+12	-28069.	3939558.	0.000
275.520	0.0203	56265889.	-843174.	-0.001049	0.000	3.401E+12	-28015.	4632108.	0.000
278.880	0.0169	53274958.	-936896.	-0.000995	0.000	3.410E+12	-27772.	5525228.	0.000
282.240	0.0136	49970475.	-1029409.	-0.000944	0.000	3.421E+12	-27295.	6727119.	0.000
285.600	0.0105	46357830.	-1119795.	-0.000897	0.000	3.434E+12	-26506.	8447998.	0.000
288.960	0.007604	42445931.	-1206772.	-0.000854	0.000	3.450E+12	-25266.	11164872.	0.000
292.320	0.004804	38248777.	-1288321.	-0.000815	0.000	3.470E+12	-23275.	16278672.	0.000
295.680	0.002129	33788844.	-1360360.	-0.000792	0.000	1.402E+13	-19605.	30940477.	0.000
299.040	-0.000519	29107579.	-1369483.	-0.000785	0.000	1.405E+13	14174.	91779985.	0.000
302.400	-0.003143	24586331.	-1307132.	-0.000778	0.000	1.409E+13	22940.	24520670.	0.000
305.760	-0.005748	20324065.	-1222457.	-0.000773	0.000	1.412E+13	27461.	16051986.	0.000
309.120	-0.008337	16371827.	-1124250.	-0.000768	0.000	1.415E+13	30996.	12492216.	0.000
312.480	-0.0109	12769515.	-1014936.	-0.000765	0.000	1.418E+13	34072.	10491041.	0.000

```
   315.840    -0.0135   9551859.   -895727.  -0.000762      0.000  1.420E+13     36886.   9195878.
0.000
   319.200    -0.0160   6750636.   -767339.  -0.000760      0.000  1.422E+13     39535.   8284015.
0.000
   322.560    -0.0186   4395745.   -630242.  -0.000759      0.000  1.424E+13     42071.   7604870.
0.000
   325.920    -0.0211   2515814.   -484758.  -0.000758      0.000  1.424E+13     44527.   7078255.
0.000
   329.280    -0.0237   1138573.   -331118.  -0.000758      0.000  1.424E+13     46926.   6657363.
0.000
   332.640    -0.0262    291102.   -169490.  -0.000758      0.000  1.424E+13     49281.   6312961.
0.000
   336.000    -0.0288      0.000      0.000  -0.000758      0.000  1.424E+13     51606.   3012911.
0.000

* This analysis makes computations of pile response using nonlinear moment-curvature relationships.
  The above values of total stress are computed for combined axial stress and do not equal the
  actual stresses in concrete and steel in the range of nonlinear bending.


Output Verification: Computed forces and moments are within specified convergence limits.


Output Summary for Load Case No. 2:

Pile-head deflection             =      1.1458516 inches
Computed slope at pile head      =     -0.0072496 radians
Maximum bending moment           =      79943017. inch-lbs
Maximum shear force              =      -1369483. lbs
Depth of maximum bending moment  =    124.3200000 inches below pile head
Depth of maximum shear force     =    299.0400000 inches below pile head
Number of iterations             =             27
Number of zero deflection points =              1



--------------------------------------------------------------------------------
                           Summary of Pile Response(s)
--------------------------------------------------------------------------------


Definitions of Pile-head Loading Conditions:

Load Type 1: Load 1 = Shear, lbs, and Load 2 = Moment, in-lbs
Load Type 2: Load 1 = Shear, lbs, and Load 2 = Slope, radians
Load Type 3: Load 1 = Shear, lbs, and Load 2 = Rotational Stiffness, in-lbs/radian
Load Type 4: Load 1 = Top Deflection, inches, and Load 2 = Moment, in-lbs
```

Load Type 5: Load 1 = Top Deflection, inches, and Load 2 = Slope, radians

Load Case No.	Load Type No.	Pile-head Condition 1 V(lbs) or y(inches)	Pile-head Condition 2 in-lb, rad., or in-lb/rad.	Axial Loading lbs	Pile-head Deflection inches	Maximum Moment in-lbs	Maximum Shear lbs	Pile-head Rotation radians
1	1	V = 30140.	M = 34001880.	132810.	0.38459853	37392352.	-742079.	-0.00251643
2	1	V = 65560.	M = 73464600.	78770.	1.14585164	79943017.	-1369483.	-0.00724964

The analysis ended normally.

Foundation Analysis - Pole Caisson (OTRM 059.1 / OTRM 051)

Analysis Data Input

Overturning Moment (Governing Cases):	$OM_{250B} := 2575.9 \cdot ft \cdot kip$	User Input - from PLS-Pole (NESC 250B)
	$OM_{250B_Lpile} := OM_{250B} \cdot 1.1 = 34001880\ in \cdot lbf$	Includes NEU 1.1 Factor - to be used in LPile
	$OM_{250C} := 5565.5 \cdot ft \cdot kip$	User Input - from PLS-Pole (NESC 250C)
	$OM_{250C_Lpile} := OM_{250C} \cdot 1.1 = 73464600\ in \cdot lbf$	Includes NEU 1.1 Factor - to be used in LPile
Shear (Governing Cases:	$V_{250B} := 27.4 \cdot kip$	User Input - from PLS-Pole (NESC 250B)
	$V_{250B_Lpile} := V_{250B} \cdot 1.1 = 30140\ lbf$	Includes NEU 1.1 Factor - to be used in LPile
	$V_{250C} := 59.6 \cdot kip$	User Input - from PLS-Pole (NESC 250C)
	$V_{250C_Lpile} := V_{250C} \cdot 1.1 = 65560\ lbf$	Includes NEU 1.1 Factor - to be used in LPile
Axial (Governing Cases):	$A_{250B} := 132.8 \cdot kip$	User Input - from PLS-Pole (NESC 250B)
	$A_{250B_Lpile} := A_{250B} \cdot 1.1 = 146080\ lbf$	Includes NEU 1.1 Factor - to be used in LPile
	$A_{250C} := 78.8 \cdot kip$	User Input - from PLS-Pole (NESC 250C)
	$A_{250C_Lpile} := A_{250C} \cdot 1.1 = 86680\ lbf$	Includes NEU 1.1 Factor - to be used in LPile
Bending Moment Capacity:	$Mn := 154826.7\ in \cdot kip$	User Input - from LPILE
Bending Moment:	$Mu := 79943017\ in \cdot lbf$	User Input - from LPILE
Caisson Diameter:	$C_{dia} := 7.5\ ft$	User Input
Caisson Overall Length:	$C_L := 28\ ft$	User Input
Caisson Reveal:	$C_R := 1.0\ ft$	User Input
Rebar Quantity:	$n := 45$	User Input
Rebar Area:	$A_{reb} := 1.56\ in^2$	User Input (Assumed)
Rebar Yield Strength:	$fy := 60\ ksi$	User Input (Assumed)
Concrete Weight:	$WT_{conc} := 150\ pcf$	User Input (Assumed)
Concrete Compressive Strength:	$f'c := 3.5\ ksi$	User Input (Assumed)
Coefficient of Friction between concrete and granular soil / rock:	$\mu := 0.45$	User Input (Assumed)
Rock Ultimate Bearing Pressure:	$RUB := 80\ ksf$	OTRM Section 4.E.3.e.ii.ii

Caisson Moment Capacity (Worst Case = 250C):

Factor of Safety Required: $FS_{moment_req} := 1.0$

NOTE: 1.1 - as per OTMR 051 Section 6 - Foundation Design Criteria - included with loads applied in LPile

Factor of Safety Provided: $FS_{moment} := \frac{Mn}{Mu} = 1.94$

$FS_{moment_check} := \text{if}\left(FS_{moment} \geq FS_{moment_req}, \text{"OK"}, \text{"NG"}\right) = \text{"OK"}$

Moment Usage: $Usage_{moment} := \frac{FS_{moment_req}}{FS_{moment}} = 51.6\%$

Caisson Axial Capacity (Worst Case = 250B):

Factor of Safety Required: $FS_{axial_req} := 1.1$

OTMR 051 Section 6 - Foundation Design Criteria

Caisson Area: $C_{area} := \pi \cdot \frac{(C_{dia})^2}{4} = 44.2\ ft^2$

Caisson Volume: $C_{volume} := C_{area} \cdot C_L = 1237\ ft^3$

Caisson Weight: $C_{weight} := C_{volume} \cdot WT_{conc} = 185.6\ kip$

Total Axial Load: $A_{total_250B} := \left(A_{250B} + C_{weight}\right) = 318.4\ kip$

Axial Capacity Provided: $A_{cap} := n \cdot A_{reb} \cdot fy + \left(C_{area} - n \cdot A_{reb}\right) \cdot 0.85 \cdot f'c = 22929.3\ kip$

Factor of Safety Provided: $FS_{axial} := \frac{A_{cap}}{A_{total_250B}} = 72$

$FS_{axial_check} := \text{if}\left(FS_{axial} \geq FS_{axial_req}, \text{"OK"}, \text{"NG"}\right) = \text{"OK"}$

Axial Usage: $Usage_{axial} := \frac{FS_{axial_req}}{FS_{axial}} = 1.53\%$

Caisson Shear Capacity (Worst Case = 250C):

Factor of Safety Required: $FS_{shear_req} := 1.1$

OTMR 051 Section 6 - Foundation Design Criteria

Total Shear Load: $V_{250C} = 59.6\ kip$

Total Axial Load: $A_{total_250C} := A_{250C} + C_{weight} = 264.4\ kip$

Shear Capacity Provided: $V_{cap} := A_{total_250C} \cdot \mu = 119\ kip$

Factor of Safety Provided: $FS_{shear} := \frac{V_{cap}}{V_{250C}} = 2$

$FS_{shear_check} := \text{if}\left(FS_{shear} \geq FS_{shear_req}, \text{"OK"}, \text{"NG"}\right) = \text{"OK"}$

Axial Usage: $Usage_{axial} := \frac{FS_{shear_req}}{FS_{shear}} = 55.1\%$

Rock Axial Capacity (Worst Case = 250B):

Factor of Safety Required: $FS_{axial_rock_req} := 1.1$ OTMR 051 Section 6 - Foundation Design Criteria

Rock Ultimate Bearing Capacity: $RUB_{cap} := RUB \cdot C_{area} = 3534\ kip$ Ultimate Bearing Pressure * Caisson Area

Factor of Safety Provided: $FS_{axial_rock} := \frac{RUB_{cap}}{A_{total_250B}} = 11.1$ $FS_{axial_soil_check} := \text{if}\left(FS_{axial_rock} \geq FS_{axial_rock_req}, \text{"OK"}, \text{"NG"}\right) = \text{"OK"}$

Axial Usage: $Usage_{axial_soil} := \frac{FS_{axial_rock_req}}{FS_{axial_rock}} = 9.9\%$

APPENDIX E

SUPPLEMENTAL INFORMATION

8-Port Antenna	R1	R2	Y1	Y2
Frequency Range	698–960	698–960	1695–2690	1695–2690
Dual Polarization	X	X	X	X
HPBW	65°	65°	65°	65°
Adjust. Electr. DT set by *FlexRET*	2°–12°	2°–12°	2.5°–12°	2.5°–12°

KATHREIN

AISG Antenna Interface Standards Group

8-Port Antenna 698–960/698–960/1695–2690/1695–2690 65°/65°/65°/65° 15.5/15.5/18/18dBi 2°–12°/2°–12°/2.5°–12°/2.5°–12°T

Type No.		80010965			
Left side, lowband		R1, connector 1–2			
		698–960			
Frequency Range	MHz	698 – 806	790 – 862	824 – 894	880 – 960
Gain at mid Tilt	dBi	14.8	15.4	15.6	15.9
Gain over all Tilts	dBi	14.8 ± 0.6	15.4 ± 0.4	15.6 ± 0.2	15.8 ± 0.2
Horizontal Pattern:					
Azimuth Beamwidth	°	62 ± 3.9	61 ± 3.2	60 ± 2.7	60 ± 2.1
Front-to-Back Ratio, Total Power, ± 30°	dB	> 22	> 25	> 27	> 25
Vertical Pattern:					
Elevation Beamwidth	°	11.9 ± 0.8	11.0 ± 0.8	10.5 ± 0.4	10.2 ± 0.4
Electrical Downtilt continuously adjustable	°	2.0 – 12.0			
Tilt Accuracy	°	< 0.7	< 0.7	< 0.7	< 0.7
First Upper Side Lobe Suppression	dB	> 14	> 14	> 15	> 14
Cross Polar Isolation	dB	> 30			
Port to Port Isolation	dB	> 27 (R1 // R2) > 30 (R1 // Y1, Y2)			
Max. Effective Power per Port	W	400 (at 50 °C ambient temperature)			
Max. Effective Power Port 1–2	W	800 (at 50 °C ambient temperature)			

Values based on NGMN-P-BASTA (version 9.6) requirements.

936.5306/b.1 ngmn 04.24.02.03 Subject to alteration.

Kathrein USA Greenway Plaza II, 2400 Lakeside Blvd., Suite 650, Richardson TX 75082
Phone: 214.238.8800 Fax: 214.238.8801 Email: info@kathrein.com

Right side, lowband		R2, connector 3–4			
		698–960			
Frequency Range	MHz	698 – 806	790 – 862	824 – 894	880 – 960
Gain at mid Tilt	dBi	14.8	15.3	15.5	15.8
Gain over all Tilts	dBi	14.8 ± 0.6	15.3 ± 0.3	15.5 ± 0.3	15.7 ± 0.3
Horizontal Pattern:					
Azimuth Beamwidth	°	63 ± 3.6	62 ± 1.8	62 ± 2.1	60 ± 3.7
Front-to-Back Ratio, Total Power, ± 30°	dB	> 22	> 24	> 26	> 27
Vertical Pattern:					
Elevation Beamwidth	°	11.6 ± 0.7	11.0 ± 0.6	10.7 ± 0.4	10.2 ± 0.5
Electrical Downtilt continuously adjustable	°	2.0 – 12.0			
Tilt Accuracy	°	< 0.7	< 0.6	< 0.6	< 0.5
First Upper Side Lobe Suppression	dB	> 14	> 16	> 16	> 16
Cross Polar Isolation	dB	> 30			
Port to Port Isolation	dB	> 27 (R2 // R1) > 30 (R2 // Y1, Y2)			
Max. Effective Power per Port	W	400 (at 50 °C ambient temperature)			
Max. Effective Power Port 3–4	W	800 (at 50 °C ambient temperature)			

Values based on NGMN-P-BASTA (version 9.6) requirements.

Left side, highband		Y1, connector 5–6				
		1695–2690				
Frequency Range	MHz	1695 – 1880	1850 – 1990	1920 – 2180	2300 – 2400	2490 – 2690
Gain at mid Tilt	dBi	17.6	17.9	18.3	18.1	18.1
Gain over all Tilts	dBi	17.5 ± 0.4	17.8 ± 0.4	18.1 ± 0.5	18.0 ± 0.6	18.0 ± 0.4
Horizontal Pattern:						
Azimuth Beamwidth	°	62 ± 5.1	65 ± 4.1	62 ± 7.2	56 ± 4.1	57 ± 5.1
Front-to-Back Ratio, Total Power, ± 30°	dB	> 22	> 25	> 25	> 25	> 25
Vertical Pattern:						
Elevation Beamwidth	°	6.4 ± 0.5	5.9 ± 0.3	5.5 ± 0.4	4.8 ± 0.3	4.4 ± 0.2
Electrical Downtilt continuously adjustable	°	2.5 – 12.0				
Tilt Accuracy	°	< 0.2	< 0.1	< 0.2	< 0.3	< 0.2
First Upper Side Lobe Suppression	dB	> 19	> 18	> 16	> 18	> 16
Cross Polar Isolation	dB	> 28				
Port to Port Isolation	dB	> 30 (Y1 // R1, R2, Y2)				
Max. Effective Power per Port	W	200 (at 50 °C ambient temperature)				
Max. Effective Power Port 5–6	W	400 (at 50 °C ambient temperature)				

Values based on NGMN-P-BASTA (version 9.6) requirements.

936.5306/b.1 ngmn 04.24.02.03 Subject to alteration.

All specifications are subject to change without notice.
The latest specifications are available at www.kathreinusa.com

Kathrein USA Greenway Plaza II, 2400 Lakeside Blvd., Suite 650, Richardson TX 75082
Phone: 214.238.8800 Fax: 214.238.8801 Email: info@kathrein.com

Right side, highband		Y2, connector 7–8				
		1695–2690				
Frequency Range	MHz	1695 – 1880	1850 – 1990	1920 – 2180	2300 – 2400	2490 – 2690
Gain at mid Tilt	dBi	17.5	18.0	18.3	18.2	17.9
Gain over all Tilts	dBi	17.4 ± 0.4	17.8 ± 0.4	18.1 ± 0.6	18.0 ± 0.7	17.8 ± 0.7
Horizontal Pattern:						
Azimuth Beamwidth	°	65 ± 4.7	66 ± 4.7	62 ± 7.8	57 ± 3.8	59 ± 7.1
Front-to-Back Ratio, Total Power, ± 30°	dB	> 24	> 26	> 26	> 25	> 24
Vertical Pattern:						
Elevation Beamwidth	°	6.4 ± 0.4	5.9 ± 0.3	5.5 ± 0.5	4.8 ± 0.3	4.4 ± 0.3
Electrical Downtilt continuously adjustable	°	2.5 – 12.0				
Tilt Accuracy	°	< 0.2	< 0.2	< 0.2	< 0.3	< 0.2
First Upper Side Lobe Suppression	dB	> 18	> 18	> 15	> 17	> 16
Cross Polar Isolation	dB	> 28				
Port to Port Isolation	dB	> 30 (Y2 // R1, R2, Y1)				
Max. Effective Power per Port	W	200 (at 50 °C ambient temperature)				
Max. Effective Power Port 7–8	W	400 (at 50 °C ambient temperature)				

Values based on NGMN-P-BASTA (version 9.6) requirements.

936.5306/b.1 ngmn 04.24.02.03 Subject to alteration.

Kathrein USA Greenway Plaza II, 2400 Lakeside Blvd., Suite 650, Richardson TX 75082
Phone: 214.238.8800 Fax: 214.238.8801 Email: info@kathrein.com

KATHREIN

Electrical specifications, all systems		
Impedance	Ω	50
VSWR		< 1.5
Return Loss	dB	> 14
Interband Isolation	dB	> 27
Passive Intermodulation	dBc	< –153 (2 x 43 dBm carrier)
Polarization	°	+45, –45
Max. Effective Power for the Antenna	W	1200 (at 50 °C ambient temperature)

Values based on NGMN-P-BASTA (version 9.6) requirements.

Mechanical specifications		
Input		8 x 4.3-10 female
Connector Position		bottom
Adjustment Mechanism		FlexRET, continuously adjustable
Wind load (at Rated Wind Speed: 150 km/h) (93 mph)	N | lbf	Frontal: 1130 | 254 Maximal: 1140 | 256
Max. Wind Velocity	km/h mph	241 150
Height / Width / Depth	mm inches	1999 / 508 / 175 78.7 / 20.0 / 6.9
Category of Mounting Hardware		XH (X-Heavy)
Weight	kg lb	44.3 / 49.3 (clamps incl.) 97.6 / 108.6 (clamps incl.)
Packing Size	mm inches	2200 / 542 / 268 86.6 / 21.3 / 10.6
Scope of Supply		Panel, FlexRET and clamps for 55–115 mm | 2.2–4.5 inches diameter

Accessories (order separately if required)

Type No.	Description	Remarks mm | inches	Weight approx. kg | lb	Units per antenna
85010097	2 clamps	Mast diameter: 110 – 220 | 4.3 – 8.7	9.4 | 20.7	1
85010099	1 downtilt kit	Downtilt angle: 0° – 13°	10.6 | 23.4	1
86010154	Site Sharing Adapter	3-way (see figure below)	0.7 | 1.5	
86010155	Site Sharing Adapter	6-way (see figure below)	1.4 | 3.1	
86010162	Gender Adapter	Solely to be used in combination with the FlexRET module 86010153V01	0.045 | 0.099	1
86010163	Port Extender		0.16 | 0.35	1

Accessories (included in the scope of supply)

85010096	2 clamps	Mast diameter: 55 – 115 | 2.2 – 4.5	5.0 | 11.0	1
86010153V01	FlexRET			1

For downtilt mounting use the clamps for an appropriate mast diameter together with the downtilt kit.
Wall mounting: No additional mounting kit needed.

Material: **Reflector screen:** Aluminum.
Fiberglass housing: It covers totally the internal antenna components. The special design reduces the sealing areas to a minimum and guarantees the best weather protection. Fiberglass material guarantees optimum performance with regards to stability, stiffness, UV resistance and painting. The color of the radome is light grey.
All nuts and bolts: Stainless steel or hot-dip galvanized steel.

Grounding: The metal parts of the antenna including the mounting kit and the inner conductors are DC grounded.

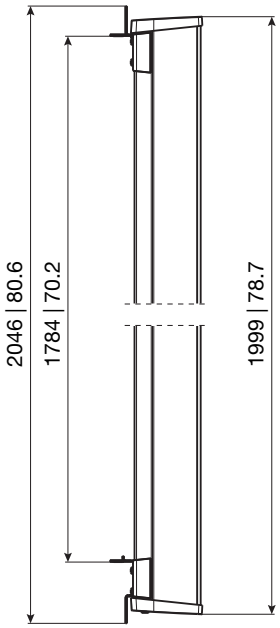

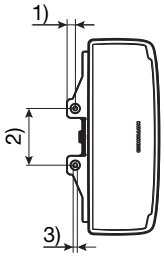

1) 22 | 0.9
2) 150 | 5.9
3) ∅ 11 | 0.4

All dimensions in mm | inches

Configuration example with Site Sharing Adapter 86010154

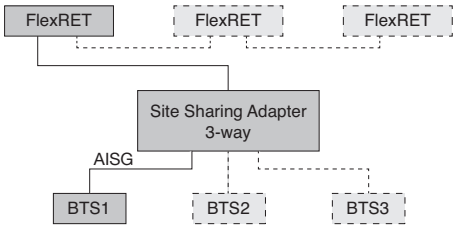

Configuration example with Site Sharing Adapter 86010155

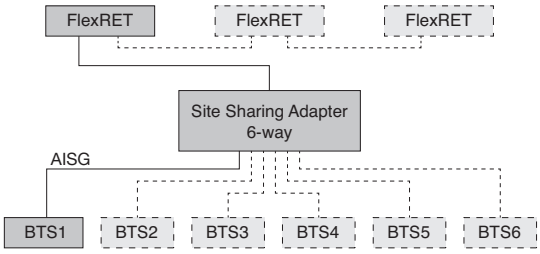

For more information please refer to the respective data sheets.

936.5306/b.1 ngmn 04.24.02.03 Subject to alteration.

Layout of interface:

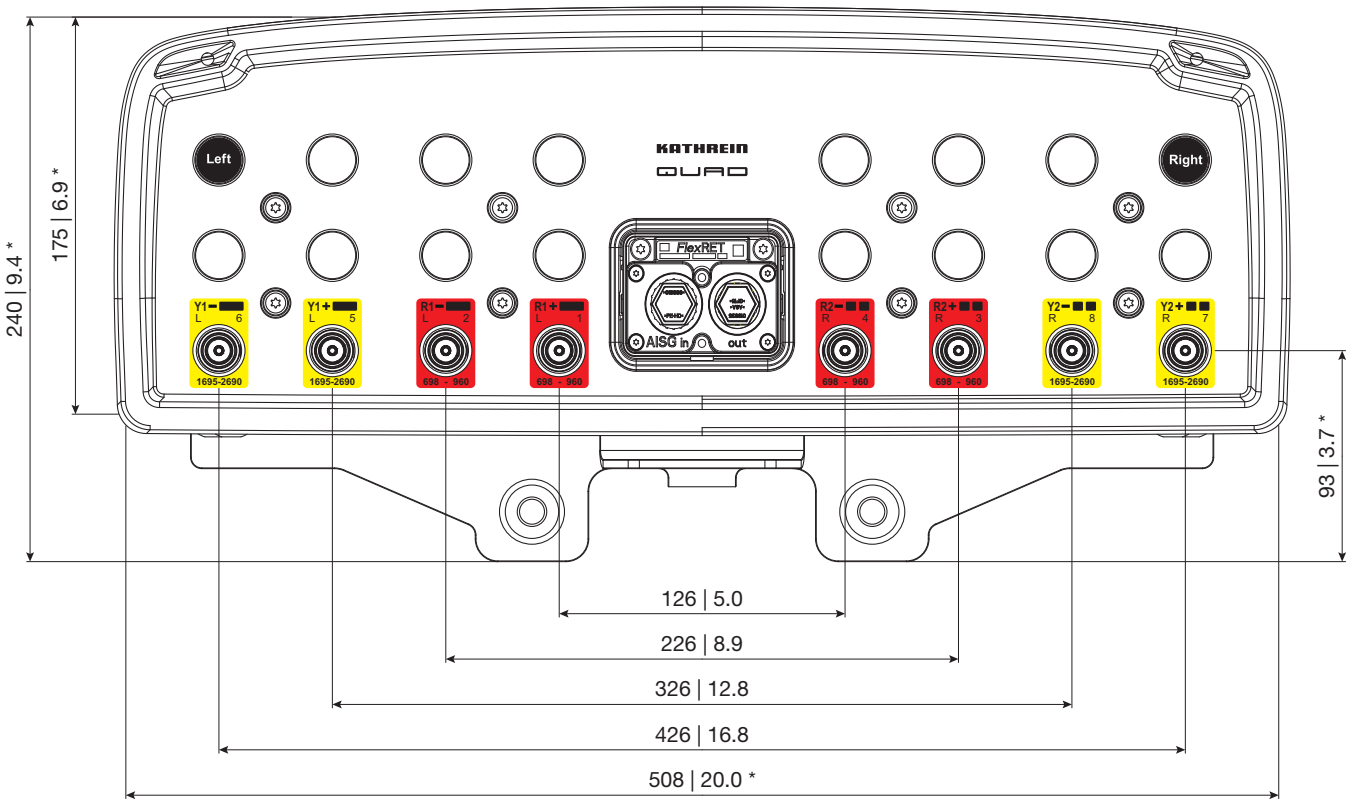

Bottom view
* Dimensions refer to radome
All dimensions in mm | inches

Correlation Table

Frequency range	Array	Connector
698– 960 MHz	R1	1–2
698– 960 MHz	R2	3–4
1695–2690 MHz	Y1	5–6
1695–2690 MHz	Y2	7–8

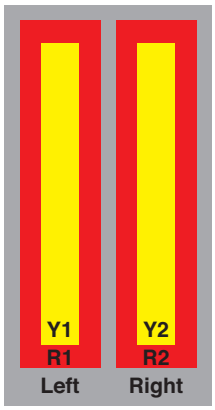

Order Information

Model	Description
80010965	8-Port antenna with mounting bracket
80010965K	8-Port antenna with mounting bracket and mechanical tilt bracket

936.5306/b.1 ngmn 04.24.02.03 Subject to alteration.

Any previous data sheet issues have now become invalid.

All specifications are subject to change without notice.
The latest specifications are available at www.kathreinusa.com

Kathrein USA Greenway Plaza II, 2400 Lakeside Blvd., Suite 650, Richardson TX 75082
Phone: 214.238.8800 Fax: 214.238.8801 Email: info@kathrein.com

Amplifiers

Triple Band Twin TMA (AWS/PCS/WCS) with AWS-3 and 700/850 Bypass

DATA SHEET

TMABPD7823VG12A

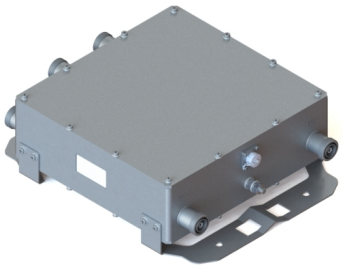

- Triple Band Twin TMA (AWS/PCS/WCS) which includes AWS-3 and 700/850 Bypass
- Each TMA has independent gain control of 6 to 12dB
- Fail-safe bypass mode and multi-strike lightning protection
- Small lightweight unit offers high reliability of >500K Hours MTBF
- Highly linear amplifier with low intermodulation

Overview

CCI's Triple Band Twin TMA (AWS/PCS/WCS), which includes AWS-3 and 700/850 bypass, contains two triple band TMA's in a single housing. Each TMA in the housing is fully duplexed and shares a single LNA for all three bands. The bypass path provides excellent isolation to the TMA path. Separate antenna ports for the bypass path and TMA path are combined onto a single BTS port. The Twin TMA's low noise, highly linear amplifiers improve the uplink sensitivity and the receive performance of the base station. The TMA is fully compliant with the AISG 2.0 specification and supports CDMA, EDGE/GSM, UMTS and LTE BTS equipment. The unit is ideally suited for sites upgraded to quad-band using the existing infrastructure. The TMA allows the sharing of feeder lines for all bands thus reducing tower loading, leasing, and installation costs. The input and output connectors are located inline for ease of installation in space constrained areas such as uni-pole structures and stealth antennas.

Technical Description:

The TMA system is an outdoor triple band twin tower mount unit which provides low noise amplification of PCS, AWS, AWS-3, and WCS uplink signals combined with 700/850 bypassed signals from separate antenna ports to a common BTS port. The tower mount unit consists of 14 band-pass filters, two redundant low noise amplifiers (LNA) with bypass failure circuitry, two bias tees, AISG control circuitry, and lightning protection circuitry all housed in an IP67 enclosure suited to long life masthead mounting. The AWS, PCS and WCS paths are dual duplexed to separate the low power uplink signals from the high power down link signals at the BTS and antenna ports. The AWS, PCS, and WCS uplink signals are amplified with a dedicated ultra-low noise PHEMT LNA with adjustable gain control. The unit provides protection against lightning strikes via a multistage surge protection circuit. DC power and AISG 2.0 control is provided via the BTS feeder cable. The unit operates in current window alarm (CWA) mode until a valid AISG message is detected, at which point it automatically switches to AISG mode. Once in AISG mode, the unit can only switch back to CWA mode with the receipt of an AISG CCI vendor defined command. In CWA mode, the unit requires 12VDC at each BTS port and follows typical current window convention. In AISG mode, the unit will accept 10-30 VDC from either BTS port. In AISG mode, the unit does not require an AISG 2.0 compatible site control unit (SCU) and may also be powered by a standard power distribution unit (PDU).
An optional Site Control Unit (SCU) is available to power up to 32 AISG modules per sector and to provide the monitoring and alarm functions for the system. The SCU is housed in a single (1U) 1.75" x 19" rack and contains dual redundant power supplies capable of being "hot swapped" that provide a regulated DC supply voltage on the RF coax for the tower mount amplifiers.

© 2017 CCI All rights reserved. Specifications are subject to change.

Triple Band Twin TMA (AWS/PCS/WCS) with AWS-3 and 700/850 Bypass

TMABPD7823VG12A

SPECIFICATIONS

Electrical

RF Parameters	Ports	Frequency(MHz)	Specification
Return Loss (minimum)	700/850 ANT	698 - 894	18 dB
	PCS/AWS/WCS ANT	1850 - 1910	18 dB (10 dB bypass mode)
		1930 - 1990	18 dB
		1710 - 1780	18 dB (10 dB bypass mode)
		2110 - 2180	18 dB
		2305 - 2320	18 dB (10 dB bypass mode)
		2345 - 2360	18 dB
	BTS	698 - 894	18 dB
		1850 - 1910	18 dB (10 dB bypass mode)
		1930 - 1990	18 dB
		1710 - 1780	18 dB (10 dB bypass mode)
		2110 - 2180	18 dB
		2305 - 2320	18 dB (10 dB bypass mode)
		2345 - 2360	18 dB
Gain Setting	PCS/AWS/WCS ANT to BTS	1710 - 1780, 1850 - 1910, 2305 - 2320	6 to 12 dB adjustable in 0.25 dB steps via AISG (± 1.0 dB)
Gain, Actual (when set for 6 dB)	PCS/AWS/WCS ANT to BTS	1710 - 1780, 1850 - 1910	6 ± 1.0 dB
		2305 - 2320	5 ± 1.0 dB
Gain, Actual (when set for 9 dB)	PCS/AWS/WCS ANT to BTS	1710 - 1780, 1850 - 1910	9 ± 1.0 dB
		2305 - 2320	8 ± 1.0 dB
Gain, Actual (when set for 12 dB)	PCS/AWS/WCS ANT to BTS	1710 - 1780, 1850 - 1910	12 ± 1.0 dB
		2305 - 2320	11 ± 1.0 dB
Insertion Loss	700/850 ANT - BTS	698 - 894	0.25 dB typical
	PCS/AWS/WCS ANT to BTS (RX Bypass mode)	1850 - 1910	2.5 dB typical
		1710 - 1780	2.5 dB typical
		2305 - 2320	4.5 dB typical
	PCS/AWS/WCS ANT to BTS (TX)	1930 - 1990	0.5 dB typical
		2110 - 2180	0.4 dB typical
		2345 - 2360	0.7 dB typical
Isolation	700/850 ANT to PCS/AWS/WCS ANT	698 - 894	70 dB
		1710 - 2360	70 dB
Noise Figure	PCS/AWS/WCS ANT to BTS	1850 - 1910	1.5 dB typical
		1710 - 1780	1.3 dB typical
		2305 - 2320	2.3 dB typical
Input Third Order Intercept Point (minimum)	PCS/AWS/WCS ANT to BTS	1710 - 1780	+12 dBm at maximum gain
		1850 - 1910	+12 dBm at maximum gain
		2305 - 2320	+12 dBm at maximum gain

General Characteristics	
Impedance	50 ohms
Continuous Average Power	200 W max.
Peak Envelope Power	2 kW max.
Intermodulation Performance(all ports)	<-117 dBm (-160 dBc) typical (2 × +43 dBm tones) all bands
Operating Voltage	+10V to +30V DC provided via coax or AISG
Power Consumption	< 2.0 W

© 2017 CCI All rights reserved. Specifications are subject to change.

Triple Band Twin TMA (AWS/PCS/WCS) with AWS-3 and 700/850 Bypass

TMABPD7823VG12A

SPECIFICATIONS

Environmental

Operating Temperature	-40˚C to +65˚C
Ingress Protection	IP67
MTBF	>500,000 hours
Lightning Protection	8/20us, ±10KA max, 10 strikes each per IEC61000-4-5

Mechanical

Connectors	6 x 7-16 DIN female 1 x AISG
Dimensions enclosure (HxWxD)	10.63 x 11.04 x 3.75 in. (270.0 x 280.3 x 95.2 mm)
Dimensions with brackets (HxWxD)	14.22 x 11.56 x 4.24 in. (361.8 x 293.5 x 107.6 mm)
Weight enclosure	25.0 lbs (11.3 kg)
Weight with brackets	26.0 lbs (11.8 kg)
Mounting	Pole/Wall mounting bracket

© 2017 CCI All rights reserved. Specifications are subject to change.

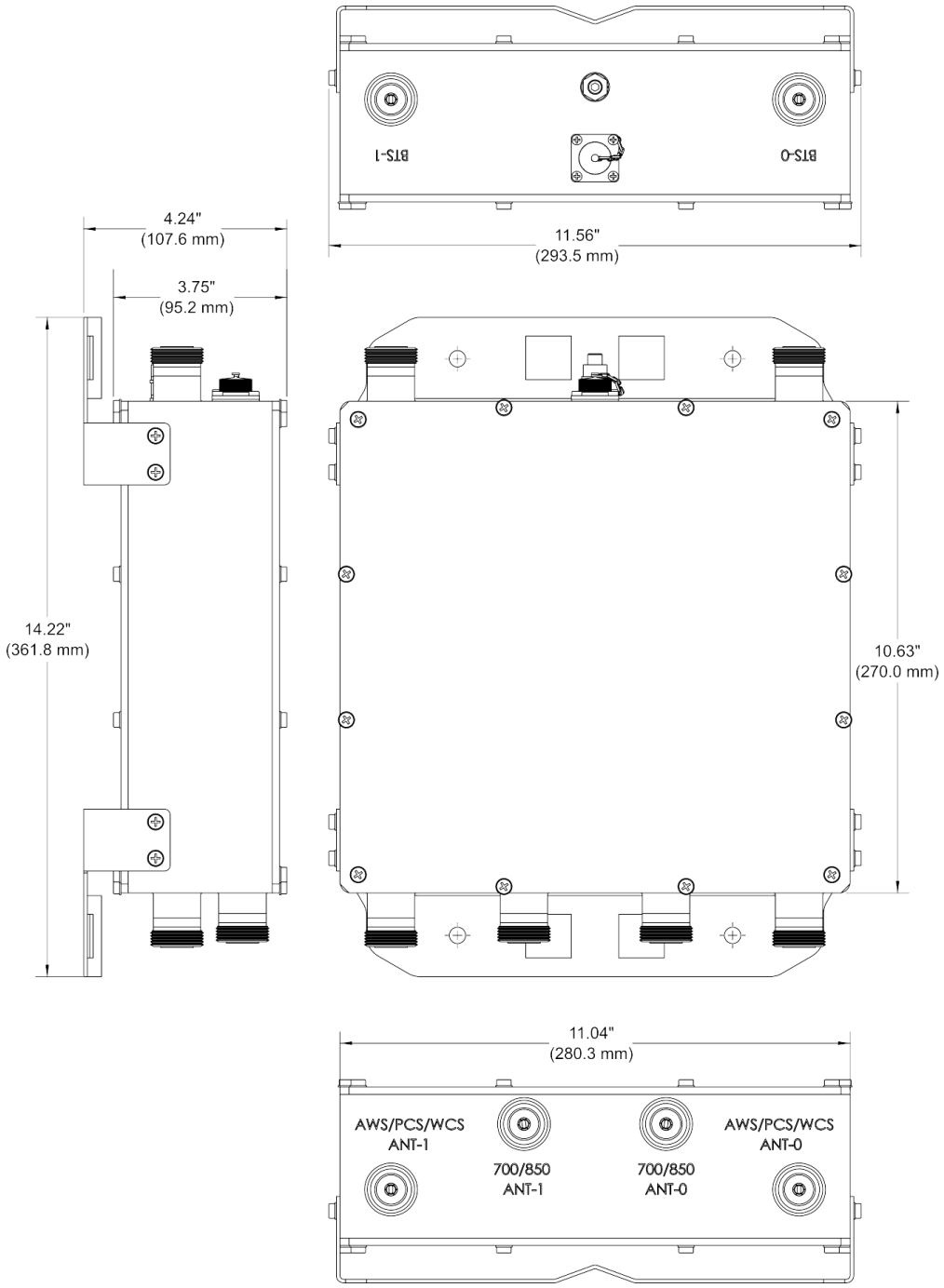

TMABPD7823VG12A Outline Drawing

© 2017 CCI All rights reserved. Specifications are subject to change.

Triple Band Twin TMA (AWS/PCS/WCS) with AWS-3 and 700/850 Bypass

SPECIFICATIONS

TMABPD7823VG12A

Block Diagram

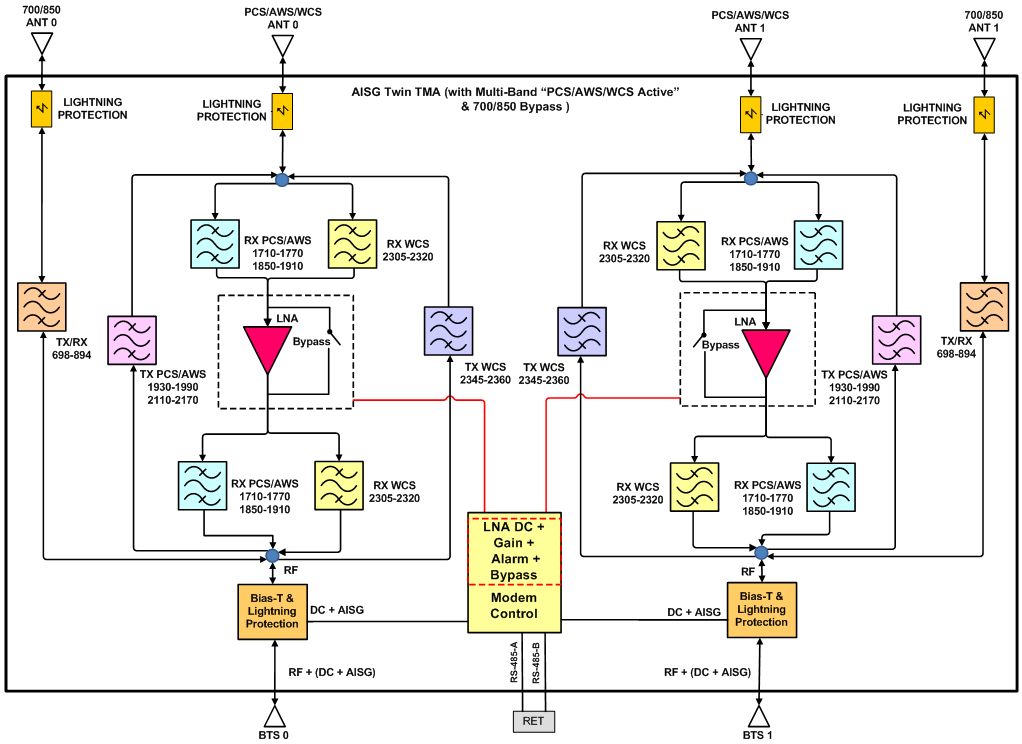

TMABPD7823VG12A Block Diagram

© 2017 CCI All rights reserved. Specifications are subject to change.

STANDARDS & CERTIFICATIONS

Parts & Accessories

TMABPD7823VG12A	Triple Band Twin TMA (PCS/AWS/WCS) with 700/850 Bypass with 7/16 DIN connectors

Standards & Compliance

Safety	EN 60950-1, UL 60950-1
Emission	EN 55022
Immunity	EN 55024
Environmental	IEC 60068-2-1, IEC 60068-2-2, IEC 60068-2-5, IEC 60068-2-6, IEC-60068-2-11, IEC 60068-2-14, IEC 60068-2-18, IEC 60068-2-27, IEC 60068-2-29, IEC 60068-02-30, IEC 60068-2-52, IEC 60068-2-64, IEC61000-4-5, GR-63-CORE 4.3.1, EN 60529 IP68

Certifications

Antenna Interface Standards Group (AISG), Federal Communication Commission (FCC) Part 15 Class B, CE, CSA US, ISO 9001:2008

© 2017 CCI All rights reserved. Specifications are subject to change.

TMA2117F00V1-1

TWIN TMA 1900/WCS, LOWPASS

Designed to be deployed in co-located 1900 & WCS systems with wideband antennas, the Kaelus TMA provides internal diplexing and gain in both bands while allowing 700/850 services to pass through to a separate antenna, thereby saving hardware costs.

FEATURES

- Improved base station sensitivity through gain in 1900 and WCS bands
- High Linearity and low noise performance; Bypass provided for 700/850MHz services
- Hardware and software configuration using AISG “Personality” upload
- Fail safe bypass mode with lightning protection

TECHNICAL SPECIFICATIONS

BAND NAME	1900	WCS
DOWNLINK		
Passband	1930 - 1990MHz	2350 - 2360MHz
Insertion loss	0.5dB typical	
Return loss	18dB minimum	
Maximum input power	160W (average) / 2kW (PEP)	120W (average) / 1.2kW (PEP)
UPLINK		
Passband	1850 - 1910MHz	2305 - 2315MHz
Gain	13dB	12dB
Variable gain	3dB to 13dB in 1dB steps (controlled by AISG commands)	2dB to 12dB in 1dB steps (controlled by AISG commands)
Gain variation	±1dB maximum	
Return loss	18dB minimum operating, 12dB in bypass	
Bypass loss	2.5dB typical	3.3dB typical
Noise figure	1.4dB typical	1.7dB typical
Output IP3	+30dBm typical	
Maximum input power with no damage	+12dBm maximum	
Rejection	27.5dB minimum@2324.54 - 2341.285MHz	
LOW BAND PATH		
Passband	698 - 896MHz	
Return loss	18dB minimum	
Insertion loss	0.35dB typical	
Maximum input power with no damage	200W (average) / 2kW (PEP)	
ELECTRICAL		
Impedance	50Ohms	
Intermodulation products	-153dBc maximum in RX band with 2 x 20W carriers	

POWER SUPPLY AND ALARM (CURRENT WINDOW ALARM MODE, DEFAULT)	
Current window alarm mode (CWA) is the default TMA operating mode and can be configured to specific customer requirements. The generic personality (F00V1) is configured so that both channels are independently powered and monitored via the respective BTS port. The BTS port sinks additional current to indicate an alarm state in its uplink path. Normal operating and alarm current values are configured independently via a field-loadable personality file, Please contact Kaelus for more information.	
DC supply voltage	8.5 to 30V DC, case is DC ground
DC supply	Each BTS powered individually (programmable)
DC supply current, normal mode	200 ± 20mA per port (programmable)
DC supply current, alarm mode	300 ± 30mA per port(programmable)

AISG MODE OF OPERATION (AUTO SELECTED ON VALID AISG 2.0 FRAMES)	
AISG signals can be applied to either port 7 or port 8. The TMA2117FxxVx-1 unit switches to AISG mode when valid frames are detected on one of the BTS ports. Both LNAs take DC power from the port with AISG frames or, if DC is present on both ports, both channels supply equal power to the TMA2117FxxVx-1.	
DC supply voltage	+8.5V to +30V DC
AISG version	2.0 (1.1 optional)
Supply current, AISG mode	400mA @ 8.5V, 120mA @ 30V typical
AISG connector, current rating	IEC60130-9, 8-pin female ,< 4A peak, 2A continuous, pin 6
Field firmware upgradable	Yes

ENVIRONMENTAL	
For further details of environmental compliance, please contact Kaelus.	
Temperature range	-40ºC to +65ºC | -40°F to +149°F
Ingress protection	IP67
Lightning protection	IEC61312-1, RF: ±5kA maximum (8/20us), AISG: ±2kA maximum (8/20us)
MTBF	>1,000,000 hours
Compliance	FCC Part 15 subpart B, ETSI EN 300 019 class 4.1, RoHS

MECHANICAL	
Dimensions H x D x W	300 x 250 x 118mm | 11.81 x 9.84 x 4.65in
Weight	11.8kg | 26lbs
Finish	Painted, light grey (RAL7035)
Connectors	DIN 4.3-10 (F) x 8 long shank, AISG (F) x 1
Mounting	Pole/wall bracket supplied with two metal clamps 45-178mm diameter poles

ORDERING INFORMATION

PART NUMBER	DESCRIPTION
TMA2117F00V1-1	TWIN TMA 1900/WCS, 698-896 LOWPASS, 6 ANT

ELECTRICAL BLOCK DIAGRAM

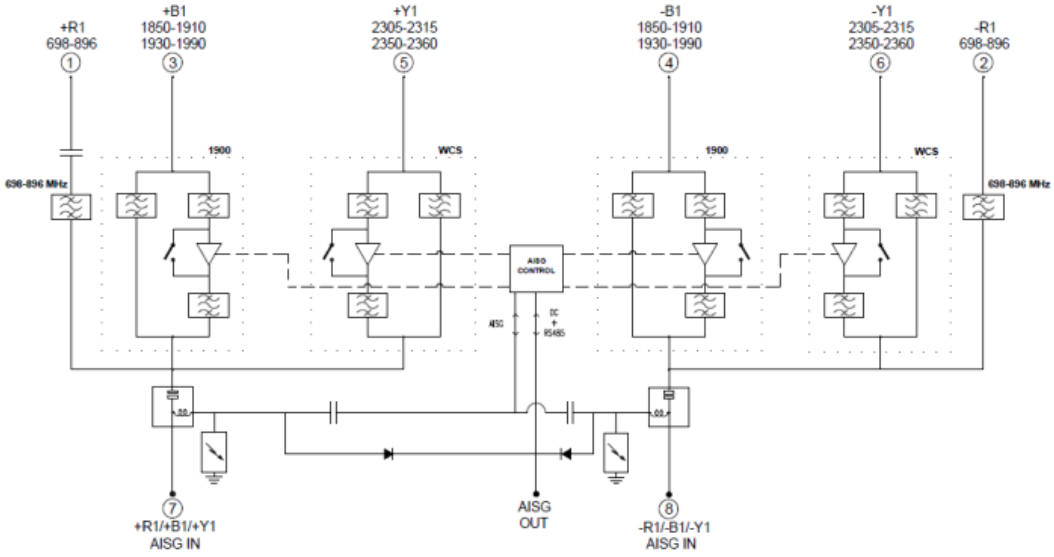

MECHANICAL BLOCK DIAGRAM

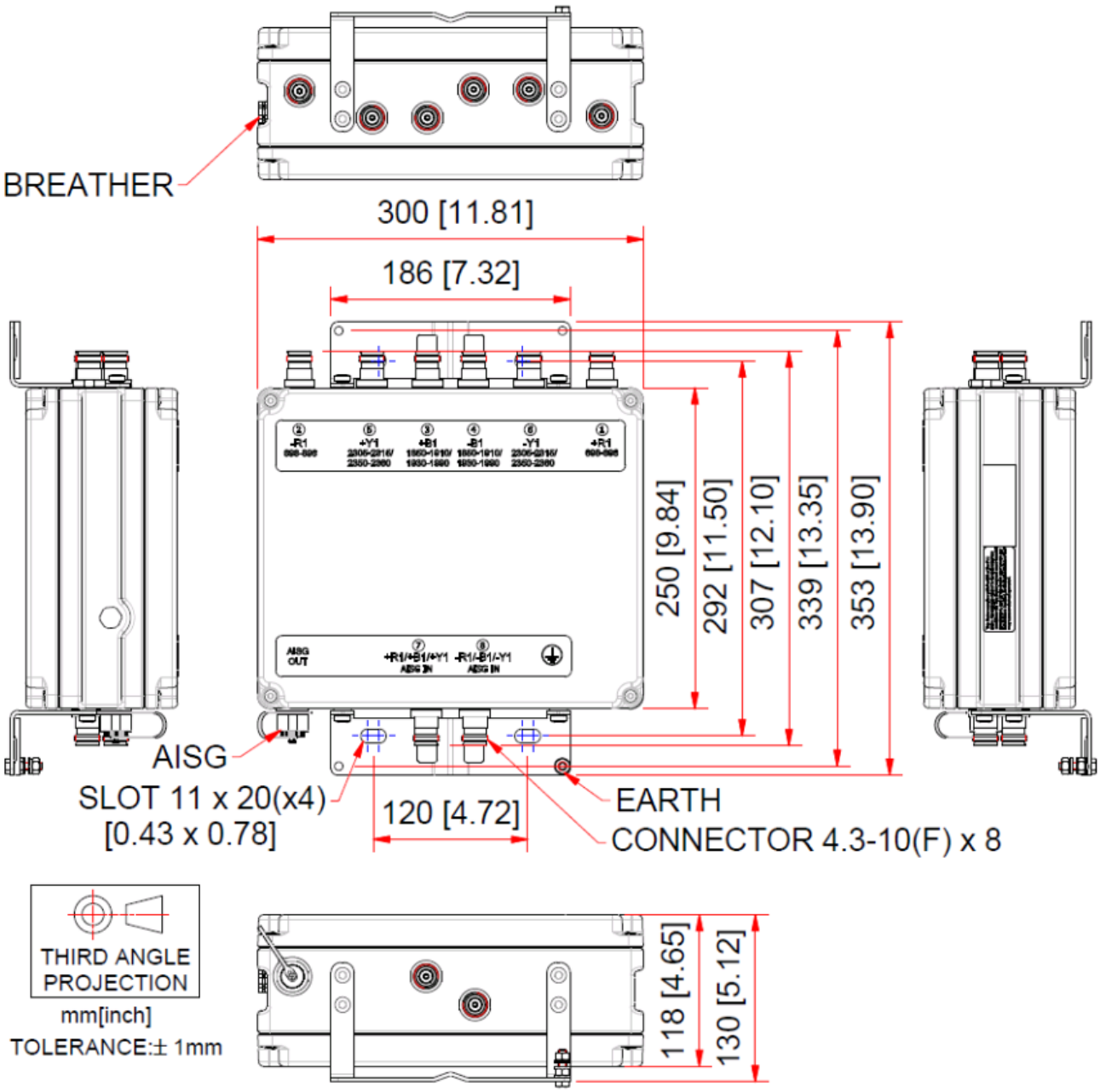

QS66512-2

6ft 65° XXX MultiServ™ 12-Port Antenna

2x698-806*MHz / 2x824-894MHz / 4x1850-1990MHz / 4x1695-1780+2110-2400MHz

- Provides 12 antenna Ports in a slim-line form factor
- Optimized Azimuth patterns for Min Inter-Sector Interference
- Industry leading Minimal Wind-Load design

- 700, 850, PCS, AWS & WCS bands in one antenna
- AISG & 3GPP compliant internal remote electrical tilt (RET)
- AWS & PCS Cross band PIM >159dBc

The Quintel MultiServ™ Multiband 12 Port Antenna with patented QTilt™ technology uniquely delivers four independent services in a single slim-line antenna. This enables existing antenna network sites to be upgraded constraint free to add new services such as LTE for 700, 850, PCS, AWS and WCS bands with the replacement of one antenna. The QS66512-2 also provides 4x1695-1780+2110-2400MHz & 4x1850-1990MHz ports as two side-by-side (CLA-2X) arrays, each set of 4 ports having independent tilt for connection to 2T4R/4T4R services.

Electrical Characteristics	2x Ports 1&2	2x Ports 3&4	4x Ports 5-8			4 Ports 9-12
Operating Frequency (MHz)	**698-806***	**824-894**	**1695-1780 and 2110-2400**			**1850-1990**
	698-806	824-894	1695-1780	2110-2180	2300-2400	1850-1990
Azimuth beamwidth[1]	67°	64°	68°	63°	58°	69°
Elevation beamwidth[1]	12°	10°	6.5°	5.5°	4.5°	5.5°
Gain[1] (dBi)	13.2	13.5	16.2	16.5	17.0	16.0
Polarization	±45°	±45°	±45° ±45°			±45° ±45°
Electrical down-tilt range	2°-10°	2°-10°	2° – 7°			2° – 7°
Upper SLL (20° > mainbeam)[1]	-17dB	-19dB	-18dB	-18B	-18dB	-16dB
Front to Back Ratio(180°±10°)[1]	≥27dB	≥29dB	≥28dB	≥28dB	≥28dB	≥27dB
Port to Port isolation[1]	≥28dB	≥30dB	≥30dB	≥30dB	≥30dB	≥30dB
Return loss (VSWR)	14dB(1.5)	14dB(1.5)	14dB(1.5)	14dB(1.5)	14dB (1.5)	14dB(1.5)
X Polar Discrimination (at 0°)	>18dB	>16dB	>20dB	>20dB	>18dB	>20dB
Max Power handling (per any port)	500 watts	500 watts	250 watts			250 watts
Total Composite Power (all ports)	1750 watts					
PIM (3rd Order) (2x43dBm)	>153dBc	>153dBc	>153dBc			>153dBc
XBand PIM (3rd Order) (2x43dBm)			>159dBc			

*[1] Typical Performance across frequency and Downtilt. *Products Ordered after Jan 2016 will be 698-806MHz*

Mechanical Characteristics	
Dimensions	L 72"(1828mm) x W 12"(304mm) x D 9.6"(245mm)
Weight (excl mounting brackets)	111lbs (50.3kg)
No. of Connectors	12x 4.3-10.0 DIN Female Long Neck
Max Wind Speed	150mph (67m/s)
Effective Projected Area	Front: 2.6ft² (0.24m²) Side: 5.0ft²(0.46m²)
Wind Load @160km/h (45m/s)	Front: 284.7N (64 lbs), Side: 535.5N (120.4 lbs)
Operating Temperature	-40°C to +65°C

Fully Integrated RET Characteristics	
AISG Standards	V1.1,V 2.0 and 3GPP
Factory Default	AISG 2.0
Surge immunity	IEC 61000-4-5:2005 4KV(AISG PIN)
Device Type	SRET Type 1
AISG Data rate	9.6 kbps
No of connectors	1in/1out.
Connector type	IEC 60130-9 (Ed 3.0)
MTBF	36,000 Operational moves

All specifications are subject to change without notice. Please contact your Quintel representative for complete information.

QS66512-2

6ft 65º XXX MultiServ™ 12-Port Antenna

2x698-806*MHz / 2x824-894MHz / 4x1850-1990MHz / 4x1695-1780+2110-2400MHz

RET Configuration

The Quintel MultiServ™ Multiband 12 Port Antenna has the following Array, RF Port and AISG I/O Configurations.

The 12-Port array topology consists of 3 radiating arrays:

R1/R2 – 698-894MHz
Y1/B1 – 1695-2400MHz
Y2/B2 – 1695-2400MHz

RF Connector Port Configuration

	Ports	Freq (MHz)
R1	1-2	698-806
R2	3-4	824-894
Y1	5-6	1695-1780+ 2110-2400
Y2	7-8	1695-1780+ 2110-2400
B1	9-10	1850-1990
B2	11-12	1850-1990

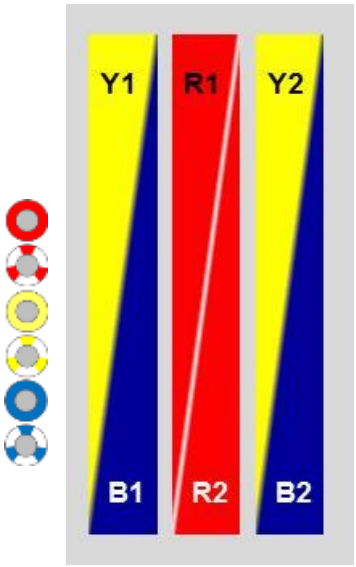

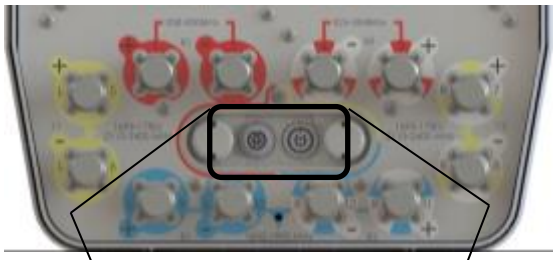

AISG I/O Configuration

RET Device	Band	RF Ports
1	698-806	1-2
2	824-894	3-4
3	AWS/WCS	5-8
4	PCS	9-12

Multiband Optimization

The Quintel MultiServ™ Multiband 12 Port Antenna is an ideal solution for independently optimizing multiple services when rapidly introducing new technologies. Technology agnostic, each pair of ports provides flexibility for existing and future technologies such as CDMA/EVDO, UMTS/HSPA, and LTE and advanced 2T4R and 4T4R MIMO implementations at high-bands.

The tilt of each service is controlled independently via internal RET actuators compliant to AISG1.1, AISG2.0 and 3GPP protocols. The QS66512-2 provides a total of 4 independent tilts:

- 1x(698-806MHz)
- 1x(824-894MHz)
- 1x Left & Right Array (1695-1780 and 2110-2400MHz)
- 1x Left & Right Array (1850-1990MHz)

Design Optimization

All Quintel antennas use the same mechanical mounting brackets thus making maintenance swaps easy and future proof. All Quintel Antennas also have Azimuth patterns optimized with network design and deployment in mind. The 3dB Azimuth beamwidth is ~65º as with most Antennas, but we have optimized how the pattern rolls-off and where the sidelobes emerge such that there is minimal Inter-Sector Interference when 3x sectors are deployed. For interference limited networks, we can deliver 25% more capacity.

The QS66512-2 12-Port antenna has been designed for delivering best in class, maximum PIM performance. This includes using 4.3-10.0 connectors externally and internally for all array diplexing filters used with our QTilt™ technology.

About Quintel

Quintel is a leading innovator in the design, development, and delivery of network-efficient antenna solutions for wireless operators worldwide. The company's products enable global wireless operators to independently deploy and optimize multiple air interfaces or services on a single standard antenna platform. Quintel is the only antenna maker whose products can increase a wireless network's capacity and provide additional services, without increasing the number or size of antennas. Quintel is headquartered in Rochester, New York with additional offices throughout North America and Europe. More information about Quintel is available at www.quintelsolutions.com.

Tel (Americas): +1 (585) 420-8720
info@quintelsolutions.com

THIS DOCUMENT PROVIDES A GENERAL DESCRIPTION OF THE PRODUCT AND SHALL NOT FORM PART OF ANY CONTRACT.
© 2017 Quintel Technology Limited. All rights reserved. Quintel and the Quintel logo are registered trademarks Quintel Technology Limited. All other trademarks are the property of their respective owners.

Product Specifications

COMMSCOPE®

POWERED BY ANDREW®

SBNH-1D6565B

Andrew® Dual Band Antenna, 698–896 MHz and 1710–2180 MHz, 65° horizontal beamwidth, internal RET

- Interleaved dipole technology providing for attractive, low wind load mechanical package
- Internal next generation actuator eliminates field installation and defines new standards for reliability
- The values presented on this datasheet have been calculated based on N-P-BASTA White Paper version 9.6 by the NGMN Alliance

This product will be discontinued on: December 31, 2014

Replaced By

DBXNH-6565B-VTM	Andrew® Dual Band Teletilt® Antenna, 698–896 MHz and 1710–2180 MHz, 65° horizontal beamwidth, RET compatible
SBNHH-1D65B	Andrew® Tri-band Antenna, 698–896 and 2 x 1710–2360 MHz, 65° horizontal beamwidth, internal RET. Both high bands share the same electrical tilt.
SBNH-1D65B	Andrew® Dualband Antenna, 698–896 MHz and 1710–2360 MHz, 65° horizontal beamwidth, internal RET.

Electrical Specifications

Frequency Band, MHz	**698–806**	**806–896**	**1710–1880**	**1850–1990**	**1920–2180**
Gain by all Beam Tilts, average, dBi	14.9	15.2	18.3	18.2	17.9
Gain by all Beam Tilts Tolerance, dB	±0.5	±0.4	±0.4	±0.3	±0.7
Gain by Beam Tilt, average, dBi	0 ° | 15.1 5 ° | 15.1 10 ° | 14.6	0 ° | 15.2 5 ° | 15.3 10 ° | 15.1	0 ° | 18.5 3 ° | 18.4 6 ° | 18.1	0 ° | 18.3 3 ° | 18.3 6 ° | 18.0	0 ° | 18.2 3 ° | 18.0 6 ° | 17.5
Beamwidth, Horizontal, degrees	71	67	59	57	63
Beamwidth, Horizontal Tolerance, degrees	±2.2	±2.3	±2.6	±1.4	±10.2
Beamwidth, Vertical, degrees	12.3	10.9	5.5	5.1	4.8
Beamwidth, Vertical Tolerance, degrees	±0.9	±0.5	±0.3	±0.2	±0.4
Beam Tilt, degrees	0–10	0–10	0–6	0–6	0–6
USLS, dB	16	17	16	17	15
Front-to-Back Total Power at 180° ± 30°, dB	21	20	29	29	27
CPR at Boresight, dB	26	22	25	26	24
CPR at Sector, dB	11	7	10	10	8
Isolation, dB	30	30	30	30	30
Isolation, Intersystem, dB	30	30	30	30	30
VSWR | Return Loss, dB	1.5 | 14.0	1.5 | 14.0	1.5 | 14.0	1.5 | 14.0	1.5 | 14.0
PIM, 3rd Order, 2 x 20 W, dBc	-153	-153	-153	-153	-153
Input Power per Port, maximum, watts	400	400	300	300	300
Polarization	±45°	±45°	±45°	±45°	±45°
Impedance	50 ohm	50 ohm	50 ohm	50 ohm	50 ohm

General Specifications

Antenna Brand	Andrew®
Antenna Type	DualPol® multiband with internal RET
Band	Multiband

©2014 CommScope, Inc. All rights reserved. All trademarks identified by ® or ™ are registered trademarks, respectively, of CommScope. All specifications are subject to change without notice. See www.commscope.com for the most current information. Revised: September 11, 2014

Product Specifications

SBNH-1D6565B

Brand	DualPol® | Teletilt®
Operating Frequency Band	1710 – 2180 MHz | 698 – 896 MHz

Mechanical Specifications

Color	Light gray
Lightning Protection	dc Ground
Radiator Material	Aluminum
Radome Material	Fiberglass, UV resistant
RF Connector Interface	7-16 DIN Female
RF Connector Location	Bottom
RF Connector Quantity, total	4
Wind Loading, maximum	618.0 N @ 150 km/h 138.9 lbf @ 150 km/h
Wind Speed, maximum	241.0 km/h | 149.8 mph

Dimensions

Depth	181.0 mm | 7.1 in
Length	1847.0 mm | 72.7 in
Width	301.0 mm | 11.9 in
Net Weight	21.5 kg | 47.4 lb

Remote Electrical Tilt (RET) Information

Input Voltage	10–30 Vdc
Power Consumption, idle state, maximum	2.0 W
Power Consumption, normal conditions, maximum	11.0 W
Protocol	3GPP/AISG 2.0 Multi-RET
RET Interface	8-pin DIN Female | 8-pin DIN Male
RET Interface, quantity	1 female | 1 male
RET System	Teletilt®

Regulatory Compliance/Certifications

Agency	Classification
RoHS 2011/65/EU	Compliant by Exemption
China RoHS SJ/T 11364-2006	Above Maximum Concentration Value (MCV)
ISO 9001:2008	Designed, manufactured and/or distributed under this quality management system

Included Products

DB380 — Pipe Mounting Kit for 2.4"-4.5" (60-115mm) OD round members on wide panel antennas. Includes 2 clamp sets and double nuts.

DB5083 — Downtilt Mounting Kit for 2.4"-4.5" (60 - 115 mm) OD round members. Includes a heavy-duty, galvanized steel

©2014 CommScope, Inc. All rights reserved. All trademarks identified by ® or ™ are registered trademarks, respectively, of CommScope. All specifications are subject to change without notice. See www.commscope.com for the most current information. Revised: September 11, 2014

downtilt mounting bracket assembly and associated hardware. This kit is compatible with the DB380 pipe mount kit for panel antennas that are equipped with two mounting brackets.

©2014 CommScope, Inc. All rights reserved. All trademarks identified by ® or ™ are registered trademarks, respectively, of CommScope. All specifications are subject to change without notice. See www.commscope.com for the most current information. Revised: September 11, 2014

PAUL J. FORD & COMPANY

Report Date:	February 12, 2019
Client:	Smartlink, LLC 85 Rangeway Rd North Billerica, MA 01862-2105 Attn: David Barbagallo 860-681-7708
Utility Name:	Eversource Energy
Structure:	Existing 120-ft Transmission Pole #24063
Line Reference:	Middletown - Norwalk - 345kV Line
Carrier-Technology:	AT&T – 2019 LTE Next Carrier
Carrier Site Name:	Orange Overland Drive
Carrier Site Number:	CTL02343
Site Address:	525 Overland Dr
City, County, State:	Orange, New Haven County, CT
Latitude, Longitude:	41.289361, -73.001083
PJF Project:	A80619-0001.001.6190

Paul J. Ford and Company is pleased to submit this "**Mount Modification Report**". The purpose of this analysis is to determine if the mount has sufficient capacity to support the equipment described herein. Analysis of the existing supporting tower structure is to be completed by others and therefore is not part of this analysis. Analysis of the antenna mounting system as a tie-off point is not part of this document.

Analysis Criteria:

Reference Standard:	2016 Connecticut State Building Code with the ANSI/TIA-222-G-2005 Standard, "Structural Standard for Antenna Supporting Structures and Antennas", with ANSI/TIA-222-G-1-2007 and ANSI/TIA-222-G-2-2009 Addenda per Exception #5 of Section 1609.1.1.
Ultimate Wind Speed:	125 mph 3-second gust wind speed without ice
Nominal Wind Speed:	97 mph 3-second gust wind speed without ice
Ice Wind Speed:	50 mph 3-second gust wind speed with 0.75" ice
IBC Site Criteria:	Structure Class III, Topographic Category 1, Exposure Category C

Summary of Analysis Results:

Antenna Mount:	**96%**	**SUFFICIENT***

***Sufficient upon completion of the modifications listed in the 'Recommendations' section of this report.**

We at Paul J. Ford and Company appreciate the opportunity of providing our continuing professional services to you and Smartlink, LLC. If you have any questions or need further assistance on this or any other projects please give us a call.

Respectfully Submitted by:
Paul J. Ford and Company

Charles E. Carrillo, P.E.
Project Engineer
ccarrillo@pauljford.com

STATE OF CONNECTICUT
JAMES R. ANTOSZEWSKI
31499
LICENSED
PROFESSIONAL ENGINEER

2/12/2019

TABLE OF CONTENTS

1) INTRODUCTION

2) ANALYSIS CRITERIA

Reference Standard
Table 1 – Proposed Antenna Information
Table 2 – Existing Antenna Information

3) ANALYSIS PROCEDURE

Table 3 – Documents Provided
3.1) Analysis Method
3.2) Assumptions

4) ANALYSIS RESULTS

Table 4 - Mount Component Capacity
4.1) Recommendations

5) CONCLUSION

STANDARD CONDITIONS

APPENDIX A – LOAD CALCULATIONS

APPENDIX B – RISA 3D OUTPUT

1) INTRODUCTION

This tower is a 120 ft transmission pole with an existing Valmont 802738 mount at the 130'-0" centerline.

2) ANALYSIS CRITERIA

This analysis has been performed in accordance with the 2016 Connecticut State Building Code based upon a nominal 3-second gust wind speed of 97 mph per section 1609.3.1 as required for use in the ANSI/TIA-222-G-2005 Standard, "Structural Standard for Antenna Supporting Structures and Antennas", with ANSI/TIA-222-G-1-2007 and ANSI/TIA-222-G-2-2009 Addenda per Exception #5 of Section 1609.1.1. Structure Class III, Exposure Category C and Topographic Category 1 with a maximum Topographic Factor, Kzt, of 1.0 were used in this analysis.

Table 1 – Proposed Antenna Information

Mounting Level (feet)	Center Line Elevation (feet)	Number of Antennas	Antenna Manufacturer	Antenna Model	Note
130	130	3	Kathrein	800-10965 (Antenna)	1
		6	CCI	TMABPD7823VG12A (TMA)	
		1	-	10'-6" Custom Handrail	-
		1	SitePro1	PRK-SFS-L	

Notes:
1. Proposed equipment

Table 2 – Existing Antenna Information

Mounting Level (feet)	Center Line Elevation (feet)	Number of Antennas	Antenna Manufacturer	Antenna Model	Note
130	130	3	Andrew	SBNH-1D6565B (Antenna)	1
		3	Quintel	QS66512-2 (Antenna)	
		6	Kaelus	TMA2117F00V1-1 (TMA)	

Notes:
1. Existing equipment

3) ANALYSIS PROCEDURE

Table 3 – Documents Provided

Document	Remarks	Reference	Source
Site Photos	-	-	
RF Data Sheet	AT&T, 07/10/2018	Orange Overland Drive	AT&T
Mount Modification Drawings	PJF, 02/12/2019	80619-0001.001.6190	PJF

3.1) Analysis Method

RISA-3D (version 15.0.4), a commercially available analysis software package, was used to create a three-dimensional model of the mount and calculate member stresses for various loading cases. Selected output from the analysis is included in Appendix C.

3.2) Assumptions

1) *The analysis of the existing transmission pole tower or the effect of the mount attachment to the tower is not within the current scope of work.*
2) *The antenna mounting system was properly fabricated, installed and maintained in good condition, twist free and plumb in accordance with its original design and manufacturer's specifications and all bolts are tightened as specified by the manufacturer and AISC requirements.*
3) *The configuration of antennas, mounts, and other appurtenances are as specified in Table 1 and 2 and the referenced drawings.*
4) *All member connections have been designed to meet or exceed the load carrying capacity of the connected member unless otherwise specified in this report.*
5) *This analysis will be required to be revised if the existing conditions in the field differ from those shown in the above referenced documents or assumed in this analysis. No allowance was made for any damaged, missing, or rusted members.*
6) *Steel grades have been assumed as follows:*
   a) *Channel, Solid Round, Angle, Plate, Unistrut* — *ASTM A36 (GR 36)*
   b) *Pipe* — *ASTM A53 (GR 35)*
   c) *HSS (Rectangular)* — *ASTM 500 (GR B-46)*
   d) *Connection Bolts* — *ASTM A325*
7) *Mount will be modified in conformance with the attached proposed modification drawings.*
8) *No Man Live loads have been considered in this analysis since these frames are not man rated. AT&T policy forbids the addition of live loads to this type of mount.*

This analysis may be affected if any assumptions are not valid or have been made in error. Paul J Ford and Company should be notified to determine the effect on the structural integrity of the tower.

4) ANALYSIS RESULTS

Table 4 – Mount Component Stresses vs. Capacity

Notes	Component	Elevation (ft)	% Capacity	Pass / Fail
1	Mount Pipes	130.0	79	Pass
1	Face Horizontal		72	Pass
1	Vertical Pipes		13	Pass
1	Vertical Kicker		78	Pass
1	Standoff		96	Pass
1	Handrail		60	Pass

Mount Rating (max from all components) =	96%

Notes:
1. See additional documentation in "Appendix C – Software analysis Output" for calculations supporting the % capacity consumed.

4.1) Recommendations

- Install the proposed modifications referenced in Table 3 of this report.

5) CONCLUSION

The mount will have sufficient capacity to carry the proposed loading configuration once the recommendations are met and properly installed.

This analysis is presented based upon the assumptions listed herein and information provided by the wireless carrier. If the existing conditions are different than those presented here, Paul J. Ford and Company should be contacted to verify the validity of the conclusions presented here.

STANDARD CONDITIONS FOR FURNISHING OF PROFESSIONAL ENGINEERING SERVICES ON EXISTING MOUNTS BY PAUL J. FORD AND COMPANY

1) It is the responsibility of the client to ensure that the information provided to Paul J. Ford and Company is accurate and complete. Paul J. Ford and Company will rely on the accuracy and completeness of such information in performing or furnishing services under this project.

2) If the existing conditions are not as represented on the referenced drawings and/or documents, Paul J. Ford and Company should be contacted immediately to evaluate the significance of the deviation.

3) The mount has been analyzed according to the minimum design loads recommended by the Reference Standard. If additional design loads are required, Paul J. Ford and Company should be made aware of this prior to the start of the project.

4) The standard of care for all Professional Engineering Services performed or furnished by Paul J. Ford and Company under this project will be the skill and care used by members of the Consultant's profession practicing under similar circumstances at the same time and in the same locality.

5) All Services are performed, results obtained, and recommendations made in accordance with generally accepted engineering principles and practices. Paul J. Ford and Company is not responsible for the conclusions, opinions and/or recommendations made by others based on the information supplied herein.

****

APPENDIX A

LOAD CALCULATIONS

Equipment Loads - TIA-222-G Calculations

Design Data as per TIA-222-G

Wind Speed w/o Ice:	$V := 97$	mph	User Input - See 2016 CT State Building Code - Appendix N
Wind Speed w/ Ice:	$Vi := 50$	mph	User Input - See Annex B of TIA-222-G
Service Wind Speed:	$V_{service_loads} := 60$	mph	Section 2.8.3 - TIA-222-G
Service Importance Factor:	$I_{service_loads} := 1$		Section 2.8.3 - TIA-222-G
Directionality Factor:	$Kd_{service_loads} := 0.85$		Section 2.8.3 - TIA-222-G
Radial Ice Thickness:	$ti := 0.75\ in$		User Input - See Annex B of TIA-222-G
Radial Ice Density:	$Id := 57\ pcf$		User Input - See Annex B of TIA-222-G
Height to Center of Antennas:	$z_{carrier_1} := 130\ ft$		User Input
Structure Type:	$ST :=$ "Pole"		User Input
Structure Class:	$SC :=$ "III"		User Input - Table 2-1 - TIA-222-G
Exposure Category:	$Exp :=$ "C"		User Input - Section 2.6.5.1 - TIA-222-G
Wind Direction Probability Factor:	$Kd := 0.95$		User Input - Table 2-2 - TIA-222-G
Importance Factor, Wind:	$I_{wind} := 1.15$		User Input - Table 2-3 - TIA-222-G
Importance Factor, Ice:	$I_{Ice} := 1.25$		User Input - Table 2-3 - TIA-222-G
Importance Factor, Ice With Wind:	$I_{IcewWind} := 1$		User Input - Table 2-3 - TIA-222-G
Exposure Category Coefficient:	$Zg := 900\ ft$		User Input - Table 2-4 - TIA-222-G
Exposure Category Coefficient:	$\alpha := 9.5$		User Input - Table 2-4 - TIA-222-G
Gust Response Factor:	$G_H := 1$		
Velocity Pressure Coefficient:	$Kz_{carrier_1} := 2.01 \left(\frac{z_{carrier_1}}{Zg}\right)^{\frac{2}{\alpha}} = 1.34$		Section 2.6.5.2 - TIA-222-G
	$Kzt := 1.0$		Section 2.6.6.4 - TIA-222-G
Velocity Pressure w/o Ice:	$qz_{carrier_1} := 0.00256 \cdot Kd \cdot Kz_{carrier_1} \cdot Kzt \cdot V^2 \cdot I_{wind} \cdot psf = 35.2\ psf$		
Velocity Pressure w/ Ice:	$qz_{ice_carrier_1} := 0.00256 \cdot Kd \cdot Kz_{carrier_1} \cdot Kzt \cdot Vi^2 \cdot I_{IcewWind} \cdot psf = 8.13\ psf$		
Height Escalation Factor for Ice Thickness:	$Kiz := \left(\frac{z_{carrier_1}}{33\ ft}\right)^{0.1} = 1.15$		
Factored Ice Thickness:	$tiz := 2.0 \cdot ti \cdot I_{Ice} \cdot Kiz \cdot Kzt^{0.35} = 2.15\ in$		Section 2.6.8 - TIA-222-G

Standard Equipment Calculations - Equipment 1 (Front Wind)

Equipment Properties

Antenna Carrier:	AT&T	User Defined
Equipment Model:	Proposed Antenna Kathrein - 800-10965	User Defined
Equipment Shape:	Flat	User Defined
Equipment Height:	$L_{eq_1} := 78.7 \cdot in$	User Defined
Equipment Width:	$W_{eq_1} := 20 \cdot in$	User Defined
Equipment Depth:	$D_{eq_1} := 6.9\ in$	User Defined
Equipment Weight:	$WT_{eq_1} := 108.6 \cdot lbf$	User Defined
Equipment Volume:	$V_{eq_1} := L_{eq_1} \cdot W_{eq_1} \cdot D_{eq_1} = 6.29\ ft^3$	
Equipment Quantity:	$N_{eq_1} := 1$	User Defined
Equippment Aspect Ratio:	$Ar_{eq_1} := \frac{L_{eq_1}}{W_{eq_1}} = 3.94$	
Mast Force Coefficient:	$Ca_{eq_1} := 1.2 + \frac{(Ar_{eq_1} - 2.5)}{4.5} \cdot 0.2 = 1.26$	As per Table 2-8 (Flat) - TIA-222-G

Equipment Wind Loads

Equipment Projected Area:	$SA_{eq_1} := L_{eq_1} \cdot W_{eq_1} = 10.93\ ft^2$	
Equipment Wind Force (All):	$F_{eq_1} := qz_{carrier_1} \cdot G_H \cdot Ca_{eq_1} \cdot SA_{eq_1} \cdot N_{eq_1} = 486\ lbf$	BLC 7 Member Point Load

Equipment Wind Loads (w/ Ice)

Equipment Projected Area (w/ Ice):	$A_ice_{eq_1} := (L_{eq_1} + 2 \cdot tiz) \cdot (W_{eq_1} + 2 \cdot tiz) = 14\ ft^2$	
Equipment Wind Force (w/ Ice) (All):	$Fi_{eq_1} := qz_{ice_carrier_1} \cdot G_H \cdot Ca_{eq_1} \cdot A_ice_{eq_1} \cdot N_{eq_1} = 144\ lbf$	BLC 5 Member Point Load

Equipment Vertical Loads

Weight of Equipment (All):	$WT_{eq_1} \cdot N_{eq_1} = 108.6\ lbf$	BLC 2 Member Point Load

Equipment Vertical Loads (Ice Only)

Volume of Ice on Equipment:	$V_{ice_eq_1} := (L_{eq_1} + 2 \cdot tiz) \cdot (W_{eq_1} + 2 \cdot tiz) \cdot (D_{eq_1} + 2 \cdot tiz) - V_{eq_1} = 6.79\ ft^3$	
Weight of Ice on Equipment (All):	$WT_{ice_eq_1} := V_{ice_eq_1} \cdot Id \cdot N_{eq_1} = 387\ lbf$	BLC 3 Member Point Load

Standard Equipment Calculations - Equipment 1 (Side Wind)

Equipment Properties

Antenna Carrier:	AT&T	User Defined
Equipment Model:	Proposed Antenna Kathrein - 800-10965	User Defined
Equipment Shape:	Flat	User Defined
Equipment Height:	$L_{eq_1} := 78.7 \cdot in$	User Defined
Equipment Width:	$W_{eq_1} := 20 \cdot in$	User Defined
Equipment Depth:	$D_{eq_1} := 6.9\ in$	User Defined
Equipment Weight:	$WT_{eq_1} := 108.6 \cdot lbf$	User Defined
Equipment Volume:	$V_{eq_1} := L_{eq_1} \cdot W_{eq_1} \cdot D_{eq_1} = 6.29\ ft^3$	
Equipment Quantity:	$N_{eq_1} := 1$	User Defined
Equippment Aspect Ratio:	$Ar_{eq_1} := \frac{L_{eq_1}}{D_{eq_1}} = 11.41$	
Mast Force Coefficient:	$Ca_{eq_1} := 1.4 + \frac{(Ar_{eq_1} - 7)}{18} \cdot 0.6 = 1.55$	As per Table 2-8 (Flat) - TIA-222-G

Equipment Wind Loads

Equipment Projected Area:	$SA_{eq_1} := L_{eq_1} \cdot D_{eq_1} = 3.77\ ft^2$	
Equipment Wind Force (All):	$F_{eq_1} := qz_{carrier_1} \cdot G_H \cdot Ca_{eq_1} \cdot SA_{eq_1} \cdot N_{eq_1} = 205\ lbf$	**BLC 6** Member Point Load

Equipment Wind Loads (w/ Ice)

Equipment Projected Area (w/ Ice):	$A_ice_{eq_1} := (L_{eq_1} + 2 \cdot tiz) \cdot (D_{eq_1} + 2 \cdot tiz) = 6\ ft^2$	
Equipment Wind Force (w/ Ice) (All):	$Fi_{eq_1} := qz_{ice_carrier_1} \cdot G_H \cdot Ca_{eq_1} \cdot A_ice_{eq_1} \cdot N_{eq_1} = 81\ lbf$	**BLC 4** Member Point Load

Equipment Vertical Loads

Weight of Equipment (All):	$WT_{eq_1} \cdot N_{eq_1} = 108.6\ lbf$	**BLC 2**

Standard Equipment Calculations - Equipment 2 (Front Wind)

Equipment Properties

Antenna Carrier:	AT&T	User Defined
Equipment Model:	Existing TMA Kaelus - TMA2117F00V1-1	User Defined
Equipment Shape:	Flat	User Defined
Equipment Height:	$L_{eq_2} := 11.8 \cdot in$	User Defined
Equipment Width:	$W_{eq_2} := 9.8 \cdot in$	User Defined
Equipment Depth:	$D_{eq_2} := 4.7\ in$	User Defined
Equipment Weight:	$WT_{eq_2} := 26 \cdot lbf$	User Defined
Equipment Volume:	$V_{eq_2} := L_{eq_2} \cdot W_{eq_2} \cdot D_{eq_2} = 0.31\ ft^3$	
Equipment Quantity:	$N_{eq_2} := 2$	User Defined
Equippment Aspect Ratio:	$Ar_{eq_2} := \frac{L_{eq_2}}{W_{eq_2}} = 1.2$	
Mast Force Coefficient:	$Ca_{eq_2} := 1.2$	As per Table 2-8 (Flat) - TIA-222-G

Equipment Wind Loads

Equipment Projected Area: $SA_{eq_2} := L_{eq_2} \cdot W_{eq_2} = 0.8\ ft^2$

Equipment Wind Force (All): $F_{eq_2} := qz_{carrier_1} \cdot G_H \cdot Ca_{eq_2} \cdot SA_{eq_2} \cdot N_{eq_2} = 68\ lbf$ — **BLC 7** Member Point Load

Equipment Wind Loads (w/ Ice)

Equipment Projected Area (w/ Ice): $A_ice_{eq_2} := (L_{eq_2} + 2 \cdot tiz) \cdot (W_{eq_2} + 2 \cdot tiz) = 2\ ft^2$

Equipment Wind Force (w/ Ice) (All): $Fi_{eq_2} := qz_{ice_carrier_1} \cdot G_H \cdot Ca_{eq_2} \cdot A_ice_{eq_2} \cdot N_{eq_2} = 31\ lbf$ — **BLC 5** Member Point Load

Equipment Vertical Loads

Weight of Equipment (All): $WT_{eq_2} \cdot N_{eq_2} = 52\ lbf$ — **BLC 2** Member Point Load

Equipment Vertical Loads (Ice Only)

Volume of Ice on Equipment: $V_{ice_eq_2} := (L_{eq_2} + 2 \cdot tiz) \cdot (W_{eq_2} + 2 \cdot tiz) \cdot (D_{eq_2} + 2 \cdot tiz) - V_{eq_2} = 0.87\ ft^3$

Weight of Ice on Equipment (All): $WT_{ice_eq_2} := V_{ice_eq_2} \cdot Id \cdot N_{eq_2} = 99\ lbf$ — **BLC 3** Member Point Load

Standard Equipment Calculations - Equipment 2 (Side Wind)

Equipment Properties

Antenna Carrier:	AT&T	User Defined
Equipment Model:	Existing TMA Kaelus - TMA2117F00V1-1	User Defined
Equipment Shape:	Flat	User Defined
Equipment Height:	$L_{eq_2} := 11.8 \cdot in$	User Defined
Equipment Width:	$W_{eq_2} := 9.8 \cdot in$	User Defined
Equipment Depth:	$D_{eq_2} := 4.7\ in$	User Defined
Equipment Weight:	$WT_{eq_2} := 26 \cdot lbf$	User Defined
Equipment Volume:	$V_{eq_2} := L_{eq_2} \cdot W_{eq_2} \cdot D_{eq_2} = 0.31\ ft^3$	
Equipment Quantity:	$N_{eq_2} := 2$	User Defined
Equippment Aspect Ratio:	$Ar_{eq_2} := \frac{L_{eq_2}}{D_{eq_2}} = 2.51$	
Mast Force Coefficient:	$Ca_{eq_2} := 1.2$	As per Table 2-8 (Flat) - TIA-222-G

Equipment Wind Loads

Equipment Projected Area:	$SA_{eq_2} := L_{eq_2} \cdot D_{eq_2} = 0.39\ ft^2$	
Equipment Wind Force (All):	$F_{eq_2} := qz_{carrier_1} \cdot G_H \cdot Ca_{eq_2} \cdot SA_{eq_2} \cdot N_{eq_2} = 33\ lbf$	**BLC 6** Member Point Load

Equipment Wind Loads (w/ Ice)

Equipment Projected Area (w/ Ice):	$A_ice_{eq_2} := (L_{eq_2} + 2 \cdot tiz) \cdot (D_{eq_2} + 2 \cdot tiz) = 1\ ft^2$	
Equipment Wind Force (w/ Ice) (All):	$Fi_{eq_2} := qz_{ice_carrier_1} \cdot G_H \cdot Ca_{eq_2} \cdot A_ice_{eq_2} \cdot N_{eq_2} = 20\ lbf$	**BLC 4** Member Point Load

Equipment Vertical Loads

Weight of Equipment (All):	$WT_{eq_2} \cdot N_{eq_2} = 52\ lbf$	**BLC 2** Member Point Load

Standard Equipment Calculations - Equipment 3 (Front Wind)

Equipment Properties

Antenna Carrier:	AT&T	User Defined
Equipment Model:	Proposed TMA CCI - TMABPD7823VG12A	User Defined
Equipment Shape:	Flat	User Defined
Equipment Height:	$L_{eq_3} := 10.6 \cdot in$	User Defined
Equipment Width:	$W_{eq_3} := 11 \cdot in$	User Defined
Equipment Depth:	$D_{eq_3} := 3.8\ in$	User Defined
Equipment Weight:	$WT_{eq_3} := 26 \cdot lbf$	User Defined
Equipment Volume:	$V_{eq_3} := L_{eq_3} \cdot W_{eq_3} \cdot D_{eq_3} = 0.26\ ft^3$	
Equipment Quantity:	$N_{eq_3} := 2$	User Defined
Equippment Aspect Ratio:	$Ar_{eq_3} := \frac{L_{eq_3}}{W_{eq_3}} = 0.96$	
Mast Force Coefficient:	$Ca_{eq_3} := 1.2$	As per Table 2-8 (Flat) - TIA-222-G

Equipment Wind Loads

Equipment Projected Area: $SA_{eq_3} := L_{eq_3} \cdot W_{eq_3} = 0.81\ ft^2$

Equipment Wind Force (All): $F_{eq_3} := qz_{carrier_1} \cdot G_H \cdot Ca_{eq_3} \cdot SA_{eq_3} \cdot N_{eq_3} = 68\ lbf$ — **BLC 7** Member Point Load

Equipment Wind Loads (w/ Ice)

Equipment Projected Area (w/ Ice): $A_ice_{eq_3} := (L_{eq_3} + 2 \cdot tiz) \cdot (W_{eq_3} + 2 \cdot tiz) = 2\ ft^2$

Equipment Wind Force (w/ Ice) (All): $Fi_{eq_3} := qz_{ice_carrier_1} \cdot G_H \cdot Ca_{eq_3} \cdot A_ice_{eq_3} \cdot N_{eq_3} = 31\ lbf$ — **BLC 5** Member Point Load

Equipment Vertical Loads

Weight of Equipment (All): $WT_{eq_3} \cdot N_{eq_3} = 52\ lbf$ — **BLC 2** Member Point Load

Equipment Vertical Loads (Ice Only)

Volume of Ice on Equipment: $V_{ice_eq_3} := (L_{eq_3} + 2 \cdot tiz) \cdot (W_{eq_3} + 2 \cdot tiz) \cdot (D_{eq_3} + 2 \cdot tiz) - V_{eq_3} = 0.81\ ft^3$

Weight of Ice on Equipment (All): $WT_{ice_eq_3} := V_{ice_eq_3} \cdot Id \cdot N_{eq_3} = 93\ lbf$ — **BLC 3** Member Point Load

Standard Equipment Calculations - Equipment 3 (Side Wind)

Equipment Properties

Antenna Carrier:	AT&T	User Defined
Equipment Model:	Proposed TMA CCI - TMABPD7823VG12A	User Defined
Equipment Shape:	Flat	User Defined
Equipment Height:	$L_{eq_3} := 10.6 \cdot in$	User Defined
Equipment Width:	$W_{eq_3} := 11 \cdot in$	User Defined
Equipment Depth:	$D_{eq_3} := 3.8\ in$	User Defined
Equipment Weight:	$WT_{eq_3} := 26 \cdot lbf$	User Defined
Equipment Volume:	$V_{eq_3} := L_{eq_3} \cdot W_{eq_3} \cdot D_{eq_3} = 0.26\ ft^3$	
Equipment Quantity:	$N_{eq_3} := 2$	User Defined
Equippment Aspect Ratio:	$Ar_{eq_3} := \frac{L_{eq_3}}{D_{eq_3}} = 2.79$	
Mast Force Coefficient:	$Ca_{eq_3} := 1.2 + \frac{(Ar_{eq_3} - 2.5)}{4.5} \cdot 0.6 = 1.24$	As per Table 2-8 (Flat) - TIA-222-G

Equipment Wind Loads

Equipment Projected Area:	$SA_{eq_3} := L_{eq_3} \cdot D_{eq_3} = 0.28\ ft^2$	
Equipment Wind Force (All):	$F_{eq_3} := qz_{carrier_1} \cdot G_H \cdot Ca_{eq_3} \cdot SA_{eq_3} \cdot N_{eq_3} = 24\ lbf$	BLC 6 Member Point Load

Equipment Wind Loads (w/ Ice)

Equipment Projected Area (w/ Ice):	$A_ice_{eq_3} := (L_{eq_3} + 2 \cdot tiz) \cdot (D_{eq_3} + 2 \cdot tiz) = 1\ ft^2$	
Equipment Wind Force (w/ Ice) (All):	$Fi_{eq_3} := qz_{ice_carrier_1} \cdot G_H \cdot Ca_{eq_3} \cdot A_ice_{eq_3} \cdot N_{eq_3} = 17\ lbf$	BLC 4 Member Point Load

Equipment Vertical Loads

Weight of Equipment (All):	$WT_{eq_3} \cdot N_{eq_3} = 52\ lbf$	BLC 2 Member Point Load

Standard Equipment Calculations - Equipment 4 (Front Wind)

Equipment Properties

Antenna Carrier:	AT&T	User Defined
Equipment Model:	Existing Antenna Andrew SBNH-1D6565B	User Defined
Equipment Shape:	Flat	User Defined
Equipment Height:	$L_{eq_4} := 72.7 \cdot in$	User Defined
Equipment Width:	$W_{eq_4} := 11.9 \cdot in$	User Defined
Equipment Depth:	$D_{eq_4} := 7.1\ in$	User Defined
Equipment Weight:	$WT_{eq_4} := 47.4 \cdot lbf$	User Defined
Equipment Volume:	$V_{eq_4} := L_{eq_4} \cdot W_{eq_4} \cdot D_{eq_4} = 3.55\ ft^3$	
Equipment Quantity:	$N_{eq_4} := 1$	User Defined
Equippment Aspect Ratio:	$Ar_{eq_4} := \frac{L_{eq_4}}{W_{eq_4}} = 6.11$	
Mast Force Coefficient:	$Ca_{eq_4} := 1.2 + \frac{(Ar_{eq_4} - 2.5)}{4.5} \cdot 0.2 = 1.36$	As per Table 2-8 (Flat) - TIA-222-G

Equipment Wind Loads

Equipment Projected Area:	$SA_{eq_4} := L_{eq_4} \cdot W_{eq_4} = 6.01\ ft^2$	
Equipment Wind Force (All):	$F_{eq_2} := qz_{carrier_1} \cdot G_H \cdot Ca_{eq_4} \cdot SA_{eq_4} \cdot N_{eq_4} = 288\ lbf$	**BLC 7** Member Point Load

Equipment Wind Loads (w/ Ice)

Equipment Projected Area (w/ Ice):	$A_ice_{eq_4} := (L_{eq_4} + 2 \cdot tiz) \cdot (W_{eq_4} + 2 \cdot tiz) = 9\ ft^2$	
Equipment Wind Force (w/ Ice) (All):	$Fi_{eq_2} := qz_{ice_carrier_1} \cdot G_H \cdot Ca_{eq_4} \cdot A_ice_{eq_4} \cdot N_{eq_4} = 96\ lbf$	**BLC 5** Member Point Load

Equipment Vertical Loads

Weight of Equipment (All):	$WT_{eq_4} \cdot N_{eq_4} = 47.4\ lbf$	**BLC 2** Member Point Load

Equipment Vertical Loads (Ice Only)

Volume of Ice on Equipment:	$V_{ice_eq_4} := (L_{eq_4} + 2 \cdot tiz) \cdot (W_{eq_4} + 2 \cdot tiz) \cdot (D_{eq_4} + 2 \cdot tiz) - V_{eq_4} = 4.68\ ft^3$	
Weight of Ice on Equipment (All):	$WT_{ice_eq_4} := V_{ice_eq_4} \cdot Id \cdot N_{eq_4} = 267\ lbf$	**BLC 3** Member Point Load

Standard Equipment Calculations - Equipment 4 (Side Wind)

Equipment Properties

Antenna Carrier:	AT&T	User Defined
Equipment Model:	Existing Antenna Andrew SBNH-1D6565B	User Defined
Equipment Shape:	Flat	User Defined
Equipment Height:	$L_{eq_4} := 72.7 \cdot in$	User Defined
Equipment Width:	$W_{eq_4} := 11.9 \cdot in$	User Defined
Equipment Depth:	$D_{eq_4} := 7.1\ in$	User Defined
Equipment Weight:	$WT_{eq_4} := 47.4 \cdot lbf$	User Defined
Equipment Volume:	$V_{eq_4} := L_{eq_4} \cdot W_{eq_4} \cdot D_{eq_4} = 3.55\ ft^3$	
Equipment Quantity:	$N_{eq_4} := 1$	User Defined
Equippment Aspect Ratio:	$Ar_{eq_4} := \frac{L_{eq_4}}{D_{eq_4}} = 10.24$	
Mast Force Coefficient:	$Ca_{eq_4} := 1.4 + \frac{(Ar_{eq_4} - 7)}{18} \cdot 0.6 = 1.51$	As per Table 2-8 (Flat) - TIA-222-G

Equipment Wind Loads

Equipment Projected Area:	$SA_{eq_4} := L_{eq_4} \cdot D_{eq_4} = 3.58\ ft^2$	
Equipment Wind Force (All):	$F_{eq_2} := qz_{carrier_1} \cdot G_H \cdot Ca_{eq_4} \cdot SA_{eq_4} \cdot N_{eq_4} = 190\ lbf$	**BLC 6** Member Point Load

Equipment Wind Loads (w/ Ice)

Equipment Projected Area (w/ Ice):	$A_ice_{eq_4} := (L_{eq_4} + 2 \cdot tiz) \cdot (D_{eq_4} + 2 \cdot tiz) = 6\ ft^2$	
Equipment Wind Force (w/ Ice) (All):	$Fi_{eq_2} := qz_{ice_carrier_1} \cdot G_H \cdot Ca_{eq_4} \cdot A_ice_{eq_4} \cdot N_{eq_4} = 75\ lbf$	**BLC 4** Member Point Load

Equipment Vertical Loads

Weight of Equipment (All):	$WT_{eq_4} \cdot N_{eq_4} = 47.4\ lbf$	**BLC 2** Member Point Load

Standard Equipment Calculations - Equipment 5 (Front Wind)

Equipment Properties

Antenna Carrier:	AT&T	User Defined
Equipment Model:	Existing Antenna Quintel QS66512-2	User Defined
Equipment Shape:	Flat	User Defined
Equipment Height:	$L_{eq_5} := 72 \cdot in$	User Defined
Equipment Width:	$W_{eq_5} := 12 \cdot in$	User Defined
Equipment Depth:	$D_{eq_5} := 9.6\ in$	User Defined
Equipment Weight:	$WT_{eq_5} := 111 \cdot lbf$	User Defined
Equipment Volume:	$V_{eq_5} := L_{eq_5} \cdot W_{eq_5} \cdot D_{eq_5} = 4.8\ ft^3$	
Equipment Quantity:	$N_{eq_5} := 1$	User Defined
Equipment Aspect Ratio:	$Ar_{eq_5} := \frac{L_{eq_5}}{W_{eq_5}} = 6$	
Mast Force Coefficient:	$Ca_{eq_5} := 1.2 + \frac{(Ar_{eq_5} - 2.5)}{4.5} \cdot 0.2 = 1.36$	As per Table 2-8 (Flat) - TIA-222-G

Equipment Wind Loads

Equipment Projected Area:	$SA_{eq_5} := L_{eq_5} \cdot W_{eq_5} = 6\ ft^2$	
Equipment Wind Force (All):	$F_{eq_5} := qz_{carrier_1} \cdot G_H \cdot Ca_{eq_5} \cdot SA_{eq_5} \cdot N_{eq_5} = 286\ lbf$	**BLC 7** Member Point Load

Equipment Wind Loads (w/ Ice)

Equipment Projected Area (w/ Ice):	$A_ice_{eq_5} := (L_{eq_5} + 2 \cdot tiz) \cdot (W_{eq_5} + 2 \cdot tiz) = 9\ ft^2$	
Equipment Wind Force (w/ Ice) (All):	$Fi_{eq_6} := qz_{ice_carrier_1} \cdot G_H \cdot Ca_{eq_5} \cdot A_ice_{eq_5} \cdot N_{eq_5} = 95\ lbf$	**BLC 5** Member Point Load

Equipment Vertical Loads

Weight of Equipment (All):	$WT_{eq_5} \cdot N_{eq_5} = 111\ lbf$	**BLC 2** Member Point Load

Equipment Vertical Loads (Ice Only)

Volume of Ice on Equipment:	$V_{ice_eq_5} := (L_{eq_5} + 2 \cdot tiz) \cdot (W_{eq_5} + 2 \cdot tiz) \cdot (D_{eq_5} + 2 \cdot tiz) - V_{eq_5} = 5.21\ ft^3$	
Weight of Ice on Equipment (All):	$WT_{ice_eq_5} := V_{ice_eq_5} \cdot Id \cdot N_{eq_5} = 297\ lbf$	**BLC 3** Member Point Load

Standard Equipment Calculations - Equipment 5 (Side Wind)

Equipment Properties

Antenna Carrier:	AT&T	User Defined
Equipment Model:	Existing Antenna Quintel QS66512-2	User Defined
Equipment Shape:	Flat	User Defined
Equipment Height:	$L_{eq_5} := 72 \cdot in$	User Defined
Equipment Width:	$W_{eq_5} := 12 \cdot in$	User Defined
Equipment Depth:	$D_{eq_5} := 9.6\ in$	User Defined
Equipment Weight:	$WT_{eq_5} := 111 \cdot lbf$	User Defined
Equipment Volume:	$V_{eq_5} := L_{eq_5} \cdot W_{eq_5} \cdot D_{eq_5} = 4.8\ ft^3$	
Equipment Quantity:	$N_{eq_5} := 1$	User Defined
Equippment Aspect Ratio:	$Ar_{eq_5} := \frac{L_{eq_5}}{D_{eq_5}} = 7.5$	
Mast Force Coefficient:	$Ca_{eq_5} := 1.4 + \frac{(Ar_{eq_5} - 7)}{18} \cdot 0.6 = 1.42$	As per Table 2-8 (Flat) - TIA-222-G

Equipment Wind Loads

Equipment Projected Area:	$SA_{eq_5} := L_{eq_5} \cdot D_{eq_5} = 4.8\ ft^2$	
Equipment Wind Force (All):	$F_{eq_5} := qz_{carrier_1} \cdot G_H \cdot Ca_{eq_5} \cdot SA_{eq_5} \cdot N_{eq_5} = 239\ lbf$	BLC 6 Member Point Load

Equipment Wind Loads (w/ Ice)

Equipment Projected Area (w/ Ice):	$A_ice_{eq_5} := (L_{eq_5} + 2 \cdot tiz) \cdot (D_{eq_5} + 2 \cdot tiz) = 7\ ft^2$	
Equipment Wind Force (w/ Ice) (All):	$Fi_{eq_5} := qz_{ice_carrier_1} \cdot G_H \cdot Ca_{eq_5} \cdot A_ice_{eq_5} \cdot N_{eq_5} = 85\ lbf$	BLC 4 Member Point Load

Equipment Vertical Loads

Weight of Equipment (All):	$WT_{eq_5} \cdot N_{eq_5} = 111\ lbf$	BLC 2 Member Point Load

Standard Equipment Calculations - Mount Member 1 (Front/Side Wind)

Pipe Properties

Antenna Carrier:	AT&T	User Defined
Equipment Model:	Mounting Pipes: P2.0	User Defined
Pipe Height:	$L_{pipe_1} := 96 \cdot in$	User Defined
Pipe Diameter:	$W_{pipe_1} := 2.375 \cdot in$	User Defined
Pipe Weight:	$WT_{pipe_1} := 29.3 \cdot lbf$	User Defined
Pipe Volume:	$V_{pipe_1} := L_{pipe_1} \cdot \frac{\left(\left(W_{pipe_1}\right)^2 \cdot \pi\right)}{4} = 0.25\ ft^3$	
Pipe Quantity:	$N_{pipe_1} := 1$	User Defined
Pipe Aspect Ratio:	$Ar_{pipe_1} := \frac{L_{pipe_1}}{W_{pipe_1}} = 40.42$	
Pipe Force Coefficient:	$Ca_{pipe_1} := 1.2$	As per Table 2-8 (Round)-TIA-222-G

Pipe Wind Loads

Pipe Projected Area:	$SA_{pipe_1} := L_{pipe_1} \cdot W_{pipe_1} = 1.58\ ft^2$	
Pipe Wind Force (All):	$F_{pipe_1} := qz_{carrier_1} \cdot G_H \cdot Ca_{pipe_1} \cdot SA_{pipe_1} = 67\ lbf$	BLC 6/7
Pipe Wind Force (Distributed):	$\frac{F_{pipe_1}}{L_{pipe_1}} = 8.4\ plf$	BLC 6/7

Pipe Wind Loads (w/ Ice)

Pipe Projected Area (w/ Ice):	$A_ice_{pipe_1} := \left(L_{pipe_1} + 2 \cdot tiz\right) \cdot \left(W_{pipe_1} + 2 \cdot tiz\right) = 4.65\ ft^2$	
Pipe Wind Force (w/ Ice) (All):	$Fi_{pipe_1} := qz_{ice_carrier_1} \cdot G_H \cdot Ca_{pipe_1} \cdot A_ice_{pipe_1} = 45\ lbf$	BLC 4/5
Pipe Wind Force (w/ Ice) (Distributed):	$\frac{Fi_{pipe_1}}{L_{pipe_1}} = 5.7\ plf$	BLC 4/5

Pipe Vertical Loads

Weight of Pipe (All):	$WT_{pipe_1} = 29\ lbf$	BLC 2
Weight of Pipe (Distributed):	$\frac{WT_{pipe_1}}{L_{pipe_1}} = 3.7\ plf$	BLC 2

Pipe Vertical Loads (Ice Only)

Volume of Ice on Pipe:	$V_{ice_pipe_1} := \left(L_{pipe_1} + 2 \cdot tiz\right) \cdot \left(\frac{\left(W_{pipe_1} + 2 \cdot tiz\right)^2 \cdot \pi}{4}\right) - V_{pipe_1} = 1.79\ ft^3$	
Weight of Ice on Pipe (All):	$WT_{ice_pipe_1} := V_{ice_pipe_1} \cdot Id = 102\ lbf$	BLC 3
Weight of Ice on Pipe (Distributed):	$\frac{WT_{ice_pipe_1}}{L_{pipe_1}} = 12.7\ plf$	BLC 3

Standard Equipment Calculations - Mount Member 2 (Front/Side Wind)

Pipe Properties

Antenna Carrier:	AT&T	User Defined
Equipment Model:	Pipe Boom: P3.0	User Defined
Pipe Height:	$L_{pipe_2} := 150 \cdot in$	User Defined
Pipe Diameter:	$W_{pipe_2} := 3.5 \cdot in$	User Defined
Pipe Weight:	$WT_{pipe_2} := 94.8 \cdot lbf$	User Defined
Pipe Volume:	$V_{pipe_2} := L_{pipe_2} \cdot \frac{\left(\left(W_{pipe_2}\right)^2 \cdot \pi\right)}{4} = 0.84\ ft^3$	
Pipe Aspect Ratio:	$Ar_{pipe_2} := \frac{L_{pipe_2}}{W_{pipe_2}} = 42.86$	
Pipe Force Coefficient:	$Ca_{pipe_2} := 1.2$	As per Table 2-8 (Round)-TIA-222-G

Pipe Wind Loads

Pipe Projected Area:	$SA_{pipe_2} := L_{pipe_2} \cdot W_{pipe_2} = 3.65\ ft^2$	
Pipe Wind Force (All):	$F_{pipe_2} := qz_{carrier_1} \cdot G_H \cdot Ca_{pipe_2} \cdot SA_{pipe_2} = 154\ lbf$	BLC 6/7
Pipe Wind Force (Distributed):	$\frac{F_{pipe_2}}{L_{pipe_2}} = 12.3\ plf$	BLC 6/7

Pipe Wind Loads (w/ Ice)

Pipe Projected Area (w/ Ice):	$A_ice_{pipe_2} := \left(L_{pipe_2} + 2 \cdot tiz\right) \cdot \left(W_{pipe_2} + 2 \cdot tiz\right) = 8.36\ ft^2$	
Pipe Wind Force (w/ Ice) (All):	$Fi_{pipe_2} := qz_{ice_carrier_1} \cdot G_H \cdot Ca_{pipe_2} \cdot A_ice_{pipe_2} = 82\ lbf$	BLC 4/5
Pipe Wind Force (w/ Ice) (Distributed):	$\frac{Fi_{pipe_2}}{L_{pipe_2}} = 6.5\ plf$	BLC 4/5

Pipe Vertical Loads

Weight of Pipe (All):	$WT_{pipe_2} = 95\ lbf$	BLC 2
Weight of Pipe (Distributed):	$\frac{WT_{pipe_2}}{L_{pipe_2}} = 7.6\ plf$	BLC 2

Pipe Vertical Loads (Ice Only)

Volume of Ice on Pipe:	$V_{ice_pipe_2} := \left(L_{pipe_2} + 2 \cdot tiz\right) \cdot \left(\frac{\left(W_{pipe_2} + 2 \cdot tiz\right)^2 \cdot \pi}{4}\right) - V_{pipe_2} = 3.43\ ft^3$	
Weight of Ice on Pipe (All):	$WT_{ice_pipe_2} := V_{ice_pipe_2} \cdot Id = 196\ lbf$	BLC 3
Weight of Ice on Pipe (Distributed):	$\frac{WT_{ice_pipe_2}}{L_{pipe_2}} = 15.7\ plf$	BLC 3

Standard Equipment Calculations - Mount Member 3 (Front/Side Wind)

Pipe Properties

Antenna Carrier:	AT&T	User Defined
Equipment Model:	Vertical Pipe: P4.0	User Defined
Pipe Height:	$L_{pipe_3} := 18 \cdot in$	User Defined
Pipe Diameter:	$W_{pipe_3} := 4.5 \cdot in$	User Defined
Pipe Weight:	$WT_{pipe_3} := 15.75 \cdot lbf$	User Defined
Pipe Volume:	$V_{pipe_3} := L_{pipe_3} \cdot \frac{\left(\left(W_{pipe_3}\right)^2 \cdot \pi\right)}{4} = 0.17\ ft^3$	
Pipe Aspect Ratio:	$Ar_{pipe_3} := \frac{L_{pipe_3}}{W_{pipe_3}} = 4$	
Pipe Force Coefficient:	$Ca_{pipe_3} := 0.7 + \frac{\left(Ar_{pipe_3} - 2.5\right)}{4.5} \cdot 0.1 = 0.73$	As per Table 2-8 (Round)-TIA-222-G

Pipe Wind Loads

Pipe Projected Area:	$SA_{pipe_3} := L_{pipe_3} \cdot W_{pipe_3} = 0.56\ ft^2$	
Pipe Wind Force (All):	$F_{pipe_3} := qz_{carrier_1} \cdot G_H \cdot Ca_{pipe_3} \cdot SA_{pipe_3} = 15\ lbf$	BLC 6/7
Pipe Wind Force (Distributed):	$\frac{F_{pipe_3}}{L_{pipe_3}} = 9.7\ plf$	BLC 6/7

Pipe Wind Loads (w/ Ice)

Pipe Projected Area (w/ Ice):	$A_ice_{pipe_3} := \left(L_{pipe_3} + 2 \cdot tiz\right) \cdot \left(W_{pipe_3} + 2 \cdot tiz\right) = 1.36\ ft^2$	
Pipe Wind Force (w/ Ice) (All):	$Fi_{pipe_3} := qz_{ice_carrier_1} \cdot G_H \cdot Ca_{pipe_3} \cdot A_ice_{pipe_3} = 8\ lbf$	BLC 4/5
Pipe Wind Force (w/ Ice) (Distributed):	$\frac{Fi_{pipe_3}}{L_{pipe_3}} = 5.4\ plf$	BLC 4/5

Pipe Vertical Loads

Weight of Pipe (All):	$WT_{pipe_3} = 16\ lbf$	BLC 2
Weight of Pipe (Distributed):	$\frac{WT_{pipe_3}}{L_{pipe_3}} = 10.5\ plf$	BLC 2

Pipe Vertical Loads (Ice Only)

Volume of Ice on Pipe:	$V_{ice_pipe_3} := \left(L_{pipe_3} + 2 \cdot tiz\right) \cdot \left(\frac{\left(W_{pipe_3} + 2 \cdot tiz\right)^2 \cdot \pi}{4}\right) - V_{pipe_3} = 0.62\ ft^3$	
Weight of Ice on Pipe (All):	$WT_{ice_pipe_3} := V_{ice_pipe_3} \cdot Id = 35\ lbf$	BLC 3
Weight of Ice on Pipe (Distributed):	$\frac{WT_{ice_pipe_3}}{L_{pipe_3}} = 23.5\ plf$	BLC 3

Standard Equipment Calculations - Mount Member 4 (Front/Side Wind)

Pipe Properties

Antenna Carrier:	AT&T	User Defined
Equipment Model:	HSS Arm Member: HSS4x4x3/16	User Defined
Arm Length:	$L_{member_4} := 36 \cdot in$	User Defined
Arm Width:	$W_{member_4} := 4 \cdot in$	User Defined
Arm Weight:	$WT_{member_4} := 28.3 \cdot lbf$	User Defined
Arm Volume:	$V_{member_4} := L_{member_4} \cdot W_{member_4}^{2} = 0.33\ ft^3$	
Arm Aspect Ratio:	$Ar_{member_4} := \frac{L_{member_4}}{W_{member_4}} = 9$	
Arm Force Coefficient:	$Ca_{member_4} := 1.4 + \frac{(Ar_{member_4} - 7)}{18} \cdot 0.6 = 1.47$	As per Table 2-8 (Flat)-TIA-222-G

Arm Wind Loads

Arm Projected Area:	$SA_{member_4} := L_{member_4} \cdot W_{member_4} = 1\ ft^2$	
Arm Wind Force (All):	$F_{member_4} := qz_{carrier_1} \cdot G_H \cdot Ca_{member_4} \cdot SA_{member_4} = 52\ lbf$	BLC 6/7
Arm Wind Force (All):	$\frac{F_{member_4}}{L_{member_4}} = 17.2\ plf$	BLC 6/7

Arm Wind Loads (w/ Ice)

Arm Projected Area (w/ Ice):	$A_ice_{member_4} := (L_{member_4} + 2 \cdot tiz) \cdot (W_{member_4} + 2 \cdot tiz) = 2.32\ ft^2$	
Arm Wind Force (w/ Ice) (All):	$Fi_{member_4} := qz_{ice_carrier_1} \cdot G_H \cdot Ca_{member_4} \cdot A_ice_{member_4} = 28\ lbf$	BLC 4/5
Arm Wind Force (w/ Ice) (Distributed):	$\frac{Fi_{member_4}}{L_{member_4}} = 9.2\ plf$	BLC 4/5

Arm Vertical Loads

Weight of Arm (All):	$WT_{member_4} = 28\ lbf$	BLC 2
Weight of Arm (Distributed):	$\frac{WT_{member_4}}{L_{member_4}} = 9.4\ plf$	BLC 2

Arm Vertical Loads (Ice Only)

Volume of Ice on HSS Arm:	$V_{ice_member_4} := (L_{member_4} + 2 \cdot tiz) \cdot (W_{member_4} + 2 \cdot tiz)^{2} - V_{member_4} = 1.27\ ft^3$	
Weight of Ice on Arm (All):	$WT_{ice_member_4} := V_{ice_member_4} \cdot Id = 73\ lbf$	BLC 3
Weight of Ice on Arm (Distributed):	$\frac{WT_{ice_member_4}}{L_{member_4}} = 24.2\ plf$	BLC 3

Standard Equipment Calculations - Mount Member 5 (Front/Side Wind)

Pipe Properties

Antenna Carrier:	AT&T	User Defined
Equipment Model:	Single Angle Handrail Member 1: L3x3x1/4	User Defined
Handrail Length:	$L_{member_5} := 126 \cdot in$	User Defined
Handrail Width:	$W_{member_5} := 3 \cdot in$	User Defined
Handrail Weight:	$WT_{member_5} := 51.45 \cdot lbf$	User Defined
Handrail Volume:	$V_{member_5} := L_{member_5} \cdot W_{member_5}^{2} = 0.66\ ft^3$	
Handrail Aspect Ratio:	$Ar_{member_5} := \frac{L_{member_5}}{W_{member_5}} = 42$	
Handrail Force Coefficient:	$Ca_{member_5} := 2$	As per Table 2-8 (Flat)-TIA-222-G

Arm Wind Loads

Handrail Projected Area:	$SA_{member_5} := L_{member_5} \cdot W_{member_5} = 2.63\ ft^2$	
Handrail Wind Force (All):	$F_{member_5} := qz_{carrier_1} \cdot G_H \cdot Ca_{member_5} \cdot SA_{member_5} = 185\ lbf$	BLC 6/7
Handrail Wind Force (All):	$\frac{F_{member_5}}{L_{member_5}} = 17.6\ plf$	BLC 6/7

Arm Wind Loads (w/ Ice)

Handrail Projected Area (w/ Ice):	$A_ice_{member_5} := (L_{member_5} + 2 \cdot tiz) \cdot (W_{member_5} + 2 \cdot tiz) = 6.61\ ft^2$	
Handrail Wind Force (w/ Ice) (All):	$Fi_{member_5} := qz_{ice_carrier_1} \cdot G_H \cdot Ca_{member_5} \cdot A_ice_{member_5} = 107\ lbf$	BLC 4/5
Handrail Wind Force (w/ Ice) (Distributed):	$\frac{Fi_{member_5}}{L_{member_5}} = 10.2\ plf$	BLC 4/5

Arm Vertical Loads

Weight of Handrail (All):	$WT_{member_5} = 51\ lbf$	BLC 2
Weight of Handrail (Distributed):	$\frac{WT_{member_5}}{L_{member_5}} = 4.9\ plf$	BLC 2

Arm Vertical Loads (Ice Only)

Volume of Ice on Handrail:	$V_{ice_member_5} := (L_{member_5} + 2 \cdot tiz) \cdot (W_{member_5} + 2 \cdot tiz)^{2} - V_{member_5} = 3.36\ ft^3$	
Weight of Ice on Handrail:	$WT_{ice_member_5} := V_{ice_member_5} \cdot Id = 192\ lbf$	BLC 3
Weight of Ice on Handrail:	$\frac{WT_{ice_member_5}}{L_{member_5}} = 18.3\ plf$	BLC 3

Standard Equipment Calculations - Mount Member 6 (Front/Side Wind)

Pipe Properties

Antenna Carrier:	AT&T	User Defined
Equipment Model:	Single Angle Handrail Member 2: L2x2x3/16	User Defined
Handrail Length:	$L_{member_6} := 69 \cdot in$	User Defined
Handrail Width:	$W_{member_6} := 2 \cdot in$	User Defined
Handrail Weight:	$WT_{member_6} := 28.3 \cdot lbf$	User Defined
Handrail Volume:	$V_{member_6} := L_{member_6} \cdot W_{member_6}^{2} = 0.16\ ft^3$	
Handrail Aspect Ratio:	$Ar_{member_6} := \frac{L_{member_6}}{W_{member_6}} = 34.5$	
Handrail Force Coefficient:	$Ca_{member_6} := 2$	As per Table 2-8 (Flat)-TIA-222-G

Arm Wind Loads

Handrail Projected Area:	$SA_{member_6} := L_{member_6} \cdot W_{member_6} = 0.96\ ft^2$	
Handrail Wind Force (All):	$F_{member_6} := qz_{carrier_1} \cdot G_H \cdot Ca_{member_6} \cdot SA_{member_6} = 67\ lbf$	BLC 6/7
Handrail Wind Force (All):	$\frac{F_{member_6}}{L_{member_6}} = 11.7\ plf$	BLC 6/7

Arm Wind Loads (w/ Ice)

Handrail Projected Area (w/ Ice):	$A_ice_{member_6} := (L_{member_6} + 2 \cdot tiz) \cdot (W_{member_6} + 2 \cdot tiz) = 3.21\ ft^2$	
Handrail Wind Force (w/ Ice) (All):	$Fi_{member_6} := qz_{ice_carrier_1} \cdot G_H \cdot Ca_{member_6} \cdot A_ice_{member_6} = 52\ lbf$	BLC 4/5
Handrail Wind Force (w/ Ice) (Distributed):	$\frac{Fi_{member_6}}{L_{member_6}} = 9.1\ plf$	BLC 4/5

Arm Vertical Loads

Weight of Handrail (All):	$WT_{member_6} = 28\ lbf$	BLC 2
Weight of Handrail (Distributed):	$\frac{WT_{member_6}}{L_{member_6}} = 4.9\ plf$	BLC 2

Arm Vertical Loads (Ice Only)

Volume of Ice on Handrail:	$V_{ice_member_6} := (L_{member_6} + 2 \cdot tiz) \cdot (W_{member_6} + 2 \cdot tiz)^2 - V_{member_6} = 1.52\ ft^3$	
Weight of Ice on Handrail:	$WT_{ice_member_6} := V_{ice_member_6} \cdot Id = 87\ lbf$	BLC 3
Weight of Ice on Handrail:	$\frac{WT_{ice_member_6}}{L_{member_6}} = 15.1\ plf$	BLC 3

Standard Equipment Calculations - Mount Member 7 (Front/Side Wind)

Pipe Properties

Antenna Carrier:	AT&T	User Defined
Equipment Model:	Single Angle Vertical Kicker Member: L2x2x3/16	User Defined
Handrail Length:	$L_{member_7} := 85.5 \cdot in$	User Defined
Handrail Width:	$W_{member_7} := 2 \cdot in$	User Defined
Handrail Weight:	$WT_{member_7} := 28.3 \cdot lbf$	User Defined
Handrail Volume:	$V_{member_7} := L_{member_7} \cdot W_{member_7}^2 = 0.2\ ft^3$	
Handrail Aspect Ratio:	$Ar_{member_7} := \frac{L_{member_7}}{W_{member_7}} = 42.75$	
Handrail Force Coefficient:	$Ca_{member_7} := 2$	As per Table 2-8 (Flat)-TIA-222-G

Arm Wind Loads

Handrail Projected Area:	$SA_{member_7} := L_{member_7} \cdot W_{member_7} = 1.19\ ft^2$	
Handrail Wind Force (All):	$F_{member_7} := qz_{carrier_1} \cdot G_H \cdot Ca_{member_7} \cdot SA_{member_7} = 84\ lbf$	BLC 6/7
Handrail Wind Force (All):	$\frac{F_{member_7}}{L_{member_7}} = 11.7\ plf$	BLC 6/7

Arm Wind Loads (w/ Ice)

Handrail Projected Area (w/ Ice):	$A_ice_{member_7} := (L_{member_7} + 2 \cdot tiz) \cdot (W_{member_7} + 2 \cdot tiz) = 3.93\ ft^2$	
Handrail Wind Force (w/ Ice) (All):	$Fi_{member_7} := qz_{ice_carrier_1} \cdot G_H \cdot Ca_{member_7} \cdot A_ice_{member_7} = 64\ lbf$	BLC 4/5
Handrail Wind Force (w/ Ice) (Distributed):	$\frac{Fi_{member_7}}{L_{member_7}} = 9\ plf$	BLC 4/5

Arm Vertical Loads

Weight of Handrail (All):	$WT_{member_7} = 28\ lbf$	BLC 2
Weight of Handrail (Distributed):	$\frac{WT_{member_7}}{L_{member_7}} = 4\ plf$	BLC 2

Arm Vertical Loads (Ice Only)

Volume of Ice on Handrail:	$V_{ice_member_7} := (L_{member_7} + 2 \cdot tiz) \cdot (W_{member_7} + 2 \cdot tiz)^2 - V_{member_7} = 1.87\ ft^3$	
Weight of Ice on Handrail:	$WT_{ice_member_7} := V_{ice_member_7} \cdot Id = 106\ lbf$	BLC 3
Weight of Ice on Handrail:	$\frac{WT_{ice_member_7}}{L_{member_7}} = 14.9\ plf$	BLC 3

Standard Equipment Calculations - Mount Member 8 (Front/Side Wind)

Pipe Properties

Antenna Carrier:	AT&T	User Defined
Equipment Model:	Existing Mast: P12.0 XS	User Defined
Pipe Height:	$L_{pipe_8} := 336 \cdot in$	User Defined
Pipe Diameter:	$W_{pipe_8} := 12.75 \cdot in$	User Defined
Pipe Weight:	$WT_{pipe_8} := 1834 \cdot lbf$	User Defined
Pipe Volume:	$V_{pipe_8} := L_{pipe_8} \cdot \frac{\left(\left(W_{pipe_8}\right)^2 \cdot \pi\right)}{4} = 24.83\ ft^3$	
Pipe Aspect Ratio:	$Ar_{pipe_8} := \frac{L_{pipe_8}}{W_{pipe_8}} = 26.35$	
Pipe Force Coefficient:	$Ca_{pipe_8} := 1.2$	As per Table 2-8 (Round)-TIA-222-G

Pipe Wind Loads

Pipe Projected Area:	$SA_{pipe_8} := L_{pipe_8} \cdot W_{pipe_8} = 29.75\ ft^2$	
Pipe Wind Force (All):	$F_{pipe_8} := qz_{carrier_1} \cdot G_H \cdot Ca_{pipe_8} \cdot SA_{pipe_8} = 1257\ lbf$	BLC 6/7
Pipe Wind Force (Distributed):	$\frac{F_{pipe_8}}{L_{pipe_8}} = 44.9\ plf$	BLC 6/7

Pipe Wind Loads (w/ Ice)

Pipe Projected Area (w/ Ice):	$A_ice_{pipe_8} := \left(L_{pipe_8} + 2 \cdot tiz\right) \cdot \left(W_{pipe_8} + 2 \cdot tiz\right) = 40.3\ ft^2$	
Pipe Wind Force (w/ Ice) (All):	$Fi_{pipe_8} := qz_{ice_carrier_1} \cdot G_H \cdot Ca_{pipe_8} \cdot A_ice_{pipe_8} = 393\ lbf$	BLC 4/5
Pipe Wind Force (w/ Ice) (Distributed):	$\frac{Fi_{pipe_8}}{L_{pipe_8}} = 14\ plf$	BLC 4/5

Pipe Vertical Loads

Weight of Pipe (All):	$WT_{pipe_8} = 1834\ lbf$	BLC 2
Weight of Pipe (Distributed):	$\frac{WT_{pipe_8}}{L_{pipe_8}} = 65.5\ plf$	BLC 2

Pipe Vertical Loads (Ice Only)

Volume of Ice on Pipe:	$V_{ice_pipe_8} := \left(L_{pipe_8} + 2 \cdot tiz\right) \cdot \left(\frac{\left(W_{pipe_8} + 2 \cdot tiz\right)^2 \cdot \pi}{4}\right) - V_{pipe_8} = 20.14\ ft^3$	
Weight of Ice on Pipe (All):	$WT_{ice_pipe_8} := V_{ice_pipe_8} \cdot Id = 1148\ lbf$	BLC 3
Weight of Ice on Pipe (Distributed):	$\frac{WT_{ice_pipe_8}}{L_{pipe_8}} = 41\ plf$	BLC 3

General Information for use in Risa-3D

Risa-3D Basic Load Cases	Description
1	Self Weight (Mast)
2	Weight of Appurtenances
3	Weight of Ice Only
4	TIA Wind with Ice - X
5	TIA Wind with Ice - Z
6	TIA Wind - X
7	TIA Wind - Z

Where:
BLC = Basic Load Case
D = Dead Load
Di = Dead Load of Ice
W = Wind Load
Wi = Wind Load w/ Ice

Load Combination	Description	Wind Factor	P-Delta	BLC	Factor	BLC	Factor	BLC	Factor	BLC	Factor	BLC	Factor
1	1.2D + 1.6W (0)	1.6	Y	1	1.2	2	1.2	6	1.6				
2	1.2D + 1.6W (30)	1.6	Y	1	1.2	2	1.2	6	1.39	7	0.8		
3	1.2D + 1.6W (60)	1.6	Y	1	1.2	2	1.2	6	0.8	7	1.39		
4	1.2D + 1.6W (90)	1.6	Y	1	1.2	2	1.2	7	1.6				
5	1.2D + 1.6W (120)	1.6	Y	1	1.2	2	1.2	6	-0.8	7	1.39		
6	1.2D + 1.6W (150)	1.6	Y	1	1.2	2	1.2	6	-1.39	7	0.8		
7	1.2D + 1.6W (180)	1.6	Y	1	1.2	2	1.2	6	-1.6				
8	1.2D + 1.6W (210)	1.6	Y	1	1.2	2	1.2	6	-1.39	7	-0.8		
9	1.2D + 1.6W (240)	1.6	Y	1	1.2	2	1.2	6	-0.8	7	-1.39		
10	1.2D + 1.6W (270	1.6	Y	1	1.2	2	1.2	7	-1.6				
11	1.2D + 1.6W (300)	1.6	Y	1	1.2	2	1.2	6	0.8	7	-1.39		
12	1.2D + 1.6W (330)	1.6	Y	1	1.2	2	1.2	6	1.39	7	-0.8		
13	1.2D+1.0Di+1.0Wi (0)	1.0	Y	1	1.2	2	1.2	3	1.0	4	1.0		
14	1.2D+1.0Di+1.0Wi (30)	1.0	Y	1	1.2	2	1.2	3	1.0	4	0.866	5	0.5
15	1.2D+1.0Di+1.0Wi (60)	1.0	Y	1	1.2	2	1.2	3	1.0	4	0.5	5	0.866
16	1.2D+1.0Di+1.0Wi (90)	1.0	Y	1	1.2	2	1.2	3	1.0	5	1.0		
17	1.2D+1.0Di+1.0Wi (120)	1.0	Y	1	1.2	2	1.2	3	1.0	4	-0.5	5	0.866
18	1.2D+1.0Di+1.0Wi (150)	1.0	Y	1	1.2	2	1.2	3	1.0	4	-0.866	5	0.5
19	1.2D+1.0Di+1.0Wi (180)	1.0	Y	1	1.2	2	1.2	3	1.0	4	-1.0		
20	1.2D+1.0Di+1.0Wi (210)	1.0	Y	1	1.2	2	1.2	3	1.0	4	-0.866	5	-0.5
21	1.2D+1.0Di+1.0Wi (240)	1.0	Y	1	1.2	2	1.2	3	1.0	4	-0.5	5	-0.866
22	1.2D+1.0Di+1.0Wi (270)	1.0	Y	1	1.2	2	1.2	3	1.0	5	-1.0		
23	1.2D+1.0Di+1.0Wi (300)	1.0	Y	1	1.2	2	1.2	3	1.0	4	0.5	5	-0.866
24	1.2D+1.0Di+1.0Wi (330)	1.0	Y	1	1.2	2	1.2	3	1.0	4	0.866	5	-0.5
25	1.2D + 1.6W (0) Service Wind	1.0	Y	1	1.2	2	1.2	7	0.48				

Service Load Conversion Factor: $$SLCF := \frac{(V_{service_loads})^2}{(V)^2} \cdot \frac{I_{service_loads}}{I_{wind}} \cdot \frac{Kd_{service_loads}}{Kd} = 0.3$$

Note: For this site - 270 wind direction is worst case. Therefore, service loads only checked for this direction.

APPENDIX B

RISA 3D OUTPUT

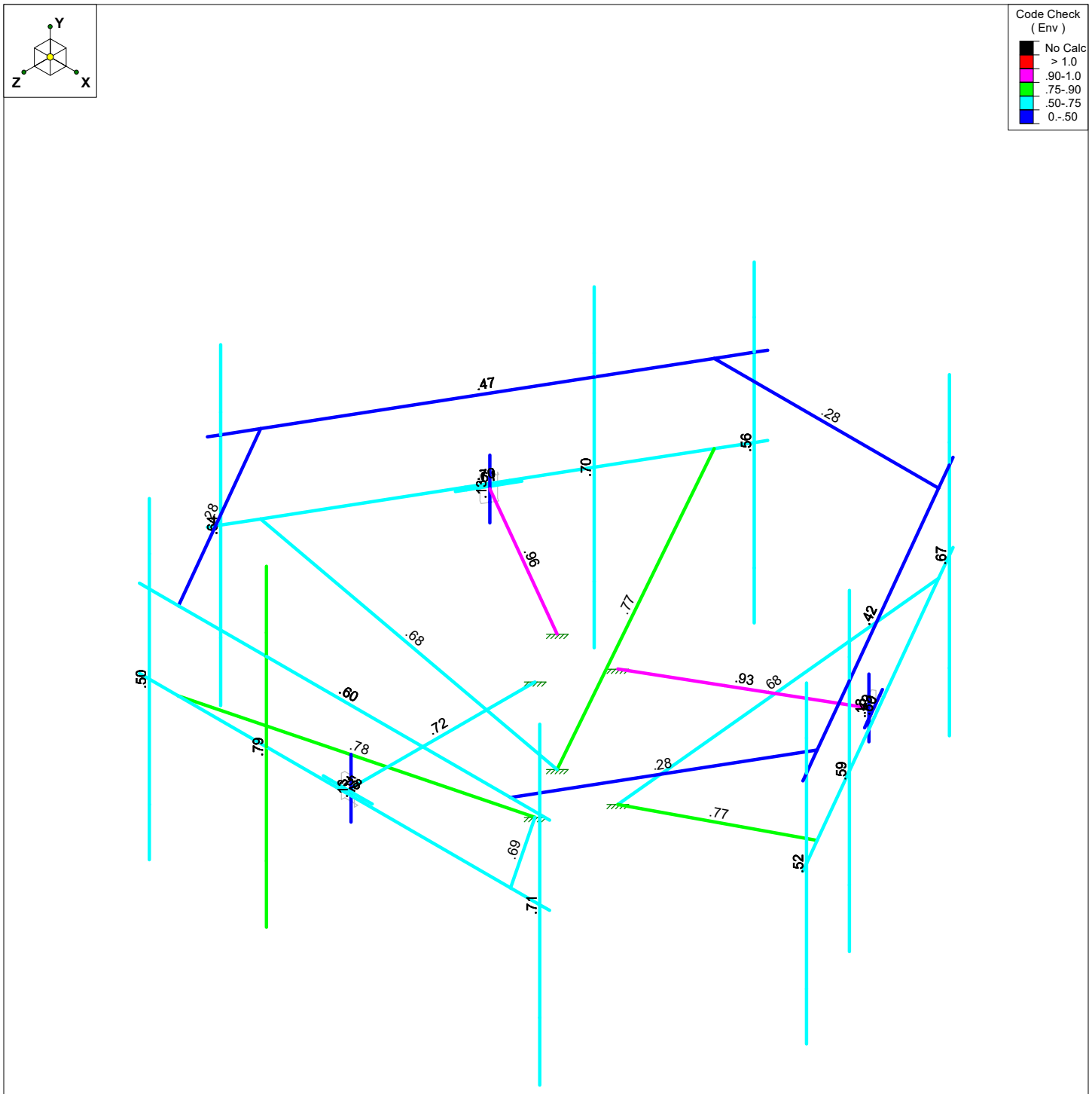

Member Code Checks Displayed (Enveloped)
Envelope Only Solution

Paul J Ford & Company	Orange Overland Drive	Page - 2
CEC		Feb 11, 2019 at 3:26 PM
A80619-0001.001.6190		80619-0001.001.6190.r3d

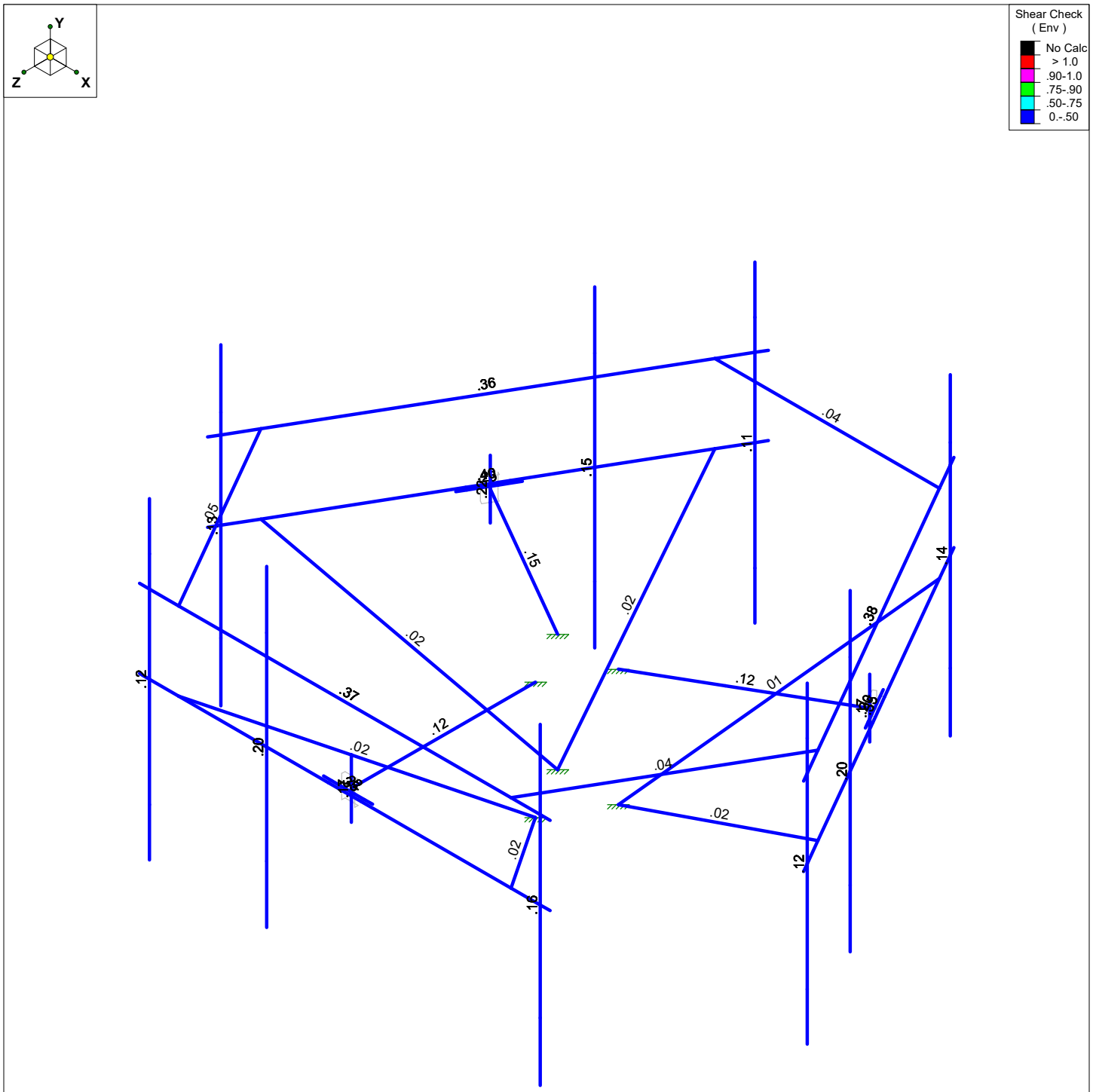

Member Shear Checks Displayed (Enveloped)
Envelope Only Solution

Paul J Ford & Company	Orange Overland Drive	Page - 3
CEC		Feb 11, 2019 at 3:26 PM
A80619-0001.001.6190		80619-0001.001.6190.r3d

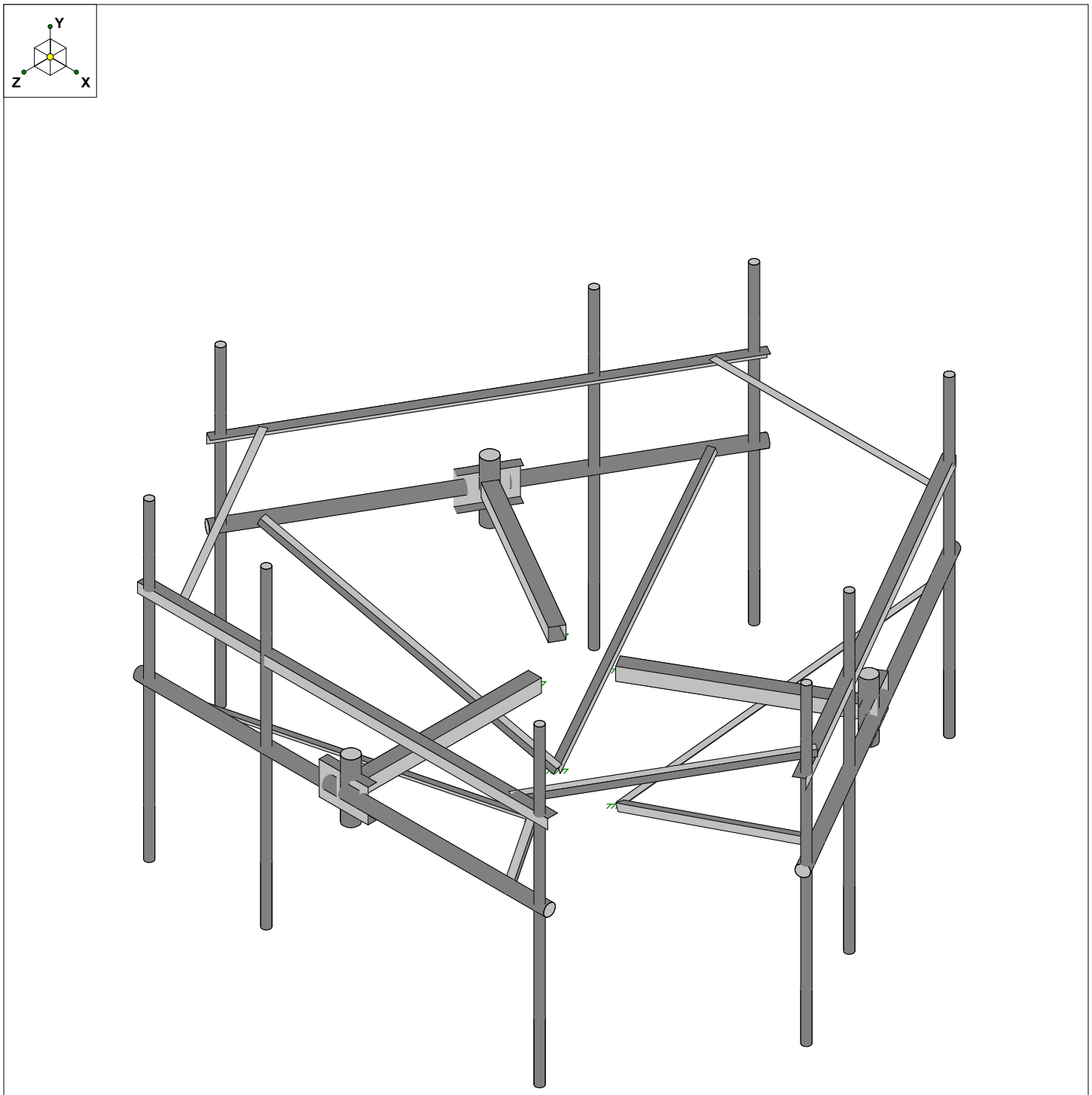

Envelope Only Solution

Paul J Ford & Company	Orange Overland Drive	Page - 4
CEC		Feb 11, 2019 at 3:27 PM
A80619-0001.001.6190		80619-0001.001.6190.r3d

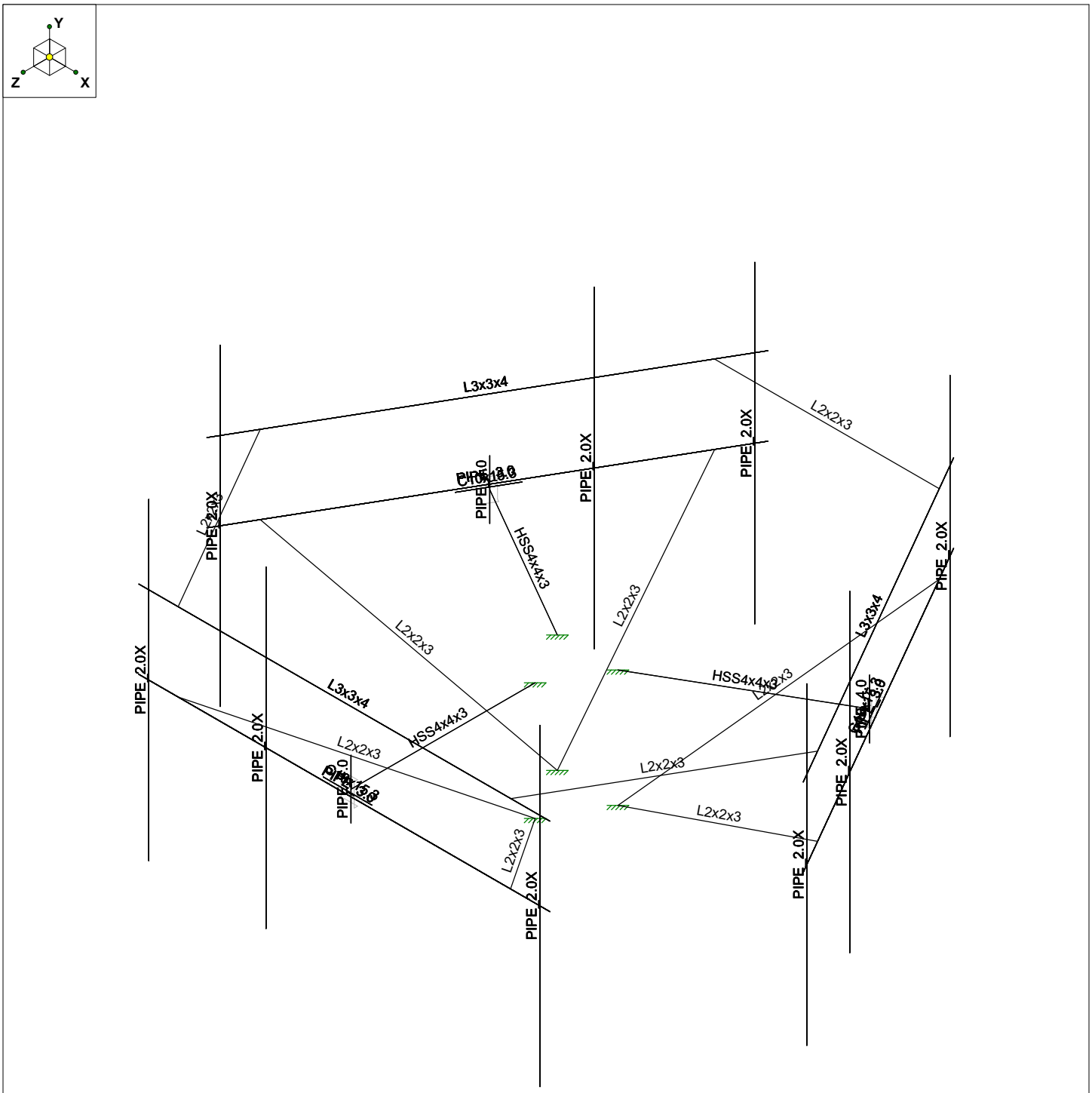

Envelope Only Solution

Paul J Ford & Company	Orange Overland Drive	Page - 5
CEC		Feb 11, 2019 at 3:27 PM
A80619-0001.001.6190		80619-0001.001.6190.r3d

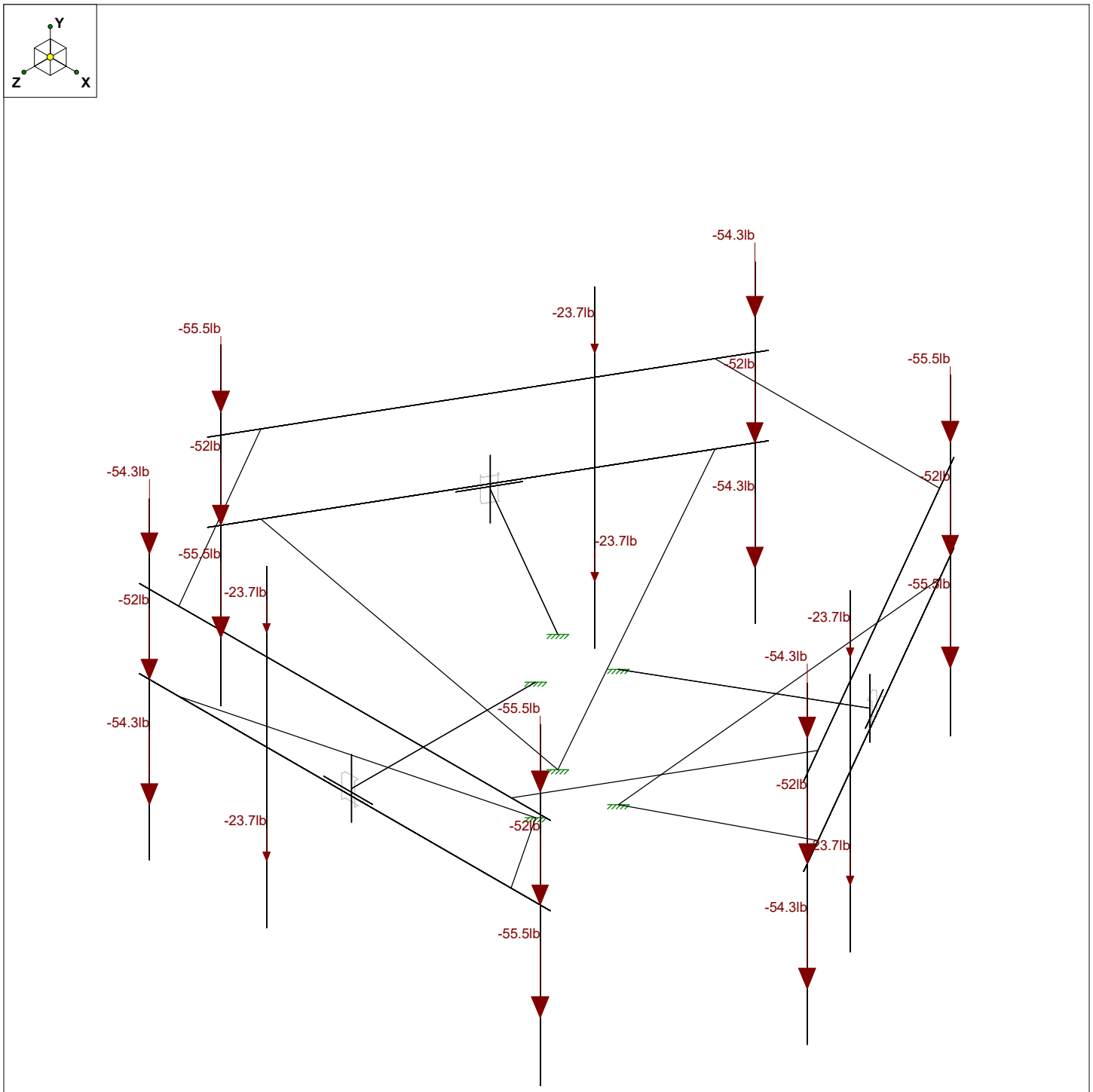

Loads: BLC 2, Weight of Appurtenances
Envelope Only Solution

Paul J Ford & Company	Orange Overland Drive	Page - 6
CEC		Feb 11, 2019 at 3:27 PM
A80619-0001.001.6190		80619-0001.001.6190.r3d

(Global) Model Settings

Display Sections for Member Calcs	5
Max Internal Sections for Member Calcs	97
Include Shear Deformation?	Yes
Increase Nailing Capacity for Wind?	Yes
Include Warping?	Yes
Trans Load Btwn Intersecting Wood Wall?	Yes
Area Load Mesh (in^2)	144
Merge Tolerance (in)	.12
P-Delta Analysis Tolerance	0.50%
Include P-Delta for Walls?	Yes
Automatically Iterate Stiffness for Walls?	Yes
Max Iterations for Wall Stiffness	3
Gravity Acceleration (in/sec^2)	386.4
Wall Mesh Size (in)	24
Eigensolution Convergence Tol. (1.E-)	4
Vertical Axis	Y
Global Member Orientation Plane	XZ
Static Solver	Sparse Accelerated
Dynamic Solver	Accelerated Solver

Hot Rolled Steel Code	AISC 14th(360-10): LRFD
Adjust Stiffness?	Yes(Iterative)
RISAConnection Code	None
Cold Formed Steel Code	None
Wood Code	None
Wood Temperature	< 100F
Concrete Code	None
Masonry Code	None
Aluminum Code	None - Building

Number of Shear Regions	4
Region Spacing Increment (in)	4
Biaxial Column Method	Exact Integration
Parme Beta Factor (PCA)	.65
Concrete Stress Block	Rectangular
Use Cracked Sections?	Yes
Use Cracked Sections Slab?	Yes
Bad Framing Warnings?	No
Unused Force Warnings?	Yes
Min 1 Bar Diam. Spacing?	No
Concrete Rebar Set	REBAR_SET_ASTMA615
Min % Steel for Column	1
Max % Steel for Column	8

(Global) Model Settings, Continued

Seismic Code	ASCE 7-10
Seismic Base Elevation (in)	Not Entered
Add Base Weight?	Yes
Ct X	.02
Ct Z	.02
T X (sec)	Not Entered
T Z (sec)	Not Entered
R X	3
R Z	3
Ct Exp. X	.75
Ct Exp. Z	.75
SD1	1
SDS	1
S1	1
TL (sec)	5
Risk Cat	I or II
Drift Cat	Other
Om Z	1
Om X	1
Cd Z	4
Cd X	4
Rho Z	1
Rho X	1

Hot Rolled Steel Properties

	Label	E [ksi]	G [ksi]	Nu	Therm (\1...	Density[k/...	Yield[ksi]	Ry	Fu[ksi]	Rt
1	A992	29000	11154	.3	.65	.49	50	1.1	65	1.1
2	A36 Gr.36	29000	11154	.3	.65	.49	36	1.5	58	1.2
3	A572 Gr.50	29000	11154	.3	.65	.49	50	1.1	65	1.1
4	A500 Gr.B RND	29000	11154	.3	.65	.527	42	1.4	58	1.3
5	A500 Gr.B Rect	29000	11154	.3	.65	.527	46	1.4	58	1.3
6	A53 Gr.B	29000	11154	.3	.65	.49	35	1.6	60	1.2
7	A1085	29000	11154	.3	.65	.49	50	1.4	65	1.3

Member Primary Data

	Label	I Joint	J Joint	K Joint	Rotate(d...	Section/Shape	Type	Design List	Material	Design Ru...
1	C2	A4	A6			PIPE_2.0X	None	None	A53 Gr.B	Typical
2	C1	A7	A9			PIPE_2.0X	None	None	A53 Gr.B	Typical
3	B1	B1	B2			PIPE_3.0	None	None	A53 Gr.B	Typical
4	C11	C1	C2			HSS4x4x3	None	None	A500 Gr.B Rect	Typical
5	M7A	N18A	N16			RIGID	None	None	RIGID	Typical
6	M8	N19	N17A			RIGID	None	None	RIGID	Typical
7	D1	N20	N21		180	C10x15.3	None	None	A36 Gr.36	Typical
8	M8A	N18	N17			PIPE_4.0	None	None	A53 Gr.B	Typical
9	M9	N21A	N19A			RIGID	None	None	RIGID	Typical
10	M10	N22	N20A			RIGID	None	None	RIGID	Typical
11	M11	N27A	N21A			RIGID	None	None	RIGID	Typical
12	M12	N25	N19A			RIGID	None	None	RIGID	Typical
13	M13	N26	N20A			RIGID	None	None	RIGID	Typical
14	M14	N28	N22			RIGID	None	None	RIGID	Typical
15	M15	N28	N27A			RIGID	None	None	RIGID	Typical
16	M16	N26	N25			RIGID	None	None	RIGID	Typical
17	M17	N32	N33			PIPE_2.0X	None	None	A53 Gr.B	Typical
18	M18	N41	N42			PIPE_2.0X	None	None	A53 Gr.B	Typical
19	M19	N43	N45			PIPE_2.0X	None	None	A53 Gr.B	Typical

Member Primary Data (Continued)

	Label	I Joint	J Joint	K Joint	Rotate(d...	Section/Shape	Type	Design List	Material	Design Ru...
20	M20	N46	N47			PIPE_3.0	None	None	A53 Gr.B	Typical
21	M21	N48	N49			HSS4x4x3	None	None	A500 Gr.B Rect	Typical
22	M22	N52	N50			RIGID	None	None	RIGID	Typical
23	M23	N53	N51			RIGID	None	None	RIGID	Typical
24	M24	N54	N55		180	C10x15.3	None	None	A36 Gr.36	Typical
25	M25	N58	N57			PIPE_4.0	None	None	A53 Gr.B	Typical
26	M26	N61	N59			RIGID	None	None	RIGID	Typical
27	M27	N62	N60			RIGID	None	None	RIGID	Typical
28	M28	N67	N61			RIGID	None	None	RIGID	Typical
29	M29	N65	N59			RIGID	None	None	RIGID	Typical
30	M30	N66	N60			RIGID	None	None	RIGID	Typical
31	M31	N68	N62			RIGID	None	None	RIGID	Typical
32	M32	N68	N67			RIGID	None	None	RIGID	Typical
33	M33	N66	N65			RIGID	None	None	RIGID	Typical
34	M34	N72	N73			PIPE_2.0X	None	None	A53 Gr.B	Typical
35	M35	N81A	N82A			PIPE_2.0X	None	None	A53 Gr.B	Typical
36	M36	N83	N85			PIPE_2.0X	None	None	A53 Gr.B	Typical
37	M37	N86	N87			PIPE_3.0	None	None	A53 Gr.B	Typical
38	M38	N88	N89			HSS4x4x3	None	None	A500 Gr.B Rect	Typical
39	M39	N92	N90			RIGID	None	None	RIGID	Typical
40	M40	N93	N91			RIGID	None	None	RIGID	Typical
41	M41	N94	N95		180	C10x15.3	None	None	A36 Gr.36	Typical
42	M42	N98	N97			PIPE_4.0	None	None	A53 Gr.B	Typical
43	M43	N101	N99			RIGID	None	None	RIGID	Typical
44	M44	N102	N100			RIGID	None	None	RIGID	Typical
45	M45	N107	N101			RIGID	None	None	RIGID	Typical
46	M46	N105	N99			RIGID	None	None	RIGID	Typical
47	M47	N106	N100			RIGID	None	None	RIGID	Typical
48	M48	N108	N102			RIGID	None	None	RIGID	Typical
49	M49	N108	N107			RIGID	None	None	RIGID	Typical
50	M50	N106	N105			RIGID	None	None	RIGID	Typical
51	M51	N112	N113			PIPE_2.0X	None	None	A53 Gr.B	Typical
52	M52	N124	N125		180	L3x3x4	None	None	A36 Gr.36	Typical
53	M53	N129	N130		180	L3x3x4	None	None	A36 Gr.36	Typical
54	M54	N134	N135		180	L3x3x4	None	None	A36 Gr.36	Typical
55	M55	N138	N143		90	L2x2x3	None	None	A36 Gr.36	Typical
56	M56	N140	N142		90	L2x2x3	None	None	A36 Gr.36	Typical
57	M57	N139	N141		90	L2x2x3	None	None	A36 Gr.36	Typical
58	M58	N144A	N153		180	L2x2x3	None	None	A36 Gr.36	Typical
59	M59	N144A	N156		90	L2x2x3	None	None	A36 Gr.36	Typical
60	M60	N146	N158		90	L2x2x3	None	None	A36 Gr.36	Typical
61	M61	N146	N155		180	L2x2x3	None	None	A36 Gr.36	Typical
62	M62	N145	N157		90	L2x2x3	None	None	A36 Gr.36	Typical
63	M63	N145	N154		180	L2x2x3	None	None	A36 Gr.36	Typical

Member Advanced Data

	Label	I Release	J Release	I Offset[in]	J Offset[in]	T/C Only	Physical	Analysis ...	Inactive	Seismic Design ...
1	C2						Yes			None
2	C1						Yes			None
3	B1						Yes			None
4	C11						Yes			None
5	M7A						Yes			None
6	M8						Yes			None
7	D1						Yes			None
8	M8A						Yes			None

Member Advanced Data (Continued)

	Label	I Release	J Release	I Offset[in]	J Offset[in]	T/C Only	Physical	Analysis ...	Inactive	Seismic Design ...
9	M9						Yes			None
10	M10						Yes			None
11	M11						Yes			None
12	M12						Yes			None
13	M13						Yes			None
14	M14						Yes			None
15	M15						Yes			None
16	M16						Yes			None
17	M17						Yes			None
18	M18						Yes			None
19	M19						Yes			None
20	M20						Yes			None
21	M21						Yes			None
22	M22						Yes			None
23	M23						Yes			None
24	M24						Yes			None
25	M25						Yes			None
26	M26						Yes			None
27	M27						Yes			None
28	M28						Yes			None
29	M29						Yes			None
30	M30						Yes			None
31	M31						Yes			None
32	M32						Yes			None
33	M33						Yes			None
34	M34						Yes			None
35	M35						Yes			None
36	M36						Yes			None
37	M37						Yes			None
38	M38						Yes			None
39	M39						Yes			None
40	M40						Yes			None
41	M41						Yes			None
42	M42						Yes			None
43	M43						Yes			None
44	M44						Yes			None
45	M45						Yes			None
46	M46						Yes			None
47	M47						Yes			None
48	M48						Yes			None
49	M49						Yes			None
50	M50						Yes			None
51	M51						Yes			None
52	M52						Yes			None
53	M53						Yes			None
54	M54						Yes			None
55	M55	OOOOXO	OOOOXO				Yes			None
56	M56	OOOOXO	OOOOXO				Yes			None
57	M57	OOOOXO	OOOOXO				Yes			None
58	M58	BenPIN	BenPIN				Yes			None
59	M59	BenPIN	BenPIN				Yes			None
60	M60	BenPIN	BenPIN				Yes			None
61	M61	BenPIN	BenPIN				Yes			None
62	M62	BenPIN	BenPIN				Yes			None
63	M63	BenPIN	BenPIN				Yes			None

Hot Rolled Steel Design Parameters

	Label	Shape	Length[in]	Lbyy[in]	Lbzz[in]	Lcomp top[in]	Lcomp bot[in]	L-torqu...	Kyy	Kzz	Cb	Function
1	C2	PIPE_2.0X	96			Lbyy						Lateral
2	C1	PIPE_2.0X	96			Lbyy						Lateral
3	B1	PIPE_3.0	126			Lbyy						Lateral
4	C11	HSS4x4x3	56.5			Lbyy						Lateral
5	D1	C10x15.3	15			Lbyy						Lateral
6	M8A	PIPE_4.0	18			Lbyy						Lateral
7	M17	PIPE_2.0X	96			Lbyy						Lateral
8	M18	PIPE_2.0X	96			Lbyy						Lateral
9	M19	PIPE_2.0X	96			Lbyy						Lateral
10	M20	PIPE_3.0	126			Lbyy						Lateral
11	M21	HSS4x4x3	56.5			Lbyy						Lateral
12	M24	C10x15.3	15			Lbyy						Lateral
13	M25	PIPE_4.0	18			Lbyy						Lateral
14	M34	PIPE_2.0X	96			Lbyy						Lateral
15	M35	PIPE_2.0X	96			Lbyy						Lateral
16	M36	PIPE_2.0X	96			Lbyy						Lateral
17	M37	PIPE_3.0	126			Lbyy						Lateral
18	M38	HSS4x4x3	56.5			Lbyy						Lateral
19	M41	C10x15.3	15			Lbyy						Lateral
20	M42	PIPE_4.0	18			Lbyy						Lateral
21	M51	PIPE_2.0X	96			Lbyy						Lateral
22	M52	L3x3x4	126			Lbyy						Lateral
23	M53	L3x3x4	126			Lbyy						Lateral
24	M54	L3x3x4	126			Lbyy						Lateral
25	M55	L2x2x3	68.945									Lateral
26	M56	L2x2x3	68.945									Lateral
27	M57	L2x2x3	68.945									Lateral
28	M58	L2x2x3	85.553									Lateral
29	M59	L2x2x3	85.553									Lateral
30	M60	L2x2x3	85.553									Lateral
31	M61	L2x2x3	85.553									Lateral
32	M62	L2x2x3	85.553									Lateral
33	M63	L2x2x3	85.553									Lateral

Joint Loads and Enforced Displacements (BLC 2 : Weight of Appurtenances)

	Joint Label	L,D,M	Direction	Magnitude[(lb,k-ft), (in,rad), ...
1	EQUIP_A_1(TOP)	L	Y	-54.3
2	EQUIP_A_1(BOT)	L	Y	-54.3
3	EQUIP_A_2	L	Y	-52
4	EQUIP_A_4(TOP)	L	Y	-23.7
5	EQUIP_A_4(BOT)	L	Y	-23.7
6	EQUIP_A_5(TOP)	L	Y	-55.5
7	EQUIP_A_5(BOT)	L	Y	-55.5
8	EQUIP_A_3	L	Y	-52
9	EQUIP_B_2	L	Y	-52
10	EQUIP_B_3	L	Y	-52
11	EQUIP_B_1(TOP)	L	Y	-54.3
12	EQUIP_B_1(BOT)	L	Y	-54.3
13	EQUIP_B_4(TOP)	L	Y	-23.7
14	EQUIP_B_4(BOT)	L	Y	-23.7
15	EQUIP_B_5(TOP)	L	Y	-55.5
16	EQUIP_B_5(BOT)	L	Y	-55.5
17	EQUIP_C_2	L	Y	-52
18	EQUIP_C_3	L	Y	-52

Joint Loads and Enforced Displacements (BLC 2 : Weight of Appurtenances) (Continued)

	Joint Label	L,D,M	Direction	Magnitude[(lb,k-ft), (in,rad), ...
19	EQUIP_C_1(TOP)	L	Y	-54.3
20	EQUIP_C_1(BOT)	L	Y	-54.3
21	EQUIP_C_4(TOP)	L	Y	-23.7
22	EQUIP_C_4(BOT)	L	Y	-23.7
23	EQUIP_C_5(TOP)	L	Y	-55.5
24	EQUIP_C_5(BOT)	L	Y	-55.5

Joint Loads and Enforced Displacements (BLC 3 : Weight of Ice Only)

	Joint Label	L,D,M	Direction	Magnitude[(lb,k-ft), (in,rad), ...
1	EQUIP_A_1(TOP)	L	Y	-193.5
2	EQUIP_A_1(BOT)	L	Y	-193.5
3	EQUIP_A_2	L	Y	-99
4	EQUIP_A_4(TOP)	L	Y	-133.5
5	EQUIP_A_4(BOT)	L	Y	-133.5
6	EQUIP_A_5(TOP)	L	Y	-148.5
7	EQUIP_A_5(BOT)	L	Y	-148.5
8	EQUIP_A_3	L	Y	-93
9	EQUIP_B_2	L	Y	-99
10	EQUIP_B_3	L	Y	-93
11	EQUIP_B_1(TOP)	L	Y	-193.5
12	EQUIP_B_1(BOT)	L	Y	-193.5
13	EQUIP_B_4(TOP)	L	Y	-133.5
14	EQUIP_B_4(BOT)	L	Y	-133.5
15	EQUIP_B_5(TOP)	L	Y	-148.5
16	EQUIP_B_5(BOT)	L	Y	-148.5
17	EQUIP_C_2	L	Y	-99
18	EQUIP_C_3	L	Y	-93
19	EQUIP_C_1(TOP)	L	Y	-193.5
20	EQUIP_C_1(BOT)	L	Y	-193.5
21	EQUIP_C_4(TOP)	L	Y	-133.5
22	EQUIP_C_4(BOT)	L	Y	-133.5
23	EQUIP_C_5(TOP)	L	Y	-148.5
24	EQUIP_C_5(BOT)	L	Y	-148.5

Joint Loads and Enforced Displacements (BLC 4 : TIA Wind with Ice - X)

	Joint Label	L,D,M	Direction	Magnitude[(lb,k-ft), (in,rad), ...
1	EQUIP_A_1(TOP)	L	X	40.5
2	EQUIP_A_1(BOT)	L	X	40.5
3	EQUIP_A_2	L	X	20
4	EQUIP_A_4(TOP)	L	X	37.5
5	EQUIP_A_4(BOT)	L	X	37.5
6	EQUIP_A_5(BOT)	L	X	42.5
7	EQUIP_A_5(TOP)	L	X	42.5
8	EQUIP_A_3	L	X	17
9	EQUIP_B_2	L	X	20
10	EQUIP_B_3	L	X	17
11	EQUIP_B_1(TOP)	L	X	40.5
12	EQUIP_B_1(BOT)	L	X	40.5
13	EQUIP_B_4(TOP)	L	X	37.5
14	EQUIP_B_4(BOT)	L	X	37.5
15	EQUIP_B_5(TOP)	L	X	42.5
16	EQUIP_B_5(BOT)	L	X	42.5
17	EQUIP_C_2	L	X	20
18	EQUIP_C_3	L	X	17
19	EQUIP_C_1(TOP)	L	X	40.5
20	EQUIP_C_1(BOT)	L	X	40.5

Joint Loads and Enforced Displacements (BLC 4 : TIA Wind with Ice - X) (Continued)

	Joint Label	L,D,M	Direction	Magnitude[(lb,k-ft), (in,rad), ...
21	EQUIP_C_4(TOP)	L	X	37.5
22	EQUIP_C_4(BOT)	L	X	37.5
23	EQUIP_C_5(TOP)	L	X	42.5
24	EQUIP_C_5(BOT)	L	X	42.5

Joint Loads and Enforced Displacements (BLC 5 : TIA Wind with Ice - Z)

	Joint Label	L,D,M	Direction	Magnitude[(lb,k-ft), (in,rad), ...
1	EQUIP_A_1(TOP)	L	Z	72
2	EQUIP_A_1(BOT)	L	Z	72
3	EQUIP_A_2	L	Z	31
4	EQUIP_A_4(TOP)	L	Z	48
5	EQUIP_A_4(BOT)	L	Z	48
6	EQUIP_A_5(TOP)	L	Z	47.5
7	EQUIP_A_5(BOT)	L	Z	47.5
8	EQUIP_A_3	L	Z	31
9	EQUIP_B_2	L	Z	31
10	EQUIP_B_3	L	Z	31
11	EQUIP_B_1(TOP)	L	Z	72
12	EQUIP_B_1(BOT)	L	Z	72
13	EQUIP_B_4(TOP)	L	Z	48
14	EQUIP_B_4(BOT)	L	Z	48
15	EQUIP_B_5(TOP)	L	Z	47.5
16	EQUIP_B_5(BOT)	L	Z	47.5
17	EQUIP_C_2	L	Z	31
18	EQUIP_C_3	L	Z	31
19	EQUIP_C_1(TOP)	L	Z	72
20	EQUIP_C_1(BOT)	L	Z	72
21	EQUIP_C_4(TOP)	L	Z	48
22	EQUIP_C_4(BOT)	L	Z	48
23	EQUIP_C_5(TOP)	L	Z	47.5
24	EQUIP_C_5(BOT)	L	Z	47.5

Joint Loads and Enforced Displacements (BLC 6 : TIA Wind - X)

	Joint Label	L,D,M	Direction	Magnitude[(lb,k-ft), (in,rad), ...
1	EQUIP_A_1(TOP)	L	X	102.5
2	EQUIP_A_1(BOT)	L	X	102.5
3	EQUIP_A_2	L	X	33
4	EQUIP_A_4(TOP)	L	X	95
5	EQUIP_A_4(BOT)	L	X	95
6	EQUIP_A_5(TOP)	L	X	119.5
7	EQUIP_A_5(BOT)	L	X	119.5
8	EQUIP_A_3	L	X	24
9	EQUIP_B_2	L	X	33
10	EQUIP_B_3	L	X	24
11	EQUIP_B_1(TOP)	L	X	102.5
12	EQUIP_B_1(BOT)	L	X	102.5
13	EQUIP_B_4(TOP)	L	X	95
14	EQUIP_B_4(BOT)	L	X	95
15	EQUIP_B_5(TOP)	L	X	119.5
16	EQUIP_B_5(BOT)	L	X	119.5
17	EQUIP_C_2	L	X	33
18	EQUIP_C_3	L	X	24
19	EQUIP_C_1(TOP)	L	X	102.5
20	EQUIP_C_1(BOT)	L	X	102.5
21	EQUIP_C_4(TOP)	L	X	95
22	EQUIP_C_4(BOT)	L	X	95

Joint Loads and Enforced Displacements (BLC 6 : TIA Wind - X) (Continued)

	Joint Label	L,D,M	Direction	Magnitude[(lb,k-ft), (in,rad), ...
23	EQUIP_C_5(TOP)	L	X	119.5
24	EQUIP_C_5(BOT)	L	X	119.5

Joint Loads and Enforced Displacements (BLC 7 : TIA Wind - Z)

	Joint Label	L,D,M	Direction	Magnitude[(lb,k-ft), (in,rad), ...
1	EQUIP_A_1(TOP)	L	Z	243
2	EQUIP_A_1(BOT)	L	Z	243
3	EQUIP_A_2	L	Z	68
4	EQUIP_A_4(TOP)	L	Z	144
5	EQUIP_A_4(BOT)	L	Z	144
6	EQUIP_A_5(TOP)	L	Z	143
7	EQUIP_A_5(BOT)	L	Z	143
8	EQUIP_A_3	L	Z	68
9	EQUIP_B_2	L	Z	68
10	EQUIP_B_3	L	Z	68
11	EQUIP_B_1(TOP)	L	Z	243
12	EQUIP_B_1(BOT)	L	Z	243
13	EQUIP_B_4(TOP)	L	Z	144
14	EQUIP_B_4(BOT)	L	Z	144
15	EQUIP_B_5(TOP)	L	Z	143
16	EQUIP_B_5(BOT)	L	Z	143
17	EQUIP_C_2	L	Z	68
18	EQUIP_C_3	L	Z	68
19	EQUIP_C_1(TOP)	L	Z	243
20	EQUIP_C_1(BOT)	L	Z	243
21	EQUIP_C_4(TOP)	L	Z	144
22	EQUIP_C_4(BOT)	L	Z	144
23	EQUIP_C_5(TOP)	L	Z	143
24	EQUIP_C_5(BOT)	L	Z	143

Member Distributed Loads (BLC 3 : Weight of Ice Only)

	Member Label	Direction	Start Magnitude[lb/ft,F,ksf]	End Magnitude[lb/ft,F,ksf]	Start Location[in...	End Location[in,...
1	C2	Y	-12.7	-12.7	0	0
2	C1	Y	-12.7	-12.7	0	0
3	M17	Y	-12.7	-12.7	0	0
4	B1	Y	-15.7	-15.7	0	0
5	C11	Y	-24.2	-24.2	0	0
6	M8A	Y	-23.5	-23.5	0	0
7	M18	Y	-12.7	-12.7	0	0
8	M19	Y	-12.7	-12.7	0	0
9	M20	Y	-15.7	-15.7	0	0
10	M21	Y	-24.2	-24.2	0	0
11	M25	Y	-23.5	-23.5	0	0
12	M34	Y	-12.7	-12.7	0	0
13	M35	Y	-12.7	-12.7	0	0
14	M36	Y	-12.7	-12.7	0	0
15	M37	Y	-15.7	-15.7	0	0
16	M38	Y	-24.2	-24.2	0	0
17	M42	Y	-23.5	-23.5	0	0
18	M51	Y	-12.7	-12.7	0	0
19	M52	Y	-18.3	-18.3	0	0
20	M53	Y	-18.3	-18.3	0	0
21	M54	Y	-18.3	-18.3	0	0
22	M55	Y	-15.1	-15.1	0	0
23	M56	Y	-15.1	-15.1	0	0

Member Distributed Loads (BLC 3 : Weight of Ice Only) (Continued)

	Member Label	Direction	Start Magnitude[lb/ft,F,ksf]	End Magnitude[lb/ft,F,ksf]	Start Location[in..	End Location[in,...
24	M57	Y	-15.1	-15.1	0	0
25	M58	Y	-14.9	-14.9	0	0
26	M59	Y	-14.9	-14.9	0	0
27	M60	Y	-14.9	-14.9	0	0
28	M61	Y	-14.9	-14.9	0	0
29	M62	Y	-14.9	-14.9	0	0
30	M63	Y	-14.9	-14.9	0	0

Member Distributed Loads (BLC 4 : TIA Wind with Ice - X)

	Member Label	Direction	Start Magnitude[lb/ft,F,ksf]	End Magnitude[lb/ft,F,ksf]	Start Location[in..	End Location[in,...
1	C2	X	5.7	5.7	0	0
2	C1	X	5.7	5.7	0	0
3	M17	X	5.7	5.7	0	0
4	C11	X	9.2	9.2	0	0
5	M8A	X	5.4	5.4	0	0
6	M18	X	5.7	5.7	0	0
7	M19	X	5.7	5.7	0	0
8	M21	X	9.2	9.2	0	0
9	M25	X	5.4	5.4	0	0
10	M34	X	5.7	5.7	0	0
11	M35	X	5.7	5.7	0	0
12	M36	X	5.7	5.7	0	0
13	M38	X	9.2	9.2	0	0
14	M42	X	5.4	5.4	0	0
15	M51	X	5.7	5.7	0	0
16	M20	X	6.5	6.5	0	0
17	M37	X	6.5	6.5	0	0
18	M53	X	10.2	10.2	0	0
19	M54	X	10.2	10.2	0	0
20	M55	X	9.1	9.1	0	0
21	M57	X	9.1	9.1	0	0
22	M58	X	9	9	0	0
23	M59	X	9	9	0	0
24	M60	X	9	9	0	0
25	M61	X	9	9	0	0
26	M62	X	9	9	0	0
27	M63	X	9	9	0	0

Member Distributed Loads (BLC 5 : TIA Wind with Ice - Z)

	Member Label	Direction	Start Magnitude[lb/ft,F,ksf]	End Magnitude[lb/ft,F,ksf]	Start Location[in..	End Location[in,...
1	C2	Z	5.7	5.7	0	0
2	C1	Z	5.7	5.7	0	0
3	M17	Z	5.7	5.7	0	0
4	B1	Z	6.5	6.5	0	0
5	M8A	Z	5.4	5.4	0	0
6	M18	Z	5.7	5.7	0	0
7	M19	Z	5.7	5.7	0	0
8	M20	Z	6.5	6.5	0	0
9	M25	Z	5.4	5.4	0	0
10	M34	Z	5.7	5.7	0	0
11	M35	Z	5.7	5.7	0	0
12	M36	Z	5.7	5.7	0	0
13	M37	Z	6.5	6.5	0	0
14	M42	Z	5.4	5.4	0	0
15	M51	Z	5.7	5.7	0	0
16	M21	Z	9.2	9.2	0	0

Member Distributed Loads (BLC 5 : TIA Wind with Ice - Z) (Continued)

	Member Label	Direction	Start Magnitude[lb/ft,F,ksf]	End Magnitude[lb/ft,F,ksf]	Start Location[in...	End Location[in,...
17	M38	Z	9.2	9.2	0	0
18	M52	Z	10.2	10.2	0	0
19	M53	Z	10.2	10.2	0	0
20	M54	Z	10.2	10.2	0	0
21	M55	Z	9.1	9.1	0	0
22	M56	Z	9.1	9.1	0	0
23	M57	Z	9.1	9.1	0	0
24	M58	Z	9	9	0	0
25	M59	Z	9	9	0	0
26	M60	Z	9	9	0	0
27	M61	Z	9	9	0	0
28	M62	Z	9	9	0	0
29	M63	Z	9	9	0	0

Member Distributed Loads (BLC 6 : TIA Wind - X)

	Member Label	Direction	Start Magnitude[lb/ft,F,ksf]	End Magnitude[lb/ft,F,ksf]	Start Location[in...	End Location[in,...
1	C2	X	8.4	8.4	0	0
2	C1	X	8.4	8.4	0	0
3	M17	X	8.4	8.4	0	0
4	C11	X	17.2	17.2	0	0
5	M8A	X	9.7	9.7	0	0
6	M18	X	8.4	8.4	0	0
7	M19	X	8.4	8.4	0	0
8	M21	X	17.2	17.2	0	0
9	M25	X	9.7	9.7	0	0
10	M34	X	8.4	8.4	0	0
11	M35	X	8.4	8.4	0	0
12	M36	X	8.4	8.4	0	0
13	M38	X	17.2	17.2	0	0
14	M42	X	9.7	9.7	0	0
15	M51	X	8.4	8.4	0	0
16	M20	X	12.3	12.3	0	0
17	M37	X	12.3	12.3	0	0
18	M53	X	17.6	17.6	0	0
19	M54	X	17.6	17.6	0	0
20	M55	X	11.7	11.7	0	0
21	M57	X	11.7	11.7	0	0
22	M58	X	11.7	11.7	0	0
23	M59	X	11.7	11.7	0	0
24	M60	X	11.7	11.7	0	0
25	M61	X	11.7	11.7	0	0
26	M62	X	11.7	11.7	0	0
27	M63	X	11.7	11.7	0	0

Member Distributed Loads (BLC 7 : TIA Wind - Z)

	Member Label	Direction	Start Magnitude[lb/ft,F,ksf]	End Magnitude[lb/ft,F,ksf]	Start Location[in...	End Location[in,...
1	C2	Z	8.4	8.4	0	0
2	C1	Z	8.4	8.4	0	0
3	M17	Z	8.4	8.4	0	0
4	B1	Z	12.3	12.3	0	0
5	M8A	Z	9.7	9.7	0	0
6	M18	Z	8.4	8.4	0	0
7	M19	Z	8.4	8.4	0	0
8	M20	Z	12.3	12.3	0	0
9	M25	Z	9.7	9.7	0	0
10	M34	Z	8.4	8.4	0	0

Member Distributed Loads (BLC 7 : TIA Wind - Z) (Continued)

	Member Label	Direction	Start Magnitude[lb/ft,F,ksf]	End Magnitude[lb/ft,F,ksf]	Start Location[in...	End Location[in,...
11	M35	Z	8.4	8.4	0	0
12	M36	Z	8.4	8.4	0	0
13	M37	Z	12.3	12.3	0	0
14	M42	Z	9.7	9.7	0	0
15	M51	Z	8.4	8.4	0	0
16	M21	Z	17.2	17.2	0	0
17	M38	Z	17.2	17.2	0	0
18	M52	Z	17.6	17.6	0	0
19	M53	Z	17.6	17.6	0	0
20	M54	Z	17.6	17.6	0	0
21	M55	Z	11.7	11.7	0	0
22	M56	Z	11.7	11.7	0	0
23	M57	Z	11.7	11.7	0	0
24	M58	Z	11.7	11.7	0	0
25	M59	Z	11.7	11.7	0	0
26	M60	Z	11.7	11.7	0	0
27	M61	Z	11.7	11.7	0	0
28	M62	Z	11.7	11.7	0	0
29	M63	Z	11.7	11.7	0	0

Basic Load Cases

	BLC Description	Category	X Gravity	Y Gravity	Z Gravity	Joint	Point	Distribut...	Area(M...	Surface...
1	Self Weight	None		-1						
2	Weight of Appurtenances	None				24				
3	Weight of Ice Only	None				24		30		
4	TIA Wind with Ice - X	None				24		27		
5	TIA Wind with Ice - Z	None				24		29		
6	TIA Wind - X	None				24		27		
7	TIA Wind - Z	None				24		29		

Load Combinations

	Description	S...	PDelta	SRSS	B...	Fa...	B...	Fact...	B...	Fa...	B...	Fa...	B...	Fa...	B...	Fa...	B...	Fa...	B...	Fa...	B...	Fa...	B...	Fa...
1	1.2D + 1.6W (0 deg)	Yes	Y		1	1.2	2	1.2	6	1.6														
2	1.2D + 1.6W (30 deg)	Yes	Y		1	1.2	2	1.2	6	1.39	7	.8												
3	1.2D + 1.6W (60 deg)	Yes	Y		1	1.2	2	1.2	6	.8	7	1.39												
4	1.2D + 1.6W (90 deg)	Yes	Y		1	1.2	2	1.2	7	1.6														
5	1.2D + 1.6W (120 deg)	Yes	Y		1	1.2	2	1.2	6	-.8	7	1.39												
6	1.2D + 1.6W (150 deg)	Yes	Y		1	1.2	2	1.2	6	-1....	7	.8												
7	1.2D + 1.6W (180 deg)	Yes	Y		1	1.2	2	1.2	6	-1.6														
8	1.2D + 1.6W (210 deg)	Yes	Y		1	1.2	2	1.2	6	-1....	7	-.8												
9	1.2D + 1.6W (240 deg)	Yes	Y		1	1.2	2	1.2	6	-.8	7	-1....												
10	1.2D + 1.6W (270 deg)	Yes	Y		1	1.2	2	1.2	7	-1.6														
11	1.2D + 1.6W (300 deg)	Yes	Y		1	1.2	2	1.2	6	.8	7	-1....												
12	1.2D + 1.6W (330 deg)	Yes	Y		1	1.2	2	1.2	6	1.39	7	-.8												
13	1.2D + 1.0Di + 1.0Wi (0...	Yes	Y		1	1.2	2	1.2	3	1	4	1												
14	1.2D + 1.0Di + 1.0Wi (3...	Yes	Y		1	1.2	2	1.2	3	1	4	.866	5	.5										
15	1.2D + 1.0Di + 1.0Wi (6...	Yes	Y		1	1.2	2	1.2	3	1	4	.5	5	.866										
16	1.2D + 1.0Di + 1.0Wi (9...	Yes	Y		1	1.2	2	1.2	3	1	5	1												
17	1.2D + 1.0Di + 1.0Wi (1...	Yes	Y		1	1.2	2	1.2	3	1	4	-.5	5	.866										
18	1.2D + 1.0Di + 1.0Wi (1...	Yes	Y		1	1.2	2	1.2	3	1	4	-.8...	5	.5										
19	1.2D + 1.0Di + 1.0Wi (1...	Yes	Y		1	1.2	2	1.2	3	1	4	-1												
20	1.2D + 1.0Di + 1.0Wi (2...	Yes	Y		1	1.2	2	1.2	3	1	4	-.8...	5	-.5										
21	1.2D + 1.0Di + 1.0Wi (2...	Yes	Y		1	1.2	2	1.2	3	1	4	-.5	5	-.8...										
22	1.2D + 1.0Di + 1.0Wi (2...	Yes	Y		1	1.2	2	1.2	3	1	5	-1												

Load Combinations (Continued)

	Description	S...	PDelta	SRSS	B...	Fa...	B...	Fact...	B...	Fa...	B...	Fa...	B...	Fa...	B...	Fa...	B...	Fa...	B...	Fa...	B...	Fa...	B...	Fa...
23	1.2D + 1.0Di + 1.0Wi (3...	Yes	Y		1	1.2	2	1.2	3	1	4	.5	5	-.8...										
24	1.2D + 1.0Di + 1.0Wi (3...	Yes	Y		1	1.2	2	1.2	3	1	4	.866	5	-.5										
25	1.2D + 1.6W (0 deg) Se...	Yes	Y		1	1.2	2	1.2	7	.48														

Envelope AISC 14th(360-10): LRFD Steel Code Checks

	Mem...	Shape	Code Check	Loc[in]	LC	Shear ...	Loc[...	Dir	LC	phi*Pn...	phi*Pn...	phi*Mn ...	phi*Mn...	Cb	Eqn
1	C2	PIPE_2.0X	.504	48	11	.116	48		4	19844....	44100	2.531	2.531	1...	H...
2	C1	PIPE_2.0X	.709	48	9	.158	48		10	19844....	44100	2.531	2.531	1...	H...
3	B1	PIPE_3.0	.724	57.75	4	.354	57.75		23	36138.4	65205	5.749	5.749	4...	H...
4	C11	HSS4x4x3	.724	0	3	.117	0	y	17	97695....	106812	12.662	12.662	1...	H...
5	D1	C10x15.3	.585	5.469	5	.220	5.469	z	11	141798...	145152	4.988	42.93	1...	H...
6	M8A	PIPE_4.0	.134	9	22	.166	9		11	92571....	93240	10.631	10.631	1...	H...
7	M17	PIPE_2.0X	.791	48	10	.197	48		3	19844....	44100	2.531	2.531	1...	H...
8	M18	PIPE_2.0X	.518	48	9	.117	48		22	19844....	44100	2.531	2.531	1...	H...
9	M19	PIPE_2.0X	.672	48	5	.144	48		5	19844....	44100	2.531	2.531	1...	H...
10	M20	PIPE_3.0	.598	57.75	13	.350	57.75		19	36138.4	65205	5.749	5.749	3...	H...
11	M21	HSS4x4x3	.935	0	10	.115	0	y	14	97695....	106812	12.662	12.662	1...	H...
12	M24	C10x15.3	.488	2.5	13	.198	5.469	z	18	141798...	145152	4.988	42.93	1...	H...
13	M25	PIPE_4.0	.129	9	18	.170	9		3	92571....	93240	10.631	10.631	1...	H...
14	M34	PIPE_2.0X	.592	48	6	.198	48		11	19844....	44100	2.531	2.531	1...	H...
15	M35	PIPE_2.0X	.557	48	4	.114	48		18	19844....	44100	2.531	2.531	1...	H...
16	M36	PIPE_2.0X	.642	48	13	.135	48		2	19844....	44100	2.531	2.531	1...	H...
17	M37	PIPE_3.0	.705	57.75	9	.399	57.75		3	36138.4	65205	5.749	5.749	3...	H...
18	M38	HSS4x4x3	.957	0	10	.145	0	z	11	97695....	106812	12.662	12.662	1...	H...
19	M41	C10x15.3	.609	5.469	9	.252	5.469	z	3	141798...	145152	4.988	42.93	1...	H...
20	M42	PIPE_4.0	.130	9	14	.225	9		4	92571....	93240	10.631	10.631	1...	H...
21	M51	PIPE_2.0X	.699	48	3	.151	48		7	19844....	44100	2.531	2.531	1...	H...
22	M52	L3x3x4	.597	39.3...	10	.372	11.8...	z	14	7012.5...	46656	1.688	3.14	1...	H...
23	M53	L3x3x4	.417	39.3...	6	.377	122....	z	4	7012.5...	46656	1.688	3.148	1...	H...
24	M54	L3x3x4	.473	38.0...	3	.363	11.8...	z	17	7012.5...	46656	1.688	3.158	1...	H...
25	M55	L2x2x3	.277	28.0...	24	.046	68.9...	z	3	5192.5...	23392.8	.558	1.058	1...	H...
26	M56	L2x2x3	.284	28.0...	16	.042	68.9...	z	20	5192.5...	23392.8	.558	1.046	1...	H...
27	M57	L2x2x3	.280	28.0...	20	.044	68.9...	z	23	5192.5...	23392.8	.558	1.049	1...	H...
28	M58	L2x2x3	.778	40.9...	22	.018	85.5...	y	19	3372.1...	23392.8	.558	.944	1...	H...
29	M59	L2x2x3	.687	40.9...	22	.018	0	y	10	3372.1...	23392.8	.558	.944	1...	H...
30	M60	L2x2x3	.683	41.8...	16	.015	85.5...	y	3	3372.1...	23392.8	.558	.944	1...	H...
31	M61	L2x2x3	.767	40.9...	14	.018	85.5...	y	24	3372.1...	23392.8	.558	.944	1...	H...
32	M62	L2x2x3	.677	40.9...	18	.014	85.5...	y	3	3372.1...	23392.8	.558	.944	1...	H...
33	M63	L2x2x3	.775	42.7...	15	.018	0	y	15	3372.1...	23392.8	.558	.944	1...	H...

8618 Westwood Center Drive, Suite 315, Vienna, VA 22182
703.276.1100 ● 703.276.1169 fax
info@sitesafe.com ● www.sitesafe.com

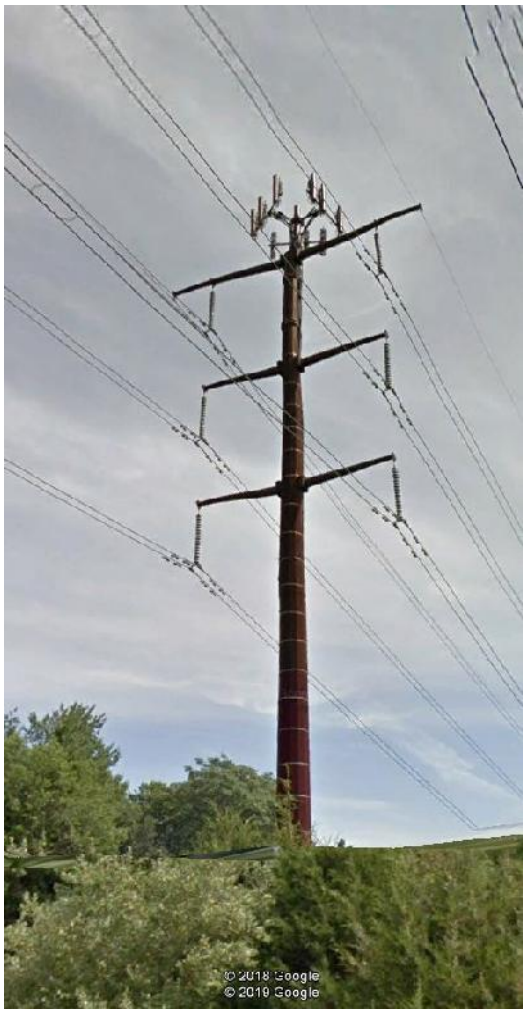

Smartlink on behalf of AT&T Mobility, LLC
Site FA – 10152334
Site ID – CT2343 (MRCTB033651-MRCTB033891-MRCTB033812-MRCTB033815-MRCTB034882)
USID – 121767
Site Name – ORANGE OVERLAND DRIVE

525 Overland Drive
Orange, CT 06477

Latitude: N41-17-21.70
Longitude: W73-0-03.90
Structure Type: Monopole

Report generated date: May 15, 2019
Report by: Yasir Alqadhili
Customer Contact: David Barbagallo

AT&T Mobility, LLC will be compliant when the remediation recommended in Section 5.2 or other appropriate remediation is implemented.

Sitesafe logo is a registered trademark of Site Safe, LLC. All rights reserved.

AT&T Proprietary (Internal use only). Not for use or disclosure outside the AT&T companies, except under written agreement. ©2019 AT&T Intellectual property. All rights reserved.

Table of Contents

1 GENERAL SITE SUMMARY 3

1.1 REPORT SUMMARY 3
1.2 FALL ARREST ANCHOR POINT SUMMARY 3
1.3 SIGNAGE SUMMARY 4

2 SCALE MAPS OF SITE 5

3 ANTENNA INVENTORY 7

4 EMISSION PREDICTIONS 8

5 SITE COMPLIANCE 11

5.1 SITE COMPLIANCE STATEMENT 11
5.2 ACTIONS FOR SITE COMPLIANCE 11

6 REVIEWER CERTIFICATION 12

APPENDIX A – STATEMENT OF LIMITING CONDITIONS 13

APPENDIX B – REGULATORY BACKGROUND INFORMATION 14

FCC RULES AND REGULATIONS 14
OSHA STATEMENT 15

APPENDIX C – SAFETY PLAN AND PROCEDURES 16

APPENDIX D – RF EMISSIONS 17

APPENDIX E – ASSUMPTIONS AND DEFINITIONS 18

GENERAL MODEL ASSUMPTIONS 18
USE OF GENERIC ANTENNAS 18

APPENDIX F – DEFINITIONS 19

APPENDIX G – REFERENCES 21

AT&T Proprietary (Internal use only). Not for use or disclosure outside the AT&T companies, except under written agreement. ©2019 AT&T Intellectual property. All rights reserved.

1 General Site Summary

1.1 Report Summary

AT&T Mobility, LLC	Summary
Max Cumulative Simulated RFE Level at antenna level	5,183.4% General Public Limit 1" in front of AT&T Mobility, LLC's Beta Sector Antenna 6
Max Cumulative Simulated RFE Level on the Ground	<1% General Public Limit
Compliant per FCC Rules and Regulations?	Will Be Compliant
Compliant per AT&T Mobility, LLC's Policy?	No

The following documents were provided by the client and were utilized to create this report:

RFDS: NEW-ENGLAND_CONNECTICUT_CTL02343_2019-LTE-Next-Carrier_LTE_mm093q_2051A0JD4X_10152334_121767_07-10-2018_Final-Approved_v3.00

CD's: 10152334_AE201_190417_CTL02343_REV2

RF Powers Used: AT&T Mobility, LLC Approved Default Power.

1.2 Fall Arrest Anchor Point Summary

Fall Arrest Anchor & Parapet Info	Parapet Available (Y/N)	Parapet Height (inches)	Fall Arrest Anchor Available (Y/N)
Roof Safety Info	N	N/A	N

AT&T Proprietary (Internal use only). Not for use or disclosure outside the AT&T companies, except under written agreement. ©2019 AT&T Intellectual property. All rights reserved.

1.3 Signage Summary

a. Pre-Site Visit AT&T Signage (Existing Signage)

AT&T Signage Locations	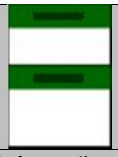								
	Information 1	Information 2	Notice	Notice 2	Caution	Caution 2	Warning	Warning 2	Barriers
Access Point(s)									
Alpha									
Beta									
Gamma									
AT&T EQ	**1**								

b. Proposed AT&T Signage

AT&T Signage Locations				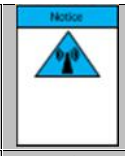					
	Information 1	Information 2	Notice	Notice 2	Caution	Caution 2	Warning	Warning 2	Barriers
Access Point(s)						**1**			
Alpha									
Beta									
Gamma									
AT&T EQ									

Note: Caution 2B at Monopole access ladder.

AT&T Proprietary (Internal use only). Not for use or disclosure outside the AT&T companies, except under written agreement. ©2019 AT&T Intellectual property. All rights reserved.

2 Scale Maps of Site

The following diagrams are included:

- Site Scale Map
- RF Exposure Diagram
- Elevation View

AT&T Proprietary (Internal use only). Not for use or disclosure outside the AT&T companies, except under written agreement. ©2019 AT&T Intellectual property. All rights reserved.

Site Scale Map For: ORANGE OVERLAND DRIVE

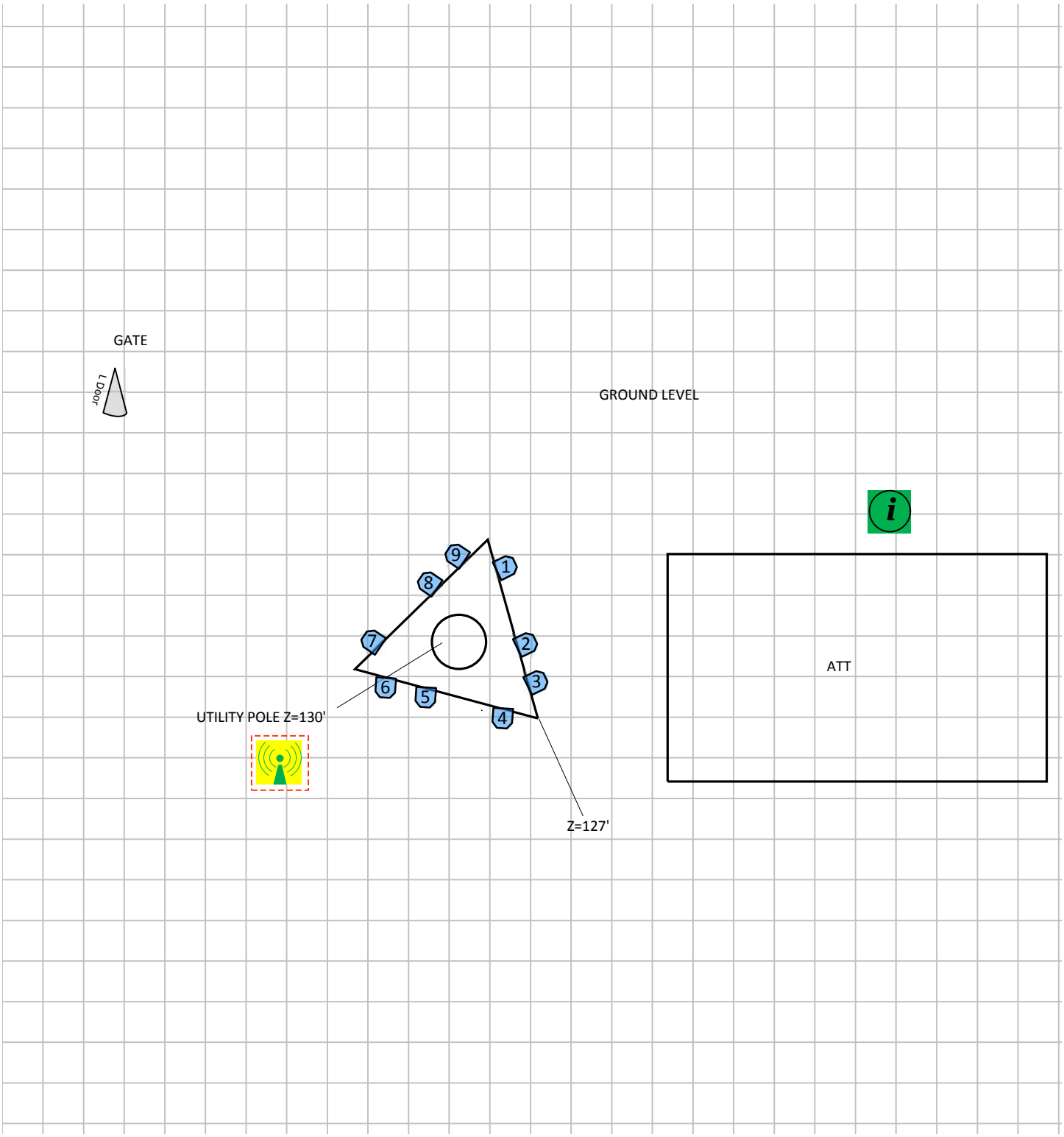

% of FCC Public Exposure Limit
Spatial average 0' - 6'

(Feet)

0 6.5 13

www.sitesafe.com
Site Name:ORANGE OVERLAND DRIVE
5/15/2019 2:17:56 PM

Carrier Identification

AT&T MOBILITY LLC | VERIZON WIRELESS | T-MOBILE | SPRINT | UNKNOWN CARRIER

Sign Legend

Caution 1 | Caution 2 | Notice 2 | Notice 1 | Warning | Warning 2 | Info 1 | Info 2 | RF Safety Plan

Barrier

Proposed Barriers/ Signs

3 Antenna Inventory

The following antenna inventory was obtained by the customer and was utilized to create the site model diagrams:

Ant ID	Operator	Antenna Make & Model	Type	TX Freq (MHz)	Technology	Az (Deg)	Hor BW (Deg)	Ant Len (ft)	Power	Power Type	Power Unit	Misc Loss	TX Count	Total ERP (Watts)	Ant Gain (dBd)	Z (AGL)	MDT	EDT
1	AT&T MOBILITY LLC (Proposed)	Quintel QS66512-2	Panel	722	LTE	30	69	6	80	TPO	Watt	0	1	1119.7	11.46	127'	0°	2°
1	AT&T MOBILITY LLC (Proposed)	Quintel QS66512-2	Panel	2300	LTE	30	64	6	100	TPO	Watt	0	1	2857.6	14.56	127'	0°	2°
1	AT&T MOBILITY LLC (Proposed)	Quintel QS66512-2	Panel	1900	LTE	30	68	6	160	TPO	Watt	0	1	4169.8	14.16	127'	0°	2°
1	AT&T MOBILITY LLC (Proposed)	Quintel QS66512-2	Panel	850	UMTS	30	63	6	40	TPO	Watt	0	1	499	10.96	127'	0°	2°
2	AT&T MOBILITY LLC (Proposed)	Andrew SBNH-1D6565B	Panel	763	LTE	30	70	6.1	160	TPO	Watt	0	1	3126.9	12.91	127'	0°	2°
3	AT&T MOBILITY LLC (Proposed)	Kathrein-Scala 800-10965	Panel	737	LTE	30	63.9	6.6	160	TPO	Watt	0	1	2845.2	12.5	126.7'	0°	2°
3	AT&T MOBILITY LLC (Proposed)	Kathrein-Scala 800-10965	Panel	2100	LTE	30	65.2	6.6	160	TPO	Watt	0	1	7114.1	16.48	126.7'	0°	3°
3	AT&T MOBILITY LLC (Proposed)	Kathrein-Scala 800-10965	Panel	850	LTE	30	61.7	6.6	80	TPO	Watt	0	1	1841.2	13.62	126.7'	0°	2°
3	AT&T MOBILITY LLC (Proposed)	Kathrein-Scala 800-10965	Panel	850	5G	30	61.7	6.6	80	TPO	Watt	0	0	1841.2	13.62	126.7'	0°	2°
4	AT&T MOBILITY LLC (Proposed)	Quintel QS66512-2	Panel	722	LTE	150	69	6	80	TPO	Watt	0	1	1119.7	11.46	127'	0°	2°
4	AT&T MOBILITY LLC (Proposed)	Quintel QS66512-2	Panel	2300	LTE	150	64	6	100	TPO	Watt	0	1	2857.6	14.56	127'	0°	2°
4	AT&T MOBILITY LLC (Proposed)	Quintel QS66512-2	Panel	1900	LTE	150	68	6	160	TPO	Watt	0	1	4169.8	14.16	127'	0°	2°
4	AT&T MOBILITY LLC (Proposed)	Quintel QS66512-2	Panel	850	UMTS	150	63	6	40	TPO	Watt	0	1	499	10.96	127'	0°	2°
5	AT&T MOBILITY LLC (Proposed)	Andrew SBNH-1D6565B	Panel	763	LTE	150	70	6.1	160	TPO	Watt	0	1	3126.9	12.91	127'	0°	2°
6	AT&T MOBILITY LLC (Proposed)	Kathrein-Scala 800-10965	Panel	737	LTE	150	63.9	6.6	160	TPO	Watt	0	1	2845.2	12.5	126.7'	0°	2°
6	AT&T MOBILITY LLC (Proposed)	Kathrein-Scala 800-10965	Panel	2100	LTE	150	65.2	6.6	160	TPO	Watt	0	1	7114.1	16.48	126.7'	0°	3°
6	AT&T MOBILITY LLC (Proposed)	Kathrein-Scala 800-10965	Panel	850	LTE	150	61.7	6.6	80	TPO	Watt	0	1	1841.2	13.62	126.7'	0°	2°
6	AT&T MOBILITY LLC (Proposed)	Kathrein-Scala 800-10965	Panel	850	5G	150	61.7	6.6	80	TPO	Watt	0	0	1841.2	13.62	126.7'	0°	2°
7	AT&T MOBILITY LLC (Proposed)	Quintel QS66512-2	Panel	722	LTE	270	69	6	80	TPO	Watt	0	1	1119.7	11.46	127'	0°	2°
7	AT&T MOBILITY LLC (Proposed)	Quintel QS66512-2	Panel	2300	LTE	270	64	6	100	TPO	Watt	0	1	2857.6	14.56	127'	0°	2°
7	AT&T MOBILITY LLC (Proposed)	Quintel QS66512-2	Panel	1900	LTE	270	68	6	160	TPO	Watt	0	1	4169.8	14.16	127'	0°	2°
7	AT&T MOBILITY LLC (Proposed)	Quintel QS66512-2	Panel	850	UMTS	270	63	6	40	TPO	Watt	0	1	499	10.96	127'	0°	2°
8	AT&T MOBILITY LLC (Proposed)	Andrew SBNH-1D6565B	Panel	763	LTE	270	70	6.1	160	TPO	Watt	0	1	3126.9	12.91	127'	0°	2°
9	AT&T MOBILITY LLC (Proposed)	Kathrein-Scala 800-10965	Panel	737	LTE	270	63.9	6.6	160	TPO	Watt	0	1	2845.2	12.5	126.7'	0°	2°
9	AT&T MOBILITY LLC (Proposed)	Kathrein-Scala 800-10965	Panel	2100	LTE	270	65.2	6.6	160	TPO	Watt	0	1	7114.1	16.48	126.7'	0°	3°
9	AT&T MOBILITY LLC (Proposed)	Kathrein-Scala 800-10965	Panel	850	LTE	270	61.7	6.6	80	TPO	Watt	0	1	1841.2	13.62	126.7'	0°	2°
9	AT&T MOBILITY LLC (Proposed)	Kathrein-Scala 800-10965	Panel	850	5G	270	61.7	6.6	80	TPO	Watt	0	0	1841.2	13.62	126.7'	0°	2°

Note: The Z reference indicates the bottom of the antenna height above the main site level unless otherwise indicated. Effective Radiated Power (ERP) is provided by the operator or based on Sitesafe experience. The values used in the modeling may be greater than are currently deployed. For other operators at this site the use of "Generic" as an antenna model or "Unknown" for a wireless operator means the information with regard to operator, their FCC license and/or antenna information was not available nor could it be secured while on site. Other operator's equipment, antenna models and powers used for modeling are based on obtained information or Sitesafe experience.

AT&T Proprietary (Internal use only). Not for use or disclosure outside the AT&T companies, except under written agreement. ©2019 AT&T Intellectual property. All rights reserved.

4 Emission Predictions

In the RF Exposure Simulations below all heights are reflected with respect to main site level. In most rooftop cases this is the height of the main rooftop and in other cases this can be ground level. Each different height area, rooftop, or platform level is labeled with its height relative to the main site level. Emissions are calculated appropriately based on the relative height and location of that area to all antennas. The total analyzed elevations in the below RF Exposure Simulations are listed below.

- GROUND LEVEL = 0'
- AT&T EQUIPMENT = 7"

The Antenna Inventory heights are referenced to the same level.

AT&T Proprietary (Internal use only). Not for use or disclosure outside the AT&T companies, except under written agreement. ©2019 AT&T Intellectual property. All rights reserved.

RF Exposure Simulation For: ORANGE OVERLAND DRIVE
Composite View

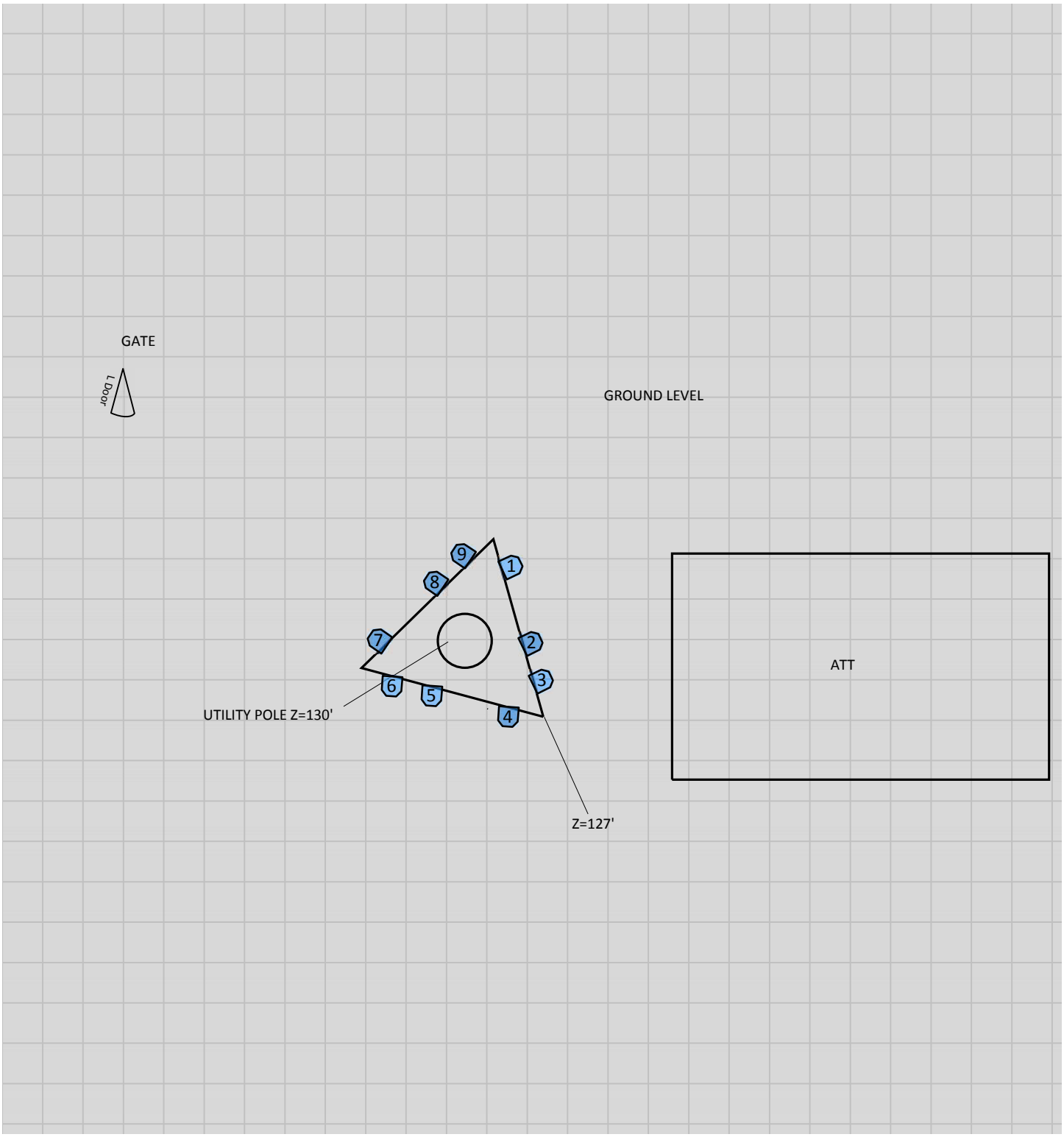

% of FCC Public Exposure Limit
Spatial average 0' - 6'

% of FCC Public Exposure Limit

>= 5000	>= 500	>= 100	>= 5	< 5

Carrier Identification

AT&T MOBILITY LLC · VERIZON WIRELESS · T-MOBILE · SPRINT · UNKNOWN CARRIER

Barrier · **Proposed Barriers/ Signs**

(Feet)

0 6.6 13.1

www.sitesafe.com
Site Name:ORANGE OVERLAND DRIVE
5/15/2019 2:11:35 PM

Sitesafe OET-65 Model
Near Field Boundary:
1.5 * Aperture
Reflection Factor: 1
Single Level (0)

RF Exposure Simulation For: ORANGE OVERLAND DRIVE
Elevation View – Northeast

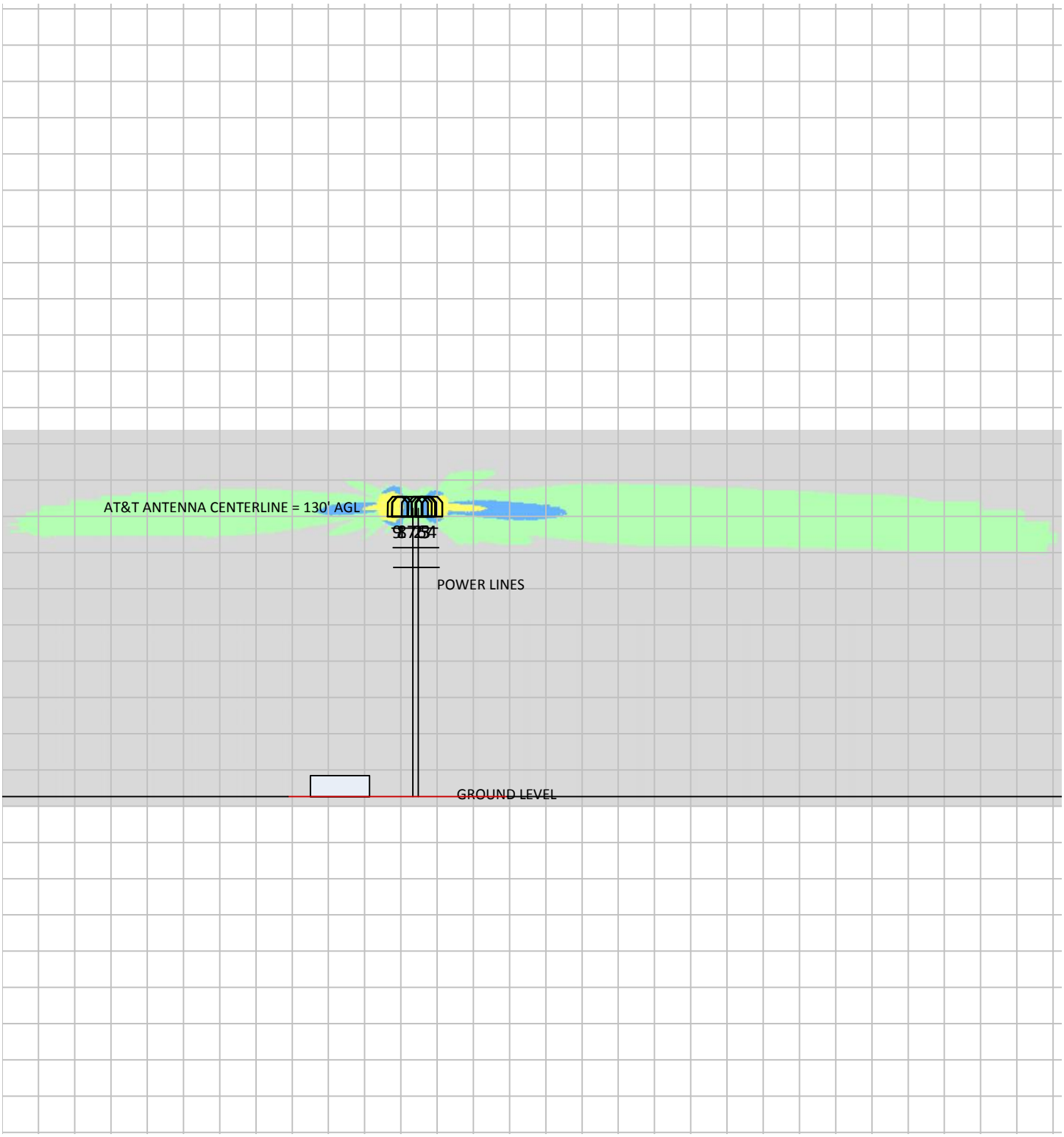

% of FCC Public Exposure Limit
Spatial average 0' - 6'

% of FCC Public Exposure Limit

>= 5000	>= 500	>= 100	>= 5	< 5

Carrier Identification

AT&T MOBILITY LLC · VERIZON WIRELESS · T-MOBILE · SPRINT · UNKNOWN CARRIER

Barrier · **Proposed Barriers/ Signs**

(Feet)

0 31.7 63.4

www.sitesafe.com
Site Name:ORANGE OVERLAND DRIVE
5/15/2019 2:15:36 PM

Sitesafe OET-65 Model
Near Field Boundary:
1.5 * Aperture
Reflection Factor: 1
Single Level (0)

5 Site Compliance

5.1 Site Compliance Statement

Upon evaluation of the cumulative RF emission levels from all operators at this site, RF hazard signage and antenna locations, Sitesafe has determined that:

AT&T Mobility, LLC will be compliant when the remediation recommended in Section 5.2 or other appropriate remediation is implemented.

The compliance determination is based on General Public RFE levels derived from theoretical modeling, RF signage placement, proposed antenna inventory and the level of restricted access to the antennas at the site. Any deviation from the AT&T Mobility, LLC's proposed deployment plan could result in the site being rendered non-compliant.

Modeling is used for determining compliance and the percentage of MPE contribution.

5.2 Actions for Site Compliance

Based on FCC regulations, common industry practice, and our understanding of AT&T Mobility, LLC RF Safety Policy requirements, this section provides a statement of recommendations for site compliance. Recommendations have been proposed based on our understanding of existing access restrictions, signage, and an analysis of predicted RFE levels.

AT&T Mobility, LLC will be made compliant if the following changes are implemented:

Monopole Access Location

(1) Yellow Caution 2B sign(s) required at tower access ladder.

Recommended per AT&T Mobility, LLC's Policy:

Site Equipment Location

Sitesafe recommends that all AT&T Mobility, LLC signage be removed from AT&T Equipment, as they are not required by AT&T Mobility, LLC's signage policy.

AT&T Proprietary (Internal use only). Not for use or disclosure outside the AT&T companies, except under written agreement. ©2019 AT&T Intellectual property. All rights reserved.

6 Reviewer Certification

The reviewer whose signature appears below hereby certifies and affirms:

That I am an employee of Site Safe, LLC, in Vienna, Virginia, at which place the staff and I provide RF compliance services to clients in the wireless communications industry; and

That I am thoroughly familiar with the Rules and Regulations of the Federal Communications Commission (FCC) as well as the regulations of the Occupational Safety and Health Administration (OSHA), both in general and specifically as they apply to the FCC Guidelines for Human Exposure to Radio Frequency Electromagnetic Fields; and

That I have thoroughly reviewed this Site Compliance Report and believe it to be true and accurate to the best of my knowledge as assembled by and attested to by Yasir Alqadhili.

May 15, 2019

AT&T Proprietary (Internal use only). Not for use or disclosure outside the AT&T companies, except under written agreement. ©2019 AT&T Intellectual property. All rights reserved.

Appendix A – Statement of Limiting Conditions

Sitesafe has provided computer generated model(s) in this Site Compliance Report to show approximate dimensions of the site, and the model is included to assist the reader of the compliance report to visualize the site area, and to provide supporting documentation for Sitesafe's recommendations.

Sitesafe may note in the Site Compliance Report any adverse physical conditions, such as needed repairs, that Sitesafe became aware of during the normal research involved in creating this report. Sitesafe will not be responsible for any such conditions that do exist or for any engineering or testing that might be required to discover whether such conditions exist. Because Sitesafe is not an expert in the field of mechanical engineering or building maintenance, the Site Compliance Report must not be considered a structural or physical engineering report.

Sitesafe obtained information used in this Site Compliance Report from sources that Sitesafe considers reliable and believes them to be true and correct. Sitesafe does not assume any responsibility for the accuracy of such items that were furnished by other parties. When conflicts in information occur between data collected by Sitesafe provided by a second party and data collected by Sitesafe, the data will be used.

AT&T Proprietary (Internal use only). Not for use or disclosure outside the AT&T companies, except under written agreement. ©2019 AT&T Intellectual property. All rights reserved.

Appendix B – Regulatory Background Information

FCC Rules and Regulations

In 1996, the Federal Communications Commission (FCC) adopted regulations for the evaluating of the effects of RF emissions in 47 CFR § 1.1307 and 1.1310. The guideline from the FCC Office of Engineering and Technology is Bulletin 65 ("OET Bulletin 65"), *Evaluating Compliance with FCC Guidelines for Human Exposure to Radio Frequency Electromagnetic Fields*, Edition 97-01, published August 1997. Since 1996 the FCC periodically reviews these rules and regulations as per their congressional mandate.

FCC regulations define two separate tiers of exposure limits: Occupational or "Controlled environment" and General Public or "Uncontrolled environment". The General Public limits are generally five times more conservative or restrictive than the Occupational limit. These limits apply to *accessible* areas where workers or the general public may be exposed to Radio Frequency (RF) electromagnetic fields.

Occupational or Controlled limits apply in situations in which persons are exposed as a consequence of their employment and where those persons exposed have been made fully aware of the potential for exposure and can exercise control over their exposure.

An area is considered a Controlled environment when access is limited to these aware personnel. Typical criteria are restricted access (i.e. locked or alarmed doors, barriers, etc.) to the areas where antennas are located coupled with proper RF warning signage. A site with Controlled environments is evaluated with Occupational limits.

All other areas are considered Uncontrolled environments. If a site has no access controls or no RF warning signage it is evaluated with General Public limits.

The theoretical modeling of the RF electromagnetic fields has been performed in accordance with OET Bulletin 65. The Maximum Permissible Exposure (MPE) limits utilized in this analysis are outlined in the following diagram:

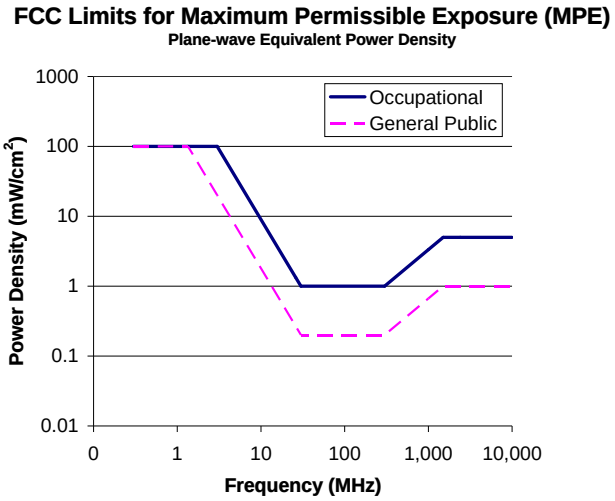

AT&T Proprietary (Internal use only). Not for use or disclosure outside the AT&T companies, except under written agreement. ©2019 AT&T Intellectual property. All rights reserved.

Limits for Occupational/Controlled Exposure (MPE)

Frequency Range (MHz)	Electric Field Strength (E) (V/m)	Magnetic Field Strength (H) (A/m)	Power Density (S) (mW/cm^2)	Averaging Time $\|E\|^2$, $\|H\|^2$ or S (minutes)
0.3-3.0	614	1.63	(100)*	6
3.0-30	1842/f	4.89/f	(900/f^2)*	6
30-300	61.4	0.163	1.0	6
300-1500	--	--	f/300	6
1500-100,000	--	--	5	6

Limits for General Population/Uncontrolled Exposure (MPE)

Frequency Range (MHz)	Electric Field Strength (E) (V/m)	Magnetic Field Strength (H) (A/m)	Power Density (S) (mW/cm^2)	Averaging Time $\|E\|^2$, $\|H\|^2$ or S (minutes)
0.3-1.34	614	1.63	(100)*	30
1.34-30	824/f	2.19/f	(180/f^2)*	30
30-300	27.5	0.073	0.2	30
300-1500	--	--	f/1500	30
1500-100,000	--	--	1.0	30

f = frequency in MHz *Plane-wave equivalent power density

OSHA Statement

The General Duty clause of the OSHA Act (Section 5) outlines the occupational safety and health responsibilities of the employer and employee. The General Duty clause in Section 5 states:

(a) Each employer –

(1) shall furnish to each of his employees employment and a place of employment which are free from recognized hazards that are causing or are likely to cause death or serious physical harm to his employees;
(2) shall comply with occupational safety and health standards promulgated under this Act.

(b) Each employee shall comply with occupational safety and health standards and all rules, regulations, and orders issued pursuant to this Act which are applicable to his own actions and conduct.

OSHA has defined Radiofrequency and Microwave Radiation safety standards for workers who may enter hazardous RF areas. Regulation Standards 29 CFR § 1910.147 identify a generic Lockout/Tagout procedure aimed to control the unexpected energization or startup of machines when maintenance or service is being performed.

AT&T Proprietary (Internal use only). Not for use or disclosure outside the AT&T companies, except under written agreement. ©2019 AT&T Intellectual property. All rights reserved.

Appendix C – Safety Plan and Procedures

The following items are general safety recommendations that should be administered on a site by site basis as needed by the carrier.

General Maintenance Work: Any maintenance personnel required to work immediately in front of antennas and / or in areas indicated as above 100% of the Occupational MPE limits should coordinate with the wireless operators to disable transmitters during their work activities.

Training and Qualification Verification: All personnel accessing areas indicated as exceeding the General Population MPE limits should have a basic understanding of EME awareness and RF Safety procedures when working around transmitting antennas. Awareness training increases a worker's understanding to potential RF exposure scenarios. Awareness can be achieved in a number of ways (e.g. videos, formal classroom lecture or internet-based courses).

Physical Access Control: Access restrictions to transmitting antennas locations is the primary element in a site safety plan. Examples of access restrictions are as follows:

- Locked door or gate
- Alarmed door
- Locked ladder access
- Restrictive Barrier at antenna (e.g. Chain link with posted RF Sign)

RF Signage: Everyone should obey all posted signs at all times. RF signs play an important role in properly warning a worker prior to entering into a potential RF Exposure area.

Assume all antennas are active: Due to the nature of telecommunications transmissions, an antenna transmits intermittently. Always assume an antenna is transmitting. Never stop in front of an antenna. If you have to pass by an antenna, move through as quickly and safely as possible thereby reducing any exposure to a minimum.

Maintain a 3 foot clearance from all antennas: There is a direct correlation between the strength of an EME field and the distance from the transmitting antenna. The further away from an antenna, the lower the corresponding EME field is.

Site RF Emissions Diagram: Section 4 of this report contains an RF Diagram that outlines various theoretical Maximum Permissible Exposure (MPE) areas at the site. The modeling is a worst-case scenario assuming a duty cycle of 100% for each transmitting antenna at full power. This analysis is based on one of two access control criteria: General Public criteria means the access to the site is uncontrolled and anyone can gain access. Occupational criteria means the access is restricted and only properly trained individuals can gain access to the antenna locations.

AT&T Proprietary (Internal use only). Not for use or disclosure outside the AT&T companies, except under written agreement. ©2019 AT&T Intellectual property. All rights reserved.

Appendix D – RF Emissions

The RF Emissions Simulation(s) in this report display theoretical spatially averaged percentage of the Maximum Permissible Exposure for all systems at the site unless otherwise noted. These diagrams use modeling as prescribed in OET Bulletin 65 and assumptions detailed in Appendix E.

The key at the bottom of each RF Emissions Simulation indicates percentages displayed referenced to FCC General Public Maximum Permissible Exposure (MPE) limits. Color coding on the diagram is as follows:

- Areas indicated as Gray are predicted to be below 5% of the MPE limits. Gray represents areas more than 20 times below the most conservative exposure limit. **Gray areas are accessible to anyone**.
- Green represents areas are predicted to be between 5% and 100% of the MPE limits. **Green areas are accessible to anyone.**
- Blue represents areas predicted to exceed the General Public MPE limits but are less than Occupational limits. **Blue areas should be accessible only to RF trained workers**.
- Yellow represents areas predicted to exceed Occupational MPE limits. **Yellow areas should be accessible only to RF trained workers able to assess current exposure levels.**
- Red represents areas predicted to have exposure more than 10 times the Occupational MPE limits. **Red indicates that the RF levels must be reduced prior to access.** An RF Safety Plan is required which outlines how to reduce the RF energy in these areas prior to access.

If trained occupational personnel require access to areas that are delineated as above 100% of the limit, Sitesafe recommends that they utilize the proper personal protection equipment (RF monitors), coordinate with the carriers to reduce or shutdown power, or make real-time power density measurements with the appropriate power density meter to determine real-time MPE levels. This will allow the personnel to ensure that their work area is within exposure limits.

AT&T Proprietary (Internal use only). Not for use or disclosure outside the AT&T companies, except under written agreement. ©2019 AT&T Intellectual property. All rights reserved.

Appendix E – Assumptions and Definitions

General Model Assumptions

In this site compliance report, it is assumed that all antennas are operating at **full power at all times**. Software modeling was performed for all transmitting antennas located on the site. Sitesafe has further assumed a 100% duty cycle and maximum radiated power.

The modeling is based on recommendations from the FCC's OET-65 bulletin with the following variances per AT&T guidance. Reflection has not been considered in the modeling, i.e. the reflection factor is 1.0. The near / far field boundary has been set to 1.5 times the aperture height of the antenna and modeling beyond that point is the lesser of the near field cylindrical model and the far field model taking into account the gain of the antenna.

The site has been modeled with these assumptions to show the maximum RF energy density. Areas modeled with exposure greater than 100% of the General Public MPE level may not actually occur but are shown as a prediction that could be realized. Sitesafe believes these areas to be safe for entry by occupationally trained personnel utilizing appropriate personal protective equipment (in most cases, a personal monitor).

Use of Generic Antennas

For the purposes of this report, the use of "Generic" as an antenna model, or "Unknown" for an operator means the information about a carrier, their FCC license and/or antenna information was not provided and could not be obtained while on site. In the event of unknown information, Sitesafe will use our industry specific knowledge of equipment, antenna models, and transmit power to model the site. If more specific information can be obtained for the unknown measurement criteria, Sitesafe recommends remodeling of the site utilizing the more complete and accurate data. Information about similar facilities is used when the service is identified and associated with a particular antenna. If no information is available regarding the transmitting service associated with an unidentified antenna, using the antenna manufacturer's published data regarding the antenna's physical characteristics makes more conservative assumptions.

Where the frequency is unknown, Sitesafe uses the closest frequency in the antenna's range that corresponds to the highest Maximum Permissible Exposure (MPE), resulting in a conservative analysis.

AT&T Proprietary (Internal use only). Not for use or disclosure outside the AT&T companies, except under written agreement. ©2019 AT&T Intellectual property. All rights reserved.

Appendix F – Definitions

5% Rule – The rules adopted by the FCC specify that, in general, at multiple transmitter sites actions necessary to bring the area into compliance with the guidelines are the shared responsibility of all licensees whose transmitters produce field strengths or power density levels at the area in question in excess of 5% of the exposure limits. In other words, any wireless operator that contributes 5% or greater of the MPE limit in an area that is identified to be greater than 100% of the MPE limit is responsible for taking corrective actions to bring the site into compliance.

Compliance – The determination of whether a site complies with FCC standards with regards to Human Exposure to Radio Frequency Electromagnetic Fields from transmitting antennas.

Decibel (dB) – A unit for measuring power or strength of a signal.

Duty Cycle – The percent of pulse duration to the pulse period of a periodic pulse train. Also, may be a measure of the temporal transmission characteristic of an intermittently transmitting RF source such as a paging antenna by dividing average transmission duration by the average period for transmission. A duty cycle of 100% corresponds to continuous operation.

Effective (or Equivalent) Isotropic Radiated Power (EIRP) – The product of the power supplied to the antenna and the antenna gain in a given direction relative to an isotropic antenna.

Effective Radiated Power (ERP) – The product of the power supplied to the antenna and the antenna gain in a given direction relative to a half-wave dipole antenna.

Gain (of an antenna) – The ratio of the maximum power in a given direction to the maximum power in the same direction from an isotropic radiator. Gain is a measure of the relative efficiency of a directional antenna as compared to an omnidirectional antenna.

General Population/Uncontrolled Environment – Defined by the FCC as an area where RF exposure may occur to persons who are **unaware** of the potential for exposure and who have no control over their exposure. General Population is also referenced as General Public.

Generic Antenna – For the purposes of this report, the use of "Generic" as an antenna model means the antenna information was not provided and could not be obtained while on site. In the event of unknown information, Sitesafe will use its industry specific knowledge of antenna models to select a worst-case scenario antenna to model the site.

Isotropic Antenna – An antenna that is completely non-directional. In other words, an antenna that radiates energy equally in all directions.

Maximum Measurement – This measurement represents the single largest measurement recorded when performing a spatial average measurement.

Maximum Permissible Exposure (MPE) – The rms and peak electric and magnetic field strength, their squares, or the plane-wave equivalent power densities associated with these fields to which a person may be exposed without harmful effect and with acceptable safety factor.

AT&T Proprietary (Internal use only). Not for use or disclosure outside the AT&T companies, except under written agreement. ©2019 AT&T Intellectual property. All rights reserved.

Occupational/Controlled Environment – Defined by the FCC as an area where RF exposure may occur to persons who are **aware** of the potential for exposure as a condition of employment or specific activity and can exercise control over their exposure.

OET Bulletin 65 – Technical guideline developed by the FCC's Office of Engineering and Technology to determine the impact of RF exposure on humans. The guideline was published in August 1997.

OSHA (Occupational Safety and Health Administration) – Under the Occupational Safety and Health Act of 1970, employers are responsible for providing a safe and healthy workplace for their employees. OSHA's role is to promote the safety and health of America's working men and women by setting and enforcing standards; providing training, outreach and education; establishing partnerships; and encouraging continual process improvement in workplace safety and health. For more information, visit www.osha.gov.

Radio Frequency Exposure or Electromagnetic Fields – Electromagnetic waves that are propagated from antennas through space.

Spatial Average Measurement – A technique used to average a minimum of ten (10) measurements taken in a ten (10) second interval from zero (0) to six (6) feet. This measurement is intended to model the average energy a 6-foot tall human body will absorb while present in an electromagnetic field of energy.

Transmitter Power Output (TPO) – The radio frequency output power of a transmitter's final radio frequency stage as measured at the output terminal while connected to a load.

AT&T Proprietary (Internal use only). Not for use or disclosure outside the AT&T companies, except under written agreement. ©2019 AT&T Intellectual property. All rights reserved.

Appendix G – References

The following references can be followed for further information about RF Health and Safety.

Site Safe, LLC
http://www.sitesafe.com
FCC Radio Frequency Safety
http://www.fcc.gov/encyclopedia/radio-frequency-safety
National Council on Radiation Protection and Measurements (NCRP)
http://www.ncrponline.org
Institute of Electrical and Electronics Engineers, Inc., (IEEE)
http://www.ieee.org
American National Standards Institute (ANSI)
http://www.ansi.org
Environmental Protection Agency (EPA)
http://www.epa.gov/radtown/wireless-tech.html
National Institutes of Health (NIH)
http://www.niehs.nih.gov/health/topics/agents/emf/
Occupational Safety and Health Agency (OSHA)
http://www.osha.gov/SLTC/radiofrequencyradiation/
International Commission on Non-Ionizing Radiation Protection (ICNIRP)
http://www.icnirp.org
World Health Organization (WHO)
http://www.who.int/peh-emf/en/
National Cancer Institute
http://www.cancer.gov/cancertopics/factsheet/Risk/cellphones
American Cancer Society (ACS)
http://www.cancer.org/docroot/PED/content/PED_1_3X_Cellular_Phone_Towers.asp?siteearea=PED
European Commission Scientific Committee on Emerging and Newly Identified Health Risks
http://ec.europa.eu/health/ph_risk/committees/04_scenihr/docs/scenihr_o_022.pdf
Fairfax County, Virginia Public School Survey
http://www.fcps.edu/fts/safety-security/RFEESurvey/
UK Health Protection Agency Advisory Group on Non-Ionizing Radiation
http://www.hpa.org.uk/webw/HPAweb&HPAwebStandard/HPAweb_C/1317133826368
Norwegian Institute of Public Health
http://www.fhi.no/dokumenter/545eea7147.pdf

AT&T Proprietary (Internal use only). Not for use or disclosure outside the AT&T companies, except under written agreement. ©2019 AT&T Intellectual property. All rights reserved.