STATE OF CONNECTICUT

CONNECTICUT SITING COUNCIL

Ten Franklin Square, New Britain, CT 06051
Phone: (860) 827-2935 Fax: (860) 827-2950
E-Mail: siting.council@ct.gov
www.ct.gov/csc

April 21, 2011

Douglas L. Culp, Real Estate Consultant
New Cingular Wireless PCS, LLC
500 Enterprise Drive
Rocky Hill, CT 06067-3900

RE: **EM-CING-107-110330** - New Cingular Wireless PCS, LLC notice of intent to modify an existing telecommunications facility located at 525 Orange Center Road, Orange, Connecticut.

Dear Mr. Culp:

The Connecticut Siting Council (Council) hereby acknowledges your notice to modify this existing telecommunications facility, pursuant to Section 16-50j-73 of the Regulations of Connecticut State Agencies with the following conditions:

- Any deviation from the proposed modification as specified in this notice and supporting materials with Council shall render this acknowledgement invalid;
- Any material changes to this modification as proposed shall require the filing of a new notice with the Council;
- Not less than 45 days after completion of construction, the Council shall be notified in writing that construction has been completed;
- The validity of this action shall expire one year from the date of this letter; and
- The applicant may file a request for an extension of time beyond the one year deadline provided that such request is submitted to the Council not less than 60 days prior to the expiration;

The proposed modifications including the placement of all necessary equipment and shelters within the tower compound are to be implemented as specified here and in your notice dated March 30, 2011. The modifications are in compliance with the exception criteria in Section 16-50j-72 (b) of the Regulations of Connecticut State Agencies as changes to an existing facility site that would not increase tower height, extend the boundaries of the tower site, increase noise levels at the tower site boundary by six decibels, and increase the total radio frequencies electromagnetic radiation power density measured at the tower site boundary to or above the standard adopted by the State Department of Environmental Protection pursuant to General Statutes § 22a-162. This facility has also been carefully modeled to ensure that radio frequency emissions are conservatively below State and federal standards applicable to the frequencies now used on this tower.

This decision is under the exclusive jurisdiction of the Council. Please be advised that the validity of this action shall expire one year from the date of this letter. Any additional change to this facility will require explicit notice to this agency pursuant to Regulations of Connecticut State Agencies Section 16-50j-73. Such notice shall include all relevant information regarding the proposed change with cumulative worst-case modeling of radio frequency exposure at the closest point of uncontrolled access to the tower base, consistent with Federal Communications Commission, Office of Engineering and Technology, Bulletin 65. Thank you for your attention and cooperation.

Very truly yours,

Linda Roberts

Linda Roberts
Executive Director

LR/CDM/laf

c: The Honorable James M. Zeoli, First Selectman, Town of Orange
Paul Dinice, Zoning Enforcement Officer, Town of Orange
Kenneth C. Baldwin, Esq., Robinson & Cole LLP

G:\EM\CINGULAR\Orange\dc042111OrangeCenterRd.DOC

CSC
CONNECTICUT SITING COUNCIL

STATE OF CONNECTICUT

CONNECTICUT SITING COUNCIL

Ten Franklin Square, New Britain, CT 06051
Phone: (860) 827-2935 Fax: (860) 827-2950
E-Mail: siting.council@ct.gov
www.ct.gov/csc

April 7, 2011

The Honorable James M. Zeoli
First Selectman
Town of Orange
Town Hall
617 Orange Center Road
Orange, CT 06477-2423

RE: **EM-CING-107-110330** - New Cingular Wireless PCS, LLC notice of intent to modify an existing telecommunications facility located at 525 Orange Center Road, Orange, Connecticut.

Dear First Selectman Zeoli:

The Connecticut Siting Council (Council) received this request to modify an existing telecommunications facility, pursuant to Regulations of Connecticut State Agencies Section 16-50j-72.

If you have any questions or comments regarding this proposal, please call me or inform the Council by April 21, 2011.

Thank you for your cooperation and consideration.

Very truly yours,

Linda Roberts

Linda Roberts
Executive Director

LR/jbw

Enclosure: Notice of Intent

c: Paul Dinice, Zoning Enforcement Officer, Town of Orange

G:\EM\CINGULAR\Orange\zeoli7.DOC

CSC
CONNECTICUT SITING COUNCIL

EM-CING-107-110330

New Cingular Wireless PCS, LLC
500 Enterprise Drive
Rocky Hill, Connecticut 06067-3900
Phone: (860) 463-5511
Fax: (860) 513-7190

Douglas L. Culp
Real Estate Consultant

ORIGINAL

HAND DELIVERED

March 30, 2011

RECEIVED
MAR 30 2011
CONNECTICUT
SITING COUNCIL

Ms. Linda Roberts
Executive Director
Connecticut Siting Council
10 Franklin Square
New Britain, Connecticut 06051

Re: New Cingular Wireless PCS, LLC notice of intent to modify an existing telecommunications facility located at 525 Orange Center Road Orange, CT (owner Verizon Wireless)

Dear Ms. Roberts:

In order to accommodate technological changes, implement Uniform Mobile Telecommunications System ("UMTS") and/or Long Term Evolution ("LTE") capabilities, and enhance system performance in the State of Connecticut, New Cingular Wireless PCS, LLC ("AT&T") plans to modify the equipment configurations at many of its existing cell sites. Please accept this letter and attachments as notification, pursuant to R.C.S.A. Section 16-50j-73, of construction which constitutes an exempt modification pursuant to R.C.S.A. Section 16-50j-72(b)(2). In compliance with R.C.S.A. Section 16-50j-73, a copy of this letter and attachments is being sent to the chief elected official of the municipality in which the affected cell site is located.

UMTS technology offers services to mobile computer and phone users anywhere in the world. Based on the Global System for Mobile ("GSM") communication standard, UMTS is the planned worldwide standard for mobile users. UMTS, fully implemented, gives computer and phone users high-speed access to the Internet as they travel. They have the same capabilities even when they roam, through both terrestrial wireless and satellite transmissions.

LTE is a new high-performance air interface for cellular mobile communications, designed to increase the capacity and speed of mobile telephone networks.

Attached is a summary of the planned modifications, including power density calculations reflecting the change in AT&T's operations at the site. Also included is documentation of the structural sufficiency of the tower to accommodate the revised antenna configuration.

The changes to the facility do not constitute modifications as defined in Connecticut General Statutes ("C.G.S.") Section 16-50i(d) because the general physical characteristics of the facility will not be significantly changed or altered. Rather, the planned changes to the facility fall squarely within those activities explicitly provided for in R.C.S.A. Section 16-50j-72(b)(2).

1. The height of the overall structure will be unaffected.

2. The proposed changes will not extend the site boundaries. There will be no effect on the site compound other than some enlarged equipment pads as may be noted in the attachments.

3. The proposed changes will not increase the noise level at the existing facility by six decibels or more.

4. Radio frequency power density may increase due to use of one or more GSM channel for UMTS transmissions. Moreover, LTE will utilize additional radio frequencies newly-licensed by the FCC for cellular mobile communications. However, the changes will not increase the calculated "worst case" power density for the combined operations at the site to a level at or above the applicable standard for uncontrolled environments as calculated for a mixed frequency site.

For the foregoing reasons, New Cingular Wireless respectfully submits that the proposed changes at the referenced site constitute exempt modifications under R.C.S.A. Section 16-50j-72(b)(2).

Please feel free to call me at (860) 463-5511 with questions concerning this matter. Thank you for your consideration.

Sincerely,

Douglas L. Culp
Real Estate Consultant

Attachments

NEW CINGULAR WIRELESS PCS, LLC
Equipment Modification

525 Orange Center Road
Site Number CT2174

Tower Owner/Manager: Verizon Wireless

Equipment configuration: Monopole

Current and/or approved: Six PowerWave antennas @ 145 ft
PowerWave TMA's (6) and Diplexer's (12) @ 145 ft
Twelve runs 1 1/4 inch coax to 145 ft
Equipment Shelter

Planned Modifications: Retain existing PowerWave Diplexers and TMA's at 145 ft
Retain existing PowerWave Antennas @ 145 ft
Retain all Coax Cabling
Install three PowerWave P65-16 antennas or equivalent @ 145 ft
Install six Ericsson RRUS 11 remote radio heads @ 145 ft
Install one RayCap DC6-48-60-18-8F surge protector @ 145 ft
Install one fiber and two DC power cables to 145 ft

Power Density:

Worst-case calculations for existing wireless operations at the site, using standard parameters for other carriers, indicate a radio frequency electromagnetic radiation power density, measured at ground level beside the Tower, of approximately 31.5% of the standard adopted by the FCC. As depicted in the second table below, the total radio frequency electromagnetic radiation power density following proposed modifications would be approximately 41.6 % of the standard.

Existing

Company	Centerline Ht (feet)	Frequency (MHz)	Number of Channels	Power Per Channel (Watts)	Power Density (mW/cm^2)	Standard Limits (mW/cm^2)	Percent of Limit
Other Users							25.14
AT&T UMTS	145	1900 Band	1	500	0.0086	1.0000	0.86
AT&T UMTS	145	800 Band	1	500	0.0086	0.5867	1.46
AT&T GSM	145	800Band	3	296	0.0152	0.5867	2.59
AT&T GSM	145	1900 Band	2	427	0.0146	1.0000	1.46
Total							**31.5%**

* Data for other users are from Siting Council records.

Proposed

Company	Centerline Ht (feet)	Frequency (MHz)	Number of Channels	Power Per Channel (Watts)	Power Density (mW/cm^2)	Standard Limits (mW/cm^2)	Percent of Limit
Other Users							25.14
AT&T UMTS	107	800 Band	1	500	0.0157	0.5867	2.68
AT&T UMTS	107	1900 Band	2	500	0.0314	1.0000	3.14
AT&T GSM	107	1900 Band	2	427	0.0268	1.0000	2.68
AT&T GSM	107	880 - 894	3	296	0.0279	0.5867	4.75
AT&T LTE	107	740 - 746	1	500	0.0157	0.4933	3.18
Total							**41.6%**

* Data for other users are from Siting Council records.

Structural information:

The attached structural analysis demonstrates that the monopole and foundation have adequate structural capacity to accommodate the proposed modifications. (CENTEK dated 3-29-11)

WIRELESS COMMUNICATIONS FACILITY

CT2174
ORANGE - CENTRAL
525 ORANGE CENTER RD
ORANGE, CT 06477

SITE DIRECTIONS

FROM: 500 ENTERPRISE DRIVE
ROCKY HILL, CONNECTICUT

TO: 525 ORANGE CENTER ROAD
ORANGE, CT

1. Start out going NE on Enterprise Drive toward Capitol Blvd;	0.4 mi.
2. Turn LEFT onto Capitol Blvd;	0.3 mi.
3. Turn LEFT onto West Street;	0.3 mi.
4. Merge onto I-91 s via ramp on the Left toward New Haven;	9.7 mi.
5. Merge onto CT-34 E/DERBY AV/DERBY TNPK VIA EXIT 57 toward ORANGE;	22.0 mi.
6. Turn slight Right onto Orange Center Road / CT-152;	0.7 mi.
7. 525 Orange Center Road is on the Left;	2.1 mi.

GENERAL NOTES

1. ALL WORK SHALL BE IN ACCORDANCE WITH THE 2005 INTERNATIONAL BUILDING CODE AS MODIFIED BY THE 2009 CONNECTICUT SUPPLEMENT, INCLUDING THE TIA/EIA-222 REVISION "F" "STRUCTURAL STANDARDS FOR STEEL ANTENNA TOWERS AND SUPPORTING STRUCTURES," 2005 CONNECTICUT FIRE SAFETY CODE AND 2009 AMENDMENTS, NATIONAL ELECTRICAL CODE AND LOCAL CODES.
2. THE COMPOUND, TOWER, PRIMARY GROUND RING, ELECTRICAL SERVICE TO THE METER BANK AND TELEPHONE SERVICE TO THE DEMARCATION POINT ARE PROVIDED BY SITE OWNER. AS BUILT FIELD CONDITIONS REGARDING THESE ITEMS SHALL BE CONFIRMED BY THE CONTRACTOR. SHOULD ANY FIELD CONDITIONS PRECLUDE COMPLIANCE WITH THE DRAWINGS, THE CONTRACTOR SHALL IMMEDIATELY NOTIFY THE ENGINEER AND SHALL NOT PROCEED WITH ANY AFFECTED WORK.
3. CONTRACTOR SHALL REVIEW ALL DRAWINGS AND SPECIFICATIONS IN THE CONTRACT DOCUMENT SET. CONTRACTOR SHALL COORDINATE ALL WORK SHOWN IN THE SET OF DRAWINGS. THE CONTRACTOR SHALL PROVIDE A COMPLETE SET OF DRAWINGS TO ALL SUBCONTRACTORS AND ALL RELATED PARTIES. THE SUBCONTRACTORS SHALL EXAMINE ALL THE DRAWINGS AND SPECIFICATIONS FOR THE INFORMATION THAT AFFECTS THEIR WORK.
4. CONTRACTOR SHALL PROVIDE A COMPLETE BUILD-OUT WITH ALL FINISHES, STRUCTURAL, MECHANICAL, AND ELECTRICAL COMPONENTS AND PROVIDE ALL ITEMS AS SHOWN OR INDICATED ON THE DRAWINGS OR IN THE WRITTEN SPECIFICATIONS.
5. CONTRACTOR SHALL FURNISH ALL MATERIAL, LABOR AND EQUIPMENT TO COMPLETE THE WORK AND FURNISH A COMPLETED JOB ALL IN ACCORDANCE WITH LOCAL AND STATE GOVERNING AUTHORITIES AND OTHER AUTHORITIES HAVING LAWFUL JURISDICTION OVER THE WORK.
6. CONTRACTOR SHALL SECURE AND PAY FOR ALL PERMITS AND ALL INSPECTIONS REQUIRED AND SHALL ALSO PAY FEES REQUIRED FOR THE GENERAL CONSTRUCTION, PLUMBING, ELECTRICAL AND HVAC. PERMITS SHALL BE PAID FOR BY THE RESPECTIVE SUBCONTRACTORS.
7. CONTRACTOR SHALL MAINTAIN A CURRENT SET OF DRAWINGS AND SPECIFICATIONS ON SITE AT ALL TIMES AND INSURE DISTRIBUTION OF NEW DRAWINGS TO SUBCONTRACTORS AND OTHER RELEVANT PARTIES AS SOON AS THEY ARE MADE AVAILABLE. ALL OLD DRAWINGS SHALL BE MARKED VOID AND REMOVED FROM THE CONTRACT AREA. THE CONTRACTOR SHALL FURNISH AN "AS-BUILT" SET OF DRAWINGS TO OWNER UPON COMPLETION OF PROJECT.
8. LOCATION OF EQUIPMENT, AND WORK SUPPLIED BY OTHERS THAT IS DIAGRAMMATICALLY INDICATED ON THE DRAWINGS SHALL BE DETERMINED BY THE CONTRACTOR. THE CONTRACTOR SHALL DETERMINE LOCATIONS AND DIMENSIONS SUBJECT TO STRUCTURAL CONDITIONS AND WORK OF THE SUBCONTRACTORS.
9. THE CONTRACTOR IS SOLELY RESPONSIBLE TO DETERMINE CONSTRUCTION PROCEDURE AND SEQUENCE, AND TO ENSURE THE SAFETY OF THE EXISTING STRUCTURES AND ITS COMPONENT PARTS DURING CONSTRUCTION. THIS INCLUDES THE ADDITION OF WHATEVER SHORING, BRACING, UNDERPINNING, ETC. THAT MAY BE NECESSARY. MAINTAIN EXISTING BUILDING'S/PROPERTY'S OPERATIONS, COORDINATE WORK WITH BUILDING/PROPERTY OWNER.
10. DRAWINGS INDICATE THE MINIMUM STANDARDS, BUT IF ANY WORK SHOULD BE INDICATED TO BE SUBSTANDARD TO ANY ORDINANCES, LAWS, CODES, RULES, OR REGULATIONS BEARING ON THE WORK, THE CONTRACTOR SHALL INCLUDE IN HIS WORK AND SHALL EXECUTE THE WORK CORRECTLY IN ACCORDANCE WITH SUCH ORDINANCES, LAWS, CODES, RULES OR REGULATIONS WITH NO INCREASE IN COSTS.
11. ALL UTILITY WORK SHALL BE IN ACCORDANCE WITH LOCAL UTILITY COMPANY REQUIREMENTS AND SPECIFICATIONS.
12. ALL EQUIPMENT AND PRODUCTS PURCHASED ARE TO BE REVIEWED BY CONTRACTOR AND ALL APPLICABLE SUBCONTRACTORS FOR ANY CONDITION PER MFR.'S RECOMMENDATIONS. CONTRACTOR TO SUPPLY THESE ITEMS AT NO COST TO OWNER OR CONSTRUCTION MANAGER.
13. ANY AND ALL ERRORS, DISCREPANCIES, AND "MISSED" ITEMS ARE TO BE BROUGHT TO THE ATTENTION OF THE AT&T CONSTRUCTION MANAGER DURING THE BIDDING PROCESS BY THE CONTRACTOR. ALL THESE ITEMS ARE TO BE INCLUDED IN THE BID. NO 'EXTRA' WILL BE ALLOWED FOR MISSED ITEMS.
14. CONTRACTOR SHALL BE RESPONSIBLE FOR ALL ON-SITE SAFETY FROM THE TIME THE JOB IS AWARDED UNTIL ALL WORK IS COMPLETE AND ACCEPTED BY THE OWNER.
15. CONTRACTOR TO REVIEW ALL SHOP DRAWINGS AND SUBMIT COPY TO ENGINEER FOR APPROVAL. DRAWINGS MUST BEAR THE CHECKER'S INITIALS BEFORE SUBMITTING TO THE CONSTRUCTION MANAGER FOR REVIEW.
16. THE CONTRACTOR SHALL FIELD VERIFY ALL DIMENSIONS, ELEVATIONS, ANGLES, AND EXISTING CONDITIONS AT THE SITE, PRIOR TO FABRICATION AND/OR INSTALLATION OF ANY WORK IN THE CONTRACT AREA.
17. COORDINATION, LAYOUT, FURNISHING AND INSTALLATION OF CONDUIT AND ALL APPURTENANCES REQUIRED FOR PROPER INSTALLATION OF ELECTRICAL AND TELECOMMUNICATION SERVICE SHALL BE THE SOLE RESPONSIBILITY OF THE CONTRACTOR.
18. ALL EQUIPMENT AND PRODUCTS PURCHASED ARE TO BE REVIEWED BY CONTRACTOR AND ALL APPLICABLE SUB-CONTRACTORS FOR ANY CONDITION PER THE MANUFACTURER'S RECOMMENDATIONS. CONTRACTOR TO SUPPLY THESE ITEMS AT NO COST TO OWNER OR CONSTRUCTION MANAGER.
19. ALL DAMAGE CAUSED TO ANY EXISTING STRUCTURE SHALL BE THE SOLE RESPONSIBILITY OF THE CONTRACTOR. THE CONTRACTOR WILL BE HELD LIABLE FOR ALL REPAIRS REQUIRED FOR EXISTING STRUCTURES IF DAMAGED DURING CONSTRUCTION ACTIVITIES.
20. THE CONTRACTOR SHALL CONTACT "CALL BEFORE YOU DIG" AT LEAST 48 HOURS PRIOR TO ANY EXCAVATIONS AT 1-800-922-4455. ALL UTILITIES SHALL BE IDENTIFIED AND CLEARLY MARKED PRIOR TO ANY EXCAVATION WORK. CONTRACTOR SHALL MAINTAIN AND PROTECT MARKED UTILITIES THROUGHOUT PROJECT COMPLETION.
21. CONTRACTOR SHALL COMPLY WITH OWNERS ENVIRONMENTAL ENGINEER ON ALL METHODS AND PROVISIONS FOR ALL EXCAVATION ACTIVITIES INCLUDING SOIL DISPOSAL. ALL BACKFILL MATERIALS TO BE PROVIDED BY THE CONTRACTOR.

VICINITY MAP

SCALE: 1" = 1000'

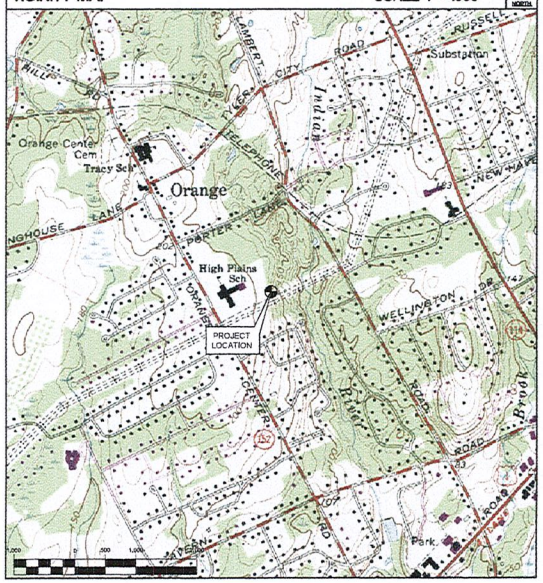

PROJECT SUMMARY

1. THE PROPOSED SCOPE OF WORK GENERALLY CONSISTS OF THE INSTALLATION OF ONE (1) LTE ANTENNA PER SECTOR FOR A TOTAL OF (3) LTE ANTENNAS TO THE EXISTING AT&T ANTENNA ARRAY. AN LTE BASEBAND EQUIPMENT UNIT (RBS) WILL BE INSTALLED WITHIN THE EXISTING AT&T EQUIPMENT SHELTER.
2. ADDITIONALLY, (2) REMOTE RADIO UNITS (RRUs) PER SECTOR WILL BE INSTALLED IN PROXIMITY OF THE PROPOSED LTE ANTENNAS. SURGE ARRESTORS WILL BE INSTALLED AT BOTH AT&T RRU AND EQUIPMENT LOCATIONS. REFER TO THESE ACCOMPANYING DRAWINGS FOR FURTHER INFORMATION.

PROJECT INFORMATION

AT&T SITE NUMBER:	CT2174
AT&T SITE NAME:	ORANGE - CENTRAL
SITE ADDRESS:	525 ORANGE CENTER ROAD ORANGE, CT 06477
LESSEE/APPLICANT:	AT&T MOBILITY 500 ENTERPRISE DRIVE, SUITE 3A ROCKY HILL, CT 06067
ENGINEER:	CENTEK ENGINEERING, INC. 63-2 NORTH BRANFORD RD. BRANFORD, CT. 06405
PROJECT COORDINATES:	LATITUDE: 41°-18'-25.3" N LONGITUDE: 73°-1'-7.8" W GROUND ELEVATION: ±191' AMSL

SHEET INDEX

SHT. NO.	DESCRIPTION	REV.
T-1	TITLE SHEET	1
N-1	NOTES AND SPECIFICATIONS	1
C-1	PLANS AND ELEVATION	1
C-2	LTE SYSTEM EQUIPMENT PLANS & DETAILS	1
E-1	ELECTRICAL DETAILS AND NOTES	1
E-2	ELECTRICAL DETAILS	1

DESIGNED BY:	CFC
DRAWN BY:	DEB
CHK'D BY:	CFC

REV.	DATE	DRAWN BY	CHK'D BY	
1	3/30/11	DEB	CFC	CONSTRUCTION
0	2/28/11	DMD	CFC	CONSTRUCTION - CLIENT REVIEW

PROFESSIONAL ENGINEER SEAL

CENTEK engineering
Centered on Solutions
(203) 488-0580
(203) 488-8587 Fax
63-2 North Branford Road
Branford, CT 06405
www.CentekEng.com

AT&T MOBILITY
WIRELESS COMMUNICATIONS FACILITY
SITE NUMBER: CT2174
SITE NAME: ORNAGE - CENTRAL
525 ORANGE CENTER ROAD
ORANGE, CT 06477

DATE: 02/28/11
SCALE: AS NOTED
JOB NO. 11021.C025

TITLE SHEET

T-1

Sheet No. 1 of 6

STRUCTURAL SPECIFICATIONS

DESIGN BASIS

GOVERNING CODE: 2003 INTERNATIONAL BUILDING CODE (IBC) AS MODIFIED BY THE 2005 CONNECTICUT STATE BUILDING CODE AND 2009 AMENDMENTS.

1. DESIGN CRITERIA:
   - WIND LOAD: PER EIA/TIA 222 F-96 (ANTENNA MOUNTS): 90 MPH (FASTEST MILE), EQUIVALENT TO 110 MPH (3 SECOND GUST).
   - BASIC WIND SPEED (OTHER STRUCTURE): 110 MPH (3 SECOND GUST) (EXPOSURE B/IMPORTANCE FACTOR 1.0 BASED ON ASCE 7-02) PER 2003 INTERNATIONAL BUILDING CODE (IBC) AS MODIFIED BY THE 2005 CONNECTICUT SUPPLEMENT AND 2009 AMMENDMENT.
   - SEISMIC LOAD (DOES NOT CONTROL): PER ASCE 7-95 MINIMUM DESIGN LOADS FOR BUILDINGS AND OTHER STRUCTURES.

GENERAL NOTES

1. IF ANY FIELD CONDITIONS EXIST WHICH PRECLUDE COMPLIANCE WITH THE DRAWINGS, THE CONTRACTOR SHALL IMMEDIATELY NOTIFY THE ENGINEER AND SHALL PROCEED WITH AFFECTED WORK AFTER CONFLICT IS SATISFACTORILY RESOLVED.
2. DIMENSIONS AND DETAILS SHALL BE CHECKED AGAINST THE PRE MANUFACTURED EQUIPMENT BUILDING SHOP DRAWINGS.
3. THE CONTRACTOR SHALL VERIFY AND COORDINATE THE SIZE AND LOCATION OF ALL OPENINGS, SLEEVES AND ANCHOR BOLTS AS REQUIRED BY ALL TRADES.
4. REFER TO DRAWING T1 FOR ADDITIONAL NOTES AND REQUIREMENTS.

SITE NOTES

1. THE CONTRACTOR SHALL CALL UTILITIES PRIOR TO THE START OF CONSTRUCTION.
2. ACTIVE EXISTING UTILITIES, WHERE ENCOUNTERED IN THE WORK, SHALL BE PROTECTED AT ALL TIMES. THE ENGINEER SHALL BE NOTIFIED IMMEDIATELY, PRIOR TO PROCEEDING, SHOULD ANY UNCOVERED EXISTING UTILITY PRECLUDE COMPLETION OF THE WORK IN ACCORDANCE WITH THE CONTRACT DOCUMENTS.
3. ALL RUBBISH, STUMPS, DEBRIS, STICKS, STONES AND OTHER REFUSE SHALL BE REMOVED OFF SITE AND BE LEGALLY DISPOSED, AT NO ADDITIONAL COST.
4. THE SITE SHALL BE GRADED TO CAUSE SURFACE WATER TO FLOW AWAY FROM THE EQUIPMENT AND TOWER AREAS.
5. NO FILL OR EMBANKMENT MATERIAL SHALL BE PLACED ON FROZEN GROUND. FROZEN MATERIALS, SNOW OR ICE SHALL NOT BE PLACED IN ANY FILL OR EMBANKMENT.
6. THE SUBGRADE SHALL BE COMPACTED AND BROUGHT TO A SMOOTH UNIFORM GRADE PRIOR TO FINISHED SURFACE APPLICATION.
7. THE AREAS OF THE COMPOUND DISTURBED BY THE WORK SHALL BE RETURNED TO THEIR ORIGINAL CONDITION.
8. CONTRACTOR SHALL MINIMIZE DISTURBANCE TO EXISTING SITE DURING CONSTRUCTION. EROSION CONTROL MEASURES, SHALL BE IN CONFORMANCE WITH THE LOCAL GUIDELINES FOR EROSION AND SEDIMENT CONTROL.

EARTHWORK NOTES

1. COMPACTED GRAVEL FILL SHALL BE FURNISHED AND PLACED AS A FOUNDATION FOR STRUCTURES, WHERE SHOWN ON THE CONTRACT DRAWINGS OR DIRECTED BY THE ENGINEER.
2. CRUSHED STONE FILL SHALL BE PLACED IN 12" MAX. LIFTS AND CONSOLIDATED USING A HAND OPERATED VIBRATORY PLATE COMPACTOR WITH A MINIMUM OF 2 PAQSSES OF COMPACTOR PER LIFT.
3. COMPACTED GRAVEL FILL TO BE WELL GRADED BANK RUN GRAVEL MEETING THE FOLLOWING GRADATION REQUIREMENTS:

SIEVE DESIGNATION	% PASSING
1 ½"	100
No. 4	40-70
No. 100	5-20
No. 200	4-8

4. CRUSHED STONE TO BE UNIFORMLY GRADED, CLEAN, HARD PROCESS AGGREGATE MEETING THE FOLLOWING GRADATION REQUIREMENTS:

SIEVE DESIGNATION	% PASSING
1"	100
¾"	90-100
½"	0-15
⅜"	0-5

5. SELECT BACKFILL FOR FOUNDATION WALLS SHALL BE FREE OF ORGANIC MATERIAL, TOPSOIL, DEBRIS AND BOULDERS LARGER THAN 6".
6. GRAVEL AND GRANULAR FILL SHALL BE INSTALLED IN 8" MAX. LIFTS. COMPACTED TO 95% MIN. AT MAX. DRY DENSITY.
7. NON WOVEN GEOTEXTILE FOR SEPARATION PURPOSES SHALL BE MIRAFI 140N, OR ENGINEER APPROVED EQUAL.

FOUNDATION CONSTRUCTION NOTES

1. ALL FOOTINGS SHALL BE PLACED ON SUITABLE, COMPACTED SOIL HAVING ADEQUATE BEARING CAPACITY AND FREE OF ORGANIC CONTENT, CLAY, OR OTHER UNSUITABLE MATERIAL. ADDITIONAL EXCAVATION MAY BE REQUIRED BELOW FOOTING ELEVATIONS INDICATED IF UNSUITABLE MATERIAL IS ENCOUNTERED.
2. SUBGRADE PREPARATION: IF UNSUITABLE SOIL IS ENCOUNTERED, REMOVE ALL UNSUITABLE MATERIALS FROM BELOW PROPOSED STRUCTURE FOUNDATIONS AND COMPACT EXPOSED SOIL SURFACES. PLACE AND COMPACT APPROVED GRAVEL FILL. PLACEMENT OF ALL COMPACTED FILL MUST BE UNDER SUPERVISION OF AN APPROVED TESTING LABORATORY. FILL SHALL BE COMPACTED IN LAYERS NOT TO EXCEED 10" BEFORE COMPACTION. DETERMINE MAXIMUM DRY DENSITY IN ACCORDANCE WITH ASTM D1557-70 AND MAKE ONE (1) FIELD DENSITY TEST IN ACCORDANCE WITH ASTM D2167-66 FOR EACH 50 CUBIC YARDS OF COMPACTED FILL. BUT NOT LESS THAN ONE (1) PER LAYER, TO INSURE COMPACTION TO 95% OF MAX. DRY DENSITY.
3. ALL SOIL SURROUNDING AND UNDER ALL FOOTINGS SHALL BE KEPT REASONABLY DRY AND PROTECTED FROM FREEZING AND FROST ACTION DURING THE COURSE OF CONSTRUCTION.
4. WHERE GROUNDWATER IS ENCOUNTERED, DEWATERING SHALL BE ACCOMPLISHED CONTINUOUSLY AND COMPLETELY DURING FOUNDATION CONSTRUCTION. PROVIDE CRUSHED STONE AS REQUIRED TO STABILIZE FOOTING SUBGRADE.
5. ALL FOOTINGS ARE TO REST ON FIRM SOIL, REGARDLESS OF ELEVATIONS SHOWN ON THE DRAWINGS, BUT IN NO CASE MAY FOOTING ELEVATIONS BE HIGHER THAN INDICATED ON THE FOUNDATION PLAN, UNLESS SPECIFICALLY DIRECTED BY THE ENGINEER.

CONCRETE CONSTRUCTION NOTES

1. CONCRETE CONSTRUCTION SHALL CONFORM TO THE FOLLOWING STANDARDS:

   ACI 211 – STANDARD PRACTICE FOR SELECTING PROPORTIONS FOR NORMAL AND HEAVYWEIGHT CONCRETE.

   ACI 301 – SPECIFICATIONS FOR STRUCTURAL CONCRETE FOR BUILDINGS.

   ACI 302 – GUIDE FOR CONCRETE FLOOR AND SLAB CONSTRUCTION

   ACI 304 – RECOMMENDED PRACTICE FOR MEASURING, MIXING, TRANSPORTING, AND PLACING CONCRETE.

   ACI 306.1 STANDARD SPECIFICATION FOR COLD WEATHER CONCRETING

   ACI 318 – BUILDING CODE REQUIREMENTS FOR REINFORCED CONCRETE.
2. CONCRETE SHALL DEVELOP COMPRESSIVE STRENGTH IN 28 DAYS AS FOLLOWS:

   SLABS ON GRADE 4,000 PSI
   ALL OTHER CONCRETE 3,000 PSI

   - PORTLAND CEMENT: ASTM C150, TYPE II, (540 LBS/CUBIC YARD)
   - AGGREGATE: ASTM C33, No. 67, TYPICAL
   - WATER: POTABLE WITH MAXIMUM WATER CEMENT RATIO OF .55
   - SLUMP: 3" TO 4"
   - ADMIXTURES: USE AIR ENTRAINING ADGENT CONFORMING TO ASTM C260 WITH 4 TO 6% TOTAL AIR. USE WATER REDUCING AGENT CONFORMING TO ASTM C494, TYPE A, IN ALL CONCRETE. CALCIUM CHLORIDE MAY NOT BE USED TO ACCELERATE THE CONCRETE SETTING TIME.
3. REINFORCING STEEL SHALL BE 60,000 PSI YIELD STRENGTH.
4. WELDED WIRE FABRIC SHALL CONFORM TO ASTM- A-185.
5. ALL DETAILING, FABRICATION, AND ERECTION OF REINFORCING BARS, UNLESS OTHERWISE NOTED, MUST FOLLOW THE LATEST ACI CODE AND LATEST ACI "MANUAL OF STANDARD PRACTICE FOR DETAILING REINFORCED CONCRETE STRUCTURES".
6. CONCRETE COVER OVER REINFORCING SHALL CONFORM TO THE FOLLOWING, UNLESS OTHERWISE SHOWN:

   BOTTOM OF FOOTINGS 3 INCHES

   SURFACES NOT EXPOSED TO EARTH OR WEATHER 1-1/2 INCHES
7. NO STEEL WIRE, METAL FORM TIES, OR ANY OTHER METAL SHALL REMAIN WITHIN THE REQUIRED COVER OF ANY CONCRETE SURFACE.
8. ALL REINFORCEMENT SHALL BE CONTINUOUS UNLESS OTHERWISE NOTED. SPLICES SHALL BE WELL STAGGERED. ADDITIONAL BARS AND SPECIAL BENDING DETAILS ARE REQUIRED AT INTERSECTING WALLS AND AT JOINTS. SUCH DETAILS SHALL COMPLY WITH ACI 315 RECOMMENDATIONS UNLESS OTHERWISE SHOWN.
9. NO TACK WELDING OF REINFORCING WILL BE PERMITTED.
10. NO CALCIUM CHLORIDE OR ADMIXTURES CONTAINING MORE THAN 1% CHLORIDE BY WEIGHT OF ADMIXTURE SHALL BE USED IN THE CONCRETE.
11. UNLESS OTHERWISE NOTED, ALL LAP SPLICES SHALL BE 48 BAR DIAMETERS.
12. SLAB ON GRADE FINISHES:

    EXTERIOR SLAB: NON-SLIP BROOM FINISH
    INTERIOR SLAB: STEEL TROWEL FINISH

GENERAL NOTES (REFERENCE)

CONTRACTOR TO REFER TO THE GENERAL NOTES ON SHEET T-1 FOR ADDITIONAL INFORMATION.

DESIGNED BY:	CFC
DRAWN BY:	DEB
CHK'D BY:	CFC

REV.	DATE	DRAWN BY	CHK'D BY	
1	3/30/11	DEB	CFC	CONSTRUCTION
0	2/28/11	DAB	CFC	CONSTRUCTION - CLIENT REVIEW

PROFESSIONAL ENGINEER SEAL

at&t

SAI communications

CENTEK engineering
Centered on Solutions™
(203) 488-0580
(203) 488-8587 Fax
63-2 North Branford Road
Branford, CT 06405
www.CentekEng.com

AT&T MOBILITY
WIRELESS COMMUNICATIONS FACILITY
SITE NUMBER: CT2174
SITE NAME: ORNAGE - CENTRAL
525 ORANGE CENTER ROAD
ORANGE, CT 06477

DATE:	02/28/11
SCALE:	AS NOTED
JOB NO.	11021.C025

NOTES AND SPECIFICATIONS

N-1

Sheet No. 2 of 5

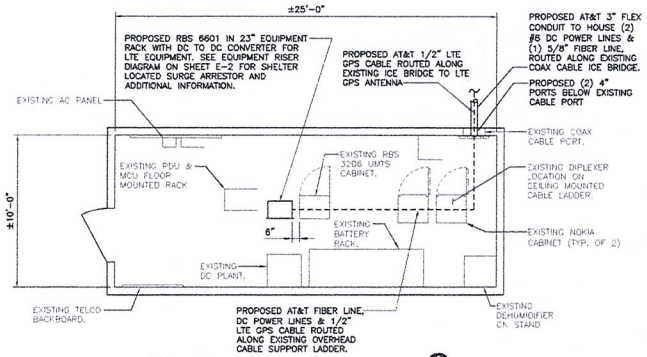

3 / C-1 **EQUIPMENT SHELTER PLAN**
SCALE: 1/4" = 1'-0"

TRUE NORTH

GRAPHIC SCALE
(IN FEET)
1 inch = 4'-0"ft.

REFER TO FINAL AT&T RF ENGINEER'S RF RADIO PLAN PRIOR TO INSTALLATION OF ANTENNAS AND COAX

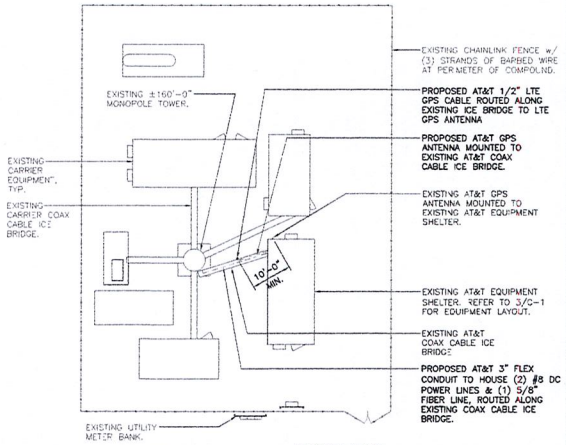

1 / C-1 **COMPOUND PLAN**
SCALE: 1" = 15'

TRUE NORTH

GRAPHIC SCALE
(IN FEET)
1 inch = 15 ft.

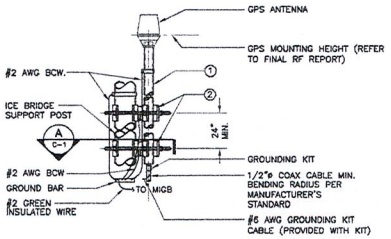

GPS ANTENNA MOUNTING BRACKET

BILL OF MATERIALS		
ITEM	DESCRIPTION	QUANTITY
1	2-1/2"ø SCH. 40 x 8'-0" LG. MAX SS OR GALV. PIPE	1
2	UNIVERSAL CLAMP SET.	2

A / C-1 **SECTION**
NOT TO SCALE

NOTES:

1. THE ELEVATION AND LOCATION OF THE GPS ANTENNA SHALL BE IN ACCORDANCE WITH THE FINAL RF REPORT AND COORDINATED WITH AT&T CONSTRUCTION MANAGER.
2. THE GPS ANTENNA MOUNT IS DESIGNED TO FASTEN TO A STANDARD 2-1/2" DIAMETER, SCHEDULE 40, GALVANIZED STEEL OR STAINLESS STEEL PIPE. THE PIPE MUST NOT BE THREADED AT THE ANTENNA MOUNT END. THE PIPE SHALL BE CUT TO THE REQUIRED LENGTH (MINIMUM OF 24 INCHES) USING A HAND OR ROTARY PIPE CUTTER TO ASSURE A SMOOTH AND PERPENDICULAR CUT. A HACK SAW SHALL NOT BE USED. THE CUT PIPE END SHALL BE DEBURRED AND SMOOTH IN ORDER TO SEAL AGAINST THE NEOPRENE GASKET ATTACHED TO THE ANTENNA MOUNT.
3. ATTACH TO ICE BRIDGE POST NEAREST ANTENNA CABLE PORT AT EQUIPMENT.
4. PRIOR TO INSTALLATION CONTRACTOR SHALL TEST GPS LOCATION WITH HAND HELD AND MOVE GPS ANTENNA TO OTHER ICE BRIDGE POSTS AS REQUIRED TO ACHIEVE ADEQUATE SIGNAL. FAILURE TO ACHIEVE ADEQUATE SIGNAL WITH A HAND HELD GPS SHALL BE REPORTED TO CONSTRUCTION MANAGER AND ENGINEER TO DETERMINE ALTERNATE INSTALLATION LOCATION FOR GPS ANTENNA.

4 / C-1 **GPS GROUNDING/MOUNTING BRACKET DETAILS**
NOT TO SCALE

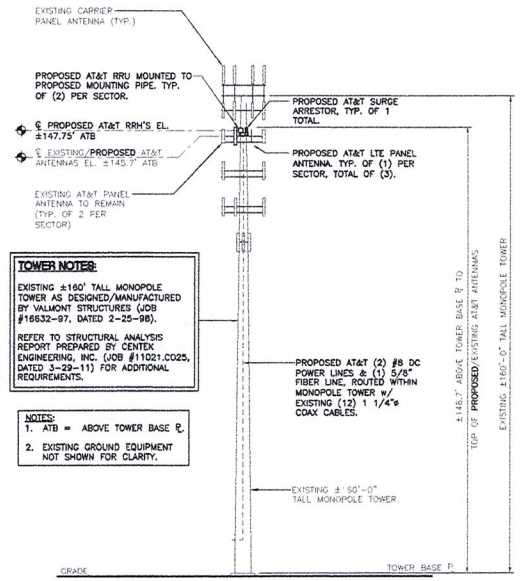

TOWER NOTES:

EXISTING ±160' TALL MONOPOLE TOWER AS DESIGNED/MANUFACTURED BY VALMONT STRUCTURES (JOB #16632-97, DATED 2-25-98).

REFER TO STRUCTURAL ANALYSIS REPORT PREPARED BY CENTEK ENGINEERING, INC. (JOB #11021.C025, DATED 3-29-11) FOR ADDITIONAL REQUIREMENTS.

NOTES:
1. ATB = ABOVE TOWER BASE ℄.
2. EXISTING GROUND EQUIPMENT NOT SHOWN FOR CLARITY.

2 / C-1 **TOWER ELEVATION**
SCALE: 1" = 20'

GRAPHIC SCALE
(IN FEET)
1 inch = 20 ft.

DESIGNED BY:	CFC
DRAWN BY:	DEB
CHK'D BY:	CFC

REV.	DATE	DRAWN BY	CHK'D BY	
1	3/30/11	DEB	CFC	CONSTRUCTION
0	2/28/11	DMO	CFC	CONSTRUCTION - CLIENT REVIEW

PROFESSIONAL ENGINEER SEAL

at&t

SAI communications

CENTEK engineering
Centered on Solutions™
(203) 488-0580
(203) 488-8587 Fax
63-2 North Branford Road
Branford, CT 06405
www.CentekEng.com

AT&T MOBILITY
WIRELESS COMMUNICATIONS FACILITY
SITE NUMBER: CT2174
SITE NAME: ORNAGE - CENTRAL
525 ORANGE CENTER ROAD
ORANGE, CT 06477

DATE: 02/28/11
SCALE: AS NOTED
JOB NO. 11021.C025

PLANS AND ELEVATION

C-1

Sheet No. 3 of 6

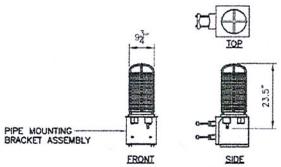

SURGE ARRESTOR				
SITE TYPE	ARRESTOR MAKE/MODEL	QTY REQUIRED	ARRESTOR LOCATION	WEIGHT
TOWER	MAKE: RAYCAP (SQUID) MODEL: DC6-48-60-18-8F	(1) PER SITE	TOWER, ADJACENT TO AT&T ANTENNAS AND RRUs.	20 LBS. (WITHOUT MOUNT)

NOTES:
1. CONTRACTOR TO COORDINATE FINAL SURGE ARRESTOR MODEL SELECTION(S) WITH AT&T CONSTRUCTION MANAGER PRIOR TO ORDERING.
2. CONTRACTOR TO INSTALL ARRESTOR IN CONFORMANCE WITH MANUFACTURERS RECOMMENDATIONS.

9 / C-2 SURGE ARRESTOR DETAIL
NOT TO SCALE

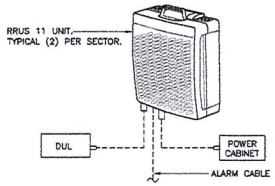

RRU (REMOTE RADIO UNIT)			
EQUIPMENT	DIMENSIONS	WEIGHT	CLEARANCES
MAKE: ERRICSON MODEL: RRUS 11	17.8"L x 17.3"W x 7.2"D	BAND 4: 44 LBS. BAND 12: 50 LBS.	ABOVE: 16" MIN. BELOW: 12" MIN. SIDE: 0" MIN.

NOTES:
1. CONTRACTOR TO COORDINATE FINAL EQUIPMENT MODEL SELECTION WITH AT&T CONSTRUCTION MANAGER PRIOR TO ORDERING.

8 / C-2 RRU DETAIL
NOT TO SCALE

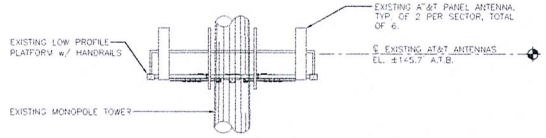

2 / C-2 EXISTING ANTENNA SECTOR ELEVATION
SCALE: 3/16" = 1'-0"

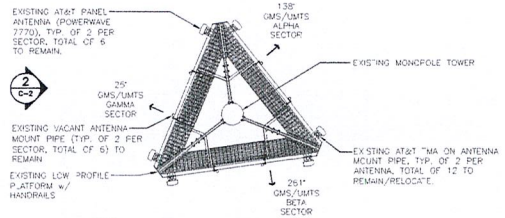

1 / C-2 EXISTING ANTENNA PLAN
SCALE: 3/16" = 1'-0"

NORTH

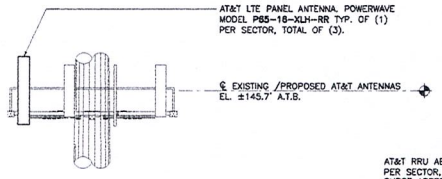

NOTE:
REPLACE EXISTING ANTENNA MOUNT PIPE AS REQUIRED TO ACCOMMODATE PROPOSED LTE ANTENNA

4 / C-2 PROPOSED ANTENNA SECTOR ELEVATION
SCALE: 3/16" = 1'-0"

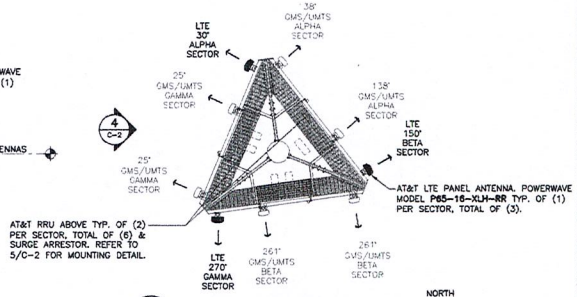

NORTH

3 / C-2 PROPOSED ANTENNA PLAN
SCALE: 3/16" = 1'-0"

REFER TO FINAL AT&T RF ENGINEER'S RF RADIO PLAN PRIOR TO INSTALLATION OF ANTENNAS AND COAX

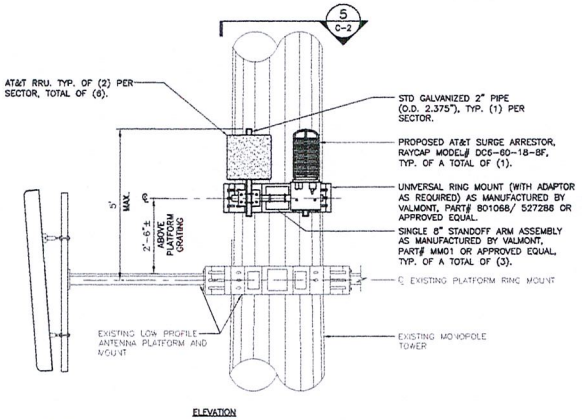

ELEVATION

7 / C-2 RRU AND SURGE ARRESTOR MOUNTING DETAIL
SCALE: 1/2" = 1'- 0"

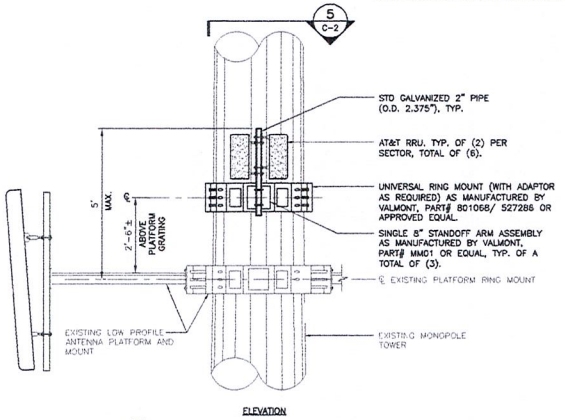

ELEVATION

6 / C-2 RRU MOUNTING DETAIL
SCALE: 1/2" = 1'- 0"

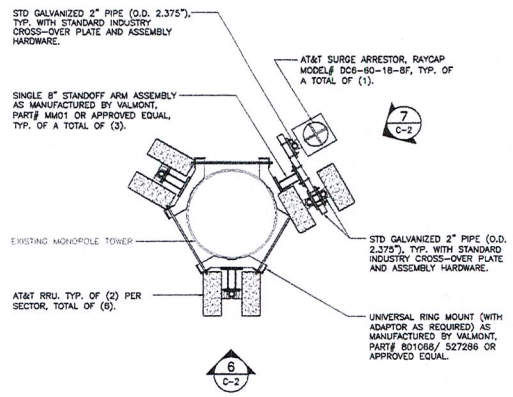

5 / C-2 RRU AND SURGE ARRESTOR PLAN
SCALE: 1/2" = 1'- 0"

DESIGNED BY:	CFC
DRAWN BY:	DEB
CHK'D BY:	CFC

REV.	DATE	DRAWN BY	CHK'D BY	
1	3/30/11	DEB	CFC	CONSTRUCTION - CLIENT REVIEW
0	2/28/11	DMD	CFC	CONSTRUCTION

PROFESSIONAL ENGINEER SEAL

at&t

SAI communications

CENTEK engineering
Centered on Solutions™
(203) 488-0580
(203) 488-8587 Fax
63-2 North Branford Road
Branford, CT 06405
www.CentekEng.com

AT&T MOBILITY
WIRELESS COMMUNICATIONS FACILITY
SITE NUMBER: CT2174
SITE NAME: ORNAGE - CENTRAL
525 ORANGE CENTER ROAD
ORANGE, CT 06477

DATE: 02/28/11
SCALE: AS NOTED
JOB NO. 11021.C025

LTE SYSTEM EQUIPMENT PLANS AND DETAILS

C-2

Sheet No. 4 of 6

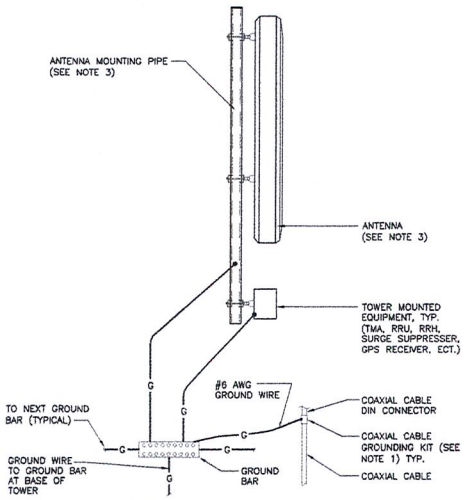

NOTES:

1. BOND COAXIAL CABLE GROUND KITS TO EACH OWNER'S GROUND BAR ALONG ENTIRE COAX RUN FROM ANTENNA TO SHELTER.
2. BOND ALL EQUIPMENT TO GROUND PER NEC AND MANUFACTURERS SPECIFICATIONS.
3. DETAIL IS TYPICAL FOR ALL ANTENNA SECTORS, INCLUDING GPS ANTENNA.

1 / E-1 TYPICAL ANTENNA GROUNDING DETAIL

NOT TO SCALE

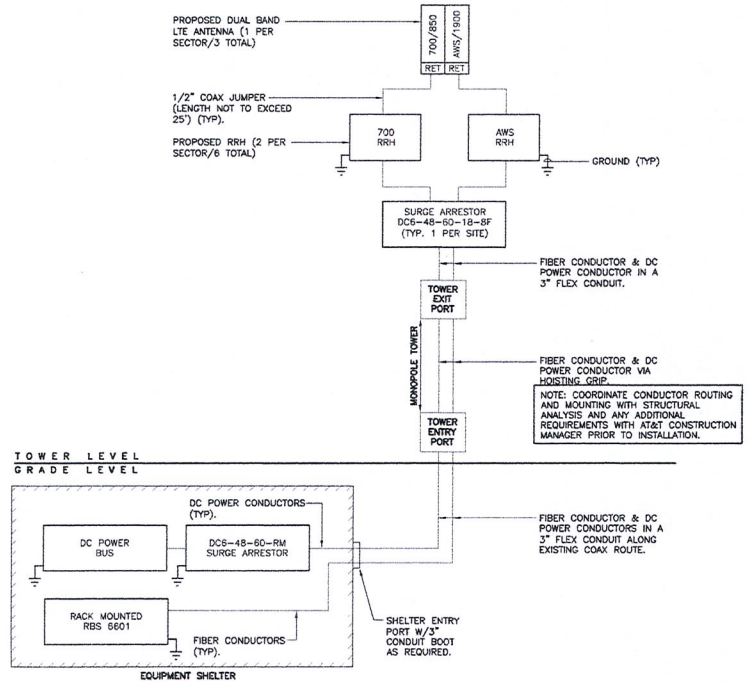

NOTES:

1. CONTRACTOR TO CONFIRM ALL PARTS.
2. INSTALL ALL EQUIPMENT TO MANUFACTURERS RECOMMENDATIONS.

2 / E-1 LTE SCHEMATIC DIAGRAM

NOT TO SCALE

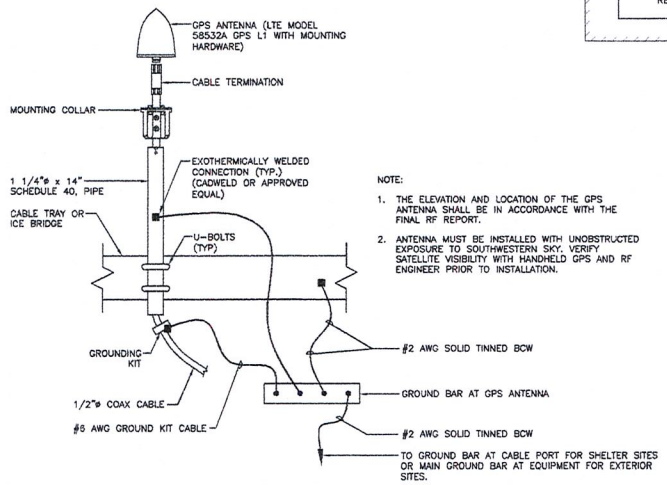

NOTE:

1. THE ELEVATION AND LOCATION OF THE GPS ANTENNA SHALL BE IN ACCORDANCE WITH THE FINAL RF REPORT.
2. ANTENNA MUST BE INSTALLED WITH UNOBSTRUCTED EXPOSURE TO SOUTHWESTERN SKY. VERIFY SATELLITE VISIBILITY WITH HANDHELD GPS AND RF ENGINEER PRIOR TO INSTALLATION.

3 / E-1 GPS MOUNTED TO CABLE TRAY / ICE BRIDGE

NOT TO SCALE

ELECTRICAL NOTES

1. PRIOR TO START OF CONSTRUCTION CONTRACTOR SHALL COORDINATE WITH OWNER FOR ALL CONSTRUCTION STANDARDS AND SPECIFICATIONS, AND ALL MANUFACTURER DOCUMENTATION FOR ALL EQUIPMENT TO BE INSTALLED.
2. INSTALL ALL EQUIPMENT IN ACCORDANCE WITH LOCAL BUILDING CODE, NATIONAL ELECTRIC CODE, OWNER AND MANUFACTURER'S SPECIFICATIONS.
3. CONNECT ALL NEW EQUIPMENT TO EXISTING TELCO AS REQUIRED BY MANUFACTURER.
4. MAINTAIN ALL CLEARANCES REQUIRED BY NEC AND EQUIPMENT MANUFACTURER.
5. PRIOR TO INSTALLATION CONTRACTOR SHALL MEASURE EXISTING ELECTRICAL LOAD AND VERIFY EXISTING AVAILABLE CAPACITY FOR PROPOSED INSTALLATION. IF INADEQUATE CAPACITY IS AVAILABLE, CONTRACTOR SHALL COORDINATE WITH LOCAL ELECTRIC UTILITY COMPANY TO UPGRADE EXISTING ELECTRIC SERVICE.
6. CONTRACTOR SHALL INSPECT EXISTING GROUNDING AND LIGHTNING PROTECTION SYSTEM AND ENSURE THAT IT IS IN COMPLIANCE WITH NEC, AND SITE OWNER'S SPECIFICATIONS. THE RESULTS OF THIS INSPECTION SHALL BE PRESENTED TO OWNERS REPRESENTATIVE, AND ANY DEFICIENCIES SHALL BE CORRECTED.
7. ALL TRANSMISSION TOWER SITES CONTAIN AN EXTENSIVE BURIED GROUNDING SYSTEM. ALL GROUNDING WORK MUST BE COORDINATED WITH, AND APPROVED BY, THE TOWER OWNER'S SITE REPRESENTATIVE. ALL OF THE TOWER OWNER'S SPECIFICATIONS MUST BE STRICTLY FOLLOWED.
8. PROVIDE AND INSTALL GROUND KITS FOR ALL NEW COAXIAL CABLES AND BOND TO EXISTING OWNERS GROUNDING SYSTEM PER OWNERS SPECIFICATIONS AND NEC.
9. ALL CONDUCTORS SHALL BE TYPE THWN (INT. APPLICATION) AND XHHW (EXT. APPLICATION), 75 DEGREE C, 600 VOLT INSULATION, SOFT ANNEALED STRANDED COPPER. #10 AWG AND SMALLER SHALL BE SPLICED USING ACCEPTABLE SOLDERLESS PRESSURE CONNECTORS. #8 AWG AND LARGER SHALL BE SPLICED USING COMPRESSION SPLIT-BOLT TYPE CONNECTORS. #12 AWG SHALL BE THE MINIMUM SIZE CONDUCTOR FOR LINE VOLTAGE BRANCH CIRCUITS. REFER TO PANEL SCHEDULE FOR BRANCH CIRCUIT CONDUCTOR SIZE(S). CONDUCTORS SHALL BE COLOR CODED FOR CONSISTENT PHASE IDENTIFICATION:
10. MINIMUM BENDING RADIUS FOR CONDUCTORS SHALL BE 12 TIMES THE LARGEST DIAMETER OF BRANCH CIRCUIT CONDUCTOR.
11. THE ENTIRE ELECTRICAL INSTALLATION SHALL BE MADE IN STRICT ACCORDANCE WITH ALL LOCAL, STATE AND NATIONAL CODES AND REGULATIONS WHICH MAY APPLY AND NOTHING IN THE DRAWINGS OR SPECIFICATIONS SHALL BE INTERPRETED AS AN INFRINGEMENT OF SUCH CODES OR REGULATIONS.
12. THE ELECTRICAL CONTRACTOR IS TO BE RESPONSIBLE FOR THE COMPLETE INSTALLATION AND COORDINATION OF THE ENTIRE ELECTRICAL SERVICE. ALL ACTIVITIES TO BE COORDINATED THROUGH OWNER'S REPRESENTATIVE, DESIGN ENGINEER AND OTHER AUTHORITIES HAVING JURISDICTION OF TRADES.
13. THE CONTRACTOR SHALL BE RESPONSIBLE FOR OBTAINING ALL PERMITS AND PAY ALL FEES AS MAY BE REQUIRED FOR THE ELECTRICAL WORK AND FOR SCHEDULING OF ALL INSPECTIONS AS MAY BE REQUIRED BY THE LOCAL AUTHORITY.
14. THE CONTRACTOR SHALL BE RESPONSIBLE FOR COORDINATION WITH THE SITE AND/OR BUILDING OWNER FOR NEW AND/OR DEMOLITION WORK INVOLVED.
15. THE CONTRACTOR SHALL GUARANTEE ALL NEW WORK FOR A PERIOD OF ONE YEAR FROM THE ACCEPTANCE DATE BY THE OWNER. THE CONTRACTOR SHALL BE RESPONSIBLE FOR OBTAINING WARRANTIES FROM ALL EQUIPMENT MANUFACTURERS FOR SUBMISSION TO THE OWNER.
16. DRAWINGS INDICATE GENERAL ARRANGEMENT OF WORK INCLUDED IN CONTRACT. CONTRACTOR SHALL WITHOUT EXTRA CHARGE, MAKE MODIFICATIONS TO THE LAYOUT OF THE WORK TO PREVENT CONFLICT WITH WORK OF OTHER TRADES AND FOR THE PROPER INSTALLATION OF WORK. CHECK ALL DRAWINGS AND VISIT JOB SITE TO VERIFY SPACE AND TYPE OF EXISTING CONDITIONS IN WHICH WORK WILL BE DONE, PRIOR TO SUBMITTAL OF BID.
17. ALL NON-CURRENT CARRYING PARTS OF THE ELECTRICAL AND TELEPHONE CONDUIT SYSTEMS SHALL BE MECHANICALLY AND ELECTRICALLY CONNECTED TO PROVIDE AN INDEPENDENT RETURN PATH TO THE EQUIPMENT GROUNDING SOURCES.
18. GROUNDING SYSTEM WILL BE IN ACCORDANCE WITH THE LATEST ACCEPTABLE EDITION OF THE NATIONAL ELECTRICAL CODE AND REQUIREMENTS PER LOCAL INSPECTOR HAVING JURISDICTION.
19. EACH EQUIPMENT GROUND CONDUCTOR SHALL BE SIZED IN ACCORDANCE WITH THE N.E.C. ARTICLE 250-122. (MIN. #12 AWG).
20. CONTRACTOR SHALL PROVIDE A CELLULAR GROUNDING SYSTEM WITH THE MAXIMUM AC RESISTANCE TO GROUND OF 5 OHM BETWEEN ANY POINT ON THE GROUNDING SYSTEM AS MEASURED BY 3-POINT GROUNDING TEST. (REFER TO SECTION 16950).

TESTS BY INDEPENDENT ELECTRICAL TESTING FIRM

A. CONTRACTOR SHALL RETAIN THE SERVICES OF A LOCAL INDEPENDENT ELECTRICAL TESTING FIRM (WITH MINIMUM 5 YEARS COMMERCIAL EXPERIENCE IN THE ELECTRICAL TESTING INDUSTRY) AS SPECIFIED BY OWNER TO PERFORM:

TEST 1: RESISTANCE TO GROUND TEST ON THE CELLULAR GROUNDING SYSTEM.

THE TESTING FIRM SHALL INCLUDE THE FOLLOWING INFORMATION WITH THE REPORT:

1. TESTING PROCEDURE INCLUDING THE MAKE AND MODEL OF TEST EQUIPMENT.
2. CERTIFICATION OF TESTING EQUIPMENT CALIBRATION WITHIN SIX (6) MONTHS OF DATE OF TESTING. INCLUDE CERTIFICATION LAB ADDRESS AND TELEPHONE NUMBER.
3. GRAPHICAL DESCRIPTION OF TESTING METHOD ACTUALLY IMPLEMENTED.

B. TESTING SHALL BE PERFORMED IN THE PRESENCE AND TO THE SATISFACTION OF OWNERS CONSTRUCTION REPRESENTATIVE. TESTING DATA SHALL BE INITIALED AND DATED BY THE CONSTRUCTION AND INCLUDED WITH THE WRITTEN REPORT/ANALYSIS.

C. THE CONTRACTOR SHALL FORWARD SIX (6) COPIES OF THE INDEPENDENT ELECTRICAL TESTING FIRM REPORT/ANALYSIS TO ENGINEER A MINIMUM OF TEN (10) WORKING DAYS PRIOR TO THE JOB TURNOVER.

D. CONTRACTOR TO PROVIDE A MINIMUM OF ONE (1) WEEK NOTICE TO OWNER AND ENGINEER FOR ALL TESTS REQUIRING WITNESSING.

DESIGNED BY:	CKD
DRAWN BY:	TJB
CHK'D BY:	CKD

REV.	DATE	DRAWN BY	CHK'D BY	
1	3/30/11	DEB	CFC	CONSTRUCTION - CLIENT REVIEW
0	2/28/11	DMO	CFC	CONSTRUCTION

PROFESSIONAL ENGINEER SEAL

at&t

SAI communications

CENTEK engineering
Centered on Solutions™
(203) 488-0580
(203) 488-8587 Fax
63-2 North Branford Road
Branford, CT 06405
www.CentekEng.com

AT&T MOBILITY
WIRELESS COMMUNICATIONS FACILITY
SITE NUMBER: CT2174
SITE NAME: ORNAGE - CENTRAL
525 ORANGE CENTER ROAD
ORANGE, CT 06477

DATE: 02/28/11
SCALE: AS NOTED
JOB NO. 11021.C025

ELECTRICAL DETAILS AND NOTES

E-1

Sheet No. 5 of 6

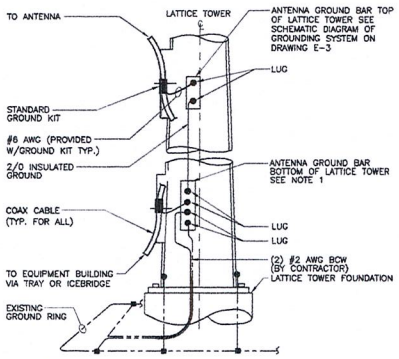

NOTES:

1. NUMBER OF GROUND BARS MAY VARY DEPENDING ON THE TYPE OF TOWER, LOCATION AND CONNECTION ORIENTATION. PROVIDE AS REQUIRED.
2. A SEPARATE GROUND BAR TO BE USED FOR GPS ANTENNA IF REQUIRED.

1 / E-2 ANTENNA CABLE GROUNDING - MONOPOLE

NOT TO SCALE

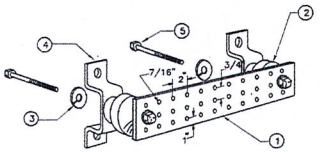

LEGEND

1. TINNED COPPER GROUND BAR, 1/4"x 4"x 20", NEWTON INSTRUMENT CO. HOLE CENTERS TO MATCH NEMA DOUBLE LUG .
2. INSULATORS, NEWTON INSTRUMENT CAT. NO. 2. 3081-4.
3. 3. 5/8" LOCK WASHERS, NEWTON INSTRUMENT CO. CAT. NO. 3015-8.
4. WALL MOUNTING BRACKET, NEWTON INSTRUMENT CO. 4. CAT NO. A-6056.
5. STAINLESS STEEL SECURITY SCREWS.

2 / E-2 GROUND BAR DETAIL

NOT TO SCALE

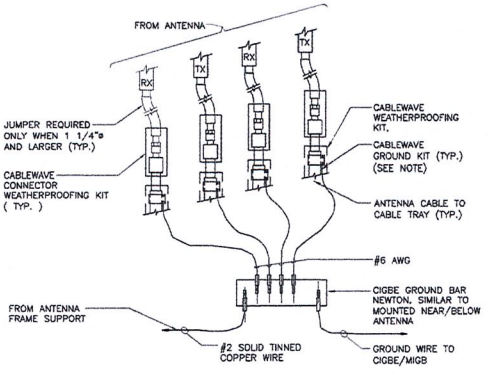

NOTE:

1. DO NOT INSTALL CABLE GROUND KIT AT A BEND AND ALWAYS DIRECT GROUND WIRE DOWN TO CIGBE

3 / E-2 CONNECTION OF GROUND WIRES TO GROUND BAR

NOT TO SCALE

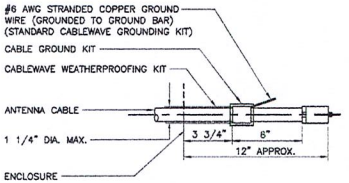

NOTE:

1. DO NOT INSTALL CABLE GROUND KIT AT A BEND AND ALWAYS DIRECT GROUND WIRE DOWN TO GROUND BAR.

4 / E-2 ANTENNA CABLE GROUNDING DETAIL

NOT TO SCALE

DESIGNED BY:	CKD
DRAWN BY:	TJB
CHK'D BY:	CKD

REV.	DATE	DRAWN BY	CHK'D BY	
1	3/30/11	DEB	CFC	CONSTRUCTION
0	2/28/11	DAD	CFC	CONSTRUCTION - CLIENT REVIEW

PROFESSIONAL ENGINEER SEAL

at&t

SAI COMMUNICATIONS

CENTEK engineering
Centered on Solutions™
(203) 488-0580
(203) 488-8587 Fax
63-2 North Branford Road
Branford, CT 06405
www.CentekEng.com

AT&T MOBILITY
WIRELESS COMMUNICATIONS FACILITY
SITE NUMBER: CT2174
SITE NAME: ORNAGE - CENTRAL
525 ORANGE CENTER ROAD
ORANGE, CT 06477

DATE:	02/28/11
SCALE:	AS NOTED
JOB NO.	11021.C025

ELECTRICAL DETAILS

E-2

Sheet No. 6 of 6

CENTEK engineering

Centered on Solutions℠

Structural Analysis Report

160-ft Existing Valmont Monopole

Proposed AT&T Antenna Upgrade

AT&T Site Ref: CT2174: Orange-Central

525 Orange Center Road
Orange, CT

CENTEK Project No. 11021.CO25

Date: March 29, 2011

STATE OF CONNECTICUT
CARLO F. CENTORE
No. 18604
LICENSED
PROFESSIONAL ENGINEER

Prepared for:

AT&T Mobility
500 Enterprise Drive, Suite 3A
Rocky Hill, CT 06067

63-2 North Branford Road, Branford, CT 06405 203.488.0580 Fax 203.488.8587 www.CentekEng.com

Table of Contents

SECTION 1 - REPORT

- INTRODUCTION.
- ANTENNA AND APPURTENANCE SUMMARY.
- PRIMARY ASSUMPTIONS USED IN THE ANALYSIS.
- ANALYSIS.
- TOWER LOADING.
- TOWER CAPACITY.
- FOUNDATION AND ANCHORS.
- CONCLUSION.

SECTION 2 – CONDITIONS & SOFTWARE

- STANDARD ENGINEERING CONDITIONS.
- GENERAL DESCRIPTION OF STRUCTURAL ANALYSIS PROGRAM.

SECTION 3 – CALCULATIONS

- RISATower INPUT/OUTPUT SUMMARY.
- RISATower DETAILED OUTPUT.
- ANCHOR BOLT AND BASE PLATE ANALYSIS.
- FOUNDATION ANALYSIS.

SECTION 4 – REFERENCE MATERIALS

- AT&T RFDS SHEET.
- ANTENNA CUT SHEETS.

Introduction

The purpose of this report is to summarize the results of the non-linear, P-Δ structural analysis of the antenna installation proposed by AT&T Mobility on the existing monopole (tower), owned and operated by Verizon Wireless, located in Orange, CT.

The host tower is a 160-ft tall, four-section, twelve sided, tapered monopole, originally designed and manufactured by Valmont Structures job no; 16632-97, dated February 25, 1998. The manufacturer's drawings and calculations were unavailable for use in this report. The tower geometry, structure member sizes and foundation system information were obtained from a previous structural analysis report prepared by Centek (Formerly Natcomm); job no; 09009.CO15, dated October 16, 2009. Antenna and appurtenance information were obtained from the aforementioned Centek structural report, an AT&T RFDS sheet and visual verification conducted from grade by Centek personal on March 2, 2011.

The tower is made up of four (4) tapered vertical sections consisting of A572-65 pole sections. The vertical tower sections are slip joint connected. The diameter of the pole (flat-flat) is 21.2-in at the top and 64.0-in at the base.

AT&T Mobility proposes the installation of three (3) panel antennas on an existing 13-ft platform with handrails. Refer to the Antenna and Appurtenance Summary below for a detailed description of the proposed antenna and appurtenance configuration.

Antenna and Appurtenance Summary

The existing tower was designed to support several communication antennas. The existing, proposed and future loads considered in this analysis consist of the following:

- NEXTEL (Existing to Remain):
  Antennas: Nine (9) Decibel DB844H90E-XY panel antennas, three (3) Argus LLPX310R panel antennas w/ Samsung WiMax remote radio heads FD_R6_RRH and two (2) Dragonwave A-Ant-23G-2C dish antennas pipe mounted to Verizon's platform with rails with a RAD center elevation of 167-ft above the existing tower base plate.
  Coax Cables: Nine (9) 1-1/4", six (6) 5/16" ∅ and two (2) 1/2" ∅ coax cables running on the inside of the existing tower.
- VERIZON (Existing):
  Antennas: Six (6) Antel LPA-80063/6CF and six (6) Decibel DB948F85T2E-M panel antennas mounted on a 13-ft platform with rails with a RAD center elevation of 155.2-ft above the existing tower base plate.
  Coax Cables: Twelve (12) 1-5/8" ∅ coax cables running on the inside of the existing tower.
- SPRINT (Existing):
  Antennas: Six (6) Decibel DB980H90E-M panel antennas mounted on a 13-ft platform with rails with a RAD center elevation of 134.1-ft above the existing tower base plate.
  Coax Cables: Six (6) 1-5/8" ∅ coax cables running on the inside of the existing tower.

- T-MOBILE (Existing):
  Antennas: Six (6) RR90-17-02DP panel antennas, three (3) RFS APX16DWV-16DWV-S panel antennas and six (6) 10" by 8" by 3" TMA's mounted on a 13-ft platform with rails with a RAD center elevation of 121.9-ft above the existing tower base plate.
  Coax Cables: Twelve (12) 1-5/8" ∅ coax cables running on the inside of the existing tower.
- POCKET (Existing):
  Antennas: Three (3) RFS APXV18-206517LS panel antennas flush mounted with a RAD center elevation of 110-ft above the existing tower base plate.
  Coax Cables: Six (6) 1-5/8" ∅ coax cables running on the inside of the existing tower.
- SPRINT (Existing):
  Antennas: One (1) GPS antenna on a GPS Stand-off mount with a RAD center elevation of 83.4-ft above the existing tower base plate.
  Coax Cables: One (1) 1/2"∅ coax cable running on the inside of the existing tower.
- AT&T (Existing to Remain):
  Antennas: Six (6) Powerwave 7770 panel antennas, six (6) Powerwave LGP TMA's, and twelve (12) Powerwave LGP diplexers mounted on a 13-ft platform with rails with a RAD center elevation of 145.7-ft above the existing tower base plate.
  Coax Cables: Twelve (12) 1-1/4" ∅ coax cables running on the inside of the existing tower.
- **AT&T (PROPOSED):**
  Antennas: Three (3) Powerwave P65-16-XLH-RR panel antennas mounted on a 13-ft platform with rails with a RAD center elevation of 145.7-ft above the existing tower base plate.
- **AT&T (PROPOSED):**
  Antennas: Six (6) Ericsson RRUS-11 and one (1) Raycap DC6-48-60-18-8F surge arrestor mounted to one (1) universal ring mount with a RAD center elevation of 147.75-ft above grade level.
  Coax Cables: One (1) fiber cable and two (2) dc control cables running inside of the existing tower.

Primary Assumptions Used in the Analysis

- The tower structure's theoretical capacity not including any assessment of the condition of the tower.
- The tower carries the horizontal and vertical loads due to the weight of antennas, ice load and wind.
- Tower is properly installed and maintained.
- Tower is in plumb condition.
- Tower loading for antennas and mounts as listed in this report.
- All bolts are appropriately tightened providing the necessary connection continuity.
- All welds are fabricated with ER-70S-6 electrodes.
- All members are assumed to be as specified in the original tower design documents or reinforcement drawings.
- All members are "hot dipped" galvanized in accordance with ASTM A123 and ASTM A153 Standards.
- All member protective coatings are in good condition.
- All tower members were properly designed, detailed, fabricated, installed and have been properly maintained since erection.
- Any deviation from the analyzed antenna loading will require a new analysis for verification of structural adequacy.
- All coax cables to be installed as indicated in this report.
- Refer to construction drawings dated 2.28.11 for RRU and Surge Arrestor mounting details.

Analysis

The existing tower was analyzed using a comprehensive computer program entitled RISATower. The program analyzes the tower, considering the worst case loading condition. The tower is considered as loaded by concentric forces along the tower shaft, and the model assumes that the shaft members are subjected to bending, axial, and shear forces.

The existing tower was analyzed for 90 mph basic wind speed (fastest mile) with no ice and 75% reduction of wind force with ½ inch accumulative ice to determine stresses in members as per guidelines of TIA/EIA-222-F-96 entitled "Structural Standards for Steel Antenna Towers and Antenna Supporting Structures", the American Institute of Steel Construction (AISC) and the Manual of Steel Construction; Allowable Stress Design (ASD).

Tower Loading

Tower loading was determined by the basic wind speed as applied to projected surface areas with modification factors per TIA/EIA-222-F, gravity loads of the tower structure and its components, and the application of ½" radial ice tower structure and its components.

Basic Wind Speed:	New Haven; v = 85 mph (fastest mile)	*[Section 16 of TIA/EIA-222-F-96]*
	Orange; v = 110 mph (3 second gust) equivalent to v = 90 mph (fastest mile)	*[Appendix K of the 2005 CT Building Code Supplement]*
	Appendix K wind speed criteria controls.	
Load Cases:	Load Case 1; 90 mph wind speed w/ no ice plus gravity load – used in calculation of tower stresses and rotation.	*[Section 2.3.16 of TIA/EIA-222-F-96]*
	Load Case 2; 78 mph wind speed w/ ½" radial ice plus gravity load – used in calculation of tower stresses. The 78 mph wind speed velocity represents 75% of the wind pressure generated by the 90 mph wind speed.	*[Section 2.3.16 of TIA/EIA-222-F-96]*
	Load Case 3; Seismic – not checked	*[Section 1614.5 of State Bldg. Code 2005] does not control in the design of this structure type*

Tower Capacity

Tower stresses were calculated utilizing the structural analysis software RISATower. Allowable stresses were determined based on Table 5 of the TIA/EIA code with a 1/3 increase per Section 3.1.1.1 of the same code.

Calculated stresses were found to be within allowable limits. In Load Case 1, per RISATower "Section Capacity Table", this tower was found to be at **81.3%** of its total capacity.

Tower Section	Elevation	Stress Ratio (percentage of capacity)	Result
Pole Shaft (L4)	0'-37.17'	81.3%	**PASS**

Foundation and Anchors

The existing foundation consists of an 8.0-ft square x 10.0-ft long reinforced concrete pier on a 22.0-ft x4.0-ft thick reinforce concrete pad. The sub-grade conditions used in the analysis of the existing foundation were obtained from the aforementioned structural report prepared by Centek (Formerly Natcomm); job no; 09009.CO15, dated October 16, 2009. The base of the tower is connected to the foundation by means of (24) 2.25"∅, ASTM A615-75 anchor bolts embedded approximately 10-ft into the concrete foundation structure.

Review of the foundation and anchor design consisted of verification of applied loads obtained from the tower design calculations and code checks of allowable stresses:

- The tower base reactions developed from the governing Load Case 1 were used in the verification of the foundation and its anchors:

Base Reactions	Vector	Proposed Load (kips/ft-kips)
Base	Shear	**45**
	Axial	**53**
	Moment	**4862**

- The foundation was found to be within allowable limits.

Foundation	Design Limit	IBC 2003/2005 CT State Building Code Section 3108.4.2 FS(1)	Proposed Loading FS(1)	Result
Reinf. Conc. Pad and Pier	OTM(2)	2.0	3.67	**PASS**

Note: 1. FS denote Factor of Safety
2. OTM denotes Overturning Moment

- The anchor bolts and base plate were found to be within allowable limits.

Tower Component	Design Limit	Stress Ratio (percentage of capacity)	Result
Anchor Bolts	Compression	69.7%	**PASS**
Base Plate	Bending	43.1%	**PASS**

Conclusion

This analysis shows that the subject tower **is adequate** to support the proposed modified AT&T antenna configuration.

The analysis is based, in part, on the information provided to this office by AT&T Mobility. If the existing conditions are different than the information in this report, Centek Engineering, Inc. must be contacted for resolution of any potential issues.

Please feel free to call with any questions or comments.

Respectfully Submitted by:

Carlo F. Centore, PE
Principal ~ Structural Engineer

STATE OF CONNECTICUT
CARLO F. CENTORE
No.16694
LICENSED
PROFESSIONAL ENGINEER

Prepared by:

Timothy J. Lynn, EIT
Structural Engineer

Standard Conditions for Furnishing of Professional Engineering Services on Existing Structures

All engineering services are performed on the basis that the information used is current and correct. This information may consist of, but is not necessarily limited to:

- Information supplied by the client regarding the structure itself, its foundations, the soil conditions, the antenna and feed line loading on the structure and its components, or other relevant information.
- Information from the field and/or drawings in the possession of CENTEK engineering, Inc. or generated by field inspections or measurements of the structure.
- It is the responsibility of the client to ensure that the information provide to CENTEK engineering, Inc. and used in the performance of our engineering services is correct and complete. In the absence of information to the contrary, we assume that all structures were constructed in accordance with the drawings and specifications and are in an un-corroded condition and have not deteriorated. It is therefore assumed that its capacity has not significantly changed from the "as new" condition.
- All services will be performed to the codes specified by the client, and we do not imply to meet any other codes or requirements unless explicitly agreed in writing. If wind and ice loads or other relevant parameters are to be different from the minimum values recommended by the codes, the client shall specify the exact requirement. In the absence of information to the contrary, all work will be performed in accordance with the latest revision of ANSI/ASCE10 & ANSI/EIA-222
- All services performed, results obtained, and recommendations made are in accordance with generally accepted engineering principles and practices. CENTEK engineering, Inc. is not responsible for the conclusions, opinions and recommendations made by others based on the information we supply.

General Description of Structural Analysis Program

RISATower, is an integrated structural analysis and design software package for Designed specifically for the telecommunications industry, RISATower, formerly ERITower, automates much of the tower analysis and design required by the TIA/EIA 222 Standard.

RISATower Features:

- RISATower can analyze and design 3- and 4-sided guyed towers, 3- and 4-sided self-supporting towers and either round or tapered ground mounted poles with or without guys.
- The program analyzes towers using the TIA-222-G (2005) standard or any of the previous TIA/EIA standards back to RS-222 (1959). Steel design is checked using the AISC ASD 9th Edition or the AISC LRFD specifications.
- Linear and non-linear (P-delta) analyses can be used in determining displacements and forces in the structure. Wind pressures and forces are automatically calculated.
- Extensive graphics plots include material take-off, shear-moment, leg compression, displacement, twist, feed line, guy anchor and stress plots.
- RISATower contains unique features such as True Cable behavior, hog rod take-up, foundation stiffness and much more.

Section	Length (ft)	Number of Sides	Thickness (in)	Socket Length (ft)	Top Dia (in)	Bot Dia (in)	Grade	Weight (K)
1	36.670	12	0.219	4.670	21.200	31.460	A572-65	2.3
2	41.830	12	0.344	5.830	29.715	41.440		5.6
3	54.830	12	0.438	7.330	39.118	54.460		12.2
4	44.500	12	0.469		51.533	64.000		13.1
								33.2

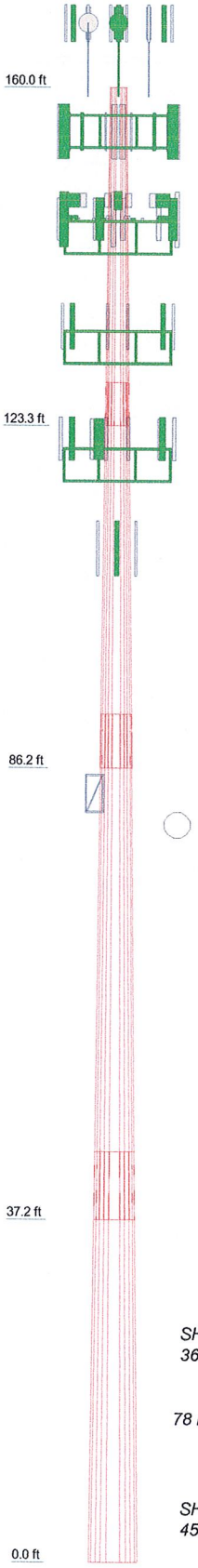

AXIAL
64 K

SHEAR
36 K

MOMENT
4085 kip-ft

TORQUE 1 kip-ft
78 mph WIND - 0.500 in ICE

AXIAL
53 K

SHEAR
45 K

MOMENT
4862 kip-ft

TORQUE 1 kip-ft
REACTIONS - 90 mph WIND

DESIGNED APPURTENANCE LOADING

TYPE	ELEVATION	TYPE	ELEVATION
(3) DB844H90E-XY (Nextel Existing)	167	7770.00 (ATI Existing)	145.7
(3) DB844H90E-XY (Nextel Existing)	167	7770.00 (ATI Existing)	145.7
(3) DB844H90E-XY (Nextel Existing)	167	P65-16-XLH-RR (ATI Proposed)	145.7
LLPX310R (Nextel Existing)	167	(2) LGP214nn TMA (ATI Existing)	145.7
LLPX310R (Nextel Existing)	167	(2) LGP214nn TMA (ATI Existing)	145.7
LLPX310R (Nextel Existing)	167	(2) LGP214nn TMA (ATI Existing)	145.7
Remote Radio Head FD R6 RRH (Nextel Existing)	167	(4) LGP21901 Diplexer (ATI Existing)	145.7
		(4) LGP21901 Diplexer (ATI Existing)	145.7
Remote Radio Head FD R6 RRH (Nextel Existing)	167	(4) LGP21901 Diplexer (ATI Existing)	145.7
		7770.00 (ATI Existing)	145.7
Remote Radio Head FD R6 RRH (Nextel Existing)	167	P65-16-XLH-RR (ATI Proposed)	145.7
A-Ant-23G-2-C (Nextel Existing)	167	7770.00 (ATI Existing)	145.7
A-Ant-23G-2-C (Nextel Existing)	167	7770.00 (ATI Existing)	145.7
(4) 8'x2 1/2" Pipe Mount (Nextel Existing)	163	P65-16-XLH-RR (ATI Proposed)	145.7
		7770.00 (ATI Existing)	145.7
(5) 8'x2 1/2" Pipe Mount (Nextel Existing)	163	13' Platform w/Rails (ATI Existing)	143.7
		(2) DB980H90E-M (Sprint Existing)	134.1
(5) 8'x2 1/2" Pipe Mount (Nextel Existing)	163	(2) DB980H90E-M (Sprint Existing)	134.1
		(2) DB980H90E-M (Sprint Existing)	134.1
DB948F85T2E-M (Verizon Existing)	155.2	13' Platform w/Rails (Sprint Existing)	131.8
DB948F85T2E-M (Verizon Existing)	155.2	APX16DWV-16DWV-S-E-ACU (T-Mobile Existing)	121.9
DB948F85T2E-M (Verizon Existing)	155.2		
DB948F85T2E-M (Verizon Existing)	155.2	APX16DWV-16DWV-S-E-ACU (T-Mobile Existing)	121.9
DB948F85T2E-M (Verizon Existing)	155.2		
LPA-80063/6CF (Verizon Existing)	155.2	(2) RR90-17-02DP (T-Mobile Existing)	121.9
LPA-80063/6CF (Verizon Existing)	155.2	(2) RR90-17-02DP (T-Mobile Existing)	121.9
LPA-80063/6CF (Verizon Existing)	155.2	(2) RR90-17-02DP (T-Mobile Existing)	121.9
LPA-80063/6CF (Verizon Existing)	155.2	(2) 10"x8"x3" TMA (T-Mobile Existing)	121.9
LPA-80063/6CF (Verizon Existing)	155.2	(2) 10"x8"x3" TMA (T-Mobile Existing)	121.9
LPA-80063/6CF (Verizon Existing)	155.2	(2) 10"x8"x3" TMA (T-Mobile Existing)	121.9
13' Platform w/Rails (Verizon Existing)	155.2	APX16DWV-16DWV-S-E-ACU (T-Mobile Existing)	121.9
DB948F85T2E-M (Verizon Existing)	155.2		
(2) RRUS-11 (ATI - Proposed)	147.75	13' Platform w/Rails (T-Mobile Existing)	119
(2) RRUS-11 (ATI - Proposed)	147.75		
(2) RRUS-11 (ATI - Proposed)	147.75	APXV18-206517LS (Pocket Existing)	110
DC6-48-60-18-8F Surge Arrestor (ATI - Proposed)	147.75	APXV18-206517LS (Pocket Existing)	110
		APXV18-206517LS (Pocket Existing)	110
Valmont Uni-Tri Bracket (ATI - Proposed)	147.75	GPS (Sprint Existing)	83.4
		Stand-off	83.4
		Stand-off	83.4

MATERIAL STRENGTH

GRADE	Fy	Fu	GRADE	Fy	Fu
A572-65	65 ksi	80 ksi			

TOWER DESIGN NOTES

1. Tower is located in New Haven County, Connecticut.
2. Tower designed for a 90 mph basic wind in accordance with the TIA/EIA-222-F Standard.
3. Tower is also designed for a 78 mph basic wind with 0.50 in ice.
4. Deflections are based upon a 50 mph wind.
5. Weld together tower sections have flange connections.
6. Connections use galvanized A325 bolts, nuts and locking devices. Installation per TIA/EIA-222 and AISC Specifications.
7. Tower members are "hot dipped" galvanized in accordance with ASTM A123 and ASTM A153 Standards.
8. Welds are fabricated with ER-70S-6 electrodes.
9. TOWER RATING: 81.3%

Centek Engineering Inc.
63-2 North Branford Road
Branford, CT 06405
Phone: 203.488.0580
FAX: 203.488.8587

Job: *11021.CO25 - CT2174 ~ Orange-Central*			
Project: *160-ft Valmont Monopole - Orange, CT*			
Client: AT&T Mobility	Drawn by: TJL	App'd:	
Code: TIA/EIA-222-F	Date: 03/29/11	Scale: NTS	
Path: J:\Jobs\11021\00 WIP\CO-25 - CT2174 - 525 Orange Center Rd, Orange, CT\Structural\Calcs\ERI Files\160' Monopole - Orange, CT.eri		Dwg No. E-1	

Tower Input Data

There is a pole section.
This tower is designed using the TIA/EIA-222-F standard.
The following design criteria apply:

Tower is located in New Haven County, Connecticut.
Basic wind speed of 90 mph.
Nominal ice thickness of 0.500 in.
Ice density of 56 pcf.
A wind speed of 78 mph is used in combination with ice.
Temperature drop of 50 °F.
Deflections calculated using a wind speed of 50 mph.
Weld together tower sections have flange connections..
Connections use galvanized A325 bolts, nuts and locking devices. Installation per TIA/EIA-222 and AISC Specifications..
Tower members are "hot dipped" galvanized in accordance with ASTM A123 and ASTM A153 Standards..
Welds are fabricated with ER-70S-6 electrodes..
A non-linear (P-delta) analysis was used.
Pressures are calculated at each section.
Stress ratio used in pole design is 1.333.
Local bending stresses due to climbing loads, feedline supports, and appurtenance mounts are not considered.

Options

Consider Moments - Legs
Consider Moments - Horizontals
Consider Moments - Diagonals
Use Moment Magnification
√ Use Code Stress Ratios
Use Code Safety Factors - Guys
Escalate Ice
Always Use Max Kz
Use Special Wind Profile
Include Bolts In Member Capacity
Leg Bolts Are At Top Of Section
Secondary Horizontal Braces Leg
Use Diamond Inner Bracing (4 Sided)
Add IBC .6D+W Combination

Distribute Leg Loads As Uniform
Assume Legs Pinned
√ Assume Rigid Index Plate
Use Clear Spans For Wind Area
Use Clear Spans For KL/r
Retension Guys To Initial Tension
√ Bypass Mast Stability Checks
Use Azimuth Dish Coefficients
√ Project Wind Area of Appurt.
Autocalc Torque Arm Areas
SR Members Have Cut Ends
√ Sort Capacity Reports By Component
Triangulate Diamond Inner Bracing

Treat Feedline Bundles As Cylinder
Use ASCE 10 X-Brace Ly Rules
Calculate Redundant Bracing Forces
Ignore Redundant Members in FEA
SR Leg Bolts Resist Compression
All Leg Panels Have Same Allowable
Offset Girt At Foundation
Consider Feedline Torque
Include Angle Block Shear Check

Poles

√ Include Shear-Torsion Interaction
Always Use Sub-Critical Flow
Use Top Mounted Sockets

Tapered Pole Section Geometry

Section	Elevation ft	Section Length ft	Splice Length ft	Number of Sides	Top Diameter in	Bottom Diameter in	Wall Thickness in	Bend Radius in	Pole Grade
L1	160.000-123.330	36.670	4.670	12	21.200	31.460	0.219	0.876	A572-65 (65 ksi)
L2	123.330-86.170	41.830	5.830	12	29.715	41.440	0.344	1.376	A572-65 (65 ksi)
L3	86.170-37.170	54.830	7.330	12	39.118	54.460	0.438	1.752	A572-65

Section	Elevation ft	Section Length ft	Splice Length ft	Number of Sides	Top Diameter in	Bottom Diameter in	Wall Thickness in	Bend Radius in	Pole Grade
L4	37.170-0.000	44.500		12	51.533	64.000	0.469	1.876	(65 ksi) A572-65 (65 ksi)

Tapered Pole Properties

Section	Tip Dia. in	Area in^2	I in^4	r in	C in	I/C in^3	J in^4	It/Q in^2	w in	w/t
L1	21.948	14.795	831.313	7.511	10.982	75.701	1684.465	7.282	5.095	23.263
	32.570	22.031	2744.484	11.184	16.296	168.412	5561.069	10.843	7.844	35.819
L2	32.119	32.534	3582.389	10.515	15.393	232.735	7258.892	16.012	7.042	20.47
	42.902	45.521	9812.935	14.712	21.466	457.140	19883.667	22.404	10.184	29.605
L3	42.187	54.553	10417.699	13.847	20.263	514.122	21109.082	26.849	9.310	21.255
	56.381	76.190	28381.014	19.340	28.210	1006.052	57507.629	37.499	13.421	30.643
L4	55.477	77.116	25666.021	18.281	26.694	961.487	52006.317	37.954	12.554	26.767
	66.258	95.943	49427.852	22.744	33.152	1490.946	100154.229	47.220	15.895	33.891

Tower Elevation ft	Gusset Area (per face) ft^2	Gusset Thickness in	Gusset Grade	Adjust. Factor A_f	Adjust. Factor A_r	Weight Mult.	Double Angle Stitch Bolt Spacing Diagonals in	Double Angle Stitch Bolt Spacing Horizontals in
L1 160.000-123.330				1	1	1		
L2 123.330-86.170				1	1	1		
L3 86.170-37.170				1	1	1		
L4 37.170-0.000				1	1	1		

Feed Line/Linear Appurtenances - Entered As Area

Description	Face or Leg	Allow Shield	Component Type	Placement ft	Total Number		C_AA_A ft^2/ft	Weight klf
1 1/4 (Nextel Existing)	A	No	Inside Pole	160.000 - 3.000	9	No Ice	0.000	0.001
						1/2" Ice	0.000	0.001
1 5/8 (Verizon Existing)	B	No	Inside Pole	156.000 - 3.000	12	No Ice	0.000	0.001
						1/2" Ice	0.000	0.001
1 1/4 (AT&T Existing)	C	No	Inside Pole	146.000 - 3.000	12	No Ice	0.000	0.001
						1/2" Ice	0.000	0.001
1 5/8 (Sprint Existing)	A	No	Inside Pole	132.000 - 3.000	6	No Ice	0.000	0.001
						1/2" Ice	0.000	0.001
1 5/8 (T-Mobile Existing)	B	No	Inside Pole	122.000 - 3.000	12	No Ice	0.000	0.001
						1/2" Ice	0.000	0.001
1 5/8 (Pocket Existing)	C	No	Inside Pole	110.000 - 3.000	6	No Ice	0.000	0.001
						1/2" Ice	0.000	0.001
1/2 (Sprint Existing)	A	No	Inside Pole	83.500 - 3.000	1	No Ice	0.000	0.000
						1/2" Ice	0.000	0.000
5/16 (Nextel Existing)	A	No	Inside Pole	160.000 - 3.000	6	No Ice	0.000	0.002
						1/2" Ice	0.000	0.002

Description	Face or Leg	Allow Shield	Component Type	Placement ft	Total Number		C_AA_A ft^2/ft	Weight klf
1/2 (Nextel Existing)	A	No	Inside Pole	160.000 - 3.000	2	No Ice	0.000	0.000
						1/2" Ice	0.000	0.000
RG6-Fiber (AT&T - Propsoed)	C	No	Inside Pole	147.750 - 3.000	1	No Ice	0.000	0.001
						1/2" Ice	0.000	0.001
#8 AWG Copper WIre (AT&T - Propsoed)	C	No	Inside Pole	147.750 - 3.000	2	No Ice	0.000	0.000
						1/2" Ice	0.000	0.000

Feed Line/Linear Appurtenances Section Areas

Tower Section	Tower Elevation ft	Face	A_R ft^2	A_F ft^2	C_AA_A In Face ft^2	C_AA_A Out Face ft^2	Weight K
L1	160.000-123.330	A	0.000	0.000	0.000	0.000	0.730
		B	0.000	0.000	0.000	0.000	0.408
		C	0.000	0.000	0.000	0.000	0.206
L2	123.330-86.170	A	0.000	0.000	0.000	0.000	0.917
		B	0.000	0.000	0.000	0.000	0.911
		C	0.000	0.000	0.000	0.000	0.484
L3	86.170-37.170	A	0.000	0.000	0.000	0.000	1.221
		B	0.000	0.000	0.000	0.000	1.223
		C	0.000	0.000	0.000	0.000	0.748
L4	37.170-0.000	A	0.000	0.000	0.000	0.000	0.852
		B	0.000	0.000	0.000	0.000	0.853
		C	0.000	0.000	0.000	0.000	0.521

Feed Line/Linear Appurtenances Section Areas - With Ice

Tower Section	Tower Elevation ft	Face or Leg	Ice Thickness in	A_R ft^2	A_F ft^2	C_AA_A In Face ft^2	C_AA_A Out Face ft^2	Weight K
L1	160.000-123.330	A	0.500	0.000	0.000	0.000	0.000	0.730
		B		0.000	0.000	0.000	0.000	0.408
		C		0.000	0.000	0.000	0.000	0.206
L2	123.330-86.170	A	0.500	0.000	0.000	0.000	0.000	0.917
		B		0.000	0.000	0.000	0.000	0.911
		C		0.000	0.000	0.000	0.000	0.484
L3	86.170-37.170	A	0.500	0.000	0.000	0.000	0.000	1.221
		B		0.000	0.000	0.000	0.000	1.223
		C		0.000	0.000	0.000	0.000	0.748
L4	37.170-0.000	A	0.500	0.000	0.000	0.000	0.000	0.852
		B		0.000	0.000	0.000	0.000	0.853
		C		0.000	0.000	0.000	0.000	0.521

Discrete Tower Loads

Description	Face or Leg	Offset Type	Offsets: Horz Lateral Vert ft ft ft	Azimuth Adjustment °	Placement ft		C_AA_A Front ft^2	C_AA_A Side ft^2	Weight K
(5) 8'x2 1/2" Pipe Mount (Nextel Existing)	A	From Face	3.000 0.000 0.000	0.000	163.000	No Ice 1/2" Ice	2.300 3.132	2.300 3.132	0.041 0.057
(5) 8'x2 1/2" Pipe Mount (Nextel Existing)	B	From Face	3.000 0.000 0.000	0.000	163.000	No Ice 1/2" Ice	2.300 3.132	2.300 3.132	0.041 0.057
(4) 8'x2 1/2" Pipe Mount (Nextel Existing)	C	From Face	3.000 0.000 0.000	0.000	163.000	No Ice 1/2" Ice	2.300 3.132	2.300 3.132	0.041 0.057
(3) DB844H90E-XY (Nextel Existing)	A	From Face	3.000 0.000 0.000	0.000	167.000	No Ice 1/2" Ice	2.867 3.177	3.733 4.101	0.010 0.035
(3) DB844H90E-XY (Nextel Existing)	B	From Face	3.000 0.000 0.000	0.000	167.000	No Ice 1/2" Ice	2.867 3.177	3.733 4.101	0.010 0.035
(3) DB844H90E-XY (Nextel Existing)	C	From Face	3.000 0.000 0.000	0.000	167.000	No Ice 1/2" Ice	2.867 3.177	3.733 4.101	0.010 0.035
LLPX310R (Nextel Existing)	A	From Face	3.000 0.000 0.000	0.000	167.000	No Ice 1/2" Ice	4.830 5.183	1.945 2.214	0.029 0.055
LLPX310R (Nextel Existing)	B	From Face	3.000 0.000 0.000	0.000	167.000	No Ice 1/2" Ice	4.830 5.183	1.945 2.214	0.029 0.055
LLPX310R (Nextel Existing)	C	From Face	3.000 0.000 0.000	0.000	167.000	No Ice 1/2" Ice	4.830 5.183	1.945 2.214	0.029 0.055
Remote Radio Head FD R6 RRH (Nextel Existing)	A	From Face	3.000 0.000 0.000	0.000	167.000	No Ice 1/2" Ice	1.804 1.988	0.778 0.918	0.033 0.045
Remote Radio Head FD R6 RRH (Nextel Existing)	A	From Face	3.000 0.000 0.000	0.000	167.000	No Ice 1/2" Ice	1.804 1.988	0.778 0.918	0.033 0.045
Remote Radio Head FD R6 RRH (Nextel Existing)	A	From Face	3.000 0.000 0.000	0.000	167.000	No Ice 1/2" Ice	1.804 1.988	0.778 0.918	0.033 0.045
13' Platform w/Rails (Verizon Existing)	C	None		0.000	155.200	No Ice 1/2" Ice	23.900 30.800	23.900 30.800	2.000 3.000
DB948F85T2E-M (Verizon Existing)	A	From Face	3.000 -4.000 0.000	0.000	155.200	No Ice 1/2" Ice	1.920 2.219	3.256 3.617	0.009 0.028
DB948F85T2E-M (Verizon Existing)	A	From Face	3.000 4.000 0.000	0.000	155.200	No Ice 1/2" Ice	1.920 2.219	3.256 3.617	0.009 0.028
DB948F85T2E-M (Verizon Existing)	B	From Face	3.000 -4.000 0.000	0.000	155.200	No Ice 1/2" Ice	1.920 2.219	3.256 3.617	0.009 0.028
DB948F85T2E-M (Verizon Existing)	B	From Face	3.000 4.000 0.000	0.000	155.200	No Ice 1/2" Ice	1.920 2.219	3.256 3.617	0.009 0.028
DB948F85T2E-M (Verizon Existing)	C	From Face	3.000 -4.000 0.000	0.000	155.200	No Ice 1/2" Ice	1.920 2.219	3.256 3.617	0.009 0.028
DB948F85T2E-M (Verizon Existing)	C	From Face	3.000 4.000 0.000	0.000	155.200	No Ice 1/2" Ice	1.920 2.219	3.256 3.617	0.009 0.028
LPA-80063/6CF	A	From Face	3.000	0.000	155.200	No Ice	10.308	9.005	0.027

Description	Face or Leg	Offset Type	Offsets: Horz Lateral Vert ft ft ft	Azimuth Adjustment °	Placement ft		C_AA_A Front ft^2	C_AA_A Side ft^2	Weight K
(Verizon Existing)			-6.000 0.000			1/2" Ice	10.868	9.554	0.101
LPA-80063/6CF (Verizon Existing)	A	From Face	3.000 6.000 0.000	0.000	155.200	No Ice 1/2" Ice	10.308 10.868	9.005 9.554	0.027 0.101
LPA-80063/6CF (Verizon Existing)	B	From Face	3.000 -6.000 0.000	0.000	155.200	No Ice 1/2" Ice	10.308 10.868	9.005 9.554	0.027 0.101
LPA-80063/6CF (Verizon Existing)	B	From Face	3.000 6.000 0.000	0.000	155.200	No Ice 1/2" Ice	10.308 10.868	9.005 9.554	0.027 0.101
LPA-80063/6CF (Verizon Existing)	C	From Face	3.000 -6.000 0.000	0.000	155.200	No Ice 1/2" Ice	10.308 10.868	9.005 9.554	0.027 0.101
LPA-80063/6CF (Verizon Existing)	C	From Face	3.000 6.000 0.000	0.000	155.200	No Ice 1/2" Ice	10.308 10.868	9.005 9.554	0.027 0.101
13' Platform w/Rails (AT&T Existing)	C	None		0.000	143.700	No Ice 1/2" Ice	17.200 22.300	17.200 22.300	2.000 3.000
7770.00 (AT&T Existing)	A	From Face	3.000 -6.000 0.000	0.000	145.700	No Ice 1/2" Ice	5.882 6.314	2.928 3.273	0.035 0.068
7770.00 (AT&T Existing)	A	From Face	3.000 2.000 0.000	0.000	145.700	No Ice 1/2" Ice	5.882 6.314	2.928 3.273	0.035 0.068
P65-16-XLH-RR (AT&T Proposed)	A	From Face	3.000 6.000 0.000	0.000	145.700	No Ice 1/2" Ice	8.400 8.949	4.700 5.147	0.060 0.107
7770.00 (AT&T Existing)	B	From Face	3.000 -6.000 0.000	0.000	145.700	No Ice 1/2" Ice	5.882 6.314	2.928 3.273	0.035 0.068
7770.00 (AT&T Existing)	B	From Face	3.000 2.000 0.000	0.000	145.700	No Ice 1/2" Ice	5.882 6.314	2.928 3.273	0.035 0.068
P65-16-XLH-RR (AT&T Proposed)	B	From Face	3.000 6.000 0.000	0.000	145.700	No Ice 1/2" Ice	8.400 8.949	4.700 5.147	0.060 0.107
7770.00 (AT&T Existing)	C	From Face	3.000 -6.000 0.000	0.000	145.700	No Ice 1/2" Ice	5.882 6.314	2.928 3.273	0.035 0.068
7770.00 (AT&T Existing)	C	From Face	3.000 2.000 0.000	0.000	145.700	No Ice 1/2" Ice	5.882 6.314	2.928 3.273	0.035 0.068
P65-16-XLH-RR (AT&T Proposed)	C	From Face	3.000 6.000 0.000	0.000	145.700	No Ice 1/2" Ice	8.400 8.949	4.700 5.147	0.060 0.107
(2) LGP214nn TMA (AT&T Existing)	A	From Face	3.000 0.000 0.000	0.000	145.700	No Ice 1/2" Ice	1.288 1.445	0.233 0.313	0.014 0.021
(2) LGP214nn TMA (AT&T Existing)	B	From Face	3.000 0.000 0.000	0.000	145.700	No Ice 1/2" Ice	1.288 1.445	0.233 0.313	0.014 0.021
(2) LGP214nn TMA (AT&T Existing)	C	From Face	3.000 0.000 0.000	0.000	145.700	No Ice 1/2" Ice	1.288 1.445	0.233 0.313	0.014 0.021
(4) LGP21901 Diplexer (AT&T Existing)	A	From Face	3.000 0.000	0.000	145.700	No Ice 1/2" Ice	0.233 0.302	0.117 0.166	0.006 0.008

Description	Face or Leg	Offset Type	Offsets: Horz Lateral Vert ft ft ft	Azimuth Adjustment °	Placement ft		C_AA_A Front ft^2	C_AA_A Side ft^2	Weight K
			0.000						
(4) LGP21901 Diplexer (AT&T Existing)	B	From Face	3.000 0.000 0.000	0.000	145.700	No Ice 1/2" Ice	0.233 0.302	0.117 0.166	0.006 0.008
(4) LGP21901 Diplexer (AT&T Existing)	C	From Face	3.000 0.000 0.000	0.000	145.700	No Ice 1/2" Ice	0.233 0.302	0.117 0.166	0.006 0.008
(2) RRUS-11 (AT&T - Proposed)	A	From Face	0.500 0.000 0.000	0.000	147.750	No Ice 1/2" Ice	2.994 3.226	1.246 1.412	0.050 0.070
(2) RRUS-11 (AT&T - Proposed)	B	From Face	0.500 0.000 0.000	0.000	147.750	No Ice 1/2" Ice	2.994 3.226	1.246 1.412	0.050 0.070
(2) RRUS-11 (AT&T - Proposed)	C	From Face	0.500 0.000 0.000	0.000	147.750	No Ice 1/2" Ice	2.994 3.226	1.246 1.412	0.050 0.070
DC6-48-60-18-8F Surge Arrestor (AT&T - Proposed)	C	From Face	0.500 0.000 0.000	0.000	147.750	No Ice 1/2" Ice	2.228 2.447	2.228 2.447	0.020 0.039
Valmont Uni-Tri Bracket (AT&T - Proposed)	C	None		0.000	147.750	No Ice 1/2" Ice	1.750 1.940	1.750 1.940	0.290 0.306
13' Platform w/Rails (Sprint Existing)	C	None		0.000	131.800	No Ice 1/2" Ice	17.200 22.300	17.200 22.300	2.000 3.000
(2) DB980H90E-M (Sprint Existing)	A	From Face	3.000 0.000 0.000	0.000	134.100	No Ice 1/2" Ice	3.799 4.178	2.194 2.556	0.009 0.029
(2) DB980H90E-M (Sprint Existing)	B	From Face	3.000 0.000 0.000	0.000	134.100	No Ice 1/2" Ice	3.799 4.178	2.194 2.556	0.009 0.029
(2) DB980H90E-M (Sprint Existing)	C	From Face	3.000 0.000 0.000	0.000	134.100	No Ice 1/2" Ice	3.799 4.178	2.194 2.556	0.009 0.029
13' Platform w/Rails (T-Mobile Existing)	C	None		0.000	119.000	No Ice 1/2" Ice	17.200 22.300	17.200 22.300	2.000 3.000
APX16DWV-16DWV-S-E-ACU (T-Mobile Existing)	A	From Face	3.000 2.000 0.000	0.000	121.900	No Ice 1/2" Ice	6.699 7.131	2.003 2.326	0.040 0.071
APX16DWV-16DWV-S-E-ACU (T-Mobile Existing)	B	From Face	3.000 2.000 0.000	0.000	121.900	No Ice 1/2" Ice	6.699 7.131	2.003 2.326	0.040 0.071
APX16DWV-16DWV-S-E-ACU (T-Mobile Existing)	C	From Face	3.000 2.000 0.000	0.000	121.900	No Ice 1/2" Ice	6.699 7.131	2.003 2.326	0.040 0.071
(2) RR90-17-02DP (T-Mobile Existing)	A	From Face	3.000 0.000 0.000	0.000	121.900	No Ice 1/2" Ice	4.356 4.775	1.974 2.312	0.018 0.040
(2) RR90-17-02DP (T-Mobile Existing)	B	From Face	3.000 0.000 0.000	0.000	121.900	No Ice 1/2" Ice	4.356 4.775	1.974 2.312	0.018 0.040
(2) RR90-17-02DP (T-Mobile Existing)	C	From Face	3.000 0.000 0.000	0.000	121.900	No Ice 1/2" Ice	4.356 4.775	1.974 2.312	0.018 0.040
(2) 10"x8"x3" TMA (T-Mobile Existing)	A	From Face	3.000 0.000 0.000	0.000	121.900	No Ice 1/2" Ice	0.778 0.899	0.292 0.380	0.015 0.020
(2) 10"x8"x3" TMA (T-Mobile Existing)	B	From Face	3.000 0.000	0.000	121.900	No Ice 1/2" Ice	0.778 0.899	0.292 0.380	0.015 0.020

Description	Face or Leg	Offset Type	Offsets: Horz Lateral Vert ft ft ft	Azimuth Adjustment °	Placement ft		C_AA_A Front ft^2	C_AA_A Side ft^2	Weight K
(2) 10"x8"x3" TMA (T-Mobile Existing)	C	From Face	0.000 3.000 0.000 0.000	0.000	121.900	No Ice 1/2" Ice	0.778 0.899	0.292 0.380	0.015 0.020
Stand-off	C	From Face	1.000 0.000 0.000	0.000	83.400	No Ice 1/2" Ice	0.750 0.950	0.750 0.950	0.027 0.036
Stand-off	A	From Face	1.000 0.000 0.000	0.000	83.400	No Ice 1/2" Ice	0.750 0.950	0.750 0.950	0.027 0.036
GPS (Sprint Existing)	A	From Face	2.000 0.000 0.000	0.000	83.400	No Ice 1/2" Ice	1.000 1.500	1.000 1.500	0.010 0.015
APXV18-206517LS (Pocket Existing)	A	From Face	1.000 0.000 0.000	0.000	110.000	No Ice 1/2" Ice	5.049 5.497	3.011 3.441	0.028 0.054
APXV18-206517LS (Pocket Existing)	B	From Face	1.000 0.000 0.000	0.000	110.000	No Ice 1/2" Ice	5.049 5.497	3.011 3.441	0.028 0.054
APXV18-206517LS (Pocket Existing)	C	From Face	1.000 0.000 0.000	0.000	110.000	No Ice 1/2" Ice	5.049 5.497	3.011 3.441	0.028 0.054

Dishes

Description	Face or Leg	Dish Type	Offset Type	Offsets: Horz Lateral Vert ft	Azimuth Adjustment °	3 dB Beam Width °	Elevation ft	Outside Diameter ft		Aperture Area ft^2	Weight K
A-Ant-23G-2-C (Nextel Existing)	A	Paraboloid w/Radome	From Face	3.000 0.000 0.000	Worst		167.000	2.175	No Ice 1/2" Ice	3.715 4.006	0.027 0.050
A-Ant-23G-2-C (Nextel Existing)	C	Paraboloid w/Radome	From Face	3.000 0.000 0.000	Worst		167.000	2.175	No Ice 1/2" Ice	3.715 4.006	0.027 0.050

Tower Pressures - No Ice

$G_H = 1.690$

Section Elevation ft	z ft	K_Z	q_z ksf	A_G ft^2	Face	A_F ft^2	A_R ft^2	A_{leg} ft^2	Leg % %	C_AA_A In Face ft^2	C_AA_A Out Face ft^2
L1 160.000-123.330	140.642	1.513	0.031	80.460	A B	0.000 0.000	80.460 80.460	80.460	100.00 100.00	0.000 0.000	0.000 0.000

Section Elevation ft	z ft	K_Z	q_z ksf	A_G ft²	Face	A_F ft²	A_R ft²	A_{leg} ft²	Leg %	C_AA_A In Face ft²	C_AA_A Out Face ft²
					C	0.000	80.460		100.00	0.000	0.000
L2 123.330-86.170	104.095	1.389	0.029	112.199	A	0.000	112.199	112.199	100.00	0.000	0.000
					B	0.000	112.199		100.00	0.000	0.000
					C	0.000	112.199		100.00	0.000	0.000
L3 86.170-37.170	61.198	1.193	0.025	194.385	A	0.000	194.385	194.385	100.00	0.000	0.000
					B	0.000	194.385		100.00	0.000	0.000
					C	0.000	194.385		100.00	0.000	0.000
L4 37.170-0.000	18.036	1	0.021	182.112	A	0.000	182.112	182.112	100.00	0.000	0.000
					B	0.000	182.112		100.00	0.000	0.000
					C	0.000	182.112		100.00	0.000	0.000

Tower Pressure - With Ice

$G_H = 1.690$

Section Elevation ft	z ft	K_Z	q_z ksf	t_Z in	A_G ft²	Face	A_F ft²	A_R ft²	A_{leg} ft²	Leg %	C_AA_A In Face ft²	C_AA_A Out Face ft²
L1 160.000-123.330	140.642	1.513	0.024	0.500	83.516	A	0.000	83.516	83.516	100.00	0.000	0.000
						B	0.000	83.516		100.00	0.000	0.000
						C	0.000	83.516		100.00	0.000	0.000
L2 123.330-86.170	104.095	1.389	0.022	0.500	115.296	A	0.000	115.296	115.296	100.00	0.000	0.000
						B	0.000	115.296		100.00	0.000	0.000
						C	0.000	115.296		100.00	0.000	0.000
L3 86.170-37.170	61.198	1.193	0.018	0.500	198.469	A	0.000	198.469	198.469	100.00	0.000	0.000
						B	0.000	198.469		100.00	0.000	0.000
						C	0.000	198.469		100.00	0.000	0.000
L4 37.170-0.000	18.036	1	0.016	0.500	185.210	A	0.000	185.210	185.210	100.00	0.000	0.000
						B	0.000	185.210		100.00	0.000	0.000
						C	0.000	185.210		100.00	0.000	0.000

Tower Pressure - Service

$G_H = 1.690$

Section Elevation ft	z ft	K_Z	q_z ksf	A_G ft²	Face	A_F ft²	A_R ft²	A_{leg} ft²	Leg %	C_AA_A In Face ft²	C_AA_A Out Face ft²
L1 160.000-123.330	140.642	1.513	0.010	80.460	A	0.000	80.460	80.460	100.00	0.000	0.000
					B	0.000	80.460		100.00	0.000	0.000
					C	0.000	80.460		100.00	0.000	0.000
L2 123.330-86.170	104.095	1.389	0.009	112.199	A	0.000	112.199	112.199	100.00	0.000	0.000
					B	0.000	112.199		100.00	0.000	0.000
					C	0.000	112.199		100.00	0.000	0.000
L3 86.170-37.170	61.198	1.193	0.008	194.385	A	0.000	194.385	194.385	100.00	0.000	0.000
					B	0.000	194.385		100.00	0.000	0.000
					C	0.000	194.385		100.00	0.000	0.000
L4 37.170-0.000	18.036	1	0.006	182.112	A	0.000	182.112	182.112	100.00	0.000	0.000
					B	0.000	182.112		100.00	0.000	0.000
					C	0.000	182.112		100.00	0.000	0.000

Tower Forces - No Ice - Wind Normal To Face

Section Elevation ft	Add Weight K	Self Weight K	Face	e	C_F	R_R	D_F	D_R	A_E ft²	F K	w klf	Ctrl. Face
L1 160.000-123.330	1.344	2.298	A	1	1.03	1	1	1	80.460	4.391	0.120	C
			B	1	1.03	1	1	1	80.460			
			C	1	1.03	1	1	1	80.460			
L2 123.330-86.170	2.312	5.555	A	1	1.03	1	1	1	112.199	5.615	0.151	C
			B	1	1.03	1	1	1	112.199			
			C	1	1.03	1	1	1	112.199			
L3 86.170-37.170	3.192	12.197	A	1	1.03	1	1	1	194.385	8.308	0.170	C
			B	1	1.03	1	1	1	194.385			
			C	1	1.03	1	1	1	194.385			
L4 37.170-0.000	2.226	13.103	A	1	1.03	1	1	1	182.112	6.573	0.177	C
			B	1	1.03	1	1	1	182.112			
			C	1	1.03	1	1	1	182.112			
Sum Weight:	9.074	33.152						OTM	1829.090 kip-ft	24.888		

Tower Forces - No Ice - Wind 45 To Face

Section Elevation ft	Add Weight K	Self Weight K	Face	e	C_F	R_R	D_F	D_R	A_E ft²	F K	w klf	Ctrl. Face
L1 160.000-123.330	1.344	2.298	A	1	1.03	1	1	1	80.460	4.391	0.120	C
			B	1	1.03	1	1	1	80.460			
			C	1	1.03	1	1	1	80.460			
L2 123.330-86.170	2.312	5.555	A	1	1.03	1	1	1	112.199	5.615	0.151	C
			B	1	1.03	1	1	1	112.199			
			C	1	1.03	1	1	1	112.199			
L3 86.170-37.170	3.192	12.197	A	1	1.03	1	1	1	194.385	8.308	0.170	C
			B	1	1.03	1	1	1	194.385			
			C	1	1.03	1	1	1	194.385			
L4 37.170-0.000	2.226	13.103	A	1	1.03	1	1	1	182.112	6.573	0.177	C
			B	1	1.03	1	1	1	182.112			
			C	1	1.03	1	1	1	182.112			
Sum Weight:	9.074	33.152						OTM	1829.090 kip-ft	24.888		

Tower Forces - No Ice - Wind 60 To Face

Section Elevation ft	Add Weight K	Self Weight K	Face	e	C_F	R_R	D_F	D_R	A_E ft²	F K	w klf	Ctrl. Face
L1 160.000-123.330	1.344	2.298	A	1	1.03	1	1	1	80.460	4.391	0.120	C
			B	1	1.03	1	1	1	80.460			
			C	1	1.03	1	1	1	80.460			
L2 123.330-	2.312	5.555	A	1	1.03	1	1	1	112.199	5.615	0.151	C

Section Elevation ft	Add Weight K	Self Weight K	Face	e	C_F	R_R	D_F	D_R	A_E ft^2	F K	w klf	Ctrl. Face
86.170			B	1	1.03	1	1	1	112.199			
			C	1	1.03	1	1	1	112.199			
L3 86.170-37.170	3.192	12.197	A	1	1.03	1	1	1	194.385	8.308	0.170	C
			B	1	1.03	1	1	1	194.385			
			C	1	1.03	1	1	1	194.385			
L4 37.170-0.000	2.226	13.103	A	1	1.03	1	1	1	182.112	6.573	0.177	C
			B	1	1.03	1	1	1	182.112			
			C	1	1.03	1	1	1	182.112			
Sum Weight:	9.074	33.152						OTM	1829.090 kip-ft	24.888		

Tower Forces - No Ice - Wind 90 To Face

Section Elevation ft	Add Weight K	Self Weight K	Face	e	C_F	R_R	D_F	D_R	A_E ft^2	F K	w klf	Ctrl. Face
L1 160.000-123.330	1.344	2.298	A	1	1.03	1	1	1	80.460	4.391	0.120	C
			B	1	1.03	1	1	1	80.460			
			C	1	1.03	1	1	1	80.460			
L2 123.330-86.170	2.312	5.555	A	1	1.03	1	1	1	112.199	5.615	0.151	C
			B	1	1.03	1	1	1	112.199			
			C	1	1.03	1	1	1	112.199			
L3 86.170-37.170	3.192	12.197	A	1	1.03	1	1	1	194.385	8.308	0.170	C
			B	1	1.03	1	1	1	194.385			
			C	1	1.03	1	1	1	194.385			
L4 37.170-0.000	2.226	13.103	A	1	1.03	1	1	1	182.112	6.573	0.177	C
			B	1	1.03	1	1	1	182.112			
			C	1	1.03	1	1	1	182.112			
Sum Weight:	9.074	33.152						OTM	1829.090 kip-ft	24.888		

Tower Forces - With Ice - Wind Normal To Face

Section Elevation ft	Add Weight K	Self Weight K	Face	e	C_F	R_R	D_F	D_R	A_E ft^2	F K	w klf	Ctrl. Face
L1 160.000-123.330	1.344	2.914	A	1	1.03	1	1	1	83.516	3.418	0.093	C
			B	1	1.03	1	1	1	83.516			
			C	1	1.03	1	1	1	83.516			
L2 123.330-86.170	2.312	6.410	A	1	1.03	1	1	1	115.296	4.328	0.116	C
			B	1	1.03	1	1	1	115.296			
			C	1	1.03	1	1	1	115.296			
L3 86.170-37.170	3.192	13.673	A	1	1.03	1	1	1	198.469	6.362	0.130	C
			B	1	1.03	1	1	1	198.469			
			C	1	1.03	1	1	1	198.469			
L4 37.170-0.000	2.226	14.483	A	1	1.03	1	1	1	185.210	5.014	0.135	C
			B	1	1.03	1	1	1	185.210			
			C	1	1.03	1	1	1	185.210			
Sum Weight:	9.074	37.478						OTM	1411.032	19.122		

Section Elevation ft	Add Weight K	Self Weight K	Face	e	C_F	R_R	D_F	D_R	A_E ft^2	F K	w klf	Ctrl. Face
									kip-ft			

Tower Forces - With Ice - Wind 45 To Face

Section Elevation ft	Add Weight K	Self Weight K	Face	e	C_F	R_R	D_F	D_R	A_E ft^2	F K	w klf	Ctrl. Face
L1 160.000-123.330	1.344	2.914	A	1	1.03	1	1	1	83.516	3.418	0.093	C
			B	1	1.03	1	1	1	83.516			
			C	1	1.03	1	1	1	83.516			
L2 123.330-86.170	2.312	6.410	A	1	1.03	1	1	1	115.296	4.328	0.116	C
			B	1	1.03	1	1	1	115.296			
			C	1	1.03	1	1	1	115.296			
L3 86.170-37.170	3.192	13.673	A	1	1.03	1	1	1	198.469	6.362	0.130	C
			B	1	1.03	1	1	1	198.469			
			C	1	1.03	1	1	1	198.469			
L4 37.170-0.000	2.226	14.483	A	1	1.03	1	1	1	185.210	5.014	0.135	C
			B	1	1.03	1	1	1	185.210			
			C	1	1.03	1	1	1	185.210			
Sum Weight:	9.074	37.478						OTM	1411.032 kip-ft	19.122		

Tower Forces - With Ice - Wind 60 To Face

Section Elevation ft	Add Weight K	Self Weight K	Face	e	C_F	R_R	D_F	D_R	A_E ft^2	F K	w klf	Ctrl. Face
L1 160.000-123.330	1.344	2.914	A	1	1.03	1	1	1	83.516	3.418	0.093	C
			B	1	1.03	1	1	1	83.516			
			C	1	1.03	1	1	1	83.516			
L2 123.330-86.170	2.312	6.410	A	1	1.03	1	1	1	115.296	4.328	0.116	C
			B	1	1.03	1	1	1	115.296			
			C	1	1.03	1	1	1	115.296			
L3 86.170-37.170	3.192	13.673	A	1	1.03	1	1	1	198.469	6.362	0.130	C
			B	1	1.03	1	1	1	198.469			
			C	1	1.03	1	1	1	198.469			
L4 37.170-0.000	2.226	14.483	A	1	1.03	1	1	1	185.210	5.014	0.135	C
			B	1	1.03	1	1	1	185.210			
			C	1	1.03	1	1	1	185.210			
Sum Weight:	9.074	37.478						OTM	1411.032 kip-ft	19.122		

Tower Forces - With Ice - Wind 90 To Face

Section Elevation ft	Add Weight K	Self Weight K	Face	e	C_F	R_R	D_F	D_R	A_E ft^2	F K	w klf	Ctrl. Face
L1 160.000-123.330	1.344	2.914	A	1	1.03	1	1	1	83.516	3.418	0.093	C
			B	1	1.03	1	1	1	83.516			
			C	1	1.03	1	1	1	83.516			
L2 123.330-86.170	2.312	6.410	A	1	1.03	1	1	1	115.296	4.328	0.116	C
			B	1	1.03	1	1	1	115.296			
			C	1	1.03	1	1	1	115.296			
L3 86.170-37.170	3.192	13.673	A	1	1.03	1	1	1	198.469	6.362	0.130	C
			B	1	1.03	1	1	1	198.469			
			C	1	1.03	1	1	1	198.469			
L4 37.170-0.000	2.226	14.483	A	1	1.03	1	1	1	185.210	5.014	0.135	C
			B	1	1.03	1	1	1	185.210			
			C	1	1.03	1	1	1	185.210			
Sum Weight:	9.074	37.478						OTM	1411.032 kip-ft	19.122		

Tower Forces - Service - Wind Normal To Face

Section Elevation ft	Add Weight K	Self Weight K	Face	e	C_F	R_R	D_F	D_R	A_E ft^2	F K	w klf	Ctrl. Face
L1 160.000-123.330	1.344	2.298	A	1	1.03	1	1	1	80.460	1.355	0.037	C
			B	1	1.03	1	1	1	80.460			
			C	1	1.03	1	1	1	80.460			
L2 123.330-86.170	2.312	5.555	A	1	1.03	1	1	1	112.199	1.733	0.047	C
			B	1	1.03	1	1	1	112.199			
			C	1	1.03	1	1	1	112.199			
L3 86.170-37.170	3.192	12.197	A	1	1.03	1	1	1	194.385	2.564	0.052	C
			B	1	1.03	1	1	1	194.385			
			C	1	1.03	1	1	1	194.385			
L4 37.170-0.000	2.226	13.103	A	1	1.03	1	1	1	182.112	2.029	0.055	C
			B	1	1.03	1	1	1	182.112			
			C	1	1.03	1	1	1	182.112			
Sum Weight:	9.074	33.152						OTM	564.534 kip-ft	7.681		

Tower Forces - Service - Wind 45 To Face

Section Elevation ft	Add Weight K	Self Weight K	Face	e	C_F	R_R	D_F	D_R	A_E ft^2	F K	w klf	Ctrl. Face
L1 160.000-123.330	1.344	2.298	A	1	1.03	1	1	1	80.460	1.355	0.037	C
			B	1	1.03	1	1	1	80.460			
			C	1	1.03	1	1	1	80.460			
L2 123.330-86.170	2.312	5.555	A	1	1.03	1	1	1	112.199	1.733	0.047	C
			B	1	1.03	1	1	1	112.199			
			C	1	1.03	1	1	1	112.199			
L3 86.170-37.170	3.192	12.197	A	1	1.03	1	1	1	194.385	2.564	0.052	C
			B	1	1.03	1	1	1	194.385			
			C	1	1.03	1	1	1	194.385			

Section Elevation ft	Add Weight K	Self Weight K	Face	e	C_F	R_R	D_F	D_R	A_E ft^2	F K	w klf	Ctrl. Face
L4 37.170-0.000	2.226	13.103	A	1	1.03	1	1	1	182.112	2.029	0.055	C
			B	1	1.03	1	1	1	182.112			
			C	1	1.03	1	1	1	182.112			
Sum Weight:	9.074	33.152						OTM	564.534 kip-ft	7.681		

Tower Forces - Service - Wind 60 To Face

Section Elevation ft	Add Weight K	Self Weight K	Face	e	C_F	R_R	D_F	D_R	A_E ft^2	F K	w klf	Ctrl. Face
L1 160.000-123.330	1.344	2.298	A	1	1.03	1	1	1	80.460	1.355	0.037	C
			B	1	1.03	1	1	1	80.460			
			C	1	1.03	1	1	1	80.460			
L2 123.330-86.170	2.312	5.555	A	1	1.03	1	1	1	112.199	1.733	0.047	C
			B	1	1.03	1	1	1	112.199			
			C	1	1.03	1	1	1	112.199			
L3 86.170-37.170	3.192	12.197	A	1	1.03	1	1	1	194.385	2.564	0.052	C
			B	1	1.03	1	1	1	194.385			
			C	1	1.03	1	1	1	194.385			
L4 37.170-0.000	2.226	13.103	A	1	1.03	1	1	1	182.112	2.029	0.055	C
			B	1	1.03	1	1	1	182.112			
			C	1	1.03	1	1	1	182.112			
Sum Weight:	9.074	33.152						OTM	564.534 kip-ft	7.681		

Tower Forces - Service - Wind 90 To Face

Section Elevation ft	Add Weight K	Self Weight K	Face	e	C_F	R_R	D_F	D_R	A_E ft^2	F K	w klf	Ctrl. Face
L1 160.000-123.330	1.344	2.298	A	1	1.03	1	1	1	80.460	1.355	0.037	C
			B	1	1.03	1	1	1	80.460			
			C	1	1.03	1	1	1	80.460			
L2 123.330-86.170	2.312	5.555	A	1	1.03	1	1	1	112.199	1.733	0.047	C
			B	1	1.03	1	1	1	112.199			
			C	1	1.03	1	1	1	112.199			
L3 86.170-37.170	3.192	12.197	A	1	1.03	1	1	1	194.385	2.564	0.052	C
			B	1	1.03	1	1	1	194.385			
			C	1	1.03	1	1	1	194.385			
L4 37.170-0.000	2.226	13.103	A	1	1.03	1	1	1	182.112	2.029	0.055	C
			B	1	1.03	1	1	1	182.112			
			C	1	1.03	1	1	1	182.112			
Sum Weight:	9.074	33.152						OTM	564.534 kip-ft	7.681		

Force Totals

Load Case	Vertical Forces K	Sum of Forces X K	Sum of Forces Z K	Sum of Overturning Moments, M_x kip-ft	Sum of Overturning Moments, M_z kip-ft	Sum of Torques kip-ft
Leg Weight	33.152					
Bracing Weight	0.000					
Total Member Self-Weight	33.152			-0.250	0.520	
Total Weight	53.022			-0.250	0.520	
Wind 0 deg - No Ice		-0.074	-44.582	-4720.844	12.924	-1.266
Wind 30 deg - No Ice		22.269	-38.572	-4082.202	-2356.196	-1.224
Wind 45 deg - No Ice		31.532	-31.471	-3329.442	-3338.801	-1.076
Wind 60 deg - No Ice		38.646	-22.226	-2349.804	-4093.836	-0.854
Wind 90 deg - No Ice		44.667	0.074	12.154	-4734.397	-0.255
Wind 120 deg - No Ice		38.720	22.355	2370.789	-4106.241	0.412
Wind 135 deg - No Ice		31.637	31.576	3346.485	-3356.343	0.715
Wind 150 deg - No Ice		22.398	38.646	4094.106	-2377.681	0.969
Wind 180 deg - No Ice		0.074	44.582	4720.343	-11.885	1.266
Wind 210 deg - No Ice		-22.269	38.572	4081.701	2357.236	1.224
Wind 225 deg - No Ice		-31.532	31.471	3328.942	3339.840	1.076
Wind 240 deg - No Ice		-38.646	22.226	2349.304	4094.876	0.854
Wind 270 deg - No Ice		-44.667	-0.074	-12.655	4735.437	0.255
Wind 300 deg - No Ice		-38.720	-22.355	-2371.290	4107.280	-0.412
Wind 315 deg - No Ice		-31.637	-31.576	-3346.985	3357.383	-0.715
Wind 330 deg - No Ice		-22.398	-38.646	-4094.606	2378.721	-0.969
Member Ice	4.326					
Total Weight Ice	63.554			-0.304	0.751	
Wind 0 deg - Ice		-0.058	-36.274	-3927.994	10.443	-1.116
Wind 30 deg - Ice		18.120	-31.386	-3396.938	-1960.296	-1.140
Wind 45 deg - Ice		25.656	-25.609	-2770.748	-2777.605	-1.035
Wind 60 deg - Ice		31.444	-18.087	-1955.756	-3405.573	-0.859
Wind 90 deg - Ice		36.341	0.058	9.387	-3938.129	-0.348
Wind 120 deg - Ice		31.502	18.187	1971.934	-3415.264	0.256
Wind 135 deg - Ice		25.738	25.691	2783.845	-2791.310	0.543
Wind 150 deg - Ice		18.221	31.444	3406.021	-1977.081	0.792
Wind 180 deg - Ice		0.058	36.274	3927.386	-8.940	1.116
Wind 210 deg - Ice		-18.120	31.386	3396.330	1961.799	1.140
Wind 225 deg - Ice		-25.656	25.609	2770.139	2779.108	1.035
Wind 240 deg - Ice		-31.444	18.087	1955.148	3407.076	0.859
Wind 270 deg - Ice		-36.341	-0.058	-9.995	3939.632	0.348
Wind 300 deg - Ice		-31.502	-18.187	-1972.542	3416.767	-0.256
Wind 315 deg - Ice		-25.738	-25.691	-2784.453	2792.813	-0.543
Wind 330 deg - Ice		-18.221	-31.444	-3406.629	1978.584	-0.792
Total Weight	53.022			-0.250	0.520	
Wind 0 deg - Service		-0.023	-13.760	-1457.224	4.348	-0.391
Wind 30 deg - Service		6.873	-11.905	-1260.112	-726.862	-0.378
Wind 45 deg - Service		9.732	-9.713	-1027.779	-1030.135	-0.332
Wind 60 deg - Service		11.928	-6.860	-725.421	-1263.170	-0.264
Wind 90 deg - Service		13.786	0.023	3.578	-1460.874	-0.079
Wind 120 deg - Service		11.951	6.900	731.552	-1266.999	0.127
Wind 135 deg - Service		9.765	9.746	1032.693	-1035.549	0.221
Wind 150 deg - Service		6.913	11.928	1263.440	-733.493	0.299
Wind 180 deg - Service		0.023	13.760	1456.723	-3.309	0.391
Wind 210 deg - Service		-6.873	11.905	1259.611	727.901	0.378
Wind 225 deg - Service		-9.732	9.713	1027.278	1031.174	0.332
Wind 240 deg - Service		-11.928	6.860	724.921	1264.210	0.264
Wind 270 deg - Service		-13.786	-0.023	-4.079	1461.914	0.079
Wind 300 deg - Service		-11.951	-6.900	-732.053	1268.039	-0.127
Wind 315 deg - Service		-9.765	-9.746	-1033.193	1036.589	-0.221
Wind 330 deg - Service		-6.913	-11.928	-1263.940	734.533	-0.299

Load Combinations

Comb. No.	Description
1	Dead Only
2	Dead+Wind 0 deg - No Ice
3	Dead+Wind 30 deg - No Ice
4	Dead+Wind 45 deg - No Ice
5	Dead+Wind 60 deg - No Ice
6	Dead+Wind 90 deg - No Ice
7	Dead+Wind 120 deg - No Ice
8	Dead+Wind 135 deg - No Ice
9	Dead+Wind 150 deg - No Ice
10	Dead+Wind 180 deg - No Ice
11	Dead+Wind 210 deg - No Ice
12	Dead+Wind 225 deg - No Ice
13	Dead+Wind 240 deg - No Ice
14	Dead+Wind 270 deg - No Ice
15	Dead+Wind 300 deg - No Ice
16	Dead+Wind 315 deg - No Ice
17	Dead+Wind 330 deg - No Ice
18	Dead+Ice+Temp
19	Dead+Wind 0 deg+Ice+Temp
20	Dead+Wind 30 deg+Ice+Temp
21	Dead+Wind 45 deg+Ice+Temp
22	Dead+Wind 60 deg+Ice+Temp
23	Dead+Wind 90 deg+Ice+Temp
24	Dead+Wind 120 deg+Ice+Temp
25	Dead+Wind 135 deg+Ice+Temp
26	Dead+Wind 150 deg+Ice+Temp
27	Dead+Wind 180 deg+Ice+Temp
28	Dead+Wind 210 deg+Ice+Temp
29	Dead+Wind 225 deg+Ice+Temp
30	Dead+Wind 240 deg+Ice+Temp
31	Dead+Wind 270 deg+Ice+Temp
32	Dead+Wind 300 deg+Ice+Temp
33	Dead+Wind 315 deg+Ice+Temp
34	Dead+Wind 330 deg+Ice+Temp
35	Dead+Wind 0 deg - Service
36	Dead+Wind 30 deg - Service
37	Dead+Wind 45 deg - Service
38	Dead+Wind 60 deg - Service
39	Dead+Wind 90 deg - Service
40	Dead+Wind 120 deg - Service
41	Dead+Wind 135 deg - Service
42	Dead+Wind 150 deg - Service
43	Dead+Wind 180 deg - Service
44	Dead+Wind 210 deg - Service
45	Dead+Wind 225 deg - Service
46	Dead+Wind 240 deg - Service
47	Dead+Wind 270 deg - Service
48	Dead+Wind 300 deg - Service
49	Dead+Wind 315 deg - Service
50	Dead+Wind 330 deg - Service

Maximum Member Forces

Section No.	Elevation ft	Component Type	Condition	Gov. Load Comb.	Force K	Major Axis Moment kip-ft	Minor Axis Moment kip-ft
L1	160 - 123.33	Pole	Max Tension	1	0.000	0.000	0.000
			Max. Compression	18	-16.831	0.619	0.326
			Max. Mx	14	-9.859	481.502	3.220
			Max. My	2	-9.873	3.340	477.946
			Max. Vy	14	-20.983	481.502	3.220
			Max. Vx	2	-20.894	3.340	477.946
			Max. Torque	11			-1.141
L2	123.33 - 86.17	Pole	Max Tension	1	0.000	0.000	0.000
			Max. Compression	18	-28.496	0.619	0.326
			Max. Mx	14	-19.498	1423.675	6.035
			Max. My	2	-19.508	6.186	1416.896
			Max. Vy	14	-29.748	1423.675	6.035
			Max. Vx	2	-29.658	6.186	1416.896
			Max. Torque	2			1.108
L3	86.17 - 37.17	Pole	Max Tension	1	0.000	0.000	0.000
			Max. Compression	18	-44.256	0.752	0.305
			Max. Mx	14	-34.519	3024.748	9.693
			Max. My	2	-34.523	9.968	3013.620
			Max. Vy	14	-37.573	3024.748	9.693
			Max. Vx	2	-37.484	9.968	3013.620
			Max. Torque	2			1.334
L4	37.17 - 0	Pole	Max Tension	1	0.000	0.000	0.000
			Max. Compression	18	-63.554	0.752	0.305
			Max. Mx	14	-53.001	4854.795	13.058
			Max. My	2	-53.001	13.335	4839.783
			Max. Vy	14	-44.693	4854.795	13.058
			Max. Vx	2	-44.607	13.335	4839.783
			Max. Torque	2			1.331

Maximum Reactions

Location	Condition	Gov. Load Comb.	Vertical K	Horizontal, X K	Horizontal, Z K
Pole	Max. Vert	31	63.554	36.341	0.058
	Max. H_x	14	53.022	44.667	0.074
	Max. H_z	2	53.022	0.074	44.582
	Max. M_x	2	4839.783	0.074	44.582
	Max. M_z	6	4853.707	-44.667	-0.074
	Max. Torsion	2	1.331	0.074	44.582
	Min. Vert	1	53.022	0.000	0.000
	Min. H_x	6	53.022	-44.667	-0.074
	Min. H_z	10	53.022	-0.074	-44.582
	Min. M_x	10	-4839.256	-0.074	-44.582
	Min. M_z	14	-4854.795	44.667	0.074
	Min. Torsion	11	-1.260	22.269	-38.572

Tower Mast Reaction Summary

Load Combination	Vertical K	$Shear_x$ K	$Shear_z$ K	Overturning Moment, M_x kip-ft	Overturning Moment, M_z kip-ft	Torque kip-ft
Dead Only	53.022	0.000	0.000	-0.250	0.520	0.000

Load Combination	Vertical K	$Shear_x$ K	$Shear_z$ K	Overturning Moment, M_x kip-ft	Overturning Moment, M_z kip-ft	Torque kip-ft
Dead+Wind 0 deg - No Ice	53.022	-0.074	-44.582	-4839.783	13.335	-1.331
Dead+Wind 30 deg - No Ice	53.022	22.269	-38.572	-4185.032	-2415.537	-1.260
Dead+Wind 45 deg - No Ice	53.022	31.532	-31.471	-3413.285	-3422.927	-1.091
Dead+Wind 60 deg - No Ice	53.022	38.646	-22.226	-2408.943	-4197.003	-0.851
Dead+Wind 90 deg - No Ice	53.022	44.667	0.074	12.531	-4853.707	-0.242
Dead+Wind 120 deg - No Ice	53.022	38.720	22.355	2430.545	-4209.743	0.404
Dead+Wind 135 deg - No Ice	53.022	31.637	31.576	3430.800	-3440.970	0.694
Dead+Wind 150 deg - No Ice	53.022	22.398	38.646	4197.245	-2437.666	0.942
Dead+Wind 180 deg - No Ice	53.022	0.074	44.582	4839.256	-12.254	1.255
Dead+Wind 210 deg - No Ice	53.022	-22.269	38.572	4184.509	2416.620	1.260
Dead+Wind 225 deg - No Ice	53.022	-31.532	31.471	3412.761	3424.012	1.134
Dead+Wind 240 deg - No Ice	53.022	-38.646	22.226	2408.419	4198.090	0.927
Dead+Wind 270 deg - No Ice	53.022	-44.667	-0.074	-13.058	4854.795	0.318
Dead+Wind 300 deg - No Ice	53.022	-38.720	-22.355	-2431.075	4210.830	-0.404
Dead+Wind 315 deg - No Ice	53.022	-31.637	-31.576	-3431.331	3442.054	-0.738
Dead+Wind 330 deg - No Ice	53.022	-22.398	-38.646	-4197.776	2438.749	-1.017
Dead+Ice+Temp	63.554	0.000	0.000	-0.305	0.752	0.000
Dead+Wind 0 deg+Ice+Temp	63.554	-0.058	-36.274	-4067.015	10.920	-1.182
Dead+Wind 30 deg+Ice+Temp	63.554	18.120	-31.386	-3517.131	-2029.627	-1.190
Dead+Wind 45 deg+Ice+Temp	63.554	25.656	-25.609	-2868.758	-2875.894	-1.070
Dead+Wind 60 deg+Ice+Temp	63.554	31.444	-18.087	-2024.905	-3526.111	-0.879
Dead+Wind 90 deg+Ice+Temp	63.554	36.341	0.058	9.793	-4077.544	-0.351
Dead+Wind 120 deg+Ice+Temp	63.554	31.502	18.187	2041.760	-3536.199	0.252
Dead+Wind 135 deg+Ice+Temp	63.554	25.738	25.691	2882.384	-2890.174	0.537
Dead+Wind 150 deg+Ice+Temp	63.554	18.221	31.444	3526.563	-2047.137	0.788
Dead+Wind 180 deg+Ice+Temp	63.554	0.058	36.274	4066.359	-9.320	1.131
Dead+Wind 210 deg+Ice+Temp	63.554	-18.120	31.386	3516.478	2031.229	1.190
Dead+Wind 225 deg+Ice+Temp	63.554	-25.656	25.609	2868.106	2877.497	1.099
Dead+Wind 240 deg+Ice+Temp	63.554	-31.444	18.087	2024.253	3527.717	0.930
Dead+Wind 270 deg+Ice+Temp	63.554	-36.341	-0.058	-10.447	4079.152	0.402
Dead+Wind 300 deg+Ice+Temp	63.554	-31.502	-18.187	-2042.418	3537.806	-0.252
Dead+Wind 315 deg+Ice+Temp	63.554	-25.738	-25.691	-2883.044	2891.780	-0.566
Dead+Wind 330 deg+Ice+Temp	63.554	-18.221	-31.444	-3527.223	2048.740	-0.839
Dead+Wind 0 deg - Service	53.022	-0.023	-13.760	-1495.328	4.501	-0.406
Dead+Wind 30 deg - Service	53.022	6.873	-11.905	-1293.051	-745.844	-0.392
Dead+Wind 45 deg - Service	53.022	9.732	-9.713	-1054.639	-1057.055	-0.344
Dead+Wind 60 deg - Service	53.022	11.928	-6.860	-744.372	-1296.193	-0.273
Dead+Wind 90 deg - Service	53.022	13.786	0.023	3.689	-1499.081	-0.084
Dead+Wind 120 deg - Service	53.022	11.951	6.900	750.690	-1300.146	0.126
Dead+Wind 135 deg - Service	53.022	9.765	9.746	1059.699	-1062.646	0.221
Dead+Wind 150 deg - Service	53.022	6.913	11.928	1296.474	-752.692	0.301
Dead+Wind 180 deg - Service	53.022	0.023	13.760	1494.799	-3.407	0.399
Dead+Wind 210 deg - Service	53.022	-6.873	11.905	1292.522	746.937	0.392
Dead+Wind 225 deg - Service	53.022	-9.732	9.713	1054.109	1058.149	0.348
Dead+Wind 240 deg - Service	53.022	-11.928	6.860	743.843	1297.287	0.280
Dead+Wind 270 deg - Service	53.022	-13.786	-0.023	-4.219	1500.175	0.091
Dead+Wind 300 deg - Service	53.022	-11.951	-6.900	-751.220	1301.239	-0.126
Dead+Wind 315 deg - Service	53.022	-9.765	-9.746	-1060.229	1063.740	-0.225
Dead+Wind 330 deg - Service	53.022	-6.913	-11.928	-1297.004	753.785	-0.309

Solution Summary

	Sum of Applied Forces			Sum of Reactions			
Load Comb.	PX K	PY K	PZ K	PX K	PY K	PZ K	% Error
1	0.000	-53.022	0.000	0.000	53.022	0.000	0.000%
2	-0.074	-53.022	-44.582	0.074	53.022	44.582	0.000%
3	22.269	-53.022	-38.572	-22.269	53.022	38.572	0.000%

Load Comb.	Sum of Applied Forces PX K	PY K	PZ K	Sum of Reactions PX K	PY K	PZ K	% Error
4	31.532	-53.022	-31.471	-31.532	53.022	31.471	0.000%
5	38.646	-53.022	-22.226	-38.646	53.022	22.226	0.000%
6	44.667	-53.022	0.074	-44.667	53.022	-0.074	0.000%
7	38.720	-53.022	22.355	-38.720	53.022	-22.355	0.000%
8	31.637	-53.022	31.576	-31.637	53.022	-31.576	0.000%
9	22.398	-53.022	38.646	-22.398	53.022	-38.646	0.000%
10	0.074	-53.022	44.582	-0.074	53.022	-44.582	0.000%
11	-22.269	-53.022	38.572	22.269	53.022	-38.572	0.000%
12	-31.532	-53.022	31.471	31.532	53.022	-31.471	0.000%
13	-38.646	-53.022	22.226	38.646	53.022	-22.226	0.000%
14	-44.667	-53.022	-0.074	44.667	53.022	0.074	0.000%
15	-38.720	-53.022	-22.355	38.720	53.022	22.355	0.000%
16	-31.637	-53.022	-31.576	31.637	53.022	31.576	0.000%
17	-22.398	-53.022	-38.646	22.398	53.022	38.646	0.000%
18	0.000	-63.554	0.000	0.000	63.554	0.000	0.000%
19	-0.058	-63.554	-36.274	0.058	63.554	36.274	0.000%
20	18.120	-63.554	-31.386	-18.120	63.554	31.386	0.000%
21	25.656	-63.554	-25.609	-25.656	63.554	25.609	0.000%
22	31.444	-63.554	-18.087	-31.444	63.554	18.087	0.000%
23	36.341	-63.554	0.058	-36.341	63.554	-0.058	0.000%
24	31.502	-63.554	18.187	-31.502	63.554	-18.187	0.000%
25	25.738	-63.554	25.691	-25.738	63.554	-25.691	0.000%
26	18.221	-63.554	31.444	-18.221	63.554	-31.444	0.000%
27	0.058	-63.554	36.274	-0.058	63.554	-36.274	0.000%
28	-18.120	-63.554	31.386	18.120	63.554	-31.386	0.000%
29	-25.656	-63.554	25.609	25.656	63.554	-25.609	0.000%
30	-31.444	-63.554	18.087	31.444	63.554	-18.087	0.000%
31	-36.341	-63.554	-0.058	36.341	63.554	0.058	0.000%
32	-31.502	-63.554	-18.187	31.502	63.554	18.187	0.000%
33	-25.738	-63.554	-25.691	25.738	63.554	25.691	0.000%
34	-18.221	-63.554	-31.444	18.221	63.554	31.444	0.000%
35	-0.023	-53.022	-13.760	0.023	53.022	13.760	0.000%
36	6.873	-53.022	-11.905	-6.873	53.022	11.905	0.000%
37	9.732	-53.022	-9.713	-9.732	53.022	9.713	0.000%
38	11.928	-53.022	-6.860	-11.928	53.022	6.860	0.000%
39	13.786	-53.022	0.023	-13.786	53.022	-0.023	0.000%
40	11.951	-53.022	6.900	-11.951	53.022	-6.900	0.000%
41	9.765	-53.022	9.746	-9.765	53.022	-9.746	0.000%
42	6.913	-53.022	11.928	-6.913	53.022	-11.928	0.000%
43	0.023	-53.022	13.760	-0.023	53.022	-13.760	0.000%
44	-6.873	-53.022	11.905	6.873	53.022	-11.905	0.000%
45	-9.732	-53.022	9.713	9.732	53.022	-9.713	0.000%
46	-11.928	-53.022	6.860	11.928	53.022	-6.860	0.000%
47	-13.786	-53.022	-0.023	13.786	53.022	0.023	0.000%
48	-11.951	-53.022	-6.900	11.951	53.022	6.900	0.000%
49	-9.765	-53.022	-9.746	9.765	53.022	9.746	0.000%
50	-6.913	-53.022	-11.928	6.913	53.022	11.928	0.000%

Non-Linear Convergence Results

Load Combination	Converged?	Number of Cycles	Displacement Tolerance	Force Tolerance
1	Yes	4	0.00000001	0.00000001
2	Yes	4	0.00000001	0.00030961
3	Yes	5	0.00000001	0.00019918
4	Yes	5	0.00000001	0.00022387

5	Yes	5	0.00000001	0.00020595
6	Yes	4	0.00000001	0.00006459
7	Yes	5	0.00000001	0.00020713
8	Yes	5	0.00000001	0.00022638
9	Yes	5	0.00000001	0.00020285
10	Yes	4	0.00000001	0.00018739
11	Yes	5	0.00000001	0.00020704
12	Yes	5	0.00000001	0.00022390
13	Yes	5	0.00000001	0.00020045
14	Yes	4	0.00000001	0.00013560
15	Yes	5	0.00000001	0.00020503
16	Yes	5	0.00000001	0.00022667
17	Yes	5	0.00000001	0.00020913
18	Yes	4	0.00000001	0.00000001
19	Yes	5	0.00000001	0.00012707
20	Yes	5	0.00000001	0.00046357
21	Yes	5	0.00000001	0.00053057
22	Yes	5	0.00000001	0.00047530
23	Yes	5	0.00000001	0.00012587
24	Yes	5	0.00000001	0.00047790
25	Yes	5	0.00000001	0.00053688
26	Yes	5	0.00000001	0.00047216
27	Yes	5	0.00000001	0.00012624
28	Yes	5	0.00000001	0.00047701
29	Yes	5	0.00000001	0.00053092
30	Yes	5	0.00000001	0.00046556
31	Yes	5	0.00000001	0.00012624
32	Yes	5	0.00000001	0.00047657
33	Yes	5	0.00000001	0.00053813
34	Yes	5	0.00000001	0.00048201
35	Yes	4	0.00000001	0.00004917
36	Yes	4	0.00000001	0.00034444
37	Yes	4	0.00000001	0.00041548
38	Yes	4	0.00000001	0.00037204
39	Yes	4	0.00000001	0.00003085
40	Yes	4	0.00000001	0.00037209
41	Yes	4	0.00000001	0.00042240
42	Yes	4	0.00000001	0.00035479
43	Yes	4	0.00000001	0.00004468
44	Yes	4	0.00000001	0.00037712
45	Yes	4	0.00000001	0.00041594
46	Yes	4	0.00000001	0.00034950
47	Yes	4	0.00000001	0.00003246
48	Yes	4	0.00000001	0.00036433
49	Yes	4	0.00000001	0.00042482
50	Yes	4	0.00000001	0.00038163

Maximum Tower Deflections - Service Wind

Section No.	*Elevation* *ft*	*Horz. Deflection* *in*	*Gov. Load Comb.*	*Tilt* °	*Twist* °
L1	160 - 123.33	27.581	48	1.711	0.004
L2	128 - 86.17	16.986	48	1.366	0.001
L3	92 - 37.17	8.327	48	0.895	0.001
L4	44.5 - 0	1.880	48	0.385	0.000

Critical Deflections and Radius of Curvature - Service Wind

Elevation ft	Appurtenance	Gov. Load Comb.	Deflection in	Tilt °	Twist °	Radius of Curvature ft
167.000	A-Ant-23G-2-C	48	27.581	1.711	0.004	22772
163.000	(5) 8'x2 1/2" Pipe Mount	48	27.581	1.711	0.004	22772
155.200	13' Platform w/Rails	48	25.908	1.663	0.004	22772
147.750	(2) RRUS-11	48	23.337	1.586	0.003	9294
145.700	7770.00	48	22.640	1.565	0.003	7962
143.700	13' Platform w/Rails	48	21.967	1.544	0.002	6985
134.100	(2) DB980H90E-M	48	18.845	1.438	0.002	4395
131.800	13' Platform w/Rails	48	18.130	1.412	0.001	4039
121.900	APX16DWV-16DWV-S-E-ACU	48	15.247	1.290	0.001	3751
119.000	13' Platform w/Rails	48	14.463	1.253	0.001	3851
110.000	APXV18-206517LS	48	12.193	1.133	0.001	4199
83.400	Stand-off	48	6.761	0.790	0.000	5085

Maximum Tower Deflections - Design Wind

Section No.	Elevation ft	Horz. Deflection in	Gov. Load Comb.	Tilt °	Twist °
L1	160 - 123.33	89.018	15	5.521	0.013
L2	128 - 86.17	54.878	15	4.415	0.004
L3	92 - 37.17	26.924	15	2.895	0.002
L4	44.5 - 0	6.083	15	1.246	0.001

Critical Deflections and Radius of Curvature - Design Wind

Elevation ft	Appurtenance	Gov. Load Comb.	Deflection in	Tilt °	Twist °	Radius of Curvature ft
167.000	A-Ant-23G-2-C	15	89.018	5.521	0.013	7197
163.000	(5) 8'x2 1/2" Pipe Mount	15	89.018	5.521	0.013	7197
155.200	13' Platform w/Rails	15	83.626	5.365	0.011	7197
147.750	(2) RRUS-11	15	75.346	5.121	0.009	2936
145.700	7770.00	15	73.101	5.052	0.008	2515
143.700	13' Platform w/Rails	15	70.932	4.985	0.008	2206
134.100	(2) DB980H90E-M	15	60.870	4.646	0.005	1386
131.800	13' Platform w/Rails	15	58.568	4.560	0.005	1273
121.900	APX16DWV-16DWV-S-E-ACU	15	49.271	4.169	0.003	1179
119.000	13' Platform w/Rails	15	46.740	4.049	0.003	1210
110.000	APXV18-206517LS	15	39.413	3.663	0.002	1315
83.400	Stand-off	15	21.864	2.555	0.002	1580

Compression Checks

Pole Design Data

Section No.	Elevation ft	Size	L ft	L_u ft	Kl/r	F_a ksi	A in^2	Actual P K	Allow. P_a K	Ratio $\frac{P}{P_a}$
L1	160 - 123.33 (1)	TP31.46x21.2x0.219	36.670	0.000	0.0	36.424	21.109	-9.852	768.877	0.013
L2	123.33 - 86.17 (2)	TP41.44x29.715x0.344	41.830	0.000	0.0	39.000	43.711	-19.493	1704.730	0.011
L3	86.17 - 37.17 (3)	TP54.46x39.118x0.438	54.830	0.000	0.0	39.000	73.298	-34.516	2858.610	0.012
L4	37.17 - 0 (4)	TP64x51.533x0.469	44.500	0.000	0.0	36.617	95.943	-53.001	3513.170	0.015

Pole Bending Design Data

Section No.	Elevation ft	Size	Actual M_x kip-ft	Actual f_{bx} ksi	Allow. F_{bx} ksi	Ratio $\frac{f_{bx}}{F_{bx}}$	Actual M_y kip-ft	Actual f_{by} ksi	Allow. F_{by} ksi	Ratio $\frac{f_{by}}{F_{by}}$
L1	160 - 123.33 (1)	TP31.46x21.2x0.219	483.281	37.519	36.424	1.030	0.000	0.000	36.424	0.000
L2	123.33 - 86.17 (2)	TP41.44x29.715x0.344	1427.067	40.641	39.000	1.042	0.000	0.000	39.000	0.000
L3	86.17 - 37.17 (3)	TP54.46x39.118x0.438	3030.233	39.066	39.000	1.002	0.000	0.000	39.000	0.000
L4	37.17 - 0 (4)	TP64x51.533x0.469	4862.225	39.134	36.617	1.069	0.000	0.000	36.617	0.000

Pole Shear Design Data

Section No.	Elevation ft	Size	Actual V K	Actual f_v ksi	Allow. F_v ksi	Ratio $\frac{f_v}{F_v}$	Actual T kip-ft	Actual f_{vt} ksi	Allow. F_{vt} ksi	Ratio $\frac{f_{vt}}{F_{vt}}$
L1	160 - 123.33 (1)	TP31.46x21.2x0.219	21.028	0.996	26.000	0.078	0.325	0.012	26.000	0.000
L2	123.33 - 86.17 (2)	TP41.44x29.715x0.344	29.793	0.682	26.000	0.053	0.324	0.004	26.000	0.000
L3	86.17 - 37.17 (3)	TP54.46x39.118x0.438	37.617	0.513	26.000	0.040	0.404	0.002	26.000	0.000
L4	37.17 - 0 (4)	TP64x51.533x0.469	44.736	0.466	26.000	0.036	0.404	0.002	26.000	0.000

Pole Interaction Design Data

Section No.	Elevation ft	Ratio $\frac{P}{P_a}$	Ratio $\frac{f_{bx}}{F_{bx}}$	Ratio $\frac{f_{by}}{F_{by}}$	Ratio $\frac{f_v}{F_v}$	Ratio $\frac{f_{vt}}{F_{vt}}$	Comb. Stress Ratio	Allow. Stress Ratio	Criteria
L1	160 - 123.33 (1)	0.013	1.030	0.000	0.078	0.000	1.044 ✔	1.333	H1-3+VT ✔
L2	123.33 - 86.17 (2)	0.011	1.042	0.000	0.053	0.000	1.054 ✔	1.333	H1-3+VT ✔
L3	86.17 - 37.17 (3)	0.012	1.002	0.000	0.040	0.000	1.014 ✔	1.333	H1-3+VT ✔

Section No.	Elevation ft	Ratio $\frac{P}{P_a}$	Ratio $\frac{f_{bx}}{F_{bx}}$	Ratio $\frac{f_{by}}{F_{by}}$	Ratio $\frac{f_v}{F_v}$	Ratio $\frac{f_{vt}}{F_{vt}}$	Comb. Stress Ratio	Allow. Stress Ratio	Criteria
L4	37.17 - 0 (4)	0.015	1.069	0.000	0.036	0.000	1.084 ✔	1.333	H1-3+VT ✔

Section Capacity Table

Section No.	Elevation ft	Component Type	Size	Critical Element	P K	$SF*P_{allow}$ K	% Capacity	Pass Fail
L1	160 - 123.33	Pole	TP31.46x21.2x0.219	1	-9.852	1024.913	78.3	Pass
L2	123.33 - 86.17	Pole	TP41.44x29.715x0.344	2	-19.493	2272.405	79.1	Pass
L3	86.17 - 37.17	Pole	TP54.46x39.118x0.438	3	-34.516	3810.527	76.1	Pass
L4	37.17 - 0	Pole	TP64x51.533x0.469	4	-53.001	4683.055	81.3	Pass
							Summary	
						Pole (L4)	81.3	Pass
						RATING =	**81.3**	**Pass**

Program Version 5.4.2.0 - 6/17/2010 File:J:/Jobs/1102100.WI/CO-25 - CT2174 - 525 Orange Center Rd, Orange, CT/Structural/Calcs/ERI Files/160' Monopole_Orange_CT.eri

Anchor Bolt and Base Plate Analysis:

Input Data:

Tower Reactions:

Overturning Moment =	$OM := 4862 \cdot ft \cdot kips$	(Input From RisaTower)
Shear Force =	$Shear := 45 \cdot kips$	(Input From RisaTower)
Axial Force =	$Axial := 53 \cdot kips$	(Input From RisaTower)

Anchor Bolt Data:

Use ASTM A615 Grade 75

Number of Anchor Bolts =	$N := 24$	(User Input)
Diameter of Bolt Circle =	$D_{bc} := 72.76 \cdot in$	(User Input)
Bolt "Column" Distance =	$l := 3.0 \cdot in$	(User Input)
Bolt Ultimate Strenght =	$F_u := 100 \cdot ksi$	(User Input)
Bolt Yeild Strenght =	$F_y := 75 \cdot ksi$	(User Input)
Bolt Modulus =	$E := 29000 \cdot ksi$	(User Input)
Diameter of Anchor Bolts =	$D := 2.25 \cdot in$	(User Input)
Threads per Inch =	$n := 4.5$	(User Input)

Base Plate Data:

Use ASTM A572 Mod 60

Plate Yield Strength =	$Fy_{bp} := 60 \cdot ksi$	(User Input)
Base Plate Thickness =	$t_{bp} := 3.0 \cdot in$	(User Input)
Base Plate Diameter =	$D_{bp} := 78.76 \cdot in$	(User Input)
Outer Pole Diameter =	$D_{pole} := 64.0 \cdot in$	(User Input)

Geometric Layout Data:

Distance from Bolts to Centroid of Pole:

Radius of Bolt Circle =: $R_{bc} := \frac{D_{bc}}{2} = 36.38 \cdot in$

Distance to Bolts = $i := 1 .. N$

$$d_i := \left| \begin{array}{l} \theta \leftarrow 2 \cdot \pi \cdot \left(\frac{i}{N}\right) \\ d \leftarrow R_{bc} \cdot \sin(\theta) \end{array} \right.$$

$d_1 = 9.42 \cdot in$ $d_7 = 35.14 \cdot in$

$d_2 = 18.19 \cdot in$ $d_8 = 31.51 \cdot in$

$d_3 = 25.72 \cdot in$ $d_9 = 25.72 \cdot in$

$d_4 = 31.51 \cdot in$ $d_{10} = 18.19 \cdot in$

$d_5 = 35.14 \cdot in$ $d_{11} = 9.42 \cdot in$

$d_6 = 36.38 \cdot in$ etc.

Critical Distances For Bending in Plate:

Outer Pole Radius = $R_{pole} := \frac{D_{pole}}{2} = 32 \cdot in$

Moment Arms of Bolts about Neutral Axis = $MA_i := if(d_i \geq R_{pole}, d_i - R_{pole}, 0in)$

$MA_1 = 0.00 \cdot in$ $MA_7 = 3.14 \cdot in$

$MA_2 = 0.00 \cdot in$ $MA_8 = 0.00 \cdot in$

$MA_3 = 0.00 \cdot in$ $MA_9 = 0.00 \cdot in$

$MA_4 = 0.00 \cdot in$ $MA_{10} = 0.00 \cdot in$

$MA_5 = 3.14 \cdot in$ $MA_{11} = 0.00 \cdot in$

$MA_6 = 4.38 \cdot in$ etc

Effective Width of Baseplate for Bending = $B_{eff} := .8 \cdot 2 \cdot \sqrt{\left(\frac{D_{bp}}{2}\right)^2 - \left(\frac{D_{pole}}{2}\right)^2} = 36.7 \cdot in$

Anchor Bolt Analysis:

Calculated Anchor Bolt Properties:

Polar Moment of Inertia = $I_p := \sum_i (d_i)^2 = 1.588 \times 10^4 \cdot in^2$

Gross Area of Bolt = $A_g := \frac{\pi}{4} \cdot D^2 = 3.976 \cdot in^2$

Net Area of Bolt = $A_n := \frac{\pi}{4} \cdot \left(D - \frac{0.9743 \cdot in}{n}\right)^2 = 3.248 \cdot in^2$

Net Diameter = $D_n := \frac{2 \cdot \sqrt{A_n}}{\sqrt{\pi}} = 2.033 \cdot in$

Radius of Gyration of Bolt = $r := \frac{D_n}{4} = 0.508 \cdot in$

Section Modulus of Bolt = $S_x := \frac{\pi \cdot D_n^3}{32} = 0.826 \cdot in^3$

Check Anchor Bolt Tension Force:

Maximum Tensile Force = $T_{Max} := OM \cdot \frac{R_{bc}}{I_p} - \frac{Axial}{N} = 131.4 \cdot kips$

Allowable Tensile Force = $T_{ALL.Gross} := 1.333 \cdot (0.33 \cdot A_g \cdot F_u) = 174.9 \cdot kips$ (1.333 increase allowed per TIA/EIA)

$T_{ALL.Net} := 1.333 \cdot (0.60 \cdot A_n \cdot F_y) = 194.812 \cdot kips$ (1.333 increase allowed per TIA/EIA)

Bolt Tension % of Capacity = $\frac{T_{Max}}{T_{ALL.Net}} = 67.5 \cdot \%$ Bolts are "upset bolts". Use net area per AISC

Condition1 = $Condition1 := if\left(\frac{T_{Max}}{T_{ALL.Net}} \le 1.00, "OK", "Overstressed"\right)$

Condition1 = "OK"

Check Anchor Bolt Bending Stress:

Maximum Bending Moment = $M_x := \left(\frac{Shear}{N}\right) \cdot l = 0.469 \cdot ft \cdot kips$

Maximum Bending Stress = $f_{bx} := \frac{M_x}{S_x} = 6.8 \cdot ksi$

Allowable Bending Stress = $F_{bx} := 1.333 \cdot 0.6 \cdot F_y = 60 \cdot ksi$ (1.333 increase allowed per TIA/EIA)

Check Combined Stress Requirement:

Per ASCE Manual 72: "If the clearance between the base plate and concrete does not exceed two times the bolt diameter a bending stress analysis of the bolts is NOT normally required.

$$l := \begin{cases} l & \text{if } l > 2 \cdot D_n \\ 0 & \text{otherwise} \end{cases} = 0 \cdot in$$

$$f_{bx} := \begin{cases} f_{bx} & \text{if } l > 2 \cdot D_n \\ 0 & \text{otherwise} \end{cases} = 0 \cdot ksi$$

Check Anchor Bolt Compression/Combined Stress:

Maximum Compressive Force =

$$C_{Max} := OM \cdot \frac{R_{bc}}{I_p} + \frac{Axial}{N} = 135.9 \cdot kips$$

Maximum Compressive Stress =

$$f_a := \frac{C_{Max}}{A_n} = 41.8 \cdot ksi$$

$$K := 0.65$$

$$C_c := \sqrt{\frac{2 \cdot \pi^2 \cdot E}{F_y}} = 87.364$$

$$F_a := \begin{cases} \dfrac{\left[1 - \dfrac{\left(\frac{K \cdot l}{r}\right)^2}{2 \cdot C_c^{\,2}}\right] \cdot F_y}{\dfrac{5}{3} + \dfrac{3 \cdot \left(\frac{K \cdot l}{r}\right)}{8 \cdot C_c} - \dfrac{\left(\frac{K \cdot l}{r}\right)^3}{8 \cdot C_c^{\,3}}} & \text{if } \dfrac{K \cdot l}{r} \le C_c \\ \dfrac{12 \cdot \pi^2 \cdot E}{23 \cdot \left(\frac{K \cdot l}{r}\right)^2} & \text{if } \dfrac{K \cdot l}{r} > C_c \end{cases} = 45 \cdot ksi$$

Allowable Compressive Stress =

$$F_a := 1.333 \cdot F_a = 60 \cdot ksi$$

(1.333 increase allowed per TIA/EIA)

Combined Stress % of Capacity =

$$\left(\frac{f_a}{F_a} + \frac{f_{bx}}{F_{bx}}\right) = 69.7 \cdot \%$$

Condition 2 =

$$Condition2 := \text{if}\left(\frac{f_a}{F_a} + \frac{f_{bx}}{F_{bx}} \le 1.00, \text{"OK"}, \text{"Overstressed"}\right)$$

Condition2 = "OK"

Base Plate Analysis:

Force from Bolts = $C_i := \frac{OM \cdot d_i}{I_p} + \frac{Axial}{N}$

$C_1 = 36.8 \cdot kips$ $C_7 = 131.3 \cdot kips$

$C_2 = 69.0 \cdot kips$ $C_8 = 117.9 \cdot kips$

$C_3 = 96.7 \cdot kips$ $C_9 = 96.7 \cdot kips$

$C_4 = 117.9 \cdot kips$ $C_{10} = 69.0 \cdot kips$

$C_5 = 131.3 \cdot kips$ $C_{11} = 36.8 \cdot kips$

$C_6 = 135.9 \cdot kips$ etc.

Maximum Bending Stress in Plate = $f_{bp} := \sum_i \frac{6 \cdot C_i \cdot MA_i}{\left(B_{eff} \cdot t_{bp}^2\right)} = 25.8 \cdot ksi$

Allowable Bending Stress in Plate = $F_{bp} := 1.33 \cdot 0.75 \cdot Fy_{bp} = 59.9 \cdot ksi$

Plate Bending Stress % of Capacity = $\frac{f_{bp}}{F_{bp}} = 43.1 \cdot \%$

Condition3 = $Condition3 := if\left(\frac{f_{bp}}{F_{bp}} < 1.00, "Ok", "Overstressed"\right)$

Condition3 = "Ok"

Standard Monopole Foundation:

Input Data:

Tower Data

Overturning Moment =	$OM := 4862 \cdot ft \cdot kips$	(User Input from RISATower)	
Shear Force =	$Shear := 45 \cdot kip$	(User Input from RISATower)	
Axial Force =	$Axial := 53 \cdot kip$	(User Input from RISATower)	
Tower Height =	$H_t := 160 \cdot ft$	(User Input)	

Footing Data:

Overall Depth of Footing =	$D_f := 14 \cdot ft$	(User Input)	
Length of Pier =	$L_p := 10 \cdot ft$	(User Input)	
Extension of Pier Above Grade =	$L_{pag} := 0.5 \cdot ft$	(User Input)	
Diameter of Pier =	$d_p := 8 \cdot ft$	(User Input)	
Thickness of Footing =	$T_f := 4 \cdot ft$	(User Input)	
Width of Footing =	$W_f := 22 \cdot ft$	(User Input)	

Anchor Bolt Data:

Length of Anchor Bolts =	$L_{st} := 132 \cdot in$	(User Input)	
Projection of Anchor Bolts Above Pier =	$A_{BP} := 10 \cdot in$	(User Input)	
Anchor Bolt Diameter =	$d_{anchor} := 2.25 \cdot in$	(User Input)	
Base Plate Bolt Circle =	$MP := 72.76 \cdot in$	(User Input)	

Material Properties:

Concrete Compressive Strength =	$f_c := 4000 \cdot psi$	(User Input)	
Steel Reinforcment Yield Strength =	$f_y := 60000 \cdot psi$	(User Input)	
Anchor Bolt Yield Strength =	$f_{ya} := 75000 \cdot psi$	(User Input)	
Internal Friction Angle of Soil =	$\Phi_s := 36 \cdot deg$	(User Input)	
Allowable Soil Bearing Capacity =	$q_s := 10000 \cdot psf$	(User Input)	
Unit Weight of Soil =	$\gamma_{soil} := 125 \cdot pcf$	(User Input)	
Unit Weight of Concrete =	$\gamma_{conc} := 150 \cdot pcf$	(User Input)	
Foundation Bouyancy =	$Bouyancy := 0$	(User Input)	(Yes=1 / No=0)
Depth to Neglect =	$n := 0 \cdot ft$	(User Input)	
Cohesion of Clay Type Soil =	$c := 0 \cdot ksf$	(User Input)	(Use 0 for Sandy Soil)
Seismic Zone Factor =	$Z := 2$	(User Input)	(UBC-1997 Fig 23-2)
Coefficient of Friction Between Concrete =	$\mu := 0.45$	(User Input)	

Pier Reinforcement:

Bar Size =	$BS_{pier} := 11$	(User Input)	
Bar Diameter =	$d_{bpier} := 1.41 \cdot in$	(User Input)	
Number of Bars =	$NB_{pier} := 31$	(User Input)	
Clear Cover of Reinforcement =	$Cvr_{pier} := 3 \cdot in$	(User Input)	
Reinforcement Location Factor =	$\alpha_{pier} := 1.0$	(User Input)	(ACI-2008 12.2.4)
Coating Factor =	$\beta_{pier} := 1.0$	(User Input)	(ACI-2008 12.2.4)
Concrete Strength Factor =	$\lambda_{pier} := 1.0$	(User Input)	(ACI-2008 12.2.4)
Reinforcement Size Factor =	$\gamma_{pier} := 1.0$	(User Input)	(ACI-2008 12.2.4)
Diameter of Tie =	$d_{Tie} := 3 \cdot in$	(User Input)	

Pad Reinforcement:

Bar Size =	$BS_{top} := 9$	(User Input)	(Top of Pad)
Bar Diameter =	$d_{btop} := 1.128 \cdot in$	(User Input)	(Top of Pad)
Number of Bars =	$NB_{top} := 35$	(User Input)	(Top of Pad)
Bar Size =	$BS_{bot} := 10$	(User Input)	(Bottom of Pad)
Bar Diameter =	$d_{bbot} := 1.27 \cdot in$	(User Input)	(Bottom of Pad)
Number of Bars =	$NB_{bot} := 35$	(User Input)	(Bottom of Pad)
Clear Cover of Reinforcement =	$Cvr_{pad} := 3.0 \cdot in$	(User Input)	
Reinforcement Location Factor =	$\alpha_{pad} := 1.0$	(User Input)	(ACI-2008 12.2.4)
Coating Factor =	$\beta_{pad} := 1.0$	(User Input)	(ACI-2008 12.2.4)
Concrete Strength Factor =	$\lambda_{pad} := 1.0$	(User Input)	(ACI-2008 12.2.4)
Reinforcement Size Factor =	$\gamma_{pad} := 1.0$	(User Input)	(ACI-2008 12.2.4)

Calculated Factors:

Pier Reinforcement Bar Area =

$$A_{bpier} := \frac{\pi \cdot d_{bpier}^2}{4} = 1.561 \cdot in^2$$

Pad Top Reinforcement Bar Area =

$$A_{btop} := \frac{\pi \cdot d_{btop}^2}{4} = 0.999 \cdot in^2$$

Pad Bottom Reinforcement Bar Area =

$$A_{bbot} := \frac{\pi \cdot d_{bbot}^2}{4} = 1.267 \cdot in^2$$

Coefficient of Lateral Soil Pressure =

$$K_p := \frac{1 + \sin(\Phi_s)}{1 - \sin(\Phi_s)} = 3.852$$

Load Factor =

$$LF := \begin{cases} 1.333 & \text{if } H_t \le 700 \cdot ft \\ 1.7 & \text{if } H_t \ge 1200 \cdot ft \\ 1.333 + \left(\frac{H_t - 700ft}{1200ft - 700ft}\right) \cdot 0.4 & \text{otherwise} \end{cases} = 1.333$$

Stability of Footing:

Adjusted Concrete Unit Weight = $\gamma_c := \text{if}(\text{Bouyancy} = 1, \gamma_{conc} - 62.4\text{pcf}, \gamma_{conc}) = 150 \cdot \text{pcf}$

Adjusted Soil Unit Weight = $\gamma_s := \text{if}(\text{Bouyancy} = 1, \gamma_{soil} - 62.4\text{pcf}, \gamma_{soil}) = 125 \cdot \text{pcf}$

Passive Pressure = $P_{pn} := K_p \cdot \gamma_s \cdot n + c \cdot 2 \cdot \sqrt{K_p} = 0 \cdot \text{ksf}$

$P_{pt} := K_p \cdot \gamma_s \cdot (D_f - T_f) + c \cdot 2 \cdot \sqrt{K_p} = 4.815 \cdot \text{ksf}$

$P_{top} := \text{if}[n < (D_f - T_f), P_{pt}, P_{pn}] = 4.815 \cdot \text{ksf}$

$P_{bot} := K_p \cdot \gamma_s \cdot D_f + c \cdot 2 \cdot \sqrt{K_p} = 6.741 \cdot \text{ksf}$

$P_{ave} := \frac{P_{top} + P_{bot}}{2} = 5.778 \cdot \text{ksf}$

$T_p := \text{if}[n < (D_f - T_f), T_f, (D_f - n)] = 4$

$A_p := W_f \cdot T_p = 88$

Ultimate Shear = $S_u := P_{ave} \cdot A_p = 508.443 \cdot \text{kip}$

Weight of Concrete Pad = $WT_c := \left[\left(W_f^2 \cdot T_f\right) + \frac{d_p^2 \cdot \pi}{4} L_p\right] \cdot \gamma_c = 365.798 \cdot \text{kip}$

Weight of Soil Above Footing = $WT_{s1} := \left[\left(W_f^2 - \frac{d_p^2 \cdot \pi}{4}\right) \cdot \left(\left|L_p - L_{pag} - n\right|\right)\right] \cdot \gamma_s = 515.06 \cdot \text{kip}$

Weight of Soil Wedge at Back Face = $WT_{s2} := \left(\frac{D_f^2 \cdot \tan(\Phi_s)}{2} \cdot W_f\right) \cdot \gamma_s = 195.803 \cdot \text{kip}$

Weight of Soil Wedge at back face Corners = $WT_{s3} := 2 \cdot \left[(D_f)^3 \cdot \frac{\tan(\Phi_s)}{3}\right] \cdot \gamma_s = 166.136 \cdot \text{kips}$

Total Weight = $WT_{tot} := WT_c + WT_{s1} + \text{Axial} = 933.858 \cdot \text{kip}$

Resisting Moment = $M_r := (WT_{tot}) \cdot \frac{W_f}{2} + S_u \cdot \frac{T_f}{3} + \left[(WT_{s2} + WT_{s3}) \cdot \left(W_f + \frac{D_f \cdot \tan(\Phi_s)}{3}\right)\right] = 20140 \cdot \text{kip} \cdot \text{ft}$

Overturning Moment = $M_{ot} := OM + \text{Shear} \cdot (L_p + T_f) = 5492 \cdot \text{kip} \cdot \text{ft}$

Factor of Safety Actual = $FS := \frac{M_r}{M_{ot}} = 3.67$

Factor of Safety Required = $FS_{req} := 2$

OverTurning_Moment_Check := if(FS ≥ FS_{req}, "Okay" , "No Good")

OverTurning_Moment_Check = "Okay"

Shear Capacity in Pier:

Shear Resistance of Pier =

$$S_p := \frac{P_{ave} \cdot A_p + \mu \cdot WT_{tot}}{FS_{req}} = 464.339 \cdot kips$$

$$Shear_Check := if(S_p > Shear, "Okay", "No Good")$$

Shear_Check = "Okay"

Bearing Pressure Caused by Footing:

Area of the Mat =

$$A_{mat} := W_f^2 = 484$$

Section Modulus of Mat =

$$S := \frac{W_f^3}{6} = 1774.67 \cdot ft^3$$

Maximum Pressure in Mat =

$$P_{max} := \frac{WT_{tot}}{A_{mat}} + \frac{M_{ot}}{S} = 5.024 \cdot ksf$$

$$Max_Pressure_Check := if(P_{max} < q_s, "Okay", "No Good")$$

Max_Pressure_Check = "Okay"

Minimum Pressure in Mat =

$$P_{min} := \frac{WT_{tot}}{A_{mat}} - \frac{M_{ot}}{S} = -1.165 \cdot ksf$$

$$Min_Pressure_Check := if[(P_{min} \geq 0) \cdot (P_{min} < q_s), "Okay", "No Good"]$$

Min_Pressure_Check = "No Good"

Distance to Resultant of Pressure Distribution =

$$X_p := \frac{P_{max}}{\frac{P_{max} - P_{min}}{W_f}} \cdot \frac{1}{3} = 5.953$$

Distance to Kern =

$$X_k := \frac{W_f}{6} = 3.667$$

Since Resultant Force is Not in Kern, Area to which Pressure is Applied Must be Reduced.

Eccentricity =

$$e := \frac{M_{ot}}{WT_{tot}} = 5.881$$

Adjusted Soil Pressure =

$$P_a := \frac{2 \cdot WT_{tot}}{3 \cdot W_f \cdot \left(\frac{W_f}{2} - e\right)} = 5.528 \cdot ksf$$

$$q_{adj} := if(P_{min} < 0, P_a, P_{max}) = 5.528 \cdot ksf$$

$$Pressure_Check := if(q_{adj} < q_s, "Okay", "No Good")$$

Pressure_Check = "Okay"

Concrete Bearing Capacity:

Strength Reduction Factor = $\Phi_c := 0.65$ (ACI-2008 9.3.2.2)

Bearing Strength Between Pier and Pad = $P_b := \Phi_c \cdot 0.85 \cdot f_c \cdot \frac{\pi \cdot d_p^2}{4} = 1.6 \times 10^4 \cdot kips$ (ACI-2008 10.14)

$Bearing_Check := if(P_b > LF \cdot Axial, "Okay", "No Good")$

Bearing_Check = "Okay"

Shear Strength of Concrete:

Beam Shear:

(Critical section located at a distance d from the face of Pier) (ACI 11.3.1.1)

$\phi_c := 0.85$ (ACI 9.3.2.5)

$d := T_f - Cvr_{pad} - d_{bbot}$

$d_1 := \frac{W_f}{2} - \frac{d_p}{2}$

$d_2 := d_1 - d$

$L := \left(\frac{W_f}{2} - e\right) \cdot 3$

$Slope := if\left(L > W_f, \frac{P_{max} - P_{min}}{W_f}, \frac{q_{adj}}{L}\right)$

$V_{req} := LF \cdot \left[\left(q_{adj} - Slope \cdot d_1\right) + \left(\frac{Slope \cdot d_1}{2}\right)\right] \cdot W_f \cdot d_1$

$V_{Avail} := \phi_c \cdot 2 \cdot \sqrt{f_c \cdot psi} \cdot W_f \cdot d$ (ACI-2008 11.2.1.1)

$Beam_Shear_Check := if(V_{req} < V_{Avail}, "Okay", "No Good")$

Beam_Shear_Check = "Okay"

Punching Shear:

(Critical Section Located at a distance of d/2 from the face of pier) (ACI 11.11.1.2)

Critical Perimeter of Punching Shear = $b_o := (d_p + d) \cdot \pi = 36.6$

Area Included Inside Perimeter = $A_{bo} := \frac{\pi \cdot (d_p + d)^2}{4} = 106.5$

Area Outside of Perimeter = $A_{out} := A_{mat} - A_{bo} = 377.5$

Guess Value = $v_u := 1ksf$ (From "Foundation Analysis and design", By Joseph Bowles, Eq. 8-9)

Given $d^2 + d_p \cdot d = \frac{WT_{tot}}{\pi \cdot v_u}$

$v_u := Find(v_u) = 7 \cdot ksf$

$V_u := v_u \cdot d \cdot W_f = 561.6 \cdot kips$

Required Shear Strength = $V_{req} := LF \cdot V_u = 748.6 \cdot kips$

Available Shear Strength = $V_{Avail} := \phi_c \cdot 4 \cdot \sqrt{f_c \cdot psi} \cdot b_o \cdot d = 4127.9 \cdot kip$ (ACI-2008 11.11.2.1)

Punching_Shear_Check := if($V_{req} < V_{Avail}$, "Okay", "No Good")

Punching_Shear_Check = "Okay"

Steel Reinforcement in Pad:

Required Reinforcement for Bending:

Strength Reduction Factor = $\phi_m := .90$ (ACI-2008 9.3.2.1)

$q_b := q_{adj} - d_1 \cdot Slope = 3.008 \cdot ksf$

Maximum Bending at Face of Pier = $M_n := \frac{1}{LF \cdot \phi_m} \cdot \left[(q_{adj} - q_b) \cdot \frac{d_1^2}{3} + q_b \cdot \frac{d_1^2}{2} \right] \cdot W_f = 2106.3 \cdot kip \cdot ft$

$$\beta := \begin{cases} 0.85 & \text{if } 2500 \cdot psi \le f_c \le 4000 \cdot psi \\ 0.65 & \text{if } f_c > 8000 \cdot psi \\ \left[0.85 - \left[\frac{\left(\frac{f_c}{psi} - 4000 \right)}{1000} \right] \cdot 0.5 \right] & \text{otherwise} \end{cases} = 0.85$$

(ACI-200810.2.7.3)

$$R_u := \frac{M_n}{\phi_m \cdot W_f \cdot d^2} = 55.6 \cdot psi$$

$$\rho := \frac{0.85 \cdot f_c}{f_y} \left(1 - \sqrt{1 - \frac{2 \cdot R_u}{0.85 \cdot f_c}} \right) = 0.0009$$

$\rho_{min} := 1.333 \cdot \rho = 0.00125$

Required Reinforcement for Temperature and Shrinkage:

$$\rho_{sh} := \begin{cases} .0018 & \text{if } f_y \geq 60000 \cdot psi \\ .0020 & \text{otherwise} \end{cases}$$ (ACI -2008 7.12.2.1)

Check Bottom Bars:

$$As := \max(\rho, \rho_{min}, \rho_{sh}) \cdot W_f \cdot d = 20.8 \cdot in^2$$

$$As_{prov} := A_{bbot} \cdot NB_{bot} = 44.3 \cdot in^2$$

$$Pad_Reinforcement_Bot := if(As_{prov} > As, "Okay", "No Good")$$

Pad_Reinforcement_Bot = "Okay"

Check top Bars:

$$As := \rho_{sh} \cdot (W_f \cdot d) = 20.8 \cdot in^2$$

$$As_{prov} := A_{btop} \cdot NB_{top} = 35 \cdot in^2$$

$$Pad_Reinforcement_Top := if(As_{prov} > As, "Okay", "No Good")$$

Pad_Reinforcement_Top = "Okay"

Developement Length Pad Reinforcement:

Bar Spacing =

$$B_{sPad} := \frac{W_f - 2 \cdot Cvr_{pad} - NB_{bot} \cdot d_{bbot}}{NB_{bot} - 1} = 6.28 \cdot in$$

Spacing or Cover Dimension =

$$c := if\left(Cvr_{pad} < \frac{B_{sPad}}{2}, Cvr_{pad}, \frac{B_{sPad}}{2}\right) = 3 \cdot in$$

Transverse Reinforcement Index =

$$k_{tr} := 0$$ (ACI-2008 12.2.3)

$$L_{dbt} := \frac{3 \cdot f_y \alpha_{pad} \cdot \beta_{pad} \cdot \gamma_{pad} \cdot \lambda_{pad}}{40 \cdot \sqrt{f_c \cdot psi} \cdot \frac{c + k_{tr}}{d_{bbot}}} \cdot d_{bbot} = 38.3 \cdot in$$

Minimum Development Length =

$$L_{dbmin} := 12 \cdot in$$ (ACI-2008 12.2.1)

$$L_{dbtCheck} := if(L_{dbt} \geq L_{dbmin}, "Use\ L.dbt", "Use\ L.dbmin")$$

Available Length in Pad =

$$L_{Pad} := \frac{W_f}{2} - \frac{d_p}{2} - Cvr_{pad} = 81 \cdot in$$

$$Lpad_Check := if(L_{Pad} > L_{dbt}, "Okay", "No Good")$$

Lpad_Check = "Okay"

Steel Reinforcement in Pier:

Area of Pier = $A_p := \frac{\pi \cdot d_p^2}{4} = 7238.23 \cdot in^2$

$A_{smin} := 0.01 \cdot 0.05 \cdot A_p = 3.62 \cdot in^2$ (ACI-2008 10.8.4 & 10.9.1)

$A_{sprov} := NB_{pier} \cdot A_{bpier} = 48.4 \cdot in^2$

Steel_Area_Check := if($A_{sprov} > A_{smin}$, "Okay", "No Good")

Steel_Area_Check = "Okay"

Bar Spacing In Pier = $B_{sPier} := \frac{d_p \cdot \pi}{NB_{pier}} - d_{bpier} = 8.319 \cdot in$

Diameter of Reinforcement Cage = $Diam_{cage} := d_p - 2 \cdot Cvr_{pier} = 90 \cdot in$

Maximum Moment in Pier = $M_p := \left[OM + Shear \cdot \left(L_p + \frac{A_{BP}}{2}\right)\right] \cdot LF = 85270.7 \cdot in \cdot kips$

Pier Check evaluated from outside program and results are listed below;

$$\begin{pmatrix} D & N & n & P_u & M_{xu} \end{pmatrix} := \begin{pmatrix} d_p \cdot 12 & NB_{pier} & BS_{pier} & \frac{Axial \cdot 1.333}{kips} & \frac{M_p}{in \cdot kips} \end{pmatrix}$$

$$\begin{pmatrix} D & N & n & P_u & M_{xu} \end{pmatrix} = (96 \quad 31 \quad 11 \quad 70.6 \quad 85270.7)$$

$$\begin{pmatrix} \phi P_n & \phi M_{xn} & f_{sp} & \rho \end{pmatrix} := (0 \quad 0 \quad 0 \quad 0)$$

$$\begin{pmatrix} \phi P_n & \phi M_{xn} & f_{sp} & \rho \end{pmatrix} := \phi P'_n(D, N, n, P_u, M_{xu})^T$$

$$\begin{pmatrix} \phi P_n & \phi M_{xn} & f_{sp} & \rho \end{pmatrix} = \begin{pmatrix} 87.9 & 1.1 \times 10^5 & -60 & 0 \end{pmatrix}$$

Axial_Load_Check := if($\phi P_n \geq P_u$, "Okay", "No Good")

Axial_Load_Check = "Okay"

Bending_Check := if($\phi M_{xn} \geq M_{xu}$, "Okay", "No Good")

Bending_Check = "Okay"

Development Length Pier Reinforcement:

Available Length in Foundation:

$L_{pier} := L_p - Cvr_{pier} = 117 \cdot in$

$L_{pad} := T_f - Cvr_{pad} = 45 \cdot in$

Tension: (ACI-2008 12.2.3)

Spacing or Cover Dimension = $c := if\left(Cvr_{pier} < \frac{B_{sPier}}{2}, Cvr_{pier}, \frac{B_{sPier}}{2}\right) = 3 \cdot in$

Transverse Reinforcement = $k_{tr} := 0$ (ACI-2008 12.2.3)

$$L_{dbt} := \frac{3 \cdot f_y \alpha_{pier} \cdot \beta_{pier} \cdot \gamma_{pier} \cdot \lambda_{pier}}{40 \cdot \sqrt{f_c \cdot psi} \cdot \left(\frac{c + k_{tr}}{d_{bpier}}\right)} \cdot d_{bpier} = 47.15 \cdot in$$

Minimum Development Length = $L_{dh} := \frac{1200 \cdot d_{bpier}}{\sqrt{\frac{f_c}{psi}}} \cdot .7 = 18.727 \cdot in$ (ACI 12.2.1)

Pier reinforcement bars are standard 90 degree hooks and therefore developement in the pad is computed as follows:

$L_{db} := max(L_{dbt}, L_{dbmin})$

$L_{tension_Check} := if(L_{pier} + L_{pad} > L_{dbt}, "Okay", "No Good")$

$L_{tension_Check} = "Okay"$

Compression: (ACI-2008 12.3.2)

$$L_{dbc1} := \frac{.02 \cdot d_{bpier} \cdot f_y}{\sqrt{f_c \cdot psi}} = 26.753 \cdot in$$

$$L_{dbmin} := 0.0003 \cdot \frac{in^2}{lb} \cdot (d_{bpier} \cdot f_y) = 25.38 \cdot in$$

$L_{dbc} := if(L_{dbc1} \geq L_{dbmin}, L_{dbc1}, L_{dbmin}) = 26.753 \cdot in$

$L_{compression_Check} := if(L_{pier} + L_{pad} > L_{dbc}, "Okay", "No Good")$

$L_{compression_Check} = "Okay"$

Tie Size and Spacing in Column:

Minimum Tie Size = $Tie_{min} := if(BS_{pier} \le 10, 3, 4) = 4$

Used #3 Ties

Seismic Factor = $z := if(Z \le 2, 1, 0.5) = 1$ (ACI-2008 21.10.5)

$s_{lim1} := 16 \cdot d_{bpier} \cdot z = 22.56 \cdot in$

$s_{lim2} := \frac{48 \cdot d_{Tie}}{8} \cdot z = 18 \cdot in$

$s_{lim3} := D_f \cdot z = 168 \cdot in$

$s_{lim4} := 18in$

Maximum Spacing = $s_{tie} := min\left(\begin{pmatrix} s_{lim1} \\ s_{lim2} \\ s_{lim3} \\ s_{lim4} \end{pmatrix}\right) = 18 \cdot in$

Number of Ties Required = $n_{tie} := \frac{L_{pier} - 3 \cdot in}{s_{tie}} + 1 = 7.333$

Check Anchor Steel Embedment:

Depth Available = $D_{ab} := L_{st} - A_{BP} = 10.167 \cdot ft$

Length of Anchor Bolt = $L_{anchor} := \frac{(0.11 \cdot f_{ya}) \cdot in}{\sqrt{f_c \cdot psi}} = 10.87 \cdot ft$

$Depth_Check := if(D_{ab} \ge L_{anchor}, "Okay", "No Good")$

Depth_Check = "No Good"

Note: Anchor plate is provided

Section 1 - RFDS GENERAL INFORMATION

RFDS NAME:	CT2174	DATE:	1/1/2011 0:23	RF DESIGN ENG:	Radu Alecsandru	RF PERF ENG:	TBD
ISSUE:	Preliminary	Approved? (Y/N)	Y	RF DESIGN PHONE:	(860) 965-6685	RF PERF PHONE:	TBD
REVISION:	V04	RF MANAGER:	Walter C. Saddig Jr.	RF DESIGN EMAIL:	ra9161@att.com	RF PERF EMAIL:	TBD
INITIATIVE / PROJECT:	LTE Addition					TRIDENT:	TBD
						GSM FREQUENCY:	
						UMTS FREQUENCY:	
						LTE FREQUENCY:	700
						I-PLAN JOB # 1:	NER-RCTB-10-05775
						I-PLAN JOB # 2:	
						I-PLAN JOB # 3:	
						I-PLAN JOB # 4:	

Section 2 - LOCATION INFORMATION

USID:	4557	FA LOCATION CODE:	10035120	LOCATION NAME:	C. ORANGE	ORACLE PRJT # 1:	2051003295
REGION:	North East	MARKET CLUSTER:	New England	MARKET:	CT	ORACLE PRJT # 2:	
ADDRESS:	525 ORANGE CENTER ROAD	CITY:	ORANGE	STATE:	CT	ORACLE PRJT # 3:	
ZIP CODE:	06477	COUNTY:	NEW HAVEN	MSA/RSA:	TBD	ORACLE PRJT # 4:	
LATITUDE (D-M-S):	41° 16' 25.3"	LONGITUDE (D-M-S):	-73° 1' 7.8"	LAT (DEC. DEG.):	41.273694	SEARCH RING NAME:	N/A
DIRECTIONS, ACCESS AND EQUIPMENT LOCATION:	TBD					SEARCH RING ID:	N/A
						BTA:	TBD
						LONG (DEC. DEG.):	-73.018833
						BORDER CELL WITH	TBD
						AM STUDY REQ'D (Y/N):	TBD
						FREQ COORD:	TBD

Section 3 - LICENSE COVERAGE/FILING INFORMATION

CGSA - NO FILING TRIGGERED:	TBD	CGSA LOSS:	TBD	PCS REDUCED - UPS ZIP:	TBD
CGSA - MINOR FILING NEEDED:	TBD	CGSA EXT AGMT NEEDED:	TBD	PCS POPS REDUCED:	TBD
CGSA - MAJOR FILING NEEDED:	TBD	CGSA SCORECARD UPDATED:	TBD		

Section 4 - TOWER/REGULATORY INFORMATION

STRUCTURE AT&T OWNED?:	TBD	GROUND ELEVATION (ft):		STRUCTURE TYPE:	Monopole	MKT LOCATION 850 MHZ CALL SIGN(S):	TBD
ADDTIONAL REGULATORY?:	TBD	HEIGHT OVERALL (ft):		FCC ASR NUMBER:	TBD	MKT LOCATION 1900 MHZ CALL SIGN(S):	TBD
SUB-LEASE RIGHTS?:	TBD	STRUCTURE HEIGHT (ft):				MKT LOCATION 700 MHZ CALL SIGN(S):	
LIGHTING TYPE:	TBD					MKT LOCATION AWS MHZ CALL SIGN(S):	

Section 5 - E-911 INFORMATION

	PSAP NAME:	PSAP ID:	E911 PHASE:	MPC SVC PROVIDER:	LMU REQUIRED:	ESRN:	DATE LIVE PH1:	DATE LIVE PH2:
ALPHA	TBD	TBD	TBD	TBD	TBD	TBD	TBD	TBD
BETA	TBD	TBD	TBD	TBD	TBD	TBD	TBD	TBD
GAMMA	TBD	TBD	TBD	TBD	TBD	TBD	TBD	TBD
DELTA								
EPSILON								
PSI								

Section 6 - RBS GENERAL INFORMATION

4-DIGIT SITE ID:	2174	COW OR TOY?:	NO	CELLULAR NETWORK:	GOLD	DISASTER PRIORITY:	TBD
CELL SITE TYPE:	SECTORIZED	SITE TYPE:	MACRO	OPS DISTRICT:	CT-South	OPS ZONE:	NE_CT_S_NHVN_SW_CS
BTS LOCATION ID:	TBD	ORIGINATING CO:	ATT	RF DISTRICT:	Bridgeport	RF ZONE:	BBP03

Section 7 - RBS SPECIFIC INFORMATION

	GSM RBSs	UMTS 1ST CARRIER RBSs	UMTS 2ND CARRIER RBSs	UMTS 3RD CARRIER RBSs	UMTS 4TH CARRIER RBSs	LTE RBSs
MSC	MBP01	TBD	TBD	TBD	TBD	
BSC/RNC	BRPTCTBSC03	BRPTCT04RNC002	TBD	N/A	N/A	N/A
LAC	05012	TBD	TBD	N/A	N/A	N/A
RAC	TBD	TBD	TBD	N/A	N/A	N/A
EQUIPMENT VENDOR	NOKIA	ERICSSON	ERICSSON	N/A	N/A	N/A
EQUIPMENT TYPE	TBD	TBD	TBD	N/A	N/A	RBS6601
LOCATION	TBD	TBD	TBD	N/A	N/A	N/A
CABINET LOCATION	TBD	TBD	TBD	N/A	N/A	N/A

Section 8 - RBS INDIVIDUAL INFORMATION

	GSM 850 RBS	GSM 1900 RBS	UMTS 850 RBS	UMTS 1900 RBS	UMTS 2ND 850 RBS	UMTS 2ND 1900 RBS	UMTS 3RD 850 RBS	UMTS 3RD 1900 RBS	UMTS 4TH 850 RBS	UMTS 4TH 1900 RBS	LTE 700 RBS	LTE AWS RBS
CELL ID/BCF	TBD	TBD	TBD	TBD	TBD	TBD	N/A	N/A	N/A	N/A	CTL02174_7A_1	
CTS COMMON ID	TBD	TBD	TBD	TBD	TBD	TBD	N/A	N/A	N/A	N/A	N/A	N/A

Section 9 - SOFT SECTOR ID

	GSM 850 RBS	GSM 1900 RBS	UMTS 850 RBS	UMTS 1900 RBS	UMTS 2ND 850 RBS	UMTS 2ND 1900 RBS	UMTS 3RD 850 RBS	UMTS 3RD 1900 RBS	UMTS 4TH 850 RBS	UMTS 4TH 1900 RBS	LTE 700 RBS	LTE AWS RBS
ALPHA (OR OMNI)	TBD	TBD	TBD	TBD	TBD	TBD	N/A	N/A	N/A	N/A	N/A	N/A
BETA	TBD	TBD	TBD	TBD	TBD	TBD	N/A	N/A	N/A	N/A	N/A	N/A
GAMMA	TBD	TBD	TBD	TBD	TBD	TBD	N/A	N/A	N/A	N/A	N/A	N/A
DELTA												
EPSILON												
PSI												

Section 10 - CID/SAC

	GSM 850 RBS	GSM 1900 RBS	UMTS 850 RBS	UMTS 1900 RBS	UMTS 2ND 850 RBS	UMTS 2ND 1900 RBS	UMTS 3RD 850 RBS	UMTS 3RD 1900 RBS	UMTS 4TH 850 RBS	UMTS 4TH 1900 RBS	LTE 700 RBS	LTE AWS RBS
ALPHA (OR OMNI)	TBD	TBD	TBD	TBD	TBD	TBD	N/A	N/A	N/A	N/A	N/A	N/A
BETA	TBD	TBD	TBD	TBD	TBD	TBD	N/A	N/A	N/A	N/A	N/A	N/A
GAMMA	TBD	TBD	TBD	TBD	TBD	TBD	N/A	N/A	N/A	N/A	N/A	N/A
DELTA												
EPSILON												
PSI												

Section 11 - CURRENT RADIO COUNTS (Existing)

	GSM 850 RBS	GSM 1900 RBS	UMTS 850 RBS	UMTS 1900 RBS	UMTS 2ND 850 RBS	UMTS 2ND 1900 RBS	UMTS 3RD 850 RBS	UMTS 3RD 1900 RBS	UMTS 4TH 850 RBS	UMTS 4TH 1900 RBS	LTE 700 RBS	LTE AWS RBS
ALPHA (OR OMNI)	3	1	TBD	TBD	TBD	TBD	N/A	N/A	N/A	N/A	N/A	N/A
BETA	2	1	TBD	TBD	TBD	TBD	N/A	N/A	N/A	N/A	N/A	N/A
GAMMA	2	1	TBD	TBD	TBD	TBD	N/A	N/A	N/A	N/A	N/A	N/A
DELTA												
EPSILON												
PSI												

Section 12 - CURRENT BASE BAND CONFIGURATION (Existing)

	GSM 1st Cabinet	GSM 2nd Cabinet	UMTS 1st Cabinet	UMTS 2nd Cabinet	LTE 1st Cabinet	LTE 2nd Cabinet
# T1s	TBD	TBD	TBD	TBD		
LINK PROFILE	TBD	TBD	TBD	TBD		
RF Combining						
Fiber or Ethernet?	TBD	TBD	TBD	TBD		
Tx Board Model	TBD	TBD	TBD	TBD		
Tx Board QTY	TBD	TBD	TBD	TBD		
RAX/ECU Board Model	TBD	TBD	TBD	TBD		
RAX/ECU Board QTY	TBD	TBD	TBD	TBD		
BBU Board Model						
BBU Board QTY						
RRU - Type(Qty-Model)						
Fiber Jumper						
DC Cable						
DC/Fiber Dem. Box						
Bundled Fiber Cable						
Bundled DC Cable						

Section 13 - NEW/PROPOSED RADIO COUNTS

	GSM 850 RBS	GSM 1900 RBS	UMTS 850 RBS	UMTS 1900 RBS	UMTS 2ND 850 RBS	UMTS 2ND 1900 RBS	UMTS 3RD 850 RBS	UMTS 3RD 1900 RBS	UMTS 4TH 850 RBS	UMTS 4TH 1900 RBS	LTE 700 RBS	LTE AWS RBS
ALPHA (OR OMNI)	3	1	TBD	TBD	TBD	TBD	N/A	N/A	N/A	N/A	N/A	N/A
BETA	2	1	TBD	TBD	TBD	TBD	N/A	N/A	N/A	N/A	N/A	N/A
GAMMA	2	1	TBD	TBD	TBD	TBD	N/A	N/A	N/A	N/A	N/A	N/A
DELTA												
EPSILON												
PSI												

Section 14 - NEW/PROPOSED BASE BAND CONFIGURATION

	GSM 1st Cabinet	GSM 2nd Cabinet	UMTS 1st Cabinet	UMTS 2nd Cabinet	LTE 1st Cabinet	LTE 2nd Cabinet
# T1s						
LINK PROFILE						
RF Combining						
Fiber or Ethernet?						
Tx Board Model						
Tx Board QTY						
RAX/ECU Board Model						
RAX/ECU Board QTY						
BBU Board Model						
BBU Board QTY						
RRU - Type(Qty-Model)					RRUS	
Fiber Jumper						
DC Cable						
DC/Fiber Dem. Box						
Bundled Fiber Cable						
Bundled DC Cable						

Section 15A - CURRENT SECTOR/CELL INFORMATION - ALPHA (OR OMNI)

ANTENNA CONFIG (FROM BACK):	ANTENNA 1 GSM, UMTS (850 / 1900) or LTE (700 / AWS)	ANTENNA 2 GSM, UMTS (850 / 1900) or LTE (700 / AWS)	ANTENNA 3 GSM, UMTS (850 / 1900) or LTE (700 / AWS)	ANTENNA 4 GSM, UMTS (850 / 1900) or LTE (700 / AWS)	ANTENNA 5 GSM, UMTS (850 / 1900) or LTE (700 / AWS)
TX/RX?					
TECHNOLOGY					
RRH LOCATION (Top/Bottom/None)					
FEEDERS TYPE	1 1/4" - RFS			1 1/4" - RFS	
Feeder Length (feet)	175 '			175 '	
ANTENNA ATOLL					
ANTENNA MAKE - MODEL	7770			7770	
ANTENNA VENDOR	Powerwave			Powerwave	
ANTENNA SIZE (H x W x D)					
ANTENNA WEIGHT					
ANTENNA GAIN					
AZIMUTH	138 °			138 °	
RADIATION CENTER (feet)	148 '			148 '	
ANTENNA TIP HEIGHT					
ELECTRICAL TILT (700/850/1900/AWS)	6 ° / 2 °			TBD / 2 °	
MECHANICAL DOWNTILT	0 °			0 °	
FEEDER AMOUNT	2			2	
Antenna RET Motor (QTY/MODEL)					
Antenna RET Splitter (QTY/MODEL)					
Antenna RET Earth (Grounding) Clamp (QTY/MODEL)					
Antenna RET Surge Arrestor (QTY/MODEL)					
Antenna RET CONTROL UNIT (QTY/MODEL) usually per site					
DC BLOCK (QTY/MODEL)					
TMA/LNA (TYPE/MODEL)	2 / Powerwave / LGP 21401 (Dual Band -			0 / N/A	
CURRENT INJECTORS FOR TMA (QTY/MODEL)					
PDU FOR TMAS (QTY/MODEL) usually per site	LGP 12104 (1900 AND 850 Bypass TMA)				
SURGE ARRESTOR (QTY/MODEL)					
DIPLEXER (QTY/MODEL)	+ 2 / Powerwave / LGP 21901			+ 2 / Powerwave / LGP 21901	
HYBRID COMBINER (QTY/MODEL)					
DUPLEXER (QTY/MODEL)					
FILTER (QTY/MODEL)					
RXAIT KIT MODULE?					
TRIPLEXER or NARROW BAND LLC (QTY/MODEL)					
SCPA/MCPA MODULE?					
Additional Component1					
Additional Component2					
Additional Component3					
MAGNETIC DECLINATION					
HATCHPLATE POWER (Watts)					
ERP (Watts)					
Local Market Note1					
Local Market Note2					
Local Market Note3					

Section 15B - CURRENT SECTOR/CELL INFORMATION - BETA

ANTENNA CONFIG (FROM BACK):	ANTENNA 1 GSM, UMTS (850 / 1900) or LTE (700 / AWS)	ANTENNA 2 GSM, UMTS (850 / 1900) or LTE (700 / AWS)	ANTENNA 3 GSM, UMTS (850 / 1900) or LTE (700 / AWS)	ANTENNA 4 GSM, UMTS (850 / 1900) or LTE (700 / AWS)	ANTENNA 5 GSM, UMTS (850 / 1900) or LTE (700 / AWS)
TX/RX?					
TECHNOLOGY					
RRH LOCATION (Top/Bottom/None)					
FEEDERS TYPE	1 1/4" - RFS			1 1/4" - RFS	
Feeder Length (feet)	175 '			175 '	
ANTENNA ATOLL					
ANTENNA MAKE - MODEL	7770			7770	
ANTENNA VENDOR	Powerwave			Powerwave	
ANTENNA SIZE (H x W x D)					
ANTENNA WEIGHT					
ANTENNA GAIN					
AZIMUTH	261 °			261 °	
RADIATION CENTER (feet)	148 '			148 '	
ANTENNA TIP HEIGHT					
ELECTRICAL TILT (700/850/1900/AWS)	4 ° / 0 °			TBD / 0 °	
MECHANICAL DOWNTILT	0 °			0 °	
FEEDER AMOUNT	2			2	
Antenna RET Motor (QTY/MODEL)					
Antenna RET Splitter (QTY/MODEL)					
Antenna RET Earth (Grounding) Clamp (QTY/MODEL)					
Antenna RET Surge Arrestor (QTY/MODEL)					
Antenna RET CONTROL UNIT (QTY/MODEL) usually per site					
DC BLOCK (QTY/MODEL)					
TMA/LNA (TYPE/MODEL)	2 / Powerwave / LGP 21401 (Dual Band -			0 / N/A	
CURRENT INJECTORS FOR TMA (QTY/MODEL)					
PDU FOR TMAS (QTY/MODEL) usually per site	LGP 12104 (1900 AND 850 Bypass TMA)				
SURGE ARRESTOR (QTY/MODEL)					
DIPLEXER (QTY/MODEL)	+ 2 / Powerwave / LGP 21901			+ 2 / Powerwave / LGP 21901	
HYBRID COMBINER (QTY/MODEL)					
DUPLEXER (QTY/MODEL)					
FILTER (QTY/MODEL)					
RXAIT KIT MODULE?					
TRIPLEXER or NARROW BAND LLC (QTY/MODEL)					
SCPA/MCPA MODULE?					
Additional Component1					
Additional Component2					
Additional Component3					
MAGNETIC DECLINATION					
HATCHPLATE POWER (Watts)					
ERP (Watts)					
Local Market Note1					
Local Market Note2					
Local Market Note3					

Section 15C - CURRENT SECTOR/CELL INFORMATION - GAMMA

ANTENNA CONFIG (FROM BACK):	ANTENNA 1 GSM, UMTS (850 / 1900) or LTE (700 / AWS)	ANTENNA 2 GSM, UMTS (850 / 1900) or LTE (700 / AWS)	ANTENNA 3 GSM, UMTS (850 / 1900) or LTE (700 / AWS)	ANTENNA 4 GSM, UMTS (850 / 1900) or LTE (700 / AWS)	ANTENNA 5 GSM, UMTS (850 / 1900) or LTE (700 / AWS)
TX/RX?					
TECHNOLOGY					
RRH LOCATION (Top/Bottom/None)					
FEEDERS TYPE	1 1/4" - RFS			1 1/4" - RFS	
Feeder Length (feet)	175 '			175 '	
ANTENNA ATOLL					
ANTENNA MAKE - MODEL	7770			7770	
ANTENNA VENDOR	Powerwave			Powerwave	
ANTENNA SIZE (H x W x D)					
ANTENNA WEIGHT					
ANTENNA GAIN					
AZIMUTH	25 °			25 °	
RADIATION CENTER (feet)	148 '			148 '	
ANTENNA TIP HEIGHT					
ELECTRICAL TILT (700/850/1900/AWS)	4 ° / 0 °			TBD / 0 °	
MECHANICAL DOWNTILT	0 °			0 °	
FEEDER AMOUNT	2			2	
Antenna RET Motor (QTY/MODEL)					
Antenna RET Splitter (QTY/MODEL)					
Antenna RET Earth (Grounding) Clamp (QTY/MODEL)					
Antenna RET Surge Arrestor (QTY/MODEL)					
Antenna RET CONTROL UNIT (QTY/MODEL) usually per site					
DC BLOCK (QTY/MODEL)					
TMA/LNA (TYPE/MODEL)	2 / Powerwave / LGP 21401 (Dual Band -			0 / N/A	
CURRENT INJECTORS FOR TMA (QTY/MODEL)					
PDU FOR TMAS (QTY/MODEL) usually per site	LGP 12104 (1900 AND 850 Bypass TMA)				
SURGE ARRESTOR (QTY/MODEL)					
DIPLEXER (QTY/MODEL)	+ 2 / Powerwave / LGP 21901			+ 2 / Powerwave / LGP 21901	
HYBRID COMBINER (QTY/MODEL)					
DUPLEXER (QTY/MODEL)					
FILTER (QTY/MODEL)					
RXAIT KIT MODULE?					
TRIPLEXER or NARROW BAND LLC (QTY/MODEL)					
SCPA/MCPA MODULE?					
Additional Component1					
Additional Component2					
Additional Component3					
MAGNETIC DECLINATION					
HATCHPLATE POWER (Watts)					
ERP (Watts)					
Local Market Note1					
Local Market Note2					
Local Market Note3					

Section 15D - CURRENT SECTOR/CELL INFORMATION - DELTA

ANTENNA CONFIG (FROM BACK):	ANTENNA 1 GSM, UMTS (850 / 1900) or LTE (700 / AWS)		ANTENNA 2 GSM, UMTS (850 / 1900) or LTE (700 / AWS)		ANTENNA 3 GSM, UMTS (850 / 1900) or LTE (700 / AWS)		ANTENNA 4 GSM, UMTS (850 / 1900) or LTE (700 / AWS)		ANTENNA 5 GSM, UMTS (850 / 1900) or LTE (700 / AWS)	
TX/RX?										
TECHNOLOGY										
RRH LOCATION (Top/Bottom/None)										
FEEDERS TYPE										
Feeder Length (feet)										
ANTENNA ATOLL										
ANTENNA MAKE - MODEL										
ANTENNA VENDOR										
ANTENNA SIZE (H x W x D)										
ANTENNA WEIGHT										
ANTENNA GAIN										
AZIMUTH										
RADIATION CENTER (feet)										
ANTENNA TIP HEIGHT										
ELECTRICAL TILT (700/850/1900/AWS)										
MECHANICAL DOWNTILT										
FEEDER AMOUNT										
Antenna RET Motor (QTY/MODEL)										
Antenna RET Splitter (QTY/MODEL)										
Antenna RET Earth (Grounding) Clamp (QTY/MODEL)										
Antenna RET Surge Arrestor (QTY/MODEL)										
Antenna RET CONTROL UNIT (QTY/MODEL) usually per site										
DC BLOCK (QTY/MODEL)										
TMA/LNA (TYPE/MODEL)										
CURRENT INJECTORS FOR TMA (QTY/MODEL)										
PDU FOR TMAS (QTY/MODEL) usually per site										
SURGE ARRESTOR (QTY/MODEL)										
DIPLEXER (QTY/MODEL)										
HYBRID COMBINER (QTY/MODEL)										
DUPLEXER (QTY/MODEL)										
FILTER (QTY/MODEL)										
RXAIT KIT MODULE?										
TRIPLEXER or NARROW BAND LLC (QTY/MODEL)										
SCPA/MCPA MODULE?										
Additional Component1										
Additional Component2										
Additional Component3										
MAGNETIC DECLINATION										
HATCHPLATE POWER (Watts)										
ERP (Watts)										
Local Market Note1										
Local Market Note2										
Local Market Note3										

Section 15E - CURRENT SECTOR/CELL INFORMATION - EPSILON

ANTENNA CONFIG (FROM BACK):	ANTENNA 1 GSM, UMTS (850 / 1900) or LTE (700 / AWS)		ANTENNA 2 GSM, UMTS (850 / 1900) or LTE (700 / AWS)		ANTENNA 3 GSM, UMTS (850 / 1900) or LTE (700 / AWS)		ANTENNA 4 GSM, UMTS (850 / 1900) or LTE (700 / AWS)		ANTENNA 5 GSM, UMTS (850 / 1900) or LTE (700 / AWS)	
TX/RX?										
TECHNOLOGY										
RRH LOCATION (Top/Bottom/None)										
FEEDERS TYPE										
Feeder Length (feet)										
ANTENNA ATOLL										
ANTENNA MAKE - MODEL										
ANTENNA VENDOR										
ANTENNA SIZE (H x W x D)										
ANTENNA WEIGHT										
ANTENNA GAIN										
AZIMUTH										
RADIATION CENTER (feet)										
ANTENNA TIP HEIGHT										
ELECTRICAL TILT (700/850/1900/AWS)										
MECHANICAL DOWNTILT										
FEEDER AMOUNT										
Antenna RET Motor (QTY/MODEL)										
Antenna RET Splitter (QTY/MODEL)										
Antenna RET Earth (Grounding) Clamp (QTY/MODEL)										
Antenna RET Surge Arrestor (QTY/MODEL)										
Antenna RET CONTROL UNIT (QTY/MODEL) usually per site										
DC BLOCK (QTY/MODEL)										
TMA/LNA (TYPE/MODEL)										
CURRENT INJECTORS FOR TMA (QTY/MODEL)										
PDU FOR TMAS (QTY/MODEL) usually per site										
SURGE ARRESTOR (QTY/MODEL)										
DIPLEXER (QTY/MODEL)										
HYBRID COMBINER (QTY/MODEL)										
DUPLEXER (QTY/MODEL)										
FILTER (QTY/MODEL)										
RXAIT KIT MODULE?										
TRIPLEXER or NARROW BAND LLC (QTY/MODEL)										
SCPA/MCPA MODULE?										
Additional Component1										
Additional Component2										
Additional Component3										
MAGNETIC DECLINATION										
HATCHPLATE POWER (Watts)										
ERP (Watts)										
Local Market Note1										
Local Market Note2										
Local Market Note3										

Section 15F - CURRENT SECTOR/CELL INFORMATION - ZETA

ANTENNA CONFIG (FROM BACK):	ANTENNA 1 GSM, UMTS (850 / 1900) or LTE (700 / AWS)		ANTENNA 2 GSM, UMTS (850 / 1900) or LTE (700 / AWS)		ANTENNA 3 GSM, UMTS (850 / 1900) or LTE (700 / AWS)		ANTENNA 4 GSM, UMTS (850 / 1900) or LTE (700 / AWS)		ANTENNA 5 GSM, UMTS (850 / 1900) or LTE (700 / AWS)	
TX/RX?										
TECHNOLOGY										
RRH LOCATION (Top/Bottom/None)										
FEEDERS TYPE										
Feeder Length (feet)										
ANTENNA ATOLL										
ANTENNA MAKE - MODEL										
ANTENNA VENDOR										
ANTENNA SIZE (H x W x D)										
ANTENNA WEIGHT										
ANTENNA GAIN										
AZIMUTH										
RADIATION CENTER (feet)										
ANTENNA TIP HEIGHT										
ELECTRICAL TILT (700/850/1900/AWS)										
MECHANICAL DOWNTILT										
FEEDER AMOUNT										
Antenna RET Motor (QTY/MODEL)										
Antenna RET Splitter (QTY/MODEL)										
Antenna RET Earth (Grounding) Clamp (QTY/MODEL)										
Antenna RET Surge Arrestor (QTY/MODEL)										
Antenna RET CONTROL UNIT (QTY/MODEL) usually per site										
DC BLOCK (QTY/MODEL)										
TMA/LNA (TYPE/MODEL)										
CURRENT INJECTORS FOR TMA (QTY/MODEL)										
PDU FOR TMAS (QTY/MODEL) usually per site										
SURGE ARRESTOR (QTY/MODEL)										
DIPLEXER (QTY/MODEL)										
HYBRID COMBINER (QTY/MODEL)										
DUPLEXER (QTY/MODEL)										
FILTER (QTY/MODEL)										
RXAIT KIT MODULE?										
TRIPLEXER or NARROW BAND LLC (QTY/MODEL)										
SCPA/MCPA MODULE?										
Additional Component1										
Additional Component2										
Additional Component3										
MAGNETIC DECLINATION										
HATCHPLATE POWER (Watts)										
ERP (Watts)										
Local Market Note1										
Local Market Note2										
Local Market Note3										

Section 16A - NEW/PROPOSED SECTOR/CELL INFORMATION - ALPHA (OR OMNI)

ANTENNA CONFIG (FROM BACK):	ANTENNA 1 GSM, UMTS (850 / 1900) or LTE (700 / AWS)	ANTENNA 2 GSM, UMTS (850 / 1900) or LTE (700 / AWS)	ANTENNA 3 GSM, UMTS (850 / 1900) or LTE (700 / AWS)	ANTENNA 4 GSM, UMTS (850 / 1900) or LTE (700 / AWS)	ANTENNA 5 GSM, UMTS (850 / 1900) or LTE (700 / AWS)
TX/RX?					
TECHNOLOGY			LTE / 700 | LTE / 2100		
RRH LOCATION (Top/Bottom/None)			TOP | TOP		
FEEDERS TYPE	1 1/4" - RFS			1 1/4" - RFS	
Feeder Length (feet)	175 '			175 '	
ANTENNA ATOLL			P65-16-XLH-RR_716MHz_16-XLH-RR_716MHz_02DT		
ANTENNA MAKE - MODEL	7770		P65-16-XLH-RR	7770	
ANTENNA VENDOR	Powerwave		Powerwave	Powerwave	
ANTENNA SIZE (H x W x D)			72.0 x 12.0 x 6.0		
ANTENNA WEIGHT			64		
ANTENNA GAIN			14.0 dBi		
AZIMUTH	138 °		30 °	138 °	
RADIATION CENTER (feet)	148 '		150 '	148 '	
ANTENNA TIP HEIGHT			153 '		
ELECTRICAL TILT (700/850/1900/AWS)	6 ° | 2 °		2 °	TBD | 2 °	
MECHANICAL DOWNTILT	0 °		0 °	0 °	
FEEDER AMOUNT	2			2	
Antenna RET Motor (QTY/MODEL)					
Antenna RET Splitter (QTY/MODEL)					
Antenna RET Earth (Grounding) Clamp (QTY/MODEL)					
Antenna RET Surge Arrestor (QTY/MODEL)					
Antenna RET CONTROL UNIT (QTY/MODEL) usually per site					
DC BLOCK (QTY/MODEL)					
TMA/LNA (TYPE/MODEL)	2 / Powerwave / LGP 21401 (Dual Band -			0 / N/A	
CURRENT INJECTORS FOR TMA (QTY/MODEL)					
PDU FOR TMAS (QTY/MODEL) usually per site					
SURGE ARRESTOR (QTY/MODEL)					
DIPLEXER (QTY/MODEL)	+ 2 / Powerwave / LGP 21901			+ 2 / Powerwave / LGP 21901	
HYBRID COMBINER (QTY/MODEL)					
DUPLEXER (QTY/MODEL)					
FILTER (QTY/MODEL)					
RXAIT KIT MODULE?					
TRIPLEXER or NARROW BAND LLC (QTY/MODEL)					
SCPA/MCPA MODULE?					
Additional Component1					
Additional Component2					
Additional Component3					
MAGNETIC DECLINATION					
HATCHPLATE POWER (Watts)					
ERP (Watts)					
Local Market Note1					
Local Market Note2					
Local Market Note3					

Section 16B - NEW/PROPOSED SECTOR/CELL INFORMATION - BETA

ANTENNA CONFIG (FROM BACK):	ANTENNA 1 GSM, UMTS (850 / 1900) or LTE (700 / AWS)	ANTENNA 2 GSM, UMTS (850 / 1900) or LTE (700 / AWS)	ANTENNA 3 GSM, UMTS (850 / 1900) or LTE (700 / AWS)	ANTENNA 4 GSM, UMTS (850 / 1900) or LTE (700 / AWS)	ANTENNA 5 GSM, UMTS (850 / 1900) or LTE (700 / AWS)
TX/RX?					
TECHNOLOGY			LTE / 700 | LTE / 2100		
RRH LOCATION (Top/Bottom/None)			TOP | TOP		
FEEDERS TYPE	1 1/4" - RFS			1 1/4" - RFS	
Feeder Length (feet)	175 '			175 '	
ANTENNA ATOLL			P65-16-XLH-RR_716MHz_16-XLH-RR_716MHz_06DT		
ANTENNA MAKE - MODEL	7770		P65-16-XLH-RR	7770	
ANTENNA VENDOR	Powerwave		Powerwave	Powerwave	
ANTENNA SIZE (H x W x D)			72.0 x 12.0 x 6.0		
ANTENNA WEIGHT			64		
ANTENNA GAIN			14.0 dBi		
AZIMUTH	261 °		150 °	261 °	
RADIATION CENTER (feet)	148 '		150 '	148 '	
ANTENNA TIP HEIGHT			153 '		
ELECTRICAL TILT (700/850/1900/AWS)	4 ° | 0 °		6 °	TBD | 0 °	
MECHANICAL DOWNTILT	0 °		0 °	0 °	
FEEDER AMOUNT	2			2	
Antenna RET Motor (QTY/MODEL)					
Antenna RET Splitter (QTY/MODEL)					
Antenna RET Earth (Grounding) Clamp (QTY/MODEL)					
Antenna RET Surge Arrestor (QTY/MODEL)					
Antenna RET CONTROL UNIT (QTY/MODEL) usually per site					
DC BLOCK (QTY/MODEL)					
TMA/LNA (TYPE/MODEL)	2 / Powerwave / LGP 21401 (Dual Band -			0 / N/A	
CURRENT INJECTORS FOR TMA (QTY/MODEL)					
PDU FOR TMAS (QTY/MODEL) usually per site					
SURGE ARRESTOR (QTY/MODEL)					
DIPLEXER (QTY/MODEL)	+ 2 / Powerwave / LGP 21901			+ 2 / Powerwave / LGP 21901	
HYBRID COMBINER (QTY/MODEL)					
DUPLEXER (QTY/MODEL)					
FILTER (QTY/MODEL)					
RXAIT KIT MODULE?					
TRIPLEXER or NARROW BAND LLC (QTY/MODEL)					
SCPA/MCPA MODULE?					
Additional Component1					
Additional Component2					
Additional Component3					
MAGNETIC DECLINATION					
HATCHPLATE POWER (Watts)					
ERP (Watts)					
Local Market Note1					
Local Market Note2					
Local Market Note3					

Section 16C - NEW/PROPOSED SECTOR/CELL INFORMATION - GAMMA

ANTENNA CONFIG (FROM BACK):	ANTENNA 1 GSM, UMTS (850 / 1900) or LTE (700 / AWS)	ANTENNA 2 GSM, UMTS (850 / 1900) or LTE (700 / AWS)	ANTENNA 3 GSM, UMTS (850 / 1900) or LTE (700 / AWS)	ANTENNA 4 GSM, UMTS (850 / 1900) or LTE (700 / AWS)	ANTENNA 5 GSM, UMTS (850 / 1900) or LTE (700 / AWS)
TX/RX?					
TECHNOLOGY			LTE / 700 | LTE / 2100		
RRH LOCATION (Top/Bottom/None)			TOP | TOP		
FEEDERS TYPE	1 1/4" - RFS			1 1/4" - RFS	
Feeder Length (feet)	175 '			175 '	
ANTENNA ATOLL			P65-16-XLH-RR_716MHz_16-XLH-RR_716MHz_08DT		
ANTENNA MAKE - MODEL	7770		P65-16-XLH-RR	7770	
ANTENNA VENDOR	Powerwave		Powerwave	Powerwave	
ANTENNA SIZE (H x W x D)			72.0 x 12.0 x 6.0		
ANTENNA WEIGHT			64		
ANTENNA GAIN			14.0 dBi		
AZIMUTH	25 °		270 °	25 °	
RADIATION CENTER (feet)	148 '		150 '	148 '	
ANTENNA TIP HEIGHT			153 '		
ELECTRICAL TILT (700/850/1900/AWS)	4 ° | 0 °		8 °	TBD | 0 °	
MECHANICAL DOWNTILT	0 °		0 °	0 °	
FEEDER AMOUNT	2			2	
Antenna RET Motor (QTY/MODEL)					
Antenna RET Splitter (QTY/MODEL)					
Antenna RET Earth (Grounding) Clamp (QTY/MODEL)					
Antenna RET Surge Arrestor (QTY/MODEL)					
Antenna RET CONTROL UNIT (QTY/MODEL) usually per site					
DC BLOCK (QTY/MODEL)					
TMA/LNA (TYPE/MODEL)	2 / Powerwave / LGP 21401 (Dual Band -			0 / N/A	
CURRENT INJECTORS FOR TMA (QTY/MODEL)					
PDU FOR TMAS (QTY/MODEL) usually per site					
SURGE ARRESTOR (QTY/MODEL)					
DIPLEXER (QTY/MODEL)	+ 2 / Powerwave / LGP 21901			+ 2 / Powerwave / LGP 21901	
HYBRID COMBINER (QTY/MODEL)					
DUPLEXER (QTY/MODEL)					
FILTER (QTY/MODEL)					
RXAIT KIT MODULE?					
TRIPLEXER or NARROW BAND LLC (QTY/MODEL)					
SCPA/MCPA MODULE?					
Additional Component1					
Additional Component2					
Additional Component3					
MAGNETIC DECLINATION					
HATCHPLATE POWER (Watts)					
ERP (Watts)					
Local Market Note1					
Local Market Note2					
Local Market Note3					

Section 16D - NEW/PROPOSED SECTOR/CELL INFORMATION - DELTA

ANTENNA CONFIG (FROM BACK):	ANTENNA 1 GSM, UMTS (850 / 1900) or LTE (700 / AWS)	ANTENNA 2 GSM, UMTS (850 / 1900) or LTE (700 / AWS)	ANTENNA 3 GSM, UMTS (850 / 1900) or LTE (700 / AWS)	ANTENNA 4 GSM, UMTS (850 / 1900) or LTE (700 / AWS)	ANTENNA 5 GSM, UMTS (850 / 1900) or LTE (700 / AWS)
TX/RX?					
TECHNOLOGY					
RRH LOCATION (Top/Bottom/None)					
FEEDERS TYPE					
Feeder Length (feet)					
ANTENNA ATOLL					
ANTENNA MAKE - MODEL					
ANTENNA VENDOR					
ANTENNA SIZE (H x W x D)					
ANTENNA WEIGHT					
ANTENNA GAIN					
AZIMUTH					
RADIATION CENTER (feet)					
ANTENNA TIP HEIGHT					
ELECTRICAL TILT (700/850/1900/AWS)					
MECHANICAL DOWNTILT					
FEEDER AMOUNT					
Antenna RET Motor (QTY/MODEL)					
Antenna RET Splitter (QTY/MODEL)					
Antenna RET Earth (Grounding) Clamp (QTY/MODEL)					
Antenna RET Surge Arrestor (QTY/MODEL)					
Antenna RET CONTROL UNIT (QTY/MODEL) usually per site					
DC BLOCK (QTY/MODEL)					
TMA/LNA (TYPE/MODEL)					
CURRENT INJECTORS FOR TMA (QTY/MODEL)					
PDU FOR TMAS (QTY/MODEL) usually per site					
SURGE ARRESTOR (QTY/MODEL)					
DIPLEXER (QTY/MODEL)					
HYBRID COMBINER (QTY/MODEL)					
DUPLEXER (QTY/MODEL)					
FILTER (QTY/MODEL)					
RXAIT KIT MODULE?					
TRIPLEXER or NARROW BAND LLC (QTY/MODEL)					
SCPA/MCPA MODULE?					
Additional Component1					
Additional Component2					
Additional Component3					
MAGNETIC DECLINATION					
HATCHPLATE POWER (Watts)					
ERP (Watts)					
Local Market Note1					
Local Market Note2					
Local Market Note3					

Section 16E - NEW/PROPOSED SECTOR/CELL INFORMATION - EPSILON

ANTENNA CONFIG (FROM BACK):	ANTENNA 1 GSM, UMTS (850 / 1900) or LTE (700 / AWS)	ANTENNA 2 GSM, UMTS (850 / 1900) or LTE (700 / AWS)	ANTENNA 3 GSM, UMTS (850 / 1900) or LTE (700 / AWS)	ANTENNA 4 GSM, UMTS (850 / 1900) or LTE (700 / AWS)	ANTENNA 5 GSM, UMTS (850 / 1900) or LTE (700 / AWS)
TX/RX?					
TECHNOLOGY					
RRH LOCATION (Top/Bottom/None)					
FEEDERS TYPE					
Feeder Length (feet)					
ANTENNA ATOLL					
ANTENNA MAKE - MODEL					
ANTENNA VENDOR					
ANTENNA SIZE (H x W x D)					
ANTENNA WEIGHT					
ANTENNA GAIN					
AZIMUTH					
RADIATION CENTER (feet)					
ANTENNA TIP HEIGHT					
ELECTRICAL TILT (700/850/1900/AWS)					
MECHANICAL DOWNTILT					
FEEDER AMOUNT					
Antenna RET Motor (QTY/MODEL)					
Antenna RET Splitter (QTY/MODEL)					
Antenna RET Earth (Grounding) Clamp (QTY/MODEL)					
Antenna RET Surge Arrestor (QTY/MODEL)					
Antenna RET CONTROL UNIT (QTY/MODEL) usually per site					
DC BLOCK (QTY/MODEL)					
TMA/LNA (TYPE/MODEL)					
CURRENT INJECTORS FOR TMA (QTY/MODEL)					
PDU FOR TMAS (QTY/MODEL) usually per site					
SURGE ARRESTOR (QTY/MODEL)					
DIPLEXER (QTY/MODEL)					
HYBRID COMBINER (QTY/MODEL)					
DUPLEXER (QTY/MODEL)					
FILTER (QTY/MODEL)					
RXAIT KIT MODULE?					
TRIPLEXER or NARROW BAND LLC (QTY/MODEL)					
SCPA/MCPA MODULE?					
Additional Component1					
Additional Component2					
Additional Component3					
MAGNETIC DECLINATION					
HATCHPLATE POWER (Watts)					
ERP (Watts)					
Local Market Note1					
Local Market Note2					
Local Market Note3					

Section 16F - NEW/PROPOSED SECTOR/CELL INFORMATION - ZETA

ANTENNA CONFIG (FROM BACK):	ANTENNA 1 GSM, UMTS (850 / 1900) or LTE (700 / AWS)	ANTENNA 2 GSM, UMTS (850 / 1900) or LTE (700 / AWS)	ANTENNA 3 GSM, UMTS (850 / 1900) or LTE (700 / AWS)	ANTENNA 4 GSM, UMTS (850 / 1900) or LTE (700 / AWS)	ANTENNA 5 GSM, UMTS (850 / 1900) or LTE (700 / AWS)
TX/RX?					
TECHNOLOGY					
RRH LOCATION (Top/Bottom/None)					
FEEDERS TYPE					
Feeder Length (feet)					
ANTENNA ATOLL					
ANTENNA MAKE - MODEL					
ANTENNA VENDOR					
ANTENNA SIZE (H x W x D)					
ANTENNA WEIGHT					
ANTENNA GAIN					
AZIMUTH					
RADIATION CENTER (feet)					
ANTENNA TIP HEIGHT					
ELECTRICAL TILT (700/850/1900/AWS)					
MECHANICAL DOWNTILT					
FEEDER AMOUNT					
Antenna RET Motor (QTY/MODEL)					
Antenna RET Splitter (QTY/MODEL)					
Antenna RET Earth (Grounding) Clamp (QTY/MODEL)					
Antenna RET Surge Arrestor (QTY/MODEL)					
Antenna RET CONTROL UNIT (QTY/MODEL) usually per site					
DC BLOCK (QTY/MODEL)					
TMA/LNA (TYPE/MODEL)					
CURRENT INJECTORS FOR TMA (QTY/MODEL)					
PDU FOR TMAS (QTY/MODEL) usually per site					
SURGE ARRESTOR (QTY/MODEL)					
DIPLEXER (QTY/MODEL)					
HYBRID COMBINER (QTY/MODEL)					
DUPLEXER (QTY/MODEL)					
FILTER (QTY/MODEL)					
RXAIT KIT MODULE?					
TRIPLEXER or NARROW BAND LLC (QTY/MODEL)					
SCPA/MCPA MODULE?					
Additional Component1					
Additional Component2					
Additional Component3					
MAGNETIC DECLINATION					
HATCHPLATE POWER (Watts)					
ERP (Watts)					
Local Market Note1					
Local Market Note2					
Local Market Note3					

P65-16-XLH-RR | Dual Broadband Antennas

POLARIZATION: Dual linear ±45°
FREQUENCY (MHz): 698-894, 1710-2170
HORIZONTAL BEAM WIDTH (°): 65, 65
GAIN (dBi/dBd): 15.5/13.4 17.5/15.4
TILT: 1-12, 0-8
LENGTH: 72"

ELECTRICAL SPECIFICATIONS*

Frequency range (MHz)	698-894		1710-2170		
Frequency band (MHz)	698-806	806-894	1710-1880	1850-1990	1900-2170
Gain (dBi/dBd)	14.8/12.7	15.5/13.4	16.9/14.8	17.2/15.1	17.5/15.4
Polarization	Dual Linear +/- 45		Dual Linear +/- 45		
Nominal Impedance (Ω)	50		50		
VSWR	< 1.5:1		< 1.5:1		
Horizontal beam width, -3 dB (°)	66	65	60	63	63
Vertical beam width, -3 dB (°)	14.7	12.5	6.8	6.4	5.7
Electrical down tilt (°)	1 to 12		0 to 8		
Side lobe suppression, vertical 1st upper (dB)	> 16	>16	> 16		
	>16	>16			
Isolation between inputs (dB)	> 30	> 30	> 30	> 30	
Inter band Isolation (dB)	> 40		> 40		
Tracking, horizontal plane ±60° (dB)	< 2		< 2	< 2	< 2
First null fill (dB)			>-20	>-20	>-20
Vertical beam squint (°)	< 0.8	< 0.8	< 0.5	< 0.5	< 0.5
Front to back ratio (dB) 180°±30° copolar	>24	>24	> 30	>30	>28
Front to back ratio (dB) 180°±30° total power					
Cross polar discrimination (XPD) 0° (dB)	> 15	> 15	> 15	> 15	> 15
Cross polar discrimination (XPD) ±60° (dB)	> 10	> 10	> 10	> 10	> 10
Far field coupling					
IM3, 2xTx@43dBm (dBc)	<-153		<-153		
IM7, 2xTx@43dBm (dBc)					
Power handling, average per input (W)	500		250		
Power handling, average total (W)	1000		500		

MECHANICAL SPECIFICATIONS*

Connector	4 X 7/16 DIN Female, IP67
Connector position	Bottom
Dimensions, HxWxD, mm (ft)	72" x 12" x 6" (1829 x 305 x 152)
Mounting	Pre-mounted Tilt Brackets
Weight, with brackets, kg (lbs)	29 (64)
Weight, without brackets, kg (lbs)	24 (53)
Wind load, frontal/lateral/rear side 42 m/s Cd=1.6 (N)	1380
Maximum operational wind speed, m/s (mph)	100 (45)
Survival wind speed, m/s (mph)	150 (67)
Lightning protection	DC Ground
Operating Temperature	-40C to +60C
Radome material	PVC, IP55
Packet size, HxWxD, mm (ft)	87" x 16" x 10" (2225 x 400 x 225)
Radome colour	Light Grey
Shipping weight, kg (lbs)	34 (75)
RET	iRET AISGv1.1, MET and AISGv2.0
Brackets	7256.00, 7454.00

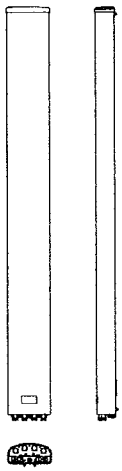

*All specifications subject to change without notice. Please contact your Powerwave representative for complete performance data.

ANTENNA PATTERNS*

For detailed patterns visit http://www.powerwave.com/rpa/.

© Copyright 2011 Powerwave Technologies, Inc. All rights reserved.
All specifications are subject to change without notice. Please contact your Powerwave representative for complete performance data.

7770.00A

DBB90 Broadband Cross Polarized

POLARIZATION: XX-Pol
FREQUENCY (MHz): 824-896, 1710-2170
HORIZONTAL BEAM WIDTH (°): 90
GAIN (dBi/dBd): 13.5/11.4, 15.5/13.4
TILT: MET
LENGTH: 1.4m (4'7")

ELECTRICAL SPECIFICATIONS*

Frequency range (MHz)	824-896	1710-2170		
Frequency band (MHz)	824-896	1710-1880	1850-1990	1900-2170
Gain (dBi/dBd)	13.5/11.4	15.5/13.4	15.5/13.4	15.5/13.4
Polarization	Dual linear ±45°	Dual linear ±45°		
Nominal Impedance (Ω)	50	50		
VSWR	<1.5:1	<1.5:1		
Horizontal beam width, -3 dB (°)	85	90	90	90
Vertical beam width, -3 dB (°)	15	7	7	7
Electrical down tilt (°)	0 to 10	0 to 8		
Side lobe suppression, vertical 1st upper (dB)	>18	>18	>18	>18
Isolation between inputs (dB)	>30	>30	>30	>25
Inter band Isolation (dB)	>36	>36		
Tracking, horizontal plane ±60° (dB)	<2	<2	<2	<2
First null fill (dB)	-	-	-	-
Vertical beam squint (°)	<1.0	<0.5	<0.5	<0.5
Front to back ratio (dB) 180°±30° copolar	>25	>25	>25	>25
Front to back ratio (dB) 180°±30° total power	>22	>21	>21	>21
Cross polar discrimination (XPD) 0° (dB)	-	-	-	-
Cross polar discrimination (XPD) ±60° (dB)	>10	>10	>10	>10
Far field coupling	-	-	-	-
IM3, 2xTx@43dBm (dBc)	<-153	<-153		
IM7, 2xTx@43dBm (dBc)	-	<-160		
Power handling, average per input (W)	500	250		
Power handling, average total (W)	800	500		

MECHANICAL SPECIFICATIONS*

Connector	4 x 7/16 DIN Female
Connector position	Bottom
Dimensions, HxWxD, mm (ft)	1408x280x125mm
Mounting	Pre-mounted heavy duty brackets
Weight, with brackets, kg (lbs)	17.6 (39)
Weight, without brackets, kg (lbs)	12.1 (27)
Wind load, frontal/lateral/rear side 42 m/s Cd=1.6 (N)	415
Maximum operational wind speed, m/s (mph)	42 (93)
Survival wind speed, m/s (mph)	55 (123)
Lightning protection	DC grounded
Operating Temperature	-40°C to +60°C
Radome material	GRP
Package size, HxWxD, mm (ft)	1550x355x255 (61"x1'2"x10")
Radome colour	Light Grey
Shipping weight, kg (lbs)	21.5 (47.4)
RET	8220.10, 8220.40, 8210.10, 8210.40
Brackets	7256.00, 7454.00

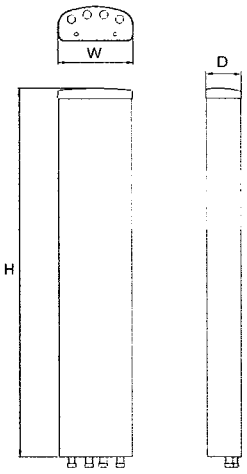

*All specifications subject to change without notice. Please contact your Powerwave representative for complete performance data.

ANTENNA PATTERNS*

For detailed patterns visithttp://www.powerwave.com/rpa/.

© Copyright 2011 Powerwave Technologies, Inc. All rights reserved.
All specifications are subject to change without notice. Please contact your Powerwave representative for complete performance data.

Tower Mounted Amplifier

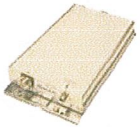

1900/850 MHz

Technical Specifications

Product Number	LGP214nn	
850 MHz	Bypass (MHz)	824-894
	Return loss* (dB)	> 20
	Insertion loss* (dB)	< 0.3
1900 MHz		
Up-link	Frequency range, full band (60 MHz)	1850-1910
	Nominal gain (dB)	12
	Return loss* (dB)	> 20
	Noise figure* (dB)	< 1.7
	Output 3rd order Intercept Point* (dBm)	> +23
Down-link	Frequency range, full band (60 MHz)	1930-1990
	Insertion loss* (dB)	< 0.6
	Return loss* (dB)	> 20
Intermodulation	2 Tx@x43 dBm (dBc)	<-158
Alarm Functionality	Two levels,individually supervised LNAs	
Power Consumption	@12 VDC	1.2 W

* Typical

All specifications subject to change without notice. Please contact your Powerwave representative for complete performance data.

Mechanical Specifications

Size,W x H x D (without mounting plate)	235 x 366 x 66 mm (9.2 x 14.4 x 2.6 in)
Weight	6.4 kg (14.1 lbs)
Color	Off white (NCS 1502-R)
Housing	Aluminum
RF-connectors	DIN 7/16 female.
Mounting kit	Mounting kit for pole and wall is included
Temperature range	-40 °C to +65 °C (-40 °F to +149 °F)
MTBF	>1 million hours
Safety	UL 60 950
Ingress protection, IP 65	EN 60 529
Environmental	ETS 300 019
EMC	FCC Part 15

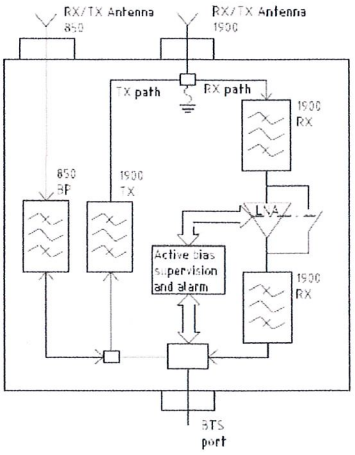

Corporate Headquarters
Powerwave Technologies, Inc.
1801 East St. Andrew Place
Santa Ana, CA 92705 USA
Tel: 714-466-1000
Fax: 714-466-5800
www.powerwave.com

Main European Office
Antennvägen 6
SE-187 80 Täby
Sweden
Tel: +46 8 540 822 00
Fax: +46 8 540 823 40

Main Asia-Pacific Office
23 F Tai Yau Building
181 Johnston Road
Wanchai, Hong Kong
Tel: +852 2512 6123
Fax: +852 2575 4860

Powerwave technologies

©Copyright 2006, Powerwave Technologies, Inc. All Rights reserved. Powerwave, Powerwave Technologies, The Power in Wireless and the Powerwave logo are registered trademarks of Powerwave Technologies, Inc.

COVERAGE AND CAPACITY | TECHNOLOGY LEADERSHIP | GLOBAL PARTNER | INTEGRATED SOLUTIONS | QUALITY AND RELIABILITY

LGP219nn

Diplex Filter for 800/900 MHz and 1800/1900/2100 MHz with Configurable DC Transparency

TECHNICAL SPECIFICATIONS

Range (MHz)	800-2170	
Frequency Range (Full Band MHz)	824-960 MHz/1710-2170 MHz	
Frequency Range (MHz)	824-960 Port, 824-960 MHz	1710-2100 Port, 1710-2170 MHz
Insertion Loss (dB)	824-960 Port: <0.1 dB Typical	1710-2100 Port: <0.2 dB Typical
Return Loss (dB)	824-960 Port, 20 dB minimum	1710-2100 Port, 20 dB minimum
Rejection UL	N/A	
Rejection DL	N/A	
Rejection	824-960 Port, 1710-1990 MHz, 52 dB minimum	1710-2170 Port, 824-960 MHz, 52 dB minimum
Transmit Band Rejection (dB)	N/A	N/A
Average Power Handling (dBm)	N/A	N/A
Peak Power (dBm)	824-960 Port, 800 AMPS, 10 kW; 900 MHz, 1600 kW	1710-2100 Port, 1800 MHz, 1600 kW; 1900 MHz, 5 kW
Max Power	824-960 Port, 800 MHz, 500W average; 900 MHz, 200 W average	1710-2100 Port, 1800 MHz, 200 W average; 1900 MHz, 300 W average
Intermodulation (IM) (dBc) (Products, Max)	824-960 Port, -110 dBm (-153 dBc), two/+43 dBm carriers in the Tx band	1710-2100 Port, -110 dBm (-153 dBc), two/+43 dBm carriers in the Tx band
Common+Port	TMA supply voltage, fed via the RF cable, +31 V maximum, 2 A	
DC Bias/AISG Passthru	N/A	

MECHANICAL SPECIFICATIONS

Dimensions mm(ft)	112 x 158 x 74 (4"x 6"x 3")
Weight kg(lbs)	2.5 (5.5) maximum
Volume	1.3 liter single unit
Color	Off White (NCS 1502-R)
Housing	Aluminum
RF Connectors	DIN 7/16 female
Mounting_Kit	Hose Clamps in Stainless Steel

ENVIRONMENTAL SPECIFICATIONS

Temperature Range Celsius (Fahrenheit)	-40°to +65°(-40°to +149°)
MTBF	10 Million Hours
Lightning Protection	According to IEC 61312-1, 3kA 10/350 uS;center pin (any port)-shield
Safety	EN 60 950, UL 1950, ETL
Ingress Protection	IP65, EN 60 529
Environmental	ETS 300 019
EMC	ETS 300 342-3

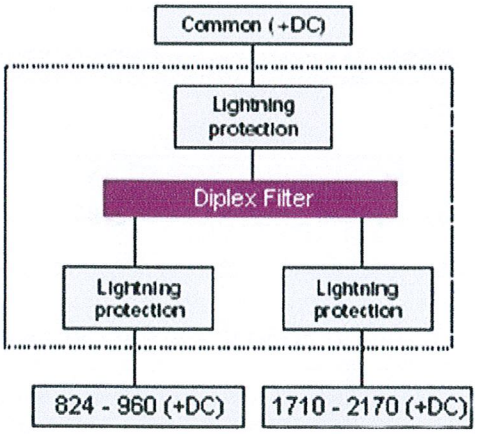

© Copyright 2008 Powerwave Technologies, Inc. All rights reserved.

RRUS 11 – Dual PA RRU.

Technical Data

RBS6000

- Multi standard
- RF: 2x30 Watts
- Carrier BW: 1.4 – 20 MHz
- Alarms: 2
- Dimensions (with sunshield):
  - Width: 17.0 in
  - Height: 17.8 in
  - Depth: 7.2 in
  - Weight: 55 lbs (Band 12)
  - Weight: 50 lbs (Band 4)
- Temperature: -40 to +131 F
- Cooling: Self convection
- Power: -48 VDC
- Rec. fuse size 20 Amp
  - Rec. DC cable:
    - 6 mm^2 up to 60 meters
    - 10 mm^2 over 60 meters
    - Shielded
- Power Cons: 200 Watts typ.

RRUS-11 I/F

RBS6000

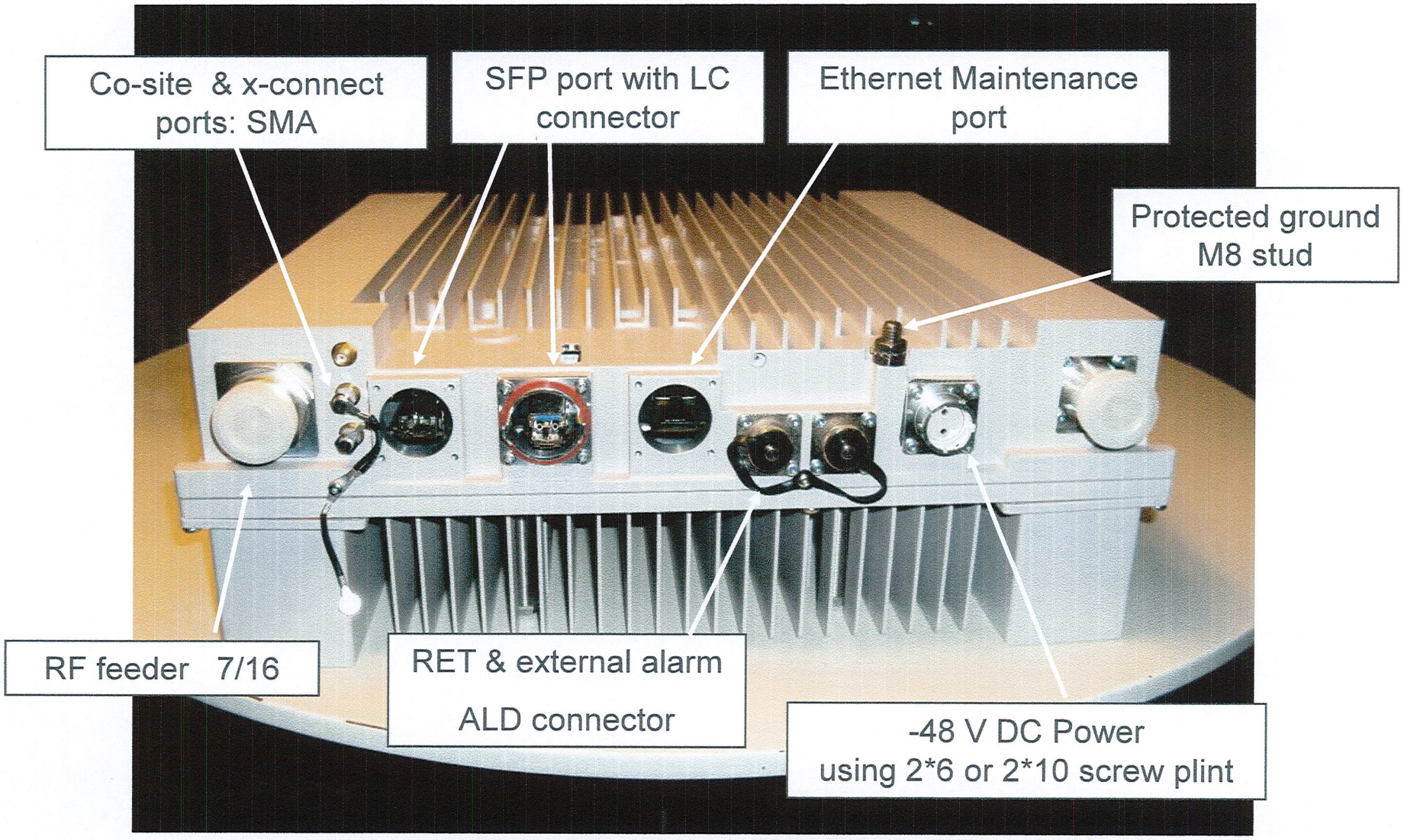

POWER

DC6-48-60-18-8F

DC Surge Suppression Solution

The DC6-48-60-18 is a dual chambered, DC surge suppression system for use in multi-circuit, Distributed Antenna Systems. The system will protect up to 6 Remote Radio Heads from voltage surges and lightning, and connect up to 18 fiber pairs. The system is enclosed in a NEMA 4 rated, waterproof enclosure.

FEATURES

- Protects up to 6 Remote Radio Heads, each with its own protection circuit.
- Flexible design allows for installation at the top of a tower for Remote Radio Head protection.
- Includes fiber connections for up to 18 pairs of fiber.
- LED indicators on individual circuits provide visual indication of suppressor status.
- Form 'C' relays allow for remote monitoring of the suppressor status.
- Patented Strikesorb technology provides over 60 kA of surge current capacity per circuit.
- Strikesorb suppression modules are fully recognized to UL 1449-3rd Edition Safety Standard, meeting all intermediate and high current fault requirements to facilitate use in OEM applications.
- Raycap recommends that DC protection system be installed within 2 meters or 6 feet of the radio.
- Dome design is lightweight and aerodynamic providing maximum flexibility for installation on top of towers.

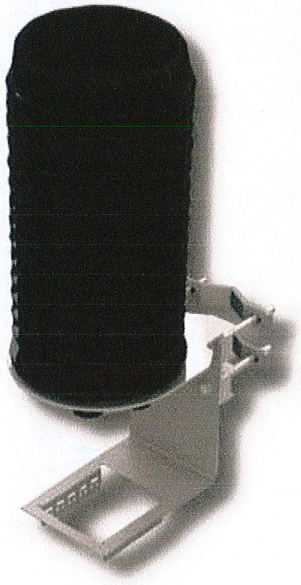

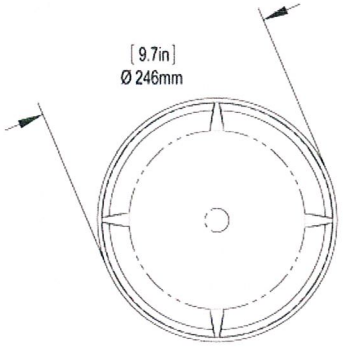

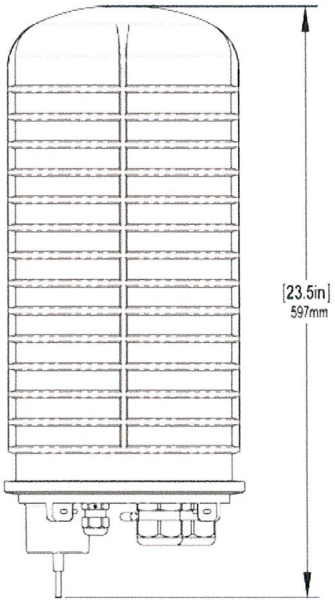

Raycap

Phone 208.777.1166 Toll Free 800.890.2569 Fax 208.777.4466 www.raycapsurgeprotection.com

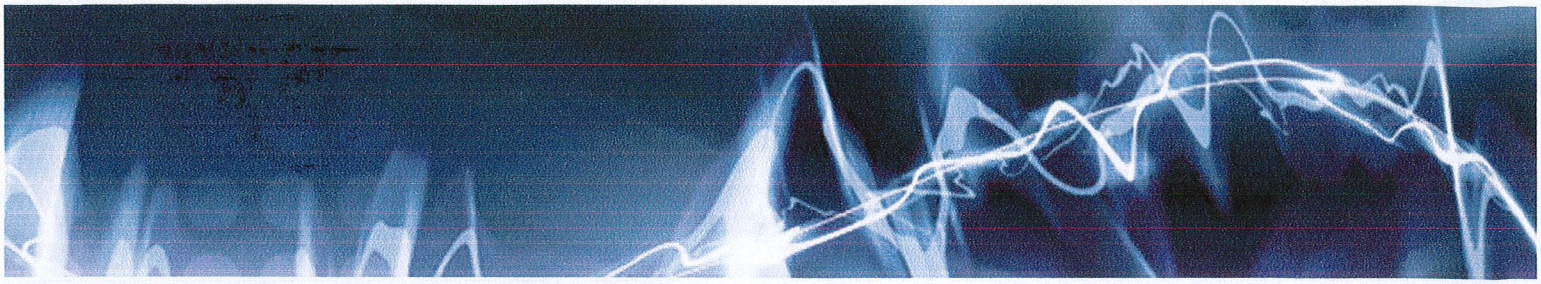

DC6-48-60-18-8F

DC Power Surge Protection

Electrical Specifications	
Model Number	DC6-48-60-18-8F
Nominal Operating Voltage	48 VDC
Nominal Discharge Current (I_n)	20 kA 8/20 µs
Maximum Discharge Current (I_{max}) per NEMA LS-1	60 kA 8/20 µs
Maximum Continuous Operating Voltage (U_c)	75 VDC
Voltage Protection Rating	400 V

Mechanical Specifications	
Suppression Connection Method	Compression lug, #2-#14 AWG Copper, #2-#12 Aluminum
Fiber Connection Method	LC-LC Single mode duplex
Environmental Rating	IP 68, 7m 72hrs
Operating Temperature	-40° C to + 80° C
Storage Temperature	-70° C to + 80° C
Cold Temperature Cycling	IEC 61300-2-22e -30° C to + 60° C 200 hrs @ 5 psi
Resistance to Aggressive Materials	CEI IEC 61073-2 including acids and bases
UV Protection	ISO 4892-2 Method A Xenon-Arc 2160 hrs
Weight	20 lbs without Mounting Bracket

STANDARDS

Strikesorb modules are compliant to the following Surge Protection Device (SPD) Standards:

- ANSI/UL 1449 – 3rd Edition
- IEEE C62.41
- NEMA LS-1, IEC 61643-1:2005 2nd Edition:2005
- IEC 61643-12
- EN 61643-11:2002 (including A11:2007)

GS-07F-0435V

Certified to ISO 9001:2000

TUV Rheinland of North America

Raycap, Inc. 806 W. Clearwater Loop • Post Falls • Idaho • 83854 • USA
Phone 208.777.1166 • Toll Free 800.890.2569 • Fax 208.777.4466 • www.raycapsurgeprotection.com

P65-16-XLH-RR | Dual Broadband Antennas

POLARIZATION: Dual linear ±45°
FREQUENCY (MHz): 698-894, 1710-2170
HORIZONTAL BEAM WIDTH (°): 65, 65
GAIN (dBi/dBd): 15.5/13.4 17.5/15.4
TILT: 1-12, 0-8
LENGTH: 72"

ELECTRICAL SPECIFICATIONS*

Frequency range (MHz)	698-894		1710-2170		
Frequency band (MHz)	698-806	806-894	1710-1880	1850-1990	1900-2170
Gain (dBi/dBd)	14.8/12.7	15.5/13.4	16.9/14.8	17.2/15.1	17.5/15.4
Polarization	Dual Linear +/- 45		Dual Linear +/- 45		
Nominal Impedance (Ω)	50		50		
VSWR	< 1.5:1		< 1.5:1		
Horizontal beam width, -3 dB (°)	66	65	60	63	63
Vertical beam width, -3 dB (°)	14.7	12.5	6.8	6.4	5.7
Electrical down tilt (°)	1 to 12		0 to 8		
Side lobe suppression, vertical 1st upper (dB)	> 16	>16	> 16		
	>16	>16			
Isolation between inputs (dB)	> 30	> 30	> 30	> 30	
Inter band Isolation (dB)	> 40		> 40		
Tracking, horizontal plane ±60° (dB)	< 2		< 2	< 2	< 2
First null fill (dB)			>-20	>-20	>-20
Vertical beam squint (°)	< 0.8	< 0.8	< 0.5	< 0.5	< 0.5
Front to back ratio (dB) 180°±30° copolar	>24	>24	> 30	>30	>28
Front to back ratio (dB) 180°±30° total power					
Cross polar discrimination (XPD) 0° (dB)	> 15	> 15	> 15	> 15	> 15
Cross polar discrimination (XPD) ±60° (dB)	> 10	> 10	> 10	> 10	> 10
Far field coupling					
IM3, 2xTx@43dBm (dBc)	<-153		<-153		
IM7, 2xTx@43dBm (dBc)					
Power handling, average per input (W)	500		250		
Power handling, average total (W)	1000		500		

MECHANICAL SPECIFICATIONS*

Connector	4 X 7/16 DIN Female, IP67
Connector position	Bottom
Dimensions, HxWxD, mm (ft)	72" x 12" x 6" (1829 x 305 x 152)
Mounting	Pre-mounted Tilt Brackets
Weight, with brackets, kg (lbs)	29 (64)
Weight, without brackets, kg (lbs)	24 (53)
Wind load, frontal/lateral/rear side 42 m/s Cd=1.6 (N)	1380
Maximum operational wind speed, m/s (mph)	100 (45)
Survival wind speed, m/s (mph)	150 (67)
Lightning protection	DC Ground
Operating Temperature	-40C to +60C
Radome material	PVC, IP55
Packet size, HxWxD, mm (ft)	87" x 16" x 10" (2225 x 400 x 225)
Radome colour	Light Grey
Shipping weight, kg (lbs)	34 (75)
RET	iRET AISGv1.1, MET and AISGv2.0
Brackets	7256.00, 7454.00

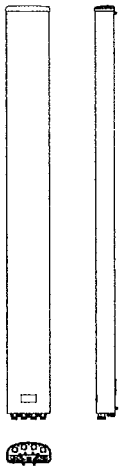

*All specifications subject to change without notice. Please contact your Powerwave representative for complete performance data.

ANTENNA PATTERNS*

For detailed patterns visit http://www.powerwave.com/rpa/.

© Copyright 2011 Powerwave Technologies, Inc. All rights reserved.
All specifications are subject to change without notice. Please contact your Powerwave representative for complete performance data.

New Cingular Wireless PCS, LLC
500 Enterprise Drive
Rocky Hill, Connecticut 06067-3900
Phone: (860) 463-5511
Fax: (860) 513-7190

Douglas L. Culp
Real Estate Consultant

March 30, 2011

Honorable Karen Goldberg
1st Selectman, Town of Orange
Orange Town Hall
617 Orange Center Road
Orange, CT 06477

Re: Telecommunications Facility – 525 Orange Center Road Orange, CT

Dear Ms. Goldberg:

In order to accommodate technological changes, implement Uniform Mobile Telecommunications System ("UMTS") and Long Term Evolution ("LTE") capabilities, and enhance system performance in the State of Connecticut, New Cingular Wireless PCS, LLC ("AT&T") will be changing its equipment configuration at certain cell sites.

As required by Regulations of Connecticut State Agencies ("R.C.S.A.") Section 16-50j-73, the Connecticut Siting Council has been notified of the changes and will review AT&T's proposal. Please accept this letter as notification under Section 16-50j-73 of construction which constitutes an exempt modification pursuant to R.C.S.A. Section 16-50j-72(b)(2).

The accompanying letter to the Siting Council fully describes Cingular's proposal for the referenced cell site. However, if you have any questions or require any further information on our plans or the Siting Council's procedures; please call me at (860) 463-5511 or Ms. Linda Roberts, Executive Director, Connecticut Siting Council at (860) 827-2935.

Sincerely,

Douglas L. Culp
Real Estate Consultant

Enclosure