EM-T-MOBILE-107-140102

HPC Wireless Services
22 Shelter Rock Lane
Danbury, CT, 06810
P.: 203.797.1112

HPC
WIRELESS SERVICES

December 30, 2013

RECEIVED
JAN - 2 2014
CONNECTICUT
SITING COUNCIL

VIA OVERNIGHT COURIER

Connecticut Siting Council
10 Franklin Square
New Britain, Connecticut 06051
Attn: Ms. Melanie Bachman, Acting Executive Director

Re: T-Mobile Northeast LLC – exempt modification
Ogg Meadow Road, Orange, Connecticut

Dear Ms. Bachman:

This letter and attachments are submitted on behalf of T-Mobile Northeast LLC ("T-Mobile"). T-Mobile is making modifications to certain existing sites in its Connecticut system in order to implement LTE technology. Please accept this letter and attachments as notification, pursuant to R.C.S.A. Section 16-50j-73, of construction that constitutes an exempt modification pursuant to R.C.S.A. Section 16-50j-72(b)(2). In compliance with R.C.S.A. Section 16-50j-73, a copy of this letter and attachments is being sent to the First Selectman of the Town of Orange.

T-Mobile plans to modify the existing wireless communications facility owned by Crown Castle and located at Ogg Meadow Road in the Town of Orange (coordinates 41°-18'-28.36" N, 73°-01'-56.22" W). Attached are a compound plan and elevation depicting the planned changes, and documentation of the structural sufficiency of the structure to accommodate the revised antenna configuration. Also included is a power density report reflecting the modification to T-Mobile's operations at the site.

The changes to the facility do not constitute a modification as defined in Connecticut General Statutes ("C.G.S.") Section 16-50i(d) because the general physical characteristics of the facility will not be significantly changed. Rather, the planned changes to the facility fall squarely within those activities explicitly provided for in R.C.S.A. Section 16-50j-72(b)(2).

1. T-Mobile will replace six (3) of its six (6) existing panel antennas with new antennas at a center line of approximately 129' and will remove three (3) of six (6)

existing antennas. Three (3) of six (6) TMAs will be removed. A hybrid cable will be run from the equipment to the antenna along the existing coaxial cable run. The proposed modifications will not extend the height of the approximately 160' structure.

2. The proposed changes will not increase the noise level at the existing facility by six decibels or more. The incremental effect of the proposed changes will be negligible.

3. The changes to the facility will not increase the calculated "worst case" power density for the combined operations at the site to a level at or above the applicable standard for uncontrolled environments as calculated for a mixed frequency site. As indicated on the attached report prepared by EBI Consulting, T-Mobile's operations at the site will result in a power density of approximately 0.610%; the combined site operations will result in a total power density of approximately 54.580%.

Please feel free to contact me by phone at (617) 281-0084 or by e-mail at agiannaras@hpcwireless.com with questions concerning this matter. Thank you for your consideration.

Respectfully yours,

Alex Giannaras

cc: Honorable James Zeoli, First Selectman, Town of Orange
Crown Castle (underlying property owner)

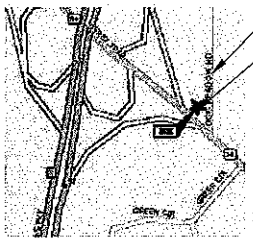

KEY PLAN
N.T.S.

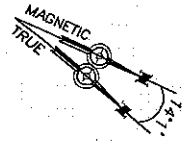

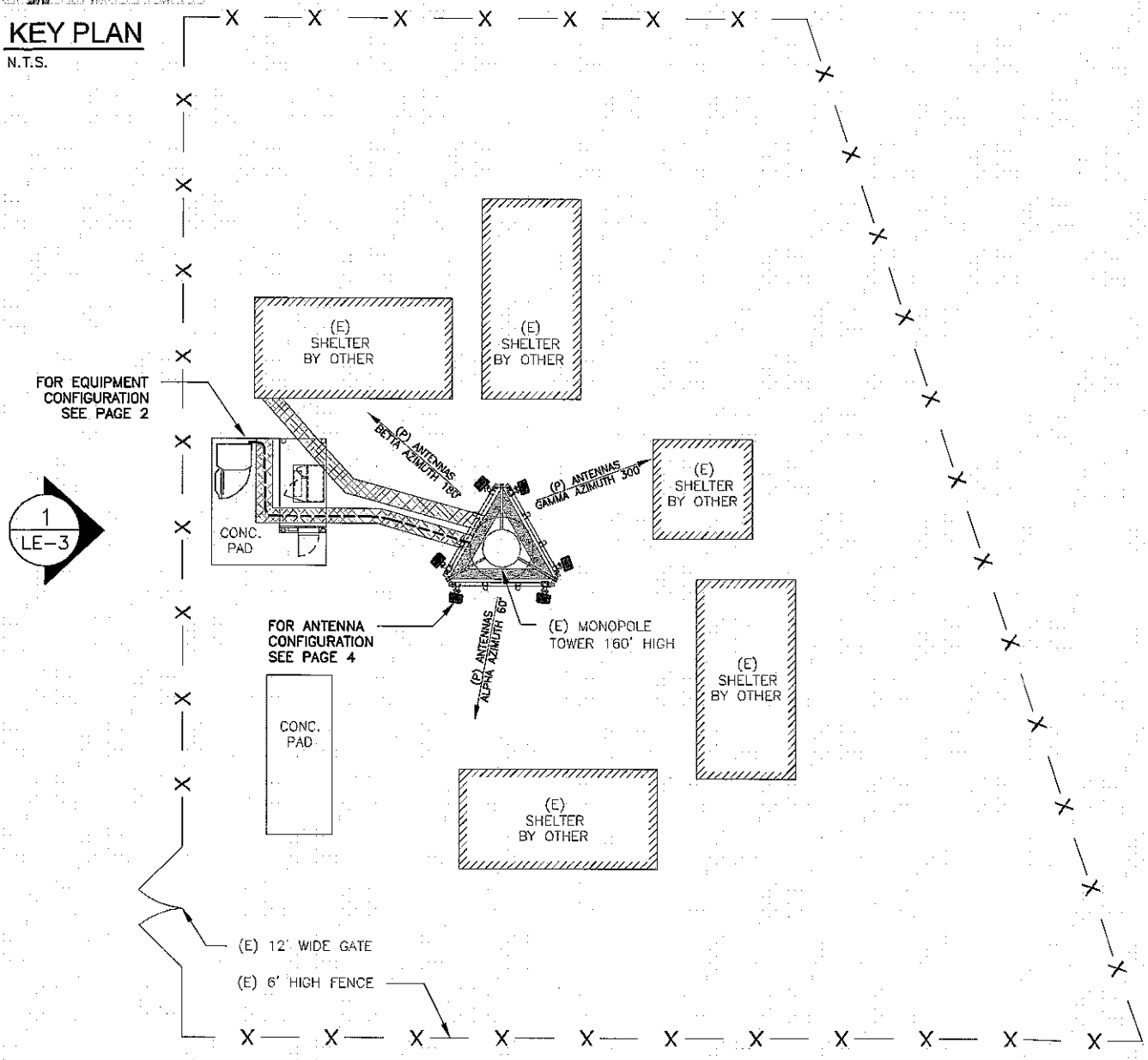

ALL EQUIPMENT LOCATIONS ARE APPROXIMATE AND ARE SUBJECT TO APPROVAL BY LESSEE/LICENSEE'S STRUCTURAL & RF ENGINEERS. LOCATIONS OF POWER & TELEPHONE FACILITIES ARE SUBJECT TO APPROVAL BY UTILITY COMPANIES.

SITE PLAN
N.T.S.

1
LE-1

CONFIGURATION
1B

SUBMITTALS	
LE REV A	09.11.13
LE REV 0	12.29.13

ATLANTIS GROUP
1340 Centre Street
Suite 203
Newton, MA 02459
Office: 617-965-0789
Fax: 617-213-5056

LEASE EXHIBIT

SITE NUMBER:
CT11084B

SITE NAME:
ORANGE/MP X56-57

SITE ADDRESS:
800 OGG MEADOW RD
ORANGE, CT 06477

NORTHEAST SITE SOLUTIONS
54 MAIN STREET, UNIT 3
STURBRIDGE, MA 01566
(508) 434-5237

FOR

T-MOBILE NORTHEAST, LLC
35 GRIFFIN ROAD SOUTH
BLOOMFIELD, CT 06002
OFFICE: (860) 692-7100
FAX: (860) 692-7159

DRAWN BY: MtH | CHECKED BY: S.M

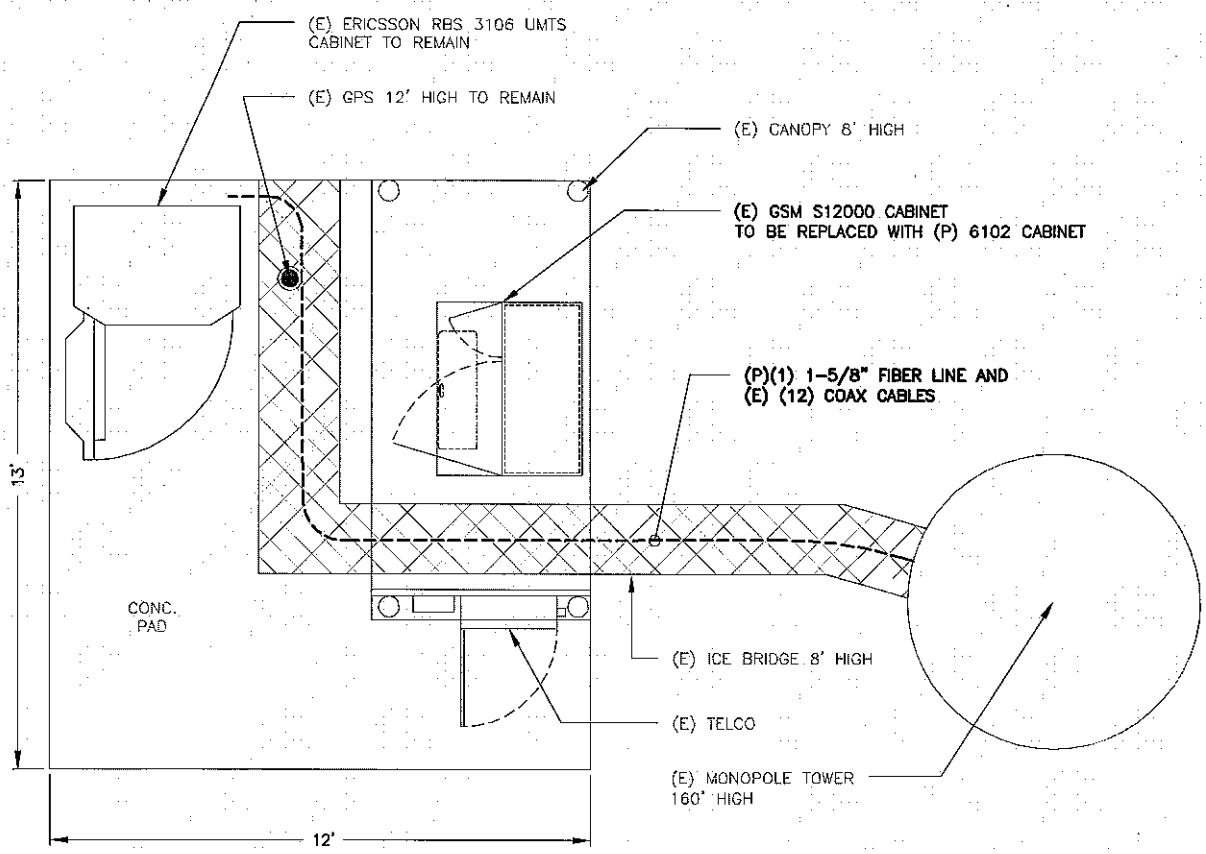

EQUIPMENT LAYOUT

N.T.S.

1
LE-2

CONFIGURATION
1B

SUBMITTALS	
LE REV A	09.11.13
LE REV 0	12.29.13

ATLANTIS GROUP
1340 Centre Street
Suite 203
Newton, MA 02459
Office: 617-965-0789
Fax: 617-213-5056

LEASE EXHIBIT

SITE NUMBER:
CT11084B

SITE NAME:
ORANGE/MP X56-57

SITE ADDRESS:
800 OGG MEADOW RD
ORANGE, CT 06477

NORTHEAST SITE SOLUTIONS
54 MAIN STREET, UNIT 3
STURBRIDGE, MA 01566
(508) 434-5237
FOR
T-MOBILE NORTHEAST, LLC
35 GRIFFIN ROAD SOUTH
BLOOMFIELD, CT 06002
OFFICE: (860) 692-7100
FAX: (860) 692-7159

DRAWN BY: MtH | CHECKED BY: S.M

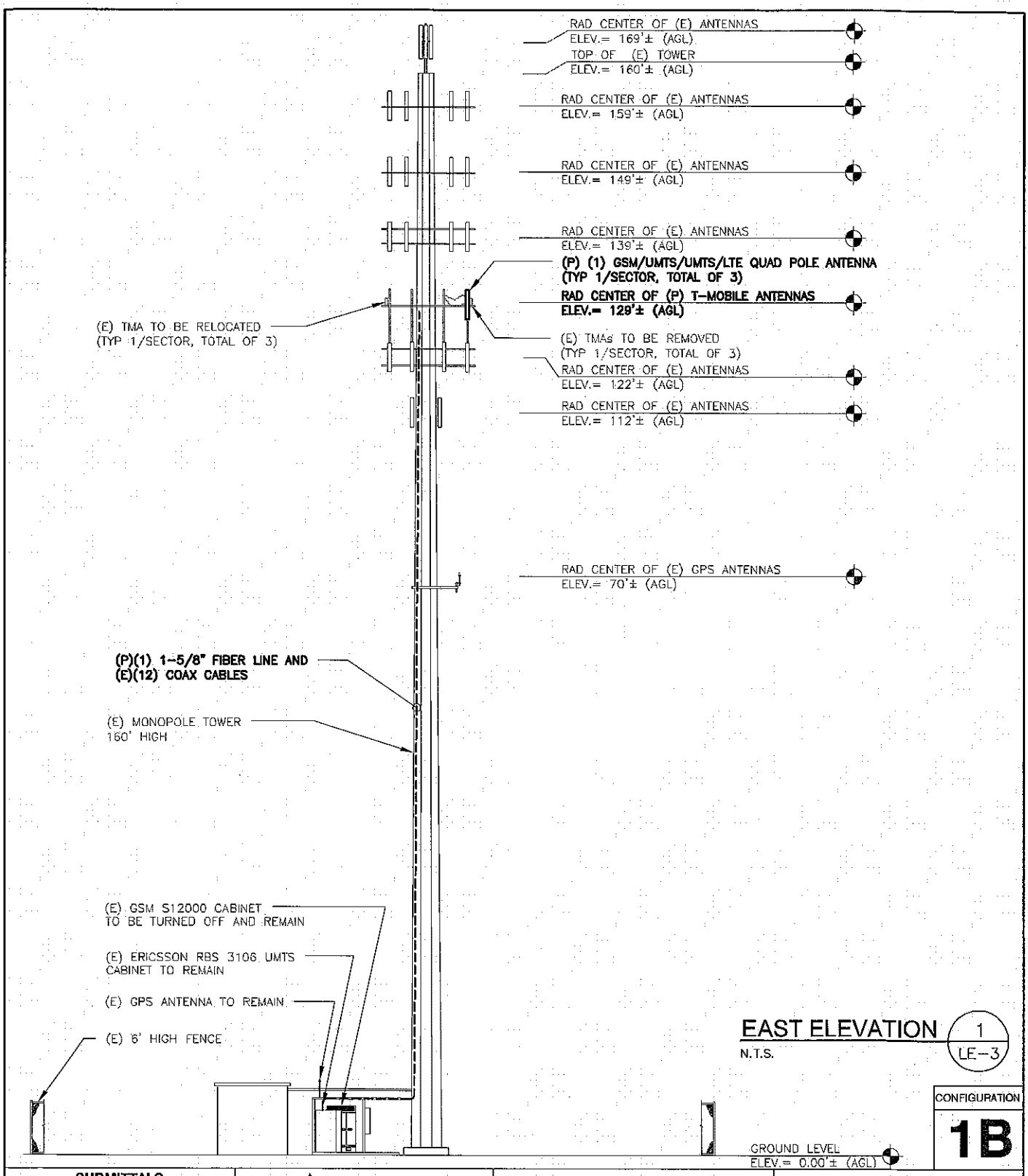

EAST ELEVATION

N.T.S.

1
LE-3

CONFIGURATION

1B

SUBMITTALS	
LE REV A	09.11.13
LE REV 0	12.29.13

ATLANTIS GROUP
1340 Centre Street
Suite 203
Newton, MA 02459
Office: 617-965-0789
Fax: 617-213-5056

LEASE EXHIBIT

SITE NUMBER:
CT11084B

SITE NAME:
ORANGE/MP X56-57

SITE ADDRESS:
800 OGG MEADOW RD
ORANGE, CT 06477

NORTHEAST SITE SOLUTIONS
54 MAIN STREET, UNIT 3
STURBRIDGE, MA 01566
(508) 434-5237

FOR

T-MOBILE NORTHEAST, LLC
35 GRIFFIN ROAD SOUTH
BLOOMFIELD, CT 06002
OFFICE: (860) 692-7100
FAX: (860) 692-7159

DRAWN BY: MtH | CHECKED BY: S.M

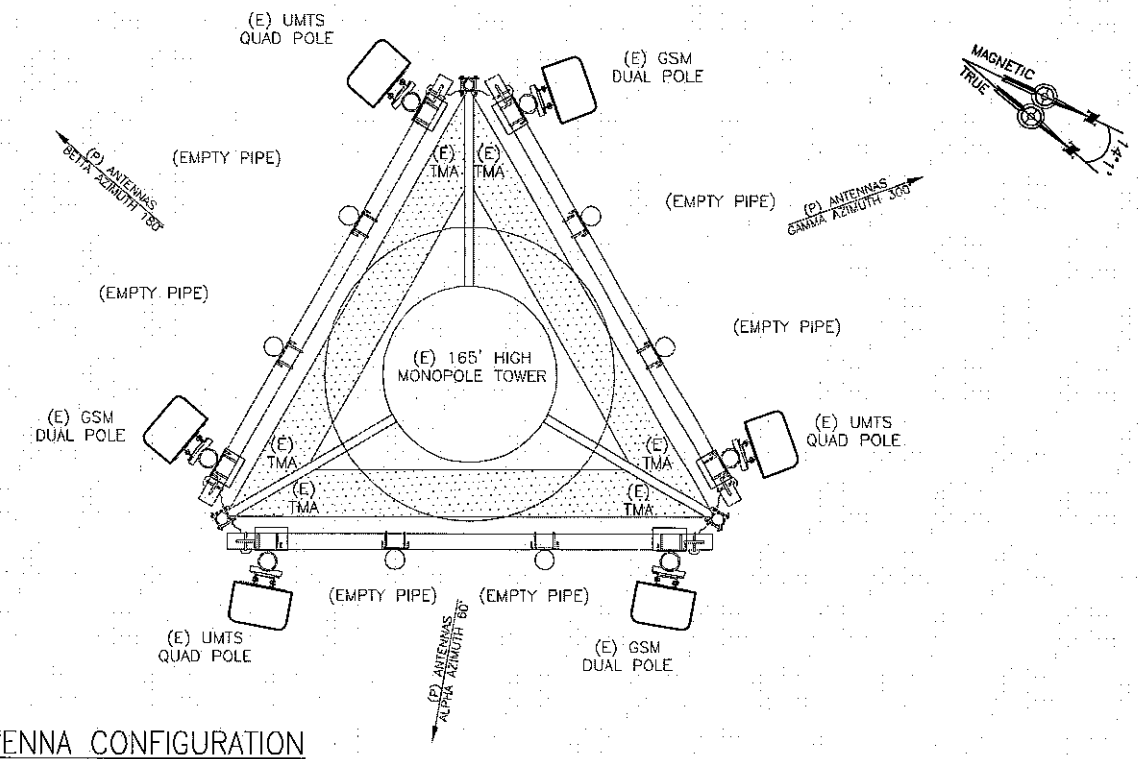

EXISTING ANTENNA CONFIGURATION

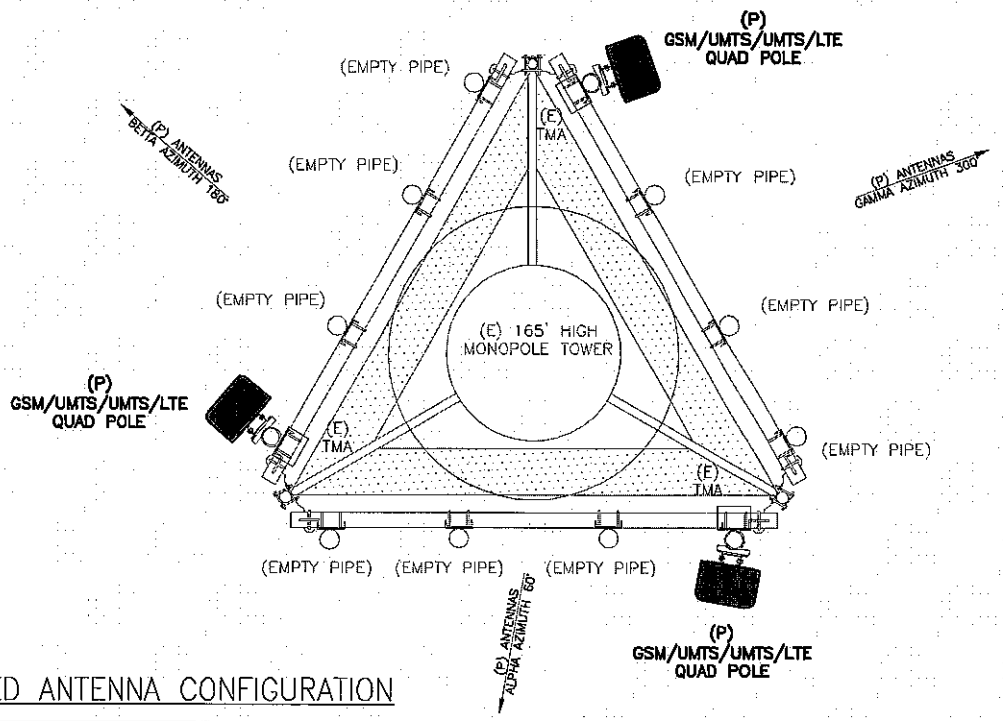

PROPOSED ANTENNA CONFIGURATION

CONFIGURATION

1B

SUBMITTALS	
LE REV A	09.11.13
LE REV 0	12.29.13

ATLANTIS GROUP
1340 Centre Street
Suite 203
Newton, MA 02459
Office: 617-965-0789
Fax: 617-213-5056

LEASE EXHIBIT

SITE NUMBER:
CT11084B

SITE NAME:
ORANGE/MP X56-57

SITE ADDRESS:
800 OGG MEADOW RD
ORANGE, CT 06477

NORTHEAST SITE SOLUTIONS
54 MAIN STREET, UNIT 3
STURBRIDGE, MA 01566
(508) 434-5237

FOR

T-MOBILE NORTHEAST, LLC
35 GRIFFIN ROAD SOUTH
BLOOMFIELD, CT 06002
OFFICE: (860) 692-7100
FAX: (860) 692-7159

DRAWN BY: MtH | CHECKED BY: S.M

PAUL J. FORD AND COMPANY
STRUCTURAL ENGINEERS
250 East Broad Street • Suite 600 • Columbus, Ohio 43215-3708

Date: **October 30, 2013**

Veronica Harris
Crown Castle
1200 McArthur Blvd
Mahwah, NJ 07430
201.236.9094

Paul J Ford and Company
250 E. Broad Street, Suite 600
Columbus, OH 43215
614.221.6679
rkoors@pjfweb.com

Subject: **Structural Analysis Report**

Carrier Designation:	***T-Mobile* Co-Locate**	
	Carrier Site Number:	CT11084B
	Carrier Site Name:	N/A
Crown Castle Designation:	**Crown Castle BU Number:**	806939
	Crown Castle Site Name:	NHV 2071 143137
	Crown Castle JDE Job Number:	243610
	Crown Castle Work Order Number:	667783
	Crown Castle Application Number:	198191 Rev. 4
Engineering Firm Designation:	**Paul J Ford and Company Project Number:**	37513-2007 R2
Site Data:	**OFF OGG MEADOW ROAD, ORANGE, New Haven County, CT** **Latitude *41° 18' 28.36"*, Longitude *-73° 1' 56.22"*** **160 Foot - Monopole Tower**	

Dear Veronica Harris,

Paul J Ford and Company is pleased to submit this **"Structural Analysis Report"** to determine the structural integrity of the above mentioned tower. This analysis has been performed in accordance with the Crown Castle Structural 'Statement of Work' and the terms of Crown Castle Purchase Order Number 590134, in accordance with application 198191, revision 4.

The purpose of the analysis is to determine acceptability of the tower stress level. Based on our analysis we have determined the tower stress level for the structure and foundation, under the following load case, to be:

LC4.7: Modified Structure w/ Existing + Reserved + Proposed Equipment **Sufficient Capacity**
Note: See Table I and Table II for the proposed and existing/reserved loading, respectively.

The structural analysis was performed for this tower in accordance with the requirements of TIA/EIA-222-F Structural Standards for Steel Antenna Towers and Antenna Supporting Structures using a fastest mile wind speed of 85 mph with no ice, 37.6 mph with 0.75 inch ice thickness and 50 mph under service loads.

All modifications and equipment proposed in this report shall be installed in accordance with the referenced proposed drawings for the determined available structural capacity to be effective.

We at *Paul J Ford and Company* appreciate the opportunity of providing our continuing professional services to you and Crown Castle. If you have any questions or need further assistance with this or any other projects please give us a call.

Respectfully submitted by:

Bob Koors, E.I.
Structural Designer

STATE OF CONNECTICUT
JOSEPH PACHICARAH JACOBS
No. PEN 22731
LICENSED
PROFESSIONAL ENGINEER

tnxTower Report - version 6.1.3.1

OCT 3 1 2013

PAUL J. FORD AND COMPANY
STRUCTURAL ENGINEERS
250 East Broad Street • Suite 600 • Columbus, Ohio 43215-3708

Date: **October 30, 2013**

Veronica Harris
Crown Castle
1200 McArthur Blvd
Mahwah, NJ 07430
201.236.9094

Paul J Ford and Company
250 E. Broad Street, Suite 600
Columbus, OH 43215
614.221.6679
rkoors@pjfweb.com

Subject: **Structural Analysis Report**

Carrier Designation:	***T-Mobile* Co-Locate**	
	Carrier Site Number:	CT11084B
	Carrier Site Name:	N/A
Crown Castle Designation:	**Crown Castle BU Number:**	806939
	Crown Castle Site Name:	NHV 2071 143137
	Crown Castle JDE Job Number:	243610
	Crown Castle Work Order Number:	667783
	Crown Castle Application Number:	198191 Rev. 4
Engineering Firm Designation:	**Paul J Ford and Company Project Number:**	37513-2007 R2
Site Data:	**OFF OGG MEADOW ROAD, ORANGE, New Haven County, CT** **Latitude *41° 18' 28.36"*, Longitude *-73° 1' 56.22"*** **160 Foot - Monopole Tower**	

Dear Veronica Harris,

Paul J Ford and Company is pleased to submit this **"Structural Analysis Report"** to determine the structural integrity of the above mentioned tower. This analysis has been performed in accordance with the Crown Castle Structural 'Statement of Work' and the terms of Crown Castle Purchase Order Number 590134, in accordance with application 198191, revision 4.

The purpose of the analysis is to determine acceptability of the tower stress level. Based on our analysis we have determined the tower stress level for the structure and foundation, under the following load case, to be:

LC4.7: Modified Structure w/ Existing + Reserved + Proposed Equipment **Sufficient Capacity**
Note: See Table I and Table II for the proposed and existing/reserved loading, respectively.

The structural analysis was performed for this tower in accordance with the requirements of TIA/EIA-222-F Structural Standards for Steel Antenna Towers and Antenna Supporting Structures using a fastest mile wind speed of 85 mph with no ice, 37.6 mph with 0.75 inch ice thickness and 50 mph under service loads.

All modifications and equipment proposed in this report shall be installed in accordance with the referenced proposed drawings for the determined available structural capacity to be effective.

We at *Paul J Ford and Company* appreciate the opportunity of providing our continuing professional services to you and Crown Castle. If you have any questions or need further assistance on this or any other projects please give us a call.

Respectfully submitted by:

Bob Koors, E.I.
Structural Designer

tnxTower Report - version 6.1.3.1

TABLE OF CONTENTS

1) INTRODUCTION

2) ANALYSIS CRITERIA
- Table 1 - Proposed Antenna and Cable Information
- Table 2 - Existing and Reserved Antenna and Cable Information

3) ANALYSIS PROCEDURE
- Table 3 - Documents Provided
- 3.1) Analysis Method
- 3.2) Assumptions

4) ANALYSIS RESULTS
- Table 4 – Section Capacity (Summary)
- Table 5 - Tower Component Stresses vs. Capacity
- 4.1) Recommendations

5) APPENDIX A
- TNXTower Output

6) APPENDIX B
- Base Level Drawing

7) APPENDIX C
- Additional Calculations

1) INTRODUCTION

This tower is a 160 ft Monopole tower designed by VALMONT in June of 1998. The tower was originally designed for a wind speed of 90 mph per TIA/EIA-222-F.

2) ANALYSIS CRITERIA

The structural analysis was performed for this tower in accordance with the requirements of TIA/EIA-222-F Structural Standards for Steel Antenna Towers and Antenna Supporting Structures using a fastest mile wind speed of 85 mph with no ice, 37.6 mph with 0.75 inch ice thickness and 50 mph under service loads.

Table 1 - Proposed Antenna and Cable Information

Mounting Level (ft)	Center Line Elevation (ft)	Number of Antennas	Antenna Manufacturer	Antenna Model	Number of Feed Lines	Feed Line Size (in)	Note
127.0	129.0	3	ericsson	ERICSSON AIR 21 B2A B4P w/ Mount Pipe	1	1-5/8	-
		3	ericsson	KRY 112 144/1			

Table 2 - Existing and Reserved Antenna and Cable Information

Mounting Level (ft)	Center Line Elevation (ft)	Number of Antennas	Antenna Manufacturer	Antenna Model	Number of Feed Lines	Feed Line Size (in)	Note
158.0	162.0	3	antel	BXA-70040/6CF w/ Mount Pipe	-	-	2
		2	antel	LPA-80063/4CF w/ Mount Pipe	12 1	1-5/8 1/2	1
		2	antel	LPA-80063/6CF w/ Mount Pipe			
		2	antel	BXA-171063-12BF w/ Mount Pipe			
		1	antel	BXA-171063-8BF-2 w/ Mount Pipe			
		1	gps	GPS_A			
		2	swedcom	SC-E 6014 rev2 w/ Mount Pipe			
	158.0	6	rfs celwave	FD9R6004/2C-3L			
		1	tower mounts	Platform Mount [LP 713-1]			
156.0	170.0	3	ems wireless	RR90-17-00DP w/ Mount Pipe	6	1-5/8	1
		4	nokia	CS72993.07			
	156.0	1	tower mounts	Pipe Mount [PM 601-3]			
147.0	152.0	6	ericsson	RRUS-11	12 2 1	1-1/4 3/8 5/8	1
		3	kathrein	800 10121 w/ Mount Pipe			
		6	powerwave technologies	P65-16-XLH-RR w/ Mount Pipe			
		6	powerwave technologies	TTAW-07BP111-001			
		1	raycap	DC6-48-60-18-8F			
	147.0	1	tower mounts	Platform Mount [LP 713-1]			

Mounting Level (ft)	Center Line Elevation (ft)	Number of Antennas	Antenna Manufacturer	Antenna Model	Number of Feed Lines	Feed Line Size (in)	Note
138.0	138.0	1	tower mounts	Side Arm Mount [SO 102-3]	3	1-1/4	2
		3	alcatel lucent	1900MHz RRH (65MHz)			
		3	alcatel lucent	800MHZ RRH			
137.0	137.0	3	alcatel lucent	800 EXTERNAL NOTCH FILTER			
		9	rfs celwave	ACU-A20-N			
		3	rfs celwave	APXVSPP18-C-A20 w/ Mount Pipe			
		1	tower mounts	Platform Mount [LP 713-1]	6 1	1-5/8 1/2	1
	140.0	1	andrew	VHLP2-11			
		2	decibel	DB950F85E-M w/ Mount Pipe			
		4	decibel	DB980H90E-M w/ Mount Pipe			
		1	dragonwave	Horizon DUO			
127.0	127.0	6	ems wireless	RR90-17-02DP w/ Mount Pipe	-	-	3
		1	tower mounts	Platform Mount [LP 713-1]	12	1-5/8	1
	118.0	12	decibel	DB844H90-XY w/ Mount Pipe			
107.0	110.0	1	andrew	PX2F-52	3 3	5/8 1/2	1
		1	andrew	VHLP2-11			
		3	argus technologies	LLPX310R w/ Mount Pipe			
		2	dragonwave	HORIZON COMPACT			
		3	samsung telecommunications	WIMAX DAP HEAD			
	107.0	1	tower mounts	Side Arm Mount [SO 101-3]			
100.0	100.0	3	rfs celwave	APXV18-206517S-C w/ Mount Pipe	6	1-5/8	1
		1	tower mounts	Pipe Mount [PM 601-3]			
80.0	81.0	1	kathrein	OG-860/1920/GPS-A	1	1/2	1
	80.0	2	tower mounts	Side Arm Mount [SO 701-1]			

Notes:
1) Existing Equipment
2) Reserved Equipment
3) Equipment To Be Removed

3) ANALYSIS PROCEDURE

Table 3 - Documents Provided

Document	Remarks	Reference	Source
4-GEOTECHNICAL REPORTS	FDH, 9/26/2006	1257473	CCISITES
4-TOWER FOUNDATION DRAWINGS/DESIGN/SPECS	Valmont, 3/26/1998	1060127	CCISITES
FOUNDATION MAPPING	FDH, 1320361500, 10/24/2013	-	CROWN
4-TOWER MANUFACTURER DRAWINGS	Valmont, 6/15/1998	822032	CCISITES
4-TOWER REINFORCEMENT DESIGN/DRAWINGS/DATA	PJF, 37513-2007 BP, 10/22/2013	4025748	CCISITES

3.1) Analysis Method

tnxTower (version 6.1.3.1), a commercially available analysis software package, was used to create a three-dimensional model of the tower and calculate member stresses for various loading cases. Selected output from the analysis is included in Appendix A.

3.2) Assumptions

1) Tower and structures were built in accordance with the manufacturer's specifications.
2) The tower and structures have been maintained in accordance with the manufacturer's specification.
3) The configuration of antennas, transmission cables, mounts and other appurtenances are as specified in Tables 1 and 2 and the referenced drawings.
4) Monopole will be modified in conformance with the referenced proposed modification drawings.
5) We have assumed the foundation is the pad and pier found in the referenced foundation drawings based on an email from FDH who did a foundation mapping on this site.

This analysis may be affected if any assumptions are not valid or have been made in error. Paul J Ford and Company should be notified to determine the effect on the structural integrity of the tower.

4) ANALYSIS RESULTS

Table 4 - Section Capacity (Summary)

Section No.	Elevation (ft)	Component Type	Size	Critical Element	P (K)	SF*P_allow (K)	% Capacity	Pass / Fail
L1	160 - 121.33	Pole	TP29.77x21.65x0.25	1	-10.72	1194.36	80.1	Pass
L2	121.33 - 98.6667	Pole	TP34.0293x28.2894x0.375	2	-17.07	2112.63	95.6	Pass
L3	98.6667 - 81.33	Pole	TP37.67x34.0293x0.4924	3	-20.24	2622.90	93.4	Pass
L4	81.33 - 64	Pole	TP40.5584x35.4946x0.5	4	-28.20	3352.85	97.3	Pass
L5	64 - 41.417	Pole	TP45.3x40.5584x0.635	5	-34.23	4176.24	90.1	Pass
L6	41.417 - 35.5	Pole	TP45.5434x42.6478x0.6931	6	-41.38	4731.15	89.3	Pass
L7	35.5 - 33.3333	Pole	TP45.9985x45.5434x0.6916	7	-42.32	4769.78	89.8	Pass
L8	33.3333 - 0	Pole	TP53x45.9985x0.635	8	-56.81	5338.33	96.2	Pass
							Summary	
						Pole (L4)	97.3	Pass
						Rating =	97.3	Pass

Table 5 - Tower Component Stresses vs. Capacity – LC4.7

Notes	Component	Elevation (ft)	% Capacity	Pass / Fail
1	Anchor Rods	0	89.0	Pass
1	Base Plate	0	71.7	Pass
1	Base Foundation Steel	0	88.7	Pass
1	Base Foundation Soil Interaction	0	50.0	Pass

Structure Rating (max from all components) =	**97.3%**

Notes:
1) See additional documentation in "Appendix C – Additional Calculations" for calculations supporting the % capacity consumed.

4.1) Recommendations

Reinforce monopole in conformance with the referenced proposed modification drawings.

APPENDIX A

TNXTOWER OUTPUT

Tower Input Data

There is a pole section.
This tower is designed using the TIA/EIA-222-F standard.
The following design criteria apply:

4) Tower is located in New Haven County, Connecticut.
5) Basic wind speed of 85.00 mph.
6) Nominal ice thickness of 0.7500 in.
7) Ice thickness is considered to increase with height.
8) Ice density of 56.00 pcf.
9) A wind speed of 37.60 mph is used in combination with ice.
10) Deflections calculated using a wind speed of 50.00 mph.
11) A non-linear (P-delta) analysis was used.
12) Pressures are calculated at each section.
13) Stress ratio used in pole design is 1.333.
14) Local bending stresses due to climbing loads, feed line supports, and appurtenance mounts are not considered.

Options

Consider Moments - Legs
Consider Moments - Horizontals
Consider Moments - Diagonals
Use Moment Magnification
√ Use Code Stress Ratios
√ Use Code Safety Factors - Guys
√ Escalate Ice
Always Use Max Kz
Use Special Wind Profile
Include Bolts In Member Capacity
Leg Bolts Are At Top Of Section
Secondary Horizontal Braces Leg
Use Diamond Inner Bracing (4 Sided)
Add IBC .6D+W Combination

Distribute Leg Loads As Uniform
Assume Legs Pinned
√ Assume Rigid Index Plate
√ Use Clear Spans For Wind Area
√ Use Clear Spans For KL/r
Retension Guys To Initial Tension
√ Bypass Mast Stability Checks
√ Use Azimuth Dish Coefficients
√ Project Wind Area of Appurt.
Autocalc Torque Arm Areas
SR Members Have Cut Ends
Sort Capacity Reports By Component
Triangulate Diamond Inner Bracing
Use TIA-222-G Tension Splice
Capacity Exemption

Treat Feedline Bundles As Cylinder
Use ASCE 10 X-Brace Ly Rules
Calculate Redundant Bracing Forces
Ignore Redundant Members in FEA
SR Leg Bolts Resist Compression
All Leg Panels Have Same Allowable
Offset Girt At Foundation
√ Consider Feedline Torque
Include Angle Block Shear Check

Poles

√ Include Shear-Torsion Interaction
Always Use Sub-Critical Flow
Use Top Mounted Sockets

Tapered Pole Section Geometry

Section	Elevation ft	Section Length ft	Splice Length ft	Number of Sides	Top Diameter in	Bottom Diameter in	Wall Thickness in	Bend Radius in	Pole Grade
L1	160.0000-121.3300	38.6700	4.67	12	21.6500	29.7700	0.2500	1.0000	A572-65 (65 ksi)
L2	121.3300-98.6667	27.3333	0.00	12	28.2894	34.0293	0.3750	1.5000	A572-65 (65 ksi)
L3	98.6667-81.3300	17.3367	5.67	12	34.0293	37.6700	0.4924	1.9694	Reinf 57.48 ksi (57 ksi)
L4	81.3300-64.0000	23.0000	0.00	12	35.4946	40.5584	0.5000	2.0000	A572-65 (65 ksi)
L5	64.0000-41.4170	22.5830	6.58	12	40.5584	45.3000	0.6350	2.5400	Reinf 59.00 ksi (59 ksi)
L6	41.4170-35.5000	12.5000	0.00	12	42.6478	45.5434	0.6931	2.7723	Reinf 59.10 ksi (59 ksi)
L7	35.5000-33.3333	2.1667	0.00	12	45.5434	45.9985	0.6916	2.7663	Reinf 59.11 ksi (59 ksi)
L8	33.3333-0.0000	33.3333		12	45.9985	53.0000	0.6350	2.5399	Reinf 62.34 ksi (62 ksi)

Tapered Pole Properties

Section	Tip Dia. in	Area in^2	I in^4	r in	C in	I/C in^3	J in^4	It/Q in^2	w in	w/t
L1	22.4137	17.2270	1006.9853	7.6612	11.2147	89.7916	2040.4253	8.4786	5.1322	20.529
	30.8202	23.7636	2643.2053	10.5682	15.4209	171.4045	5355.8505	11.6957	7.3084	29.233
L2	30.3026	33.7066	3352.4112	9.9933	14.6539	228.7726	6792.8940	16.5894	6.5766	17.537
	35.2298	40.6376	5874.8386	12.0483	17.6272	333.2827	11904.0157	20.0006	8.1149	21.64
L3	35.2298	53.1695	7633.0139	12.0062	17.6272	433.0249	15466.5555	26.1684	7.8003	15.843
	38.9989	58.9414	10398.4842	13.3096	19.5131	532.8987	21070.1482	29.0092	8.7760	17.824
L4	38.0391	56.3413	8806.7289	12.5281	18.3862	478.9858	17844.8205	27.7295	8.1726	16.345
	41.9892	64.4941	13209.7196	14.3409	21.0093	628.7568	26766.4732	31.7420	9.5297	19.059
L5	41.9892	81.6327	16607.5512	14.2926	21.0093	790.4869	33651.4012	40.1771	9.1678	14.437
	46.8980	91.3279	23255.4158	15.9901	23.4654	991.0513	47121.7773	44.9488	10.4386	16.438
L6	45.7310	93.6298	21035.9314	15.0198	22.0916	952.2157	42624.5001	46.0817	9.5722	13.811
	47.1500	100.0918	25698.9263	16.0564	23.5915	1089.3315	52072.9921	49.2621	10.3482	14.931
L7	47.1500	99.8785	25645.8795	16.0569	23.5915	1087.0829	51965.5049	49.1571	10.3522	14.969
	47.6211	100.8919	26434.5121	16.2199	23.8272	1109.4253	53563.4882	49.6559	10.4742	15.146
L8	47.6211	92.7518	24362.4821	16.2401	23.8272	1022.4646	49364.9938	45.6496	10.6258	16.734
	54.8696	107.0674	37473.6235	18.7467	27.4540	1364.9604	75931.7209	52.6953	12.5023	19.689

Tower Elevation ft	Gusset Area (per face) ft^2	Gusset Thickness in	Gusset Grade	Adjust. Factor A_f	Adjust. Factor A_r	Weight Mult.	Double Angle Stitch Bolt Spacing Diagonals in	Double Angle Stitch Bolt Spacing Horizontals in
L1 160.0000-121.3300				1	1	1		
L2 121.3300-98.6667				1	1	1		
L3 98.6667-81.3300				1	1	1		
L4 81.3300-64.0000				1	1	1		
L5 64.0000-41.4170				1	1	1		
L6 41.4170-35.5000				1	1	1		
L7 35.5000-33.3333				1	1	1		
L8 33.3333-0.0000				1	1	1		

Feed Line/Linear Appurtenances - Entered As Round Or Flat

Description	Face or Leg	Allow Shield	Component Type	Placement ft	Total Number	Number Per Row	Clear Spacing in	Width or Diameter in	Perimeter in	Weight plf
**										

Feed Line/Linear Appurtenances - Entered As Area

Description	Face or Leg	Allow Shield	Component Type	Placement ft	Total Number		C_AA_A ft^2/ft	Weight plf
HJ7-50A(1-5/8")	C	No	Inside Pole	158.0000 - 0.0000	12	No Ice	0.0000	1.04
						1/2" Ice	0.0000	1.04
						1" Ice	0.0000	1.04
						2" Ice	0.0000	1.04
						4" Ice	0.0000	1.04
LDF4-50A(1/2")	C	No	Inside Pole	158.0000 - 0.0000	1	No Ice	0.0000	0.15
						1/2" Ice	0.0000	0.15
						1" Ice	0.0000	0.15
						2" Ice	0.0000	0.15
						4" Ice	0.0000	0.15
***								
LDF7-50A(1-5/8")	C	No	Inside Pole	156.0000 - 0.0000	6	No Ice	0.0000	0.82
						1/2" Ice	0.0000	0.82
						1" Ice	0.0000	0.82
						2" Ice	0.0000	0.82
						4" Ice	0.0000	0.82
***								
LDF6-50A(1-1/4")	C	No	Inside Pole	147.0000 - 0.0000	12	No Ice	0.0000	0.66
						1/2" Ice	0.0000	0.66
						1" Ice	0.0000	0.66
						2" Ice	0.0000	0.66
						4" Ice	0.0000	0.66
FB-L98B-002-75000(3/8")	C	No	Inside Pole	147.0000 - 0.0000	2	No Ice	0.0000	0.06
						1/2" Ice	0.0000	0.06
						1" Ice	0.0000	0.06
						2" Ice	0.0000	0.06
						4" Ice	0.0000	0.06
WR-VG82ST-BRDA(5/8")	C	No	Inside Pole	147.0000 - 0.0000	1	No Ice	0.0000	0.31
						1/2" Ice	0.0000	0.31
						1" Ice	0.0000	0.31
						2" Ice	0.0000	0.31
						4" Ice	0.0000	0.31
***								
EC4-50(1/2")	C	No	Inside Pole	137.0000 - 0.0000	1	No Ice	0.0000	0.16
						1/2" Ice	0.0000	0.16
						1" Ice	0.0000	0.16
						2" Ice	0.0000	0.16
						4" Ice	0.0000	0.16
***								
LDF7-50A(1-5/8")	C	No	Inside Pole	137.0000 - 0.0000	6	No Ice	0.0000	0.82
						1/2" Ice	0.0000	0.82
						1" Ice	0.0000	0.82
						2" Ice	0.0000	0.82
						4" Ice	0.0000	0.82
HB114-1-0813U4-M5J(1 1/4")	C	No	CaAa (Out Of Face)	137.0000 - 0.0000	3	No Ice	0.0000	1.20
						1/2" Ice	0.0000	2.45
						1" Ice	0.0000	4.30
						2" Ice	0.0000	9.85
						4" Ice	0.0000	28.27
HB114-1-0813U4-M5J(1 1/4")	C	No	CaAa (Out Of Face)	137.0000 - 127.0000	1	No Ice	0.1540	1.20
						1/2" Ice	0.2540	2.45
						1" Ice	0.3540	4.30
						2" Ice	0.5540	9.85
						4" Ice	0.9540	28.27
Sprint								
LDF6-50A(1-1/4")	C	No	Inside Pole	127.0000 - 0.0000	12	No Ice	0.0000	0.66
						1/2" Ice	0.0000	0.66
						1" Ice	0.0000	0.66
						2" Ice	0.0000	0.66
						4" Ice	0.0000	0.66
T-Mobile								
FLC 158-50J(1-5/8")	C	No	Inside Pole	127.0000 - 0.0000	12	No Ice	0.0000	0.92
						1/2" Ice	0.0000	0.92
						1" Ice	0.0000	0.92
						2" Ice	0.0000	0.92
						4" Ice	0.0000	0.92

Description	Face or Leg	Allow Shield	Component Type	Placement ft	Total Number		C_AA_A ft^2/ft	Weight plf
MLE Hybrid 9Power/18Fiber RL 2(1 5/8)	C	No	CaAa (Out Of Face)	127.0000 - 0.0000	1	No Ice	0.1625	1.07
						1/2" Ice	0.2625	2.37
						1" Ice	0.3625	4.28
						2" Ice	0.5625	9.93
						4" Ice	0.9625	28.56
****								
FSJ4-50B(1/2")	C	No	CaAa (Out Of Face)	107.0000 - 0.0000	3	No Ice	0.0000	0.14
						1/2" Ice	0.0000	0.76
						1" Ice	0.0000	2.00
						2" Ice	0.0000	6.30
						4" Ice	0.0000	22.23
***								
HJ4.5-50(5/8")	C	No	CaAa (Out Of Face)	107.0000 - 0.0000	3	No Ice	0.0000	0.40
						1/2" Ice	0.0000	1.24
						1" Ice	0.0000	2.69
						2" Ice	0.0000	7.42
						4" Ice	0.0000	24.22
EC4-50(1/2")	C	No	CaAa (Out Of Face)	107.0000 - 0.0000	3	No Ice	0.0000	0.16
						1/2" Ice	0.0000	0.85
						1" Ice	0.0000	2.15
						2" Ice	0.0000	6.59
						4" Ice	0.0000	22.79
2" Conduit (1 1/2" EMT)	C	No	CaAa (Out Of Face)	107.0000 - 0.0000	1	No Ice	0.1740	1.16
						1/2" Ice	0.2740	2.53
						1" Ice	0.3740	4.51
						2" Ice	0.5740	10.30
						4" Ice	0.9740	29.21
***								
CR 50 1873(1-5/8")	C	No	Inside Pole	100.0000 - 0.0000	6	No Ice	0.0000	0.83
						1/2" Ice	0.0000	0.83
						1" Ice	0.0000	0.83
						2" Ice	0.0000	0.83
						4" Ice	0.0000	0.83
***								
LDF4-50A(1/2")	C	No	Inside Pole	80.0000 - 0.0000	1	No Ice	0.0000	0.15
						1/2" Ice	0.0000	0.15
						1" Ice	0.0000	0.15
						2" Ice	0.0000	0.15
						4" Ice	0.0000	0.15
**								
Aero MP3-05	C	No	CaAa (Out Of Face)	66.1700 - 0.0000	1	No Ice	0.3478	0.00
						1/2" Ice	0.4001	0.00
						1" Ice	0.6566	0.00
						2" Ice	0.8788	0.00
						4" Ice	1.3232	0.00
Aero MP3-04	C	No	CaAa (Out Of Face)	100.3300 - 85.3300	1	No Ice	0.2690	0.00
						1/2" Ice	0.3801	0.00
						1" Ice	0.4913	0.00
						2" Ice	0.7135	0.00
						4" Ice	1.1579	0.00
**								

Feed Line/Linear Appurtenances Section Areas

Tower Section	Tower Elevation ft	Face	A_R ft^2	A_F ft^2	C_AA_A In Face ft^2	C_AA_A Out Face ft^2	Weight K
L1	160.0000-121.3300	A	0.000	0.000	0.000	0.000	0.00
		B	0.000	0.000	0.000	0.000	0.00
		C	0.000	0.000	0.000	2.461	1.11
		D	0.000	0.000	0.000	0.000	0.00
L2	121.3300-98.6667	A	0.000	0.000	0.000	0.000	0.00
		B	0.000	0.000	0.000	0.000	0.00
		C	0.000	0.000	0.000	5.580	1.27
		D	0.000	0.000	0.000	0.000	0.00
L3	98.6667-81.3300	A	0.000	0.000	0.000	0.000	0.00

Tower Section	Tower Elevation ft	Face	A_R ft^2	A_F ft^2	C_AA_A In Face ft^2	C_AA_A Out Face ft^2	Weight K
		B	0.000	0.000	0.000	0.000	0.00
		C	0.000	0.000	0.000	9.422	1.09
		D	0.000	0.000	0.000	0.000	0.00
L4	81.3300-64.0000	A	0.000	0.000	0.000	0.000	0.00
		B	0.000	0.000	0.000	0.000	0.00
		C	0.000	0.000	0.000	6.586	1.09
		D	0.000	0.000	0.000	0.000	0.00
L5	64.0000-41.4170	A	0.000	0.000	0.000	0.000	0.00
		B	0.000	0.000	0.000	0.000	0.00
		C	0.000	0.000	0.000	15.453	1.42
		D	0.000	0.000	0.000	0.000	0.00
L6	41.4170-35.5000	A	0.000	0.000	0.000	0.000	0.00
		B	0.000	0.000	0.000	0.000	0.00
		C	0.000	0.000	0.000	4.049	0.37
		D	0.000	0.000	0.000	0.000	0.00
L7	35.5000-33.3333	A	0.000	0.000	0.000	0.000	0.00
		B	0.000	0.000	0.000	0.000	0.00
		C	0.000	0.000	0.000	1.483	0.14
		D	0.000	0.000	0.000	0.000	0.00
L8	33.3333-0.0000	A	0.000	0.000	0.000	0.000	0.00
		B	0.000	0.000	0.000	0.000	0.00
		C	0.000	0.000	0.000	22.810	2.10
		D	0.000	0.000	0.000	0.000	0.00

Feed Line/Linear Appurtenances Section Areas - With Ice

Tower Section	Tower Elevation ft	Face or Leg	Ice Thickness in	A_R ft^2	A_F ft^2	C_AA_A In Face ft^2	C_AA_A Out Face ft^2	Weight K
L1	160.0000-121.3300	A	0.892	0.000	0.000	0.000	0.000	0.00
		B		0.000	0.000	0.000	0.000	0.00
		C		0.000	0.000	0.000	5.257	1.28
		D		0.000	0.000	0.000	0.000	0.00
L2	121.3300-98.6667	A	0.866	0.000	0.000	0.000	0.000	0.00
		B		0.000	0.000	0.000	0.000	0.00
		C		0.000	0.000	0.000	11.439	1.67
		D		0.000	0.000	0.000	0.000	0.00
L3	98.6667-81.3300	A	0.846	0.000	0.000	0.000	0.000	0.00
		B		0.000	0.000	0.000	0.000	0.00
		C		0.000	0.000	0.000	17.794	1.57
		D		0.000	0.000	0.000	0.000	0.00
L4	81.3300-64.0000	A	0.824	0.000	0.000	0.000	0.000	0.00
		B		0.000	0.000	0.000	0.000	0.00
		C		0.000	0.000	0.000	12.948	1.57
		D		0.000	0.000	0.000	0.000	0.00
L5	64.0000-41.4170	A	0.793	0.000	0.000	0.000	0.000	0.00
		B		0.000	0.000	0.000	0.000	0.00
		C		0.000	0.000	0.000	27.191	2.00
		D		0.000	0.000	0.000	0.000	0.00
L6	41.4170-35.5000	A	0.764	0.000	0.000	0.000	0.000	0.00
		B		0.000	0.000	0.000	0.000	0.00
		C		0.000	0.000	0.000	7.124	0.52
		D		0.000	0.000	0.000	0.000	0.00
L7	35.5000-33.3333	A	0.754	0.000	0.000	0.000	0.000	0.00
		B		0.000	0.000	0.000	0.000	0.00
		C		0.000	0.000	0.000	2.531	0.19
		D		0.000	0.000	0.000	0.000	0.00
L8	33.3333-0.0000	A	0.750	0.000	0.000	0.000	0.000	0.00
		B		0.000	0.000	0.000	0.000	0.00
		C		0.000	0.000	0.000	38.827	2.89
		D		0.000	0.000	0.000	0.000	0.00

Feed Line Center of Pressure

Section	Elevation ft	CP_X in	CP_Z in	CP_X Ice in	CP_Z Ice in
L1	160.0000-121.3300	0.0718	0.0718	0.1393	0.1393
L2	121.3300-98.6667	0.2431	0.2431	0.4363	0.4363
L3	98.6667-81.3300	0.4855	0.4855	0.7796	0.7796
L4	81.3300-64.0000	0.3623	0.3623	0.6238	0.6238
L5	64.0000-41.4170	0.6093	0.6093	0.9298	0.9298
L6	41.4170-35.5000	0.6135	0.6135	0.9408	0.9408
L7	35.5000-33.3333	0.6154	0.6154	0.9253	0.9253
L8	33.3333-0.0000	0.6225	0.6225	0.9412	0.9412

Discrete Tower Loads

Description	Face or Leg	Offset Type	Offsets: Horz Lateral Vert ft ft ft	Azimuth Adjustment °	Placement ft		C_AA_A Front ft^2	C_AA_A Side ft^2	Weight K
GPS_A	A	From Face	4.0000 0.00 4.00	0.0000	158.0000	No Ice 1/2" Ice 1" Ice 2" Ice 4" Ice	0.2975 0.3739 0.4589 0.6549 1.1506	0.2975 0.3739 0.4589 0.6549 1.1506	0.00 0.00 0.01 0.02 0.08
158-FT VW									
(2) LPA-80063/4CF w/ Mount Pipe	A	From Face	4.0000 0.00 4.00	0.0000	158.0000	No Ice 1/2" Ice 1" Ice 2" Ice 4" Ice	7.2481 7.7190 8.2003 9.1945 11.3199	7.2599 7.9574 8.6723 10.1556 13.3910	0.04 0.10 0.18 0.34 0.80
(2) LPA-80063/6CF w/ Mount Pipe	B	From Face	4.0000 0.00 4.00	0.0000	158.0000	No Ice 1/2" Ice 1" Ice 2" Ice 4" Ice	10.5771 11.2413 11.8720 13.1633 15.8657	10.6706 11.9322 12.9107 14.9215 19.1577	0.05 0.14 0.25 0.48 1.09
(2) SC-E 6014 rev2 w/ Mount Pipe	C	From Face	4.0000 0.00 4.00	0.0000	158.0000	No Ice 1/2" Ice 1" Ice 2" Ice 4" Ice	3.7829 4.1817 4.5912 5.4423 7.2927	4.3959 5.0091 5.6403 6.9563 9.8967	0.03 0.07 0.12 0.22 0.54
BXA-171063-8BF-2 w/ Mount Pipe	A	From Leg	4.0000 0.00 4.00	0.0000	158.0000	No Ice 1/2" Ice 1" Ice 2" Ice 4" Ice	3.1789 3.5550 3.9637 4.8533 6.7671	3.3530 3.9709 4.5951 5.8933 8.8855	0.03 0.06 0.10 0.19 0.49
BXA-171063-12BF w/ Mount Pipe	B	From Face	4.0000 0.00 4.00	0.0000	158.0000	No Ice 1/2" Ice 1" Ice 2" Ice 4" Ice	4.9710 5.5211 6.0361 7.0911 9.3593	5.2283 6.3892 7.2610 9.0462 12.8165	0.04 0.09 0.14 0.27 0.67
BXA-171063-12BF w/ Mount Pipe	C	From Face	4.0000 0.00 4.00	0.0000	158.0000	No Ice 1/2" Ice 1" Ice 2" Ice 4" Ice	4.9710 5.5211 6.0361 7.0911 9.3593	5.2283 6.3892 7.2610 9.0462 12.8165	0.04 0.09 0.14 0.27 0.67

Description	Face or Leg	Offset Type	Offsets: Horz Lateral Vert ft ft ft	Azimuth Adjustment °	Placement ft		C_AA_A Front ft^2	C_AA_A Side ft^2	Weight K
BXA-70040/6CF w/ Mount Pipe	A	From Face	4.0000 0.00 4.00	0.0000	158.0000	No Ice	16.5490	7.3636	0.06
						1/2" Ice	17.2696	8.5309	0.16
						1" Ice	17.9568	9.4122	0.27
						2" Ice	19.3612	11.2283	0.52
						4" Ice	22.2894	15.3369	1.17
BXA-70040/6CF w/ Mount Pipe	B	From Face	4.0000 0.00 4.00	0.0000	158.0000	No Ice	16.5490	7.3636	0.06
						1/2" Ice	17.2696	8.5309	0.16
						1" Ice	17.9568	9.4122	0.27
						2" Ice	19.3612	11.2283	0.52
						4" Ice	22.2894	15.3369	1.17
BXA-70040/6CF w/ Mount Pipe	C	From Face	4.0000 0.00 4.00	0.0000	158.0000	No Ice	16.5490	7.3636	0.06
						1/2" Ice	17.2696	8.5309	0.16
						1" Ice	17.9568	9.4122	0.27
						2" Ice	19.3612	11.2283	0.52
						4" Ice	22.2894	15.3369	1.17
(2) FD9R6004/2C-3L	A	From Face	4.0000 0.00 0.00	0.0000	158.0000	No Ice	0.3665	0.0846	0.00
						1/2" Ice	0.4506	0.1362	0.01
						1" Ice	0.5433	0.1965	0.01
						2" Ice	0.7546	0.3430	0.02
						4" Ice	1.2808	0.7396	0.06
(2) FD9R6004/2C-3L	B	From Face	4.0000 0.00 0.00	0.0000	158.0000	No Ice	0.3665	0.0846	0.00
						1/2" Ice	0.4506	0.1362	0.01
						1" Ice	0.5433	0.1965	0.01
						2" Ice	0.7546	0.3430	0.02
						4" Ice	1.2808	0.7396	0.06
(2) FD9R6004/2C-3L	C	From Face	4.0000 0.00 0.00	0.0000	158.0000	No Ice	0.3665	0.0846	0.00
						1/2" Ice	0.4506	0.1362	0.01
						1" Ice	0.5433	0.1965	0.01
						2" Ice	0.7546	0.3430	0.02
						4" Ice	1.2808	0.7396	0.06
Platform Mount [LP 713-1]	C	None		0.0000	158.0000	No Ice	31.2700	31.2700	1.51
						1/2" Ice	39.6800	39.6800	1.93
						1" Ice	48.0900	48.0900	2.35
						2" Ice	64.9100	64.9100	3.19
						4" Ice	98.5500	98.5500	4.86
156-FT EXSITING Abandoned									
RR90-17-00DP w/ Mount Pipe	A	From Face	0.5000 0.00 14.00	0.0000	156.0000	No Ice	4.5931	3.3194	0.03
						1/2" Ice	5.0883	4.0888	0.07
						1" Ice	5.5778	4.7844	0.12
						2" Ice	6.5876	6.2255	0.22
						4" Ice	8.7306	9.3076	0.56
RR90-17-00DP w/ Mount Pipe	B	From Face	0.5000 0.00 14.00	0.0000	156.0000	No Ice	4.5931	3.3194	0.03
						1/2" Ice	5.0883	4.0888	0.07
						1" Ice	5.5778	4.7844	0.12
						2" Ice	6.5876	6.2255	0.22
						4" Ice	8.7306	9.3076	0.56
RR90-17-00DP w/ Mount Pipe	C	From Face	0.5000 0.00 14.00	0.0000	156.0000	No Ice	4.5931	3.3194	0.03
						1/2" Ice	5.0883	4.0888	0.07
						1" Ice	5.5778	4.7844	0.12
						2" Ice	6.5876	6.2255	0.22
						4" Ice	8.7306	9.3076	0.56
CS72993.07	A	From Face	4.0000 0.00 14.00	0.0000	156.0000	No Ice	1.4292	0.4219	0.02
						1/2" Ice	1.5923	0.5371	0.03
						Ice	1.7640	0.6609	0.04

Description	Face or Leg	Offset Type	Offsets: Horz Lateral Vert ft ft ft	Azimuth Adjustment °	Placement ft		C_AA_A Front ft^2	C_AA_A Side ft^2	Weight K
						1" Ice	2.1335	0.9344	0.06
						2" Ice	2.9761	1.5852	0.15
						4" Ice			
CS72993.07	B	From Face	4.0000	0.0000	156.0000	No Ice	1.4292	0.4219	0.02
			0.00			1/2"	1.5923	0.5371	0.03
			14.00			Ice	1.7640	0.6609	0.04
						1" Ice	2.1335	0.9344	0.06
						2" Ice	2.9761	1.5852	0.15
						4" Ice			
(2) CS72993.07	C	From Face	4.0000	0.0000	156.0000	No Ice	1.4292	0.4219	0.02
			0.00			1/2"	1.5923	0.5371	0.03
			14.00			Ice	1.7640	0.6609	0.04
						1" Ice	2.1335	0.9344	0.06
						2" Ice	2.9761	1.5852	0.15
						4" Ice			
4.5" OD x 15' Pipe	C	From Leg	1.0000	0.0000	156.0000	No Ice	6.7500	6.7500	0.50
			0.00			1/2"	8.2958	8.2958	0.55
			0.00			Ice	9.8583	9.8583	0.60
						1" Ice	12.2241	12.2241	0.75
						2" Ice	15.9713	15.9713	1.15
						4" Ice			
Pipe Mount [PM 601-3]	C	None		0.0000	156.0000	No Ice	4.3900	4.3900	0.20
						1/2"	5.4800	5.4800	0.24
						Ice	6.5700	6.5700	0.28
						1" Ice	8.7500	8.7500	0.36
						2" Ice	13.1100	13.1100	0.53
						4" Ice			
147-FT RESERVED									
800 10121 w/ Mount Pipe	A	From Face	4.0000	0.0000	147.0000	No Ice	6.0334	4.9479	0.07
			0.00			1/2"	6.7136	6.0222	0.12
			5.00			Ice	7.2991	6.8104	0.18
						1" Ice	8.4999	8.4586	0.32
						2" Ice	11.0444	12.1015	0.73
						4" Ice			
800 10121 w/ Mount Pipe	B	From Face	4.0000	0.0000	147.0000	No Ice	6.0334	4.9479	0.07
			0.00			1/2"	6.7136	6.0222	0.12
			5.00			Ice	7.2991	6.8104	0.18
						1" Ice	8.4999	8.4586	0.32
						2" Ice	11.0444	12.1015	0.73
						4" Ice			
800 10121 w/ Mount Pipe	C	From Face	4.0000	0.0000	147.0000	No Ice	6.0334	4.9479	0.07
			0.00			1/2"	6.7136	6.0222	0.12
			5.00			Ice	7.2991	6.8104	0.18
						1" Ice	8.4999	8.4586	0.32
						2" Ice	11.0444	12.1015	0.73
						4" Ice			
(2) P65-16-XLH-RR w/ Mount Pipe	A	From Face	4.0000	0.0000	147.0000	No Ice	8.6375	6.3625	0.08
			0.00			1/2"	9.2903	7.5378	0.14
			5.00			Ice	9.9098	8.4270	0.22
						1" Ice	11.1763	10.2390	0.39
						2" Ice	13.8289	14.0988	0.89
						4" Ice			
(2) P65-16-XLH-RR w/ Mount Pipe	B	From Face	4.0000	0.0000	147.0000	No Ice	8.6375	6.3625	0.08
			0.00			1/2"	9.2903	7.5378	0.14
			5.00			Ice	9.9098	8.4270	0.22
						1" Ice	11.1763	10.2390	0.39
						2" Ice	13.8289	14.0988	0.89
						4" Ice			
(2) P65-16-XLH-RR w/ Mount Pipe	C	From Face	4.0000	0.0000	147.0000	No Ice	8.6375	6.3625	0.08
			0.00			1/2"	9.2903	7.5378	0.14
			5.00			Ice	9.9098	8.4270	0.22
						1" Ice	11.1763	10.2390	0.39
						2" Ice	13.8289	14.0988	0.89
						4" Ice			
(2) TTAW-07BP111-001	A	From Face	4.0000	0.0000	147.0000	No Ice	0.6449	0.5198	0.02

Description	Face or Leg	Offset Type	Offsets: Horz Lateral Vert ft ft ft	Azimuth Adjustment °	Placement ft		C_AA_A Front ft^2	C_AA_A Side ft^2	Weight K
			0.00			1/2"	0.7568	0.6232	0.02
			5.00			Ice	0.8773	0.7354	0.03
						1" Ice	1.1444	0.9856	0.05
						2" Ice	1.7822	1.5896	0.12
						4" Ice			
(2) TTAW-07BP111-001	B	From Face	4.0000	0.0000	147.0000	No Ice	0.6449	0.5198	0.02
			0.00			1/2"	0.7568	0.6232	0.02
			5.00			Ice	0.8773	0.7354	0.03
						1" Ice	1.1444	0.9856	0.05
						2" Ice	1.7822	1.5896	0.12
						4" Ice			
(2) TTAW-07BP111-001	C	From Face	4.0000	0.0000	147.0000	No Ice	0.6449	0.5198	0.02
			0.00			1/2"	0.7568	0.6232	0.02
			5.00			Ice	0.8773	0.7354	0.03
						1" Ice	1.1444	0.9856	0.05
						2" Ice	1.7822	1.5896	0.12
						4" Ice			
(2) RRUS-11	A	From Face	4.0000	0.0000	147.0000	No Ice	3.2486	1.3726	0.05
			0.00			1/2"	3.4905	1.5510	0.07
			5.00			Ice	3.7411	1.7380	0.09
						1" Ice	4.2682	2.1381	0.15
						2" Ice	5.4260	3.0418	0.31
						4" Ice			
(2) RRUS-11	B	From Face	4.0000	0.0000	147.0000	No Ice	3.2486	1.3726	0.05
			0.00			1/2"	3.4905	1.5510	0.07
			5.00			Ice	3.7411	1.7380	0.09
						1" Ice	4.2682	2.1381	0.15
						2" Ice	5.4260	3.0418	0.31
						4" Ice			
(2) RRUS-11	C	From Face	4.0000	0.0000	147.0000	No Ice	3.2486	1.3726	0.05
			0.00			1/2"	3.4905	1.5510	0.07
			5.00			Ice	3.7411	1.7380	0.09
						1" Ice	4.2682	2.1381	0.15
						2" Ice	5.4260	3.0418	0.31
						4" Ice			
DC6-48-60-18-8F	C	From Face	4.0000	0.0000	147.0000	No Ice	2.5667	2.5667	0.02
			0.00			1/2"	2.7978	2.7978	0.04
			5.00			Ice	3.0377	3.0377	0.07
						1" Ice	3.5432	3.5432	0.13
						2" Ice	4.6580	4.6580	0.30
						4" Ice			
Platform Mount [LP 713-1]	C	None		0.0000	147.0000	No Ice	31.2700	31.2700	1.51
						1/2"	39.6800	39.6800	1.93
						Ice	48.0900	48.0900	2.35
						1" Ice	64.9100	64.9100	3.19
						2" Ice	98.5500	98.5500	4.86
						4" Ice			
137-FT RESERVED									
APXVSPP18-C-A20 w/ Mount Pipe	A	From Face	4.0000	0.0000	137.0000	No Ice	8.4975	6.9458	0.08
			0.00			1/2"	9.1490	8.1266	0.15
			0.00			Ice	9.7672	9.0212	0.23
						1" Ice	11.0311	10.8440	0.41
						2" Ice	13.6786	14.8507	0.91
						4" Ice			
APXVSPP18-C-A20 w/ Mount Pipe	B	From Face	4.0000	0.0000	137.0000	No Ice	8.4975	6.9458	0.08
			0.00			1/2"	9.1490	8.1266	0.15
			0.00			Ice	9.7672	9.0212	0.23
						1" Ice	11.0311	10.8440	0.41
						2" Ice	13.6786	14.8507	0.91
						4" Ice			
APXVSPP18-C-A20 w/ Mount Pipe	C	From Face	4.0000	0.0000	137.0000	No Ice	8.4975	6.9458	0.08
			0.00			1/2"	9.1490	8.1266	0.15
			0.00			Ice	9.7672	9.0212	0.23
						1" Ice	11.0311	10.8440	0.41
						2" Ice	13.6786	14.8507	0.91

Description	Face or Leg	Offset Type	Offsets: Horz Lateral Vert ft ft ft	Azimuth Adjustment °	Placement ft		C_AA_A Front ft^2	C_AA_A Side ft^2	Weight K
						4" Ice			
800 EXTERNAL NOTCH FILTER	A	From Face	4.0000	0.0000	137.0000	No Ice	0.7701	0.3747	0.01
			0.00			1/2"	0.8898	0.4647	0.02
			0.00			Ice	1.0181	0.5634	0.02
						1" Ice	1.3007	0.7868	0.04
						2" Ice	1.9696	1.3372	0.11
						4" Ice			
800 EXTERNAL NOTCH FILTER	B	From Face	4.0000	0.0000	137.0000	No Ice	0.7701	0.3747	0.01
			0.00			1/2"	0.8898	0.4647	0.02
			0.00			Ice	1.0181	0.5634	0.02
						1" Ice	1.3007	0.7868	0.04
						2" Ice	1.9696	1.3372	0.11
						4" Ice			
800 EXTERNAL NOTCH FILTER	C	From Face	4.0000	0.0000	137.0000	No Ice	0.7701	0.3747	0.01
			0.00			1/2"	0.8898	0.4647	0.02
			0.00			Ice	1.0181	0.5634	0.02
						1" Ice	1.3007	0.7868	0.04
						2" Ice	1.9696	1.3372	0.11
						4" Ice			
(3) ACU-A20-N	A	From Face	4.0000	0.0000	137.0000	No Ice	0.0778	0.1361	0.00
			0.00			1/2"	0.1210	0.1890	0.00
			0.00			Ice	0.1728	0.2506	0.00
						1" Ice	0.3025	0.3997	0.01
						2" Ice	0.6654	0.8015	0.04
						4" Ice			
(3) ACU-A20-N	B	From Face	4.0000	0.0000	137.0000	No Ice	0.0778	0.1361	0.00
			0.00			1/2"	0.1210	0.1890	0.00
			0.00			Ice	0.1728	0.2506	0.00
						1" Ice	0.3025	0.3997	0.01
						2" Ice	0.6654	0.8015	0.04
						4" Ice			
(3) ACU-A20-N	C	From Face	4.0000	0.0000	137.0000	No Ice	0.0778	0.1361	0.00
			0.00			1/2"	0.1210	0.1890	0.00
			0.00			Ice	0.1728	0.2506	0.00
						1" Ice	0.3025	0.3997	0.01
						2" Ice	0.6654	0.8015	0.04
						4" Ice			
***									
800MHZ RRH	A	From Face	4.0000	0.0000	137.0000	No Ice	2.4899	2.0685	0.05
			0.00			1/2"	2.7061	2.2705	0.07
			1.00			Ice	2.9310	2.4812	0.10
						1" Ice	3.4068	2.9284	0.16
						2" Ice	4.4620	3.9265	0.32
						4" Ice			
800MHZ RRH	B	From Face	4.0000	0.0000	137.0000	No Ice	2.4899	2.0685	0.05
			0.00			1/2"	2.7061	2.2705	0.07
			1.00			Ice	2.9310	2.4812	0.10
						1" Ice	3.4068	2.9284	0.16
						2" Ice	4.4620	3.9265	0.32
						4" Ice			
800MHZ RRH	C	From Face	4.0000	0.0000	137.0000	No Ice	2.4899	2.0685	0.05
			0.00			1/2"	2.7061	2.2705	0.07
			1.00			Ice	2.9310	2.4812	0.10
						1" Ice	3.4068	2.9284	0.16
						2" Ice	4.4620	3.9265	0.32
						4" Ice			
1900MHz RRH (65MHz)	A	From Face	4.0000	0.0000	137.0000	No Ice	2.6979	2.7708	0.06
			0.00			1/2"	2.9362	3.0111	0.08
			1.00			Ice	3.1832	3.2600	0.11
						1" Ice	3.7030	3.7837	0.18
						2" Ice	4.8463	4.9348	0.35
						4" Ice			
1900MHz RRH (65MHz)	B	From Face	4.0000	0.0000	137.0000	No Ice	2.6979	2.7708	0.06
			0.00			1/2"	2.9362	3.0111	0.08
			1.00			Ice	3.1832	3.2600	0.11

Description	Face or Leg	Offset Type	Offsets: Horz Lateral Vert ft ft ft	Azimuth Adjustment °	Placement ft		C_AA_A Front ft^2	C_AA_A Side ft^2	Weight K
						1" Ice	3.7030	3.7837	0.18
						2" Ice	4.8463	4.9348	0.35
						4" Ice			
1900MHz RRH (65MHz)	C	From Face	4.0000	0.0000	137.0000	No Ice	2.6979	2.7708	0.06
			0.00			1/2"	2.9362	3.0111	0.08
			1.00			Ice	3.1832	3.2600	0.11
						1" Ice	3.7030	3.7837	0.18
						2" Ice	4.8463	4.9348	0.35
						4" Ice			
Side Arm Mount [SO 102-3]	C	None		0.0000	138.0000	No Ice	3.0000	3.0000	0.08
						1/2"	3.4800	3.4800	0.11
						Ice	3.9600	3.9600	0.14
						1" Ice	4.9200	4.9200	0.20
						2" Ice	6.8400	6.8400	0.32
						4" Ice			
137-FT EXISTING									
(2) DB980H90E-M w/ Mount Pipe	A	From Leg	4.0000	0.0000	137.0000	No Ice	4.0361	3.6194	0.03
			0.00			1/2"	4.4987	4.4808	0.07
			3.00			Ice	4.9468	5.2186	0.11
						1" Ice	5.8700	6.7442	0.22
						2" Ice	8.0460	9.9954	0.55
						4" Ice			
(2) DB950F85E-M w/ Mount Pipe	B	From Leg	4.0000	0.0000	137.0000	No Ice	2.7722	5.6611	0.03
			0.00			1/2"	3.2208	6.5452	0.07
			3.00			Ice	3.6549	7.3057	0.12
						1" Ice	4.5499	8.9492	0.23
						2" Ice	6.4474	12.5361	0.58
						4" Ice			
(2) DB980H90E-M w/ Mount Pipe	C	From Leg	4.0000	0.0000	137.0000	No Ice	4.0361	3.6194	0.03
			0.00			1/2"	4.4987	4.4808	0.07
			3.00			Ice	4.9468	5.2186	0.11
						1" Ice	5.8700	6.7442	0.22
						2" Ice	8.0460	9.9954	0.55
						4" Ice			
Horizon DUO	C	From Face	4.0000	0.0000	137.0000	No Ice	0.5469	0.3427	0.01
			0.00			1/2"	0.6484	0.4261	0.01
			3.00			Ice	0.7586	0.5181	0.02
						1" Ice	1.0049	0.7281	0.04
						2" Ice	1.6012	1.2518	0.10
						4" Ice			
Platform Mount [LP 713-1]	C	None		0.0000	137.0000	No Ice	31.2700	31.2700	1.51
						1/2"	39.6800	39.6800	1.93
						Ice	48.0900	48.0900	2.35
						1" Ice	64.9100	64.9100	3.19
						2" Ice	98.5500	98.5500	4.86
						4" Ice			
127-FT									
ERICSSON AIR 21 B2A B4P w/ Mount Pipe	A	From Face	4.0000	0.0000	127.0000	No Ice	6.8253	5.6424	0.11
			0.00			1/2"	7.3471	6.4800	0.17
			2.00			Ice	7.8632	7.2567	0.23
						1" Ice	8.9261	8.8640	0.38
						2" Ice	11.1755	12.2932	0.81
						4" Ice			
ERICSSON AIR 21 B2A B4P w/ Mount Pipe	B	From Face	4.0000	0.0000	127.0000	No Ice	6.8253	5.6424	0.11
			0.00			1/2"	7.3471	6.4800	0.17
			2.00			Ice	7.8632	7.2567	0.23
						1" Ice	8.9261	8.8640	0.38
						2" Ice	11.1755	12.2932	0.81
						4" Ice			
ERICSSON AIR 21 B2A B4P w/ Mount Pipe	C	From Face	4.0000	0.0000	127.0000	No Ice	6.8253	5.6424	0.11
			0.00			1/2"	7.3471	6.4800	0.17
			2.00			Ice	7.8632	7.2567	0.23
						1" Ice	8.9261	8.8640	0.38
						2" Ice	11.1755	12.2932	0.81
						4" Ice			

Description	Face or Leg	Offset Type	Offsets: Horz Lateral Vert ft ft ft	Azimuth Adjustment °	Placement ft		C_AA_A Front ft^2	C_AA_A Side ft^2	Weight K
KRY 112 144/1	A	From Face	4.0000	0.0000	127.0000	No Ice	0.4083	0.2042	0.01
			0.00			1/2"	0.4969	0.2733	0.01
			2.00			Ice	0.5941	0.3511	0.02
						1" Ice	0.8145	0.5326	0.03
						2" Ice	1.3590	0.9992	0.08
						4" Ice			
KRY 112 144/1	B	From Face	4.0000	0.0000	127.0000	No Ice	0.4083	0.2042	0.01
			0.00			1/2"	0.4969	0.2733	0.01
			2.00			Ice	0.5941	0.3511	0.02
						1" Ice	0.8145	0.5326	0.03
						2" Ice	1.3590	0.9992	0.08
						4" Ice			
KRY 112 144/1	C	From Face	4.0000	0.0000	127.0000	No Ice	0.4083	0.2042	0.01
			0.00			1/2"	0.4969	0.2733	0.01
			2.00			Ice	0.5941	0.3511	0.02
						1" Ice	0.8145	0.5326	0.03
						2" Ice	1.3590	0.9992	0.08
						4" Ice			
(4) DB844H90-XY w/ Mount Pipe	A	From Face	4.0000	0.0000	127.0000	No Ice	3.1042	5.1542	0.03
			0.00			1/2"	3.4760	5.8328	0.07
			-9.00			Ice	3.8787	6.5235	0.11
						1" Ice	4.7607	7.9586	0.22
						2" Ice	6.6604	11.0923	0.55
						4" Ice			
(4) DB844H90-XY w/ Mount Pipe	B	From Face	4.0000	0.0000	127.0000	No Ice	3.1042	5.1542	0.03
			0.00			1/2"	3.4760	5.8328	0.07
			-9.00			Ice	3.8787	6.5235	0.11
						1" Ice	4.7607	7.9586	0.22
						2" Ice	6.6604	11.0923	0.55
						4" Ice			
(4) DB844H90-XY w/ Mount Pipe	C	From Face	4.0000	0.0000	127.0000	No Ice	3.1042	5.1542	0.03
			0.00			1/2"	3.4760	5.8328	0.07
			-9.00			Ice	3.8787	6.5235	0.11
						1" Ice	4.7607	7.9586	0.22
						2" Ice	6.6604	11.0923	0.55
						4" Ice			
Platform Mount [LP 713-1]	C	None		0.0000	127.0000	No Ice	31.2700	31.2700	1.51
						1/2"	39.6800	39.6800	1.93
						Ice	48.0900	48.0900	2.35
						1" Ice	64.9100	64.9100	3.19
						2" Ice	98.5500	98.5500	4.86
						4" Ice			
107-FT EXISTING									
LLPX310R w/ Mount Pipe	A	From Face	4.0000	0.0000	107.0000	No Ice	4.9623	2.8484	0.04
			0.00			1/2"	5.3512	3.3668	0.08
			3.00			Ice	5.7501	3.9019	0.12
						1" Ice	6.5777	5.0799	0.23
						2" Ice	8.3714	7.8368	0.53
						4" Ice			
LLPX310R w/ Mount Pipe	B	From Face	4.0000	0.0000	107.0000	No Ice	4.9623	2.8484	0.04
			0.00			1/2"	5.3512	3.3668	0.08
			3.00			Ice	5.7501	3.9019	0.12
						1" Ice	6.5777	5.0799	0.23
						2" Ice	8.3714	7.8368	0.53
						4" Ice			
LLPX310R w/ Mount Pipe	C	From Face	4.0000	0.0000	107.0000	No Ice	4.9623	2.8484	0.04
			0.00			1/2"	5.3512	3.3668	0.08
			3.00			Ice	5.7501	3.9019	0.12
						1" Ice	6.5777	5.0799	0.23
						2" Ice	8.3714	7.8368	0.53
						4" Ice			
WIMAX DAP HEAD	A	From Face	4.0000	0.0000	107.0000	No Ice	1.8044	0.7778	0.03
			0.00			1/2"	1.9877	0.9182	0.04
			3.00			Ice	2.1795	1.0673	0.06
						1" Ice	2.5891	1.3914	0.09

Description	Face or Leg	Offset Type	Offsets: Horz Lateral Vert ft ft ft	Azimuth Adjustment °	Placement ft		C_AA_A Front ft^2	C_AA_A Side ft^2	Weight K
						2" Ice	3.5121	2.1432	0.20
						4" Ice			
WIMAX DAP HEAD	B	From Face	4.0000	0.0000	107.0000	No Ice	1.8044	0.7778	0.03
			0.00			1/2"	1.9877	0.9182	0.04
			3.00			Ice	2.1795	1.0673	0.06
						1" Ice	2.5891	1.3914	0.09
						2" Ice	3.5121	2.1432	0.20
						4" Ice			
WIMAX DAP HEAD	C	From Face	4.0000	0.0000	107.0000	No Ice	1.8044	0.7778	0.03
			0.00			1/2"	1.9877	0.9182	0.04
			3.00			Ice	2.1795	1.0673	0.06
						1" Ice	2.5891	1.3914	0.09
						2" Ice	3.5121	2.1432	0.20
						4" Ice			
HORIZON COMPACT	A	From Face	4.0000	0.0000	107.0000	No Ice	0.8409	0.4295	0.01
			0.00			1/2"	0.9658	0.5249	0.02
			3.00			Ice	1.0993	0.6289	0.03
						1" Ice	1.3922	0.8629	0.05
						2" Ice	2.0819	1.4345	0.12
						4" Ice			
HORIZON COMPACT	C	From Face	4.0000	0.0000	107.0000	No Ice	0.8409	0.4295	0.01
			0.00			1/2"	0.9658	0.5249	0.02
			3.00			Ice	1.0993	0.6289	0.03
						1" Ice	1.3922	0.8629	0.05
						2" Ice	2.0819	1.4345	0.12
						4" Ice			
Side Arm Mount [SO 101-3]	C	None		0.0000	107.0000	No Ice	7.5000	7.5000	0.25
						1/2"	8.9000	8.9000	0.33
						Ice	10.3000	10.3000	0.41
						1" Ice	13.1000	13.1000	0.58
						2" Ice	18.7000	18.7000	0.90
						4" Ice			
100-FT EXISTING									
APXV18-206517S-C w/ Mount Pipe	A	From Face	1.0000	0.0000	100.0000	No Ice	5.4042	4.7000	0.05
			0.00			1/2"	5.9597	5.8600	0.10
			0.00			Ice	6.4808	6.7338	0.15
						1" Ice	7.5467	8.5150	0.28
						2" Ice	9.9193	12.2774	0.68
						4" Ice			
APXV18-206517S-C w/ Mount Pipe	B	From Face	1.0000	0.0000	100.0000	No Ice	5.4042	4.7000	0.05
			0.00			1/2"	5.9597	5.8600	0.10
			0.00			Ice	6.4808	6.7338	0.15
						1" Ice	7.5467	8.5150	0.28
						2" Ice	9.9193	12.2774	0.68
						4" Ice			
APXV18-206517S-C w/ Mount Pipe	C	From Face	1.0000	0.0000	100.0000	No Ice	5.4042	4.7000	0.05
			0.00			1/2"	5.9597	5.8600	0.10
			0.00			Ice	6.4808	6.7338	0.15
						1" Ice	7.5467	8.5150	0.28
						2" Ice	9.9193	12.2774	0.68
						4" Ice			
Pipe Mount [PM 601-3]	C	None		0.0000	100.0000	No Ice	4.3900	4.3900	0.20
						1/2"	5.4800	5.4800	0.24
						Ice	6.5700	6.5700	0.28
						1" Ice	8.7500	8.7500	0.36
						2" Ice	13.1100	13.1100	0.53
						4" Ice			
80-FT EXISTING									
OG-860/1920/GPS-A	A	From Face	3.0000	0.0000	80.0000	No Ice	0.3286	0.4044	0.00
			0.00			1/2"	0.4340	0.5138	0.01
			1.00			Ice	0.5481	0.6317	0.01
						1" Ice	0.8022	0.8936	0.02
						2" Ice	1.4140	1.5210	0.08
						4" Ice			
Side Arm Mount [SO 701-	A	None		0.0000	80.0000	No Ice	0.8500	1.6700	0.07

Description	Face or Leg	Offset Type	Offsets: Horz Lateral Vert ft ft ft	Azimuth Adjustment °	Placement ft		C_AA_A Front ft^2	C_AA_A Side ft^2	Weight K
1]						1/2" Ice	1.1400	2.3400	0.08
						1" Ice	1.4300	3.0100	0.09
						2" Ice	2.0100	4.3500	0.12
						4" Ice	3.1700	7.0300	0.18
Side Arm Mount [SO 701-1]	B	None		0.0000	80.0000	No Ice	0.8500	1.6700	0.07
						1/2" Ice	1.1400	2.3400	0.08
						1" Ice	1.4300	3.0100	0.09
						2" Ice	2.0100	4.3500	0.12
						4" Ice	3.1700	7.0300	0.18
****									

Dishes

Description	Face or Leg	Dish Type	Offset Type	Offsets: Horz Lateral Vert ft	Azimuth Adjustment °	3 dB Beam Width °	Elevation ft	Outside Diameter ft		Aperture Area ft^2	Weight K
VHLP2-11	B	Paraboloid w/o Radome	From Face	4.0000	0.0000		137.0000	2.1750	No Ice	3.7200	0.03
				0.00					1/2" Ice	4.0100	0.05
				3.00					1" Ice	4.3000	0.07
									2" Ice	4.8800	0.11
									4" Ice	6.0400	0.19
VHLP2-11	A	Paraboloid w/o Radome	From Face	2.0000	0.0000		107.0000	2.1750	No Ice	3.7200	0.03
				0.00					1/2" Ice	4.0100	0.05
				3.00					1" Ice	4.3000	0.07
									2" Ice	4.8800	0.11
									4" Ice	6.0400	0.19
PX2F-52	C	Paraboloid w/o Radome	From Face	2.0000	0.0000		107.0000	2.0917	No Ice	3.4400	0.02
				0.00					1/2" Ice	3.7200	0.04
				3.00					1" Ice	3.9900	0.06
									2" Ice	4.5500	0.09
									4" Ice	5.6700	0.17

Tower Pressures - No Ice

$G_H = 1.690$

Section Elevation ft	z ft	K_Z	q_z psf	A_G ft^2	Face	A_F ft^2	A_R ft^2	A_{leg} ft^2	Leg %	C_AA_A In Face ft^2	C_AA_A Out Face ft^2
L1 160.0000-121.3300	139.8360	1.511	27.92	82.850	A	0.000	82.850	82.850	100.00	0.000	0.000
					B	0.000	82.850		100.00	0.000	0.000
					C	0.000	82.850		100.00	0.000	2.461
					D	0.000	82.850		100.00	0.000	0.000
L2 121.3300-98.6667	109.7144	1.41	26.07	59.774	A	0.000	59.774	59.774	100.00	0.000	0.000
					B	0.000	59.774		100.00	0.000	0.000
					C	0.000	59.774		100.00	0.000	5.580
					D	0.000	59.774		100.00	0.000	0.000
L3 98.6667-81.3300	89.8516	1.331	24.62	51.793	A	0.000	51.793	51.793	100.00	0.000	0.000
					B	0.000	51.793		100.00	0.000	0.000
					C	0.000	51.793		100.00	0.000	9.422
					D	0.000	51.793		100.00	0.000	0.000

Section Elevation ft	z ft	K_Z	q_z psf	A_G ft²	Face	A_F ft²	A_R ft²	A_{leg} ft²	Leg %	C_AA_A In Face ft²	C_AA_A Out Face ft²
L4 81.3300-64.0000	72.5224	1.252	23.16	55.818	A	0.000	55.818	55.818	100.00	0.000	0.000
					B	0.000	55.818		100.00	0.000	0.000
					C	0.000	55.818		100.00	0.000	6.586
					D	0.000	55.818		100.00	0.000	0.000
L5 64.0000-41.4170	52.5006	1.142	21.12	80.789	A	0.000	80.789	80.789	100.00	0.000	0.000
					B	0.000	80.789		100.00	0.000	0.000
					C	0.000	80.789		100.00	0.000	15.453
					D	0.000	80.789		100.00	0.000	0.000
L6 41.4170-35.5000	38.4434	1.045	19.32	22.119	A	0.000	22.119	22.119	100.00	0.000	0.000
					B	0.000	22.119		100.00	0.000	0.000
					C	0.000	22.119		100.00	0.000	4.049
					D	0.000	22.119		100.00	0.000	0.000
L7 35.5000-33.3333	34.4149	1.012	18.72	8.264	A	0.000	8.264	8.264	100.00	0.000	0.000
					B	0.000	8.264		100.00	0.000	0.000
					C	0.000	8.264		100.00	0.000	1.483
					D	0.000	8.264		100.00	0.000	0.000
L8 33.3333-0.0000	16.2737	1	18.50	137.498	A	0.000	137.498	137.498	100.00	0.000	0.000
					B	0.000	137.498		100.00	0.000	0.000
					C	0.000	137.498		100.00	0.000	22.810
					D	0.000	137.498		100.00	0.000	0.000

Tower Pressure - With Ice

$G_H = 1.690$

Section Elevation ft	z ft	K_Z	q_z psf	t_Z in	A_G ft²	Face	A_F ft²	A_R ft²	A_{leg} ft²	Leg %	C_AA_A In Face ft²	C_AA_A Out Face ft²
L1 160.0000-121.3300	139.8360	1.511	5.46	0.8919	88.599	A	0.000	88.599	88.599	100.00	0.000	0.000
						B	0.000	88.599		100.00	0.000	0.000
						C	0.000	88.599		100.00	0.000	5.257
						D	0.000	88.599		100.00	0.000	0.000
L2 121.3300-98.6667	109.7144	1.41	5.10	0.8663	63.143	A	0.000	63.143	63.143	100.00	0.000	0.000
						B	0.000	63.143		100.00	0.000	0.000
						C	0.000	63.143		100.00	0.000	11.439
						D	0.000	63.143		100.00	0.000	0.000
L3 98.6667-81.3300	89.8516	1.331	4.82	0.8458	54.237	A	0.000	54.237	54.237	100.00	0.000	0.000
						B	0.000	54.237		100.00	0.000	0.000
						C	0.000	54.237		100.00	0.000	17.794
						D	0.000	54.237		100.00	0.000	0.000
L4 81.3300-64.0000	72.5224	1.252	4.53	0.8243	58.261	A	0.000	58.261	58.261	100.00	0.000	0.000
						B	0.000	58.261		100.00	0.000	0.000
						C	0.000	58.261		100.00	0.000	12.948
						D	0.000	58.261		100.00	0.000	0.000
L5 64.0000-41.4170	52.5006	1.142	4.13	0.7930	83.774	A	0.000	83.774	83.774	100.00	0.000	0.000
						B	0.000	83.774		100.00	0.000	0.000
						C	0.000	83.774		100.00	0.000	27.191
						D	0.000	83.774		100.00	0.000	0.000
L6 41.4170-35.5000	38.4434	1.045	3.78	0.7639	22.901	A	0.000	22.901	22.901	100.00	0.000	0.000
						B	0.000	22.901		100.00	0.000	0.000
						C	0.000	22.901		100.00	0.000	7.124
						D	0.000	22.901		100.00	0.000	0.000
L7 35.5000-33.3333	34.4149	1.012	3.66	0.7538	8.537	A	0.000	8.537	8.537	100.00	0.000	0.000
						B	0.000	8.537		100.00	0.000	0.000
						C	0.000	8.537		100.00	0.000	2.531
						D	0.000	8.537		100.00	0.000	0.000
L8 33.3333-0.0000	16.2737	1	3.62	0.7500	141.664	A	0.000	141.664	141.664	100.00	0.000	0.000
						B	0.000	141.664		100.00	0.000	0.000
						C	0.000	141.664		100.00	0.000	38.827
						D	0.000	141.664		100.00	0.000	0.000

Tower Pressure - Service

G_H = 1.690

Section Elevation ft	z ft	K_Z	q_z psf	A_G ft²	Face	A_F ft²	A_R ft²	A_{leg} ft²	Leg %	C_AA_A In Face ft²	C_AA_A Out Face ft²
L1 160.0000-121.3300	139.8360	1.511	9.66	82.850	A	0.000	82.850	82.850	100.00	0.000	0.000
					B	0.000	82.850		100.00	0.000	0.000
					C	0.000	82.850		100.00	0.000	2.461
					D	0.000	82.850		100.00	0.000	0.000
L2 121.3300-98.6667	109.7144	1.41	9.02	59.774	A	0.000	59.774	59.774	100.00	0.000	0.000
					B	0.000	59.774		100.00	0.000	0.000
					C	0.000	59.774		100.00	0.000	5.580
					D	0.000	59.774		100.00	0.000	0.000
L3 98.6667-81.3300	89.8516	1.331	8.52	51.793	A	0.000	51.793	51.793	100.00	0.000	0.000
					B	0.000	51.793		100.00	0.000	0.000
					C	0.000	51.793		100.00	0.000	9.422
					D	0.000	51.793		100.00	0.000	0.000
L4 81.3300-64.0000	72.5224	1.252	8.01	55.818	A	0.000	55.818	55.818	100.00	0.000	0.000
					B	0.000	55.818		100.00	0.000	0.000
					C	0.000	55.818		100.00	0.000	6.586
					D	0.000	55.818		100.00	0.000	0.000
L5 64.0000-41.4170	52.5006	1.142	7.31	80.789	A	0.000	80.789	80.789	100.00	0.000	0.000
					B	0.000	80.789		100.00	0.000	0.000
					C	0.000	80.789		100.00	0.000	15.453
					D	0.000	80.789		100.00	0.000	0.000
L6 41.4170-35.5000	38.4434	1.045	6.69	22.119	A	0.000	22.119	22.119	100.00	0.000	0.000
					B	0.000	22.119		100.00	0.000	0.000
					C	0.000	22.119		100.00	0.000	4.049
					D	0.000	22.119		100.00	0.000	0.000
L7 35.5000-33.3333	34.4149	1.012	6.48	8.264	A	0.000	8.264	8.264	100.00	0.000	0.000
					B	0.000	8.264		100.00	0.000	0.000
					C	0.000	8.264		100.00	0.000	1.483
					D	0.000	8.264		100.00	0.000	0.000
L8 33.3333-0.0000	16.2737	1	6.40	137.498	A	0.000	137.498	137.498	100.00	0.000	0.000
					B	0.000	137.498		100.00	0.000	0.000
					C	0.000	137.498		100.00	0.000	22.810
					D	0.000	137.498		100.00	0.000	0.000

Load Combinations

Comb. No.	Description
1	Dead Only
2	Dead+Wind 0 deg - No Ice
3	Dead+Wind 45 deg - No Ice
4	Dead+Wind 90 deg - No Ice
5	Dead+Wind 135 deg - No Ice
6	Dead+Wind 180 deg - No Ice
7	Dead+Wind 225 deg - No Ice
8	Dead+Wind 270 deg - No Ice
9	Dead+Wind 315 deg - No Ice
10	Dead+Ice
11	Dead+Wind 0 deg+Ice
12	Dead+Wind 45 deg+Ice
13	Dead+Wind 90 deg+Ice
14	Dead+Wind 135 deg+Ice
15	Dead+Wind 180 deg+Ice
16	Dead+Wind 225 deg+Ice
17	Dead+Wind 270 deg+Ice
18	Dead+Wind 315 deg+Ice
19	Dead+Wind 0 deg - Service
20	Dead+Wind 45 deg - Service
21	Dead+Wind 90 deg - Service
22	Dead+Wind 135 deg - Service
23	Dead+Wind 180 deg - Service

Comb. No.	Description
24	Dead+Wind 225 deg - Service
25	Dead+Wind 270 deg - Service
26	Dead+Wind 315 deg - Service

Maximum Member Forces

Section No.	Elevation ft	Component Type	Condition	Gov. Load Comb.	Force K	Major Axis Moment kip-ft	Minor Axis Moment kip-ft
L1	160 - 121.33	Pole	Max Tension	11	0.00	0.00	-0.00
			Max. Compression	10	-23.55	-2.16	15.08
			Max. Mx	4	-10.72	-546.07	1.04
			Max. My	2	-10.91	1.37	512.03
			Max. Vy	4	27.54	-546.07	1.04
			Max. Vx	6	26.84	-3.47	-503.16
			Max. Torque	8			-25.22
L2	121.33 - 98.6667	Pole	Max Tension	1	0.00	0.00	0.00
			Max. Compression	10	-32.04	-2.78	16.23
			Max. Mx	4	-17.08	-1366.15	-2.57
			Max. My	2	-17.27	6.04	1305.45
			Max. Vy	4	33.64	-1366.15	-2.57
			Max. Vx	6	32.43	-8.55	-1298.15
			Max. Torque	8			-26.44
L3	98.6667 - 81.33	Pole	Max Tension	1	0.00	0.00	0.00
			Max. Compression	10	-35.73	-3.26	15.93
			Max. Mx	4	-20.24	-1768.65	-4.46
			Max. My	2	-20.41	8.01	1692.61
			Max. Vy	4	35.37	-1768.65	-4.46
			Max. Vx	6	34.16	-10.76	-1686.51
			Max. Torque	8			-26.43
L4	81.33 - 64	Pole	Max Tension	1	0.00	0.00	0.00
			Max. Compression	10	-45.01	-4.22	15.24
			Max. Mx	4	-28.20	-2624.59	-8.37
			Max. My	2	-28.32	11.87	2518.31
			Max. Vy	4	38.84	-2624.59	-8.37
			Max. Vx	6	37.64	-15.11	-2514.60
			Max. Torque	8			-26.29
L5	64 - 41.417	Pole	Max Tension	1	0.00	0.00	0.00
			Max. Compression	10	-51.75	-4.94	14.67
			Max. Mx	4	-34.23	-3264.21	-11.20
			Max. My	2	-34.33	14.54	3136.97
			Max. Vy	4	41.13	-3264.21	-11.20
			Max. Vx	6	39.93	-18.13	-3134.97
			Max. Torque	8			-26.16
L6	41.417 - 35.5	Pole	Max Tension	1	0.00	0.00	0.00
			Max. Compression	10	-59.82	-5.49	14.18
			Max. Mx	4	-41.38	-3790.90	-13.43
			Max. My	2	-41.46	16.62	3647.31
			Max. Vy	4	43.03	-3790.90	-13.43
			Max. Vx	6	41.83	-20.48	-3646.67
			Max. Torque	8			-25.96
L7	35.5 - 33.3333	Pole	Max Tension	1	0.00	0.00	0.00
			Max. Compression	10	-60.84	-5.59	14.08
			Max. Mx	4	-42.32	-3884.40	-13.82
			Max. My	2	-42.39	16.98	3737.98
			Max. Vy	4	43.30	-3884.40	-13.82
			Max. Vx	6	42.10	-20.89	-3737.58
			Max. Torque	8			-25.90
L8	33.3333 - 0	Pole	Max Tension	1	0.00	0.00	0.00
			Max. Compression	10	-76.63	-7.12	12.55
			Max. Mx	4	-56.81	-5394.68	-19.98
			Max. My	6	-56.82	-27.08	-5208.57
			Max. Vy	4	47.38	-5394.68	-19.98

Section No.	Elevation ft	Component Type	Condition	Gov. Load Comb.	Force K	Major Axis Moment kip-ft	Minor Axis Moment kip-ft
			Max. Vx	6	46.22	-27.08	-5208.57
			Max. Torque	8			-25.89

Maximum Reactions

Location	Condition	Gov. Load Comb.	Vertical K	Horizontal, X K	Horizontal, Z K
Pole	Max. Vert	11	76.63	0.03	11.01
	Max. H_x	8	56.84	47.34	0.17
	Max. H_z	2	56.84	0.17	46.10
	Max. M_x	2	5205.29	0.17	46.10
	Max. M_z	4	5394.68	-47.34	-0.17
	Max. Torsion	4	25.58	-47.34	-0.17
	Min. Vert	1	56.84	0.00	0.00
	Min. H_x	4	56.84	-47.34	-0.17
	Min. H_z	6	56.84	-0.17	-46.18
	Min. M_x	6	-5208.57	-0.17	-46.18
	Min. M_z	8	-5389.27	47.34	0.17
	Min. Torsion	8	-25.60	47.34	0.17

Tower Mast Reaction Summary

Load Combination	Vertical K	$Shear_x$ K	$Shear_z$ K	Overturning Moment, M_x kip-ft	Overturning Moment, M_z kip-ft	Torque kip-ft
Dead Only	56.84	0.00	-0.00	-4.63	-2.34	-0.00
Dead+Wind 0 deg - No Ice	56.84	-0.17	-46.10	-5205.29	22.41	3.05
Dead+Wind 45 deg - No Ice	56.84	33.45	-32.44	-3658.59	-3809.74	-15.97
Dead+Wind 90 deg - No Ice	56.84	47.34	0.17	19.99	-5394.68	-25.58
Dead+Wind 135 deg - No Ice	56.84	33.62	32.87	3712.48	-3833.99	-20.23
Dead+Wind 180 deg - No Ice	56.84	0.17	46.18	5208.57	-27.08	-3.07
Dead+Wind 225 deg - No Ice	56.84	-33.36	32.64	3678.19	3792.89	15.91
Dead+Wind 270 deg - No Ice	56.84	-47.34	-0.17	-29.49	5389.27	25.60
Dead+Wind 315 deg - No Ice	56.84	-33.67	-32.68	-3694.00	3838.34	20.29
Dead+Ice	76.63	0.00	-0.00	-12.55	-7.12	-0.00
Dead+Wind 0 deg+Ice	76.63	-0.03	-11.01	-1306.59	-3.32	0.92
Dead+Wind 45 deg+Ice	76.63	7.92	-7.76	-923.60	-943.74	-3.83
Dead+Wind 90 deg+Ice	76.63	11.20	0.03	-8.86	-1331.83	-6.35
Dead+Wind 135 deg+Ice	76.63	7.94	7.84	910.19	-946.79	-5.15
Dead+Wind 180 deg+Ice	76.63	0.03	11.03	1284.17	-11.00	-0.92
Dead+Wind 225 deg+Ice	76.63	-7.90	7.80	904.88	926.69	3.85
Dead+Wind 270 deg+Ice	76.63	-11.20	-0.03	-16.54	1317.35	6.35
Dead+Wind 315 deg+Ice	76.63	-7.96	-7.80	-929.16	934.51	5.13
Dead+Wind 0 deg - Service	56.84	-0.06	-15.95	-1807.06	6.20	1.07
Dead+Wind 45 deg - Service	56.84	11.57	-11.22	-1271.13	-1321.95	-5.59
Dead+Wind 90 deg - Service	56.84	16.38	0.06	3.78	-1871.46	-8.99
Dead+Wind 135 deg - Service	56.84	11.63	11.37	1283.60	-1330.45	-7.12
Dead+Wind 180 deg - Service	56.84	0.06	15.98	1801.99	-10.95	-1.07
Dead+Wind 225 deg - Service	56.84	-11.54	11.29	1271.67	1313.03	5.61
Dead+Wind 270 deg - Service	56.84	-16.38	-0.06	-13.37	1866.45	8.99
Dead+Wind 315 deg - Service	56.84	-11.65	-11.31	-1283.44	1328.78	7.10

Solution Summary

Load Comb.	Sum of Applied Forces PX K	PY K	PZ K	Sum of Reactions PX K	PY K	PZ K	% Error
1	0.00	-56.84	0.00	0.00	56.84	0.00	0.000%
2	-0.17	-56.84	-46.10	0.17	56.84	46.10	0.000%
3	33.45	-56.84	-32.44	-33.45	56.84	32.44	0.000%
4	47.34	-56.84	0.17	-47.34	56.84	-0.17	0.000%
5	33.62	-56.84	32.87	-33.62	56.84	-32.87	0.000%
6	0.17	-56.84	46.18	-0.17	56.84	-46.18	0.000%
7	-33.36	-56.84	32.64	33.36	56.84	-32.64	0.000%
8	-47.34	-56.84	-0.17	47.34	56.84	0.17	0.000%
9	-33.67	-56.84	-32.68	33.67	56.84	32.68	0.000%
10	0.00	-76.63	0.00	-0.00	76.63	0.00	0.000%
11	-0.03	-76.63	-11.01	0.03	76.63	11.01	0.000%
12	7.92	-76.63	-7.76	-7.92	76.63	7.76	0.000%
13	11.20	-76.63	0.03	-11.20	76.63	-0.03	0.000%
14	7.94	-76.63	7.84	-7.94	76.63	-7.84	0.000%
15	0.03	-76.63	11.03	-0.03	76.63	-11.03	0.000%
16	-7.90	-76.63	7.80	7.90	76.63	-7.80	0.000%
17	-11.20	-76.63	-0.03	11.20	76.63	0.03	0.000%
18	-7.96	-76.63	-7.80	7.96	76.63	7.80	0.000%
19	-0.06	-56.84	-15.95	0.06	56.84	15.95	0.000%
20	11.57	-56.84	-11.22	-11.57	56.84	11.22	0.000%
21	16.38	-56.84	0.06	-16.38	56.84	-0.06	0.000%
22	11.63	-56.84	11.37	-11.63	56.84	-11.37	0.000%
23	0.06	-56.84	15.98	-0.06	56.84	-15.98	0.000%
24	-11.54	-56.84	11.29	11.54	56.84	-11.29	0.000%
25	-16.38	-56.84	-0.06	16.38	56.84	0.06	0.000%
26	-11.65	-56.84	-11.31	11.65	56.84	11.31	0.000%

Non-Linear Convergence Results

Load Combination	Converged?	Number of Cycles	Displacement Tolerance	Force Tolerance
1	Yes	4	0.00000001	0.00000001
2	Yes	5	0.00000001	0.00005415
3	Yes	6	0.00000001	0.00005772
4	Yes	5	0.00000001	0.00066532
5	Yes	6	0.00000001	0.00005769
6	Yes	5	0.00000001	0.00009183
7	Yes	6	0.00000001	0.00005585
8	Yes	5	0.00000001	0.00070502
9	Yes	6	0.00000001	0.00005985
10	Yes	4	0.00000001	0.00001246
11	Yes	4	0.00000001	0.00063407
12	Yes	5	0.00000001	0.00027197
13	Yes	5	0.00000001	0.00026535
14	Yes	5	0.00000001	0.00027505
15	Yes	4	0.00000001	0.00062256
16	Yes	5	0.00000001	0.00024229
17	Yes	5	0.00000001	0.00026398
18	Yes	5	0.00000001	0.00029547
19	Yes	4	0.00000001	0.00040682
20	Yes	5	0.00000001	0.00019111
21	Yes	5	0.00000001	0.00015912
22	Yes	5	0.00000001	0.00019769
23	Yes	4	0.00000001	0.00046410
24	Yes	5	0.00000001	0.00018022
25	Yes	5	0.00000001	0.00016170
26	Yes	5	0.00000001	0.00020729

Maximum Tower Deflections - Service Wind

Section No.	Elevation ft	Horz. Deflection in	Gov. Load Comb.	Tilt °	Twist °
L1	160 - 121.33	42.102	21	2.4722	0.0700
L2	126 - 98.6667	25.537	21	2.0479	0.0367
L3	98.6667 - 81.33	15.143	21	1.5263	0.0187
L4	87 - 64	11.671	21	1.3140	0.0141
L5	64 - 41.417	6.198	21	0.9153	0.0080
L6	48 - 35.5	3.547	21	0.6681	0.0052
L7	35.5 - 33.3333	1.948	21	0.5310	0.0039
L8	33.3333 - 0	1.714	21	0.4995	0.0036

Critical Deflections and Radius of Curvature - Service Wind

Elevation ft	Appurtenance	Gov. Load Comb.	Deflection in	Tilt °	Twist °	Radius of Curvature ft
158.0000	GPS_A	21	41.080	2.4514	0.0679	19279
156.0000	RR90-17-00DP w/ Mount Pipe	21	40.058	2.4304	0.0658	19279
147.0000	800 10121 w/ Mount Pipe	21	35.502	2.3329	0.0565	7414
140.0000	VHLP2-11	21	32.044	2.2496	0.0495	4819
138.0000	Side Arm Mount [SO 102-3]	21	31.076	2.2241	0.0476	4380
137.0000	APXVSPP18-C-A20 w/ Mount Pipe	21	30.597	2.2109	0.0466	4190
127.0000	ERICSSON AIR 21 B2A B4P w/ Mount Pipe	21	25.979	2.0643	0.0375	2955
110.0000	VHLP2-11	21	19.059	1.7492	0.0249	2763
107.0000	LLPX310R w/ Mount Pipe	21	17.968	1.6895	0.0231	2750
100.0000	APXV18-206517S-C w/ Mount Pipe	21	15.575	1.5519	0.0193	2747
80.0000	OG-860/1920/GPS-A	21	9.807	1.1915	0.0119	3551

Maximum Tower Deflections - Design Wind

Section No.	Elevation ft	Horz. Deflection in	Gov. Load Comb.	Tilt °	Twist °
L1	160 - 121.33	120.955	4	7.0983	0.2007
L2	126 - 98.6667	73.460	4	5.8889	0.1047
L3	98.6667 - 81.33	43.595	4	4.3931	0.0532
L4	87 - 64	33.609	4	3.7830	0.0401
L5	64 - 41.417	17.856	4	2.6365	0.0229
L6	48 - 35.5	10.220	4	1.9249	0.0148
L7	35.5 - 33.3333	5.613	4	1.5302	0.0111
L8	33.3333 - 0	4.939	4	1.4393	0.0103

Critical Deflections and Radius of Curvature - Design Wind

Elevation ft	Appurtenance	Gov. Load Comb.	Deflection in	Tilt °	Twist °	Radius of Curvature ft
158.0000	GPS_A	4	118.025	7.0391	0.1946	6919
156.0000	RR90-17-00DP w/ Mount Pipe	4	115.098	6.9796	0.1886	6919
147.0000	800 10121 w/ Mount Pipe	4	102.037	6.7023	0.1617	2659
140.0000	VHLP2-11	4	92.123	6.4652	0.1415	1726
138.0000	Side Arm Mount [SO 102-3]	4	89.349	6.3923	0.1359	1569
137.0000	APXVSPP18-C-A20 w/ Mount Pipe	4	87.974	6.3548	0.1332	1500
127.0000	ERICSSON AIR 21 B2A B4P w/ Mount Pipe	4	74.726	5.9359	0.1071	1056

Elevation ft	Appurtenance	Gov. Load Comb.	Deflection in	Tilt °	Twist °	Radius of Curvature ft
110.0000	VHLP2-11	4	54.855	5.0328	0.0710	977
107.0000	LLPX310R w/ Mount Pipe	4	51.717	4.8615	0.0658	971
100.0000	APXV18-206517S-C w/ Mount Pipe	4	44.836	4.4664	0.0551	966
80.0000	OG-860/1920/GPS-A	4	28.245	3.4308	0.0340	1243

Compression Checks

Pole Design Data

Section No.	Elevation ft	Size	L ft	L_u ft	Kl/r	F_a ksi	A in^2	Actual P K	Allow. P_a K	Ratio $\frac{P}{P_a}$
L1	160 - 121.33 (1)	TP29.77x21.65x0.25	38.6700	0.0000	0.0	39.000	22.9742	-10.72	895.99	0.012
L2	121.33 - 98.6667 (2)	TP34.0293x28.2894x0.375	27.3333	0.0000	0.0	39.000	40.6376	-17.07	1584.87	0.011
L3	98.6667 - 81.33 (3)	TP37.67x34.0293x0.4924	17.3367	0.0000	0.0	34.488	57.0537	-20.24	1967.67	0.010
L4	81.33 - 64 (4)	TP40.5584x35.4946x0.5	23.0000	0.0000	0.0	39.000	64.4941	-28.20	2515.27	0.011
L5	64 - 41.417 (5)	TP45.3x40.5584x0.635	22.5830	0.0000	0.0	35.400	88.5018	-34.23	3132.96	0.011
L6	41.417 - 35.5 (6)	TP45.5434x42.6478x0.6931	12.5000	0.0000	0.0	35.460	100.0920	-41.38	3549.25	0.012
L7	35.5 - 33.3333 (7)	TP45.9985x45.5434x0.6916	2.1667	0.0000	0.0	35.466	100.8920	-42.32	3578.23	0.012
L8	33.3333 - 0 (8)	TP53x45.9985x0.635	33.3333	0.0000	0.0	37.404	107.0670	-56.81	4004.75	0.014

Pole Bending Design Data

Section No.	Elevation ft	Size	Actual M_x kip-ft	Actual f_{bx} ksi	Allow. F_{bx} ksi	Ratio $\frac{f_{bx}}{F_{bx}}$	Actual M_y kip-ft	Actual f_{by} ksi	Allow. F_{by} ksi	Ratio $\frac{f_{by}}{F_{by}}$
L1	160 - 121.33 (1)	TP29.77x21.65x0.25	546.07	40.915	39.000	1.049	0.00	0.000	39.000	0.000
L2	121.33 - 98.6667 (2)	TP34.0293x28.2894x0.375	1366.15	49.189	39.000	1.261	0.00	0.000	39.000	0.000
L3	98.6667 - 81.33 (3)	TP37.67x34.0293x0.4924	1768.65	42.525	34.488	1.233	0.00	0.000	34.488	0.000
L4	81.33 - 64 (4)	TP40.5584x35.4946x0.5	2624.60	50.091	39.000	1.284	0.00	0.000	39.000	0.000
L5	64 - 41.417 (5)	TP45.3x40.5584x0.635	3264.22	42.108	35.400	1.189	0.00	0.000	35.400	0.000
L6	41.417 - 35.5 (6)	TP45.5434x42.6478x0.6931	3790.93	41.761	35.460	1.178	0.00	0.000	35.460	0.000
L7	35.5 - 33.3333 (7)	TP45.9985x45.5434x0.6916	3884.43	42.016	35.466	1.185	0.00	0.000	35.466	0.000
L8	33.3333 - 0 (8)	TP53x45.9985x0.635	5394.71	47.427	37.404	1.268	0.00	0.000	37.404	0.000

Pole Shear Design Data

Section No.	Elevation ft	Size	Actual V K	Actual f_v ksi	Allow. F_v ksi	Ratio $\frac{f_v}{F_v}$	Actual T kip-ft	Actual f_{vt} ksi	Allow. F_{vt} ksi	Ratio $\frac{f_{vt}}{F_{vt}}$
L1	160 - 121.33 (1)	TP29.77x21.65x0.25	27.54	1.199	26.000	0.094	25.19	0.891	26.000	0.034
L2	121.33 - 98.6667 (2)	TP34.0293x28.2894x0.375	33.64	0.828	26.000	0.065	26.42	0.448	26.000	0.017
L3	98.6667 - 81.33 (3)	TP37.67x34.0293x0.4924	35.37	0.620	22.992	0.055	26.32	0.297	22.992	0.013
L4	81.33 - 64 (4)	TP40.5584x35.4946x0.5	38.84	0.602	26.000	0.047	26.15	0.235	26.000	0.009
L5	64 - 41.417 (5)	TP45.3x40.5584x0.635	41.13	0.465	23.600	0.040	26.00	0.157	23.600	0.007
L6	41.417 - 35.5 (6)	TP45.5434x42.6478x0.6931	43.03	0.430	23.640	0.037	25.89	0.134	23.640	0.006
L7	35.5 - 33.3333 (7)	TP45.9985x45.5434x0.6916	43.30	0.429	23.644	0.037	25.87	0.131	23.644	0.006
L8	33.3333 - 0 (8)	TP53x45.9985x0.635	47.38	0.442	24.936	0.036	25.59	0.106	24.936	0.004

Pole Interaction Design Data

Section No.	Elevation ft	Ratio $\frac{P}{P_a}$	Ratio $\frac{f_{bx}}{F_{bx}}$	Ratio $\frac{f_{by}}{F_{by}}$	Ratio $\frac{f_v}{F_v}$	Ratio $\frac{f_{vt}}{F_{vt}}$	Comb. Stress Ratio	Allow. Stress Ratio	Criteria
L1	160 - 121.33 (1)	0.012	1.049	0.000	0.094	0.034	1.068 ✔	1.333	H1-3+VT ✔
L2	121.33 - 98.6667 (2)	0.011	1.261	0.000	0.065	0.017	1.274 ✔	1.333	H1-3+VT ✔
L3	98.6667 - 81.33 (3)	0.010	1.233	0.000	0.055	0.013	1.245 ✔	1.333	H1-3+VT ✔
L4	81.33 - 64 (4)	0.011	1.284	0.000	0.047	0.009	1.297 ✔	1.333	H1-3+VT ✔
L5	64 - 41.417 (5)	0.011	1.189	0.000	0.040	0.007	1.201 ✔	1.333	H1-3+VT ✔
L6	41.417 - 35.5 (6)	0.012	1.178	0.000	0.037	0.006	1.190 ✔	1.333	H1-3+VT ✔
L7	35.5 - 33.3333 (7)	0.012	1.185	0.000	0.037	0.006	1.197 ✔	1.333	H1-3+VT ✔
L8	33.3333 - 0 (8)	0.014	1.268	0.000	0.036	0.004	1.283 ✔	1.333	H1-3+VT ✔

Section Capacity Table

Section No.	Elevation ft	Component Type	Size	Critical Element	P K	$SF*P_{allow}$ K	% Capacity	Pass Fail
L1	160 - 121.33	Pole	TP29.77x21.65x0.25	1	-10.72	1194.36	80.1	Pass
L2	121.33 - 98.6667	Pole	TP34.0293x28.2894x0.375	2	-17.07	2112.63	95.6	Pass
L3	98.6667 - 81.33	Pole	TP37.67x34.0293x0.4924	3	-20.24	2622.90	93.4	Pass
L4	81.33 - 64	Pole	TP40.5584x35.4946x0.5	4	-28.20	3352.85	97.3	Pass
L5	64 - 41.417	Pole	TP45.3x40.5584x0.635	5	-34.23	4176.24	90.1	Pass
L6	41.417 - 35.5	Pole	TP45.5434x42.6478x0.6931	6	-41.38	4731.15	89.3	Pass
L7	35.5 - 33.3333	Pole	TP45.9985x45.5434x0.6916	7	-42.32	4769.78	89.8	Pass
L8	33.3333 - 0	Pole	TP53x45.9985x0.635	8	-56.81	5338.33	96.2	Pass
							Summary	
						Pole (L4)	97.3	Pass
						RATING =	**97.3**	**Pass**

APPENDIX B

BASE LEVEL DRAWING

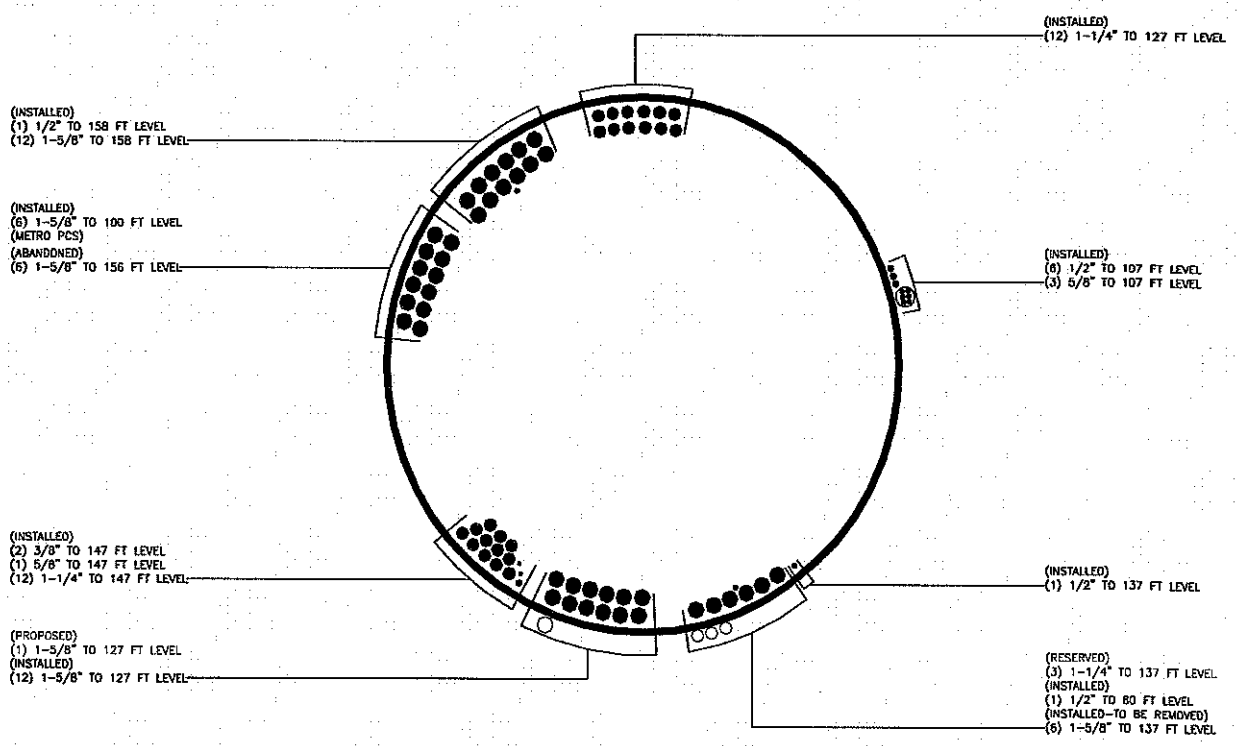
(INSTALLED)
(12) 1-1/4" TO 127 FT LEVEL
(INSTALLED)
(1) 1/2" TO 158 FT LEVEL
(12) 1-5/8" TO 158 FT LEVEL
(INSTALLED)
(6) 1-5/8" TO 100 FT LEVEL
(METRO PCS)
(ABANDONED)
(6) 1-5/8" TO 156 FT LEVEL
(INSTALLED)
(6) 1/2" TO 107 FT LEVEL
(3) 5/8" TO 107 FT LEVEL
(INSTALLED)
(2) 3/8" TO 147 FT LEVEL
(1) 5/8" TO 147 FT LEVEL
(12) 1-1/4" TO 147 FT LEVEL
(INSTALLED)
(1) 1/2" TO 137 FT LEVEL
(PROPOSED)
(1) 1-5/8" TO 127 FT LEVEL
(INSTALLED)
(12) 1-5/8" TO 127 FT LEVEL
(RESERVED)
(3) 1-1/4" TO 137 FT LEVEL
(INSTALLED)
(1) 1/2" TO 80 FT LEVEL
(INSTALLED-TO BE REMOVED)
(6) 1-5/8" TO 137 FT LEVEL

APPENDIX C

ADDITIONAL CALCULATIONS

Section	1	2	3	4	5	6	7	8
Length (ft)	38.6700	27.3333	17.3367	23.0000	22.5830	12.5000	2.1667	33.3333
Number of Sides	12	12	12	12	12	12	12	12
Thickness (in)	0.2500	0.3750	0.4924	0.5000	0.6350	0.6931	0.8910	0.6350
Socket Length (ft)	4.6700		5.6700		6.5830			
Top Dia (in)	21.6500	28.2894	34.0293	35.4946	40.5584	42.6478	45.5434	45.9985
Bot Dia (in)	29.7700	34.0293	37.6700	40.5584	45.3000	45.5434	45.9985	53.0000
Grade	A572-65		Reinf 57.48 ksi	A572-65	Reinf 59.00 ksi	Reinf 59.10 ksi	Reinf 59.11 ksi	Reinf 62.34 ksi
Weight (K)	2.7	3.5	3.3	4.7	6.6	4.1	0.7	11.3

37.0

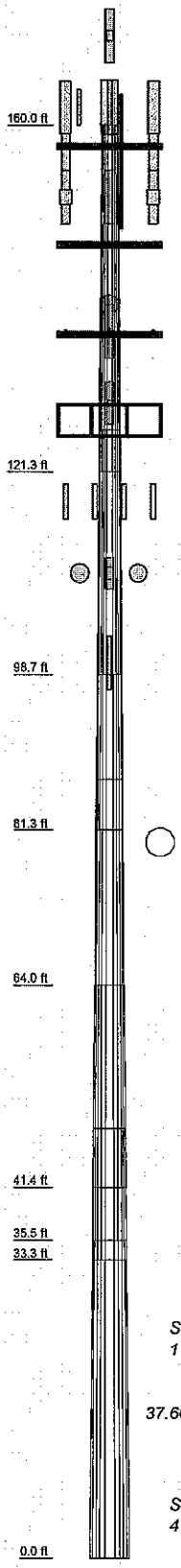

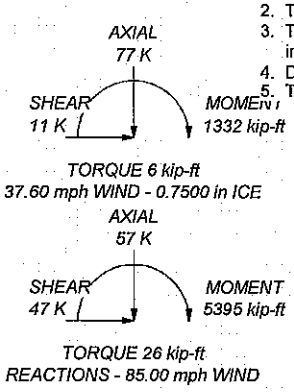

DESIGNED APPURTENANCE LOADING

TYPE	ELEVATION	TYPE	ELEVATION
GPS_A	158	800MHZ RRH	137
(2) LPA-80063/4CF w/ Mount Pipe	158	800MHZ RRH	137
(2) LPA-80063/6CF w/ Mount Pipe	158	800MHZ RRH	137
(2) SC-E 6014 rev2 w/ Mount Pipe	158	1900MHz RRH (65MHz)	137
BXA-171063-8BF-2 w/ Mount Pipe	158	1900MHz RRH (65MHz)	137
BXA-171063-12BF w/ Mount Pipe	158	1900MHz RRH (65MHz)	137
BXA-171063-12BF w/ Mount Pipe	158	APXVSPP18-C-A20 w/ Mount Pipe	137
BXA-70040/6CF w/ Mount Pipe	158	(2) DB980H90E-M w/ Mount Pipe	137
BXA-70040/6CF w/ Mount Pipe	158	(2) DB950F85E-M w/ Mount Pipe	137
BXA-70040/6CF w/ Mount Pipe	158	(2) DB980H90E-M w/ Mount Pipe	137
(2) FD9R6004/2C-3L	158	Horizon DUO	137
(2) FD9R6004/2C-3L	158	Platform Mount [LP 713-1]	137
(2) FD9R6004/2C-3L	158	VHLP2-11	137
Platform Mount [LP 713-1]	158	ERICSSON AIR 21 B2A B4P w/ Mount Pipe	127
RR90-17-00DP w/ Mount Pipe	156	ERICSSON AIR 21 B2A B4P w/ Mount Pipe	127
RR90-17-00DP w/ Mount Pipe	156		
RR90-17-00DP w/ Mount Pipe	156	KRY 112 144/1	127
CS72993.07	156	KRY 112 144/1	127
CS72993.07	156	KRY 112 144/1	127
(2) CS72993.07	156	(4) DB844H90-XY w/ Mount Pipe	127
4.5" OD x 15' Pipe	156	(4) DB844H90-XY w/ Mount Pipe	127
Pipe Mount [PM 601-3]	156	(4) DB844H90-XY w/ Mount Pipe	127
800 10121 w/ Mount Pipe	147	Platform Mount [LP 713-1]	127
800 10121 w/ Mount Pipe	147	ERICSSON AIR 21 B2A B4P w/ Mount Pipe	127
800 10121 w/ Mount Pipe	147		
(2) P65-16-XLH-RR w/ Mount Pipe	147	LLPX310R w/ Mount Pipe	107
(2) P65-16-XLH-RR w/ Mount Pipe	147	LLPX310R w/ Mount Pipe	107
(2) P65-16-XLH-RR w/ Mount Pipe	147	WiMAX DAP HEAD	107
(2) TTAW-07BP111-001	147	WiMAX DAP HEAD	107
(2) TTAW-07BP111-001	147	WiMAX DAP HEAD	107
(2) TTAW-07BP111-001	147	HORIZON COMPACT	107
(2) RRUS-11	147	HORIZON COMPACT	107
(2) RRUS-11	147	Side Arm Mount [SO 101-3]	107
(2) RRUS-11	147	LLPX310R w/ Mount Pipe	107
DC6-48-60-18-8F	147	VHLP2-11	107
Platform Mount [LP 713-1]	147	PX2F-52	107
Side Arm Mount [SO 102-3]	138	Pipe Mount [PM 601-3]	100
APXVSPP18-C-A20 w/ Mount Pipe	137	APXV18-206517S-C w/ Mount Pipe	100
APXVSPP18-C-A20 w/ Mount Pipe	137	APXV18-206517S-C w/ Mount Pipe	100
800 EXTERNAL NOTCH FILTER	137	APXV18-206517S-C w/ Mount Pipe	100
800 EXTERNAL NOTCH FILTER	137	OG-860/1920/GPS-A	80
800 EXTERNAL NOTCH FILTER	137	Side Arm Mount [SO 701-1]	80
(3) ACU-A20-N	137	Side Arm Mount [SO 701-1]	80
(3) ACU-A20-N	137		
(3) ACU-A20-N	137		

MATERIAL STRENGTH

GRADE	Fy	Fu	GRADE	Fy	Fu
A572-65	65 ksi	80 ksi	Reinf 59.10 ksi	59 ksi	74 ksi
Reinf 57.48 ksi	57 ksi	72 ksi	Reinf 59.11 ksi	59 ksi	74 ksi
Reinf 59.00 ksi	59 ksi	74 ksi	Reinf 62.34 ksi	62 ksi	78 ksi

TOWER DESIGN NOTES

1. Tower is located in New Haven County, Connecticut.
2. Tower designed for a 85.00 mph basic wind in accordance with the TIA/EIA-222-F Standard.
3. Tower is also designed for a 37.60 mph basic wind with 0.75 in ice. Ice is considered to increase in thickness with height.
4. Deflections are based upon a 50.00 mph wind.
5. TOWER RATING: 97.3%

Paul J Ford and Company
250 E. Broad Street Suite 600
Columbus, OH 43215
Phone: 614.221.6679
FAX: 614.448.44105

Job: ***160 FT Monopole / NHV 2071 143137***			
Project: ***PJF 37513-2007 R2 / BU 806939***			
Client: Crown Castle	Drawn by: Robert Koors		App'd:
Code: TIA/EIA-222-F	Date: 10/31/13		Scale: NTS
Path: T:\375 Crown Castle\2013\37513-2007 BU 806939\VO 9972B BU 806939 - R2\37513-2007 R2 AERO Reinforced.er			Dwg No. E-1

Stiffened or Unstiffened, Ungrouted, Circular Base Plate - Any Rod Material

TIA Rev F

Site Data

BU#: *806939*
Site Name:
App #:

Pole Manufacturer:	*Other*

Reactions		
Moment:	5395	ft-kips
Axial:	57	kips
Shear:	47	kips

Anchor Rod Data		
Qty:	24	
Diam:	2.25	in
Rod Material:	A615-J	
Strength (Fu):	100	ksi
Yield (Fy):	75	ksi
Bolt Circle:	61.37	in

If No stiffeners, Criteria: AISC ASD <-Only Applcable to Unstiffened Cases

Anchor Rod Results

Maximum Rod Tension:	173.4 Kips	
Allowable Tension:	195.0 Kips	
Anchor Rod Stress Ratio:	89.0% **Pass**	

Rigid
Service, ASD
Fty*ASIF

Plate Data		
Diam:	67.37	in
Thick:	3	in
Grade:	60	ksi
Single-Rod B-eff:	7.10	in

Base Plate Results Flexural Check

Base Plate Stress:	43.0 ksi	
Allowable Plate Stress:	60.0 ksi	
Base Plate Stress Ratio:	71.7% **Pass**	

Rigid
Service ASD
0.75*Fy*ASIF
Y.L. Length: 30.94

Stiffener Data (Welding at both sides)		
Config:	0	*
Weld Type:		
Groove Depth:		in **
Groove Angle:		degrees
Fillet H. Weld:		<-- Disregard
Fillet V. Weld:		in
Width:		in
Height:		in
Thick:		in
Notch:		in
Grade:		ksi
Weld str.:		ksi

n/a

Stiffener Results

Horizontal Weld :	n/a
Vertical Weld:	n/a
Plate Flex+Shear, fb/Fb+(fv/Fv)^2:	n/a
Plate Tension+Shear, ft/Ft+(fv/Fv)^2:	n/a
Plate Comp. (AISC Bracket):	n/a

Pole Results

Pole Punching Shear Check: n/a

Pole Data		
Diam:	53	in
Thick:	0.563	in
Grade:	65	ksi
# of Sides:	12	"0" IF Round
Fu	80	ksi
Reinf. Fillet Weld	0	"0" if None

Stress Increase Factor		
ASIF:	1.333	

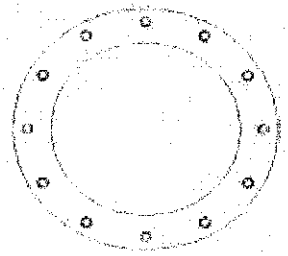

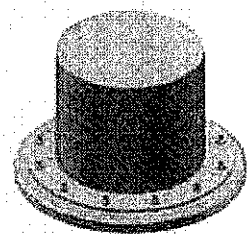

* 0 = none, 1 = every bolt, 2 = every 2 bolts, 3 = 2 per bolt

** Note: for complete joint penetration groove welds the groove depth must be exactly 1/2 the stiffener thickness for calculation purposes

PJF job no. **37513-2007 R2** Project name **#**

Foundation Loads:

Pole weight or tower leg compression =	57	(kips)
Horizontal load at top of pier =	47	(kips)
Overturning moment at top of pier=	5395	(ft-kips)

Design criteria:

Safety factor against overturning =	1.5	

Soil Properties:

Soil density =	115	(pcf)
Allowable soil bearing =	5	(ksf)
Depth to water table =	8	(ft)

Dimensions:

Pier shape (round or square)	R	("R" or "S")
Pier width =	7	(ft)
Pier height above grade =	0.5	(ft)
depth to bottom of footing =	9.5	(ft)
Footing thickness =	3.5	(ft)
Footing width =	30	(ft)
Footing length =	30	(ft)

Concrete:

Concrete strength =	4	(ksi)
Rebar strength =	60	(ksi)
ultimate load factor =	1.3	

Reinforcing Steel:

	Pad	
minimum cover over rebar =	3	inches
size of pad rebar =	#11	bar
quantity of pad rebar =	28	(ea direction)

Reinforcing Steel:

	Pier	
size of vert rebar in pier=	#11	bar
vertical rebar quantity =	36	
size of pier ties =	#5	bar
minimum cover over rebar =	3	inches

Total volume of concrete = #### cu yd

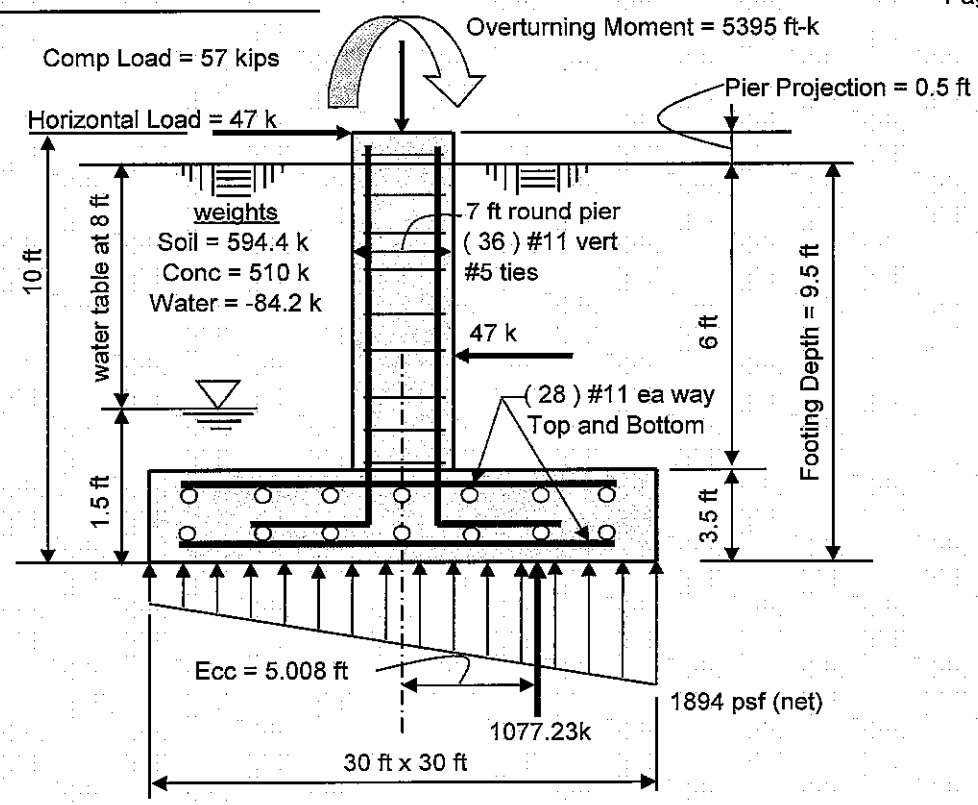

Summary of analysis results	
Maximum Net Soil Bearing = 1.894 ksf Allowable Net Soil Bearing = 5 ksf **Soil Bearing Stress Ratio = 0.38 Okay**	Ult Bending Shear Capacity = 126 psi Ult Bending Shear Stress = 30 psi **Bending Shear Stress Ratio = 0.24 Okay**
Ftg Overturning Resistance = 16158 ft-kips Overturning Moment = 5395 ft-kips Required Overturning Safety Factor = 1.5 Overturning Safety Factor = 2.995 **Ratio = 0.5 Okay**	Pad Bending Moment Capacity= 7050 ft-k Pad Bending Moment = 2496 ft-k **Bending Moment Stress Ratio = 0.35 OK**

```
                        oooooo              o
                       oo    oo            oo
 ooooo    oooooo      oo          ooooo    oo      oo   oo   o oooooooooo    o ooooo
oo    o   oo   oo     oo         oo   oo   oo      oo   oo    oo   oo   oo    oo   oo
oo        oo   oo     oo         oo   oo   oo      oo   oo    oo   oo   oo    oo   oo
 ooooo    oo   oo     oo         oo   oo   oo      oo   oo    oo   oo   oo    oo   oo
     oo   oooooo      oo         oo   oo   oo      oo   oo    oo   oo   oo    oo   oo
o    oo   oo          oo    oo   oo   oo   oo  o   oo   oo    oo   oo   oo    oo   oo
 ooooo    oo           oooooo     ooooo     ooo     ooooo o   oo   oo   oo    oo   oo (TM)
```

spColumn v4.80 (TM)
Computer program for the Strength Design of Reinforced Concrete Sections
Copyright © 1988-2011, STRUCTUREPOINT, LLC.
All rights reserved

Licensee stated above acknowledges that STRUCTUREPOINT (SP) is not and cannot be responsible for either the accuracy or adequacy of the material supplied as input for processing by the spColumn computer program. Furthermore, STRUCTUREPOINT neither makes any warranty expressed nor implied with respect to the correctness of the output prepared by the spColumn program. Although STRUCTUREPOINT has endeavored to produce spColumn error free the program is not and cannot be certified infallible. The final and only responsibility for analysis, design and engineering documents is the licensee's. Accordingly, STRUCTUREPOINT disclaims all responsibility in contract, negligence or other tort for any analysis, design or engineering documents prepared in connection with the use of the spColumn program.

General Information:

File Name: T:\375_Crown_Castle\2013\37513-2007 BU 806939\WO 667783 BU 806939 - R2\37513-2007 R2.col
Project: 37513-2007_R1
Column:
Code: ACI 318-08

Engineer: LGR
Units: English

Run Option: Investigation
Run Axis: X-axis

Slenderness: Not considered
Column Type: Structural

Material Properties:

f'c = 4 ksi
Ec = 3605 ksi
Ultimate strain = 0.003 in/in
Beta1 = 0.85

fy = 60 ksi
Es = 29000 ksi

Section:

Circular: Diameter = 84 in

Gross section area, Ag = 5541.77 in^2
Ix = 2.44392e+006 in^4
rx = 21 in
Xo = 0 in

Iy = 2.44392e+006 in^4
ry = 21 in
Yo = 0 in

Reinforcement:

Bar Set: ASTM A615

Size	Diam (in)	Area (in^2)	Size	Diam (in)	Area (in^2)	Size	Diam (in)	Area (in^2)
# 3	0.38	0.11	# 4	0.50	0.20	# 5	0.63	0.31
# 6	0.75	0.44	# 7	0.88	0.60	# 8	1.00	0.79
# 9	1.13	1.00	# 10	1.27	1.27	# 11	1.41	1.56
# 14	1.69	2.25	# 18	2.26	4.00			

Confinement: Tied; #5 ties with #10 bars, #5 with larger bars.
phi(a) = 0.8, phi(b) = 0.9, phi(c) = 0.65

Layout: Circular
Pattern: All Sides Equal (Cover to transverse reinforcement)
Total steel area: As = 56.16 in^2 at rho = 1.01%
Minimum clear spacing = 5.16 in

36 #11 Cover = 3 in

Factored Loads and Moments with Corresponding Capacities:

No.	Pu kip	Mux k-ft	PhiMnx k-ft	PhiMn/Mu	NA depth in	Dt depth in	eps_t	Phi
1	57.00	7695.67	8682.88	1.128	15.32	79.67	0.01260	0.900

*** End of output ***

EBI Consulting

environmental | engineering | due diligence

RADIO FREQUENCY EMISSIONS ANALYSIS REPORT
EVALUATION OF HUMAN EXPOSURE POTENTIAL TO NON-IONIZING EMISSIONS

T-Mobile Existing Facility

Site ID: CT11084B

Orange MP X56-57
800 Ogg Meadow Road
Orange, CT 06477

December 6, 2013

EBI Project Number: 69132466

21 B Street Burlington, MA 01803 Tel: (781) 273.2500 Fax: (781) 273.3311

EBI Consulting
environmental | engineering | due diligence

December 6, 2013

T-Mobile USA
Attn: Jason Overbey, RF Manager
35 Griffin Road South
Bloomfield, CT 06002

Re: Emissions Values for Site: **CT11084B - Orange MP X56-57**

EBI Consulting was directed to analyze the proposed T-Mobile facility located at 800 Ogg Meadow Road, Orange, CT, for the purpose of determining whether the emissions from the Proposed T-Mobile Antenna Installation located on this property are within specified federal limits.

All information used in this report was analyzed as a percentage of current Maximum Permissible Exposure (% MPE) as listed in the FCC OET Bulletin 65 Edition 97-01and ANSI/IEEE Std C95.1. The FCC regulates Maximum Permissible Exposure in units of microwatts per square centimeter (μW/cm2). The number of μW/cm2 calculated at each sample point is called the power density. The exposure limit for power density varies depending upon the frequencies being utilized. Wireless Carriers and Paging Services use different frequency bands each with different exposure limits, therefore it is necessary to report results and limits in terms of percent MPE rather than power density.

All results were compared to the FCC (Federal Communications Commission) radio frequency exposure rules, 47 CFR 1.1307(b)(1) – (b)(3), to determine compliance with the Maximum Permissible Exposure (MPE) limits for General Population/Uncontrolled environments as defined below.

General population/uncontrolled exposure limits apply to situations in which the general public may be exposed or in which persons who are exposed as a consequence of their employment may not be made fully aware of the potential for exposure or cannot exercise control over their exposure. Therefore, members of the general public would always be considered under this category when exposure is not employment related, for example, in the case of a telecommunications tower that exposes persons in a nearby residential area.

Public exposure to radio frequencies is regulated and enforced in units of microwatts per square centimeter (μW/cm2). The general population exposure limit for the cellular band is 567 μW/cm2, and the general population exposure limit for the PCS band is 1000 μW/cm2. Because each carrier will be using different frequency bands, and each frequency band has different exposure limits, it is necessary to report percent of MPE rather than power density.

Occupational/controlled exposure limits apply to situations in which persons are exposed as a consequence of their employment and in which those persons who are exposed have been made fully aware of the potential for exposure and can exercise control over their exposure. Occupational/controlled exposure limits also apply where exposure is of a transient nature as a result of incidental passage through a location where exposure levels may be above general population/uncontrolled limits (see below), as long as the exposed person has been made fully aware of the potential for exposure and can exercise control over his or her exposure by leaving the area or by some other appropriate means.

Additional details can be found in FCC OET 65.

CALCULATIONS

Calculations were done for the proposed T-Mobile Wireless antenna facility located at 800 Ogg Meadow Road, Orange, CT, using the equipment information listed below. All calculations were performed per the specifications under FCC OET 65. Since T-Mobile is proposing highly focused directional panel antennas, which project most of the emitted energy out toward the horizon, the actual antenna pattern gain value in the direction of the sample area was used. For this report the sample point is a 6 foot person standing at the base of the tower

For all calculations, all equipment was calculated using the following assumptions:

1) 2 GSM channels (1935.000 MHz—to 1945.000 MHz / 1980.000 MHz—to 1985.000 MHz) were considered for each sector of the proposed installation.
2) 2 UMTS channels (2110.000 MHz to 2120.000 MHz / 2140.000 MHz to 2145.000 MHz) were considered for each sector of the proposed installation
3) 2 LTE channels (2110.000 MHz to 2120.000 MHz / 2140.000 MHz to 2145.000 MHz) were considered for each sector of the proposed installation
4) All radios at the proposed installation were considered to be running at full power and were uncombined in their RF transmissions paths per carrier prescribed configuration. Per FCC OET Bulletin No. 65 - Edition 97-01 recommendations to achieve the maximum anticipated value at each sample point, all power levels emitting from the proposed antenna installation are increased by a factor of 2.56 to account for possible in-phase reflections from the surrounding environment. This is rarely the case, and if so, is never continuous.
5) For the following calculations the sample point was the top of a six foot person standing at the base of the tower. The actual gain in this direction was used per the manufactures supplied specifications.
6) The antenna used in this modeling is the Ericsson AIR21 for LTE, UMTS and GSM. This is based on feedback from the carrier with regards to anticipated antenna selection. This antenna has a 15.6 dBd gain value at its main lobe. Actual antenna gain values were used for all calculations as per the manufacturers specifications

7) The antenna mounting height centerline of the proposed antennas is **129 feet** above ground level (AGL)
8) Emissions values for additional carriers were taken from the Connecticut Siting Council active database. Values in this database are provided by the individual carriers themselves.

All calculation were done with respect to uncontrolled / general public threshold limits

Site ID	CT11084B - Orange MP X56-57
Site Address	800 Ogg Meadow Road, Orange, CT 06477
Site Type	Monopole

Sector 1

Antenna Number	Antenna Make	Antenna Model	Status	Frequency Band	Technology	Power Out Per Channel (Watts)	Number of Channels	Composite Power	Antenna Gain in direction of sample point (dBd)	Antenna Height (ft)	analysis height	Cable Size	Cable Loss (dB)	Additional Loss	ERP	Power Density Value	Power Density Percentage
1a	Ericsson	AIR21 B2A / B4P	Active	PCS - 1950 MHz	GSM / UMTS	30	4	120	-3.95	129	123	7/8"	1.2	0	36.659053	0.871118	0.08711%
1B	Ericsson	AIR21 B2A / B4P	Active	AWS - 2100 MHz	UMTS / LTE	40	4	160	-3.95	129	123	7/8"	1.2	0	48.878738	1.161491	0.11615%
														Sector total Power Density Value:			0.203%

Sector 2

Antenna Number	Antenna Make	Antenna Model	Status	Frequency Band	Technology	Power Out Per Channel (Watts)	Number of Channels	Composite Power	Antenna Gain in direction of sample point (dBd)	Antenna Height (ft)	analysis height	Cable Size	Cable Loss (dB)	Additional Loss	ERP	Power Density Value	Power Density Percentage
1a	RFS	APX16DWV-16DWVS	Active	PCS - 1950 MHz	GSM / UMTS	30	4	120	-3.95	129	123	7/8"	1.2	0	36.659053	0.871118	0.08711%
1B	RFS	APX16DWV-16DWVS	Active	AWS - 2100 MHz	UMTS / LTE	40	4	160	-3.95	129	123	1-5/8"	1.2	0	48.878738	1.161491	0.11615%
														Sector total Power Density Value:			0.203%

Sector 3

Antenna Number	Antenna Make	Antenna Model	Status	Frequency Band	Technology	Power Out Per Channel (Watts)	Number of Channels	Composite Power	Antenna Gain in direction of sample point (dBd)	Antenna Height (ft)	analysis height	Cable Size	Cable Loss (dB)	Additional Loss	ERP	Power Density Value	Power Density Percentage
1a	Ericsson	AIR21 B2A / B4P	Active	PCS - 1950 MHz	GSM / UMTS	30	4	120	-3.95	129	123	7/8"	1.2	0	36.659053	0.871118	0.08711%
1B	Ericsson	AIR21 B2A / B4P	Active	AWS - 2100 MHz	UMTS / LTE	40	4	160	-3.95	129	123	1-5/8"	1.2	0	48.878738	1.161491	0.11615%
														Sector total Power Density Value:			0.203%

Site Composite MPE %	
Carrier	MPE %
T-Mobile	0.610%
AT&T	16.310%
MetroPCS	6.810%
Verizon Wireless	15.020%
Clearwire	1.540%
Nextel	4.170%
Sprint	7.510%
Metricom	0.570%
XM	2.040%
Total Site MPE %	**54.580%**

Summary

All calculations performed for this analysis yielded results that were well within the allowable limits for general public exposure to RF Emissions.

The anticipated Maximum Composite contributions from the T-Mobile facility are **0.610% (0.203% from each sector)** of the allowable FCC established general public limit considering all three sectors simultaneously sampled at the ground level.

The anticipated composite MPE value for this site assuming all carriers present is **54.580%** of the allowable FCC established general public limit sampled at the ground level. This is based upon values listed in the Connecticut Siting Council database for existing carrier emissions.

FCC guidelines state that if a site is found to be out of compliance (over allowable thresholds), that carriers over a 5% contribution to the composite value will require measures to bring the site into compliance. For this facility, the composite values calculated were within the allowable 100% threshold standard per the federal government.

Scott Heffernan
RF Engineering Director

EBI Consulting
21 B Street
Burlington, MA 01803