CUDDY +FEDER LLP

445 Hamilton Avenue, 14th Floor
White Plains, New York 10601
T 914 761 1300
F 914 761 5372
cuddyfeder.com

Lucia Chiocchio
lchiocchio@cuddyfeder.com

3/25/20

BY ELECTRONIC MAIL
Melanie A. Bachman
Executive Director
Connecticut Siting Council
10 Franklin Square
New Britain, CT 06051

Re: New Cingular Wireless PCS, LLC ("AT&T")
Notice of Exempt Modification
Emergency Back-up Generator
223 Rogers Road, Norwich, CT 06360
Lat.: 41.53365890° Long.: -72.13502690°

Dear Ms. Bachman:

This letter and enclosures are respectfully submitted on behalf of New Cingular Wireless PCS, LLC ("AT&T"). AT&T currently maintains its wireless telecommunications facility at 223 Rogers Road in the City of Norwich, Connecticut. Michael J. Coleman TR (c/o Property Tax Department) is the owner of the underlying property and American Tower Corporation is the owner of the tower. AT&T submits this letter and enclosures to the Connecticut Siting Council ("Council") to notify the Council of AT&T's intent to perform modifications to the existing facility that do not have substantial adverse environmental effects and thus do not require a certificate pursuant to Section 16-50k of the Connecticut General Statutes.

AT&T intends to install one (1) new Generac 30 KW Diesel Generator within the existing grade-level fenced equipment compound as demonstrated on the plans enclosed as Attachment 1. AT&T's existing facility supports its FirstNet program which provides first responders with priority access to AT&T's network to ensure adequate communication capabilities in the event of emergency. AT&T's proposed generator will ensure that critical communication capability for first responders and the public are not lost in the event of a loss of power.

AT&T's proposed generator will also advance the State's goal of natural disaster and emergency

preparedness. As discussed in the Council's Docket 432 Findings and Report and Docket 440 proceedings and Findings of Fact (Nos. 76- 77), in response to two significant storm events in 2011, the State formed a Two Storm Panel (the "Panel") that evaluated Connecticut's approach to planning and mitigation of impacts associated with emergencies and natural disasters. The Panel found that "wireless telecommunications service providers were not prepared to serve residential and business customers during a power outage" because certain companies had limited backup generator capacity.[1] The Panel also noted that "[t]he failure of a large portion of Connecticut's telecommunications system during the two storms is a life safety issue." The Panel recommended that State regulatory bodies review "telecommunications services currently in place to verify that the vendors have sufficient generator and backhaul capacity to meet the emergency needs of consumers and businesses" and that the "Connecticut Siting Council should require continuity of service plans for any cellular tower to be erected."[2] The planned modifications will ensure continuity of services by reinforcing AT&T's back-up power and backhaul capacity to meet the emergency needs of first responders, consumers and businesses in the event of a power outage.

The planned modifications to the facility fall squarely within the activities explicitly provided for in R.C.S.A. § 16-50j-72(b)(2) as the planned modifications:

- Will not result in an increase in the height of the existing structure;
- Will not require the extension of the site boundary;
- Will not increase noise levels at the facility by more than six decibels or more, or to levels that exceed state or local criteria since emergency backup generators are exempt from noise regulations as "noise created as a result of, or relating to, an emergency";[3]
- Will not increase radio frequency emission at the facility to a level at or above the Federal Communications Commission safety standards;
- Will not cause a change or alteration in the physical or environmental characteristics of the site; and
- Will not impair the structural integrity of the facility.

The original approvals for this facility were not available to AT&T at the time of this application.

[1] See Council Administrative Notice Item No. 39
[2] See Council Administrative Notice Item No. 39.
[3] R.C.S.A. § 22a-69-1.8.

The proposed modifications will have no impact on the existing tower structure itself or the radio-frequency emissions as the proposed modifications only consist of the addition of one new generator within the grade-level fenced equipment compound. Thus, AT&T respectfully requests a waiver from submission of information relating to the existing tower structure or the radio-frequency emissions.

Please accept this letter as notification pursuant to R.C.S.A. § 16-50j-73 for construction that constitutes an exempt modification pursuant to R.C.S.A. § 16-50j-73. In accordance with R.C.S.A. § 16-50j-73, a copy of this letter and enclosure are being sent by email to the City Mayor Peter Albert Nystrom and the Planning & Neighborhood Services Department as well as by first class mail to the property owner and structure owner identified above. Certificate of mailing is enclosed as Attachment 2.

For the foregoing reasons, AT&T respectfully submits that the proposed modification to the above referenced wireless telecommunications facility constitutes an exempt modification under R.C.S.A. § 16-50j-72(b)(2).

Very truly yours,

Lucia Chiocchio

Lucia Chiocchio

Attachments

cc: Mayor Peter Albert Nystrom, City of Norwich
Deanna Rhodes, City Planner
American Tower Corporation, Tower Owner
Michael J. Coleman TR (c/o Property Tax Department), Property Owner
AT&T
General Dynamics Information Technology
Daniel Patrick, Esq. & Julie Durkin, Cuddy & Feder, LLP

ATTACHMENT 1

© Copyright 2019 - Ramaker & Associates, Inc. - All Rights Reserved
DRAWN BY: TRB CHECKED BY: MJR

I:\45800\45813\CAD\45813_GD_ATT_GENERATOR ADD CDs_NORWICH-ROGERS RD_10034991_recover.dwg Printed by: rguerrero on Mar 19, 2020 - 9:41am

at&t Mobility

SITE NAME: NORWICH-ROGERS RD
FA LOCATION CODE: 10034991
ATC: 302493

GENERATOR PROJECT
30KW GENERAC DIESEL GENERATOR
200A GENERAC ATS

223 ROGERS ROAD
NORWICH, CT 06360

VICINITY MAP

AERIAL VIEW OF SITE

SCOPE OF WORK

ADD STANDBY GENERATOR, ASSOCIATED CONCRETE PAD, AND UTILITY EQUIPMENT TO EXISTING AT&T EQUIPMENT AREA. THERE WILL BE NO CHANGE IN THE SIZE OR HEIGHT OF THE TOWER OR ANTENNAS.

MEMBER ONE CALL SYSTEMS INTERNATIONAL

TO OBTAIN LOCATION OF PARTICIPANTS' UNDERGROUND FACILITIES BEFORE YOU DIG IN CONNECTICUT

CALL BEFORE YOU DIG
811 OR 1-800-922-4455

CONNECTICUT PUBLIC ACT 87-71 REQUIRES MIN. 2 WORKING DAYS NOTICE BEFORE YOU EXCAVATE.

PROJECT INFORMATION

PROJECT MANAGER:

JOE JARVIS
MARKET LEAD
GENERAL DYNAMICS WIRELESS SERVICES
661 MOORE RD STE 110
KING OF PRUSSIA, PA 19406
EMAIL: joseph.jarvis@gdit.com

ENGINEER:

RAMAKER & ASSOCIATES, INC.
855 COMMUNITY DRIVE
SAUK CITY, WI 53583
PH.: (608) 643-4100
FAX: (608) 643-7999
CONTACT: TYLER BEATTY
EMAIL: tbeatty@ramaker.com

APPLICANT INFORMATION:
AT&T MOBILITY
7150 STANDARD DR
HANOVER, MD 21076

SITE DATA:
SITE NAME: NORWICH-ROGERS RD
FA NUMBER: 10034991

TOWER OWNER:
AMERICAN TOWER CORPORATION
10 PRESIDENTIAL WAY
WOBURN, MA 01801

PROPERTY OWNER:
COLEMAN MICHAEL J TR
C/O PROPERTY TAX DEPT
P.O. BOX 723597
ATLANTA, GA 31139

ADDRESS:
223 ROGERS ROAD
NORWICH, CT 06360

COUNTY: NEW LONDON

LAT.: 41.53365890°
LONG.: -72.13502690°

GROUND ELEVATION: 385 FT AMSL

DO NOT SCALE DRAWINGS:
CONTRACTOR SHALL VERIFY ALL PLANS & EXISTING DIMENSIONS & CONDITIONS ON THE JOB SITE & SHALL IMMEDIATELY NOTIFY THE ENGINEER IN WRITING OF ANY DISCREPANCIES BEFORE PROCEEDING WITH THE WORK OR BE RESPONSIBLE FOR SAME.

THE INFORMATION CONTAINED IN THIS SET OF DOCUMENTS IS PROPRIETARY BY NATURE. ANY USE OR DISCLOSURE OTHER THAN THAT WHICH RELATES TO THE CLIENT IS STRICTLY PROHIBITED.

APPLICABLE BUILDING CODE & STANDARDS

ALL WORK AND MATERIALS SHALL BE PERFORMED AND INSTALLED IN ACCORDANCE WITH THE CURRENT EDITION OF THE FOLLOWING CODES AS ADOPTED BY THE GOVERNING LOCAL AUTHORITIES. NOTHING IN THESE PLANS ARE TO BE CONSTRUCTED TO PERMIT WORK NOT CONFORMING TO THESE CODES:

1. INTERNATIONAL BUILDING CODE 2015

2. NATIONAL ELECTRIC CODE 2017

3. AMERICAN CONCRETE INSTITUTE (ACI) 318, BUILDING CODE REQUIREMENTS FOR STRUCTURAL CONCRETE

4. AMERICAN INSTITUTE OF STEEL CONSTRUCTION (AISC), MANUAL OF STEEL CONSTRUCTION

5. TELECOMMUNICATIONS INDUSTRY ASSOCIATION (TIA) 222-G, STRUCTURAL STANDARDS FOR STEEL TOWER AND ANTENNA SUPPORTING STRUCTURES

6. TIA 607, COMMERCIAL BUILDING GROUNDING AND BONDING REQUIREMENTS FOR TELECOMMUNICATIONS

SHEET INDEX

GENERAL:

T-1 TITLE SHEET

NOTES:

N-1 GENERAL NOTES

SITE:

A-1 SITE PLAN
A-2 SITE PLAN & EQUIPMENT LAYOUT
S-1 FOUNDATION DETAILS

ELECTRICAL & GROUNDING:

E-1 WIRING DETAILS
E-2 PANEL AND PENETRATION DETAILS
E-3 ATS, CONDUIT & GROUND ROD DETAILS
E-4 GENERAC GENERATOR SPECIFICATIONS
E-4.1 GENERAC GENERATOR SPECIFICATIONS
E-4.2 GENERAC GENERATOR SPECIFICATIONS
E-5 GENERAC ATS SPECIFICATIONS
E-5.1 GENERAC ATS SPECIFICATIONS

SIGNATURE BLOCK

AT&T MGR. DATE

GENERAL DYNAMICS CONSTRUCTION MGR. DATE

SITE ACQUISITION DATE

RAMAKER & ASSOCIATES, INC.
100% EMPLOYEE-OWNED
855 Community Dr, Sauk City, WI 53583
608-643-4100 www.Ramaker.com
Sauk City, WI • Willmar, MN
Woodcliff Lake, NJ • Bayamon, PR

PREPARED FOR:
at&t Mobility

CONSULTANT:
GENERAL DYNAMICS
Information Technology, Inc.
GENERAL DYNAMICS
661 MOORE RD STE 110
KING OF PRUSSIA, PA 19406

Certification & Seal:
I hereby certify that this plan, specification, or report was prepared by me or under my direct supervision and that I am a duly Licensed Professional Engineer under the laws of the State of Connecticut.

STATE OF CONNECTICUT · JAMES R. SKOWRONSKI · 26266 · LICENSED PROFESSIONAL ENGINEER

Signature: Date: 3/19/2020

MARK	DATE	DESCRIPTION
1	3/19/20	REVISED CDs

ISSUE PHASE: FINAL DATE ISSUED: 2/28/2020

PROJECT TITLE:
NORWICH-ROGERS RD
FA ID # 10034991

PROJECT INFORMATION:
223 ROGERS ROAD
NORWICH, CT 06360

SHEET TITLE:
TITLE SHEET

SCALE: NONE

PROJECT NUMBER: 45813
SHEET NUMBER: T-1

This document contains confidential or proprietary information of Ramaker & Associates, Inc. Neither this document nor the information herein is to be reproduced, distributed, used or disclosed either in whole or in part except as authorized by Ramaker and Associates, Inc.

© Copyright 2019 - Ramaker & Associates, Inc. - All Rights Reserved
DRAWN BY: TRB CHECKED BY: MJR

I:\458004581 3\CAD\458113_GD_ATT_GENERATOR ADD CDs_NORWICH-ROGERS RD_10034991_recover.dwg Printed by: rguerrero on Mar 19, 2020 - 9:41am

NOTES TO SUBCONTRACTOR:

1. THE GENERAL SUBCONTRACTOR MUST VERIFY ALL DIMENSIONS, CONDITIONS AND ELEVATIONS BEFORE PROCEEDING WITH THE WORK. ALL WORK SHALL BE PERFORMED IN A WORKMANLIKE MANNER IN ACCORDANCE WITH ACCEPTED CONSTRUCTION PRACTICES.

2. IT IS THE INTENTION OF THESE DRAWINGS TO SHOW THE COMPLETED INSTALLATION. THE SUBCONTRACTOR SHALL BE RESPONSIBLE FOR ALL TEMPORARY BRACING, SHORING, TIES, FORM WORK, ETC. IN ACCORDANCE WITH ALL NATIONAL, STATE, AND LOCAL ORDINANCES, TO SAFELY EXECUTE ALL WORK AND SHALL BE RESPONSIBLE FOR SAME. ALL WORK SHALL BE IN ACCORDANCE WITH LOCAL CODES.

3. THE SUBCONTRACTOR SHALL USE ADEQUATE NUMBER OF SKILLED WORKMAN WHO ARE THOROUGHLY TRAINED AND EXPERIENCED IN THE NECESSARY CRAFTS AND WHO ARE COMPLETELY FAMILIAR WITH THE SPECIFIED REQUIREMENTS AND METHOD NEEDED FOR PROPER PERFORMANCE OF THE WORK.

4. CONSTRUCTION SUBCONTRACTOR AGREES THAT IN ACCORDANCE WITH GENERALLY ACCEPTED CONSTRUCTION PRACTICES, CONSTRUCTION SUBCONTRACTOR WILL BE REQUIRED TO ASSUME SOLE AND COMPLETE RESPONSIBILITY FOR JOB SITE CONDITIONS DURING THE COURSE OF CONSTRUCTION OF THE PROJECT, INCLUDING THE SAFETY OF ALL PERSONS AND PROPERTY, THAT THIS REQUIREMENT SHALL BE MADE TO APPLY CONTINUOUSLY AND NOT BE LIMITED TO NORMAL WORKING HOURS AND CONSTRUCTION SUBCONTRACTOR FURTHER AGREES TO INDEMNIFY AND HOLD DESIGN ENGINEER HARMLESS FROM ANY AND ALL LIABILITY, REAL OR ALLEGED, IN CONNECTION WITH PERFORMANCE OF WORK ON THIS PROJECT.

5. SITE GROUNDING SHALL COMPLY WITH AT&T WIRELESS SERVICES TECHNICAL SPECIFICATIONS FOR FACILITY GROUNDING FOR CELL SITE STANDARDS, LATEST EDITION, AND COMPLY WITH AT&T TOWERS GROUNDING CHECKLIST, LATEST VERSION. WHEN NATIONAL AND LOCAL GROUNDING CODES ARE MORE STRINGENT THEY SHALL GOVERN. GROUNDING SHALL BE COMPLETED BEFORE ERECTION OF TOWER.

6. ALL WORK SHALL COMPLY WITH OSHA AND STATE SAFETY REQUIREMENTS. PROCEDURES FOR THE PROTECTION OF EXCAVATIONS, EXISTING CONSTRUCTION AND UTILITIES SHALL BE ESTABLISHED PRIOR TO FOUNDATION INSTALLATION, IF TEMPORARY LIGHTING AND MARKING IS REQUIRED BY THE FEDERAL AVIATION ADMINISTRATION (FAA), IT IS THE SUBCONTRACTOR'S RESPONSIBILITY TO MAINTAIN THE NECESSARY LIGHTS AND NOTIFY THE PROPER AUTHORITIES IN THE EVENT OF A PROBLEM.

7. ALL WORK SHALL BE ACCOMPLISHED IN ACCORDANCE WITH ALL LOCAL, STATE, AND FEDERAL CODES OR ORDINANCES. THE MOST STRINGENT CODE WILL APPLY IN THE CASE OF DISCREPANCIES OR DIFFERENCES IN THE CODE REQUIREMENTS.

8. ANY DAMAGE TO THE ADJACENT PROPERTIES WILL BE CORRECTED AT THE SUBCONTRACTOR'S EXPENSE TO THE SATISFACTION OF THE LANDOWNER AND THE ENGINEER.

9. THE COMPLETE BID PACKAGE INCLUDES THESE CONSTRUCTION DRAWINGS ALONG WITH THE SPECIFICATIONS. SUBCONTRACTOR IS RESPONSIBLE FOR REVIEW OF TOTAL BID PACKAGE PRIOR TO BID SUBMITTAL..

10. SUBCONTRACTOR SHALL VERIFY LOCATION OF ALL EXISTING UTILITIES WITHIN CONSTRUCTION LIMITS PRIOR TO CONSTRUCTION.

11. THE SUBCONTRACTOR IS RESPONSIBLE FOR MAINTAINING POSITIVE DRAINAGE ON THE SITE AT ALL TIMES. SILT AND EROSION CONTROL SHALL BE MAINTAINED ON THE DOWNSTREAM SIDE OF THE SITE AT ALL TIMES. ANY DAMAGE TO ADJACENT PROPERTIES WILL BE CORRECTED AT THE SUBCONTRACTOR'S EXPENSE.

12. CLEARING OF TREES AND VEGETATION ON THE SITE SHOULD BE HELD TO A MINIMUM. ONLY THE TREES NECESSARY FOR CONSTRUCTION OF THE FACILITIES SHALL BE REMOVED. ANY DAMAGE TO THE PROPERTY OUTSIDE THE LEASED PROPERTY SHALL BE REPAIRED BY THE SUBCONTRACTOR.

13. ALL SUITABLE BORROW MATERIAL FOR BACK FILL OF THE SITE SHALL BE INCLUDED IN THE BID. EXCESS TOPSOIL AND UNSUITABLE MATERIAL SHALL BE DISPOSED OF OFF SITE AT LOCATIONS APPROVED BY GOVERNING AGENCIES PRIOR TO DISPOSAL.

14. SEEDING AND MULCHING OF THE SITE WILL BE ACCOMPLISHED AS SOON AS POSSIBLE AFTER COMPLETION OF THE SITE DEVELOPMENT. THE SUBCONTRACTOR IS RESPONSIBLE FOR PROVIDING AND MAINTAIN AN ADEQUATE COVER OF VEGETATION OVER THE SITE FOR A ONE YEAR PERIOD.

15. PERMITS: THE SUBCONTRACTOR SHALL BE RESPONSIBLE FOR OBTAINING AND INCURRING THE COST OF ALL REQUIRED PERMITS, INSPECTIONS, CERTIFICATES, ETC.

16. RECORD DRAWINGS: MAINTAIN A RECORD OF ALL CHANGES, SUBSTITUTIONS BETWEEN WORK AS SPECIFIED AND INSTALLED. RECORD CHANGES ON A CLEAN SET OF CONTRACT DRAWINGS WHICH SHALL BE TURNED OVER TO THE CONSTRUCTION MANAGER UPON COMPLETION OF THE PROJECT.

17. THE PLANS SHOW SOME KNOWN SUBSURFACE STRUCTURES, ABOVE GROUND STRUCTURES AND/OR EXISTING UTILITIES BELIEVED TO BE IN THE WORKING AREA. IT IS THE RESPONSIBILITY OF THE SUBCONTRACTOR TO VERIFY ALL UTILITIES, PIPELINES AND OTHER STRUCTURES SHOWN OR NOT SHOWN ON THESE PLANS. THE SUBCONTRACTOR SHALL CONTACT THE LOCAL JURISDICTION'S DIGGER'S HOTLINE BEFORE DIGGING OR DRILLING. ANY DAMAGE TO EXISTING UTILITIES SHALL BE REPAIRED TO THE SATISFACTION OF THE OWNER AND ENGINEER AT THE SUBCONTRACTOR'S EXPENSE.

GENERAL NOTES:

1. THIS PROPOSAL IS FOR THE ADDITION OF A NEW GENERATOR ON A CONCRETE PAD TO AN EXISTING UNMANNED TELECOMMUNICATIONS FACILITY CONSISTING OF AN EQUIPMENT SHELTER AND TOWER.

2. THE PROPOSED FACILITY WILL BE UNMANNED AND DOES NOT REQUIRE POTABLE WATER OR SEWER SERVICE.

3. THE PROPOSED FACILITY IS UNMANNED AND IS NOT FOR HUMAN HABITAT. (NO HANDICAP ACCESS IS REQUIRED)

4. OCCUPANCY IS LIMITED TO PERIODIC MAINTENANCE AND INSPECTION, APPROXIMATELY 2 TIMES PER MONTH BY AT&T TECHNICIANS.

5. OUTDOOR STORAGE AND SOLID WASTE CONTAINERS ARE NOT PROPOSED.

6. ALL MATERIAL SHALL BE FURNISHED AND WORK SHALL BE PERFORMED IN ACCORDANCE WITH THE PROJECT SPECIFICATIONS.

7. SUBCONTRACTOR SHALL BE RESPONSIBLE FOR REPAIRING ANY DAMAGE CAUSED BY THE CONSTRUCTION OPERATION.

8. SUBCONTRACTOR SHALL BE RESPONSIBLE FOR OBTAINING ALL PERMITS AND INSPECTION REQUIRED FOR CONSTRUCTION.

9. SUBCONTRACTOR SHALL REMOVE ALL TRASH AND DEBRIS FROM THE SITE ON A DAILY BASIS.

ELECTRICAL NOTES:
A. GENERAL

1. COORDINATE LOCATION AND POWER REQUIREMENTS OF ALL EQUIPMENT WITH AT&T AND EQUIPMENT SUPPLIER PRIOR TO INSTALLATION.

2. COORDINATE LOCATION AND REQUIREMENTS FOR ELECTRICAL AND TELEPHONE SERVICES WITH THE PROPERTY REPRESENTATIVE, AT&T AND UTILITY COMPANIES. ROUTING OF CONDUITS MAY BE MODIFIED TO MEET SITE REQUIREMENTS. EXACT CONDUIT ROUTING TO BE DETERMINED IN THE FIELD.

3. ALL WIRING AND EQUIPMENT SHOWN ON ELECTRICAL SHEETS SHALL BE FURNISHED AND INSTALLED UNDER ELECTRICAL PORTION OF CONTRACT UNLESS OTHERWISE NOTED

4. UNINTERRUPTED ELECTRICAL SERVICE FOR EXISTING EQUIPMENT SHALL BE MAINTAINED DURING THE INSTALLATION OF THE WORK DESCRIBED UNDER THESE DOCUMENTS. TEMPORARY EQUIPMENT, CABLES AND WHATEVER ELSE IS NECESSARY SHALL BE PROVIDED AS REQUIRED TO MAINTAIN ELECTRICAL SERVICE. TEMPORARY SERVICE FACILITIES, IF REQUIRED AT ANY TIME, SHALL NOT BE DISCONNECTED OR REMOVED UNTIL NEW SERVICE EQUIPMENT IS IN PROPER OPERATION. IF ANY SERVICE OR SYSTEM MUST BE INTERRUPTED, THE CONTRACTOR SHALL REQUEST PERMISSION IN WRITING STATING THE DATE, TIME, ETC. THE SERVICE WILL BE INTERRUPTED AND THE AREAS AFFECTED. THIS REQUEST SHALL BE MADE IN SUFFICIENT TIME FOR PROPER ARRANGEMENTS TO BE MADE. WRITTEN PERMISSION SHALL BE OBTAINED FROM THE OWNER BEFORE INTERRUPTING ELECTRICAL SERVICE.

5. COORDINATE NEW WORK WITH OTHER TRADES AND VERIFY EXISTING CONDITIONS TO AVOID INTERFERENCE. IN CASE OF INTERFERENCE, AT&T'S REPRESENTATIVE WILL DECIDE WHICH WORK IS TO BE RELOCATED, REGARDLESS OF WHICH WAS FIRST INSTALLED.

6. THE INSTALLATION MUST COMPLY WITH NEC AND ALL FEDERAL, STATE AND LOCAL RULES AND REGULATIONS.

7. THE DRAWINGS ARE DIAGRAMMATIC AND INDICATE THE GENERAL ARRANGEMENT OF SYSTEMS AND EQUIPMENT UNLESS OTHERWISE DEFINED BY DIMENSIONS OR DETAILS. EXACT EQUIPMENT LOCATIONS AND RACEWAY ROUTING SHALL BE GOVERNED BY ACTUAL FIELD CONDITIONS AND/OR DIRECTIONS FROM AT&T'S REPRESENTATIVE.

8. CONTRACTOR SHALL PAY ALL PERMITS AND FEES REQUIRED.

9. ALL MATERIALS SHALL BE FURNISHED AND WORK SHALL BE PERFORMED IN ACCORDANCE WITH THE APPLICABLE SECTIONS OF THE STANDARDS REFERENCED BELOW:
   a. ANSI (AMERICAN NATIONAL STANDARDS INSTITUTE)
   b. ASTIM (AMERICAN SOCIETY FOR TESTING MATERIALS)
   c. ETL (ELECTRICAL TESTING LABORATORY)
   d. ICEA (INSULATED CABLE ENGINEERS ASSOCIATION)
   e. IEEE (INSTITUTE OF ELECTRICAL AND ELECTRONIC ENGINEERS)
   f. MBFU (NATIONAL BOARD OF FIRE UNDERWRITERS)
   g. NESC (NATIONAL ELECTRICAL SAFETY CODE)
   h. NEMA (NATIONAL ELECTRICAL MANUFACTURER'S ASSOCIATION)
   i. NFPA (NATIONAL FIRE PROTECTION ASSOCIATION)
   j. UL (UNDERWRITER'S LABORATORY)

10. CONTRACTOR SHALL REVIEW PLANS, DETAILS AND SPECIFICATIONS IN DETAIL AND ADJUST WORK TO CONFORM WITH ACTUAL SITE CONDITIONS SO THAT ELECTRICAL DEVICES AND EQUIPMENT WILL BE LOCATED AND READILY ACCESSIBLE. QUANTITIES LISTED IN MATERIAL LISTS ON THE DRAWINGS ARE FOR INFORMATION ONLY. THE CONTRACTOR SHALL PROVIDE HIS OWN TAKEOFF FOR MATERIAL QUANTITY AND TYPES BASED ON ACTUAL SITE CONDITIONS, IN ADDITION, CONTRACTOR SHALL PROVIDE ALL NECESSARY MATERIALS TO INSTALL EQUIPMENT FURNISHED BY AT&T OR ITS SUPPLIERS. ALL ITEMS NOT SPECIFICALLY MENTIONED HEREIN OR SHOWN ON THE DRAWINGS, BUT WHICH ARE OBVIOUSLY NECESSARY TO MAKE A COMPLETE WORKING INSTALLATION, SHALL BE INCLUDED.

11. THE CONTRACTOR OR BIDDER SHALL BEAR THE RESPONSIBILITY OF NOTIFYING (IN WRITING) AT&T'S REPRESENTATIVE OF ANY CONFLICTS PRIOR TO THE SUBMISSION OF CONTRACTOR'S PROPOSAL OR PERFORMANCE OF WORK, IN THE EVENT OF DISCREPANCIES THE CONTRACTOR SHALL PRICE THE MORE COSTLY OR EXTENSIVE WORK, UNLESS DIRECTED IN WRITING OTHERWISE.

12. ALL FLOORS WHERE PENETRATIONS ARE REQUIRED IN BUILDING ARE TO BE CORE DRILLED AND THEN FIREPROOFED.

B. WIRING/CONDUIT

1. PROVIDE PULL BOXES AND JUNCTION BOXES WHERE SHOWN OR AS REQUIRED BY CODE SUCH THAT NO MORE THAN THE EQUIVALENT OF FOUR QUARTER BENDS (380 DEGREES TOTAL) EXIST IN A CONDUIT RUN.

2. ALL POWER AND CONTROL/INDICATION WIRING SHALL BE TYPE THHN/THWN 800V RATED 75 DEGREES CELSIUS, UNLESS NOTED OTHERWISE.

3. SCHEDULE 80 PVC CONDUIT SHALL BE USED ABOVE GROUND, WHERE ABOVE GRADE IS DEFINED AS THE GROUND OF THE TURN-UP

4. BELL END OR TERMINAL ADAPTER MUST BE INSTALLED ON END OF PVC CONDUIT PER NEC 352.46. 300.4 F, (3)

5. CONDUIT BENDS SHALL BE MADE IN ACCORDANCE WITH NEC TABLE 346-10. NO RIGHT ANGLE DEVICE OTHER THAN STANDARD CONDUIT ELBOWS WITH 12" MINIMUM INSIDE SWEEPS FOR ALL CONDUITS 2" OR LARGER.

6. POWER WIRING SIZE SHALL NOT BE SMALLER THAN #12 AWG.

7. ALL WIRING SHALL BE COPPER. ALUMINUM WILL NOT BE ACCEPTABLE ALL POWER CIRCUITS SHALL CONTAIN A GROUND WIRE.

8. PHASE MARKINGS TO BE USED AT POWER CONDUCTOR TERMINATIONS.

9. CONTRACTOR SHALL ENSURE INTEGRITY IS MAINTAINED WHEN INSTALLING CONDUIT AND WIRING.

10. INSTALL PULL STRING IN ALL CONDUIT.

11. FOR ROOFTOP INSTALLS AND BUILD-OUTS, CONDUITS INSIDE BUILDING AND ON ROOF SHALL BE RGS, UNLESS OTHERWISE NOTED. FOR RAW LAND SITES AND CO-LOCATES, PVC SCHEDULE 80 SHALL BE UTILIZED UNLESS NOTED OTHERWISE.

12. MAINTAIN MINIMUM 1'-0" VERTICAL AND 1'-0" HORIZONTAL SEPARATIONS FROM ANY MECHANICAL GAS PIPING.

13. ALL WIRING ROUTED IN PLENUM TO BE RATED OR IN METALLIC FLEX (LIQUIDITE) CONDUIT.

C. EQUIPMENT

1. EQUIPMENT/PARTS CONNECTED TO EXISTING PANELS, DUCTS, ETC. SHALL MATCH THE CHARACTERISTICS (A/C, V, A) OF THAT EQUIPMENT.

2. ALL ELECTRICAL EQUIPMENT OUTSIDE SHALL BE NEMA OR 3R RATED.

D. GROUNDING

1. ALL GROUND CONNECTIONS TO BUILDING SHALL BE MADE USING TWO-HOLE CONNECTORS. PROVIDE STAINLESS STEEL BOLTS AND LOCK WASHERS ON ALL MECHANICAL GROUND CONNECTIONS.

2. ALL EQUIPMENT SURFACES TO BE BONDED TO GROUNDING SYSTEM SHALL BE STRIPPED OF ALL PAINT AND DIRT. CONNECTIONS TO VARIOUS METALS SHALL BE OF A TYPE AS TO CAUSE A GALVANIC OR CORROSIVE REACTION. AREA SHALL BE REPAINTED FOLLOWING BONDING.

3. ANY METALLIC ITEM WITHIN 6' OF GROUND CONDUCTORS MUST BE CONNECTED TO THE GROUNDING SYSTEM.

4. EXTERIOR, ABOVE GRADE GROUND CONNECTIONS SHALL BE FURNISHED WITH A LIBERAL PROTECTIVE COATING OF ANTI-OXIDE COMPOUND.

5. ALL MATERIALS AND LABOR REQUIRED FOR THE GROUNDING SYSTEM AS INDICATED ON THE PLANS AND DETAILS, AND AS DESCRIBED HEREIN SHALL BE FURNISHED BY THIS CONTRACTOR UNLESS OTHERWISE NOTED.

6. EXACT LOCATION OF GROUND CONNECTION POINTS SHALL BE DETERMINED IN FIELD. ADJUST LOCATIONS INDICATED ON PLANS ACCORDING TO ACTUAL EQUIPMENT LOCATIONS TO KEEP THE GROUND CONNECTION CABLES AS SHORT AS PRACTICAL.

7. PROVIDE ALL ELECTRICAL SYSTEM AND EQUIPMENT GROUNDS AS REQUIRED BY THE CURRENT EDITION OF THE NATIONAL ELECTRIC CODE (1999) AND THE CURRENT EDITION OF THE NATIONAL ELECTRICAL SAFETY CODE. BONDING JUMPERS WITH APPROVED GROUND FITTINGS SHALL BE INSTALLED AT ALL RACEWAYS, EQUIPMENT ENCLOSURES, PULL BOXES, ETC. TO MAINTAIN GROUND CONTINUITY WHERE REQUIRED BY CODE.

8. ALL EQUIPMENT GROUND CONDUCTORS SHALL BE TIN COATED, #2 AWG COPPER UNLESS NOTED OTHERWISE ON THE DRAWINGS.

9. PROVIDE PRE AND POST GROUND TEST RESULTS, USING CLAMP-ON TESTER. TEST RESULTS SHALL BE PHOTOS WITH DIGITAL TIME AND GPS STAMPED/EMBEDDED.

E. INSPECTION/DOCUMENTATION

1. THE CONTRACTOR, UPON COMPLETION OF HIS WORK, SHALL PROVIDE AS-BUILT DRAWINGS. INFORMATION SHOULD BE GIVEN TO THE GENERAL CONTRACTOR FOR INCLUSION IN FINAL AS-BUILT SURVEY DOCUMENTS TO BE GIVEN TO THE OWNER.

2. CONTRACTOR SHALL SUPPLY DOCUMENTATION ATTESTING TO THE COMPLETE GROUND SYSTEM'S RECEPTIVITY (MAX. 5 OHMS).

3. AN ELECTRICAL INSPECTION SHALL BE MADE BY AND INSPECTING AGENCY APPROVED BY AT&T'S REPRESENTATIVE. CONTRACTOR SHALL COORDINATE ALL INSPECTIONS AND OBTAIN POWER COMPANY APPROVAL.

4. CONTRACTOR SHALL HAVE ATS AND GENERATOR RELAY INSTALLATION AND CONNECTIONS INSPECTED BY OTHERS TO ENSURE THAT UL LISTING FOR THAT EQUIPMENT IS NOT VOIDED.

RAMAKER & ASSOCIATES, INC.
100% EMPLOYEE-OWNED
855 Community Dr, Sauk City, WI 53583
608-643-4100 www.Ramaker.com
Sauk City, WI • Willmar, MN
Woodcliff Lake, NJ • Bayamon, PR

PREPARED FOR:
at&t Mobility

CONSULTANT:
GENERAL DYNAMICS
Information Technology, Inc.
GENERAL DYNAMICS
661 MOORE RD STE 110
KING OF PRUSSIA, PA 19406

Certification & Seal:
I hereby certify that this plan, specification, or report was prepared by me or under my direct supervision and that I am a duly Licensed Professional Engineer under the laws of the State of Connecticut.

STATE OF CONNECTICUT · JAMES R. SKOWRONSKI · 26266 · LICENSED PROFESSIONAL ENGINEER

Signature: Date: 3/19/2020

MARK	DATE	DESCRIPTION
1	3/19/20	REVISED CDs

ISSUE PHASE: FINAL DATE ISSUED: 2/28/2020

PROJECT TITLE:
NORWICH-ROGERS RD
FA ID # 10034991

PROJECT INFORMATION:
223 ROGERS ROAD
NORWICH, CT 06360

SHEET TITLE:
GENERAL NOTES

SCALE: NONE

PROJECT NUMBER: 45813
SHEET NUMBER: N-1

This document contains confidential or proprietary information of Ramaker & Associates, Inc. Neither this document nor the information herein is to be reproduced, distributed, used or disclosed either in whole or in part except as authorized by Ramaker and Associates, Inc.

© Copyright 2019 - Ramaker & Associates, Inc. - All Rights Reserved
DRAWN BY: TRB CHECKED BY: MJR

I:\45800\45813\CAD\45813_GD_ATT_GENERATOR ADD CDs_NORWICH-ROGERS RD_10034991_recover.dwg Printed by: rguerrero on Mar 19, 2020 - 9:41am

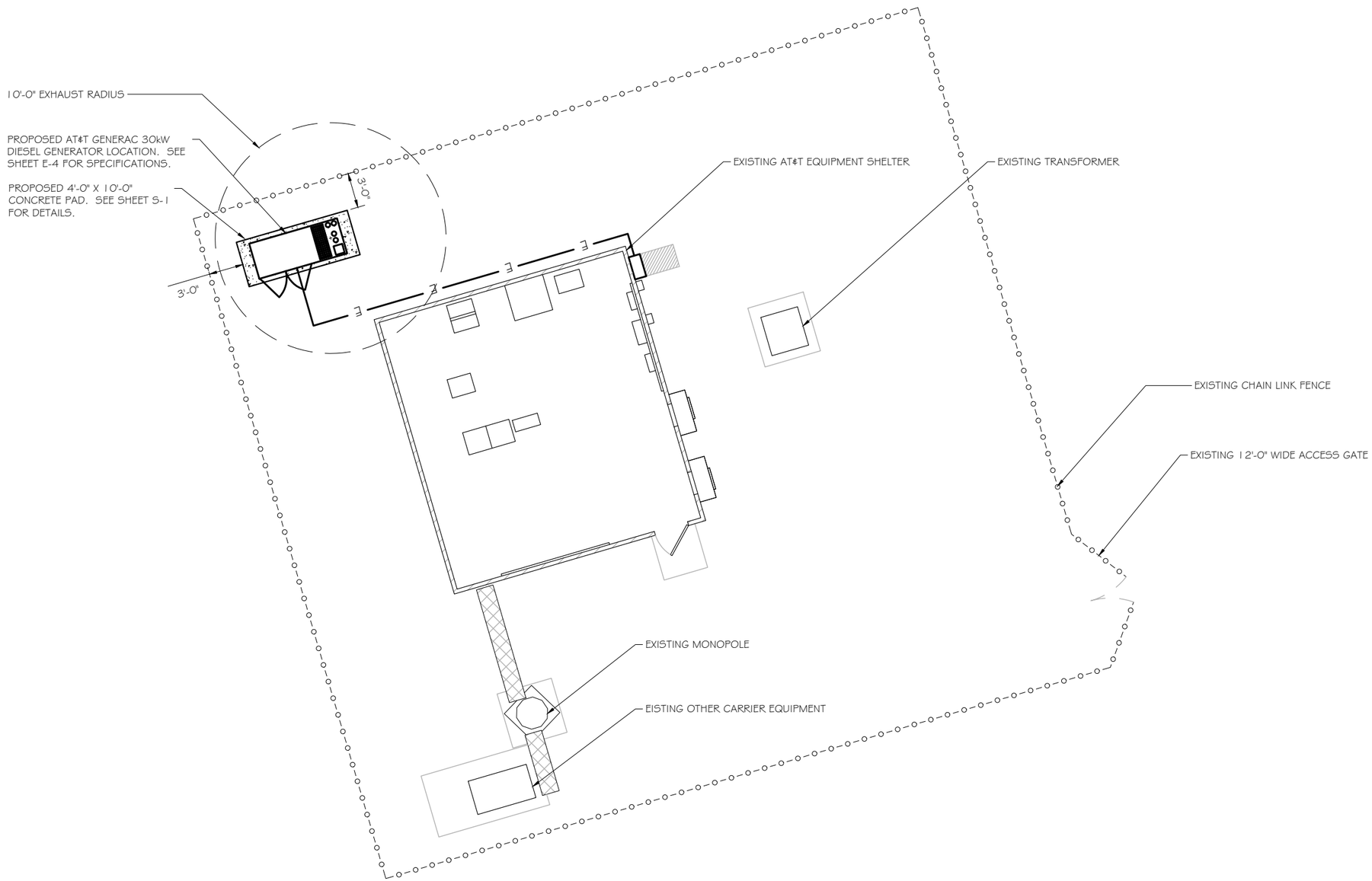

SITE PLAN
SCALE: 1" = 10'
1

RAMAKER & ASSOCIATES, INC.
100% EMPLOYEE-OWNED
855 Community Dr, Sauk City, WI 53583
608-643-4100 www.Ramaker.com
Sauk City, WI • Willmar, MN
Woodcliff Lake, NJ • Bayamon, PR

PREPARED FOR:
at&t Mobility

CONSULTANT:
GENERAL DYNAMICS
Information Technology, Inc.
GENERAL DYNAMICS
661 MOORE RD STE 110
KING OF PRUSSIA, PA 19406

Certification & Seal:
I hereby certify that this plan, specification, or report was prepared by me or under my direct supervision and that I am a duly Licensed Professional Engineer under the laws of the State of Connecticut.

STATE OF CONNECTICUT
JAMES R. SKOWRONSKI
26266
LICENSED
PROFESSIONAL ENGINEER

Signature: Date: 3/19/2020

MARK	DATE	DESCRIPTION
1	3/19/20	REVISED CDs

ISSUE PHASE: FINAL
DATE ISSUED: 2/28/2020

PROJECT TITLE:
NORWICH-ROGERS RD
FA ID # 10034991

PROJECT INFORMATION:
223 ROGERS ROAD
NORWICH, CT 06360

SHEET TITLE:
SITE PLAN

0 5' 10' 20'
11" x 17" - 1" = 10'
22" x 34" - 1" = 5'

PROJECT NUMBER: 45813
SHEET NUMBER: A-1

This document contains confidential or proprietary information of Ramaker & Associates, Inc. Neither this document nor the information herein is to be reproduced, distributed, used or disclosed either in whole or in part except as authorized by Ramaker and Associates, Inc.

© Copyright 2019 - Ramaker & Associates, Inc. - All Rights Reserved
DRAWN BY: TRB CHECKED BY: MJR

I:\45800\45813\CAD\45813_GD_ATT_GENERATOR ADD CDs_NORWICH-ROGERS RD_10034991_recover.dwg Printed by: rguerrero on Mar 19, 2020 - 9:41am

SCOPE OF WORK DETAILS

GENERAL:

- NEW GENERAC DIESEL GENERATOR PROVIDED BY GENERAL DYNAMICS & INSTALLED BY GENERAL CONTRACTOR, SEE E-4.
- NEW 4'-0" X 10'-0" CONCRETE PAD PROVIDED & INSTALLED BY GENERAL CONTRACTOR (AS REQUIRED) SEE S-1
- NEW GENERAC AUTOMATIC TRANSFER SWITCH PROVIDED BY GENERAL DYNAMICS & INSTALLED BY CONTRACTOR (AS REQUIRED) SEE E-3 & E-5.
- CONTRACTOR TO VERIFY ALL EXISTING UTILITIES PRIOR TO CONSTRUCTION
- CONTRACTOR SHALL RESTORE & REPAIR ANY DAMAGED AREAS CAUSED BY CONSTRUCTION TO ORIGINAL OR BETTER CONDITION

CONDUITS:

- INSTALL PULL STRING IN EACH CONDUIT
- (1) NEW 2" AND (1) NEW 1" ELECTRICAL CONDUITS WITH CONDUCTORS TO RUN FROM NEW GENERATOR TO NEW ATS. CONDUIT PROVIDED AND INSTALLED BY GENERAL CONTRACTOR. SEE E-1, E-2 & E-3.
- (2) NEW 1" ELECTRICAL CONDUIT WITH CONDUCTORS TO RUN FROM NEW GENERATOR TO AC PANEL. CONDUIT PROVIDED & INSTALLED BY GENERAL CONTRACTOR. SEE E-1, E-2 & E-3.
- (1) NEW 1" ALARM CONDUIT & CABLING PROVIDED & INSTALLED BY GENERAL CONTRACTOR. SEE E-1, E-2 & E-3.

GROUNDING:

- NEW EXOTHERMIC CONNECTION FROM EXISTING GROUND RING TO NEW MECHANICAL CONNECTION AT GENERATOR CHASSIS. GENERAL CONTRACTOR TO VERIFY LOCATION IN FIELD. LOCATE GROUND RODS NO MORE THAN 8'-0" APART.

H-FRAME:

- PROVIDE NEW H-FRAME IF REQUIRED, MATCH EXISTING H-FRAME MATERIAL FOR CONSTRUCTION OF NEW H-FRAME. USE ALL GALVANIZED COMPONENTS, WHITE PLASTIC END CAPS ON UNISTRUTS, WEATHER CAPS ON TOPS OF PIPE AND CONCRETE SUPPORTS BELOW FROST LINE. TOP OF FOOTING SHOULD BE AT LEAST 2" ABOVE EXISTING GROUND LEVEL. SLOPE THE GROUND AWAY FROM THE H-FRAME FOR POSITIVE WATER DRAINAGE OFF THE FORM.

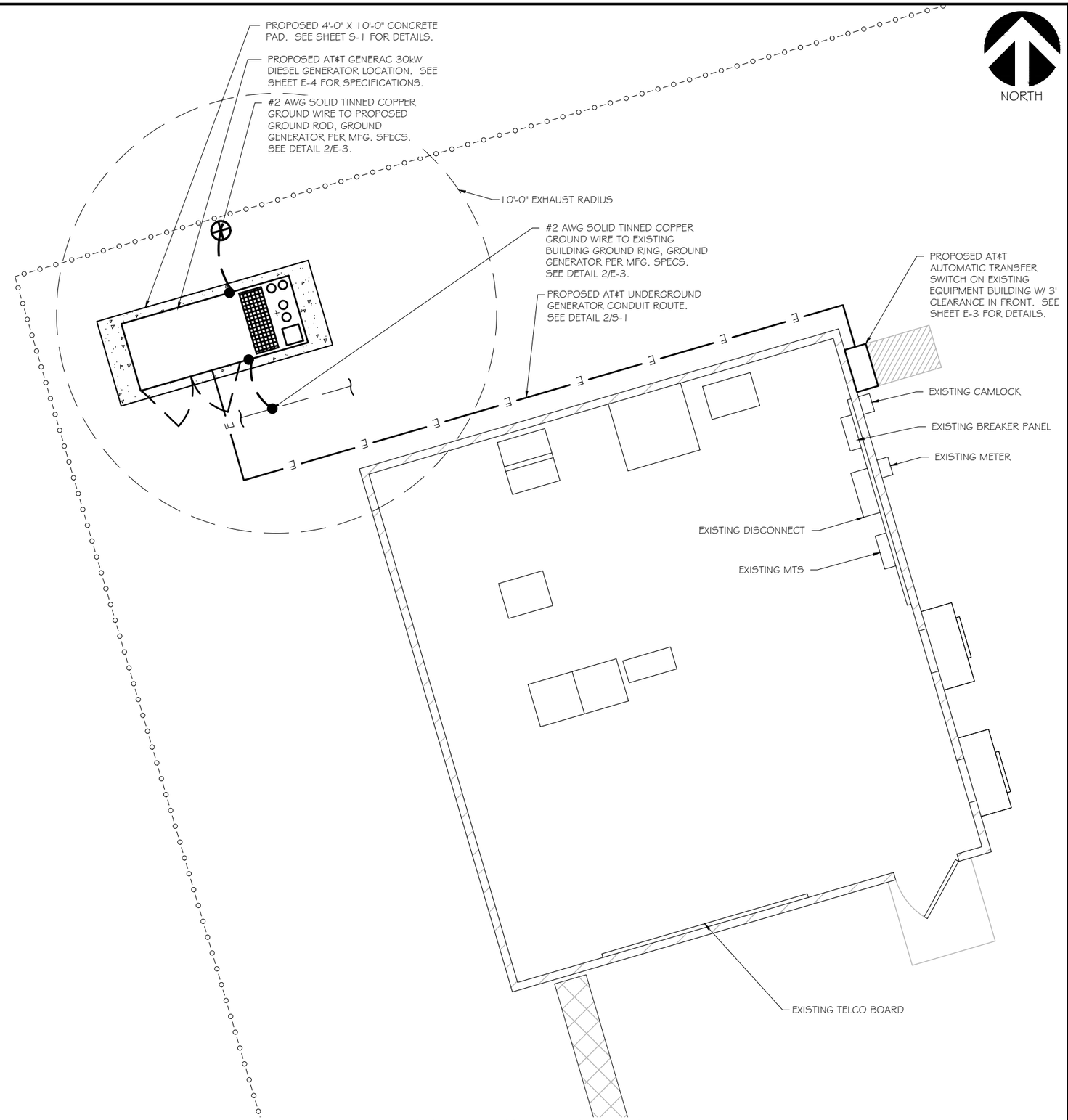

SITE PLAN & EQUIPMENT LAYOUT (1)
SCALE: 1" = 5'

RAMAKER & ASSOCIATES, INC.
100% EMPLOYEE-OWNED
855 Community Dr, Sauk City, WI 53583
608-643-4100 www.Ramaker.com
Sauk City, WI • Willmar, MN
Woodcliff Lake, NJ • Bayamon, PR

PREPARED FOR:
at&t Mobility

CONSULTANT:
GENERAL DYNAMICS
Information Technology, Inc.
GENERAL DYNAMICS
661 MOORE RD STE 110
KING OF PRUSSIA, PA 19406

Certification & Seal:
I hereby certify that this plan, specification, or report was prepared by me or under my direct supervision and that I am a duly Licensed Professional Engineer under the laws of the State of Connecticut.

STATE OF CONNECTICUT · JAMES R. SKOWRONSKI · 26266 · LICENSED PROFESSIONAL ENGINEER

Signature: Date: 3/19/2020

MARK	DATE	DESCRIPTION
1	3/19/20	REVISED CDs

ISSUE PHASE: FINAL — DATE ISSUED: 2/28/2020

PROJECT TITLE:
NORWICH-ROGERS RD
FA ID # 10034991

PROJECT INFORMATION:
223 ROGERS ROAD
NORWICH, CT 06360

SHEET TITLE:
SITE PLAN & EQUIPMENT LAYOUT

0 2.5' 5' 10'
11" x 17" - 1" = 5'
22" x 34" - 1" = 2.5'

PROJECT NUMBER: 45813
SHEET NUMBER: A-2

This document contains confidential or proprietary information of Ramaker & Associates, Inc. Neither this document nor the information herein is to be reproduced, distributed, used or disclosed either in whole or in part except as authorized by Ramaker and Associates, Inc.

© Copyright 2019 - Ramaker & Associates, Inc. - All Rights Reserved
DRAWN BY: TRB CHECKED BY: MJR

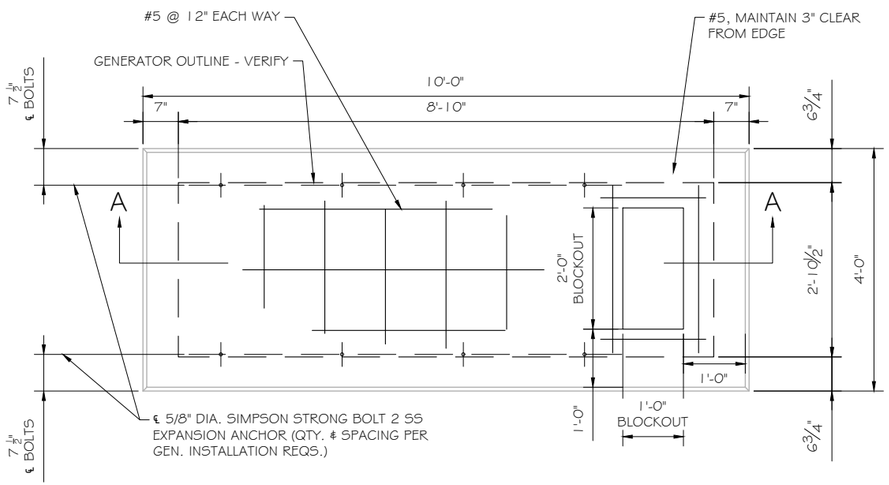

FOUNDATION PLAN (1)
SCALE: NTS

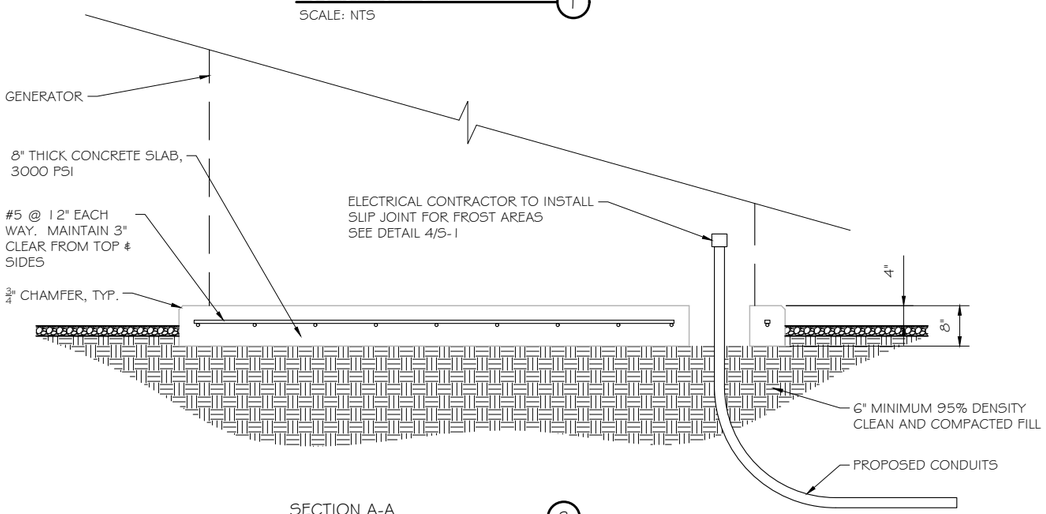

SECTION A-A (3)
SCALE: NTS

DOUBLE WALL FUEL TANK BASE SPECIFICATION

REF: ATT 30KW GENERATOR PACKAGE
UL REGISTRATION NUMBER: MH18459
U.L. 142 DOUBLE WALL FUEL TANK BASE SPECIFICATION
FUEL TANK BASE CONSTRUCTION:
- BE CONSTRUCTED IN ACCORDANCE WITH UNDERWRITERS LABORATORIES STANDARD UL-142. BE CONSTRUCTED IN ACCORDANCE WITH FLAMMABLE & COMBUSTIBLE LIQUIDS CODE, NFPA 30; THE STANDARD FOR INSTALLATION & USE OF STATIONARY COMBUSTIBLE ENGINE & GAS TURBINES, NFPA 37; AND THE STANDARD FOR EMERGENCY & STANDBY POWER SYSTEMS, NFPA 110.
- ANCHORS MINIMUM (4) @ 5/8" FOR GEN-SET MOUNTING

SUB BASE TANK TESTING: PRIMARY TANK & SECONDARY CONTAINMENT BASIN SECTIONS SHALL BE
PRESSURIZED AT 3-5 PSI AND LEAK-CHECKED TO ENSURE INTEGRITY OF SUB BASE WELD SEAMS
PER UL-142 STANDARDS
FUEL FILL: 5 GALLON SPILL CONTAINMENT WITH ALARM
- 40% REMAINING FOR ALARM
- 20% REMAINING FOR SHUT-DOWN

FACTORY PRE-SET AT 95% FULL FOR ALARM
FUEL CONTAINMENT BASIN: SUB BASE TANK SHALL INCLUDE A WELDED STEEL CONTAINMENT BASIN, SIZED AT A MINIMUM OF 110% OF THE TANK CAPACITY TO PREVENT ESCAPE OF FUEL INTO THE ENVIRONMENT IN THE EVENT OF A TANK RUPTURE. A FUEL CONTAINMENT BASIN LEAK DETECTOR SWITCH SHALL BE PROVIDED.

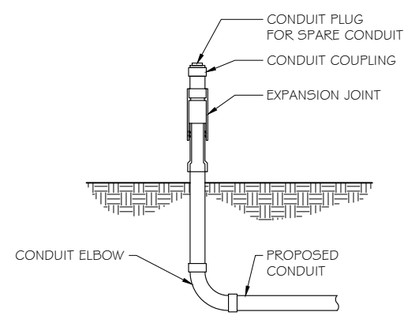

SLIPJOINT DETAIL (4)
SCALE: NTS

NOTE:

VERIFY WIRE AND CONDUIT QUANTITY & SIZES WITH GENERATOR MAKE & MODEL # PRIOR TO INSTALLATION. VERIFY ELECTRICAL REQUIREMENTS WITH LOCAL UTILITY PROVIDER.

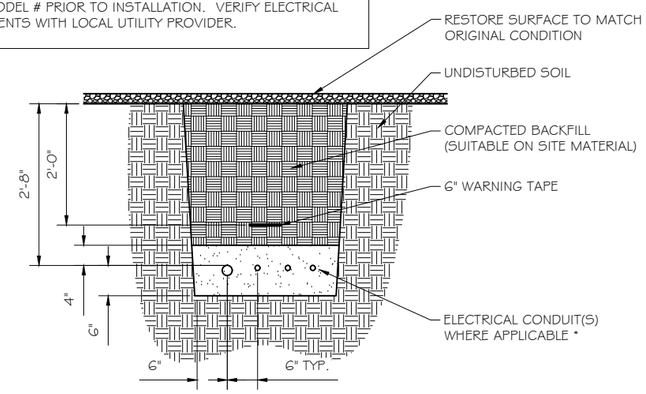

* SEPARATION DIMENSION TO BE VERIFIED WITH LOCAL UTILITY COMPANY REQUIREMENTS

NOTES:
1. PROVIDE PVC CONDUIT BELOW GRADE EXCEPT AS NOTED BELOW.
2. PROVIDE RGS CONDUIT AND ELBOWS AT STUB UP LOCATIONS (I.E. SERVICE POLE, BTS EQUIPMENT, ETC.)
3. INSTALL UTILITY PULLBOXES PER NEC.

UTILITY CONDUIT TRENCH (2)
SCALE: NTS

STRUCTURAL GENERAL NOTES

1.0 GENERAL CONDITIONS
1.1 DESIGN & CONSTRUCTION OF ALL WORK SHALL CONFORM TO LOCAL BUILDING CODES, ACI 318-11. IN CASE OF CONFLICT BETWEEN THE CODES, STANDARDS, REGULATIONS, SPECIFICATIONS, GENERAL NOTES AND/OR MANUFACTURER'S REQUIREMENTS, USE THE MOST STRINGENT PROVISIONS.
1.2 IT IS THE EXPRESS INTENT OF PARTIES INVOLVED IN THIS PROJECT THAT THE CONTRACTOR OR SUBCONTRACTOR OR INDEPENDENT CONTRACTOR OR THE RESPECTIVE EMPLOYEES SHALL EXCULPATE THE ARCHITECT, THE ENGINEER, TECH. CONSTRUCTION MANAGER, THE OWNER, & THEIR AGENTS FROM ANY LIABILITY WHATSOEVER & HOLD THEM HARMLESS AGAINST LOSS, DAMAGES, LIABILITY OR ANY EXPENSE ARISING IN ANY MATTER FROM THE WRONGFUL OR NEGLIGENT ACT, OR FAILURE TO CARRY METHODS, TECHNIQUES OR PROCEDURES OR FAILURE TO CONFORM TO THE STATE SCAFFOLDING ACT IN CONNECTIONS WITH THE WORK.
1.3 DO NOT SCALE DRAWINGS
1.4 VERIFY ALL EQUIPMENT MOUNTING DIMENSIONS PER MANUFACTURER DRAWINGS
1.5 DESIGN LOADS ARE (GENERAC):

LIVE LOAD	: 100 PSF
EQUIPMENT SIZE	: 889.1" H, 106" W, 38" D
WEIGHT WITH WOODEN SHIPPING SKID	
ENCLOSED GENERATOR	: 3974 LBS

2.0 FOR DESIGN & ANALYSIS OF THE FOUNDATION, THE MINIMUM NET SOIL BEARING CAPACITY SHALL BE ASSUMED TO BE 2000 PSF.
3.0 CONCRETE
3.1 MEET OR EXCEED THE FOLLOWING CODES & STANDARDS:

DESIGN	: ACI318-11
CONSTRUCTION	: ACI301
DETAILING	: CRSI MANUAL OF STANDARD PRACTICE
REINF. STEEL	: ASTM A 615 GRADE 60, DEFORMED
MIXING	: ASTM C 94. READY MIX CONCRETE
AIR ENTRAINMENT	: ACI 318 AND ASTM C-260
AGGREGATE	: ASTM C 33 AND C 330 (FOR LIGHT WEIGHT)

3.2 CONCRETE STRENGTH AT 28 DAYS SHALL BE 4000 PSI MINIMUM
3.3 DO NOT FIELD BEND OR WELD TO GRADE 60 REINFORCED STEEL
3.4 PROVIDE AIR ENTRAINED CONCRETE WITH AIR CONTENT OF 5 TO 7% FOR ALL CONCRETE EXPOSED TO EARTH OR WEATHER.
3.5 MAXIMUM AGGREGATE SIZE: 3/4"
3.6 DO NOT USE IN ADMIXTURE, WATER OR OTHER CONSTITUENTS OF CONCRETE WHICH HAS CALCIUM CHLORIDE.
3.7 MINIMUM COVER FOR REINFORCING STEEL SHALL BE AS SHOWN ON PLAN.
4.0 FOUNDATION & EXCAVATION NOTES
4.1 SLAB SHALL BE CONSTRUCTED UPON UNDISTURBED, NATURAL SUBGRADE OR COMPACTED GRANULAR FILL WITH AN ASSUMED MINIMUM NET ALLOWABLE BEARING CAPACITY OF 1800 PSF.
4.2 ALL ORGANIC AND/OR OTHER UNSUITABLE MATERIAL SHALL BE REMOVED FRO FOUNDATION & SLAB SUBGRADE & BACKFILL AREAS, & THEN BACKFILLED WITH ACCEPTABLE GRANULAR FILL COMPACTED TO 95% OF MAXIMUM DENSITY AT OPTIMUM MOISTURE CONTENT (ASTM D1557).
4.3 THE CONTRACTOR SHALL PROVIDE ALL NECESSARY MEASURES TO PREVENT ANY WATER, FROST, OR ICE FROM PENETRATING ANY FOOTING OR STRUCTURAL SUBGRADE BEFORE & AFTER PLACING OF CONCRETE, AND UNTIL SUCH CONCRETE HAS FULLY CURED.

RAMAKER & ASSOCIATES, INC.
100% EMPLOYEE-OWNED
855 Community Dr, Sauk City, WI 53583
608-643-4100 www.Ramaker.com
Sauk City, WI • Willmar, MN
Woodcliff Lake, NJ • Bayamon, PR

PREPARED FOR:
at&t Mobility

CONSULTANT:
GENERAL DYNAMICS
Information Technology, Inc.
GENERAL DYNAMICS
661 MOORE RD STE 110
KING OF PRUSSIA, PA 19406

Certification & Seal:
I hereby certify that this plan, specification, or report was prepared by me or under my direct supervision and that I am a duly Licensed Professional Engineer under the laws of the State of Connecticut.

STATE OF CONNECTICUT · JAMES R. SKOWRONSKI · 26266 · LICENSED PROFESSIONAL ENGINEER

Signature: Date: 3/19/2020

MARK	DATE	DESCRIPTION
1	3/19/20	REVISED CDs

ISSUE PHASE: FINAL DATE ISSUED: 2/28/2020

PROJECT TITLE:
NORWICH-ROGERS RD
FA ID # 10034991

PROJECT INFORMATION:
223 ROGERS ROAD
NORWICH, CT 06360

SHEET TITLE:
FOUNDATION DETAILS

SCALE: NONE

PROJECT NUMBER: 45813
SHEET NUMBER: S-1

I:\45800\45813\CAD\45813_GD_ATT_GENERATOR ADD CDs_NORWICH-ROGERS RD_10034991_recover.dwg Printed by: rguerrero on Mar 19, 2020 - 9:41am

This document contains confidential or proprietary information of Ramaker & Associates, Inc. Neither this document nor the information herein is to be reproduced, distributed, used or disclosed either in whole or in part except as authorized by Ramaker and Associates, Inc.

© Copyright 2019 - Ramaker & Associates, Inc. - All Rights Reserved
DRAWN BY: TRB CHECKED BY: MJR

I:\45800\45813\CAD\45813_GD_ATT_GENERATOR ADD CDs_NORWICH-ROGERS RD_10034991_recover.dwg Printed by: rguerrero on Mar 19, 2020 - 9:41am

DIAGRAM CIRCUIT SCHEDULE

NO.	FROM	TO	WIRES	GROUND	CONDUIT SIZE	FUNCTION
1	NORMAL POWER SOURCE	AUTOMATIC TRANSFER SWITCH	(3) 3/0	(1) #4	2"	NORMAL POWER FEEDER TO ATS (CUT BACK EXISTING)
2	AUTOMATIC TRANSFER SWITCH	LOAD CENTER	(3) 3/0	(1) #4	2"	POWER FEEDER FROM ATS TO PANEL
3	GENERATOR	AUTOMATIC TRANSFER SWITCH	(3) 3/0	(1) #4	2"	EMERGENCY POWER FEEDER TO ATS
4	AUTOMATIC TRANSFER SWITCH	GENERATOR	(2) #10	(1) #10	1"	START CIRCUIT
5	LOAD CENTER (DISTRIBUTION CENTER)	GENERATOR, ATS	(2) #12 (2) #12 (2) #12	(1) #12 (1) #12 (1) #12	1" 1" 1"	CIRCUIT FOR GENERATOR BLOCK HEATER & BATTERY HEATER CIRCUIT FOR BATTERY CHARGER CIRCUIT FOR ATS
6	GENERATOR	AUTOMATIC TRANSFER SWITCH	12-PAIR 24 AWG OR 2EA 6-PAIR CAT5	N/A	1"	ALARM CABLES (1) 12 PAIR 24 AWG. PROVIDE 24" OF SLACK CABLE. FINAL PUNCH DOWN IS BY AT&T TECH. LABEL ALL WIRES
7	AUTOMATIC TRANSFER SWITCH	ALARM BLOCK	12-PAIR 24 AWG OR 2EA 6-PAIR CAT5	N/A	1"	ALARM CABLES (1) 12 PAIR 24 AWG (RUN TO PURCELL CABINET & INTO ALARM BOX). PROVIDE 24" OF SLACK CABLE. FINAL PUNCH DOWN IS BY AT&T TECH. LABEL ALL WIRES

CIRCUIT DETAIL (1)
SCALE: NTS

ALARM WIRE IDENTIFICATION CHART

WIRE	ALARM
BROWN BROWN / WHITE	GENERATOR RUNNING
GREEN GREEN / WHITE	CRITICAL FAULT
BLUE BLUE / WHITE	MINOR FAULT
ORANGE ORANGE / WHITE	LOW FUEL
BROWN * BROWN / WHITE *	FUEL LEAK
*CAT5 CABLE ONLY, FROM 2ND CAT5 CABLE	

ALARM WIRING IDENTIFICATION CHART (2)
SCALE: NTS

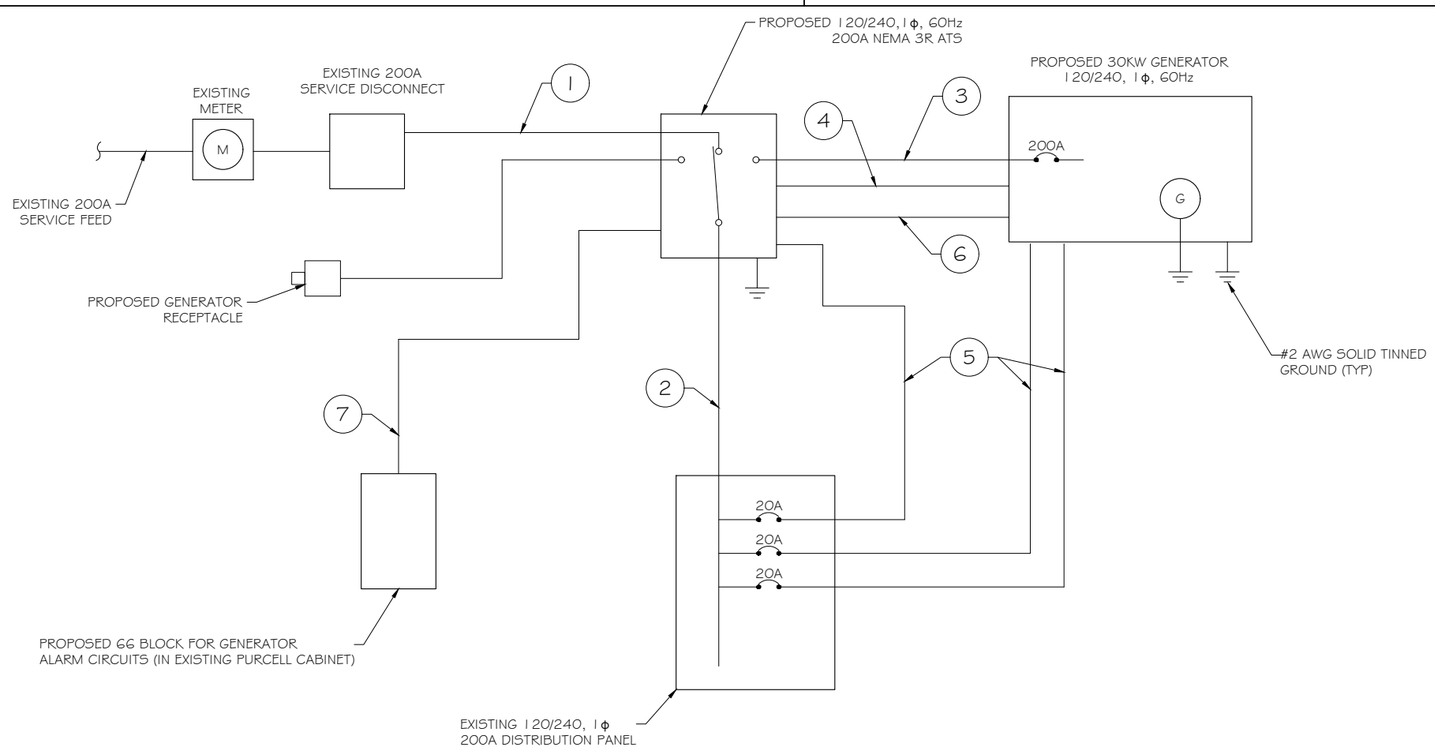

PROPOSED WIRING DIAGRAM (3)
SCALE: NTS

RAMAKER & ASSOCIATES, INC.
100% EMPLOYEE-OWNED
855 Community Dr, Sauk City, WI 53583
608-643-4100 www.Ramaker.com
Sauk City, WI • Willmar, MN
Woodcliff Lake, NJ • Bayamon, PR

PREPARED FOR:
at&t Mobility

CONSULTANT:
GENERAL DYNAMICS
Information Technology, Inc.
GENERAL DYNAMICS
661 MOORE RD STE 110
KING OF PRUSSIA, PA 19406

Certification & Seal:
I hereby certify that this plan, specification, or report was prepared by me or under my direct supervision and that I am a duly Licensed Professional Engineer under the laws of the State of Connecticut.

STATE OF CONNECTICUT
JAMES R. SKOWRONSKI
26266
LICENSED
PROFESSIONAL ENGINEER

Signature: Date: 3/19/2020

MARK	DATE	DESCRIPTION
1	3/19/20	REVISED CDs

ISSUE PHASE: FINAL DATE ISSUED: 2/28/2020

PROJECT TITLE:
NORWICH-ROGERS RD
FA ID # 10034991

PROJECT INFORMATION:
223 ROGERS ROAD
NORWICH, CT 06360

SHEET TITLE:
WIRING DETAILS

SCALE: NONE

PROJECT NUMBER: 45813
SHEET NUMBER: E-1

This document contains confidential or proprietary information of Ramaker & Associates, Inc. Neither this document nor the information herein is to be reproduced, distributed, used or disclosed either in whole or in part except as authorized by Ramaker and Associates, Inc.

© Copyright 2019 - Ramaker & Associates, Inc. - All Rights Reserved
DRAWN BY: TRB CHECKED BY: MJR

AC Distribution Panel - Layout Diagram									
Breaker Position	Breaker Type	On/Off	Size	Circuit Label	Breaker Position	Breaker Type	On/Off	Size	Circuit Label
1	2P	OFF	30	RECTIFIER 6	2	2P	OFF	30	
3	2P	OFF	30		4	2P	OFF	30	RECTIFIER 4
5	2P	OFF	30	RECTIFIER 5	6	2P	OFF	30	
7	2P	OFF	30		8	2P	OFF	30	RECTIFIER 2
9	2P	OFF	30	RECTIFIER 1	10	2P	OFF	30	RECTIFIER 3
11	2P	OFF	30		12	2P	OFF	30	
13	2P	OFF	30	RECTIFIER 7	14	2P	OFF	30	
15	2P	OFF	30		16	2P	OFF	30	
17	2P	OFF	30		18	2P	ON	20	
19	2P	OFF	30		20	2P	ON	20	
21	2P	ON	40	GE PP POS 11-12	22	1P	OFF	20	
23	2P	ON	40		24	1P	ON	15	
25	2P	ON	40	GE PP POS 13-14	26	1P	ON	15	
27	2P	ON	40		28	1P	ON	15	
29	2P	ON	40	GE PP POS 21-22	30	1P	ON	15	GEN BLOCK HTR
31	2P	ON	40		32				BLANK
33	2P	ON	40	GE PP POS 23-24	34				BLANK
35	2P	ON	40		36				BLANK
37	**1P**	**ON**	**20**	**ATS**	38				BLANK
39	**1P**	**ON**	**20**	**BLOCK HEATER**	40				BLANK
41	**1P**	**ON**	**20**	**BATTERY CHARGER**	42				BLANK

PROPOSED 20A BREAKERS FOR ATS, BLOCK HEATER AND BATTERY CHARGER ON NEW AT&T GENERATOR

EXISTING PANEL SCHEDULE (1)

SCALE: NTS

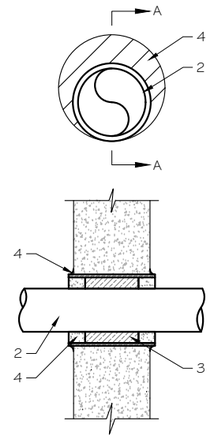

NOTE:
1. IF EXISTING CONSTRUCTION VARIES FROM THIS DETAIL, AN EQUAL 3-HR U.L. PENETRATION APPROPRIATE FOR THE EXISTING WALL TYPE SHALL BE CONSTRUCTED
2. GC SHALL USE NON-SHRINKING CAULK TO WEATHERSEAL ALL PENETRATIONS INTO OR THRU SHELTER WALL.

U.L. SYSTEM NO. C-AJ-1150
CONDUIT THROUGH BEARING WALL SIMILAR TO U.L. DESIGN NO. U902
F RATING = 3 HR
T RATING = 0 HR

1. FLOOR OR WALL ASSEMBLY : MINIMUM 4-1/2" THICK REINFORCED LIGHTWEIGHT OR NORMAL WEIGHT (100-150 PCF) CONCRETE. WALL MAY ALSO BE CONSTRUCTED OF ANY UL CLASSIFIED CONCRETE BLOCKS*. MAX DIAMETER OF OPENING IS 4". SEE CONCRETE BLOCKS 9CATZ) CATEGORY IN THE FIRE RESISTANCE DIRECTORY FOR NAMES OF MANUFACTURERS.
2. THROUGH PENETRATIONS : ONE METALLIC PIPE OR CONDUIT TO BE RIGIDLY SUPPORTED ON BOTH SIDES OF FLOOR OR WALL ASSEMBLY. THE ANNULAR SPACE SHALL BE MINIMUM 0". (POINT CONTACT) TO MAXIMUM 1-3/8". THE FOLLOWING TYPES AND SIZES OF METALLIC PIPES OR CONDUITS MAY BE USED:
   A. STEEL PIPE-NOMINAL 6" DIAMETER (OR SMALLER) SCHEDULE 40 (OR HEAVIER) STEEL PIPE.
   B. IRON PIPE-NOMINAL 6" DIAMETER (OR SMALLER) CAST OR DUCTILE IRON PIPE.
   C. CONDUIT - NOMINAL 4" DIAMETER (OR SMALLER) STEEL ELECTRICAL METALLIC TUBING OR NOMINAL 3-1/2" DIAMETER (OR SMALLER) STEEL CONDUIT.
3. PACKING MATERIAL: MINIMUM 6" THICKNESS OF MIN 4.0 PCF MINERAL WOOL BATTING INSULATION FIRMLY PACKED INTO OPENING AS A PERMANENT FORM. PACKING MATERIAL TO BE RECESSED FROM TOP SURFACE OF FLOOR OR FROM BOTH SURFACES OF WALL AS REQUIRED TO ACCOMMODATE THE REQUIRED THICKNESS OF FILL MATERIAL.
4. FILL, VOID, OR CAVITY MATERIAL*: SEALANT: MINIMUM 1/4" THICKNESS OF FILL MATERIAL APPLIED WITHIN THE ANNULUS, FLUSH WITH TOP SURFACE OF FLOOR AND WITH BOTH SURFACES OF WALL. AT THE POINT CONTACT LOCATION BETWEEN PIPE AND CONCRETE, A MINIMUM 1/2" DIAMETER BEAD OF FILL MATERIAL SHALL BE APPLIED AT THE CONCRETE/PIPE INTERFACE ON THE TOP SURFACE OF FLOOR AND ON BOTH SURFACES OF WALL. W RATING APPLIES ONLY WHEN CP601S OR CP604 SEALANT IS USED.

HILTI CONSTRUCTION CHEMICALS, DIV OF HILTI INC. : CP601S, CP604, CP606, OR FS-ONE SEALANT.

* BEARING THE UL CLASSIFICATION MARK

OUTER WALL PENETRATION DETAIL (IF APPLICABLE) (2)

SCALE: NTS

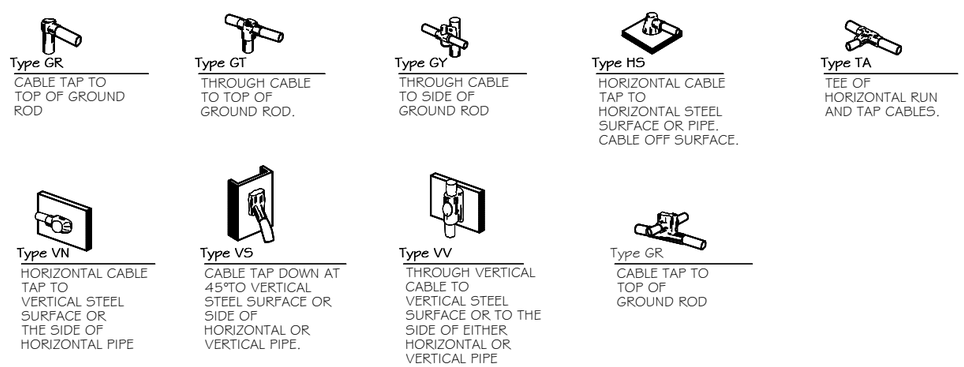

NOTE:
CONTRACTOR TO LABEL WIRES WITH P-TOUCH OR SIMILAR LABELS ONLY. ABSOLUTELY NO HANDWRITTEN LABELS.

*CONTRACTOR TO UTILIZE NEXT AVAILABLE IN SEQUENCE SINGLE BREAKER POSITION FOR GENERATOR, BATTERY CHARGER, BATTERY HEATER AND BLOCK HEATER

CADWELD DETAILS (3)

SCALE: NTS

RAMAKER & ASSOCIATES, INC.
100% EMPLOYEE-OWNED
855 Community Dr, Sauk City, WI 53583
608-643-4100 www.Ramaker.com
Sauk City, WI • Willmar, MN
Woodcliff Lake, NJ • Bayamon, PR

PREPARED FOR:
at&t Mobility

CONSULTANT:
GENERAL DYNAMICS
Information Technology, Inc.
GENERAL DYNAMICS
661 MOORE RD STE 110
KING OF PRUSSIA, PA 19406

Certification & Seal:
I hereby certify that this plan, specification, or report was prepared by me or under my direct supervision and that I am a duly Licensed Professional Engineer under the laws of the State of Connecticut.

STATE OF CONNECTICUT · JAMES R. SKOWRONSKI · 26266 · LICENSED PROFESSIONAL ENGINEER

Signature: Date: 3/19/2020

MARK	DATE	DESCRIPTION
1	3/19/20	REVISED CDs

ISSUE PHASE: FINAL DATE ISSUED: 2/28/2020

PROJECT TITLE:
NORWICH-ROGERS RD
FA ID # 10034991

PROJECT INFORMATION:
223 ROGERS ROAD
NORWICH, CT 06360

SHEET TITLE:
PANEL AND PENETRATION DETAILS

SCALE: NONE

PROJECT NUMBER: 45813
SHEET NUMBER: E-2

I:\458004581 3\CAD\45813_GD_ATT_GENERATOR ADD CDs_NORWICH-ROGERS RD_10034991_recover.dwg Printed by: rguerrero on Mar 19, 2020 - 9:41am

This document contains confidential or proprietary information of Ramaker & Associates, Inc. Neither this document nor the information herein is to be reproduced, distributed, used or disclosed either in whole or in part except as authorized by Ramaker and Associates, Inc.

© Copyright 2019 - Ramaker & Associates, Inc. - All Rights Reserved
DRAWN BY: TRB CHECKED BY: MJR

I:\45800\45813\CAD\45813_GD_ATT_GENERATOR ADD CDs_NORWICH-ROGERS RD_10034991_recover.dwg Printed by: rguerrero on Mar 19, 2020 - 9:41am

1. CONDUIT (TYP)
2. BUTTERFLY CLAMP AS REQUIRED
3. EXISTING WALL/CEILING
4. VERTICAL "UNISTRUT" P1000 'T' SERIES LENGTH BASED ON NUMBER OF CONDUIT TO BE MOUNTED

WALL CONSTRUCTION TYPE	USE
HOLLOW	3/8" DIA. TOGGLE BOLT
HOLLOW, AT STUD	3/8" DIA. LAG SCREW
CONCRETE BLOCK (HOLLOW)	3/8" DIA. HILTI HY-20 WITH SCREEN, MINIMUM EMBEDMENT 2-1/2"
CONCRETE (SOLID)	3/8" DIA. HILTI HY-150 WITH SCREEN, MINIMUM EMBEDMENT 2-1/2"
NOTE: USE GALVANIZED OR STAINLESS STEEL HARDWARE FOR WALL MOUNT & CONNECTIONS OF CHANNELS SPACE UNITS @ 5'-0" O.C. LENGTH OF RUN	

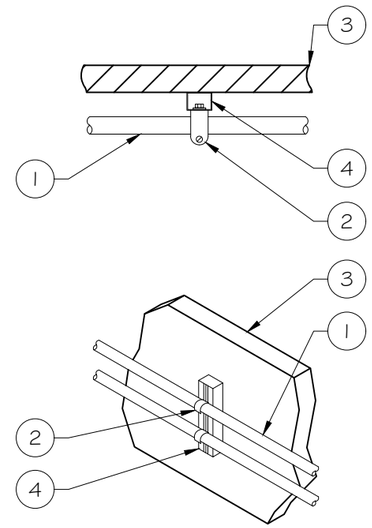

CONDUIT WALL MOUNT (1)
SCALE: NTS

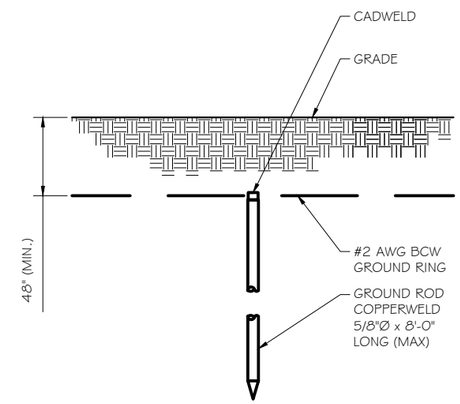

NOTE:
1. GROUND RODS MAY BE:
   - COPPER CLAD STEEL
   - SOLID COPPER
2. GROUND RODS SHALL HAVE A MAXIMUM SPACING TWICE THE LENGTH OF ROD
3. SEE RESISTIVITY REPORT FOR VERIFICATION AS AVAILABLE
4. A LARGER CONDUCTOR SHALL BE REQUIRED IN AREAS HIGHLY PRONE TO LIGHTNING AND/OR AREAS WITH HIGHLY ACIDIC SOIL
5. GROUND RODS INSTALLED WITHIN CLOSE PROXIMITY TO TOWER OR WHEN SOIL IS AT OR BELOW 2,000 OHM-CM, SHALL BE GALVANIZED TO PREVENT GALVANIC CORROSION OF TOWER, (SEE ANSI/TIA-EIA-222-G)
6. PROVIDE (1) GROUND LEAD TO EACH SIDE OF THE GENERATOR

GROUND ROD DETAIL (2)
SCALE: NTS

WALL CONSTRUCTION TYPE	USE
HOLLOW	3/8" DIA. TOGGLE BOLT
HOLLOW, AT STUD	3/8" DIA. LAG SCREW
CONCRETE BLOCK (HOLLOW)	7/16" DIA. HILTI HY-20 WITH SCREEN MINIMUM EMBEDMENT 2-1/2"
CONCRETE (SOLID)	7/16" DIA. HILTI HY-150 WITH SCREEN MINIMUM EMBEDMENT 2-1/2"

NOTE:
1. USE GALVANIZED OR STAINLESS STEEL HARDWARE FOR WALL MOUNT AND CONNECTION OF CHANNELS
2. GC SHALL USE NON-SHRINKING CAULK TO WEATHER SEAL ALL PENETRATIONS INTO OR THROUGH SHELTER WALL

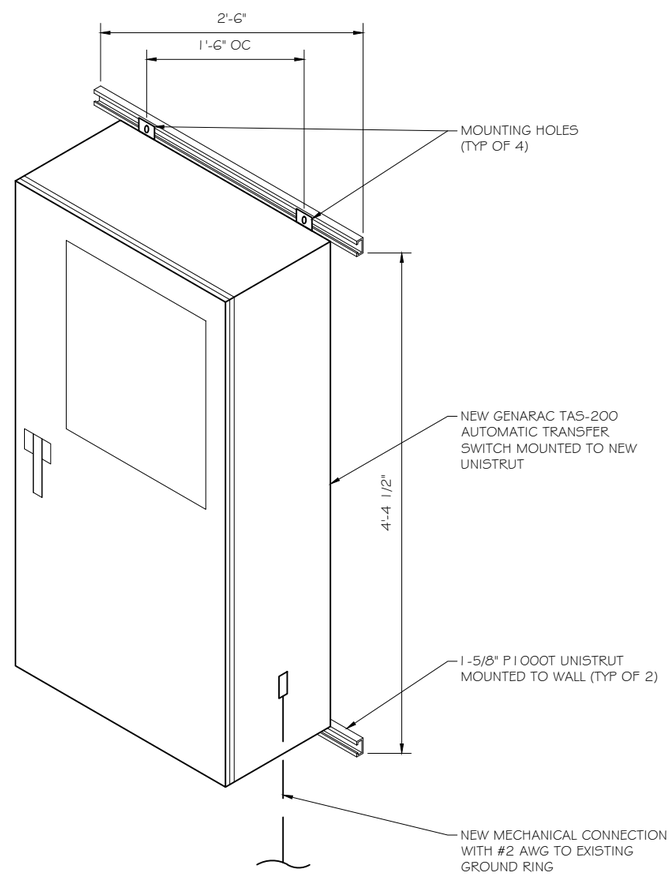

GENERAC ATS MOUNTING DETAIL (3)
SCALE: NTS

RAMAKER & ASSOCIATES, INC.
100% EMPLOYEE-OWNED
855 Community Dr, Sauk City, WI 53583
608-643-4100 www.Ramaker.com
Sauk City, WI • Willmar, MN
Woodcliff Lake, NJ • Bayamon, PR

PREPARED FOR:
at&t Mobility

CONSULTANT:
GENERAL DYNAMICS
Information Technology, Inc.
GENERAL DYNAMICS
661 MOORE RD STE 110
KING OF PRUSSIA, PA 19406

Certification & Seal:
I hereby certify that this plan, specification, or report was prepared by me or under my direct supervision and that I am a duly Licensed Professional Engineer under the laws of the State of Connecticut.

STATE OF CONNECTICUT · JAMES R. SKOWRONSKI · 26266 · LICENSED PROFESSIONAL ENGINEER

Signature: Date: 3/19/2020

MARK	DATE	DESCRIPTION
1	3/19/20	REVISED CDs

ISSUE PHASE: FINAL — DATE ISSUED: 2/28/2020

PROJECT TITLE:
NORWICH-ROGERS RD
FA ID # 10034991

PROJECT INFORMATION:
223 ROGERS ROAD
NORWICH, CT 06360

SHEET TITLE:
ATS, CONDUIT & GROUND ROD DETAILS

SCALE: NONE

PROJECT NUMBER: 45813
SHEET NUMBER: E-3

This document contains confidential or proprietary information of Ramaker & Associates, Inc. Neither this document nor the information herein is to be reproduced, distributed, used or disclosed either in whole or in part except as authorized by Ramaker and Associates, Inc.

© Copyright 2019 - Ramaker & Associates, Inc. - All Rights Reserved
DRAWN BY: TRB CHECKED BY: MJR

SD030 | 2.2L | 30 kW

INDUSTRIAL DIESEL GENERATOR SET

EPA Certified Stationary Emergency

GENERAC | INDUSTRIAL POWER

Standby Power Rating
30 kW, 38 kVA, 60 Hz

Prime Power Rating*
27 kW, 34 kVA, 60 Hz

*EPA Certified Prime ratings are not available in the US or its Territories

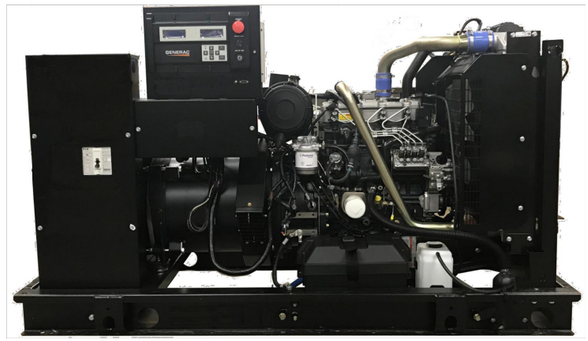

Image used for illustration purposes only

Codes and Standards

Not all codes and standards apply to all configurations. Contact factory for details.

- UL2200, UL508, UL489, UL142
- CSA C22.2
- BS5514 and DIN 6271
- SAE J1349
- NFPA 37, 70, 99, 110
- NEC700, 701, 702, 708
- ISO 3046, 7637, 8528, 9001
- NEMA ICS10, MG1, 250, ICS6, AB1
- ANSI C62.41

Powering Ahead

For over 50 years, Generac has provided innovative design and superior manufacturing.

Generac ensures superior quality by designing and manufacturing most of its generator components, including alternators, enclosures and base tanks, control systems and communications software.

Generac gensets utilize a wide variety of options, configurations and arrangements, allowing us to meet the standby power needs of practically every application.

Generac searched globally to ensure the most reliable engines power our generators. We choose only engines that have already been proven in heavy-duty industrial applications under adverse conditions.

Generac is committed to ensuring our customers' service support continues after their generator purchase.

SPEC SHEET

1 of 6

SD030 | 2.2L | 30 kW

INDUSTRIAL DIESEL GENERATOR SET

EPA Certified Stationary Emergency

GENERAC | INDUSTRIAL POWER

STANDARD FEATURES

ENGINE SYSTEM

- Oil Drain Extension
- Air Cleaner
- Fan Guard
- Stainless Steel Flexible Exhaust Connection
- Factory Filled Oil and Coolant
- Radiator Duct Adapter (Open Set Only)
- Critical Silencer (Enclosed Unit Only)
- Engine Coolant Heater

Fuel System

- Fuel Lockoff Solenoid
- Primary Fuel Filter

Cooling System

- Closed Coolant Recovery System
- UV/Ozone Resistant Hoses
- Factory-Installed Radiator
- Radiator Drain Extension
- 50/50 Ethylene Glycol Antifreeze

Electrical System

- Battery Charging Alternator
- Battery Cables
- Battery Tray
- Rubber-Booted Engine Electrical Connections
- Solenoid Activated Starter Motor

ALTERNATOR SYSTEM

- UL2200 GENprotect™
- Class H Insulation Material
- 2/3 Pitch
- Skewed Stator
- Brushless Excitation
- Sealed Bearing
- Rotor Dynamically Spin Balanced
- Amortisseur Winding (3-Phase Only)
- Full Load Capacity Alternator
- Protective Thermal Switch

GENERATOR SET

- Internal Genset Vibration Isolation
- Separation of Circuits - High/Low Voltage
- Separation of Circuits - Multiple Breakers
- Wrapped Exhaust Piping
- Standard Factory Testing
- 2 Year Limited Warranty (Standby Rated Units)
- 1 Year Limited Warranty (Prime Rated Units)
- Silencer Mounted in the Discharge Hood (Enclosed Unit Only)

ENCLOSURE (If Selected)

- Rust-Proof Fasteners with Nylon Washers to Protect Finish
- High Performance Sound-Absorbing Material (Sound Attenuation Enclosures)
- Gasketed Doors
- Stamped Air-Intake Louvers
- Upward Facing Discharge Hoods (Radiator and Exhaust)
- Stainless Steel Lift Off Door Hinges
- Stainless Steel Lockable Handles
- RhinoCoat™ - Textured Polyester Powder Coat Paint

FUEL TANKS (If Selected)

- UL 142/ULC S601
- Double Wall
- Normal and Emergency Vents
- Sloped Top
- Sloped Bottom
- Factory Pressure Tested
- Rupture Basin Alarm
- Fuel Level
- Check Valve In Supply and Return Lines
- RhinoCoat™ - Textured Polyester Powder Coat Paint
- Stainless Steel Hardware

CONTROL SYSTEM

Digital H Control Panel- Dual 4x20 Display

Program Functions

- Programmable Crank Limiter
- 7-Day Programmable Exerciser
- Special Applications Programmable Logic Controller
- RS-232/485 Communications
- All Phase Sensing Digital Voltage Regulator
- 2-Wire Start Capability
- Date/Time Fault History (Event Log)
- Isochronous Governor Control
- Waterproof/Sealed Connectors
- Audible Alarms and Shutdowns
- Not in Auto (Flashing Light)
- Auto/Off/Manual Switch
- E-Stop (Red Mushroom-Type)
- NFPA110 Level I and II (Programmable)
- Customizable Alarms, Warnings, and Events
- Modbus® Protocol
- Predictive Maintenance Algorithm
- Sealed Boards
- Password Parameter Adjustment Protection
- Single Point Ground
- 16 Channel Remote Trending
- 0.2 msec High Speed Remote Trending
- Alarm Information Automatically Annunciated on the Display

Full System Status Display

- Power Output (kW)
- Power Factor
- kW Hours, Total, and Last Run
- Real/Reactive/Apparent Power
- All Phase AC Voltage
- All Phase Currents
- Oil Pressure
- Coolant Temperature
- Coolant Level
- Engine Speed
- Battery Voltage
- Frequency

Alarms and Warnings

- Oil Pressure
- Coolant Temperature
- Coolant Level
- Engine Overspeed
- Battery Voltage
- Alarms and Warnings Time and Date Stamped
- Snap Shots of Key Operation Parameters During Alarms and Warnings
- Alarms and Warnings Spelled Out (No Alarm Codes)

SPEC SHEET

2 of 6

GENERAC 30KW GENERATOR SPECIFICATIONS
SCALE: NTS

1

RAMAKER & ASSOCIATES, INC.
100% EMPLOYEE-OWNED
855 Community Dr, Sauk City, WI 53583
608-643-4100 www.Ramaker.com
Sauk City, WI • Willmar, MN
Woodcliff Lake, NJ • Bayamon, PR

PREPARED FOR:

at&t Mobility

CONSULTANT:

GENERAL DYNAMICS
Information Technology, Inc.

GENERAL DYNAMICS
661 MOORE RD STE 110
KING OF PRUSSIA, PA 19406

Certification & Seal:
I hereby certify that this plan, specification, or report was prepared by me or under my direct supervision and that I am a duly Licensed Professional Engineer under the laws of the State of Connecticut.

STATE OF CONNECTICUT · JAMES R. SKOWRONSKI · 26266 · LICENSED PROFESSIONAL ENGINEER

Signature: Date: 3/19/2020

MARK	DATE	DESCRIPTION
1	3/19/20	REVISED CDs

ISSUE PHASE: FINAL — DATE ISSUED: 2/28/2020

PROJECT TITLE:
NORWICH-ROGERS RD
FA ID # 10034991

PROJECT INFORMATION:
223 ROGERS ROAD
NORWICH, CT 06360

SHEET TITLE:
GENERAC 30KW GENERATOR SPECIFICATIONS

SCALE: NONE

PROJECT NUMBER: 45813
SHEET NUMBER: E-4

This document contains confidential or proprietary information of Ramaker & Associates, Inc. Neither this document nor the information herein is to be reproduced, distributed, used or disclosed either in whole or in part except as authorized by Ramaker and Associates, Inc.

I:\45800\45813\CAD\45813_GD_ATT_GENERATOR ADD CDs_NORWICH-ROGERS RD_10034991_recover.dwg Printed by: rguerrero on Mar 19, 2020 - 9:42am

© Copyright 2019 - Ramaker & Associates, Inc. - All Rights Reserved
DRAWN BY: TRB CHECKED BY: MJR

SD030 | 2.2L | 30 kW

INDUSTRIAL DIESEL GENERATOR SET

EPA Certified Stationary Emergency

GENERAC | INDUSTRIAL POWER

CONFIGURABLE OPTIONS

ENGINE SYSTEM

- Oil Heater
- Critical Silencer (Open Set Only)
- Radiator Stone Guard
- Level 1 Fan and Belt Guards (Open Set Only)

FUEL SYSTEM

- NPT Flexible Fuel Line

ELECTRICAL SYSTEM

- 10A UL Listed Battery Charger
- Battery Warmer

ALTERNATOR SYSTEM

- Alternator Upsizing
- Anti-Condensation Heater
- Tropical Coating
- Permanent Magnet Excitation

GENERATOR SET

- Extended Factory Testing
- 8 Position Load Center
- Pad Vibration Isolation

CIRCUIT BREAKER OPTIONS

- Main Line Circuit Breaker
- 2nd Main Line Circuit Breaker
- Shunt Trip and Auxiliary Contact
- Electronic Trip Breakers

ENCLOSURE

- Weather Protected Enclosure
- Level 1 Sound Attenuation
- Level 2 Sound Attenuation
- Level 2 Sound Attenuation with Motorized Dampers
- Steel Enclosure
- Aluminum Enclosure
- Up to 200 MPH Wind Load Rating (Contact Factory for Availability)
- AC/DC Enclosure Lighting Kit
- Door Alarm Switch
- Enclosure Heater
- Damper Alarm Contacts

WARRANTY (Standby Gensets Only)

- 2 Year Extended Limited Warranty
- 5 Year Limited Warranty
- 5 Year Extended Limited Warranty
- 7 Year Extended Limited Warranty
- 10 Year Extended Limited Warranty

CONTROL SYSTEM

- NFPA 110 Compliant 21-Light Remote Annunciator
- Remote Relay Assembly (8 or 16)
- Oil Temperature Indication and Alarm
- Remote E-Stop (Break Glass-Type, Surface Mount)
- Remote E-Stop (Red Mushroom-Type, Surface Mount)
- Remote E-Stop (Red Mushroom-Type, Flush Mount)
- 100 dB Alarm Horn
- Ground Fault Annunciation
- 120V GFCI and 240V Outlets
- Remote Communication - Modem
- 10A Engine Run Relay

FUEL TANKS (Size On Last Page)

- 8 in (203.2 mm) Fill Extension
- 13 in (330.2 mm) Fill Extension
- 19 in (482.6 mm) Fill Extension
- Overfill Protection Valve
- 5 Gallon Spill Box Return Hose
- 5 Gallon Spill Box
- Tank Risers
- Fuel Level Switch and Alarm
- 12' Vent System
- Fire Rated Stainless Steel Fuel Hose

ENGINEERED OPTIONS

ENGINE SYSTEM

- Coolant Heater Isolation Ball Valves
- Fluid Containment Pan

CONTROL SYSTEM

- Spare Inputs (x4) / Outputs (x4)
- Battery Disconnect Switch

ALTERNATOR SYSTEM

- 3rd Breaker System

GENERATOR SET

- Special Testing

FUEL TANKS

- UL2085 Tank
- Stainless Steel Tanks
- Special Fuel Tanks
- Vent Extensions

SPEC SHEET

SD030 | 2.2L | 30 kW

INDUSTRIAL DIESEL GENERATOR SET

EPA Certified Stationary Emergency

GENERAC | INDUSTRIAL POWER

APPLICATION AND ENGINEERING DATA

ENGINE SPECIFICATIONS

General

Make	Perkins
EPA Emissions Compliance	Stationary Emergency
EPA Emissions Reference	See Emission Data Sheet
Cylinder #	4
Type	In-Line
Displacement - in^3 (L)	135 (2.22)
Bore - in (mm)	3.3 (84)
Stroke - in (mm)	3.9 (100)
Compression Ratio	23.3:1
Intake Air Method	Turbocharged
Cylinder Head	Cast Iron
Piston Type	Aluminum
Crankshaft Type	Forged Steel

Engine Governing

Governor	Electronic Isochronous
Frequency Regulation (Steady State)	±0.5%

Lubrication System

Oil Pump Type	Gear
Oil Filter Type	Full-Flow
Crankcase Capacity - qt (L)	11.2 (10.6)

Cooling System

Cooling System Type	Closed Recovery
Water Pump Type	Pre-Lubed, Self Sealing
Fan Type	Pusher
Fan Speed - RPM	1,980
Fan Diameter - in (mm)	18 (457)

Fuel System

Fuel Type	Ultra Low Sulfur Diesel Fuel #2
Fuel Specifications	ASTM
Fuel Filtering (Microns)	5
Fuel Inject Pump	Distribution Injection Pump
Fuel Pump Type	Engine Driven Gear
Injector Type	Mechanical
Fuel Supply Line - in (mm)	0.31 (7.9) ID
Fuel Return Line - in (mm)	0.2 (4.8) ID

Engine Electrical System

System Voltage	12 VDC
Battery Charger Alternator	Standard
Battery Size	See Battery Index 0161970SBY
Battery Voltage	12 VDC
Ground Polarity	Negative

ALTERNATOR SPECIFICATIONS

Standard Model	K0035124Y21
Poles	4
Field Type	Revolving
Insulation Class - Rotor	H
Insulation Class - Stator	H
Total Harmonic Distortion	<5% (3-Phase)
Telephone Interference Factor (TIF)	< 50
Standard Excitation	Brushless
Bearings	Single Sealed
Coupling	Direct via Flexible Disc
Load Capacity - Standby	100%
Prototype Short Circuit Test	Yes
Voltage Regulator Type	Digital
Number of Sensed Phases	All
Regulation Accuracy (Steady State)	±0.25%

SPEC SHEET

GENERAC 30KW GENERATOR SPECIFICATIONS

SCALE: NTS

1

RAMAKER & ASSOCIATES, INC.
100% EMPLOYEE-OWNED
855 Community Dr, Sauk City, WI 53583
608-643-4100 www.Ramaker.com
Sauk City, WI • Willmar, MN
Woodcliff Lake, NJ • Bayamon, PR

PREPARED FOR:

at&t Mobility

CONSULTANT:

GENERAL DYNAMICS
Information Technology, Inc.

GENERAL DYNAMICS
661 MOORE RD STE 110
KING OF PRUSSIA, PA 19406

Certification & Seal:
I hereby certify that this plan, specification, or report was prepared by me or under my direct supervision and that I am a duly Licensed Professional Engineer under the laws of the State of Connecticut.

STATE OF CONNECTICUT · JAMES R. SKOWRONSKI · 26266 · LICENSED PROFESSIONAL ENGINEER

Signature: Date: 3/19/2020

MARK	DATE	DESCRIPTION
1	3/19/20	REVISED CDs

ISSUE PHASE: FINAL DATE ISSUED: 2/28/2020

PROJECT TITLE:
NORWICH-ROGERS RD
FA ID # 10034991

PROJECT INFORMATION:
223 ROGERS ROAD
NORWICH, CT 06360

SHEET TITLE:
GENERAC 30KW GENERATOR SPECIFICATIONS

SCALE: NONE

PROJECT NUMBER: 45813
SHEET NUMBER: E-4.1

This document contains confidential or proprietary information of Ramaker & Associates, Inc. Neither this document nor the information herein is to be reproduced, distributed, used or disclosed either in whole or in part except as authorized by Ramaker and Associates, Inc.

I:\45800\45813\CAD\45813_GD_ATT_GENERATOR ADD CDs_NORWICH-ROGERS RD_10034991_recover.dwg Printed by: rguerrero on Mar 19, 2020 - 9:42am

© Copyright 2019 - Ramaker & Associates, Inc. - All Rights Reserved
DRAWN BY: TRB CHECKED BY: MJR

I:\45800\45813\CAD\45813_GD_ATT_GENERATOR ADD CDs_NORWICH-ROGERS RD_10034991_recover.dwg Printed by: rguerrero on Mar 19, 2020 - 9:42am

SD030 | 2.2L | 30 kW

INDUSTRIAL DIESEL GENERATOR SET

EPA Certified Stationary Emergency

GENERAC | INDUSTRIAL POWER

OPERATING DATA

POWER RATINGS

		Standby
Single-Phase 120/240 VAC @1.0pf	30 kW	Amps: 125
Three-Phase 120/208 VAC @0.8pf	30 kW	Amps: 104
Three-Phase 120/240 VAC @0.8pf	30 kW	Amps: 90
Three-Phase 277/480 VAC @0.8pf	30 kW	Amps: 45
Three-Phase 346/600 VAC @0.8pf	30 kW	Amps: 36

MOTOR STARTING CAPABILITIES (skVA)

skVA vs. Voltage Dip

277/480 VAC	30%	208/240 VAC	30%
K0035124Y21	61	K0035124Y21	46
K0040124Y21	76	K0040124Y21	58
K0050124Y21	98	K0050124Y21	75

FUEL CONSUMPTION RATES*

Fuel Pump Lift- ft (m)
3 (1)

Total Fuel Pump Flow (Combustion + Return) - gph (Lph)
16.6 (63)

Diesel - gph (Lph)

Percent Load	Standby
25%	1.0 (3.7)
50%	1.4 (5.2)
75%	2.0 (7.5)
100%	2.8 (10.5)

* Fuel supply installation must accommodate fuel consumption rates at 100% load.

COOLING

		Standby
Coolant Flow	gpm (Lpm)	14.9 (56.2)
Coolant System Capacity	gal (L)	2.5 (9.5)
Heat Rejection to Coolant	BTU/hr (kW)	128,638 (136)
Inlet Air	scfm (m^3/hr)	2,800 (4,757)
Maximum Operating Ambient Temperature	°F (°C)	122 (50)
Maximum Operating Ambient Temperature (Before Derate)	See Bulletin No. 0199280SSD	
Maximum Radiator Backpressure	in H_2O (kPa)	0.5 (0.12)

COMBUSTION AIR REQUIREMENTS

	Standby
Flow at Rated Power scfm (m^3/min)	88 (2.5)

ENGINE

		Standby
Rated Engine Speed	RPM	1,800
Horsepower at Rated kW**	hp	49
Piston Speed	ft/min (m/min)	1,181 (360)
BMEP	psi (kPa)	159 (1,096)

EXHAUST

		Standby
Exhaust Flow (Rated Output)	scfm (m^3/min)	296.6 (8.4)
Max. Allowable Backpressure (Post Turbocharger)	inHg (kPa)	1.5 (5.1)
Exhaust Temp (Rated Output)	°F (°C)	892 (478)

** Refer to "Emissions Data Sheet" for maximum bHP for EPA and SCAQMD permitting purposes.

Deration – Operational characteristics consider maximum ambient conditions. Derate factors may apply under atypical site conditions.
Please contact a Generac Power Systems Industrial Dealer for additional details. All performance ratings in accordance with ISO3046, BS5514, ISO8528, and DIN6271 standards.
Standby - See Bulletin 0187500SSB
Prime - See Bulletin 0187510SSB

SPEC SHEET

SD030 | 2.2L | 30 kW

INDUSTRIAL DIESEL GENERATOR SET

EPA Certified Stationary Emergency

GENERAC | INDUSTRIAL POWER

DIMENSIONS AND WEIGHTS*

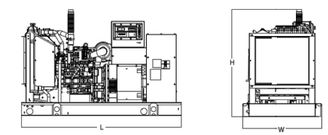

OPEN SET (Includes Exhaust Flex)

Run Time - Hours	Usable Capacity - Gal (L)	L x W x H - in (mm)	Weight - lbs (kg)
No Tank	-	76.0 (1,930) x 37.4 (950) x 44.8 (1,138)	1,641 (745)
19	54 (204)	76.0 (1,930) x 37.4 (950) x 57.8 (1,468)	2,121 (963)
47	132 (501)	76.0 (1,930) x 37.4 (950) x 69.8 (1,773)	2,351 (1,067)
75	211 (799)	76.0 (1,930) x 37.4 (950) x 81.8 (2,078)	2,560 (1,162)
107	300 (1,136)	92.9 (2,360) x 37.4 (950) x 81.8 (2,078)	2,623 (1,190)

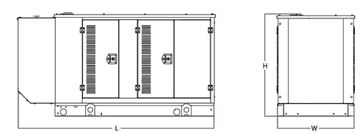

WEATHER PROTECTED ENCLOSURE

Run Time - Hours	Usable Capacity - Gal (L)	L x W x H - in (mm)	Weight - lbs (kg) Enclosure Only Steel	Aluminum
No Tank	-	94.8 (2,409) x 38.0 (965) x 49.5 (1,258)	372 (170)	241 (110)
19	54 (204)	94.8 (2,409) x 38.0 (965) x 62.5 (1,588)		
47	132 (501)	94.8 (2,409) x 38.0 (965) x 74.5 (1,893)		
75	211 (799)	94.8 (2,409) x 38.0 (965) x 86.5 (2,198)		
107	300 (1,136)	94.8 (2,409) x 38.0 (965) x 86.5 (2,198)		

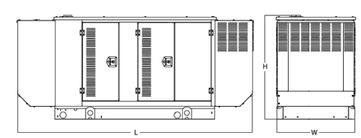

LEVEL 1 ACOUSTIC ENCLOSURE

Run Time - Hours	Usable Capacity - Gal (L)	L x W x H - in (mm)	Weight - lbs (kg) Enclosure Only Steel	Aluminum
No Tank	-	112.5 (2,857) x 38.0 (965) x 49.5 (1,258)	505 (230)	338 (154)
19	54 (204)	112.5 (2,857) x 38.0 (965) x 62.5 (1,582)		
47	132 (501)	112.5 (2,857) x 38.0 (965) x 74.5 (1,893)		
75	211 (799)	112.5 (2,857) x 38.0 (965) x 86.5 (2,198)		
107	300 (1,136)	112.5 (2,857) x 38.0 (965) x 86.5 (2,198)		

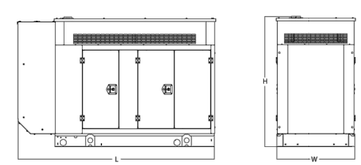

LEVEL 2 ACOUSTIC ENCLOSURE

Run Time - Hours	Usable Capacity - Gal (L)	L x W x H - in (mm)	Weight - lbs (kg) Enclosure Only Steel	Aluminum
No Tank	-	94.8 (2,407) x 38.0 (965) x 61.1 (1,551)	510 (232)	341 (155)
19	54 (204)	94.8 (2,407) x 38.0 (965) x 74.1 (1,881)		
47	132 (501)	94.8 (2,407) x 38.0 (965) x 86.1 (2,186)		
75	211 (799)	94.8 (2,407) x 38.0 (965) x 98.1 (2,491)		
107	300 (1,136)	94.8 (2,407) x 38.0 (965) x 98.1 (2,491)		

* All measurements are approximate and for estimation purposes only. Specification characteristics may change without notice. Please contact a Generac Power Systems Industrial Dealer for detailed installation drawings.

SPEC SHEET

Generac Power Systems, Inc. | P.O. Box 8 | Waukesha, WI 53189
P: (262) 544-4811 ©2018 Generac Power Systems, Inc. All rights reserved. All specifications are subject to change without notice.

Part No. 10000024842
Rev. B 08/27/18

GENERAC 30KW GENERATOR SPECIFICATIONS
SCALE: NTS
1

RAMAKER & ASSOCIATES, INC.
100% EMPLOYEE-OWNED
855 Community Dr, Sauk City, WI 53583
608-643-4100 www.Ramaker.com
Sauk City, WI • Willmar, MN
Woodcliff Lake, NJ • Bayamon, PR

PREPARED FOR:

at&t Mobility

CONSULTANT:

GENERAL DYNAMICS
Information Technology, Inc.

GENERAL DYNAMICS
661 MOORE RD STE 110
KING OF PRUSSIA, PA 19406

Certification & Seal:
I hereby certify that this plan, specification, or report was prepared by me or under my direct supervision and that I am a duly Licensed Professional Engineer under the laws of the State of Connecticut.

STATE OF CONNECTICUT · JAMES R. SKOWRONSKI · 26266 · LICENSED PROFESSIONAL ENGINEER

Signature: Date: 3/19/2020

MARK	DATE	DESCRIPTION
1	3/19/20	REVISED CDs

ISSUE PHASE: FINAL DATE ISSUED: 2/28/2020

PROJECT TITLE:
NORWICH-ROGERS RD
FA ID # 10034991

PROJECT INFORMATION:
223 ROGERS ROAD
NORWICH, CT 06360

SHEET TITLE:
GENERAC 30KW GENERATOR SPECIFICATIONS

SCALE: NONE

PROJECT NUMBER: 45813
SHEET NUMBER: E-4.2

This document contains confidential or proprietary information of Ramaker & Associates, Inc. Neither this document nor the information herein is to be reproduced, distributed, used or disclosed either in whole or in part except as authorized by Ramaker and Associates, Inc.

© Copyright 2019 - Ramaker & Associates, Inc. - All Rights Reserved
DRAWN BY: TRB CHECKED BY: MJR

I:\45800\45813\CAD\45813_GD_ATT_GENERATOR ADD CDs_NORWICH-ROGERS RD_10034991_recover.dwg Printed by: rguerrero on Mar 19, 2020 - 9:42am

TTS Series Switches

200 Amps 600 VAC

GENERAC | INDUSTRIAL POWER

TAS200

200A Automatic Transfer Switch

TAS200 TAS200

1 of 3 2 of 3

The Generac TAS200 Automatic Transfer Switch

Flexibility for multiple application installations

Multiple generator support with 3 source panel

Designed with a 6 inch touch screen controller for improved user interface

Camlock functionality for mobile generator sources

Image used for illustration purposes only.

Features

- STEEL CONSTRUCTION
- NEMA 3R ENCLOSURE WITH HINGED "PADLOCKING" DOORS
- STAINLESS STEEL HARDWARE
- CAMLOCK "QUICK CONNECT" CAPABILITY
- OPERATIONAL STATUS VIEW VIA 6 INCH TOUCH SCREEN
- TEST FUNCTION - FAST TEST & NORMAL TEST
- UL1008 LISTED - FOR EMERGENCY SYSTEMS

Optional Features

- EXTENDED WARRANTY
- THREE-PHASE VOLTAGE CONFIGURATIONS

Codes and Standards

Generac products are designed to the following standards:

c UL us LISTED — UL1008, UL508, UL50, CSA C22.2 No. 178

nec — NEC 700, 701 and 702

NEMA — NEMA 250

Application and Engineering Data

Cabinet Specifications	
Dimensions	24"W x 12"D x 48"H
Weight	210 lbs.
Construction	Single Chamber with Main Door
	Steel
	UL Type / NEMA 3R Rated
	Powder Coat Finish for Corrosion Resistance
	C-UL-US Listed - Automatic Transfer Switch
	Stainless Steel Hardware
	3-Point Latching System with Pad-Lockable Handles
Mounting Options	Wall
	H-frame
Installed	Pre-wired alarm terminal strip

Electrical Specifications	
Voltage/Phase/Amps	120/240 Single-Phase, 200A 120/208 3-Phase, 200A 120/240 3-Phase, 200A
Breaker	Eaton 200 amp Utility Breaker
	Eaton 200 amp Generator Breaker
Maximum RMS Symmetrical Fault Current - Amps	25k AIC Rated
Protective Device Continuous Rating (Max) Amp	200
Input to Generator	350MCM - #6 AWG
Output to Site	350MCM - #6 AWG
Generator Annunciator Connector	Deutsch DTM04-12PA-L012
Alarm Terminal Board	Generator Run Alarm
	Generator Fail – Shutdown Alarm
	Generator Fail – Non Shutdown Alarm
	Low Fuel Alarm
	Generator Theft Alarm
	AC Utility Fail Alarm

Camlock Component		
Camlock Component	Shipped loose for multiple installation options	
Dimensions	9" W x 9.4" D x 24.25" H	
200A Camlock Generator Connection	Single-Phase: Black L1, Red L2, White-Neutral, Green-Ground	
	3-Phase: Black L1, Red L2, Blue L3, White-Neutral, Green-Ground	
	Uses 4 CH E1016 Male Connectors	
	Mating Connector – CH E1016 Female	

GENERAC ATS SPECIFICATIONS (1)
SCALE: NTS

RAMAKER & ASSOCIATES, INC.
100% EMPLOYEE-OWNED
855 Community Dr, Sauk City, WI 53583
608-643-4100 www.Ramaker.com
Sauk City, WI • Willmar, MN
Woodcliff Lake, NJ • Bayamon, PR

PREPARED FOR:
at&t Mobility

CONSULTANT:
GENERAL DYNAMICS
Information Technology, Inc.
GENERAL DYNAMICS
661 MOORE RD STE 110
KING OF PRUSSIA, PA 19406

Certification & Seal:
I hereby certify that this plan, specification, or report was prepared by me or under my direct supervision and that I am a duly Licensed Professional Engineer under the laws of the State of Connecticut.

STATE OF CONNECTICUT · JAMES R. SKOWRONSKI · 26266 · LICENSED PROFESSIONAL ENGINEER

Signature: Date: 3/19/2020

MARK	DATE	DESCRIPTION
1	3/19/20	REVISED CDs

ISSUE PHASE: FINAL — DATE ISSUED: 2/28/2020

PROJECT TITLE:
NORWICH-ROGERS RD
FA ID # 10034991

PROJECT INFORMATION:
223 ROGERS ROAD
NORWICH, CT 06360

SHEET TITLE:
GENERAC ATS SPECIFICATIONS

SCALE: NONE

PROJECT NUMBER: 45813
SHEET NUMBER: E-5

This document contains confidential or proprietary information of Ramaker & Associates, Inc. Neither this document nor the information herein is to be reproduced, distributed, used or disclosed either in whole or in part except as authorized by Ramaker and Associates, Inc.

© Copyright 2019 - Ramaker & Associates, Inc. - All Rights Reserved
DRAWN BY: TRB CHECKED BY: MJR

I:\45800\45813\CAD\45813_GD_ATT_GENERATOR ADD CDs_NORWICH-ROGERS RD_10034991_recover.dwg Printed by: rguerrero on Mar 19, 2020 - 9:42am

GENERAC | INDUSTRIAL POWER

TTS Control Systems

TAS200

Touch Screen Interface

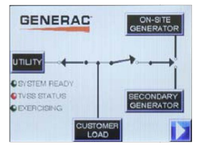

INDICATORS AND BUTTONS

• System Ready indicator • Standby Operating indicator • Utility Available indicator • GEN/UTIL Switch Position indicator • TVSS status	• Normal Test button • Fast Test button • Return to Normal button • Reset button • Exercising indicator

DETAILS SCREEN

System Settings:

- System Voltage/Phases:
  - 120/240V single phase (standard)
  - 120/208V three phase (optional)
  - 120/240V three phase (optional)
- Utility Fail Monitor:
  - Under Voltage: 75-95% of nominal voltage
  - Over Voltage: 105%-125% of nominal voltage
  - Pickup (hysteresis): fixed at 5 volts
  - Delay time: 0-60s
- Utility Interrupt Delay: 0-60s
- Return to Utility Timer: 1-30 minutes
- Transfer:
  - In-phase, or
  - Time-Delay-Neutral at 0.0-10.0s in 1 second increments

Engine Settings:

- Engine Warm-up timer: 0-20 minutes
- Generator Load Accept:
  - Time-Delay-Neutral at 0.0-10.0s in 1 second increments
  - Voltage: 85-95% of nominal
  - Frequency: 85-95% of nominal
- Engine Minimum Run Timer: 5-30 minutes
- Engine Cooldown Timer: 0-20 minutes

Exercise Settings:

- Time of day
- Day of week
- Exercise:
  - Exercise with/without load
  - Exercise once every 1, 2, or 4 weeks.
  - Exercise time-of-day
  - Exercise day of week
  - Exercise duration: 15-30 minutes

Screen Settings:

- Brightness & Contrast button
- Screen Calibration button
- Startup/Clean screen

Diagnostics:

- Digital I/O bits status
- Voltage A/D readings

Mimic Diagram:

- System Ready
- Transfer switch position
- Utility available
- Standby available
- Maintenance/Auto switch position
- Generator source TS position
- TVSS status

Generac Power Systems, Inc. • S45 W29290 HWY. 59, Waukesha, WI 53189 • generac.com
©2013 Generac Power Systems, Inc. All rights reserved. All specifications are subject to change without notice. Bulletin 0195670SBY-B / Printed in U.S.A. 03/13/13

GENERAC ATS SPECIFICATIONS (1)
SCALE: NTS

RAMAKER & ASSOCIATES, INC.
100% EMPLOYEE-OWNED
855 Community Dr, Sauk City, WI 53583
608-643-4100 www.Ramaker.com
Sauk City, WI • Willmar, MN
Woodcliff Lake, NJ • Bayamon, PR

PREPARED FOR:
at&t Mobility

CONSULTANT:
GENERAL DYNAMICS
Information Technology, Inc.
GENERAL DYNAMICS
661 MOORE RD STE 110
KING OF PRUSSIA, PA 19406

Certification & Seal:
I hereby certify that this plan, specification, or report was prepared by me or under my direct supervision and that I am a duly Licensed Professional Engineer under the laws of the State of Connecticut.

STATE OF CONNECTICUT · JAMES R. SKOWRONSKI · 26266 · LICENSED · PROFESSIONAL ENGINEER

Signature: Date: 3/19/2020

MARK	DATE	DESCRIPTION
1	3/19/20	REVISED CDs

ISSUE PHASE: FINAL — DATE ISSUED: 2/28/2020

PROJECT TITLE:
NORWICH-ROGERS RD
FA ID # 10034991

PROJECT INFORMATION:
223 ROGERS ROAD
NORWICH, CT 06360

SHEET TITLE:
GENERAC ATS SPECIFICATIONS

SCALE: NONE

PROJECT NUMBER: 45813
SHEET NUMBER: E-5.1

This document contains confidential or proprietary information of Ramaker & Associates, Inc. Neither this document nor the information herein is to be reproduced, distributed, used or disclosed either in whole or in part except as authorized by Ramaker and Associates, Inc.

223 ROGERS RD

Location	223 ROGERS RD	**Mblu**	88/ 1/ 10/ 1/
Acct#	0007550001	**Owner**	COLEMAN MICHAEL J TR
Assessment	$295,200	**Appraisal**	$421,700
PID	743	**Building Count**	1

Current Value

Appraisal			
Valuation Year	**Improvements**	**Land**	**Total**
2018	$196,100	$225,600	$421,700
Assessment			
Valuation Year	**Improvements**	**Land**	**Total**
2018	$137,300	$157,900	$295,200

Parcel Addreses

Additional Addresses
No Additional Addresses available for this parcel

Owner of Record

Owner	COLEMAN MICHAEL J TR C/O PROPERTY TAX DEPT	**Sale Price**	$0
		Certificate	
Address	P.O BOX 723597 ATLANTA, GA 31139	**Book & Page**	1297/0025
		Sale Date	01/22/1997

Ownership History

Ownership History				
Owner	**Sale Price**	**Certificate**	**Book & Page**	**Sale Date**
COLEMAN MICHAEL J TR	$0		1297/0025	01/22/1997

Building Information

Building 1 : Section 1

Year Built:
Living Area: 0
Replacement Cost: $0
Building Percent Good:
Replacement Cost
Less Depreciation: $0

Building Attributes	
Field	**Description**
Style	Vacant Land
Model	
Grade:	
Stories:	
Occupancy	
Exterior Wall 1	
Exterior Wall 2	
Roof Structure:	
Roof Cover	
Interior Wall 1	
Interior Wall 2	
Interior Flr 1	
Interior Flr 2	
Heat Fuel	
Heat Type:	
AC Type:	
Total Bedrooms:	
Total Bthrms:	
Total Half Baths:	
Total Xtra Fixtrs:	
Total Rooms:	
Bath Style:	
Kitchen Style:	
Num Kitchens	
Fireplace (s)	
Whirlpool	
FPLG Gas	
FPLW Wood	
FPO	
Usrfld 107	
park	
Fireplaces	
Usrfld 108	
Usrfld 101	
Usrfld 102	

Building Photo

(http://images.vgsi.com/photos/NorwichCTPhotos//\00\01\99\75.jpg)

Building Layout

(ParcelSketch.ashx?pid=743&bid=743)

Building Sub-Areas (sq ft)	Legend
No Data for Building Sub-Areas	

Usrfld 100	
Usrfld 300	
Usrfld 301	

Extra Features

Extra Features	Legend
No Data for Extra Features	

Land

Land Use

Use Code	431V
Description	TEL REL TW M-00
Zone	R80
Neighborhood	
Alt Land Appr	No
Category	

Land Line Valuation

Size (Acres)	2.85
Frontage	0
Depth	0
Assessed Value	$157,900
Appraised Value	$225,600

Outbuildings

Outbuildings						Legend
Code	**Description**	**Sub Code**	**Sub Description**	**Size**	**Value**	**Bldg #**
SHD5	Shed Comm Mas			625.00 S.F.	$7,800	1
FN4	Fence Chain 8'			240.00 L.F.	$2,000	1
TWR	CELL TOWER			150.00 UNITS	$56,300	1
MSC4	ARRAY			1.00 UNIT	$130,000	1

Valuation History

Appraisal			
Valuation Year	**Improvements**	**Land**	**Total**
2019	$196,100	$225,600	$421,700
2018	$196,100	$225,600	$421,700
2017	$115,429	$222,286	$337,714

Assessment			
Valuation Year	**Improvements**	**Land**	**Total**
2019	$137,300	$157,900	$295,200
2018	$137,300	$157,900	$295,200
2017	$80,800	$155,600	$236,400

(c) 2020 Vision Government Solutions, Inc. All rights reserved.

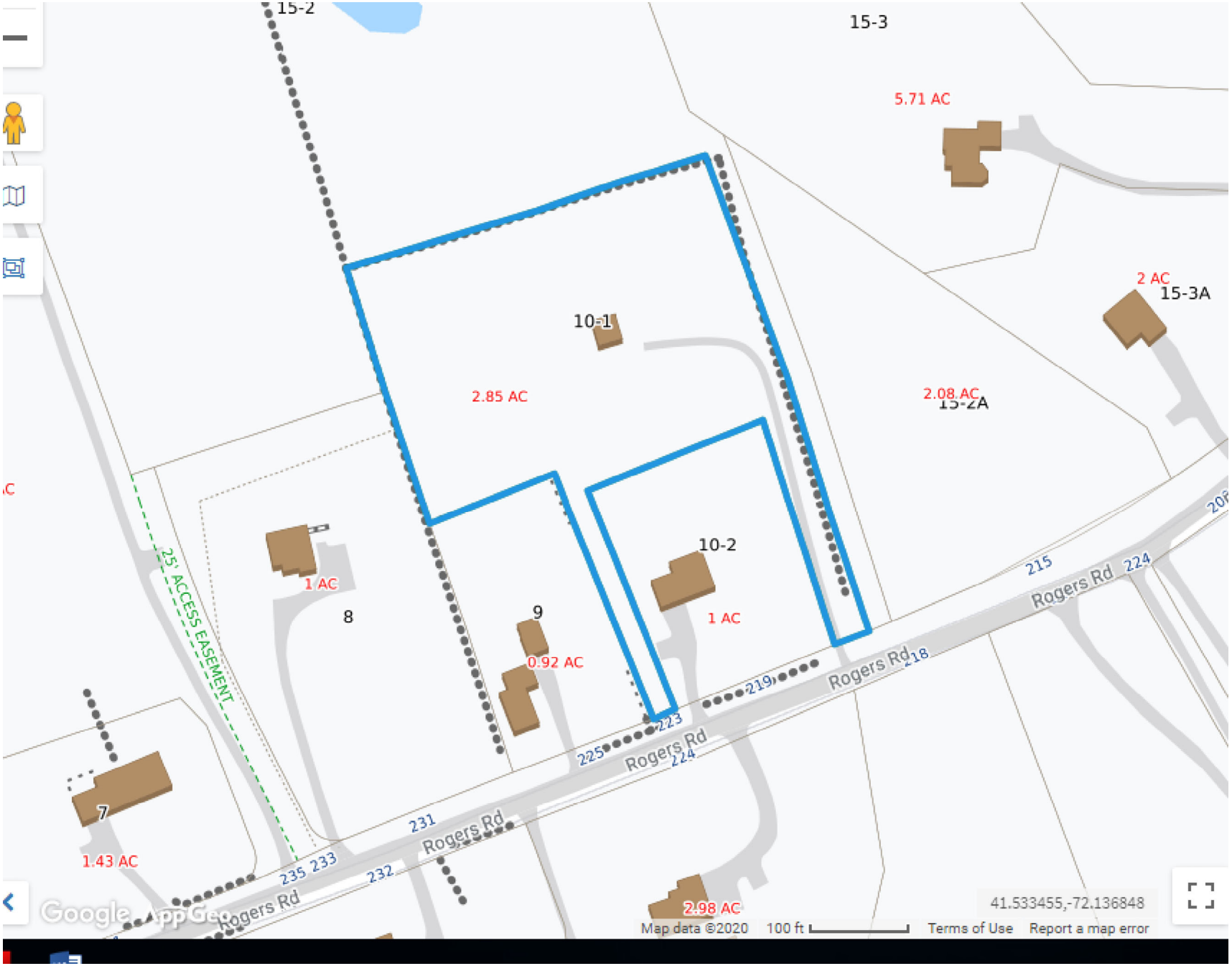
15-2
15-3
5.71 AC
2 AC
15-3A
10-1
2.85 AC
2.08 AC
15-2A
10-2
1 AC
1 AC
8
9
0.92 AC
25' ACCESS EASEMENT
7
1.43 AC
2.98 AC
Rogers Rd
Rogers Rd
Rogers Rd
Rogers Rd
Rogers Rd
215
224
218
219
223
225
224
231
232
235 233
41.533455,-72.136848
Map data ©2020
100 ft
Terms of Use
Report a map error

ATTACHMENT 2

CERTIFICATION

I hereby certify that on the 25 day of March 2020, a copy of AT&T's Exempt Modification Request to the Connecticut Siting Council was sent by electronic mail to the chief elected official and the planning and zoning department of the municipality in which the facility is located as well as by first class mail to the property owner and tower/facility owner.

Dated: 3/25/20

Cuddy & Feder LLP
445 Hamilton Ave, 14th Floor
White Plains, NY 10601
Attorneys for:
New Cingular Wireless PCS, LLC (AT&T)