Robinson+Cole

KENNETH C. BALDWIN

280 Trumbull Street
Hartford, CT 06103-3597
Main (860) 275-8200
Fax (860) 275-8299
kbaldwin@rc.com
Direct (860) 275-8345

Also admitted in Massachusetts
and New York

March 20, 2020

Via Electronic Mail

Melanie A. Bachman, Esq.
Executive Director/Staff Attorney
Connecticut Siting Council
10 Franklin Square
New Britain, CT 06051

Re: **Notice of Exempt Modification – Facility Modification**
2 Hinckley Hill Road, Norwich, Connecticut

Dear Attorney Bachman:

Cellco Partnership d/b/a Verizon Wireless ("Cellco") currently maintains fifteen (15) antennas at the 127.5-foot level on the existing 150-foot tower at 2 Hinckley Hill Road in Norwich, Connecticut (the "Property"). The Property is owned by 17 Mile Real Estate LLC. The tower is owned by EIP Communications I, LLC (CDT). The City of Norwich ("City") approved the tower in 1999. The Siting Council approved Cellco's shared use of the tower in 2000 (TS-BAM-104-000607). A copy of the City's Site Plan approval and Council's tower share approval are included in Attachment 1.

Cellco now intends to modify its facility by removing nine (9) antennas, installing six (6) newer model antennas, and replacing six (6) remote radio heads ("RRHs"). A set of project plans showing the proposed facility modifications and specifications for Cellco's antennas and RRHs are included in Attachment 2.

Please accept this letter as notification pursuant to R.C.S.A. § 16-50j-73, for construction that constitutes an exempt modification pursuant to R.C.S.A. § 16-50j-72(b)(2). In accordance with R.C.S.A. § 16-50j-73, a copy of this letter is being sent to Norwich Mayor, Peter H. Nystrom; Deanna Rhodes, Norwich's City Planner; EIP Communications I, LLC, the tower owner; and 17 Mile Real Estate LLC, the Property owner.

The planned modifications to the facility fall squarely within those activities explicitly provided for in R.C.S.A. § 16-50j-72(b)(2).

1. The proposed modifications will not result in an increase in the height of the existing tower. Cellco's replacement antennas and RRHs will be installed at the 127.5-foot level on the 150-foot tower.

2. The proposed modifications will not involve any change to ground-mounted equipment and, therefore, will not require the extension of the site boundary.

3. The proposed modifications will not increase noise levels at the facility by six decibels or more, or to levels that exceed state and local criteria.

4. The installation of new antennas will not increase radio frequency (RF) emissions at the facility to a level at or above the Federal Communications Commission (FCC) safety standard. A cumulative General Power Density table for the modified facility is included in Attachment 3.

5. The proposed modifications will not cause a change or alteration in the physical or environmental characteristics of the site.

6. The tower, its foundation and antenna mounts, with certain modifications, can support Cellco's proposed facility modifications. (*See* Structural Analysis Report included in Attachment 4 and Mount Structural Analysis Report included in Attachment 5).

A copy of the parcel map and Property owner information is included in Attachment 6. A Certificate of Mailing verifying that this filing was sent to municipal officials and the owner of the Property is included in Attachment 7.

Robinson+Cole

For the foregoing reasons, Cellco respectfully submits that the proposed modifications to the above-referenced telecommunications facility constitutes an exempt modification under R.C.S.A. § 16-50j-72(b)(2).

Sincerely,

Kenneth C. Baldwin

Enclosures
Copy to:
Peter A. Nystrom, Norwich Mayor
Deanna Rhodes, Norwich City Planner
17 Mail Real Estate LLC
EIP Communications I, LLC
Tim Parks

ATTACHMENT 1

FILE COPY

CITY OF NORWICH
CONNECTICUT

CERTIFIED MAIL
#Z149574215

SITE PLAN APPROVAL

Date: Sept. 22, 1999

Site Development Plan # 805 - Cordless Data Transfer, Inc.; construction of 140-ft. wireless communications tower & equipment pad.

Name: Cordless Data Transfer, Inc.
Box 363
17 Ridgewood Drive
Marlborough, CT 06447

Location: in the Town of Norwich off 2 Hinckley Hill, Preston.

The final plan of Site Development Plan # 805 as referenced above was considered at the regular meeting of the Commission on the City Plan held on Sept. 21, 1999.

After careful consideration the Commission voted unanimously to approve the site plan.

A coastal site plan review was not required in accordance with Chapter 444 of the Connecticut General Statutes. After careful consideration the Commission on the City Plan voted n/a to n/a the coastal site plan application.

The approval of the above referenced site plan is subject to the following conditions and/or modifications:

1. Bond in the amount of $25,000.00 for site work shall be posted prior to endorsement of the plan;
2. Bond in the amount of $12,000.00 for removal of the facility in the event it is abandoned shall be posted prior to endorsement of the plan;
3. Pursuant to Sec. 7.5.6(a) of the Zoning Regulations, the fifty (50) foot buffer around the tower shall be provided in perpetuity and noted on the plan prior to endorsement of the plan;
4. The Memorandum of Management Agreement shall be filed with the City Clerk prior to endorsement of the plan.

Please provide the following plans, bond, and deeds to the Planning Department, 23 Union Street, within 60 days after the date of approval.

1. Two sets of mylars and six sets of prints of the final site plan; one set of the mylars shall be produced by one of the following processes: wash-off photographic polyester film; fixed line photographic polyester film; original ink drawing on polyester film or linen. All modifications of approval shall be incorporated into the final plan.

2. All R.O.W. and/or easement deeds associated with the site plan.

3. Post a passbook or surety bond with the Commission on the City Plan in a form acceptable to the Corporation Counsel and in the amount approved by the Director of Public Works.

The Chairperson of the Commission on the City Plan must endorse the site plans prior to filing the approved plans with the City Clerk and prior to the issuance of a zoning compliance permit and a building permit.

The Planning Department will contact you after the site plan has been endorsed by the chairperson. You are responsible for filing the plan with the City Clerk within 90 days after approval by the Commission; provided acceptable plans and bond are submitted by the applicant. If an acceptable plan is not filed with the clerk within the 90 day period, the Commission's approval is invalid.

CHANGES TO THE APPROVED PLAN: All site activities shall be constructed in accordance with the approved plans, specifications and documents of record. Any change to the plans must be approved by the Commission on the City Plan.

EROSION AND SEDIMENT CONTROL: The erosion and sediment control measures shall be installed in accordance with the Connecticut Guidelines for Erosion and Sediment Control; such measures shall be installed prior to site disturbance. Additional erosion and sediment control measures shall be provided if determined to be necessary by a representative of the Planning Department or Public Works Department.

PRE-CONSTRUCTION CONFERENCE: It is the responsibility of the permittee or the contractor to schedule a pre-construction conference with the Planning Department for the purpose of inspecting the installation of the erosion and sediment control measures, and Public Works to set up an inspection schedule for road, drainage and sidewalk construction. City Hall telephone number: Planning Department, (860) 823-3766; Public Works Department, (860) 823-3798.

PUBLIC UTILITIES: Contact the Department of Public Utilities for an inspection of the sewer, water, electric and gas lines installation.

TIME PERIODS: Site plan approval is valid for one year, however, an extension to such approval may be granted by the Commission. In addition, all construction in the approved site plan must be completed within 5 years, based on Section 8.3.i of the Connecticut General Statutes.

CONSTRUCTION REQUIREMENTS: The following conditions shall be a requirement of the approval:

1. Unsuitable material in the pavement areas must be removed and replaced with suitable material as directed by the City Road Inspector.

2. If blasting is required for construction, a pre-blast survey shall be conducted prior to blasting. Contact the Fire Marshal, telephone (860) 887-2780.

ZONING PERMIT: After the plan has been filed, a zoning permit can be applied for through the zoning enforcement officer: telephone (860) 823-3766.

BUILDING PERMIT: For any building construction, please submit building plans and separate application to the building inspector.

CERTIFICATE OF COMPLIANCE will be issued after all parking, sidewalks, recreation area (for multi-family development) and public safety concerns are addressed in accordance with the approved site plan.

CERTIFICATE OF OCCUPANCY is issued by the building inspector. Certificate of Compliance must be obtained prior to the issuance of a Certificate of Occupancy.

AS-BUILT DRAWING may be required by the Commission prior to the final release of the bond.

Congratulations on the successful completion of your application.

Peter W. Davis
Planning Director

cc-Director of Public Works
-City Engineer
-Building Inspector
-John F. Bilda, Engineer, Public Utilities Dept.

Memorandum of Management Agreement

This memorandum evidences that a Management Agreement was made and entered into by a written Agreement dated July 1, 1997 by and between Mr. James C. Irwin and Mrs. LaVerne G. Irwin, jointly, as individuals (Owners) and owners of property located in the City of Norwich, Connecticut located on assessors map # 27 Block 1 lot 6A, and Cordless Data Transfer, Incorporated, a Connecticut corporation (CDT) maintaining an office at 17 Ridgewood Drive Marlborough, Connecticut 06447.

Such Agreement provides in part that Owners grant CDT unrestricted access to the proposed tower site on the property for the installation, operation and maintenance of driveways, electric and telephone service and the tower structure and equipment and facilities located thereon.

The term of this agreement is for a period of five years with three five year, automatic extension periods at the option of the Owners.

CDT and the Owners hereby acknowledge that the City of Norwich has a rule or regulation requiring that the tower structure be removed should it become abandoned or cease to be used as a licensed communications facility. Should the tower become abandoned and it is not removed as per the City's regulations, then, the Owners and CDT grant to the City of Norwich permission to enter the property and remove the tower structure.

Complete copies of this Management Agreement are on file at the office of Cordless Data Transfer, Inc. at 17 Ridgewood Drive, Marlborough, Connecticut 06447.

In witness whereof the parties have executed this Memorandum as of the date below.

Cordless Data Transfer, Inc. (CDT)

Robert J. Francis, President

9/15/99
Date

James C. Irwin

James C. Irwin

15 Sept 1999
Date

LaVerne G. Irwin

LaVerne G. Irwin

15 Sept 1999
Date

APPROVED AS TO FORM
And Legality On 10/20/99
Corporation Counsel
City of Norwich, Conn.

RECEIVED FOR RECORD AT NORWICH, CONN.
ON 10-20-99 AT 4:15 P M.
Attest Beverly C. Muldoon, Town Clerk

294593

Received for Record in Norwich, CT

Oct 20 1999 at 4:15 PM, and

Recorded in Norwich Land Records in

Vol 1463 at Page 219

Beverly C. MacDonald Town Clerk

Orig rec'd - Robt D. Frances

Pd 10 -

June 26, 2000

Sandy M. Carter
Manager-Regulatory
Verizon Wireless
20 Alexander Drive
P.O. Box 5029
Wallingford, CT 06492-2430

RE: TS-BAM-104-000607 - Cellco Partnership d/b/a Verizon Wireless request for an order to approve tower sharing at an existing telecommunications facility located at 2 Hinckley Hill Road in Norwich, Connecticut.

Dear Ms. Carter:

At a public meeting held June 20, 2000, the Connecticut Siting Council (Council) ruled that the shared use of this existing tower site is technically, legally, environmentally, and economically feasible and meets public safety concerns, and therefore, in compliance with General Statutes § 16-50aa, the Council has ordered the shared use of this facility to avoid the unnecessary proliferation of tower structures. This facility has also been carefully modeled to ensure that radio frequency emissions are conservatively below State and federal standards applicable to the frequencies now used on this tower.

This decision is under the exclusive jurisdiction of the Council. Any additional change to this facility may require an explicit request to this agency pursuant to General Statutes § 16-50aa or notice pursuant to Regulations of Connecticut State Agencies Section 16-50j-73, as applicable. Such request or notice shall include all relevant information regarding the proposed change with cumulative worst-case modeling of radio frequency exposure at the closest point uncontrolled access to the tower base, consistent with Federal Communications Commission, Office of Engineering and Technology, Bulletin 65. Any deviation from this format may result in the Council implementing enforcement proceedings pursuant to General Statutes § 16-50u including, without limitation, imposition of expenses resulting from such failure and of civil penalties in an amount not less than one thousand dollars per day for each day of construction or operation in material violation.

This decision applies only to this request for tower sharing and is not applicable to any other request or construction. The proposed shared use is to be implemented as specified in your letter dated June 6, 2000.

Thank you for your attention and cooperation.

Very truly yours,

Mortimer A. Gelston
Chairman

MAG/PMA/grg

c: Honorable Richard J. Abele, President City Council, City of Norwich

ATTACHMENT 2

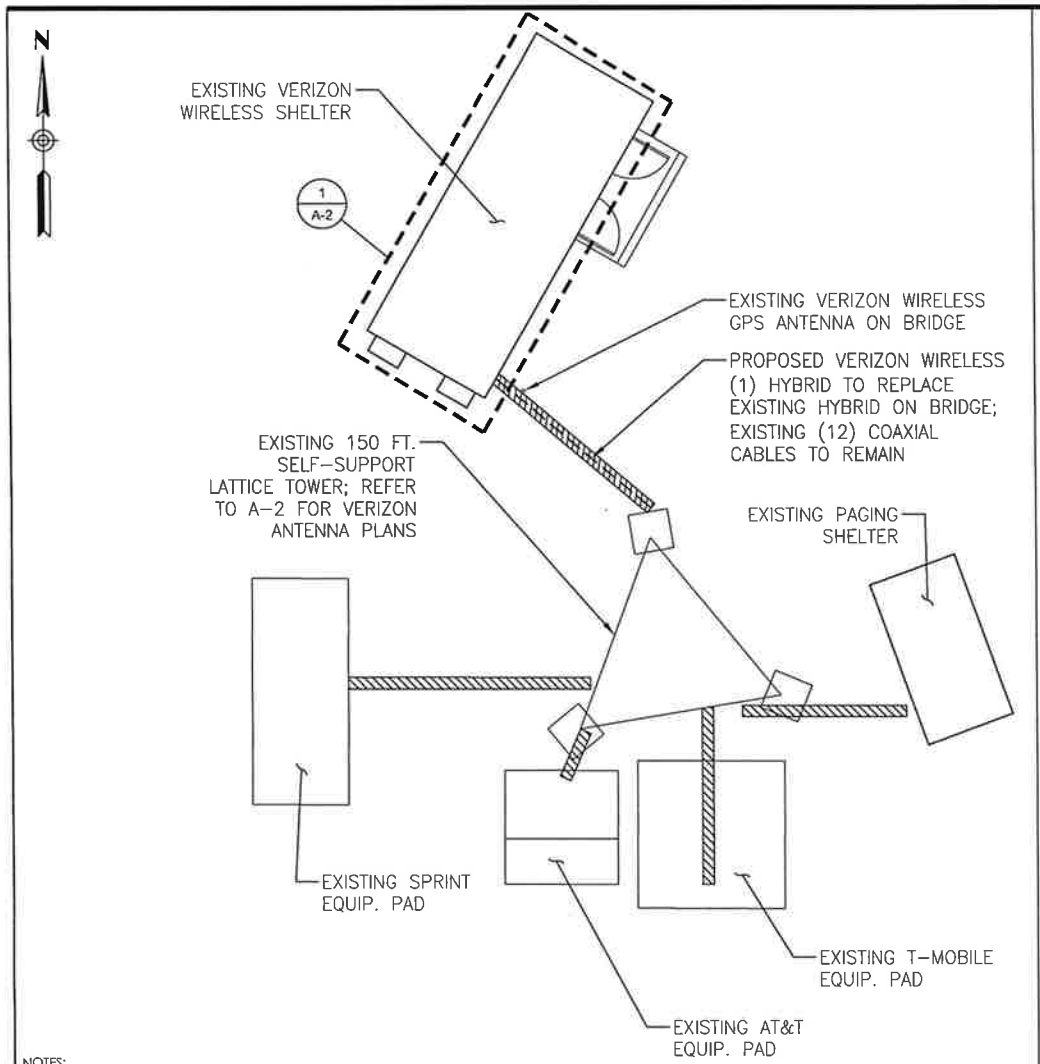

NOTES:
1. COMPOUND PLAN IS BASED EXISTING DRAWINGS OBTAINED FROM THE CT SITING COUNCIL WEBSITE AND A LIMITED DESIGN VISIT ON 9-16-19 FOR A PROPOSED ANTENNA MODIFICATION. A COMPOUND SURVEY WAS NOT PERFORMED.
2. PLANS ARE DIAGRAMMATIC ONLY AND NOT TO BE SCALED.
3. REFER TO STRUCTURAL TOWER ANALYSIS BY OTHERS.

1 COMPOUND PLAN

Scale: 3/32" = 1'-0"

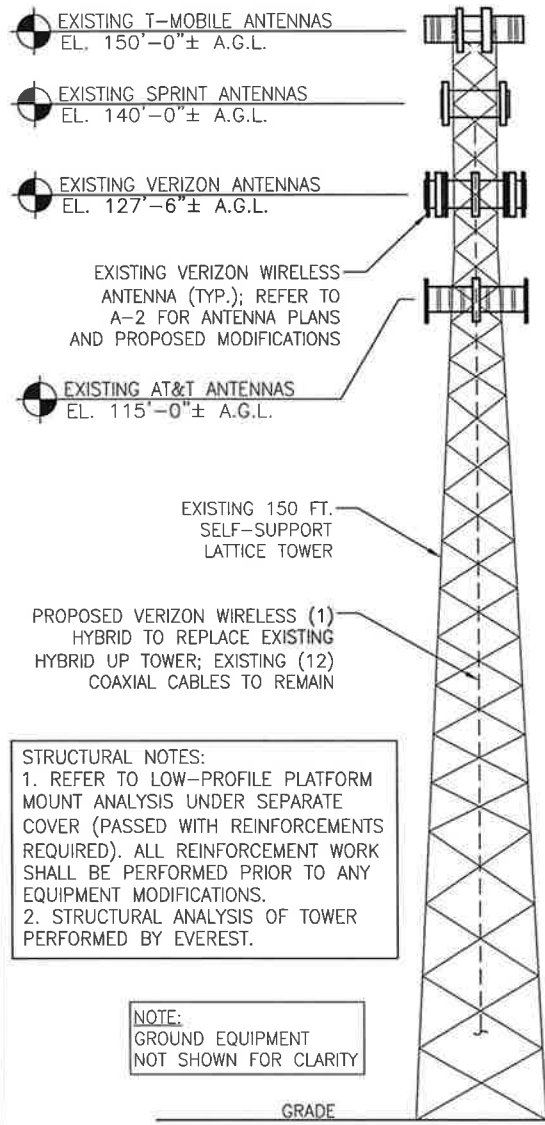

STRUCTURAL NOTES:
1. REFER TO LOW-PROFILE PLATFORM MOUNT ANALYSIS UNDER SEPARATE COVER (PASSED WITH REINFORCEMENTS REQUIRED). ALL REINFORCEMENT WORK SHALL BE PERFORMED PRIOR TO ANY EQUIPMENT MODIFICATIONS.
2. STRUCTURAL ANALYSIS OF TOWER PERFORMED BY EVEREST.

NOTE:
GROUND EQUIPMENT NOT SHOWN FOR CLARITY

2 ELEVATION

Scale: N.T.S

verizon
WIRELESS COMMUNICATIONS FACILITY

20 ALEXANDER DRIVE
WALLINGFORD, CT 06492

On Air Engineering, LLC
88 Foundry Pond Road
Cold Spring, NY 10516
201-456-4624
onair@optonline.net

LICENSURE

STATE OF CONNECTICUT
DAVID A. WEINPAHL
NO. 22144
LICENSED
LICENSED PROFESSIONAL ENGINEER

DAVID WEINPAHL, P.E.
CT LIC NO. 22144

SUBMITTALS

NO	DATE	DESCRIPTION
0	11 [illegible] 19	REVIEW
1	11 19 19	REVISED FOR MOUNT ANALYSIS
2	10 22 20	REVISED FOR NEW SQUIP ENGINEER

NO	DATE	DESCRIPTION
DRAWN BY:		AS
CHECKED BY:		DW

PROJECT NAME:
ANTMO
PCS-850-LTE
DESIGN EXHIBITS

SITE NAME:
NORWICH EAST CT

SITE ADDRESS:
EVEREST SITE #702499
2 HINCKLEY HILL RD.
PRESTON, CT 06365

SHEET TITLE:
COMPOUND PLAN
& ELEVATION

SHEET NUMBER:
A-1

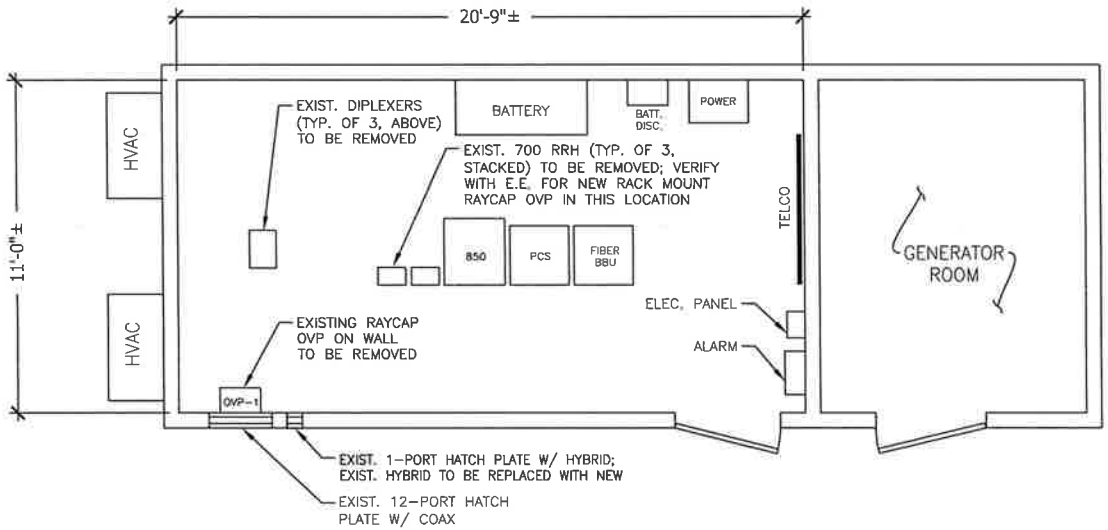

NOTES:
1. CONTRACTOR TO INSTALL NEW AND/OR MODIFY EXISTING CABLE ENTRY PORTS FOR THE PROJECT AS REQUIRED INCLUDING THE REMOVAL OF ANY EXISTING COAXIAL CABLES AS DIRECTED BY VERIZON WIRELESS.

2. SHELTER PLAN IS BASED ON LIMITED MEASUREMENTS FOR THE PURPOSE OF LOCATING THE PROPOSED OVP INSIDE. A DETAILED EQUIPMENT ROOM SURVEY WAS NOT PERFORMED.

1 SHELTER PLAN - GRADE

Scale: 1/4" = 1'-0"

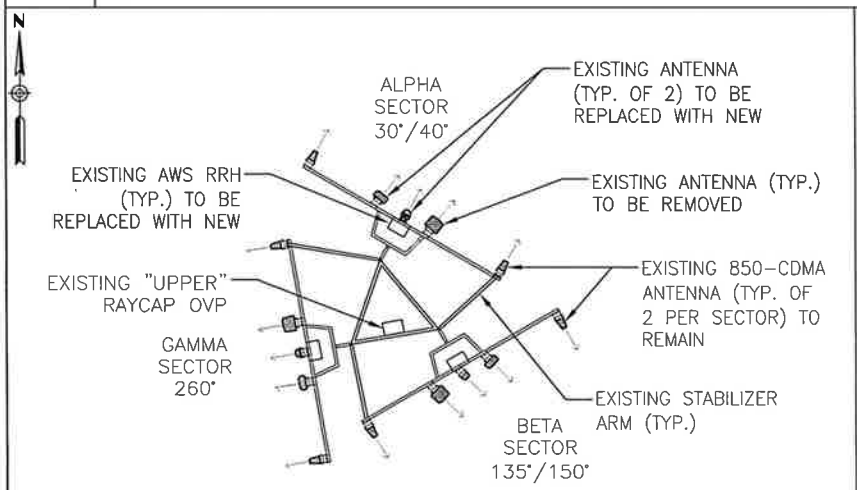

2 ANTENNA PLAN @ 127.5 FT. - EXISTING

Scale: 1/8" = 1'-0"

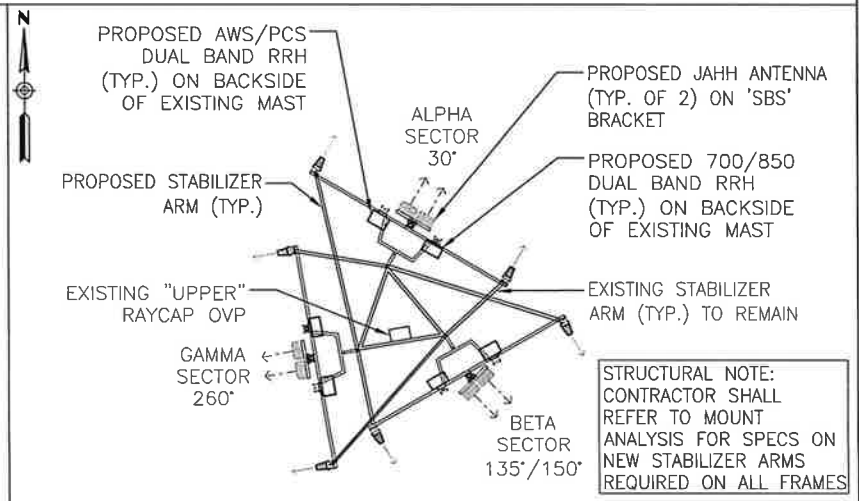

STRUCTURAL NOTE: CONTRACTOR SHALL REFER TO MOUNT ANALYSIS FOR SPECS ON NEW STABILIZER ARMS REQUIRED ON ALL FRAMES

3 ANTENNA PLAN @ 127.5 FT. - PROPOSED

Scale: 1/8" = 1'-0"

verizon
WIRELESS COMMUNICATIONS FACILITY

20 ALEXANDER DRIVE
WALLINGFORD, CT 06492

On Air Engineering, LLC
88 Foundry Pond Road
Cold Spring, NY 10516
201-456-4624
onair@optonline.net

LICENSURE

STATE OF CONNECTICUT — DAVID A. WEINPAHL — NO. 22144 — LICENSED PROFESSIONAL ENGINEER

DAVID WEINPAHL, P.E.
CT LIC NO 22144

SUBMITTALS

NO	DATE	DESCRIPTION
0	11/11/19	REVIEW
1	11/19/19	REVISED FOR MOUNT ANALYSIS
2	9/22/20	REVISED FOR VZW EQUIP ENGINEER

NO	DATE	DESCRIPTION

DRAWN BY: AS
CHECKED BY: DW

PROJECT NAME:
ANTMO
PCS-850-LTE
DESIGN EXHIBITS

SITE NAME:
NORWICH EAST CT

SITE ADDRESS:
EVEREST SITE #702499
2 HINCKLEY HILL RD.
PRESTON, CT 06365

SHEET TITLE:
SHELTER PLAN & ANTENNA PLANS

SHEET NUMBER:
A-2

EXISTING - ALPHA

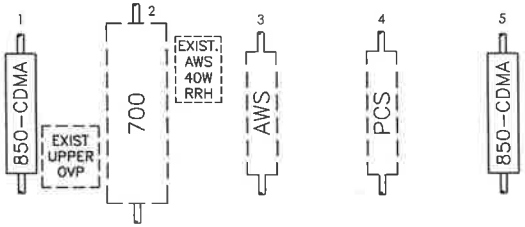

(VIEWED FROM REAR)

PROPOSED - ALPHA

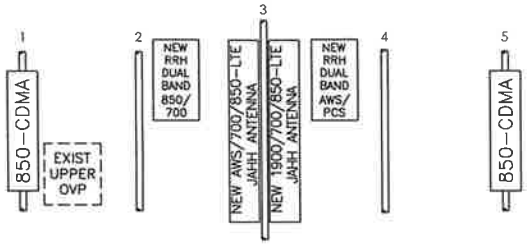

(VIEWED FROM REAR)

SECTOR: ALPHA				
POSITION	EXISTING ANTENNA	PROPOSED		
		ANTENNA	RRH	OVP
1	850-CDMA	EXISTING TO REMAIN	-	-
2	700	NEW JAHH SEE NOTE 1	NEW 700/850 RRH SEE NOTE 2	SEE NOTE 3
3	AWS	NEW JAHH SEE NOTE 1	REMOVE EXIST. AWS 40W RRH	-
4	1900 PLACEHOLDER	REMOVE EXIST. LEAVE MAST	NEW AWS/PCS RRH SEE NOTE 2	-
5	850-CDMA	EXISTING TO REMAIN	-	-

NOTES:
1. NEW JAHH ANTENNAS TO BE LOCATED ON 'SBS' MOUNTING BRACKET AT EXISTING POS. 3 MAST; POS. 2 AND POS. 4 MASTS TO REMAIN FOR RRH SUPPORT.
2. NEW DUAL BAND RRH (TYP.) TO BE LOCATED ON BACKSIDE OF POS. 2 AND POS. 4 MASTS.
3. EXISTING (1) RAYCAP OVP TO REMAIN. ALL RRH's (ALL SECTORS) TO BE CONNECTED TO (1) OVP.

1 ANTENNA SECTOR CONFIGURATIONS - ALPHA

Scale: N.T.S.

EXISTING - BETA

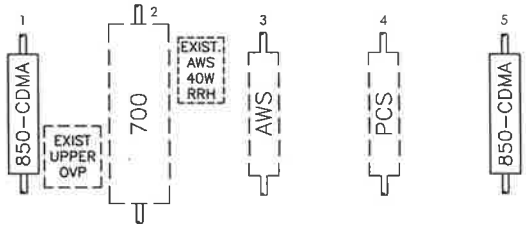

(VIEWED FROM REAR)

PROPOSED - BETA

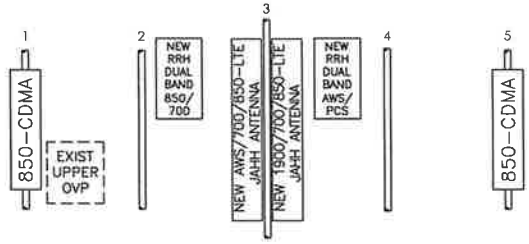

(VIEWED FROM REAR)

SECTOR: BETA				
POSITION	EXISTING ANTENNA	PROPOSED		
		ANTENNA	RRH	OVP
1	850-CDMA	EXISTING TO REMAIN	-	-
2	700	NEW JAHH SEE NOTE 1	NEW 700/850 RRH SEE NOTE 2	SEE NOTE 3
3	AWS	NEW JAHH SEE NOTE 1	REMOVE EXIST. AWS 40W RRH	-
4	1900 PLACEHOLDER	REMOVE EXIST. LEAVE MAST	NEW AWS/PCS RRH SEE NOTE 2	-
5	850-CDMA	EXISTING TO REMAIN	-	-

NOTES:
1. NEW JAHH ANTENNAS TO BE LOCATED ON 'SBS' MOUNTING BRACKET AT EXISTING POS. 3 MAST; POS. 2 AND POS. 4 MASTS TO REMAIN FOR RRH SUPPORT.
2. NEW DUAL BAND RRH (TYP.) TO BE LOCATED ON BACKSIDE OF POS. 2 AND POS. 4 MASTS.
3. EXISTING (1) RAYCAP OVP TO REMAIN. ALL RRH's (ALL SECTORS) TO BE CONNECTED TO (1) OVP.

2 ANTENNA SECTOR CONFIGURATIONS - BETA

Scale: N.T.S.

EXISTING - GAMMA

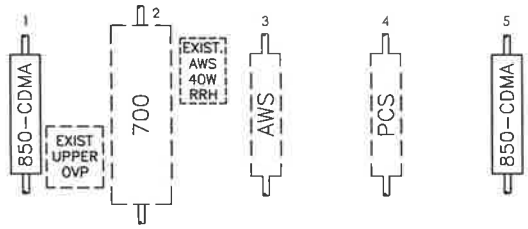

(VIEWED FROM REAR)

PROPOSED - GAMMA

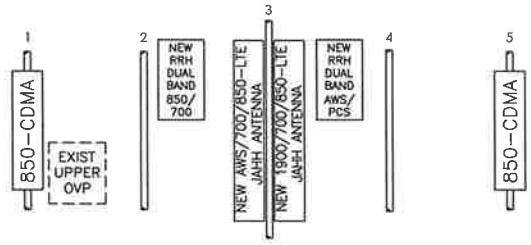

(VIEWED FROM REAR)

SECTOR: GAMMA				
POSITION	EXISTING ANTENNA	PROPOSED		
		ANTENNA	RRH	OVP
1	850-CDMA	EXISTING TO REMAIN	-	-
2	700	NEW JAHH SEE NOTE 1	NEW 700/850 RRH SEE NOTE 2	SEE NOTE 3
3	AWS	NEW JAHH SEE NOTE 1	REMOVE EXIST. AWS 40W RRH	-
4	1900 PLACEHOLDER	REMOVE EXIST. LEAVE MAST	NEW AWS/PCS RRH SEE NOTE 2	-
5	850-CDMA	EXISTING TO REMAIN	-	-

NOTES:
1. NEW JAHH ANTENNAS TO BE LOCATED ON 'SBS' MOUNTING BRACKET AT EXISTING POS. 3 MAST; POS. 2 AND POS. 4 MASTS TO REMAIN FOR RRH SUPPORT.
2. NEW DUAL BAND RRH (TYP.) TO BE LOCATED ON BACKSIDE OF POS. 2 AND POS. 4 MASTS.
3. EXISTING (1) RAYCAP OVP TO REMAIN. ALL RRH's (ALL SECTORS) TO BE CONNECTED TO (1) OVP.

3 ANTENNA SECTOR CONFIGURATIONS - GAMMA

Scale: N.T.S.

verizon
WIRELESS COMMUNICATIONS FACILITY

20 ALEXANDER DRIVE
WALLINGFORD, CT 06492

On Air Engineering, LLC
88 Foundry Pond Road
Cold Spring, NY 10516
201-456-4624
onair@optonline.net

LICENSURE

STATE OF CONNECTICUT
DAVID A. WEINPAHL
NO. 22144
LICENSED
LICENSED PROFESSIONAL ENGINEER

DAVID WEINPAHL, P.E.
CT LIC.NO. 22144

SUBMITTALS

NO	DATE	DESCRIPTION
0	11.11.19	REVIEW
1	11.19.19	REVISED PER MOUNT ANALYSIS
2	01.22.20	REVISED FOR NEW EQUIP ENGINEER

NO	DATE	DESCRIPTION

DRAWN BY: AS
CHECKED BY: DW

PROJECT NAME:
ANTMO
PCS-850-LTE
DESIGN EXHIBITS

SITE NAME:
NORWICH EAST CT

SITE ADDRESS:
EVEREST SITE #702499
2 HINCKLEY HILL RD.
PRESTON, CT 06365

SHEET TITLE:
ANTENNA SECTOR CONFIGURATIONS

SHEET NUMBER:
A-3

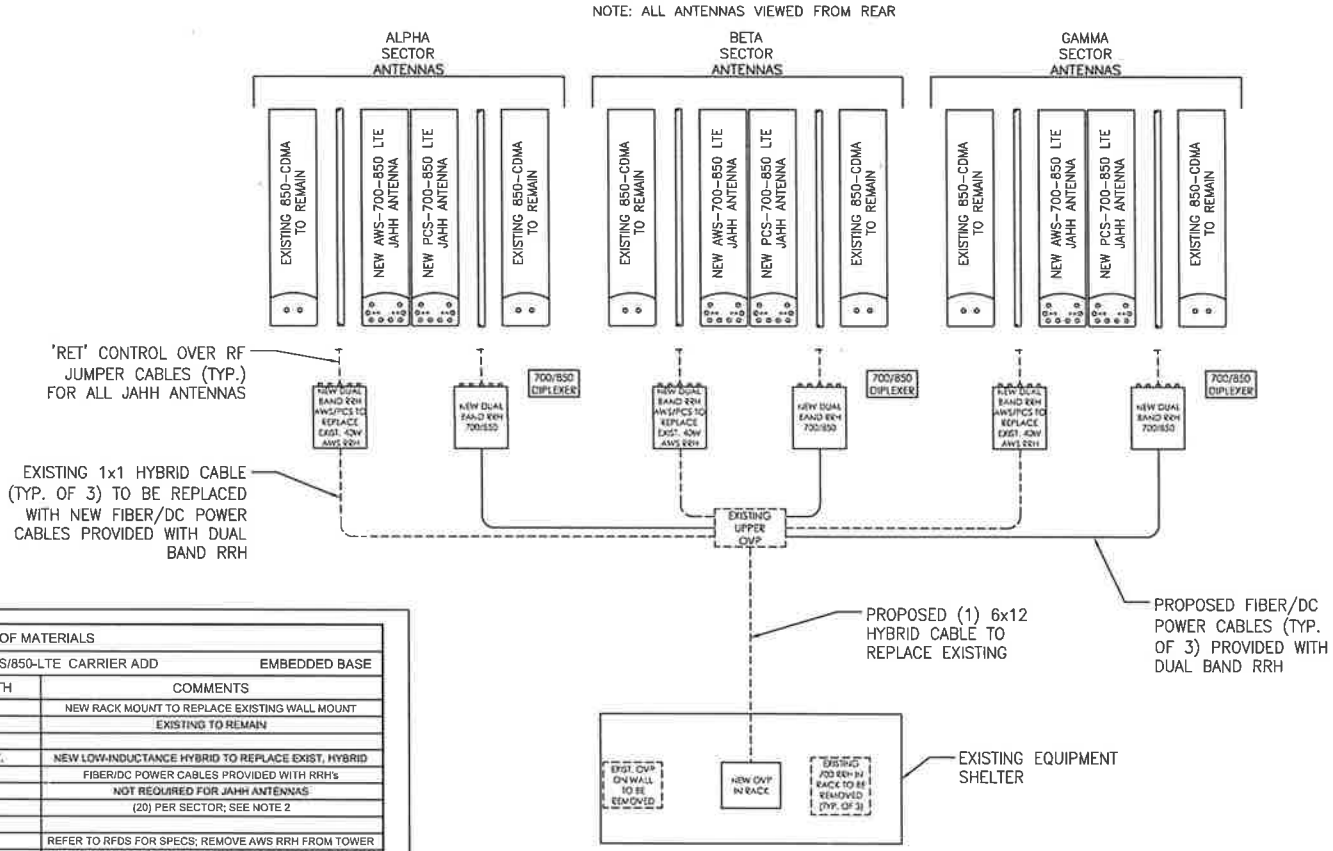

BILL OF MATERIALS			
SITE NAME: NORWICH EAST CT	PCS/850-LTE CARRIER ADD		EMBEDDED BASE
DESCRIPTION	QTY	LENGTH	COMMENTS
LOWER OVP	1	-	NEW RACK MOUNT TO REPLACE EXISTING WALL MOUNT
UPPER OVP	-	-	EXISTING TO REMAIN
6x12 HYBRID CABLE	1	180 FT.	NEW LOW-INDUCTANCE HYBRID TO REPLACE EXIST. HYBRID
1x1 HYBRID CABLE	-	-	FIBER/DC POWER CABLES PROVIDED WITH RRH's
RET CONTROL CABLE	-	-	NOT REQUIRED FOR JAHH ANTENNAS
1/2" JUMPERS	60	6 FT.	(20) PER SECTOR; SEE NOTE 2
AWS/PCS DUAL BAND RRH	3	-	REFER TO RFDS FOR SPECS; REMOVE AWS RRH FROM TOWER
700/850 DUAL BAND RRH	3	-	REFER TO RFDS FOR SPECS; REMOVE 700 RRH FROM SHELTER
DIPLEXER	3	-	REFER TO RFDS FOR SPECS
AWS ANTENNA	3	-	NEW JAHH TO REPLACE EXIST. AWS
700 ANTENNA	3	-	NEW JAHH TO REPLACE EXIST. 700
1900 ANTENNA	-	-	SHARED WITH NEW JAHH ANTENNA; REMOVE EXIST.
850-CDMA ANTENNA	-	-	EXISTING TO REMAIN - 2 PER SECTOR
850-LTE ANTENNA	-	-	SHARED WITH NEW JAHH ANTENNA
SIDE-BY-SIDE MTG. BRACKET	3	-	COMMSCOPE BSAMNT-SBS-2-2

NOTES:
1. ITEMS SHOWN ARE FOR MAJOR DESIGN ELEMENTS ONLY. REFER TO VERIZON WIRELESS RFDS. FOR ALL MANUFACTURER PART NUMBERS AND ACCESSORY ITEMS REQUIRED FOR A COMPLETE INSTALLATION.
2. EXIST. 700 & AWS JUMPERS TO BE REPLACED; LENGTH NOTED IS AVERAGE; FIELD FABRICATE ALL JUMPERS TO MIN. LENGTHS.

GENERAL NOTES:

1. CONTRACTOR SHALL REFER TO THE LATEST VERIZON WIRELESS RF DATA SHEET WHICH MAY INCLUDE ANTENNA SECTOR AZIMUTHS/ANTENNA CHANGES, ETC. THAT ARE REQUIRED AS PART OF THE PROJECT.
2. CONTRACTOR SHALL SECURE ALL CONTROL CABLES IN ACCORDANCE WITH INDUSTRY STANDARDS AND MANUFACTURERS INSTRUCTIONS. EXTERIOR CONTROL CABLES MAY BE TAPED OR TIE-WRAPPED TO EXISTING COAXIAL CABLES EVERY 4 FT. MAX. FOR HORIZONTAL RUNS. CONTRACTOR MAY USE HOISTING GRIPS AT TOP OF VERTICAL CABLE RUNS IN CERTAIN APPLICATIONS.
3. CABLES SHALL BE ROUTED AND SECURED ON STRUCTURAL MEMBERS ONLY - DO NOT "LOOP" THE CABLES IN MID-AIR BETWEEN ANTENNAS
4. RF JUMPER CABLES, COAX AND DIPLEXER WIRING NOT SHOWN.

1 BILL OF MATERIALS
Scale: N.T.S.

2 RF PLUMBING DIAGRAM
Scale: N.T.S.

verizon
WIRELESS COMMUNICATIONS FACILITY

20 ALEXANDER DRIVE
WALLINGFORD, CT 06492

On Air Engineering, LLC
88 Foundry Pond Road
Cold Spring, NY 10516
201-456-4624
onair@optonline.net

LICENSE

STATE OF CONNECTICUT
DAVID A. WEINPAHL
NO. 22144
LICENSED PROFESSIONAL ENGINEER

DAVID WEINPAHL, P.E.
CT LIC NO. 22144

SUBMITTALS

NO	DATE	DESCRIPTION
0	12.11.19	REVIEW
1	12.19.19	REVISED PER MOUNT ANALYSIS
2	01.22.20	REVISED PER NEW LOCAL ENGINEER

NO	DATE	DESCRIPTION

DRAWN BY: AS
CHECKED BY: DW

PROJECT NAME:
ANTMO
PCS-850-LTE
DESIGN EXHIBITS

SITE NAME:
NORWICH EAST CT

SITE ADDRESS:
EVEREST SITE #702499
2 HINCKLEY HILL RD.
PRESTON, CT 06365

SHEET TITLE:
RF PLUMBING
DIAGRAM & B.O.M.

SHEET NUMBER:
A-4

JAHH-65B-R3B

8-port sector antenna, 2x 698–787, 2x 824-894 and 4x 1695–2360 MHz, 65° HPBW, 3x RET and low bands have diplexers. Internal SBT's on first LB(Port 1) and first HB(Port 5).

- Internal SBT on low and high band allow remote RET control from the radio over the RF jumper cable
- One RET for 700MHz, one RET for 850MHz, and one RET for both high bands to ensure same tilt level for 4x Rx or 4x MIMO
- Internal filter on low band and interleaved dipole technology providing for attractive, low wind load mechanical package
- Separate RS-485 RET input/output for low and high band

General Specifications

Antenna Type	Sector
Band	Multiband
Color	Light gray
Effective Projective Area (EPA), frontal	0.28 m^2 | 3.014 ft^2
Effective Projective Area (EPA), lateral	0.24 m^2 | 2.583 ft^2
Grounding Type	RF connector body grounded to reflector and mounting bracket
Performance Note	Outdoor usage | Wind loading figures are validated by wind tunnel measurements described in white paper WP-112534-EN
RF Connector Interface	4.3-10 Female
RF Connector Location	Bottom
RF Connector Quantity, high band	4
RF Connector Quantity, low band	4
RF Connector Quantity, total	8

Remote Electrical Tilt (RET) Information, General

RET Interface	8-pin DIN Female | 8-pin DIN Male
RET Interface, quantity	2 female | 2 male

Dimensions

Width	350 mm | 13.78 in
Length	1828 mm | 71.969 in
Depth	208 mm | 8.189 in

©2020 CommScope, Inc. All rights reserved. All trademarks identified by ® or ™ are registered trademarks, respectively, of CommScope. All specifications are subject to change without notice. See www.commscope.com for the most current information. Revised: January 30, 2020

COMMSCOPE®

JAHH-65B-R3B

Array Layout

JAHH-65A-R3B JAHH-65B-R3B JAHH-65C-R3B

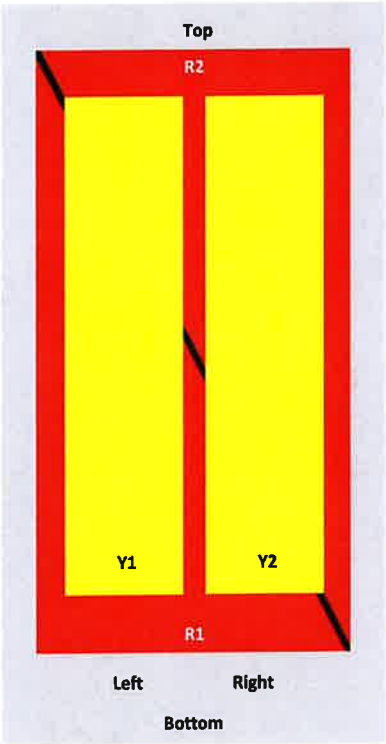

Array	Freq (MHz)	Conns	RET (SRET)	AISG RET UID
R1	698-798	1-2	1	AAXXXXXXXXXXXXXXX1
R2	824-894	3-4	2	AAXXXXXXXXXXXXXXX2
Y1	1695-2360	5-6	3	AAXXXXXXXXXXXXXXX3
Y2	1695-2360	7-8		

View from the front of the antenna

(Sizes of colored boxes are not true depictions of array sizes)

Electrical Specifications

Operating Frequency Band	1695 – 2360 MHz | 698 – 787 MHz | 824 – 894 MHz

Remote Electrical Tilt (RET) Information, Electrical

Protocol	3GPP/AISG 2.0 (Single RET)
Power Consumption, idle state, maximum	2 W
Power Consumption, normal conditions, maximum	13 W
Input Voltage	10–30 Vdc
Internal Bias Tee	Port 1 | Port 5
Internal RET	High band (1) | Low band (2)

©2020 CommScope, Inc. All rights reserved. All trademarks identified by ® or ™ are registered trademarks, respectively, of CommScope. All specifications are subject to change without notice. See www.commscope.com for the most current information. Revised: January 30, 2020

COMMSCOPE®

JAHH-65B-R3B

Electrical Specifications

Frequency Band, MHz	698–787	824–894	1695–1880	1850–1990	1920–2200	2300–2360
Gain, dBi	14.5	15.8	18	18.4	18.5	18.8
Beamwidth, Horizontal, degrees	67	65	63	63	65	68
Beamwidth, Vertical, degrees	12.4	10.5	5.7	5.2	4.9	4.4
Beam Tilt, degrees	2–14	2–14	0–10	0–10	0–10	0–10
USLS (First Lobe), dB	18	18	20	20	21	23
Front-to-Back Ratio at 180°, dB	32	34	31	35	36	38
Isolation, Cross Polarization, dB	25	25	25	25	25	25
Isolation, Inter-band, dB	30	30	30	30	30	30
VSWR | Return loss, dB	1.5 | 14.0	1.5 | 14.0	1.5 | 14.0	1.5 | 14.0	1.5 | 14.0	1.5 | 14.0
PIM, 3rd Order, 2 x 20 W, dBc	-153	-153	-153	-153	-153	-153
Input Power per Port at 50° C, maximum, watts	200	200	300	300	300	250

Electrical Specifications, BASTA

Frequency Band, MHz	698–787	824–894	1695–1880	1850–1990	1920–2200	2300–2360
Gain by all Beam Tilts, average, dBi	14.3	14.9	17.6	18.1	18.2	18.5
Gain by all Beam Tilts Tolerance, dB	±0.3	±0.5	±0.6	±0.4	±0.5	±0.6
Gain by Beam Tilt, average, dBi	2 ° | 14.3 8 ° | 14.3 14 ° | 14.3	2 ° | 15.0 8 ° | 14.9 14 ° | 15.4	0 ° | 17.2 5 ° | 17.6 10 ° | 17.6	0 ° | 17.6 5 ° | 18.2 10 ° | 18.2	0 ° | 17.7 5 ° | 18.3 10 ° | 18.3	0 ° | 17.9 5 ° | 18.7 10 ° | 18.7
Beamwidth, Horizontal Tolerance, degrees	±1.2	±1.4	±4	±2.4	±2.9	±2.7
Beamwidth, Vertical Tolerance, degrees	±0.9	±0.5	±0.3	±0.2	±0.3	±0.1
USLS, beampeak to 20° above beampeak, dB	18	17	17	18	19	18
Front-to-Back Total Power at 180° ± 30°, dB	25	24	26	29	27	29
CPR at Boresight, dB	22	23	20	21	21	24
CPR at Sector, dB	11	12	11	11	11	8

Material Specifications

Radiator Material	Aluminum | Low loss circuit board
Radome Material	Fiberglass, UV resistant

©2020 CommScope, Inc. All rights reserved. All trademarks identified by ® or ™ are registered trademarks, respectively, of CommScope. All specifications are subject to change without notice. See www.commscope.com for the most current information. Revised: January 30, 2020

COMMSCOPE®

JAHH-65B-R3B

Reflector Material	Aluminum

Mechanical Specifications

Wind Loading at Velocity, frontal	301.0 N @ 150 km/h | 67.7 lbf @ 150 km/h
Wind Loading at Velocity, lateral	254.0 N @ 150 km/h | 57.1 lbf @ 150 km/h
Wind Loading at Velocity, maximum	143.4 lbf @ 150 km/h | 638.0 N @ 150 km/h
Wind Speed, maximum	241 km/h | 149.75 mph

Packaging and Weights

Width, packed	456 mm | 17.953 in
Depth, packed	357 mm | 14.055 in
Length, packed	1975 mm | 77.756 in
Net Weight, without mounting kit	29.2 kg | 64.375 lb
Weight, gross	42.5 kg | 93.696 lb

Regulatory Compliance/Certifications

Agency	Classification
CHINA-ROHS	Above maximum concentration value
ISO 9001:2015	Designed, manufactured and/or distributed under this quality management system
ROHS	Compliant/Exempted

Included Products

BSAMNT-3 — Wide Profile Antenna Downtilt Mounting Kit for 2.4 - 4.5 in (60 - 115 mm) OD round members. Kit contains one scissor top bracket set and one bottom bracket set.

* Footnotes

Performance Note	Severe environmental conditions may degrade optimum performance

©2020 CommScope, Inc. All rights reserved. All trademarks identified by ® or ™ are registered trademarks, respectively, of CommScope. All specifications are subject to change without notice. See www.commscope.com for the most current information. Revised: January 30, 2020

COMMSCOPE®

SAMSUNG

Dual-Band Radio Unit
700/850MHz (B13/B5)

RFV01U-D2A

Samsung's RFV01U-D2A is a compact remote Radio Unit (RU) designed for deployments that require flexibility in installation and rapid onlining, without compromising on coverage, capacity or operational expenses.

The RFV01U-D2A RU targets dual-band support across Band 13 (700MHz) and Band 5 (850MHz), making it an ideal product for broad coverage footprints across multiple common low-end, long-range frequencies.

The RU handles all Radio Frequency (RF) processing in a single, compact unit, and is designed to interface via CPRI with Samsung's CDU baseband offerings, in both distributed- and central-RAN configurations.

In addition to its minimal footprint and ease of installation, the RU is also designed to reduce cost of ownership through its integrated spectrum analyzer, which allows for remote RF monitoring, greatly reducing the need for on-site maintenance visits.

Features and Benefits

- Dual-band support for broad frequency coverage
- Minimal footprint reduces site costs
- Rapid, easy installation
- Flexibly deployable in any location
- Remote RF monitoring capability
- Convection cooled, silent operation

Key Technical Specifications

Duplex Type: FDD
Operating Frequencies:
B13: DL(746-756MHz)/UL(777-787MHz)
B5: DL(869-894MHz)/UL(824-849MHz)
Instantaneous Bandwidth: 10MHz(B13) + 25MHz(B5)
RF Chain: 4T4R/2T4R/2T2R
Output Power: Total 320W
DU-RU Interface: CPRI (10Gbps)
Dimensions: 380 x 380 x 207mm (29.9L)
Weight: 31.9kg
Input Power: -48V DC
Operating Temp.: -40 - 55°(w/o solar load)
Cooling: Natural convection

SAMSUNG

Dual-Band Radio Unit
AWS/PCS (B66/B2)

RFV01U-D1A

Samsung's RFV01U-D1A is a compact remote Radio Unit (RU) designed for deployments that require flexibility in installation and rapid onlining, without compromising on coverage, capacity or operational expenses.

The RFV01U-D1A RU targets dual-band support across Band 66 (AWS) and Band 2 (PCS), making it an ideal product for broad coverage footprints across multiple common mid-range frequencies.

The RU handles all Radio Frequency (RF) processing in a single, compact unit, and is designed to interface via CPRI with Samsung's CDU baseband offerings, in both distributed- and central-RAN configurations.

In addition to its minimal footprint and ease of installation, the RU is also designed to reduce cost of ownership through its integrated spectrum analyzer, which allows for remote RF monitoring, greatly reducing the need for on-site maintenance visits.

Features and Benefits

- Dual-band support for broad frequency coverage
- Minimal footprint reduces site costs
- Rapid, easy installation
- Flexibly deployable in any location
- Remote RF monitoring capability
- Convection cooled, silent operation
- Built-in Broadcast Auxiliary Services (BAS) filter ensures compliant AWS operation without impacting footprint

Key Technical Specifications

Duplex Type: FDD
Operating Frequencies:
B66: DL(2,110-2,180MHz)/UL(1,710-1,780MHz)
B2: DL(1,930-1,990MHz)/UL(1,850-1,910MHz)
Instantaneous Bandwidth:
70MHz(B66) + 60MHz(B2)
RF Chain: 4T4R/2T4R/2T2R
Output Power: Total 320W
DU-RU Interface: CPRI (10Gbps)
Dimensions: 380 x 380 x 255mm (36.8L)
Weight: 38.3kg
Input Power: -48V DC
Operating Temp.: -40 - 55°(w/o solar load)
Cooling: Natural convection

ATTACHMENT 3

	General	Power	Density					
Site Name: Norwich East								
Tower Height: 150Ft								
CARRIER	**# OF CHAN.**	**WATTS ERP**	**HEIGHT**	**CALC. POWER DENS**	**FREQ.**	**MAX. PERMISS. EXP.**	**FRACTION MPE**	**Total**
*Sprint-CDMA	1	438	140	850	0.0088	0.5667	0.15%	
*Sprint-LTE	2	438	140	850	0.0175	0.5667	0.31%	
*Sprint-PCS-CDMA	5	623	140	1900	0.0624	1.0000	0.62%	
*Sprint-PCS-LTE	2	1556	140	1900	0.0623	1.0000	0.62%	
*Sprint-BRS-LTE	8	640	140	2500	0.1025	1.0000	1.03%	
*T-Mobile	2	2334	150	2100	0.0810	1.0000	0.81%	
*T-Mobile	2	2334	150	1900	0.0810	1.0000	0.81%	
*T-Mobile	2	1102	150	1900	0.0382	1.0000	0.38%	
*T-Mobile	2	1102	150	1900	0.0382	1.0000	0.38%	
*T-Mobile	2	592	150	600	0.0205	0.4000	0.51%	
*T-Mobile	2	649	150	700	0.0225	0.4667	0.48%	
*AT&T-UMTS	2	414	115	850	0.0251	0.5667	0.44%	
*AT&T-LTE	2	1751	115	700	0.1060	0.4667	2.27%	
*AT&T-AWS-LTE	2	2057	115	2100	0.1245	1.0000	1.25%	
*AT&T-WCS-LTE	2	2080	115	2300	0.1259	1.0000	1.26%	
*AT&T-LTE	2	1079	115	700	0.0653	0.4667	1.40%	
*AT&T-PCS-LTE	2	1833	115	1900	0.1110	1.0000	1.11%	
*TSR Paging	1	500	135	824	0.0108	0.5493	0.20%	
*Aquis Paging	1	500	135	890	0.0108	0.5933	0.18%	
VZW PCS	**4**	**1550**	**127.5**	**0.1371**	**1970**	**1.0000**	**13.71%**	
VZW Cellular CDMA	**2**	**289**	**127.5**	**0.0128**	**869**	**0.5793**	**2.21%**	
VZW Cellular LTE	**4**	**468**	**127.5**	**0.0414**	**880**	**0.5866**	**7.06%**	
VZW AWS	**4**	**1530**	**127.5**	**0.1354**	**2145**	**1.0000**	**13.54%**	
VZW 700	**4**	**619**	**127.5**	**0.0548**	**746**	**0.4973**	**11.01%**	
VZW CBRS	**0**	**0**	**127.5**	**0.0000**	**3550**	**2.3660**	**0.00%**	
								61.75%
* Source: Siting Council								

ATTACHMENT 4

PAUL J. FORD & COMPANY

Report Date:	January 20, 2020
Client:	Everest Infrastructure Partners 1435 Bedford Avenue Pittsburgh, PA 15219 Attn: Michael Culbert Michael.culbert@everestinfrastructure.com
Structure:	Existing 150-ft Self Support
Site Name:	Norwich CDT
Site Reference #:	24530 / 15368507
Site Address:	2 Hinkley Hill Rd
City, County, State:	Preston, New London County, CT
Latitude, Longitude:	41.514847, -72.061689
PJF Project:	A00019-0737.001.8700

Paul J. Ford and Company is pleased to submit this "**Structural Analysis Report**" to determine the tower stress level.

Analysis Criteria:

Reference Standard:	2015 International Building Code with the ANSI/TIA-222-G-2005 Standard, "Structural Standard for Antenna Supporting Structures and Antennas", with ANSI/TIA-222-G-1-2007 and ANSI/TIA-222-G-2-2009 Addenda per Exception #5 of Section 1609.1.1.
Ultimate Wind Speed:	135 mph 3-second gust wind speed without ice
Nominal Wind Speed:	105 mph 3-second gust wind speed without ice
Ice Wind Speed:	50 mph 3-second gust wind speed with 0.75" ice
Service Wind Speed:	60 mph (Serviceability) without ice
IBC Site Criteria:	Risk Category II, Topographic Category 1, Exposure Category B

Proposed Appurtenance Loads:

The structure was analyzed with the addition of the proposed appurtenance loads shown in Table 1 combined with the existing loads shown in Table 2 of this report.

Summary of Analysis Results:

Existing Structure:	Pass - 99.4%
Existing Foundation:	Pass - 63.2%

We at Paul J. Ford and Company appreciate the opportunity of providing our continuing professional services to you and Everest Infrastructure Partners. If you have any questions or need further assistance on this or any other projects, please give us a call.

Respectfully Submitted by:
Paul J. Ford and Company

Anthony Pelino

Anthony Pelino, E.I.
Structural Designer
apelino@pauljford.com

JPJ

STATE OF CONNECTICUT
JOSEPH PACHICARAH JACOB
No. PEN.22731
LICENSED
PROFESSIONAL ENGINEER

01/20/2020

TABLE OF CONTENTS

1) INTRODUCTION

2) ANALYSIS CRITERIA
- Table 1 - Proposed Equipment Configuration
- Table 2 - Other Considered Equipment

3) ANALYSIS PROCEDURE
- Table 3 - Documents Provided
- 3.1) Analysis Method
- 3.2) Assumptions

4) ANALYSIS RESULTS
- Table 4 - Section Capacity (Summary)
- Table 5 - Tower Component Stresses vs. Capacity
- 4.1) Recommendations

5) APPENDIX A
- tnxTower Output

6) APPENDIX B
- Base Level Drawing

7) APPENDIX C
- Additional Calculations

1) INTRODUCTION

This tower is a 150 ft Self Support tower designed by Fred A. Nudd Corporation in July of 1999.

2) ANALYSIS CRITERIA

TIA-222 Revision:	TIA-222-G
Risk Category:	II
Wind Speed:	105 mph
Exposure Category:	B
Topographic Factor:	1
Ice Thickness:	0.75 in
Wind Speed with Ice:	50 mph
Service Wind Speed:	60 mph

Table 1 - Proposed Equipment Configuration

Mounting Level (ft)	Center Line Elevation (ft)	Number of Antennas	Antenna Manufacturer	Antenna Model	Number of Feed Lines	Feed Line Size (in)	Note
127.5	127.5	3	commscope	BSAMNT-SBS-2-2 (Mount Bracket)	12 1	1-5/8 Hybrid	-
		6	commscope	JAHH-65B-R3B_TIA w/ Mount Pipe			
		6	rfs celwave	APL868013 w/ Mount Pipe			
		3	rfs celwave	FDJ85020Q7-S1			
		3	samsung telecommunications	B5/B13 RRH-BR04C			
		3	samsung telecommunications	B2/B66A RRH-BR049			
		1	rfs celwave	DB-T1-6Z-8AB-0Z			
		1	tower mounts	Sector Mount [SM 802-3]			

Table 2 - Other Considered Equipment

Mounting Level (ft)	Center Line Elevation (ft)	Number of Antennas	Antenna Manufacturer	Antenna Model	Number of Feed Lines	Feed Line Size (in)	Note
150.0	150.0	3	ericsson	4449	6 2	1-5/8 1-1/4	1
		3	ericsson	AIR 32 B2a/B66Aa w/ Mount Pipe			
		3	ericsson	KRY 112 144/2			
		3	rfs celwave	APXVAA24_43-U-A20_TIA w/ Mount Pipe			
		1	tower mounts	Sector Mount [SM 802-3]			
140.0	140.0	6	alcatel lucent	1900 MHz 4x45W RRH	4	1-1/4	1
		3	alcatel lucent	1900MHz RRH			
		6	alcatel lucent	RRH 2x50 - 2300			
		3	alcatel lucent	TME-TD-RRH8x20-25			
		3	commscope	DT465B-2XR w/ Mount Pipe			
		3	rfs celwave	APXV9ERR18-C-A20_TIA w/ Mount Pipe			
		3	rfs celwave	IBC1900BB-3			
		1	tower mounts	Sector Mount [SM 802-3]			
115.0	115.0	2	cci antennas	OPA-65R-LCUU-H6_TIA w/ Mount Pipe	6 6 2 1	1-1/4 3/4 3/8 Conduit	1
		1	cci antennas	OPA-65R-LCUU-H8_TIA w/ Mount Pipe			
		9	ericsson	RRUS 32			
		3	ericsson	RRUS 4478 B14			
		3	ericsson	RRUS-11			
		2	kmw communications	EPBQ-654L8H6-L2_TIA w/ Mount Pipe			
		1	kmw communications	EPBQ-654L8H8-L2_TIA w/ Mount Pipe			
		3	powerwave technologies	7770.00 w/ Mount Pipe			
		6	powerwave technologies	LGP21401			
		1	raycap	DC6-48-60-0-8F			
		2	raycap	DC6-48-60-18-8F			
		1	tower mounts	Sector Mount [SM 802-3]			

3) ANALYSIS PROCEDURE

Table 3 - Documents Provided

Document	Remarks	Reference	Source
Previous Structural Analysis	Fred A. Nudd Corporation, 6/11/2018	118-23067	Everest
Foundation Design	Fred A. Nudd Corporation, 11/20/1999	99-6864-2R	Everest
Collocation Application	AT&T, 7/26/2019	702499	Everest
Collocation Application	Verizon, 11/1/2019	702499	Everest
Tower Loading Profile	Everest	-	Everest

3.1) Analysis Method

tnxTower (version 8.0.5.0), a commercially available analysis software package, was used to create a three-dimensional model of the tower and calculate member stresses for various loading cases. Selected output from the analysis is included in Appendix A.

3.2) Assumptions

1) Tower and structures were built and maintained in accordance with the manufacturer's specifications.
2) The configuration of antennas, transmission cables, mounts and other appurtenances are as specified in Tables 1 and 2 and the referenced drawings.
3) The tower manufacturer drawings were not available at the time of the analysis. Therefore, the tower geometry is based off of the previous structural analysis listed in Table 3.
4) At the time of the analysis, the anchor rod condition was unknown. The anchor rods are assumed to be not grouted, and l_{ar} is assumed to be less than the anchor rod diameter.
5) The foundation reactions from this analysis are compared to the original design reactions in Appendix C of this report.

This analysis may be affected if any assumptions are not valid or have been made in error. Paul J. Ford and Company should be notified to determine the effect on the structural integrity of the tower.

4) ANALYSIS RESULTS

Table 4 - Section Capacity (Summary)

Section No.	Elevation (ft)	Component Type	Size	Critical Element	P (K)	SF*P_allow (K)	% Capacity	Pass / Fail
T1	150 - 140	Leg	Pipe 2.875" x 0.203" (2.5 STD)	3	-8.972	82.352	10.9	Pass
T2	140 - 120	Leg	Pipe 2.875" x 0.203" (2.5 STD)	21	-43.489	62.849	69.2	Pass
T3	120 - 100	Leg	Pipe 4.5" x 0.237" (4 STD)	48	-89.886	138.323	65.0	Pass
T4	100 - 80	Leg	Pipe 5.563" x 0.258" (5 STD)	73	-128.164	184.163	69.6	Pass
T5	80 - 60	Leg	Pipe 6.625" x 0.280" (6 STD)	94	-164.434	248.307	66.2	Pass
T6	60 - 40	Leg	Pipe 8.625" x 0.322" (8 STD)	115	-198.752	387.660	51.3	Pass
T7	40 - 20	Leg	Pipe 8.625" x 0.500" (8 XS)	136	-229.235	550.137	41.7	Pass
T8	20 - 0	Leg	Pipe 8.625" x 0.500" (8 XS)	151	-260.150	550.137	47.3	Pass
T1	150 - 140	Diagonal	L 1.5 x 1.5 x 3/16	10	-2.157	5.986	36.0	Pass

Section No.	Elevation (ft)	Component Type	Size	Critical Element	P (K)	SF*P_allow (K)	% Capacity	Pass / Fail
							47.9 (b)	
T2	140 - 120	Diagonal	L2x2x3/16	25	-6.097	12.165	50.1 89.7 (b)	Pass
T3	120 - 100	Diagonal	L2x2x3/16	49	-6.073	9.392	64.7 91.4 (b)	Pass
T4	100 - 80	Diagonal	L 2.5 x 2.5 x 3/16	76	-6.723	11.342	59.3 87.1 (b)	Pass
T5	80 - 60	Diagonal	L 3 x 3 x 3/16	97	-7.118	14.880	47.8 88.9 (b)	Pass
T6	60 - 40	Diagonal	L 3 x 3 x 3/16	118	-7.700	11.874	64.8 99.4 (b)	Pass
T7	40 - 20	Diagonal	L 3.5 x 3.5 x 1/4	139	-8.602	16.676	51.6 68.6 (b)	Pass
T8	20 - 0	Diagonal	L 3.5 x 3.5 x 1/4	154	-9.602	13.406	71.6	Pass
T1	150 - 140	Top Girt	L3x3x1/4	6	-0.624	22.310	2.8	Pass
							Summary	
						Leg (T4)	69.6	Pass
						Diagonal (T6)	99.4	Pass
						Top Girt (T1)	2.8	Pass
						Bolt Checks	99.4	Pass
						Rating =	99.4	Pass

Table 5 - Tower Component Stresses vs. Capacity

Notes	Component	Elevation (ft)	% Capacity	Pass / Fail
1, 2	Anchor Rods	0	61.7	Pass
1, 3	Foundation Reaction Comparison	0	63.2	Pass

Structure Rating (max from all components) =	99.4%

Notes:
1) See additional documentation in "Appendix C – Additional Calculations" for calculations supporting the % capacity consumed.
2) See assumption #4
3) See assumption #5: Foundation capacity determined by comparing analysis reactions to original design reactions.

4.1) Recommendations

The tower and its foundation have sufficient capacity to carry the proposed load configuration. No modifications are required at this time.

APPENDIX A

TNXTOWER OUTPUT

Section	T1	T2	T3	T4	T5	T6	T7	T8
Legs	Pipe 2.875" x 0.203" (2.5 STD)		Pipe 4.5" x 0.237" (4 STD)	Pipe 5.563" x 0.258" (5 STD)	Pipe 6.625" x 0.280" (6 STD)	Pipe 8.625" x 0.322" (8 STD)	Pipe 8.625" x 0.500" (8 XS)	
Leg Grade	A500M-54							
Diagonals	L 1.5 x 1.5 x 3/16	L2x2x3/16		L 2.5 x 2.5 x 3/16	L 3 x 3 x 3/16		L 3.5 x 3.5 x 1/4	
Diagonal Grade	A36							
Top Girts	L3x3x1/4	N.A.						
Face Width (ft) 18	6	8	10	12	14	16		
# Panels @ (ft)	2 @ 4.33333	8 @ 4.66667			9 @ 6.25		4 @ 9.33333	
Weight (K) 17.1	0.4	0.8	1.2	1.8	2.1	2.8	4.0	4.1

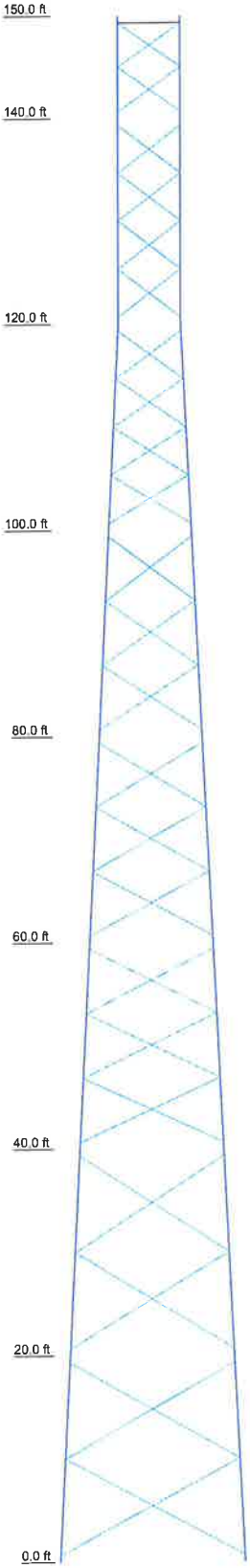

MATERIAL STRENGTH

GRADE	Fy	Fu	GRADE	Fy	Fu
A500M-54	54 ksi	70 ksi	A36	36 ksi	58 ksi

TOWER DESIGN NOTES

1. Tower is located in New London County, Connecticut.
2. Tower designed for Exposure B to the TIA-222-G Standard.
3. Tower designed for a 105 mph basic wind in accordance with the TIA-222-G Standard.
4. Tower is also designed for a 50 mph basic wind with 0.75 in ice. Ice is considered to increase in thickness with height.
5. Deflections are based upon a 60 mph wind.
6. Tower Structure Class II.
7. Topographic Category 1 with Crest Height of 0.000 ft
8. TOWER RATING: 99.4%

ALL REACTIONS ARE FACTORED

MAX. CORNER REACTIONS AT BASE:
DOWN: 268 K
SHEAR: 27 K

UPLIFT: -237 K
SHEAR: 24 K

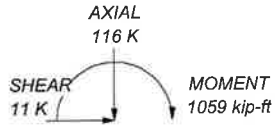

TORQUE 8 kip-ft
50 mph WIND - 0.750 in ICE

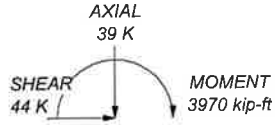

TORQUE 36 kip-ft
REACTIONS - 105 mph WIND

Paul J. Ford and Company
250 E. Broad St., Ste 600
Columbus, OH 43215
Phone: 614-221-6679
FAX:

Job: PJF# 00019-0737.001.8700			
Project: Existing 209 ft Self Supported Tower			
Client: Crown Castle	Drawn by: ADP	App'd:	
Code: TIA-222-G	Date: 01/17/20	Scale: NTS	
Path: O:\TOWER\00_Mac\2019\00019-0737_Norwich CO\TIA\00019-0737.001 #700.eff		Dwg No. E-1	

Tower Input Data

The main tower is a 3x free standing tower with an overall height of 150.000 ft above the ground line.
The base of the tower is set at an elevation of 0.000 ft above the ground line.
The face width of the tower is 6.000 ft at the top and 18.000 ft at the base.
This tower is designed using the TIA-222-G standard.
The following design criteria apply:

1) Tower is located in New London County, Connecticut.
2) ASCE 7-10 Wind Data is used (wind speeds converted to nominal values).
3) Basic wind speed of 105 mph.
4) Structure Class II.
5) Exposure Category B.
6) Topographic Category 1.
7) Crest Height 0.000 ft.
8) Nominal ice thickness of 0.750 in.
9) Ice thickness is considered to increase with height.
10) Ice density of 56.000 pcf.
11) A wind speed of 50 mph is used in combination with ice.
12) Temperature drop of 50.000 °F.
13) Deflections calculated using a wind speed of 60 mph.
14) A non-linear (P-delta) analysis was used.
15) Pressures are calculated at each section.
16) Stress ratio used in tower member design is 1.
17) Local bending stresses due to climbing loads, feed line supports, and appurtenance mounts are not considered.

Options

Consider Moments - Legs
Consider Moments - Horizontals
Consider Moments - Diagonals
Use Moment Magnification
√ Use Code Stress Ratios
√ Use Code Safety Factors - Guys
Escalate Ice
Always Use Max Kz
Use Special Wind Profile

√ Include Bolts In Member Capacity

Leg Bolts Are At Top Of Section
√ Secondary Horizontal Braces Leg
Use Diamond Inner Bracing (4 Sided)
SR Members Have Cut Ends
SR Members Are Concentric

Distribute Leg Loads As Uniform
Assume Legs Pinned
√ Assume Rigid Index Plate
√ Use Clear Spans For Wind Area
√ Use Clear Spans For KL/r
Retension Guys To Initial Tension
√ Bypass Mast Stability Checks
√ Use Azimuth Dish Coefficients
√ Project Wind Area of Appurt.

Autocalc Torque Arm Areas

Add IBC .6D+W Combination
√ Sort Capacity Reports By Component
Triangulate Diamond Inner Bracing
Treat Feed Line Bundles As Cylinder
Ignore KL/ry For 60 Deg. Angle Legs

Use ASCE 10 X-Brace Ly Rules
√ Calculate Redundant Bracing Forces
Ignore Redundant Members in FEA
√ SR Leg Bolts Resist Compression
All Leg Panels Have Same Allowable
Offset Girt At Foundation
√ Consider Feed Line Torque
√ Include Angle Block Shear Check
Use TIA-222-G Bracing Resist. Exemption
Use TIA-222-G Tension Splice Exemption

Poles

Include Shear-Torsion Interaction
Always Use Sub-Critical Flow
Use Top Mounted Sockets
Pole Without Linear Attachments
Pole With Shroud Or No Appurtenances
Outside and Inside Corner Radii Are Known

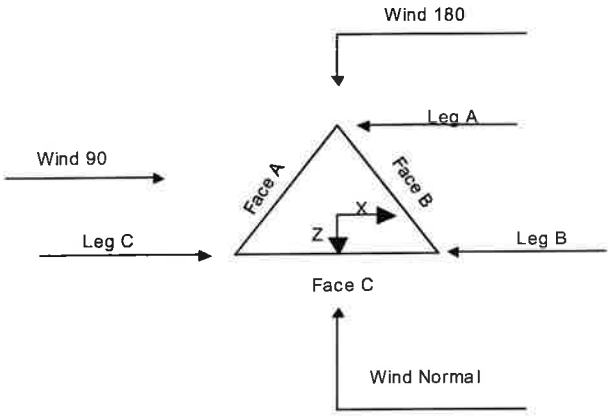

Triangular Tower

Tower Section Geometry

Tower Section	Tower Elevation ft	Assembly Database	Description	Section Width ft	Number of Sections	Section Length ft
T1	150.000-140.000			6.000	1	10.000
T2	140.000-120.000			6.000	1	20.000
T3	120.000-100.000			6.000	1	20.000
T4	100.000-80.000			8.000	1	20.000
T5	80.000-60.000			10.000	1	20.000
T6	60.000-40.000			12.000	1	20.000
T7	40.000-20.000			14.000	1	20.000
T8	20.000-0.000			16.000	1	20.000

Tower Section Geometry *(cont'd)*

Tower Section	Tower Elevation ft	Diagonal Spacing ft	Bracing Type	Has K Brace End Panels	Has Horizontals	Top Girt Offset in	Bottom Girt Offset in
T1	150.000-140.000	4.333	X Brace	No	No	8.000	8.000
T2	140.000-120.000	4.667	X Brace	No	No	8.000	8.000
T3	120.000-100.000	4.667	X Brace	No	No	8.000	8.000
T4	100.000-80.000	6.250	X Brace	No	No	7.500	7.500
T5	80.000-60.000	6.250	X Brace	No	No	7.500	7.500
T6	60.000-40.000	6.250	X Brace	No	No	7.500	7.500
T7	40.000-20.000	9.333	X Brace	No	No	8.000	8.000
T8	20.000-0.000	9.333	X Brace	No	No	8.000	8.000

Tower Section Geometry *(cont'd)*

Tower Elevation ft	Leg Type	Leg Size	Leg Grade	Diagonal Type	Diagonal Size	Diagonal Grade
T1 150.000-140.000	Pipe	Pipe 2.875" x 0.203" (2.5 STD)	A500M-54 (54 ksi)	Equal Angle	L 1.5 x 1.5 x 3/16	A36 (36 ksi)
T2 140.000-120.000	Pipe	Pipe 2.875" x 0.203" (2.5 STD)	A500M-54 (54 ksi)	Equal Angle	L2x2x3/16	A36 (36 ksi)
T3 120.000-100.000	Pipe	Pipe 4.5" x 0.237" (4 STD)	A500M-54 (54 ksi)	Equal Angle	L2x2x3/16	A36 (36 ksi)
T4 100.000-80.000	Pipe	Pipe 5.563" x 0.258" (5 STD)	A500M-54 (54 ksi)	Equal Angle	L 2.5 x 2.5 x 3/16	A36 (36 ksi)
T5 80.000-60.000	Pipe	Pipe 6.625" x 0.280" (6 STD)	A500M-54 (54 ksi)	Equal Angle	L 3 x 3 x 3/16	A36 (36 ksi)
T6 60.000-40.000	Pipe	Pipe 8.625" x 0.322" (8 STD)	A500M-54 (54 ksi)	Equal Angle	L 3 x 3 x 3/16	A36 (36 ksi)
T7 40.000-20.000	Pipe	Pipe 8.625" x 0.500" (8 XS)	A500M-54 (54 ksi)	Equal Angle	L 3.5 x 3.5 x 1/4	A36 (36 ksi)
T8 20.000-0.000	Pipe	Pipe 8.625" x 0.500" (8 XS)	A500M-54 (54 ksi)	Equal Angle	L 3.5 x 3.5 x 1/4	A36 (36 ksi)

Tower Section Geometry *(cont'd)*

Tower Elevation ft	Gusset Area (per face) ft^2	Gusset Thickness in	Gusset Grade	Adjust. Factor A_f	Adjust. Factor A_r	Weight Mult.	Double Angle Stitch Bolt Spacing Diagonals in	Double Angle Stitch Bolt Spacing Horizontals in	Double Angle Stitch Bolt Spacing Redundants in
T1 150.000-140.000	0.000	0.000	A36 (36 ksi)	1.03	1	1.05	0.000	0.000	36.000
T2 140.000-120.000	0.000	0.000	A36 (36 ksi)	1.03	1	1.05	0.000	0.000	36.000
T3 120.000-100.000	0.000	0.000	A36 (36 ksi)	1.03	1	1.05	0.000	0.000	36.000
T4 100.000-80.000	0.000	0.000	A36 (36 ksi)	1.03	1	1.05	0.000	0.000	36.000
T5 80.000-60.000	0.000	0.000	A36 (36 ksi)	1.03	1	1.05	0.000	0.000	36.000
T6 60.000-40.000	0.000	0.000	A36 (36 ksi)	1.03	1	1.05	0.000	0.000	36.000
T7 40.000-20.000	0.000	0.000	A36 (36 ksi)	1.03	1	1.05	0.000	0.000	36.000
T8 20.000-0.000	0.000	0.000	A36 (36 ksi)	1.03	1	1.05	0.000	0.000	36.000

Tower Section Geometry *(cont'd)*

Tower Elevation ft	Calc K Single Angles	Calc K Solid Rounds	K Factors[1] Legs	X Brace Diags X Y	K Brace Diags X Y	Single Diags X Y	Girts X Y	Horiz. X Y	Sec. Horiz. X Y	Inner Brace X Y
T1 150.000-140.000	Yes	Yes	1	1 1	1 1	1 1	1 1	1 1	1 1	1 1
T2 140.000-120.000	Yes	Yes	1	1 1	1 1	1 1	1 1	1 1	1 1	1 1
T3 120.000-100.000	Yes	Yes	1	1 1	1 1	1 1	1 1	1 1	1 1	1 1

Tower Elevation ft	Calc K Single Angles	Calc K Solid Rounds	K Factors[1] Legs	X Brace Diags X Y	K Brace Diags X Y	Single Diags X Y	Girts X Y	Horiz. X Y	Sec. Horiz. X Y	Inner Brace X Y
T4 100.000-80.000	Yes	Yes	1	1 1	1 1	1 1	1 1	1 1	1 1	1 1
T5 80.000-60.000	Yes	Yes	1	1 1	1 1	1 1	1 1	1 1	1 1	1 1
T6 60.000-40.000	Yes	Yes	1	1 1	1 1	1 1	1 1	1 1	1 1	1 1
T7 40.000-20.000	Yes	Yes	1	1 1	1 1	1 1	1 1	1 1	1 1	1 1
T8 20.000-0.000	No	Yes	1	1 1	1 1	1 1	1 1	1 1	1 0.5	1 1

[1]Note: K factors are applied to member segment lengths. K-braces without inner supporting members will have the K factor in the out-of-plane direction applied to the overall length.

Tower Section Geometry *(cont'd)*

Tower Elevation ft	Leg Net Width Deduct in	Leg U	Diagonal Net Width Deduct in	Diagonal U	Top Girt Net Width Deduct in	Top Girt U	Bottom Girt Net Width Deduct in	Bottom Girt U	Mid Girt Net Width Deduct in	Mid Girt U	Long Horizontal Net Width Deduct in	Long Horizontal U	Short Horizontal Net Width Deduct in	Short Horizontal U
T1 150.000-140.000	0.000	1	0.000	0.75	0.000	0.75	0.000	0.75	0.000	0.75	0.000	0.75	0.000	0.75
T2 140.000-120.000	0.000	1	0.000	0.75	0.000	0.75	0.000	0.75	0.000	0.75	0.000	0.75	0.000	0.75
T3 120.000-100.000	0.000	1	0.000	0.75	0.000	0.75	0.000	0.75	0.000	0.75	0.000	0.75	0.000	0.75
T4 100.000-80.000	0.000	1	0.000	0.75	0.000	0.75	0.000	0.75	0.000	0.75	0.000	0.75	0.000	0.75
T5 80.000-60.000	0.000	1	0.000	0.75	0.000	0.75	0.000	0.75	0.000	0.75	0.000	0.75	0.000	0.75
T6 60.000-40.000	0.000	1	0.000	0.75	0.000	0.75	0.000	0.75	0.000	0.75	0.000	0.75	0.000	0.75
T7 40.000-20.000	0.000	1	0.000	0.75	0.000	0.75	0.000	0.75	0.000	0.75	0.000	0.75	0.000	0.75
T8 20.000-0.000	0.000	1	0.000	0.75	0.000	0.75	0.000	0.75	0.000	0.75	0.000	0.75	0.000	0.75

Tower Section Geometry *(cont'd)*

Tower Elevation ft	Leg Connection Type	Leg Bolt Size in	Leg No.	Diagonal Bolt Size in	Diagonal No.	Top Girt Bolt Size in	Top Girt No.	Bottom Girt Bolt Size in	Bottom Girt No.	Mid Girt Bolt Size in	Mid Girt No.	Long Horizontal Bolt Size in	Long Horizontal No.	Short Horizontal Bolt Size in	Short Horizontal No.
T1 150.000-140.000	Flange	0.750 A325N	4	0.500 A325N	1	0.625 A325N	0	0.000 A325N	0	0.625 A325N	0	0.625 A325N	0	0.625 A325N	0
T2 140.000-120.000	Flange	1.000 A325N	4	0.625 A325N	1	0.625 A325N	0	0.000 A325N	0	0.625 A325N	0	0.625 A325N	0	0.625 A325N	0
T3 120.000-100.000	Flange	1.000 A325N	6	0.625 A325N	1	0.625 A325N	0	0.000 A325N	0	0.625 A325N	0	0.625 A325N	0	0.625 A325N	0
T4 100.000-80.000	Flange	1.000 A325N	8	0.625 A325N	1	0.625 A325N	0	0.000 A325N	0	0.625 A325N	0	0.625 A325N	0	0.625 A325N	0
T5 80.000-60.000	Flange	1.250 A325N	8	0.625 A325N	1	0.625 A325N	0	0.000 A325N	0	0.625 A325N	0	0.625 A325N	0	0.625 A325N	0
T6 60.000-40.000	Flange	1.250 A325N	8	0.625 A325N	1	0.625 A325N	0	0.000 A325N	0	0.625 A325N	0	0.625 A325N	0	0.625 A325N	0

Tower Elevation ft	Leg Connection Type	Leg		Diagonal		Top Girt		Bottom Girt		Mid Girt		Long Horizontal		Short Horizontal	
		Bolt Size in	No.	Bolt Size in	No.	Bolt Size in	No.	Bolt Size in	No.	Bolt Size in	No.	Bolt Size in	No.	Bolt Size in	No.
T7 40.000-20.000	Flange	1.250 A325N	8	0.750 A325N	1	0.625 A325N	0	0.000 A325N	0	0.625 A325N	0	0.625 A325N	0	0.625 A325N	0
T8 20.000-0.000	Flange	1.500 A325N	0	0.750 A325N	1	0.625 A325N	0	0.000 A325N	0	0.625 A325N	0	0.625 A325N	0	0.625 A325N	1

Feed Line/Linear Appurtenances - Entered As Round Or Flat

Description	Face or Leg	Allow Shield	Exclude From Torque Calculation	Component Type	Placement ft	Face Offset in	Lateral Offset (Frac FW)	#	# Per Row	Clear Spacing in	Width or Diameter in	Perimeter in	Weight klf
Safety Line 3/8	C	No	No	Ar (CaAa)	150.000 - 0.000	0.000	0.5	1	1	0.375	0.375		0.000
A													
LDF6-50A(1-1/4")	A	No	No	Ar (CaAa)	140.000 - 0.000	0.000	-0.2	4	4	1.000	1.550		0.001
1.75" flat Cable Ladder Rail	A	No	No	Af (CaAa)	140.000 - 0.000	0.000	-0.2	2	2	30.000 1.750	1.750		0.002
B													
LDF7-50A(1-5/8")	B	No	No	Ar (CaAa)	127.500 - 0.000	0.000	0.25	12	6	1.000 1.980	1.980		0.001
HFT1206-24SVL-210(1-5/8)	B	No	No	Ar (CaAa)	127.500 - 0.000	0.000	0.25	1	1	1.710	1.710		0.002
1.75" flat Cable Ladder Rail	B	No	No	Af (CaAa)	127.500 - 0.000	0.000	0.25	2	2	30.000 1.750	1.750		0.002
C													
LDF6-50A(1-1/4")	C	No	No	Ar (CaAa)	115.000 - 0.000	0.000	0.25	6	6	1.000 1.550	1.550		0.001
LDF2-50(3/8")	C	No	No	Ar (CaAa)	115.000 - 0.000	0.000	0.25	2	2	0.440	0.440		0.000
ASU9328TYP01(3/4")	C	No	No	Ar (CaAa)	115.000 - 0.000	0.000	0.25	6	6	0.700	0.700		0.000
1.75" flat Cable Ladder Rail	C	No	No	Af (CaAa)	115.000 - 0.000	0.000	0.25	2	2	30.000 1.750	1.750		0.002
*													
LDF7-50A(1-5/8")	C	No	No	Ar (CaAa)	150.000 - 0.000	0.000	-0.25	6	6	1.000 1.980	1.980		0.001
LDF6-50A(1-1/4")	C	No	No	Ar (CaAa)	150.000 - 0.000	0.000	-0.3	2	2	1.000 1.550	1.550		0.001
1.75" flat Cable Ladder Rail	C	No	No	Af (CaAa)	150.000 - 0.000	0.000	-0.25	2	2	30.000 1.750	1.750		0.002
*****													
***													
**													
*													

Discrete Tower Loads

Description	Face or Leg	Offset Type	Offsets: Horz Lateral Vert ft ft ft	Azimuth Adjustment °	Placement ft		C_AA_A Front ft^2	C_AA_A Side ft^2	Weight K
APXVAA24_43-U-A20_TIA w/ Mount Pipe	A	From Leg	4.000 0.000 0.000	0.000	150.000	No Ice 1/2" Ice 1" Ice	20.480 21.231 21.990	10.869 12.393 13.942	0.157 0.293 0.439
APXVAA24_43-U-A20_TIA w/ Mount Pipe	B	From Leg	4.000 0.000 0.000	0.000	150.000	No Ice 1/2" Ice 1" Ice	20.480 21.231 21.990	10.869 12.393 13.942	0.157 0.293 0.439
APXVAA24_43-U-A20_TIA w/ Mount Pipe	C	From Leg	4.000 0.000 0.000	0.000	150.000	No Ice 1/2" Ice 1" Ice	20.480 21.231 21.990	10.869 12.393 13.942	0.157 0.293 0.439
AIR 32 B2a/B66Aa w/ Mount Pipe	A	From Leg	4.000 0.000 0.000	0.000	150.000	No Ice 1/2" Ice 1" Ice	6.747 7.202 7.648	6.070 6.867 7.583	0.153 0.214 0.282
AIR 32 B2a/B66Aa w/ Mount Pipe	B	From Leg	4.000 0.000 0.000	0.000	150.000	No Ice 1/2" Ice 1" Ice	6.747 7.202 7.648	6.070 6.867 7.583	0.153 0.214 0.282
AIR 32 B2a/B66Aa w/ Mount Pipe	C	From Leg	4.000 0.000 0.000	0.000	150.000	No Ice 1/2" Ice 1" Ice	6.747 7.202 7.648	6.070 6.867 7.583	0.153 0.214 0.282
KRY 112 144/2	A	From Leg	4.000 0.000 0.000	0.000	150.000	No Ice 1/2" Ice 1" Ice	0.479 0.568 0.664	0.232 0.299 0.376	0.010 0.014 0.019
KRY 112 144/2	B	From Leg	4.000 0.000 0.000	0.000	150.000	No Ice 1/2" Ice 1" Ice	0.479 0.568 0.664	0.232 0.299 0.376	0.010 0.014 0.019
KRY 112 144/2	C	From Leg	4.000 0.000 0.000	0.000	150.000	No Ice 1/2" Ice 1" Ice	0.479 0.568 0.664	0.232 0.299 0.376	0.010 0.014 0.019
4449	A	From Leg	4.000 0.000 0.000	0.000	150.000	No Ice 1/2" Ice 1" Ice	1.969 2.145 2.329	1.402 1.558 1.720	0.071 0.089 0.110
4449	B	From Leg	4.000 0.000 0.000	0.000	150.000	No Ice 1/2" Ice 1" Ice	1.969 2.145 2.329	1.402 1.558 1.720	0.071 0.089 0.110
4449	C	From Leg	4.000 0.000 0.000	0.000	150.000	No Ice 1/2" Ice 1" Ice	1.969 2.145 2.329	1.402 1.558 1.720	0.071 0.089 0.110
Sector Mount [SM 802-3]	C	None		0.000	150.000	No Ice 1/2" Ice 1" Ice	25.340 33.440 41.560	25.340 33.440 41.560	0.930 1.388 1.977
5' x 2" Pipe Mount	A	From Leg	4.000 0.000 0.000	0.000	150.000	No Ice 1/2" Ice 1" Ice	1.000 1.393 1.703	1.000 1.393 1.703	0.057 0.065 0.076
5' x 2" Pipe Mount	B	From Leg	4.000 0.000 0.000	0.000	150.000	No Ice 1/2" Ice 1" Ice	1.000 1.393 1.703	1.000 1.393 1.703	0.057 0.065 0.076
5' x 2" Pipe Mount	C	From Leg	4.000 0.000 0.000	0.000	150.000	No Ice 1/2" Ice 1" Ice	1.000 1.393 1.703	1.000 1.393 1.703	0.057 0.065 0.076

***

Description	Face or Leg	Offset Type	Offsets: Horz Lateral Vert ft ft ft	Azimuth Adjustment °	Placement ft		C_AA_A Front ft^2	C_AA_A Side ft^2	Weight K
DT465B-2XR w/ Mount Pipe	A	From Leg	4.000 0.000 0.000	0.000	140.000	No Ice 1/2" Ice 1" Ice	5.500 5.970 6.450	4.380 4.840 5.300	0.091 0.164 0.248
DT465B-2XR w/ Mount Pipe	B	From Leg	4.000 0.000 0.000	0.000	140.000	No Ice 1/2" Ice 1" Ice	5.500 5.970 6.450	4.380 4.840 5.300	0.091 0.164 0.248
DT465B-2XR w/ Mount Pipe	C	From Leg	4.000 0.000 0.000	0.000	140.000	No Ice 1/2" Ice 1" Ice	5.500 5.970 6.450	4.380 4.840 5.300	0.091 0.164 0.248
APXV9ERR18-C-A20_TIA w/ Mount Pipe	A	From Leg	4.000 0.000 0.000	0.000	140.000	No Ice 1/2" Ice 1" Ice	8.262 8.822 9.346	7.471 8.656 9.556	0.095 0.166 0.244
APXV9ERR18-C-A20_TIA w/ Mount Pipe	B	From Leg	4.000 0.000 0.000	0.000	140.000	No Ice 1/2" Ice 1" Ice	8.262 8.822 9.346	7.471 8.656 9.556	0.095 0.166 0.244
APXV9ERR18-C-A20_TIA w/ Mount Pipe	C	From Leg	4.000 0.000 0.000	0.000	140.000	No Ice 1/2" Ice 1" Ice	8.262 8.822 9.346	7.471 8.656 9.556	0.095 0.166 0.244
(2) 1900 MHz 4x45W RRH	A	From Leg	4.000 0.000 0.000	0.000	140.000	No Ice 1/2" Ice 1" Ice	2.322 2.527 2.739	2.238 2.441 2.651	0.060 0.083 0.110
(2) 1900 MHz 4x45W RRH	B	From Leg	4.000 0.000 0.000	0.000	140.000	No Ice 1/2" Ice 1" Ice	2.322 2.527 2.739	2.238 2.441 2.651	0.060 0.083 0.110
(2) 1900 MHz 4x45W RRH	C	From Leg	4.000 0.000 0.000	0.000	140.000	No Ice 1/2" Ice 1" Ice	2.322 2.527 2.739	2.238 2.441 2.651	0.060 0.083 0.110
TME-TD-RRH8x20-25	A	From Leg	4.000 0.000 0.000	0.000	140.000	No Ice 1/2" Ice 1" Ice	4.045 4.298 4.557	1.535 1.714 1.901	0.070 0.097 0.128
TME-TD-RRH8x20-25	B	From Leg	4.000 0.000 0.000	0.000	140.000	No Ice 1/2" Ice 1" Ice	4.045 4.298 4.557	1.535 1.714 1.901	0.070 0.097 0.128
TME-TD-RRH8x20-25	C	From Leg	4.000 0.000 0.000	0.000	140.000	No Ice 1/2" Ice 1" Ice	4.045 4.298 4.557	1.535 1.714 1.901	0.070 0.097 0.128
(2) RRH 2x50-800 w/Notch Filter	A	From Leg	4.000 0.000 0.000	0.000	140.000	No Ice 1/2" Ice 1" Ice	1.733 1.898 2.070	1.333 1.481 1.637	0.069 0.087 0.107
(2) RRH 2x50-800 w/Notch Filter	B	From Leg	4.000 0.000 0.000	0.000	140.000	No Ice 1/2" Ice 1" Ice	1.733 1.898 2.070	1.333 1.481 1.637	0.069 0.087 0.107
(2) RRH 2x50-800 w/Notch Filter	C	From Leg	4.000 0.000 0.000	0.000	140.000	No Ice 1/2" Ice 1" Ice	1.733 1.898 2.070	1.333 1.481 1.637	0.069 0.087 0.107
Sector Mount [SM 802-3]	C	None		0.000	140.000	No Ice 1/2" Ice 1" Ice	25.340 33.440 41.560	25.340 33.440 41.560	0.930 1.388 1.977

***

Description	Face or Leg	Offset Type	Offsets: Horz Lateral Vert ft ft ft	Azimuth Adjustment °	Placement ft		C_AA_A Front ft^2	C_AA_A Side ft^2	Weight K
(2) JAHH-65B-R3B_TIA w/ Mount Pipe	A	From Leg	4.000 0.000 0.000	0.000	127.500	No Ice 1/2" Ice 1" Ice	9.351 9.921 10.455	7.646 8.833 9.734	0.089 0.165 0.250
(2) JAHH-65B-R3B_TIA w/ Mount Pipe	B	From Leg	4.000 0.000 0.000	0.000	127.500	No Ice 1/2" Ice 1" Ice	9.351 9.921 10.455	7.646 8.833 9.734	0.089 0.165 0.250
(2) JAHH-65B-R3B_TIA w/ Mount Pipe	C	From Leg	4.000 0.000 0.000	0.000	127.500	No Ice 1/2" Ice 1" Ice	9.351 9.921 10.455	7.646 8.833 9.734	0.089 0.165 0.250
B2/B66A RRH-BR049	A	From Leg	4.000 0.000 0.000	0.000	127.500	No Ice 1/2" Ice 1" Ice	1.875 2.045 2.223	1.013 1.145 1.284	0.070 0.087 0.106
B2/B66A RRH-BR049	B	From Leg	4.000 0.000 0.000	0.000	127.500	No Ice 1/2" Ice 1" Ice	1.875 2.045 2.223	1.013 1.145 1.284	0.070 0.087 0.106
B2/B66A RRH-BR049	C	From Leg	4.000 0.000 0.000	0.000	127.500	No Ice 1/2" Ice 1" Ice	1.875 2.045 2.223	1.013 1.145 1.284	0.070 0.087 0.106
B5/B13 RRH-BR04C	A	From Leg	4.000 0.000 0.000	0.000	127.500	No Ice 1/2" Ice 1" Ice	1.875 2.045 2.223	1.013 1.145 1.284	0.070 0.087 0.106
B5/B13 RRH-BR04C	B	From Leg	4.000 0.000 0.000	0.000	127.500	No Ice 1/2" Ice 1" Ice	1.875 2.045 2.223	1.013 1.145 1.284	0.070 0.087 0.106
B5/B13 RRH-BR04C	C	From Leg	4.000 0.000 0.000	0.000	127.500	No Ice 1/2" Ice 1" Ice	1.875 2.045 2.223	1.013 1.145 1.284	0.070 0.087 0.106
BSAMNT-SBS-2-2 (Mount Bracket)	A	From Leg	4.000 0.000 0.000	0.000	127.500	No Ice 1/2" Ice 1" Ice	0.000 0.000 0.000	0.000 0.000 0.000	0.067 0.088 0.108
BSAMNT-SBS-2-2 (Mount Bracket)	B	From Leg	4.000 0.000 0.000	0.000	127.500	No Ice 1/2" Ice 1" Ice	0.000 0.000 0.000	0.000 0.000 0.000	0.067 0.088 0.108
BSAMNT-SBS-2-2 (Mount Bracket)	C	From Leg	4.000 0.000 0.000	0.000	127.500	No Ice 1/2" Ice 1" Ice	0.000 0.000 0.000	0.000 0.000 0.000	0.067 0.088 0.108
FDJ85020Q7-S1	A	From Leg	4.000 0.000 0.000	0.000	127.500	No Ice 1/2" Ice 1" Ice	0.958 1.093 1.236	0.357 0.433 0.517	0.024 0.033 0.045
FDJ85020Q7-S1	B	From Leg	4.000 0.000 0.000	0.000	127.500	No Ice 1/2" Ice 1" Ice	0.958 1.093 1.236	0.357 0.433 0.517	0.024 0.033 0.045
FDJ85020Q7-S1	C	From Leg	4.000 0.000 0.000	0.000	127.500	No Ice 1/2" Ice 1" Ice	0.958 1.093 1.236	0.357 0.433 0.517	0.024 0.033 0.045
(2) APL868013 w/ Mount Pipe	A	From Leg	4.000 0.000 0.000	0.000	127.500	No Ice 1/2" Ice 1" Ice	2.630 3.070 3.530	4.130 4.600 5.090	0.030 0.064 0.106
(2) APL868013 w/ Mount	B	From Leg	4.000	0.000	127.500	No Ice	2.630	4.130	0.030

Description	Face or Leg	Offset Type	Offsets: Horz Lateral Vert ft ft ft	Azimuth Adjustment °	Placement ft		C_AA_A Front ft^2	C_AA_A Side ft^2	Weight K
Pipe			0.000 0.000			1/2" Ice 1" Ice	3.070 3.530	4.600 5.090	0.064 0.106
(2) APL868013 w/ Mount Pipe	C	From Leg	4.000 0.000 0.000	0.000	127.500	No Ice 1/2" Ice 1" Ice	2.630 3.070 3.530	4.130 4.600 5.090	0.030 0.064 0.106
DB-T1-6Z-8AB-0Z	C	From Leg	4.000 0.000 0.000	0.000	127.500	No Ice 1/2" Ice 1" Ice	4.800 5.070 5.348	2.000 2.193 2.393	0.044 0.080 0.120
Sector Mount [SM 802-3]	C	None		0.000	127.500	No Ice 1/2" Ice 1" Ice	25.340 33.440 41.560	25.340 33.440 41.560	0.930 1.388 1.977
***									
OPA-65R-LCUU-H6_TIA w/ Mount Pipe	A	From Leg	4.000 0.000 0.000	0.000	115.000	No Ice 1/2" Ice 1" Ice	9.678 10.250 10.788	7.121 8.303 9.199	0.106 0.181 0.265
OPA-65R-LCUU-H6_TIA w/ Mount Pipe	B	From Leg	4.000 0.000 0.000	0.000	115.000	No Ice 1/2" Ice 1" Ice	9.678 10.250 10.788	7.121 8.303 9.199	0.106 0.181 0.265
OPA-65R-LCUU-H8_TIA w/ Mount Pipe	C	From Leg	4.000 0.000 0.000	0.000	115.000	No Ice 1/2" Ice 1" Ice	13.000 13.686 14.375	9.556 11.031 12.487	0.103 0.198 0.303
EPBQ-654L8H6-L2_TIA w/ Mount Pipe	A	From Leg	4.000 0.000 0.000	0.000	115.000	No Ice 1/2" Ice 1" Ice	13.474 14.086 14.664	6.642 7.833 8.748	0.110 0.201 0.300
EPBQ-654L8H6-L2_TIA w/ Mount Pipe	B	From Leg	4.000 0.000 0.000	0.000	115.000	No Ice 1/2" Ice 1" Ice	13.474 14.086 14.664	6.642 7.833 8.748	0.110 0.201 0.300
EPBQ-654L8H8-L2_TIA w/ Mount Pipe	C	From Leg	4.000 0.000 0.000	0.000	115.000	No Ice 1/2" Ice 1" Ice	18.326 19.062 19.807	9.171 10.685 12.223	0.119 0.236 0.363
7770.00 w/ Mount Pipe	A	From Leg	4.000 0.000 0.000	0.000	115.000	No Ice 1/2" Ice 1" Ice	5.746 6.179 6.607	4.254 5.014 5.711	0.055 0.103 0.157
7770.00 w/ Mount Pipe	B	From Leg	4.000 0.000 0.000	0.000	115.000	No Ice 1/2" Ice 1" Ice	5.746 6.179 6.607	4.254 5.014 5.711	0.055 0.103 0.157
7770.00 w/ Mount Pipe	C	From Leg	4.000 0.000 0.000	0.000	115.000	No Ice 1/2" Ice 1" Ice	5.746 6.179 6.607	4.254 5.014 5.711	0.055 0.103 0.157
RRUS-11	A	From Leg	4.000 0.000 0.000	0.000	115.000	No Ice 1/2" Ice 1" Ice	2.791 2.998 3.213	1.192 1.340 1.496	0.050 0.071 0.095
RRUS-11	B	From Leg	4.000 0.000 0.000	0.000	115.000	No Ice 1/2" Ice 1" Ice	2.791 2.998 3.213	1.192 1.340 1.496	0.050 0.071 0.095
RRUS-11	C	From Leg	4.000 0.000 0.000	0.000	115.000	No Ice 1/2" Ice 1" Ice	2.791 2.998 3.213	1.192 1.340 1.496	0.050 0.071 0.095
RRUS 4478 B14	A	From Leg	4.000	0.000	115.000	No Ice	2.021	1.246	0.059

Description	Face or Leg	Offset Type	Offsets: Horz Lateral Vert ft ft ft	Azimuth Adjustment °	Placement ft		C_AA_A Front ft^2	C_AA_A Side ft^2	Weight K
			0.000			1/2"	2.200	1.396	0.077
			0.000			Ice	2.386	1.554	0.097
						1" Ice			
RRUS 4478 B14	B	From Leg	4.000	0.000	115.000	No Ice	2.021	1.246	0.059
			0.000			1/2"	2.200	1.396	0.077
			0.000			Ice	2.386	1.554	0.097
						1" Ice			
RRUS 4478 B14	C	From Leg	4.000	0.000	115.000	No Ice	2.021	1.246	0.059
			0.000			1/2"	2.200	1.396	0.077
			0.000			Ice	2.386	1.554	0.097
						1" Ice			
(3) RRUS 32	A	From Leg	4.000	0.000	115.000	No Ice	2.857	1.777	0.055
			0.000			1/2"	3.083	1.968	0.077
			0.000			Ice	3.316	2.166	0.103
						1" Ice			
(3) RRUS 32	B	From Leg	4.000	0.000	115.000	No Ice	2.857	1.777	0.055
			0.000			1/2"	3.083	1.968	0.077
			0.000			Ice	3.316	2.166	0.103
						1" Ice			
(3) RRUS 32	C	From Leg	4.000	0.000	115.000	No Ice	2.857	1.777	0.055
			0.000			1/2"	3.083	1.968	0.077
			0.000			Ice	3.316	2.166	0.103
						1" Ice			
(2) LGP21401	A	From Leg	4.000	0.000	115.000	No Ice	1.104	0.347	0.014
			0.000			1/2"	1.239	0.442	0.021
			0.000			Ice	1.381	0.544	0.030
						1" Ice			
(2) LGP21401	B	From Leg	4.000	0.000	115.000	No Ice	1.104	0.347	0.014
			0.000			1/2"	1.239	0.442	0.021
			0.000			Ice	1.381	0.544	0.030
						1" Ice			
(2) LGP21401	C	From Leg	4.000	0.000	115.000	No Ice	1.104	0.347	0.014
			0.000			1/2"	1.239	0.442	0.021
			0.000			Ice	1.381	0.544	0.030
						1" Ice			
DC6-48-60-18-8F	A	From Leg	4.000	0.000	115.000	No Ice	1.212	1.212	0.033
			0.000			1/2"	1.892	1.892	0.055
			0.000			Ice	2.105	2.105	0.080
						1" Ice			
DC6-48-60-18-8F	B	From Leg	4.000	0.000	115.000	No Ice	1.212	1.212	0.033
			0.000			1/2"	1.892	1.892	0.055
			0.000			Ice	2.105	2.105	0.080
						1" Ice			
DC6-48-60-0-8F	C	From Leg	4.000	0.000	115.000	No Ice	0.917	0.917	0.019
			0.000			1/2"	1.458	1.458	0.037
			0.000			Ice	1.643	1.643	0.057
						1" Ice			
Sector Mount [SM 802-3]	C	None		0.000	115.000	No Ice	25.340	25.340	0.930
						1/2"	33.440	33.440	1.388
						Ice	41.560	41.560	1.977
						1" Ice			
***									

Load Combinations

Comb. No.	Description
1	Dead Only
2	1.2 Dead+1.6 Wind 0 deg - No Ice

Comb. No.	Description
3	0.9 Dead+1.6 Wind 0 deg - No Ice
4	1.2 Dead+1.6 Wind 30 deg - No Ice
5	0.9 Dead+1.6 Wind 30 deg - No Ice
6	1.2 Dead+1.6 Wind 60 deg - No Ice
7	0.9 Dead+1.6 Wind 60 deg - No Ice
8	1.2 Dead+1.6 Wind 90 deg - No Ice
9	0.9 Dead+1.6 Wind 90 deg - No Ice
10	1.2 Dead+1.6 Wind 120 deg - No Ice
11	0.9 Dead+1.6 Wind 120 deg - No Ice
12	1.2 Dead+1.6 Wind 150 deg - No Ice
13	0.9 Dead+1.6 Wind 150 deg - No Ice
14	1.2 Dead+1.6 Wind 180 deg - No Ice
15	0.9 Dead+1.6 Wind 180 deg - No Ice
16	1.2 Dead+1.6 Wind 210 deg - No Ice
17	0.9 Dead+1.6 Wind 210 deg - No Ice
18	1.2 Dead+1.6 Wind 240 deg - No Ice
19	0.9 Dead+1.6 Wind 240 deg - No Ice
20	1.2 Dead+1.6 Wind 270 deg - No Ice
21	0.9 Dead+1.6 Wind 270 deg - No Ice
22	1.2 Dead+1.6 Wind 300 deg - No Ice
23	0.9 Dead+1.6 Wind 300 deg - No Ice
24	1.2 Dead+1.6 Wind 330 deg - No Ice
25	0.9 Dead+1.6 Wind 330 deg - No Ice
26	1.2 Dead+1.0 Ice+1.0 Temp
27	1.2 Dead+1.0 Wind 0 deg+1.0 Ice+1.0 Temp
28	1.2 Dead+1.0 Wind 30 deg+1.0 Ice+1.0 Temp
29	1.2 Dead+1.0 Wind 60 deg+1.0 Ice+1.0 Temp
30	1.2 Dead+1.0 Wind 90 deg+1.0 Ice+1.0 Temp
31	1.2 Dead+1.0 Wind 120 deg+1.0 Ice+1.0 Temp
32	1.2 Dead+1.0 Wind 150 deg+1.0 Ice+1.0 Temp
33	1.2 Dead+1.0 Wind 180 deg+1.0 Ice+1.0 Temp
34	1.2 Dead+1.0 Wind 210 deg+1.0 Ice+1.0 Temp
35	1.2 Dead+1.0 Wind 240 deg+1.0 Ice+1.0 Temp
36	1.2 Dead+1.0 Wind 270 deg+1.0 Ice+1.0 Temp
37	1.2 Dead+1.0 Wind 300 deg+1.0 Ice+1.0 Temp
38	1.2 Dead+1.0 Wind 330 deg+1.0 Ice+1.0 Temp
39	Dead+Wind 0 deg - Service
40	Dead+Wind 30 deg - Service
41	Dead+Wind 60 deg - Service
42	Dead+Wind 90 deg - Service
43	Dead+Wind 120 deg - Service
44	Dead+Wind 150 deg - Service
45	Dead+Wind 180 deg - Service
46	Dead+Wind 210 deg - Service
47	Dead+Wind 240 deg - Service
48	Dead+Wind 270 deg - Service
49	Dead+Wind 300 deg - Service
50	Dead+Wind 330 deg - Service

Maximum Tower Deflections - Service Wind

Section No.	Elevation ft	Horz. Deflection in	Gov. Load Comb.	Tilt °	Twist °
T1	150 - 140	3.028	47	0.197	0.038
T2	140 - 120	2.592	47	0.195	0.037
T3	120 - 100	1.783	47	0.161	0.032
T4	100 - 80	1.143	47	0.121	0.024
T5	80 - 60	0.680	47	0.083	0.018
T6	60 - 40	0.369	47	0.051	0.012
T7	40 - 20	0.168	47	0.030	0.007
T8	20 - 0	0.054	47	0.015	0.003

Critical Deflections and Radius of Curvature - Service Wind

Elevation ft	Appurtenance	Gov. Load Comb.	Deflection in	Tilt °	Twist °	Radius of Curvature ft
150.000	APXVAA24_43-U-A20_TIA w/ Mount Pipe	47	3.028	0.197	0.038	144493
140.000	DT465B-2XR w/ Mount Pipe	47	2.592	0.195	0.037	72331
127.500	(2) JAHH-65B-R3B_TIA w/ Mount Pipe	47	2.070	0.176	0.034	32362
115.000	OPA-65R-LCUU-H6_TIA w/ Mount Pipe	47	1.606	0.151	0.030	25008

Maximum Tower Deflections - Design Wind

Section No.	Elevation ft	Horz. Deflection in	Gov. Load Comb.	Tilt °	Twist °
T1	150 - 140	14.843	18	0.967	0.187
T2	140 - 120	12.703	18	0.954	0.181
T3	120 - 100	8.740	18	0.788	0.155
T4	100 - 80	5.605	18	0.594	0.118
T5	80 - 60	3.330	18	0.409	0.086
T6	60 - 40	1.807	18	0.252	0.060
T7	40 - 20	0.824	18	0.145	0.033
T8	20 - 0	0.264	18	0.073	0.016

Critical Deflections and Radius of Curvature - Design Wind

Elevation ft	Appurtenance	Gov. Load Comb.	Deflection in	Tilt °	Twist °	Radius of Curvature ft
150.000	APXVAA24_43-U-A20_TIA w/ Mount Pipe	18	14.843	0.967	0.187	29891
140.000	DT465B-2XR w/ Mount Pipe	18	12.703	0.954	0.181	14975
127.500	(2) JAHH-65B-R3B_TIA w/ Mount Pipe	18	10.149	0.864	0.167	6680
115.000	OPA-65R-LCUU-H6_TIA w/ Mount Pipe	18	7.870	0.738	0.146	5138

Bolt Design Data

Section No.	Elevation ft	Component Type	Bolt Grade	Bolt Size in	Number Of Bolts	Maximum Load per Bolt K	Allowable Load per Bolt K	Ratio Load / Allowable	Allowable Ratio	Criteria
T1	150	Leg	A325N	0.750	4	1.759	29.821	0.059	1	Bolt Tension
		Diagonal	A325N	0.500	1	2.245	4.690	0.479	1	Member Block Shear
T2	140	Leg	A325N	1.000	4	10.789	53.014	0.204	1	Bolt Tension
		Diagonal	A325N	0.625	1	6.126	6.831	0.897	1	Member Block Shear
T3	120	Leg	A325N	1.000	6	14.154	53.014	0.267	1	Bolt Tension
		Diagonal	A325N	0.625	1	6.245	6.831	0.914	1	Member Block Shear
T4	100	Leg	A325N	1.000	8	15.193	53.014	0.287	1	Bolt Tension
		Diagonal	A325N	0.625	1	6.822	7.830	0.871	1	Member Bearing
T5	80	Leg	A325N	1.250	8	19.232	82.835	0.232	1	Bolt Tension
		Diagonal	A325N	0.625	1	6.958	7.830	0.889	1	Member

Section No.	Elevation ft	Component Type	Bolt Grade	Bolt Size in	Number Of Bolts	Maximum Load per Bolt K	Allowable Load per Bolt K	Ratio Load / Allowable	Allowable Ratio	Criteria
T6	60	Leg	A325N	1.250	8	22.986	82.835	0.277	1	Bearing Bolt Tension
		Diagonal	A325N	0.625	1	7.782	7.830	0.994	1	Member Bearing
T7	40	Leg	A325N	1.250	8	26.456	82.835	0.319	1	Bolt Tension
		Diagonal	A325N	0.750	1	8.659	12.615	0.686	1	Member Bearing
T8	20	Diagonal	A325N	0.750	1	8.985	12.615	0.712	1	Member Bearing

Compression Checks

Leg Design Data (Compression)

Section No.	Elevation ft	Size	L ft	L_u ft	Kl/r	A in^2	P_u K	ϕP_n K	Ratio $\frac{P_u}{\phi P_n}$
T1	150 - 140	Pipe 2.875" x 0.203" (2.5 STD)	10.000	0.667	8.4 K=1.00	1.704	-8.972	82.352	0.109 [1]
T2	140 - 120	Pipe 2.875" x 0.203" (2.5 STD)	20.000	4.667	59.1 K=1.00	1.704	-43.489	62.849	0.692 [1]
T3	120 - 100	Pipe 4.5" x 0.237" (4 STD)	20.033	4.674	37.2 K=1.00	3.174	-89.886	138.323	0.650 [1]
T4	100 - 80	Pipe 5.563" x 0.258" (5 STD)	20.033	6.260	40.0 K=1.00	4.300	-128.164	184.163	0.696 [1]
T5	80 - 60	Pipe 6.625" x 0.280" (6 STD)	20.033	6.260	33.5 K=1.00	5.581	-164.434	248.307	0.662 [1]
T6	60 - 40	Pipe 8.625" x 0.322" (8 STD)	20.033	6.260	25.6 K=1.00	8.399	-198.752	387.660	0.513 [1]
T7	40 - 20	Pipe 8.625" x 0.500" (8 XS)	20.033	9.349	39.0 K=1.00	12.763	-229.235	550.137	0.417 [1]
T8	20 - 0	Pipe 8.625" x 0.500" (8 XS)	20.033	9.349	39.0 K=1.00	12.763	-260.150	550.137	0.473 [1]

[1] P_u / ϕP_n controls

Diagonal Design Data (Compression)

Section No.	Elevation ft	Size	L ft	L_u ft	Kl/r	A in^2	P_u K	ϕP_n K	Ratio $\frac{P_u}{\phi P_n}$
T1	150 - 140	L 1.5 x 1.5 x 3/16	7.401	3.449	141.1 K=1.00	0.527	-2.157	5.986	0.360 [1]
T2	140 - 120	L2x2x3/16	7.601	3.529	110.6 K=1.03	0.715	-6.097	12.165	0.501 [1]
T3	120 - 100	L2x2x3/16	9.005	4.300	131.0 K=1.00	0.715	-6.073	9.392	0.647 [1]
T4	100 - 80	L 2.5 x 2.5 x 3/16	11.478	5.529	134.0 K=1.00	0.902	-6.723	11.342	0.593 [1]
T5	80 - 60	L 3 x 3 x 3/16	13.200	6.344	127.7 K=1.00	1.090	-7.118	14.880	0.478 [1]
T6	60 - 40	L 3 x 3 x 3/16	14.991	7.152	144.0 K=1.00	1.090	-7.700	11.874	0.648 [1]
T7	40 - 20	L 3.5 x 3.5 x 1/4	18.067	8.751	151.3 K=1.00	1.690	-8.602	16.676	0.516 [1]
T8	20 - 0	L 3.5 x 3.5 x 1/4	19.806	9.760	168.8	1.690	-9.602	13.406	0.716 [1]

Section No.	Elevation ft	Size	L ft	L_u ft	Kl/r	A in^2	P_u K	ϕP_n K	Ratio $\frac{P_u}{\phi P_n}$
					K=1.00				

[1] P_u / ϕP_n controls

Top Girt Design Data (Compression)

Section No.	Elevation ft	Size	L ft	L_u ft	Kl/r	A in^2	P_u K	ϕP_n K	Ratio $\frac{P_u}{\phi P_n}$
T1	150 - 140	L3x3x1/4	6.000	5.760	118.4 K=1.01	1.440	-0.624	22.310	0.028 [1]

[1] P_u / ϕP_n controls

Tension Checks

Leg Design Data (Tension)

Section No.	Elevation ft	Size	L ft	L_u ft	Kl/r	A in^2	P_u K	ϕP_n K	Ratio $\frac{P_u}{\phi P_n}$
T1	150 - 140	Pipe 2.875" x 0.203" (2.5 STD)	10.000	0.667	8.4	1.704	7.037	82.817	0.085 [1]
T2	140 - 120	Pipe 2.875" x 0.203" (2.5 STD)	20.000	0.667	8.4	1.704	43.156	82.817	0.521 [1]
T3	120 - 100	Pipe 4.5" x 0.237" (4 STD)	20.033	0.668	5.3	3.174	84.922	154.259	0.551 [1]
T4	100 - 80	Pipe 5.563" x 0.258" (5 STD)	20.033	0.626	4.0	4.300	121.548	208.974	0.582 [1]
T5	80 - 60	Pipe 6.625" x 0.280" (6 STD)	20.033	0.626	3.3	5.581	153.856	271.254	0.567 [1]
T6	60 - 40	Pipe 8.625" x 0.322" (8 STD)	20.033	0.626	2.6	8.399	183.889	408.204	0.450 [1]
T7	40 - 20	Pipe 8.625" x 0.500" (8 XS)	20.033	0.668	2.8	12.763	211.647	620.268	0.341 [1]
T8	20 - 0	Pipe 8.625" x 0.500" (8 XS)	20.033	0.668	2.8	12.763	237.787	620.268	0.383 [1]

[1] P_u / ϕP_n controls

Diagonal Design Data (Tension)

Section No.	Elevation ft	Size	L ft	L_u ft	Kl/r	A in^2	P_u K	ϕP_n K	Ratio $\frac{P_u}{\phi P_n}$
T1	150 - 140	L 1.5 x 1.5 x 3/16	7.401	3.449	93.4	0.308	2.245	13.381	0.168 [1]
T2	140 - 120	L2x2x3/16	7.601	3.529	71.0	0.431	6.126	18.739	0.327 [1]
T3	120 - 100	L2x2x3/16	9.005	4.300	86.0	0.431	6.245	18.739	0.333 [1]
T4	100 - 80	L 2.5 x 2.5 x 3/16	10.452	5.025	79.3	0.571	6.822	24.840	0.275 [1]
T5	80 - 60	L 3 x 3 x 3/16	13.200	6.344	82.6	0.712	6.958	30.973	0.225 [1]
T6	60 - 40	L 3 x 3 x 3/16	14.991	7.152	92.9	0.712	7.782	30.973	0.251 [1]
T7	40 - 20	L 3.5 x 3.5 x 1/4	18.067	8.751	97.8	1.103	8.659	47.999	0.180 [1]
T8	20 - 0	L 3.5 x 3.5 x 1/4	19.806	9.760	107.4	1.103	8.985	47.999	0.187 [1]

Section No.	Elevation ft	Size	L ft	L_u ft	Kl/r	A in^2	P_u K	ϕP_n K	Ratio $\frac{P_u}{\phi P_n}$

[1] P_u / ϕP_n controls

Top Girt Design Data (Tension)

Section No.	Elevation ft	Size	L ft	L_u ft	Kl/r	A in^2	P_u K	ϕP_n K	Ratio $\frac{P_u}{\phi P_n}$
T1	150 - 140	L3x3x1/4	6.000	5.760	74.3	1.440	0.592	46.656	0.013 [1]

[1] P_u / ϕP_n controls

Section Capacity Table

Section No.	Elevation ft	Component Type	Size	Critical Element	P K	ϕP_{allow} K	% Capacity	Pass Fail
T1	150 - 140	Leg	Pipe 2.875" x 0.203" (2.5 STD)	3	-8.972	82.352	10.9	Pass
T2	140 - 120	Leg	Pipe 2.875" x 0.203" (2.5 STD)	21	-43.489	62.849	69.2	Pass
T3	120 - 100	Leg	Pipe 4.5" x 0.237" (4 STD)	48	-89.886	138.323	65.0	Pass
T4	100 - 80	Leg	Pipe 5.563" x 0.258" (5 STD)	73	-128.164	184.163	69.6	Pass
T5	80 - 60	Leg	Pipe 6.625" x 0.280" (6 STD)	94	-164.434	248.307	66.2	Pass
T6	60 - 40	Leg	Pipe 8.625" x 0.322" (8 STD)	115	-198.752	387.660	51.3	Pass
T7	40 - 20	Leg	Pipe 8.625" x 0.500" (8 XS)	136	-229.235	550.137	41.7	Pass
T8	20 - 0	Leg	Pipe 8.625" x 0.500" (8 XS)	151	-260.150	550.137	47.3	Pass
T1	150 - 140	Diagonal	L 1.5 x 1.5 x 3/16	10	-2.157	5.986	36.0 47.9 (b)	Pass
T2	140 - 120	Diagonal	L2x2x3/16	25	-6.097	12.165	50.1 89.7 (b)	Pass
T3	120 - 100	Diagonal	L2x2x3/16	49	-6.073	9.392	64.7 91.4 (b)	Pass
T4	100 - 80	Diagonal	L 2.5 x 2.5 x 3/16	76	-6.723	11.342	59.3 87.1 (b)	Pass
T5	80 - 60	Diagonal	L 3 x 3 x 3/16	97	-7.118	14.880	47.8 88.9 (b)	Pass
T6	60 - 40	Diagonal	L 3 x 3 x 3/16	118	-7.700	11.874	64.8 99.4 (b)	Pass
T7	40 - 20	Diagonal	L 3.5 x 3.5 x 1/4	139	-8.602	16.676	51.6 68.6 (b)	Pass
T8	20 - 0	Diagonal	L 3.5 x 3.5 x 1/4	154	-9.602	13.406	71.6	Pass
T1	150 - 140	Top Girt	L3x3x1/4	6	-0.624	22.310	2.8	Pass
						Summary		
						Leg (T4)	69.6	Pass
						Diagonal (T6)	99.4	Pass
						Top Girt (T1)	2.8	Pass
						Bolt Checks	99.4	Pass
						RATING =	**99.4**	**Pass**

APPENDIX B

BASE LEVEL DRAWING

Feed Line Plan

Round Flat App In Face App Out Face

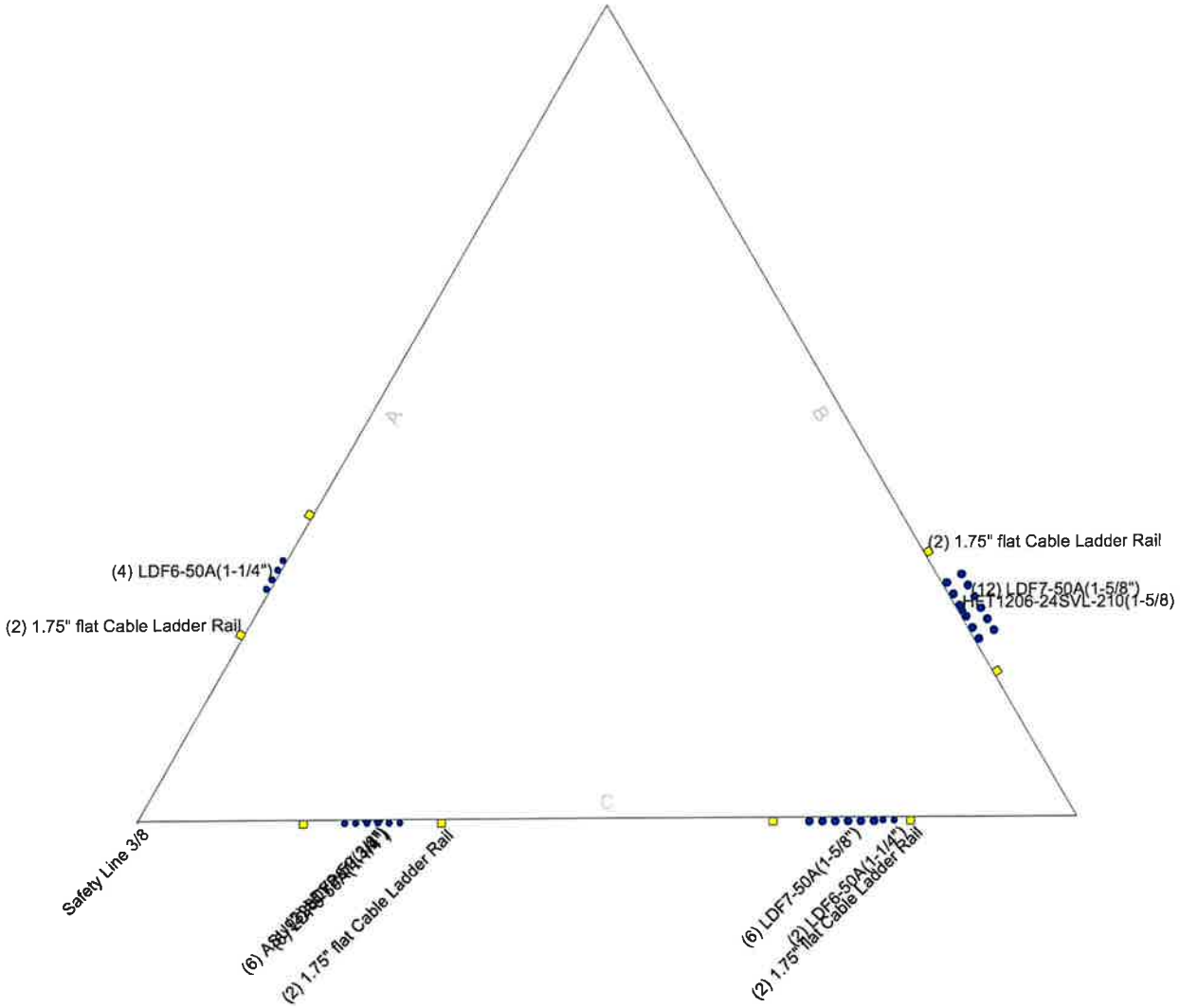

PJF Paul J. Ford and Company 250 E. Broad St., Ste 600 Columbus, OH 43215 Phone: 614-221-6679 FAX:	Job: PJF# 00019-0737.001.8700		
	Project: Existing 209 ft Self Supported Tower		
	Client: Crown Castle	Drawn by: ADP	App'd:
	Code: TIA-222-G	Date: 01/17/20	Scale: NTS
	Path: G:\TOWER\000 Misc\2019\00019-0737_Norwich CO\TIN\00019-0737.001.8700.eh		Dwg No. E-7

APPENDIX C

ADDITIONAL CALCULATIONS

PAUL J. FORD & COMPANY
250 E Broad St, Ste 600 • Columbus, OH 43215
Phone 614.221.6679 www.pauljford.com

By ADP Date 1/17/2020
Project # 00019-0737.001.8700

Self-Support Tower Anchor Rod Capacity - TIA-G

Loads

Compression :	268	kips	Tension :	237	kips
Comp. Shear :	27	kips	Ten.Shear :	24	kips

Code: TIA-G
Maximum Ratio: 1.00

Existing Anchor Rods

Anchor Rod Condition (n) :	0.5	
Anchor Rod ø :	1 1/2	in
Anchor Rod Quantity :	8	
Anchor Rod Grade :	F1554 Gr. 36	
F_y :	36	ksi
F_u :	58	ksi
Threads per Inch	6	
Net Tensile Area	1.41	in^2
ϕ_t :	0.80	
$\phi_t R_{nt}$:	521.63	kip
Anchor Rod Ratio :	0.617	

l_{ar} : inches
Comp. M_u : 0.00 k-in

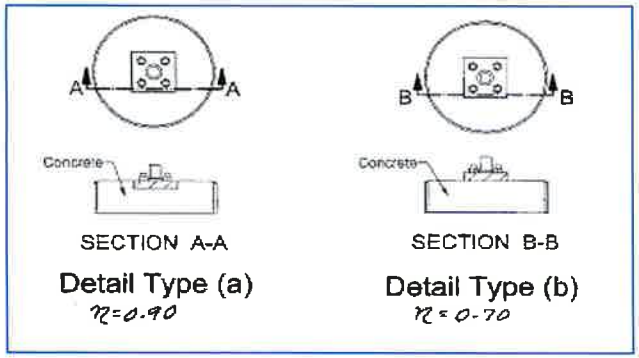

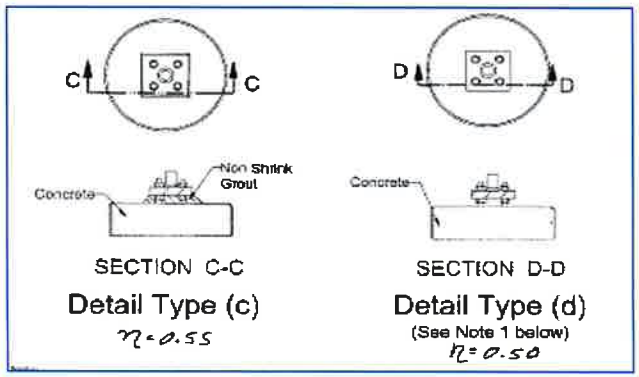

PAUL J. FORD & COMPANY
250 E Broad St, Ste 600 • Columbus, OH 43215
Phone 614.221.6679 www.pauljford.com

Job Number:	00019-0737.001.8700
Engineer:	ADP
Date:	1/17/2020
Site Name:	NORWICH CDT
Site Number:	24530 / 11368507

Monopole and Tower Foundation Comparison Tool

(Version v1.4 - Effective Date 07/16/2019)

Structure Type:	Self-Support Tower
Current Analysis Code:	TIA-222-G
Original Design Code:	TIA-222-F
Manufacturer:	Fred A. Nudd Corporation
Design Drawing Number:	99-6864-2R
Design Drawing Date:	11/20/1999

☐ Compare Base Shear
☑ Compare Base Axial Compression

Base Reaction	Original Design (kips, kip-ft)	Adjusted Original Design	Current Analysis (kips, kip-ft)	Reactions Ratio	Result
Axial Compression	347.00	468.45	268.00	57.21%	Sufficient
Tension (Uplift)	313.00	422.55	267.00	63.19%	Sufficient

Notes: 1. The original tower design was completed in accordance with the TIA-222-F standard. Per section 15.5.1 of the TIA-222-G standard, the reactions from the original design shall be multiplied by 1.35 for comparison to the reactions from this analysis.

ASCE 7 Hazards Report

Address:
No Address at This Location

Standard: ASCE/SEI 7-10
Risk Category: II
Soil Class: D - Stiff Soil

Elevation: 297 ft (NAVD 88)
Latitude: 41.5148
Longitude: -72.0617

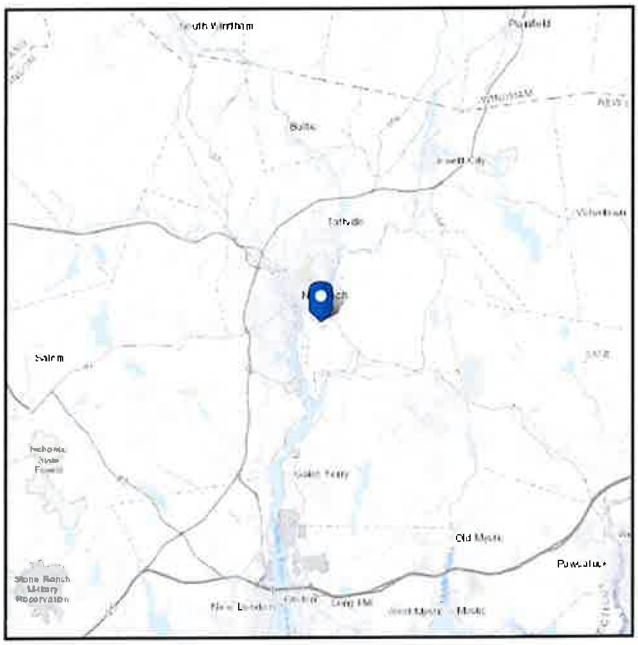

Wind

Results:

Wind Speed:	132 Vmph ← 135 mph per Jurisdiction
10-year MRI	79 Vmph
25-year MRI	89 Vmph
50-year MRI	98 Vmph
100-year MRI	108 Vmph
Data Source:	ASCE/SEI 7-10, Fig. 26.5-1A and Figs. CC-1–CC-4, incorporating errata of March 12, 2014
Date Accessed:	Thu Dec 26 2019

Value provided is 3-second gust wind speeds at 33 ft above ground for Exposure C Category, based on linear interpolation between contours. Wind speeds are interpolated in accordance with the 7-10 Standard. Wind speeds correspond to approximately a 7% probability of exceedance in 50 years (annual exceedance probability = 0.00143, MRI = 700 years).

Site is in a hurricane-prone region as defined in ASCE/SEI 7-10 Section 26.2. Glazed openings need not be protected against wind-borne debris.

Mountainous terrain, gorges, ocean promontories, and special wind regions should be examined for unusual wind conditions.

ASCE
AMERICAN SOCIETY OF CIVIL ENGINEERS

Seismic

Site Soil Class: D - Stiff Soil

Results:

S_S :	0.167	S_{DS} :	0.178
S_1 :	0.06	S_{D1} :	0.096
F_a :	1.6	T_L :	6
F_v :	2.4	PGA :	0.084
S_{MS} :	0.268	PGA_M :	0.134
S_{M1} :	0.144	F_{PGA} :	1.6
		I_e :	1

Seismic Design Category B

Data Accessed: Thu Dec 26 2019

Date Source: USGS Seismic Design Maps based on ASCE/SEI 7-10, incorporating Supplement 1 and errata of March 31, 2013, and ASCE/SEI 7-10 Table 1.5-2. Additional data for site-specific ground motion procedures in accordance with ASCE/SEI 7-10 Ch. 21 are available from USGS.

AMERICAN SOCIETY OF CIVIL ENGINEERS

Ice

Results:

Ice Thickness:	0.75 in.
Concurrent Temperature:	15 F
Gust Speed:	50 mph
Data Source:	Standard ASCE/SEI 7-10, Figs. 10-2 through 10-8
Date Accessed:	Thu Dec 26 2019

Ice thicknesses on structures in exposed locations at elevations higher than the surrounding terrain and in valleys and gorges may exceed the mapped values.

Values provided are equivalent radial ice thicknesses due to freezing rain with concurrent 3-second gust speeds, for a 50-year mean recurrence interval, and temperatures concurrent with ice thicknesses due to freezing rain. Thicknesses for ice accretions caused by other sources shall be obtained from local meteorological studies. Ice thicknesses in exposed locations at elevations higher than the surrounding terrain and in valleys and gorges may exceed the mapped values.

The ASCE 7 Hazard Tool is provided for your convenience, for informational purposes only, and is provided "as is" and without warranties of any kind. The location data included herein has been obtained from information developed, produced, and maintained by third party providers; or has been extrapolated from maps incorporated in the ASCE 7 standard. While ASCE has made every effort to use data obtained from reliable sources or methodologies, ASCE does not make any representations or warranties as to the accuracy, completeness, reliability, currency, or quality of any data provided herein. Any third-party links provided by this Tool should not be construed as an endorsement, affiliation, relationship, or sponsorship of such third-party content by or from ASCE.

ASCE does not intend, nor should anyone interpret, the results provided by this Tool to replace the sound judgment of a competent professional, having knowledge and experience in the appropriate field(s) of practice, nor to substitute for the standard of care required of such professionals in interpreting and applying the contents of this Tool or the ASCE 7 standard.

In using this Tool, you expressly assume all risks associated with your use. Under no circumstances shall ASCE or its officers, directors, employees, members, affiliates, or agents be liable to you or any other person for any direct, indirect, special, incidental, or consequential damages arising from or related to your use of, or reliance on, the Tool or any information obtained therein. To the fullest extent permitted by law, you agree to release and hold harmless ASCE from any and all liability of any nature arising out of or resulting from any use of data provided by the ASCE 7 Hazard Tool.

STANDARD CONDITIONS FOR FURNISHING OF PROFESSIONAL ENGINEERING SERVICES ON EXISTING STRUCTURES BY PAUL J. FORD AND COMPANY

1) Paul J. Ford and Company has not made a field inspection to verify the tower member sizes or the antenna/coax loading. If the existing conditions are not as represented on these drawings, we should be contacted immediately to evaluate the significance of the deviation.

2) No allowance was made for any damaged, missing, or rusted members. The analysis of this tower assumes that no physical deterioration has occurred in any of the structural components of the tower and that all the tower members have the same load carrying capacity as the day the tower was erected.

3) It is not possible to have all the detailed information to perform a thorough analysis of every structural sub-component of an existing tower. The structural analysis by Paul J. Ford and Company verifies the adequacy of the main structural members of the tower. Paul J. Ford and Company provides a limited scope of service in that we cannot verify the adequacy of every weld, plate connection detail, etc.

4) This tower has been analyzed according to the minimum design wind loads recommended by the Telecommunications Industry Association Standard ANSI/TIA-222-G. If the owner or local or state agencies require a higher design wind load, Paul J. Ford and Company should be made aware of this requirement.

5) The enclosed sketches are a schematic representation of the tower that we have analyzed. If any material is fabricated from these sketches, the contractor shall be responsible for field verifying the existing conditions and for the proper fit and clearance in the field.

6) Miscellaneous items such as antenna mounts etc. have not been designed or detailed as a part of our work. We recommend that material of adequate size and strength be purchased from a reputable tower manufacturer.

ATTACHMENT 5

PAUL J. FORD & COMPANY

Report Date:	November 19, 2019
Client:	On Air Engineering, LLC 88 Foundry Pond Road Cold Spring, NY 10516 Attn: David Weinpahl, P.E. (201) 456-4624 dweinpahl@onaireng.com
Structure:	Existing 150-ft Self Support
Carrier:	Verizon Wireless
Carrier Site Name:	Norwich East CT
Mount Type:	(3) 12 Foot Sector Frames
Site Address:	2 Hinckley Hill Rd
City, County, State:	Preston, New London County, CT
Latitude, Longitude:	41.514848, -72.061688
PJF Project:	A42919-0015.001.8190

Paul J. Ford and Company is pleased to submit this "**Mount Structural Analysis Report**". The purpose of this analysis is to determine if the mount has sufficient capacity to support the equipment described herein. Analysis of the existing supporting tower structure is to be completed by others and therefore is not part of this analysis. Analysis of the antenna mounting system as a tie-off point is not part of this document.

Analysis Criteria:

Reference Standard:	2015 International Building Code with the ANSI/TIA-222-G-2005 Standard, "Structural Standard for Antenna Supporting Structures and Antennas", with ANSI/TIA-222-G-1-2007 and ANSI/TIA-222-G-2-2009 Addenda per Exception #5 of Section 1609.1.1.
Ultimate Wind Speed:	135 mph 3-second gust wind speed without ice
Nominal Wind Speed:	105 mph 3-second gust wind speed without ice
Ice Wind Speed:	50 mph 3-second gust wind speed with 0.75" ice
IBC Site Criteria:	Risk Category II, Topographic Category 1, Exposure Category B

Summary of Analysis Results:

Antenna Mount:	**94.8%**	**SUFFICIENT***

***Sufficient upon completion of the modifications listed in the 'Recommendations' section of this report.**

We at Paul J. Ford and Company appreciate the opportunity of providing our continuing professional services to you and On Air Engineering, LLC. If you have any questions or need further assistance on this or any other projects please give us a call.

Respectfully Submitted by:
Paul J. Ford and Company

Anthony Pelino

Anthony Pelino, E.I.
Structural Designer
apelino@pauljford.com

D.S.

STATE OF CONNECTICUT
AUSTIN T. KLINE
No. 30301
LICENSED
PROFESSIONAL ENGINEER

2019.11.20
17:18:36-05'00'

TABLE OF CONTENTS

1) INTRODUCTION

2) ANALYSIS CRITERIA

Reference Standard
Table 1 – Equipment Configuration

3) ANALYSIS PROCEDURE

Table 2 – Documents Provided
3.1) Analysis Method
3.2) Assumptions

4) ANALYSIS RESULTS

Table 3 – Mount Component Capacity
4.1) Recommendations

STANDARD CONDITIONS

APPENDIX A – WIRE FRAME AND RENDERED MODELS

APPENDIX B – SOFTWARE INPUT CALCULATIONS

APPENDIX C – SOFTWARE ANALYSIS OUPUT

APPENDIX D – MODIFICATION DRAWINGS

APPENDIX E – POST MODIFICATION INSPECTION (PMI) REQUIREMENTS FOR DESKTOP REVIEW

1) INTRODUCTION

The existing mounts under consideration are (3) 12 Sector Frames installed at the 127.5' elevation on a 150' Self Support tower. The existing mounts considered in this analysis are identified as a Fred A. Nudd Corporation 12-ft Antenna Boom based on photos.

2) ANALYSIS CRITERIA

This analysis has been performed in accordance with the 2015 International Building Code based upon an ultimate 3-second gust wind speed of 135 mph converted to a nominal 3-second gust wind speed of 105 mph per section 1609.3.1 as required for use in the ANSI/TIA-222-G-2005 Standard, "Structural Standard for Antenna Supporting Structures and Antennas", with ANSI/TIA-222-G-1-2007 and ANSI/TIA-222-G-2-2009 Addenda per Exception #5 of Section 1609.1.1. and 50 mph with 0.75 inch ice thickness. Risk Category II, Exposure Category B and Topographic Category 1 with a maximum Topographic Factor, Kzt, of 1.0 were used in this analysis.

In addition, the mounts have been analyzed for various live loading conditions consisting of a 250-pound man live load applied individually at the midpoint and cantilevered ends of horizontal members as well as a 250-pound man live load applied individually at mount pipe locations using a 3-second wind speed of 30 mph.

Table 1 – Equipment Configuration

Mounting Level (feet)	Center Line Elevation (feet)	Quantity	Manufacturer	Model	Status	Mount Type
127.5	127.5	6	Andrew	JAHH-65B-R3B	Proposed	(3)12' Sector Frames
		3	CommScope	BSAMNT-SBS-2-2		
		3	Samsung Telecommunications	RFV01U-D1A		
		3	Samsung Telecommunications	RFV01U-D2A		
		3	RFS Celwave	FDJ85020Q7-S1		
		3	Antel	BXA70063-6CF-2-750MHZ	Equipment to be removed	
		3	TIL-TEK Antennae	MGD5-800T2		
		2	Amphenol	BXA-171063-12CF-EDIN-2		
		1	Amphenol	BXA-171085-12CF-EDIN-2		
		3	Nokia	UHID B4 RRH 2x40		
		6	RFS Celwave	APL868013	Existing	
		1	Raycap	6 circuit OVP		tower mounted

3) ANALYSIS PROCEDURE

Table 2 – Documents Provided

Document	Remarks	Reference	Source
Mount Manufacturer Drawings	Fred A. Nudd Corporation, 6/10/1996	Model#: 12-ft Antenna Boom	On Air Engineering
Site Photos	-	-	On Air Engineering
Equipment Layout Drawing	On Air Engineering, 11/11/2019	-	On Air Engineering
Radio Frequency Data Sheet	Verizon, 09/31/2019	1410177	On Air Engineering

3.1) Analysis Method

RISA-3D (version 17.0.3), a commercially available analysis software package, was used to create a three-dimensional model of the mount and calculate member stresses for various loading cases. Selected output from the analysis is included in Appendix C. In addition, this analysis is in accordance with Verizon's NSTD-446 *Antenna Mount Analysis and Modification Process (dated 03/29/19)*.

3.2) Assumptions

1) *The analysis of the existing self support tower or the effect of the mount attachment to the tower is not within the current scope of work.*
2) *The antenna mounting system was properly fabricated, installed and maintained in good condition, twist free and plumb in accordance with its original design and manufacturer's specifications and all bolts are tightened as specified by the manufacturer and AISC requirements.*
3) *The configuration of antennas, mounts, and other appurtenances are as specified in Table 1.*
4) *All member connections have been designed to meet or exceed the load carrying capacity of the connected member unless otherwise specified in this report. All U-Bolt connections have been properly tightened. This analysis will be required to be revised if the existing conditions in the field differ from those shown in the above referenced documents or assumed in this analysis. No allowance was made for any damaged, missing, or rusted members.*
5) *Steel grades have been assumed as follows:*
   - *a) Channel, Solid Round, Angle, Plate, Unistrut* — *ASTM A36 (GR 36)*
   - *b) Pipe* — *ASTM A53 (GR 35)*
   - *c) HSS (Rectangular)* — *ASTM 500 (GR B-46)*
   - *d) HSS (Round)* — *ASTM 500 (GR B-42)*
   - *e) Connection Bolts* — *ASTM A325*
   - *f) Threaded Rods* — *ASTM F1554 (GR 36)*
   - *g) U-Bolts* — *SAE J429 (GR2)*
6) *Proposed equipment is to be installed in the locations specified in Appendix A. Any changes to the proposed equipment locations will render this report invalid.*
7) *Mount has been modeled based on the photographs referenced in Table 2, indicating a match to the Fred A. Nudd Corporation mount model 12-ft Antenna Boom. Member information and dimensions not provided have been assumed to match those specified in the manufacturer drawings referenced in Table 2. No guarantee can be made as to the accuracy of these assumptions without a complete mount mapping.*
8) *Mount will be modified in conformance with the attached proposed modification drawings.*

This analysis may be affected if any assumptions are not valid or have been made in error. Paul J Ford and Company should be notified to determine the effect on the structural integrity of the tower.

4) ANALYSIS RESULTS

Table 3 – Mount Component Capacity

Notes	Component	% Capacity	Pass / Fail
1, 2	Mount Pipes	44.1	Pass
1, 2	Face Horizontal	94.8	Pass
1, 2	Standoff Members	55.2	Pass
1, 2	Bracing Members	63.6	Pass
1, 2	Tie Back	8.5	Pass
1, 2	Mount to Tower Connection (bolts/welds)	16.8	Pass

Mount Rating (max from all components) =	**94.8%**

Notes:
1. See additional documentation in "Appendix C – Software analysis Output" for calculations supporting the % capacity consumed.
2. All sectors are typical.

4.1) Recommendations

The mount will have sufficient capacity to carry the proposed loading configuration. In order for the results of the analysis to be considered valid, the modification listed below must be completed.

- Install (3) 12-ft long P1.5 STD (1.9" O.D. x 0.145") stiff arm or EOR approved equivalent in accordance with attached manufacturer drawings. Connection locations to mount shall mirror existing stiff arm locations on opposite side of mount. Connection to tower must be to adjacent tower leg.

No structural modifications are required at this time, provided that the above-listed changes are implemented.

STANDARD CONDITIONS FOR FURNISHING OF PROFESSIONAL ENGINEERING SERVICES ON EXISTING MOUNTS BY PAUL J. FORD AND COMPANY

1) It is the responsibility of the client to ensure that the information provided to Paul J. Ford and Company is accurate and complete. Paul J. Ford and Company will rely on the accuracy and completeness of such information in performing or furnishing services under this project.

2) If the existing conditions are not as represented on the referenced drawings and/or documents, Paul J. Ford and Company should be contacted immediately to evaluate the significance of the deviation.

3) The mount has been analyzed according to the minimum design loads recommended by the Reference Standard. If additional design loads are required, Paul J. Ford and Company should be made aware of this prior to the start of the project.

4) The standard of care for all Professional Engineering Services performed or furnished by Paul J. Ford and Company under this project will be the skill and care used by members of the Consultant's profession practicing under similar circumstances at the same time and in the same locality.

5) All Services are performed, results obtained, and recommendations made in accordance with generally accepted engineering principles and practices. Paul J. Ford and Company is not responsible for the conclusions, opinions and/or recommendations made by others based on the information supplied herein.

****

APPENDIX A

WIRE FRAME AND RENDERED MODELS

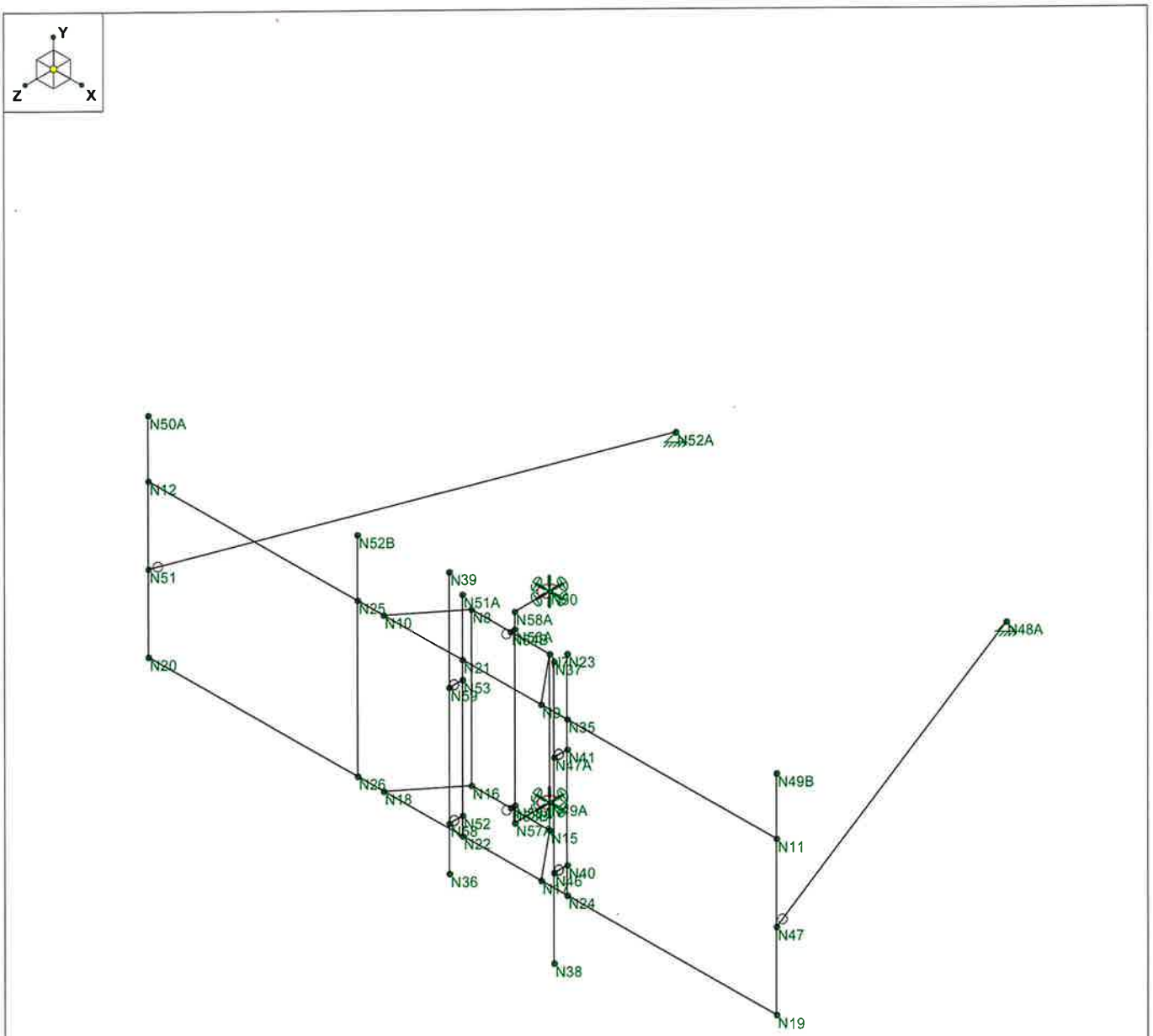

Envelope Only Solution

Paul J. Ford and Company	Norwich East CT	SK - 1
ADP		Nov 19, 2019 at 8:52 AM
42819-0015.001.8190		42919-0015.001.8190_Wind.r3d

ALPHA SECTOR - ANTENNA AZIMUTH 30°

LEGEND
EXISTING: BLUE
PROPOSED: RED

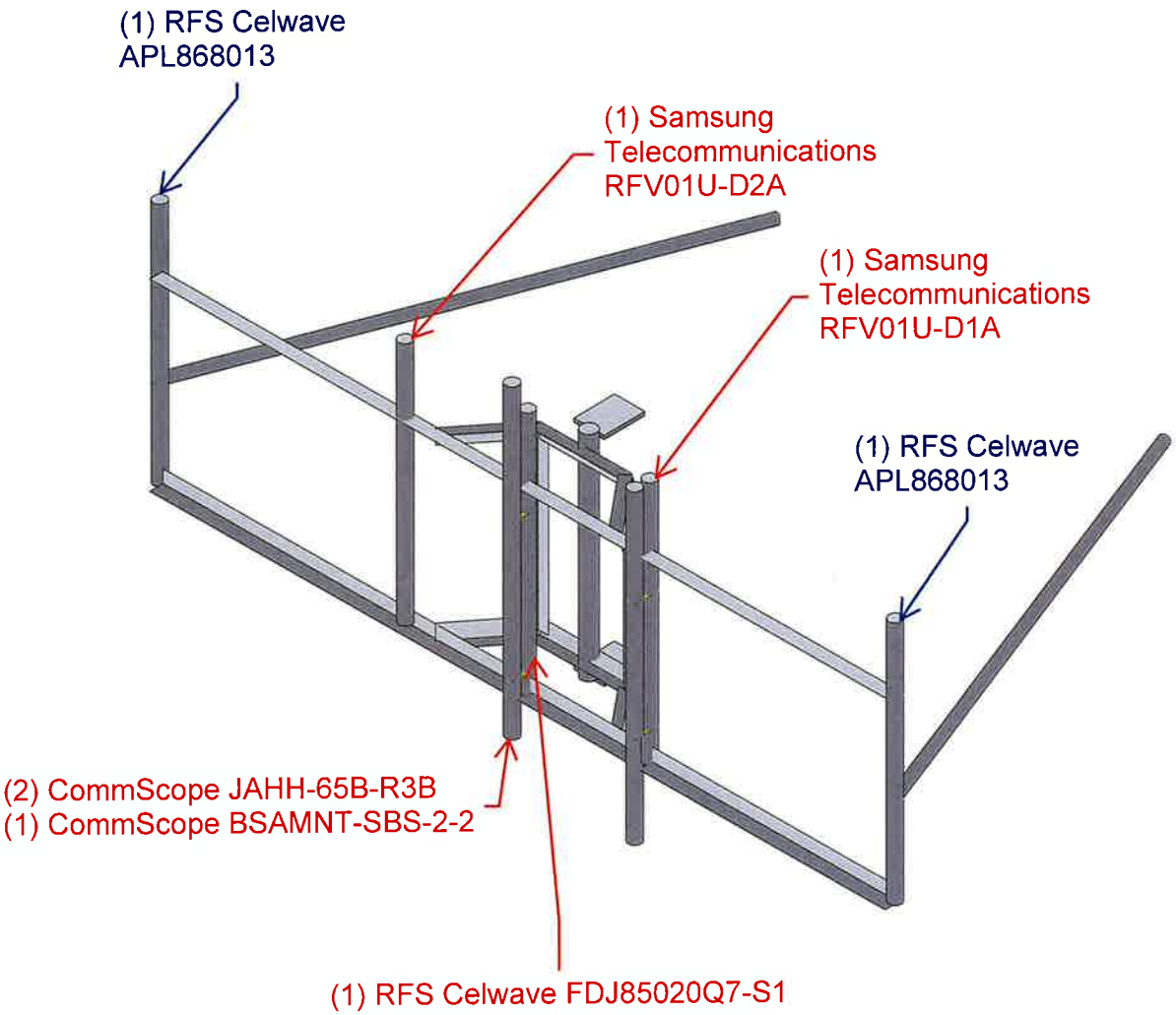

NOTES:

1) A 6" VERTICAL TOLERANCE FOR PROPOSED EQUIPMENT IS ACCEPTABLE.
2) CONTRACTOR TO VERIFY LOCATION OF EXISTING EQUIPMENT PRIOR TO INSTALLATION OF PROPOSED EQUIPMENT. NOTIFY EOR FOR ANY DEVIATIONS.
3) INSTALL SHALL NOT CAUSE HARM TO THE STRUCTURE, CLIMBING FACILITY, SAFETY CLIMB OR ANY SYSTEM INSTALLED ON THE STRUCTURE.

Envelope Only Solution

Paul J. Ford and Company	Norwich East CT	SK - 2
ADP		Nov 19, 2019 at 8:52 AM
42819-0015.001.8190		42919-0015.001.8190_Wind.r3d

BETA SECTOR - ANTENNA AZIMUTH 135°/150°

LEGEND
EXISTING: BLUE
PROPOSED: RED

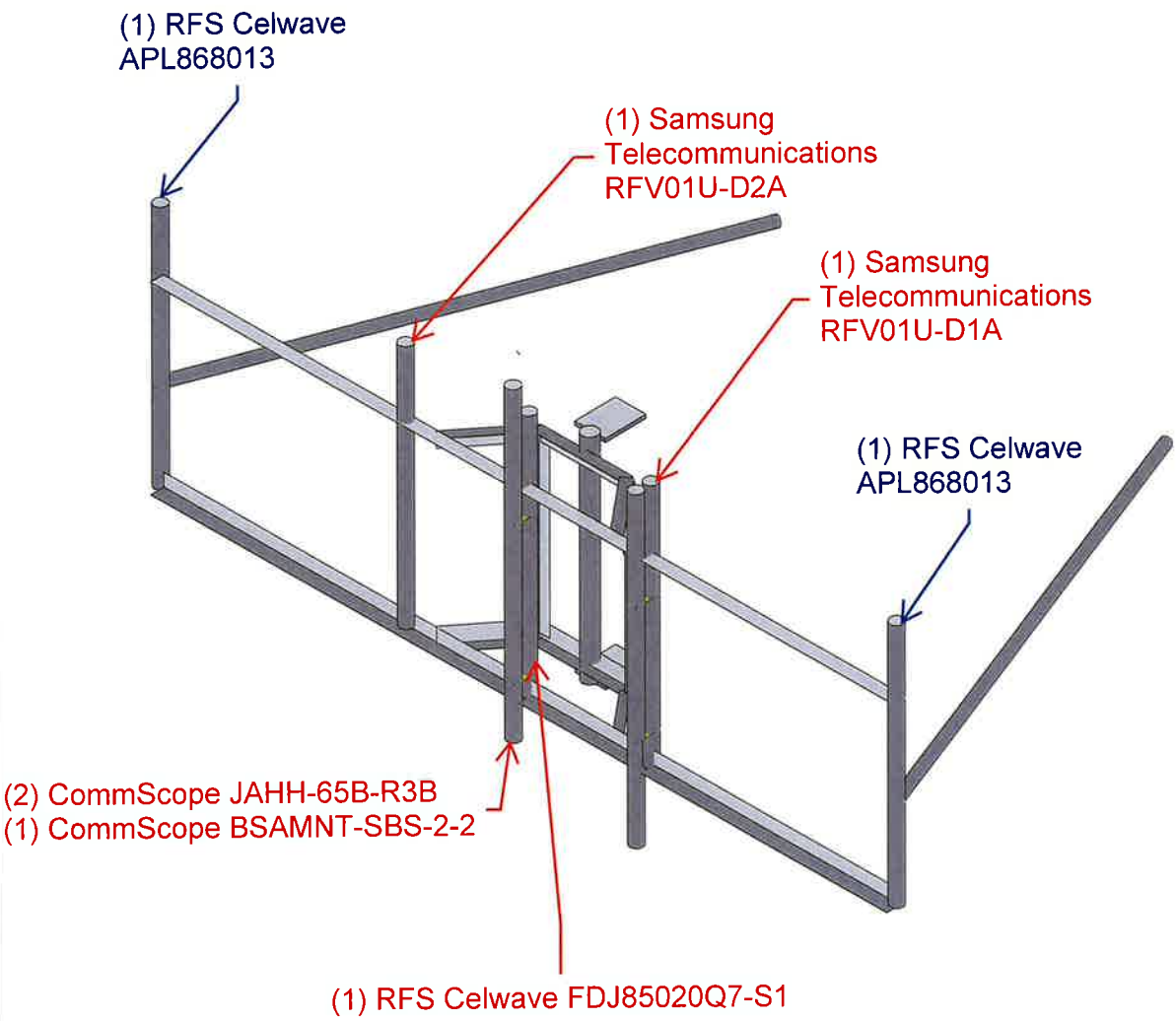

NOTES:

1) A 6" VERTICAL TOLERANCE FOR PROPOSED EQUIPMENT IS ACCEPTABLE.
2) CONTRACTOR TO VERIFY LOCATION OF EXISTING EQUIPMENT PRIOR TO INSTALLATION OF PROPOSED EQUIPMENT. NOTIFY EOR FOR ANY DEVIATIONS.
3) INSTALL SHALL NOT CAUSE HARM TO THE STRUCTURE, CLIMBING FACILITY, SAFETY CLIMB OR ANY SYSTEM INSTALLED ON THE STRUCTURE.

Envelope Only Solution

Paul J. Ford and Company	Norwich East CT	SK - 2
ADP		Nov 19, 2019 at 8:52 AM
42819-0015.001.8190		42919-0015.001.8190_Wind.r3d

GAMMA SECTOR - ANTENNA AZIMUTH 260°

LEGEND
EXISTING: BLUE
PROPOSED: RED

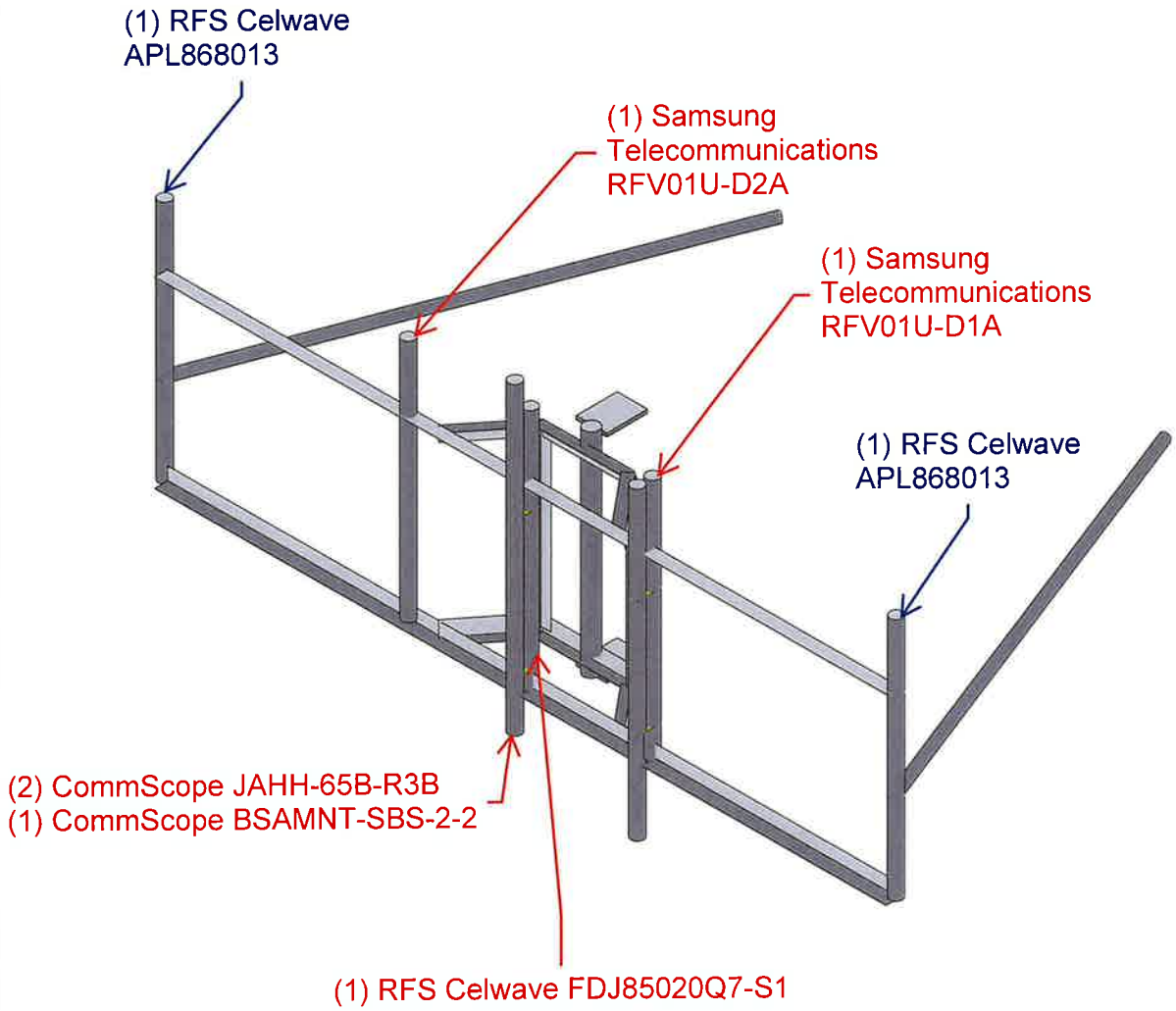

NOTES:

1) A 6" VERTICAL TOLERANCE FOR PROPOSED EQUIPMENT IS ACCEPTABLE.
2) CONTRACTOR TO VERIFY LOCATION OF EXISTING EQUIPMENT PRIOR TO INSTALLATION OF PROPOSED EQUIPMENT. NOTIFY EOR FOR ANY DEVIATIONS.
3) INSTALL SHALL NOT CAUSE HARM TO THE STRUCTURE, CLIMBING FACILITY, SAFETY CLIMB OR ANY SYSTEM INSTALLED ON THE STRUCTURE.

Envelope Only Solution

Paul J. Ford and Company	Norwich East CT	SK - 2
ADP		Nov 19, 2019 at 8:52 AM
42819-0015.001.8190		42919-0015.001.8190_Wind.r3d

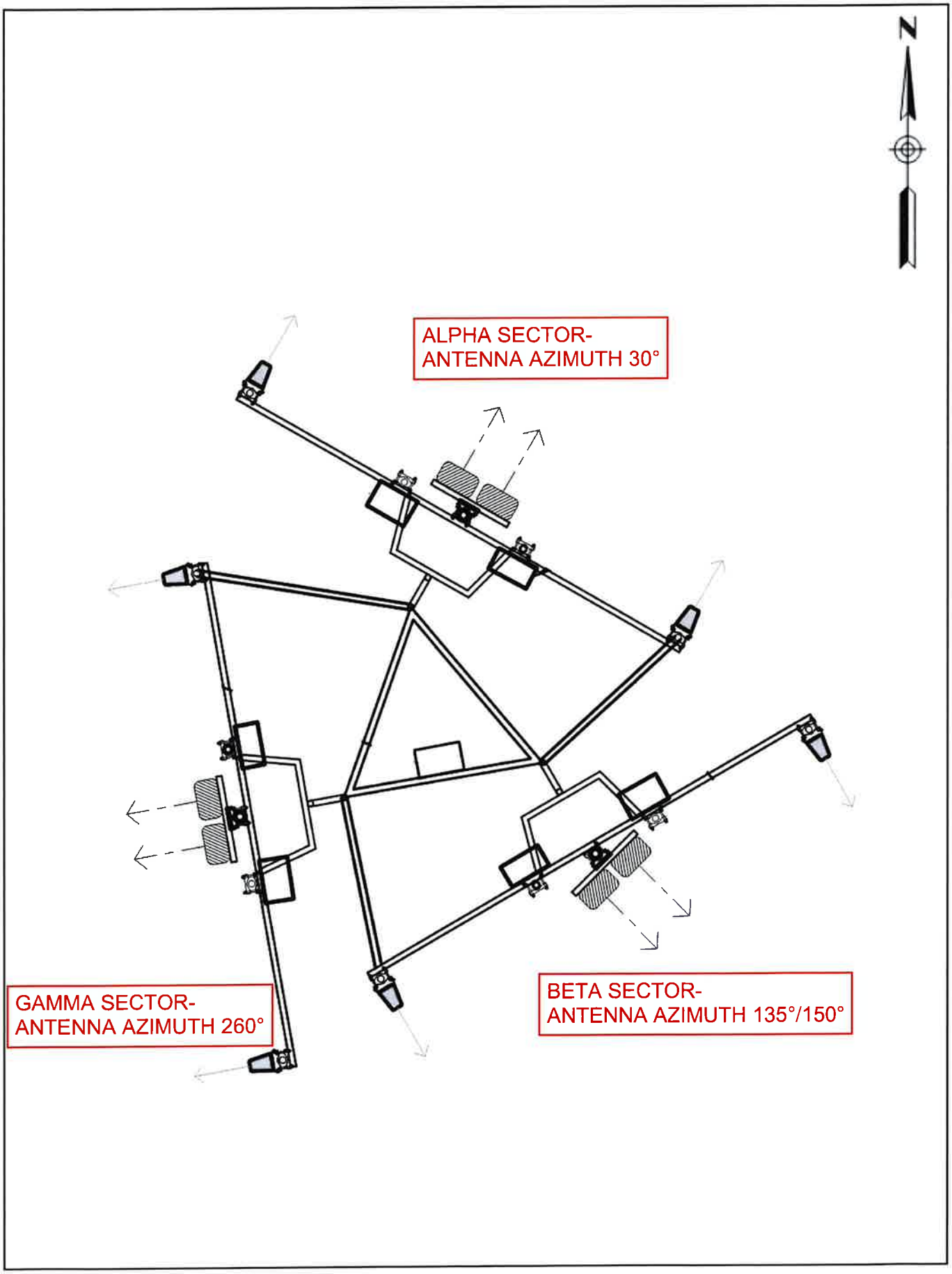
N
ALPHA SECTOR-
ANTENNA AZIMUTH 30°
BETA SECTOR-
ANTENNA AZIMUTH 135°/150°
GAMMA SECTOR-
ANTENNA AZIMUTH 260°

APPENDIX B

SOFTWARE INPUT CALCULATIONS

PAUL J. FORD & COMPANY
250 E Broad St, Ste 600 • Columbus, OH 43215
Phone 614.221.6679 www.pauljford.com

Project # 42919-0015.001.8190
By ADP

Analysis 30 degrees
File Tier 2.r3d

Mount Loading per TIA-222-G-2

Structure & Wind Speed

Structure Type =	Mount	
Mount Type =	1 Sector	
Mount Centerline, z =	127.5	ft
Centerline Y Coordinate =	0	in
Wind Speed =	105	mph
Service Wind Speed =	30	mph
Const. Duration =		
Non-Op Wind Speed =	#N/A	mph
Op Wind Speed =	30	mph
Ice Wind Speed =	50	mph
Ice Thickness =	0.75	in

Topo

Exposure Cat =	B	
Structure Class =	II	
Topographic Cat =	1	
Crest Height =	0	ft

Velocity Pressure Coefficients

z_g =	1200	ft	
a =	7.00		
K_{zmin} =	0.70		
K_z =	1.06		Calculated Value
K_z =	1.06		Section 2.6.5.2
K_{zt} =	1.00		Section 2.6.6.4
Gh =	1.00		Section 2.6.7
K_d =	0.95		Table 2-2
I =	1.00		Table 2-3
q_z=	28.40	psf	Section 2.6.9.6

Ice Loading

Ii =	1.00	
Iwi =	1.00	
q_z=	6.44	psf
K_{iz} =	1.14	
T_{iz} =	1.72	in
h =	1.00	in
W_i =	12.68	psf

Wind Pressures

Pressure =	28.402
Ice Pressure =	6.440

Antennas

Item	Status	Manufacturer	Antenna	Height (in)	Width (in)	Depth (in)	Flat or Round	Weight (lbs)	Sector / Face	Position	Top/Bottom Mounting Point Spacing	Override Spacing (in)	Max Antenna C/L (ft)	Min Antenna C/L (ft)	Antenna C/L (ft)	Antenna Top Mount Location from Mount Pipe Bottom (in)	Antenna Bottom Mount Location from Mount Pipe Bottom (in)
1	E	RFS CELWAVE	APL868013_TIA	48	6	8	Flat	11.6	C	1	42.00		128.29	127.79	127.5	46.00	4.00
2	E	RFS CELWAVE	APL868013_TIA	48	6	8	Flat	11.6	C	5	42.00		128.29	127.79	127.5	46.00	4.00
3	P	COMMSCOPE	JAHH-65B-R3B_TIA	72	13.8	8.2	Flat	63.3	C	3	66.00		127.29	128.79	127.5	48.00	2.00
4	P	COMMSCOPE	JAHH-65B-R3B_TIA	72	13.8	8.2	Flat	63.3	C	3	66.00		127.29	128.79	127.5	48.00	2.00
5	P	COMMSCOPE	BSAMNT-SBS-2-2 (MOUNT BRACKET)	1	1	1	Flat	67.5	C	3	1.00		130.00	126.08	127.5	18.00	17.00
6	P	SAMSUNG TELECOMMUNICATIONS	RFV01U-D1A	15	15	10	Flat	84.4	C	2	9.00		129.67	126.42	127.5	22.00	13.00
7	P	SAMSUNG TELECOMMUNICATIONS	RFV01U-D2A	15	15	8.1	Flat	70.3	C	4	9.00		129.67	126.42	127.5	22.00	13.00
8	P	RFS CELWAVE	FDJ85020Q7-S1	6.8	16.9	6.3	Flat	23.6	C	3	0.80		130.01	126.08	127.5	17.90	17.10

Dishes

Item	Status	Manufacturer	Microwave Dish	Dia (in)	Dish Type	Weight (lbs)	Sector / Face	Position	Top/Bottom Mounting Point Spacing	Override Spacing (in)	Max Antenna C/L (ft)	Min Antenna C/L (ft)	Antenna C/L (ft)	Antenna Top Mount Location from Mount Pipe Bottom (in)	Antenna Bottom Mount Location from Mount Pipe Bottom (in)

ASCE 7 Hazards Report

Address:
No Address at This Location

Standard: ASCE/SEI 7-10
Risk Category: II
Soil Class: D - Stiff Soil

Elevation: 292.22 ft (NAVD 88)
Latitude: 41.514848
Longitude: -72.061688

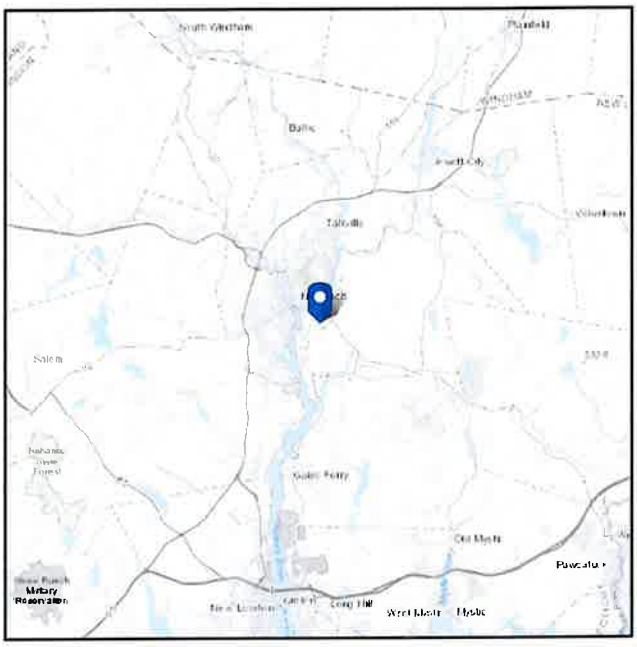

Wind

Results:

Wind Speed:	132 Vmph
10-year MRI	79 Vmph
25-year MRI	89 Vmph
50-year MRI	98 Vmph
100-year MRI	108 Vmph

135 mph ultimate per jurisdiction
105 mph nominal per jurisdiction

Data Source: ASCE/SEI 7-10, Fig. 26.5-1A and Figs. CC-1–CC-4, incorporating errata of March 12, 2014

Date Accessed: Mon Nov 18 2019

Value provided is 3-second gust wind speeds at 33 ft above ground for Exposure C Category, based on linear interpolation between contours. Wind speeds are interpolated in accordance with the 7-10 Standard. Wind speeds correspond to approximately a 7% probability of exceedance in 50 years (annual exceedance probability = 0.00143, MRI = 700 years).

Site is in a hurricane-prone region as defined in ASCE/SEI 7-10 Section 26.2. Glazed openings need not be protected against wind-borne debris.

Mountainous terrain, gorges, ocean promontories, and special wind regions should be examined for unusual wind conditions.

ASCE
AMERICAN SOCIETY OF CIVIL ENGINEERS

Seismic

Site Soil Class: D - Stiff Soil

Results:

S_S :	0.167	S_{DS} :	0.178
S_1 :	0.06	S_{D1} :	0.096
F_a :	1.6	T_L :	6
F_v :	2.4	PGA :	0.084
S_{MS} :	0.268	PGA_M :	0.134
S_{M1} :	0.144	F_{PGA} :	1.6
		I_e :	1

Seismic Design Category B

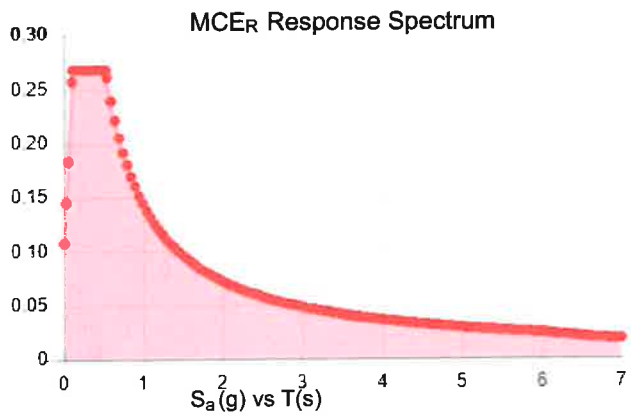

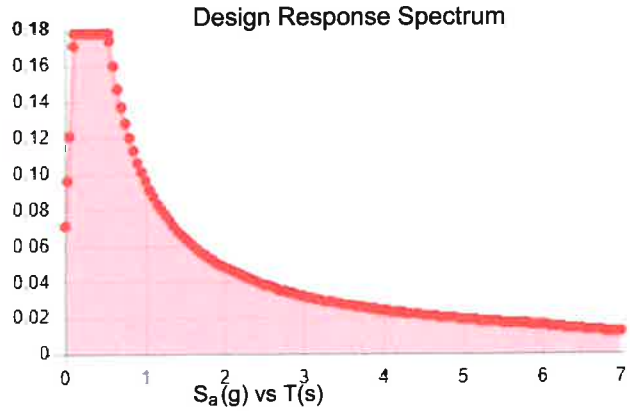

Data Accessed: Mon Nov 18 2019

Date Source: USGS Seismic Design Maps based on ASCE/SEI 7-10, incorporating Supplement 1 and errata of March 31, 2013, and ASCE/SEI 7-10 Table 1.5-2. Additional data for site-specific ground motion procedures in accordance with ASCE/SEI 7-10 Ch. 21 are available from USGS.

ASCE
AMERICAN SOCIETY OF CIVIL ENGINEERS

Ice

Results:

Ice Thickness:	0.75 in.
Concurrent Temperature:	15 F
Gust Speed:	50 mph
Data Source:	Standard ASCE/SEI 7-10, Figs. 10-2 through 10-8
Date Accessed:	Mon Nov 18 2019

Ice thicknesses on structures in exposed locations at elevations higher than the surrounding terrain and in valleys and gorges may exceed the mapped values.

Values provided are equivalent radial ice thicknesses due to freezing rain with concurrent 3-second gust speeds, for a 50-year mean recurrence interval, and temperatures concurrent with ice thicknesses due to freezing rain. Thicknesses for ice accretions caused by other sources shall be obtained from local meteorological studies. Ice thicknesses in exposed locations at elevations higher than the surrounding terrain and in valleys and gorges may exceed the mapped values.

The ASCE 7 Hazard Tool is provided for your convenience, for informational purposes only, and is provided "as is" and without warranties of any kind. The location data included herein has been obtained from information developed, produced, and maintained by third party providers; or has been extrapolated from maps incorporated in the ASCE 7 standard. While ASCE has made every effort to use data obtained from reliable sources or methodologies, ASCE does not make any representations or warranties as to the accuracy, completeness, reliability, currency, or quality of any data provided herein. Any third-party links provided by this Tool should not be construed as an endorsement, affiliation, relationship, or sponsorship of such third-party content by or from ASCE.

ASCE does not intend, nor should anyone interpret, the results provided by this Tool to replace the sound judgment of a competent professional, having knowledge and experience in the appropriate field(s) of practice, nor to substitute for the standard of care required of such professionals in interpreting and applying the contents of this Tool or the ASCE 7 standard.

In using this Tool, you expressly assume all risks associated with your use. Under no circumstances shall ASCE or its officers, directors, employees, members, affiliates, or agents be liable to you or any other person for any direct, indirect, special, incidental, or consequential damages arising from or related to your use of, or reliance on, the Tool or any information obtained therein. To the fullest extent permitted by law, you agree to release and hold harmless ASCE from any and all liability of any nature arising out of or resulting from any use of data provided by the ASCE 7 Hazard Tool.

APPENDIX C

SOFTWARE ANALYSIS OUTPUT

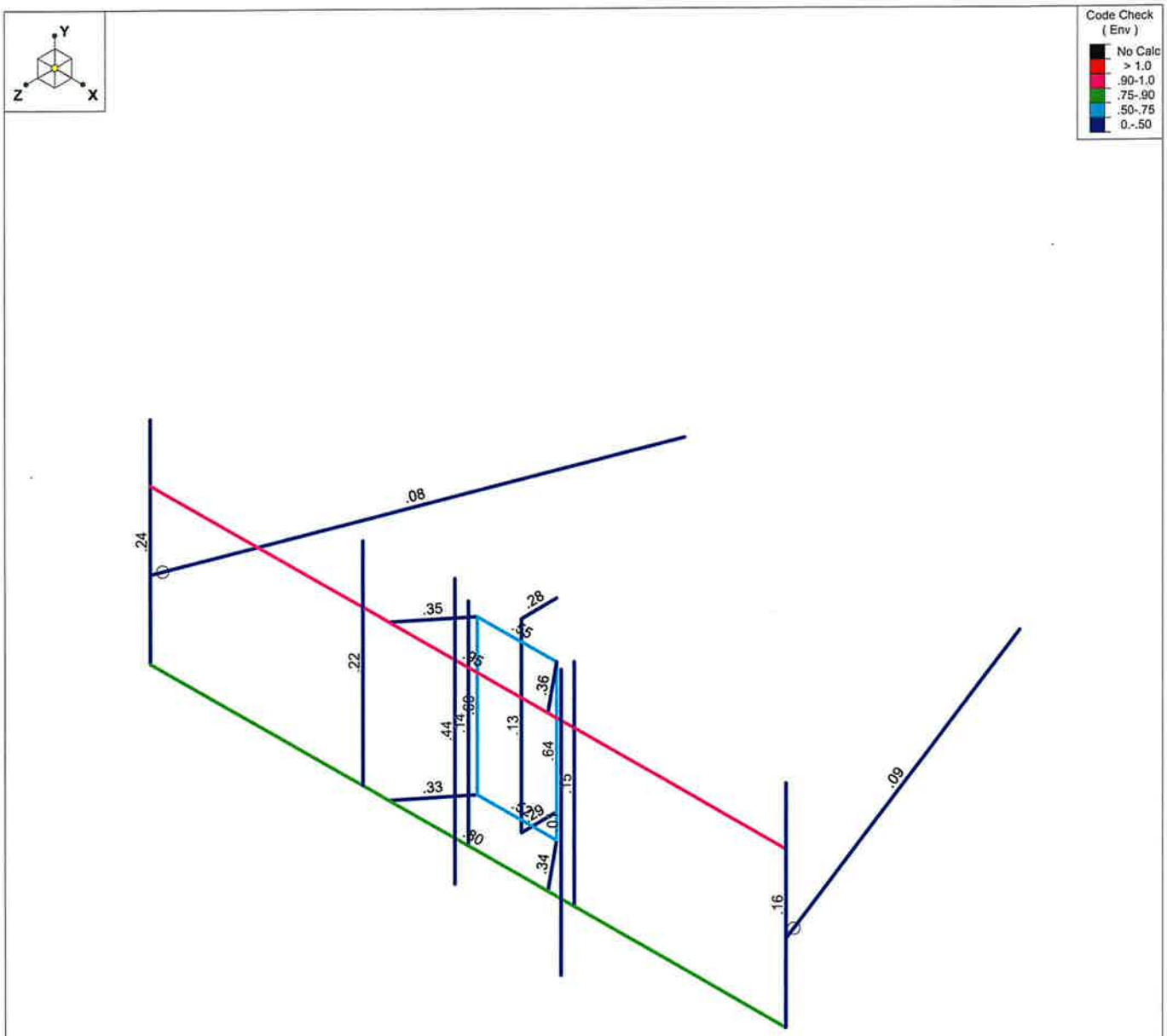

Member Code Checks Displayed (Enveloped)
Envelope Only Solution

Paul J. Ford and Company	Norwich East CT	SK - 3
ADP		Nov 19, 2019 at 8:59 AM
42819-0015.001.8190		42919-0015.001.8190_Wind.r3d

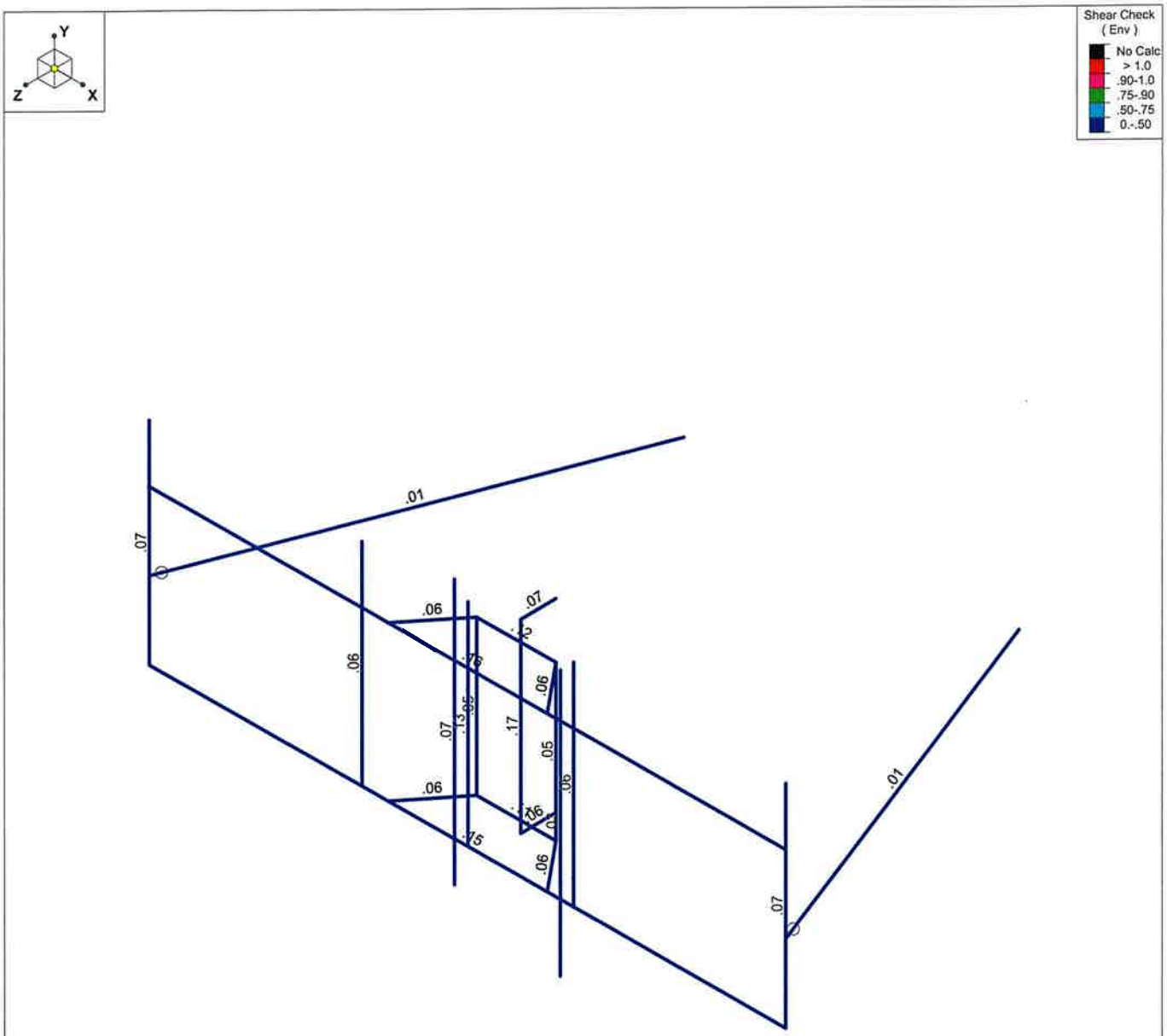

Member Shear Checks Displayed (Enveloped)
Envelope Only Solution

Paul J. Ford and Company	Norwich East CT	SK - 4
ADP		Nov 19, 2019 at 8:59 AM
42819-0015.001.8190		42919-0015.001.8190_Wind.r3d

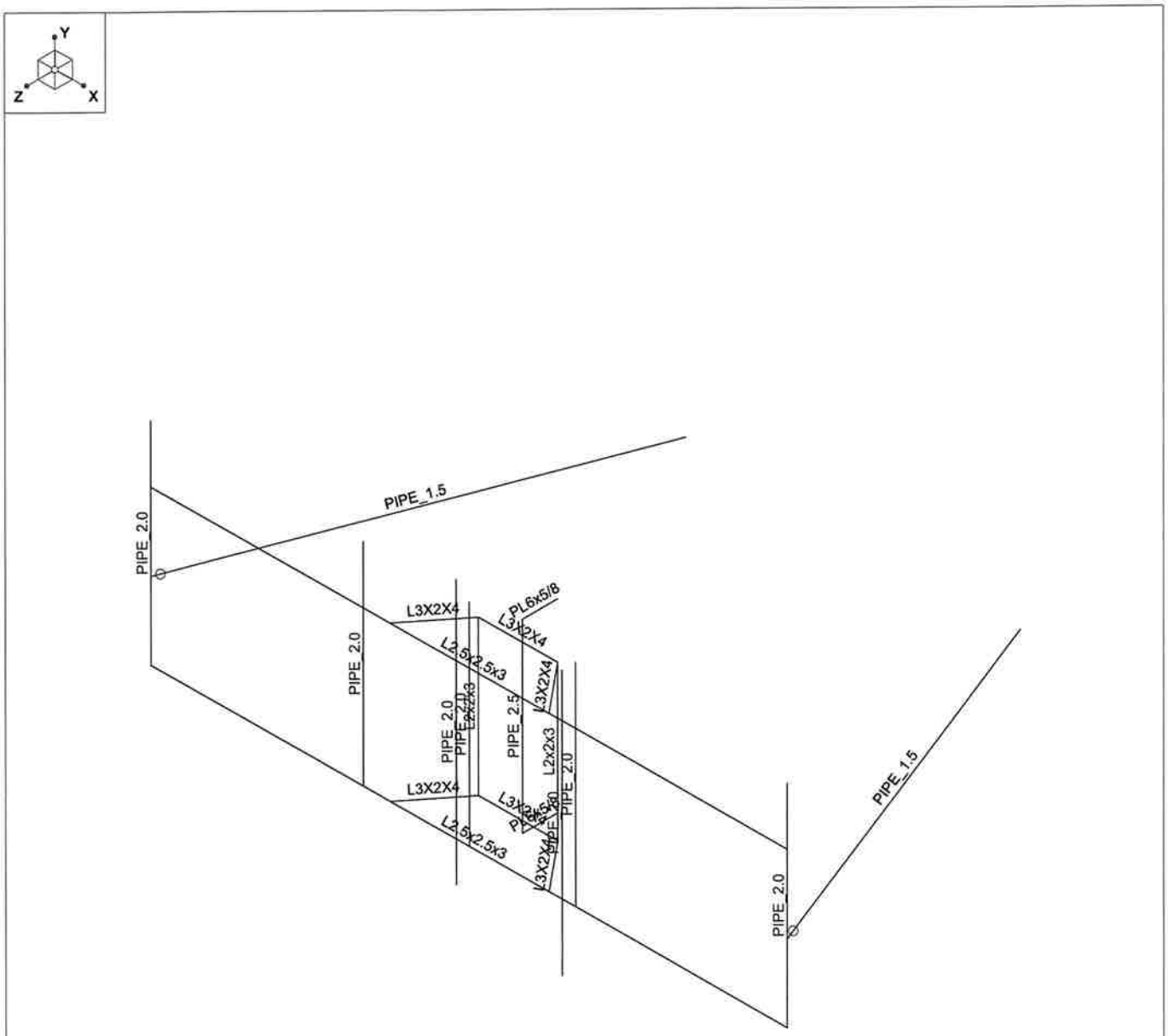

Envelope Only Solution

Paul J. Ford and Company	Norwich East CT	SK - 5
ADP		Nov 19, 2019 at 8:59 AM
42819-0015.001.8190		42919-0015.001.8190_Wind.r3d

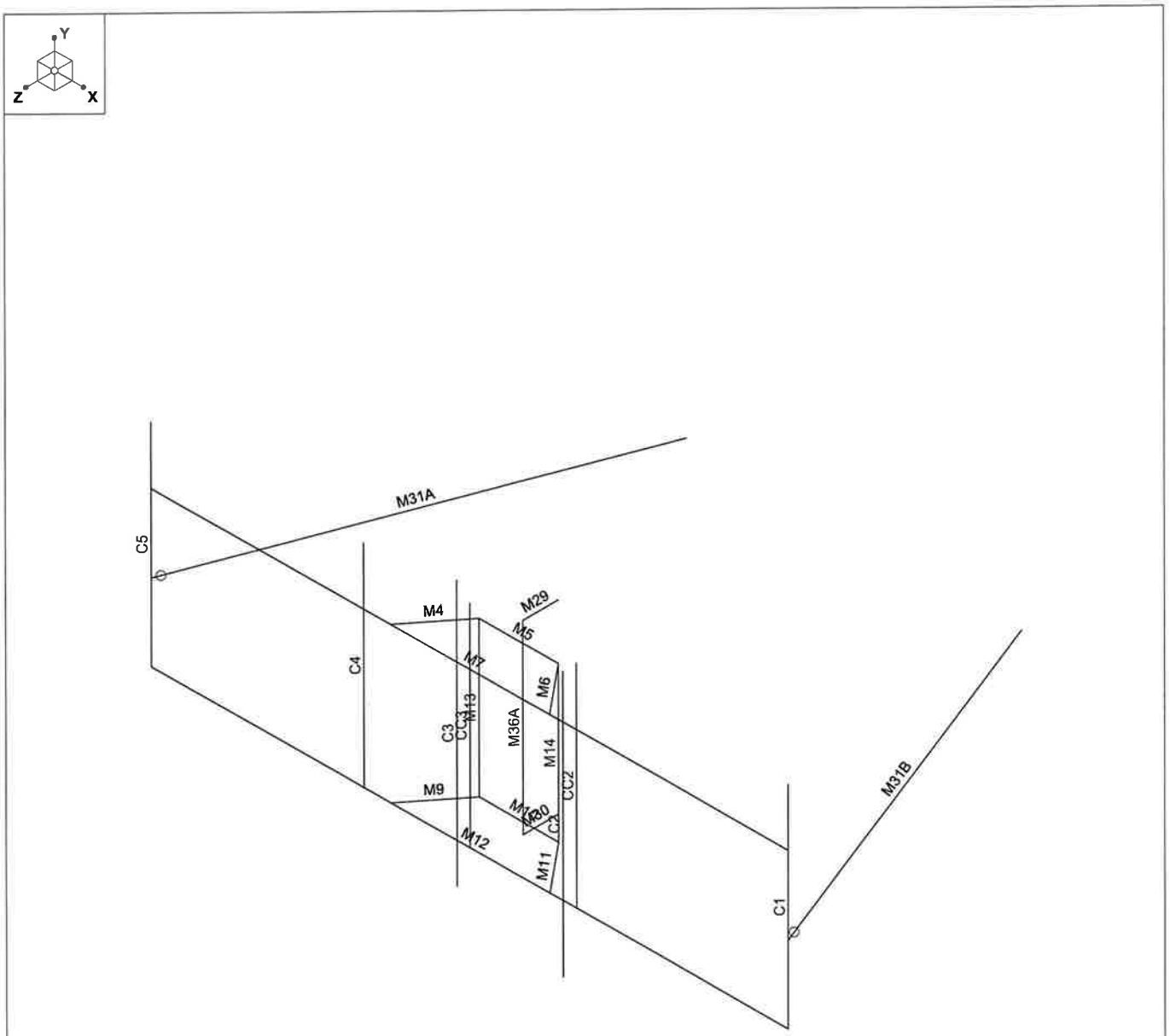

Envelope Only Solution

Paul J. Ford and Company	Norwich East CT	SK - 6
ADP		Nov 19, 2019 at 8:59 AM
42819-0015.001.8190		42919-0015.001.8190_Wind.r3d

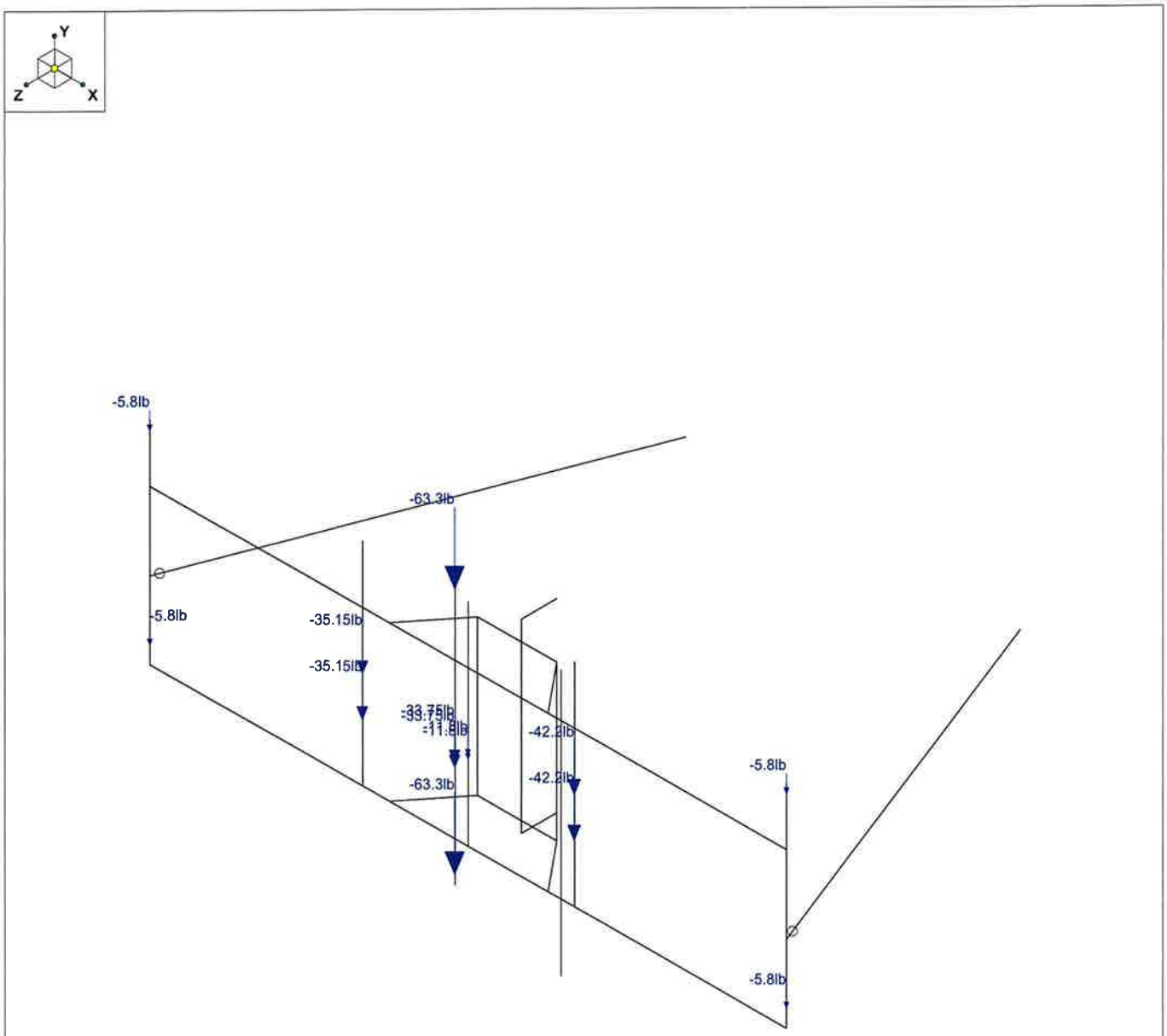

Loads: BLC 1, Dead
Envelope Only Solution

Paul J. Ford and Company	Norwich East CT	SK - 7
ADP		Nov 19, 2019 at 8:59 AM
42819-0015.001.8190		42919-0015.001.8190_Wind.r3d

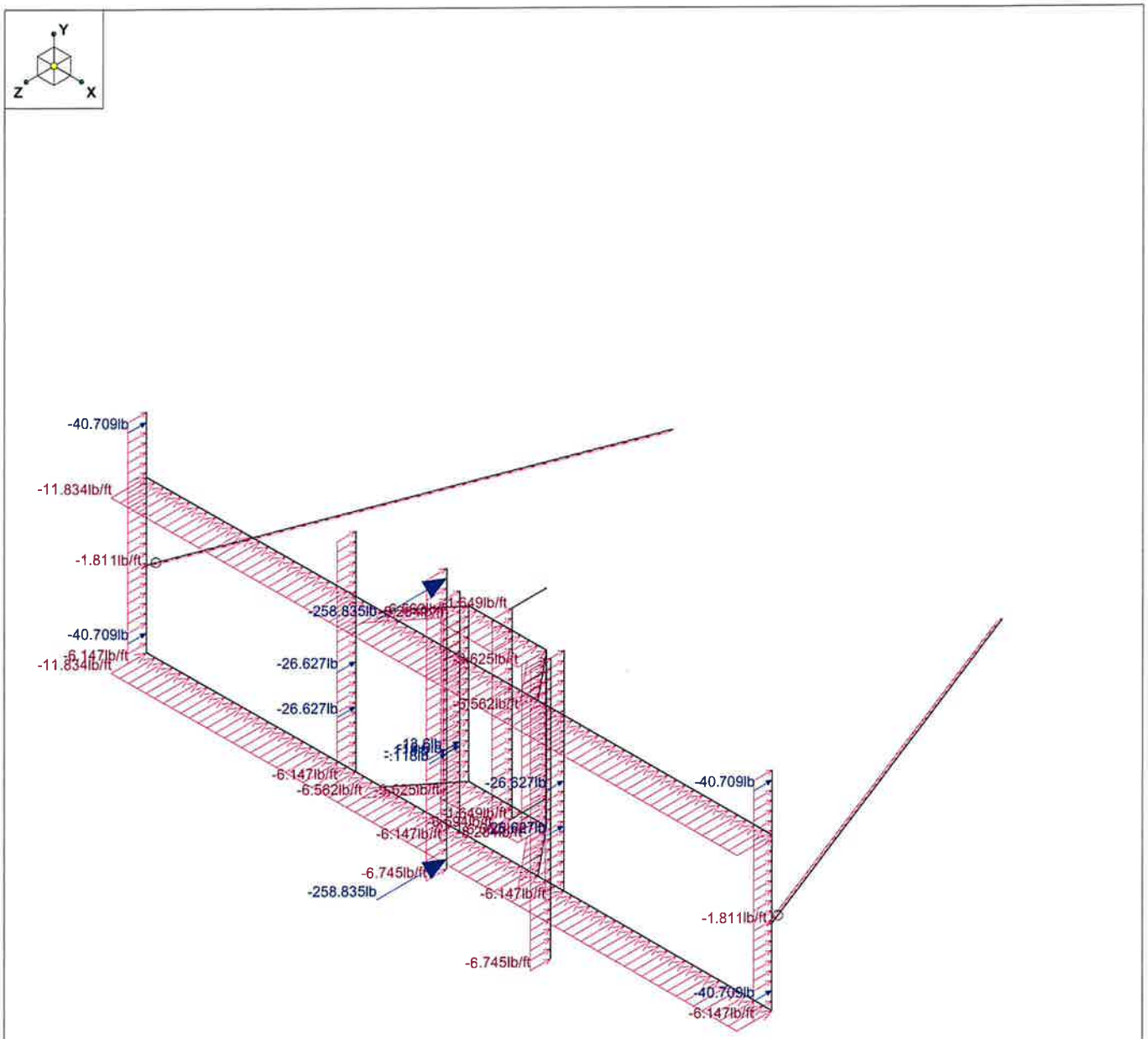

Loads: BLC 3, Wind 0
Envelope Only Solution

Paul J. Ford and Company	Norwich East CT	SK - 8
ADP		Nov 19, 2019 at 8:59 AM
42819-0015.001.8190		42919-0015.001.8190_Wind.r3d

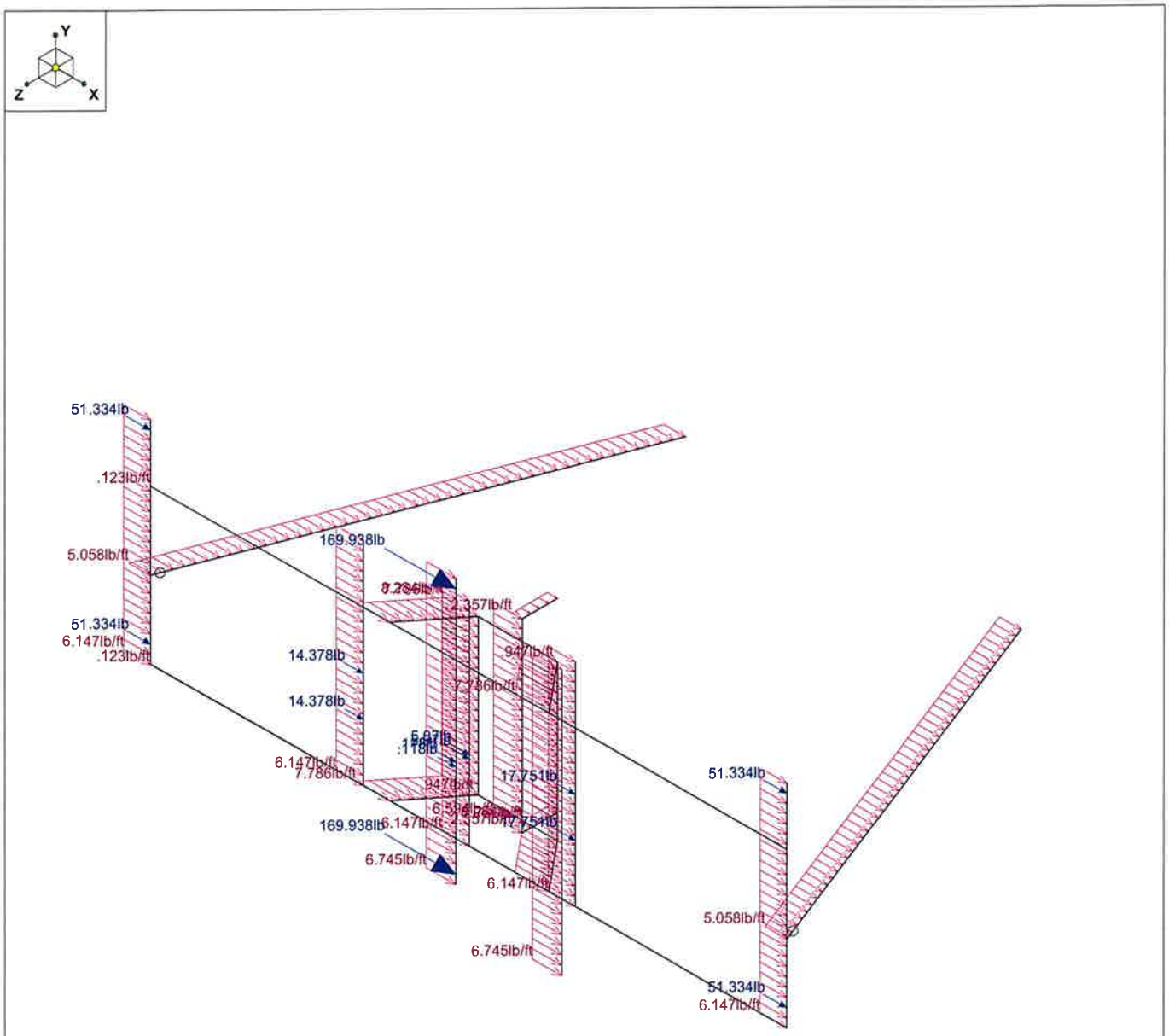

Loads: BLC 6, Wind 90
Envelope Only Solution

Paul J. Ford and Company	Norwich East CT	SK - 9
ADP		Nov 19, 2019 at 8:59 AM
42819-0015.001.8190		42919-0015.001.8190_Wind.r3d

(Global) Model Settings

Display Sections for Member Calcs	5
Max Internal Sections for Member Calcs	97
Include Shear Deformation?	No
Increase Nailing Capacity for Wind?	Yes
Include Warping?	Yes
Trans Load Btwn Intersecting Wood Wall?	Yes
Area Load Mesh (in^2)	144
Merge Tolerance (in)	.12
P-Delta Analysis Tolerance	0.50%
Include P-Delta for Walls?	Yes
Automatically Iterate Stiffness for Walls?	No
Max Iterations for Wall Stiffness	3
Gravity Acceleration (in/sec^2)	386.4
Wall Mesh Size (in)	12
Eigensolution Convergence Tol. (1.E-)	4
Vertical Axis	Y
Global Member Orientation Plane	XZ
Static Solver	Sparse Accelerated
Dynamic Solver	Accelerated Solver

Hot Rolled Steel Code	AISC 14th(360-10): LRFD
Adjust Stiffness?	Yes(Iterative)
RISAConnection Code	None
Cold Formed Steel Code	None
Wood Code	None
Wood Temperature	< 100F
Concrete Code	None
Masonry Code	None
Aluminum Code	None - Building
Stainless Steel Code	None

Number of Shear Regions	4
Region Spacing Increment (in)	4
Biaxial Column Method	Exact Integration
Parme Beta Factor (PCA)	.65
Concrete Stress Block	Rectangular
Use Cracked Sections?	Yes
Use Cracked Sections Slab?	Yes
Bad Framing Warnings?	No
Unused Force Warnings?	Yes
Min 1 Bar Diam. Spacing?	No
Concrete Rebar Set	REBAR_SET_ASTMA615
Min % Steel for Column	1
Max % Steel for Column	8

(Global) Model Settings, Continued

Seismic Code	ASCE 7-05
Seismic Base Elevation (in)	Not Entered
Add Base Weight?	Yes
Ct X	.02
Ct Z	.02
T X (sec)	Not Entered
T Z (sec)	Not Entered
R X	3
R Z	3
Ct Exp. X	.75
Ct Exp. Z	.75
SD1	1
SDS	1
S1	1
TL (sec)	5
Occupancy Cat	I or II
Drift Cat	Other
Om Z	1
Om X	1
Cd Z	4
Cd X	4
Rho Z	1
Rho X	1

Hot Rolled Steel Properties

	Label	E [ksi]	G [ksi]	Nu	Therm (/...	Density[k/ft^3]	Yield[ksi]	Ry	Fu[ksi]	Rt
1	A36 Gr.36	29000	11154	.3	.65	.49	36	1.5	58	1.2
2	A572 Gr.50	29000	11154	.3	.65	.49	50	1.1	65	1.1
3	A992	29000	11154	.3	.65	.49	50	1.1	65	1.1
4	A500 Gr.42	29000	11154	.3	.65	.49	42	1.4	58	1.3
5	A500 Gr.46	29000	11154	.3	.65	.49	46	1.4	58	1.3
6	A53 Gr. B (35 ksi)	29000	11154	.3	.65	.49	35	1.5	60	1.2

Member Primary Data

	Label	I Joint	J Joint	K Joint	Rotate(deg)	Section/Shape	Type	Design List	Material	Design Rules
1	M4	N8	N10		180	L3X2X4	None	None	A36 Gr.36	Typical
2	M5	N7	N8		180	L3X2X4	None	None	A36 Gr.36	Typical
3	M6	N9	N7		180	L3X2X4	None	None	A36 Gr.36	Typical
4	M7	N12	N11		90	L2.5x2.5x3	None	None	A36 Gr.36	Typical
5	M9	N18	N16			L3X2X4	None	None	A36 Gr.36	Typical
6	M10	N16	N15			L3X2X4	None	None	A36 Gr.36	Typical
7	M11	N15	N17			L3X2X4	None	None	A36 Gr.36	Typical
8	M12	N20	N19			L2.5x2.5x3	None	None	A36 Gr.36	Typical
9	M13	N8	N16		180	L2x2x3	None	None	A36 Gr.36	Typical
10	M14	N15	N7			L2x2x3	None	None	A36 Gr.36	Typical
11	C5	N20	N50A			PIPE_2.0	None	None	A53 Gr. B ...	Typical
12	C4	N26	N52B			PIPE_2.0	None	None	A53 Gr. B ...	Typical
13	CC3	N22	N51A			PIPE_2.0	None	None	A53 Gr. B ...	Typical
14	CC2	N24	N23			PIPE_2.0	None	None	A53 Gr. B ...	Typical
15	C1	N19	N49B			PIPE_2.0	None	None	A53 Gr. B ...	Typical
16	M34A	N54B	N56A			RIGID	None	None	RIGID	Typical
17	M35A	N53B	N55A			RIGID	None	None	RIGID	Typical
18	M36A	N57A	N58A			PIPE_2.5	None	None	A53 Gr. B ...	Typical
19	M29	N58A	N50		90	PL6x5/8	None	None	A36 Gr.36	Typical
20	M30	N57A	N49A		90	PL6x5/8	None	None	A36 Gr.36	Typical

Member Primary Data (Continued)

	Label	I Joint	J Joint	K Joint	Rotate(deg)	Section/Shape	Type	Design List	Material	Design Rules
21	M31A	N51	N52A			PIPE_1.5	None	None	A53 Gr. B ...	Typical
22	M31B	N47	N48A			PIPE_1.5	None	None	A53 Gr. B ...	Typical
23	C3	N36	N39			PIPE_2.0	None	None	A53 Gr. B ...	Typical
24	C2	N38	N37			PIPE_2.0	None	None	A53 Gr. B ...	Typical
25	M25	N58	N52			RIGID	None	None	RIGID	Typical
26	M26	N59	N53			RIGID	None	None	RIGID	Typical
27	M27	N47A	N41			RIGID	None	None	RIGID	Typical
28	M28	N46	N40			RIGID	None	None	RIGID	Typical

Member Advanced Data

	Label	I Release	J Release	I Offset[in]	J Offset[in]	T/C Only	Physical	Defl Rat...	Analysis ...	Inactive	Seismic...
1	M4						Yes	** NA **			None
2	M5						Yes	** NA **			None
3	M6						Yes	** NA **			None
4	M7						Yes	** NA **			None
5	M9						Yes	** NA **			None
6	M10						Yes	** NA **			None
7	M11						Yes	** NA **			None
8	M12						Yes	** NA **			None
9	M13						Yes	** NA **			None
10	M14						Yes	** NA **			None
11	C5						Yes	** NA **			None
12	C4						Yes	** NA **			None
13	CC3						Yes	** NA **			None
14	CC2						Yes	** NA **			None
15	C1						Yes	** NA **			None
16	M34A		OOOOOO				Yes	** NA **			None
17	M35A		OOOOOO				Yes	** NA **			None
18	M36A						Yes	** NA **			None
19	M29		OOOOOP1..				Yes	** NA **			None
20	M30		OOOOOP1..				Yes	** NA **			None
21	M31A	BenPIN					Yes	** NA **			None
22	M31B	BenPIN					Yes	** NA **			None
23	C3						Yes	** NA **			None
24	C2						Yes	** NA **			None
25	M25		OOOXOO				Yes	** NA **			None
26	M26		OOOXOO				Yes	** NA **			None
27	M27		OOOXOO				Yes	** NA **			None
28	M28		OOOXOO				Yes	** NA **			None

Hot Rolled Steel Design Parameters

	Label	Shape	Length[in]	Lbyy[in]	Lbzz[in]	Lcomp top[in]	Lcomp bot[in]	L-torqu...	Kyy	Kzz	Cb	Function
1	M4	L3X2X4	14.213									Lateral
2	M5	L3X2X4	18									Lateral
3	M6	L3X2X4	14.213									Lateral
4	M7	L2.5x2.5x3	144									Lateral
5	M9	L3X2X4	14.213									Lateral
6	M10	L3X2X4	18									Lateral
7	M11	L3X2X4	14.213									Lateral
8	M12	L2.5x2.5x3	144									Lateral
9	M13	L2x2x3	35									Lateral
10	M14	L2x2x3	35									Lateral
11	C5	PIPE_2.0	48									Lateral
12	C4	PIPE_2.0	48									Lateral

Hot Rolled Steel Design Parameters (Continued)

	Label	Shape	Length[in]	Lbyy[in]	Lbzz[in]	Lcomp top[in]	Lcomp bot[in]	L-torqu...	Kyy	Kzz	Cb	Function
13	CC3	PIPE_2.0	48									Lateral
14	CC2	PIPE_2.0	48									Lateral
15	C1	PIPE_2.0	48									Lateral
16	M36A	PIPE_2.5	42									Lateral
17	M29	PL6x5/8	8									Lateral
18	M30	PL6x5/8	8									Lateral
19	M31A	PIPE_1.5	93.408									Lateral
20	M31B	PIPE_1.5	93.408									Lateral
21	C3	PIPE_2.0	60									Lateral
22	C2	PIPE_2.0	60									Lateral

Basic Load Cases

	BLC Description	Category	X Gravity	Y Gravity	Z Gravity	Joint	Point	Distributed	Area(Me...	Surface(P...
1	Dead	None		-1.1			14			
2	Live	None								
3	Wind 0	None					28	44		
4	Wind 30	None					28	44		
5	Wind 60	None					28	44		
6	Wind 90	None					28	44		
7	Wind 120	None					28	44		
8	Wind 150	None					28	44		
9	Ice Load	None					14	22		
10	Ice 0	None					28	44		
11	Ice 30	None					28	44		
12	Ice 60	None					28	44		
13	Ice 90	None					28	44		
14	Ice 120	None					28	44		
15	Ice 150	None					28	44		
16	Lm	None				1				
17	Lv	None				1				

Load Combinations

	Description	So..	P...	S...	BLC	Fac..	BLC	Fac..	BLC	Fac..	BLC	Fac..	BLC	Fac..	BLC	Fac..	BLC	Fac..	BLC	Fac..	BLC	Fac..	BLC	Fac...
1	1.4 D	Yes	Y		1	1.4																		
2	1.2 D + 1.6 L	Yes	Y		1	1.2	2	1.6																
3	1.2 D + 1.6 Wo @ 0	Yes	Y		1	1.2	3	1.6																
4	1.2 D + 1.6 Wo @ 30	Yes	Y		1	1.2	4	1.6																
5	1.2 D + 1.6 Wo @ 60	Yes	Y		1	1.2	5	1.6																
6	1.2 D + 1.6 Wo @ 90	Yes	Y		1	1.2	6	1.6																
7	1.2 D + 1.6 Wo @ 120	Yes	Y		1	1.2	7	1.6																
8	1.2 D + 1.6 Wo @ 150	Yes	Y		1	1.2	8	1.6																
9	1.2 D + 1.6 Wo @ 180	Yes	Y		1	1.2	3	-1.6																
10	1.2 D + 1.6 Wo @ 210	Yes	Y		1	1.2	4	-1.6																
11	1.2 D + 1.6 Wo @ 240	Yes	Y		1	1.2	5	-1.6																
12	1.2 D + 1.6 Wo @ 270	Yes	Y		1	1.2	6	-1.6																
13	1.2 D + 1.6 Wo @ 300	Yes	Y		1	1.2	7	-1.6																
14	1.2 D + 1.6 Wo @ 330	Yes	Y		1	1.2	8	-1.6																
15	1.2 D + 1.0 Di + 1.0 Wi ...	Yes	Y		1	1.2	9	1	10	1														
16	1.2 D + 1.0 Di + 1.0 Wi ...	Yes	Y		1	1.2	9	1	11	1														
17	1.2 D + 1.0 Di + 1.0 Wi ...	Yes	Y		1	1.2	9	1	12	1														
18	1.2 D + 1.0 Di + 1.0 Wi ...	Yes	Y		1	1.2	9	1	13	1														
19	1.2 D + 1.0 Di + 1.0 Wi ...	Yes	Y		1	1.2	9	1	14	1														
20	1.2 D + 1.0 Di + 1.0 Wi ...	Yes	Y		1	1.2	9	1	15	1														
21	1.2 D + 1.0 Di + 1.0 Wi ...	Yes	Y		1	1.2	9	1	10	-1														

Load Combinations (Continued)

	Description	So..	P...	S...	BLC	Fac..	BLC	Fac..	BLC	Fac..	BLC	Fac..	BLC	Fac..	BLC	Fac..	BLC	Fac..	BLC	Fac..	BLC	Fac..	BLC	Fac..
22	1.2 D + 1.0 Di + 1.0 Wi ...	Yes	Y		1	1.2	9	1	11	-1														
23	1.2 D + 1.0 Di + 1.0 Wi ...	Yes	Y		1	1.2	9	1	12	-1														
24	1.2 D + 1.0 Di + 1.0 Wi ...	Yes	Y		1	1.2	9	1	13	-1														
25	1.2 D + 1.0 Di + 1.0 Wi ...	Yes	Y		1	1.2	9	1	14	-1														
26	1.2 D + 1.0 Di + 1.0 Wi ...	Yes	Y		1	1.2	9	1	15	-1														
27	1.2 D + 1.5 Lm + 1.0 Wm..	Yes	Y		1	1.2	3	.111	16	1.5														
28	1.2 D + 1.5 Lm + 1.0 Wm..	Yes	Y		1	1.2	4	.111	16	1.5														
29	1.2 D + 1.5 Lm + 1.0 Wm..	Yes	Y		1	1.2	5	.111	16	1.5														
30	1.2 D + 1.5 Lm + 1.0 Wm..	Yes	Y		1	1.2	6	.111	16	1.5														
31	1.2 D + 1.5 Lm + 1.0 Wm..	Yes	Y		1	1.2	7	.111	16	1.5														
32	1.2 D + 1.5 Lm + 1.0 Wm..	Yes	Y		1	1.2	8	.111	16	1.5														
33	1.2 D + 1.5 Lm + 1.0 Wm..	Yes	Y		1	1.2	3	-.111	16	1.5														
34	1.2 D + 1.5 Lm + 1.0 Wm..	Yes	Y		1	1.2	4	-.111	16	1.5														
35	1.2 D + 1.5 Lm + 1.0 Wm..	Yes	Y		1	1.2	5	-.111	16	1.5														
36	1.2 D + 1.5 Lm + 1.0 Wm..	Yes	Y		1	1.2	6	-.111	16	1.5														
37	1.2 D + 1.5 Lm + 1.0 Wm..	Yes	Y		1	1.2	7	-.111	16	1.5														
38	1.2 D + 1.5 Lm + 1.0 Wm..	Yes	Y		1	1.2	8	-.111	16	1.5														
39	1.2 D + 1.5 Lv	Yes	Y		1	1.2	17	1.5																

Envelope Joint Reactions

	Joint		X [lb]	LC	Y [lb]	LC	Z [lb]	LC	MX [k-in]	LC	MY [k-in]	LC	MZ [k-in]	LC
1	N50	max	1246.097	13	1264.82	21	828.04	3	-1.112	3	18.813	14	.375	11
2		min	-1293.394	5	150.321	3	-1447.758	9	-5.159	21	-19.001	4	-.686	39
3	N49A	max	875.335	13	1260.286	15	1066.113	15	-1.012	9	18.821	14	.236	5
4		min	-836.346	5	149.669	9	-397.723	9	-5.183	15	-19.004	4	-.687	39
5	N52A	max	112.079	8	42.965	20	368.832	14	0	39	0	39	0	39
6		min	-201.353	14	12.72	13	-376.404	8	0	1	0	1	0	1
7	N48A	max	213.003	4	43.011	22	386.106	4	0	39	0	39	0	39
8		min	-118.702	10	12.666	5	-395.593	10	0	1	0	1	0	1
9	Totals:	max	1993.094	11	2476.548	21	2320.989	3						
10		min	-1993.111	7	870.048	3	-2320.99	9						

Envelope AISC 14th(360-10): LRFD Steel Code Checks

	Member	Shape	Code Check	Loc[in]	LC	Shear ...	Loc[in]	Dir	LC	phi*Pnc ...	phi*Pnt [...	phi*Mn y..	phi*Mn z..	Cb	Eqn
1	M7	L2.5x2.5x3	.948	54	10	.155	90	z	19	2280.519	29192.4	10.471	16.858	1....	H2-1
2	M12	L2.5x2.5x3	.799	48	39	.151	90	y	26	2280.519	29192.4	10.471	19.581	2....	H2-1
3	M14	L2x2x3	.636	0	16	.046	35	z	22	15275.5...	23392.8	6.693	14.871	2....	H2-1
4	M13	L2x2x3	.604	35	26	.046	0	z	39	15275.5...	23392.8	6.693	14.871	2....	H2-1
5	M5	L3X2X4	.552	9	20	.122	9	z	8	35468.99	38880	9.916	29.315	1....	H2-1
6	M10	L3X2X4	.518	9	26	.110	9	z	26	35468.99	38880	9.916	29.867	1....	H2-1
7	C3	PIPE_2.0	.441	37.5	8	.073	10		7	23808.54	32130	22.459	22.459	1....	H1-1b
8	M6	L3X2X4	.361	14.213	26	.060	14.213	y	17	36716.7...	38880	9.916	29.867	1....	H2-1
9	M4	L3X2X4	.348	0	16	.059	0	y	23	36716.7...	38880	9.916	29.867	1....	H2-1
10	M11	L3X2X4	.345	0	19	.060	0	y	22	36716.7...	38880	9.916	29.867	1....	H2-1
11	M9	L3X2X4	.330	14.213	23	.059	14.213	y	20	36716.7...	38880	9.916	29.867	1....	H2-1
12	M30	PL6x5/8	.286	8	16	.061	0	y	39	109553....	121500	18.984	182.25	2....	H1-1b
13	M29	PL6x5/8	.282	8	22	.066	8	y	14	109553....	121500	18.984	182.25	1....	H1-1b
14	C5	PIPE_2.0	.235	35	39	.066	17.5		8	26521.4...	32130	22.459	22.459	2....	H1-1b
15	C4	PIPE_2.0	.218	0	39	.058	0		39	26521.4...	32130	22.459	22.459	2....	H1-1b
16	C1	PIPE_2.0	.156	17.5	4	.065	17.5		10	26521.4...	32130	22.459	22.459	2....	H1-1b
17	CC2	PIPE_2.0	.153	0	25	.058	0		39	26521.4...	32130	22.459	22.459	2....	H1-1b
18	CC3	PIPE_2.0	.144	31	14	.125	0		5	26521.4...	32130	22.459	22.459	2....	H1-1b
19	M36A	PIPE_2.5	.125	0	15	.172	38.5		39	45877.4...	50715	43.155	43.155	3....	H1-1b
20	M31B	PIPE_1.5	.085	46.704	5	.006	0		23	7586.51	23593.5	13.261	13.261	1....	H1-1b

Envelope AISC 14th(360-10): LRFD Steel Code Checks (Continued)

	Member	Shape	Code Check	Loc[in]	LC	Shear ...	Loc[in]	Dir	LC	phi*Pnc ...	phi*Pnt [...	phi*Mn y...	phi*Mn z...	Cb	Eqn
21	M31A	PIPE_1.5	.085	46.704	13	.006	93.408		25	7586.51	23593.5	13.261	13.261	1...	H1-1b
22	C2	PIPE_2.0	.008	40.625	7	.026	18.125		39	23808.54	32130	22.459	22.459	1...	H1-1b

PAUL J. FORD & COMPANY
250 E Broad St, Ste 600 • Columbus, OH 43215
Phone 614.221.6679 www.pauljford.com

Project # A42919-0015.001.8190
By ADP
Date: 11/19/19
v0.1, Effective 07/10/18

MOUNT TO TOWER CONNECTION CHECKS

REACTIONS

Px=	1.293	Kip
Py=	1.448	Kip
(Axial)Pz=	1.265	Kip
Mx=	5.159	Kip-in
My=	0.363	Kip-in
(Torque)Mz=	19.001	Kip-in

Number of Bolts = 2

BOLT CHECKS

Tension Reaction	1.09	kip
Shear Reaction	2.09	kip
Bolt Type	A325N	
Bolt Diameter	0.625	in
Tensile Strength	20.7	kips
Shear Strength	12.4	kips
Reduced Tensile Strength	-	kips
Tensile Capacity Used	5.3%	
Shear Capacity Used	16.8%	

Note: Tension reduction not required if tension or shear capacity < 30%

APPENDIX D

MODIFICATION DRAWINGS

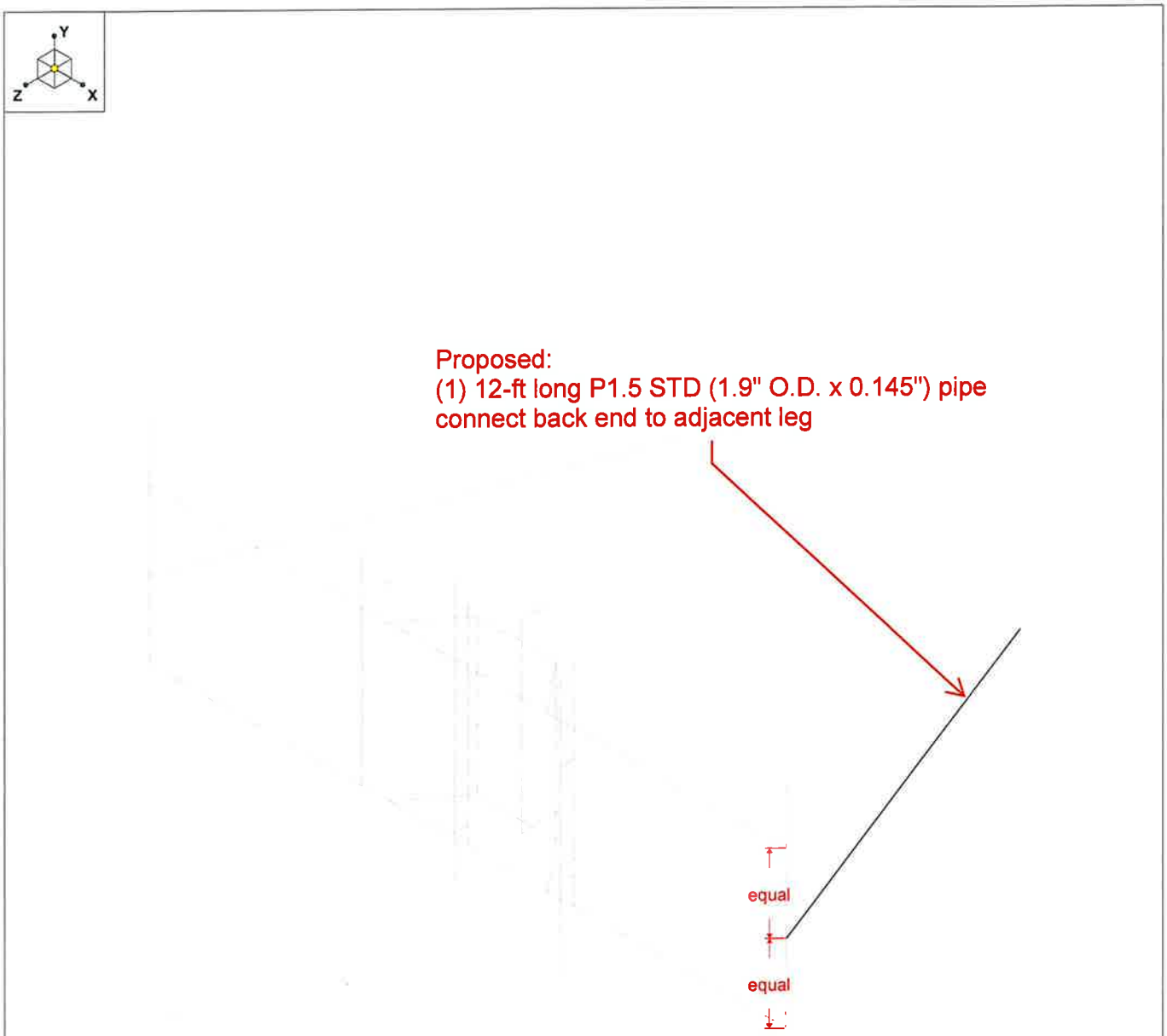

Envelope Only Solution

Paul J. Ford and Company	Norwich East CT	SK - 10
ADP		Nov 19, 2019 at 9:01 AM
42819-0015.001.8190		42919-0015.001.8190_Wind.r3d

APPENDIX E

POST MODIFICATION INSPECTION (PMI) REQUIREMENTS FOR DESKTOP REVIEW

Post Modification Inspection (PMI) Report Requirements

Documents & Photos Required from Contractor

Purpose – to provide PJF the proper documentation in order to complete the required Mount Desktop review of the Post Modification Inspection Report.

- Contractor is responsible for making certain the photos provided as noted below provide confirmation that the modification was completed in accordance with the modification drawings.
- Contractor shall relay any data that can impact the performance of the mount or the mount modification, this includes safety issues.

Base Requirements:

- Provide "as built drawings" showing contractor's name, preparer's signature, and date. Any deviations from the drawing (proposed modification) must be shown.
- Notation that all hardware was properly installed, and the existing hardware was inspected for any issues.
- Verification that loading is as communicated in the modification drawings. NOTE if loading is different than what is conveyed in the modification drawing contact PJF immediately.
- Each photo should be time and date stamped.
- Photos should be high resolution and submitted in a Zip File and should be organized in the file structure as depicted in Schedule A attached.
- Any special photos outside of the standard requirements will be indicated on the drawings.
- Contractor shall ensure that the safety climb wire rope is supported and not adversely impacted by the install of the modification components. This may involve the install of wire rope guides, or other items to protect the wire rope.
- The photos in the file structure should be uploaded to **pjfmount@pauljford.com** as depicted on the drawings.

Photo Requirements:

- *Base and "During Installation Photos"*
  - Base pictures include
    - Photo of Gate Signs showing the tower owner, site name, and number.
    - Photo of carrier shelter showing the carrier site name and number if available.
    - Photos of the galvanizing compound and/or paint used (if applicable), clearly showing the label and name.
  - "During Installation" Photos if provided – must be placed only in this folder
- *Photos taken at ground level*
  - Overall tower structure before and after installation of the modifications
  - Photos of the appropriate mount before and after installation of the modifications; if the mounts are at different rad elevations, pictures must be provided for all elevations that the modifications were installed.
- *Photos taken at Mount Elevation*
  - Photos showing each individual sector before and after installation of modifications. Each entire sector must be in one photo to show in the inter-connection of members.
  - Close-up photos of each installed modification per the modification drawings; pictures should also include connection hardware (U-bolts, bolts, nuts, all-threaded rods, etc.)

- Photos showing the measurements of the installed modification member sizes (i.e. lengths, widths, depths, diameters, thicknesses).
- Photos showing the elevation or distances of the installed modifications from the appropriate reference locations shown in the modification drawings.
- Photos showing the installed modifications onto the tower with tape drop measurements (if applicable) (i.e. ring/collar mounts, tie-backs, V-bracing kits, etc.); if the existing mount elevations needs to be changed according to the modification drawings, a tape drop measurement shall be provided before the elevation change.
- Photos showing the safety climb wire rope above and below the mount prior to modification.
- Photos showing the safety climb wire rope above and below the mount post modification.

Antenna and equipment placement and Geometry Certification:

- The contractor must certify that the antenna and equipment placement and geometry is in accordance with the antenna placement diagrams as included in this mount analysis.

☐ The contractor certifies per photos that the equipment on the mount is as depicted on the antenna placement diagrams as included in this mount analysis.

☐ The contractor notes that the equipment on the mount is not in accordance with the antenna placement diagrams and has accordingly marked up the diagrams or provided a diagram outlining the differences.

Material Certification:

- Materials utilized must be as per specification on the drawings or the equivalent as validated by PJF.
  - Submission of specifications / invoices certifying / PJF approval of an "equivalent" must be submitted to the noted email box by the PMI contractor.
- The contractor must certify that the materials meet these specifications by one of the methods below.

☐ The Material utilized was as specified on the PJF Mount Modification Drawings

☐ The Material utilized was an "equivalent" and included as part of the PMI are the PJF certification, invoices, or specifications validating accepted status

Certifying Individual: Company _____

Name _____

Signature _____

Schedule A – Photo & Document File Structure

- VzW Site Number / Name
  - Base & "During Installation" Photos
  - Pre-Installation Photos
    - Alpha
    - Beta
    - Gamma
    - Ground Level
    - Tape Drop
  - Post-Installation Photos
    - Alpha
    - Beta
    - Gamma
    - Ground Level
    - Tape Drop
  - Material Certification – Submission of this document including executed certification on Page 2
  - Specific Required Additional Photos
  - Required Additional Photos

Special Instructions / Validation as required from the MA or any other information the contractor deems necessary to share that was identified:

Issue: _____

_____

_____

Response: _____

_____

_____

ATTACHMENT 6

2 HINCKLEY HILL RD REAR

Location	2 HINCKLEY HILL RD REAR	**Mblu**	119/ 1/ 1/ 1/
Acct#	0052410001	**Owner**	17 MILE REAL ESTATE LLC
Assessment	$847,500	**Appraisal**	$1,210,700
PID	5166	**Building Count**	1

Current Value

Appraisal			
Valuation Year	**Improvements**	**Land**	**Total**
2018	$1,043,100	$167,600	$1,210,700

Assessment			
Valuation Year	**Improvements**	**Land**	**Total**
2018	$730,200	$117,300	$847,500

Parcel Addreses

Additional Addresses
No Additional Addresses available for this parcel

Owner of Record

Owner 17 MILE REAL ESTATE LLC
Address 69 HARRY ST
CONSHOHOCKEN, PA 19428

Sale Price $1,803,750
Certificate
Book & Page 3118/0239
Sale Date 04/30/2019
Instrument 00

Ownership History

Ownership History					
Owner	**Sale Price**	**Certificate**	**Book & Page**	**Instrument**	**Sale Date**
17 MILE REAL ESTATE LLC	$1,803,750		3118/0239	00	04/30/2019
IRWIN LAVERNE G	$0		3118/0227	1S	04/30/2019
IRWIN JAMES C +	$0		2379/0094	1A	05/08/2007
IRWIN JAMES C + LAVERENE G	$0		0532/0280	1A	05/01/1980

Building Information

Building 1 : Section 1

Year Built:
Living Area: 0
Replacement Cost: $0
Building Percent Good:
Replacement Cost Less Depreciation: $0

Building Attributes	
Field	**Description**
Style	Outbuildings
Model	
Grade:	
Stories:	
Occupancy	
Exterior Wall 1	
Exterior Wall 2	
Roof Structure:	
Roof Cover	
Interior Wall 1	
Interior Wall 2	
Interior Flr 1	
Interior Flr 2	
Heat Fuel	
Heat Type:	
AC Type:	
Total Bedrooms:	
Total Bthrms:	
Total Half Baths:	
Total Xtra Fixtrs:	
Total Rooms:	
Bath Style:	
Kitchen Style:	
Num Kitchens	
Fireplace (s)	
Whirlpool	
FPLG Gas	
FPLW Wood	
FPO	
Usrfld 107	

Building Photo

(http://images.vgsi.com/photos/NorwichCTPhotos//\00\01\40\66.jpg)

Building Layout

Building Layout (ParcelSketch.ashx?pid=5166&bid=5166)

Building Sub-Areas (sq ft)	Legend
No Data for Building Sub-Areas	

park	
Fireplaces	
Usrfld 108	
Usrfld 101	
Usrfld 102	
Usrfld 100	
Usrfld 300	
Usrfld 301	

Extra Features

Extra Features	Legend
No Data for Extra Features	

Land

Land Use

Use Code	431V
Description	TEL REL TW M-00
Zone	R40
Neighborhood	
Alt Land Appr	No
Category	

Land Line Valuation

Size (Acres)	3.59
Frontage	0
Depth	0
Assessed Value	$117,300
Appraised Value	$167,600

Outbuildings

Outbuildings						Legend
Code	**Description**	**Sub Code**	**Sub Description**	**Size**	**Value**	**Bldg #**
SHD4	Shed Comm. Wd.			128.00 S.F.	$1,300	1
SHD5	Shed Comm Mas			360.00 S.F.	$4,500	1
TWR	CELL TOWER			150.00 UNITS	$101,300	1
MSC5	ARRAYS			4.00 UNIT	$936,000	1

Valuation History

Appraisal			
Valuation Year	**Improvements**	**Land**	**Total**
2019	$1,043,100	$167,600	$1,210,700
2018	$1,043,100	$167,600	$1,210,700
2017	$107,429	$170,714	$278,143

Assessment			
Valuation Year	**Improvements**	**Land**	**Total**

2019	$730,200	$117,300	**$847,500**
2018	$730,200	$117,300	**$847,500**
2017	$75,200	$119,500	$194,700

(c) 2020 Vision Government Solutions, Inc. All rights reserved.

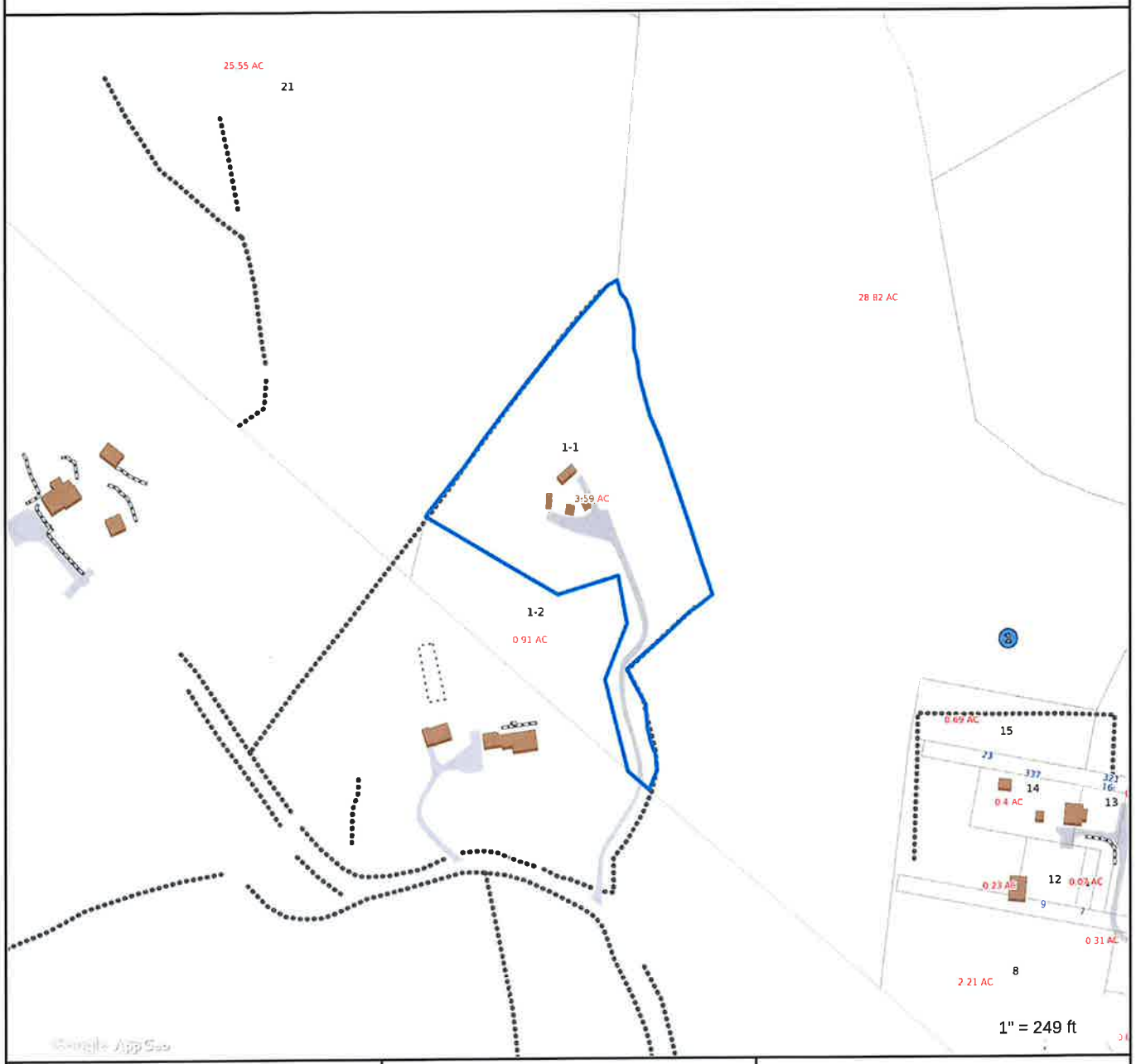

Property Information

Property ID	119-001-001.000-0001
Location	2 HINCKLEY HILL RD REAR
Owner	17 MILE REAL ESTATE LLC

MAP FOR REFERENCE ONLY
NOT A LEGAL DOCUMENT

City of Norwich, CT makes no claims and no warranties, expressed or implied, concerning the validity or accuracy of the GIS data presented on this map.

Geometry updated 1/22/2019
Data updated 1/22/2019

ATTACHMENT 7

UNITED STATES POSTAL SERVICE®

Certificate of Mailing — Firm

Name and Address of Sender

Kenneth C. Baldwin, Esq.
Robinson & Cole LLP
280 Trumbull Street
Hartford, CT 06103

TOTAL NO. of Pieces Listed by Sender: 3

TOTAL NO. of Pieces Received at Post Office™: 3

OLD STATE HOUSE STATION 06103 MAR 20 2020 USPS

Postmaster, per (name of receiving employee)

Affix Stamp Here
Postmark with Date of Receipt.

neopost
03/20/2020
US POSTAGE $002.84⁰
ZIP 06103
041L12203937

USPS® Tracking Number / Firm-specific Identifier	Address (Name, Street, City, State, and ZIP Code™)	Postage	Fee	Special Handling	Parcel Airlift
1.	Peter A. Nystrom, Mayor City of Greenwich 100 Broadway Norwich, CT 06360				
2.	Deanna Rhodes, City Planner City of Greenwich 100 Broadway Norwich, CT 06360				
3.	17 Mile Real Estate LLC 69 Harry Street Conshohocken, PA 19428				
4.					
5.					
6.					

OLD STATE HOUSE STATION 06103 MAR 20 2020 USPS

Norwich East

See Reverse for Instructions