STATE OF CONNECTICUT

CONNECTICUT SITING COUNCIL

Ten Franklin Square, New Britain, CT 06051

Phone: (860) 827-2935 Fax: (860) 827-2950

E-Mail: siting.council@ct.gov

www.ct.gov/csc

VIA ELECTRONIC MAIL

August 17, 2018

Arthur Perkowski
Airosmith Development Inc.
32 Clinton Street
Saratoga Springs, NY 12866

RE: **EM-SPRINT-101-180803** – Sprint Spectrum, LP notice of intent to modify an existing telecommunications facility located at 15 Dwight Street, North Haven, Connecticut.

Dear Mr. Perkowski:

The Connecticut Siting Council (Council) is in receipt of your correspondence of August 13, 2018 submitted in response to the Council's August 7, 2018 notification of an incomplete request for exempt modification with regard to the above-referenced matter.

The submission renders the request for exempt modification complete and the Council will process the request in accordance with the Federal Communications Commission 60-day timeframe.

Thank you for your attention and cooperation.

Sincerely,

Melanie A. Bachman
Executive Director

MAB/RDM/emr

STATE OF CONNECTICUT
CONNECTICUT SITING COUNCIL
Ten Franklin Square, New Britain, CT 06051
Phone: (860) 827-2935 Fax: (860) 827-2950
E-Mail: siting.council@ct.gov
www.ct.gov/csc

RECEIVED
AUG 13 2018
Connecticut Siting Council

August 7, 2018

Arthur Perkowski
Airosmith Development Inc.
32 Clinton Street
Saratoga Springs, NY 12866

RE: **EM-SPRINT-101-180803** – Sprint Spectrum, L.P. notice of intent to modify an existing telecommunications facility located at 15 Dwight Street, North Haven, Connecticut.

Dear Mr. Perkowski:

The Connecticut Siting Council (Council) received a notice of intent to modify the above-referenced facility on August 3, 2018.

According to Section 16-50j-71 of the Regulations of Connecticut State Agencies, "…any modification, as defined in Section 16-50j-2a of the Regulations of Connecticut State Agencies, to an existing tower site, except as specified in Sections 16-50j-72 and 16-50j-88 of the Regulations of Connecticut State Agencies, may have a substantial adverse environmental effect."

Staff has reviewed this exempt modification request for completeness and has identified a deficiency in the Construction Drawings (CD) prepared by Infinigy, dated July 9, 2018 and stamped and signed by John S. Stevens. The structural Note on page A-2 of the CD references a Structural Analysis Report dated April 5, 2018.

The Structural Analysis Report submitted with this filing is dated June 25, 2018.

Therefore, the exempt modification request is incomplete at this time. The Council recommends that Airosmith Development, Inc. provide an updated CD referencing the current Structural Analysis Report on or before September 7, 2018. If additional time is needed to gather the requested information, please submit a written request for an extension of time prior to September 7, 2018.

This notice of incompletion shall have the effect of tolling the Federal Communications Commission (FCC) 60-day timeframe in accordance with Paragraph 217 of the FCC Wireless Infrastructure Report and Order issued on October 21, 2014 (FCC 14-153).

Thank you for your attention to this matter. Should you have any questions, please feel free to contact me at 860-827-2951.

Sincerely,

Melanie A. Bachman
Executive Director

MAB/MP/IN

c: The Honorable Michael J. Freda, First Selectman, Town of North Haven
Laura Magaraci, Zoning Enforcement Officer, Town of North Haven

S:\EMS_TS\1_BYTOWN\NorthHaven\DwightSt\AT&T_CING\EM-CING-101-180803_DwightSt_incomplete.docx

Sprint

PROJECT:	DO MACRO UPGRADE
SITE NAME:	NORTH HAVEN CT-1
SITE CASCADE:	CT52XC119
SITE ADDRESS:	15 DWIGHT STREET NORTH HAVEN, CT 06473
SITE TYPE:	MONOPOLE TOWER
MARKET:	SOUTHERN CONNECTICUT

SITE INFORMATION

TOWER OWNER:
AMERICAN TOWER CORPORATION
10 PRESIDENTIAL WAY
WOBURN, MA 01801

LATITUDE (NAD83):
41° 25' 14.9" N
41.420811

LONGITUDE (NAD83):
72° 50' 55.7" W
-72.848801

COUNTY:
NEW HAVEN

ZONING JURISDICTION:
CONNECTICUT SITING COUNCIL

ZONING DISTRICT:
TBD

POWER COMPANY:
CL&P
PHONE: (800) 286-2000

AAV PROVIDER:
TBD

PROJECT MANAGER:
AIROSMITH DEVELOPMENT
TERRI BURKHOLDER
(315) 719-2928
TBURKHOLDER@AIROSMITHDEVELOPMENT.COM

AREA MAP

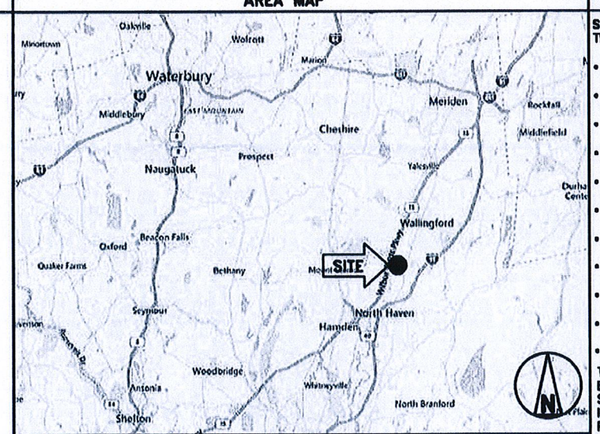

LOCATION MAP

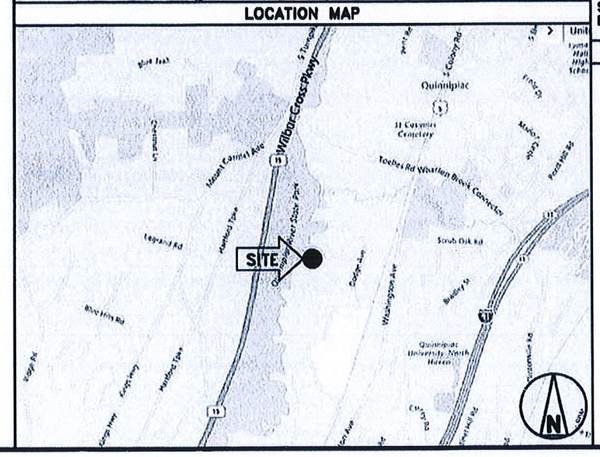

PROJECT DESCRIPTION

SPRINT PROPOSES TO MODIFY AN EXISTING UNMANNED TELECOMMUNICATIONS FACILITY.

- REMOVE (3) PANEL ANTENNAS AND RRH'S
- INSTALL (6) PANEL ANTENNAS
- INSTALL (6) 800 MHz RRH'S BEHIND ANTENNAS
- INSTALL (3) 1900 MHz RRH'S BEHIND ANTENNAS
- INSTALL (3) 2500 MHz RRH'S BEHIND ANTENNAS
- INSTALL (48) JUMPER CABLES
- INSTALL (4) HYBRID CABLES
- REMOVE EXISTING CLEARWIRE GROUND EQUIPMENT
- INSTALL (2) EQUIPMENT CABINETS WITHIN EXISTING LEASE AREA
- INSTALL 7'x7' CONCRETE EQUIPMENT PAD
- INSTALL 2.5 EQUIPMENT INSIDE EXISTING N.V. MMBS CABINET

THESE PLANS HAVE BEEN DEVELOPED FOR THE MODIFICATION OF AN EXISTING UNMANNED TELECOMMUNICATIONS FACILITY OWNED OR LEASED BY SPRINT IN ACCORDANCE WITH THE SCOPE OF WORK PROVIDED BY SPRINT. INFINIGY HAS INCORPORATED THIS SCOPE OF WORK IN THE PLANS. THESE PLANS ARE NOT FOR CONSTRUCTION UNLESS ACCOMPANIED BY A PASSING STRUCTURAL STABILITY ANALYSIS PREPARED BY A LICENSED STRUCTURAL ENGINEER. STRUCTURAL ANALYSIS MUST INCLUDE BOTH TOWER AND MOUNT.

APPLICABLE CODES

ALL WORK SHALL BE PERFORMED AND MATERIALS INSTALL IN ACCORDANCE WITH THE CURRENT EDITIONS OF THE FOLLOWING CODES AS ADOPTED BY THE LOCAL GOVERNING AUTHORITIES. NOTHING IN THESE PLANS IS TO BE CONSTRUED TO PERMIT WORK NOT CONFORMING TO THESE CODES.

1. INTERNATIONAL BUILDING CODE (2015 IBC)
2. TIA-222-G OR LATEST EDITION
3. NFPA 780 – LIGHTNING PROTECTION CODE
4. 2011 NATIONAL ELECTRIC CODE OR LATEST EDITION
5. ANY OTHER NATIONAL OR LOCAL APPLICABLE CODES, MOST RECENT EDITIONS
6. CT BUILDING CODE
7. LOCAL BUILDING CODE
8. CITY/COUNTY ORDINANCES

811
Know what's below.
Call before you dig.
www.call811.com

DRAWING INDEX

SHEET NO.	SHEET TITLE	REV.
T-1	TITLE SHEET & PROJECT DATA	1
SP-1	SPRINT SPECIFICATIONS	1
SP-2	SPRINT SPECIFICATIONS	1
SP-3	SPRINT SPECIFICATIONS	1
A-1	SITE PLAN	1
A-2	TOWER ELEVATION	1
A-3	ANTENNA LAYOUT & MOUNTING DETAILS	1
A-4	EQUIPMENT & MOUNTING DETAILS	1
A-5	EQUIPMENT & MOUNTING DETAILS	1
A-6	EQUIPMENT DETAILS	1
A-7	CIVIL DETAILS	1
A-8	PLUMBING DIAGRAM	1
E-1	ONE LINE & NOTES	1
E-2	ELECTRICAL & GROUNDING DETAILS	1
E-3	ELECTRICAL & GROUNDING DETAILS	1

PLANS PREPARED FOR:
Sprint

PLANS PREPARED BY:
INFINIGY
FROM ZERO TO INFINIGY
the solutions are endless
1033 Watervliet Shaker Rd | Albany, NY 12205
Phone: 518-690-0790 | Fax: 518-690-0793
www.infinigy.com
JOB NUMBER 526-104

PROJECT MANAGER:
AIROSMITH DEVELOPMENT
32 CLINTON ST.
SARATOGA SPRINGS, NY 12866
OFFICE#. (518) 308-3740

ENGINEERING LICENSE:
STATE OF CONNECTICUT
JOHN S. STEVENS
No. 24705
LICENSED PROFESSIONAL ENGINEER
DATE: 10-2018

DRAWING NOTICE:
THESE DOCUMENTS ARE CONFIDENTIAL AND ARE THE SOLE PROPERTY OF SPRINT AND MAY NOT BE REPRODUCED, DISSEMINATED OR REDISTRIBUTED WITHOUT THE EXPRESS WRITTEN CONSENT OF SPRINT.

REVISIONS:

DESCRIPTION	DATE	BY	REV.
REVISED/ ISSUED FOR PERMIT	08/10/18	ETC	1
ISSUED FOR PERMIT	07/09/18	ETC	0

SITE NAME:
NORTH HAVEN CT-1

SITE NUMBER:
CT52XC119

SITE ADDRESS:
15 DWIGHT STREET
NORTH HAVEN, CT 06473

SHEET DESCRIPTION:
TITLE SHEET
& PROJECT DATA

SHEET NUMBER:
T-1

THESE OUTLINE SPECIFICATIONS IN CONJUNCTION WITH THE SPRINT STANDARD CONSTRUCTION SPECIFICATIONS, INCLUDING CONTRACT DOCUMENTS AND THE CONSTRUCTION DRAWINGS DESCRIBE THE WORK TO BE PERFORMED BY THE CONTRACTOR.

SECTION 01 100 – SCOPE OF WORK

PART 1 – GENERAL

1.1 THE WORK: THESE STANDARD CONSTRUCTION SPECIFICATIONS IN CONJUNCTION WITH THE SPRINT CONSTRUCTION STANDARDS FOR WIRELESS SITES, CONTRACT DOCUMENTS AND THE CONSTRUCTION DRAWINGS DESCRIBE THE WORK TO BE PERFORMED BY THE CONTRACTOR.

1.2 RELATED DOCUMENTS:

A. THE REQUIREMENTS OF THIS SECTION APPLY TO ALL SECTIONS IN THIS SPECIFICATION.

B. SPRINT "STANDARD CONSTRUCTION DETAILS FOR WIRELESS SITES" ARE INCLUDED IN AND MADE A PART OF THESE SPECIFICATIONS HEREWITH.

1.3 PRECEDENCE: SHOULD CONFLICTS OCCUR BETWEEN THE STANDARD CONSTRUCTION SPECIFICATIONS FOR WIRELESS SITES INCLUDING THE STANDARD CONSTRUCTION DETAILS FOR WIRELESS SITES AND THE CONSTRUCTION DRAWINGS, INFORMATION ON THE CONSTRUCTION DRAWINGS SHALL TAKE PRECEDENCE. NOTIFY SPRINT CONSTRUCTION MANAGER IF THIS OCCURS.

1.4 NATIONALLY RECOGNIZED CODES AND STANDARDS:

A. THE WORK SHALL COMPLY WITH APPLICABLE NATIONAL AND LOCAL CODES AND STANDARDS, LATEST EDITION, AND PORTIONS THEREOF, INCLUDED BUT NOT LIMITED TO THE FOLLOWING:

1. GR-63-CORE NEBS REQUIREMENTS: PHYSICAL PROTECTION
5. GR-78-CORE GENERIC REQUIREMENTS FOR THE PHYSICAL DESIGN AND MANUFACTURE OF TELECOMMUNICATIONS EQUIPMENT.
3. GR-1089 CORE, ELECTROMAGNETIC COMPATIBILITY AND ELECTRICAL SAFETY –GENERIC CRITERIA FOR NETWORK TELECOMMUNICATIONS EQUIPMENT.
4. NATIONAL FIRE PROTECTION ASSOCIATION CODES AND STANDARDS (NFPA) INCLUDING NFPA 70 (NATIONAL ELECTRICAL CODE – "NEC") AND NFPA 101 (LIFE SAFETY CODE).
5. AMERICAN SOCIETY FOR TESTING OF MATERIALS (ASTM)
6. INSTITUTE OF ELECTRONIC AND ELECTRICAL ENGINEERS (IEEE)
7. AMERICAN CONCRETE INSTITUTE (ACI)
8. AMERICAN WIRE PRODUCERS ASSOCIATION (AWPA)
9. CONCRETE REINFORCING STEEL INSTITUTE (CRSI)
10. AMERICAN ASSOCIATION OF STATE HIGHWAY AND TRANSPORTATION OFFICIALS (AASHTO)
11. PORTLAND CEMENT ASSOCIATION (PCA)
12. NATIONAL CONCRETE MASONRY ASSOCIATION (NCMA)
13. BRICK INDUSTRY ASSOCIATION (BIA)
14. AMERICAN WELDING SOCIETY (AWS)
15. NATIONAL ROOFING CONTRACTORS ASSOCIATION (NRCA)
16. SHEET METAL AND AIR CONDITIONING CONTRACTORS' NATIONAL ASSOCIATION (SMACNA)
17. DOOR AND HARDWARE INSTITUTE (DHI)
18. OCCUPATIONAL SAFETY AND HEALTH ACT (OSHA)
19. APPLICABLE BUILDING CODES INCLUDING UNIFORM BUILDING CODE, SOUTHERN BUILDING CODE, BOCA, AND THE INTERNATIONAL BUILDING CODE.

1.5 DEFINITIONS:

A. WORK: THE SUM OF TASKS AND RESPONSIBILITIES IDENTIFIED IN THE CONTRACT DOCUMENTS.

B. COMPANY: SPRINT CORPORATION

C. ENGINEER: SYNONYMOUS WITH ARCHITECT & ENGINEER AND "A&E". THE DESIGN PROFESSIONAL HAVING PROFESSIONAL RESPONSIBILITY FOR DESIGN OF THE PROJECT.

D. CONTRACTOR: CONSTRUCTION CONTRACTOR; CONSTRUCTION VENDOR; INDIVIDUAL OR ENTITY WHO AFTER EXECUTION OF A CONTRACT IS BOUND TO ACCOMPLISH THE WORK.

E. THIRD PARTY VENDOR OR AGENCY: A VENDOR OR AGENCY ENGAGED SEPARATELY BY THE COMPANY, A&E, OR CONTRACTOR TO PROVIDE MATERIALS OR TO ACCOMPLISH SPECIFIC TASKS RELATED TO BUT NOT INCLUDED IN THE WORK.

F. OFCI: OWNER FURNISHED, CONTRACTOR INSTALLED EQUIPMENT.

G. CONSTRUCTION MANAGER – ALL PROJECTS RELATED COMMUNICATION TO FLOW THROUGH SPRINT REPRESENTATIVE IN CHARGE OF PROJECT...

1.6 SITE FAMILIARITY: CONTRACTOR SHALL BE RESPONSIBLE FOR FAMILIARIZING HIMSELF WITH ALL CONTRACT DOCUMENTS, FIELD CONDITIONS AND DIMENSIONS PRIOR TO PROCEEDING WITH CONSTRUCTION. ANY DISCREPANCIES SHALL BE BROUGHT TO THE ATTENTION OF THE SPRINT CONSTRUCTION MANAGER PRIOR TO THE COMMENCEMENT OF WORK. NO COMPENSATION WILL BE AWARDED BASED ON CLAIM OF LACK OF KNOWLEDGE OR FIELD CONDITIONS.

1.7 POINT OF CONTACT: COMMUNICATION BETWEEN SPRINT AND THE CONTRACTOR SHALL FLOW THROUGH THE SINGLE SPRINT CONSTRUCTION MANAGER APPOINTED TO MANAGE THE PROJECT FOR SPRINT.

1.8 ON-SITE SUPERVISION: THE CONTRACTOR SHALL SUPERVISE AND DIRECT THE WORK AND SHALL BE RESPONSIBLE FOR CONSTRUCTION MEANS, METHODS, TECHNIQUES, SEQUENCES, AND PROCEDURES IN ACCORDANCE WITH THE CONTRACT DOCUMENTS. THE CONTRACTOR SHALL EMPLOY A COMPETENT SUPERINTENDENT WHO SHALL BE IN ATTENDANCE AT THE SITE AT ALL TIMES DURING PERFORMANCE OF THE WORK.

1.9 DRAWINGS, SPECIFICATIONS AND DETAILS REQUIRED AT JOBSITE: THE CONSTRUCTION CONTRACTOR SHALL MAINTAIN A FULL SET OF THE CONSTRUCTION DRAWINGS, STANDARD CONSTRUCTION DETAILS FOR WIRELESS SITES AND THE STANDARD CONSTRUCTION SPECIFICATIONS FOR WIRELESS SITES AT THE JOBSITE FROM MOBILIZATION THROUGH CONSTRUCTION COMPLETION.

A. THE JOBSITE DRAWINGS, SPECIFICATIONS AND DETAILS SHALL BE CLEARLY MARKED DAILY IN RED PENCIL WITH ANY CHANGES IN CONSTRUCTION OVER WHAT IS DEPICTED IN THE DOCUMENTS. AT CONSTRUCTION COMPLETION, THIS JOBSITE MARKUP SET SHALL BE DELIVERED TO THE COMPANY OR COMPANY'S DESIGNATED REPRESENTATIVE TO BE FORWARDED TO THE COMPANY'S A&E VENDOR FOR PRODUCTION OF "AS-BUILT" DRAWINGS.

B. DETAILS ARE INTENDED TO SHOW DESIGN INTENT. MODIFICATIONS MAY BE REQUIRED TO SUIT JOB DIMENSIONS OR CONDITIONS, AND SUCH MODIFICATIONS SHALL BE INCLUDED AS PART OF THE WORK. CONTRACTOR SHALL NOTIFY SPRINT CONSTRUCTION MANAGER OF ANY VARIATIONS PRIOR TO PROCEEDING WITH THE WORK.

C. DIMENSIONS SHOWN ARE TO FINISH SURFACES UNLESS NOTED OTHERWISE. SPACING BETWEEN EQUIPMENT IS THE REQUIRED CLEARANCE. SHOULD THERE BE ANY QUESTIONS REGARDING THE CONTRACT DOCUMENTS, EXISTING CONDITIONS AND/OR DESIGN INTENT, THE CONTRACTOR SHALL BE RESPONSIBLE FOR OBTAINING A CLARIFICATION FROM THE SPRINT CONSTRUCTION MANAGER PRIOR TO PROCEEDING WITH THE WORK.

1.10 USE OF JOB SITE: THE CONTRACTOR SHALL CONFINE ALL CONSTRUCTION AND RELATED OPERATIONS INCLUDING STAGING AND STORAGE OF MATERIALS AND EQUIPMENT, PARKING, TEMPORARY FACILITIES, AND WASTE STORAGE TO THE LEASE PARCEL UNLESS OTHERWISE PERMITTED BY THE CONTRACT DOCUMENTS.

1.11 UTILITIES SERVICES: WHERE NECESSARY TO CUT EXISTING PIPES, ELECTRICAL WIRES, CONDUITS, CABLES, ETC., OF UTILITY SERVICES, OR OF FIRE PROTECTION OR COMMUNICATIONS SYSTEMS, THEY SHALL BE CUT AND CAPPED AT SUITABLE PLACES OR WHERE SHOWN. ALL SUCH ACTIONS SHALL BE COORDINATED WITH THE UTILITY COMPANY INVOLVED:

1.12 PERMITS / FEES: WHEN REQUIRED THAT A PERMIT OR CONNECTION FEE BE PAID TO A PUBLIC UTILITY PROVIDER FOR NEW SERVICE TO THE CONSTRUCTION PROJECT, PAYMENT OF SUCH FEE SHALL BE THE RESPONSIBILITY OF THE CONTRACTOR.

1.13 CONTRACTOR SHALL TAKE ALL MEASURES AND PROVIDE ALL MATERIAL NECESSARY FOR PROTECTING EXISTING EQUIPMENT AND PROPERTY.

1.14 METHODS OF PROCEDURE (MOPS) FOR CONSTRUCTION: CONTRACTOR SHALL PERFORM WORK AS DESCRIBED IN THE FOLLOWING INSTALLATION AND COMMISSIONING MOPS.

NOTE: IN SHORT-FORM SPECIFICATIONS ON THE DRAWINGS, A/E TO INSERT LIST OF APPLICABLE MOPS INCLUDING EN-2012-001, EN-2013-002, EL-0568, AND TS-0193

1.15 USE OF ELECTRONIC PROJECT MANAGEMENT SYSTEMS:

PART 2 – PRODUCTS (NOT USED)

PART 3 – EXECUTION

3.1 TEMPORARY UTILITIES AND FACILITIES: THE CONTRACTOR SHALL BE RESPONSIBLE FOR ALL TEMPORARY UTILITIES AND FACILITIES NECESSARY EXCEPT AS OTHERWISE INDICATED IN THE CONSTRUCTION DOCUMENTS. TEMPORARY UTILITIES AND FACILITIES INCLUDE POTABLE WATER, HEAT, HVAC, ELECTRICITY, SANITARY FACILITIES, WASTE DISPOSAL FACILITIES, AND TELEPHONE/COMMUNICATION SERVICES. PROVIDE TEMPORARY UTILITIES AND FACILITIES IN ACCORDANCE WITH OSHA AND THE AUTHORITY HAVING JURISDICTION. CONTRACTOR MAY UTILIZE THE COMPANY ELECTRICAL SERVICE IN THE COMPLETION OF THE WORK WHEN IT BECOMES AVAILABLE. USE OF THE LESSORS OR SITE OWNER'S UTILITIES OR FACILITIES IS EXPRESSLY FORBIDDEN EXCEPT AS OTHERWISE ALLOWED IN THE CONTRACT DOCUMENTS.

3.2 ACCESS TO WORK: THE CONTRACTOR SHALL PROVIDE ACCESS TO THE JOB SITE FOR AUTHORIZED COMPANY PERSONNEL AND AUTHORIZED REPRESENTATIVES OF THE ARCHITECT/ENGINEER DURING ALL PHASES OF THE WORK.

3.3 TESTING: REQUIREMENTS FOR TESTING BY THIS CONTRACTOR SHALL BE AS INDICATED HEREWITH, ON THE CONSTRUCTION DRAWINGS, AND IN THE INDIVIDUAL SECTIONS OF THESE SPECIFICATIONS. SHOULD COMPANY CHOOSE TO ENGAGE ANY THIRD-PARTY TO CONDUCT ADDITIONAL TESTING, THE CONTRACTOR SHALL COOPERATE WITH AND PROVIDE A WORK AREA FOR COMPANY'S TEST AGENCY.

3.4 DIMENSIONS: VERIFY DIMENSIONS INDICATED ON DRAWINGS WITH FIELD DIMENSIONS BEFORE FABRICATION OR ORDERING OF MATERIALS. DO NOT SCALE DRAWINGS.

3.5 EXISTING CONDITIONS: NOTIFY THE SPRINT CONSTRUCTION MANAGER OF EXISTING CONDITIONS DIFFERING FROM THOSE INDICATED ON THE DRAWINGS. DO NOT REMOVE OR ALTER STRUCTURAL COMPONENTS WITHOUT PRIOR WRITTEN APPROVAL FROM THE ARCHITECT AND ENGINEER.

SECTION 01 200 – COMPANY FURNISHED MATERIAL AND EQUIPMENT

PART 1 – GENERAL

1.1 THE WORK: THESE STANDARD CONSTRUCTION SPECIFICATIONS IN CONJUNCTION WITH THE OTHER CONTRACT DOCUMENTS AND THE CONSTRUCTION DRAWINGS DESCRIBE THE WORK TO BE PERFORMED BY THE CONTRACTOR.

1.2 RELATED DOCUMENTS:

A. THE REQUIREMENTS OF THIS SECTION APPLY TO ALL SECTIONS IN THIS SPECIFICATION.

B. SPRINT "STANDARD CONSTRUCTION DETAILS FOR WIRELESS SITES" ARE INCLUDED IN AND MADE A PART OF THESE SPECIFICATIONS HEREWITH.

PART 2 – PRODUCTS (NOT USED)

PART 3 – EXECUTION

3.1 RECEIPT OF MATERIAL AND EQUIPMENT:

A. A COMPANY FURNISHED MATERIAL AND EQUIPMENT IS IDENTIFIED ON THE RF DATA SHEET IN THE CONSTRUCTION DOCUMENTS.

B. THE CONTRACTOR IS RESPONSIBLE FOR SPRINT PROVIDED MATERIAL AND EQUIPMENT AND UPON RECEIPT SHALL:

1 ACCEPT DELIVERIES AS SHIPPED AND TAKE RECEIPT.
2. VERIFY COMPLETENESS AND CONDITION OF ALL DELIVERIES.
3. TAKE RESPONSIBILITY FOR EQUIPMENT AND PROVIDE INSURANCE PROTECTION AS REQUIRED IN AGREEMENT.
4. RECORD ANY DEFECTS OR DAMAGES AND WITHIN TWENTY-FOUR HOURS AFTER RECEIPT, REPORT TO SPRINT OR ITS DESIGNATED PROJECT REPRESENTATIVE OF SUCH.
5. PROVIDE SECURE AND NECESSARY WEATHER PROTECTED WAREHOUSING.
6. COORDINATE SAFE AND SECURE TRANSPORTATION OF MATERIAL AND EQUIPMENT, DELIVERING AND OFF-LOADING FROM CONTRACTOR'S WAREHOUSE TO SITE.

3.2 DELIVERABLES:

A. COMPLETE SHIPPING AND RECEIPT DOCUMENTATION IN ACCORDANCE WITH COMPANY PRACTICE.

B. IF APPLICABLE, COMPLETE LOST/STOLEN/DAMAGED DOCUMENTATION REPORT AS NECESSARY IN ACCORDANCE WITH COMPANY PRACTICE, AND AS DIRECTED BY COMPANY.

C. UPLOAD DOCUMENTATION INTO SPRINT SITE MANAGEMENT SYSTEM (SMS) AND/OR PROVIDE HARD COPY DOCUMENTATION AS REQUESTED.

SECTION 01 300 – CELL SITE CONSTRUCTION CO.

PART 1 – GENERAL

1.1 THE WORK: THESE STANDARD CONSTRUCTION SPECIFICATIONS IN CONJUNCTION WITH THE OTHER CONTRACT DOCUMENTS AND THE CONSTRUCTION DRAWINGS DESCRIBE THE WORK TO BE PERFORMED BY THE CONTRACTOR.

1.2 RELATED DOCUMENTS:

A. THE REQUIREMENTS OF THIS SECTION APPLY TO ALL SECTIONS IN THIS SPECIFICATION.

B. SPRINT "STANDARD CONSTRUCTION DETAILS FOR WIRELESS SITES" ARE INCLUDED IN AND MADE A PART OF THESE SPECIFICATIONS HEREWITH.

1.3 NOTICE TO PROCEED

A. NO WORK SHALL COMMENCE PRIOR TO COMPANY'S WRITTEN NOTICE TO PROCEED AND THE ISSUANCE OF THE WORK ORDER.

B. UPON RECEIVING NOTICE TO PROCEED, CONTRACTOR SHALL FULLY PERFORM ALL WORK NECESSARY TO PROVIDE SPRINT WITH AN OPERATIONAL WIRELESS FACILITY.

PART 2 – PRODUCTS (NOT USED)

PART 3 – EXECUTION

3.1 FUNCTIONAL REQUIREMENTS:

A. THE ACTIVITIES DESCRIBED IN THIS PARAGRAPH REPRESENT MINIMUM ACTIONS AND PROCESSES REQUIRED TO SUCCESSFULLY COMPLETE THE WORK. THE ACTIVITIES DESCRIBED ARE NOT EXHAUSTIVE, AND CONTRACTOR SHALL TAKE ANY AND ALL ACTIONS AS NECESSARY TO SUCCESSFULLY COMPLETE THE CONSTRUCTION OF A FULLY FUNCTIONING WIRELESS FACILITY AT THE SITE IN ACCORDANCE WITH COMPANY PROCESSES.

B. SUBMIT SPECIFIC DOCUMENTATION AS INDICATED HEREIN, AND OBTAIN REQUIRED APPROVALS WHILE THE WORK IS BEING PERFORMED.

C. MANAGE AND CONDUCT ALL FIELD CONSTRUCTION SERVICE RELATED ACTIVITIES

D. PROVIDE CONSTRUCTION ACTIVITIES TO THE EXTENT REQUIRED BY THE CONTRACT DOCUMENTS, INCLUDING BUT NOT LIMITED TO THE FOLLOWING:

PLANS PREPARED FOR:

Sprint

PLANS PREPARED BY:

INFINIGY
FROM ZERO TO INFINIGY
the solutions are endless

1033 Watervliet Shaker Rd | Albany, NY 12205
Phone: 518-690-0790 | Fax: 518-690-0793
www.infinigy.com
JOB NUMBER 526-104

PROJECT MANAGER:

AIROSMITH DEVELOPMENT

32 CLINTON ST.
SARATOGA SPRINGS, NY 12866
OFFICER. (518) 306-3740

ENGINEERING LICENSE:

STATE OF CONNECTICUT
JOHN S. STEVENS
No. 24705
LICENSED PROFESSIONAL ENGINEER
AUG 10 2018

DRAWING NOTICE:

THESE DOCUMENTS ARE CONFIDENTIAL AND ARE THE SOLE PROPERTY OF SPRINT AND MAY NOT BE REPRODUCED, DISSEMINATED OR REDISTRIBUTED WITHOUT THE EXPRESS WRITTEN CONSENT OF SPRINT.

REVISIONS:

DESCRIPTION	DATE	BY	REV.
REVISED/ ISSUED FOR PERMIT	08/10/18	ETC	1
ISSUED FOR PERMIT	07/09/18	ETC	0

SITE NAME:

NORTH HAVEN CT-1

SITE NUMBER:

CT52XC119

SITE ADDRESS:

15 DWIGHT STREET
NORTH HAVEN, CT 06473

SHEET DESCRIPTION:

SPRINT SPECIFICATIONS

SHEET NUMBER:

SP-1

CONTINUE FROM SP-1

1. PERFORM ANY REQUIRED SITE ENVIRONMENTAL MITIGATION.
2. PREPARE GROUND SITES; PROVIDE DE-GRUBBING; AND ROUGH AND FINAL GRADING, AND COMPOUND SURFACE TREATMENTS.
3. MANAGE AND CONDUCT ALL ACTIVITIES FOR INSTALLATION OF UTILITIES INCLUDING ELECTRICAL AND TELCO BACKHAUL.
4. INSTALL UNDERGROUND FACILITIES INCLUDING UNDERGROUND POWER AND COMMUNICATIONS CONDUITS, AND UNDERGROUND GROUNDING SYSTEM.
5. INSTALL ABOVE GROUND GROUNDING SYSTEMS.
6. PROVIDE NEW HVAC INSTALLATIONS AND MODIFICATIONS.
7. INSTALL "H-FRAMES", CABINETS AND SHELTERS AS INDICATED.
8. INSTALL ROADS, ACCESS WAYS, CURBS AND DRAINS AS INDICATED.
9. ACCOMPLISH REQUIRED MODIFICATION OF EXISTING FACILITIES.
10. PROVIDE ANTENNA SUPPORT STRUCTURE FOUNDATIONS.
11. PROVIDE SLABS AND EQUIPMENT PLATFORMS.
12. INSTALL COMPOUND FENCING, SIGHT SHIELDING, LANDSCAPING AND ACCESS BARRIERS.
13. PERFORM INSPECTION AND MATERIAL TESTING AS REQUIRED HEREINAFTER.
14. CONDUCT SITE RESISTANCE TO EARTH TESTING AS REQUIRED HEREINAFTER
15. INSTALL FIXED GENERATOR SETS AND OTHER STANDBY POWER SOLUTIONS.
16. INSTALL TOWERS, ANTENNA SUPPORT STRUCTURES AND PLATFORMS ON EXISTING TOWERS AS REQUIRED.
17. INSTALL CELL SITE RADIOS, MICROWAVE, GPS, COAXIAL MAINLINE, ANTENNAS, CROSS BAND COUPLERS, TOWER TOP AMPLIFIERS, LOW NOISE AMPLIFIERS AND RELATED EQUIPMENT.
18. PERFORM, DOCUMENT, AND CLOSE OUT ANY CONSTRUCTION CONTROL DOCUMENTS THAT MAY BE REQUIRED BY GOVERNMENT AGENCIES AND LANDLORDS.
19. PERFORM ANTENNAL AND COAX SWEEP TESTING AND MAKE ANY AND ALL NECESSARY CORRECTIONS.
20. REMAIN ON SITE MOBILIZED THROUGHOUT HAND-OFF AND INTEGRATION TO ASSIST AS NEEDED UNTIL SITE IS DEEMED SUBSTANTIALLY COMPLETE AND PLACED "ON AIR."

3.2 GENERAL REQUIREMENTS FOR CIVIL CONSTRUCTION:

A. CONTRACTOR SHALL KEEP THE SITE FREE FROM ACCUMULATING WASTE MATERIAL, DEBRIS, AND TRASH. AT THE COMPLETION OF THE WORK, CONTRACTOR SHALL REMOVE FROM THE SITE ALL REMAINING RUBBISH, IMPLEMENTS, TEMPORARY FACILITIES, AND SURPLUS MATERIALS.

B. EQUIPMENT ROOMS SHALL AT ALL TIMES BE MAINTAINED "BROOM CLEAN" AND CLEAR OF DEBRIS.

C. CONTRACTOR SHALL TAKE ALL REASONABLE PRECAUTIONS TO DISCOVER AND LOCATE ANY HAZARDOUS CONDITION.

1. IN THE EVENT CONTRACTOR ENCOUNTERS ANY HAZARDOUS CONDITION WHICH HAS NOT BEEN ABATED OR OTHERWISE MITIGATED, CONTRACTOR AND ALL OTHER PERSONS SHALL IMMEDIATELY STOP WORK IN THE AFFECTED AREA AND NOTIFY COMPANY IN WRITING. THE WORK IN THE AFFECTED AREA SHALL NOT BE RESUMED EXCEPT BY WRITTEN NOTIFICATION BY COMPANY.

2. CONTRACTOR AGREES TO USE CARE WHILE ON THE SITE AND SHALL NOT TAKE ANY ACTION THAT WILL OR MAY RESULT IN OR CAUSE THE HAZARDOUS CONDITION TO BE FURTHER RELEASED IN THE ENVIRONMENT, OR TO FURTHER EXPOSE INDIVIDUALS TO THE HAZARD.

D. CONTRACTOR'S ACTIVITIES SHALL BE RESTRICTED TO THE PROJECT LIMITS. SHOULD AREAS OUTSIDE THE PROJECT LIMITS BE AFFECTED BY CONTRACTOR'S ACTIVITIES, CONTRACTOR SHALL IMMEDIATELY RETURN THEM TO ORIGINAL CONDITION

E. CONDUCT TESTING AS REQUIRED HEREIN.

3.3 DELIVERABLES:

A. CONTRACTOR SHALL REVIEW, APPROVE, AND SUBMIT TO SPRINT SHOP DRAWINGS, PRODUCT DATA, SAMPLES, AND SIMILAR SUBMITTALS AS REQUIRED HEREINAFTER

B. PROVIDE DOCUMENTATION INCLUDING, BUT NOT LIMITED TO, THE FOLLOWING. DOCUMENTATION SHALL BE FORWARDED IN ORIGINAL FORMAT AND/OR UPLOADED INTO SMS.

1. ALL CORRESPONDENCE AND PRELIMINARY CONSTRUCTION REPORTS.
2. PROJECT PROGRESS REPORTS.
3. CIVIL CONSTRUCTION START DATE (POPULATE FIELD IN SMS AND/OR FORWARD NOTIFICATION).
4. ELECTRICAL SERVICE COMPLETION DATE (POPULATE FIELD IN SMS AND/OR FORWARD NOTIFICATION).
5. LINES AND ANTENNA INSTALL DATE (POPULATE FIELD IN SMS AND/OR FORWARD NOTIFICATION).
6. POWER INSTALL DATE (POPULATE FIELD IN SMS AND/OR FORWARD NOTIFICATION).
7. TELCO READY DATE (POPULATE FIELD IN SMS AND/OR FORWARD NOTIFICATION).
8. PPC (OR SHELTER) INSTALL DATE (POPULATE FIELD IN SMS AND/OR FORWARD NOTIFICATION).
9. TOWER CONSTRUCTION START DATE (POPULATE FIELD IN SMS AND/OR FORWARD NOTIFICATION).
10. TOWER CONSTRUCTION COMPLETE DATE (POPULATE FIELD IN SMS AND/OR FORWARD NOTIFICATION).
11. BTS AND RADIO EQUIPMENT DELIVERED AT SITE DATE (POPULATE FIELD IN SMS AND/OR FORWARD NOTIFICATION).
12. NETWORK OPERATIONS HANDOFF CHECKLIST (HOC WALK) COMPLETE (UPLOAD FORM IN SMS)
13. CIVIL CONSTRUCTION COMPLETE DATE (POPULATE FIELD IN SMS AND/OR FORWARD NOTIFICATION).
14. SITE CONSTRUCTION PROGRESS PHOTOS UNLOADED INTO SMS.

SECTION 01 400 – SUBMITTALS & TESTS

PART 1 – GENERAL

1.1 THE WORK: THESE STANDARD CONSTRUCTION SPECIFICATIONS IN CONJUNCTION WITH THE OTHER CONTRACT DOCUMENTS AND THE CONSTRUCTION DRAWINGS DESCRIBE THE WORK TO BE PERFORMED BY THE CONTRACTOR.

1.2 RELATED DOCUMENTS:

A. THE REQUIREMENTS OF THIS SECTION APPLY TO ALL SECTIONS IN THIS SPECIFICATION.

B. SPRINT "STANDARD CONSTRUCTION DETAILS FOR WIRELESS SITES" ARE INCLUDED IN AND MADE A PART OF THESE SPECIFICATIONS HEREWITH.

1.3 SUBMITTALS:

A. THE WORK IN ALL ASPECTS SHALL COMPLY WITH THE CONSTRUCTION DRAWINGS AND THESE SPECIFICATIONS.

B. SUBMIT THE FOLLOWING TO COMPANY REPRESENTATIVE FOR APPROVAL.

1. CONCRETE MIX-DESIGNS FOR TOWER FOUNDATIONS, ANCHORS PIERS, AND CONCRETE PAVING.
2. CONCRETE BREAK TESTS AS SPECIFIED HEREIN.
3. SPECIAL FINISHES FOR INTERIOR SPACES, IF ANY.
4. ALL EQUIPMENT AND MATERIALS SO IDENTIFIED ON THE CONSTRUCTION DRAWINGS.
5. CHEMICAL GROUNDING DESIGN

D. ALTERNATES: AT THE COMPANY'S REQUEST, ANY ALTERNATIVES TO THE MATERIALS OR METHODS SPECIFIED SHALL BE SUBMITTED TO SPRINT'S CONSTRUCTION MANAGER FOR APPROVAL PRIOR TO BEING SHIPPED TO SITE. SPRINT WILL REVIEW AND APPROVE ONLY THOSE REQUESTS MADE IN WRITING. NO VERBAL APPROVALS WILL BE CONSIDERED. SUBMITTAL FOR APPROVAL SHALL INCLUDE A STATEMENT OF COST REDUCTION PROPOSED FOR USE OF ALTERNATE PRODUCT.

1.4 TESTS AND INSPECTIONS:

A. THE CONTRACTOR SHALL BE RESPONSIBLE FOR ALL CONSTRUCTION TESTS, INSPECTIONS AND PROJECT DOCUMENTATION.

B. CONTRACTOR SHALL ACCOMPLISH TESTING INCLUDING BUT NOT LIMITED TO THE FOLLOWING:

1. COAX SWEEPS AND FIBER TESTS PER TS-0200 REV 4 ANTENNA LINE ACCEPTANCE STANDARDS.
2. AGL, AZIMUTH AND DOWNTILT USING ELECTRONIC COMMERCIAL MADE-FOR-THE-PURPOSE ANTENNA ALIGNMENT TOOL.
3. CONTRACTOR SHALL BE RESPONSIBLE FOR ANY AND ALL CORRECTIONS TO ANY WORK IDENTIFIED AS UNACCEPTABLE IN SITE INSPECTION ACTIVITIES AND/OR AS A RESULT OF TESTING.

C. REQUIRED CLOSEOUT DOCUMENTATION INCLUDES, BUT IS NOT LIMITED TO THE FOLLOWING;

1. AZIMUTH, DOWNTILT, AGL – UPLOAD REPORT FROM ANTENNA ALIGNMENT TOOL TO SITERRA TASK 465. INSTALLED AZIMUTH, DOWNTILT, AND AGL MUST CONFORM TO THE RF DATA SHEETS. SWEEP AND FIBER TESTS
2. SCANABLE BARCODE PHOTOGRAPHS OF TOWER TOP AND INACCESSIBLE SERIALIZED EQUIPMENT
3. ALL AVAILABLE JURISDICTIONAL INFORMATION
4. PDF SCAN OF REDLINES PRODUCED IN FIELD
5. ELECTRONIC AS-BUILT DRAWINGS IN AUTOCAD AND PDF FORMATS. ANY FIELD CHANGE MUST BE REFLECTED BY MODIFYING THE PLANS, ELEVATIONS, AND DETAILS IN THE DRAWING SETS. GENERAL NOTES INDICATING MODIFICATIONS WILL NOT BE ACCEPTED. CHANGES SHALL BE HIGHLIGHTED AS "CLOUDS" IDENTIFIED AS THE "AS-BUILT" CONDITION.
6. LIEN WAIVERS
7. FINAL PAYMENT APPLICATION
8. REQUIRED FINAL CONSTRUCTION PHOTOS
9. CONSTRUCTION AND COMMISSIONING CHECKLIST COMPLETE WITH NO DEFICIENT ITEMS
10. ALL POST NTP TASKS INCLUDING DOCUMENT UPLOADS COMPLETED IN SITERRA (SPRINTS DOCUMENT REPOSITORY OF RECORD).

1.5 COMMISSIONING: PERFORM ALL COMMISSIONING AS REQUIRED BY APPLICABLE MOPs

1.6 INTEGRATION: PERFORM ALL INTEGRATION ACTIVITIES AS REQUIRED BY APPLICABLE MOPs

PART 2 – PRODUCTS (NOT USED)

PART 3 – EXECUTION

3.1 REQUIREMENTS FOR TESTING:

A. THIRD PARTY TESTING AGENCY:

1. WHEN THE USE OF A THIRD PARTY INDEPENDENT TESTING AGENCY IS REQUIRED, THE AGENCY THAT IS SELECTED MUST PERFORM SUCH WORK ON A REGULAR BASIS IN THE STATE WHERE THE PROJECT IS LOCATED AND HAVE A THOROUGH UNDERSTANDING OF LOCAL AVAILABLE MATERIALS, INCLUDING THE SOIL, ROCK, AND GROUNDWATER CONDITIONS.
2. THE THIRD PARTY TESTING AGENCY IS TO BE FAMILIAR WITH THE APPLICABLE REQUIREMENTS FOR THE TESTS TO BE DONE, EQUIPMENT TO BE USED, AND ASSOCIATED HEALTH AND SAFETY ISSUES.
3. EXPERIENCE IN SOILS, CONCRETE, MASONRY, AGGREGATE, AND ASPHALT TESTING USING ASTM, AASJTO, AND OTHER METHODS IS NEEDED.
4. EXPERIENCE IN SOILS, CONCRETE, MASONRY, AGGREGATE, AND ASPHALT TESTING USING ASTM, AASJTO, AND OTHER METHODS IS NEEDED.

3.2 REQUIRED TESTS:

A. CONTRACTOR SHALL ACCOMPLISH TESTING INCLUDING BUT NOT LIMITED TO THE FOLLOWING:

1. CONCRETE CYLINDER BREAK TESTS FOR THE TOWER AND ANCHOR FOUNDATIONS AS SPECIFIED IN SECTION: PORTLAND CEMENT CONCRETE PAVING.
2. ASPHALT ROADWAY COMPACTED THICKNESS, SURFACE SMOOTHNESS, AND COMPACTED DENSITY TESTING AS SPECIFIED IN SECTION: HOT MIX ASPHALT PAVING.
3. FIELD QUALITY CONTROL TESTING AS SPECIFIED IN SECTION: PORTLAND CEMENT CONCRETE PAVING.
4. TESTING REQUIRED UNDER SECTION: AGGREGATE BASE FOR ACCESS ROADS, PADS AND ANCHOR LOCATIONS
5. STRUCTURAL BACKFILL COMPACTION TESTS FOR THE TOWER FOUNDATION.
6. SITE RESISTANCE TO EARTH TESTING PER EXHIBIT: CELL SITE GROUNDING SYSTEM DESIGN.
7. ANTENNA AND COAX SWEEP TESTS PER EXHIBIT: ANTENNA TRANSMISSION LINE ACCEPTANCE STANDARDS.
8. GROUNDING AT ANTENNA MASTS FOR GPS AND ANTENNAS
9. ALL OTHER TESTS REQUIRED BY COMPANY OR JURISDICTION.

3.3 REQUIRED INSPECTIONS

A. SCHEDULE INSPECTIONS WITH COMPANY REPRESENTATIVE.

B. CONDUCT INSPECTIONS INCLUDING BUT NOT LIMITED TO THE FOLLOWING:

1. GROUNDING SYSTEM INSTALLATION PRIOR TO EARTH CONCEALMENT DOCUMENTED WITH DIGITAL PHOTOGRAPHS BY CONTRACTOR, APPROVED BY A&E OR SPRINT REPRESENTATIVE.
2. FORMING FOR CONCRETE AND REBAR PLACEMENT PRIOR TO POUR DOCUMENTED WITH DIGITAL PHOTOGRAPHS BY CONTRACTOR, APPROVED BY A&E OR SPRINT REPRESENTATIVE.
3. COMPACTION OF BACKFILL MATERIALS; AGGREGATE BASE FOR ROADS, PADS, AND ANCHORS; ASPHALT PAVING; AND SHAFT BACKFILL FOR CONCRETE AND WOOD POLES, BY INDEPENDENT THIRD PARTY AGENCY.
4. PRE- AND POST-CONSTRUCTION ROOFTOP AND STRUCTURAL INSPECTIONS ON EXISTING FACILITIES.
5. TOWER ERECTION SECTION STACKING AND PLATFORM ATTACHMENT DOCUMENTED BY DIGITAL PHOTOGRAPHS BY THIRD PARTY AGENCY.
6. ANTENNA AZIMUTH , DOWN TILT AND PER SUNLIGHT TOOL SUNSIGHT INSTRUMENTS – ANTENNALIGN ALIGNMENT TOOL (AAT)

PLANS PREPARED FOR:

Sprint

PLANS PREPARED BY:

INFINIGY
FROM ZERO TO INFINIGY
the solutions are endless
1033 Watervliet Shaker Rd | Albany, NY 12205
Phone: 518-690-0790 | Fax: 518-690-0793
www.infinigy.com
JOB NUMBER 526-104

PROJECT MANAGER:

AIROSMITH DEVELOPMENT
32 CLINTON ST.
SARATOGA SPRINGS, NY 12866
OFFICE#. (518) 306-3740

ENGINEERING LICENSE:

STATE OF CONNECTICUT
JOHN S. STEVENS
No. 24705
LICENSED PROFESSIONAL ENGINEER
AUG 10 2018

DRAWING NOTICE:

THESE DOCUMENTS ARE CONFIDENTIAL AND ARE THE SOLE PROPERTY OF SPRINT AND MAY NOT BE REPRODUCED, DISSEMINATED OR REDISTRIBUTED WITHOUT THE EXPRESS WRITTEN CONSENT OF SPRINT.

REVISIONS:

DESCRIPTION	DATE	BY	REV.
REVISED/ ISSUED FOR PERMIT	08/10/18	ETC	1
ISSUED FOR PERMIT	07/09/18	ETC	0

SITE NAME:

NORTH HAVEN CT-1

SITE NUMBER:

CT52XC119

SITE ADDRESS:

15 DWIGHT STREET
NORTH HAVEN, CT 06473

SHEET DESCRIPTION:

SPRINT SPECIFICATIONS

SHEET NUMBER:

SP-2

CONTINUE FROM SP-2

7. VERIFICATION DOCUMENTED WITH THE ANTENNA CHECKLIST REPORT, BY A&E, SITE DEVELOPMENT REP, OR RF REP.

8. FINAL INSPECTION CHECKLIST AND HANDOFF WALK (HOC.). SIGNED FORM SHOWING ACCEPTANCE BY FIELD OPS IS TO BE UPLOADED INTO SMS.

9. COAX SWEEP AND FIBER TESTING DOCUMENTS SUBMITTED VIA SMS FOR RF APPROVAL.

10. SCAN–ABLE BARCODE PHOTOGRAPHS OF TOWER TOP AND INACCESSIBLE SERIALIZED EQUIPMENT

11. ALL AVAILABLE JURISDICTIONAL INFORMATION

12. PDF SCAN OF REDLINES PRODUCED IN FIELD

C. THE CONTRACTOR SHALL BE RESPONSIBLE FOR ANY AND ALL CORRECTIONS TO ANY WORK IDENTIFIED AS UNACCEPTABLE IN SITE INSPECTION ACTIVITIES AND/OR AS A RESULT OF TESTING.

D. CONSTRUCTION INSPECTIONS AND CORRECTIVE MEASURES SHALL BE DOCUMENTED BY THE CONTRACTOR WITH WRITTEN REPORTS AND PHOTOGRAPHS. PHOTOGRAPHS MUST BE DIGITAL AND OF SUFFICIENT QUALITY TO CLEARLY SHOW THE SITE CONSTRUCTION. PHOTOGRAPHS MUST CLEARLY IDENTIFY THE PHOTOGRAPHED ITEM AND BE LABELED WITH THE SITE CASCADE NUMBER, SITE NAME, DESCRIPTION, AND DATE.

3.4 DELIVERABLES: TEST AND INSPECTION REPORTS AND CLOSEOUT DOCUMENTATION SHALL BE UPLOADED TO THE SMS AND/OR FORWARDED TO SPRINT FOR INCLUSION INTO THE PERMANENT SITE FILES.

A. THE FOLLOWING TEST AND INSPECTION REPORTS SHALL BE PROVIDED AS APPLICABLE.

1. CONCRETE MIX AND CYLINDER BREAK REPORTS.

2. STRUCTURAL BACKFILL COMPACTION REPORTS.

3. SITE RESISTANCE TO EARTH TEST.

4. ANTENNA AZIMUTH AND DOWN TILT VERIFICATION

5. TOWER ERECTION INSPECTIONS AND MEASUREMENTS DOCUMENTING TOWER INSTALLED PER SUPPLIER'S REQUIREMENTS AND THE APPLICABLE SECTIONS HEREIN.

6. COAX CABLE SWEEP TESTS PER COMPANY'S "ANTENNA LINE ACCEPTANCE STANDARDS".

B. REQUIRED CLOSEOUT DOCUMENTATION INCLUDES THE FOLLOWING;

1. TEST WELLS AND TRENCHES: PHOTOGRAPHS OF ALL TEST WELLS; PHOTOGRAPHS SHOWING ALL OPEN EXCAVATIONS AND TRENCHING PRIOR TO BACKFILLING SHOWING A TAPE MEASURE VISIBLE IN THE EXCAVATIONS INDICATING DEPTH.

2. CONDUITS, CONDUCTORS AND GROUNDING: PHOTOGRAPHS SHOWING TYPICAL INSTALLATION OF CONDUCTORS AND CONNECTORS; PHOTOGRAPHS SHOWING TYPICAL BEND RADIUS OF INSTALLED GROUND WIRES AND GROUND ROD SPACING;

3. CONCRETE FORMS AND REINFORCING: CONCRETE FORMING AT TOWER AND EQUIPMENT/SHELTER PAD/FOUNDATIONS – PHOTOGRAPHS SHOWING ALL REINFORCING STEEL, UTILITY AND CONDUIT STUB OUTS; PHOTOGRAPHS SHOWING CONCRETE POUR OF SHELTER SLAB/FOUNDATION, TOWER FOUNDATION AND GUY ANCHORS WITH VIBRATOR IN USE; PHOTOGRAPHS SHOWING EACH ANCHOR ON GUYED TOWERS, BEFORE CONCRETE POUR.

4. TOWER, ANTENNAS AND MAINLINE: INSPECTION AND PHOTOGRAPHS OF SECTION STACKING; INSPECTION AND PHOTOGRAPHS OF PLATFORM COMPONENT ATTACHMENT POINTS; PHOTOGRAPHS OF TOWER TOP GROUNDING; PHOTOS OF TOWER COAX LINE COLOR CODING AT THE TOP AND AT GROUND LEVEL; INSPECTION AND PHOTOGRAPHS OF OPERATIONAL OF TOWER LIGHTING, AND PLACEMENT OF FAA REGISTRATION SIGN; PHOTOGRAPHS SHOWING ADDITIONAL GROUNDING POINTS FOR TOWERS GREATER THAN 200 FEET.; PHOTOS OF ANTENNA GROUND BAR, EQUIPMENT GROUND BAR, AND MASTER GROUND BAR; PHOTOS OF GPS ANTENNA(S); PHOTOS OF EACH SECTOR OF ANTENNAS; ONE PHOTOGRAPH LOOKING AT THE SECTOR AND ONE FROM BEHIND SHOWING THE PROJECTED COVERAGE AREA; PHOTOS OF COAX WEATHERPROOFING – TOP AND BOTTOM; PHOTOS OF COAX GROUNDING—TOP AND BOTTOM; PHOTOS OF ANTENNA AND MAST GROUNDING; PHOTOS OF COAX CABLE ENTRY INTO SHELTER; PHOTOS OF PLATFORM MECHANICAL CONNECTIONS TO TOWER/MONOPOLE.

5. ROOF TOPS: PRE–CONSTRUCTION AND POST–CONSTRUCTION VISUAL INSPECTION AND PHOTOGRAPHS OF THE ROOF AND INTERIOR TO DETERMINE AND DOCUMENT CONDITIONS; ROOF TOP CONSTRUCTION INSPECTIONS AS REQUIRED BY THE JURISDICTION; PHOTOGRAPHS OF CABLE TRAY AND/OR ICE BRIDGE; PHOTOGRAPHS OF DOGHOUSE/CABLE EXIT FROM ROOF;

6. SITE LAYOUT – PHOTOGRAPHS OF THE OVERALL COMPOUND, INCLUDING EQUIPMENT PLATFORM FROM ALL FOUR CORNERS.

7. FINISHED UTILITIES: CLOSE–UP PHOTOGRAPHS OF THE PPC BREAKER PANEL; CLOSE–UP PHOTOGRAPH OF THE INSIDE OF THE TELCO PANEL AND NIU; CLOSE–UP PHOTOGRAPH OF THE POWER METER AND DISCONNECT; PHOTOS OF POWER AND TELCO ENTRANCE TO COMPANY ENCLOSURE; PHOTOGRAPHS AT METER BOX AND/OR FACILITY DISTRIBUTION PANEL.

8. REQUIRED MATERIALS CERTIFICATIONS: CONCRETE MIX DESIGNS; MILL CERTIFICATION FOR ALL REINFORCING AND STRUCTURAL STEEL; AND ASPHALT PAVING MIX DESIGN.

9. ANY AND ALL SUBMITTALS BY THE JURISDICTION OR COMPANY.

SECTION 01 400 – SUBMITTALS & TESTS

PART 1 – GENERAL

1.1 THE WORK: THESE STANDARD CONSTRUCTION SPECIFICATIONS IN CONJUNCTION WITH THE OTHER CONTRACT DOCUMENTS AND THE CONSTRUCTION DRAWINGS DESCRIBE THE WORK TO BE PERFORMED BY THE CONTRACTOR.

1.2 RELATED DOCUMENTS:

A. THE REQUIREMENTS OF THIS SECTION APPLY TO ALL SECTIONS IN THIS SPECIFICATION.

B. SPRINT "STANDARD CONSTRUCTION DETAILS FOR WIRELESS SITES" ARE INCLUDED IN AND MADE A PART OF THESE SPECIFICATIONS HEREWITH.

PART 2 – PRODUCTS (NOT USED)

PART 3 – EXECUTION

3.1 WEEKLY REPORTS:

A. CONTRACTOR SHALL PROVIDE SPRINT WITH WEEKLY REPORTS SHOWING PROJECT STATUS. THIS STATUS REPORT FORMAT WILL BE PROVIDED TO THE CONTRACTOR BY SPRINT. THE REPORT WILL CONTAIN SITE ID NUMBER, THE MILESTONES FOR EACH SITE, INCLUDING THE BASELINE DATE, ESTIMATED COMPLETION DATE AND ACTUAL COMPLETION DATE.

B. REPORT INFORMATION WILL BE TRANSMITTED TO SPRINT VIA ELECTRONIC MEANS AS REQUIRED. THIS INFORMATION WILL PROVIDE A BASIS FOR PROGRESS MONITORING AND PAYMENT.

3.2 PROJECT CONFERENCE CALLS:

A. SPRINT MAY HOLD WEEKLY PROJECT CONFERENCE CALLS. CONTRACTOR WILL BE REQUIRED TO COMMUNICATE SITE STATUS, MILESTONE COMPLETIONS AND UPCOMING MILESTONE PROJECTIONS, AND ANSWER ANY OTHER SITE STATUS QUESTIONS AS NECESSARY.

3.3 PROJECT TRACKING IN SMS:

A. CONTRACTOR SHALL PROVIDE SCHEDULE UPDATES AND PROJECTIONS IN THE SMS SYSTEM ON A WEEKLY BASIS.

3.4 ADDITIONAL REPORTING:

A. ADDITIONAL OR ALTERNATE REPORTING REQUIREMENTS MAY BE ADDED TO THE REPORT AS DETERMINED TO BE REASONABLY NECESSARY BY COMPANY.

3.5 PROJECT PHOTOGRAPHS:

A. FILE DIGITAL PHOTOGRAPHS OF COMPLETED SITE IN JPEG FORMAT IN THE SMS PHOTO LIBRARY FOR THE RESPECTIVE SITE. PHOTOGRAPHS SHALL BE CLEARLY LABELED WITH SITE NUMBER, NAME AND DESCRIPTION, AND SHALL INCLUDE AT A MINIMUM THE FOLLOWING AS APPLICABLE:

1. 1SHELTER AND TOWER OVERVIEW.

2. TOWER FOUNDATION(S) – FORMS AND STEEL BEFORE POUR (EACH ANCHOR ON GUYED TOWERS).

3. TOWER FOUNDATION(S) POUR WITH VIBRATOR IN USE (EACH ANCHOR ON GUYED TOWERS).

4. TOWER STEEL AS BEING INSTALLED INTO HOLE (SHOW ANCHOR STEEL ON GUYED TOWERS).

5. PHOTOS OF TOWER SECTION STACKING.

6. CONCRETE TESTING / SAMPLES.

7. PLACING OF ANCHOR BOLTS IN TOWER FOUNDATION.

8. BUILDING/WATER TANK FROM ROAD FOR TENANT IMPROVEMENTS OR COMMENTS.

9. SHELTER FOUNDATION—-FORMS AND STEEL BEFORE POURING.

10. SHELTER FOUNDATION POUR WITH VIBRATOR IN USE.

11. COAX CABLE ENTRY INTO SHELTER.

12. PLATFORM MECHANICAL CONNECTIONS TO TOWER/MONOPOLE.

13. ROOFTOP PRE AND POST CONSTRUCTION PHOTOS TO INCLUDE PENETRATIONS AND INTERIOR CEILING.

14. PHOTOS OF TOWER TOP COAX LINE COLOR CODING AND COLOR CODING AT GROUND LEVEL.

15. PHOTOS OF ALL APPROPRIATE COMPANY OR REGULATORY SIGNAGE.

16. PHOTOS OF EQUIPMENT BOLT DOWN INSIDE SHELTER.

17. POWER AND TELCO ENTRANCE TO COMPANY ENCLOSURE AND POWER AND TELCO SUPPLY LOCATIONS INCLUDING METER/DISCONNECT.

18. ELECTRICAL TRENCH(S) WITH ELECTRICAL / CONDUIT BEFORE BACKFILL.

19. ELECTRICAL TRENCH(S) WITH FOIL–BACKED TAPE BEFORE FURTHER BACKFILL.

20. TELCO TRENCH WITH TELEPHONE / CONDUIT BEFORE BACKFILL.

21. TELCO TRENCH WITH FOIL–BACKED TAPE BEFORE FURTHER BACKFILL.

22. SHELTER GROUND–RING TRENCH WITH GROUND–WIRE BEFORE BACKFILL (SHOW ALL CAD WELDS AND BEND RADII).

23. TOWER GROUND–RING TRENCH WITH GROUND–WIRE BEFORE BACKFILL (SHOW ALL CAD WELDS AND BEND RADII).

24. FENCE GROUND–RING TRENCH WITH GROUND–WIRE BEFORE BACKFILL (SHOW ALL CAD WELDS AND BEND RADII).

25. ALL BTS GROUND CONNECTIONS.

26. ALL GROUND TEST WELLS.

27. ANTENNA GROUND BAR AND EQUIPMENT GROUND BAR.

28. ADDITIONAL GROUNDING POINTS ON TOWERS ABOVE 200'.

29. HVAC UNITS INCLUDING CONDENSERS ON SPLIT SYSTEMS.

30. GPS ANTENNAS.

31. CABLE TRAY AND/OR WAVEGUIDE BRIDGE.

32. DOGHOUSE/CABLE EXIT FROM ROOF.

33. EACH SECTOR OF ANTENNAS; ONE PHOTOGRAPH LOOKING AT THE SECTOR AND ONE FROM BEHIND SHOWING THE PROJECTED COVERAGE AREA.

34. MASTER BUS BAR.

35. TELCO BOARD AND NIU.

36. ELECTRICAL DISTRIBUTION WALL.

37. CABLE ENTRY WITH SURGE SUPPRESSION.

38. ENTRANCE TO EQUIPMENT ROOM.

39. COAX WEATHERPROOFING–TOP AND BOTTOM OF TOWER.

40. COAX GROUNDING –TOP AND BOTTOM OF TOWER.

41. ANTENNA AND MAST GROUNDING.

42. LANDSCAPING – WHERE APPLICABLE.

3.6 FINAL PROJECT ACCEPTANCE: COMPLETE ALL REQUIRED REPORTING TASKS PER CONTRACT, CONTRACT DOCUMENTS OR THE SPRINT INTEGRATED CONSTRUCTION STANDARDS FOR WIRELESS SITES AND UPLOAD INTO SITERRA.

PLANS PREPARED FOR:

Sprint

PLANS PREPARED BY:

INFINIGY
FROM ZERO TO INFINIGY
the solutions are endless
1033 Watervliet Shaker Rd | Albany, NY 12205
Phone: 518-690-0790 | Fax: 518-690-0793
www.infinigy.com
JOB NUMBER 526-104

PROJECT MANAGER:

AIROSMITH DEVELOPMENT
32 CLINTON ST.
SARATOGA SPRINGS, NY 12866
OFFICE#. (518) 306-3740

ENGINEERING LICENSE:

STATE OF CONNECTICUT
JOHN S. STEVENS
No. 24705
LICENSED
PROFESSIONAL ENGINEER

DRAWING NOTICE:

THESE DOCUMENTS ARE CONFIDENTIAL AND ARE THE SOLE PROPERTY OF SPRINT AND MAY NOT BE REPRODUCED, DISSEMINATED OR REDISTRIBUTED WITHOUT THE EXPRESS WRITTEN CONSENT OF SPRINT.

REVISIONS:

DESCRIPTION	DATE	BY	REV.
REVISED/ ISSUED FOR PERMIT	08/10/18	ETC	1
ISSUED FOR PERMIT	07/09/18	ETC	0

SITE NAME:

NORTH HAVEN CT-1

SITE NUMBER:

CT52XC119

SITE ADDRESS:

15 DWIGHT STREET
NORTH HAVEN, CT 06473

SHEET DESCRIPTION:

SPRINT SPECIFICATIONS

SHEET NUMBER:

SP-3

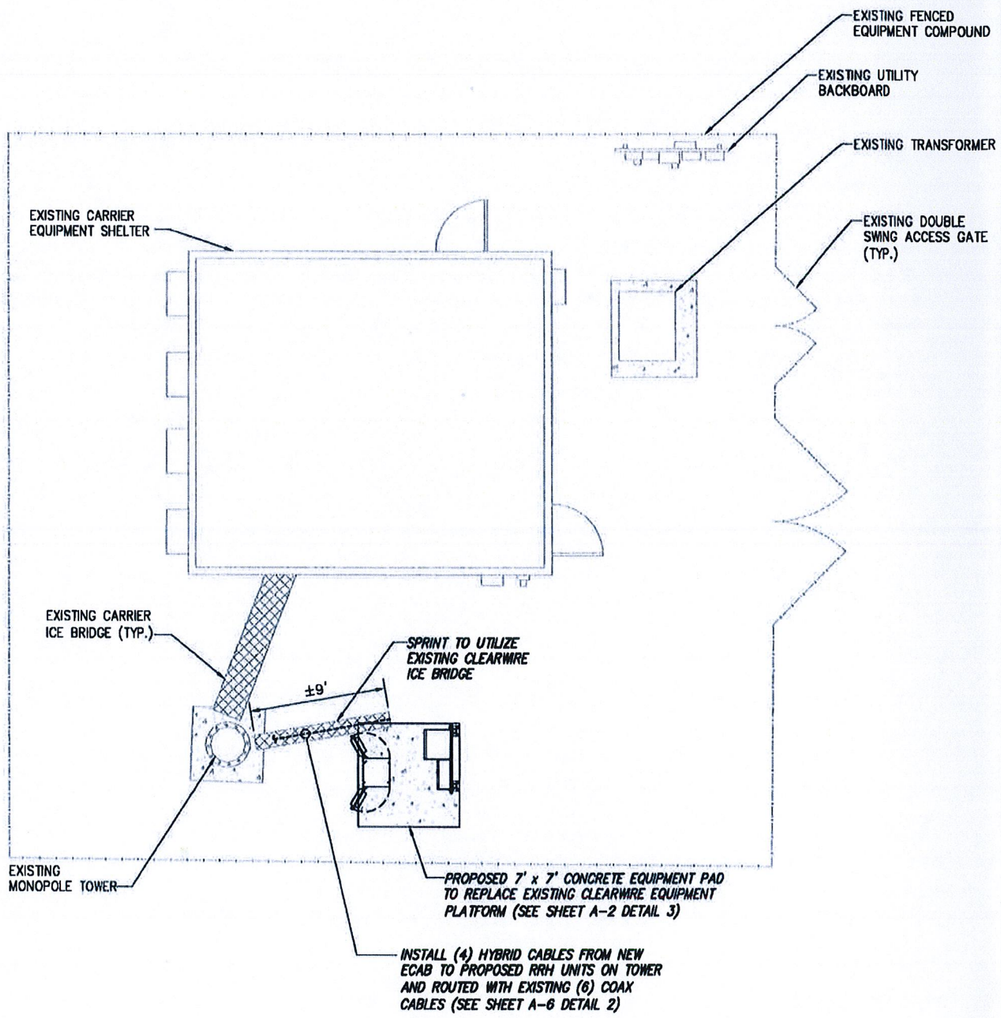

INFORMATION CONTAINED WITHIN DRAWINGS ARE BASED ON PROVIDED INFORMATION AND ARE NOT THE RESULT OF A FIELD SURVEY.

GRAPHIC SCALE:
10' 5' 0 5' 10'
SCALE (11x17): 1" = 10'-0"
SCALE (22x34): 1" = 5'-0"

OVERALL SITE PLAN | SCALE: AS NOTED | 1

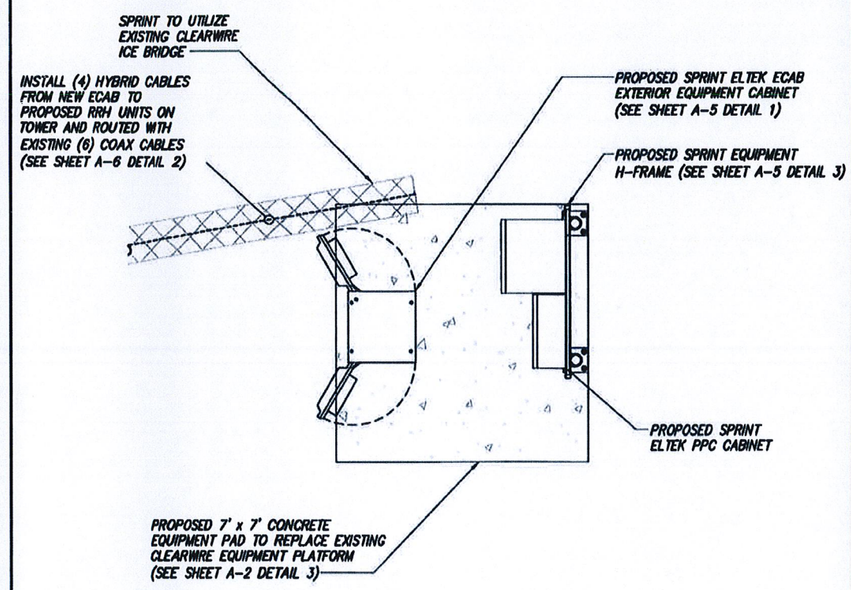

GRAPHIC SCALE:
4' 2' 0 2' 4'
SCALE (11x17): 1" = 4'-0"
SCALE (22x34): 1" = 2'-0"

SPRINT EQUIPMENT PLAN | SCALE: AS NOTED | 2

PLANS PREPARED FOR:

Sprint

PLANS PREPARED BY:

INFINIGY
FROM ZERO TO INFINIGY
the solutions are endless
1033 Watervliet Shaker Rd | Albany, NY 12205
Phone: 518-690-0790 | Fax: 518-690-0793
www.infinigy.com
JOB NUMBER 526-104

PROJECT MANAGER:

AIROSMITH DEVELOPMENT
32 CLINTON ST.
SARATOGA SPRINGS, NY 12866
OFFICE#. (518) 308-3740

ENGINEERING LICENSE:

STATE OF CONNECTICUT
JOHN S. STEVENS
No. 24705
LICENSED PROFESSIONAL ENGINEER
08.10.2018

DRAWING NOTICE:

THESE DOCUMENTS ARE CONFIDENTIAL AND ARE THE SOLE PROPERTY OF SPRINT AND MAY NOT BE REPRODUCED, DISSEMINATED OR REDISTRIBUTED WITHOUT THE EXPRESS WRITTEN CONSENT OF SPRINT.

REVISIONS:

DESCRIPTION	DATE	BY	REV.
REVISED/ ISSUED FOR PERMIT	08/10/18	ETC	1
ISSUED FOR PERMIT	07/09/18	ETC	0

SITE NAME:

NORTH HAVEN CT-1

SITE NUMBER:

CT52XC119

SITE ADDRESS:

15 DWIGHT STREET
NORTH HAVEN, CT 06473

SHEET DESCRIPTION:

SITE PLAN

SHEET NUMBER:

A-1

NOTE:
SEE DETAIL 2 ON A-3
FOR ANTENNA LAYOUT

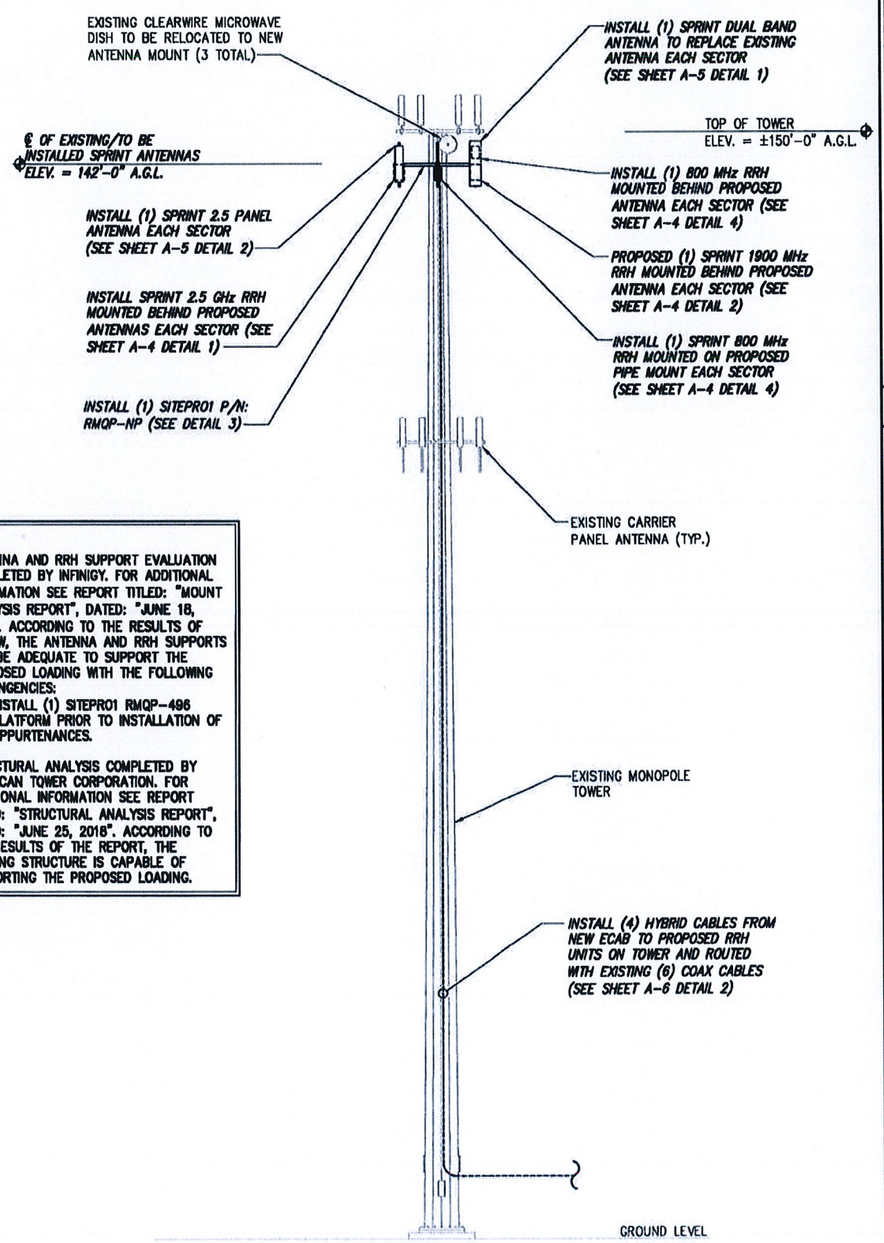

NOTE:

- ANTENNA AND RRH SUPPORT EVALUATION COMPLETED BY INFINIGY. FOR ADDITIONAL INFORMATION SEE REPORT TITLED: "MOUNT ANALYSIS REPORT", DATED: "JUNE 18, 2018". ACCORDING TO THE RESULTS OF REVIEW, THE ANTENNA AND RRH SUPPORTS WILL BE ADEQUATE TO SUPPORT THE PROPOSED LOADING WITH THE FOLLOWING CONTINGENCIES:
  - •• INSTALL (1) SITEPRO1 RMQP-496 PLATFORM PRIOR TO INSTALLATION OF APPURTENANCES.
- STRUCTURAL ANALYSIS COMPLETED BY AMERICAN TOWER CORPORATION. FOR ADDITIONAL INFORMATION SEE REPORT TITLED: "STRUCTURAL ANALYSIS REPORT", DATED: "JUNE 25, 2018". ACCORDING TO THE RESULTS OF THE REPORT, THE EXISTING STRUCTURE IS CAPABLE OF SUPPORTING THE PROPOSED LOADING.

TOWER ELEVATION | NO SCALE | 1

SITE LOADING CHART

SECTOR	EXISTING/ PROPOSED	ANTENNA MODEL #	VENDOR	AZIMUTH	QTY.	REMAIN/ REMOVED	RRH (QTY/MODEL)	CABLE	CABLE LENGTH	RAD CENTER
ALPHA	PROPOSED	NNVV-65B-R4	COMMSCOPE	0°	1	–	(2) 800 MHZ 2X50W RRH	SEE SHEET A-5 DETAIL 1	±182'*	±142' AGL
	PROPOSED	APXVTM14-ALU-120	RFS	0°	1	–	(1) TD-RRHBX20-25 W/ SOLAR SHIELD	SEE SHEET A-5 DETAIL 1		
	EXISTING	LLPX310R	ARGUS	0°	1	REMOVE	(1) 1900 MHz 4X45 RRH	EXISTING COAX		
BETA	PROPOSED	NNVV-65B-R4	COMMSCOPE	120°	1	–	(2) 800 MHZ 2X50W RRH	SEE SHEET A-5 DETAIL 1		±142' AGL
	PROPOSED	APXVTM14-ALU-120	RFS	120°	1	–	(1) TD-RRHBX20-25 W/ SOLAR SHIELD	SEE SHEET A-5 DETAIL 1		
	EXISTING	LLPX310R	ARGUS	120°	1	REMOVE	(1) 1900 MHz 4X45 RRH	EXISTING COAX		
GAMMA	PROPOSED	NNVV-65B-R4	COMMSCOPE	240°	1	–	(2) 800 MHZ 2X50W RRH	SEE SHEET A-5 DETAIL 1		142' AGL
	PROPOSED	APXVTM14-ALU-120	RFS	240°	1	–	(1) TD-RRHBX20-25 W/ SOLAR SHIELD	SEE SHEET A-5 DETAIL 1		
	EXISTING	LLPX310R	ARGUS	240°	1	REMOVE	(1) 1900 MHz 4X45 RRH	EXISTING COAX		

PROJECT SCOPE:

REMOVE: (3) PANEL ANTENNAS AND (3) RRH'S INSTALL: (6) PANEL ANTENNAS AND (12) RRH'S

* PROPOSED CABLE LENGTH WAS DETERMINED USING THE SUM OF THE RAD CENTER OF ANTENNAS, AND DISTANCE FROM EXISTING EQUIPMENT AREA TO TOWER BASE WITH AN ADDITIONAL 20' BUFFER. LENGTH TO BE VERIFIED IN FIELD PRIOR TO ORDERING MATERIALS.

SITE LOADING CHART | NO SCALE | 2

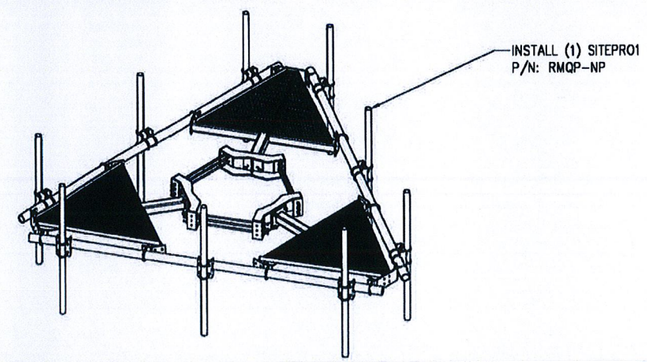

MOUNT DETAIL | NO SCALE | 3

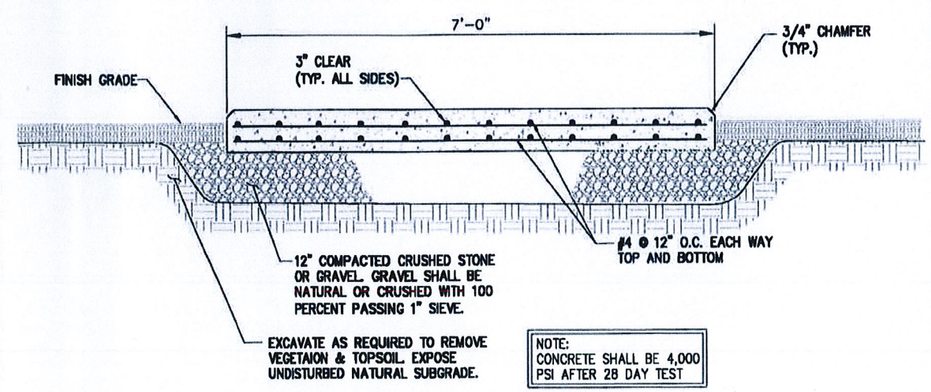

NOTE:
CONCRETE SHALL BE 4,000 PSI AFTER 28 DAY TEST

EQUIPMENT CABINET FOUNDATION | NO SCALE | 4

PLANS PREPARED FOR:

Sprint

PLANS PREPARED BY:

INFINIGY
FROM ZERO TO INFINIGY
the solutions are endless
1033 Watervliet Shaker Rd | Albany, NY 12205
Phone: 518-690-0790 | Fax: 518-690-0793
www.infinigy.com
JOB NUMBER 526-104

PROJECT MANAGER:

AIROSMITH DEVELOPMENT
32 CLINTON ST.
SARATOGA SPRINGS, NY 12866
OFFICE#. (518) 308-3740

ENGINEERING LICENSE:

STATE OF CONNECTICUT
JOHN S. STEVENS
No. 24705
LICENSED PROFESSIONAL ENGINEER
AUG 10 2018

DRAWING NOTICE:

THESE DOCUMENTS ARE CONFIDENTIAL AND ARE THE SOLE PROPERTY OF SPRINT AND MAY NOT BE REPRODUCED, DISSEMINATED OR REDISTRIBUTED WITHOUT THE EXPRESS WRITTEN CONSENT OF SPRINT.

REVISIONS:

DESCRIPTION	DATE	BY	REV.
REVISED/ ISSUED FOR PERMIT	08/10/18	ETC	1
ISSUED FOR PERMIT	07/09/18	ETC	0

SITE NAME:

NORTH HAVEN CT-1

SITE NUMBER:

CT52XC119

SITE ADDRESS:

15 DWIGHT STREET
NORTH HAVEN, CT 06473

SHEET DESCRIPTION:

TOWER ELEVATION

SHEET NUMBER:

A-2

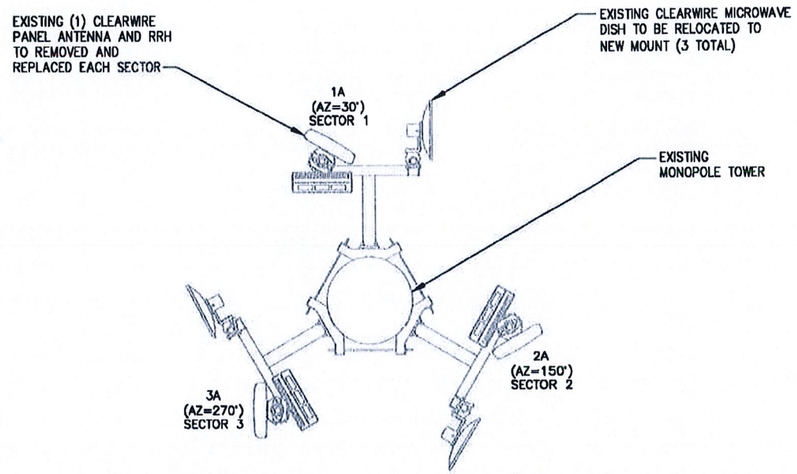

EXISTING ANTENNA LAYOUT | NO SCALE | 1

THE CONFIGURATION PLANS ARE BASED ON PROVIDED INFORMATION AND ARE FOR CONCEPTUAL PURPOSES ONLY. CONTRACTOR TO VERIFY FIELD CONDITIONS PRIOR TO CONSTRUCTION.

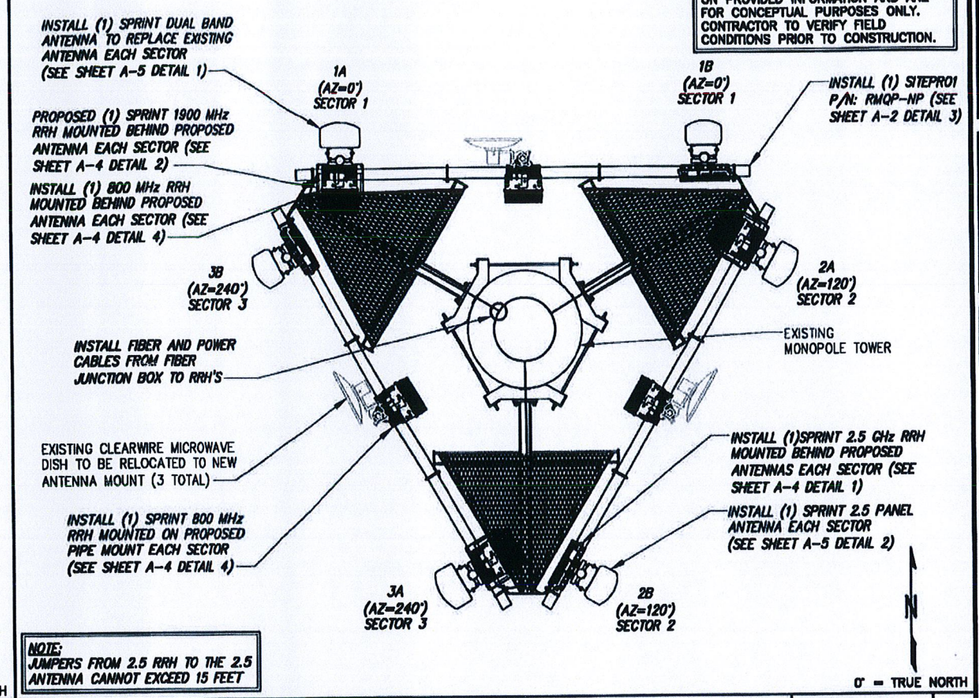

NOTE:
JUMPERS FROM 2.5 RRH TO THE 2.5 ANTENNA CANNOT EXCEED 15 FEET

FINAL ANTENNA & RRH LAYOUT | NO SCALE | 2

NOTE:
CONTRACTOR TO POSITION RRH ON MOUNT BEHIND ANTENNA SUCH THAT THE RRH DOES NOT INTERFERE WITH THE EXISTING PLATFORM/T-ARM MOUNTING HARDWARE.

NOTE:
THE DIAGRAM IS FOR CONCEPTUAL PURPOSES ONLY. CONTRACTOR IS TO REFER TO PASSING STRUCTURAL ANALYSIS FOR ANTENNA AND RRH MOUNTING DETAILS

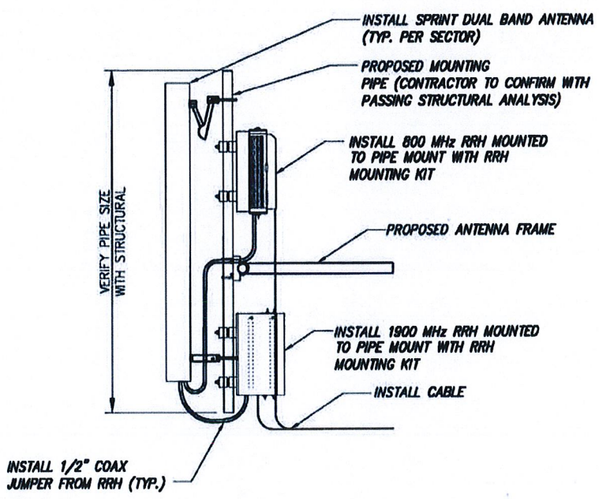

NOTES:

1. CUT DC CONDUCTORS TO LENGTH.
2. COIL FIBER CABLE AND SECURE AT SIDE OF RRH.
3. DO NO EXCEED BEND RADIUS.

TYPICAL DUAL BAND ANTENNA & RRH MOUNTING DETAILS | NO SCALE | 3

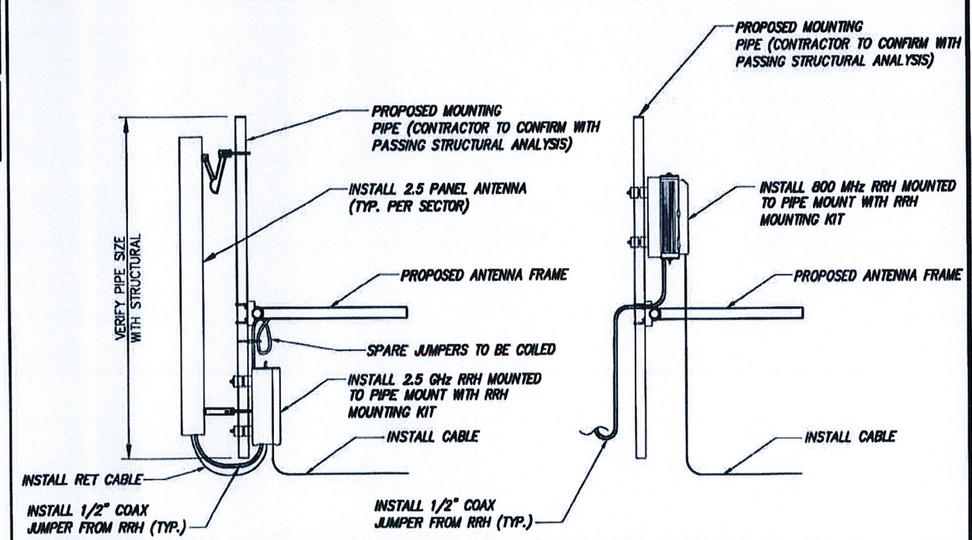

NOTE:
CONTRACTOR TO POSITION RRH ON MOUNT BEHIND ANTENNA SUCH THAT THE RRH DOES NOT INTERFERE WITH THE EXISTING PLATFORM/T-ARM MOUNTING HARDWARE.

NOTE:
THE DIAGRAM IS FOR CONCEPTUAL PURPOSES ONLY. CONTRACTOR IS TO REFER TO PASSING STRUCTURAL ANALYSIS FOR ANTENNA AND RRH MOUNTING DETAILS

NOTES:

1. CUT DC CONDUCTORS TO LENGTH.
2. COIL FIBER CABLE AND SECURE AT SIDE OF RRH.
3. DO NO EXCEED BEND RADIUS.

TYPICAL 2.5 ANTENNA & RRH MOUNTING DETAILS | NO SCALE | 4

PLANS PREPARED FOR:

Sprint

PLANS PREPARED BY:

INFINIGY
FROM ZERO TO INFINIGY
the solutions are endless
1033 Watervliet Shaker Rd | Albany, NY 12205
Phone: 518-690-0790 | Fax: 518-690-0793
www.infinigy.com
JOB NUMBER 526-104

PROJECT MANAGER:

AIROSMITH DEVELOPMENT
32 CLINTON ST.
SARATOGA SPRINGS, NY 12866
OFFICE#. (518) 306-3740

ENGINEERING LICENSE:

STATE OF CONNECTICUT
JOHN S. STEVENS
No. 24705
LICENSED PROFESSIONAL ENGINEER
AUG 10 2018

DRAWING NOTICE:

THESE DOCUMENTS ARE CONFIDENTIAL AND ARE THE SOLE PROPERTY OF SPRINT AND MAY NOT BE REPRODUCED, DISSEMINATED OR REDISTRIBUTED WITHOUT THE EXPRESS WRITTEN CONSENT OF SPRINT.

REVISIONS:

DESCRIPTION	DATE	BY	REV.
REVISED/ ISSUED FOR PERMIT	08/10/18	ETC	1
ISSUED FOR PERMIT	07/09/18	ETC	0

SITE NAME:

NORTH HAVEN CT-1

SITE NUMBER:

CT52XC119

SITE ADDRESS:

15 DWIGHT STREET
NORTH HAVEN, CT 06473

SHEET DESCRIPTION:

ANTENNA LAYOUT & MOUNTING DETAILS

SHEET NUMBER:

A-3

RRH: ALCATEL LUCENT TD-RRH8X20
COLOR: LIGHT GREY
WEIGHT: 70 LBS.

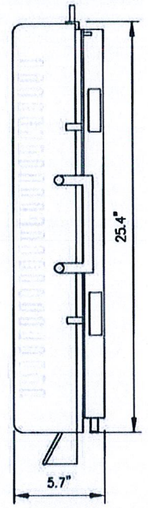

SIDE VIEW

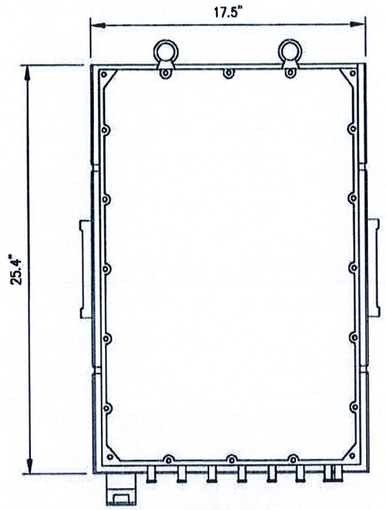

FRONT VIEW

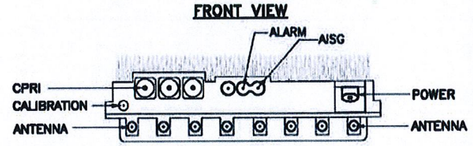

PLAN VIEW

NOTES

COMPLY WITH MANUFACTURERS INSTRUCTIONS TO ENSURE THAT ALL RRH'S RECEIVE ELECTRICAL POWER WITHIN 24 HOURS OF BEING REMOVED FROM THE MANUFACTURER'S PACKAGING. DO NOT OPEN RRH PACKAGES IN THE RAIN.

2.5 RRH'S | NO SCALE | 1

RRH: ALCATEL LUCENT 1900 MHz
COLOR: LIGHT GREY
WEIGHT: 70 LBS.
(INCLUDING OPTIONAL SOLAR SHIELD)

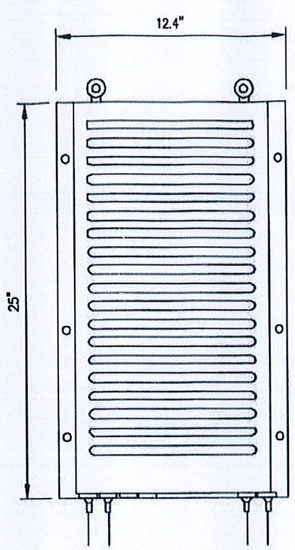

FRONT VIEW

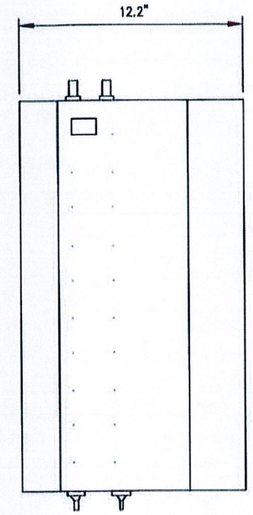

SIDE VIEW

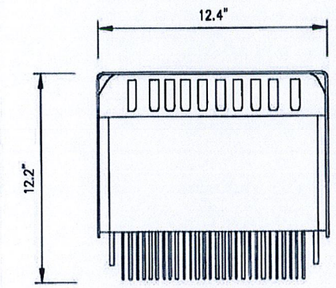

TOP VIEW

1900 MHz RRH | NO SCALE | 2

DETAIL NOT USED | NO SCALE | 3

RRH: ALCATEL LUCENT RRH 800 MHz 2x50W
COLOR: LIGHT GREY
WEIGHT: 53 LBS.

NOTES

COMPLY WITH MANUFACTURERS INSTRUCTIONS TO ENSURE THAT ALL RRH'S RECEIVE ELECTRICAL POWER WITHIN 24 HOURS OF BEING REMOVED FROM THE MANUFACTURER'S PACKAGING. DO NOT OPEN RRH PACKAGES IN THE RAIN.

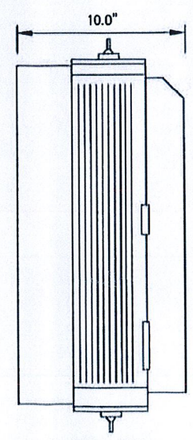

SIDE VIEW

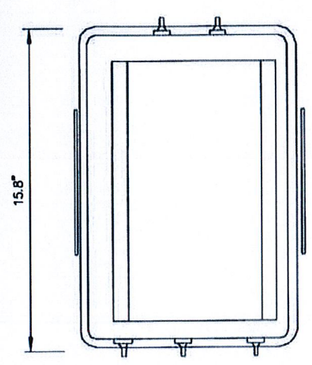

FRONT VIEW

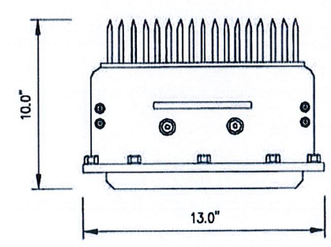

PLAN VIEW

800 MHz RRH | NO SCALE | 4

PLANS PREPARED FOR:

Sprint

PLANS PREPARED BY:

INFINIGY
FROM ZERO TO INFINIGY
the solutions are endless
1033 Watervliet Shaker Rd | Albany, NY 12205
Phone: 518-690-0790 | Fax: 518-690-0793
www.infinigy.com
JOB NUMBER 526-104

PROJECT MANAGER:

AIRSMITH DEVELOPMENT
32 CLINTON ST.
SARATOGA SPRINGS, NY 12866
OFFICE#: (518) 308-3740

ENGINEERING LICENSE:

STATE OF CONNECTICUT
JOHN S. STEVENS
No. 24705
LICENSED PROFESSIONAL ENGINEER
AUG 1 6 2018

DRAWING NOTICE:

THESE DOCUMENTS ARE CONFIDENTIAL AND ARE THE SOLE PROPERTY OF SPRINT AND MAY NOT BE REPRODUCED, DISSEMINATED OR REDISTRIBUTED WITHOUT THE EXPRESS WRITTEN CONSENT OF SPRINT.

REVISIONS:

DESCRIPTION	DATE	BY	REV.
REVISED/ ISSUED FOR PERMIT	08/10/18	ETC	1
ISSUED FOR PERMIT	07/09/18	ETC	0

SITE NAME:
NORTH HAVEN CT-1

SITE NUMBER:
CT52XC119

SITE ADDRESS:
15 DWIGHT STREET
NORTH HAVEN, CT 06473

SHEET DESCRIPTION:
EQUIPMENT & MOUNTING DETAILS

SHEET NUMBER:
A-4

ANTENNA COMMSCOPE NNVV-65B-R4

RADOME MATERIAL:	FIBERGLASS
RADOME COLOR:	LIGHT GREY
DIMENSIONS, HxWxD.in(mim):	71.9"x19.6"x7.8" (1826x498x198mm)
WEIGHT:	77.4 lbs
CONNECTORS:	(2) 7/16" DIN FEMALE (8) 4.1/9.5 DIN FEMALE

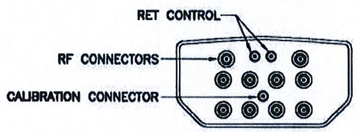

PLAN VIEW

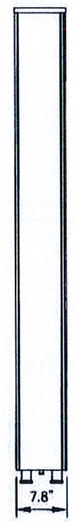

SIDE VIEW

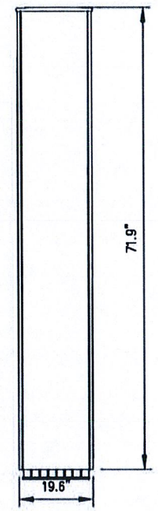

FRONT VIEW

DUAL BAND ANTENNA | NO SCALE | 1

ANTENNA RFS APXVTM14-ALU-I20

RADOME MATERIAL:	ASA
RADOME COLOR:	LIGHT GREY
DIMENSIONS, HxWxD.in(mim):	56.3"x12.6"x6.3" (1549x439x300mm)
WEIGHT:	56.2 lbs
CONNECTORS:	(8) 4.1/9.5 DIN FEMALE (1) NF – CALIBRATION CONNECTOR

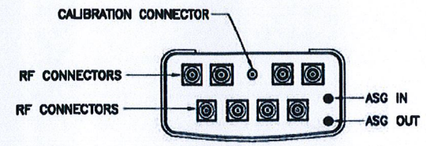

PLAN VIEW

SIDE VIEW

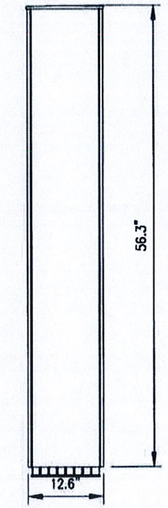

FRONT VIEW

2.5 ANTENNA DETAIL | NO SCALE | 2

DETAIL NOT USED | NO SCALE | 3

DETAIL NOT USED | NO SCALE | 4

PLANS PREPARED FOR:

Sprint

PLANS PREPARED BY:

INFINIGY
FROM ZERO TO INFINIGY
the solutions are endless
1033 Watervliet Shaker Rd | Albany, NY 12205
Phone: 518-690-0790 | Fax: 518-690-0793
www.infinigy.com
JOB NUMBER 526-104

PROJECT MANAGER:

AIROSMITH DEVELOPMENT
52 CLINTON ST.
SARATOGA SPRINGS, NY 12866
OFFICE#. (518) 306-3740

ENGINEERING LICENSE:

STATE OF CONNECTICUT
JOHN S. STEVENS
No. 24705
LICENSED PROFESSIONAL ENGINEER

AUG 10 2018

DRAWING NOTICE:

THESE DOCUMENTS ARE CONFIDENTIAL AND ARE THE SOLE PROPERTY OF SPRINT AND MAY NOT BE REPRODUCED, DISSEMINATED OR REDISTRIBUTED WITHOUT THE EXPRESS WRITTEN CONSENT OF SPRINT.

REVISIONS:

DESCRIPTION	DATE	BY	REV.
REVISED/ ISSUED FOR PERMIT	08/10/18	ETC	1
ISSUED FOR PERMIT	07/09/18	ETC	0

SITE NAME:

NORTH HAVEN CT-1

SITE NUMBER:

CT52XC119

SITE ADDRESS:

15 DWIGHT STREET
NORTH HAVEN, CT 06473

SHEET DESCRIPTION:

EQUIPMENT & MOUNTING DETAILS

SHEET NUMBER:

A-5

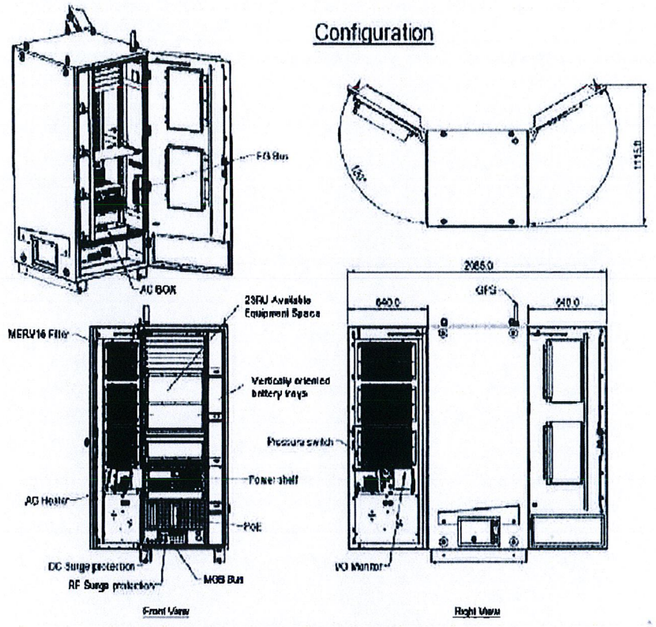

ELTEK ECAB EXTERIOR CABINET
P/N: ESOA220-SCA02

EQUIPMENT CABINET DETAIL | NO SCALE | 1

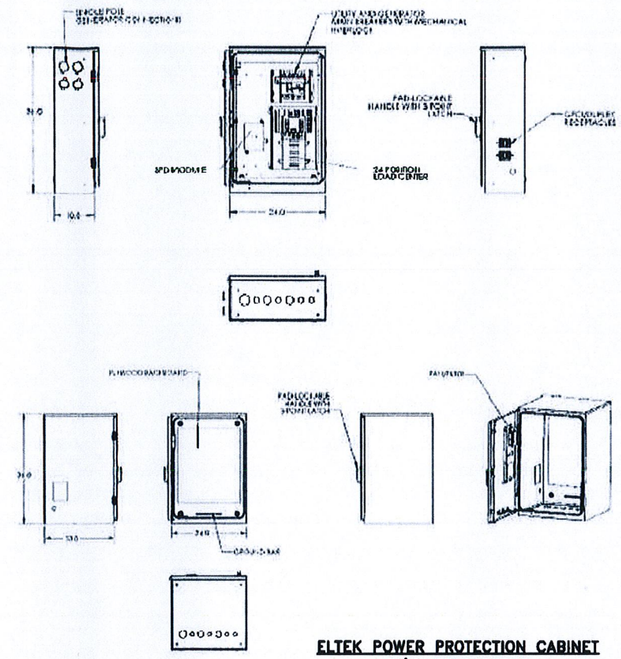

ELTEK POWER PROTECTION CABINET
P/N: 5811122212

EQUIPMENT CABINET DETAIL | NO SCALE | 2

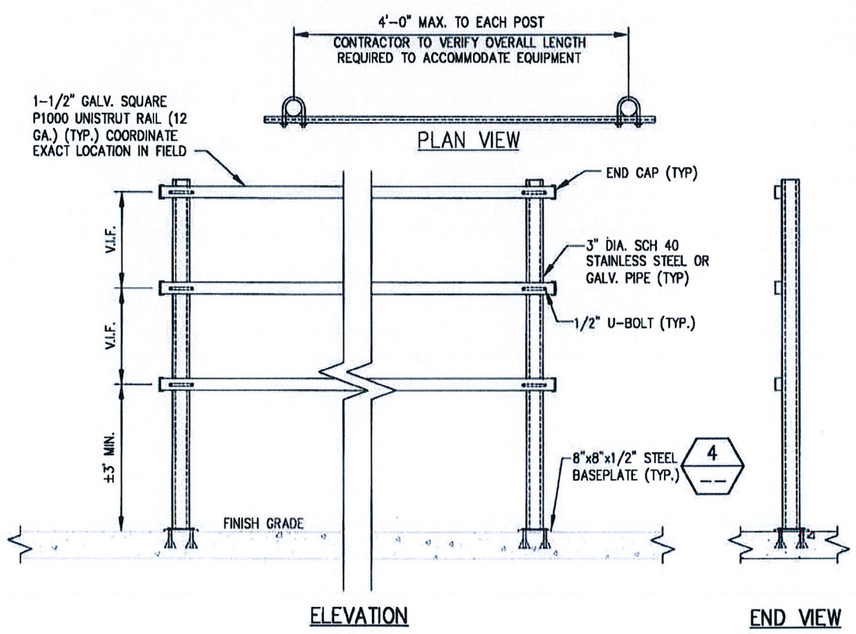

H-FRAME DETAIL | NO SCALE | 3

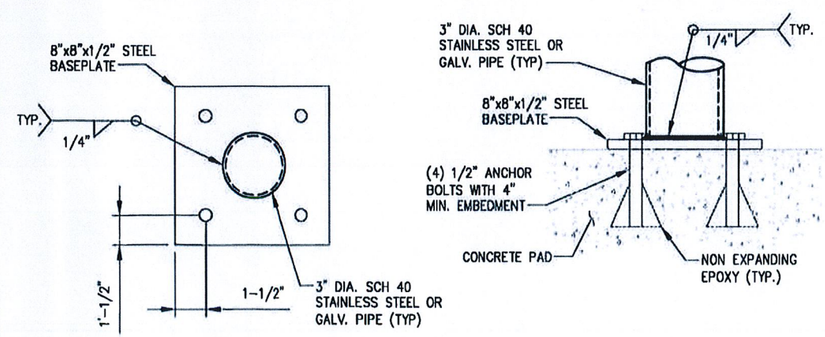

SUPPORT POST MOUNTING DETAIL | NO SCALE | 4

PLANS PREPARED FOR:

Sprint

PLANS PREPARED BY:

INFINIGY
FROM ZERO TO INFINIGY
the solutions are endless
1033 Watervliet Shaker Rd | Albany, NY 12205
Phone: 518-690-0790 | Fax: 518-690-0793
www.infinigy.com
JOB NUMBER 526-104

PROJECT MANAGER:

AIROSMITH DEVELOPMENT
32 CLINTON ST.
SARATOGA SPRINGS, NY 12866
OFFICE#. (518) 306-3740

ENGINEERING LICENSE:

STATE OF CONNECTICUT
JOHN S. STEVENS
No. 24765
LICENSED PROFESSIONAL ENGINEER
AUG 1 0 2018

DRAWING NOTICE:

THESE DOCUMENTS ARE CONFIDENTIAL AND ARE THE SOLE PROPERTY OF SPRINT AND MAY NOT BE REPRODUCED, DISSEMINATED OR REDISTRIBUTED WITHOUT THE EXPRESS WRITTEN CONSENT OF SPRINT.

REVISIONS:

DESCRIPTION	DATE	BY	REV.
REVISED/ ISSUED FOR PERMIT	08/10/18	ETC	1
ISSUED FOR PERMIT	07/09/18	ETC	0

SITE NAME:

NORTH HAVEN CT-1

SITE NUMBER:

CT52XC119

SITE ADDRESS:

15 DWIGHT STREET
NORTH HAVEN, CT 06473

SHEET DESCRIPTION:

EQUIPMENT & MOUNTING DETAILS

SHEET NUMBER:

A-6

RFS HYBRIFLEX RISER CABLE SCHEDULE

Fiber Only (Existing DC Power)	Hybrid cable MN: HB058-M12-050F 12x multi-mode fiber pairs, Top: Outdoor protected connectors, Bottom: LC Connectors, 5/8 cable, 50 ft	50 ft
	MN: HB058-M12-075F	75 ft
	MN: HB058-M12-100F	100 ft
	MN: HB058-M12-125F	125 ft
	MN: HB058-M12-150F	150 ft
	MN: HB058-M12-175F	175 ft
	MN: HB058-M12-200F	200 ft
8 AWG Power	Hybrid cable MN: HB114-08U3M12-050F 3x 8 AWG power pairs, 12x multi-mode fiber pairs, Outdoor rated connectors & LC Connectors, 1 1/4 cable, 50 ft	50 ft
	MN: HB114-08U3M12-075F	75 ft
	MN: HB114-08U3M12-100F	100 ft
	MN: HB114-08U3M12-125F	125 ft
	MN: HB114-08U3M12-150F	150 ft
	MN: HB114-08U3M12-175F	175 ft (4)*
	MN: HB114-08U3M12-200F	200 ft
6 AWG Power	Hybrid cable MN: HB114-13U3M12-225F 3x 6 AWG power pair, 12x multi-mode fiber pairs, Outdoor rated connectors & LC Connectors, 1 1/4 cable, 225 ft	225 ft
	MN: HB114-13U3M12-250F	250 ft
	MN: HB114-13U3M12-275F	275 ft
	MN: HB114-13U3M12-300F	300 ft
4 AWG Power	Hybrid cable MN: HB114-21U3M12-325F 3x 4 AWG power pair, 12x multi-mode fiber pairs, Outdoor rated connectors & LC Connectors, 1 1/4 cable, 325 ft	325 ft
	MN: HB114-21U3M12-350F	350 ft
	MN: HB114-21U3M12-375F	375 ft

RFS HYBRIFLEX JUMPER CABLE SCHEDULE

Fiber Only	Hybrid Jumper cable MN: HBF012-M3-5F1 5 ft, 3x multi-mode fiber pairs, Outdoor & LC connectors, 1/2 cable	5 ft
	MN: HBF012-M3-10F1	10 ft
	MN: HBF012-M3-15F1	15 ft
	MN: HBF012-M3-20F1	20 ft
	MN: HBF012-M3-25F1	25 ft
	MN: HBF012-M3-30F1	30 ft
8 AWG Power	Hybrid Jumper cable MN: HBF058-08U1M3-5F1 5 ft, 1x 8 AWG power pair, 3x multi-mode fiber pairs, Outdoor & LC Connectors, 5/8 cable	5 ft
	MN: HBF058-08U1M3-10F1	10 ft
	MN: HBF058-08U1M3-15F1	15 ft
	MN: HBF058-08U1M3-20F1	20 ft
	MN: HBF058-08U1M3-25F1	25 ft
	MN: HBF058-08U1M3-30F1	30 ft
6 AWG Power	Hybrid Jumper cable MN: HBF058-13U1M3-5F1 5 ft, 1x 6 AWG power pair, 3x multi-mode fiber pairs, Outdoor & LC Connectors, 5/8 cable	5 ft
	MN: HBF058-13U1M3-10F1	10 ft
	MN: HBF058-13U1M3-15F1	15 ft
	MN: HBF058-13U1M3-20F1	20 ft
	MN: HBF058-13U1M3-25F1	25 ft
	MN: HBF058-13U1M3-30F1	30 ft
4 AWG Power	Hybrid Jumper cable MN: HBF078-21U1M3-5F1 5 ft, 1x 4 AWG power pair, 3x multi-mode fiber pairs, Outdoor & LC Connectors, 7/8 cable	5 ft
	MN: HBF078-21U1M3-10F1	10 ft
	MN: HBF078-21U1M3-15F1	15 ft
	MN: HBF078-21U1M3-20F1	20 ft
	MN: HBF078-21U1M3-25F1	25 ft
	MN: HBF078-21U1M3-30F1	30 ft

NOTE:
SPRINT CM TO CONFIRM HYBRID OR FIBER RISER CABLE AND HYBRID OR FIBER JUMPER CABLE MODEL NUMBERS IF HYBRID CABLES ARE REQUIRED BEFORE PREPARING BOM.

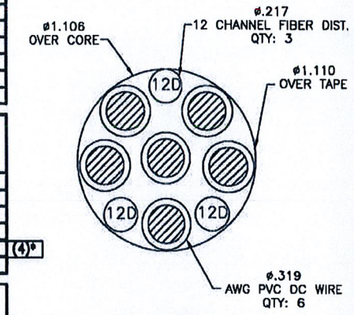

4 AWG

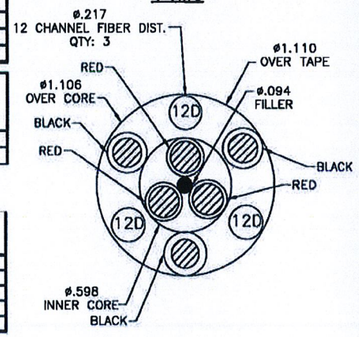

8 & 6 AWG

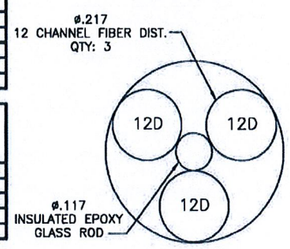

FIBER ONLY

* PROPOSED CABLE LENGTH WAS DETERMINED USING THE SUM OF THE RAD CENTER OF ANTENNAS, AND DISTANCE FROM EXISTING EQUIPMENT AREA TO TOWER BASE WITH AN ADDITIONAL 20' BUFFER. LENGTH TO BE VERIFIED IN FIELD PRIOR TO ORDERING MATERIALS.

800/1900/2500 CABLE CROSS SECTION DATA | NO SCALE | 1

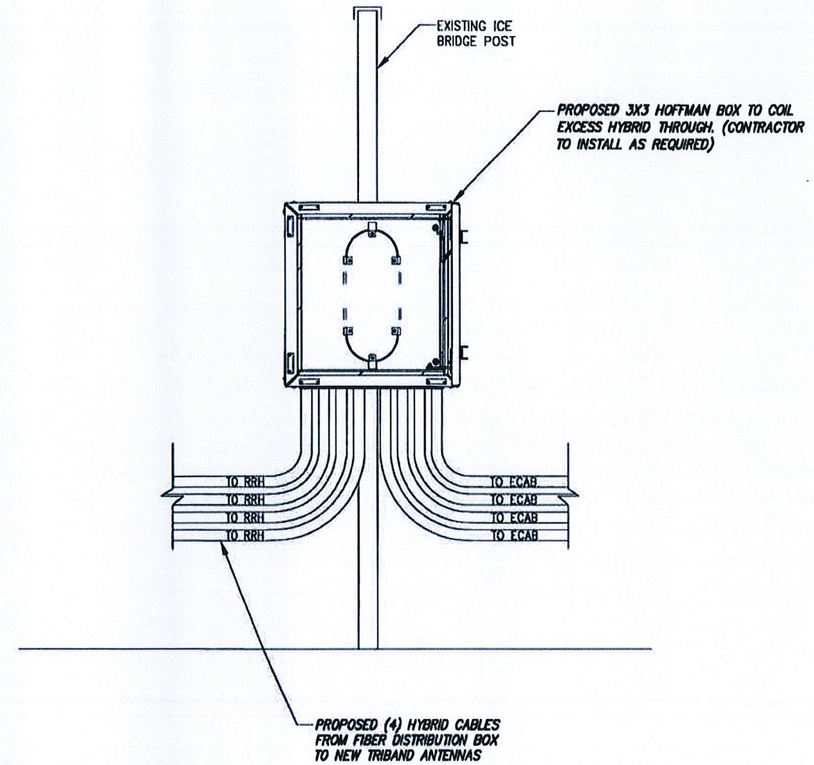

OPTIONAL HYBRID SLACK BOX | NO SCALE | 2

DETAIL NOT USED | NO SCALE | 3

PLANS PREPARED FOR:

Sprint

PLANS PREPARED BY:

INFINIGY
FROM ZERO TO INFINIGY
the solutions are endless
1033 Watervliet Shaker Rd | Albany, NY 12205
Phone: 518-690-0790 | Fax: 518-690-0793
www.infinigy.com
JOB NUMBER 526-104

PROJECT MANAGER:

AIROSMITH DEVELOPMENT
32 CLINTON ST.
SARATOGA SPRINGS, NY 12866
OFFICE#. (518) 306-3740

ENGINEERING LICENSE:

STATE OF CONNECTICUT
JOHN S. STEVENS
No. 24705
LICENSED PROFESSIONAL ENGINEER
AUG 10 2018

DRAWING NOTICE:

THESE DOCUMENTS ARE CONFIDENTIAL AND ARE THE SOLE PROPERTY OF SPRINT AND MAY NOT BE REPRODUCED, DISSEMINATED OR REDISTRIBUTED WITHOUT THE EXPRESS WRITTEN CONSENT OF SPRINT.

REVISIONS:

DESCRIPTION	DATE	BY	REV.
REVISED/ ISSUED FOR PERMIT	08/10/18	ETC	1
ISSUED FOR PERMIT	07/09/18	ETC	0

SITE NAME:

NORTH HAVEN CT-1

SITE NUMBER:

CT52XC119

SITE ADDRESS:

15 DWIGHT STREET
NORTH HAVEN, CT 06473

SHEET DESCRIPTION:

CIVIL DETAILS

SHEET NUMBER:

A-7

ALU-NSN 211 APXVTM14-ALU-I20 & NNVV-65B-R4 wo Filters

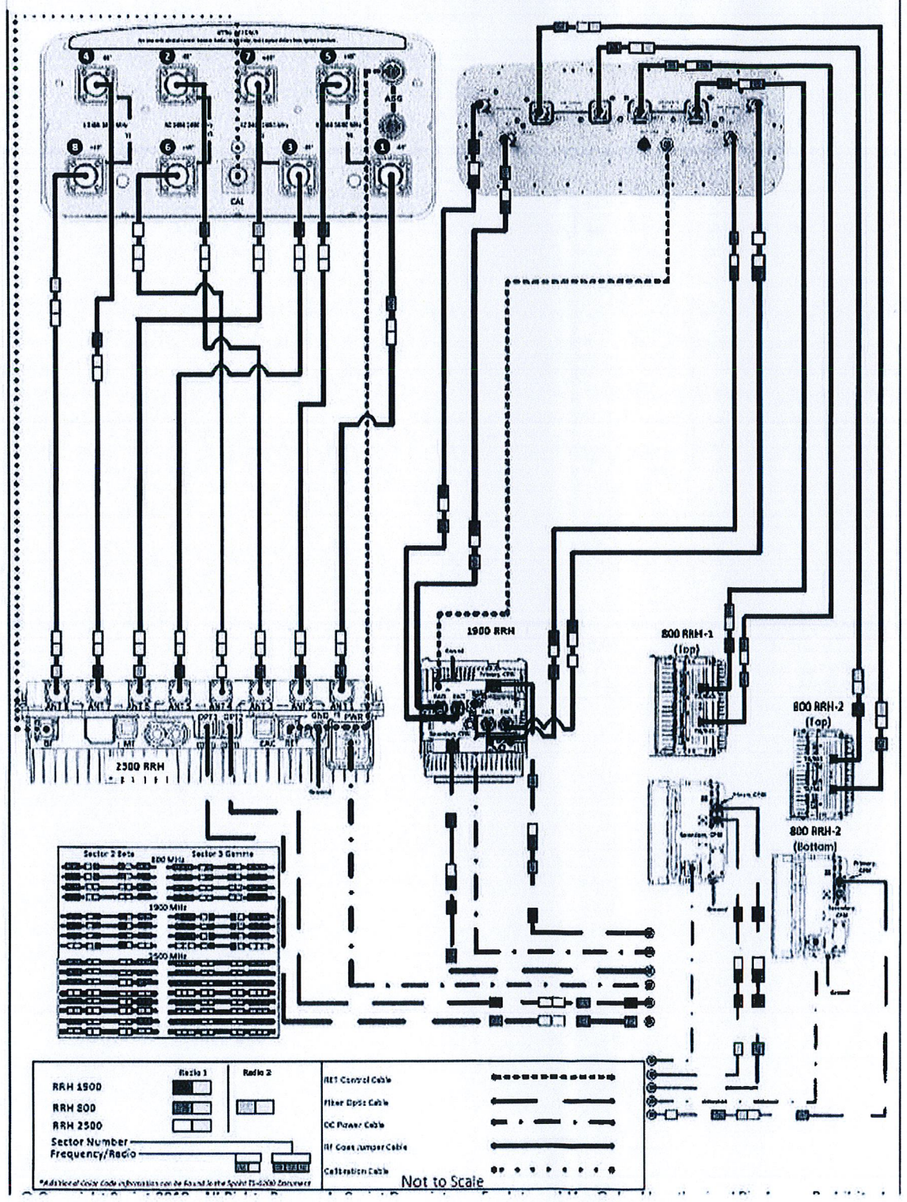

PLUMBING DIAGRAM | NO SCALE | 1

PLANS PREPARED FOR:

Sprint

PLANS PREPARED BY:

INFINIGY
FROM ZERO TO INFINIGY
the solutions are endless
1033 Watervliet Shaker Rd | Albany, NY 12205
Phone: 518-690-0790 | Fax: 518-690-0793
www.infinigy.com
JOB NUMBER 526-104

PROJECT MANAGER:

AIRSMITH DEVELOPMENT
32 CLINTON ST.
SARATOGA SPRINGS, NY 12866
OFFICE#. (518) 306-3740

ENGINEERING LICENSE:

STATE OF CONNECTICUT
JOHN S. STEVENS
No. 24705
LICENSED PROFESSIONAL ENGINEER
AUG 10 2018

DRAWING NOTICE:

THESE DOCUMENTS ARE CONFIDENTIAL AND ARE THE SOLE PROPERTY OF SPRINT AND MAY NOT BE REPRODUCED, DISSEMINATED OR REDISTRIBUTED WITHOUT THE EXPRESS WRITTEN CONSENT OF SPRINT.

REVISIONS:

DESCRIPTION	DATE	BY	REV.
REVISED/ ISSUED FOR PERMIT	08/10/18	ETC	1
ISSUED FOR PERMIT	07/09/18	ETC	0

SITE NAME:

NORTH HAVEN CT-1

SITE NUMBER:

CT52XC119

SITE ADDRESS:

15 DWIGHT STREET
NORTH HAVEN, CT 06473

SHEET DESCRIPTION:

PLUMBING DIAGRAM

SHEET NUMBER:

A-8

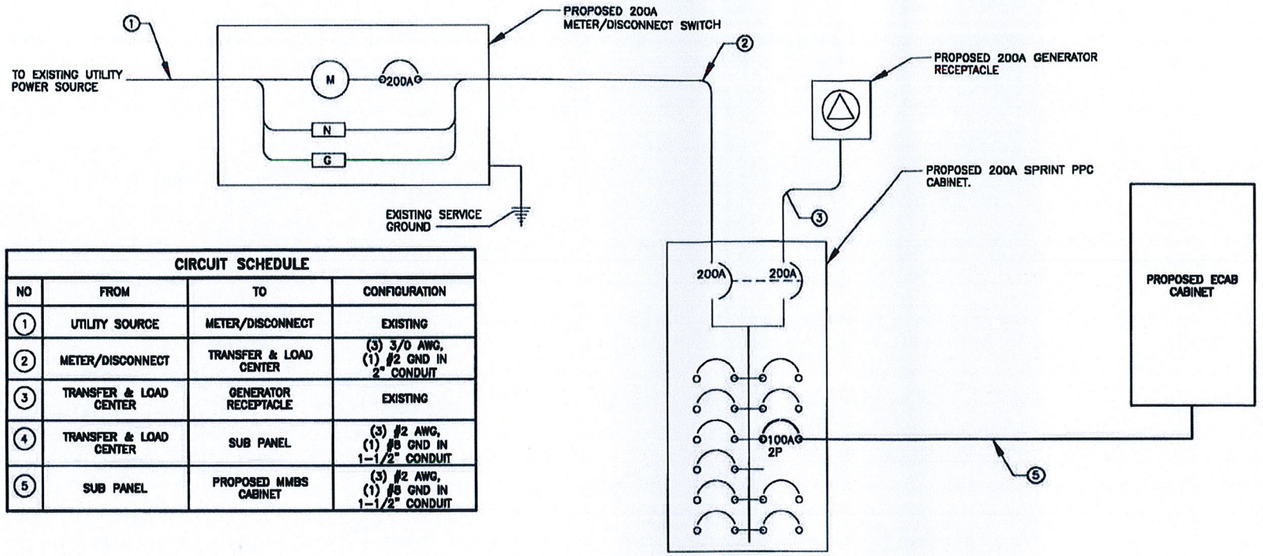

CIRCUIT SCHEDULE

NO	FROM	TO	CONFIGURATION
1	UTILITY SOURCE	METER/DISCONNECT	EXISTING
2	METER/DISCONNECT	TRANSFER & LOAD CENTER	(3) 3/0 AWG, (1) #2 GND IN 2" CONDUIT
3	TRANSFER & LOAD CENTER	GENERATOR RECEPTACLE	EXISTING
4	TRANSFER & LOAD CENTER	SUB PANEL	(3) #2 AWG, (1) #6 GND IN 1-1/2" CONDUIT
5	SUB PANEL	PROPOSED MMBS CABINET	(3) #2 AWG, (1) #6 GND IN 1-1/2" CONDUIT

ONE LINE DIAGRAM | NO SCALE | 1

GENERAL ELECTRICAL NOTES:

1. ALL ELECTRICAL WORK SHALL BE IN ACCORDANCE WITH THE LATEST VERSION OF THE NATIONAL ELECTRICAL CODE AND ALL LOCAL AND STATE CODES, LAWS, AND ORDINANCES.
2. ALL UNDERGROUND CONDUIT SHALL BE PVC SCHEDULE 40 UNLESS OTHERWISE INDICATED. CONDUITS EXPOSED ABOVE GROUND SHALL BE RIGID GALVANIZED STEEL. ALL UNDERGROUND CONDUIT SHALL TRANSITION FROM PVC TO RIGID ABOVE GRADE. PROVIDE 36" SEPARATION BETWEEN UNDERGROUND POWER AND TELEPHONE CONDUITS. SUPPLY UTILITY MARKING TAPE BURIED 12" BELOW GRADE ALONG ENTIRE LENGTH OF UNDERGROUND CONDUITS.
3. ALL CONDUCTORS SHALL BE COPPER WITH THHN/THWN INSULATION. CONTROL CONDUCTORS SHALL BE STRANDED, POWER & LIGHTING CONDUCTORS SHALL BE SOLID FOR #10 & #12 CONDUCTORS AND STRANDED FOR ALL OTHER SIZES.
4. ELECTRICAL DRAWINGS ARE IN PART DIAGRAMMATIC. COORDINATE ELECTRICAL WORK WITH SITE CONDITIONS.
5. LOCATE ALL UNDERGROUND UTILITIES BEFORE TRENCHING. IF CONFLICTS ARISE, CONTACT UTILITY COMPANY AND ENGINEER IMMEDIATELY.
6. ALL EXPOSED CONDUITS SHALL HAVE WEATHERPROOF CAPS NOT DUCT TAPE.
7. PROVIDE 200 LB TEST PULL WIRES IN EACH TELEPHONE AND POWER CONDUIT.
8. PULL BOXES SHALL BE INSTALLED AS NEEDED PER NEC UTILITY REQUIREMENTS.

ELECTRICAL NOTES | NO SCALE | 2

GENERAL GROUNDING NOTES:

1. TO ENSURE PROPER BONDING, ALL CONNECTIONS SHALL BE AS FOLLOWS:
   - #2/0 BARE TINNED SOLID COPPER CONDUCTOR: CADWELD TO RODS OR GROUND RING
   - LUGS AND BUS BAR (UNLESS NOTED OTHERWISE): SANDED CLEAN, COATED WITH OXIDE INHIBITOR AND BOLTED FOR MAXIMUM SURFACE CONTACT. ALL LUGS SHALL BE COPPER (NO ALUMINUM SHALL BE PERMITTED). PROVIDE LOCK WASHERS FOR ALL MECHANICAL CONNECTIONS FOR GROUND CONDUCTORS. USE STAINLESS STEEL HARDWARE THROUGHOUT.
2. ALL GROUNDING CABLE IN CONCRETE OR THROUGH WALLS SHALL BE IN 3/4" PVC CONDUIT. SEAL AROUND CONDUIT THROUGH WALLS. NO METALLIC CONDUIT SHALL BE USED FOR GROUNDING CONDUCTORS.
3. OWNER'S REPRESENTATIVE WILL INSPECT CADWELDS AND CONDUCT MEGGER TEST PRIOR TO BURIAL. MAXIMUM 5 OHMS RESISTANCE IS REQUIRED.
4. DO NOT INSTALL GROUND RING OUTSIDE OF LEASED AREA.
5. MAKE ALL GROUND CONNECTIONS AS SHORT AND DIRECT AS POSSIBLE. AVOID SHARP BENDS. ALL BENDS SHALL BE A MINIMUM 8" RADIUS AND NO GREATER THAN 90 DEGREES.
6. ALL CADWELDS TO BURIED GROUND RING SHALL BE THE PARALLEL TYPE, EXCEPT FOR THE GROUND RODS WHICH SHALL BE THE TEE TYPE.
7. BOND SERVICE CONDUITS TO GROUND RING AS THEY CROSS. DO NOT EXOTHERMICALLY WELD TO CONDUITS.
8. THE CONTRACTOR SHALL NOTIFY THE CONSTRUCTION MANAGER WHEN THE GROUNDING SYSTEM IS COMPLETE. THE CONSTRUCTION MANAGER SHALL INSPECT THE GROUNDING SYSTEM PRIOR TO BACKFILLING.
9. THE MINIMUM SPACING BETWEEN GROUND RODS SHALL BE 10'-0" (MAX. 15'-0").
10. BOND CIGBE TO EXTERNAL GROUND RING WITH 2 RUNS OF #2 BARE, TINNED, SOLID COPPER CONDUCTOR IN PVC. CONNECT BAR END WITH 2 HOLE LUG, AND "CADWELD" THE OTHER END TO THE EXTERNAL GROUND ROD.
11. THE PREFERRED LOCATION FOR COAX GROUNDING IS AT THE BASE OF THE TOWER PRIOR TO THE COAX BEND. BONDING IS SHOWN ON THE ICE BRIDGE DUE TO DIFFICULTY WITH WELDING OR ATTACHING TO TOWER LEGS. CONTRACTOR SHALL ADVISE CONSTRUCTION MANAGER PRIOR TO PLACING CIGBE ON ICE BRIDGE IF MOUNTING TO TOWER LEG IS POSSIBLE.
12. BONDING OF THE GROUNDED CONDUCTOR (NEUTRAL) AND THE GROUNDING CONDUCTOR SHALL BE AT THE SERVICE DISCONNECTING MEANS. BONDING JUMPER SHALL BE INSTALLED PER N.E.C. ARTICLE 250-30.

GROUNDING NOTES | NO SCALE | 3

PLANS PREPARED FOR:

Sprint

PLANS PREPARED BY:

INFINIGY
FROM ZERO TO INFINIGY
the solutions are endless
1033 Watervliet Shaker Rd | Albany, NY 12205
Phone: 518-690-0790 | Fax: 518-690-0793
www.infinigy.com
JOB NUMBER 526-104

PROJECT MANAGER:

AIROSMITH DEVELOPMENT
22 CLINTON ST.
SARATOGA SPRINGS, NY 12866
OFFICE# (518) 306-3740

ENGINEERING LICENSE:

STATE OF CONNECTICUT
JOHN S. STEVENS
No. 24
LICENSED PROFESSIONAL ENGINEER
08-13-2018

DRAWING NOTICE:

THESE DOCUMENTS ARE CONFIDENTIAL AND ARE THE SOLE PROPERTY OF SPRINT AND MAY NOT BE REPRODUCED, DISSEMINATED OR REDISTRIBUTED WITHOUT THE EXPRESS WRITTEN CONSENT OF SPRINT.

REVISIONS:

DESCRIPTION	DATE	BY	REV.
REVISED/ ISSUED FOR PERMIT	08/10/18	ETC	1
ISSUED FOR PERMIT	07/09/18	ETC	0

SITE NAME:

NORTH HAVEN CT-1

SITE NUMBER:

CT52XC119

SITE ADDRESS:

15 DWIGHT STREET
NORTH HAVEN, CT 06473

SHEET DESCRIPTION:

ELECTRICAL & GROUNDING PLAN

SHEET NUMBER:

E-1

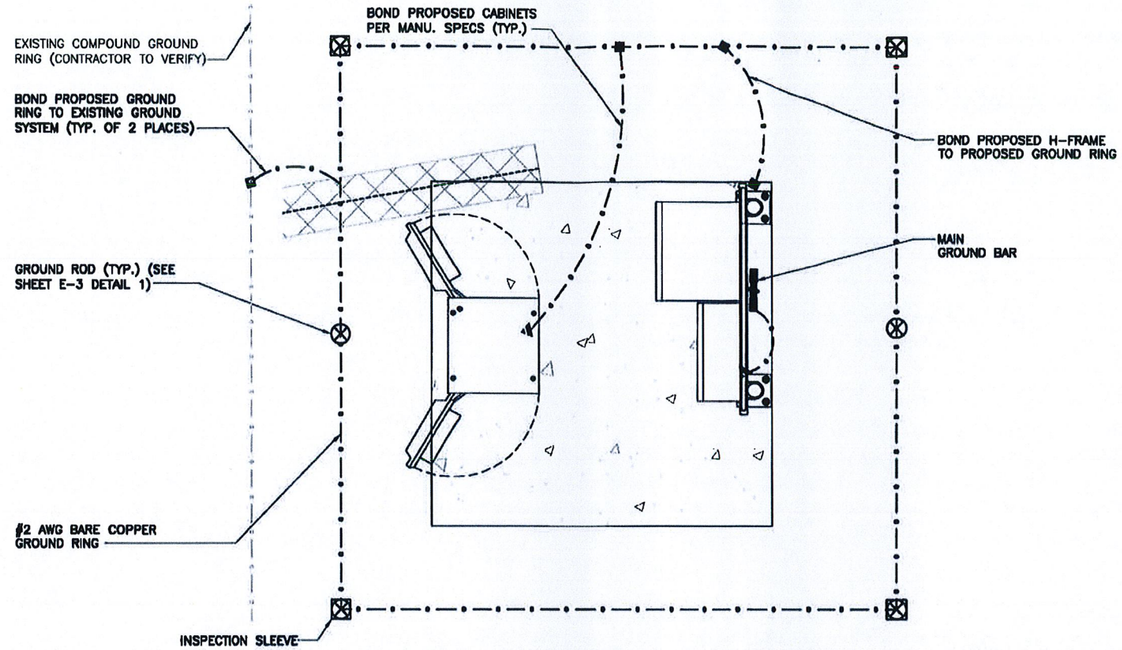

LEGEND:

- EXISTING GROUND RING
- CADWELD CONNECTION (EXOTHERMIC WELD)
- MECHANICAL CONNECTION
- GROUND ROD

GROUNDING PLAN

NO SCALE | 1

NOTE:
1. COPPER GROUND BAR 1/4"x4"x24" 2-HOLE CONTERS TO MATCH NEMA DOUBLE LUG CONFIGURATION.
2. SIMILAR INSTALLATION FOR TOP AND BOTTOM TOWER GROUND BARS AND FOR COAX ENTRY PORT GROUND BARS.

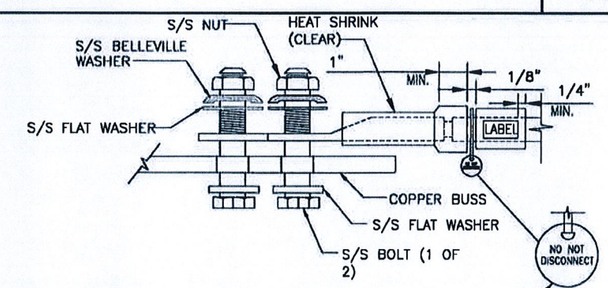

NOTE:
ALL MECHANICAL EXTERNAL TERMINATION SURFACES SHALL BE TREATED WITH T&B KOPR-SHIELD CP8 ANTI-OXIDATION COMPOUND.

"DO NOT DISCONNECT" TAG ON ALL GROUND BAR INTERCONNECTS

EQUIPMENT GROUND CONNECTION

NO SCALE | 4

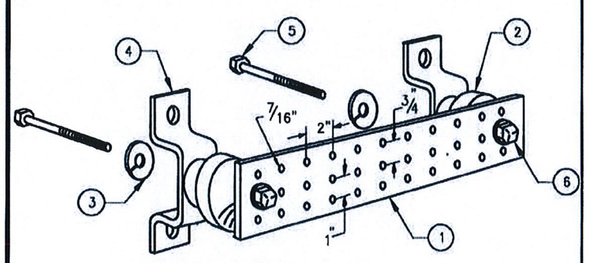

LEGEND

1 – TINNED COPPER GROUND BAR, 1/4"x 4"x 24"
2 – INSULATORS (NO INSULATORS ON TOWER)
3 – 5/8" LOCK WASHERS
4 – MOUNTING BRACKET (MOUNT HORIZONTAL ON VERTICAL CABLE LADDER)
5 – 5/8-11 X 1" H.H.C.S.BOLTS
6 – "LOCTITE" THREAD LOCK (RED) ON ALL REMOVABLE BOLTS

TINNED GROUND BAR DETAIL

NO SCALE | 2

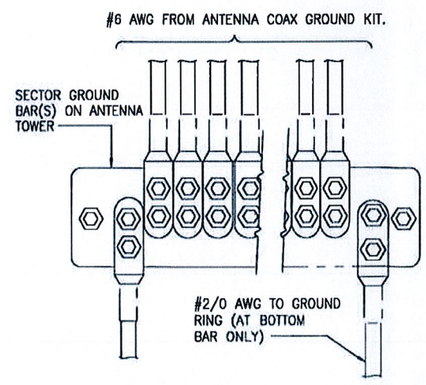

ANTENNA GROUND WIRE INSTALLATION

NO SCALE | 3

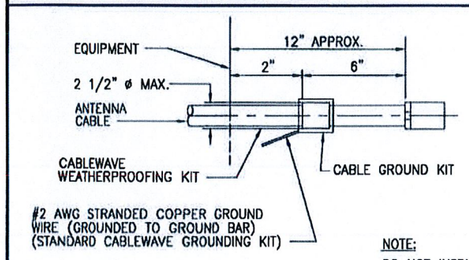

NOTE:
DO NOT INSTALL CABLE GROUND KIT AT A BEND AND ALWAYS DIRECT GROUND WIRE DOWN TO GROUND BAR.

CABLE GROUND KIT CONNECTION

NO SCALE | 5

PLANS PREPARED FOR:

Sprint

PLANS PREPARED BY:

INFINIGY
FROM ZERO TO INFINIGY
the solutions are endless
1033 Watervliet Shaker Rd | Albany, NY 12205
Phone: 518-690-0790 | Fax: 518-690-0793
www.infinigy.com
JOB NUMBER 526-104

PROJECT MANAGER:

AIROSMITH DEVELOPMENT
32 CLINTON ST.
SARATOGA SPRINGS, NY 12866
OFFICE#. (518) 306-3740

ENGINEERING LICENSE:

STATE OF CONNECTICUT
JOHN S. STEVENS
No. 24705
LICENSED PROFESSIONAL ENGINEER
DATE: 7-0-2018

DRAWING NOTICE:

THESE DOCUMENTS ARE CONFIDENTIAL AND ARE THE SOLE PROPERTY OF SPRINT AND MAY NOT BE REPRODUCED, DISSEMINATED OR REDISTRIBUTED WITHOUT THE EXPRESS WRITTEN CONSENT OF SPRINT.

REVISIONS:

DESCRIPTION	DATE	BY	REV.
REVISED/ ISSUED FOR PERMIT	08/10/18	ETC	1
ISSUED FOR PERMIT	07/09/18	ETC	0

SITE NAME:

NORTH HAVEN CT-1

SITE NUMBER:

CT52XC119

SITE ADDRESS:

15 DWIGHT STREET
NORTH HAVEN, CT 06473

SHEET DESCRIPTION:

ELECTRICAL & GROUNDING PLAN

SHEET NUMBER:

E-2

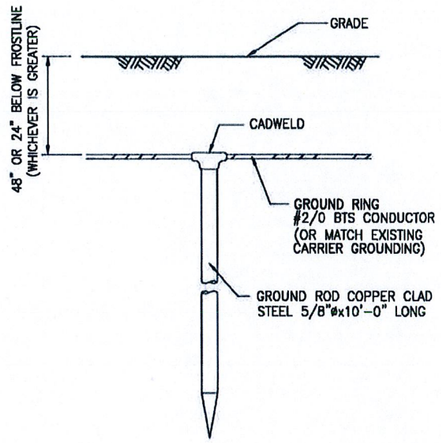

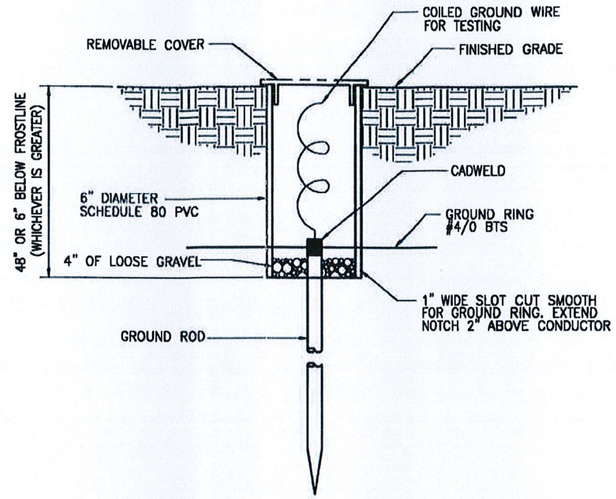

GROUND ROD & INSPECTION SLEEVE DETAIL — NO SCALE — 1

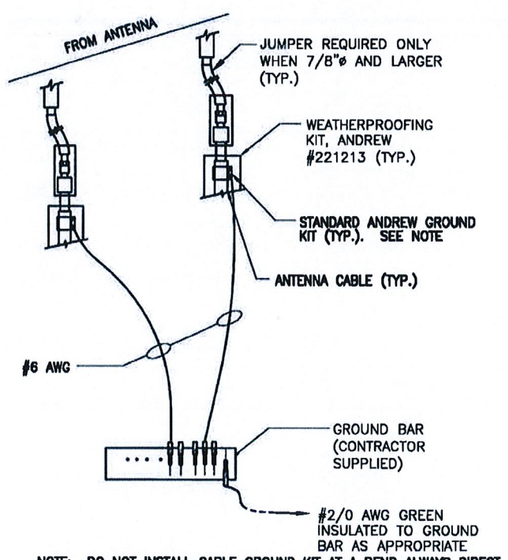

NOTE: DO NOT INSTALL CABLE GROUND KIT AT A BEND ALWAYS DIRECT GROUND WIRE DOWN TO CIGBE

CONNECTION OF GROUND WIRES TO GROUND BARS @ ANTENNAS — NO SCALE — 2

LEGEND:

- EXISTING GROUND RING
- CADWELD CONNECTION (EXOTHERMIC WELD)
- MECHANICAL CONNECTION
- GROUND ROD
- CABLE GROUND KIT

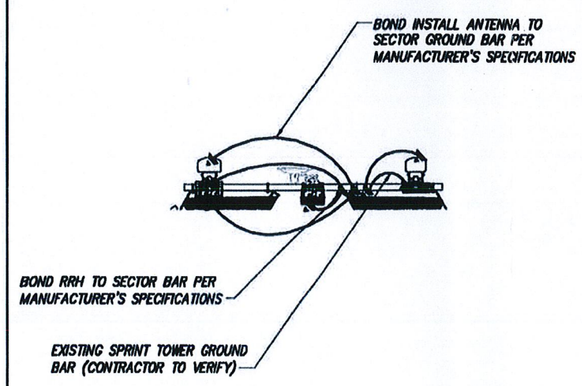

TYPICAL ANTENNA GROUNDING PLAN — NO SCALE — 3

LEGEND:

- EXISTING GROUND RING
- CADWELD CONNECTION (EXOTHERMIC WELD)
- MECHANICAL CONNECTION
- GROUND ROD
- CABLE GROUND KIT

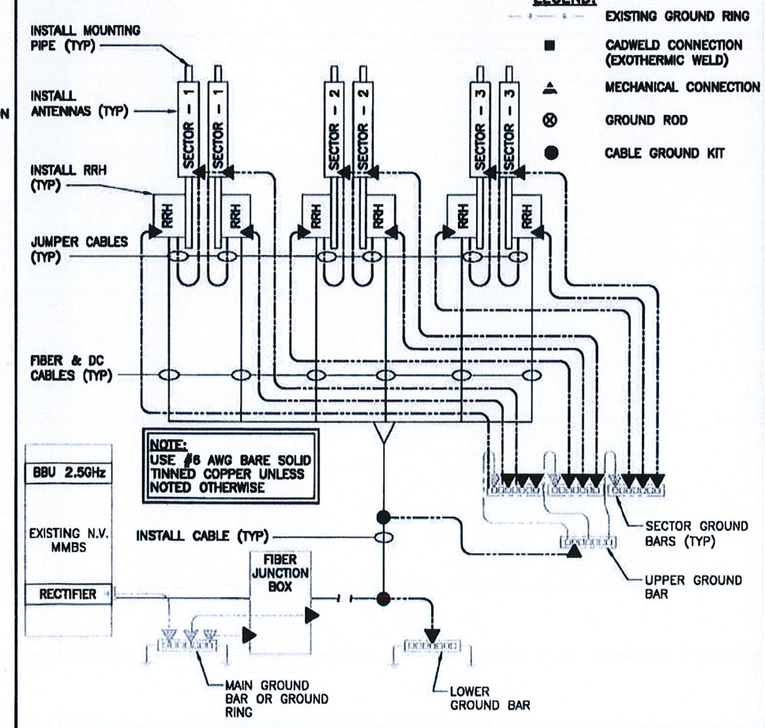

GROUNDING RISER DIAGRAM — NO SCALE — 4

PLANS PREPARED FOR:

Sprint

PLANS PREPARED BY:

INFINIGY
FROM ZERO TO INFINIGY
the solutions are endless
1033 Watervliet Shaker Rd | Albany, NY 12205
Phone: 518-690-0790 | Fax: 518-690-0793
www.infinigy.com
JOB NUMBER 526-104

PROJECT MANAGER:

AIRSMITH DEVELOPMENT
32 CLINTON ST.
SARATOGA SPRINGS, NY 12866
OFFICE#. (518) 308-3740

ENGINEERING LICENSE:

STATE OF CONNECTICUT · JOHN S. STEVENS · No. 24708 · LICENSED PROFESSIONAL ENGINEER

DRAWING NOTICE:

THESE DOCUMENTS ARE CONFIDENTIAL AND ARE THE SOLE PROPERTY OF SPRINT AND MAY NOT BE REPRODUCED, DISSEMINATED OR REDISTRIBUTED WITHOUT THE EXPRESS WRITTEN CONSENT OF SPRINT.

REVISIONS:

DESCRIPTION	DATE	BY	REV.
REVISED/ ISSUED FOR PERMIT	08/10/18	ETC	1
ISSUED FOR PERMIT	07/09/18	ETC	0

SITE NAME: NORTH HAVEN CT-1

SITE NUMBER: CT52XC119

SITE ADDRESS: 15 DWIGHT STREET NORTH HAVEN, CT 06473

SHEET DESCRIPTION: ELECTRICAL & GROUNDING DETAILS

SHEET NUMBER: E-3