Crown Castle
3 Corporate Park Drive, Suite 101
Clifton Park, NY 12065

December 26, 2018

Melanie A. Bachman
Acting Executive Director
Connecticut Siting Council
10 Franklin Square
New Britain, CT 06051

RE: **Notice of Exempt Modification for Verizon / Crown Site BU: 806354**
Verizon Site ID: Newtown CT
21 Berkshire Road, Newtown, CT 06482
Latitude: 41° 24′ 45.53″/ Longitude: -73° 16′ 12.34″

Dear Ms. Bachman:

Verizon is requesting to file an Exempt Modification for an existing 185-foot monopole tower at 21 Berkshire Road in Newtown, CT. The tower is owned by Crown Castle. The property is owned by the Carmine Renzulli. Verizon currently has twelve (12) panel antennas installed at the 188 foot elevation on the tower. Verizon now intends to remove nine (9) existing antennas and three (3) RRUs and replace with six (6) panel antennas, (6) RRUs, (6) diplexers, and (1) handrail kit.

This facility was approved by the by the Connecticut Siting Council in Docket No. 89 on March 3, 1988.
This approval included the conditions that:

1. The monopole tower at the Newtown site shall be no taller than necessary to provide the proposed service, and in no event shall exceed a total height of 193 feet, including antennas and associated equipment. **The proposed antenna will have a total height of 192 feet to the top of the antenna.**

2. The facility shall be constructed in accordance with all applicable federal, state, an municipal laws and regulations.

3. Unless necessary to comply with condition number 2, above, no lights shall be installed on this tower.

This modification complies with the aforementioned condition(s).

Please accept this letter as notification pursuant to Regulations of Connecticut State Agencies § 16-50j- 73, for construction that constitutes an exempt modification pursuant to R.C.S.A. § 16-50j-72(b)(2). In accordance with R.S.C.A. § 16-50j-73, a copy of this letter is being sent to Daniel C. Rosenthal, First Selectman, Town of Newtown, as well as the Town Planner, and property owner.

1. The proposed modifications will not result in an increase in the height of the existing tower.

2. The proposed modifications will not require the extension of the site boundary.

3. The proposed modification will not increase noise levels at the facility by six decibels or more, or to levels that exceed state and local criteria.

4. The operation of the replacement antennas will not increase radio frequency emissions at the facility to a level at or above the Federal Communication Commission safety standard.
5. The proposed modifications will not cause a change or alteration in the physical or environmental characteristics of the site.

6. The existing structure and its foundation can support the proposed loading.

For the foregoing reasons, Verizon respectfully submits that the proposed modifications to the above-reference telecommunications facility constitutes an exempt modification under R.C.S.A. § 16-50j-72(b)(2). Please send approval/rejection letter to Attn: William Stone.

Sincerely,

William Stone
Real Estate Specialist
3 Corporate Park Drive, Suite 101
Clifton Park, NY 12065
518-373-3543
William.stone@crowncastle.com

Attachments:

Tab 1: Exhibit-1: Compound plan and elevation depicting the planned changes
Tab 2: Exhibit-2: Structural Modification Report
Tab 3: Exhibit-3: General Power Density Table Report (RF Emissions Analysis Report)

cc:

Daniel C. Rosenthal
Newtown Municipal Center
3 Primrose Street
Newtown, CT 06470
(203) 270-4201

Planning and Zoning
Newtown Municipal Center
3 Primrose Street
Newtown, CT 06470
(203) 270-4276

Carmine Renzulli
505 Westport Ave, Lot 31
Norwalk, CT 06851
(203) 856-5411

ORIGIN ID:GFLA (518) 373-3523
ANNE MARIE ZSAMBA
CROWN CASTLE
3 CORPORATE PARK DRIVE
SUITE 101
CLIFTON PARK, NY 12065
UNITED STATES US

SHIP DATE: 26DEC18
ACTWGT: 1.50 LB
CAD: 104924194/INET4040

BILL SENDER

TO DANIEL ROSENTHAL, FIRST SELECTMAN
TOWN OF NEWTOWN
3 PRIMROSE STREET
NEWTOWN CT 06470
(203) 270-4276
REF: 1766.698
INV:
PO:
DEPT:

552J2/E4AF/DCA5

J182119881501uv

THU - 27 DEC 10:30A
PRIORITY OVERNIGHT
DSR
06470
CT-US SWF

TRK# 0201 7740 5919 9711

E9 DXRA

After printing this label:
1. Use the 'Print' button on this page to print your label to your laser or inkjet printer.
2. Fold the printed page along the horizontal line.
3. Place label in shipping pouch and affix it to your shipment so that the barcode portion of the label can be read and scanned.

Warning: Use only the printed original label for shipping. Using a photocopy of this label for shipping purposes is fraudulent and could result in additional billing charges, along with the cancellation of your FedEx account number.
Use of this system constitutes your agreement to the service conditions in the current FedEx Service Guide, available on fedex.com.FedEx will not be responsible for any claim in excess of $100 per package, whether the result of loss, damage, delay, non-delivery,misdelivery,or misinformation, unless you declare a higher value, pay an additional charge, document your actual loss and file a timely claim.Limitations found in the current FedEx Service Guide apply. Your right to recover from FedEx for any loss, including intrinsic value of the package, loss of sales, income interest, profit, attorney's fees, costs, and other forms of damage whether direct, incidental,consequential, or special is limited to the greater of $100 or the authorized declared value. Recovery cannot exceed actual documented loss.Maximum for items of extraordinary value is $1,000, e.g. jewelry, precious metals, negotiable instruments and other items listed in our ServiceGuide. Written claims must be filed within strict time limits, see current FedEx Service Guide.

ORIGIN ID:GFLA
ANNE MARIE ZSAMBA (518) 373-3523
CROWN CASTLE
3 CORPORATE PARK DRIVE
SUITE 101
CLIFTON PARK, NY 12065
UNITED STATES US

SHIP DATE: 26DEC18
ACTWGT: 1.50 LB
CAD: 104924194/INET4040

BILL SENDER

TO PLANNING AND ZONING
TOWN OF NEWTOWN
3 PRIMROSE STREET

NEWTOWN CT 06470
(203) 270-4276
INV:
PO:
REF: 1766.668
DEPT:

552J2/E4AF/DCA5

FedEx Express

J192118881601uw

THU - 27 DEC 9:00A
FIRST OVERNIGHT
DSR
06470
CT-US SWF

TRK# 0201 7740 5921 3980

E1 DXRA

After printing this label:
1. Use the 'Print' button on this page to print your label to your laser or inkjet printer.
2. Fold the printed page along the horizontal line.
3. Place label in shipping pouch and affix it to your shipment so that the barcode portion of the label can be read and scanned.

Warning: Use only the printed original label for shipping. Using a photocopy of this label for shipping purposes is fraudulent and could result in additional billing charges, along with the cancellation of your FedEx account number.
Use of this system constitutes your agreement to the service conditions in the current FedEx Service Guide, available on fedex.com.FedEx will not be responsible for any claim in excess of $100 per package, whether the result of loss, damage, delay, non-delivery,misdelivery,or misinformation, unless you declare a higher value, pay an additional charge, document your actual loss and file a timely claim.Limitations found in the current FedEx Service Guide apply. Your right to recover from FedEx for any loss, including intrinsic value of the package, loss of sales, income interest, profit, attorney's fees, costs, and other forms of damage whether direct, incidental,consequential, or special is limited to the greater of $100 or the authorized declared value. Recovery cannot exceed actual documented loss.Maximum for items of extraordinary value is $1,000, e.g. jewelry, precious metals, negotiable instruments and other items listed in our ServiceGuide. Written claims must be filed within strict time limits, see current FedEx Service Guide.

ORIGIN ID:GFLA (518) 373-3523
ANNE MARIE ZSAMBA
CROWN CASTLE
3 CORPORATE PARK DRIVE
SUITE 101
CLIFTON PARK, NY 12065
UNITED STATES US

SHIP DATE: 28DEC18
ACTWGT: 1.50 LB
CAD: 104924194/INET4040

BILL SENDER

TO CARMINE RENZULLI

505 WESTPORT AVE, LOT 31

NORWALK CT 06851
(203) 856-5411
REF: 1734.7680
INV:
PO:
DEPT:

FedEx Express

J192118881501uv

552J2/E4AF/DCA5

THU - 27 DEC 10:30A
PRIORITY OVERNIGHT
DSR
06851
CT-US JFK

TRK# 0201 7740 5922 9214

ER YAKA

After printing this label:
1. Use the 'Print' button on this page to print your label to your laser or inkjet printer.
2. Fold the printed page along the horizontal line.
3. Place label in shipping pouch and affix it to your shipment so that the barcode portion of the label can be read and scanned.

Warning: Use only the printed original label for shipping. Using a photocopy of this label for shipping purposes is fraudulent and could result in additional billing charges, along with the cancellation of your FedEx account number.
Use of this system constitutes your agreement to the service conditions in the current FedEx Service Guide, available on fedex.com.FedEx will not be responsible for any claim in excess of $100 per package, whether the result of loss, damage, delay, non-delivery,misdelivery,or misinformation, unless you declare a higher value, pay an additional charge, document your actual loss and file a timely claim.Limitations found in the current FedEx Service Guide apply. Your right to recover from FedEx for any loss, including intrinsic value of the package, loss of sales, income interest, profit, attorney's fees, costs, and other forms of damage whether direct, incidental,consequential, or special is limited to the greater of $100 or the authorized declared value. Recovery cannot exceed actual documented loss.Maximum for items of extraordinary value is $1,000, e.g. jewelry, precious metals, negotiable instruments and other items listed in our ServiceGuide. Written claims must be filed within strict time limits, see current FedEx Service Guide.

ORIGIN ID:GFLA (518) 373-3523
ANNE MARIE ZSAMBA
CROWN CASTLE
3 CORPORATE PARK DRIVE
SUITE 101
CLIFTON PARK, NY 12065
UNITED STATES US

SHIP DATE: 26DEC18
ACTWGT: 4.50 LB
CAD: 104924194/INET4040

BILL SENDER

TO **MELANIE BACHMAN**
CONNECTICUT SITING COUNCIL
10 FRANKLIN SQUARE
NEW BRITAIN CT 06051
(860) 827-2951
REF: 1765.6690
INV:
PO:
DEPT:

552J2/E4AF/DCA5

J192118081591uv

FedEx Express

THU - 27 DEC 10:30A
PRIORITY OVERNIGHT
DSR
06051
BDL
CT-US

TRK# 0201 7740 5923 5139

EB BDLA

After printing this label:
1. Use the 'Print' button on this page to print your label to your laser or inkjet printer.
2. Fold the printed page along the horizontal line.
3. Place label in shipping pouch and affix it to your shipment so that the barcode portion of the label can be read and scanned.

Warning: Use only the printed original label for shipping. Using a photocopy of this label for shipping purposes is fraudulent and could result in additional billing charges, along with the cancellation of your FedEx account number.
Use of this system constitutes your agreement to the service conditions in the current FedEx Service Guide, available on fedex.com.FedEx will not be responsible for any claim in excess of $100 per package, whether the result of loss, damage, delay, non-delivery,misdelivery,or misinformation, unless you declare a higher value, pay an additional charge, document your actual loss and file a timely claim.Limitations found in the current FedEx Service Guide apply. Your right to recover from FedEx for any loss, including intrinsic value of the package, loss of sales, income interest, profit, attorney's fees, costs, and other forms of damage whether direct, incidental,consequential, or special is limited to the greater of $100 or the authorized declared value. Recovery cannot exceed actual documented loss.Maximum for items of extraordinary value is $1,000, e.g. jewelry, precious metals, negotiable instruments and other items listed in our ServiceGuide. Written claims must be filed within strict time limits, see current FedEx Service Guide.

DOCKET NO. 89 - An application of Metro Mobile CTS of Fairfield County, Inc., for a Certificate of Environmental Compatibility and Public Need for cellular telephone antennas and associated equipment in the Town of Newtown, Connecticut	:	CONNECTICUT SITING COUNCIL
	:	March 3, 1988

D E C I S I O N A N D O R D E R

Pursuant to the forgoing opinion, the Connecticut Siting Council hereby directs that a Certificate of Environmental Compatibility and Public Need, as provided by Section 16-50k of the General Statutes of Connecticut (CGS) be issued to Metro Mobile CTS of Fairfield County, Inc., for the construction, operation, and maintenance of a cellular telephone tower site and associated equipment at the "LM/A-Newtown" alternative site off of Route 34 in the Town of Newtown, Connecticut.

The "LM-Newtown" site off of Commerce Road is hereby denied.

The facility shall be constructed, operated, and maintained as specified in the Council's record in this matter, and subject to the following conditions:

1. The monopole tower at the Newtown site shall be no taller than necessary to provide the proposed service, and in no event shall exceed a total height of 193 feet, including antennas and associated equipment.

2. The facility shall be constructed in accordance with all applicable federal, state, and municipal laws and regulations.

3. Unless necessary to comply with condition number 2, above, no lights shall be installed on this tower.

4. The Certificate Holder shall prepare a development and management (D&M) plan for the Newtown site in compliance with sections 16-50j-75 through 16-50j-77 of the Regulations of State Agencies. The D&M plan shall provide for permanent evergreen screening around the outside perimeter of the eight-foot chain link fence which will surround the site.

5. The Certificate Holder or its successor shall notify the Council if and when directional antennas or any equipment other than that listed in this application is added to this facility.

6. The Certificate Holder or its successor shall permit public or private entities to share space on the tower for due consideration, or shall provide the requesting entity with specific legal, technical, environmental, or economic reasons precluding such tower sharing.

7. If this facility does not provide, or permanently ceases to provide, cellular service following completion of construction, this Decision and Order shall be void, and the tower and all associated equipment in this application shall be dismantled and removed or reapplication for any new use shall be made to the Council before any such new use is made.

8. The Certificate Holder shall comply with any future radio frequency (RF) standards promulgated by State or federal regulatory agencies. Upon the establishment of any new governmental RF standards, the facility granted in the Decision and Order shall be brought into compliance with such standards.

9. Unless otherwise approved by the Council, this Decision and Order shall be void if all construction authorized herein is not completed within three years of the the issuance of this Decision and Order.

Pursuant to CGS Section 16-50p, we hereby direct that a copy of this Decision and Order be served on each person listed below. A notice of the issuance shall be published in the Danbury News-Times and Newtown Bee.

By this Decison and Order the Council disposes of the legal rights, duties, and privileges of each party named or admitted to the proceeding in accordance with Section 16-50j-17 of the Regulations of State Agencies.

The parties or intervenors to this proceeding are:

Metro Mobile CTS of Fairfield County, Inc. 50 Rockland Road South Norwalk, CT 06854 ATTN: Peter Kelley Vice President	(applicant)
Howard L. Slater, Esq. Jennifer Young Gaudet, Esq. Byrne, Slater, Sandler, Shulman & Rouse, P.C. 330 Main Street P.O. Box 3216 Hartford, CT 06103	(its representative)
Fleishman and Walsh, P.C. 1725 N Street, N.W. Washington, D.C. 20036 ATTN: Richard Rubin, Esq.	(party)
Theodore G. Whippie Chairman Planning & Zoning Comm. Edmond Town Hall 45 Main Street Newtown, CT 06470	(party)

CERTIFICATION

The undersigned members of the Connecticut Siting Council hereby certify that they have heard this case in Docket 89 or read the record thereof, and that we voted as follows:

Dated at New Britain, Connecticut the 3rd day of March, 1988.

Council Members	Vote Cast
Gloria Dibble Pond Chairperson	Yes
Commissioner Peter Boucher Designee: Roland Miller	Yes
Commissioner Leslie Carothers Designee: Brian Emerick	Yes
Owen L. Clark	Absent
Fred J. Doocy	Yes
Mortimer A. Gelston	Yes
James G. Horsfall	Yes
William H. Smith	Yes
Colin C. Tait	Absent

1058E-2

CERTIFICATION

The undersigned members of the Connecticut Siting Council hereby certify that they have heard this case in Docket 89 or read the record thereof, and that we voted as follows:

Dated at New Britain, Connecticut the 3rd day of March, 1988.

Council Members	Vote Cast
Gloria Dibble Pond Chairperson	Yes
Commissioner Peter Boucher Designee: Roland Miller	Yes
Commissioner Leslie Carothers Designee: Brian Emerick	Yes
Owen L. Clark	Absent
Fred J. Doocy	Yes
Mortimer A. Gelston	Yes
James G. Horsfall	Yes
William H. Smith	Yes
Colin C. Tait	Absent

1058E-2

Town of Newtown, CT
Property Listing Report

Map Block Lot 38-10-3-C

Account 00428200C

Property Information

Owner	RENZULLI CARMINE V	Fire District	
Co-Owner		Census Tract	
Address	21 BERKSHIRE ROAD	Neighborhood	
Mailing Address	505 WESTPORT AVE LT 31 NORWALK CT 06851	Zoning Code	B-3
		Acreage	0.25
Land Use	1060 Vacant W/ OB	Utilities	Well,Septic
Land Class	R	Lot Setting/Desc	
Vision ID	15220	Voting District	
School Zone		Borough	
Town Clerk Map		Historic	

Photo

No Photo Available

Sketch

Construction Details

Year Built		Bedrooms	0	Exterior Walls	
Stories		Full Bathrooms		Interior Walls	
Building Style		Half Bathrooms		Heating Type	
Building Use		Bath Style		Heating Fuel	
Building Condition		Kitchen Style		AC Type	
Floors		Roof Style		Gross Bldg Area	
Total Rooms		Roof Cover		Total Living Area	0

Report Created On 8/3/2017

Town of Newtown, CT
Property Listing Report

Map Block Lot 38-10-3-C

Account 00428200C

Valuation Summary (Assessed value = 70% of Appraised Value)

Item	Appraised	Assessed
Buildings	0	0
Outbuildings	96000	67200
Improvements	96000	67200
Extras	0	0
Land	360000	252000
Total	456000	319200

Outbuilding and Extra Items

Type	Description
Cell Tower	1 Units

Sub Areas

Subarea Type	Gross Area (sq ft)	Living Area (sq ft)
Total Area		

Sales History

Owner of Record	Book/ Page	Sale Date	Sale Price
RENZULLI CARMINE V	0306/0377	12/25/2009	

Report Created On 8/3/2017

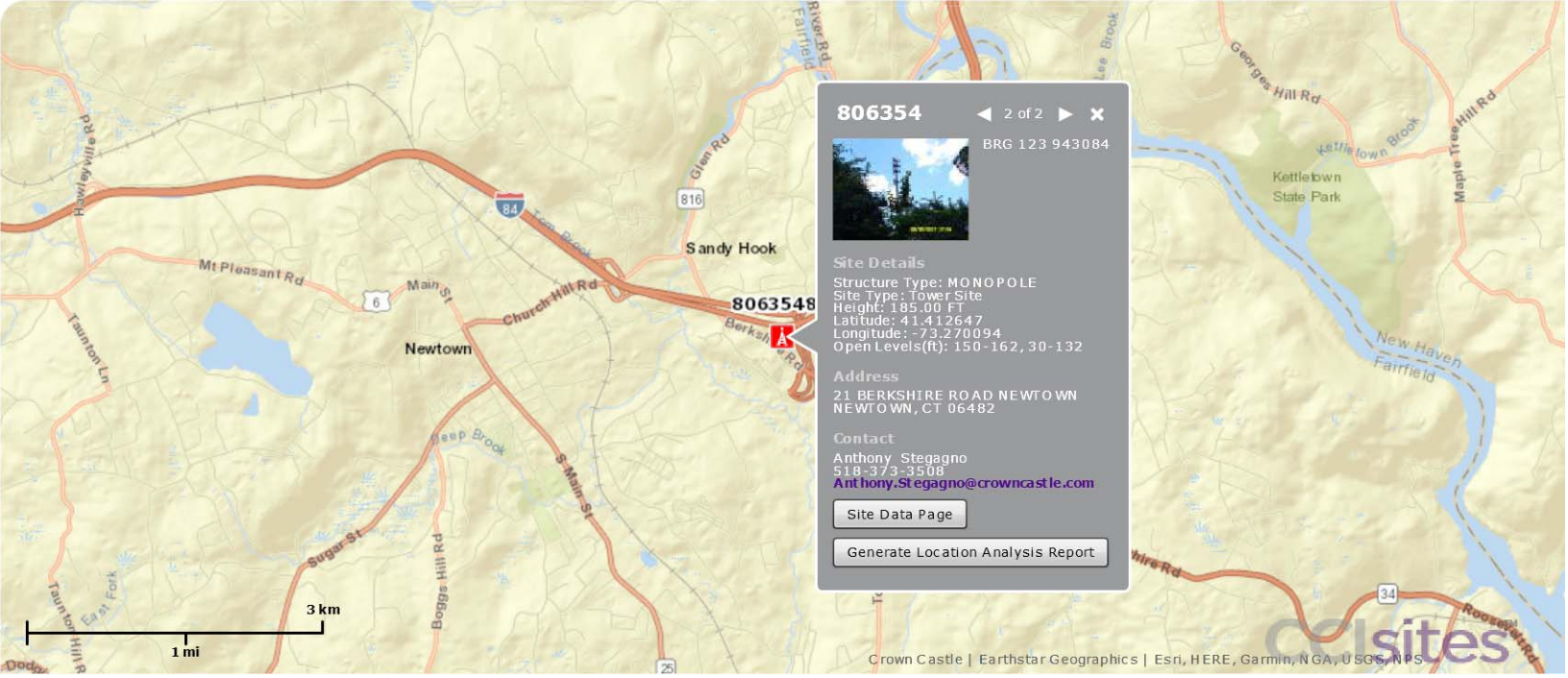
806354
2 of 2
BRG 123 943084
Site Details
Structure Type: MONOPOLE
Site Type: Tower Site
Height: 185.00 FT
Latitude: 41.412647
Longitude: -73.270094
Open Levels(ft): 150-162, 30-132
Address
21 BERKSHIRE ROAD NEWTOWN
NEWTOWN, CT 06482
Contact
Anthony Stegagno
518-373-3508
Anthony.Stegagno@crowncastle.com
Site Data Page
Generate Location Analysis Report
8063548
Sandy Hook
Newtown
Mt Pleasant Rd
Church Hill Rd
Main St
Berkshire Rd
Glen Rd
Hawleyville Rd
Taunton Ln
Sugar St
Boggs Hill Rd
S Main St
Beep Brook
Georges Hill Rd
Kettletown Brook
Kettletown State Park
Maple Tree Hill Rd
New Haven
Fairfield
Roosevelt Rd
3 km
1 mi
Crown Castle | Earthstar Geographics | Esri, HERE, Garmin, NGA, USGS, NPS
ccisites

verizon

CROWN CASTLE

VERIZON SITE NAME:	NEWTOWN CT
CROWN CASTLE SITE NAME:	BRG 123 943084
CROWN CASTLE BU NUMBER:	806354
SITE ADDRESS:	21 BERKSHIRE ROAD NEWTOWN, CT 06482
SITE TYPE:	MONOPOLE TOWER

SITE INFORMATION

APPLICANT:
VERIZON
180 WASHINGTON VALLEY ROAD
BEDMINSTER, NJ 07921

TOWER OWNER:
CROWN CASTLE

CROWN CASTLE PM:
JEFFREY BARBADORA
(781) 970-0053

LATITUDE (NAD83):
41° 24' 45.53" N
41.412647

LONGITUDE (NAD83):
73° 16' 12.34" W
-73.270094

COUNTY:
FAIRFIELD

ZONING JURISDICTION:
FAIRFIELD COUNTY

POWER COMPANY:
NATIONAL GRID
(800) 322-3223

TELCO PROVIDER:
FIBER APP

VERIZON WIRELESS CM:
TBD

AREA MAP

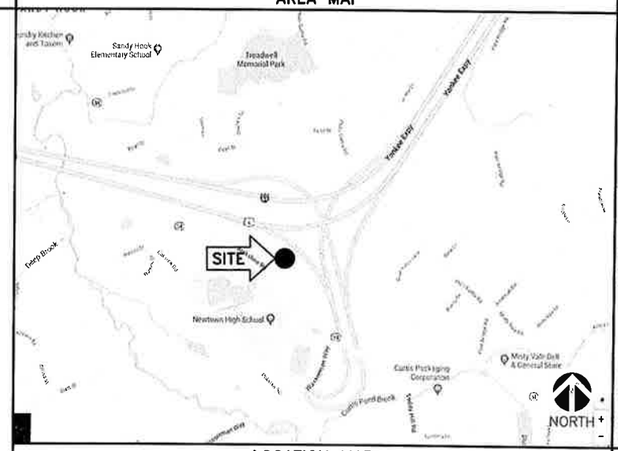

LOCATION MAP

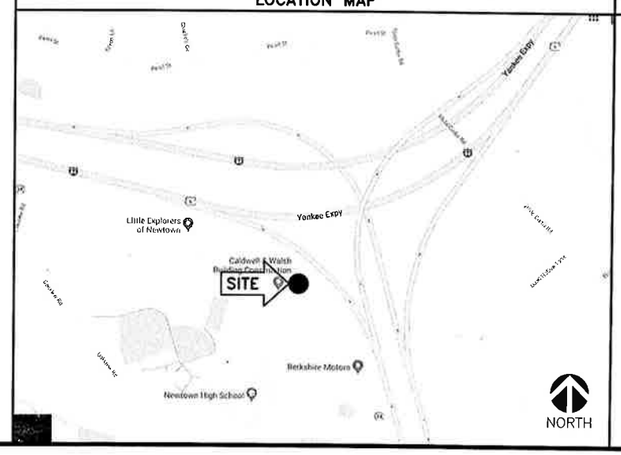

PROJECT DESCRIPTION

VERIZON PROPOSES TO MODIFY AN EXISTING UNMANNED TELECOMMUNICATION FACILITY:

VERIZON EQUIPMENT TO BE REMOVED:

- REMOVE (9) EXISTING PANEL ANTENNAS
- REMOVE (3) EXISTING RRH'S

VERIZON EQUIPMENT TO BE INSTALLED:

- INSTALL (6) COMMSCOPE PANEL ANTENNAS P/N: QS8658-5
- INSTALL (3) SAMSUNG RRH'S P/N: B5/B13 RRH-BR04C
- INSTALL (3) SAMSUNG RRH'S P/N: B2/B66A RRH-BR049
- INSTALL (6) RFS DIPLEXERS P/N: CBC78T-DS-43
- INSTALL (1) HANDRAIL KIT (SITE PRO1 PART# HRK-12 OR APPROVED EQUAL)

THESE PLANS HAVE BEEN DEVELOPED FOR THE MODIFICATION OF AN EXISTING UNMANNED TELECOMMUNICATIONS FACILITY OWNED OR LEASED BY VERIZON IN ACCORDANCE WITH THE SCOPE OF WORK PROVIDED BY VERIZON. INFINIGY HAS INCORPORATED THIS SCOPE OF WORK IN THE PLANS. THESE PLANS ARE NOT FOR CONSTRUCTION UNLESS ACCOMPANIED BY A PASSING STRUCTURAL STABILITY ANALYSIS PREPARED BY A LICENSED STRUCTURAL ENGINEER. STRUCTURAL ANALYSIS MUST INCLUDE BOTH TOWER AND MOUNT.

APPLICABLE CODES

ALL WORK SHALL BE PERFORMED AND MATERIALS INSTALL IN ACCORDANCE WITH THE CURRENT EDITIONS OF THE FOLLOWING CODES AS ADOPTED BY THE LOCAL GOVERNING AUTHORITIES. NOTHING IN THESE PLANS IS TO BE CONSTRUED TO PERMIT WORK NOT CONFORMING TO THESE CODES.

1. INTERNATIONAL BUILDING CODE (2015 IBC)
2. TIA-EIA-222-G OR LATEST EDITION
3. NFPA 780 – LIGHTNING PROTECTION CODE
4. 2017 NATIONAL ELECTRIC CODE OR LATEST EDITION
5. ANY OTHER NATIONAL OR LOCAL APPLICABLE CODES, MOST RECENT EDITIONS
6. RI BUILDING CODE
7. LOCAL BUILDING CODE
8. CITY/COUNTY ORDINANCES

811 Know what's below. Call before you dig. www.call811.com

DRAWING INDEX

SHEET NO:	SHEET TITLE	REV
T-1	TITLE SHEET & PROJECT DATA	A
SP-1	VERIZON SPECIFICATIONS	A
A-1	OVERALL SITE PLAN	A
A-2	TOWER ELEVATION	A
A-3	ANTENNA LAYOUT & LOADING CHART	A
A-4	EQUIPMENT DETAILS	A
A-5	EQUIPMENT DETAILS	A
G-1	GROUNDING PLAN & DETAILS	A

DRIVING DIRECTIONS

FROM: PROVIDENCE, RI

1. DEPART DORRANCE ST TOWARD FULTON ST / KENNEDY PLAZA
2. TURN LEFT ONTO WASHINGTON ST
3. TURN RIGHT ONTO US-1 N / FOUNTAIN ST
4. TURN LEFT TO STAY ON US-1 N / FOUNTAIN ST
5. TAKE RAMP LEFT FOR RI-10 / US-6 WEST TOWARD HARTFORD
6. TAKE RAMP RIGHT AND FOLLOW SIGNS FOR US-6 WEST
7. TAKE RAMP RIGHT FOR I-295 NORTH TOWARD HARTFORD CT
8. KEEP STRAIGHT ONTO US-6 W / GRAND ARMY OF THE REPUBLIC HWY / HARTFORD AVE
9. TAKE RAMP FOR I-395 S / GOVERNOR JOHN DAVIS LODGE TPKE
10. AT EXIT 13, TAKE RAMP RIGHT FOR CT-32 SOUTH / CT-2 EAST TOWARD NORWICH
11. AT EXIT 28N, TAKE RAMP RIGHT FOR I-395 NORTH TOWARD PROVIDENCE
12. AT EXIT 13B, TAKE RAMP RIGHT FOR CT-32 NORTH / CT-2 WEST TOWARD HARTFORD
13. AT EXIT 5D, TAKE RAMP RIGHT FOR CT-3 SOUTH TOWARD WETHERSFIELD
14. TAKE RAMP LEFT FOR I-91 SOUTH TOWARD NEW HAVEN
15. AT EXIT 18, TAKE RAMP RIGHT FOR I-691 WEST TOWARD MERIDEN / WATERBURY
16. PASS SAVE-A-LOT ON THE RIGHT IN 7.9 MI
17. AT EXIT 11, TAKE RAMP RIGHT TOWARD DERBY / NEW HAVEN
18. TURN RIGHT ONTO WASSERMAN WAY
19. TURN LEFT ONTO CT-34
20. ARRIVE AT 21 BERKSHIRE ROAD,NEWTOWN, NEWTOWN, CT 06482.

PLANS PREPARED FOR:
verizon
180 WASHINGTON VALLEY ROAD
BEDMINSTER, NJ 07921

PLANS PREPARED BY:
INFINIGY
FROM ZERO TO INFINIGY
the solutions are endless
1490 W. 121st. Ave., Suite 101
Westminster, CO 80234
Office # (303) 219-1178
Fax # (303) 242-8636
JOB NUMBER: TBD

MLA PARTNER:
CROWN CASTLE

ENGINEERING LICENSE:
STATE OF CONNECTICUT · JOHN S. STEVENS · No. 24705 · LICENSED PROFESSIONAL ENGINEER
NOV 30 2018

DRAWING NOTICE:
THESE DOCUMENTS ARE CONFIDENTIAL AND ARE THE SOLE PROPERTY OF VERIZON AND MAY NOT BE REPRODUCED, DISSEMINATED OR REDISTRIBUTED WITHOUT THE EXPRESS WRITTEN CONSENT OF VERIZON.

REVISIONS:

DESCRIPTION	DATE	BY	REV
ISSUED FOR REVIEW	11/28/18	RCD	A

VERIZON SITE NAME: NEWTOWN CT

CROWN CASTLE SITE NAME: BRG 123 943084

CROWN CASTLE BU #: 806354

SITE ADDRESS: 21 BERKSHIRE ROAD
NEWTOWN
NEWTOWN, CT 06482

SHEET DESCRIPTION: TITLE SHEET & PROJECT DATA

SHEET NUMBER: T-1

ELECTRICAL NOTES:

WORK INCLUDED

1. INCLUDE ALL LABOR, MATERIALS, EQUIPMENT, PLANT SERVICES AND ADMINISTRATIVE TASKS REQUIRED TO COMPLETE AND MAKE OPERABLE THE ELECTRICAL WORK SHOWN ON THE DRAWINGS AND SPECIFIED HEREIN, INCLUDING BUT NOT LIMITED TO THE FOLLOWING:
   A. PREPARE AND SUBMIT SHOP DRAWINGS, DIAGRAMS AND ILLUSTRATIONS.
   B. PROCURE ALL NECESSARY PERMITS AND APPROVALS AND PAY ALL REQUIRED FEES AND CHARGES IN CONNECTION WITH THE WORK OF THIS CONTRACT.
   C. SUBMIT AS-BUILT DRAWINGS, OPERATING AND MAINTENANCE INSTRUCTIONS AND MANUALS.
   D. EXECUTE ALL CUTTING, DRILLING, ROUGH AND FINISH PATCHING OF EXISTING OR NEWLY INSTALLED CONSTRUCTION REQUIRED FOR THE WORK OF THIS CONTRACT. FOR SLAB PENETRATIONS THROUGH POST TENSION SLABS, X-RAY EXACT AREA OF PENETRATION PRIOR TO PERFORMING WORK. COORDINATE ALL X-RAY WORK WITH BUILDING ENGINEER.
   E. PROVIDE HANGERS, SUPPORTS, FOUNDATIONS, STRUCTURAL FRAMING SUPPORTS, AND BASES FOR CONDUIT AND EQUIPMENT PROVIDED OR INSTALLED UNDER THE WORK OF HIS CONTRACT. PROVIDE COUNTER FLASHING, SLEEVES AND SEALS FOR FLOOR AND WALL PENETRATIONS.
   F. MAINTAIN ALL EXISTING ELECTRICAL SERVICES IN THE BUILDING AREAS NOT AFFECTED BY THE ALTERATION DURING THE PROGRESS OF THE WORK INCLUDING PROVIDING ALL TEMPORARY JUMPERS, CONDUITS, CAPS, PROTECTIVE DEVICES, CONNECTIONS AND EQUIPMENT REQUIRED. PROVIDE TEMPORARY LIGHT AND POWER FOR CONSTRUCTION PURPOSES.
2. IT IS THE INTENT OF THESE DRAWINGS AND SPECIFICATIONS TO CALL FOR AN INSTALLATION THAT IS COMPLETE IN EVERY RESPECT. IT IS NOT THE INTENT TO GIVE EVERY DETAIL ON THE DRAWINGS AND IN THE SPECIFICATIONS. IF AN ITEM OF WORK IS INDICATED IN THE DRAWINGS, IT IS CONSIDERED SUFFICIENT FOR INCLUSION IN THE CONTRACT. FURNISH AND INSTALL ALL MATERIAL AND EQUIPMENT USUALLY FURNISHED OR NEEDED TO MAKE A COMPLETE INSTALLATION WHETHER OR NOT SPECIFICALLY MENTIONED IN THE CONTRACT DOCUMENTS.

GENERAL REQUIREMENTS

1. PROVIDE ALL WORK IN ACCORDANCE WITH THE NATIONAL ELECTRICAL CODE (NEC) AND LOCAL AND STATE ELECTRICAL CODES.
2. THE ELECTRICAL PLANS ARE DIAGRAMMATIC ONLY. REFER TO THE ARCHITECTURAL PLANS FOR THE EXACT DIMENSIONS OF THE BUILDING.
3. LOAD CALCULATIONS ARE BASED ON EXISTING BUILDING INFORMATION/DRAWINGS PROVIDED TO ENGINEERING. CONTRACTOR IS TO VERIFY ALL EXISTING RATINGS AND LOADS PRIOR TO PURCHASING OF SPECIFIED EQUIPMENT FOR COMPLIANCE TO NEC. CONTRACTOR TO NOTIFY ENGINEER OF ANY DISCREPANCIES AND REQUEST FURTHER DIRECTION BY ENGINEER.
4. EXISTING BUILDING EQUIPMENT IS NOTED ON THE DRAWINGS. NEW OR RELOCATED EQUIPMENT IS SHOWN WITH SOLID LINES. FUTURE EQUIPMENT (NOT IN THIS CONTRACT) IS DEPICTED WITH SHADED LINES. REQUEST CLARIFICATION OF DRAWINGS OR OF SPECIFICATIONS PRIOR TO PRICING OR INSTALLATION.
5. GENERAL
   A. AFTER CAREFULLY STUDYING THE DRAWINGS AND SPECIFICATIONS, AND BEFORE SUBMITTING THE PROPOSAL, MAKE A MANDATORY SITE VISIT TO ASCERTAIN CONDITIONS OF THE SITE, AND THE NATURE AND EXACT QUANTITY OF WORK TO BE PERFORMED. NO EXTRA COMPENSATION WILL BE ALLOWED FOR FAILURE TO NOTIFY THE OWNER, IN WRITING, OF ANY DISCREPANCIES THAT MAY HAVE BEEN NOTED BETWEEN THE EXISTING CONDITIONS AND THE DRAWINGS AND SPECIFICATIONS.
   B. VERIFY ALL MEASUREMENTS AT THE SITE AND BE RESPONSIBLE FOR CORRECTNESS OF SAME.
6. QUALITY, WORKMANSHIP, MATERIALS AND SAFETY
   A. PROVIDE NEW MATERIALS AND EQUIPMENT OF A DOMESTIC MANUFACTURER BY THOSE REGULARLY ENGAGED IN THE PRODUCTION AND MANUFACTURE OF SPECIFIED MATERIALS AND EQUIPMENT. WHERE UL, OR OTHER AGENCY, HAS ESTABLISHED STANDARDS FOR MATERIALS, PROVIDE MATERIALS WHICH ARE LISTED AND LABELED ACCORDINGLY. THE COMMERCIALLY STANDARD ITEMS OF EQUIPMENT AND THE SPECIFIC NAMES MENTIONED HEREIN ARE INTENDED FOR THE PROPER FUNCTIONING OF THE WORK.
   B. WORK SHALL BE PERFORMED BY WORKMEN SKILLED IN THE TRADE REQUIRED FOR THE WORK. INSTALL MATERIALS AND EQUIPMENT TO PRESENT A NEAT APPEARANCE WHEN COMPLETED AND IN ACCORDANCE WITH THE APPROVED RECOMMENDATIONS OF THE MANUFACTURER AND IN ACCORDANCE WITH CONTRACT DOCUMENTS.
   C. PROVIDE LABOR, MATERIALS, APPARATUS AND APPLIANCES ESSENTIAL TO THE FUNCTIONING OF THE SYSTEMS DESCRIBED OR INDICATED HEREIN, OR WHICH MAY BE REASONABLY IMPLIED AS ESSENTIAL WHENEVER MENTIONED IN THE CONTRACT DOCUMENT OR NOT.
   D. MAKE WRITTEN REQUESTS FOR SUPPLEMENTARY INSTRUCTIONS TO ARCHITECT/ENGINEER IN CASE OF DOUBT AS TO WORK INTENDED OR IN EVENT OF NEED FOR EXPLANATION THEREOF.
   E. PERFORMANCE AND MATERIAL REQUIREMENTS SCHEDULED OR SPECIFIED ARE MINIMUM STANDARD ACCEPTABLE. THE RIGHT TO JUDGE THE QUALITY OF EQUIPMENT THAT DEVIATES FROM THE CONTRACT DOCUMENT REMAINS SOLELY WITH ARCHITECT/ENGINEER. CONTRACT DOCUMENT OR NOT.

GUARANTEE

1. GUARANTEE MATERIALS, PARTS AND LABOR FOR WORK FOR ONE YEAR FROM THE DATE OF ISSUANCE OF OCCUPANCY PERMIT. DURING THAT PERIOD, MAKE GOOD FAULTS OR IMPERFECTIONS THAT MAY ARISE DUE TO DEFECTS OR OMISSIONS IN MATERIALS OR WORKMANSHIP WITH NO ADDITIONAL COMPENSATION AND AS DIRECTED BY ARCHITECT.

CLEANING

1. REMOVE ALL CONSTRUCTION DEBRIS RESULTING FROM THE WORK.
2. CLEAN EQUIPMENT AND SYSTEMS FOLLOWING THE COMPLETION OF THE PROJECT TO THE SATISFACTION OF THE ENGINEER.

COORDINATION AND SUPERVISION

1. CAREFULLY LAY OUT ALL WORK IN ADVANCE TO AVOID UNNECESSARY CUTTING, CHANNELING, CHASING OR DRILLING OF FLOORS, WALLS, PARTITIONS, CEILINGS OR OTHER SURFACES. WHERE SUCH WORK IS NECESSARY, HOWEVER, PATCH AND REPAIR THE WORK IN AN APPROVED MANNER BY SKILLED MECHANICS AT NO ADDITIONAL COST TO THE OWNER. RENDER FULL COOPERATION TO OTHER TRADES WHERE WORK WILL BE INSTALLED IN CLOSE PROXIMITY TO WORK OF OTHER TRADES. ASSIST IN WORKING OUT SPACE CONDITIONS. IF WORK IS INSTALLED BEFORE COORDINATION WITH OTHER TRADES, OR CAUSES INTERFERENCE, MAKE CHANGES NECESSARY TO CORRECT CONDITIONS WITHOUT EXTRA CHARGE.

SUBMITTALS

1. AS-BUILT DRAWINGS:
   A. UPON COMPLETION OF THE WORK, FURNISH TO THE OWNER "AS-BUILT" DRAWINGS.
2. SERVICE MANUALS:
   A. UPON COMPLETION OF THE WORK, FULLY INSTRUCT VERIZON AS TO THE OPERATION AND MAINTENANCE OF ALL MATERIAL, EQUIPMENT AND SYSTEMS.
   B. PROVIDE 3 COMPLETE BOUND SETS OF INSTRUCTIONS FOR OPERATING AND MAINTAINING ALL SYSTEMS AND EQUIPMENT.

CUTTING AND PATCHING

1. PROVIDE ALL CUTTING, DRILLING, ROUGH AND FINISH PATCHING REQUIRED TO COMPLETE THE WORK.
2. OBTAIN OWNER APPROVAL PRIOR TO CUTTING THROUGH FLOORS OR WALLS FOR PIPING OR CONDUIT.

TESTS, INSPECTION AND APPROVAL

1. BEFORE ENERGIZING ANY ELECTRICAL INSTALLATION, INSPECT EACH UNIT IN DETAIL. TIGHTEN ALL BOLTS AND CONNECTIONS (TORQUE-TIGHTEN WHERE REQUIRED) AND DETERMINE THAT ALL COMPONENTS ARE ALIGNED, AND THE EQUIPMENT IS IN SAFE, OPERATIONAL CONDITION.
2. PROVIDE THE COMPLETE ELECTRICAL SYSTEM FREE OF GROUND FAULTS AND SHORT CIRCUITS SUCH THAT THE SYSTEM WILL OPERATE SATISFACTORILY UNDER FULL LOAD CONDITIONS, WITHOUT EXCESSIVE HEATING AT ANY POINT IN THE SYSTEM.

SPECIAL REQUIREMENTS

1. DO NOT LEAVE ANY WORK INCOMPLETE NOR ANY HAZARDOUS SITUATIONS CREATED WHICH WILL AFFECT THE LIFE OR SAFETY OF THE PUBLIC AND/OR BUILDING OCCUPANTS. DO NOT INTERFERE WITH OR CUTOFF ANY OF THE EXISTING SERVICES WITHOUT THE OWNER'S WRITTEN PERMISSION.
2. WHEN NECESSARY TO TEMPORARILY DISCONNECT ANY EXISTING BUILDING UTILITIES AND SERVICE SYSTEMS, INCLUDING FEEDER OR BRANCH CIRCUITING SUPPLYING EXISTING FACILITIES, CONFER WITH THE OWNER AND ARRANGE THE PERIOD OF INTERRUPTION FOR A TIME MUTUALLY AGREED UPON.
   SHUTDOWN NOTE: SCHEDULE AND NOTIFY OWNER 48 HOURS PRIOR TO SHUTDOWN. ALL SHUTDOWN WORK TO BE SCHEDULED AT A TIME CONVENIENT TO OWNER.

GROUNDING

1. ROUTE ALL GROUNDING CONDUCTORS AS SHOWN ON CONDUIT/GROUNDING RISER.
2. ROUTE 500 KCMIL CU. THHN CONDUCTOR FROM THE MGB LOCATION TO BUILDING STEEL. VERIFY BUILDING STEEL IS EFFECTIVELY GROUNDED PER NEC TO THE MAIN SERVICE GROUNDING ELECTRODE CONDUCTOR (GEC).
3. MAKE ALL GROUND CONNECTIONS FROM MGB TO ELECTRICAL EQUIPMENT WITH 2 HOLE, CRIMP TYPE, BURNDY COMPRESSION TERMINATIONS, SIZED AS REQUIRED.
4. USE 1 HOLE, CRIMP TYPE, BURNDY COMPRESSIONS TERMINATIONS, SIZED AS REQUIRED, AT EQUIPMENT GROUND CONNECTIONS.
5. HIRE AN INDEPENDENT LAB TO PERFORM THE SPECIFIED OHMS TESTING. PROVIDE 4 SETS OF THE CERTIFIED DOCUMENTS TO THE OWNER FOR VERIFICATION PRIOR TO THE PROJECT COMPLETION.

RACEWAYS

1. ALL WIRING TO BE INSTALLED IN CONDUIT SYSTEMS IN ACCORDANCE WITH THE FOLLOWING:
   A. EXTERIOR FEEDERS AND CONTROL, WHERE UNDERGROUND, TO BE IN SCH 40 PVC.
   B. EXTERIOR, ABOVE GROUND POWER CONDUITS TO BE GALVANIZED RIGID STEEL (RGS).
   C. ALL TELECOMMUNICATION CONDUITS, INTERIOR/EXTERIOR, TO BE EMT.

   ON THIS PROJECT.
   E. ALL TELECOM CONDUITS AND PULL BOXES INSTALLED ON THIS PROJECT TO BE LABELED "VERIZON". OWNER WILL PROVIDE LABELS FOR CONTRACTOR TO INSTALL.
   F. INTERIOR FEEDERS TO BE INSTALLED IN E.M.T. WITH STEEL COMPRESSION FITTINGS.
   G. MINIMUM SIZE CONDUIT TO BE ¾" TRADE SIZE UNLESS OTHERWISE INDICATED ON THE DRAWINGS.
   H. FINAL CONNECTIONS TO MOTORS AND VIBRATING EQUIPMENT TO BE INSTALLED IN LIQUID-TIGHT FLEXIBLE METAL CONDUIT.

   AREAS OR DRYWALL PARTITIONS, UNLESS OTHERWISE NOTED.
   J. THE ROUTING OF CONDUITS INDICATED ON THE DRAWINGS IS DIAGRAMMATIC. BEFORE INSTALLING ANY WORK, EXAMINE THE WORKING LAYOUTS AND SHOP DRAWINGS OF THE OTHER TRADES TO DETERMINE THE EXACT LOCATIONS AND CLEARANCES.
   K. ALL EXTERIOR MOUNTING HARDWARE TO BE GALVANIZED STEEL. COORDINATE WITH BUILDING ENGINEER PRIOR TO ATTACHING TO BUILDING STRUCTURE.

RACEWAYS CONT'D

   L. PENETRATIONS OF WALLS, FLOORS AND ROOFS, FOR THE PASSAGE OF ELECTRICAL RACEWAYS, TO BE PROPERLY SEALED AFTER INSTALLATION OF RACEWAYS SO AS TO MAINTAIN THE STRUCTURAL OR WATERPROOF INTEGRITY OF THE WALL, FLOOR OR ROOF SYSTEM TO BE PENETRATED. SEAL ALL CONDUIT PENETRATIONS THROUGH FIRE OR SMOKE RATED WALLS, CEILINGS OR SMOKE TIGHT CORRIDOR PARTITIONS TO MAINTAIN PROPER RATING OF WALL OR CEILING.
   M. PROVIDE ALL CONDUIT ENDS WITH INSULATED METALLIC GROUNDING BUSHINGS.
   N. CONDUIT TO BE SUPPORTED AT MAXIMUM DISTANCE OF 8'-0", OR AS REQUIRED BY NEC, IN HORIZONTAL AND VERTICAL DIRECTIONS.
   O. PROVIDE STAINLESS STEEL BLANK COVER PLATES FOR ALL JUNCTION BOXES AND/OR OUTLET BOXES NOT USED IN EXPOSED AREAS. PROVIDE ALL OTHER UNUSED BOXES WITH STANDARD STEEL COVER PLATES.
   P. WHERE APPLICABLE, PROVIDE ROOFTOP CONDUIT SUPPORT SYSTEM, CONFORMING TO ROOFTOP WARRANTY REQUIREMENTS, PER BUILDING.

WIRES AND CABLES

1. CONTRACTOR TO COORDINATE WITH EQUIPMENT SUPPLIER AND VENDOR FOR EXACT EQUIPMENT OVER-CURRENT PROTECTION VOLTAGE, WIRE SIZE AND PLUG CONFIGURATION, IF APPLICABLE, PRIOR TO BID.
2. ALL EQUIPMENT/DEVICES TO BE PROVIDED WITH INSULATED GROUND CONDUCTOR.
3. ALL WIRE AND CABLE TO BE 600VOLT, COPPER, WITH THWN/THHN INSULATION, EXCEPT AS NOTED.
4. WIRE FOR POWER AND LIGHTING WILL NOT BE LESS THAN NO. 12AWG. ALL WIRE NO. 8 AND LARGER TO BE STRANDED.
5. CONTROL WIRING IS NOT TO BE LESS THAN NO. 14AWG, FLEXIBLE IN SINGLE CONDUCTORS OR MULTI-CONDUCTOR CABLES. CONTROL WIRING WILL CONSIST OF MULTI-CONDUCTOR CABLES WHEREVER POSSIBLE. CABLES TO BE PROVIDED WITH AN OVERALL FLAME-RETARDANT, EXTRUDED JACKET AND RATED FOR PLENUM USE. ALL CONTROL WIRE TO BE 600VOLT RATED.
6. WIRE PREVIOUSLY PULLED INTO CONDUIT IS CONSIDERED USED AND IS NOT TO BE RE-PULLED.
7. HOME RUNS AND BRANCH CIRCUIT WIRING FOR 20A, 120V CIRCUITS:

LENGTH (FT.)	HOME RUN WIRE SIZE
0 TO 50	NO. 12
51 TO 100	NO. 10
101 TO 150	NO. 8

8. VOLTAGE DROP IS NOT TO EXCEED 3%
9. MAKE ALL CONNECTIONS WITH UL APPROVED, SOLDERLESS, PRESSURE TYPE INSULATED CONNECTORS: SCOTCHLOK OR AND APPROVED EQUAL.

WIRING DEVICES

1. ALL RECEPTACLES INSTALLED IN THIS PROJECT TO BE GROUNDING TYPE, WITH GROUNDING PIN SLOT CONNECTED TO DEVICE GROUND SCREW FOR GROUND WIRE CONNECTION.

DISCONNECT SWITCHES AND FUSES

1. DISCONNECT SWITCHES TO BE VOLTAGE-RATED TO SUIT THE CHARACTERISTICS OF THE SYSTEM FROM WHICH THEY ARE SUPPLIED.
2. PROVIDE HEAVY-DUTY, METAL-ENCLOSED, EXTERNALLY-OPERATED DISCONNECT SWITCHES, FUSED OR UNFUSED, OF SUCH TYPE AND SIZE AS REQUIRED TO PROPERLY PROTECT OR DISCONNECT THE LOAD FOR WHICH THEY ARE INTENDED.
3. PROVIDE NEMA 1 DISCONNECT SWITCHES FOR INTERIOR INSTALLATION, NEMA 3R FOR EXTERIOR INSTALLATION.
4. DISCONNECT SWITCHES TO BE MANUFACTURED BY:
   A. GENERAL ELECTRIC COMPANY
   B. SQUARE-D
5. PROVIDE RK-1 TYPE FUSES, UNLESS NOTED OTHERWISE.

INSTALLATION

1. INSTALL DISCONNECT SWITCHES WHERE INDICATED ON DRAWINGS.
2. INSTALL FUSES IN FUSIBLE DISCONNECT SWITCHES. FUSES MUST MATCH IN TYPE AND RATING.
3. FUSES TO BE MOUNTED SO THAT THE LABELS SHOWING THEIR RATINGS CAN BE READ WITHOUT REQUIRING FUSE REMOVAL.
4. FURNISH AND DEPOSIT SPARE FUSES AT THE JOB SITE AS FOLLOWS:
   A. THREE SPARES FOR EACH TYPE AND SIZE, IN EXCESS OF 60A, USED FOR INITIAL FUSING.
   B. TEN PERCENT SPARES FOR EACH TYPE AND SIZE, UP TO AND INCLUDING 60A, USED FOR INITIAL FUSING. IN NO CASE WILL LESS THAN THREE FUSES OF ONE PARTICULAR TYPE AND SIZE BE FURNISHED.

CONFLICTS

1. THE CONTRACTOR SHALL BE RESPONSIBLE FOR VERIFICATIONS OF ALL MEASUREMENTS AT THE SITE BEFORE ORDERING ANY MATERIALS OR DOING ANY WORK. NO EXTRA CHARGE OR COMPENSATION SHALL BE ALLOWED DUE TO DIFFERENCE BETWEEN ACTUAL DIMENSIONS AND DIMENSIONS INDICATED ON THE CONSTRUCTION DRAWINGS. ANY SUCH DISCREPANCY IN DIMENSION WHICH MAY BE FOUND SHALL BE SUBMITTED TO THE OWNER FOR CONSIDERATION BEFORE THE CONTRACTOR PROCEEDS WITH THE WORK IN THE AFFECTED AREAS.
2. THE BIDDER, IF AWARDED THE CONTRACT, WILL NOT BE ALLOWED ANY EXTRA COMPENSATION BY REASON OF ANY MATTER OR THING CONCERNING SUCH BIDDER MIGHT HAVE FULLY INFORMED THEMSELVES PRIOR TO THE BIDDING.
3. NO PLEA OF IGNORANCE OF CONDITIONS THAT EXIST, OR OF DIFFICULTIES OR CONDITIONS THAT MAY BE ENCOUNTERED, OR OF ANY OTHER RELEVANT MATTER CONCERNING THE WORK TO BE PERFORMED IN THE EXECUTION OF THE WORK WILL BE ACCEPTED AS AN EXCUSE FOR ANY FAILURE OR OMISSION ON THE PART OF THE CONTRACTOR TO FULFILL EVERY DETAIL OF ALL THE REQUIREMENTS OF THE CONTRACT DOCUMENTS GOVERNING THE WORK.

CONTRACTS AND WARRANTIES

1. CONTRACTOR IS RESPONSIBLE FOR APPLICATION AND PAYMENT OF CONTRACTOR LICENSES AND BONDS.
2. SEE MASTER CONTRACTION SERVICES AGREEMENT FOR ADDITIONAL DETAILS.

STORAGE

1. ALL MATERIALS MUST BE STORED IN A LEVEL AND DRY FASHION AND IN A MANNER THAT DOES NOT NECESSARILY OBSTRUCT THE FLOW OF OTHER WORK. ANY STORAGE METHOD MUST MEET ALL RECOMMENDATIONS OF THE ASSOCIATED MANUFACTURER.

CLEANUP

1. THE CONTRACTORS SHALL, AT ALL TIMES, KEEP THE SITE FREE FROM ACCUMULATION OF WASTE MATERIALS OR RUBBISH CAUSED BY THEIR EMPLOYEES AT WORK AND AT THE COMPLETION OF THE WORK. THEY SHALL REMOVE ALL RUBBISH FROM AND ABOUT THE BUILDING AREA, INCLUDING ALL THEIR TOOLS, SCAFFOLDING AND SURPLUS MATERIALS AND SHALL LEAVE THEIR WORK CLEAN AND READY TO USE.
2. EXTERIOR
   A. VISUALLY INSPECT EXTERIOR SURFACES AND REMOVE ALL TRACES OF SOIL, WASTE MATERIALS, SMUDGES AND OTHER FOREIGN MATTER.
   B. REMOVE ALL TRACES OF SPLASHED MATERIALS FROM ADJACENT SURFACES.
   C. IF NECESSARY, TO ACHIEVE A UNIFORM DEGREE OF CLEANLINESS, HOSE DOWN THE EXTERIOR OF THE STRUCTURE.
3. INTERIOR
   A. VISUALLY INSPECT INTERIOR SURFACE AND REMOVE ALL TRACES OF SOIL, WASTE MATERIALS, SMUDGES AND OTHER FOREIGN MATTER FROM WALLS, FLOOR, AND CEILING.
   B. REMOVE ALL TRACES OF SPLASHED MATERIALS FROM ADJACENT SURFACES.
   C. REMOVE PAINT DROPPINGS, SPOTS, STAINS, AND DIRT FROM FINISHED SURFACES.

CHANGE ORDER PROCEDURE:

1. REFER TO SECTION 17 OF SIGNED MCSA: SEE PROFESSIONAL SERVICE AGREEMENT FOR MCSA.

RELATED DOCUMENTS AND COORDINATION

1. GENERAL CARPENTRY, ELECTRICAL AND ANTENNA DRAWINGS ARE INTERRELATED. IN PERFORMANCE OF THE WORK, THE CONTRACTOR MUST REFER TO ALL DRAWINGS. ALL COORDINATION TO BE THE RESPONSIBILITY OF THE CONTRACTOR.

SHOP DRAWINGS

1. CONTRACTOR SHALL SUBMIT SHOP DRAWINGS AS REQUIRED AND LISTED IN THESE SPECIFICATIONS TO THE OWNER FOR APPROVAL.
2. ALL SHOP DRAWINGS SHALL BE REVIEWED, CHECKED AND CORRECTED BY CONTRACTOR PRIOR TO SUBMITTAL TO THE OWNER.

PRODUCTS AND SUBSTITUTIONS

1. SUBMIT 3 COPIES OF EACH REQUEST FOR SUBSTITUTION. IN EACH REQUEST, IDENTIFY THE PRODUCT OR FABRICATION OR INSTALLATION METHOD TO BE REPLACED BY THE SUBSTITUTION. INCLUDE RELATED SPECIFICATION SECTION AND DRAWING NUMBERS AND COMPLETE DOCUMENTATION SHOWING COMPLIANCE WITH THE REQUIREMENTS FOR SUBSTITUTIONS.
2. SUBMIT ALL NECESSARY PRODUCT DATA AND CUT SHEETS WHICH PROPERLY INDICATE AND DESCRIBE THE ITEMS, PRODUCTS AND MATERIALS BEING INSTALLED. THE CONTRACTOR SHALL, IF DEEMED NECESSARY BY THE OWNER, SUBMIT ACTUAL SAMPLES TO THE OWNER FOR APPROVAL IN LIEU OF CUT SHEETS.

QUALITY ASSURANCE

1. ALL WORK SHALL BE IN ACCORDANCE WITH APPLICABLE LOCAL, STATE AND FEDERAL REGULATIONS. THESE SHALL INCLUDE, BUT NOT BE LIMITED TO THE APPLICABLE CODES SET FORTH BY THE LOCAL GOVERNING BODY. SEE "CODE COMPLIANCE" T-1.

ADMINISTRATION

1. BEFORE THE COMMENCEMENT OF ANY WORK, THE CONTRACTOR WILL ASSIGN A PROJECT MANAGER WHO WILL ACT AS A SINGLE POINT OF CONTACT FOR ALL PERSONNEL INVOLVED IN THIS PROJECT. THIS PROJECT MANAGER WILL DEVELOP A MASTER SCHEDULE FOR THE PROJECT WHICH WILL BE SUBMITTED TO THE OWNER PRIOR TO THE COMMENCEMENT OF ANY WORK.
2. SUBMIT A BAR TYPE PROGRESS CHART, NOT MORE THAN 3 DAYS AFTER THE DATE ESTABLISHED FOR COMMENCEMENT OF THE WORK ON THE SCHEDULE, INDICATING A TIME BAR FOR EACH MAJOR CATEGORY OR UNIT OF WORK TO BE PERFORMED AT THE SITE, PROPERLY SEQUENCED AND COORDINATED WITH OTHER ELEMENTS OF WORK AND SHOWING COMPLETION OF THE WORK SUFFICIENTLY IN ADVANCE OF THE DATE ESTABLISHED FOR SUBSTANTIAL COMPLETION OF THE WORK.
3. PRIOR TO COMMENCING CONSTRUCTION, THE OWNER SHALL SCHEDULE AN ON-SITE MEETING WITH ALL MAJOR PARTIES. THIS WOULD INCLUDE, BUT NOT LIMITED TO, THE OWNER, PROJECT MANAGER, CONTRACTOR, LAND OWNER REPRESENTATIVE, LOCAL TELEPHONE COMPANY, TOWER ERECTION FOREMAN (IF SUBCONTRACTED).
4. CONTRACTOR SHALL BE EQUIPPED WITH SOME MEANS OF CONSTANT COMMUNICATIONS, SUCH AS A MOBILE PHONE OR A BEEPER. THIS EQUIPMENT WILL NOT BE SUPPLIED BY THE OWNER, NOR WILL WIRELESS SERVICE BE ARRANGED.
5. DURING CONSTRUCTION, CONTRACTOR MUST ENSURE THAT EMPLOYEES AND SUBCONTRACTORS WEAR HARD HATS AT ALL TIMES. CONTRACTOR WILL COMPLY WITH ALL WPCS SAFETY REQUIREMENTS IN THEIR AGREEMENT.
6. PROVIDE WRITTEN DAILY UPDATES ON SITE PROGRESS TO THE OWNER.
7. COMPLETE INVENTORY OF CONSTRUCTION MATERIALS AND EQUIPMENT IS REQUIRED PRIOR TO START OF CONSTRUCTION.
8. NOTIFY THE OWNER/PROJECT MANAGER IN WRITING NO LESS THAN 48 HOURS IN ADVANCE OF CONCRETE POURS, TOWER ERECTIONS, AND EQUIPMENT CABINET PLACEMENTS.

INSURANCE AND BONDS

1. CONTRACTOR, AT THEIR OWN EXPENSE, SHALL CARRY AND MAINTAIN, FOR THE DURATION OF THE PROJECT, ALL INSURANCE, AS REQUIRED AND LISTED, AND SHALL NOT COMMENCE WITH THEIR WORK UNTIL THEY HAVE PRESENTED AN ORIGINAL CERTIFICATE OF INSURANCE STATING ALL COVERAGES TO THE OWNER. REFER TO THE MASTER AGREEMENT FOR REQUIRED INSURANCE LIMITS.
2. THE OWNER SHALL BE NAMED AS AN ADDITIONAL INSURED ON ALL POLICIES.
3. CONTRACTOR MUST PROVIDE PROOF OF INSURANCE.

GENERAL NOTES:

INTENT

1. THESE SPECIFICATIONS AND CONSTRUCTION DRAWINGS ACCOMPANYING THEM DESCRIBE THE WORK TO BE DONE AND THE MATERIALS TO BE FURNISHED FOR CONSTRUCTION.
2. THE DRAWINGS AND SPECIFICATIONS ARE INTENDED TO BE FULLY EXPLANATORY AND SUPPLEMENTARY. HOWEVER, SHOULD ANYTHING BE SHOWN, INDICATED, OR SPECIFIED ON ONE AND NOT THE OTHER, IT SHALL BE DONE THE SAME AS IF SHOWN,INDICATED OR SPECIFIED IN BOTH
3. THE INTENTION OF THE DOCUMENTS IS TO INCLUDE ALL LABOR AND MATERIALS REASONABLY NECESSARY FOR THE PROPER EXECUTION AND COMPLETION OF THE WORK AS STIPULATED IN THE CONTRACT.
4. THE PURPOSE OF THE SPECIFICATIONS IS TO INTERPRET THE INTENT OF THE DRAWINGS AND TO DESIGNATE THE METHOD OF THE PROCEDURE, TYPE AND QUALITY OF MATERIALS REQUIRED TO COMPLETE THE WORK.
5. MINOR DEVIATIONS FROM THE DESIGN LAYOUT ARE ANTICIPATED AND SHALL BE CONSIDERED AS PART OF THE WORK. NO CHANGES THAT ALTER THE CHARACTER OF THE WORK WILL BE MADE OR PERMITTED BY THE OWNER WITHOUT ISSUING A CHANGE ORDER.

ABBREVIATIONS

ADJ	ADJUSTABLE
AGL	ABOVE GROUND LINE
&	AND
APPROX	APPROXIMATE
@	AT
BTS	BASE TRANSMISSION STATION
CAB	CABINET
CLG	CEILING
CONC	CONCRETE
CONT	CONTINUOUS
DIA OR ø	DIAMETER
DWG	DRAWING
EA	EACH
ELEC	ELECTRICAL
ELEV	ELEVATION
EQ	EQUAL
EQUIP	EQUIPMENT
EGB	EQUIPMENT GROUND BAR
(E)	EXISTING
EXT	EXTERIOR
FF	FINISHED FLOOR
GA	GAUGE
GALV	GALVANIZED
GC	GENERAL CONTRACTOR
GRND	GROUND
LG	LONG
MAX	MAXIMUM
MECH	MECHANICAL
MW	MICROWAVE DISH
MFR	MANUFACTURER
MGB	MASTER GROUND BAR
MIN	MINIMUM
MTL	METAL
(N)	NEW
NIC	NOT IN CONTRACT
NTS	NOT TO SCALE
OC	ON CENTER
OPP	OPPOSITE
(P)	PROPOSED
PCS	PERSONAL COMMUNICATION SYSTEM
PPC	POWER PROTECTION CABINET
SF	SQUARE FOOT
SHT	SHEET
SIM	SIMILAR
SS	STAINLESS STEEL
STL	STEEL
TOC	TOP OF CONCRETE
TOM	TOP OF MASONRY
TYP	TYPICAL
VIF	VERIFY IN FIELD
UON	UNLESS OTHERWISE NOTED
WWF	WELDED WIRE FABRIC
W/	WITH

PLANS PREPARED FOR:

verizon

180 WASHINGTON VALLEY ROAD
BEDMINSTER, NJ 07921

PLANS PREPARED BY:

INFINIGY

FROM ZERO TO INFINIGY
the solutions are endless

1490 W. 121st. Ave., Suite 101
Westminster, CO 80234
Office # (303) 219-1178
Fax # (303) 242-8636
JOB NUMBER: TBD

MLA PARTNER:

CROWN CASTLE

ENGINEERING LICENSE:

STATE OF CONNECTICUT
JOHN S. STEVENS
No. 24705
LICENSED
PROFESSIONAL ENGINEER
NOV 30 2018

DRAWING NOTICE:

THESE DOCUMENTS ARE CONFIDENTIAL AND ARE THE SOLE PROPERTY OF VERIZON AND MAY NOT BE REPRODUCED, DISSEMINATED OR REDISTRIBUTED WITHOUT THE EXPRESS WRITTEN CONSENT OF VERIZON.

REVISIONS:

DESCRIPTION	DATE	BY	REV
ISSUED FOR REVIEW	11/28/18	RCD	A

VERIZON SITE NAME:

NEWTOWN CT

CROWN CASTLE SITE NAME:

BRG 123 943084

CROWN CASTLE BU #:

806354

SITE ADDRESS:

21 BERKSHIRE ROAD
NEWTOWN
NEWTOWN, CT 06482

SHEET DESCRIPTION:

VERIZON SPECIFICATIONS

SHEET NUMBER:

SP-1

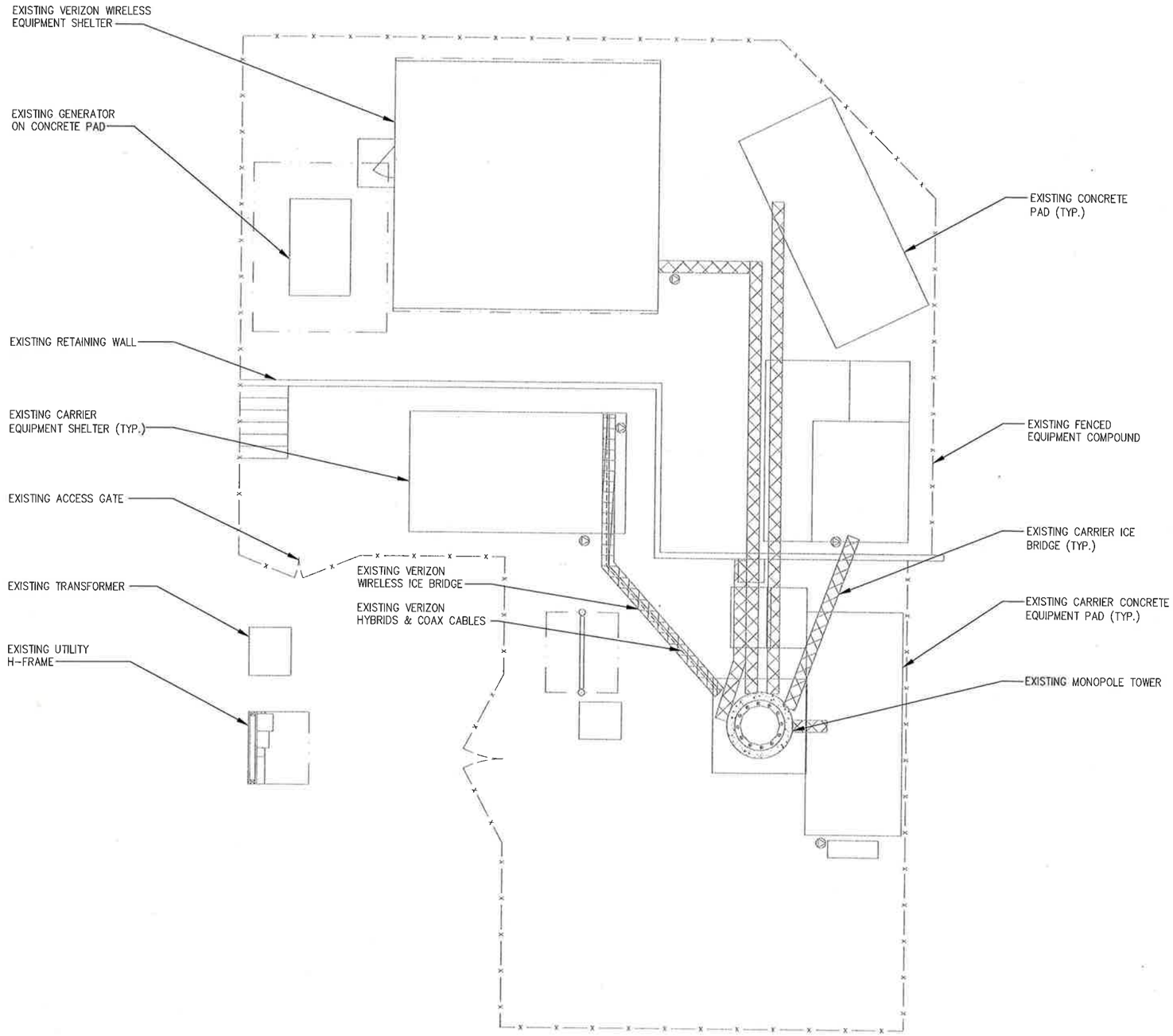

INFORMATION CONTAINED WITHIN DRAWINGS IS BASED ON PROVIDED INFORMATION AND IS NOT THE RESULT OF A FIELD SURVEY. CONTRACTOR TO VERIFY EXISTING FIELD CONDITIONS PRIOR TO ANY CONSTRUCTION

GRAPHIC SCALE

10' 5' 0 5' 10'

NORTH

SCALE: 22"x34" SHEET 1"= 5'
SCALE: 11"x17" SHEET 1"= 10'

OVERALL SITE PLAN

SCALE: AS NOTED | 1

PLANS PREPARED FOR:

verizon

180 WASHINGTON VALLEY ROAD
BEDMINSTER, NJ 07921

PLANS PREPARED BY:

INFINIGY
FROM ZERO TO INFINIGY
the solutions are endless

1490 W. 121st. Ave., Suite 101
Westminster, CO 80234
Office # (303) 219-1178
Fax # (303) 242-8636

JOB NUMBER: TBD

MLA PARTNER:

CROWN CASTLE

ENGINEERING LICENSE:

STATE OF CONNECTICUT
JOHN S. STEVENS
No. 24705
LICENSED
PROFESSIONAL ENGINEER
NOV 30 2018

DRAWING NOTICE:

THESE DOCUMENTS ARE CONFIDENTIAL AND ARE THE SOLE PROPERTY OF VERIZON AND MAY NOT BE REPRODUCED, DISSEMINATED OR REDISTRIBUTED WITHOUT THE EXPRESS WRITTEN CONSENT OF VERIZON.

REVISIONS:

DESCRIPTION	DATE	BY	REV
ISSUED FOR REVIEW	11/28/18	RCD	A

VERIZON SITE NAME:

NEWTOWN CT

CROWN CASTLE SITE NAME:

BRG 123 943084

CROWN CASTLE BU #:

806354

SITE ADDRESS:

21 BERKSHIRE ROAD
NEWTOWN
NEWTOWN, CT 06482

SHEET DESCRIPTION:

OVERALL SITE PLAN

SHEET NUMBER:

A-1

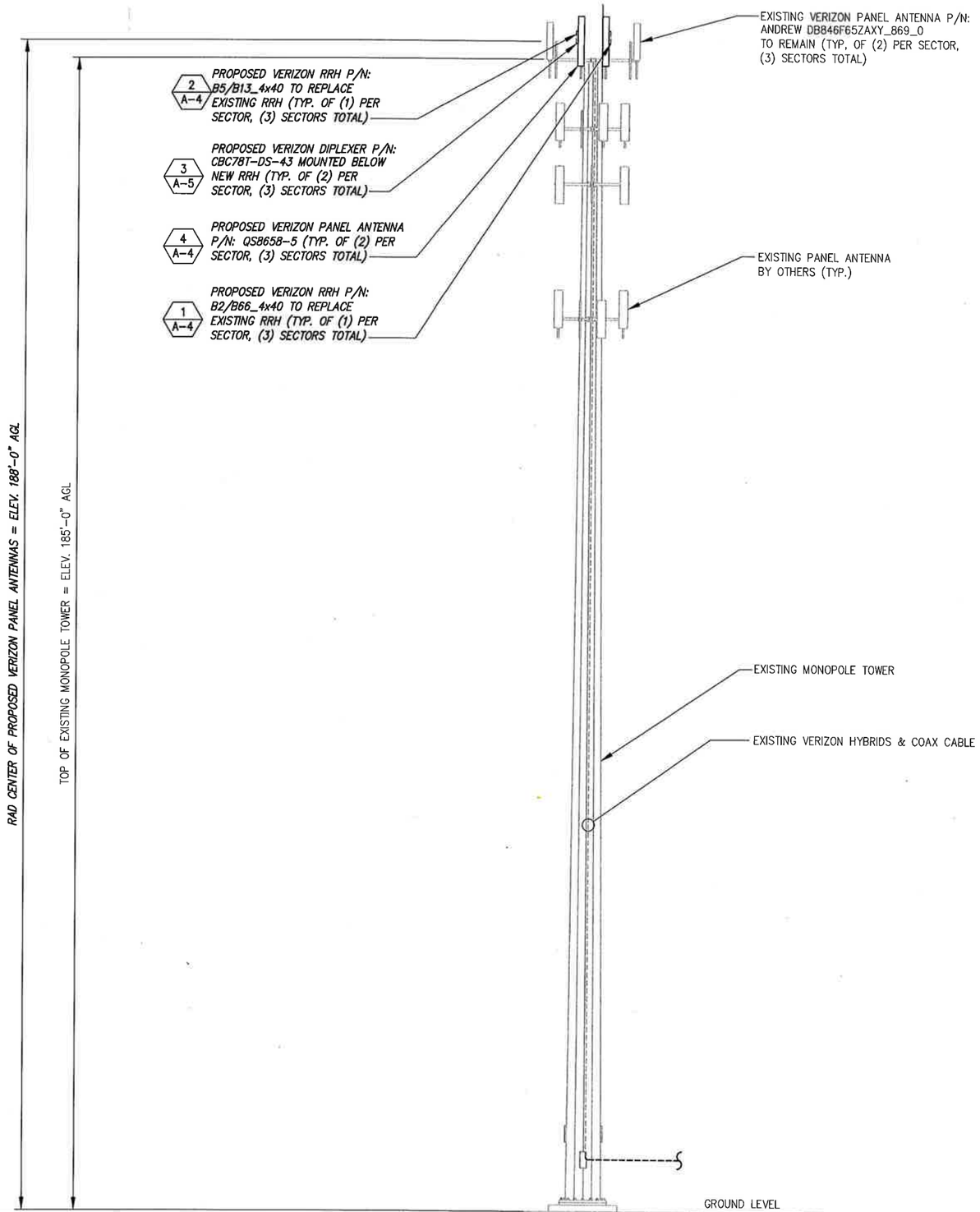

PROPOSED TOWER ELEVATION

NO SCALE | 1

INFINIGY ENGINEERING HAS NOT EVALUATED THE TOWER OR MOUNT FOR THIS SITE AND ASSUMES NO RESPONSIBILITY FOR ITS STRUCTURAL INTEGRITY. REFER TO STRUCTURAL ANALYSIS BY OTHERS PRIOR TO ANY CONSTRUCTION.

PLANS PREPARED FOR:

verizon

180 WASHINGTON VALLEY ROAD
BEDMINSTER, NJ 07921

PLANS PREPARED BY:

INFINIGY

FROM ZERO TO INFINIGY
the solutions are endless

1490 W. 121st. Ave., Suite 101
Westminster, CO 80234
Office # (303) 219-1178
Fax # (303) 242-8636
JOB NUMBER: TBD

MLA PARTNER:

CROWN CASTLE

ENGINEERING LICENSE:

STATE OF CONNECTICUT
JOHN S. STEVENS
No. 24705
LICENSED
PROFESSIONAL ENGINEER
NOV 30 2018

DRAWING NOTICE:

THESE DOCUMENTS ARE CONFIDENTIAL AND ARE THE SOLE PROPERTY OF VERIZON AND MAY NOT BE REPRODUCED, DISSEMINATED OR REDISTRIBUTED WITHOUT THE EXPRESS WRITTEN CONSENT OF VERIZON.

REVISIONS:

DESCRIPTION	DATE	BY	REV
ISSUED FOR REVIEW	11/28/18	RCD	A

VERIZON SITE NAME:

NEWTOWN CT

CROWN CASTLE SITE NAME:

BRG 123 943084

CROWN CASTLE BU #:

806354

SITE ADDRESS:

21 BERKSHIRE ROAD
NEWTOWN
NEWTOWN, CT 06482

SHEET DESCRIPTION:

TOWER ELEVATION

SHEET NUMBER:

A-2

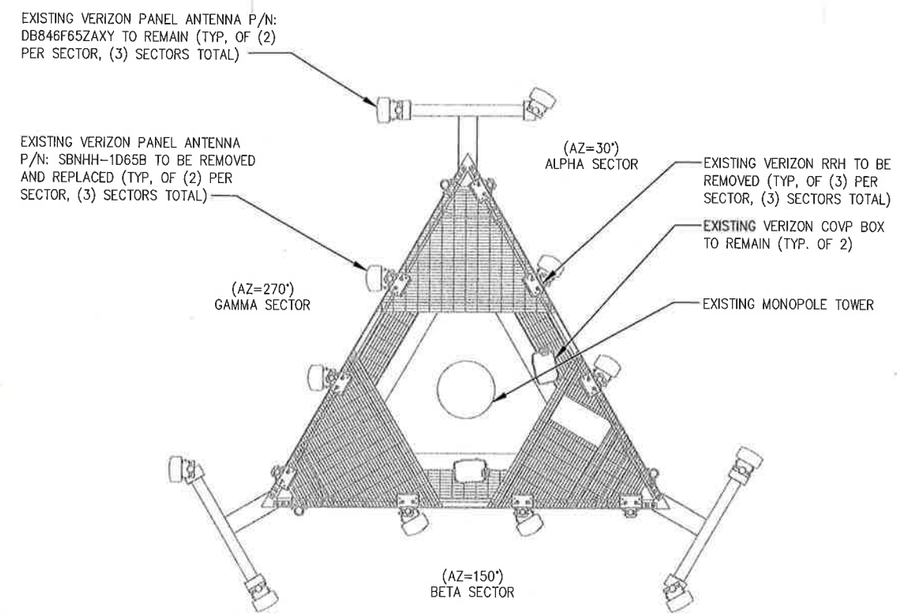

NOTE:
CONTRACTOR TO VERIFY EQUIPMENT & MOUNTING HARDWARE DOES NOT TRAP OR INTERFERE WITH SAFETY CLIMB

EXISTING ANTENNA LAYOUT | NO SCALE | 2

INFINIGY ENGINEERING HAS NOT EVALUATED THE TOWER OR MOUNT FOR THIS SITE AND ASSUMES NO RESPONSIBILITY FOR ITS STRUCTURAL INTEGRITY. REFER TO STRUCTURAL ANALYSIS BY OTHERS PRIOR TO ANY CONSTRUCTION.

THE CONFIGURATION PLAN IS BASED ON PROVIDED INFORMATION AND IS FOR CONCEPTUAL PURPOSES ONLY. CONTRACTOR TO VERIFY FIELD CONDITIONS PRIOR TO CONSTRUCTION.

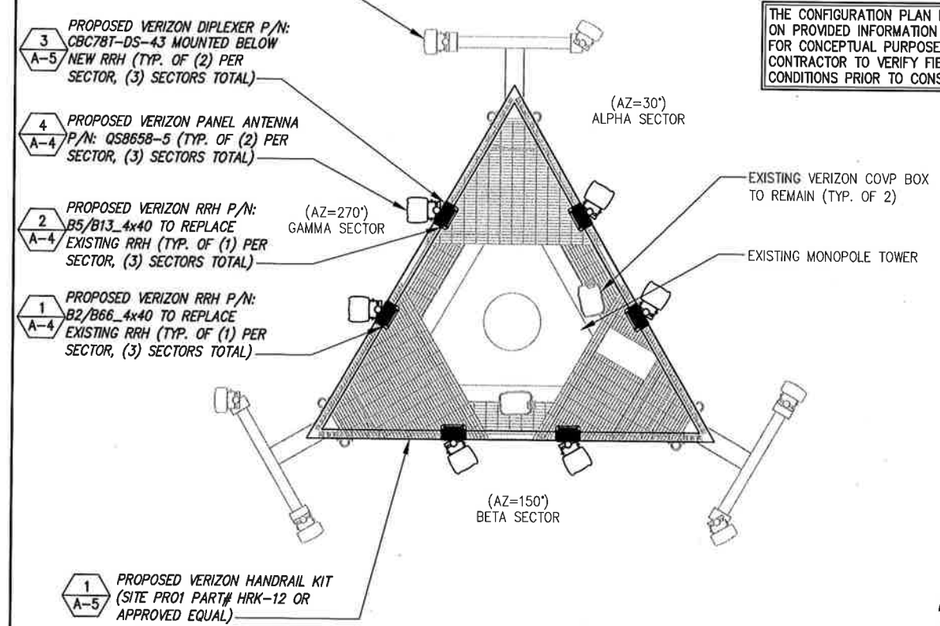

PROPOSED ANTENNA LAYOUT | NO SCALE | 2

SITE LOADING CHART

SECTOR	POSITION	SECTOR COLOR	TECHNOLOGY	ANTENNA MODEL #	VENDOR	QTY. (REMOVED)	QTY. (NEW)	RRH (QTY/MODEL)	AZIMUTH	DOWNTILT MECHANICAL	DOWNTILT ELECTRICAL	RAD CENTER	FEED LINE TYPE/LENGTH (FEET + 20%)
ALPHA	A3	RED	CDMA	DB846F65ZAXY	DECIBEL	--	--	--	30°	0°	0°	±185' AGL	EXISTING COAX
ALPHA	A2	RED	LTE 1900/LTE 2100	*QS8658-5*	*QUINTEL*	1	1	*(1) B2/B66A RRHBR049*	30°	0°	4°	±185' AGL	(1) EXISTING HI-CAP HYBRID CABLE LENGTH = ±238' (TYP.)
ALPHA	A3	RED	LTE 700/LTE 850	*QS8658-5*	*QUINTEL*	1	1	*(1) B5/B13 RRHBR04C W/ DIPLEXER*	30°	0°	4°	±185' AGL	(1) EXISTING HI-CAP HYBRID CABLE LENGTH = ±238' (TYP.)
ALPHA	A4	RED	CDMA	DB846F65ZAXY	DECIBEL	--	--	--	30°	0°	0°	±185' AGL	EXISTING COAX
BETA	B1	BLUE	CDMA	DB846F65ZAXY	DECIBEL	--	--	--	150°	0°	0°	±185' AGL	EXISTING COAX
BETA	B2	BLUE	LTE 1900/LTE 2100	*QS8658-5*	*QUINTEL*	1	1	*(1) B2/B66A RRHBR049*	150°	0°	4°	±185' AGL	(1) EXISTING HI-CAP HYBRID CABLE LENGTH = ±238' (TYP.)
BETA	B3	BLUE	LTE 700/LTE 850	*QS8658-5*	*QUINTEL*	1	1	*(1) B5/B13 RRHBR04C W/ DIPLEXER*	150°	0°	2°	±185' AGL	(1) EXISTING HI-CAP HYBRID CABLE LENGTH = ±238' (TYP.)
BETA	B4	BLUE	CDMA	DB846F65ZAXY	DECIBEL	--	--	--	150°	0°	0°	±185' AGL	EXISTING COAX
GAMMA	G1	WHITE	CDMA	DB846F65ZAXY	DECIBEL	--	--	--	270°	0°	0°	±185' AGL	EXISTING COAX
GAMMA	G2	WHITE	LTE 1900/LTE 2100	*QS8658-5*	*QUINTEL*	1	1	*(1) B2/B66A RRHBR049*	270°	0°	4°	±185' AGL	(1) EXISTING HI-CAP HYBRID CABLE LENGTH = ±238' (TYP.)
GAMMA	G3	WHITE	LTE 700/LTE 850	*QS8658-5*	*QUINTEL*	1	1	*(1) B5/B13 RRHBR04C W/ DIPLEXER*	270°	0°	4°	±185' AGL	(1) EXISTING HI-CAP HYBRID CABLE LENGTH = ±238' (TYP.)
GAMMA	G4	WHITE	CDMA	DB846F65ZAXY	DECIBEL	--	--	--	270°	0°	0°	±185' AGL	EXISTING COAX

NOTE:
CABLE LENGTHS ARE BASED ON PROVIDED INFORMATION. CONTRACTOR TO VERIFY REQUIRED CABLE LENGTHS PRIOR TO CONSTRUCTION.

SITE LOADING CHART | NO SCALE | 3

PLANS PREPARED FOR:

verizon

180 WASHINGTON VALLEY ROAD
BEDMINSTER, NJ 07921

PLANS PREPARED BY:

INFINIGY
FROM ZERO TO INFINIGY
the solutions are endless
1490 W. 121st. Ave., Suite 101
Westminster, CO 80234
Office # (303) 219-1178
Fax # (303) 242-9636
JOB NUMBER: TBD

MLA PARTNER:

CROWN CASTLE

ENGINEERING LICENSE:

STATE OF CONNECTICUT · JOHN S. STEVENS · NO. 31705 · LICENSED PROFESSIONAL ENGINEER · NOV 30 2018

DRAWING NOTICE:

THESE DOCUMENTS ARE CONFIDENTIAL AND ARE THE SOLE PROPERTY OF VERIZON AND MAY NOT BE REPRODUCED, DISSEMINATED OR REDISTRIBUTED WITHOUT THE EXPRESS WRITTEN CONSENT OF VERIZON.

REVISIONS:

DESCRIPTION	DATE	BY	REV
ISSUED FOR REVIEW	11/28/18	RCD	A

VERIZON SITE NAME:
NEWTOWN CT

CROWN CASTLE SITE NAME:
BRG 123 943084

CROWN CASTLE BU #:
806354

SITE ADDRESS:
21 BERKSHIRE ROAD
NEWTOWN
NEWTOWN, CT 06482

SHEET DESCRIPTION:
ANTENNA LAYOUT & LOADING CHART

SHEET NUMBER:
A-3

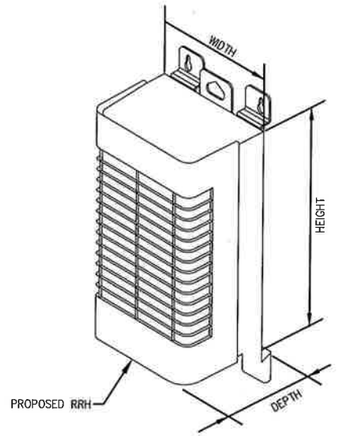

SIZE AND WEIGHT TABLE				
RRH	WIDTH	DEPTH	HEIGHT	WEIGHT WO BRACKET
B66A–RRH4X45	11.9"	7.2"	25.8"	52.9 LBS

REMOTE RADIO HEAD SPECIFICATIONS | NO SCALE | 1

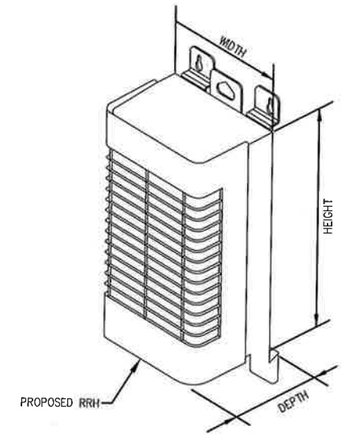

SIZE AND WEIGHT TABLE				
RRH	WIDTH	DEPTH	HEIGHT	WEIGHT WO BRACKET
B13–RRH4X30–R4	12.0"	9.0"	21.6"	57.2 LBS

REMOTE RADIO HEAD SPECIFICATIONS | NO SCALE | 2

COMMSCOPE DIPLEXER

PART NUMBER: CBC78TDS–43

DIMENSIONS (HxWxD): 6.38"x6.98"x4.76"

Ingress Protection Test Method IEC 60529:2001, IP67

Outline Drawing

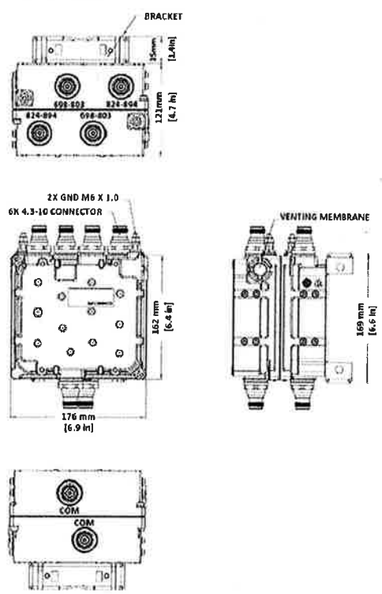

DIPLEXER DETAIL | NO SCALE | 3

COMMSCOPE PANEL ANTENNA

PART NUMBER: QS8658–5

DIMENSIONS (HxWxD): 96.0"x12.0"x9.6"

TOTAL WEIGHT: 98.0 lbs.

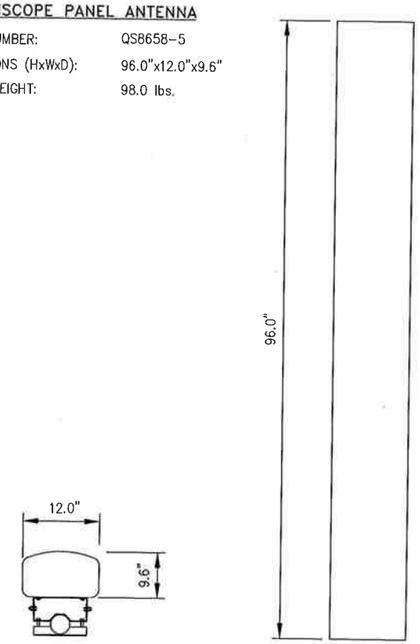

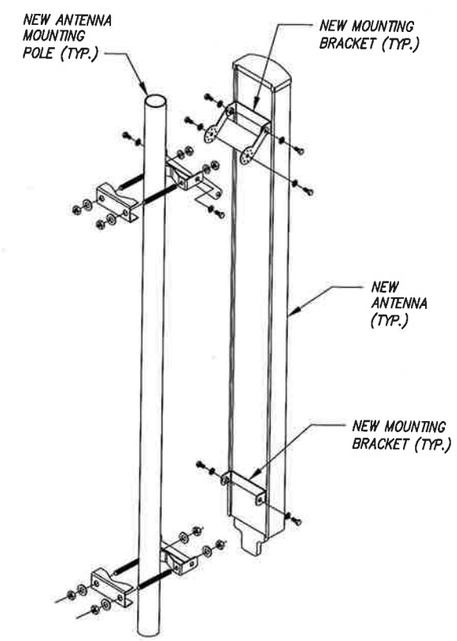

PANEL ANTENNA & MOUNTING DETAILS | NO SCALE | 4

PLANS PREPARED FOR:

verizon

160 WASHINGTON VALLEY ROAD
BEDMINSTER, NJ 07921

PLANS PREPARED BY:

INFINIGY
FROM ZERO TO INFINIGY
the solutions are endless

1490 W. 121st. Ave., Suite 101
Westminster, CO 80234
Office # (303) 219-1178
Fax # (303) 242-8636

JOB NUMBER: TBD

MLA PARTNER:

CROWN CASTLE

ENGINEERING LICENSE:

STATE OF CONNECTICUT
JOHN S. STEVENS
No. 24705
LICENSED PROFESSIONAL ENGINEER
NOV 30 2018

DRAWING NOTICE:

THESE DOCUMENTS ARE CONFIDENTIAL AND ARE THE SOLE PROPERTY OF VERIZON AND MAY NOT BE REPRODUCED, DISSEMINATED OR REDISTRIBUTED WITHOUT THE EXPRESS WRITTEN CONSENT OF VERIZON.

REVISIONS:

DESCRIPTION	DATE	BY	REV
ISSUED FOR REVIEW	11/28/18	RCD	A

VERIZON SITE NAME: NEWTOWN CT

CROWN CASTLE SITE NAME: BRG 123 943084

CROWN CASTLE BU #: 806354

SITE ADDRESS: 21 BERKSHIRE ROAD
NEWTOWN
NEWTOWN, CT 06482

SHEET DESCRIPTION: EQUIPMENT & DETAILS

SHEET NUMBER: A-4

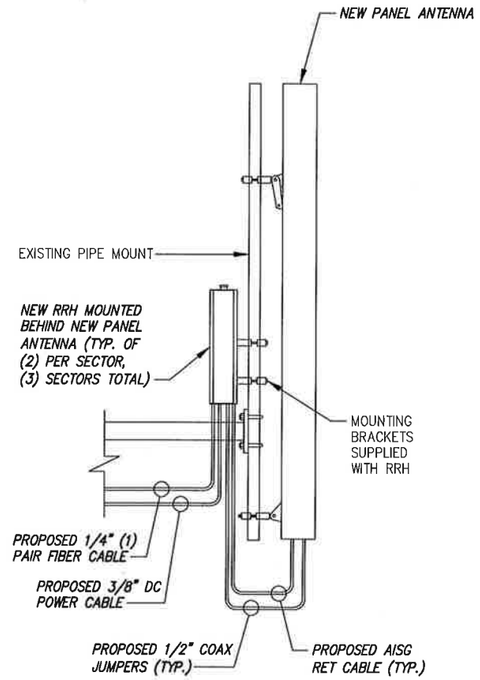

RRH MOUNTING DETAIL | NO SCALE | 2

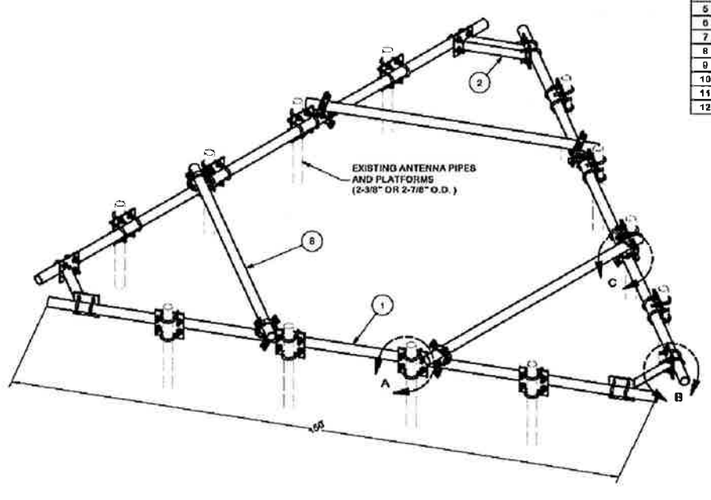

PARTS LIST

ITEM	QTY	PART NO.	PART DESCRIPTION	LENGTH	UNIT WT.	NET WT.
1	3	P2150	2-3/8" OD X 150" SCH 40 GALVANIZED PIPE	150 in	45.77	137.31
2	3	X-AHCP	ANGLE HANDRAIL CORNER PLATE		12.92	38.76
3	69	X-UB1212	1/2" X 2-1/2" X 4-1/2" X 2" U-BOLT (HDG.)		0.25	15.42
4	24	X-UB1360	1/2" X 3" X 5" X 2" U-BOLT (HDG.)		0.26	6.17
5	144	G12FW	1/2" HDG USS FLATWASHER		0.03	4.91
6	144	G12LW	1/2" HDG LOCKWASHER		0.01	2.00
7	144	G12NUT	1/2" HDG HEAVY 2H HEX NUT		0.07	10.31
8	3	P272	2-3/8" X 72" SCH 40 GALVANIZED PIPE	72 in	23.07	69.20
9	6	X-127594	FLAT DISK CLAMP PLATE 4" CENTERS (GALV.)		2.48	14.90
10	12	X-100064	CLAMP (S) (4" V-CLAMP) GALVANIZED		0.91	10.95
11	24	G1204	1/2" x 4" HDG HEX BOLT GR5 FULL THREAD	4 in	0.27	6.48
12	12	SCX2	CROSSOVER PLATE	7 in	4.80	57.55
					TOTAL WT. #	406.61

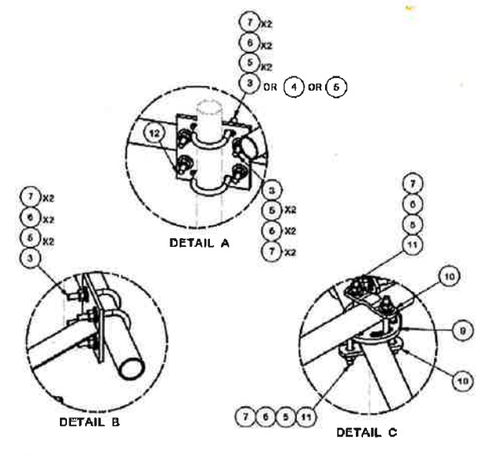

HANDRAIL KIT (SITE PRO1 PART# HRK-12) | NO SCALE | 1

PLANS PREPARED FOR:

verizon

180 WASHINGTON VALLEY ROAD
BEDMINSTER, NJ 07921

PLANS PREPARED BY:

INFINIGY

FROM ZERO TO INFINIGY
the solutions are endless

1490 W. 121st. Ave., Suite 101
Westminster, CO 80234
Office # (303) 219-1178
Fax # (303) 242-8636

JOB NUMBER: TBD

MLA PARTNER:

CROWN CASTLE

ENGINEERING LICENSE:

STATE OF CONNECTICUT
JOHN S. STEVENS
No. 24705
LICENSED PROFESSIONAL ENGINEER
NOV 30 2018

DRAWING NOTICE:

THESE DOCUMENTS ARE CONFIDENTIAL AND ARE THE SOLE PROPERTY OF VERIZON AND MAY NOT BE REPRODUCED, DISSEMINATED OR REDISTRIBUTED WITHOUT THE EXPRESS WRITTEN CONSENT OF VERIZON.

REVISIONS:

DESCRIPTION	DATE	BY	REV
ISSUED FOR REVIEW	11/28/18	RCD	A

VERIZON SITE NAME:
NEWTOWN CT

CROWN CASTLE SITE NAME:
BRG 123 943084

CROWN CASTLE BU #:
806354

SITE ADDRESS:
21 BERKSHIRE ROAD
NEWTOWN
NEWTOWN, CT 06482

SHEET DESCRIPTION:
EQUIPMENT DETAILS

SHEET NUMBER:
A-5

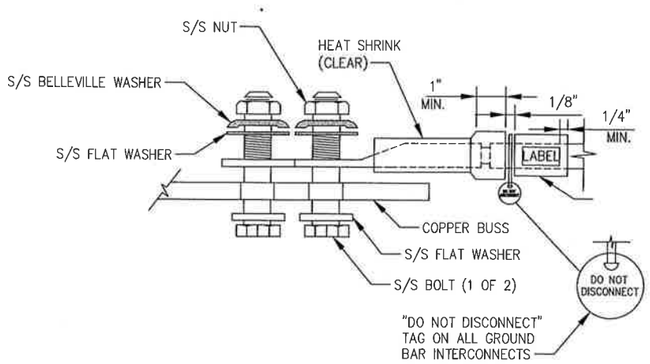

NOTE:
ALL MECHANICAL EXTERNAL TERMINATION SURFACES SHALL BE TREATED WITH T&B KOPR-SHIELD CP8 ANTI-OXIDATION COMPOUND.

TYPICAL EQUIPMENT GROUND CONNECTION | NO SCALE | 1

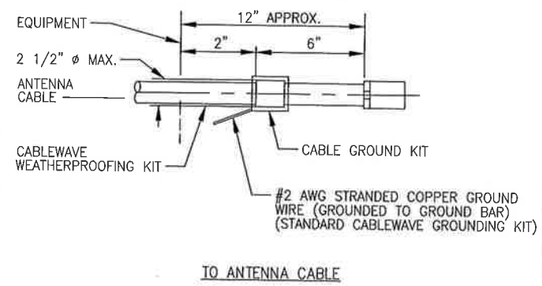

NOTE:
DO NOT INSTALL CABLE GROUND KIT AT A BEND AND ALWAYS DIRECT GROUND WIRE DOWN TO GROUND BAR.

TYPICAL CABLE GROUND KIT CONNECTION | NO SCALE | 2

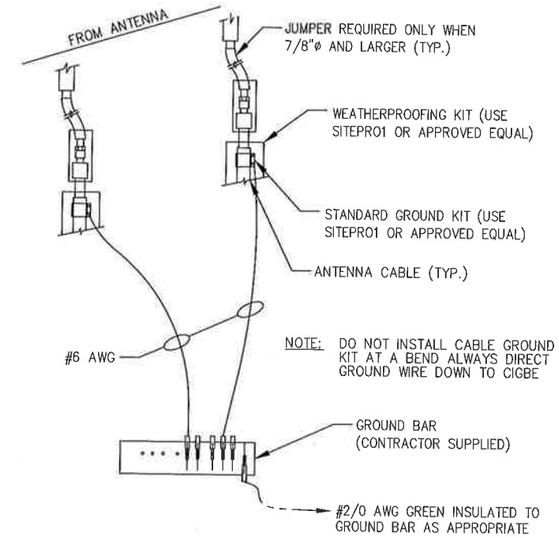

TYPICAL CONNECTION OF GROUND WIRES TO GROUNDING BARS @ ANTENNAS | NO SCALE | 3

GENERAL GROUNDING NOTES:

1. TO ENSURE PROPER BONDING, ALL CONNECTIONS SHALL BE AS FOLLOWS:
   – #2 BARE TINNED SOLID COPPER CONDUCTOR: EXOTHERMIC WELD TO RODS OR GROUND RING
   – LUGS AND BUS BAR (UNLESS NOTED OTHERWISE): SANDED CLEAN, COATED WITH OXIDE INHIBITOR AND BOLTED FOR MAXIMUM SURFACE CONTACT. ALL LUGS SHALL BE COPPER (NO ALUMINUM SHALL BE PERMITTED). PROVIDE LOCK WASHERS FOR ALL MECHANICAL CONNECTIONS FOR GROUND CONDUCTORS. USE STAINLESS STEEL HARDWARE THROUGHOUT.
2. ALL GROUNDING CABLE IN CONCRETE OR THROUGH WALLS SHALL BE IN 3/4" PVC CONDUIT. SEAL AROUND CONDUIT THROUGH WALLS. NO METALLIC CONDUIT SHALL BE USED FOR GROUNDING CONDUCTORS.
3. OWNER'S REPRESENTATIVE WILL INSPECT EXOTHERMIC WELD AND CONDUCT MEGGER TEST PRIOR TO BURIAL. MAXIMUM 5 OHMS RESISTANCE IS REQUIRED.
4. CONTRACTOR TO INSTALL GROUNDING IN CLOSE PROXIMITY TO EQUIPMENT PLATFORM OR PAD.
5. MAKE ALL GROUND CONNECTIONS AS SHORT AND DIRECT AS POSSIBLE. AVOID SHARP BENDS. ALL BENDS SHALL BE A MINIMUM 8" RADIUS AND NO GREATER THAN 90 DEGREES.
6. ALL CADWELDS TO BURIED GROUND RING SHALL BE THE PARALLEL TYPE, EXCEPT FOR THE GROUND RODS WHICH SHALL BE THE TEE TYPE.
7. BOND SERVICE CONDUITS TO GROUND RING AS THEY CROSS. DO NOT EXOTHERMICALLY WELD TO CONDUITS.
8. THE CONTRACTOR SHALL NOTIFY THE CONSTRUCTION MANAGER WHEN THE GROUNDING SYSTEM IS COMPLETE. THE CONSTRUCTION MANAGER SHALL INSPECT THE GROUNDING SYSTEM PRIOR TO BACKFILLING.
9. THE MINIMUM SPACING BETWEEN GROUND RODS SHALL BE 10'-0" (MAX. 15'-0").
10. BOND CIGBE TO EXTERNAL GROUND RING WITH 2 RUNS OF #2 BARE, TINNED, SOLID COPPER CONDUCTOR IN PVC. CONNECT BAR END WITH 2 HOLE LUG, AND "CADWELD" THE OTHER END TO THE EXTERNAL GROUND ROD.
11. THE PREFERRED LOCATION FOR COAX GROUNDING IS AT THE BASE OF THE TOWER PRIOR TO THE COAX BEND.
12. BONDING OF THE GROUNDED CONDUCTOR (NEUTRAL) AND THE GROUNDING CONDUCTOR SHALL BE AT THE SERVICE DISCONNECTING MEANS. BONDING JUMPER SHALL BE INSTALLED PER N.E.C. ARTICLE 250-30.

GROUNDING SYMBOLS:

- ⊗ GROUND ROD
- ▢ ACCESS WELL
- ⊠ GROUND ROD WITH ACCESS
- ■ COMPRESSION TYPE CONNECTION
- ● EXOTHERMIC WELD TYPE CONNECTION
- —G— #2/0 BTS COPPER CONDUCTOR BURIED GROUND CABLE
- (#) INDICATES CODED NOTE

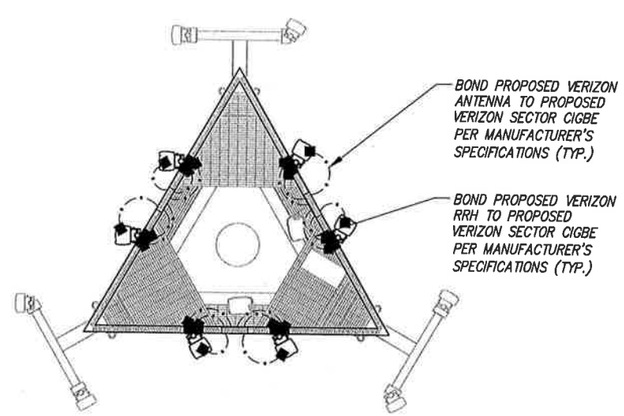

NORTH = 0°

TYPICAL ANTENNA GROUNDING PLAN | NO SCALE | 1

PLANS PREPARED FOR:

verizon

180 WASHINGTON VALLEY ROAD
BEDMINSTER, NJ 07921

PLANS PREPARED BY:

INFINIGY
FROM ZERO TO INFINIGY
the solutions are endless

1490 W. 121st. Ave., Suite 101
Westminster, CO 80234
Office # (303) 219-1178
Fax # (303) 242-8636
JOB NUMBER: TBD

MLA PARTNER:

CROWN CASTLE

ENGINEERING LICENSE:

STATE OF CONNECTICUT · JOHN S. STEVENS · No. 24705 · LICENSED PROFESSIONAL ENGINEER
NOV 30 2018

DRAWING NOTICE:

THESE DOCUMENTS ARE CONFIDENTIAL AND ARE THE SOLE PROPERTY OF VERIZON AND MAY NOT BE REPRODUCED, DISSEMINATED OR REDISTRIBUTED WITHOUT THE EXPRESS WRITTEN CONSENT OF VERIZON.

REVISIONS:

DESCRIPTION	DATE	BY	REV
ISSUED FOR REVIEW	11/28/18	RCD	A

VERIZON SITE NAME: NEWTOWN CT

CROWN CASTLE SITE NAME: BRG 123 943084

CROWN CASTLE BU #: 806354

SITE ADDRESS:
21 BERKSHIRE ROAD
NEWTOWN
NEWTOWN, CT 06482

SHEET DESCRIPTION: GROUNDING PLANS

SHEET NUMBER: G-1

Date: **December 5, 2018**

Rebecca Klein
Crown Castle
3530 Toringdon Way, Suite 300
Charlotte, NC 28277

Tower Engineering Professionals
326 Tryon Road
Raleigh, NC 27603
(919) 661-6351

Subject: Structural Analysis Report

Carrier Designation:	***Verizon Wireless* Co-Locate**	
	Carrier Site Number:	1905
	Carrier Site Name:	Newtown CT
Crown Castle Designation:	**Crown Castle BU Number:**	806354
	Crown Castle Site Name:	BRG 123 943084
	Crown Castle JDE Job Number:	535166
	Crown Castle Work Order Number:	1666466
	Crown Castle Order Number:	461593 Rev. 0
Engineering Firm Designation:	**TEP Project Number:**	83114.200294
Site Data:	**21 Berkshire Road Newtown, Newtown, Fairfield County, CT 06482** **Latitude *41° 24' 45.53"*, Longitude *-73° 16' 12.34"*** **185 Foot - Monopole Tower**	

Dear Rebecca Klein,

Tower Engineering Professionals is pleased to submit this **"Structural Analysis Report"** to determine the structural integrity of the above-mentioned tower.

The purpose of the analysis is to determine acceptability of the tower stress level. Based on our analysis we have determined the tower stress level for the structure and foundation, under the following load case, to be:

LC7: Proposed Equipment Configuration **Sufficient Capacity**

This analysis utilizes an ultimate 3-second gust wind speed of 120 mph as required by the 2018 Connecticut State Building Code. Applicable Standard references and design criteria are listed in Section 2 - Analysis Criteria.

Structural analysis prepared by: Connor J. Klein, E.I./JSC

Respectfully submitted by:

Aaron T. Rucker, P.E.

STATE OF CONNECTICUT
AARON THOMAS RUCKER
32608
LICENSED
PROFESSIONAL ENGINEER

Electronic Copy

12/06/2018

TABLE OF CONTENTS

1) INTRODUCTION

2) ANALYSIS CRITERIA
Table 1 - Proposed Equipment Configuration
Table 2 - Other Considered Equipment

3) ANALYSIS PROCEDURE
Table 3 - Documents Provided
3.1) Analysis Method
3.2) Assumptions

4) ANALYSIS RESULTS
Table 4 - Section Capacity (Summary)
Table 5 - Tower Component Stresses vs. Capacity
4.1) Recommendations

5) APPENDIX A
tnxTower Output

6) APPENDIX B
Base Level Drawing

7) APPENDIX C
Additional Calculations

1) INTRODUCTION

This tower is a 185-ft monopole tower designed by Engineered Endeavors, Inc. The tower has been modified per reinforcement drawings prepared by Vertical Structures, Inc. in February of 2009. All information provided to TEP was assumed to be accurate and complete.

2) ANALYSIS CRITERIA

TIA-222 Revision:	TIA-222-H
Risk Category:	II
Wind Speed:	120 mph
Exposure Category:	C
Topographic Factor:	1.0
Ice Thickness:	1.5 in
Wind Speed with Ice:	50 mph
Service Wind Speed:	60 mph

Table 1 - Proposed Equipment Configuration

Mounting Level (ft)	Center Line Elevation (ft)	Number of Antennas	Antenna Manufacturer	Antenna Model	Number of Feed Lines	Feed Line Size (in)
185.0	188.0	6	Decibel	DB846F65ZAXY w/ Mount Pipe	8	1-5/8
		6	Quintel Technology	QS8658-5 w/ Mount Pipe		
		6	Commscope	CBC78T-DS-43		
		2	Raycap	RRFDC-3315-PF-48		
		3	Samsung Telecomm.	RFV01U-D1A		
		3	Samsung Telecomm.	RFV01U-D2A		
	185.0	1	Tower Mounts	Platform Mount [LP 712-1]		
		1	Tower Mounts	Side Arm Mount [SO 202-3]		

Table 2 - Other Considered Equipment

Mounting Level (ft)	Center Line Elevation (ft)	Number of Antennas	Antenna Manufacturer	Antenna Model	Number of Feed Lines	Feed Line Size (in)
182.0	188.0	1	Decibel	ASP-601	1	1/2
	182.0	1	Tower Mounts	Side Arm Mount [SO 104-3]		

Mounting Level (ft)	Center Line Elevation (ft)	Number of Antennas	Antenna Manufacturer	Antenna Model	Number of Feed Lines	Feed Line Size (in)
175.0	177.0	3	Powerwave Technologies	7770.00 w/ Mount Pipe	12 6 3	1-5/8 5/8 3/8
		3	KMW Communications	EPBQ-654L8H6-L2 w/ Mount Pipe		
		3	CCI Antennas	OPA-65R-LCUU-H6 w/ Mount Pipe		
		12	Powerwave Technologies	7020.00		
		6	Powerwave Technologies	LGP21401		
		3	Raycap	DC6-48-60-18-8F		
		3	Ericsson	RRUS 32		
		3	Ericsson	RRUS 4478 B14		
		3	Ericsson	RRUS 32 B66		
		3	CCI Antennas	DTMABP7819VG12A		
		3	Ericsson	RRUS 11		
		3	Ericsson	RRUS 32 B2		
	175.0	1	Tower Mounts	Miscellaneous [NA 507-1]		
		1	Tower Mounts	Platform Mount [LP 712-1]		
167.0	167.0	1	Tower Mounts	Side Arm Mount [SO 104-3]	-	-
	165.0	3	Alcatel Lucent	1900MHz RRH (65MHz)		
		3	Alcatel Lucent	800MHZ RRH		
		3	Alcatel Lucent	800 External Notch Filter		
165.0	165.0	3	RFS Celwave	APXVTM14-ALU-I20 w/ Mount Pipe	4	1-1/4
		3	RFS Celwave	APXVSPP18-C-A20 w/ Mount Pipe		
		3	Alcatel Lucent	TD-RRH8x20-25		
		9	RFS Celwave	ACU-A20-N		
		1	Tower Mounts	Platform Mount [LP 712-1]		
		1	Tower Mounts	Miscellaneous [NA 507-1]		
145.0	148.0	3	Ericsson	AIR 21 B2A B4P w/ Mount Pipe	7	1-5/8
		3	Ericsson	AIR 21 B4A B2P w/ Mount Pipe		
		3	Ericsson	KRY 112 144/1		
	146.0	3	Commscope	LNX-6515DS-A1M w/ Mount Pipe		
		3	Ericsson	RRUS 11 B12		
	145.0	1	Tower Mounts	Platform Mount [LP 712-1]		
110.0	111.0	1	Generic	GPS	1	1/2
	110.0	1	Tower Mounts	Side Arm Mount [SO 701-1]		
108.0	109.0	1	Generic	GPS	1	1/2
	108.0	1	Tower Mounts	Side Arm Mount [SO 701-1]		
52.0	53.0	1	Generic	GPS	1	1/2
	52.0	1	Tower Mounts	Side Arm Mount [SO 701-1]		

3) ANALYSIS PROCEDURE

Table 3 - Documents Provided

Document	Remarks	Reference	Source
Geotechnical Report	Clarence Welti Associates, Inc.	2297011	CCISites
Tower Foundation Drawings	Engineered Endeavors, Inc.	822037	CCISites
Tower Manufacturer Drawings	Engineered Endeavors, Inc.	822035	CCISites
Tower Reinforcement Drawings	Vertical Structures, Inc.	2381114	CCISites
Post-Modification Inspection	Vertical Structures, Inc.	2447231	CCISites

3.1) Analysis Method

tnxTower (version 8.0.4.0), a commercially available analysis software package, was used to create a three-dimensional model of the tower and calculate member stresses for various loading cases. Selected output from the analysis is included in Appendix A.

3.2) Assumptions

1) The tower and foundation were built and maintained in accordance with the manufacturer's specification.
2) The configuration of antennas, transmission cables, mounts and other appurtenances are as specified in Tables 1 and 2, and the referenced drawings.
3) All tower components are in sufficient condition to carry their full design capacity.
4) Serviceability with respect to antenna twist, tilt, roll, or lateral translation, is not checked and is left to the carrier or tower owner to ensure conformance.
5) All antenna mounts and mounting hardware are structurally sufficient to carry the full design capacity requirements of appurtenance wind area and weight as provided by the original manufacturer specifications. It is the carrier's responsibility to ensure compliance to the structural limitations of the existing and/or proposed antenna mounts. TEP did not perform a site visit to verify the size, condition or capacity of the antenna mounts and did not analyze antennas supporting mounts as part of this structural analysis report.

This analysis may be affected if any assumptions are not valid or have been made in error. Tower Engineering Professionals should be notified to determine the effect on the structural integrity of the tower.

4) ANALYSIS RESULTS

Table 4 - Section Capacity (Summary)

Section No.	Elevation (ft)	Component Type	Size	Critical Element	P (lb)	ΦP_{allow} (lb)	% Capacity	Pass / Fail
L1	185 - 149.46	Pole	TP36.06x29x0.25	1	-13855.70	1915735.41	44.1	Pass
L2	149.46 - 114.083	Pole	TP42.46x34.55x0.313	2	-23884.50	2885252.87	70.5	Pass
L3	114.083 - 76.666	Pole	TP49.15x40.695x0.375	3	-35064.80	4059299.82	78.0	Pass
L4	76.666 - 38.253	Pole	TP55.9x47.097x0.438	4	-49904.80	5433382.25	77.6	Pass
L5	38.253 - 0	Pole	TP62.5x53.56x0.5	5	-72429.50	7118705.68	75.2	Pass
							Summary	
						Pole (L3)	78.0	Pass
						Rating =	**78.0**	**Pass**

Table 5 - Tower Component Stresses vs. Capacity – LC7

Notes	Component	Elevation (ft)	% Capacity	Pass / Fail
1,2	Anchor Rods	-	73.2	Pass
1,2	Base Plate	-	82.4	Pass
1,2	Base Foundation Soil Interaction	-	89.6	Pass
1,2	Base Foundation Structural	-	74.6	Pass

Structure Rating (max from all components) =	89.6%

Notes:
1) See additional documentation in "Appendix C - Additional Calculations" for calculations supporting the % capacity listed.
2) Rating per TIA-222-H Section 15.5

4.1) Recommendations

1) If the load differs from that described in Tables 1 and 2 of this report, the referenced drawings, or the provisions of this analysis are found to be invalid, another structural analysis should be performed.
2) The tower and its foundation have sufficient capacity to carry the proposed load configuration. No modifications are required at this time.

APPENDIX A

TNXTOWER OUTPUT

Section	Length (ft)	Number of Sides	Thickness (in)	Socket Length (ft)	Top Dia (in)	Bot Dia (in)	Grade	Weight (lb)
1	35.54	18	0.250	5.08	29.000	36.060	A572-65	3097.7
2	40.46	18	0.313	5.83	34.550	42.460		5215.5
3	43.25	18	0.375	6.67	40.695	49.150		7803.4
4	45.08	18	0.438	7.50	47.097	55.900		10876.6
5	45.75	18	0.500		53.560	62.500		14214.4
								41207.5

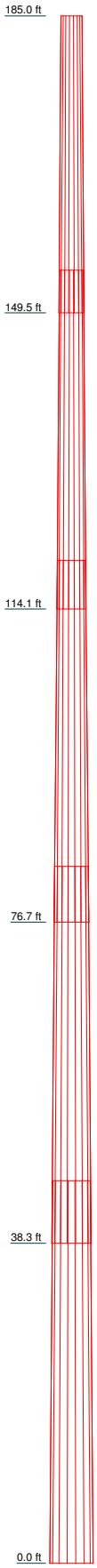

ALL REACTIONS ARE FACTORED

AXIAL 111543 lb

SHEAR 13416 lb

MOMENT 1937657 lb-ft

TORQUE 629 lb-ft
50 mph WIND - 1.275 in ICE

AXIAL 72463 lb

SHEAR 47751 lb

MOMENT 6724073 lb-ft

TORQUE 1820 lb-ft
REACTIONS - 120 mph WIND

DESIGNED APPURTENANCE LOADING

TYPE	ELEVATION	TYPE	ELEVATION
(2) DB846F65ZAXY w/ Mount Pipe	185	(3) 2.4" Dia x 6-ft Pipe	175
(2) DB846F65ZAXY w/ Mount Pipe	185	(3) 2.4" Dia x 6-ft Pipe	175
(2) DB846F65ZAXY w/ Mount Pipe	185	8' Ladder	175
(2) QS8658-5 w/ Mount Pipe	185	Miscellaneous [NA 507-1]	175
(2) QS8658-5 w/ Mount Pipe	185	Platform Mount [LP 712-1]	175
(2) QS8658-5 w/ Mount Pipe	185	1900MHz RRH (65MHz)	167
(2) CBC78T-DS-43	185	1900MHz RRH (65MHz)	167
(2) CBC78T-DS-43	185	1900MHz RRH (65MHz)	167
(2) CBC78T-DS-43	185	800MHZ RRH	167
RRFDC-3315-PF-48	185	800MHZ RRH	167
RRFDC-3315-PF-48	185	800MHZ RRH	167
(2) RFV01U-D1A	185	800 EXTERNAL NOTCH FILTER	167
RFV01U-D1A	185	800 EXTERNAL NOTCH FILTER	167
RFV01U-D2A	185	800 EXTERNAL NOTCH FILTER	167
RFV01U-D2A	185	(2) 2.4" Dia x 4-ft Pipe	167
RFV01U-D2A	185	(2) 2.4" Dia x 4-ft Pipe	167
2.4" Dia x 6-ft Pipe	185	(2) 2.4" Dia x 4-ft Pipe	167
2.4" Dia x 6-ft Pipe	185	2.4" Dia. x 4' Pipe (Horizontal)	167
2.4" Dia x 6-ft Pipe	185	2.4" Dia. x 4' Pipe (Horizontal)	167
8' Ladder	185	2.4" Dia. x 4' Pipe (Horizontal)	167
Platform Mount [LP 712-1]	185	Side Arm Mount [SO 104-3]	167
Side Arm Mount [SO 202-3]	185	APXVTM14-ALU-I20 w/ Mount Pipe	165
ASP-601	182	APXVTM14-ALU-I20 w/ Mount Pipe	165
2.4" Dia x 6-ft Pipe	182	APXVTM14-ALU-I20 w/ Mount Pipe	165
2.4" Dia x 12-ft Pipe	182	APXVSPP18-C-A20 w/ Mount Pipe	165
Side Arm Mount [SO 104-3]	182	APXVSPP18-C-A20 w/ Mount Pipe	165
7770.00 w/ Mount Pipe	175	APXVSPP18-C-A20 w/ Mount Pipe	165
7770.00 w/ Mount Pipe	175	TD-RRH8x20-25	165
7770.00 w/ Mount Pipe	175	TD-RRH8x20-25	165
EPBQ-654L8H6-L2 w/ Mount Pipe	175	TD-RRH8x20-25	165
EPBQ-654L8H6-L2 w/ Mount Pipe	175	(3) ACU-A20-N	165
EPBQ-654L8H6-L2 w/ Mount Pipe	175	(3) ACU-A20-N	165
OPA-65R-LCUU-H6 w/ Mount Pipe	175	(3) ACU-A20-N	165
OPA-65R-LCUU-H6 w/ Mount Pipe	175	8' Ladder	165
OPA-65R-LCUU-H6 w/ Mount Pipe	175	Miscellaneous [NA 507-1]	165
(4) 7020.00	175	Platform Mount [LP 712-1]	165
(4) 7020.00	175	ERICSSON AIR 21 B2A B4P w/ Mount Pipe	145
(4) 7020.00	175	ERICSSON AIR 21 B2A B4P w/ Mount Pipe	145
(2) LGP21401	175	ERICSSON AIR 21 B2A B4P w/ Mount Pipe	145
(2) LGP21401	175	ERICSSON AIR 21 B4A B2P w/ Mount Pipe	145
(2) LGP21401	175	ERICSSON AIR 21 B4A B2P w/ Mount Pipe	145
DC6-48-60-18-8F	175	ERICSSON AIR 21 B4A B2P w/ Mount Pipe	145
DC6-48-60-18-8F	175	LNX-6515DS-A1M w/ Mount Pipe	145
DC6-48-60-18-8F	175	LNX-6515DS-A1M w/ Mount Pipe	145
RRUS 32	175	LNX-6515DS-A1M w/ Mount Pipe	145
RRUS 32	175	KRY 112 144/1	145
RRUS 32	175	KRY 112 144/1	145
RRUS 4478 B14	175	KRY 112 144/1	145
RRUS 4478 B14	175	RRUS 11 B12	145
RRUS 4478 B14	175	RRUS 11 B12	145
RRUS 32 B66	175	RRUS 11 B12	145
RRUS 32 B66	175	8' Ladder	145
RRUS 32 B66	175	Platform Mount [LP 712-1]	145
DTMABP7819VG12A	175	GPS	110
DTMABP7819VG12A	175	2.4" Dia x 18" Pipe	110
DTMABP7819VG12A	175	Side Arm Mount [SO 701-1]	110
RRUS 11	175	GPS	108
RRUS 11	175	2.4" Dia x 18" Pipe	108
RRUS 11	175	Side Arm Mount [SO 701-1]	108
RRUS 32 B2	175	GPS	52
RRUS 32 B2	175	2.4" Dia x 18" Pipe	52
RRUS 32 B2	175	Side Arm Mount [SO 701-1]	52
(3) 2.4" Dia x 6-ft Pipe	175		

MATERIAL STRENGTH

GRADE	Fy	Fu	GRADE	Fy	Fu
A572-65	65 ksi	80 ksi			

TOWER DESIGN NOTES

1. Tower is located in Fairfield County, Connecticut.
2. Tower designed for Exposure C to the TIA-222-H Standard.
3. Tower designed for a 120 mph basic wind in accordance with the TIA-222-H Standard.
4. Tower is also designed for a 50 mph basic wind with 1.27 in ice. Ice is considered to increase in thickness with height.
5. Deflections are based upon a 60 mph wind.
6. Tower Risk Category II.
7. Topographic Category 1 with Crest Height of 0.00 ft
8. TIA-222-H Annex S
9. TOWER RATING: 78%

Tower Engineering Professionals
326 Tyron Road
Raleigh, NC 27603
Phone: (919) 661-6351
FAX: (919) 661-6350

Job: **BRG 123 943084 (BU 806354)**			
Project: **TEP No. 83114.200294**			
Client: Crown Castle	Drawn by: Connor J. Klein	App'd:	
Code: TIA-222-H	Date: 12/05/18	Scale: NTS	
Path:		Dwg No. E-1	

Tower Input Data

The tower is a monopole.
This tower is designed using the TIA-222-H standard.
The following design criteria apply:

Tower is located in Fairfield County, Connecticut.
Tower base elevation above sea level: 349.00 ft.
Basic wind speed of 120 mph.
Risk Category II.
Exposure Category C.
Simplified Topographic Factor Procedure for wind speed-up calculations is used.
Topographic Category: 1.
Crest Height 0.00 ft.
Nominal ice thickness of 1.275 in.
Ice thickness is considered to increase with height.
Ice density of 56 pcf.
A wind speed of 50 mph is used in combination with ice.
Temperature drop of 50 °F.
Deflections calculated using a wind speed of 60 mph.
TIA-222-H Annex S.
A non-linear (P-delta) analysis was used.
Pressures are calculated at each section.
Stress ratio used in pole design is 1.05.
Local bending stresses due to climbing loads, feed line supports, and appurtenance mounts are not considered.

Options

Consider Moments - Legs
Consider Moments - Horizontals
Consider Moments - Diagonals
Use Moment Magnification
Use Code Stress Ratios
√ Use Code Safety Factors - Guys
Escalate Ice
Always Use Max Kz
Use Special Wind Profile
Include Bolts In Member Capacity
Leg Bolts Are At Top Of Section
Secondary Horizontal Braces Leg
Use Diamond Inner Bracing (4 Sided)
SR Members Have Cut Ends
SR Members Are Concentric

Distribute Leg Loads As Uniform
Assume Legs Pinned
√ Assume Rigid Index Plate
√ Use Clear Spans For Wind Area
Use Clear Spans For KL/r
Retension Guys To Initial Tension
√ Bypass Mast Stability Checks
√ Use Azimuth Dish Coefficients
√ Project Wind Area of Appurt.
Autocalc Torque Arm Areas
Add IBC .6D+W Combination
√ Sort Capacity Reports By Component
Triangulate Diamond Inner Bracing
Treat Feed Line Bundles As Cylinder
Ignore KL/ry For 60 Deg. Angle Legs

Use ASCE 10 X-Brace Ly Rules
Calculate Redundant Bracing Forces
Ignore Redundant Members in FEA
SR Leg Bolts Resist Compression
All Leg Panels Have Same Allowable
Offset Girt At Foundation
√ Consider Feed Line Torque
Include Angle Block Shear Check
Use TIA-222-H Bracing Resist. Exemption
Use TIA-222-H Tension Splice Exemption

Poles

√ Include Shear-Torsion Interaction
Always Use Sub-Critical Flow
Use Top Mounted Sockets
Pole Without Linear Attachments
Pole With Shroud Or No Appurtenances
Outside and Inside Corner Radii Are Known

Tapered Pole Section Geometry

Section	Elevation ft	Section Length ft	Splice Length ft	Number of Sides	Top Diameter in	Bottom Diameter in	Wall Thickness in	Bend Radius in	Pole Grade
L1	185.00-149.46	35.54	5.083	18	29.000	36.060	0.250	1.000	A572-65 (65 ksi)
L2	149.46-114.08	40.46	5.833	18	34.550	42.460	0.313	1.250	A572-65 (65 ksi)
L3	114.08-76.67	43.25	6.667	18	40.695	49.150	0.375	1.500	A572-65 (65 ksi)
L4	76.67-38.25	45.08	7.500	18	47.097	55.900	0.438	1.750	A572-65 (65 ksi)
L5	38.25-0.00	45.75		18	53.560	62.500	0.500	2.000	A572-65 (65 ksi)

Tapered Pole Properties

Section	Tip Dia. in	Area in^2	I in^4	r in	C in	I/C in^3	J in^4	It/Q in^2	w in	w/t
L1	29.409	22.813	2382.308	10.206	14.732	161.710	4767.751	11.409	4.664	18.656
	36.578	28.415	4603.597	12.713	18.318	251.309	9213.253	14.210	5.907	23.626
L2	36.044	33.960	5029.336	12.154	17.552	286.547	10065.289	16.983	5.531	17.699
	43.067	41.805	9382.312	14.962	21.570	434.977	18776.969	20.906	6.923	22.153
L3	42.423	47.990	9856.592	14.313	20.673	476.788	19726.153	24.000	6.502	17.339
	49.850	58.054	17448.877	17.315	24.968	698.844	34920.713	29.033	7.990	21.308
L4	49.078	64.792	17820.988	16.564	23.925	744.866	35665.426	32.402	7.519	17.186
	56.695	77.017	29930.967	19.689	28.397	1054.011	59901.319	38.516	9.068	20.728
L5	55.798	84.207	29951.960	18.836	27.209	1100.824	59943.332	42.111	8.547	17.093
	63.387	98.394	47784.764	22.010	31.750	1505.032	95632.404	49.206	10.120	20.24

Tower Elevation ft	Gusset Area (per face) ft^2	Gusset Thickness in	Gusset Grade	Adjust. Factor A_f	Adjust. Factor A_r	Weight Mult.	Double Angle Stitch Bolt Spacing Diagonals in	Double Angle Stitch Bolt Spacing Horizontals in	Double Angle Stitch Bolt Spacing Redundants in
L1 185.00-149.46				1	1	1			
L2 149.46-114.08				1	1	1			
L3 114.08-76.67				1	1	1			
L4 76.67-38.25				1	1	1			
L5 38.25-0.00				1	1	1			

Feed Line/Linear Appurtenances - Entered As Round Or Flat

Description	Sector	Exclude From Torque Calculation	Component Type	Placement ft	Total Number	Number Per Row	Start/End Position	Width or Diameter in	Perimeter in	Weight plf
175										
CR 50 1873PE(1-5/8)	A	No	Surface Af (CaAa)	175.00 - 0.00	6	6	-0.250 -0.250	0.000	3.960	0.830
CR 50 1873PE(1-5/8)	C	No	Surface Af (CaAa)	175.00 - 0.00	6	6	0.000 0.000	0.000	3.960	0.830
Misc										

Description	Sector	Exclude From Torque Calculation	Component Type	Placement ft	Total Number	Number Per Row	Start/End Position	Width or Diameter in	Perimeter in	Weight plf
Safety Line 3/8	A	No	Surface Af (CaAa)	185.00 - 0.00	1	1	0.500 0.500	0.000	0.750	0.220
******** * * * * *										

Feed Line/Linear Appurtenances - Entered As Area

Description	Face or Leg	Allow Shield	Exclude From Torque Calculation	Component Type	Placement ft	Total Number		C_AA_A ft^2/ft	Weight plf
185									
HJ7-50A(1-5/8)	A	No	No	Inside Pole	185.00 - 0.00	6	No Ice	0.00	1.040
							1/2" Ice	0.00	1.040
							1" Ice	0.00	1.040
							2" Ice	0.00	1.040
HB158-1-08U8-S8J18(1-5/8)	A	No	No	Inside Pole	185.00 - 0.00	2	No Ice	0.00	1.300
							1/2" Ice	0.00	1.300
							1" Ice	0.00	1.300
							2" Ice	0.00	1.300
182									
LDF4P-50A(1/2)	A	No	No	Inside Pole	182.00 - 0.00	1	No Ice	0.00	0.150
							1/2" Ice	0.00	0.150
							1" Ice	0.00	0.150
							2" Ice	0.00	0.150
2" Flexible Conduit	A	No	No	Inside Pole	175.00 - 0.00	1	No Ice	0.00	0.340
							1/2" Ice	0.00	0.340
							1" Ice	0.00	0.340
							2" Ice	0.00	0.340
FB-L98B-002-75000(3/8)	A	No	No	Inside Pole	175.00 - 0.00	1	No Ice	0.00	0.059
							1/2" Ice	0.00	0.059
							1" Ice	0.00	0.059
							2" Ice	0.00	0.059
WR-VG82ST-BRDA(5/8)	A	No	No	Inside Pole	175.00 - 0.00	2	No Ice	0.00	0.307
							1/2" Ice	0.00	0.307
							1" Ice	0.00	0.307
							2" Ice	0.00	0.307
WR-VG82ST-BRDA(5/8)	A	No	No	CaAa (Out Of Face)	175.00 - 0.00	2	No Ice	0.00	0.307
							1/2" Ice	0.00	1.006
							1" Ice	0.00	2.317
							2" Ice	0.00	6.770
FB-L98B-002-75000(3/8)	A	No	No	Inside Pole	175.00 - 0.00	2	No Ice	0.00	0.059
							1/2" Ice	0.00	0.059
							1" Ice	0.00	0.059
							2" Ice	0.00	0.059
WR-VG82ST-BRDA(5/8)	A	No	No	Inside Pole	175.00 - 0.00	2	No Ice	0.00	0.307
							1/2" Ice	0.00	0.307
							1" Ice	0.00	0.307
							2" Ice	0.00	0.307
2" Flexible Conduit	A	No	No	Inside Pole	175.00 - 0.00	1	No Ice	0.00	0.340
							1/2" Ice	0.00	0.340
							1" Ice	0.00	0.340
							2" Ice	0.00	0.340

Description	Face or Leg	Allow Shield	Exclude From Torque Calculation	Component Type	Placement ft	Total Number		C_AA_A ft^2/ft	Weight plf
165									
HB114-1-0813U4-M5J(1-1/4)	B	No	No	Inside Pole	165.00 - 0.00	4	No Ice	0.00	1.200
							1/2" Ice	0.00	1.200
							1" Ice	0.00	1.200
							2" Ice	0.00	1.200
145									
LDF7-50A(1-5/8)	B	No	No	Inside Pole	145.00 - 0.00	6	No Ice	0.00	0.820
							1/2" Ice	0.00	0.820
							1" Ice	0.00	0.820
							2" Ice	0.00	0.820
MLE Hybrid 9Power/18Fiber RL 2(1-5/8)	B	No	No	Inside Pole	145.00 - 0.00	1	No Ice	0.00	1.070
							1/2" Ice	0.00	1.070
							1" Ice	0.00	1.070
							2" Ice	0.00	1.070
110									
LDF4P-50A(1/2")	C	No	No	Inside Pole	110.00 - 0.00	1	No Ice	0.00	0.150
							1/2" Ice	0.00	0.150
							1" Ice	0.00	0.150
							2" Ice	0.00	0.150
108									
LDF4P-50A(1/2")	C	No	No	Inside Pole	108.00 - 0.00	1	No Ice	0.00	0.150
							1/2" Ice	0.00	0.150
							1" Ice	0.00	0.150
							2" Ice	0.00	0.150
52									
LDF4P-50A(1/2")	C	No	No	Inside Pole	52.00 - 0.00	1	No Ice	0.00	0.150
							1/2" Ice	0.00	0.150
							1" Ice	0.00	0.150
							2" Ice	0.00	0.150
********									
*									
*									
*									
*									
*									

Feed Line/Linear Appurtenances Section Areas

Tower Section	Tower Elevation ft	Face	A_R ft^2	A_F ft^2	C_AA_A In Face ft^2	C_AA_A Out Face ft^2	Weight lb
L1	185.00-149.46	A	0.000	0.000	0.000	0.000	522.96
		B	0.000	0.000	0.000	0.000	74.59
		C	0.000	0.000	0.000	0.000	127.19
L2	149.46-114.08	A	0.000	0.000	0.000	0.000	597.44
		B	0.000	0.000	0.000	0.000	355.00
		C	0.000	0.000	0.000	0.000	176.18
L3	114.08-76.67	A	0.000	0.000	0.000	0.000	631.89
		B	0.000	0.000	0.000	0.000	403.73
		C	0.000	0.000	0.000	0.000	196.04
L4	76.67-38.25	A	0.000	0.000	0.000	0.000	648.71
		B	0.000	0.000	0.000	0.000	414.48
		C	0.000	0.000	0.000	0.000	204.88
L5	38.25-0.00	A	0.000	0.000	0.000	0.000	646.01

Tower Section	Tower Elevation ft	Face	A_R ft^2	A_F ft^2	C_AA_A In Face ft^2	C_AA_A Out Face ft^2	Weight lb
		B	0.000	0.000	0.000	0.000	412.75
		C	0.000	0.000	0.000	0.000	207.71

Feed Line/Linear Appurtenances Section Areas - With Ice

Tower Section	Tower Elevation ft	Face or Leg	Ice Thickness in	A_R ft^2	A_F ft^2	C_AA_A In Face ft^2	C_AA_A Out Face ft^2	Weight lb
L1	185.00-149.46	A	1.499	0.000	0.000	10.656	0.000	1015.76
		B		0.000	0.000	0.000	0.000	74.59
		C		0.000	0.000	0.000	0.000	270.65
L2	149.46-114.08	A	1.464	0.000	0.000	10.607	0.000	1228.15
		B		0.000	0.000	0.000	0.000	355.00
		C		0.000	0.000	0.000	0.000	374.90
L3	114.08-76.67	A	1.417	0.000	0.000	10.955	0.000	1273.29
		B		0.000	0.000	0.000	0.000	403.73
		C		0.000	0.000	0.000	0.000	398.43
L4	76.67-38.25	A	1.347	0.000	0.000	10.889	0.000	1272.78
		B		0.000	0.000	0.000	0.000	414.48
		C		0.000	0.000	0.000	0.000	402.31
L5	38.25-0.00	A	1.209	0.000	0.000	10.309	0.000	1217.02
		B		0.000	0.000	0.000	0.000	412.75
		C		0.000	0.000	0.000	0.000	389.33

Feed Line Center of Pressure

Section	Elevation ft	CP_X in	CP_Z in	CP_X Ice in	CP_Z Ice in
L1	185.00-149.46	0.000	0.000	1.099	-1.112
L2	149.46-114.08	0.000	0.000	1.102	-1.113
L3	114.08-76.67	0.000	0.000	1.123	-1.132
L4	76.67-38.25	0.000	0.000	1.126	-1.134
L5	38.25-0.00	0.000	0.000	1.104	-1.111

Note: For pole sections, center of pressure calculations do not consider feed line shielding.

Shielding Factor Ka

Tower Section	Feed Line Record No.	Description	Feed Line Segment Elev.	K_a No Ice	K_a Ice
L1	8	CR 50 1873PE(1-5/8)	149.46 - 175.00	1.0000	1.0000
L1	9	CR 50 1873PE(1-5/8)	149.46 - 175.00	1.0000	1.0000
L1	29	Safety Line 3/8	149.46 - 185.00	1.0000	1.0000

Tower Section	Feed Line Record No.	Description	Feed Line Segment Elev.	K_a No Ice	K_a Ice
L2	8	CR 50 1873PE(1-5/8)	114.08 - 149.46	1.0000	1.0000
L2	9	CR 50 1873PE(1-5/8)	114.08 - 149.46	1.0000	1.0000
L2	29	Safety Line 3/8	114.08 - 149.46	1.0000	1.0000
L3	8	CR 50 1873PE(1-5/8)	76.67 - 114.08	1.0000	1.0000
L3	9	CR 50 1873PE(1-5/8)	76.67 - 114.08	1.0000	1.0000
L3	29	Safety Line 3/8	76.67 - 114.08	1.0000	1.0000
L4	8	CR 50 1873PE(1-5/8)	38.25 - 76.67	1.0000	1.0000
L4	9	CR 50 1873PE(1-5/8)	38.25 - 76.67	1.0000	1.0000
L4	29	Safety Line 3/8	38.25 - 76.67	1.0000	1.0000

Discrete Tower Loads

Description	Face or Leg	Offset Type	Offsets: Horz Lateral Vert ft ft ft	Azimuth Adjustment °	Placement ft		C_AA_A Front ft^2	C_AA_A Side ft^2	Weight lb
185									
(2) DB846F65ZAXY w/ Mount Pipe	A	From Centroid-Leg	4.00 0.000 3.000	0.000	185.00	No Ice	7.27	7.82	46.55
						1/2" Ice	7.83	9.01	113.93
						1" Ice	8.35	9.91	189.25
						2" Ice	9.40	11.73	367.34
(2) DB846F65ZAXY w/ Mount Pipe	B	From Centroid-Leg	4.00 0.000 3.000	0.000	185.00	No Ice	7.27	7.82	46.55
						1/2" Ice	7.83	9.01	113.93
						1" Ice	8.35	9.91	189.25
						2" Ice	9.40	11.73	367.34
(2) DB846F65ZAXY w/ Mount Pipe	C	From Centroid-Leg	4.00 0.000 3.000	0.000	185.00	No Ice	7.27	7.82	46.55
						1/2" Ice	7.83	9.01	113.93
						1" Ice	8.35	9.91	189.25
						2" Ice	9.40	11.73	367.34
(2) QS8658-5 w/ Mount Pipe	A	From Centroid-Leg	4.00 0.000 3.000	0.000	185.00	No Ice	11.70	11.74	130.85
						1/2" Ice	12.42	13.27	229.33
						1" Ice	13.15	14.83	337.91
						2" Ice	14.52	17.19	589.73
(2) QS8658-5 w/ Mount Pipe	B	From Centroid-Leg	4.00 0.000 3.000	0.000	185.00	No Ice	11.70	11.74	130.85
						1/2" Ice	12.42	13.27	229.33
						1" Ice	13.15	14.83	337.91
						2" Ice	14.52	17.19	589.73
(2) QS8658-5 w/ Mount Pipe	C	From Centroid-Leg	4.00 0.000 3.000	0.000	185.00	No Ice	11.70	11.74	130.85
						1/2" Ice	12.42	13.27	229.33
						1" Ice	13.15	14.83	337.91
						2" Ice	14.52	17.19	589.73
(2) CBC78T-DS-43	A	From Centroid-Leg	4.00 0.000 3.000	0.000	185.00	No Ice	0.37	0.25	10.58
						1/2" Ice	0.45	0.32	14.68
						1" Ice	0.53	0.39	20.15
						2" Ice	0.72	0.56	35.97
(2) CBC78T-DS-43	B	From Centroid-Leg	4.00 0.000 3.000	0.000	185.00	No Ice	0.37	0.25	10.58
						1/2" Ice	0.45	0.32	14.68
						1" Ice	0.53	0.39	20.15
						2" Ice	0.72	0.56	35.97

Description	Face or Leg	Offset Type	Offsets: Horz Lateral Vert ft ft ft	Azimuth Adjustment °	Placement ft		C_AA_A Front ft^2	C_AA_A Side ft^2	Weight lb
(2) CBC78T-DS-43	C	From Centroid-Leg	4.00 0.000 3.000	0.000	185.00	No Ice	0.37	0.25	10.58
						1/2" Ice	0.45	0.32	14.68
						1" Ice	0.53	0.39	20.15
						2" Ice	0.72	0.56	35.97
RRFDC-3315-PF-48	A	From Centroid-Leg	4.00 0.000 3.000	0.000	185.00	No Ice	3.36	2.19	32.00
						1/2" Ice	3.60	2.39	60.54
						1" Ice	3.84	2.61	92.61
						2" Ice	4.34	3.05	168.17
RRFDC-3315-PF-48	C	From Centroid-Leg	4.00 0.000 3.000	0.000	185.00	No Ice	3.36	2.19	32.00
						1/2" Ice	3.60	2.39	60.54
						1" Ice	3.84	2.61	92.61
						2" Ice	4.34	3.05	168.17
(2) RFV01U-D1A	A	From Centroid-Leg	4.00 0.000 3.000	0.000	185.00	No Ice	1.88	1.25	84.40
						1/2" Ice	2.05	1.39	102.74
						1" Ice	2.22	1.54	123.87
						2" Ice	2.60	1.86	175.27
RFV01U-D1A	B	From Centroid-Leg	4.00 0.000 3.000	0.000	185.00	No Ice	1.88	1.25	84.40
						1/2" Ice	2.05	1.39	102.74
						1" Ice	2.22	1.54	123.87
						2" Ice	2.60	1.86	175.27
RFV01U-D2A	A	From Centroid-Leg	4.00 0.000 3.000	0.000	185.00	No Ice	1.88	1.01	70.30
						1/2" Ice	2.05	1.14	86.73
						1" Ice	2.22	1.28	105.83
						2" Ice	2.60	1.59	152.80
RFV01U-D2A	B	From Centroid-Leg	4.00 0.000 3.000	0.000	185.00	No Ice	1.88	1.01	70.30
						1/2" Ice	2.05	1.14	86.73
						1" Ice	2.22	1.28	105.83
						2" Ice	2.60	1.59	152.80
RFV01U-D2A	C	From Centroid-Leg	4.00 0.000 3.000	0.000	185.00	No Ice	1.88	1.01	70.30
						1/2" Ice	2.05	1.14	86.73
						1" Ice	2.22	1.28	105.83
						2" Ice	2.60	1.59	152.80
2.4" Dia x 6-ft Pipe	A	From Centroid-Leg	4.00 0.000 0.000	0.000	185.00	No Ice	1.43	1.43	21.96
						1/2" Ice	1.93	1.93	32.81
						1" Ice	2.30	2.30	47.71
						2" Ice	3.06	3.06	90.32
2.4" Dia x 6-ft Pipe	B	From Centroid-Leg	4.00 0.000 0.000	0.000	185.00	No Ice	1.43	1.43	21.96
						1/2" Ice	1.93	1.93	32.81
						1" Ice	2.30	2.30	47.71
						2" Ice	3.06	3.06	90.32
2.4" Dia x 6-ft Pipe	C	From Centroid-Leg	4.00 0.000 0.000	0.000	185.00	No Ice	1.43	1.43	21.96
						1/2" Ice	1.93	1.93	32.81
						1" Ice	2.30	2.30	47.71
						2" Ice	3.06	3.06	90.32
8' Ladder	B	From Centroid-Leg	2.00 0.000 -4.000	0.000	185.00	No Ice	1.53	5.33	97.20
						1/2" Ice	4.36	8.08	114.05
						1" Ice	7.19	10.83	130.89
						2" Ice	12.86	16.33	164.58
Platform Mount [LP 712-1]	C	None		0.000	185.00	No Ice	24.53	24.53	1335.00
						1/2" Ice	29.94	29.94	1645.59
						1" Ice	35.35	35.35	1956.18
						2" Ice	46.17	46.17	2577.36
Side Arm Mount [SO 202-3]	C	None		0.000	185.00	No Ice	6.18	6.18	330.00
						1/2" Ice	8.56	8.56	400.64
						1" Ice	10.94	10.94	471.28
						2" Ice	15.70	15.70	612.56

182

Description	Face or Leg	Offset Type	Offsets: Horz Lateral Vert ft ft ft	Azimuth Adjustment °	Placement ft		C_AA_A Front ft^2	C_AA_A Side ft^2	Weight lb
ASP-601	B	From Leg	1.00 0.000 6.000	0.000	182.00	No Ice 1/2" Ice 1" Ice 2" Ice	2.34 4.21 6.08 9.83	2.34 4.21 6.08 9.83	28.00 36.40 44.80 61.60
2.4" Dia x 6-ft Pipe	B	From Leg	1.00 0.000 6.000	0.000	182.00	No Ice 1/2" Ice 1" Ice 2" Ice	1.43 1.93 2.30 3.06	1.43 1.93 2.30 3.06	21.96 32.81 47.71 90.32
2.4" Dia x 12-ft Pipe	B	From Leg	1.00 0.000 6.000	0.000	182.00	No Ice 1/2" Ice 1" Ice 2" Ice	2.86 4.08 5.33 7.61	2.86 4.08 5.33 7.61	40.26 61.66 90.79 172.83
Side Arm Mount [SO 104-3]	C	None		0.000	182.00	No Ice 1/2" Ice 1" Ice 2" Ice	3.30 4.13 4.96 6.62	3.30 4.13 4.96 6.62	287.00 317.00 347.00 407.00
175									
7770.00 w/ Mount Pipe	A	From Centroid-Leg	4.00 0.000 2.000	0.000	175.00	No Ice 1/2" Ice 1" Ice 2" Ice	5.75 6.18 6.61 7.49	4.25 5.01 5.71 7.16	55.38 102.81 156.64 286.58
7770.00 w/ Mount Pipe	B	From Centroid-Leg	4.00 0.000 2.000	0.000	175.00	No Ice 1/2" Ice 1" Ice 2" Ice	5.75 6.18 6.61 7.49	4.25 5.01 5.71 7.16	55.38 102.81 156.64 286.58
7770.00 w/ Mount Pipe	C	From Centroid-Leg	4.00 0.000 2.000	0.000	175.00	No Ice 1/2" Ice 1" Ice 2" Ice	5.75 6.18 6.61 7.49	4.25 5.01 5.71 7.16	55.38 102.81 156.64 286.58
EPBQ-654L8H6-L2 w/ Mount Pipe	A	From Centroid-Leg	4.00 0.000 2.000	0.000	175.00	No Ice 1/2" Ice 1" Ice 2" Ice	13.47 14.09 14.66 15.84	6.64 7.83 8.75 10.58	109.65 200.52 299.98 528.33
EPBQ-654L8H6-L2 w/ Mount Pipe	B	From Centroid-Leg	4.00 0.000 2.000	0.000	175.00	No Ice 1/2" Ice 1" Ice 2" Ice	13.47 14.09 14.66 15.84	6.64 7.83 8.75 10.58	109.65 200.52 299.98 528.33
EPBQ-654L8H6-L2 w/ Mount Pipe	C	From Centroid-Leg	4.00 0.000 2.000	0.000	175.00	No Ice 1/2" Ice 1" Ice 2" Ice	13.47 14.09 14.66 15.84	6.64 7.83 8.75 10.58	109.65 200.52 299.98 528.33
OPA-65R-LCUU-H6 w/ Mount Pipe	A	From Centroid-Leg	4.00 0.000 2.000	0.000	175.00	No Ice 1/2" Ice 1" Ice 2" Ice	9.90 10.47 11.01 12.11	7.18 8.36 9.26 11.09	98.55 175.48 260.58 458.97
OPA-65R-LCUU-H6 w/ Mount Pipe	B	From Centroid-Leg	4.00 0.000 2.000	0.000	175.00	No Ice 1/2" Ice 1" Ice 2" Ice	9.90 10.47 11.01 12.11	7.18 8.36 9.26 11.09	98.55 175.48 260.58 458.97
OPA-65R-LCUU-H6 w/ Mount Pipe	C	From Centroid-Leg	4.00 0.000 2.000	0.000	175.00	No Ice 1/2" Ice 1" Ice 2" Ice	9.90 10.47 11.01 12.11	7.18 8.36 9.26 11.09	98.55 175.48 260.58 458.97
(4) 7020.00	A	From Centroid-Leg	4.00 0.000 2.000	0.000	175.00	No Ice 1/2" Ice 1" Ice 2" Ice	0.10 0.15 0.20 0.33	0.17 0.24 0.31 0.48	2.20 5.16 9.33 22.11

Description	Face or Leg	Offset Type	Offsets: Horz Lateral Vert ft ft ft	Azimuth Adjustment °	Placement ft		C_AA_A Front ft^2	C_AA_A Side ft^2	Weight lb
(4) 7020.00	B	From Centroid-Leg	4.00 0.000 2.000	0.000	175.00	No Ice	0.10	0.17	2.20
						1/2" Ice	0.15	0.24	5.16
						1" Ice	0.20	0.31	9.33
						2" Ice	0.33	0.48	22.11
(4) 7020.00	C	From Centroid-Leg	4.00 0.000 2.000	0.000	175.00	No Ice	0.10	0.17	2.20
						1/2" Ice	0.15	0.24	5.16
						1" Ice	0.20	0.31	9.33
						2" Ice	0.33	0.48	22.11
(2) LGP21401	A	From Centroid-Leg	4.00 0.000 2.000	0.000	175.00	No Ice	1.10	0.21	14.10
						1/2" Ice	1.24	0.27	21.26
						1" Ice	1.38	0.35	30.32
						2" Ice	1.69	0.52	54.89
(2) LGP21401	B	From Centroid-Leg	4.00 0.000 2.000	0.000	175.00	No Ice	1.10	0.21	14.10
						1/2" Ice	1.24	0.27	21.26
						1" Ice	1.38	0.35	30.32
						2" Ice	1.69	0.52	54.89
(2) LGP21401	C	From Centroid-Leg	4.00 0.000 2.000	0.000	175.00	No Ice	1.10	0.21	14.10
						1/2" Ice	1.24	0.27	21.26
						1" Ice	1.38	0.35	30.32
						2" Ice	1.69	0.52	54.89
DC6-48-60-18-8F	A	From Centroid-Leg	4.00 0.000 2.000	0.000	175.00	No Ice	1.21	1.21	32.80
						1/2" Ice	1.89	1.89	54.76
						1" Ice	2.11	2.11	79.58
						2" Ice	2.57	2.57	138.43
DC6-48-60-18-8F	B	From Centroid-Leg	4.00 0.000 2.000	0.000	175.00	No Ice	1.21	1.21	32.80
						1/2" Ice	1.89	1.89	54.76
						1" Ice	2.11	2.11	79.58
						2" Ice	2.57	2.57	138.43
DC6-48-60-18-8F	C	From Centroid-Leg	4.00 0.000 2.000	0.000	175.00	No Ice	1.21	1.21	32.80
						1/2" Ice	1.89	1.89	54.76
						1" Ice	2.11	2.11	79.58
						2" Ice	2.57	2.57	138.43
RRUS 32	A	From Centroid-Leg	4.00 0.000 2.000	0.000	175.00	No Ice	2.86	1.78	55.12
						1/2" Ice	3.08	1.97	77.39
						1" Ice	3.32	2.17	102.93
						2" Ice	3.81	2.58	164.59
RRUS 32	B	From Centroid-Leg	4.00 0.000 2.000	0.000	175.00	No Ice	2.86	1.78	55.12
						1/2" Ice	3.08	1.97	77.39
						1" Ice	3.32	2.17	102.93
						2" Ice	3.81	2.58	164.59
RRUS 32	C	From Centroid-Leg	4.00 0.000 2.000	0.000	175.00	No Ice	2.86	1.78	55.12
						1/2" Ice	3.08	1.97	77.39
						1" Ice	3.32	2.17	102.93
						2" Ice	3.81	2.58	164.59
RRUS 4478 B14	A	From Centroid-Leg	4.00 0.000 2.000	0.000	175.00	No Ice	1.84	1.06	59.90
						1/2" Ice	2.01	1.20	75.78
						1" Ice	2.19	1.34	94.29
						2" Ice	2.57	1.66	139.98
RRUS 4478 B14	B	From Centroid-Leg	4.00 0.000 2.000	0.000	175.00	No Ice	1.84	1.06	59.90
						1/2" Ice	2.01	1.20	75.78
						1" Ice	2.19	1.34	94.29
						2" Ice	2.57	1.66	139.98
RRUS 4478 B14	C	From Centroid-Leg	4.00 0.000 2.000	0.000	175.00	No Ice	1.84	1.06	59.90
						1/2" Ice	2.01	1.20	75.78
						1" Ice	2.19	1.34	94.29
						2" Ice	2.57	1.66	139.98
RRUS 32 B66	A	From	4.00	0.000	175.00	No Ice	2.73	1.67	52.90

Description	Face or Leg	Offset Type	Offsets: Horz Lateral Vert ft ft ft	Azimuth Adjustment °	Placement ft		C_AA_A Front ft^2	C_AA_A Side ft^2	Weight lb
		Centroid-Le	0.000			1/2" Ice	2.95	1.86	73.96
		g	2.000			1" Ice	3.18	2.05	98.21
						2" Ice	3.66	2.46	157.06
RRUS 32 B66	B	From	4.00	0.000	175.00	No Ice	2.73	1.67	52.90
		Centroid-Le	0.000			1/2" Ice	2.95	1.86	73.96
		g	2.000			1" Ice	3.18	2.05	98.21
						2" Ice	3.66	2.46	157.06
RRUS 32 B66	C	From	4.00	0.000	175.00	No Ice	2.73	1.67	52.90
		Centroid-Le	0.000			1/2" Ice	2.95	1.86	73.96
		g	2.000			1" Ice	3.18	2.05	98.21
						2" Ice	3.66	2.46	157.06
DTMABP7819VG12A	A	From	4.00	0.000	175.00	No Ice	0.98	0.34	19.18
		Centroid-Le	0.000			1/2" Ice	1.10	0.42	26.48
		g	2.000			1" Ice	1.23	0.51	35.63
						2" Ice	1.52	0.71	60.23
DTMABP7819VG12A	B	From	4.00	0.000	175.00	No Ice	0.98	0.34	19.18
		Centroid-Le	0.000			1/2" Ice	1.10	0.42	26.48
		g	2.000			1" Ice	1.23	0.51	35.63
						2" Ice	1.52	0.71	60.23
DTMABP7819VG12A	C	From	4.00	0.000	175.00	No Ice	0.98	0.34	19.18
		Centroid-Le	0.000			1/2" Ice	1.10	0.42	26.48
		g	2.000			1" Ice	1.23	0.51	35.63
						2" Ice	1.52	0.71	60.23
RRUS 11	A	From	4.00	0.000	175.00	No Ice	2.79	1.19	50.70
		Centroid-Le	0.000			1/2" Ice	3.00	1.34	71.57
		g	2.000			1" Ice	3.21	1.50	95.48
						2" Ice	3.67	1.84	153.20
RRUS 11	B	From	4.00	0.000	175.00	No Ice	2.79	1.19	50.70
		Centroid-Le	0.000			1/2" Ice	3.00	1.34	71.57
		g	2.000			1" Ice	3.21	1.50	95.48
						2" Ice	3.67	1.84	153.20
RRUS 11	C	From	4.00	0.000	175.00	No Ice	2.79	1.19	50.70
		Centroid-Le	0.000			1/2" Ice	3.00	1.34	71.57
		g	2.000			1" Ice	3.21	1.50	95.48
						2" Ice	3.67	1.84	153.20
RRUS 32 B2	A	From	4.00	0.000	175.00	No Ice	2.73	1.67	52.90
		Centroid-Le	0.000			1/2" Ice	2.95	1.86	73.96
		g	2.000			1" Ice	3.18	2.05	98.21
						2" Ice	3.66	2.46	157.06
RRUS 32 B2	B	From	4.00	0.000	175.00	No Ice	2.73	1.67	52.90
		Centroid-Le	0.000			1/2" Ice	2.95	1.86	73.96
		g	2.000			1" Ice	3.18	2.05	98.21
						2" Ice	3.66	2.46	157.06
RRUS 32 B2	C	From	4.00	0.000	175.00	No Ice	2.73	1.67	52.90
		Centroid-Le	0.000			1/2" Ice	2.95	1.86	73.96
		g	2.000			1" Ice	3.18	2.05	98.21
						2" Ice	3.66	2.46	157.06
(3) 2.4" Dia x 6-ft Pipe	A	From	4.00	0.000	175.00	No Ice	1.43	1.43	21.96
		Centroid-Le	0.000			1/2" Ice	1.93	1.93	32.81
		g	1.000			1" Ice	2.30	2.30	47.71
						2" Ice	3.06	3.06	90.32
(3) 2.4" Dia x 6-ft Pipe	B	From	4.00	0.000	175.00	No Ice	1.43	1.43	21.96
		Centroid-Le	0.000			1/2" Ice	1.93	1.93	32.81
		g	1.000			1" Ice	2.30	2.30	47.71
						2" Ice	3.06	3.06	90.32
(3) 2.4" Dia x 6-ft Pipe	C	From	4.00	0.000	175.00	No Ice	1.43	1.43	21.96
		Centroid-Le	0.000			1/2" Ice	1.93	1.93	32.81

Description	Face or Leg	Offset Type	Offsets: Horz Lateral Vert ft ft ft	Azimuth Adjustment °	Placement ft		C_AA_A Front ft^2	C_AA_A Side ft^2	Weight lb
		g	1.000			1" Ice	2.30	2.30	47.71
						2" Ice	3.06	3.06	90.32
8' Ladder	A	From Centroid-Leg	2.00 0.000 -4.000	0.000	175.00	No Ice	1.53	5.33	97.20
						1/2" Ice	4.36	8.08	114.05
						1" Ice	7.19	10.83	130.89
						2" Ice	12.86	16.33	164.58
Miscellaneous [NA 507-1]	C	None		0.000	175.00	No Ice	4.80	4.80	245.00
						1/2" Ice	6.70	6.70	294.00
						1" Ice	8.60	8.60	343.00
						2" Ice	12.40	12.40	441.00
Platform Mount [LP 712-1]	C	None		0.000	175.00	No Ice	24.53	24.53	1335.00
						1/2" Ice	29.94	29.94	1645.59
						1" Ice	35.35	35.35	1956.18
						2" Ice	46.17	46.17	2577.36
167									
1900MHz RRH (65MHz)	A	From Leg	1.00 0.000 -2.000	0.000	167.00	No Ice	2.32	2.38	60.00
						1/2" Ice	2.53	2.59	83.98
						1" Ice	2.74	2.80	111.24
						2" Ice	3.19	3.25	176.37
1900MHz RRH (65MHz)	B	From Leg	1.00 0.000 -2.000	0.000	167.00	No Ice	2.32	2.38	60.00
						1/2" Ice	2.53	2.59	83.98
						1" Ice	2.74	2.80	111.24
						2" Ice	3.19	3.25	176.37
1900MHz RRH (65MHz)	C	From Leg	1.00 0.000 -2.000	0.000	167.00	No Ice	2.32	2.38	60.00
						1/2" Ice	2.53	2.59	83.98
						1" Ice	2.74	2.80	111.24
						2" Ice	3.19	3.25	176.37
800MHZ RRH	A	From Leg	1.00 0.000 -2.000	0.000	167.00	No Ice	2.13	1.77	53.00
						1/2" Ice	2.32	1.95	74.19
						1" Ice	2.51	2.13	98.39
						2" Ice	2.92	2.51	156.61
800MHZ RRH	B	From Leg	1.00 0.000 -2.000	0.000	167.00	No Ice	2.13	1.77	53.00
						1/2" Ice	2.32	1.95	74.19
						1" Ice	2.51	2.13	98.39
						2" Ice	2.92	2.51	156.61
800MHZ RRH	C	From Leg	1.00 0.000 -2.000	0.000	167.00	No Ice	2.13	1.77	53.00
						1/2" Ice	2.32	1.95	74.19
						1" Ice	2.51	2.13	98.39
						2" Ice	2.92	2.51	156.61
800 EXTERNAL NOTCH FILTER	A	From Leg	1.00 0.000 -2.000	0.000	167.00	No Ice	0.66	0.32	11.00
						1/2" Ice	0.76	0.40	16.81
						1" Ice	0.87	0.48	24.26
						2" Ice	1.11	0.67	44.81
800 EXTERNAL NOTCH FILTER	B	From Leg	1.00 0.000 -2.000	0.000	167.00	No Ice	0.66	0.32	11.00
						1/2" Ice	0.76	0.40	16.81
						1" Ice	0.87	0.48	24.26
						2" Ice	1.11	0.67	44.81
800 EXTERNAL NOTCH FILTER	C	From Leg	1.00 0.000 -2.000	0.000	167.00	No Ice	0.66	0.32	11.00
						1/2" Ice	0.76	0.40	16.81
						1" Ice	0.87	0.48	24.26
						2" Ice	1.11	0.67	44.81
(2) 2.4" Dia x 4-ft Pipe	A	From Leg	1.00 0.000 0.000	0.000	167.00	No Ice	0.87	0.87	14.64
						1/2" Ice	1.12	1.12	22.02
						1" Ice	1.37	1.37	32.24
						2" Ice	1.91	1.91	61.82
(2) 2.4" Dia x 4-ft Pipe	B	From Leg	1.00 0.000	0.000	167.00	No Ice	0.87	0.87	14.64
						1/2" Ice	1.12	1.12	22.02

Description	Face or Leg	Offset Type	Offsets: Horz Lateral Vert ft ft ft	Azimuth Adjustment °	Placement ft		C_AA_A Front ft^2	C_AA_A Side ft^2	Weight lb
			0.000			1" Ice	1.37	1.37	32.24
						2" Ice	1.91	1.91	61.82
(2) 2.4" Dia x 4-ft Pipe	C	From Leg	1.00	0.000	167.00	No Ice	0.87	0.87	14.64
			0.000			1/2" Ice	1.12	1.12	22.02
			0.000			1" Ice	1.37	1.37	32.24
						2" Ice	1.91	1.91	61.82
2.4" Dia. x 4' Pipe (Horizontal)	A	From Leg	1.00	0.000	167.00	No Ice	0.87	0.87	14.64
			0.000			1/2" Ice	1.12	1.12	22.02
			0.000			1" Ice	1.37	1.37	32.24
						2" Ice	1.91	1.91	61.82
2.4" Dia. x 4' Pipe (Horizontal)	B	From Leg	1.00	0.000	167.00	No Ice	0.87	0.87	14.64
			0.000			1/2" Ice	1.12	1.12	22.02
			0.000			1" Ice	1.37	1.37	32.24
						2" Ice	1.91	1.91	61.82
2.4" Dia. x 4' Pipe (Horizontal)	C	From Leg	1.00	0.000	167.00	No Ice	0.87	0.87	14.64
			0.000			1/2" Ice	1.12	1.12	22.02
			0.000			1" Ice	1.37	1.37	32.24
						2" Ice	1.91	1.91	61.82
Side Arm Mount [SO 104-3]	C	None		0.000	167.00	No Ice	3.30	3.30	287.00
						1/2" Ice	4.13	4.13	317.00
						1" Ice	4.96	4.96	347.00
						2" Ice	6.62	6.62	407.00
165									
APXVTM14-ALU-I20 w/ Mount Pipe	A	From Centroid-Face	4.00	0.000	165.00	No Ice	6.58	4.96	76.99
			0.000			1/2" Ice	7.03	5.75	131.60
			0.000			1" Ice	7.47	6.47	192.90
						2" Ice	8.38	7.94	338.70
APXVTM14-ALU-I20 w/ Mount Pipe	B	From Centroid-Face	4.00	0.000	165.00	No Ice	6.58	4.96	76.99
			0.000			1/2" Ice	7.03	5.75	131.60
			0.000			1" Ice	7.47	6.47	192.90
						2" Ice	8.38	7.94	338.70
APXVTM14-ALU-I20 w/ Mount Pipe	C	From Centroid-Face	4.00	0.000	165.00	No Ice	6.58	4.96	76.99
			0.000			1/2" Ice	7.03	5.75	131.60
			0.000			1" Ice	7.47	6.47	192.90
						2" Ice	8.38	7.94	338.70
APXVSPP18-C-A20 w/ Mount Pipe	A	From Centroid-Face	4.00	0.000	165.00	No Ice	8.26	7.47	87.55
			0.000			1/2" Ice	8.82	8.66	158.03
			0.000			1" Ice	9.35	9.56	236.54
						2" Ice	10.42	11.39	421.23
APXVSPP18-C-A20 w/ Mount Pipe	B	From Centroid-Face	4.00	0.000	165.00	No Ice	8.26	7.47	87.55
			0.000			1/2" Ice	8.82	8.66	158.03
			0.000			1" Ice	9.35	9.56	236.54
						2" Ice	10.42	11.39	421.23
APXVSPP18-C-A20 w/ Mount Pipe	C	From Centroid-Face	4.00	0.000	165.00	No Ice	8.26	7.47	87.55
			0.000			1/2" Ice	8.82	8.66	158.03
			0.000			1" Ice	9.35	9.56	236.54
						2" Ice	10.42	11.39	421.23
TD-RRH8x20-25	A	From Centroid-Face	4.00	0.000	165.00	No Ice	3.70	1.29	66.00
			0.000			1/2" Ice	3.95	1.46	89.94
			0.000			1" Ice	4.20	1.64	117.22
						2" Ice	4.72	2.02	182.59
TD-RRH8x20-25	B	From Centroid-Face	4.00	0.000	165.00	No Ice	3.70	1.29	66.00
			0.000			1/2" Ice	3.95	1.46	89.94
			0.000			1" Ice	4.20	1.64	117.22
						2" Ice	4.72	2.02	182.59
TD-RRH8x20-25	C	From Centroid-Fa	4.00	0.000	165.00	No Ice	3.70	1.29	66.00
			0.000			1/2" Ice	3.95	1.46	89.94

Description	Face or Leg	Offset Type	Offsets: Horz Lateral Vert ft ft ft	Azimuth Adjustment °	Placement ft		C_AA_A Front ft^2	C_AA_A Side ft^2	Weight lb
		ce	0.000			1" Ice	4.20	1.64	117.22
						2" Ice	4.72	2.02	182.59
(3) ACU-A20-N	A	From	4.00	0.000	165.00	No Ice	0.07	0.12	1.04
		Centroid-Fa	0.000			1/2" Ice	0.10	0.16	2.32
		ce	0.000			1" Ice	0.15	0.21	4.41
						2" Ice	0.26	0.34	11.80
(3) ACU-A20-N	B	From	4.00	0.000	165.00	No Ice	0.07	0.12	1.04
		Centroid-Fa	0.000			1/2" Ice	0.10	0.16	2.32
		ce	0.000			1" Ice	0.15	0.21	4.41
						2" Ice	0.26	0.34	11.80
(3) ACU-A20-N	C	From	4.00	0.000	165.00	No Ice	0.07	0.12	1.04
		Centroid-Fa	0.000			1/2" Ice	0.10	0.16	2.32
		ce	0.000			1" Ice	0.15	0.21	4.41
						2" Ice	0.26	0.34	11.80
8' Ladder	A	From	2.00	0.000	165.00	No Ice	1.53	5.33	97.20
		Centroid-Fa	0.000			1/2" Ice	4.36	8.08	114.05
		ce	-4.000			1" Ice	7.19	10.83	130.89
						2" Ice	12.86	16.33	164.58
Miscellaneous [NA 507-1]	C	None		0.000	165.00	No Ice	4.80	4.80	245.00
						1/2" Ice	6.70	6.70	294.00
						1" Ice	8.60	8.60	343.00
						2" Ice	12.40	12.40	441.00
Platform Mount [LP 712-1]	C	None		0.000	165.00	No Ice	24.53	24.53	1335.00
						1/2" Ice	29.94	29.94	1645.59
						1" Ice	35.35	35.35	1956.18
						2" Ice	46.17	46.17	2577.36
*** **145**									
ERICSSON AIR 21 B2A B4P w/ Mount Pipe	A	From	4.00	0.000	145.00	No Ice	6.33	5.64	112.18
		Centroid-Fa	0.000			1/2" Ice	6.78	6.43	169.02
		ce	3.000			1" Ice	7.21	7.13	232.59
						2" Ice	8.12	8.59	383.07
ERICSSON AIR 21 B2A B4P w/ Mount Pipe	B	From	4.00	0.000	145.00	No Ice	6.33	5.64	112.18
		Centroid-Fa	0.000			1/2" Ice	6.78	6.43	169.02
		ce	3.000			1" Ice	7.21	7.13	232.59
						2" Ice	8.12	8.59	383.07
ERICSSON AIR 21 B2A B4P w/ Mount Pipe	C	From	4.00	0.000	145.00	No Ice	6.33	5.64	112.18
		Centroid-Fa	0.000			1/2" Ice	6.78	6.43	169.02
		ce	3.000			1" Ice	7.21	7.13	232.59
						2" Ice	8.12	8.59	383.07
ERICSSON AIR 21 B4A B2P w/ Mount Pipe	A	From	4.00	0.000	145.00	No Ice	6.33	5.64	112.18
		Centroid-Fa	0.000			1/2" Ice	6.78	6.43	169.02
		ce	3.000			1" Ice	7.21	7.13	232.59
						2" Ice	8.12	8.59	383.07
ERICSSON AIR 21 B4A B2P w/ Mount Pipe	B	From	4.00	0.000	145.00	No Ice	6.33	5.64	112.18
		Centroid-Fa	0.000			1/2" Ice	6.78	6.43	169.02
		ce	3.000			1" Ice	7.21	7.13	232.59
						2" Ice	8.12	8.59	383.07
ERICSSON AIR 21 B4A B2P w/ Mount Pipe	C	From	4.00	0.000	145.00	No Ice	6.33	5.64	112.18
		Centroid-Fa	0.000			1/2" Ice	6.78	6.43	169.02
		ce	3.000			1" Ice	7.21	7.13	232.59
						2" Ice	8.12	8.59	383.07
LNX-6515DS-A1M w/ Mount Pipe	A	From	4.00	0.000	145.00	No Ice	11.68	9.84	83.27
		Centroid-Fa	0.000			1/2" Ice	12.40	11.37	172.93
		ce	1.000			1" Ice	13.14	12.91	272.55
						2" Ice	14.51	15.27	506.06
LNX-6515DS-A1M w/	B	From	4.00	0.000	145.00	No Ice	11.68	9.84	83.27

Description	Face or Leg	Offset Type	Offsets: Horz Lateral Vert ft ft ft	Azimuth Adjustment °	Placement ft		C_AA_A Front ft^2	C_AA_A Side ft^2	Weight lb
Mount Pipe		Centroid-Fa	0.000			1/2" Ice	12.40	11.37	172.93
		ce	1.000			1" Ice	13.14	12.91	272.55
						2" Ice	14.51	15.27	506.06
LNX-6515DS-A1M w/	C	From	4.00	0.000	145.00	No Ice	11.68	9.84	83.27
Mount Pipe		Centroid-Fa	0.000			1/2" Ice	12.40	11.37	172.93
		ce	1.000			1" Ice	13.14	12.91	272.55
						2" Ice	14.51	15.27	506.06
KRY 112 144/1	A	From	4.00	0.000	145.00	No Ice	0.35	0.17	11.00
		Centroid-Fa	0.000			1/2" Ice	0.43	0.23	14.18
		ce	3.000			1" Ice	0.51	0.30	18.58
						2" Ice	0.70	0.46	31.87
KRY 112 144/1	B	From	4.00	0.000	145.00	No Ice	0.35	0.17	11.00
		Centroid-Fa	0.000			1/2" Ice	0.43	0.23	14.18
		ce	3.000			1" Ice	0.51	0.30	18.58
						2" Ice	0.70	0.46	31.87
KRY 112 144/1	C	From	4.00	0.000	145.00	No Ice	0.35	0.17	11.00
		Centroid-Fa	0.000			1/2" Ice	0.43	0.23	14.18
		ce	3.000			1" Ice	0.51	0.30	18.58
						2" Ice	0.70	0.46	31.87
RRUS 11 B12	A	From	4.00	0.000	145.00	No Ice	2.79	1.19	50.70
		Centroid-Fa	0.000			1/2" Ice	3.00	1.34	71.57
		ce	1.000			1" Ice	3.21	1.50	95.48
						2" Ice	3.67	1.84	153.20
RRUS 11 B12	B	From	4.00	0.000	145.00	No Ice	2.79	1.19	50.70
		Centroid-Fa	0.000			1/2" Ice	3.00	1.34	71.57
		ce	1.000			1" Ice	3.21	1.50	95.48
						2" Ice	3.67	1.84	153.20
RRUS 11 B12	C	From	4.00	0.000	145.00	No Ice	2.79	1.19	50.70
		Centroid-Fa	0.000			1/2" Ice	3.00	1.34	71.57
		ce	1.000			1" Ice	3.21	1.50	95.48
						2" Ice	3.67	1.84	153.20
8' Ladder	A	From	2.00	0.000	145.00	No Ice	1.53	5.33	97.20
		Centroid-Fa	0.000			1/2" Ice	4.36	8.08	114.05
		ce	0.000			1" Ice	7.19	10.83	130.89
						2" Ice	12.86	16.33	164.58
Platform Mount [LP 712-1]	C	None		0.000	145.00	No Ice	24.53	24.53	1335.00
						1/2" Ice	29.94	29.94	1645.59
						1" Ice	35.35	35.35	1956.18
						2" Ice	46.17	46.17	2577.36
110									
GPS	A	From Leg	3.00	0.000	110.00	No Ice	0.08	0.08	10.00
			0.000			1/2" Ice	0.14	0.14	11.02
			1.000			1" Ice	0.22	0.22	12.90
						2" Ice	0.40	0.40	19.88
2.4" Dia x 18" Pipe	A	From Leg	3.00	0.000	110.00	No Ice	0.24	0.24	5.50
			0.000			1/2" Ice	0.34	0.34	8.45
			0.000			1" Ice	0.46	0.46	12.72
						2" Ice	0.70	0.70	25.80
Side Arm Mount [SO 701-1]	A	From Leg	1.50	0.000	110.00	No Ice	0.85	1.67	65.00
			0.000			1/2" Ice	1.14	2.34	79.00
			0.000			1" Ice	1.43	3.01	93.00
						2" Ice	2.01	4.35	121.00
108									
GPS	A	From Leg	3.00	0.000	108.00	No Ice	0.08	0.08	10.00
			0.000			1/2" Ice	0.14	0.14	11.02
			1.000			1" Ice	0.22	0.22	12.90
						2" Ice	0.40	0.40	19.88

Description	Face or Leg	Offset Type	Offsets: Horz Lateral Vert ft ft ft	Azimuth Adjustment °	Placement ft		C_AA_A Front ft^2	C_AA_A Side ft^2	Weight lb
2.4" Dia x 18" Pipe	A	From Leg	3.00	0.000	108.00	No Ice	0.24	0.24	5.50
			0.000			1/2" Ice	0.34	0.34	8.45
			0.000			1" Ice	0.46	0.46	12.72
						2" Ice	0.70	0.70	25.80
Side Arm Mount [SO 701-1]	A	From Leg	1.50	0.000	108.00	No Ice	0.85	1.67	65.00
			0.000			1/2" Ice	1.14	2.34	79.00
			0.000			1" Ice	1.43	3.01	93.00
						2" Ice	2.01	4.35	121.00
52									
GPS	A	From Leg	3.00	0.000	52.00	No Ice	0.08	0.08	10.00
			0.000			1/2" Ice	0.14	0.14	11.02
			1.000			1" Ice	0.22	0.22	12.90
						2" Ice	0.40	0.40	19.88
2.4" Dia x 18" Pipe	A	From Leg	3.00	0.000	52.00	No Ice	0.24	0.24	5.50
			0.000			1/2" Ice	0.34	0.34	8.45
			0.000			1" Ice	0.46	0.46	12.72
						2" Ice	0.70	0.70	25.80
Side Arm Mount [SO 701-1]	A	From Leg	1.50	0.000	52.00	No Ice	0.85	1.67	65.00
			0.000			1/2" Ice	1.14	2.34	79.00
			0.000			1" Ice	1.43	3.01	93.00
						2" Ice	2.01	4.35	121.00
*********									

Load Combinations

Comb. No.	Description
1	Dead Only
2	1.2 Dead+1.0 Wind 0 deg - No Ice
3	0.9 Dead+1.0 Wind 0 deg - No Ice
4	1.2 Dead+1.0 Wind 30 deg - No Ice
5	0.9 Dead+1.0 Wind 30 deg - No Ice
6	1.2 Dead+1.0 Wind 60 deg - No Ice
7	0.9 Dead+1.0 Wind 60 deg - No Ice
8	1.2 Dead+1.0 Wind 90 deg - No Ice
9	0.9 Dead+1.0 Wind 90 deg - No Ice
10	1.2 Dead+1.0 Wind 120 deg - No Ice
11	0.9 Dead+1.0 Wind 120 deg - No Ice
12	1.2 Dead+1.0 Wind 150 deg - No Ice
13	0.9 Dead+1.0 Wind 150 deg - No Ice
14	1.2 Dead+1.0 Wind 180 deg - No Ice
15	0.9 Dead+1.0 Wind 180 deg - No Ice
16	1.2 Dead+1.0 Wind 210 deg - No Ice
17	0.9 Dead+1.0 Wind 210 deg - No Ice
18	1.2 Dead+1.0 Wind 240 deg - No Ice
19	0.9 Dead+1.0 Wind 240 deg - No Ice
20	1.2 Dead+1.0 Wind 270 deg - No Ice
21	0.9 Dead+1.0 Wind 270 deg - No Ice
22	1.2 Dead+1.0 Wind 300 deg - No Ice
23	0.9 Dead+1.0 Wind 300 deg - No Ice
24	1.2 Dead+1.0 Wind 330 deg - No Ice

Comb. No.	Description
25	0.9 Dead+1.0 Wind 330 deg - No Ice
26	1.2 Dead+1.0 Ice+1.0 Temp
27	1.2 Dead+1.0 Wind 0 deg+1.0 Ice+1.0 Temp
28	1.2 Dead+1.0 Wind 30 deg+1.0 Ice+1.0 Temp
29	1.2 Dead+1.0 Wind 60 deg+1.0 Ice+1.0 Temp
30	1.2 Dead+1.0 Wind 90 deg+1.0 Ice+1.0 Temp
31	1.2 Dead+1.0 Wind 120 deg+1.0 Ice+1.0 Temp
32	1.2 Dead+1.0 Wind 150 deg+1.0 Ice+1.0 Temp
33	1.2 Dead+1.0 Wind 180 deg+1.0 Ice+1.0 Temp
34	1.2 Dead+1.0 Wind 210 deg+1.0 Ice+1.0 Temp
35	1.2 Dead+1.0 Wind 240 deg+1.0 Ice+1.0 Temp
36	1.2 Dead+1.0 Wind 270 deg+1.0 Ice+1.0 Temp
37	1.2 Dead+1.0 Wind 300 deg+1.0 Ice+1.0 Temp
38	1.2 Dead+1.0 Wind 330 deg+1.0 Ice+1.0 Temp
39	Dead+Wind 0 deg - Service
40	Dead+Wind 30 deg - Service
41	Dead+Wind 60 deg - Service
42	Dead+Wind 90 deg - Service
43	Dead+Wind 120 deg - Service
44	Dead+Wind 150 deg - Service
45	Dead+Wind 180 deg - Service
46	Dead+Wind 210 deg - Service
47	Dead+Wind 240 deg - Service
48	Dead+Wind 270 deg - Service
49	Dead+Wind 300 deg - Service
50	Dead+Wind 330 deg - Service

Maximum Member Forces

Section No.	Elevation ft	Component Type	Condition	Gov. Load Comb.	Axial lb	Major Axis Moment lb-ft	Minor Axis Moment lb-ft
L1	185 - 149.46	Pole	Max Tension	26	0.00	-0.08	-0.13
			Max. Compression	26	-34161.90	-109.02	1587.93
			Max. Mx	8	-13908.91	-586072.71	3972.69
			Max. My	2	-13882.24	-3473.90	589858.99
			Max. Vy	20	-25755.57	585660.01	-2696.60
			Max. Vx	2	-25861.40	-3473.90	589858.99
			Max. Torque	12			1162.95
L2	149.46 - 114.083	Pole	Max Tension	1	0.00	0.00	0.00
			Max. Compression	26	-51247.36	1085.91	2132.48
			Max. Mx	20	-23941.00	1672608.76	-10586.17
			Max. My	2	-23912.19	-10741.80	1681703.75
			Max. Vy	20	-34524.20	1672608.76	-10586.17
			Max. Vx	2	-34706.90	-10741.80	1681703.75
			Max. Torque	12			938.65
L3	114.083 - 76.666	Pole	Max Tension	1	0.00	0.00	0.00
			Max. Compression	26	-66042.56	2118.80	3555.31
			Max. Mx	20	-35099.94	3024657.59	-19149.39
			Max. My	2	-35085.51	-19191.00	3038381.14
			Max. Vy	20	-39162.07	3024657.59	-19149.39
			Max. Vx	2	-39267.61	-19191.00	3038381.14
			Max. Torque	20			-1523.62
L4	76.666 - 38.253	Pole	Max Tension	1	0.00	0.00	0.00
			Max. Compression	26	-84667.25	3251.59	4403.19
			Max. Mx	20	-49922.74	4581949.37	-28204.30

Section No.	Elevation ft	Component Type	Condition	Gov. Load Comb.	Axial lb	Major Axis Moment lb-ft	Minor Axis Moment lb-ft
			Max. My	2	-49916.33	-27705.31	4598866.19
			Max. Vy	20	-43539.17	4581949.37	-28204.30
			Max. Vx	2	-43609.55	-27705.31	4598866.19
			Max. Torque	20			-1823.25
L5	38.253 - 0	Pole	Max Tension	1	0.00	0.00	0.00
			Max. Compression	26	-111543.25	4747.76	4658.02
			Max. Mx	20	-72429.91	6675792.29	-39473.53
			Max. My	2	-72429.77	-37693.28	6694567.16
			Max. Vy	20	-47554.41	6675792.29	-39473.53
			Max. Vx	2	-47619.98	-37693.28	6694567.16
			Max. Torque	20			-1822.10

Maximum Reactions

Location	Condition	Gov. Load Comb.	Vertical lb	Horizontal, X lb	Horizontal, Z lb
Pole	Max. Vert	27	111543.25	-37.44	13374.13
	Max. H_x	21	54347.45	47503.60	-229.50
	Max. H_z	2	72463.26	-229.50	47569.01
	Max. M_x	2	6694567.16	-229.50	47569.01
	Max. M_z	8	6671308.88	-47503.58	229.50
	Max. Torsion	8	1749.50	-47503.58	229.50
	Min. Vert	5	54347.45	-23950.54	41310.72
	Min. H_x	8	72463.26	-47503.58	229.50
	Min. H_z	15	54347.45	229.50	-47569.02
	Min. M_x	14	-6693591.88	229.50	-47569.01
	Min. M_z	20	-6675792.29	47503.58	-229.50
	Min. Torsion	20	-1820.49	47503.58	-229.50

Tower Mast Reaction Summary

Load Combination	Vertical lb	$Shear_x$ lb	$Shear_z$ lb	Overturning Moment, M_x lb-ft	Overturning Moment, M_z lb-ft	Torque lb-ft
Dead Only	60386.05	0.00	0.00	-353.82	1800.08	0.00
1.2 Dead+1.0 Wind 0 deg - No Ice	72463.26	229.50	-47569.01	-6694567.16	-37693.23	274.96
0.9 Dead+1.0 Wind 0 deg - No Ice	54347.45	229.50	-47569.00	-6607720.45	-37728.84	255.11
1.2 Dead+1.0 Wind 30 deg - No Ice	72463.26	23950.54	-41310.72	-5817581.18	-3368979.35	-635.42
0.9 Dead+1.0 Wind 30 deg - No Ice	54347.45	23950.54	-41310.72	-5742081.74	-3325906.15	-650.50
1.2 Dead+1.0 Wind 60 deg - No Ice	72463.26	41254.06	-23983.25	-3382085.04	-5797009.78	-1366.84
0.9 Dead+1.0 Wind 60 deg - No Ice	54347.45	41254.05	-23983.25	-3338119.99	-5722521.32	-1373.24
1.2 Dead+1.0 Wind 90 deg - No Ice	72463.26	47503.58	-229.50	-40427.47	-6671308.88	-1749.50
0.9 Dead+1.0 Wind 90 deg - No Ice	54347.45	47503.58	-229.50	-39745.69	-6585513.36	-1745.28
1.2 Dead+1.0 Wind 120 deg -	72463.26	41024.56	23585.75	3312115.88	-5757370.28	-1689.37

Load Combination	Vertical lb	$Shear_x$ lb	$Shear_z$ lb	Overturning Moment, M_x lb-ft	Overturning Moment, M_z lb-ft	Torque lb-ft
No Ice						
0.9 Dead+1.0 Wind 120 deg - No Ice	54347.45	41024.56	23585.75	3269357.90	-5683413.58	-1675.25
1.2 Dead+1.0 Wind 150 deg - No Ice	72463.26	23553.04	41081.22	5776983.57	-3299959.31	-1185.14
0.9 Dead+1.0 Wind 150 deg - No Ice	54347.45	23553.04	41081.22	5702284.68	-3257827.17	-1164.69
1.2 Dead+1.0 Wind 180 deg - No Ice	72463.26	-229.50	47569.01	6693591.88	42206.26	-346.04
0.9 Dead+1.0 Wind 180 deg - No Ice	54347.45	-229.50	47569.02	6607002.85	41074.31	-325.02
1.2 Dead+1.0 Wind 210 deg - No Ice	72463.26	-23950.54	41310.72	5816598.85	3373475.18	611.42
0.9 Dead+1.0 Wind 210 deg - No Ice	54347.45	-23950.54	41310.72	5741374.68	3329239.34	626.89
1.2 Dead+1.0 Wind 240 deg - No Ice	72463.26	-41254.06	23983.25	3381113.57	5801490.80	1413.77
0.9 Dead+1.0 Wind 240 deg - No Ice	54347.45	-41254.05	23983.25	3337420.91	5725844.15	1419.49
1.2 Dead+1.0 Wind 270 deg - No Ice	72463.26	-47503.58	229.50	39473.91	6675792.29	1820.49
0.9 Dead+1.0 Wind 270 deg - No Ice	54347.45	-47503.60	229.50	39059.21	6588822.93	1815.12
1.2 Dead+1.0 Wind 300 deg - No Ice	72463.26	-41024.56	-23585.75	-3313062.36	5761870.89	1713.35
0.9 Dead+1.0 Wind 300 deg - No Ice	54347.45	-41024.56	-23585.75	-3270039.53	5686750.80	1698.73
1.2 Dead+1.0 Wind 330 deg - No Ice	72463.26	-23553.04	-41081.22	-5777940.92	3304474.75	1137.94
0.9 Dead+1.0 Wind 330 deg - No Ice	54347.45	-23553.04	-41081.22	-5702974.30	3261174.74	1118.22
1.2 Dead+1.0 Ice+1.0 Temp	111543.25	-0.00	-0.01	-4658.02	4747.76	0.08
1.2 Dead+1.0 Wind 0 deg+1.0 Ice+1.0 Temp	111543.25	37.44	-13374.13	-1935245.23	-1883.07	180.75
1.2 Dead+1.0 Wind 30 deg+1.0 Ice+1.0 Temp	111543.25	6725.89	-11601.06	-1680066.45	-965345.72	-152.85
1.2 Dead+1.0 Wind 60 deg+1.0 Ice+1.0 Temp	111543.25	11612.15	-6719.49	-976041.10	-1668811.32	-444.97
1.2 Dead+1.0 Wind 90 deg+1.0 Ice+1.0 Temp	111543.25	13386.94	-37.44	-11808.72	-1923787.43	-618.48
1.2 Dead+1.0 Wind 120 deg+1.0 Ice+1.0 Temp	111543.25	11574.71	6654.65	954266.03	-1661949.26	-627.38
1.2 Dead+1.0 Wind 150 deg+1.0 Ice+1.0 Temp	111543.25	6661.05	11563.62	1663319.37	-953455.03	-468.63
1.2 Dead+1.0 Wind 180 deg+1.0 Ice+1.0 Temp	111543.25	-37.44	13374.13	1925359.26	11849.69	-183.60
1.2 Dead+1.0 Wind 210 deg+1.0 Ice+1.0 Temp	111543.25	-6725.89	11601.06	1670177.41	975309.73	151.81
1.2 Dead+1.0 Wind 240 deg+1.0 Ice+1.0 Temp	111543.25	-11612.15	6719.49	966152.72	1678771.32	447.06
1.2 Dead+1.0 Wind 270 deg+1.0 Ice+1.0 Temp	111543.25	-13386.94	37.44	1924.08	1933746.04	621.91
1.2 Dead+1.0 Wind 300 deg+1.0 Ice+1.0 Temp	111543.25	-11574.71	-6654.65	-964147.60	1671910.49	629.01
1.2 Dead+1.0 Wind 330 deg+1.0 Ice+1.0 Temp	111543.25	-6661.05	-11563.62	-1673201.60	963420.28	467.10
Dead+Wind 0 deg - Service	60386.05	51.34	-10640.44	-1488221.94	-7007.93	66.17
Dead+Wind 30 deg - Service	60386.05	5357.36	-9240.56	-1293336.74	-747436.29	-143.65
Dead+Wind 60 deg - Service	60386.05	9227.88	-5364.68	-752005.01	-1287089.66	-314.55
Dead+Wind 90 deg - Service	60386.05	10625.81	-51.34	-9281.98	-1481361.13	-402.06
Dead+Wind 120 deg - Service	60386.05	9176.55	5275.76	735821.24	-1278216.08	-383.15

Load Combination	Vertical lb	$Shear_x$ lb	$Shear_z$ lb	Overturning Moment, M_x lb-ft	Overturning Moment, M_z lb-ft	Torque lb-ft
Dead+Wind 150 deg - Service	60386.05	5268.44	9189.22	1283652.20	-732063.05	-262.00
Dead+Wind 180 deg - Service	60386.05	-51.34	10640.44	1487410.34	10745.31	-69.74
Dead+Wind 210 deg - Service	60386.05	-5357.36	9240.56	1292524.85	751172.98	142.52
Dead+Wind 240 deg - Service	60386.05	-9227.88	5364.68	751193.57	1290825.75	317.03
Dead+Wind 270 deg - Service	60386.05	-10625.81	51.34	8471.28	1485097.31	405.70
Dead+Wind 300 deg - Service	60386.05	-9176.55	-5275.76	-736631.67	1281952.98	384.35
Dead+Wind 330 deg - Service	60386.05	-5268.44	-9189.22	-1284463.08	735800.56	259.59

Solution Summary

	Sum of Applied Forces			Sum of Reactions			
Load Comb.	PX lb	PY lb	PZ lb	PX lb	PY lb	PZ lb	% Error
1	0.00	-60386.05	0.00	0.00	60386.05	0.00	0.000%
2	229.50	-72463.26	-47569.00	-229.50	72463.26	47569.01	0.000%
3	229.50	-54347.45	-47569.00	-229.50	54347.45	47569.00	0.000%
4	23950.54	-72463.26	-41310.72	-23950.54	72463.26	41310.72	0.000%
5	23950.54	-54347.45	-41310.72	-23950.54	54347.45	41310.72	0.000%
6	41254.05	-72463.26	-23983.25	-41254.06	72463.26	23983.25	0.000%
7	41254.05	-54347.45	-23983.25	-41254.05	54347.45	23983.25	0.000%
8	47503.58	-72463.26	-229.50	-47503.58	72463.26	229.50	0.000%
9	47503.58	-54347.45	-229.50	-47503.58	54347.45	229.50	0.000%
10	41024.55	-72463.26	23585.75	-41024.56	72463.26	-23585.75	0.000%
11	41024.55	-54347.45	23585.75	-41024.56	54347.45	-23585.75	0.000%
12	23553.04	-72463.26	41081.22	-23553.04	72463.26	-41081.22	0.000%
13	23553.04	-54347.45	41081.22	-23553.04	54347.45	-41081.22	0.000%
14	-229.50	-72463.26	47569.00	229.50	72463.26	-47569.01	0.000%
15	-229.50	-54347.45	47569.00	229.50	54347.45	-47569.02	0.000%
16	-23950.54	-72463.26	41310.72	23950.54	72463.26	-41310.72	0.000%
17	-23950.54	-54347.45	41310.72	23950.54	54347.45	-41310.72	0.000%
18	-41254.05	-72463.26	23983.25	41254.06	72463.26	-23983.25	0.000%
19	-41254.05	-54347.45	23983.25	41254.05	54347.45	-23983.25	0.000%
20	-47503.58	-72463.26	229.50	47503.58	72463.26	-229.50	0.000%
21	-47503.58	-54347.45	229.50	47503.60	54347.45	-229.50	0.000%
22	-41024.55	-72463.26	-23585.75	41024.56	72463.26	23585.75	0.000%
23	-41024.55	-54347.45	-23585.75	41024.56	54347.45	23585.75	0.000%
24	-23553.04	-72463.26	-41081.22	23553.04	72463.26	41081.22	0.000%
25	-23553.04	-54347.45	-41081.22	23553.04	54347.45	41081.22	0.000%
26	0.00	-111543.25	0.00	0.00	111543.25	0.01	0.000%
27	37.44	-111543.25	-13374.10	-37.44	111543.25	13374.13	0.000%
28	6725.87	-111543.25	-11601.03	-6725.89	111543.25	11601.06	0.000%
29	11612.12	-111543.25	-6719.47	-11612.15	111543.25	6719.49	0.000%
30	13386.91	-111543.25	-37.44	-13386.94	111543.25	37.44	0.000%
31	11574.68	-111543.25	6654.63	-11574.71	111543.25	-6654.65	0.000%
32	6661.03	-111543.25	11563.59	-6661.05	111543.25	-11563.62	0.000%
33	-37.44	-111543.25	13374.10	37.44	111543.25	-13374.13	0.000%
34	-6725.87	-111543.25	11601.03	6725.89	111543.25	-11601.06	0.000%
35	-11612.12	-111543.25	6719.47	11612.15	111543.25	-6719.49	0.000%
36	-13386.91	-111543.25	37.44	13386.94	111543.25	-37.44	0.000%
37	-11574.68	-111543.25	-6654.63	11574.71	111543.25	6654.65	0.000%
38	-6661.03	-111543.25	-11563.59	6661.05	111543.25	11563.62	0.000%
39	51.34	-60386.05	-10640.43	-51.34	60386.05	10640.44	0.000%
40	5357.36	-60386.05	-9240.55	-5357.36	60386.05	9240.56	0.000%
41	9227.88	-60386.05	-5364.68	-9227.88	60386.05	5364.68	0.000%
42	10625.80	-60386.05	-51.34	-10625.81	60386.05	51.34	0.000%
43	9176.55	-60386.05	5275.76	-9176.55	60386.05	-5275.76	0.000%
44	5268.44	-60386.05	9189.22	-5268.44	60386.05	-9189.22	0.000%
45	-51.34	-60386.05	10640.43	51.34	60386.05	-10640.44	0.000%

Load Comb.	Sum of Applied Forces PX lb	PY lb	PZ lb	Sum of Reactions PX lb	PY lb	PZ lb	% Error
46	-5357.36	-60386.05	9240.55	5357.36	60386.05	-9240.56	0.000%
47	-9227.88	-60386.05	5364.68	9227.88	60386.05	-5364.68	0.000%
48	-10625.80	-60386.05	51.34	10625.81	60386.05	-51.34	0.000%
49	-9176.55	-60386.05	-5275.76	9176.55	60386.05	5275.76	0.000%
50	-5268.44	-60386.05	-9189.22	5268.44	60386.05	9189.22	0.000%

Non-Linear Convergence Results

Load Combination	Converged?	Number of Cycles	Displacement Tolerance	Force Tolerance
1	Yes	4	0.00000001	0.00000001
2	Yes	5	0.00000001	0.00012237
3	Yes	5	0.00000001	0.00005254
4	Yes	6	0.00000001	0.00030928
5	Yes	6	0.00000001	0.00009066
6	Yes	6	0.00000001	0.00031189
7	Yes	6	0.00000001	0.00009163
8	Yes	5	0.00000001	0.00018952
9	Yes	5	0.00000001	0.00008268
10	Yes	6	0.00000001	0.00030075
11	Yes	6	0.00000001	0.00008877
12	Yes	6	0.00000001	0.00030667
13	Yes	6	0.00000001	0.00009079
14	Yes	5	0.00000001	0.00007913
15	Yes	4	0.00000001	0.00083874
16	Yes	6	0.00000001	0.00031070
17	Yes	6	0.00000001	0.00009118
18	Yes	6	0.00000001	0.00030740
19	Yes	6	0.00000001	0.00009005
20	Yes	5	0.00000001	0.00003694
21	Yes	4	0.00000001	0.00038739
22	Yes	6	0.00000001	0.00030748
23	Yes	6	0.00000001	0.00009104
24	Yes	6	0.00000001	0.00030224
25	Yes	6	0.00000001	0.00008918
26	Yes	4	0.00000001	0.00004884
27	Yes	6	0.00000001	0.00015478
28	Yes	6	0.00000001	0.00025853
29	Yes	6	0.00000001	0.00025985
30	Yes	6	0.00000001	0.00015376
31	Yes	6	0.00000001	0.00025037
32	Yes	6	0.00000001	0.00025388
33	Yes	6	0.00000001	0.00015359
34	Yes	6	0.00000001	0.00025801
35	Yes	6	0.00000001	0.00025636
36	Yes	6	0.00000001	0.00015433
37	Yes	6	0.00000001	0.00025843
38	Yes	6	0.00000001	0.00025518
39	Yes	4	0.00000001	0.00016211
40	Yes	5	0.00000001	0.00009110
41	Yes	5	0.00000001	0.00009341
42	Yes	4	0.00000001	0.00019873
43	Yes	5	0.00000001	0.00008529
44	Yes	5	0.00000001	0.00008994
45	Yes	4	0.00000001	0.00015422
46	Yes	5	0.00000001	0.00009235

47	Yes	5	0.00000001	0.00008972
48	Yes	4	0.00000001	0.00017380
49	Yes	5	0.00000001	0.00009121
50	Yes	5	0.00000001	0.00008684

Maximum Tower Deflections - Service Wind

Section No.	Elevation ft	Horz. Deflection in	Gov. Load Comb.	Tilt °	Twist °
L1	185 - 149.46	33.977	40	1.634	0.002
L2	154.543 - 114.083	23.868	40	1.493	0.001
L3	119.916 - 76.666	14.105	40	1.156	0.001
L4	83.333 - 38.253	6.638	46	0.762	0.000
L5	45.753 - 0	1.990	46	0.393	0.000

Critical Deflections and Radius of Curvature - Service Wind

Elevation ft	Appurtenance	Gov. Load Comb.	Deflection in	Tilt °	Twist °	Radius of Curvature ft
185.00	(2) DB846F65ZAXY w/ Mount Pipe	40	33.977	1.634	0.002	43516
182.00	ASP-601	40	32.956	1.624	0.001	43516
175.00	7770.00 w/ Mount Pipe	40	30.581	1.598	0.001	21758
167.00	1900MHz RRH (65MHz)	40	27.902	1.564	0.001	12087
165.00	APXVTM14-ALU-I20 w/ Mount Pipe	40	27.241	1.555	0.001	10878
145.00	ERICSSON AIR 21 B2A B4P w/ Mount Pipe	40	20.942	1.416	0.001	6449
110.00	GPS	46	11.787	1.047	0.001	5303
108.00	GPS	46	11.347	1.025	0.001	5338
52.00	GPS	46	2.539	0.451	0.000	5081

Maximum Tower Deflections - Design Wind

Section No.	Elevation ft	Horz. Deflection in	Gov. Load Comb.	Tilt °	Twist °
L1	185 - 149.46	152.553	4	7.348	0.007
L2	154.543 - 114.083	107.267	4	6.718	0.004
L3	119.916 - 76.666	63.450	4	5.205	0.003
L4	83.333 - 38.253	29.871	16	3.432	0.002
L5	45.753 - 0	8.955	16	1.767	0.001

Critical Deflections and Radius of Curvature - Design Wind

Elevation ft	Appurtenance	Gov. Load Comb.	Deflection in	Tilt °	Twist °	Radius of Curvature ft
185.00	(2) DB846F65ZAXY w/ Mount Pipe	4	152.553	7.348	0.007	10053
182.00	ASP-601	4	147.980	7.302	0.007	10053
175.00	7770.00 w/ Mount Pipe	4	137.348	7.190	0.006	5025
167.00	1900MHz RRH (65MHz)	4	125.347	7.039	0.005	2789
165.00	APXVTM14-ALU-I20 w/ Mount Pipe	4	122.386	6.996	0.005	2510
145.00	ERICSSON AIR 21 B2A B4P w/ Mount Pipe	4	94.149	6.373	0.004	1478
110.00	GPS	16	53.033	4.716	0.003	1197
108.00	GPS	16	51.053	4.617	0.002	1204
52.00	GPS	16	11.427	2.029	0.001	1131

Compression Checks

Pole Design Data

Section No.	Elevation ft	Size	L ft	L_u ft	Kl/r	A in^2	P_u lb	ϕP_n lb	Ratio $\frac{P_u}{\phi P_n}$
L1	185 - 149.46 (1)	TP36.06x29x0.25	35.54	0.00	0.0	27.614	-13855.70	1824510.00	0.008
L2	149.46 - 114.083 (2)	TP42.46x34.55x0.313	40.46	0.00	0.0	40.674	-23884.50	2747860.00	0.009
L3	114.083 - 76.666 (3)	TP49.15x40.695x0.375	43.25	0.00	0.0	56.503	-35064.80	3866000.00	0.009
L4	76.666 - 38.253 (4)	TP55.9x47.097x0.438	45.08	0.00	0.0	74.983	-49904.80	5174650.00	0.010
L5	38.253 - 0 (5)	TP62.5x53.56x0.5	45.75	0.00	0.0	98.394	-72429.50	6779720.00	0.011

Pole Bending Design Data

Section No.	Elevation ft	Size	M_{ux} lb-ft	ϕM_{nx} lb-ft	Ratio $\frac{M_{ux}}{\phi M_{nx}}$	M_{uy} lb-ft	ϕM_{ny} lb-ft	Ratio $\frac{M_{uy}}{\phi M_{ny}}$
L1	185 - 149.46 (1)	TP36.06x29x0.25	591882.50	1306508.33	0.453	0.00	1306508.33	0.000
L2	149.46 - 114.083 (2)	TP42.46x34.55x0.313	1688741.67	2317658.33	0.729	0.00	2317658.33	0.000
L3	114.083 - 76.666 (3)	TP49.15x40.695x0.375	3051641.67	3773733.33	0.809	0.00	3773733.33	0.000
L4	76.666 - 38.253 (4)	TP55.9x47.097x0.438	4618750.00	5744408.00	0.804	0.00	5744408.00	0.000
L5	38.253 - 0 (5)	TP62.5x53.56x0.5	6724074.67	8641833.33	0.778	0.00	8641833.33	0.000

Pole Shear Design Data

Section No.	Elevation ft	Size	Actual V_u lb	ϕV_n lb	Ratio $\frac{V_u}{\phi V_n}$	Actual T_u lb-ft	ϕT_n lb-ft	Ratio $\frac{T_u}{\phi T_n}$
L1	185 - 149.46 (1)	TP36.06x29x0.25	25985.90	484626.00	0.054	239.99	1455816.67	0.000
L2	149.46 - 114.083 (2)	TP42.46x34.55x0.313	34871.60	713829.00	0.049	172.82	2524583.33	0.000
L3	114.083 - 76.666 (3)	TP49.15x40.695x0.375	39451.10	991629.00	0.040	483.47	4057650.00	0.000
L4	76.666 - 38.253 (4)	TP55.9x47.097x0.438	43798.60	1315950.00	0.033	636.16	6122508.00	0.000
L5	38.253 - 0 (5)	TP62.5x53.56x0.5	47802.70	1726810.00	0.028	611.42	9225416.67	0.000

Pole Interaction Design Data

Section No.	Elevation ft	Ratio $\frac{P_u}{\phi P_n}$	Ratio $\frac{M_{ux}}{\phi M_{nx}}$	Ratio $\frac{M_{uy}}{\phi M_{ny}}$	Ratio $\frac{V_u}{\phi V_n}$	Ratio $\frac{T_u}{\phi T_n}$	Comb. Stress Ratio	Allow. Stress Ratio	Criteria
L1	185 - 149.46 (1)	0.008	0.453	0.000	0.054	0.000	0.464	1.050	4.8.2
L2	149.46 - 114.083 (2)	0.009	0.729	0.000	0.049	0.000	0.740	1.050	4.8.2
L3	114.083 - 76.666 (3)	0.009	0.809	0.000	0.040	0.000	0.819	1.050	4.8.2
L4	76.666 - 38.253 (4)	0.010	0.804	0.000	0.033	0.000	0.815	1.050	4.8.2
L5	38.253 - 0 (5)	0.011	0.778	0.000	0.028	0.000	0.790	1.050	4.8.2

Section Capacity Table

Section No.	Elevation ft	Component Type	Size	Critical Element	P lb	ϕP_{allow} lb	% Capacity	Pass Fail
L1	185 - 149.46	Pole	TP36.06x29x0.25	1	-13855.70	1915735.41	44.1	Pass
L2	149.46 - 114.083	Pole	TP42.46x34.55x0.313	2	-23884.50	2885252.87	70.5	Pass
L3	114.083 - 76.666	Pole	TP49.15x40.695x0.375	3	-35064.80	4059299.82	78.0	Pass
L4	76.666 - 38.253	Pole	TP55.9x47.097x0.438	4	-49904.80	5433382.25	77.6	Pass
L5	38.253 - 0	Pole	TP62.5x53.56x0.5	5	-72429.50	7118705.68	75.2	Pass
							Summary	
						Pole (L3)	78.0	Pass
						RATING =	**78.0**	**Pass**

APPENDIX B

BASE LEVEL DRAWING

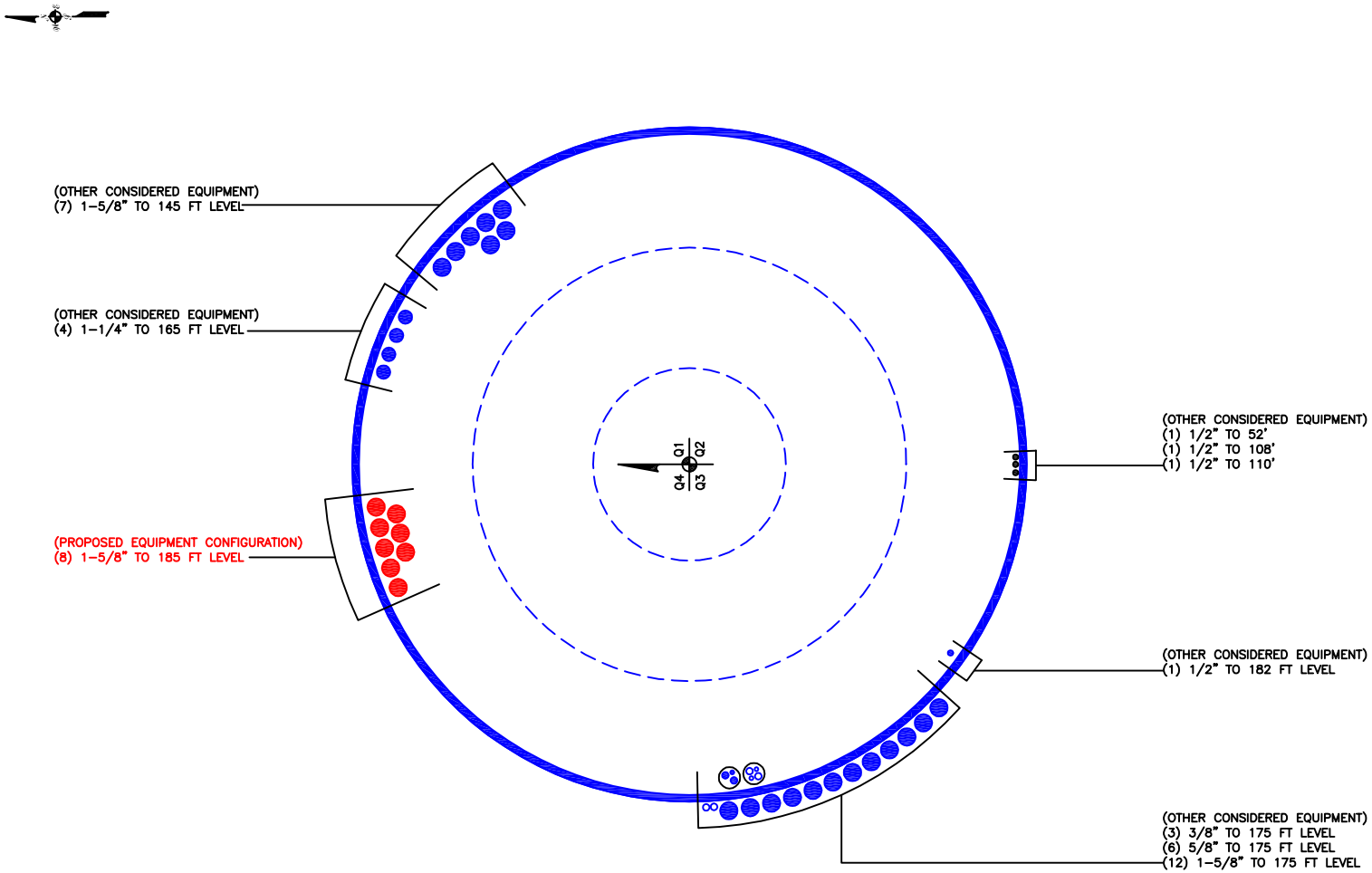

BUSINESS UNIT: 806354 TOWER ID: C_BASELEVEL

APPENDIX C

ADDITIONAL CALCULATIONS

ASCE 7 Hazards Report

Address:
No Address at This Location

Standard: ASCE/SEI 7-10
Risk Category: II
Soil Class: D - Stiff Soil

Elevation: 349.26 ft (NAVD 88)
Latitude: 41.412647
Longitude: -73.270094

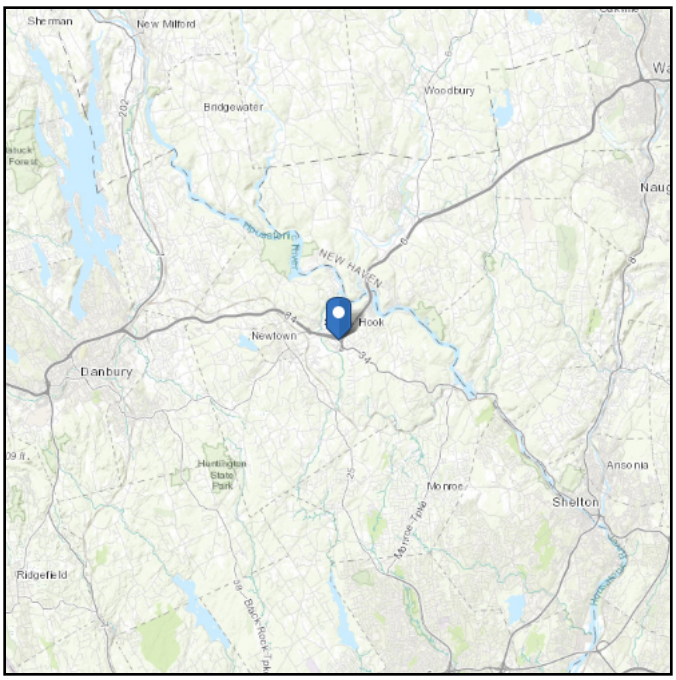

Wind

Results:	**76 Vmph**
Wind Speed:	119 Vmph
10-year MRI	76 Vmph
25-year MRI	85 Vmph
50-year MRI	91 Vmph
100-year MRI	97 Vmph
Data Source:	ASCE/SEI 7-10, Fig. 26.5-1A and Figs. CC-1–CC-4, incorporating errata of March 12, 2014
Date Accessed:	Tue Dec 04 2018

Jurisdictional Wind Speed Governs (120 mph)

Value provided is 3-second gust wind speeds at 33 ft above ground for Exposure C Category, based on linear interpolation between contours. Wind speeds are interpolated in accordance with the 7-10 Standard. Wind speeds correspond to approximately a 7% probability of exceedance in 50 years (annual exceedance probability = 0.00143, MRI = 700 years).

Site is in a hurricane-prone region as defined in ASCE/SEI 7-10 Section 26.2. Glazed openings need not be protected against wind-borne debris.

Mountainous terrain, gorges, ocean promontories, and special wind regions should be examined for unusual wind conditions.

Seismic

Site Soil Class: D - Stiff Soil

Results:

S_S :	0.204	S_{DS} :	0.218
S_1 :	0.065	S_{D1} :	0.105
F_a :	1.600	T_L :	6.000
F_v :	2.400	PGA :	0.109
S_{MS} :	0.327	PGA_M :	0.173
S_{M1} :	0.157	F_{PGA} :	1.582
		I_e :	1

Seismic Design Category B

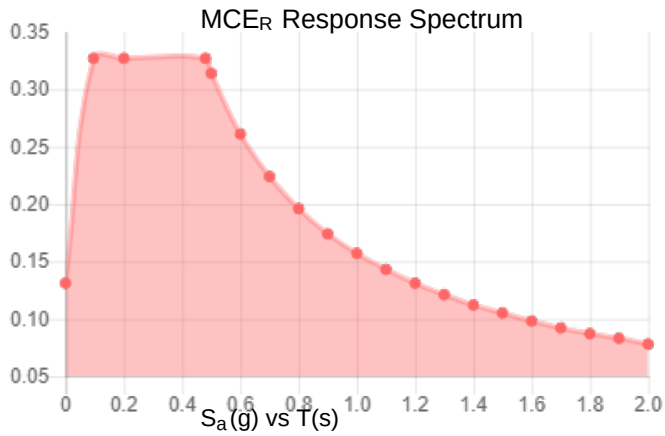

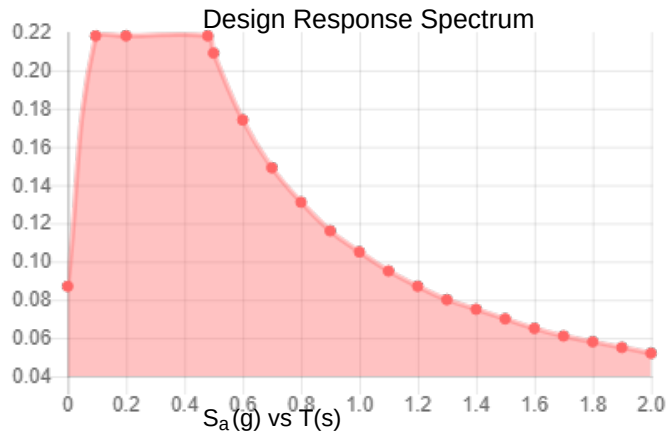

Data Accessed: Tue Dec 04 2018

Date Source: USGS Seismic Design Maps based on ASCE/SEI 7-10, incorporating Supplement 1 and errata of March 31, 2013, and ASCE/SEI 7-10 Table 1.5-2. Additional data for site-specific ground motion procedures in accordance with ASCE/SEI 7-10 Ch. 21 are available from USGS.

Ice

Results:

Ice Thickness:	0.75 in.
Concurrent Temperature:	15 F
Gust Speed:	50 mph
Data Source:	Standard ASCE/SEI 7-10, Figs. 10-2 through 10-8
Date Accessed:	Tue Dec 04 2018

Ice thicknesses on structures in exposed locations at elevations higher than the surrounding terrain and in valleys and gorges may exceed the mapped values.

Values provided are equivalent radial ice thicknesses due to freezing rain with concurrent 3-second gust speeds, for a 50-year mean recurrence interval, and temperatures concurrent with ice thicknesses due to freezing rain. Thicknesses for ice accretions caused by other sources shall be obtained from local meteorological studies. Ice thicknesses in exposed locations at elevations higher than the surrounding terrain and in valleys and gorges may exceed the mapped values.

The ASCE 7 Hazard Tool is provided for your convenience, for informational purposes only, and is provided “as is” and without warranties of any kind. The location data included herein has been obtained from information developed, produced, and maintained by third party providers; or has been extrapolated from maps incorporated in the ASCE 7 standard. While ASCE has made every effort to use data obtained from reliable sources or methodologies, ASCE does not make any representations or warranties as to the accuracy, completeness, reliability, currency, or quality of any data provided herein. Any third-party links provided by this Tool should not be construed as an endorsement, affiliation, relationship, or sponsorship of such third-party content by or from ASCE.

ASCE does not intend, nor should anyone interpret, the results provided by this Tool to replace the sound judgment of a competent professional, having knowledge and experience in the appropriate field(s) of practice, nor to substitute for the standard of care required of such professionals in interpreting and applying the contents of this Tool or the ASCE 7 standard.

In using this Tool, you expressly assume all risks associated with your use. Under no circumstances shall ASCE or its officers, directors, employees, members, affiliates, or agents be liable to you or any other person for any direct, indirect, special, incidental, or consequential damages arising from or related to your use of, or reliance on, the Tool or any information obtained therein. To the fullest extent permitted by law, you agree to release and hold harmless ASCE from any and all liability of any nature arising out of or resulting from any use of data provided by the ASCE 7 Hazard Tool.

Monopole Base Plate Connection

Site Info	
BU #	806354
Site Name	BRG 123 943084
Order #	461593 Rev. 0

Analysis Considerations	
TIA-222 Revision	H
Grout Considered:	No
l_{ar} (in)	2.25

Applied Loads	
Moment (kip-ft)	6724.07
Axial Force (kips)	72.46
Shear Force (kips)	47.75

**TIA-222-H Section 15.5 Applied*

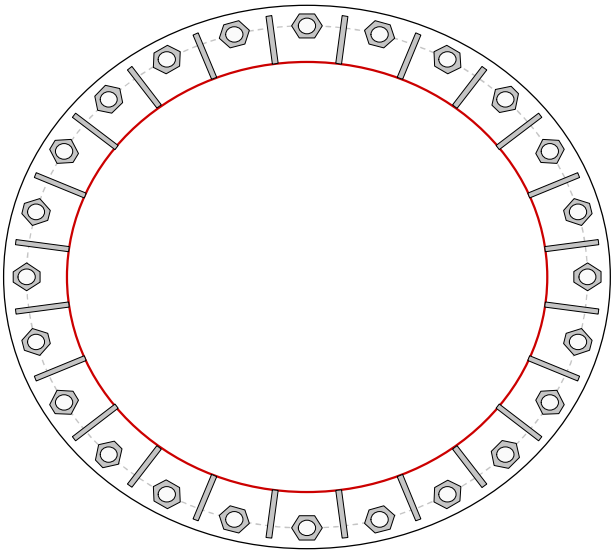

Connection Properties

Anchor Rod Data

(24) 2-1/4" ø bolts (A615-75 N; Fy=75 ksi, Fu=100 ksi) on 73" BC

Base Plate Data

79" OD x 2.5" Plate (A572-60; Fy=60 ksi, Fu=75 ksi)

Stiffener Data

(24) 15"H x 7"W x 0.75"T, Notch: 0.5"
plate: Fy= 50 ksi ; weld: Fy= 70 ksi
horiz. weld: 0.5" fillet
vert. weld: 0.375" fillet

Pole Data

62.5" x 0.5" 18-sided pole (A572-65; Fy=65 ksi, Fu=80 ksi)

Analysis Results

Anchor Rod Summary *(units of kips, kip-in)*

Pu_c = 187.17	ϕPn_c = 243.75	**Stress Rating**
Vu = 1.99	ϕVn = 73.13	**73.2%**
Mu = n/a	ϕMn = n/a	**Pass**

Base Plate Summary

Max Stress (ksi):	22.55	(Roark's Flexural)
Allowable Stress (ksi):	54	
Stress Rating:	**39.8%**	**Pass**

Stiffener Summary

Horizontal Weld:	**82.0%**	**Pass**
Vertical Weld:	**56.7%**	**Pass**
Plate Flexure+Shear:	**28.7%**	**Pass**
Plate Tension+Shear:	**59.2%**	**Pass**
Plate Compression:	**82.4%**	**Pass**

Pole Summary

Punching Shear:	**14.3%**	**Pass**

Pier and Pad Foundation

BU # :	806354
Site Name:	BRG 123 943084
App. Number:	461593 Rev. 0

TIA-222 Revision:	H
Tower Type:	Monopole

Top & Bot. Pad Rein. Different?:	☑
Block Foundation?:	☐

Superstructure Analysis Reactions

Compression, P_{comp}:	72.463	kips
Base Shear, Vu_comp:	47.751	kips
Moment, M_u:	6724.073	ft-kips
Tower Height, **H**:	185	ft
BP Dist. Above Fdn, bp_{dist}:	4.5	in

Foundation Analysis Checks

	Capacity	Demand	Rating*	Check
Lateral (Sliding) (kips)	398.89	47.75	**11.4%**	**Pass**
Bearing Pressure (ksf)	5.04	3.77	**74.7%**	**Pass**
*Overturning (kip*ft)*	7900.59	7076.24	**89.6%**	**Pass**
*Pier Flexure (Comp.) (kip*ft)*	8823.42	6915.08	**74.6%**	**Pass**
Pier Compression (kip)	40734.72	118.54	**0.3%**	**Pass**
*Pad Flexure (kip*ft)*	6100.57	3496.81	**54.6%**	**Pass**
Pad Shear - 1-way (kips)	997.97	472.15	**45.1%**	**Pass**
Pad Shear - 2-way (Comp) (ksi)	0.190	0.000	**0.0%**	**Pass**
*Flexural 2-way (Comp) (kip*ft)*	5333.66	4149.05	**74.1%**	**Pass**

**Rating per TIA-222-H Section 15.5*

Soil Rating*:	**89.6%**
Structural Rating*:	**74.6%**

Pier Properties

Pier Shape:	Square	
Pier Diameter, **dpier**:	8	ft
Ext. Above Grade, **E**:	1	ft
Pier Rebar Size, **Sc**:	9	
Pier Rebar Quantity, **mc**:	48	
Pier Tie/Spiral Size, **St**:	4	
Pier Tie/Spiral Quantity, **mt**:	5	
Pier Reinforcement Type:	Tie	
Pier Clear Cover, cc_{pier}:	4	in

Pad Properties

Depth, **D**:	6	ft
Pad Width, **W**:	28	ft
Pad Thickness, **T**:	3	ft
Pad Rebar Size (Top), Sp_{top}:	9	
Pad Top Rebar Quantity (Top), mp_{top}:	20	
Pad Rebar Size (Bottom), **Sp**:	9	
Pad Rebar Quantity (Bottom), **mp**:	45	
Pad Clear Cover, cc_{pad}:	3	in

Material Properties

Rebar Grade, **Fy**:	60000	psi
Concrete Compressive Strength, **F'c**:	4000	psi
Dry Concrete Density, δc:	150	pcf

Soil Properties

Total Soil Unit Weight, γ:	120	pcf
Ultimate Net Bearing, Qnet:	6.000	ksf
Cohesion, **Cu**:	0.000	ksf
Friction Angle, φ:	34	degrees
SPT Blow Count, N_{blows}:		
Base Friction, μ:	0.6	
Neglected Depth, **N**:	3.33	ft
Foundation Bearing on Rock?	No	
Groundwater Depth, **gw**:	10	ft

<--Toggle between Gross and Net

Date: **October 26, 2018**

Charles McGuirt
Crown Castle
3530 Toringdon Way, Suite 300
Charlotte, NC28277
704-405-6607

Subject:	**Mount Modification Analysis Report**	
Carrier Designation:	**Verizon Wireless**	
	Carrier Site Number:	**1905**
	Carrier Site Name:	**Newton CT**
Crown Castle Designation:	**Crown Castle BU Number:**	**806354**
	Crown Castle Site Name:	**BRG 123 943084**
	Crown Castle JDE Job Number:	**535166**
	Crown Castle Order Number:	**461593 Rev 0**
Engineering Firm Designation:	**EOR Report Designation:**	**18-29816**
Site Data:	**21 Berkshire Road, Newton, Newton County, CT, 06482**	
	Latitude 41° 24' 45.53" Longitude -73° 16' 12.34"	
Structure Information:	**Tower Height & Type:**	**185 ft Monopole**
	Mount Elevation:	**185 ft**
	Mount Type:	**10.83 ft Low Profile Platform**

Dear Charles McGuirt,

EOR is pleased to submit this "Mount Modification Analysis Report" to determine the structural integrity of Verizon Wireless' antenna mounting system with the proposed appurtenance and equipment addition on the abovementioned supporting tower structure. Analysis of the existing supporting tower structure is to be completed by others and therefore is not part of this analysis. Analysis of the antenna mounting system as a tie-off point for fall protection or rigging is not part of this document.

The purpose of the analysis is to determine acceptability of the mount stress level. Based on our analysis we have determined the mount stress level to be:

10.83 ft Low Profile Platform (Typical) **Sufficient**

This analysis has been performed in accordance with the 2016 Connecticut Building Code based upon an ultimate 3-second gust wind speed of 120 mph as required for use in the TIA-222-H Standard per Exception #5 of Section 1609.1.1. Exposure Category C with a maximum topographic factor, Kzt, of 1.000 and Risk Category II were used in this analysis.

Mount structural analysis prepared by: Uma Toluganti

10/26/2018

Respectfully submitted by:

Mark E. Patterson, P.E.
Connecticut PE #: 31284

Commissioned by:
Power of Design Group, LLC
1033 E Turkeyfoot Lake Rd. Suite 206
Akron, OH 44312
(330) 961.7432
mhoudeshell@podgrp.com

TABLE OF CONTENTS

1) INTRODUCTION

2) ANALYSIS CRITERIA
Table 1 – Proposed Equipment Configuration

3) ANALYSIS PROCEDURE
Table 2 – Documents Provided
3.1) Analysis Method
3.2) Assumptions

4) ANALYSIS RESULTS
Table 3 - Mount Component Stresses vs. Capacity
4.1) Recommendations
Table 4 – Verizon Mount Classification

5) DISCLAIMER OF WARRANTIES

6) APPENDIX A
Wire Frame and Rendered Models

7) APPENDIX B
Software Input Calculations

8) APPENDIX C
Software Analysis Output

9) APPENDIX D
Mount Modification Drawings

1) INTRODUCTION

This mount is an existing 10.83 ft Low Profile Platform. This mount is installed at the185 ft elevation on 185 ft monopole.

2) ANALYSIS CRITERIA

Building Code:	2012 IBC
TIA-222 Revision:	TIA-222-H
Risk Category:	II
Nominal Wind Speed[1]:	93 mph
Exposure Category:	C
Topographic Factor at Base:	1.000
Topographic Factor at Mount:	1.000
Ice Thickness:	1 in
Wind Speed with Ice:	50 mph
Seismic S_s:	0.204
Seismic S_1:	0.065
Live Loading Wind Speed:	30 mph
Man Live Load at Mid/End-Points:	250 lb
Man Live Load at Mount Pipes:	500 lb

Notes:

1) From 2016 CSBC, Appendix N. Equivalent to 120 mph ultimate wind speed considering Risk Category II based on conversion from section 1609.3.1 of 2012 IBC.

Table 1 - Proposed Equipment Configuration

Mount Centerline (ft)	Antenna Centerline (ft)	Number of Antennas	Antenna Manufacturer	Antenna Model	Mount / Modification Details	Note
185	188	6	Decibel	DB846F65ZAXY	10.83 ft Low Profile Platform	
		6	Quintel Technology	QS8658-5		
		6	Commscope	CBC78T-DS-43		
		2	Raycap	RRFDC-3315-PF-48		
		3	Samsung	RFV01U-D1A		
		3	Samsung	RFV01U-D2A		

3) ANALYSIS PROCEDURE

Table 2 - Documents Provided

Document	Remarks	Reference	Source
Crown Application	-	Crown Castle App ID: 461593 Rev 0 Dated: 9/26/2018	Crown
Tower Drawings	-	Engineer Endeavors, Inc Drawings No: K10498 Dated:1/20/1998	Crown
Mount Modification Drawings	-	Power of Design Group Project #:18-29816	POD

3.1) Analysis Method

RISA3D (version 17.0), a commercially available analysis software package, was used to create a three-dimensional model of the mount and calculate member stresses for various loading cases. Selected output from the analysis is included in the Appendices.

This analysis was performed in accordance with Crown Castle's ENG-SOW-10208 Tower Mount Analysis (Revision B). In addition, this analysis is in accordance with Verizon's NSTD-445 Antenna Mounting System Classification Standard.

3.2) Assumptions

1) The antenna mounting system was properly fabricated, installed and maintained in good condition in accordance with its original design and manufacturer's specifications.
2) The configuration of antennas, mounts, and other appurtenances are as specified in Table 1 and the referenced drawings.
3) All member connections are assumed to have been designed to meet or exceed the load carrying capacity of the connected member unless otherwise specified in this report.
4) The weight of the mount was increased 10% in the analysis to account for connections, coax, and jumpers.
5) Member sizes have been assumed from photos of the site and past experience with similar mounting systems. If the sizes assumed in this report differ from the actual member sizes, EOR shall be contacted immediately and the results of the analysis shall be considered null and void.
6) Steel grades have been assumed as follows, unless noted otherwise:
    a. Channel, Solid Round, Angle, Plate — ASTM A36 (GR 36)
    b. HSS (Rectangular) — ASTM 500 (GR B-46)
    c. Pipe — ASTM A53 (GR 35)
    d. Connection Bolts — ASTM A325

If any of these assumptions are not valid or have been made in error, this analysis may be affected, and EOR should be allowed to review any new information to determine its effect on the structural integrity of the mount.

4) ANALYSIS RESULTS

Table 3 - Mount Component Stresses vs. Capacity (10.83 ft Platform, All Sectors)

Notes	Component	Critical Member	Centerline (ft)	% Capacity	Pass / Fail
	Face	FACE3	185	99.7	Pass
	Corner	CORNER3	185	49.2	Pass
	Support	SUPPORT1	185	38.0	Pass
	Rail	Rail6	183	26.8	Pass
	Ladder	LADDER2	185	25.0	Pass
	Mount Pipe	MP GAMMA3	185	50.6	Pass
	Standoff	Standoff6	185	11.6	Pass

Structure Rating (max from all components) =	99.7 %

4.1) Recommendations

The mounting system was found to be adequate to support the proposed loading once the modifications outlined in this report have been properly installed.

Table 4 – Verizon Mount Classification

Notes	Classification	% Capacity
1,2,3	M800R-4	100.2

Notes:

1) Classification is based upon analysis design criteria as specified above.
2) Classification is based upon equal distribution of loads across the face.
3) This analysis is certifying the mount for the specified loads in the loading tables and the rating the mount at the specified load classification. Any variation from the loading scenarios/classifications specified shall be verified adequate through a new structural analysis and is beyond the scope of this report.

5) DISCLAIMER OF WARRANTIES

EOR has not performed a site visit to the structure to verify the member sizes or antenna/coax loading unless noted otherwise. If the existing conditions are not as represented in this report, we should be contacted immediately to evaluate the significance of the discrepancy. This is not a condition assessment of the structure or foundation. This report does not replace a full structure inspection. The structure, foundations, and mounting systems are assumed to have been properly fabricated, erected, maintained, in good condition, twist free, and plumb.

The engineering services rendered by EOR in connection with this Structural Analysis are limited to a computer analysis of the structure and theoretical capacity of its main structural members. No allowance was made for any damaged, bent, missing, loose, or rusted members (above and below ground). No allowance was made for loose bolts or cracked welds.

EOR does not analyze the fabrication of the structure (including welding). It is not possible to have all the very detailed information needed to perform a thorough analysis of every structural sub-component and connection of an existing structure. EOR provides a limited scope of service in that we cannot verify the adequacy of every weld, plate connection detail, etc. The purpose of this report is to assess the feasibility of adding appurtenances usually accompanied by transmission lines to the structure.

It is the owner's responsibility to determine the amount of ice accumulation in excess of the code specified amount, if any, that should be considered in the structural analysis.

The attached sketches are a schematic representation of the analyzed structure. If any material is fabricated from these sketches, the contractor shall be responsible for field verifying the existing conditions, proper fit, and clearance in the field. Any mentions of structural modifications are reasonable estimates and should not be used as a precise construction document. Precise modification drawings are obtainable from EOR, but are beyond the scope of this report.

EOR makes no warranties, expressed and/or implied, in connection with this report and disclaims any liability arising from material, fabrication, and erection of this structure. EOR will not be responsible whatsoever, for or on account of, consequential or incidental damages sustained by any person, firm, or organization as a result of any data or conclusions contained in this report. The maximum liability of EOR pursuant to this report will be limited to the total fee received for preparation of this report.

APPENDIX A

Wire Frame and Rendered Models

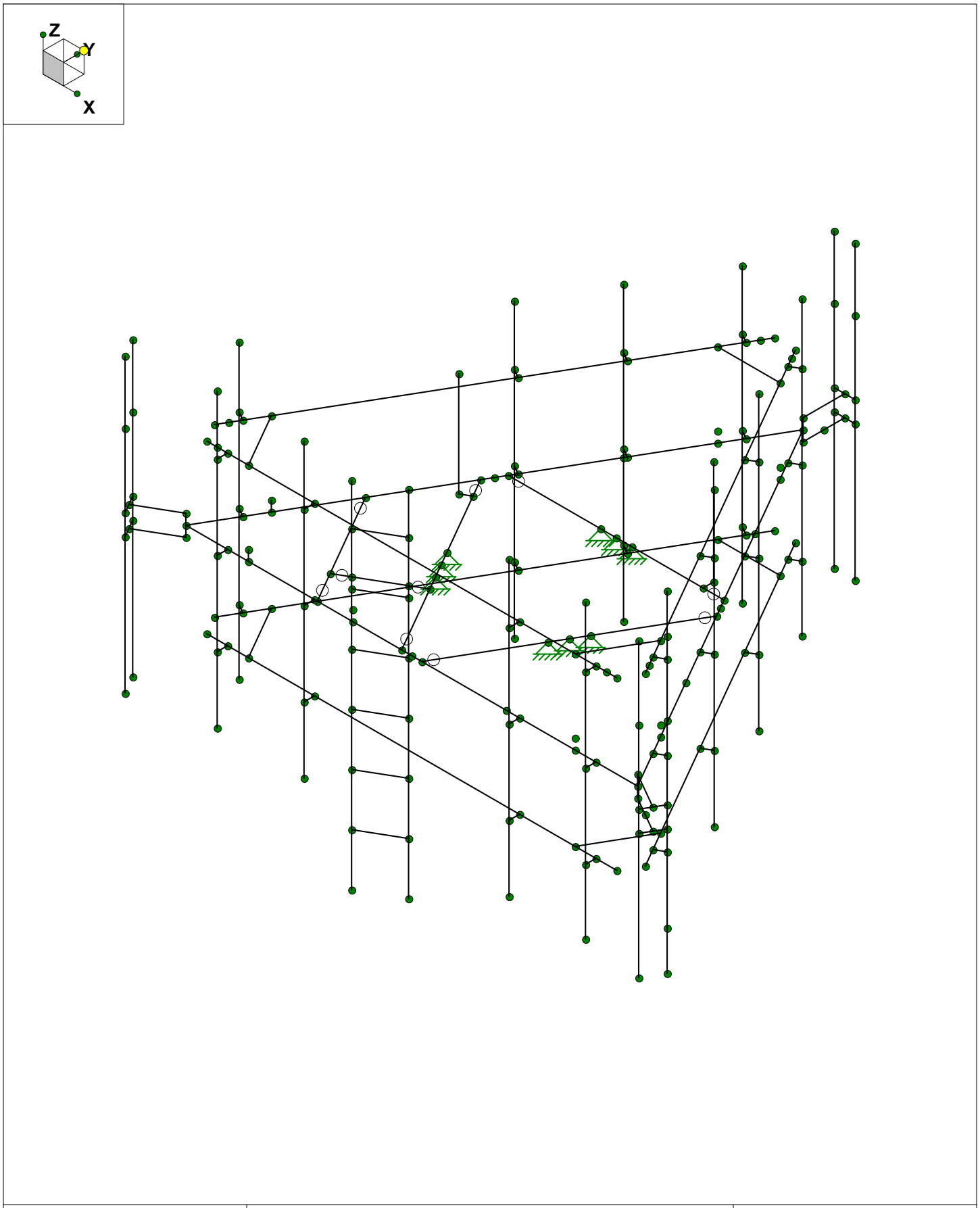

POD	806354	SK - 1
JEM		Oct 26, 2018 at 2:42 PM
18-29178		10.83' Low Profile Platform (Chann...

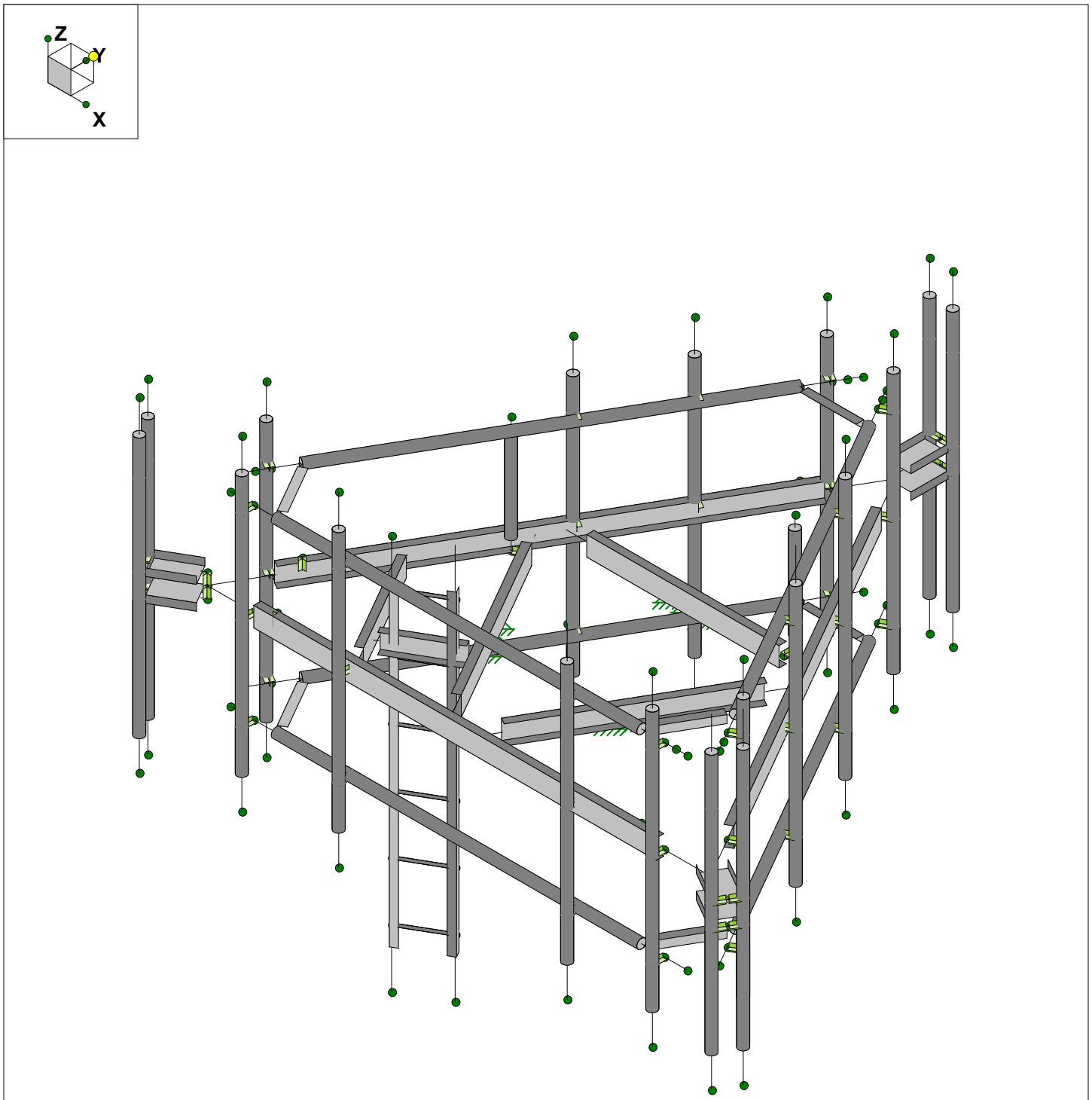

POD	806354	SK - 2
JEM		Oct 26, 2018 at 2:43 PM
18-29178		10.83' Low Profile Platform (Chann...

APPENDIX B

Software Input Calculations

POD Job #	**18-29187**
Site Number	**806354**
Site Name	**BRG 123 943084**

General Site Information

Mount Type	LLP	Risk Category	II
V (Wind Speed)	120	I(ice)	1
Zs	2		
ti	1		
Vi	50		
Kzt	1		
Exposure	C		
zg	900		
α	9.5		
Kmin	0.85		
G_H	1		
Ke	1.00		
K_D	0.95		

Appurtenance Information

				Alpha				Beta				Gamma			
Model	Shielded	% Shielded	Centerline	# on MP 1	# on MP 2	# on MP 3	# on MP 4	# on MP 1	# on MP 2	# on MP 3	# on MP 4	# on MP 1	# on MP 2	# on MP 3	# on MP 4
DB846F65ZAXY	No	0	188	1				1				1			
QS8658-5	No	0	188		1	1			1	1			1	1	
CBC78T-DS-43	Front	100	188	1				1		1		1		1	
RRFDC-3315-PF-48	Front	0	188			1								1	
RFV01U-D1A	Front	60	188								1		1		
RFV01U-D2A	Front	60	188				1		1			1			

Mount Information

Elevation (ft)	185	Grating Thickness (in)	1
K_z	1.44	Grating Ice Weight (k/ft^2)	0.015
Kiz	1.19		
tiz	1.19		

	Length (ft)	Width (in)	Centerline
Mount Pipes	7	2.375	188

Round Members

Member	Length (ft)	Width (in)	Frame Member	# of Members
Ladder Rungs	1	0.625	No	6

Flat Members

Member	Length (ft)	Width (in)	Shape	A	B	C	D	Frame Member	# of Members
Face	10.83	5	Channel	1.75	5	0.32	0.19	Yes	2
Face	10.83	5	Channel	1.75	5	0.32	0.19	No	1
Corner	5.174	5	Channel	1.75	5	0.32	0.19	No	3
Support	3.15	5	Channel	1.75	5	0.32	0.19	No	2
Ladder	8.5	1.75	Angle	1.75	0.25		0.25	No	2
Standoff	1	2	Channel	2	6	0.291	0.179	No	6

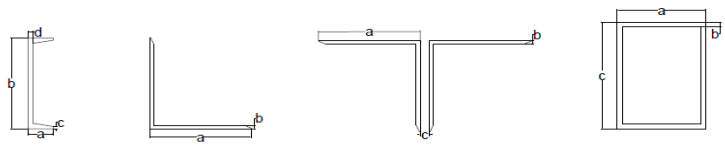

POD Job #	**18-29187**
Site Number	**806354**
Site Name	**BRG 123 943084**

General Site Information

Mount Type	LLP	Risk Category	II
V (Wind Speed)	120	I(ice)	1
Zs	2		
ti	1		
Vi	50		
Kzt	1		
Exposure	C		
zg	900		
α	9.5		
Kmin	0.85		
G_H	1		
Ke	1.00		
K_D	0.95		

Appurtenance Information

				Alpha				Beta				Gamma			
Model	Shielded	% Shielded	Centerline	# on MP 5	# on MP 6	# on MP 7	# on MP 8	# on MP 5	# on MP 6	# on MP 7	# on MP 8	# on MP 5	# on MP 6	# on MP 7	# on MP 8
DB846F65ZAXY	No	0	188	1				1				1			
QS8658-5	No	0	188												
CBC78T-DS-43	Front	100	188	1											
RRFDC-3315-PF-48	Front	0	188									1			
RFV01U-D1A	Front	60	188												
RFV01U-D2A	Front	60	188												

Mount Information

Elevation (ft)	123	Grating Thickness (in)	1
K_z	1.32	Grating Ice Weight (k/ft^2)	0.014
Kiz	1.14		
tiz	1.14		

	Length (ft)	Width (in)	Centerline
Mount Pipes	7	2.375	188

Round Members

Member	Length (ft)	Width (in)	Frame Member	# of Members
Ladder Rungs	1	0.625	No	6

Flat Members

Member	Length (ft)	Width (in)	Shape	A	B	C	D	Frame Member	# of Members
Face	10.83	5	Channel	1.75	5	0.32	0.19	Yes	2
Face	10.83	5	Channel	1.75	5	0.32	0.19	No	1
Corner	5.174	5	Channel	1.75	5	0.32	0.19	No	3
Support	3.15	5	Channel	1.75	5	0.32	0.19	No	2
Ladder	8.5	1.75	Angle	1.75	0.25		0.25	No	2
Standoff	1	2	Channel	2	6	0.291	0.179	No	6

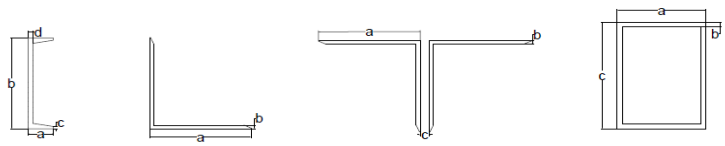

APPENDIX C

Software Analysis Output

Hot Rolled Steel Design Parameters

	Label	Shape	Length[...	Lbyy[ft]	Lbzz[ft]	Lcomp top...	Lcomp bot...	L-torq...	Kyy	Kzz	Cb	Functi...
1	Standoff6	MC6X7	1			Lbyy						Lateral
2	Standoff5	MC6X7	1			Lbyy						Lateral
3	Standoff4	MC6X7	1			Lbyy						Lateral
4	Standoff3	MC6X7	1			Lbyy						Lateral
5	Standoff2	MC6X7	1			Lbyy						Lateral
6	Standoff1	MC6X7	1			Lbyy						Lateral
7	SUPPORT2	C5X6.7	1.75			Lbyy						Lateral
8	SUPPORT1	C5X6.7	3.153			Lbyy						Lateral
9	Rail3	PIPE_2.0	9.833	5.417	5.417	Lbyy						Lateral
10	Rail2	PIPE_2.0	9.833	5.417	5.417	Lbyy						Lateral
11	Rail1	PIPE_2.0	9.833	5.417	5.417	Lbyy						Lateral
12	RUNG6	SR 5/8	1			Lbyy						Lateral
13	RUNG5	SR 5/8	1			Lbyy						Lateral
14	RUNG4	SR 5/8	1			Lbyy						Lateral
15	RUNG3	SR 5/8	1			Lbyy						Lateral
16	RUNG2	SR 5/8	1			Lbyy						Lateral
17	RUNG1	SR 5/8	1			Lbyy						Lateral
18	PLATE3	L2x2x4	1.5			Lbyy						Lateral
19	PLATE2	L2x2x4	1.5			Lbyy						Lateral
20	PLATE1	L2x2x4	1.5			Lbyy						Lateral
21	MP GAMMA6	PIPE_2.0	7			Lbyy						Lateral
22	MP GAMMA5	PIPE_2.0	7			Lbyy						Lateral
23	MP GAMMA4	PIPE_2.0	7			Lbyy						Lateral
24	MP GAMMA3	PIPE_2.0	7			Lbyy						Lateral
25	MP GAMMA2	PIPE_2.0	7			Lbyy						Lateral
26	MP GAMMA1	PIPE_2.0	7			Lbyy						Lateral
27	MP BETA6	PIPE_2.0	7			Lbyy						Lateral
28	MP BETA5	PIPE_2.0	7			Lbyy						Lateral
29	MP BETA4	PIPE_2.0	7			Lbyy						Lateral
30	MP BETA3	PIPE_2.0	7			Lbyy						Lateral
31	MP BETA2	PIPE_2.0	7			Lbyy						Lateral
32	MP BETA1	PIPE_2.0	7			Lbyy						Lateral
33	MP ALPHA8	PIPE_2.0	2.5			Lbyy						Lateral
34	MP ALPHA7	PIPE_2.0	2.5			Lbyy						Lateral
35	MP ALPHA6	PIPE_2.0	7			Lbyy						Lateral
36	MP ALPHA5	PIPE_2.0	7			Lbyy						Lateral
37	MP ALPHA4	PIPE_2.0	7			Lbyy						Lateral
38	MP ALPHA3	PIPE_2.0	7			Lbyy						Lateral
39	MP ALPHA2	PIPE_2.0	7			Lbyy						Lateral
40	MP ALPHA1	PIPE_2.0	7			Lbyy						Lateral
41	LADDER2	L1.75x1.7...	8.5			Lbyy						Lateral
42	LADDER1	L1.75x1.7...	8.5			Lbyy						Lateral
43	FACE3	C5X9	10.833	5.417	5.417	Lbyy						Lateral
44	FACE2	C5X9	10.833	5.417	5.417	Lbyy						Lateral
45	FACE1	C5X9	10.833	5.417	5.417	Lbyy						Lateral
46	CORNER3	C5X9	5.174			Lbyy						Lateral
47	CORNER2	C5X9	5.174			Lbyy						Lateral
48	CORNER1	C5X9	5.174			Lbyy						Lateral
49	M95	C5X6.7	3.153			Lbyy						Lateral
50	M96	C5X6.7	3.153			Lbyy						Lateral
51	M103	PIPE_2.0	9.833	5.417	5.417	Lbyy						Lateral
52	M104	PIPE_2.0	9.833	5.417	5.417	Lbyy						Lateral
53	M105	PIPE_2.0	9.833	5.417	5.417	Lbyy						Lateral
54	M106	L2x2x4	1.5			Lbyy						Lateral
55	M107	L2x2x4	1.5			Lbyy						Lateral
56	M108	L2x2x4	1.5			Lbyy						Lateral

Member Primary Data

	Label	I Joint	J Joint	K Joint	Rotat...	Section/Shape	Type	Design List	Material	Design...
1	Standoff6	N113	N115			MC6X7	Beam	Wide Flange	A36 Gr.36	Typical
2	Standoff5	N112	N114		180	MC6X7	Beam	Wide Flange	A36 Gr.36	Typical
3	Standoff4	N103	N105		180	MC6X7	Beam	Wide Flange	A36 Gr.36	Typical
4	Standoff3	N102	N104			MC6X7	Beam	Wide Flange	A36 Gr.36	Typical
5	Standoff2	N93A	N95			MC6X7	Beam	Wide Flange	A36 Gr.36	Typical
6	Standoff1	N92A	N94A		180	MC6X7	Beam	Wide Flange	A36 Gr.36	Typical
7	SUPPORT2	N36	N37		90	C5X6.7	Beam	Channel	A36 Gr.36	Typical
8	SUPPORT1	N34	N35		90	C5X6.7	Beam	Channel	A36 Gr.36	Typical
9	Rail3	N168	N169			PIPE_2.0	Beam	Channel	A53 Gr.B	Typical
10	Rail2	N165	N166			PIPE_2.0	Beam	Channel	A53 Gr.B	Typical
11	Rail1	N162	N163			PIPE_2.0	Beam	Channel	A53 Gr.B	Typical
12	RUNG6	N69A	N70A			SR 5/8	Beam	BAR	A36 Gr.36	Typical
13	RUNG5	N67A	N68A			SR 5/8	Beam	BAR	A36 Gr.36	Typical
14	RUNG4	N65	N66A			SR 5/8	Beam	BAR	A36 Gr.36	Typical
15	RUNG3	N63	N64			SR 5/8	Beam	BAR	A36 Gr.36	Typical
16	RUNG2	N61A	N62			SR 5/8	Beam	BAR	A36 Gr.36	Typical
17	RUNG1	N59A	N60A			SR 5/8	Beam	BAR	A36 Gr.36	Typical
18	PLATE3	N172	N174		90	L2x2x4	Beam	Wide Flange	A36 Gr.36	Typical
19	PLATE2	N169A	N171		270	L2x2x4	Beam	Wide Flange	A36 Gr.36	Typical
20	PLATE1	N168A	N175			L2x2x4	Beam	Wide Flange	A36 Gr.36	Typical
21	MP GAMMA6	N123	N119A			PIPE_2.0	Beam	Pipe	A53 Gr.B	Typical
22	MP GAMMA5	N94	N91			PIPE_2.0	Beam	Pipe	A53 Gr.B	Typical
23	MP GAMMA4	N88	N79			PIPE_2.0	Beam	Pipe	A53 Gr.B	Typical
24	MP GAMMA3	N87	N78			PIPE_2.0	Beam	Pipe	A53 Gr.B	Typical
25	MP GAMMA2	N86	N77			PIPE_2.0	Beam	Pipe	A53 Gr.B	Typical
26	MP GAMMA1	N122	N118A			PIPE_2.0	Beam	Pipe	A53 Gr.B	Typical
27	MP BETA6	N121	N117A			PIPE_2.0	Beam	Pipe	A53 Gr.B	Typical
28	MP BETA5	N93	N90			PIPE_2.0	Beam	Pipe	A53 Gr.B	Typical
29	MP BETA4	N85	N76A			PIPE_2.0	Beam	Pipe	A53 Gr.B	Typical
30	MP BETA3	N84	N75A			PIPE_2.0	Beam	Pipe	A53 Gr.B	Typical
31	MP BETA2	N83	N74A			PIPE_2.0	Beam	Pipe	A53 Gr.B	Typical
32	MP BETA1	N128	N126			PIPE_2.0	Beam	Pipe	A53 Gr.B	Typical
33	MP ALPHA8	N135	N136			PIPE_2.0	Beam	Pipe	A53 Gr.B	Typical
34	MP ALPHA7	N131A	N132			PIPE_2.0	Beam	Pipe	A53 Gr.B	Typical
35	MP ALPHA6	N127	N125			PIPE_2.0	Beam	Pipe	A53 Gr.B	Typical
36	MP ALPHA5	N92	N89			PIPE_2.0	Beam	Pipe	A53 Gr.B	Typical
37	MP ALPHA4	N82	N73A			PIPE_2.0	Beam	Pipe	A53 Gr.B	Typical
38	MP ALPHA3	N81	N72A			PIPE_2.0	Beam	Pipe	A53 Gr.B	Typical
39	MP ALPHA2	N80	N71A			PIPE_2.0	Beam	Pipe	A53 Gr.B	Typical
40	MP ALPHA1	N124	N120			PIPE_2.0	Beam	Pipe	A53 Gr.B	Typical
41	LADDER2	N56A	N58A		30	L1.75x1.75x4	Beam	Single Angle	A36 Gr.36	Typical
42	LADDER1	N55A	N57A		300	L1.75x1.75x4	Beam	Single Angle	A36 Gr.36	Typical
43	FACE3	N1	N3		90	C5X9	Beam	Channel	A36 Gr.36	Typical
44	FACE2	N2	N3		90	C5X9	Beam	Channel	A36 Gr.36	Typical
45	FACE1	N1	N2		270	C5X9	Beam	Channel	A36 Gr.36	Typical
46	CORNER3	N4	N5		270	C5X9	Beam	Channel	A36 Gr.36	Typical
47	CORNER2	N8	N9		90	C5X9	Beam	Channel	A36 Gr.36	Typical
48	CORNER1	N6	N7		90	C5X9	Beam	Channel	A36 Gr.36	Typical
49	44	N160	N161			RIGID	None	None	RIGID	Typical
50	43	N158	N159			RIGID	None	None	RIGID	Typical
51	42	N156	N157			RIGID	None	None	RIGID	Typical
52	41	N154	N155			RIGID	None	None	RIGID	Typical
53	40	N152	N153			RIGID	None	None	RIGID	Typical
54	39	N150	N151			RIGID	None	None	RIGID	Typical
55	38	N148	N149			RIGID	None	None	RIGID	Typical
56	37	N146	N147			RIGID	None	None	RIGID	Typical

Member Primary Data (Continued)

	Label	I Joint	J Joint	K Joint	Rotat...	Section/Shape	Type	Design List	Material	Design...
57	36	N144	N145			RIGID	None	None	RIGID	Typical
58	35	N142	N143			RIGID	None	None	RIGID	Typical
59	34	N140	N141			RIGID	None	None	RIGID	Typical
60	33	N138	N139			RIGID	None	None	RIGID	Typical
61	32	N131	N135			RIGID	None	None	RIGID	Typical
62	31	N129	N131A			RIGID	None	None	RIGID	Typical
63	30	N114	N118			RIGID	None	None	RIGID	Typical
64	29	N115	N119			RIGID	None	None	RIGID	Typical
65	28	N114	N116			RIGID	None	None	RIGID	Typical
66	27	N115	N117			RIGID	None	None	RIGID	Typical
67	26	N2	N112			RIGID	None	None	RIGID	Typical
68	25	N2	N113			RIGID	None	None	RIGID	Typical
69	24	N104	N108			RIGID	None	None	RIGID	Typical
70	23	N105	N109			RIGID	None	None	RIGID	Typical
71	22	N104	N106			RIGID	None	None	RIGID	Typical
72	21	N105	N107			RIGID	None	None	RIGID	Typical
73	20	N1	N102			RIGID	None	None	RIGID	Typical
74	19	N1	N103			RIGID	None	None	RIGID	Typical
75	18	N94A	N98			RIGID	None	None	RIGID	Typical
76	17	N95	N99			RIGID	None	None	RIGID	Typical
77	16	N94A	N96			RIGID	None	None	RIGID	Typical
78	15	N95	N97			RIGID	None	None	RIGID	Typical
79	14	N3	N92A			RIGID	None	None	RIGID	Typical
80	13	N3	N93A			RIGID	None	None	RIGID	Typical
81	12	N60	N61			RIGID	None	None	RIGID	Typical
82	11	N58	N59			RIGID	None	None	RIGID	Typical
83	10	N56	N57			RIGID	None	None	RIGID	Typical
84	9	N54	N55			RIGID	None	None	RIGID	Typical
85	8	N52	N53			RIGID	None	None	RIGID	Typical
86	7	N50	N51			RIGID	None	None	RIGID	Typical
87	6	N48	N49			RIGID	None	None	RIGID	Typical
88	5	N46	N47			RIGID	None	None	RIGID	Typical
89	4	N44	N45			RIGID	None	None	RIGID	Typical
90	3	N42	N43			RIGID	None	None	RIGID	Typical
91	2	N40	N41			RIGID	None	None	RIGID	Typical
92	1	N38	N39			RIGID	None	None	RIGID	Typical
93	M93	N171A	N177A			RIGID	None	None	RIGID	Typical
94	M94	N178	N182			RIGID	None	None	RIGID	Typical
95	M95	N187	N188		90	C5X6.7	Beam	Channel	A36 Gr.36	Typical
96	M96	N190A	N191		270	C5X6.7	Beam	Channel	A36 Gr.36	Typical
97	M103	N231	N232			PIPE_2.0	Beam	Channel	A53 Gr.B	Typical
98	M104	N229	N230			PIPE_2.0	Beam	Channel	A53 Gr.B	Typical
99	M105	N227	N228			PIPE_2.0	Beam	Channel	A53 Gr.B	Typical
100	M106	N236	N237		90	L2x2x4	Beam	Wide Flange	A36 Gr.36	Typical
101	M107	N234	N235		270	L2x2x4	Beam	Wide Flange	A36 Gr.36	Typical
102	M108	N233	N238			L2x2x4	Beam	Wide Flange	A36 Gr.36	Typical
103	M109	N225	N226			RIGID	None	None	RIGID	Typical
104	M110	N223	N224			RIGID	None	None	RIGID	Typical
105	M111	N221	N222			RIGID	None	None	RIGID	Typical
106	M112	N219	N220			RIGID	None	None	RIGID	Typical
107	M113	N217	N218			RIGID	None	None	RIGID	Typical
108	M114	N215	N216			RIGID	None	None	RIGID	Typical
109	M115	N213	N214			RIGID	None	None	RIGID	Typical
110	M116	N211	N212			RIGID	None	None	RIGID	Typical
111	M117	N209	N210			RIGID	None	None	RIGID	Typical
112	M118	N207	N208			RIGID	None	None	RIGID	Typical
113	M119	N205A	N206			RIGID	None	None	RIGID	Typical

Member Primary Data (Continued)

	Label	I Joint	J Joint	K Joint	Rotat...	Section/Shape	Type	Design List	Material	Design...
114	M120	N203A	N204B			RIGID	None	None	RIGID	Typical

Member Advanced Data

	Label	I Release	J Release	I Offset[in]	J Offset[in]	T/C Only	Physical	Defl Rat...	Analysis ...	Inactive	Seismic...
1	Standoff6						Yes				None
2	Standoff5						Yes				None
3	Standoff4						Yes	Default			None
4	Standoff3						Yes				None
5	Standoff2						Yes				None
6	Standoff1						Yes				None
7	SUPPORT2	BenPIN	BenPIN				Yes				None
8	SUPPORT1	BenPIN	BenPIN				Yes				None
9	Rail3						Yes				None
10	Rail2						Yes				None
11	Rail1						Yes				None
12	RUNG6						Yes				None
13	RUNG5						Yes				None
14	RUNG4						Yes				None
15	RUNG3						Yes				None
16	RUNG2						Yes				None
17	RUNG1						Yes				None
18	PLATE3						Yes				None
19	PLATE2						Yes				None
20	PLATE1						Yes	Default			None
21	MP GAMM...						Yes				None
22	MP GAMM...						Yes				None
23	MP GAMM...						Yes				None
24	MP GAMM...						Yes				None
25	MP GAMM...						Yes				None
26	MP GAMM...						Yes				None
27	MP BETA6						Yes				None
28	MP BETA5						Yes				None
29	MP BETA4						Yes				None
30	MP BETA3						Yes				None
31	MP BETA2						Yes				None
32	MP BETA1						Yes				None
33	MP ALPHA8						Yes				None
34	MP ALPHA7						Yes				None
35	MP ALPHA6						Yes				None
36	MP ALPHA5						Yes				None
37	MP ALPHA4						Yes				None
38	MP ALPHA3						Yes				None
39	MP ALPHA2						Yes				None
40	MP ALPHA1						Yes				None
41	LADDER2						Yes				None
42	LADDER1						Yes				None
43	FACE3						Yes				None
44	FACE2						Yes				None
45	FACE1						Yes				None
46	CORNER3	BenPIN	BenPIN				Yes				None
47	CORNER2	BenPIN	BenPIN				Yes				None
48	CORNER1	BenPIN	BenPIN				Yes				None
49	44						Yes	** NA **			None
50	43						Yes	** NA **			None
51	42						Yes	** NA **			None

Member Advanced Data (Continued)

	Label	I Release	J Release	I Offset[in]	J Offset[in]	T/C Only	Physical	Defl Rat...	Analysis ...	Inactive	Seismic...
52	41						Yes	** NA **			None
53	40						Yes	** NA **			None
54	39						Yes	** NA **			None
55	38						Yes	** NA **			None
56	37						Yes	** NA **			None
57	36						Yes	** NA **			None
58	35						Yes	** NA **			None
59	34						Yes	** NA **			None
60	33						Yes	** NA **			None
61	32						Yes	** NA **			None
62	31						Yes	** NA **			None
63	30						Yes	** NA **			None
64	29						Yes	** NA **			None
65	28						Yes	** NA **			None
66	27						Yes	** NA **			None
67	26						Yes	** NA **			None
68	25						Yes	** NA **			None
69	24						Yes	** NA **			None
70	23						Yes	** NA **			None
71	22						Yes	** NA **			None
72	21						Yes	** NA **			None
73	20						Yes	** NA **			None
74	19						Yes	** NA **			None
75	18						Yes	** NA **			None
76	17						Yes	** NA **			None
77	16						Yes	** NA **			None
78	15						Yes	** NA **			None
79	14						Yes	** NA **			None
80	13						Yes	** NA **			None
81	12						Yes	** NA **			None
82	11						Yes	** NA **			None
83	10						Yes	** NA **			None
84	9						Yes	** NA **			None
85	8						Yes	** NA **			None
86	7						Yes	** NA **			None
87	6						Yes	** NA **			None
88	5						Yes	** NA **			None
89	4						Yes	** NA **			None
90	3						Yes	** NA **			None
91	2						Yes	** NA **			None
92	1						Yes	** NA **			None
93	M93						Yes	** NA **			None
94	M94						Yes	** NA **			None
95	M95	BenPIN	BenPIN				Yes			Inactive	None
96	M96	BenPIN	BenPIN				Yes	Default		Inactive	None
97	M103						Yes				None
98	M104						Yes				None
99	M105						Yes				None
100	M106						Yes				None
101	M107						Yes				None
102	M108						Yes	Default			None
103	M109						Yes	** NA **			None
104	M110						Yes	** NA **			None
105	M111						Yes	** NA **			None
106	M112						Yes	** NA **			None
107	M113						Yes	** NA **			None
108	M114						Yes	** NA **			None

Member Advanced Data (Continued)

	Label	I Release	J Release	I Offset[in]	J Offset[in]	T/C Only	Physical	Defl Rat...	Analysis ...	Inactive	Seismic...
109	M115						Yes	** NA **			None
110	M116						Yes	** NA **			None
111	M117						Yes	** NA **			None
112	M118						Yes	** NA **			None
113	M119						Yes	** NA **			None
114	M120						Yes	** NA **			None

Hot Rolled Steel Properties

	Label	E [ksi]	G [ksi]	Nu	Therm (\1E...	Density[k/ft...	Yield[ksi]	Ry	Fu[ksi]	Rt
1	A992	29000	11154	.3	.65	.49	50	1.1	65	1.1
2	A36 Gr.36	29000	11154	.3	.65	.49	36	1.5	58	1.2
3	A572 Gr.50	29000	11154	.3	.65	.49	50	1.1	65	1.1
4	A500 Gr.B RND	29000	11154	.3	.65	.527	42	1.4	58	1.3
5	A500 Gr.B Rect	29000	11154	.3	.65	.527	46	1.4	58	1.3
6	A53 Gr.B	29000	11154	.3	.65	.49	35	1.6	60	1.2
7	A1085	29000	11154	.3	.65	.49	50	1.4	65	1.3

Member Point Loads (BLC 1 : Wind Load (0))

	Member Label	Direction	Magnitude[k,k-ft]	Location[ft,%]
1	MP ALPHA1	Y	-.356	3.5
2	MP ALPHA2	Y	-.58	3.5
3	MP ALPHA3	Y	-.772	3.5
4	MP ALPHA5	Y	-.356	3.5
5	MP BETA1	Y	-.332	3.5
6	MP BETA2	Y	-.557	3.5
7	MP BETA3	Y	-.519	3.5
8	MP BETA5	Y	-.323	3.5
9	MP GAMMA5	Y	-.38	3.5
10	MP GAMMA3	Y	-.663	3.5
11	MP GAMMA2	Y	-.567	3.5
12	MP GAMMA1	Y	-.38	3.5
13	MP ALPHA4	Y	-.095	3.5
14	MP BETA4	Y	-.071	3.5

Member Point Loads (BLC 2 : Dead Load)

	Member Label	Direction	Magnitude[k,k-ft]	Location[ft,%]
1	MP ALPHA1	Z	-.032	3.5
2	MP ALPHA2	Z	-.098	3.5
3	MP ALPHA3	Z	-.13	3.5
4	MP ALPHA5	Z	-.032	3.5
5	MP BETA1	Z	-.032	3.5
6	MP BETA2	Z	-.168	3.5
7	MP BETA3	Z	-.109	3.5
8	MP BETA5	Z	-.021	3.5
9	MP GAMMA5	Z	-.105	3.5
10	MP GAMMA3	Z	-.141	3.5
11	MP GAMMA2	Z	-.182	3.5
12	MP GAMMA1	Z	-.102	3.5
13	MP ALPHA4	Z	-.07	3.5
14	MP BETA4	Z	-.084	3.5

Member Point Loads (BLC 3 : Live Load)

Member Label	Direction	Magnitude[k,k-ft]	Location[ft,%]

Member Point Loads (BLC 3 : Live Load) (Continued)

	Member Label	Direction	Magnitude[k,k-ft]	Location[ft,%]
1	FACE1	Z	-.5	0
2	Rail1	Z	-.5	0
3	Rail2	Z	-.5	0
4	Rail3	Z	-.5	0
5	M103	Z	-.5	0
6	M104	Z	-.5	0
7	M105	Z	-.5	0

Member Point Loads (BLC 4 : Ice Wind Load (0))

	Member Label	Direction	Magnitude[k,k-ft]	Location[ft,%]
1	MP ALPHA1	Y	-.044	3.5
2	MP ALPHA2	Y	-.069	3.5
3	MP ALPHA3	Y	-.093	3.5
4	MP ALPHA5	Y	-.044	3.5
5	MP BETA1	Y	-.042	3.5
6	MP BETA2	Y	-.069	3.5
7	MP BETA3	Y	-.064	3.5
8	MP BETA5	Y	-.04	3.5
9	MP GAMMA5	Y	-.049	3.5
10	MP GAMMA3	Y	-.083	3.5
11	MP GAMMA2	Y	-.07	3.5
12	MP GAMMA1	Y	-.05	3.5
13	MP ALPHA4	Y	-.013	3.5
14	MP BETA4	Y	-.01	3.5

Member Point Loads (BLC 5 : Ice Dead Load)

	Member Label	Direction	Magnitude[k,k-ft]	Location[ft,%]
1	MP ALPHA1	Z	-.138	3.5
2	MP ALPHA2	Z	-.191	3.5
3	MP ALPHA3	Z	-.272	3.5
4	MP ALPHA5	Z	-.138	3.5
5	MP BETA1	Z	-.138	3.5
6	MP BETA2	Z	-.234	3.5
7	MP BETA3	Z	-.203	3.5
8	MP BETA5	Z	-.126	3.5
9	MP GAMMA5	Z	-.175	3.5
10	MP GAMMA3	Z	-.284	3.5
11	MP GAMMA2	Z	-.239	3.5
12	MP GAMMA1	Z	-.182	3.5
13	MP ALPHA4	Z	-.044	3.5
14	MP BETA4	Z	-.048	3.5

Member Point Loads (BLC 6 : Wind Load (30))

	Member Label	Direction	Magnitude[k,k-ft]	Location[ft,%]
1	MP ALPHA1	Y	-.302	3.5
2	MP ALPHA2	Y	-.482	3.5
3	MP ALPHA3	Y	-.634	3.5
4	MP ALPHA5	Y	-.302	3.5
5	MP BETA1	Y	-.281	3.5
6	MP BETA2	Y	-.465	3.5
7	MP BETA3	Y	-.432	3.5
8	MP BETA5	Y	-.27	3.5
9	MP GAMMA5	Y	-.337	3.5
10	MP GAMMA3	Y	-.637	3.5
11	MP GAMMA2	Y	-.521	3.5

Member Point Loads (BLC 6 : Wind Load (30)) (Continued)

	Member Label	Direction	Magnitude[k,k-ft]	Location[ft,%]
12	MP GAMMA1	Y	-.337	3.5
13	MP ALPHA4	Y	-.073	3.5
14	MP BETA4	Y	-.055	3.5
15	MP ALPHA1	X	-.174	3.5
16	MP ALPHA2	X	-.278	3.5
17	MP ALPHA3	X	-.366	3.5
18	MP ALPHA5	X	-.174	3.5
19	MP BETA1	X	-.162	3.5
20	MP BETA2	X	-.269	3.5
21	MP BETA3	X	-.249	3.5
22	MP BETA5	X	-.156	3.5
23	MP GAMMA5	X	-.195	3.5
24	MP GAMMA3	X	-.368	3.5
25	MP GAMMA2	X	-.301	3.5
26	MP GAMMA1	X	-.195	3.5
27	MP ALPHA4	X	-.042	3.5
28	MP BETA4	X	-.032	3.5

Member Point Loads (BLC 7 : Ice Wind Load (30))

	Member Label	Direction	Magnitude[k,k-ft]	Location[ft,%]
1	MP ALPHA1	Y	-.037	3.5
2	MP ALPHA2	Y	-.058	3.5
3	MP ALPHA3	Y	-.077	3.5
4	MP ALPHA5	Y	-.037	3.5
5	MP BETA1	Y	-.036	3.5
6	MP BETA2	Y	-.058	3.5
7	MP BETA3	Y	-.054	3.5
8	MP BETA5	Y	-.034	3.5
9	MP GAMMA5	Y	-.042	3.5
10	MP GAMMA3	Y	-.078	3.5
11	MP GAMMA2	Y	-.063	3.5
12	MP GAMMA1	Y	-.043	3.5
13	MP ALPHA4	Y	-.01	3.5
14	MP BETA4	Y	-.008	3.5
15	MP ALPHA1	X	-.022	3.5
16	MP ALPHA2	X	-.033	3.5
17	MP ALPHA3	X	-.044	3.5
18	MP ALPHA5	X	-.022	3.5
19	MP BETA1	X	-.021	3.5
20	MP BETA2	X	-.034	3.5
21	MP BETA3	X	-.031	3.5
22	MP BETA5	X	-.02	3.5
23	MP GAMMA5	X	-.024	3.5
24	MP GAMMA3	X	-.045	3.5
25	MP GAMMA2	X	-.036	3.5
26	MP GAMMA1	X	-.025	3.5
27	MP ALPHA4	X	-.006	3.5
28	MP BETA4	X	-.005	3.5

Member Point Loads (BLC 8 : Wind Load (60))

	Member Label	Direction	Magnitude[k,k-ft]	Location[ft,%]
1	MP ALPHA1	Y	-.166	3.5
2	MP ALPHA2	Y	-.255	3.5
3	MP ALPHA3	Y	-.326	3.5
4	MP ALPHA5	Y	-.166	3.5
5	MP BETA1	Y	-.166	3.5

Member Point Loads (BLC 8 : Wind Load (60)) (Continued)

	Member Label	Direction	Magnitude[k,k-ft]	Location[ft,%]
6	MP BETA2	Y	-.279	3.5
7	MP BETA3	Y	-.26	3.5
8	MP BETA5	Y	-.161	3.5
9	MP GAMMA5	Y	-.197	3.5
10	MP GAMMA3	Y	-.386	3.5
11	MP GAMMA2	Y	-.309	3.5
12	MP GAMMA1	Y	-.197	3.5
13	MP ALPHA4	Y	-.031	3.5
14	MP BETA4	Y	-.036	3.5
15	MP ALPHA1	X	-.288	3.5
16	MP ALPHA2	X	-.441	3.5
17	MP ALPHA3	X	-.566	3.5
18	MP ALPHA5	X	-.288	3.5
19	MP BETA1	X	-.288	3.5
20	MP BETA2	X	-.483	3.5
21	MP BETA3	X	-.45	3.5
22	MP BETA5	X	-.28	3.5
23	MP GAMMA5	X	-.341	3.5
24	MP GAMMA3	X	-.669	3.5
25	MP GAMMA2	X	-.536	3.5
26	MP GAMMA1	X	-.341	3.5
27	MP ALPHA4	X	-.054	3.5
28	MP BETA4	X	-.062	3.5

Member Point Loads (BLC 9 : Ice Wind Load (60))

	Member Label	Direction	Magnitude[k,k-ft]	Location[ft,%]
1	MP ALPHA1	Y	-.021	3.5
2	MP ALPHA2	Y	-.031	3.5
3	MP ALPHA3	Y	-.04	3.5
4	MP ALPHA5	Y	-.021	3.5
5	MP BETA1	Y	-.021	3.5
6	MP BETA2	Y	-.034	3.5
7	MP BETA3	Y	-.032	3.5
8	MP BETA5	Y	-.02	3.5
9	MP GAMMA5	Y	-.024	3.5
10	MP GAMMA3	Y	-.046	3.5
11	MP GAMMA2	Y	-.037	3.5
12	MP GAMMA1	Y	-.024	3.5
13	MP ALPHA4	Y	-.005	3.5
14	MP BETA4	Y	-.005	3.5
15	MP ALPHA1	X	-.037	3.5
16	MP ALPHA2	X	-.054	3.5
17	MP ALPHA3	X	-.07	3.5
18	MP ALPHA5	X	-.037	3.5
19	MP BETA1	X	-.037	3.5
20	MP BETA2	X	-.06	3.5
21	MP BETA3	X	-.055	3.5
22	MP BETA5	X	-.035	3.5
23	MP GAMMA5	X	-.042	3.5
24	MP GAMMA3	X	-.081	3.5
25	MP GAMMA2	X	-.064	3.5
26	MP GAMMA1	X	-.042	3.5
27	MP ALPHA4	X	-.008	3.5
28	MP BETA4	X	-.009	3.5

Member Point Loads (BLC 10 : Wind Load (90))

	Member Label	Direction	Magnitude[k,k-ft]	Location[ft,%]
1	MP ALPHA1	X	-.325	3.5
2	MP ALPHA2	X	-.486	3.5
3	MP ALPHA3	X	-.613	3.5
4	MP ALPHA5	X	-.325	3.5
5	MP BETA1	X	-.348	3.5
6	MP BETA2	X	-.598	3.5
7	MP BETA3	X	-.56	3.5
8	MP BETA5	X	-.345	3.5
9	MP GAMMA5	X	-.389	3.5
10	MP GAMMA3	X	-.736	3.5
11	MP GAMMA2	X	-.601	3.5
12	MP GAMMA1	X	-.389	3.5
13	MP ALPHA4	X	-.051	3.5
14	MP BETA4	X	-.087	3.5

Member Point Loads (BLC 11 : Ice Wind Load (90))

	Member Label	Direction	Magnitude[k,k-ft]	Location[ft,%]
1	MP ALPHA1	X	-.042	3.5
2	MP ALPHA2	X	-.059	3.5
3	MP ALPHA3	X	-.076	3.5
4	MP ALPHA5	X	-.042	3.5
5	MP BETA1	X	-.043	3.5
6	MP BETA2	X	-.072	3.5
7	MP BETA3	X	-.067	3.5
8	MP BETA5	X	-.043	3.5
9	MP GAMMA5	X	-.049	3.5
10	MP GAMMA3	X	-.09	3.5
11	MP GAMMA2	X	-.073	3.5
12	MP GAMMA1	X	-.049	3.5
13	MP ALPHA4	X	-.008	3.5
14	MP BETA4	X	-.012	3.5

Member Point Loads (BLC 12 : Wind Load (120))

	Member Label	Direction	Magnitude[k,k-ft]	Location[ft,%]
1	MP ALPHA1	Y	.166	3.5
2	MP ALPHA2	Y	.255	3.5
3	MP ALPHA3	Y	.326	3.5
4	MP ALPHA5	Y	.166	3.5
5	MP BETA1	Y	.178	3.5
6	MP BETA2	Y	.309	3.5
7	MP BETA3	Y	.29	3.5
8	MP BETA5	Y	.178	3.5
9	MP GAMMA5	Y	.19	3.5
10	MP GAMMA3	Y	.331	3.5
11	MP GAMMA2	Y	.283	3.5
12	MP GAMMA1	Y	.19	3.5
13	MP ALPHA4	Y	.031	3.5
14	MP BETA4	Y	.047	3.5
15	MP ALPHA1	X	-.288	3.5
16	MP ALPHA2	X	-.441	3.5
17	MP ALPHA3	X	-.566	3.5
18	MP ALPHA5	X	-.288	3.5
19	MP BETA1	X	-.308	3.5
20	MP BETA2	X	-.536	3.5
21	MP BETA3	X	-.503	3.5
22	MP BETA5	X	-.308	3.5

Member Point Loads (BLC 12 : Wind Load (120)) (Continued)

	Member Label	Direction	Magnitude[k,k-ft]	Location[ft,%]
23	MP GAMMA5	X	-.329	3.5
24	MP GAMMA3	X	-.574	3.5
25	MP GAMMA2	X	-.491	3.5
26	MP GAMMA1	X	-.329	3.5
27	MP ALPHA4	X	-.054	3.5
28	MP BETA4	X	-.082	3.5

Member Point Loads (BLC 13 : Ice Wind Load (120))

	Member Label	Direction	Magnitude[k,k-ft]	Location[ft,%]
1	MP ALPHA1	Y	.302	3.5
2	MP ALPHA2	Y	.482	3.5
3	MP ALPHA3	Y	.634	3.5
4	MP ALPHA5	Y	.302	3.5
5	MP BETA1	Y	.302	3.5
6	MP BETA2	Y	.518	3.5
7	MP BETA3	Y	.485	3.5
8	MP BETA5	Y	.299	3.5
9	MP GAMMA5	Y	.325	3.5
10	MP GAMMA3	Y	.542	3.5
11	MP GAMMA2	Y	.476	3.5
12	MP GAMMA1	Y	.325	3.5
13	MP ALPHA4	Y	.073	3.5
14	MP BETA4	Y	.075	3.5
15	MP ALPHA1	X	-.174	3.5
16	MP ALPHA2	X	-.278	3.5
17	MP ALPHA3	X	-.366	3.5
18	MP ALPHA5	X	-.174	3.5
19	MP BETA1	X	-.174	3.5
20	MP BETA2	X	-.299	3.5
21	MP BETA3	X	-.28	3.5
22	MP BETA5	X	-.172	3.5
23	MP GAMMA5	X	-.188	3.5
24	MP GAMMA3	X	-.313	3.5
25	MP GAMMA2	X	-.275	3.5
26	MP GAMMA1	X	-.188	3.5
27	MP ALPHA4	X	-.042	3.5
28	MP BETA4	X	-.043	3.5

Member Point Loads (BLC 14 : Wind Load (150))

	Member Label	Direction	Magnitude[k,k-ft]	Location[ft,%]
1	MP ALPHA1	Y	.302	3.5
2	MP ALPHA2	Y	.482	3.5
3	MP ALPHA3	Y	.634	3.5
4	MP ALPHA5	Y	.302	3.5
5	MP BETA1	Y	.302	3.5
6	MP BETA2	Y	.518	3.5
7	MP BETA3	Y	.485	3.5
8	MP BETA5	Y	.299	3.5
9	MP GAMMA5	Y	.325	3.5
10	MP GAMMA3	Y	.542	3.5
11	MP GAMMA2	Y	.476	3.5
12	MP GAMMA1	Y	.325	3.5
13	MP ALPHA4	Y	.073	3.5
14	MP BETA4	Y	.075	3.5
15	MP ALPHA1	X	-.174	3.5
16	MP ALPHA2	X	-.278	3.5

Member Point Loads (BLC 14 : Wind Load (150)) (Continued)

	Member Label	Direction	Magnitude[k,k-ft]	Location[ft,%]
17	MP ALPHA3	X	-.366	3.5
18	MP ALPHA5	X	-.174	3.5
19	MP BETA1	X	-.174	3.5
20	MP BETA2	X	-.299	3.5
21	MP BETA3	X	-.28	3.5
22	MP BETA5	X	-.172	3.5
23	MP GAMMA5	X	-.188	3.5
24	MP GAMMA3	X	-.313	3.5
25	MP GAMMA2	X	-.275	3.5
26	MP GAMMA1	X	-.188	3.5
27	MP ALPHA4	X	-.042	3.5
28	MP BETA4	X	-.043	3.5

Member Point Loads (BLC 15 : Ice Wind Load (150))

	Member Label	Direction	Magnitude[k,k-ft]	Location[ft,%]
1	MP ALPHA1	Y	.037	3.5
2	MP ALPHA2	Y	.058	3.5
3	MP ALPHA3	Y	.077	3.5
4	MP ALPHA5	Y	.037	3.5
5	MP BETA1	Y	.037	3.5
6	MP BETA2	Y	.063	3.5
7	MP BETA3	Y	.058	3.5
8	MP BETA5	Y	.037	3.5
9	MP GAMMA5	Y	.042	3.5
10	MP GAMMA3	Y	.069	3.5
11	MP GAMMA2	Y	.059	3.5
12	MP GAMMA1	Y	.043	3.5
13	MP ALPHA4	Y	.01	3.5
14	MP BETA4	Y	.01	3.5
15	MP ALPHA1	X	-.022	3.5
16	MP ALPHA2	X	-.033	3.5
17	MP ALPHA3	X	-.044	3.5
18	MP ALPHA5	X	-.022	3.5
19	MP BETA1	X	-.022	3.5
20	MP BETA2	X	-.036	3.5
21	MP BETA3	X	-.034	3.5
22	MP BETA5	X	-.021	3.5
23	MP GAMMA5	X	-.024	3.5
24	MP GAMMA3	X	-.04	3.5
25	MP GAMMA2	X	-.034	3.5
26	MP GAMMA1	X	-.025	3.5
27	MP ALPHA4	X	-.006	3.5
28	MP BETA4	X	-.006	3.5

Member Point Loads (BLC 16 : Wind Load (180))

	Member Label	Direction	Magnitude[k,k-ft]	Location[ft,%]
1	MP ALPHA1	Y	.356	3.5
2	MP ALPHA2	Y	.58	3.5
3	MP ALPHA3	Y	.772	3.5
4	MP ALPHA5	Y	.356	3.5
5	MP BETA1	Y	.332	3.5
6	MP BETA2	Y	.557	3.5
7	MP BETA3	Y	.519	3.5
8	MP BETA5	Y	.323	3.5
9	MP GAMMA5	Y	.38	3.5
10	MP GAMMA3	Y	.663	3.5

Member Point Loads (BLC 16 : Wind Load (180)) (Continued)

	Member Label	Direction	Magnitude[k,k-ft]	Location[ft,%]
11	MP GAMMA2	Y	.567	3.5
12	MP GAMMA1	Y	.38	3.5
13	MP ALPHA4	Y	.095	3.5
14	MP BETA4	Y	.071	3.5

Member Point Loads (BLC 17 : Ice Wind Load (180))

	Member Label	Direction	Magnitude[k,k-ft]	Location[ft,%]
1	MP ALPHA1	Y	.044	3.5
2	MP ALPHA2	Y	.069	3.5
3	MP ALPHA3	Y	.093	3.5
4	MP ALPHA5	Y	.044	3.5
5	MP BETA1	Y	.042	3.5
6	MP BETA2	Y	.069	3.5
7	MP BETA3	Y	.064	3.5
8	MP BETA5	Y	.04	3.5
9	MP GAMMA5	Y	.049	3.5
10	MP GAMMA3	Y	.083	3.5
11	MP GAMMA2	Y	.07	3.5
12	MP GAMMA1	Y	.05	3.5
13	MP ALPHA4	Y	.013	3.5
14	MP BETA4	Y	.01	3.5

Member Point Loads (BLC 18 : Wind Load (210))

	Member Label	Direction	Magnitude[k,k-ft]	Location[ft,%]
1	MP ALPHA1	Y	.302	3.5
2	MP ALPHA2	Y	.482	3.5
3	MP ALPHA3	Y	.634	3.5
4	MP ALPHA5	Y	.302	3.5
5	MP BETA1	Y	.281	3.5
6	MP BETA2	Y	.465	3.5
7	MP BETA3	Y	.432	3.5
8	MP BETA5	Y	.27	3.5
9	MP GAMMA5	Y	.337	3.5
10	MP GAMMA3	Y	.637	3.5
11	MP GAMMA2	Y	.521	3.5
12	MP GAMMA1	Y	.337	3.5
13	MP ALPHA4	Y	.073	3.5
14	MP BETA4	Y	.055	3.5
15	MP ALPHA1	X	.174	3.5
16	MP ALPHA2	X	.278	3.5
17	MP ALPHA3	X	.366	3.5
18	MP ALPHA5	X	.174	3.5
19	MP BETA1	X	.162	3.5
20	MP BETA2	X	.269	3.5
21	MP BETA3	X	.249	3.5
22	MP BETA5	X	.156	3.5
23	MP GAMMA5	X	.195	3.5
24	MP GAMMA3	X	.368	3.5
25	MP GAMMA2	X	.301	3.5
26	MP GAMMA1	X	.195	3.5
27	MP ALPHA4	X	.042	3.5
28	MP BETA4	X	.032	3.5

Member Point Loads (BLC 19 : Ice Wind Load (210))

Member Label	Direction	Magnitude[k,k-ft]	Location[ft,%]

Member Point Loads (BLC 19 : Ice Wind Load (210)) (Continued)

	Member Label	Direction	Magnitude[k,k-ft]	Location[ft,%]
1	MP ALPHA1	Y	.037	3.5
2	MP ALPHA2	Y	.058	3.5
3	MP ALPHA3	Y	.077	3.5
4	MP ALPHA5	Y	.037	3.5
5	MP BETA1	Y	.036	3.5
6	MP BETA2	Y	.058	3.5
7	MP BETA3	Y	.054	3.5
8	MP BETA5	Y	.034	3.5
9	MP GAMMA5	Y	.042	3.5
10	MP GAMMA3	Y	.078	3.5
11	MP GAMMA2	Y	.063	3.5
12	MP GAMMA1	Y	.043	3.5
13	MP ALPHA4	Y	.01	3.5
14	MP BETA4	Y	.008	3.5
15	MP ALPHA1	X	.022	3.5
16	MP ALPHA2	X	.033	3.5
17	MP ALPHA3	X	.044	3.5
18	MP ALPHA5	X	.022	3.5
19	MP BETA1	X	.021	3.5
20	MP BETA2	X	.034	3.5
21	MP BETA3	X	.031	3.5
22	MP BETA5	X	.02	3.5
23	MP GAMMA5	X	.024	3.5
24	MP GAMMA3	X	.045	3.5
25	MP GAMMA2	X	.036	3.5
26	MP GAMMA1	X	.025	3.5
27	MP ALPHA4	X	.006	3.5
28	MP BETA4	X	.005	3.5

Member Point Loads (BLC 20 : Wind Load (240))

	Member Label	Direction	Magnitude[k,k-ft]	Location[ft,%]
1	MP ALPHA1	Y	.166	3.5
2	MP ALPHA2	Y	.255	3.5
3	MP ALPHA3	Y	.326	3.5
4	MP ALPHA5	Y	.166	3.5
5	MP BETA1	Y	.166	3.5
6	MP BETA2	Y	.279	3.5
7	MP BETA3	Y	.26	3.5
8	MP BETA5	Y	.161	3.5
9	MP GAMMA5	Y	.197	3.5
10	MP GAMMA3	Y	.386	3.5
11	MP GAMMA2	Y	.309	3.5
12	MP GAMMA1	Y	.197	3.5
13	MP ALPHA4	Y	.031	3.5
14	MP BETA4	Y	.036	3.5
15	MP ALPHA1	X	.288	3.5
16	MP ALPHA2	X	.441	3.5
17	MP ALPHA3	X	.566	3.5
18	MP ALPHA5	X	.288	3.5
19	MP BETA1	X	.288	3.5
20	MP BETA2	X	.483	3.5
21	MP BETA3	X	.45	3.5
22	MP BETA5	X	.28	3.5
23	MP GAMMA5	X	.341	3.5
24	MP GAMMA3	X	.669	3.5
25	MP GAMMA2	X	.536	3.5

Member Point Loads (BLC 20 : Wind Load (240)) (Continued)

	Member Label	Direction	Magnitude[k,k-ft]	Location[ft,%]
26	MP GAMMA1	X	.341	3.5
27	MP ALPHA4	X	.054	3.5
28	MP BETA4	X	.062	3.5

Member Point Loads (BLC 21 : Ice Wind Load (240))

	Member Label	Direction	Magnitude[k,k-ft]	Location[ft,%]
1	MP ALPHA1	Y	.021	3.5
2	MP ALPHA2	Y	.031	3.5
3	MP ALPHA3	Y	.04	3.5
4	MP ALPHA5	Y	.021	3.5
5	MP BETA1	Y	.021	3.5
6	MP BETA2	Y	.034	3.5
7	MP BETA3	Y	.032	3.5
8	MP BETA5	Y	.02	3.5
9	MP GAMMA5	Y	.024	3.5
10	MP GAMMA3	Y	.046	3.5
11	MP GAMMA2	Y	.037	3.5
12	MP GAMMA1	Y	.024	3.5
13	MP ALPHA4	Y	.005	3.5
14	MP BETA4	Y	.005	3.5
15	MP ALPHA1	X	.037	3.5
16	MP ALPHA2	X	.054	3.5
17	MP ALPHA3	X	.07	3.5
18	MP ALPHA5	X	.037	3.5
19	MP BETA1	X	.037	3.5
20	MP BETA2	X	.06	3.5
21	MP BETA3	X	.055	3.5
22	MP BETA5	X	.035	3.5
23	MP GAMMA5	X	.042	3.5
24	MP GAMMA3	X	.081	3.5
25	MP GAMMA2	X	.064	3.5
26	MP GAMMA1	X	.042	3.5
27	MP ALPHA4	X	.008	3.5
28	MP BETA4	X	.009	3.5

Member Point Loads (BLC 22 : Wind Load (270))

	Member Label	Direction	Magnitude[k,k-ft]	Location[ft,%]
1	MP ALPHA1	X	.325	3.5
2	MP ALPHA2	X	.486	3.5
3	MP ALPHA3	X	.613	3.5
4	MP ALPHA5	X	.325	3.5
5	MP BETA1	X	.348	3.5
6	MP BETA2	X	.598	3.5
7	MP BETA3	X	.56	3.5
8	MP BETA5	X	.345	3.5
9	MP GAMMA5	X	.389	3.5
10	MP GAMMA3	X	.736	3.5
11	MP GAMMA2	X	.601	3.5
12	MP GAMMA1	X	.389	3.5
13	MP ALPHA4	X	.051	3.5
14	MP BETA4	X	.087	3.5

Member Point Loads (BLC 23 : Ice Wind Load (270))

	Member Label	Direction	Magnitude[k,k-ft]	Location[ft,%]
1	MP ALPHA1	X	.042	3.5

Member Point Loads (BLC 23 : Ice Wind Load (270)) (Continued)

	Member Label	Direction	Magnitude[k,k-ft]	Location[ft,%]
2	MP ALPHA2	X	.059	3.5
3	MP ALPHA3	X	.076	3.5
4	MP ALPHA5	X	.042	3.5
5	MP BETA1	X	.043	3.5
6	MP BETA2	X	.072	3.5
7	MP BETA3	X	.067	3.5
8	MP BETA5	X	.043	3.5
9	MP GAMMA5	X	.049	3.5
10	MP GAMMA3	X	.09	3.5
11	MP GAMMA2	X	.073	3.5
12	MP GAMMA1	X	.049	3.5
13	MP ALPHA4	X	.008	3.5
14	MP BETA4	X	.012	3.5

Member Point Loads (BLC 24 : Wind Load (300))

	Member Label	Direction	Magnitude[k,k-ft]	Location[ft,%]
1	MP ALPHA1	Y	-.166	3.5
2	MP ALPHA2	Y	-.255	3.5
3	MP ALPHA3	Y	-.326	3.5
4	MP ALPHA5	Y	-.166	3.5
5	MP BETA1	Y	-.178	3.5
6	MP BETA2	Y	-.309	3.5
7	MP BETA3	Y	-.29	3.5
8	MP BETA5	Y	-.178	3.5
9	MP GAMMA5	Y	-.19	3.5
10	MP GAMMA3	Y	-.331	3.5
11	MP GAMMA2	Y	-.283	3.5
12	MP GAMMA1	Y	-.19	3.5
13	MP ALPHA4	Y	-.031	3.5
14	MP BETA4	Y	-.047	3.5
15	MP ALPHA1	X	.288	3.5
16	MP ALPHA2	X	.441	3.5
17	MP ALPHA3	X	.566	3.5
18	MP ALPHA5	X	.288	3.5
19	MP BETA1	X	.308	3.5
20	MP BETA2	X	.536	3.5
21	MP BETA3	X	.503	3.5
22	MP BETA5	X	.308	3.5
23	MP GAMMA5	X	.329	3.5
24	MP GAMMA3	X	.574	3.5
25	MP GAMMA2	X	.491	3.5
26	MP GAMMA1	X	.329	3.5
27	MP ALPHA4	X	.054	3.5
28	MP BETA4	X	.082	3.5

Member Point Loads (BLC 25 : Ice Wind Load (300))

	Member Label	Direction	Magnitude[k,k-ft]	Location[ft,%]
1	MP ALPHA1	Y	-.021	3.5
2	MP ALPHA2	Y	-.031	3.5
3	MP ALPHA3	Y	-.04	3.5
4	MP ALPHA5	Y	-.021	3.5
5	MP BETA1	Y	-.022	3.5
6	MP BETA2	Y	-.037	3.5
7	MP BETA3	Y	-.034	3.5
8	MP BETA5	Y	-.022	3.5
9	MP GAMMA5	Y	-.024	3.5

Member Point Loads (BLC 25 : Ice Wind Load (300)) (Continued)

	Member Label	Direction	Magnitude[k,k-ft]	Location[ft,%]
10	MP GAMMA3	Y	-.041	3.5
11	MP GAMMA2	Y	-.035	3.5
12	MP GAMMA1	Y	-.025	3.5
13	MP ALPHA4	Y	-.005	3.5
14	MP BETA4	Y	-.006	3.5
15	MP ALPHA1	X	.037	3.5
16	MP ALPHA2	X	.054	3.5
17	MP ALPHA3	X	.07	3.5
18	MP ALPHA5	X	.037	3.5
19	MP BETA1	X	.038	3.5
20	MP BETA2	X	.064	3.5
21	MP BETA3	X	.06	3.5
22	MP BETA5	X	.038	3.5
23	MP GAMMA5	X	.042	3.5
24	MP GAMMA3	X	.072	3.5
25	MP GAMMA2	X	.061	3.5
26	MP GAMMA1	X	.043	3.5
27	MP ALPHA4	X	.008	3.5
28	MP BETA4	X	.011	3.5

Member Point Loads (BLC 26 : Wind Load (330))

	Member Label	Direction	Magnitude[k,k-ft]	Location[ft,%]
1	MP ALPHA1	Y	-.302	3.5
2	MP ALPHA2	Y	-.482	3.5
3	MP ALPHA3	Y	-.634	3.5
4	MP ALPHA5	Y	-.302	3.5
5	MP BETA1	Y	-.302	3.5
6	MP BETA2	Y	-.518	3.5
7	MP BETA3	Y	-.485	3.5
8	MP BETA5	Y	-.299	3.5
9	MP GAMMA5	Y	-.325	3.5
10	MP GAMMA3	Y	-.542	3.5
11	MP GAMMA2	Y	-.476	3.5
12	MP GAMMA1	Y	-.325	3.5
13	MP ALPHA4	Y	-.073	3.5
14	MP BETA4	Y	-.075	3.5
15	MP ALPHA1	X	.174	3.5
16	MP ALPHA2	X	.278	3.5
17	MP ALPHA3	X	.366	3.5
18	MP ALPHA5	X	.174	3.5
19	MP BETA1	X	.174	3.5
20	MP BETA2	X	.299	3.5
21	MP BETA3	X	.28	3.5
22	MP BETA5	X	.172	3.5
23	MP GAMMA5	X	.188	3.5
24	MP GAMMA3	X	.313	3.5
25	MP GAMMA2	X	.275	3.5
26	MP GAMMA1	X	.188	3.5
27	MP ALPHA4	X	.042	3.5
28	MP BETA4	X	.043	3.5

Member Point Loads (BLC 27 : Ice Wind Load (330))

	Member Label	Direction	Magnitude[k,k-ft]	Location[ft,%]
1	MP ALPHA1	Y	-.037	3.5
2	MP ALPHA2	Y	-.058	3.5
3	MP ALPHA3	Y	-.077	3.5

Member Point Loads (BLC 27 : Ice Wind Load (330)) (Continued)

	Member Label	Direction	Magnitude[k,k-ft]	Location[ft,%]
4	MP ALPHA5	Y	-.037	3.5
5	MP BETA1	Y	-.037	3.5
6	MP BETA2	Y	-.063	3.5
7	MP BETA3	Y	-.058	3.5
8	MP BETA5	Y	-.037	3.5
9	MP GAMMA5	Y	-.042	3.5
10	MP GAMMA3	Y	-.069	3.5
11	MP GAMMA2	Y	-.059	3.5
12	MP GAMMA1	Y	-.043	3.5
13	MP ALPHA4	Y	-.01	3.5
14	MP BETA4	Y	-.01	3.5
15	MP ALPHA1	X	.022	3.5
16	MP ALPHA2	X	.033	3.5
17	MP ALPHA3	X	.044	3.5
18	MP ALPHA5	X	.022	3.5
19	MP BETA1	X	.022	3.5
20	MP BETA2	X	.036	3.5
21	MP BETA3	X	.034	3.5
22	MP BETA5	X	.021	3.5
23	MP GAMMA5	X	.024	3.5
24	MP GAMMA3	X	.04	3.5
25	MP GAMMA2	X	.034	3.5
26	MP GAMMA1	X	.025	3.5
27	MP ALPHA4	X	.006	3.5
28	MP BETA4	X	.006	3.5

Member Point Loads (BLC 28 : Maintanence (0))

	Member Label	Direction	Magnitude[k,k-ft]	Location[ft,%]
1	MP ALPHA1	Y	-.022	3.5
2	MP ALPHA2	Y	-.036	3.5
3	MP ALPHA3	Y	-.048	3.5
4	MP ALPHA5	Y	-.022	3.5
5	MP BETA1	Y	-.021	3.5
6	MP BETA2	Y	-.035	3.5
7	MP BETA3	Y	-.032	3.5
8	MP BETA5	Y	-.02	3.5
9	MP GAMMA5	Y	-.024	3.5
10	MP GAMMA3	Y	-.041	3.5
11	MP GAMMA2	Y	-.035	3.5
12	MP GAMMA1	Y	-.024	3.5
13	MP ALPHA4	Y	-.006	3.5
14	MP BETA4	Y	-.004	3.5

Member Point Loads (BLC 29 : Maintanence (30))

	Member Label	Direction	Magnitude[k,k-ft]	Location[ft,%]
1	MP ALPHA1	Y	-.019	3.5
2	MP ALPHA2	Y	-.03	3.5
3	MP ALPHA3	Y	-.04	3.5
4	MP ALPHA5	Y	-.019	3.5
5	MP BETA1	Y	-.018	3.5
6	MP BETA2	Y	-.029	3.5
7	MP BETA3	Y	-.027	3.5
8	MP BETA5	Y	-.017	3.5
9	MP GAMMA5	Y	-.021	3.5
10	MP GAMMA3	Y	-.04	3.5
11	MP GAMMA2	Y	-.033	3.5

Member Point Loads (BLC 29 : Maintanence (30)) (Continued)

	Member Label	Direction	Magnitude[k,k-ft]	Location[ft,%]
12	MP GAMMA1	Y	-.021	3.5
13	MP ALPHA4	Y	-.005	3.5
14	MP BETA4	Y	-.003	3.5
15	MP ALPHA1	X	-.011	3.5
16	MP ALPHA2	X	-.017	3.5
17	MP ALPHA3	X	-.023	3.5
18	MP ALPHA5	X	-.011	3.5
19	MP BETA1	X	-.01	3.5
20	MP BETA2	X	-.017	3.5
21	MP BETA3	X	-.016	3.5
22	MP BETA5	X	-.01	3.5
23	MP GAMMA5	X	-.012	3.5
24	MP GAMMA3	X	-.023	3.5
25	MP GAMMA2	X	-.019	3.5
26	MP GAMMA1	X	-.012	3.5
27	MP ALPHA4	X	-.003	3.5
28	MP BETA4	X	-.002	3.5

Member Point Loads (BLC 30 : Maintanence (60))

	Member Label	Direction	Magnitude[k,k-ft]	Location[ft,%]
1	MP ALPHA1	Y	-.01	3.5
2	MP ALPHA2	Y	-.016	3.5
3	MP ALPHA3	Y	-.02	3.5
4	MP ALPHA5	Y	-.01	3.5
5	MP BETA1	Y	-.01	3.5
6	MP BETA2	Y	-.017	3.5
7	MP BETA3	Y	-.016	3.5
8	MP BETA5	Y	-.01	3.5
9	MP GAMMA5	Y	-.012	3.5
10	MP GAMMA3	Y	-.024	3.5
11	MP GAMMA2	Y	-.019	3.5
12	MP GAMMA1	Y	-.012	3.5
13	MP ALPHA4	Y	-.002	3.5
14	MP BETA4	Y	-.002	3.5
15	MP ALPHA1	X	-.018	3.5
16	MP ALPHA2	X	-.028	3.5
17	MP ALPHA3	X	-.035	3.5
18	MP ALPHA5	X	-.018	3.5
19	MP BETA1	X	-.018	3.5
20	MP BETA2	X	-.03	3.5
21	MP BETA3	X	-.028	3.5
22	MP BETA5	X	-.017	3.5
23	MP GAMMA5	X	-.021	3.5
24	MP GAMMA3	X	-.042	3.5
25	MP GAMMA2	X	-.033	3.5
26	MP GAMMA1	X	-.021	3.5
27	MP ALPHA4	X	-.003	3.5
28	MP BETA4	X	-.004	3.5

Member Point Loads (BLC 31 : Maintanence (90))

	Member Label	Direction	Magnitude[k,k-ft]	Location[ft,%]
1	MP ALPHA1	X	-.02	3.5
2	MP ALPHA2	X	-.03	3.5
3	MP ALPHA3	X	-.038	3.5
4	MP ALPHA5	X	-.02	3.5
5	MP BETA1	X	-.022	3.5

Member Point Loads (BLC 31 : Maintanence (90)) (Continued)

	Member Label	Direction	Magnitude[k,k-ft]	Location[ft,%]
6	MP BETA2	X	-.037	3.5
7	MP BETA3	X	-.035	3.5
8	MP BETA5	X	-.022	3.5
9	MP GAMMA5	X	-.024	3.5
10	MP GAMMA3	X	-.046	3.5
11	MP GAMMA2	X	-.038	3.5
12	MP GAMMA1	X	-.024	3.5
13	MP ALPHA4	X	-.003	3.5
14	MP BETA4	X	-.005	3.5

Member Point Loads (BLC 32 : Maintanence (120))

	Member Label	Direction	Magnitude[k,k-ft]	Location[ft,%]
1	MP ALPHA1	Y	.01	3.5
2	MP ALPHA2	Y	.016	3.5
3	MP ALPHA3	Y	.02	3.5
4	MP ALPHA5	Y	.01	3.5
5	MP BETA1	Y	.011	3.5
6	MP BETA2	Y	.019	3.5
7	MP BETA3	Y	.018	3.5
8	MP BETA5	Y	.011	3.5
9	MP GAMMA5	Y	.012	3.5
10	MP GAMMA3	Y	.021	3.5
11	MP GAMMA2	Y	.018	3.5
12	MP GAMMA1	Y	.012	3.5
13	MP ALPHA4	Y	.002	3.5
14	MP BETA4	Y	.003	3.5
15	MP ALPHA1	X	-.018	3.5
16	MP ALPHA2	X	-.028	3.5
17	MP ALPHA3	X	-.035	3.5
18	MP ALPHA5	X	-.018	3.5
19	MP BETA1	X	-.019	3.5
20	MP BETA2	X	-.033	3.5
21	MP BETA3	X	-.031	3.5
22	MP BETA5	X	-.019	3.5
23	MP GAMMA5	X	-.021	3.5
24	MP GAMMA3	X	-.036	3.5
25	MP GAMMA2	X	-.031	3.5
26	MP GAMMA1	X	-.021	3.5
27	MP ALPHA4	X	-.003	3.5
28	MP BETA4	X	-.005	3.5

Member Point Loads (BLC 33 : Maintanence (150))

	Member Label	Direction	Magnitude[k,k-ft]	Location[ft,%]
1	MP ALPHA1	Y	.019	3.5
2	MP ALPHA2	Y	.03	3.5
3	MP ALPHA3	Y	.04	3.5
4	MP ALPHA5	Y	.019	3.5
5	MP BETA1	Y	.019	3.5
6	MP BETA2	Y	.032	3.5
7	MP BETA3	Y	.03	3.5
8	MP BETA5	Y	.019	3.5
9	MP GAMMA5	Y	.02	3.5
10	MP GAMMA3	Y	.034	3.5
11	MP GAMMA2	Y	.03	3.5
12	MP GAMMA1	Y	.02	3.5
13	MP ALPHA4	Y	.005	3.5

Member Point Loads (BLC 33 : Maintanence (150)) (Continued)

	Member Label	Direction	Magnitude[k,k-ft]	Location[ft,%]
14	MP BETA4	Y	.005	3.5
15	MP ALPHA1	X	-.011	3.5
16	MP ALPHA2	X	-.017	3.5
17	MP ALPHA3	X	-.023	3.5
18	MP ALPHA5	X	-.011	3.5
19	MP BETA1	X	-.011	3.5
20	MP BETA2	X	-.019	3.5
21	MP BETA3	X	-.018	3.5
22	MP BETA5	X	-.011	3.5
23	MP GAMMA5	X	-.012	3.5
24	MP GAMMA3	X	-.02	3.5
25	MP GAMMA2	X	-.017	3.5
26	MP GAMMA1	X	-.012	3.5
27	MP ALPHA4	X	-.003	3.5
28	MP BETA4	X	-.003	3.5

Member Point Loads (BLC 34 : Maintanence (180))

	Member Label	Direction	Magnitude[k,k-ft]	Location[ft,%]
1	MP ALPHA1	Y	.022	3.5
2	MP ALPHA2	Y	.036	3.5
3	MP ALPHA3	Y	.048	3.5
4	MP ALPHA5	Y	.022	3.5
5	MP BETA1	Y	.021	3.5
6	MP BETA2	Y	.035	3.5
7	MP BETA3	Y	.032	3.5
8	MP BETA5	Y	.02	3.5
9	MP GAMMA5	Y	.024	3.5
10	MP GAMMA3	Y	.041	3.5
11	MP GAMMA2	Y	.035	3.5
12	MP GAMMA1	Y	.024	3.5
13	MP ALPHA4	Y	.006	3.5
14	MP BETA4	Y	.004	3.5

Member Point Loads (BLC 35 : Maintanence (210))

	Member Label	Direction	Magnitude[k,k-ft]	Location[ft,%]
1	MP ALPHA1	Y	.019	3.5
2	MP ALPHA2	Y	.03	3.5
3	MP ALPHA3	Y	.04	3.5
4	MP ALPHA5	Y	.019	3.5
5	MP BETA1	Y	.018	3.5
6	MP BETA2	Y	.029	3.5
7	MP BETA3	Y	.027	3.5
8	MP BETA5	Y	.017	3.5
9	MP GAMMA5	Y	.021	3.5
10	MP GAMMA3	Y	.04	3.5
11	MP GAMMA2	Y	.033	3.5
12	MP GAMMA1	Y	.021	3.5
13	MP ALPHA4	Y	.005	3.5
14	MP BETA4	Y	.003	3.5
15	MP ALPHA1	X	.011	3.5
16	MP ALPHA2	X	.017	3.5
17	MP ALPHA3	X	.023	3.5
18	MP ALPHA5	X	.011	3.5
19	MP BETA1	X	.01	3.5
20	MP BETA2	X	.017	3.5
21	MP BETA3	X	.016	3.5

Member Point Loads (BLC 35 : Maintanence (210)) (Continued)

	Member Label	Direction	Magnitude[k,k-ft]	Location[ft,%]
22	MP BETA5	X	.01	3.5
23	MP GAMMA5	X	.012	3.5
24	MP GAMMA3	X	.023	3.5
25	MP GAMMA2	X	.019	3.5
26	MP GAMMA1	X	.012	3.5
27	MP ALPHA4	X	.003	3.5
28	MP BETA4	X	.002	3.5

Member Point Loads (BLC 36 : Maintanence (240))

	Member Label	Direction	Magnitude[k,k-ft]	Location[ft,%]
1	MP ALPHA1	Y	.01	3.5
2	MP ALPHA2	Y	.016	3.5
3	MP ALPHA3	Y	.02	3.5
4	MP ALPHA5	Y	.01	3.5
5	MP BETA1	Y	.01	3.5
6	MP BETA2	Y	.017	3.5
7	MP BETA3	Y	.016	3.5
8	MP BETA5	Y	.01	3.5
9	MP GAMMA5	Y	.012	3.5
10	MP GAMMA3	Y	.024	3.5
11	MP GAMMA2	Y	.019	3.5
12	MP GAMMA1	Y	.012	3.5
13	MP ALPHA4	Y	.002	3.5
14	MP BETA4	Y	.002	3.5
15	MP ALPHA1	X	.018	3.5
16	MP ALPHA2	X	.028	3.5
17	MP ALPHA3	X	.035	3.5
18	MP ALPHA5	X	.018	3.5
19	MP BETA1	X	.018	3.5
20	MP BETA2	X	.03	3.5
21	MP BETA3	X	.028	3.5
22	MP BETA5	X	.017	3.5
23	MP GAMMA5	X	.021	3.5
24	MP GAMMA3	X	.042	3.5
25	MP GAMMA2	X	.033	3.5
26	MP GAMMA1	X	.021	3.5
27	MP ALPHA4	X	.003	3.5
28	MP BETA4	X	.004	3.5

Member Point Loads (BLC 37 : Maintanence (270))

	Member Label	Direction	Magnitude[k,k-ft]	Location[ft,%]
1	MP ALPHA1	X	.02	3.5
2	MP ALPHA2	X	.03	3.5
3	MP ALPHA3	X	.038	3.5
4	MP ALPHA5	X	.02	3.5
5	MP BETA1	X	.022	3.5
6	MP BETA2	X	.037	3.5
7	MP BETA3	X	.035	3.5
8	MP BETA5	X	.022	3.5
9	MP GAMMA5	X	.024	3.5
10	MP GAMMA3	X	.046	3.5
11	MP GAMMA2	X	.038	3.5
12	MP GAMMA1	X	.024	3.5
13	MP ALPHA4	X	.003	3.5
14	MP BETA4	X	.005	3.5

Member Point Loads (BLC 38 : Maintanence (300))

	Member Label	Direction	Magnitude[k,k-ft]	Location[ft,%]
1	MP ALPHA1	Y	-.01	3.5
2	MP ALPHA2	Y	-.016	3.5
3	MP ALPHA3	Y	-.02	3.5
4	MP ALPHA5	Y	-.01	3.5
5	MP BETA1	Y	-.011	3.5
6	MP BETA2	Y	-.019	3.5
7	MP BETA3	Y	-.018	3.5
8	MP BETA5	Y	-.011	3.5
9	MP GAMMA5	Y	-.012	3.5
10	MP GAMMA3	Y	-.021	3.5
11	MP GAMMA2	Y	-.018	3.5
12	MP GAMMA1	Y	-.012	3.5
13	MP ALPHA4	Y	-.002	3.5
14	MP BETA4	Y	-.003	3.5
15	MP ALPHA1	X	.018	3.5
16	MP ALPHA2	X	.028	3.5
17	MP ALPHA3	X	.035	3.5
18	MP ALPHA5	X	.018	3.5
19	MP BETA1	X	.019	3.5
20	MP BETA2	X	.033	3.5
21	MP BETA3	X	.031	3.5
22	MP BETA5	X	.019	3.5
23	MP GAMMA5	X	.021	3.5
24	MP GAMMA3	X	.036	3.5
25	MP GAMMA2	X	.031	3.5
26	MP GAMMA1	X	.021	3.5
27	MP ALPHA4	X	.003	3.5
28	MP BETA4	X	.005	3.5

Member Point Loads (BLC 39 : Maintanence (330))

	Member Label	Direction	Magnitude[k,k-ft]	Location[ft,%]
1	MP ALPHA1	Y	-.019	3.5
2	MP ALPHA2	Y	-.03	3.5
3	MP ALPHA3	Y	-.04	3.5
4	MP ALPHA5	Y	-.019	3.5
5	MP BETA1	Y	-.019	3.5
6	MP BETA2	Y	-.032	3.5
7	MP BETA3	Y	-.03	3.5
8	MP BETA5	Y	-.019	3.5
9	MP GAMMA5	Y	-.02	3.5
10	MP GAMMA3	Y	-.034	3.5
11	MP GAMMA2	Y	-.03	3.5
12	MP GAMMA1	Y	-.02	3.5
13	MP ALPHA4	Y	-.005	3.5
14	MP BETA4	Y	-.005	3.5
15	MP ALPHA1	X	.011	3.5
16	MP ALPHA2	X	.017	3.5
17	MP ALPHA3	X	.023	3.5
18	MP ALPHA5	X	.011	3.5
19	MP BETA1	X	.011	3.5
20	MP BETA2	X	.019	3.5
21	MP BETA3	X	.018	3.5
22	MP BETA5	X	.011	3.5
23	MP GAMMA5	X	.012	3.5
24	MP GAMMA3	X	.02	3.5
25	MP GAMMA2	X	.017	3.5

Member Point Loads (BLC 39 : Maintanence (330)) (Continued)

	Member Label	Direction	Magnitude[k,k-ft]	Location[ft,%]
26	MP GAMMA1	X	.012	3.5
27	MP ALPHA4	X	.003	3.5
28	MP BETA4	X	.003	3.5

Member Distributed Loads (BLC 1 : Wind Load (0))

	Member Label	Direction	Start Magnitude[k/ft,...	End Magnitude[k/ft,F...	Start Location[ft,%]	End Location[ft,%]
1	Standoff6	Y	-.005	-.005	0	0
2	Standoff5	Y	-.005	-.005	0	0
3	Standoff4	Y	-.005	-.005	0	0
4	Standoff3	Y	-.005	-.005	0	0
5	Standoff2	Y	-.005	-.005	0	0
6	Standoff1	Y	-.005	-.005	0	0
7	SUPPORT2	Y	-.013	-.013	0	0
8	SUPPORT1	Y	-.013	-.013	0	0
9	Rail3	Y	-.004	-.004	0	0
10	Rail2	Y	-.013	-.013	0	0
11	Rail1	Y	-.013	-.013	0	0
12	RUNG6	Y	-.001	-.001	0	0
13	RUNG5	Y	-.001	-.001	0	0
14	RUNG4	Y	-.001	-.001	0	0
15	RUNG3	Y	-.001	-.001	0	0
16	RUNG2	Y	-.001	-.001	0	0
17	RUNG1	Y	-.001	-.001	0	0
18	PLATE3	Y	-.001	-.001	0	0
19	PLATE2	Y	-.001	-.001	0	0
20	PLATE1	Y	-.001	-.001	0	0
21	MP GAMMA6	Y	-.012	-.012	0	0
22	MP GAMMA5	Y	-.012	-.012	0	0
23	MP GAMMA4	Y	-.012	-.012	0	0
24	MP GAMMA3	Y	-.012	-.012	0	0
25	MP GAMMA2	Y	-.012	-.012	0	0
26	MP GAMMA1	Y	-.012	-.012	0	0
27	MP BETA6	Y	-.012	-.012	0	0
28	MP BETA5	Y	-.012	-.012	0	0
29	MP BETA4	Y	-.012	-.012	0	0
30	MP BETA3	Y	-.012	-.012	0	0
31	MP BETA2	Y	-.012	-.012	0	0
32	MP BETA1	Y	-.012	-.012	0	0
33	MP ALPHA8	Y	-.012	-.012	0	0
34	MP ALPHA7	Y	-.012	-.012	0	0
35	MP ALPHA6	Y	-.012	-.012	0	0
36	MP ALPHA5	Y	-.012	-.012	0	0
37	MP ALPHA4	Y	-.012	-.012	0	0
38	MP ALPHA3	Y	-.012	-.012	0	0
39	MP ALPHA2	Y	-.012	-.012	0	0
40	MP ALPHA1	Y	-.012	-.012	0	0
41	LADDER2	Y	-.004	-.004	0	0
42	LADDER1	Y	-.004	-.004	0	0
43	FACE3	Y	-.01	-.01	0	0
44	FACE2	Y	-.01	-.01	0	0
45	FACE1	Y	-.01	-.01	0	0
46	CORNER3	Y	-.013	-.013	0	0
47	CORNER2	Y	-.013	-.013	0	0
48	CORNER1	Y	-.013	-.013	0	0
49	M95	Y	-.013	-.013	0	0

Member Distributed Loads (BLC 1 : Wind Load (0)) (Continued)

	Member Label	Direction	Start Magnitude[k/ft,...	End Magnitude[k/ft,F...	Start Location[ft,%]	End Location[ft,%]
50	M96	Y	-.013	-.013	0	0
51	M103	Y	-.004	-.004	0	0
52	M104	Y	-.013	-.013	0	0
53	M105	Y	-.013	-.013	0	0
54	M106	Y	-.001	-.001	0	0
55	M107	Y	-.001	-.001	0	0
56	M108	Y	-.001	-.001	0	0

Member Distributed Loads (BLC 4 : Ice Wind Load (0))

	Member Label	Direction	Start Magnitude[k/ft,...	End Magnitude[k/ft,F...	Start Location[ft,%]	End Location[ft,%]
1	Standoff6	Y	-.003	-.003	0	0
2	Standoff5	Y	-.003	-.003	0	0
3	Standoff4	Y	-.003	-.003	0	0
4	Standoff3	Y	-.003	-.003	0	0
5	Standoff2	Y	-.003	-.003	0	0
6	Standoff1	Y	-.003	-.003	0	0
7	SUPPORT2	Y	-.005	-.005	0	0
8	SUPPORT1	Y	-.005	-.005	0	0
9	Rail3	Y	-.002	-.002	0	0
10	Rail2	Y	-.006	-.006	0	0
11	Rail1	Y	-.006	-.006	0	0
12	RUNG6	Y	-.001	-.001	0	0
13	RUNG5	Y	-.001	-.001	0	0
14	RUNG4	Y	-.001	-.001	0	0
15	RUNG3	Y	-.001	-.001	0	0
16	RUNG2	Y	-.001	-.001	0	0
17	RUNG1	Y	-.001	-.001	0	0
18	PLATE3	Y	-.002	-.002	0	0
19	PLATE2	Y	-.002	-.002	0	0
20	PLATE1	Y	-.002	-.002	0	0
21	MP GAMMA6	Y	-.004	-.004	0	0
22	MP GAMMA5	Y	-.004	-.004	0	0
23	MP GAMMA4	Y	-.004	-.004	0	0
24	MP GAMMA3	Y	-.004	-.004	0	0
25	MP GAMMA2	Y	-.004	-.004	0	0
26	MP GAMMA1	Y	-.004	-.004	0	0
27	MP BETA6	Y	-.004	-.004	0	0
28	MP BETA5	Y	-.004	-.004	0	0
29	MP BETA4	Y	-.004	-.004	0	0
30	MP BETA3	Y	-.004	-.004	0	0
31	MP BETA2	Y	-.004	-.004	0	0
32	MP BETA1	Y	-.004	-.004	0	0
33	MP ALPHA8	Y	-.004	-.004	0	0
34	MP ALPHA7	Y	-.004	-.004	0	0
35	MP ALPHA6	Y	-.004	-.004	0	0
36	MP ALPHA5	Y	-.004	-.004	0	0
37	MP ALPHA4	Y	-.004	-.004	0	0
38	MP ALPHA3	Y	-.004	-.004	0	0
39	MP ALPHA2	Y	-.004	-.004	0	0
40	MP ALPHA1	Y	-.004	-.004	0	0
41	LADDER2	Y	-.003	-.003	0	0
42	LADDER1	Y	-.003	-.003	0	0
43	FACE3	Y	-.005	-.005	0	0
44	FACE2	Y	-.009	-.009	0	0
45	FACE1	Y	-.009	-.009	0	0
46	CORNER3	Y	-.005	-.005	0	0

Member Distributed Loads (BLC 4 : Ice Wind Load (0)) (Continued)

	Member Label	Direction	Start Magnitude[k/ft,...	End Magnitude[k/ft,F...	Start Location[ft,%]	End Location[ft,%]
47	CORNER2	Y	-.005	-.005	0	0
48	CORNER1	Y	-.005	-.005	0	0
49	M95	Y	-.005	-.005	0	0
50	M96	Y	-.005	-.005	0	0
51	M103	Y	-.002	-.002	0	0
52	M104	Y	-.006	-.006	0	0
53	M105	Y	-.006	-.006	0	0
54	M106	Y	-.002	-.002	0	0
55	M107	Y	-.002	-.002	0	0
56	M108	Y	-.002	-.002	0	0

Member Distributed Loads (BLC 5 : Ice Dead Load)

	Member Label	Direction	Start Magnitude[k/ft,...	End Magnitude[k/ft,F...	Start Location[ft,%]	End Location[ft,%]
1	CORNER1	Z	-.025	-.025	0	0
2	CORNER2	Z	-.025	-.025	0	0
3	CORNER3	Z	-.025	-.025	0	0
4	FACE1	Z	-.025	-.025	0	0
5	FACE2	Z	-.025	-.025	0	0
6	FACE3	Z	-.025	-.025	0	0
7	LADDER1	Z	-.015	-.015	0	0
8	LADDER2	Z	-.015	-.015	0	0
9	MP ALPHA1	Z	-.014	-.014	0	0
10	MP ALPHA2	Z	-.014	-.014	0	0
11	MP ALPHA3	Z	-.014	-.014	0	0
12	MP ALPHA4	Z	-.014	-.014	0	0
13	MP ALPHA5	Z	-.014	-.014	0	0
14	MP ALPHA6	Z	-.014	-.014	0	0
15	MP BETA1	Z	-.014	-.014	0	0
16	MP BETA2	Z	-.014	-.014	0	0
17	MP BETA3	Z	-.014	-.014	0	0
18	MP BETA4	Z	-.014	-.014	0	0
19	MP BETA5	Z	-.014	-.014	0	0
20	MP BETA6	Z	-.014	-.014	0	0
21	MP ALPHA7	Z	-.012	-.012	0	0
22	MP GAMMA2	Z	-.014	-.014	0	0
23	MP GAMMA3	Z	-.014	-.014	0	0
24	MP GAMMA4	Z	-.014	-.014	0	0
25	MP GAMMA5	Z	-.014	-.014	0	0
26	MP GAMMA6	Z	-.014	-.014	0	0
27	MP ALPHA8	Z	-.012	-.012	0	0
28	MP GAMMA1	Z	-.014	-.014	0	0
29	RUNG1	Z	-.009	-.009	0	0
30	RUNG2	Z	-.009	-.009	0	0
31	RUNG3	Z	-.009	-.009	0	0
32	RUNG4	Z	-.009	-.009	0	0
33	RUNG5	Z	-.009	-.009	0	0
34	RUNG6	Z	-.009	-.009	0	0
35	SUPPORT1	Z	-.015	-.015	0	0
36	SUPPORT2	Z	-.015	-.015	0	0
37	Standoff1	Z	-.028	-.028	0	0
38	Standoff2	Z	-.028	-.028	0	0
39	Standoff3	Z	-.028	-.028	0	0
40	Standoff4	Z	-.028	-.028	0	0
41	Standoff5	Z	-.028	-.028	0	0
42	Standoff6	Z	-.028	-.028	0	0
43	Rail1	Z	-.025	-.025	0	0

Member Distributed Loads (BLC 5 : Ice Dead Load) (Continued)

	Member Label	Direction	Start Magnitude[k/ft,...	End Magnitude[k/ft,F...	Start Location[ft,%]	End Location[ft,%]
44	Rail2	Z	-.025	-.025	0	0
45	Rail3	Z	-.025	-.025	0	0
46	M95	Z	-.015	-.015	0	0
47	M96	Z	-.015	-.015	0	0
48	M103	Z	-.025	-.025	0	0
49	M104	Z	-.025	-.025	0	0
50	M105	Z	-.025	-.025	0	0

Member Distributed Loads (BLC 6 : Wind Load (30))

	Member Label	Direction	Start Magnitude[k/ft,...	End Magnitude[k/ft,F...	Start Location[ft,%]	End Location[ft,%]
1	Standoff6	Y	-.004	-.004	0	0
2	Standoff5	Y	-.004	-.004	0	0
3	Standoff4	Y	-.004	-.004	0	0
4	Standoff3	Y	-.004	-.004	0	0
5	Standoff2	Y	-.004	-.004	0	0
6	Standoff1	Y	-.004	-.004	0	0
7	SUPPORT2	Y	-.011	-.011	0	0
8	SUPPORT1	Y	-.011	-.011	0	0
9	Rail3	Y	-.003	-.003	0	0
10	Rail2	Y	-.011	-.011	0	0
11	Rail1	Y	-.011	-.011	0	0
12	RUNG6	Y	-.000866	-.000866	0	0
13	RUNG5	Y	-.000866	-.000866	0	0
14	RUNG4	Y	-.000866	-.000866	0	0
15	RUNG3	Y	-.000866	-.000866	0	0
16	RUNG2	Y	-.000866	-.000866	0	0
17	RUNG1	Y	-.000866	-.000866	0	0
18	PLATE3	Y	-.000866	-.000866	0	0
19	PLATE2	Y	-.000866	-.000866	0	0
20	PLATE1	Y	-.000866	-.000866	0	0
21	MP GAMMA6	Y	-.01	-.01	0	0
22	MP GAMMA5	Y	-.01	-.01	0	0
23	MP GAMMA4	Y	-.01	-.01	0	0
24	MP GAMMA3	Y	-.01	-.01	0	0
25	MP GAMMA2	Y	-.01	-.01	0	0
26	MP GAMMA1	Y	-.01	-.01	0	0
27	MP BETA6	Y	-.01	-.01	0	0
28	MP BETA5	Y	-.01	-.01	0	0
29	MP BETA4	Y	-.01	-.01	0	0
30	MP BETA3	Y	-.01	-.01	0	0
31	MP BETA2	Y	-.01	-.01	0	0
32	MP BETA1	Y	-.01	-.01	0	0
33	MP ALPHA8	Y	-.01	-.01	0	0
34	MP ALPHA7	Y	-.01	-.01	0	0
35	MP ALPHA6	Y	-.01	-.01	0	0
36	MP ALPHA5	Y	-.01	-.01	0	0
37	MP ALPHA4	Y	-.01	-.01	0	0
38	MP ALPHA3	Y	-.01	-.01	0	0
39	MP ALPHA2	Y	-.01	-.01	0	0
40	MP ALPHA1	Y	-.01	-.01	0	0
41	LADDER2	Y	-.003	-.003	0	0
42	LADDER1	Y	-.003	-.003	0	0
43	FACE3	Y	-.009	-.009	0	0
44	FACE2	Y	-.009	-.009	0	0
45	FACE1	Y	-.009	-.009	0	0
46	CORNER3	Y	-.011	-.011	0	0

Member Distributed Loads (BLC 6 : Wind Load (30)) (Continued)

	Member Label	Direction	Start Magnitude[k/ft,...	End Magnitude[k/ft,F...	Start Location[ft,%]	End Location[ft,%]
47	CORNER2	Y	-.011	-.011	0	0
48	CORNER1	Y	-.011	-.011	0	0
49	Standoff6	X	-.003	-.003	0	0
50	Standoff5	X	-.003	-.003	0	0
51	Standoff4	X	-.003	-.003	0	0
52	Standoff3	X	-.003	-.003	0	0
53	Standoff2	X	-.003	-.003	0	0
54	Standoff1	X	-.003	-.003	0	0
55	SUPPORT2	X	-.006	-.006	0	0
56	SUPPORT1	X	-.006	-.006	0	0
57	Rail3	X	-.002	-.002	0	0
58	Rail2	X	-.006	-.006	0	0
59	Rail1	X	-.006	-.006	0	0
60	RUNG6	X	-.0005	-.0005	0	0
61	RUNG5	X	-.0005	-.0005	0	0
62	RUNG4	X	-.0005	-.0005	0	0
63	RUNG3	X	-.0005	-.0005	0	0
64	RUNG2	X	-.0005	-.0005	0	0
65	RUNG1	X	-.0005	-.0005	0	0
66	PLATE3	X	-.0005	-.0005	0	0
67	PLATE2	X	-.0005	-.0005	0	0
68	PLATE1	X	-.0005	-.0005	0	0
69	MP GAMMA6	X	-.006	-.006	0	0
70	MP GAMMA5	X	-.006	-.006	0	0
71	MP GAMMA4	X	-.006	-.006	0	0
72	MP GAMMA3	X	-.006	-.006	0	0
73	MP GAMMA2	X	-.006	-.006	0	0
74	MP GAMMA1	X	-.006	-.006	0	0
75	MP BETA6	X	-.006	-.006	0	0
76	MP BETA5	X	-.006	-.006	0	0
77	MP BETA4	X	-.006	-.006	0	0
78	MP BETA3	X	-.006	-.006	0	0
79	MP BETA2	X	-.006	-.006	0	0
80	MP BETA1	X	-.006	-.006	0	0
81	MP ALPHA8	X	-.006	-.006	0	0
82	MP ALPHA7	X	-.006	-.006	0	0
83	MP ALPHA6	X	-.006	-.006	0	0
84	MP ALPHA5	X	-.006	-.006	0	0
85	MP ALPHA4	X	-.006	-.006	0	0
86	MP ALPHA3	X	-.006	-.006	0	0
87	MP ALPHA2	X	-.006	-.006	0	0
88	MP ALPHA1	X	-.006	-.006	0	0
89	LADDER2	X	-.002	-.002	0	0
90	LADDER1	X	-.002	-.002	0	0
91	FACE3	X	-.005	-.005	0	0
92	FACE2	X	-.005	-.005	0	0
93	FACE1	X	-.005	-.005	0	0
94	CORNER3	X	-.006	-.006	0	0
95	CORNER2	X	-.006	-.006	0	0
96	CORNER1	X	-.006	-.006	0	0
97	M95	Y	-.011	-.011	0	0
98	M95	X	-.006	-.006	0	0
99	M96	Y	-.011	-.011	0	0
100	M96	X	-.006	-.006	0	0
101	M103	Y	-.003	-.003	0	0
102	M103	X	-.002	-.002	0	0
103	M104	Y	-.011	-.011	0	0

Member Distributed Loads (BLC 6 : Wind Load (30)) (Continued)

	Member Label	Direction	Start Magnitude[k/ft,...	End Magnitude[k/ft,F...	Start Location[ft,%]	End Location[ft,%]
104	M104	X	-.006	-.006	0	0
105	M105	Y	-.011	-.011	0	0
106	M105	X	-.006	-.006	0	0
107	M106	Y	-.000866	-.000866	0	0
108	M106	X	-.0005	-.0005	0	0
109	M107	Y	-.000866	-.000866	0	0
110	M107	X	-.0005	-.0005	0	0
111	M108	Y	-.000866	-.000866	0	0
112	M108	X	-.0005	-.0005	0	0

Member Distributed Loads (BLC 7 : Ice Wind Load (30))

	Member Label	Direction	Start Magnitude[k/ft,...	End Magnitude[k/ft,F...	Start Location[ft,%]	End Location[ft,%]
1	Standoff6	Y	-.003	-.003	0	0
2	Standoff5	Y	-.003	-.003	0	0
3	Standoff4	Y	-.003	-.003	0	0
4	Standoff3	Y	-.003	-.003	0	0
5	Standoff2	Y	-.003	-.003	0	0
6	Standoff1	Y	-.003	-.003	0	0
7	SUPPORT2	Y	-.004	-.004	0	0
8	SUPPORT1	Y	-.004	-.004	0	0
9	Rail3	Y	-.002	-.002	0	0
10	Rail2	Y	-.005	-.005	0	0
11	Rail1	Y	-.005	-.005	0	0
12	RUNG6	Y	-.000866	-.000866	0	0
13	RUNG5	Y	-.000866	-.000866	0	0
14	RUNG4	Y	-.000866	-.000866	0	0
15	RUNG3	Y	-.000866	-.000866	0	0
16	RUNG2	Y	-.000866	-.000866	0	0
17	RUNG1	Y	-.000866	-.000866	0	0
18	PLATE3	Y	-.002	-.002	0	0
19	PLATE2	Y	-.002	-.002	0	0
20	PLATE1	Y	-.002	-.002	0	0
21	MP GAMMA6	Y	-.003	-.003	0	0
22	MP GAMMA5	Y	-.003	-.003	0	0
23	MP GAMMA4	Y	-.003	-.003	0	0
24	MP GAMMA3	Y	-.003	-.003	0	0
25	MP GAMMA2	Y	-.003	-.003	0	0
26	MP GAMMA1	Y	-.003	-.003	0	0
27	MP BETA6	Y	-.003	-.003	0	0
28	MP BETA5	Y	-.003	-.003	0	0
29	MP BETA4	Y	-.003	-.003	0	0
30	MP BETA3	Y	-.003	-.003	0	0
31	MP BETA2	Y	-.003	-.003	0	0
32	MP BETA1	Y	-.003	-.003	0	0
33	MP ALPHA8	Y	-.003	-.003	0	0
34	MP ALPHA7	Y	-.003	-.003	0	0
35	MP ALPHA6	Y	-.003	-.003	0	0
36	MP ALPHA5	Y	-.003	-.003	0	0
37	MP ALPHA4	Y	-.003	-.003	0	0
38	MP ALPHA3	Y	-.003	-.003	0	0
39	MP ALPHA2	Y	-.003	-.003	0	0
40	MP ALPHA1	Y	-.003	-.003	0	0
41	LADDER2	Y	-.003	-.003	0	0
42	LADDER1	Y	-.003	-.003	0	0
43	FACE3	Y	-.004	-.004	0	0
44	FACE2	Y	-.008	-.008	0	0

Member Distributed Loads (BLC 7 : Ice Wind Load (30)) (Continued)

	Member Label	Direction	Start Magnitude[k/ft,...	End Magnitude[k/ft,F...	Start Location[ft,%]	End Location[ft,%]
45	FACE1	Y	-.008	-.008	0	0
46	CORNER3	Y	-.004	-.004	0	0
47	CORNER2	Y	-.004	-.004	0	0
48	CORNER1	Y	-.004	-.004	0	0
49	Standoff6	X	-.002	-.002	0	0
50	Standoff5	X	-.002	-.002	0	0
51	Standoff4	X	-.002	-.002	0	0
52	Standoff3	X	-.002	-.002	0	0
53	Standoff2	X	-.002	-.002	0	0
54	Standoff1	X	-.002	-.002	0	0
55	SUPPORT2	X	-.003	-.003	0	0
56	SUPPORT1	X	-.003	-.003	0	0
57	Rail3	X	-.001	-.001	0	0
58	Rail2	X	-.003	-.003	0	0
59	Rail1	X	-.003	-.003	0	0
60	RUNG6	X	-.0005	-.0005	0	0
61	RUNG5	X	-.0005	-.0005	0	0
62	RUNG4	X	-.0005	-.0005	0	0
63	RUNG3	X	-.0005	-.0005	0	0
64	RUNG2	X	-.0005	-.0005	0	0
65	RUNG1	X	-.0005	-.0005	0	0
66	PLATE3	X	-.001	-.001	0	0
67	PLATE2	X	-.001	-.001	0	0
68	PLATE1	X	-.001	-.001	0	0
69	MP GAMMA6	X	-.002	-.002	0	0
70	MP GAMMA5	X	-.002	-.002	0	0
71	MP GAMMA4	X	-.002	-.002	0	0
72	MP GAMMA3	X	-.002	-.002	0	0
73	MP GAMMA2	X	-.002	-.002	0	0
74	MP GAMMA1	X	-.002	-.002	0	0
75	MP BETA6	X	-.002	-.002	0	0
76	MP BETA5	X	-.002	-.002	0	0
77	MP BETA4	X	-.002	-.002	0	0
78	MP BETA3	X	-.002	-.002	0	0
79	MP BETA2	X	-.002	-.002	0	0
80	MP BETA1	X	-.002	-.002	0	0
81	MP ALPHA8	X	-.002	-.002	0	0
82	MP ALPHA7	X	-.002	-.002	0	0
83	MP ALPHA6	X	-.002	-.002	0	0
84	MP ALPHA5	X	-.002	-.002	0	0
85	MP ALPHA4	X	-.002	-.002	0	0
86	MP ALPHA3	X	-.002	-.002	0	0
87	MP ALPHA2	X	-.002	-.002	0	0
88	MP ALPHA1	X	-.002	-.002	0	0
89	LADDER2	X	-.002	-.002	0	0
90	LADDER1	X	-.002	-.002	0	0
91	FACE3	X	-.003	-.003	0	0
92	FACE2	X	-.004	-.004	0	0
93	FACE1	X	-.004	-.004	0	0
94	CORNER3	X	-.003	-.003	0	0
95	CORNER2	X	-.003	-.003	0	0
96	CORNER1	X	-.003	-.003	0	0
97	M95	Y	-.004	-.004	0	0
98	M95	X	-.003	-.003	0	0
99	M96	Y	-.004	-.004	0	0
100	M96	X	-.003	-.003	0	0
101	M103	Y	-.002	-.002	0	0

Member Distributed Loads (BLC 7 : Ice Wind Load (30)) (Continued)

	Member Label	Direction	Start Magnitude[k/ft,...	End Magnitude[k/ft,F...	Start Location[ft,%]	End Location[ft,%]
102	M103	X	-.001	-.001	0	0
103	M104	Y	-.005	-.005	0	0
104	M104	X	-.003	-.003	0	0
105	M105	Y	-.005	-.005	0	0
106	M105	X	-.003	-.003	0	0
107	M106	Y	-.002	-.002	0	0
108	M106	X	-.001	-.001	0	0
109	M107	Y	-.002	-.002	0	0
110	M107	X	-.001	-.001	0	0
111	M108	Y	-.002	-.002	0	0
112	M108	X	-.001	-.001	0	0

Member Distributed Loads (BLC 8 : Wind Load (60))

	Member Label	Direction	Start Magnitude[k/ft,...	End Magnitude[k/ft,F...	Start Location[ft,%]	End Location[ft,%]
1	Standoff6	Y	-.003	-.003	0	0
2	Standoff5	Y	-.003	-.003	0	0
3	Standoff4	Y	-.003	-.003	0	0
4	Standoff3	Y	-.003	-.003	0	0
5	Standoff2	Y	-.003	-.003	0	0
6	Standoff1	Y	-.003	-.003	0	0
7	SUPPORT2	Y	-.006	-.006	0	0
8	SUPPORT1	Y	-.006	-.006	0	0
9	Rail3	Y	-.002	-.002	0	0
10	Rail2	Y	-.006	-.006	0	0
11	Rail1	Y	-.006	-.006	0	0
12	RUNG6	Y	-.0005	-.0005	0	0
13	RUNG5	Y	-.0005	-.0005	0	0
14	RUNG4	Y	-.0005	-.0005	0	0
15	RUNG3	Y	-.0005	-.0005	0	0
16	RUNG2	Y	-.0005	-.0005	0	0
17	RUNG1	Y	-.0005	-.0005	0	0
18	PLATE3	Y	-.0005	-.0005	0	0
19	PLATE2	Y	-.0005	-.0005	0	0
20	PLATE1	Y	-.0005	-.0005	0	0
21	MP GAMMA6	Y	-.006	-.006	0	0
22	MP GAMMA5	Y	-.006	-.006	0	0
23	MP GAMMA4	Y	-.006	-.006	0	0
24	MP GAMMA3	Y	-.006	-.006	0	0
25	MP GAMMA2	Y	-.006	-.006	0	0
26	MP GAMMA1	Y	-.006	-.006	0	0
27	MP BETA6	Y	-.006	-.006	0	0
28	MP BETA5	Y	-.006	-.006	0	0
29	MP BETA4	Y	-.006	-.006	0	0
30	MP BETA3	Y	-.006	-.006	0	0
31	MP BETA2	Y	-.006	-.006	0	0
32	MP BETA1	Y	-.006	-.006	0	0
33	MP ALPHA8	Y	-.006	-.006	0	0
34	MP ALPHA7	Y	-.006	-.006	0	0
35	MP ALPHA6	Y	-.006	-.006	0	0
36	MP ALPHA5	Y	-.006	-.006	0	0
37	MP ALPHA4	Y	-.006	-.006	0	0
38	MP ALPHA3	Y	-.006	-.006	0	0
39	MP ALPHA2	Y	-.006	-.006	0	0
40	MP ALPHA1	Y	-.006	-.006	0	0
41	LADDER2	Y	-.002	-.002	0	0
42	LADDER1	Y	-.002	-.002	0	0

Member Distributed Loads (BLC 8 : Wind Load (60)) (Continued)

	Member Label	Direction	Start Magnitude[k/ft,...	End Magnitude[k/ft,F...	Start Location[ft,%]	End Location[ft,%]
43	FACE3	Y	-.005	-.005	0	0
44	FACE2	Y	-.005	-.005	0	0
45	FACE1	Y	-.005	-.005	0	0
46	CORNER3	Y	-.006	-.006	0	0
47	CORNER2	Y	-.006	-.006	0	0
48	CORNER1	Y	-.006	-.006	0	0
49	Standoff6	X	-.004	-.004	0	0
50	Standoff5	X	-.004	-.004	0	0
51	Standoff4	X	-.004	-.004	0	0
52	Standoff3	X	-.004	-.004	0	0
53	Standoff2	X	-.004	-.004	0	0
54	Standoff1	X	-.004	-.004	0	0
55	SUPPORT2	X	-.011	-.011	0	0
56	SUPPORT1	X	-.011	-.011	0	0
57	Rail3	X	-.003	-.003	0	0
58	Rail2	X	-.011	-.011	0	0
59	Rail1	X	-.011	-.011	0	0
60	RUNG6	X	-.000866	-.000866	0	0
61	RUNG5	X	-.000866	-.000866	0	0
62	RUNG4	X	-.000866	-.000866	0	0
63	RUNG3	X	-.000866	-.000866	0	0
64	RUNG2	X	-.000866	-.000866	0	0
65	RUNG1	X	-.000866	-.000866	0	0
66	PLATE3	X	-.000866	-.000866	0	0
67	PLATE2	X	-.000866	-.000866	0	0
68	PLATE1	X	-.000866	-.000866	0	0
69	MP GAMMA6	X	-.01	-.01	0	0
70	MP GAMMA5	X	-.01	-.01	0	0
71	MP GAMMA4	X	-.01	-.01	0	0
72	MP GAMMA3	X	-.01	-.01	0	0
73	MP GAMMA2	X	-.01	-.01	0	0
74	MP GAMMA1	X	-.01	-.01	0	0
75	MP BETA6	X	-.01	-.01	0	0
76	MP BETA5	X	-.01	-.01	0	0
77	MP BETA4	X	-.01	-.01	0	0
78	MP BETA3	X	-.01	-.01	0	0
79	MP BETA2	X	-.01	-.01	0	0
80	MP BETA1	X	-.01	-.01	0	0
81	MP ALPHA8	X	-.01	-.01	0	0
82	MP ALPHA7	X	-.01	-.01	0	0
83	MP ALPHA6	X	-.01	-.01	0	0
84	MP ALPHA5	X	-.01	-.01	0	0
85	MP ALPHA4	X	-.01	-.01	0	0
86	MP ALPHA3	X	-.01	-.01	0	0
87	MP ALPHA2	X	-.01	-.01	0	0
88	MP ALPHA1	X	-.01	-.01	0	0
89	LADDER2	X	-.003	-.003	0	0
90	LADDER1	X	-.003	-.003	0	0
91	FACE3	X	-.009	-.009	0	0
92	FACE2	X	-.009	-.009	0	0
93	FACE1	X	-.009	-.009	0	0
94	CORNER3	X	-.011	-.011	0	0
95	CORNER2	X	-.011	-.011	0	0
96	CORNER1	X	-.011	-.011	0	0
97	M95	Y	-.006	-.006	0	0
98	M95	X	-.011	-.011	0	0
99	M96	Y	-.006	-.006	0	0

Member Distributed Loads (BLC 8 : Wind Load (60)) (Continued)

	Member Label	Direction	Start Magnitude[k/ft,...	End Magnitude[k/ft,F...	Start Location[ft,%]	End Location[ft,%]
100	M96	X	-.011	-.011	0	0
101	M103	Y	-.002	-.002	0	0
102	M103	X	-.003	-.003	0	0
103	M104	Y	-.006	-.006	0	0
104	M104	X	-.011	-.011	0	0
105	M105	Y	-.006	-.006	0	0
106	M105	X	-.011	-.011	0	0
107	M106	Y	-.0005	-.0005	0	0
108	M106	X	-.000866	-.000866	0	0
109	M107	Y	-.0005	-.0005	0	0
110	M107	X	-.000866	-.000866	0	0
111	M108	Y	-.0005	-.0005	0	0
112	M108	X	-.000866	-.000866	0	0

Member Distributed Loads (BLC 9 : Ice Wind Load (60))

	Member Label	Direction	Start Magnitude[k/ft,...	End Magnitude[k/ft,F...	Start Location[ft,%]	End Location[ft,%]
1	Standoff6	Y	-.002	-.002	0	0
2	Standoff5	Y	-.002	-.002	0	0
3	Standoff4	Y	-.002	-.002	0	0
4	Standoff3	Y	-.002	-.002	0	0
5	Standoff2	Y	-.002	-.002	0	0
6	Standoff1	Y	-.002	-.002	0	0
7	SUPPORT2	Y	-.003	-.003	0	0
8	SUPPORT1	Y	-.003	-.003	0	0
9	Rail3	Y	-.001	-.001	0	0
10	Rail2	Y	-.003	-.003	0	0
11	Rail1	Y	-.003	-.003	0	0
12	RUNG6	Y	-.0005	-.0005	0	0
13	RUNG5	Y	-.0005	-.0005	0	0
14	RUNG4	Y	-.0005	-.0005	0	0
15	RUNG3	Y	-.0005	-.0005	0	0
16	RUNG2	Y	-.0005	-.0005	0	0
17	RUNG1	Y	-.0005	-.0005	0	0
18	PLATE3	Y	-.001	-.001	0	0
19	PLATE2	Y	-.001	-.001	0	0
20	PLATE1	Y	-.001	-.001	0	0
21	MP GAMMA6	Y	-.002	-.002	0	0
22	MP GAMMA5	Y	-.002	-.002	0	0
23	MP GAMMA4	Y	-.002	-.002	0	0
24	MP GAMMA3	Y	-.002	-.002	0	0
25	MP GAMMA2	Y	-.002	-.002	0	0
26	MP GAMMA1	Y	-.002	-.002	0	0
27	MP BETA6	Y	-.002	-.002	0	0
28	MP BETA5	Y	-.002	-.002	0	0
29	MP BETA4	Y	-.002	-.002	0	0
30	MP BETA3	Y	-.002	-.002	0	0
31	MP BETA2	Y	-.002	-.002	0	0
32	MP BETA1	Y	-.002	-.002	0	0
33	MP ALPHA8	Y	-.002	-.002	0	0
34	MP ALPHA7	Y	-.002	-.002	0	0
35	MP ALPHA6	Y	-.002	-.002	0	0
36	MP ALPHA5	Y	-.002	-.002	0	0
37	MP ALPHA4	Y	-.002	-.002	0	0
38	MP ALPHA3	Y	-.002	-.002	0	0
39	MP ALPHA2	Y	-.002	-.002	0	0
40	MP ALPHA1	Y	-.002	-.002	0	0

Member Distributed Loads (BLC 9 : Ice Wind Load (60)) (Continued)

	Member Label	Direction	Start Magnitude[k/ft,...	End Magnitude[k/ft,F...	Start Location[ft,%]	End Location[ft,%]
41	LADDER2	Y	-.002	-.002	0	0
42	LADDER1	Y	-.002	-.002	0	0
43	FACE3	Y	-.003	-.003	0	0
44	FACE2	Y	-.004	-.004	0	0
45	FACE1	Y	-.004	-.004	0	0
46	CORNER3	Y	-.003	-.003	0	0
47	CORNER2	Y	-.003	-.003	0	0
48	CORNER1	Y	-.003	-.003	0	0
49	Standoff6	X	-.003	-.003	0	0
50	Standoff5	X	-.003	-.003	0	0
51	Standoff4	X	-.003	-.003	0	0
52	Standoff3	X	-.003	-.003	0	0
53	Standoff2	X	-.003	-.003	0	0
54	Standoff1	X	-.003	-.003	0	0
55	SUPPORT2	X	-.004	-.004	0	0
56	SUPPORT1	X	-.004	-.004	0	0
57	Rail3	X	-.002	-.002	0	0
58	Rail2	X	-.005	-.005	0	0
59	Rail1	X	-.005	-.005	0	0
60	RUNG6	X	-.000866	-.000866	0	0
61	RUNG5	X	-.000866	-.000866	0	0
62	RUNG4	X	-.000866	-.000866	0	0
63	RUNG3	X	-.000866	-.000866	0	0
64	RUNG2	X	-.000866	-.000866	0	0
65	RUNG1	X	-.000866	-.000866	0	0
66	PLATE3	X	-.002	-.002	0	0
67	PLATE2	X	-.002	-.002	0	0
68	PLATE1	X	-.002	-.002	0	0
69	MP GAMMA6	X	-.003	-.003	0	0
70	MP GAMMA5	X	-.003	-.003	0	0
71	MP GAMMA4	X	-.003	-.003	0	0
72	MP GAMMA3	X	-.003	-.003	0	0
73	MP GAMMA2	X	-.003	-.003	0	0
74	MP GAMMA1	X	-.003	-.003	0	0
75	MP BETA6	X	-.003	-.003	0	0
76	MP BETA5	X	-.003	-.003	0	0
77	MP BETA4	X	-.003	-.003	0	0
78	MP BETA3	X	-.003	-.003	0	0
79	MP BETA2	X	-.003	-.003	0	0
80	MP BETA1	X	-.003	-.003	0	0
81	MP ALPHA8	X	-.003	-.003	0	0
82	MP ALPHA7	X	-.003	-.003	0	0
83	MP ALPHA6	X	-.003	-.003	0	0
84	MP ALPHA5	X	-.003	-.003	0	0
85	MP ALPHA4	X	-.003	-.003	0	0
86	MP ALPHA3	X	-.003	-.003	0	0
87	MP ALPHA2	X	-.003	-.003	0	0
88	MP ALPHA1	X	-.003	-.003	0	0
89	LADDER2	X	-.003	-.003	0	0
90	LADDER1	X	-.003	-.003	0	0
91	FACE3	X	-.004	-.004	0	0
92	FACE2	X	-.008	-.008	0	0
93	FACE1	X	-.008	-.008	0	0
94	CORNER3	X	-.004	-.004	0	0
95	CORNER2	X	-.004	-.004	0	0
96	CORNER1	X	-.004	-.004	0	0
97	M95	Y	-.003	-.003	0	0

Member Distributed Loads (BLC 9 : Ice Wind Load (60)) (Continued)

	Member Label	Direction	Start Magnitude[k/ft,...	End Magnitude[k/ft,F...	Start Location[ft,%]	End Location[ft,%]
98	M95	X	-.004	-.004	0	0
99	M96	Y	-.003	-.003	0	0
100	M96	X	-.004	-.004	0	0
101	M103	Y	-.001	-.001	0	0
102	M103	X	-.002	-.002	0	0
103	M104	Y	-.003	-.003	0	0
104	M104	X	-.005	-.005	0	0
105	M105	Y	-.003	-.003	0	0
106	M105	X	-.005	-.005	0	0
107	M106	Y	-.001	-.001	0	0
108	M106	X	-.002	-.002	0	0
109	M107	Y	-.001	-.001	0	0
110	M107	X	-.002	-.002	0	0
111	M108	Y	-.001	-.001	0	0
112	M108	X	-.002	-.002	0	0

Member Distributed Loads (BLC 10 : Wind Load (90))

	Member Label	Direction	Start Magnitude[k/ft,...	End Magnitude[k/ft,F...	Start Location[ft,%]	End Location[ft,%]
1	Standoff6	X	-.005	-.005	0	0
2	Standoff5	X	-.005	-.005	0	0
3	Standoff4	X	-.005	-.005	0	0
4	Standoff3	X	-.005	-.005	0	0
5	Standoff2	X	-.005	-.005	0	0
6	Standoff1	X	-.005	-.005	0	0
7	SUPPORT2	X	-.013	-.013	0	0
8	SUPPORT1	X	-.013	-.013	0	0
9	Rail3	X	-.004	-.004	0	0
10	Rail2	X	-.013	-.013	0	0
11	Rail1	X	-.013	-.013	0	0
12	RUNG6	X	-.001	-.001	0	0
13	RUNG5	X	-.001	-.001	0	0
14	RUNG4	X	-.001	-.001	0	0
15	RUNG3	X	-.001	-.001	0	0
16	RUNG2	X	-.001	-.001	0	0
17	RUNG1	X	-.001	-.001	0	0
18	PLATE3	X	-.001	-.001	0	0
19	PLATE2	X	-.001	-.001	0	0
20	PLATE1	X	-.001	-.001	0	0
21	MP GAMMA6	X	-.012	-.012	0	0
22	MP GAMMA5	X	-.012	-.012	0	0
23	MP GAMMA4	X	-.012	-.012	0	0
24	MP GAMMA3	X	-.012	-.012	0	0
25	MP GAMMA2	X	-.012	-.012	0	0
26	MP GAMMA1	X	-.012	-.012	0	0
27	MP BETA6	X	-.012	-.012	0	0
28	MP BETA5	X	-.012	-.012	0	0
29	MP BETA4	X	-.012	-.012	0	0
30	MP BETA3	X	-.012	-.012	0	0
31	MP BETA2	X	-.012	-.012	0	0
32	MP BETA1	X	-.012	-.012	0	0
33	MP ALPHA8	X	-.012	-.012	0	0
34	MP ALPHA7	X	-.012	-.012	0	0
35	MP ALPHA6	X	-.012	-.012	0	0
36	MP ALPHA5	X	-.012	-.012	0	0
37	MP ALPHA4	X	-.012	-.012	0	0
38	MP ALPHA3	X	-.012	-.012	0	0

Member Distributed Loads (BLC 10 : Wind Load (90)) (Continued)

	Member Label	Direction	Start Magnitude[k/ft,...	End Magnitude[k/ft,F...	Start Location[ft,%]	End Location[ft,%]
39	MP ALPHA2	X	-.012	-.012	0	0
40	MP ALPHA1	X	-.012	-.012	0	0
41	LADDER2	X	-.004	-.004	0	0
42	LADDER1	X	-.004	-.004	0	0
43	FACE3	X	-.01	-.01	0	0
44	FACE2	X	-.01	-.01	0	0
45	FACE1	X	-.01	-.01	0	0
46	CORNER3	X	-.013	-.013	0	0
47	CORNER2	X	-.013	-.013	0	0
48	CORNER1	X	-.013	-.013	0	0
49	M95	X	-.013	-.013	0	0
50	M96	X	-.013	-.013	0	0
51	M103	X	-.004	-.004	0	0
52	M104	X	-.013	-.013	0	0
53	M105	X	-.013	-.013	0	0
54	M106	X	-.001	-.001	0	0
55	M107	X	-.001	-.001	0	0
56	M108	X	-.001	-.001	0	0

Member Distributed Loads (BLC 11 : Ice Wind Load (90))

	Member Label	Direction	Start Magnitude[k/ft,...	End Magnitude[k/ft,F...	Start Location[ft,%]	End Location[ft,%]
1	Standoff6	X	-.003	-.003	0	0
2	Standoff5	X	-.003	-.003	0	0
3	Standoff4	X	-.003	-.003	0	0
4	Standoff3	X	-.003	-.003	0	0
5	Standoff2	X	-.003	-.003	0	0
6	Standoff1	X	-.003	-.003	0	0
7	SUPPORT2	X	-.005	-.005	0	0
8	SUPPORT1	X	-.005	-.005	0	0
9	Rail3	X	-.002	-.002	0	0
10	Rail2	X	-.006	-.006	0	0
11	Rail1	X	-.006	-.006	0	0
12	RUNG6	X	-.001	-.001	0	0
13	RUNG5	X	-.001	-.001	0	0
14	RUNG4	X	-.001	-.001	0	0
15	RUNG3	X	-.001	-.001	0	0
16	RUNG2	X	-.001	-.001	0	0
17	RUNG1	X	-.001	-.001	0	0
18	PLATE3	X	-.002	-.002	0	0
19	PLATE2	X	-.002	-.002	0	0
20	PLATE1	X	-.002	-.002	0	0
21	MP GAMMA6	X	-.004	-.004	0	0
22	MP GAMMA5	X	-.004	-.004	0	0
23	MP GAMMA4	X	-.004	-.004	0	0
24	MP GAMMA3	X	-.004	-.004	0	0
25	MP GAMMA2	X	-.004	-.004	0	0
26	MP GAMMA1	X	-.004	-.004	0	0
27	MP BETA6	X	-.004	-.004	0	0
28	MP BETA5	X	-.004	-.004	0	0
29	MP BETA4	X	-.004	-.004	0	0
30	MP BETA3	X	-.004	-.004	0	0
31	MP BETA2	X	-.004	-.004	0	0
32	MP BETA1	X	-.004	-.004	0	0
33	MP ALPHA8	X	-.004	-.004	0	0
34	MP ALPHA7	X	-.004	-.004	0	0
35	MP ALPHA6	X	-.004	-.004	0	0

Member Distributed Loads (BLC 11 : Ice Wind Load (90)) (Continued)

	Member Label	Direction	Start Magnitude[k/ft,...	End Magnitude[k/ft,F...	Start Location[ft,%]	End Location[ft,%]
36	MP ALPHA5	X	-.004	-.004	0	0
37	MP ALPHA4	X	-.004	-.004	0	0
38	MP ALPHA3	X	-.004	-.004	0	0
39	MP ALPHA2	X	-.004	-.004	0	0
40	MP ALPHA1	X	-.004	-.004	0	0
41	LADDER2	X	-.003	-.003	0	0
42	LADDER1	X	-.003	-.003	0	0
43	FACE3	X	-.005	-.005	0	0
44	FACE2	X	-.009	-.009	0	0
45	FACE1	X	-.009	-.009	0	0
46	CORNER3	X	-.005	-.005	0	0
47	CORNER2	X	-.005	-.005	0	0
48	CORNER1	X	-.005	-.005	0	0
49	M95	X	-.005	-.005	0	0
50	M96	X	-.005	-.005	0	0
51	M103	X	-.002	-.002	0	0
52	M104	X	-.006	-.006	0	0
53	M105	X	-.006	-.006	0	0
54	M106	X	-.002	-.002	0	0
55	M107	X	-.002	-.002	0	0
56	M108	X	-.002	-.002	0	0

Member Distributed Loads (BLC 12 : Wind Load (120))

	Member Label	Direction	Start Magnitude[k/ft,...	End Magnitude[k/ft,F...	Start Location[ft,%]	End Location[ft,%]
1	Standoff6	Y	.003	.003	0	0
2	Standoff5	Y	.003	.003	0	0
3	Standoff4	Y	.003	.003	0	0
4	Standoff3	Y	.003	.003	0	0
5	Standoff2	Y	.003	.003	0	0
6	Standoff1	Y	.003	.003	0	0
7	SUPPORT2	Y	.006	.006	0	0
8	SUPPORT1	Y	.006	.006	0	0
9	Rail3	Y	.002	.002	0	0
10	Rail2	Y	.006	.006	0	0
11	Rail1	Y	.006	.006	0	0
12	RUNG6	Y	.0005	.0005	0	0
13	RUNG5	Y	.0005	.0005	0	0
14	RUNG4	Y	.0005	.0005	0	0
15	RUNG3	Y	.0005	.0005	0	0
16	RUNG2	Y	.0005	.0005	0	0
17	RUNG1	Y	.0005	.0005	0	0
18	PLATE3	Y	.0005	.0005	0	0
19	PLATE2	Y	.0005	.0005	0	0
20	PLATE1	Y	.0005	.0005	0	0
21	MP GAMMA6	Y	.006	.006	0	0
22	MP GAMMA5	Y	.006	.006	0	0
23	MP GAMMA4	Y	.006	.006	0	0
24	MP GAMMA3	Y	.006	.006	0	0
25	MP GAMMA2	Y	.006	.006	0	0
26	MP GAMMA1	Y	.006	.006	0	0
27	MP BETA6	Y	.006	.006	0	0
28	MP BETA5	Y	.006	.006	0	0
29	MP BETA4	Y	.006	.006	0	0
30	MP BETA3	Y	.006	.006	0	0
31	MP BETA2	Y	.006	.006	0	0
32	MP BETA1	Y	.006	.006	0	0

Member Distributed Loads (BLC 12 : Wind Load (120)) (Continued)

	Member Label	Direction	Start Magnitude[k/ft,...	End Magnitude[k/ft,F...	Start Location[ft,%]	End Location[ft,%]
33	MP ALPHA8	Y	.006	.006	0	0
34	MP ALPHA7	Y	.006	.006	0	0
35	MP ALPHA6	Y	.006	.006	0	0
36	MP ALPHA5	Y	.006	.006	0	0
37	MP ALPHA4	Y	.006	.006	0	0
38	MP ALPHA3	Y	.006	.006	0	0
39	MP ALPHA2	Y	.006	.006	0	0
40	MP ALPHA1	Y	.006	.006	0	0
41	LADDER2	Y	.002	.002	0	0
42	LADDER1	Y	.002	.002	0	0
43	FACE3	Y	.005	.005	0	0
44	FACE2	Y	.005	.005	0	0
45	FACE1	Y	.005	.005	0	0
46	CORNER3	Y	.006	.006	0	0
47	CORNER2	Y	.006	.006	0	0
48	CORNER1	Y	.006	.006	0	0
49	Standoff6	X	-.004	-.004	0	0
50	Standoff5	X	-.004	-.004	0	0
51	Standoff4	X	-.004	-.004	0	0
52	Standoff3	X	-.004	-.004	0	0
53	Standoff2	X	-.004	-.004	0	0
54	Standoff1	X	-.004	-.004	0	0
55	SUPPORT2	X	-.011	-.011	0	0
56	SUPPORT1	X	-.011	-.011	0	0
57	Rail3	X	-.003	-.003	0	0
58	Rail2	X	-.011	-.011	0	0
59	Rail1	X	-.011	-.011	0	0
60	RUNG6	X	-.000866	-.000866	0	0
61	RUNG5	X	-.000866	-.000866	0	0
62	RUNG4	X	-.000866	-.000866	0	0
63	RUNG3	X	-.000866	-.000866	0	0
64	RUNG2	X	-.000866	-.000866	0	0
65	RUNG1	X	-.000866	-.000866	0	0
66	PLATE3	X	-.000866	-.000866	0	0
67	PLATE2	X	-.000866	-.000866	0	0
68	PLATE1	X	-.000866	-.000866	0	0
69	MP GAMMA6	X	-.01	-.01	0	0
70	MP GAMMA5	X	-.01	-.01	0	0
71	MP GAMMA4	X	-.01	-.01	0	0
72	MP GAMMA3	X	-.01	-.01	0	0
73	MP GAMMA2	X	-.01	-.01	0	0
74	MP GAMMA1	X	-.01	-.01	0	0
75	MP BETA6	X	-.01	-.01	0	0
76	MP BETA5	X	-.01	-.01	0	0
77	MP BETA4	X	-.01	-.01	0	0
78	MP BETA3	X	-.01	-.01	0	0
79	MP BETA2	X	-.01	-.01	0	0
80	MP BETA1	X	-.01	-.01	0	0
81	MP ALPHA8	X	-.01	-.01	0	0
82	MP ALPHA7	X	-.01	-.01	0	0
83	MP ALPHA6	X	-.01	-.01	0	0
84	MP ALPHA5	X	-.01	-.01	0	0
85	MP ALPHA4	X	-.01	-.01	0	0
86	MP ALPHA3	X	-.01	-.01	0	0
87	MP ALPHA2	X	-.01	-.01	0	0
88	MP ALPHA1	X	-.01	-.01	0	0
89	LADDER2	X	-.003	-.003	0	0

Member Distributed Loads (BLC 12 : Wind Load (120)) (Continued)

	Member Label	Direction	Start Magnitude[k/ft,...	End Magnitude[k/ft,F...	Start Location[ft,%]	End Location[ft,%]
90	LADDER1	X	-.003	-.003	0	0
91	FACE3	X	-.009	-.009	0	0
92	FACE2	X	-.009	-.009	0	0
93	FACE1	X	-.009	-.009	0	0
94	CORNER3	X	-.011	-.011	0	0
95	CORNER2	X	-.011	-.011	0	0
96	CORNER1	X	-.011	-.011	0	0
97	M95	Y	.006	.006	0	0
98	M95	X	-.011	-.011	0	0
99	M96	Y	.006	.006	0	0
100	M96	X	-.011	-.011	0	0
101	M103	Y	.002	.002	0	0
102	M103	X	-.003	-.003	0	0
103	M104	Y	.006	.006	0	0
104	M104	X	-.011	-.011	0	0
105	M105	Y	.006	.006	0	0
106	M105	X	-.011	-.011	0	0
107	M106	Y	.0005	.0005	0	0
108	M106	X	-.000866	-.000866	0	0
109	M107	Y	.0005	.0005	0	0
110	M107	X	-.000866	-.000866	0	0
111	M108	Y	.0005	.0005	0	0
112	M108	X	-.000866	-.000866	0	0

Member Distributed Loads (BLC 13 : Ice Wind Load (120))

	Member Label	Direction	Start Magnitude[k/ft,...	End Magnitude[k/ft,F...	Start Location[ft,%]	End Location[ft,%]
1	Standoff6	Y	.002	.002	0	0
2	Standoff5	Y	.002	.002	0	0
3	Standoff4	Y	.002	.002	0	0
4	Standoff3	Y	.002	.002	0	0
5	Standoff2	Y	.002	.002	0	0
6	Standoff1	Y	.002	.002	0	0
7	SUPPORT2	Y	.003	.003	0	0
8	SUPPORT1	Y	.003	.003	0	0
9	Rail3	Y	.001	.001	0	0
10	Rail2	Y	.003	.003	0	0
11	Rail1	Y	.003	.003	0	0
12	RUNG6	Y	.0005	.0005	0	0
13	RUNG5	Y	.0005	.0005	0	0
14	RUNG4	Y	.0005	.0005	0	0
15	RUNG3	Y	.0005	.0005	0	0
16	RUNG2	Y	.0005	.0005	0	0
17	RUNG1	Y	.0005	.0005	0	0
18	PLATE3	Y	.001	.001	0	0
19	PLATE2	Y	.001	.001	0	0
20	PLATE1	Y	.001	.001	0	0
21	MP GAMMA6	Y	.002	.002	0	0
22	MP GAMMA5	Y	.002	.002	0	0
23	MP GAMMA4	Y	.002	.002	0	0
24	MP GAMMA3	Y	.002	.002	0	0
25	MP GAMMA2	Y	.002	.002	0	0
26	MP GAMMA1	Y	.002	.002	0	0
27	MP BETA6	Y	.002	.002	0	0
28	MP BETA5	Y	.002	.002	0	0
29	MP BETA4	Y	.002	.002	0	0
30	MP BETA3	Y	.002	.002	0	0

Member Distributed Loads (BLC 13 : Ice Wind Load (120)) (Continued)

	Member Label	Direction	Start Magnitude[k/ft,...	End Magnitude[k/ft,F...	Start Location[ft,%]	End Location[ft,%]
31	MP BETA2	Y	.002	.002	0	0
32	MP BETA1	Y	.002	.002	0	0
33	MP ALPHA8	Y	.002	.002	0	0
34	MP ALPHA7	Y	.002	.002	0	0
35	MP ALPHA6	Y	.002	.002	0	0
36	MP ALPHA5	Y	.002	.002	0	0
37	MP ALPHA4	Y	.002	.002	0	0
38	MP ALPHA3	Y	.002	.002	0	0
39	MP ALPHA2	Y	.002	.002	0	0
40	MP ALPHA1	Y	.002	.002	0	0
41	LADDER2	Y	.002	.002	0	0
42	LADDER1	Y	.002	.002	0	0
43	FACE3	Y	.003	.003	0	0
44	FACE2	Y	.004	.004	0	0
45	FACE1	Y	.004	.004	0	0
46	CORNER3	Y	.003	.003	0	0
47	CORNER2	Y	.003	.003	0	0
48	CORNER1	Y	.003	.003	0	0
49	Standoff6	X	-.003	-.003	0	0
50	Standoff5	X	-.003	-.003	0	0
51	Standoff4	X	-.003	-.003	0	0
52	Standoff3	X	-.003	-.003	0	0
53	Standoff2	X	-.003	-.003	0	0
54	Standoff1	X	-.003	-.003	0	0
55	SUPPORT2	X	-.004	-.004	0	0
56	SUPPORT1	X	-.004	-.004	0	0
57	Rail3	X	-.002	-.002	0	0
58	Rail2	X	-.005	-.005	0	0
59	Rail1	X	-.005	-.005	0	0
60	RUNG6	X	-.000866	-.000866	0	0
61	RUNG5	X	-.000866	-.000866	0	0
62	RUNG4	X	-.000866	-.000866	0	0
63	RUNG3	X	-.000866	-.000866	0	0
64	RUNG2	X	-.000866	-.000866	0	0
65	RUNG1	X	-.000866	-.000866	0	0
66	PLATE3	X	-.002	-.002	0	0
67	PLATE2	X	-.002	-.002	0	0
68	PLATE1	X	-.002	-.002	0	0
69	MP GAMMA6	X	-.003	-.003	0	0
70	MP GAMMA5	X	-.003	-.003	0	0
71	MP GAMMA4	X	-.003	-.003	0	0
72	MP GAMMA3	X	-.003	-.003	0	0
73	MP GAMMA2	X	-.003	-.003	0	0
74	MP GAMMA1	X	-.003	-.003	0	0
75	MP BETA6	X	-.003	-.003	0	0
76	MP BETA5	X	-.003	-.003	0	0
77	MP BETA4	X	-.003	-.003	0	0
78	MP BETA3	X	-.003	-.003	0	0
79	MP BETA2	X	-.003	-.003	0	0
80	MP BETA1	X	-.003	-.003	0	0
81	MP ALPHA8	X	-.003	-.003	0	0
82	MP ALPHA7	X	-.003	-.003	0	0
83	MP ALPHA6	X	-.003	-.003	0	0
84	MP ALPHA5	X	-.003	-.003	0	0
85	MP ALPHA4	X	-.003	-.003	0	0
86	MP ALPHA3	X	-.003	-.003	0	0
87	MP ALPHA2	X	-.003	-.003	0	0

Member Distributed Loads (BLC 13 : Ice Wind Load (120)) (Continued)

	Member Label	Direction	Start Magnitude[k/ft,...	End Magnitude[k/ft,F...	Start Location[ft,%]	End Location[ft,%]
88	MP ALPHA1	X	-.003	-.003	0	0
89	LADDER2	X	-.003	-.003	0	0
90	LADDER1	X	-.003	-.003	0	0
91	FACE3	X	-.004	-.004	0	0
92	FACE2	X	-.008	-.008	0	0
93	FACE1	X	-.008	-.008	0	0
94	CORNER3	X	-.004	-.004	0	0
95	CORNER2	X	-.004	-.004	0	0
96	CORNER1	X	-.004	-.004	0	0
97	M95	Y	.003	.003	0	0
98	M95	X	-.004	-.004	0	0
99	M96	Y	.003	.003	0	0
100	M96	X	-.004	-.004	0	0
101	M103	Y	.001	.001	0	0
102	M103	X	-.002	-.002	0	0
103	M104	Y	.003	.003	0	0
104	M104	X	-.005	-.005	0	0
105	M105	Y	.003	.003	0	0
106	M105	X	-.005	-.005	0	0
107	M106	Y	.001	.001	0	0
108	M106	X	-.002	-.002	0	0
109	M107	Y	.001	.001	0	0
110	M107	X	-.002	-.002	0	0
111	M108	Y	.001	.001	0	0
112	M108	X	-.002	-.002	0	0

Member Distributed Loads (BLC 14 : Wind Load (150))

	Member Label	Direction	Start Magnitude[k/ft,...	End Magnitude[k/ft,F...	Start Location[ft,%]	End Location[ft,%]
1	Standoff6	Y	.004	.004	0	0
2	Standoff5	Y	.004	.004	0	0
3	Standoff4	Y	.004	.004	0	0
4	Standoff3	Y	.004	.004	0	0
5	Standoff2	Y	.004	.004	0	0
6	Standoff1	Y	.004	.004	0	0
7	SUPPORT2	Y	.011	.011	0	0
8	SUPPORT1	Y	.011	.011	0	0
9	Rail3	Y	.003	.003	0	0
10	Rail2	Y	.011	.011	0	0
11	Rail1	Y	.011	.011	0	0
12	RUNG6	Y	.000866	.000866	0	0
13	RUNG5	Y	.000866	.000866	0	0
14	RUNG4	Y	.000866	.000866	0	0
15	RUNG3	Y	.000866	.000866	0	0
16	RUNG2	Y	.000866	.000866	0	0
17	RUNG1	Y	.000866	.000866	0	0
18	PLATE3	Y	.000866	.000866	0	0
19	PLATE2	Y	.000866	.000866	0	0
20	PLATE1	Y	.000866	.000866	0	0
21	MP GAMMA6	Y	.01	.01	0	0
22	MP GAMMA5	Y	.01	.01	0	0
23	MP GAMMA4	Y	.01	.01	0	0
24	MP GAMMA3	Y	.01	.01	0	0
25	MP GAMMA2	Y	.01	.01	0	0
26	MP GAMMA1	Y	.01	.01	0	0
27	MP BETA6	Y	.01	.01	0	0
28	MP BETA5	Y	.01	.01	0	0

Member Distributed Loads (BLC 14 : Wind Load (150)) (Continued)

	Member Label	Direction	Start Magnitude[k/ft,...	End Magnitude[k/ft,F...	Start Location[ft,%]	End Location[ft,%]
29	MP BETA4	Y	.01	.01	0	0
30	MP BETA3	Y	.01	.01	0	0
31	MP BETA2	Y	.01	.01	0	0
32	MP BETA1	Y	.01	.01	0	0
33	MP ALPHA8	Y	.01	.01	0	0
34	MP ALPHA7	Y	.01	.01	0	0
35	MP ALPHA6	Y	.01	.01	0	0
36	MP ALPHA5	Y	.01	.01	0	0
37	MP ALPHA4	Y	.01	.01	0	0
38	MP ALPHA3	Y	.01	.01	0	0
39	MP ALPHA2	Y	.01	.01	0	0
40	MP ALPHA1	Y	.01	.01	0	0
41	LADDER2	Y	.003	.003	0	0
42	LADDER1	Y	.003	.003	0	0
43	FACE3	Y	.009	.009	0	0
44	FACE2	Y	.009	.009	0	0
45	FACE1	Y	.009	.009	0	0
46	CORNER3	Y	.011	.011	0	0
47	CORNER2	Y	.011	.011	0	0
48	CORNER1	Y	.011	.011	0	0
49	Standoff6	X	-.003	-.003	0	0
50	Standoff5	X	-.003	-.003	0	0
51	Standoff4	X	-.003	-.003	0	0
52	Standoff3	X	-.003	-.003	0	0
53	Standoff2	X	-.003	-.003	0	0
54	Standoff1	X	-.003	-.003	0	0
55	SUPPORT2	X	-.006	-.006	0	0
56	SUPPORT1	X	-.006	-.006	0	0
57	Rail3	X	-.002	-.002	0	0
58	Rail2	X	-.006	-.006	0	0
59	Rail1	X	-.006	-.006	0	0
60	RUNG6	X	-.0005	-.0005	0	0
61	RUNG5	X	-.0005	-.0005	0	0
62	RUNG4	X	-.0005	-.0005	0	0
63	RUNG3	X	-.0005	-.0005	0	0
64	RUNG2	X	-.0005	-.0005	0	0
65	RUNG1	X	-.0005	-.0005	0	0
66	PLATE3	X	-.0005	-.0005	0	0
67	PLATE2	X	-.0005	-.0005	0	0
68	PLATE1	X	-.0005	-.0005	0	0
69	MP GAMMA6	X	-.006	-.006	0	0
70	MP GAMMA5	X	-.006	-.006	0	0
71	MP GAMMA4	X	-.006	-.006	0	0
72	MP GAMMA3	X	-.006	-.006	0	0
73	MP GAMMA2	X	-.006	-.006	0	0
74	MP GAMMA1	X	-.006	-.006	0	0
75	MP BETA6	X	-.006	-.006	0	0
76	MP BETA5	X	-.006	-.006	0	0
77	MP BETA4	X	-.006	-.006	0	0
78	MP BETA3	X	-.006	-.006	0	0
79	MP BETA2	X	-.006	-.006	0	0
80	MP BETA1	X	-.006	-.006	0	0
81	MP ALPHA8	X	-.006	-.006	0	0
82	MP ALPHA7	X	-.006	-.006	0	0
83	MP ALPHA6	X	-.006	-.006	0	0
84	MP ALPHA5	X	-.006	-.006	0	0
85	MP ALPHA4	X	-.006	-.006	0	0

Member Distributed Loads (BLC 14 : Wind Load (150)) (Continued)

	Member Label	Direction	Start Magnitude[k/ft,...	End Magnitude[k/ft,F...	Start Location[ft,%]	End Location[ft,%]
86	MP ALPHA3	X	-.006	-.006	0	0
87	MP ALPHA2	X	-.006	-.006	0	0
88	MP ALPHA1	X	-.006	-.006	0	0
89	LADDER2	X	-.002	-.002	0	0
90	LADDER1	X	-.002	-.002	0	0
91	FACE3	X	-.005	-.005	0	0
92	FACE2	X	-.005	-.005	0	0
93	FACE1	X	-.005	-.005	0	0
94	CORNER3	X	-.006	-.006	0	0
95	CORNER2	X	-.006	-.006	0	0
96	CORNER1	X	-.006	-.006	0	0
97	M95	Y	.011	.011	0	0
98	M95	X	-.006	-.006	0	0
99	M96	Y	.011	.011	0	0
100	M96	X	-.006	-.006	0	0
101	M103	Y	.003	.003	0	0
102	M103	X	-.002	-.002	0	0
103	M104	Y	.011	.011	0	0
104	M104	X	-.006	-.006	0	0
105	M105	Y	.011	.011	0	0
106	M105	X	-.006	-.006	0	0
107	M106	Y	.000866	.000866	0	0
108	M106	X	-.0005	-.0005	0	0
109	M107	Y	.000866	.000866	0	0
110	M107	X	-.0005	-.0005	0	0
111	M108	Y	.000866	.000866	0	0
112	M108	X	-.0005	-.0005	0	0

Member Distributed Loads (BLC 15 : Ice Wind Load (150))

	Member Label	Direction	Start Magnitude[k/ft,...	End Magnitude[k/ft,F...	Start Location[ft,%]	End Location[ft,%]
1	Standoff6	Y	.003	.003	0	0
2	Standoff5	Y	.003	.003	0	0
3	Standoff4	Y	.003	.003	0	0
4	Standoff3	Y	.003	.003	0	0
5	Standoff2	Y	.003	.003	0	0
6	Standoff1	Y	.003	.003	0	0
7	SUPPORT2	Y	.004	.004	0	0
8	SUPPORT1	Y	.004	.004	0	0
9	Rail3	Y	.002	.002	0	0
10	Rail2	Y	.005	.005	0	0
11	Rail1	Y	.005	.005	0	0
12	RUNG6	Y	.000866	.000866	0	0
13	RUNG5	Y	.000866	.000866	0	0
14	RUNG4	Y	.000866	.000866	0	0
15	RUNG3	Y	.000866	.000866	0	0
16	RUNG2	Y	.000866	.000866	0	0
17	RUNG1	Y	.000866	.000866	0	0
18	PLATE3	Y	.002	.002	0	0
19	PLATE2	Y	.002	.002	0	0
20	PLATE1	Y	.002	.002	0	0
21	MP GAMMA6	Y	.003	.003	0	0
22	MP GAMMA5	Y	.003	.003	0	0
23	MP GAMMA4	Y	.003	.003	0	0
24	MP GAMMA3	Y	.003	.003	0	0
25	MP GAMMA2	Y	.003	.003	0	0
26	MP GAMMA1	Y	.003	.003	0	0

Member Distributed Loads (BLC 15 : Ice Wind Load (150)) (Continued)

	Member Label	Direction	Start Magnitude[k/ft,...	End Magnitude[k/ft,F...	Start Location[ft,%]	End Location[ft,%]
27	MP BETA6	Y	.003	.003	0	0
28	MP BETA5	Y	.003	.003	0	0
29	MP BETA4	Y	.003	.003	0	0
30	MP BETA3	Y	.003	.003	0	0
31	MP BETA2	Y	.003	.003	0	0
32	MP BETA1	Y	.003	.003	0	0
33	MP ALPHA8	Y	.003	.003	0	0
34	MP ALPHA7	Y	.003	.003	0	0
35	MP ALPHA6	Y	.003	.003	0	0
36	MP ALPHA5	Y	.003	.003	0	0
37	MP ALPHA4	Y	.003	.003	0	0
38	MP ALPHA3	Y	.003	.003	0	0
39	MP ALPHA2	Y	.003	.003	0	0
40	MP ALPHA1	Y	.003	.003	0	0
41	LADDER2	Y	.003	.003	0	0
42	LADDER1	Y	.003	.003	0	0
43	FACE3	Y	.004	.004	0	0
44	FACE2	Y	.008	.008	0	0
45	FACE1	Y	.008	.008	0	0
46	CORNER3	Y	.004	.004	0	0
47	CORNER2	Y	.004	.004	0	0
48	CORNER1	Y	.004	.004	0	0
49	Standoff6	X	-.002	-.002	0	0
50	Standoff5	X	-.002	-.002	0	0
51	Standoff4	X	-.002	-.002	0	0
52	Standoff3	X	-.002	-.002	0	0
53	Standoff2	X	-.002	-.002	0	0
54	Standoff1	X	-.002	-.002	0	0
55	SUPPORT2	X	-.003	-.003	0	0
56	SUPPORT1	X	-.003	-.003	0	0
57	Rail3	X	-.001	-.001	0	0
58	Rail2	X	-.003	-.003	0	0
59	Rail1	X	-.003	-.003	0	0
60	RUNG6	X	-.0005	-.0005	0	0
61	RUNG5	X	-.0005	-.0005	0	0
62	RUNG4	X	-.0005	-.0005	0	0
63	RUNG3	X	-.0005	-.0005	0	0
64	RUNG2	X	-.0005	-.0005	0	0
65	RUNG1	X	-.0005	-.0005	0	0
66	PLATE3	X	-.001	-.001	0	0
67	PLATE2	X	-.001	-.001	0	0
68	PLATE1	X	-.001	-.001	0	0
69	MP GAMMA6	X	-.002	-.002	0	0
70	MP GAMMA5	X	-.002	-.002	0	0
71	MP GAMMA4	X	-.002	-.002	0	0
72	MP GAMMA3	X	-.002	-.002	0	0
73	MP GAMMA2	X	-.002	-.002	0	0
74	MP GAMMA1	X	-.002	-.002	0	0
75	MP BETA6	X	-.002	-.002	0	0
76	MP BETA5	X	-.002	-.002	0	0
77	MP BETA4	X	-.002	-.002	0	0
78	MP BETA3	X	-.002	-.002	0	0
79	MP BETA2	X	-.002	-.002	0	0
80	MP BETA1	X	-.002	-.002	0	0
81	MP ALPHA8	X	-.002	-.002	0	0
82	MP ALPHA7	X	-.002	-.002	0	0
83	MP ALPHA6	X	-.002	-.002	0	0

Member Distributed Loads (BLC 15 : Ice Wind Load (150)) (Continued)

	Member Label	Direction	Start Magnitude[k/ft,...	End Magnitude[k/ft,F...	Start Location[ft,%]	End Location[ft,%]
84	MP ALPHA5	X	-.002	-.002	0	0
85	MP ALPHA4	X	-.002	-.002	0	0
86	MP ALPHA3	X	-.002	-.002	0	0
87	MP ALPHA2	X	-.002	-.002	0	0
88	MP ALPHA1	X	-.002	-.002	0	0
89	LADDER2	X	-.002	-.002	0	0
90	LADDER1	X	-.002	-.002	0	0
91	FACE3	X	-.003	-.003	0	0
92	FACE2	X	-.004	-.004	0	0
93	FACE1	X	-.004	-.004	0	0
94	CORNER3	X	-.003	-.003	0	0
95	CORNER2	X	-.003	-.003	0	0
96	CORNER1	X	-.003	-.003	0	0
97	M95	Y	.004	.004	0	0
98	M95	X	-.003	-.003	0	0
99	M96	Y	.004	.004	0	0
100	M96	X	-.003	-.003	0	0
101	M103	Y	.002	.002	0	0
102	M103	X	-.001	-.001	0	0
103	M104	Y	.005	.005	0	0
104	M104	X	-.003	-.003	0	0
105	M105	Y	.005	.005	0	0
106	M105	X	-.003	-.003	0	0
107	M106	Y	.002	.002	0	0
108	M106	X	-.001	-.001	0	0
109	M107	Y	.002	.002	0	0
110	M107	X	-.001	-.001	0	0
111	M108	Y	.002	.002	0	0
112	M108	X	-.001	-.001	0	0

Member Distributed Loads (BLC 16 : Wind Load (180))

	Member Label	Direction	Start Magnitude[k/ft,...	End Magnitude[k/ft,F...	Start Location[ft,%]	End Location[ft,%]
1	Standoff6	Y	.005	.005	0	0
2	Standoff5	Y	.005	.005	0	0
3	Standoff4	Y	.005	.005	0	0
4	Standoff3	Y	.005	.005	0	0
5	Standoff2	Y	.005	.005	0	0
6	Standoff1	Y	.005	.005	0	0
7	SUPPORT2	Y	.013	.013	0	0
8	SUPPORT1	Y	.013	.013	0	0
9	Rail3	Y	.004	.004	0	0
10	Rail2	Y	.013	.013	0	0
11	Rail1	Y	.013	.013	0	0
12	RUNG6	Y	.001	.001	0	0
13	RUNG5	Y	.001	.001	0	0
14	RUNG4	Y	.001	.001	0	0
15	RUNG3	Y	.001	.001	0	0
16	RUNG2	Y	.001	.001	0	0
17	RUNG1	Y	.001	.001	0	0
18	PLATE3	Y	.001	.001	0	0
19	PLATE2	Y	.001	.001	0	0
20	PLATE1	Y	.001	.001	0	0
21	MP GAMMA6	Y	.012	.012	0	0
22	MP GAMMA5	Y	.012	.012	0	0
23	MP GAMMA4	Y	.012	.012	0	0
24	MP GAMMA3	Y	.012	.012	0	0

Member Distributed Loads (BLC 16 : Wind Load (180)) (Continued)

	Member Label	Direction	Start Magnitude[k/ft,...	End Magnitude[k/ft,F...	Start Location[ft,%]	End Location[ft,%]
25	MP GAMMA2	Y	.012	.012	0	0
26	MP GAMMA1	Y	.012	.012	0	0
27	MP BETA6	Y	.012	.012	0	0
28	MP BETA5	Y	.012	.012	0	0
29	MP BETA4	Y	.012	.012	0	0
30	MP BETA3	Y	.012	.012	0	0
31	MP BETA2	Y	.012	.012	0	0
32	MP BETA1	Y	.012	.012	0	0
33	MP ALPHA8	Y	.012	.012	0	0
34	MP ALPHA7	Y	.012	.012	0	0
35	MP ALPHA6	Y	.012	.012	0	0
36	MP ALPHA5	Y	.012	.012	0	0
37	MP ALPHA4	Y	.012	.012	0	0
38	MP ALPHA3	Y	.012	.012	0	0
39	MP ALPHA2	Y	.012	.012	0	0
40	MP ALPHA1	Y	.012	.012	0	0
41	LADDER2	Y	.004	.004	0	0
42	LADDER1	Y	.004	.004	0	0
43	FACE3	Y	.01	.01	0	0
44	FACE2	Y	.01	.01	0	0
45	FACE1	Y	.01	.01	0	0
46	CORNER3	Y	.013	.013	0	0
47	CORNER2	Y	.013	.013	0	0
48	CORNER1	Y	.013	.013	0	0
49	M95	Y	.013	.013	0	0
50	M96	Y	.013	.013	0	0
51	M103	Y	.004	.004	0	0
52	M104	Y	.013	.013	0	0
53	M105	Y	.013	.013	0	0
54	M106	Y	.001	.001	0	0
55	M107	Y	.001	.001	0	0
56	M108	Y	.001	.001	0	0

Member Distributed Loads (BLC 17 : Ice Wind Load (180))

	Member Label	Direction	Start Magnitude[k/ft,...	End Magnitude[k/ft,F...	Start Location[ft,%]	End Location[ft,%]
1	Standoff6	Y	.003	.003	0	0
2	Standoff5	Y	.003	.003	0	0
3	Standoff4	Y	.003	.003	0	0
4	Standoff3	Y	.003	.003	0	0
5	Standoff2	Y	.003	.003	0	0
6	Standoff1	Y	.003	.003	0	0
7	SUPPORT2	Y	.005	.005	0	0
8	SUPPORT1	Y	.005	.005	0	0
9	Rail3	Y	.002	.002	0	0
10	Rail2	Y	.006	.006	0	0
11	Rail1	Y	.006	.006	0	0
12	RUNG6	Y	.001	.001	0	0
13	RUNG5	Y	.001	.001	0	0
14	RUNG4	Y	.001	.001	0	0
15	RUNG3	Y	.001	.001	0	0
16	RUNG2	Y	.001	.001	0	0
17	RUNG1	Y	.001	.001	0	0
18	PLATE3	Y	.002	.002	0	0
19	PLATE2	Y	.002	.002	0	0
20	PLATE1	Y	.002	.002	0	0
21	MP GAMMA6	Y	.004	.004	0	0

Member Distributed Loads (BLC 17 : Ice Wind Load (180)) (Continued)

	Member Label	Direction	Start Magnitude[k/ft,...	End Magnitude[k/ft,F...	Start Location[ft,%]	End Location[ft,%]
22	MP GAMMA5	Y	.004	.004	0	0
23	MP GAMMA4	Y	.004	.004	0	0
24	MP GAMMA3	Y	.004	.004	0	0
25	MP GAMMA2	Y	.004	.004	0	0
26	MP GAMMA1	Y	.004	.004	0	0
27	MP BETA6	Y	.004	.004	0	0
28	MP BETA5	Y	.004	.004	0	0
29	MP BETA4	Y	.004	.004	0	0
30	MP BETA3	Y	.004	.004	0	0
31	MP BETA2	Y	.004	.004	0	0
32	MP BETA1	Y	.004	.004	0	0
33	MP ALPHA8	Y	.004	.004	0	0
34	MP ALPHA7	Y	.004	.004	0	0
35	MP ALPHA6	Y	.004	.004	0	0
36	MP ALPHA5	Y	.004	.004	0	0
37	MP ALPHA4	Y	.004	.004	0	0
38	MP ALPHA3	Y	.004	.004	0	0
39	MP ALPHA2	Y	.004	.004	0	0
40	MP ALPHA1	Y	.004	.004	0	0
41	LADDER2	Y	.003	.003	0	0
42	LADDER1	Y	.003	.003	0	0
43	FACE3	Y	.005	.005	0	0
44	FACE2	Y	.009	.009	0	0
45	FACE1	Y	.009	.009	0	0
46	CORNER3	Y	.005	.005	0	0
47	CORNER2	Y	.005	.005	0	0
48	CORNER1	Y	.005	.005	0	0
49	M95	Y	.005	.005	0	0
50	M96	Y	.005	.005	0	0
51	M103	Y	.002	.002	0	0
52	M104	Y	.006	.006	0	0
53	M105	Y	.006	.006	0	0
54	M106	Y	.002	.002	0	0
55	M107	Y	.002	.002	0	0
56	M108	Y	.002	.002	0	0

Member Distributed Loads (BLC 18 : Wind Load (210))

	Member Label	Direction	Start Magnitude[k/ft,...	End Magnitude[k/ft,F...	Start Location[ft,%]	End Location[ft,%]
1	Standoff6	Y	.004	.004	0	0
2	Standoff5	Y	.004	.004	0	0
3	Standoff4	Y	.004	.004	0	0
4	Standoff3	Y	.004	.004	0	0
5	Standoff2	Y	.004	.004	0	0
6	Standoff1	Y	.004	.004	0	0
7	SUPPORT2	Y	.011	.011	0	0
8	SUPPORT1	Y	.011	.011	0	0
9	Rail3	Y	.003	.003	0	0
10	Rail2	Y	.011	.011	0	0
11	Rail1	Y	.011	.011	0	0
12	RUNG6	Y	.000866	.000866	0	0
13	RUNG5	Y	.000866	.000866	0	0
14	RUNG4	Y	.000866	.000866	0	0
15	RUNG3	Y	.000866	.000866	0	0
16	RUNG2	Y	.000866	.000866	0	0
17	RUNG1	Y	.000866	.000866	0	0
18	PLATE3	Y	.000866	.000866	0	0

Member Distributed Loads (BLC 18 : Wind Load (210)) (Continued)

	Member Label	Direction	Start Magnitude[k/ft,...	End Magnitude[k/ft,F...	Start Location[ft,%]	End Location[ft,%]
19	PLATE2	Y	.000866	.000866	0	0
20	PLATE1	Y	.000866	.000866	0	0
21	MP GAMMA6	Y	.01	.01	0	0
22	MP GAMMA5	Y	.01	.01	0	0
23	MP GAMMA4	Y	.01	.01	0	0
24	MP GAMMA3	Y	.01	.01	0	0
25	MP GAMMA2	Y	.01	.01	0	0
26	MP GAMMA1	Y	.01	.01	0	0
27	MP BETA6	Y	.01	.01	0	0
28	MP BETA5	Y	.01	.01	0	0
29	MP BETA4	Y	.01	.01	0	0
30	MP BETA3	Y	.01	.01	0	0
31	MP BETA2	Y	.01	.01	0	0
32	MP BETA1	Y	.01	.01	0	0
33	MP ALPHA8	Y	.01	.01	0	0
34	MP ALPHA7	Y	.01	.01	0	0
35	MP ALPHA6	Y	.01	.01	0	0
36	MP ALPHA5	Y	.01	.01	0	0
37	MP ALPHA4	Y	.01	.01	0	0
38	MP ALPHA3	Y	.01	.01	0	0
39	MP ALPHA2	Y	.01	.01	0	0
40	MP ALPHA1	Y	.01	.01	0	0
41	LADDER2	Y	.003	.003	0	0
42	LADDER1	Y	.003	.003	0	0
43	FACE3	Y	.009	.009	0	0
44	FACE2	Y	.009	.009	0	0
45	FACE1	Y	.009	.009	0	0
46	CORNER3	Y	.011	.011	0	0
47	CORNER2	Y	.011	.011	0	0
48	CORNER1	Y	.011	.011	0	0
49	Standoff6	X	.003	.003	0	0
50	Standoff5	X	.003	.003	0	0
51	Standoff4	X	.003	.003	0	0
52	Standoff3	X	.003	.003	0	0
53	Standoff2	X	.003	.003	0	0
54	Standoff1	X	.003	.003	0	0
55	SUPPORT2	X	.006	.006	0	0
56	SUPPORT1	X	.006	.006	0	0
57	Rail3	X	.002	.002	0	0
58	Rail2	X	.006	.006	0	0
59	Rail1	X	.006	.006	0	0
60	RUNG6	X	.0005	.0005	0	0
61	RUNG5	X	.0005	.0005	0	0
62	RUNG4	X	.0005	.0005	0	0
63	RUNG3	X	.0005	.0005	0	0
64	RUNG2	X	.0005	.0005	0	0
65	RUNG1	X	.0005	.0005	0	0
66	PLATE3	X	.0005	.0005	0	0
67	PLATE2	X	.0005	.0005	0	0
68	PLATE1	X	.0005	.0005	0	0
69	MP GAMMA6	X	.006	.006	0	0
70	MP GAMMA5	X	.006	.006	0	0
71	MP GAMMA4	X	.006	.006	0	0
72	MP GAMMA3	X	.006	.006	0	0
73	MP GAMMA2	X	.006	.006	0	0
74	MP GAMMA1	X	.006	.006	0	0
75	MP BETA6	X	.006	.006	0	0

Member Distributed Loads (BLC 18 : Wind Load (210)) (Continued)

	Member Label	Direction	Start Magnitude[k/ft,...	End Magnitude[k/ft,F...	Start Location[ft,%]	End Location[ft,%]
76	MP BETA5	X	.006	.006	0	0
77	MP BETA4	X	.006	.006	0	0
78	MP BETA3	X	.006	.006	0	0
79	MP BETA2	X	.006	.006	0	0
80	MP BETA1	X	.006	.006	0	0
81	MP ALPHA8	X	.006	.006	0	0
82	MP ALPHA7	X	.006	.006	0	0
83	MP ALPHA6	X	.006	.006	0	0
84	MP ALPHA5	X	.006	.006	0	0
85	MP ALPHA4	X	.006	.006	0	0
86	MP ALPHA3	X	.006	.006	0	0
87	MP ALPHA2	X	.006	.006	0	0
88	MP ALPHA1	X	.006	.006	0	0
89	LADDER2	X	.002	.002	0	0
90	LADDER1	X	.002	.002	0	0
91	FACE3	X	.005	.005	0	0
92	FACE2	X	.005	.005	0	0
93	FACE1	X	.005	.005	0	0
94	CORNER3	X	.006	.006	0	0
95	CORNER2	X	.006	.006	0	0
96	CORNER1	X	.006	.006	0	0
97	M95	Y	.011	.011	0	0
98	M95	X	.006	.006	0	0
99	M96	Y	.011	.011	0	0
100	M96	X	.006	.006	0	0
101	M103	Y	.003	.003	0	0
102	M103	X	.002	.002	0	0
103	M104	Y	.011	.011	0	0
104	M104	X	.006	.006	0	0
105	M105	Y	.011	.011	0	0
106	M105	X	.006	.006	0	0
107	M106	Y	.000866	.000866	0	0
108	M106	X	.0005	.0005	0	0
109	M107	Y	.000866	.000866	0	0
110	M107	X	.0005	.0005	0	0
111	M108	Y	.000866	.000866	0	0
112	M108	X	.0005	.0005	0	0

Member Distributed Loads (BLC 19 : Ice Wind Load (210))

	Member Label	Direction	Start Magnitude[k/ft,...	End Magnitude[k/ft,F...	Start Location[ft,%]	End Location[ft,%]
1	Standoff6	Y	.003	.003	0	0
2	Standoff5	Y	.003	.003	0	0
3	Standoff4	Y	.003	.003	0	0
4	Standoff3	Y	.003	.003	0	0
5	Standoff2	Y	.003	.003	0	0
6	Standoff1	Y	.003	.003	0	0
7	SUPPORT2	Y	.004	.004	0	0
8	SUPPORT1	Y	.004	.004	0	0
9	Rail3	Y	.002	.002	0	0
10	Rail2	Y	.005	.005	0	0
11	Rail1	Y	.005	.005	0	0
12	RUNG6	Y	.000866	.000866	0	0
13	RUNG5	Y	.000866	.000866	0	0
14	RUNG4	Y	.000866	.000866	0	0
15	RUNG3	Y	.000866	.000866	0	0
16	RUNG2	Y	.000866	.000866	0	0

Member Distributed Loads (BLC 19 : Ice Wind Load (210)) (Continued)

	Member Label	Direction	Start Magnitude[k/ft,...	End Magnitude[k/ft,F...	Start Location[ft,%]	End Location[ft,%]
17	RUNG1	Y	.000866	.000866	0	0
18	PLATE3	Y	.002	.002	0	0
19	PLATE2	Y	.002	.002	0	0
20	PLATE1	Y	.002	.002	0	0
21	MP GAMMA6	Y	.003	.003	0	0
22	MP GAMMA5	Y	.003	.003	0	0
23	MP GAMMA4	Y	.003	.003	0	0
24	MP GAMMA3	Y	.003	.003	0	0
25	MP GAMMA2	Y	.003	.003	0	0
26	MP GAMMA1	Y	.003	.003	0	0
27	MP BETA6	Y	.003	.003	0	0
28	MP BETA5	Y	.003	.003	0	0
29	MP BETA4	Y	.003	.003	0	0
30	MP BETA3	Y	.003	.003	0	0
31	MP BETA2	Y	.003	.003	0	0
32	MP BETA1	Y	.003	.003	0	0
33	MP ALPHA8	Y	.003	.003	0	0
34	MP ALPHA7	Y	.003	.003	0	0
35	MP ALPHA6	Y	.003	.003	0	0
36	MP ALPHA5	Y	.003	.003	0	0
37	MP ALPHA4	Y	.003	.003	0	0
38	MP ALPHA3	Y	.003	.003	0	0
39	MP ALPHA2	Y	.003	.003	0	0
40	MP ALPHA1	Y	.003	.003	0	0
41	LADDER2	Y	.003	.003	0	0
42	LADDER1	Y	.003	.003	0	0
43	FACE3	Y	.004	.004	0	0
44	FACE2	Y	.008	.008	0	0
45	FACE1	Y	.008	.008	0	0
46	CORNER3	Y	.004	.004	0	0
47	CORNER2	Y	.004	.004	0	0
48	CORNER1	Y	.004	.004	0	0
49	Standoff6	X	.002	.002	0	0
50	Standoff5	X	.002	.002	0	0
51	Standoff4	X	.002	.002	0	0
52	Standoff3	X	.002	.002	0	0
53	Standoff2	X	.002	.002	0	0
54	Standoff1	X	.002	.002	0	0
55	SUPPORT2	X	.003	.003	0	0
56	SUPPORT1	X	.003	.003	0	0
57	Rail3	X	.001	.001	0	0
58	Rail2	X	.003	.003	0	0
59	Rail1	X	.003	.003	0	0
60	RUNG6	X	.0005	.0005	0	0
61	RUNG5	X	.0005	.0005	0	0
62	RUNG4	X	.0005	.0005	0	0
63	RUNG3	X	.0005	.0005	0	0
64	RUNG2	X	.0005	.0005	0	0
65	RUNG1	X	.0005	.0005	0	0
66	PLATE3	X	.001	.001	0	0
67	PLATE2	X	.001	.001	0	0
68	PLATE1	X	.001	.001	0	0
69	MP GAMMA6	X	.002	.002	0	0
70	MP GAMMA5	X	.002	.002	0	0
71	MP GAMMA4	X	.002	.002	0	0
72	MP GAMMA3	X	.002	.002	0	0
73	MP GAMMA2	X	.002	.002	0	0

Member Distributed Loads (BLC 19 : Ice Wind Load (210)) (Continued)

	Member Label	Direction	Start Magnitude[k/ft,...	End Magnitude[k/ft,F...	Start Location[ft,%]	End Location[ft,%]
74	MP GAMMA1	X	.002	.002	0	0
75	MP BETA6	X	.002	.002	0	0
76	MP BETA5	X	.002	.002	0	0
77	MP BETA4	X	.002	.002	0	0
78	MP BETA3	X	.002	.002	0	0
79	MP BETA2	X	.002	.002	0	0
80	MP BETA1	X	.002	.002	0	0
81	MP ALPHA8	X	.002	.002	0	0
82	MP ALPHA7	X	.002	.002	0	0
83	MP ALPHA6	X	.002	.002	0	0
84	MP ALPHA5	X	.002	.002	0	0
85	MP ALPHA4	X	.002	.002	0	0
86	MP ALPHA3	X	.002	.002	0	0
87	MP ALPHA2	X	.002	.002	0	0
88	MP ALPHA1	X	.002	.002	0	0
89	LADDER2	X	.002	.002	0	0
90	LADDER1	X	.002	.002	0	0
91	FACE3	X	.003	.003	0	0
92	FACE2	X	.004	.004	0	0
93	FACE1	X	.004	.004	0	0
94	CORNER3	X	.003	.003	0	0
95	CORNER2	X	.003	.003	0	0
96	CORNER1	X	.003	.003	0	0
97	M95	Y	.004	.004	0	0
98	M95	X	.003	.003	0	0
99	M96	Y	.004	.004	0	0
100	M96	X	.003	.003	0	0
101	M103	Y	.002	.002	0	0
102	M103	X	.001	.001	0	0
103	M104	Y	.005	.005	0	0
104	M104	X	.003	.003	0	0
105	M105	Y	.005	.005	0	0
106	M105	X	.003	.003	0	0
107	M106	Y	.002	.002	0	0
108	M106	X	.001	.001	0	0
109	M107	Y	.002	.002	0	0
110	M107	X	.001	.001	0	0
111	M108	Y	.002	.002	0	0
112	M108	X	.001	.001	0	0

Member Distributed Loads (BLC 20 : Wind Load (240))

	Member Label	Direction	Start Magnitude[k/ft,...	End Magnitude[k/ft,F...	Start Location[ft,%]	End Location[ft,%]
1	Standoff6	Y	.003	.003	0	0
2	Standoff5	Y	.003	.003	0	0
3	Standoff4	Y	.003	.003	0	0
4	Standoff3	Y	.003	.003	0	0
5	Standoff2	Y	.003	.003	0	0
6	Standoff1	Y	.003	.003	0	0
7	SUPPORT2	Y	.006	.006	0	0
8	SUPPORT1	Y	.006	.006	0	0
9	Rail3	Y	.002	.002	0	0
10	Rail2	Y	.006	.006	0	0
11	Rail1	Y	.006	.006	0	0
12	RUNG6	Y	.0005	.0005	0	0
13	RUNG5	Y	.0005	.0005	0	0
14	RUNG4	Y	.0005	.0005	0	0

Member Distributed Loads (BLC 20 : Wind Load (240)) (Continued)

	Member Label	Direction	Start Magnitude[k/ft,...	End Magnitude[k/ft,F...	Start Location[ft,%]	End Location[ft,%]
15	RUNG3	Y	.0005	.0005	0	0
16	RUNG2	Y	.0005	.0005	0	0
17	RUNG1	Y	.0005	.0005	0	0
18	PLATE3	Y	.0005	.0005	0	0
19	PLATE2	Y	.0005	.0005	0	0
20	PLATE1	Y	.0005	.0005	0	0
21	MP GAMMA6	Y	.006	.006	0	0
22	MP GAMMA5	Y	.006	.006	0	0
23	MP GAMMA4	Y	.006	.006	0	0
24	MP GAMMA3	Y	.006	.006	0	0
25	MP GAMMA2	Y	.006	.006	0	0
26	MP GAMMA1	Y	.006	.006	0	0
27	MP BETA6	Y	.006	.006	0	0
28	MP BETA5	Y	.006	.006	0	0
29	MP BETA4	Y	.006	.006	0	0
30	MP BETA3	Y	.006	.006	0	0
31	MP BETA2	Y	.006	.006	0	0
32	MP BETA1	Y	.006	.006	0	0
33	MP ALPHA8	Y	.006	.006	0	0
34	MP ALPHA7	Y	.006	.006	0	0
35	MP ALPHA6	Y	.006	.006	0	0
36	MP ALPHA5	Y	.006	.006	0	0
37	MP ALPHA4	Y	.006	.006	0	0
38	MP ALPHA3	Y	.006	.006	0	0
39	MP ALPHA2	Y	.006	.006	0	0
40	MP ALPHA1	Y	.006	.006	0	0
41	LADDER2	Y	.002	.002	0	0
42	LADDER1	Y	.002	.002	0	0
43	FACE3	Y	.005	.005	0	0
44	FACE2	Y	.005	.005	0	0
45	FACE1	Y	.005	.005	0	0
46	CORNER3	Y	.006	.006	0	0
47	CORNER2	Y	.006	.006	0	0
48	CORNER1	Y	.006	.006	0	0
49	Standoff6	X	.004	.004	0	0
50	Standoff5	X	.004	.004	0	0
51	Standoff4	X	.004	.004	0	0
52	Standoff3	X	.004	.004	0	0
53	Standoff2	X	.004	.004	0	0
54	Standoff1	X	.004	.004	0	0
55	SUPPORT2	X	.011	.011	0	0
56	SUPPORT1	X	.011	.011	0	0
57	Rail3	X	.003	.003	0	0
58	Rail2	X	.011	.011	0	0
59	Rail1	X	.011	.011	0	0
60	RUNG6	X	.000866	.000866	0	0
61	RUNG5	X	.000866	.000866	0	0
62	RUNG4	X	.000866	.000866	0	0
63	RUNG3	X	.000866	.000866	0	0
64	RUNG2	X	.000866	.000866	0	0
65	RUNG1	X	.000866	.000866	0	0
66	PLATE3	X	.000866	.000866	0	0
67	PLATE2	X	.000866	.000866	0	0
68	PLATE1	X	.000866	.000866	0	0
69	MP GAMMA6	X	.01	.01	0	0
70	MP GAMMA5	X	.01	.01	0	0
71	MP GAMMA4	X	.01	.01	0	0

Member Distributed Loads (BLC 20 : Wind Load (240)) (Continued)

	Member Label	Direction	Start Magnitude[k/ft,...	End Magnitude[k/ft,F...	Start Location[ft,%]	End Location[ft,%]
72	MP GAMMA3	X	.01	.01	0	0
73	MP GAMMA2	X	.01	.01	0	0
74	MP GAMMA1	X	.01	.01	0	0
75	MP BETA6	X	.01	.01	0	0
76	MP BETA5	X	.01	.01	0	0
77	MP BETA4	X	.01	.01	0	0
78	MP BETA3	X	.01	.01	0	0
79	MP BETA2	X	.01	.01	0	0
80	MP BETA1	X	.01	.01	0	0
81	MP ALPHA8	X	.01	.01	0	0
82	MP ALPHA7	X	.01	.01	0	0
83	MP ALPHA6	X	.01	.01	0	0
84	MP ALPHA5	X	.01	.01	0	0
85	MP ALPHA4	X	.01	.01	0	0
86	MP ALPHA3	X	.01	.01	0	0
87	MP ALPHA2	X	.01	.01	0	0
88	MP ALPHA1	X	.01	.01	0	0
89	LADDER2	X	.003	.003	0	0
90	LADDER1	X	.003	.003	0	0
91	FACE3	X	.009	.009	0	0
92	FACE2	X	.009	.009	0	0
93	FACE1	X	.009	.009	0	0
94	CORNER3	X	.011	.011	0	0
95	CORNER2	X	.011	.011	0	0
96	CORNER1	X	.011	.011	0	0
97	M95	Y	.006	.006	0	0
98	M95	X	.011	.011	0	0
99	M96	Y	.006	.006	0	0
100	M96	X	.011	.011	0	0
101	M103	Y	.002	.002	0	0
102	M103	X	.003	.003	0	0
103	M104	Y	.006	.006	0	0
104	M104	X	.011	.011	0	0
105	M105	Y	.006	.006	0	0
106	M105	X	.011	.011	0	0
107	M106	Y	.0005	.0005	0	0
108	M106	X	.000866	.000866	0	0
109	M107	Y	.0005	.0005	0	0
110	M107	X	.000866	.000866	0	0
111	M108	Y	.0005	.0005	0	0
112	M108	X	.000866	.000866	0	0

Member Distributed Loads (BLC 21 : Ice Wind Load (240))

	Member Label	Direction	Start Magnitude[k/ft,...	End Magnitude[k/ft,F...	Start Location[ft,%]	End Location[ft,%]
1	Standoff6	Y	.002	.002	0	0
2	Standoff5	Y	.002	.002	0	0
3	Standoff4	Y	.002	.002	0	0
4	Standoff3	Y	.002	.002	0	0
5	Standoff2	Y	.002	.002	0	0
6	Standoff1	Y	.002	.002	0	0
7	SUPPORT2	Y	.003	.003	0	0
8	SUPPORT1	Y	.003	.003	0	0
9	Rail3	Y	.001	.001	0	0
10	Rail2	Y	.003	.003	0	0
11	Rail1	Y	.003	.003	0	0
12	RUNG6	Y	.0005	.0005	0	0

Member Distributed Loads (BLC 21 : Ice Wind Load (240)) (Continued)

	Member Label	Direction	Start Magnitude[k/ft,...	End Magnitude[k/ft,F...	Start Location[ft,%]	End Location[ft,%]
13	RUNG5	Y	.0005	.0005	0	0
14	RUNG4	Y	.0005	.0005	0	0
15	RUNG3	Y	.0005	.0005	0	0
16	RUNG2	Y	.0005	.0005	0	0
17	RUNG1	Y	.0005	.0005	0	0
18	PLATE3	Y	.001	.001	0	0
19	PLATE2	Y	.001	.001	0	0
20	PLATE1	Y	.001	.001	0	0
21	MP GAMMA6	Y	.002	.002	0	0
22	MP GAMMA5	Y	.002	.002	0	0
23	MP GAMMA4	Y	.002	.002	0	0
24	MP GAMMA3	Y	.002	.002	0	0
25	MP GAMMA2	Y	.002	.002	0	0
26	MP GAMMA1	Y	.002	.002	0	0
27	MP BETA6	Y	.002	.002	0	0
28	MP BETA5	Y	.002	.002	0	0
29	MP BETA4	Y	.002	.002	0	0
30	MP BETA3	Y	.002	.002	0	0
31	MP BETA2	Y	.002	.002	0	0
32	MP BETA1	Y	.002	.002	0	0
33	MP ALPHA8	Y	.002	.002	0	0
34	MP ALPHA7	Y	.002	.002	0	0
35	MP ALPHA6	Y	.002	.002	0	0
36	MP ALPHA5	Y	.002	.002	0	0
37	MP ALPHA4	Y	.002	.002	0	0
38	MP ALPHA3	Y	.002	.002	0	0
39	MP ALPHA2	Y	.002	.002	0	0
40	MP ALPHA1	Y	.002	.002	0	0
41	LADDER2	Y	.002	.002	0	0
42	LADDER1	Y	.002	.002	0	0
43	FACE3	Y	.003	.003	0	0
44	FACE2	Y	.004	.004	0	0
45	FACE1	Y	.004	.004	0	0
46	CORNER3	Y	.003	.003	0	0
47	CORNER2	Y	.003	.003	0	0
48	CORNER1	Y	.003	.003	0	0
49	Standoff6	X	.003	.003	0	0
50	Standoff5	X	.003	.003	0	0
51	Standoff4	X	.003	.003	0	0
52	Standoff3	X	.003	.003	0	0
53	Standoff2	X	.003	.003	0	0
54	Standoff1	X	.003	.003	0	0
55	SUPPORT2	X	.004	.004	0	0
56	SUPPORT1	X	.004	.004	0	0
57	Rail3	X	.002	.002	0	0
58	Rail2	X	.005	.005	0	0
59	Rail1	X	.005	.005	0	0
60	RUNG6	X	.000866	.000866	0	0
61	RUNG5	X	.000866	.000866	0	0
62	RUNG4	X	.000866	.000866	0	0
63	RUNG3	X	.000866	.000866	0	0
64	RUNG2	X	.000866	.000866	0	0
65	RUNG1	X	.000866	.000866	0	0
66	PLATE3	X	.002	.002	0	0
67	PLATE2	X	.002	.002	0	0
68	PLATE1	X	.002	.002	0	0
69	MP GAMMA6	X	.003	.003	0	0

Member Distributed Loads (BLC 21 : Ice Wind Load (240)) (Continued)

	Member Label	Direction	Start Magnitude[k/ft,...	End Magnitude[k/ft,F...	Start Location[ft,%]	End Location[ft,%]
70	MP GAMMA5	X	.003	.003	0	0
71	MP GAMMA4	X	.003	.003	0	0
72	MP GAMMA3	X	.003	.003	0	0
73	MP GAMMA2	X	.003	.003	0	0
74	MP GAMMA1	X	.003	.003	0	0
75	MP BETA6	X	.003	.003	0	0
76	MP BETA5	X	.003	.003	0	0
77	MP BETA4	X	.003	.003	0	0
78	MP BETA3	X	.003	.003	0	0
79	MP BETA2	X	.003	.003	0	0
80	MP BETA1	X	.003	.003	0	0
81	MP ALPHA8	X	.003	.003	0	0
82	MP ALPHA7	X	.003	.003	0	0
83	MP ALPHA6	X	.003	.003	0	0
84	MP ALPHA5	X	.003	.003	0	0
85	MP ALPHA4	X	.003	.003	0	0
86	MP ALPHA3	X	.003	.003	0	0
87	MP ALPHA2	X	.003	.003	0	0
88	MP ALPHA1	X	.003	.003	0	0
89	LADDER2	X	.003	.003	0	0
90	LADDER1	X	.003	.003	0	0
91	FACE3	X	.004	.004	0	0
92	FACE2	X	.008	.008	0	0
93	FACE1	X	.008	.008	0	0
94	CORNER3	X	.004	.004	0	0
95	CORNER2	X	.004	.004	0	0
96	CORNER1	X	.004	.004	0	0
97	M95	Y	.003	.003	0	0
98	M95	X	.004	.004	0	0
99	M96	Y	.003	.003	0	0
100	M96	X	.004	.004	0	0
101	M103	Y	.001	.001	0	0
102	M103	X	.002	.002	0	0
103	M104	Y	.003	.003	0	0
104	M104	X	.005	.005	0	0
105	M105	Y	.003	.003	0	0
106	M105	X	.005	.005	0	0
107	M106	Y	.001	.001	0	0
108	M106	X	.002	.002	0	0
109	M107	Y	.001	.001	0	0
110	M107	X	.002	.002	0	0
111	M108	Y	.001	.001	0	0
112	M108	X	.002	.002	0	0

Member Distributed Loads (BLC 22 : Wind Load (270))

	Member Label	Direction	Start Magnitude[k/ft,...	End Magnitude[k/ft,F...	Start Location[ft,%]	End Location[ft,%]
1	Standoff6	X	.005	.005	0	0
2	Standoff5	X	.005	.005	0	0
3	Standoff4	X	.005	.005	0	0
4	Standoff3	X	.005	.005	0	0
5	Standoff2	X	.005	.005	0	0
6	Standoff1	X	.005	.005	0	0
7	SUPPORT2	X	.013	.013	0	0
8	SUPPORT1	X	.013	.013	0	0
9	Rail3	X	.004	.004	0	0
10	Rail2	X	.013	.013	0	0

Member Distributed Loads (BLC 22 : Wind Load (270)) (Continued)

	Member Label	Direction	Start Magnitude[k/ft,...	End Magnitude[k/ft,F...	Start Location[ft,%]	End Location[ft,%]
11	Rail1	X	.013	.013	0	0
12	RUNG6	X	.001	.001	0	0
13	RUNG5	X	.001	.001	0	0
14	RUNG4	X	.001	.001	0	0
15	RUNG3	X	.001	.001	0	0
16	RUNG2	X	.001	.001	0	0
17	RUNG1	X	.001	.001	0	0
18	PLATE3	X	.001	.001	0	0
19	PLATE2	X	.001	.001	0	0
20	PLATE1	X	.001	.001	0	0
21	MP GAMMA6	X	.012	.012	0	0
22	MP GAMMA5	X	.012	.012	0	0
23	MP GAMMA4	X	.012	.012	0	0
24	MP GAMMA3	X	.012	.012	0	0
25	MP GAMMA2	X	.012	.012	0	0
26	MP GAMMA1	X	.012	.012	0	0
27	MP BETA6	X	.012	.012	0	0
28	MP BETA5	X	.012	.012	0	0
29	MP BETA4	X	.012	.012	0	0
30	MP BETA3	X	.012	.012	0	0
31	MP BETA2	X	.012	.012	0	0
32	MP BETA1	X	.012	.012	0	0
33	MP ALPHA8	X	.012	.012	0	0
34	MP ALPHA7	X	.012	.012	0	0
35	MP ALPHA6	X	.012	.012	0	0
36	MP ALPHA5	X	.012	.012	0	0
37	MP ALPHA4	X	.012	.012	0	0
38	MP ALPHA3	X	.012	.012	0	0
39	MP ALPHA2	X	.012	.012	0	0
40	MP ALPHA1	X	.012	.012	0	0
41	LADDER2	X	.004	.004	0	0
42	LADDER1	X	.004	.004	0	0
43	FACE3	X	.01	.01	0	0
44	FACE2	X	.01	.01	0	0
45	FACE1	X	.01	.01	0	0
46	CORNER3	X	.013	.013	0	0
47	CORNER2	X	.013	.013	0	0
48	CORNER1	X	.013	.013	0	0
49	M95	X	.013	.013	0	0
50	M96	X	.013	.013	0	0
51	M103	X	.004	.004	0	0
52	M104	X	.013	.013	0	0
53	M105	X	.013	.013	0	0
54	M106	X	.001	.001	0	0
55	M107	X	.001	.001	0	0
56	M108	X	.001	.001	0	0

Member Distributed Loads (BLC 23 : Ice Wind Load (270))

	Member Label	Direction	Start Magnitude[k/ft,...	End Magnitude[k/ft,F...	Start Location[ft,%]	End Location[ft,%]
1	Standoff6	X	.003	.003	0	0
2	Standoff5	X	.003	.003	0	0
3	Standoff4	X	.003	.003	0	0
4	Standoff3	X	.003	.003	0	0
5	Standoff2	X	.003	.003	0	0
6	Standoff1	X	.003	.003	0	0
7	SUPPORT2	X	.005	.005	0	0

Member Distributed Loads (BLC 23 : Ice Wind Load (270)) (Continued)

	Member Label	Direction	Start Magnitude[k/ft,...	End Magnitude[k/ft,F...	Start Location[ft,%]	End Location[ft,%]
8	SUPPORT1	X	.005	.005	0	0
9	Rail3	X	.002	.002	0	0
10	Rail2	X	.006	.006	0	0
11	Rail1	X	.006	.006	0	0
12	RUNG6	X	.001	.001	0	0
13	RUNG5	X	.001	.001	0	0
14	RUNG4	X	.001	.001	0	0
15	RUNG3	X	.001	.001	0	0
16	RUNG2	X	.001	.001	0	0
17	RUNG1	X	.001	.001	0	0
18	PLATE3	X	.002	.002	0	0
19	PLATE2	X	.002	.002	0	0
20	PLATE1	X	.002	.002	0	0
21	MP GAMMA6	X	.004	.004	0	0
22	MP GAMMA5	X	.004	.004	0	0
23	MP GAMMA4	X	.004	.004	0	0
24	MP GAMMA3	X	.004	.004	0	0
25	MP GAMMA2	X	.004	.004	0	0
26	MP GAMMA1	X	.004	.004	0	0
27	MP BETA6	X	.004	.004	0	0
28	MP BETA5	X	.004	.004	0	0
29	MP BETA4	X	.004	.004	0	0
30	MP BETA3	X	.004	.004	0	0
31	MP BETA2	X	.004	.004	0	0
32	MP BETA1	X	.004	.004	0	0
33	MP ALPHA8	X	.004	.004	0	0
34	MP ALPHA7	X	.004	.004	0	0
35	MP ALPHA6	X	.004	.004	0	0
36	MP ALPHA5	X	.004	.004	0	0
37	MP ALPHA4	X	.004	.004	0	0
38	MP ALPHA3	X	.004	.004	0	0
39	MP ALPHA2	X	.004	.004	0	0
40	MP ALPHA1	X	.004	.004	0	0
41	LADDER2	X	.003	.003	0	0
42	LADDER1	X	.003	.003	0	0
43	FACE3	X	.005	.005	0	0
44	FACE2	X	.009	.009	0	0
45	FACE1	X	.009	.009	0	0
46	CORNER3	X	.005	.005	0	0
47	CORNER2	X	.005	.005	0	0
48	CORNER1	X	.005	.005	0	0
49	M95	X	.005	.005	0	0
50	M96	X	.005	.005	0	0
51	M103	X	.002	.002	0	0
52	M104	X	.006	.006	0	0
53	M105	X	.006	.006	0	0
54	M106	X	.002	.002	0	0
55	M107	X	.002	.002	0	0
56	M108	X	.002	.002	0	0

Member Distributed Loads (BLC 24 : Wind Load (300))

	Member Label	Direction	Start Magnitude[k/ft,...	End Magnitude[k/ft,F...	Start Location[ft,%]	End Location[ft,%]
1	Standoff6	Y	-.003	-.003	0	0
2	Standoff5	Y	-.003	-.003	0	0
3	Standoff4	Y	-.003	-.003	0	0
4	Standoff3	Y	-.003	-.003	0	0

Member Distributed Loads (BLC 24 : Wind Load (300)) (Continued)

	Member Label	Direction	Start Magnitude[k/ft,...	End Magnitude[k/ft,F...	Start Location[ft,%]	End Location[ft,%]
5	Standoff2	Y	-.003	-.003	0	0
6	Standoff1	Y	-.003	-.003	0	0
7	SUPPORT2	Y	-.006	-.006	0	0
8	SUPPORT1	Y	-.006	-.006	0	0
9	Rail3	Y	-.002	-.002	0	0
10	Rail2	Y	-.006	-.006	0	0
11	Rail1	Y	-.006	-.006	0	0
12	RUNG6	Y	-.0005	-.0005	0	0
13	RUNG5	Y	-.0005	-.0005	0	0
14	RUNG4	Y	-.0005	-.0005	0	0
15	RUNG3	Y	-.0005	-.0005	0	0
16	RUNG2	Y	-.0005	-.0005	0	0
17	RUNG1	Y	-.0005	-.0005	0	0
18	PLATE3	Y	-.0005	-.0005	0	0
19	PLATE2	Y	-.0005	-.0005	0	0
20	PLATE1	Y	-.0005	-.0005	0	0
21	MP GAMMA6	Y	-.006	-.006	0	0
22	MP GAMMA5	Y	-.006	-.006	0	0
23	MP GAMMA4	Y	-.006	-.006	0	0
24	MP GAMMA3	Y	-.006	-.006	0	0
25	MP GAMMA2	Y	-.006	-.006	0	0
26	MP GAMMA1	Y	-.006	-.006	0	0
27	MP BETA6	Y	-.006	-.006	0	0
28	MP BETA5	Y	-.006	-.006	0	0
29	MP BETA4	Y	-.006	-.006	0	0
30	MP BETA3	Y	-.006	-.006	0	0
31	MP BETA2	Y	-.006	-.006	0	0
32	MP BETA1	Y	-.006	-.006	0	0
33	MP ALPHA8	Y	-.006	-.006	0	0
34	MP ALPHA7	Y	-.006	-.006	0	0
35	MP ALPHA6	Y	-.006	-.006	0	0
36	MP ALPHA5	Y	-.006	-.006	0	0
37	MP ALPHA4	Y	-.006	-.006	0	0
38	MP ALPHA3	Y	-.006	-.006	0	0
39	MP ALPHA2	Y	-.006	-.006	0	0
40	MP ALPHA1	Y	-.006	-.006	0	0
41	LADDER2	Y	-.002	-.002	0	0
42	LADDER1	Y	-.002	-.002	0	0
43	FACE3	Y	-.005	-.005	0	0
44	FACE2	Y	-.005	-.005	0	0
45	FACE1	Y	-.005	-.005	0	0
46	CORNER3	Y	-.006	-.006	0	0
47	CORNER2	Y	-.006	-.006	0	0
48	CORNER1	Y	-.006	-.006	0	0
49	Standoff6	X	.004	.004	0	0
50	Standoff5	X	.004	.004	0	0
51	Standoff4	X	.004	.004	0	0
52	Standoff3	X	.004	.004	0	0
53	Standoff2	X	.004	.004	0	0
54	Standoff1	X	.004	.004	0	0
55	SUPPORT2	X	.011	.011	0	0
56	SUPPORT1	X	.011	.011	0	0
57	Rail3	X	.003	.003	0	0
58	Rail2	X	.011	.011	0	0
59	Rail1	X	.011	.011	0	0
60	RUNG6	X	.000866	.000866	0	0
61	RUNG5	X	.000866	.000866	0	0

Member Distributed Loads (BLC 24 : Wind Load (300)) (Continued)

	Member Label	Direction	Start Magnitude[k/ft,...	End Magnitude[k/ft,F...	Start Location[ft,%]	End Location[ft,%]
62	RUNG4	X	.000866	.000866	0	0
63	RUNG3	X	.000866	.000866	0	0
64	RUNG2	X	.000866	.000866	0	0
65	RUNG1	X	.000866	.000866	0	0
66	PLATE3	X	.000866	.000866	0	0
67	PLATE2	X	.000866	.000866	0	0
68	PLATE1	X	.000866	.000866	0	0
69	MP GAMMA6	X	.01	.01	0	0
70	MP GAMMA5	X	.01	.01	0	0
71	MP GAMMA4	X	.01	.01	0	0
72	MP GAMMA3	X	.01	.01	0	0
73	MP GAMMA2	X	.01	.01	0	0
74	MP GAMMA1	X	.01	.01	0	0
75	MP BETA6	X	.01	.01	0	0
76	MP BETA5	X	.01	.01	0	0
77	MP BETA4	X	.01	.01	0	0
78	MP BETA3	X	.01	.01	0	0
79	MP BETA2	X	.01	.01	0	0
80	MP BETA1	X	.01	.01	0	0
81	MP ALPHA8	X	.01	.01	0	0
82	MP ALPHA7	X	.01	.01	0	0
83	MP ALPHA6	X	.01	.01	0	0
84	MP ALPHA5	X	.01	.01	0	0
85	MP ALPHA4	X	.01	.01	0	0
86	MP ALPHA3	X	.01	.01	0	0
87	MP ALPHA2	X	.01	.01	0	0
88	MP ALPHA1	X	.01	.01	0	0
89	LADDER2	X	.003	.003	0	0
90	LADDER1	X	.003	.003	0	0
91	FACE3	X	.009	.009	0	0
92	FACE2	X	.009	.009	0	0
93	FACE1	X	.009	.009	0	0
94	CORNER3	X	.011	.011	0	0
95	CORNER2	X	.011	.011	0	0
96	CORNER1	X	.011	.011	0	0
97	M95	Y	-.006	-.006	0	0
98	M95	X	.011	.011	0	0
99	M96	Y	-.006	-.006	0	0
100	M96	X	.011	.011	0	0
101	M103	Y	-.002	-.002	0	0
102	M103	X	.003	.003	0	0
103	M104	Y	-.006	-.006	0	0
104	M104	X	.011	.011	0	0
105	M105	Y	-.006	-.006	0	0
106	M105	X	.011	.011	0	0
107	M106	Y	-.0005	-.0005	0	0
108	M106	X	.000866	.000866	0	0
109	M107	Y	-.0005	-.0005	0	0
110	M107	X	.000866	.000866	0	0
111	M108	Y	-.0005	-.0005	0	0
112	M108	X	.000866	.000866	0	0

Member Distributed Loads (BLC 25 : Ice Wind Load (300))

	Member Label	Direction	Start Magnitude[k/ft,...	End Magnitude[k/ft,F...	Start Location[ft,%]	End Location[ft,%]
1	Standoff6	Y	-.002	-.002	0	0
2	Standoff5	Y	-.002	-.002	0	0

Member Distributed Loads (BLC 25 : Ice Wind Load (300)) (Continued)

	Member Label	Direction	Start Magnitude[k/ft,...	End Magnitude[k/ft,F...	Start Location[ft,%]	End Location[ft,%]
3	Standoff4	Y	-.002	-.002	0	0
4	Standoff3	Y	-.002	-.002	0	0
5	Standoff2	Y	-.002	-.002	0	0
6	Standoff1	Y	-.002	-.002	0	0
7	SUPPORT2	Y	-.003	-.003	0	0
8	SUPPORT1	Y	-.003	-.003	0	0
9	Rail3	Y	-.001	-.001	0	0
10	Rail2	Y	-.003	-.003	0	0
11	Rail1	Y	-.003	-.003	0	0
12	RUNG6	Y	-.0005	-.0005	0	0
13	RUNG5	Y	-.0005	-.0005	0	0
14	RUNG4	Y	-.0005	-.0005	0	0
15	RUNG3	Y	-.0005	-.0005	0	0
16	RUNG2	Y	-.0005	-.0005	0	0
17	RUNG1	Y	-.0005	-.0005	0	0
18	PLATE3	Y	-.001	-.001	0	0
19	PLATE2	Y	-.001	-.001	0	0
20	PLATE1	Y	-.001	-.001	0	0
21	MP GAMMA6	Y	-.002	-.002	0	0
22	MP GAMMA5	Y	-.002	-.002	0	0
23	MP GAMMA4	Y	-.002	-.002	0	0
24	MP GAMMA3	Y	-.002	-.002	0	0
25	MP GAMMA2	Y	-.002	-.002	0	0
26	MP GAMMA1	Y	-.002	-.002	0	0
27	MP BETA6	Y	-.002	-.002	0	0
28	MP BETA5	Y	-.002	-.002	0	0
29	MP BETA4	Y	-.002	-.002	0	0
30	MP BETA3	Y	-.002	-.002	0	0
31	MP BETA2	Y	-.002	-.002	0	0
32	MP BETA1	Y	-.002	-.002	0	0
33	MP ALPHA8	Y	-.002	-.002	0	0
34	MP ALPHA7	Y	-.002	-.002	0	0
35	MP ALPHA6	Y	-.002	-.002	0	0
36	MP ALPHA5	Y	-.002	-.002	0	0
37	MP ALPHA4	Y	-.002	-.002	0	0
38	MP ALPHA3	Y	-.002	-.002	0	0
39	MP ALPHA2	Y	-.002	-.002	0	0
40	MP ALPHA1	Y	-.002	-.002	0	0
41	LADDER2	Y	-.002	-.002	0	0
42	LADDER1	Y	-.002	-.002	0	0
43	FACE3	Y	-.003	-.003	0	0
44	FACE2	Y	-.004	-.004	0	0
45	FACE1	Y	-.004	-.004	0	0
46	CORNER3	Y	-.003	-.003	0	0
47	CORNER2	Y	-.003	-.003	0	0
48	CORNER1	Y	-.003	-.003	0	0
49	Standoff6	X	.003	.003	0	0
50	Standoff5	X	.003	.003	0	0
51	Standoff4	X	.003	.003	0	0
52	Standoff3	X	.003	.003	0	0
53	Standoff2	X	.003	.003	0	0
54	Standoff1	X	.003	.003	0	0
55	SUPPORT2	X	.004	.004	0	0
56	SUPPORT1	X	.004	.004	0	0
57	Rail3	X	.002	.002	0	0
58	Rail2	X	.005	.005	0	0
59	Rail1	X	.005	.005	0	0

Member Distributed Loads (BLC 25 : Ice Wind Load (300)) (Continued)

	Member Label	Direction	Start Magnitude[k/ft,...	End Magnitude[k/ft,F...	Start Location[ft,%]	End Location[ft,%]
60	RUNG6	X	.000866	.000866	0	0
61	RUNG5	X	.000866	.000866	0	0
62	RUNG4	X	.000866	.000866	0	0
63	RUNG3	X	.000866	.000866	0	0
64	RUNG2	X	.000866	.000866	0	0
65	RUNG1	X	.000866	.000866	0	0
66	PLATE3	X	.002	.002	0	0
67	PLATE2	X	.002	.002	0	0
68	PLATE1	X	.002	.002	0	0
69	MP GAMMA6	X	.003	.003	0	0
70	MP GAMMA5	X	.003	.003	0	0
71	MP GAMMA4	X	.003	.003	0	0
72	MP GAMMA3	X	.003	.003	0	0
73	MP GAMMA2	X	.003	.003	0	0
74	MP GAMMA1	X	.003	.003	0	0
75	MP BETA6	X	.003	.003	0	0
76	MP BETA5	X	.003	.003	0	0
77	MP BETA4	X	.003	.003	0	0
78	MP BETA3	X	.003	.003	0	0
79	MP BETA2	X	.003	.003	0	0
80	MP BETA1	X	.003	.003	0	0
81	MP ALPHA8	X	.003	.003	0	0
82	MP ALPHA7	X	.003	.003	0	0
83	MP ALPHA6	X	.003	.003	0	0
84	MP ALPHA5	X	.003	.003	0	0
85	MP ALPHA4	X	.003	.003	0	0
86	MP ALPHA3	X	.003	.003	0	0
87	MP ALPHA2	X	.003	.003	0	0
88	MP ALPHA1	X	.003	.003	0	0
89	LADDER2	X	.003	.003	0	0
90	LADDER1	X	.003	.003	0	0
91	FACE3	X	.004	.004	0	0
92	FACE2	X	.008	.008	0	0
93	FACE1	X	.008	.008	0	0
94	CORNER3	X	.004	.004	0	0
95	CORNER2	X	.004	.004	0	0
96	CORNER1	X	.004	.004	0	0
97	M95	Y	-.003	-.003	0	0
98	M95	X	.004	.004	0	0
99	M96	Y	-.003	-.003	0	0
100	M96	X	.004	.004	0	0
101	M103	Y	-.001	-.001	0	0
102	M103	X	.002	.002	0	0
103	M104	Y	-.003	-.003	0	0
104	M104	X	.005	.005	0	0
105	M105	Y	-.003	-.003	0	0
106	M105	X	.005	.005	0	0
107	M106	Y	-.001	-.001	0	0
108	M106	X	.002	.002	0	0
109	M107	Y	-.001	-.001	0	0
110	M107	X	.002	.002	0	0
111	M108	Y	-.001	-.001	0	0
112	M108	X	.002	.002	0	0

Member Distributed Loads (BLC 26 : Wind Load (330))

Member Label	Direction	Start Magnitude[k/ft,...	End Magnitude[k/ft,F...	Start Location[ft,%]	End Location[ft,%]

Member Distributed Loads (BLC 26 : Wind Load (330)) (Continued)

	Member Label	Direction	Start Magnitude[k/ft,...	End Magnitude[k/ft,F...	Start Location[ft,%]	End Location[ft,%]
1	Standoff6	Y	-.004	-.004	0	0
2	Standoff5	Y	-.004	-.004	0	0
3	Standoff4	Y	-.004	-.004	0	0
4	Standoff3	Y	-.004	-.004	0	0
5	Standoff2	Y	-.004	-.004	0	0
6	Standoff1	Y	-.004	-.004	0	0
7	SUPPORT2	Y	-.011	-.011	0	0
8	SUPPORT1	Y	-.011	-.011	0	0
9	Rail3	Y	-.003	-.003	0	0
10	Rail2	Y	-.011	-.011	0	0
11	Rail1	Y	-.011	-.011	0	0
12	RUNG6	Y	-.000866	-.000866	0	0
13	RUNG5	Y	-.000866	-.000866	0	0
14	RUNG4	Y	-.000866	-.000866	0	0
15	RUNG3	Y	-.000866	-.000866	0	0
16	RUNG2	Y	-.000866	-.000866	0	0
17	RUNG1	Y	-.000866	-.000866	0	0
18	PLATE3	Y	-.000866	-.000866	0	0
19	PLATE2	Y	-.000866	-.000866	0	0
20	PLATE1	Y	-.000866	-.000866	0	0
21	MP GAMMA6	Y	-.01	-.01	0	0
22	MP GAMMA5	Y	-.01	-.01	0	0
23	MP GAMMA4	Y	-.01	-.01	0	0
24	MP GAMMA3	Y	-.01	-.01	0	0
25	MP GAMMA2	Y	-.01	-.01	0	0
26	MP GAMMA1	Y	-.01	-.01	0	0
27	MP BETA6	Y	-.01	-.01	0	0
28	MP BETA5	Y	-.01	-.01	0	0
29	MP BETA4	Y	-.01	-.01	0	0
30	MP BETA3	Y	-.01	-.01	0	0
31	MP BETA2	Y	-.01	-.01	0	0
32	MP BETA1	Y	-.01	-.01	0	0
33	MP ALPHA8	Y	-.01	-.01	0	0
34	MP ALPHA7	Y	-.01	-.01	0	0
35	MP ALPHA6	Y	-.01	-.01	0	0
36	MP ALPHA5	Y	-.01	-.01	0	0
37	MP ALPHA4	Y	-.01	-.01	0	0
38	MP ALPHA3	Y	-.01	-.01	0	0
39	MP ALPHA2	Y	-.01	-.01	0	0
40	MP ALPHA1	Y	-.01	-.01	0	0
41	LADDER2	Y	-.003	-.003	0	0
42	LADDER1	Y	-.003	-.003	0	0
43	FACE3	Y	-.009	-.009	0	0
44	FACE2	Y	-.009	-.009	0	0
45	FACE1	Y	-.009	-.009	0	0
46	CORNER3	Y	-.011	-.011	0	0
47	CORNER2	Y	-.011	-.011	0	0
48	CORNER1	Y	-.011	-.011	0	0
49	Standoff6	X	.003	.003	0	0
50	Standoff5	X	.003	.003	0	0
51	Standoff4	X	.003	.003	0	0
52	Standoff3	X	.003	.003	0	0
53	Standoff2	X	.003	.003	0	0
54	Standoff1	X	.003	.003	0	0
55	SUPPORT2	X	.006	.006	0	0
56	SUPPORT1	X	.006	.006	0	0
57	Rail3	X	.002	.002	0	0

Member Distributed Loads (BLC 26 : Wind Load (330)) (Continued)

	Member Label	Direction	Start Magnitude[k/ft,...	End Magnitude[k/ft,F...	Start Location[ft,%]	End Location[ft,%]
58	Rail2	X	.006	.006	0	0
59	Rail1	X	.006	.006	0	0
60	RUNG6	X	.0005	.0005	0	0
61	RUNG5	X	.0005	.0005	0	0
62	RUNG4	X	.0005	.0005	0	0
63	RUNG3	X	.0005	.0005	0	0
64	RUNG2	X	.0005	.0005	0	0
65	RUNG1	X	.0005	.0005	0	0
66	PLATE3	X	.0005	.0005	0	0
67	PLATE2	X	.0005	.0005	0	0
68	PLATE1	X	.0005	.0005	0	0
69	MP GAMMA6	X	.006	.006	0	0
70	MP GAMMA5	X	.006	.006	0	0
71	MP GAMMA4	X	.006	.006	0	0
72	MP GAMMA3	X	.006	.006	0	0
73	MP GAMMA2	X	.006	.006	0	0
74	MP GAMMA1	X	.006	.006	0	0
75	MP BETA6	X	.006	.006	0	0
76	MP BETA5	X	.006	.006	0	0
77	MP BETA4	X	.006	.006	0	0
78	MP BETA3	X	.006	.006	0	0
79	MP BETA2	X	.006	.006	0	0
80	MP BETA1	X	.006	.006	0	0
81	MP ALPHA8	X	.006	.006	0	0
82	MP ALPHA7	X	.006	.006	0	0
83	MP ALPHA6	X	.006	.006	0	0
84	MP ALPHA5	X	.006	.006	0	0
85	MP ALPHA4	X	.006	.006	0	0
86	MP ALPHA3	X	.006	.006	0	0
87	MP ALPHA2	X	.006	.006	0	0
88	MP ALPHA1	X	.006	.006	0	0
89	LADDER2	X	.002	.002	0	0
90	LADDER1	X	.002	.002	0	0
91	FACE3	X	.005	.005	0	0
92	FACE2	X	.005	.005	0	0
93	FACE1	X	.005	.005	0	0
94	CORNER3	X	.006	.006	0	0
95	CORNER2	X	.006	.006	0	0
96	CORNER1	X	.006	.006	0	0
97	M95	Y	-.011	-.011	0	0
98	M95	X	.006	.006	0	0
99	M96	Y	-.011	-.011	0	0
100	M96	X	.006	.006	0	0
101	M103	Y	-.003	-.003	0	0
102	M103	X	.002	.002	0	0
103	M104	Y	-.011	-.011	0	0
104	M104	X	.006	.006	0	0
105	M105	Y	-.011	-.011	0	0
106	M105	X	.006	.006	0	0
107	M106	Y	-.000866	-.000866	0	0
108	M106	X	.0005	.0005	0	0
109	M107	Y	-.000866	-.000866	0	0
110	M107	X	.0005	.0005	0	0
111	M108	Y	-.000866	-.000866	0	0
112	M108	X	.0005	.0005	0	0

Member Distributed Loads (BLC 27 : Ice Wind Load (330))

	Member Label	Direction	Start Magnitude[k/ft,...	End Magnitude[k/ft,F...	Start Location[ft,%]	End Location[ft,%]
1	Standoff6	Y	-.003	-.003	0	0
2	Standoff5	Y	-.003	-.003	0	0
3	Standoff4	Y	-.003	-.003	0	0
4	Standoff3	Y	-.003	-.003	0	0
5	Standoff2	Y	-.003	-.003	0	0
6	Standoff1	Y	-.003	-.003	0	0
7	SUPPORT2	Y	-.004	-.004	0	0
8	SUPPORT1	Y	-.004	-.004	0	0
9	Rail3	Y	-.002	-.002	0	0
10	Rail2	Y	-.005	-.005	0	0
11	Rail1	Y	-.005	-.005	0	0
12	RUNG6	Y	-.000866	-.000866	0	0
13	RUNG5	Y	-.000866	-.000866	0	0
14	RUNG4	Y	-.000866	-.000866	0	0
15	RUNG3	Y	-.000866	-.000866	0	0
16	RUNG2	Y	-.000866	-.000866	0	0
17	RUNG1	Y	-.000866	-.000866	0	0
18	PLATE3	Y	-.002	-.002	0	0
19	PLATE2	Y	-.002	-.002	0	0
20	PLATE1	Y	-.002	-.002	0	0
21	MP GAMMA6	Y	-.003	-.003	0	0
22	MP GAMMA5	Y	-.003	-.003	0	0
23	MP GAMMA4	Y	-.003	-.003	0	0
24	MP GAMMA3	Y	-.003	-.003	0	0
25	MP GAMMA2	Y	-.003	-.003	0	0
26	MP GAMMA1	Y	-.003	-.003	0	0
27	MP BETA6	Y	-.003	-.003	0	0
28	MP BETA5	Y	-.003	-.003	0	0
29	MP BETA4	Y	-.003	-.003	0	0
30	MP BETA3	Y	-.003	-.003	0	0
31	MP BETA2	Y	-.003	-.003	0	0
32	MP BETA1	Y	-.003	-.003	0	0
33	MP ALPHA8	Y	-.003	-.003	0	0
34	MP ALPHA7	Y	-.003	-.003	0	0
35	MP ALPHA6	Y	-.003	-.003	0	0
36	MP ALPHA5	Y	-.003	-.003	0	0
37	MP ALPHA4	Y	-.003	-.003	0	0
38	MP ALPHA3	Y	-.003	-.003	0	0
39	MP ALPHA2	Y	-.003	-.003	0	0
40	MP ALPHA1	Y	-.003	-.003	0	0
41	LADDER2	Y	-.003	-.003	0	0
42	LADDER1	Y	-.003	-.003	0	0
43	FACE3	Y	-.004	-.004	0	0
44	FACE2	Y	-.008	-.008	0	0
45	FACE1	Y	-.008	-.008	0	0
46	CORNER3	Y	-.004	-.004	0	0
47	CORNER2	Y	-.004	-.004	0	0
48	CORNER1	Y	-.004	-.004	0	0
49	Standoff6	X	.002	.002	0	0
50	Standoff5	X	.002	.002	0	0
51	Standoff4	X	.002	.002	0	0
52	Standoff3	X	.002	.002	0	0
53	Standoff2	X	.002	.002	0	0
54	Standoff1	X	.002	.002	0	0
55	SUPPORT2	X	.003	.003	0	0
56	SUPPORT1	X	.003	.003	0	0
57	Rail3	X	.001	.001	0	0

Member Distributed Loads (BLC 27 : Ice Wind Load (330)) (Continued)

	Member Label	Direction	Start Magnitude[k/ft,...	End Magnitude[k/ft,F...	Start Location[ft,%]	End Location[ft,%]
58	Rail2	X	.003	.003	0	0
59	Rail1	X	.003	.003	0	0
60	RUNG6	X	.0005	.0005	0	0
61	RUNG5	X	.0005	.0005	0	0
62	RUNG4	X	.0005	.0005	0	0
63	RUNG3	X	.0005	.0005	0	0
64	RUNG2	X	.0005	.0005	0	0
65	RUNG1	X	.0005	.0005	0	0
66	PLATE3	X	.001	.001	0	0
67	PLATE2	X	.001	.001	0	0
68	PLATE1	X	.001	.001	0	0
69	MP GAMMA6	X	.002	.002	0	0
70	MP GAMMA5	X	.002	.002	0	0
71	MP GAMMA4	X	.002	.002	0	0
72	MP GAMMA3	X	.002	.002	0	0
73	MP GAMMA2	X	.002	.002	0	0
74	MP GAMMA1	X	.002	.002	0	0
75	MP BETA6	X	.002	.002	0	0
76	MP BETA5	X	.002	.002	0	0
77	MP BETA4	X	.002	.002	0	0
78	MP BETA3	X	.002	.002	0	0
79	MP BETA2	X	.002	.002	0	0
80	MP BETA1	X	.002	.002	0	0
81	MP ALPHA8	X	.002	.002	0	0
82	MP ALPHA7	X	.002	.002	0	0
83	MP ALPHA6	X	.002	.002	0	0
84	MP ALPHA5	X	.002	.002	0	0
85	MP ALPHA4	X	.002	.002	0	0
86	MP ALPHA3	X	.002	.002	0	0
87	MP ALPHA2	X	.002	.002	0	0
88	MP ALPHA1	X	.002	.002	0	0
89	LADDER2	X	.002	.002	0	0
90	LADDER1	X	.002	.002	0	0
91	FACE3	X	.003	.003	0	0
92	FACE2	X	.004	.004	0	0
93	FACE1	X	.004	.004	0	0
94	CORNER3	X	.003	.003	0	0
95	CORNER2	X	.003	.003	0	0
96	CORNER1	X	.003	.003	0	0
97	M95	Y	-.004	-.004	0	0
98	M95	X	.003	.003	0	0
99	M96	Y	-.004	-.004	0	0
100	M96	X	.003	.003	0	0
101	M103	Y	-.002	-.002	0	0
102	M103	X	.001	.001	0	0
103	M104	Y	-.005	-.005	0	0
104	M104	X	.003	.003	0	0
105	M105	Y	-.005	-.005	0	0
106	M105	X	.003	.003	0	0
107	M106	Y	-.002	-.002	0	0
108	M106	X	.001	.001	0	0
109	M107	Y	-.002	-.002	0	0
110	M107	X	.001	.001	0	0
111	M108	Y	-.002	-.002	0	0
112	M108	X	.001	.001	0	0

Member Distributed Loads (BLC 40 : BLC 2 Transient Area Loads)

	Member Label	Direction	Start Magnitude[k/ft,...	End Magnitude[k/ft,F...	Start Location[ft,%]	End Location[ft,%]
1	SUPPORT1	Z	-.006	-.006	.891	2.262
2	FACE3	Z	-.055	-.018	.486	.607
3	FACE3	Z	-.018	.001	.607	.729
4	FACE3	Z	.001	.001	.729	.85
5	FACE3	Z	.001	.001	.85	.971
6	FACE3	Z	.001	.001	.971	1.092
7	FACE3	Z	.001	-.015	1.092	1.213
8	FACE3	Z	-.015	-.024	1.213	1.334
9	FACE3	Z	-.024	-.008	1.334	1.455
10	FACE3	Z	-.008	.001	1.455	1.576
11	FACE3	Z	.001	-.008	1.576	1.697
12	FACE3	Z	-.008	-.024	1.697	1.819
13	FACE3	Z	-.024	-.015	1.819	1.94
14	FACE3	Z	-.015	.001	1.94	2.061
15	FACE3	Z	.001	.001	2.061	2.182
16	FACE3	Z	.001	.001	2.182	2.303
17	FACE3	Z	.001	.001	2.303	2.424
18	FACE3	Z	.001	-.018	2.424	2.545
19	FACE3	Z	-.018	-.055	2.545	2.666
20	FACE1	Z	-.0002754	-.004	0	1.625
21	FACE1	Z	-.004	-.009	1.625	3.25
22	SUPPORT2	Z	-.007	-.007	.014	1.75
23	SUPPORT1	Z	-.007	-.006	0	.946
24	SUPPORT1	Z	-.006	-.004	.946	1.892
25	FACE3	Z	0	-.003	2.167	3.033
26	FACE3	Z	-.003	-.005	3.033	3.9
27	FACE3	Z	-.005	-.002	3.9	4.767
28	FACE3	Z	-.002	-.0002949	4.767	5.633
29	FACE3	Z	-.0002949	0	5.633	6.5
30	CORNER1	Z	-5.397e-5	-.007	2.069	2.69
31	CORNER1	Z	-.007	-.011	2.69	3.311
32	CORNER1	Z	-.011	-.006	3.311	3.932
33	CORNER1	Z	-.006	-.002	3.932	4.553
34	CORNER1	Z	-.002	-5.397e-5	4.553	5.174
35	32	Z	.0007137	-.007	0	.125
36	32	Z	-.007	-.018	.125	.25
37	FACE3	Z	-.009	-.009	6.5	7.944
38	FACE3	Z	-.009	-.008	7.944	9.389
39	FACE3	Z	-.008	-.006	9.389	10.833
40	FACE2	Z	-.0002955	-.002	4.333	5.633
41	FACE2	Z	-.002	-.008	5.633	6.933
42	FACE2	Z	-.008	-.012	6.933	8.233
43	FACE2	Z	-.012	-.007	8.233	9.533
44	FACE2	Z	-.007	-.0002955	9.533	10.833
45	CORNER3	Z	-.004	-.007	0	1.035
46	CORNER3	Z	-.007	-.011	1.035	2.069
47	CORNER3	Z	-.011	-.012	2.069	3.104
48	CORNER3	Z	-.012	-.006	3.104	4.139
49	CORNER3	Z	-.006	-.0003064	4.139	5.174
50	31	Z	.000481	-.006	0	.125
51	31	Z	-.006	-.015	.125	.25
52	FACE2	Z	-.004	-.008	0	1.083
53	FACE2	Z	-.008	-.013	1.083	2.167
54	FACE2	Z	-.013	-.011	2.167	3.25
55	FACE2	Z	-.011	-.006	3.25	4.333
56	FACE2	Z	-.006	-.005	4.333	5.417
57	FACE1	Z	-.003	-.008	5.416	7.222

Member Distributed Loads (BLC 40 : BLC 2 Transient Area Loads) (Continued)

	Member Label	Direction	Start Magnitude[k/ft,...	End Magnitude[k/ft,F...	Start Location[ft,%]	End Location[ft,%]
58	FACE1	Z	-.008	-.007	7.222	9.027
59	FACE1	Z	-.007	-.001	9.027	10.833
60	CORNER2	Z	-.0009849	-.01	.517	1.897
61	CORNER2	Z	-.01	-.013	1.897	3.277
62	CORNER2	Z	-.013	-.008	3.277	4.656

Member Distributed Loads (BLC 41 : BLC 5 Transient Area Loads)

	Member Label	Direction	Start Magnitude[k/ft,...	End Magnitude[k/ft,F...	Start Location[ft,%]	End Location[ft,%]
1	SUPPORT1	Z	-.008	-.008	.891	2.262
2	FACE3	Z	-.082	-.026	.486	.607
3	FACE3	Z	-.026	.002	.607	.729
4	FACE3	Z	.002	.002	.729	.85
5	FACE3	Z	.002	.002	.85	.971
6	FACE3	Z	.002	.002	.971	1.092
7	FACE3	Z	.002	-.022	1.092	1.213
8	FACE3	Z	-.022	-.036	1.213	1.334
9	FACE3	Z	-.036	-.012	1.334	1.455
10	FACE3	Z	-.012	.002	1.455	1.576
11	FACE3	Z	.002	-.012	1.576	1.697
12	FACE3	Z	-.012	-.036	1.697	1.819
13	FACE3	Z	-.036	-.022	1.819	1.94
14	FACE3	Z	-.022	.002	1.94	2.061
15	FACE3	Z	.002	.002	2.061	2.182
16	FACE3	Z	.002	.002	2.182	2.303
17	FACE3	Z	.002	.002	2.303	2.424
18	FACE3	Z	.002	-.026	2.424	2.545
19	FACE3	Z	-.026	-.082	2.545	2.666
20	FACE1	Z	-.0004131	-.007	0	1.625
21	FACE1	Z	-.007	-.013	1.625	3.25
22	SUPPORT2	Z	-.01	-.01	.014	1.75
23	SUPPORT1	Z	-.011	-.009	0	.946
24	SUPPORT1	Z	-.009	-.006	.946	1.892
25	FACE3	Z	4.003e-19	-.004	2.167	3.033
26	FACE3	Z	-.004	-.007	3.033	3.9
27	FACE3	Z	-.007	-.003	3.9	4.767
28	FACE3	Z	-.003	-.0004423	4.767	5.633
29	FACE3	Z	-.0004423	4.003e-19	5.633	6.5
30	CORNER1	Z	-8.096e-5	-.01	2.069	2.69
31	CORNER1	Z	-.01	-.016	2.69	3.311
32	CORNER1	Z	-.016	-.009	3.311	3.932
33	CORNER1	Z	-.009	-.003	3.932	4.553
34	CORNER1	Z	-.003	-8.096e-5	4.553	5.174
35	32	Z	.001	-.01	0	.125
36	32	Z	-.01	-.026	.125	.25
37	FACE3	Z	-.014	-.014	6.5	7.944
38	FACE3	Z	-.014	-.012	7.944	9.389
39	FACE3	Z	-.012	-.009	9.389	10.833
40	FACE2	Z	-.0004433	-.003	4.333	5.633
41	FACE2	Z	-.003	-.012	5.633	6.933
42	FACE2	Z	-.012	-.018	6.933	8.233
43	FACE2	Z	-.018	-.011	8.233	9.533
44	FACE2	Z	-.011	-.0004433	9.533	10.833
45	CORNER3	Z	-.006	-.01	0	1.035
46	CORNER3	Z	-.01	-.017	1.035	2.069
47	CORNER3	Z	-.017	-.019	2.069	3.104
48	CORNER3	Z	-.019	-.009	3.104	4.139

Member Distributed Loads (BLC 41 : BLC 5 Transient Area Loads) (Continued)

	Member Label	Direction	Start Magnitude[k/ft,...	End Magnitude[k/ft,F...	Start Location[ft,%]	End Location[ft,%]
49	CORNER3	Z	-.009	-.0004596	4.139	5.174
50	31	Z	.0007215	-.009	0	.125
51	31	Z	-.009	-.023	.125	.25
52	FACE2	Z	-.002	-.014	0	1.083
53	FACE2	Z	-.014	-.017	1.083	2.167
54	FACE2	Z	-.017	-.015	2.167	3.25
55	FACE2	Z	-.015	-.013	3.25	4.333
56	FACE2	Z	-.013	-.006	4.333	5.417
57	FACE1	Z	-.001	-.015	5.416	7.222
58	FACE1	Z	-.015	-.015	7.222	9.027
59	FACE1	Z	-.015	-.001	9.027	10.833
60	CORNER2	Z	-.002	-.013	.517	2.069
61	CORNER2	Z	-.013	-.014	2.069	3.621
62	CORNER2	Z	-.014	-.005	3.621	5.174

Member Area Loads (BLC 2 : Dead Load)

	Joint A	Joint B	Joint C	Joint D	Direction	Distribution	Magnitude[ksf]
1	N1	N35	N34		Z	Two Way	-.01
2	N34	N36	N37	N7	Z	Two Way	-.01
3	N4	N5	N3		Z	Two Way	-.01
4	N8	N9	N2		Z	Two Way	-.01

Member Area Loads (BLC 5 : Ice Dead Load)

	Joint A	Joint B	Joint C	Joint D	Direction	Distribution	Magnitude[ksf]
1	N1	N35	N34		Z	Two Way	-.015
2	N34	N36	N37	N7	Z	Two Way	-.015
3	N4	N5	N3		Z	Two Way	-.015
4	N8	N9	N2		Z	Two Way	-.015

Basic Load Cases

	BLC Description	Category	X Gravity	Y Gravity	Z Gravity	Joint	Point	Distributed	Area(Me...	Surface(P...
1	Wind Load (0)	WL					14	56		
2	Dead Load	DL			-1.1		14		4	
3	Live Load	LL					7			
4	Ice Wind Load (0)	OL1					14	56		
5	Ice Dead Load	OL2					14	50	4	
6	Wind Load (30)	WL					28	112		
7	Ice Wind Load (30)	OL1					28	112		
8	Wind Load (60)	WL					28	112		
9	Ice Wind Load (60)	OL1					28	112		
10	Wind Load (90)	WL					14	56		
11	Ice Wind Load (90)	OL1					14	56		
12	Wind Load (120)	WL					28	112		
13	Ice Wind Load (120)	OL1					28	112		
14	Wind Load (150)	WL					28	112		
15	Ice Wind Load (150)	OL1					28	112		
16	Wind Load (180)	WL					14	56		
17	Ice Wind Load (180)	OL1					14	56		
18	Wind Load (210)	WL					28	112		
19	Ice Wind Load (210)	OL1					28	112		
20	Wind Load (240)	WL					28	112		
21	Ice Wind Load (240)	OL1					28	112		
22	Wind Load (270)	WL					14	56		

Basic Load Cases (Continued)

	BLC Description	Category	X Gravity	Y Gravity	Z Gravity	Joint	Point	Distributed	Area(Me...	Surface(P...
23	Ice Wind Load (270)	OL1					14	56		
24	Wind Load (300)	WL					28	112		
25	Ice Wind Load (300)	OL1					28	112		
26	Wind Load (330)	WL					28	112		
27	Ice Wind Load (330)	OL1					28	112		
28	Maintanence (0)	OL3					14			
29	Maintanence (30)	OL3					28			
30	Maintanence (60)	OL3					28			
31	Maintanence (90)	OL3					14			
32	Maintanence (120)	OL3					28			
33	Maintanence (150)	OL3					28			
34	Maintanence (180)	OL3					14			
35	Maintanence (210)	OL3					28			
36	Maintanence (240)	OL3					28			
37	Maintanence (270)	OL3					14			
38	Maintanence (300)	OL3					28			
39	Maintanence (330)	OL3					28			
40	BLC 2 Transient Area...	None						62		
41	BLC 5 Transient Area...	None						62		

Load Combinations

	Description	S...	P...	S...	B...	Fa...	B...	Fa...	B...	Fa...	B...	Fa...	B...	Fa...	B...	Fa...	B...	Fa...	B...	Fa...	B...	Fa...	B...	Fa...
1	1.4D	Yes	Y		2	1.4																		
2	1.2D + 1.6W(0)	Yes	Y		2	1.2	1	1.6																
3	1.2D + 1.0Di + 1.0Wi(0)	Yes	Y		2	1.2	5	1	4	1														
4	1.2D + 1.5L + 1.0Wl(0)	Yes	Y		2	1.2	3	1.5	28	1														
5	1.2D + 1.6W(30)	Yes	Y		2	1.2	6	1.6																
6	1.2D + 1.0Di + 1.0Wi(30)	Yes	Y		2	1.2	5	1	7	1														
7	1.2D + 1.5L + 1.0Wl(30)	Yes	Y		2	1.2	3	1.5	29	1														
8	1.2D + 1.6W(60)	Yes	Y		2	1.2	8	1.6																
9	1.2D + 1.0Di + 1.0Wi(60)	Yes	Y		2	1.2	5	1	9	1														
10	1.2D + 1.5L + 1.0Wl(60)	Yes	Y		2	1.2	3	1.5	30	1														
11	1.2D + 1.6W(90)	Yes	Y		2	1.2	10	1.6																
12	1.2D + 1.0Di + 1.0Wi(90)	Yes	Y		2	1.2	5	1	11	1														
13	1.2D + 1.5L + 1.0Wl(90)	Yes	Y		2	1.2	3	1.5	31	1														
14	1.2D + 1.6W(120)	Yes	Y		2	1.2	12	1.6																
15	1.2D + 1.0Di + 1.0Wi(120)	Yes	Y		2	1.2	5	1	13	1														
16	1.2D + 1.5L + 1.0Wl(120)	Yes	Y		2	1.2	3	1.5	32	1														
17	1.2D + 1.6W(150)	Yes	Y		2	1.2	14	1.6																
18	1.2D + 1.0Di + 1.0Wi(150)	Yes	Y		2	1.2	5	1	15	1														
19	1.2D + 1.5L + 1.0Wl(150)	Yes	Y		2	1.2	3	1.5	33	1														
20	1.2D + 1.6W(180)	Yes	Y		2	1.2	16	1.6																
21	1.2D + 1.0Di + 1.0Wi(180)	Yes	Y		2	1.2	5	1	17	1														
22	1.2D + 1.5L + 1.0Wl(180)	Yes	Y		2	1.2	3	1.5	34	1														
23	1.2D + 1.6W(210)	Yes	Y		2	1.2	18	1.6																
24	1.2D + 1.0Di + 1.0Wi(210)	Yes	Y		2	1.2	5	1	19	1														
25	1.2D + 1.5L + 1.0Wl(210)	Yes	Y		2	1.2	3	1.5	35	1														
26	1.2D + 1.6W(240)	Yes	Y		2	1.2	20	1.6																
27	1.2D + 1.0Di + 1.0Wi(240)	Yes	Y		2	1.2	5	1	21	1														
28	1.2D + 1.5L + 1.0Wl(240)	Yes	Y		2	1.2	3	1.5	36	1														
29	1.2D + 1.6W(270)	Yes	Y		2	1.2	22	1.6																
30	1.2D + 1.0Di + 1.0Wi(270)	Yes	Y		2	1.2	5	1	23	1														
31	1.2D + 1.5L + 1.0Wl(270)	Yes	Y		2	1.2	3	1.5	37	1														
32	1.2D + 1.6W(300)	Yes	Y		2	1.2	24	1.6																
33	1.2D + 1.0Di + 1.0Wi(300)	Yes	Y		2	1.2	5	1	25	1														

Load Combinations (Continued)

	Description	S...	P...	S...	B...	Fa...	B...	Fa...	B...	Fa...	B...	Fa...	B...	Fa...	B...	Fa...	B...	Fa...	B...	Fa...	B...	Fa...	B...	Fa...
34	1.2D + 1.5L + 1.0Wl(300)	Yes	Y		2	1.2	3	1.5	38	1														
35	1.2D + 1.6W(330)	Yes	Y		2	1.2	26	1.6																
36	1.2D + 1.0Di + 1.0Wi(330)	Yes	Y		2	1.2	5	1	27	1														
37	1.2D + 1.5L + 1.0Wl(330)	Yes	Y		2	1.2	3	1.5	39	1														

Envelope AISC 14th(360-10): LRFD Steel Code Checks

	Member	Shape	Code Check	Loc[ft]	LC	She...	Lo...	Dir	LC	phi*P...	phi*P...	phi*M...	phi*M.....		Eqn
1	FACE3	C5X9	.997	5.078	20	.292	5.4...	z	23	33.361	85.536	1.909	11.853	...	H1-1b
2	FACE2	C5X9	.914	5.755	32	.263	5.4...	z	17	33.361	85.536	1.909	10.385	1	H1-1b
3	FACE1	C5X9	.804	5.078	29	.221	5.4...	z	29	33.361	85.536	1.909	10.385	1	H1-1b
4	MP GAMMA5	PIPE_2.0	.506	3.573	28	.103	3.5...		4	17.855	32.13	1.872	1.872	...	H1-1b
5	CORNER3	C5X9	.492	2.964	15	.196	2.2...	y	24	36.252	85.536	1.909	11.853	...	H1-1b
6	CORNER2	C5X9	.454	2.21	35	.174	2.2...	y	9	36.252	85.536	1.909	11.853	...	H1-1a
7	CORNER1	C5X9	.444	2.964	5	.183	2.91	y	30	36.252	85.536	1.909	11.853	...	H1-1a
8	SUPPORT1	C5X6.7	.380	2.299	26	.036	2.3...	z	8	46.542	63.828	1.604	9.585	...	H1-1b
9	MP BETA4	PIPE_2.0	.344	3.573	14	.137	3.5...		14	17.855	32.13	1.872	1.872	...	H1-1b
10	MP BETA3	PIPE_2.0	.320	3.573	35	.184	3.5...		5	17.855	32.13	1.872	1.872	...	H1-1b
11	MP ALPHA2	PIPE_2.0	.317	5.542	37	.126	3.5...		8	17.855	32.13	1.872	1.872	...	H1-1b
12	MP BETA5	PIPE_2.0	.310	3.5	15	.111	3.5		17	17.855	32.13	1.872	1.872	...	H1-1b
13	MP BETA2	PIPE_2.0	.302	3.573	36	.196	3.5...		32	17.855	32.13	1.872	1.872	...	H1-1b
14	MP GAMMA2	PIPE_2.0	.287	5.542	25	.165	3.5...		20	17.855	32.13	1.872	1.872	...	H1-1b
15	MP ALPHA3	PIPE_2.0	.285	3.573	13	.242	3.5...		17	17.855	32.13	1.872	1.872	...	H1-1b
16	MP ALPHA5	PIPE_2.0	.278	3.5	31	.098	3.5		29	17.855	32.13	1.872	1.872	...	H1-1b
17	MP ALPHA4	PIPE_2.0	.274	3.573	4	.125	3.5...		26	17.855	32.13	1.872	1.872	...	H1-1b
18	M108	L2x2x4	.272	0	25	.027	1.5	z	22	27.293	30.586	.691	1.577	...	H2-1
19	M103	PIPE_2.0	.268	4.507	4	.109	4.4...		17	22.6	32.13	1.872	1.872	1	H1-1b
20	M107	L2x2x4	.260	1.5	16	.020	1.5	y	5	27.293	30.586	.691	1.577	...	H2-1
21	Rail3	PIPE_2.0	.258	4.507	22	.105	4.4...		35	22.6	32.13	1.872	1.872	...	H1-1b
22	LADDER2	L1.75x1....	.250	6.464	32	.015	4.9...	z	5	2.056	26.325	.513	1.034	...	H2-1
23	MP GAMMA3	PIPE_2.0	.245	3.573	24	.201	3.5...		26	17.855	32.13	1.872	1.872	...	H1-1b
24	LADDER1	L1.75x1....	.242	6.464	17	.015	4.9...	y	8	2.056	26.325	.513	1.046	...	H2-1
25	PLATE1	L2x2x4	.240	0	4	.034	1.5	z	4	27.293	30.586	.691	1.577	...	H2-1
26	M106	L2x2x4	.239	0	35	.015	.062	z	29	27.293	30.586	.691	1.577	...	H2-1
27	PLATE2	L2x2x4	.228	1.5	31	.024	0	y	31	27.293	30.586	.691	1.577	...	H2-1
28	MP GAMMA4	PIPE_2.0	.223	3.573	17	.190	3.5...		2	17.855	32.13	1.872	1.872	...	H1-1b
29	M104	PIPE_2.0	.221	6.555	15	.123	.922		13	22.6	32.13	1.872	1.872	...	H1-1b
30	Rail2	PIPE_2.0	.212	3.483	15	.135	.922		28	22.6	32.13	1.872	1.872	1	H1-1b
31	M105	PIPE_2.0	.207	7.58	31	.134	.922		22	22.6	32.13	1.872	1.872	1	H1-1b
32	Rail1	PIPE_2.0	.201	2.561	28	.147	.922		4	22.6	32.13	1.872	1.872	1	H1-1b
33	PLATE3	L2x2x4	.194	0	14	.014	0	y	16	27.293	30.586	.691	1.577	...	H2-1
34	RUNG3	SR 5/8	.188	0	26	.023	1		8	7.287	9.94	.104	.104	...	H1-1b
35	RUNG2	SR 5/8	.177	0	26	.017	1		8	7.287	9.94	.104	.104	...	H1-1b
36	RUNG4	SR 5/8	.161	0	26	.023	1		8	7.287	9.94	.104	.104	...	H1-1b
37	RUNG1	SR 5/8	.160	0	26	.011	1		5	7.287	9.94	.104	.104	...	H1-1b
38	Standoff2	MC6X7	.116	0	15	.026	.458	y	11	65.96	67.716	1.889	12.15	...	H1-1b
39	Standoff1	MC6X7	.114	0	27	.026	.458	y	29	65.96	67.716	1.889	12.15	...	H1-1b
40	Standoff6	MC6X7	.104	0	15	.044	.49	y	23	65.96	67.716	1.889	12.15	...	H1-1b
41	Standoff3	MC6X7	.101	0	15	.022	.417	y	17	65.96	67.716	1.889	12.15	...	H1-1b
42	Standoff4	MC6X7	.089	0	15	.022	.417	y	35	65.96	67.716	1.889	12.15	...	H1-1b
43	Standoff5	MC6X7	.086	0	33	.016	.417	z	15	65.96	67.716	1.889	12.15	...	H1-1b
44	MP ALPHA6	PIPE_2.0	.082	3.5	2	.029	3.5		2	17.855	32.13	1.872	1.872	...	H1-1b
45	MP BETA1	PIPE_2.0	.074	3.5	23	.035	3.0...		15	17.855	32.13	1.872	1.872	...	H1-1b
46	MP GAMMA1	PIPE_2.0	.059	3.281	2	.055	3.7...		15	17.855	32.13	1.872	1.872	...	H1-1b
47	MP BETA6	PIPE_2.0	.053	3.792	20	.028	3.2...		3	17.855	32.13	1.872	1.872	...	H1-1b
48	MP GAMMA6	PIPE_2.0	.053	3.792	11	.022	3.2...		27	17.855	32.13	1.872	1.872	...	H1-1b

Envelope AISC 14th(360-10): LRFD Steel Code Checks (Continued)

	Member	Shape	Code Check	Loc[ft]	LC	She...	Lo...	Dir	LC	phi*P...	phi*P...	phi*M...	phi*M.....		Eqn
49	MP ALPHA1	PIPE_2.0	.053	3.792	11	.035	3.2...		23	17.855	32.13	1.872	1.872	...	H1-1b
50	RUNG5	SR 5/8	.047	1	8	.009	0		27	7.287	9.94	.104	.104	...	H1-1b
51	MP ALPHA7	PIPE_2.0	.032	0	20	.005	0		20	29.81	32.13	1.872	1.872	...	H1-1b
52	MP ALPHA8	PIPE_2.0	.032	0	8	.005	0		8	29.81	32.13	1.872	1.872	...	H1-1b
53	SUPPORT2	C5X6.7	.029	.93	20	.482	1.75	z	35	57.91	63.828	1.604	9.585	...	H1-1b
54	RUNG6	SR 5/8	.019	1	26	.017	1		26	7.287	9.94	.104	.104	...	H1-1b

APPENDIX D

Mount Modification Drawings

SITE:

806354 BRG 123 943084 (NG1905)

MODIFICATION DRAWING FOR AN EXISTING 10'-10" PLATFORM AT 158.42' ON A MONOPOLE TOWER

SHEET INDEX	
T-01	TITLE SHEET
N-01	NOTES
S-01	PLAN & SECTION VIEWS
MI-01	MODIFICATION CHECKLIST

PROJECT INFORMATION	
COUNTY:	NEWTON
SITE ADDRESS:	21 BERKSHIRE ROAD NEWTON, CT 06482
LATITUDE:	41° 24' 45.53"
LONGITUDE:	-73° 16' 12.34"

SCOPE OF WORK:

MODIFICATION DRAWINGS INCLUDES:
ADD HANDRAIL KITS TO THE MOUNT

PLANS PREPARED FOR:

CROWN CASTLE

PLANS PREPARED BY:

POD
POWER OF DESIGN
1033 E. TURKEYFOOT LAKE RD.
SUITE 206 AKRON, OHIO 44312
330-961-7432

CARRIER:

verizon

DRAWING NOTICE:
THESE DOCUMENTS ARE CONFIDENTIAL AND ARE THE SOLE PROPERTY OF CROWN CASTLEW AND MAY NOT BE REPRODUCED, DISSEMINATED OR REDISTRIBUTED WITHOUT THE EXPRESS WRITTEN CONSENT OF CROWN CASTLEW.

MODIFICATION DRAWING

REV.	DATE	DESCRIPTION

SITE INFORMATION:
BRG 123 943084
(NG1905)

21 BERKSHIRE ROAD
NEWTON, CT 06482

SITE NUMBER:
806354

POD NUMBER:	18-29816
DRAWN BY:	UT
CHECKED BY:	JGC
DATE:	10/29/2018

SHEET TITLE:

TITLE SHEET

T-01

GENERAL NOTES

1. THE MODIFICATIONS REPRESENTED IN THESE DRAWINGS ARE BASED ON THE STRUCTURAL DOCUMENTS PROVIDED IN THE STRUCTURAL DOCUMENTS TABLE. THE CONTRACTOR SHALL OBTAIN AND BECOME FAMILIAR WITH ALL REFERENCED DOCUMENTS.

REFERENCE DOCUMENTS	
DOCUMENT TYPE	DESIGNATION
MOUNT ANALYSIS	POD PROJECT NUMBER: 18-29178 DATED: 10/09/2018

2. ALL MODIFICATIONS MUST BE INSTALLED TO BRING THE TOWER INTO CONFORMANCE WITH ALL APPLICABLE CODES.

GOVERNING CODES	TIA-222-H, 2016 CONNECTICUT BUILDING CODE
WIND SPEED	120 MPH ULTIMATE WIND SPEED
WIND SPEED W/ICE	50 MPH 3 SECOND GUST
RADIAL ICE THICKNESS	1”
STRUCTURE CLASS	II
EXPOSURE CATEGORY	C
TOPOGRAPHIC CATEGORY	1
SPECTRAL RESPONSE ACCELERATIONS	SS= 0.204 & S1= 0.065

3. ALL WORK PRESENTED ON THESE DRAWINGS MUST BE COMPLETED BY THE CONTRACTOR UNLESS NOTED OTHERWISE OR APPROVED BY THE EOR. THE CONTRACTOR MUST HAVE CONSIDERABLE EXPERIENCE PERFORMING WORK SIMILAR TO THAT DESCRIBED WITHIN THESE DRAWINGS. BY ACCEPTANCE OF THIS PROJECT, THE CONTRACTOR IS ATTESTING THAT HE HAS SUFFICIENT EXPERIENCE AND ABILITY, THAT HE IS KNOWLEDGEABLE OF THE WORK TO BE PERFORMED AND THAT HE IS PROPERLY LICENSED AND REGISTERED TO PERFORM THE WORK IN THE PROJECT JURISDICTION.
4. WORK SHALL ONLY BE PERFORMED DURING CALM, DRY DAYS (WINDS LESS THAN 10-MPH). IT IS THE CONTRACTOR'S SOLE RESPONSIBILITY TO DETERMINE INSTILLATION PROCEDURE AND SEQUENCE TO INSURE THE SAFETY OF THE STRUCTURE AND ITS COMPONENT PARTS DURING ERECTION AND/OR MODIFICATIONS. THIS INCLUDES, BUT IS NOT LIMITED TO, THE ADDITION OF TEMPORARY BRACING, GUYS OR TIE-DOWNS THAT MAY BE NECESSARY. SUCH MATERIAL SHALL BE REMOVED AND SHALL REMAIN THE PROPERTY OF THE CONTRACTOR AFTER THE COMPLETION OF THE PROJECT.
5. ALL DIMENSIONS, ELEVATIONS AND EXISTING CONDITIONS SHOWN ON THE DRAWINGS SHALL BE FIELD VERIFIED BY THE CONTRACTOR PRIOR TO BEGINNING ANY MATERIALS ORDERING, FABRICATION OR CONSTRUCTION WORK ON THIS PROJECT. CONTRACTOR SHALL NOT SCALE CONTRACT DRAWINGS IN LIEU OF FIELD VERIFICATIONS. ANY DISCREPANCIES SHALL BE IMMEDIATELY BROUGHT TO THE ATTENTION OF THE OWNER AND EOR. THE DISCREPANCIES MUST BE RESOLVED BEFORE THE CONTRACTOR IS TO PROCEED WITH THE WORK. THE CONTRACT DOCUMENTS DO NOT INDICATE THE METHODS OF CONSTRUCTION. THE CONTRACTOR SHALL SUPERVISE AND DIRECT THE WORK AND IS SOLELY RESPONSIBLE FOR ALL CONSTRUCTION MEANS, METHODS, TECHNIQUES, SEQUENCES AND PROCEDURES. OBSERVATION VISITS TO THE SITE BY THE OWNER AND/OR THE EOR SHALL NOT INCLUDE INSPECTION OF THE PROTECTIVE MEASURES AND PROCEDURES.
6. THE DESIGN WITHIN THESE DRAWINGS ASSUMES THE TOWER AND ITS FOUNDATIONS HAVE BEEN WELL MAINTAINED, IN GOOD CONDITION AND ARE WITHOUT DEFECT. BENT MEMBERS, CORRODED MEMBER, LOOSE BOLTS, CRACKED WELDS, AND OTHER STRUCTURAL DEFECTS HAVE NOT BEEN CONSIDERED UNLESS SPECIFICALLY NOTED. THE TOWER IS ASSUMED TO BE PLUMB AND THE SITE IS ASSUMED LEVEL. THE OWNER AND/OR EOR SHALL BE NOTIFIED IMMEDIATELY IF ANY VARIANCES ARE FOUND.
7. THE CONTRACTOR SHALL ONLY WORK WITHIN THE LIMITS OF THE TOWER OWNER'S PROPERTY, LEASE AREA OR APPROVED EASEMENTS. IT IS THE RESPONSIBILITY OF THE CONTRACTOR TO VERIFY WORK IS PERFORMED WITHIN THESE BOUNDARIES. CONSTRUCTION STAKING AND BOUNDARY MARKING IS THE RESPONSIBILITY OF THE CONTRACTOR. THE CONTRACTOR SHALL EMPLOY A SURVEYOR AS REQUIRED. ANY WORK OUTSIDE THESE BOUNDARIES SHALL BE APPROVED IN WRITING BY THE OWNER.
8. THE CONTRACTOR SHALL BE RESPONSIBLE FOR INITIATING, MAINTAIN AND SUPERVISING ALL SAFETY PRECAUTIONS AND PROGRAMS IN CONNECTION WITH THE WORK. THE CONTRACTOR IS RESPONSIBLE FOR INSURING THAT ALL WORK PERFORMED COMPLIES WITH ALL APPLICATION SAFETY CODES AND GOVERNING REGULATIONS.
9. ACCESS TO THE PROPOSED WORK SITE MAY BE RESTRICTED. THE CONTRACTOR SHALL COORDINATE INTENDED CONSTRUCTION ACTIVITY, INCLUDING WORK SCHEDULES AND MATERIAL DELIVERIES, WITH THE OWNER/RESIDENT LEASING AGENT FOR APPROVAL.
10. THE CONTRACTOR SHALL SECURE ALL NECESSARY PERMITS FOR THIS PROJECT FROM ALL APPLICABLE GOVERNING AGENCIES. THE CONTRACTOR WILL BE RESPONSIBLE FOR ABIDING BY ALL CONDITIONS AND REQUIREMENTS OF THE PERMITS.
11. ALL MATERIAL UTILIZED FOR THIS PROJECT MUST BE NEW AND FREE OF ANY DEFECTS. ANY MATERIAL SUBSTITUTIONS, INCLUDED BUT NOT LIMITED TO ALTERED SIZED AND/OR STRENGTHS, MUST BE APPROVED BY THE EOR.
12. UNLESS NOTED OTHERWISE, ALL NEW MEMBERS SHALL MAINTAIN THE EXISTING MEMBER WORKING LINES AND NOT INTRODUCE ECCENTRICITIES INTO THE STRUCTURE.
13. ALL DIMENSIONS AND QUANTITIES LISTED WITHIN THESE DRAWINGS ARE INTENDED TO AID THE CONTRACTOR. THE CONTRACTOR SHALL VERIFY ALL DIMENSION AND QUANTITIES PRIOR TO BIDDING AND/OR ORDERING MATERIALS.
14. ALL MANUFACTURERS' INSTRUCTIONS SHALL BE FOLLOWED EXACTLY. ANY DEVIATION REQUIRES WRITTEN APPROVAL FROM THE EOR.
15. THE CONTRACTOR IS RESPONSIBLE FOR TEMPORARILY REMOVING COAX, BRACKETS, ANTENNAS MOUNTS AND ANY OTHER TOWER APPURTENANCE THAT MAY INTERFERE WITH THE INSTILLATION OF THE TOWER MODIFICATIONS. ALL TOWER APPURTENANCES MUST BE REPLACE AND/OR RESTORED TO ITS ORIGINAL LOCATION. SOME MOUNTS OR ATTACHMENTS MAY REQUIRE CUSTOM MODIFICATION TO PROPERLY FIT THE MODIFIED REGION OF THE STRUCTURE. THESE CUSTOM MOUNTS OR ATTACHMENTS ARE DESIGNED BY OTHERS AND MUST BE APPROVED BY THE OWNER/EOR PRIOR TO REMOVAL. ANY CARRIER DOWNTIME MUST BE COORDINATED WITH THE OWNER IN WRITING.
16. DO NOT SCALE DRAWINGS.

STRUCTURAL STEEL NOTES

1. ALL DETAILING, FABRICATION AND ERECTION OF STRUCTURAL STEEL SHALL CONFORM TO THE AISC SPECIFICATIONS, LATEST EDITION.
2. ALL STRUCTURAL STEEL SHALL ELEMENTS SHALL CONFORM TO THE FOLLOWING REQUIREMENTS.

MATERIAL SPECIFICATIONS	
ANGLES	ASTM A36 (36 KSI YIELD STRENGTH)
BOLTS	ASTM A325N
NUTS	ASTM A563
WASHER	ASTM F436
PIPE	ASTM A53 - GRADE B (35 KSI YIELD STRENGTH)
U-BOLT	ASTM A307

3. ALL CONNECTIONS NOT FULLY DETAILED ON THESE PLANS SHALL BE DETAILED BY THE FABRICATOR IN ACCORDANCE WITH AISC SPECIFICATIONS, LATEST EDITION.
4. CAULKING SHALL BE PROVIDED AROUND PERIMETER OF ANY AND ALL MODIFICATION MEMBERS TO ENSURE COMPLETE SEAL BETWEEN EXISTING STRUCTURE AND REINFORCING MEMBERS IN FULL CONTACT WITH EXISTING STEEL. SEALANT IS TO BE EXTERIOR GRADE, PAINTABLE SILICONE CAULKING AS MANUFACTURED BY DOW AND ACCEPTABLE TO EOR.
5. HOLES SHALL NOT BE FLAME CUT THROUGH STEEL UNLESS APPROVED BY THE EOR.
6. ALL EXPOSED STEEL SHALL BE HOT-DIPPED GALVANIZED PER ASTM A123, ASTM A153/A153M, OR ASTM A653 G90, AS APPLICABLE FOR FULL WEATHER PROTECTION. FOR HIGH STRENGTH STEEL FASTENERS WHERE HOT-DIPPED GALVANIZING IS NOT PERMITTED DACROMET F1136 GRADE 3 COATING SHALL BE USED. IN ADDITION ALL NEW STEEL SHALL BE PAINTED TO MATCH EXISTING TOWER STEEL. CONTRACTOR SHALL OBTAIN EOR APPROVAL FOR STEEL PROTECTION BY ANY OTHER MEANS.
7. REPAIR DAMAGED PAINTED/GALVANIZED SURFACES WITH TWO COATS OF BRUSH OR ROLL ON ZRC COLD GALVANIZING COMPOUND OR EOR APPROVED COATING. SURFACES MUST BE WIRE BRUSHED AND SOLVENT CLEANED PRIOR TO APPLICATION OF GALVANIZING COMPOUND.
8. ALL BOLT ASSEMBLIES FOR STRUCTURAL MEMBERS REPRESENTED IN THIS DRAWING REQUIRE LOCKING DEVICES (SPLIT WASHER/PAL NUT) TO BE INSTALLED IN ACCORDANCE WITH TIA/EIA-222 REQUIREMENTS.
9. ALL PROPOSED AND/OR REPLACED BOLTS SHALL BE OF SUFFICIENT LENGTH SUCH THAT THE END OF THE BOLT BE AT LEAST FLUSH WITH THE FACE OF THE NUT. IT IS NOT PERMITTED FOR THE BOLT END TO BE BELOW THE FACE OF THE NUT AFTER TIGHTENING IS COMPLETED.

PLANS PREPARED FOR:

CROWN CASTLE

PLANS PREPARED BY:

POD
POWER OF DESIGN
1033 E. TURKEYFOOT LAKE RD.
SUITE 206 AKRON, OHIO 44312
330-961-7432

CARRIER:

verizon

DRAWING NOTICE:
THESE DOCUMENTS ARE CONFIDENTIAL AND ARE THE SOLE PROPERTY OF CROWN CASTLEW AND MAY NOT BE REPRODUCED, DISSEMINATED OR REDISTRIBUTED WITHOUT THE EXPRESS WRITTEN CONSENT OF CROWN CASTLEW.

MODIFICATION DRAWING

REV.	DATE	DESCRIPTION

SITE INFORMATION:
BRG 123 943084
(NG1905)

21 BERKSHIRE ROAD
NEWTON, CT 06482

SITE NUMBER:
806354

POD NUMBER:	18-29816
DRAWN BY:	UT
CHECKED BY:	JGC
DATE:	10/26/2018

SHEET TITLE:

NOTES

N-01

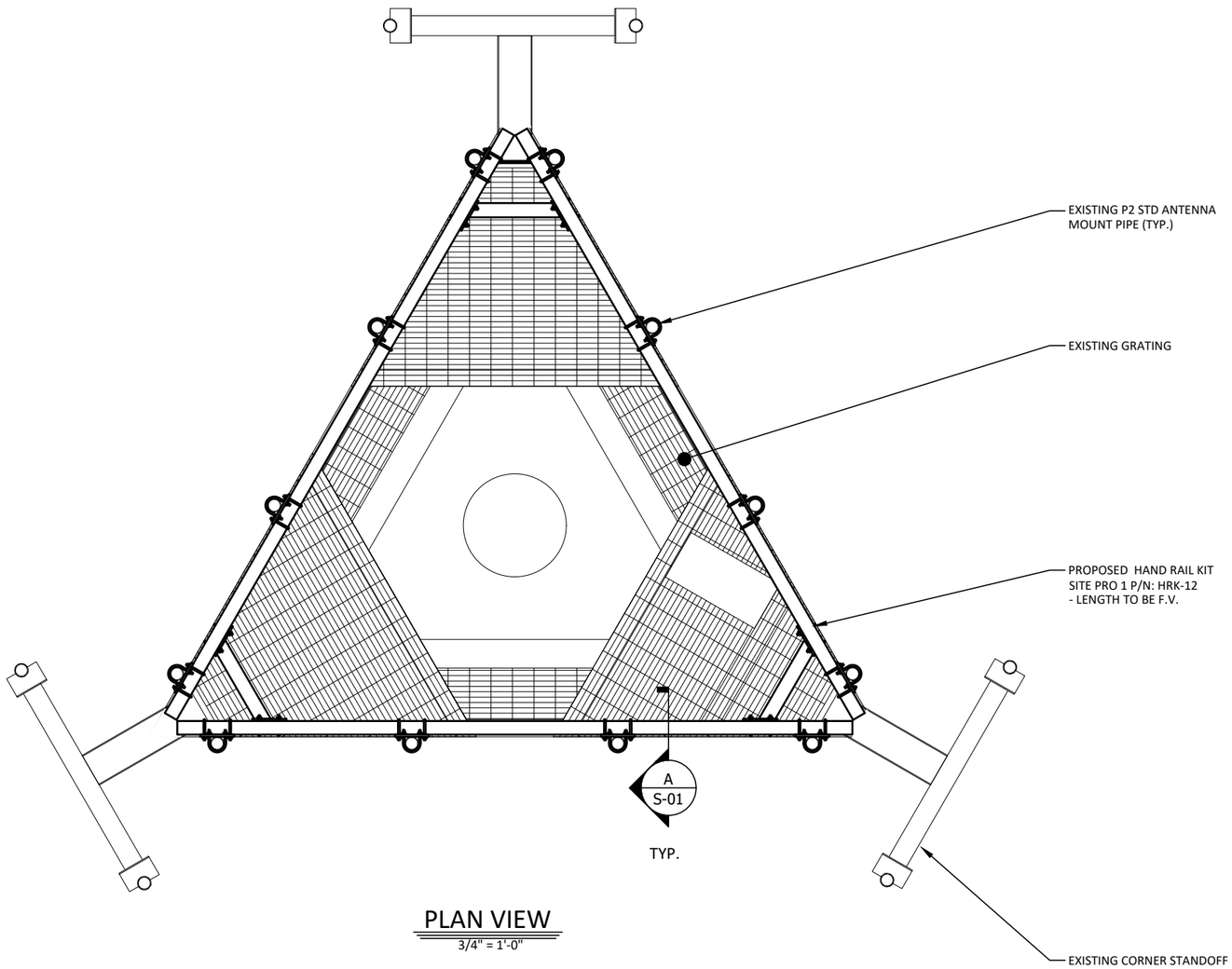

PLAN VIEW
3/4" = 1'-0"

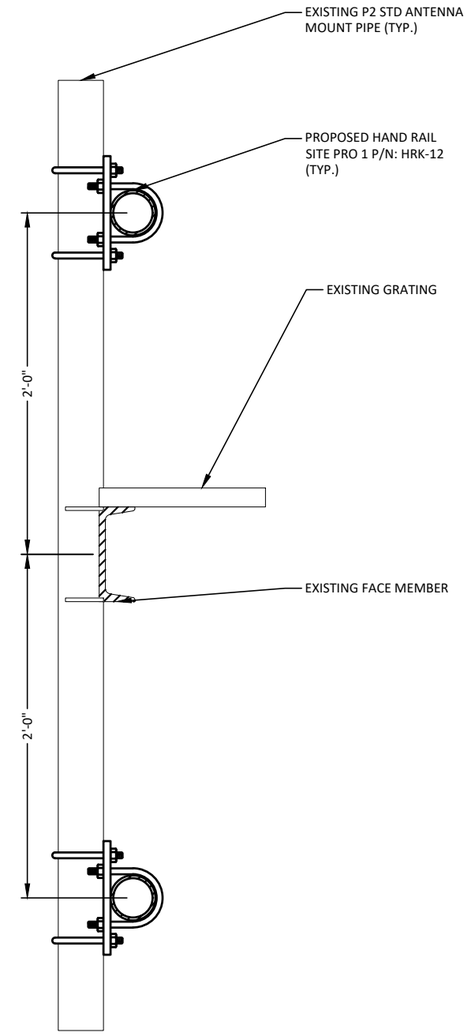

SECTION A S-01
1-1/2" = 1'-0"

NOTES:
- ANTENNAS NOT SHOWN FOR CLARITY
- MOUNT PIPES NOT SHOWN FOR CLARITY

PLANS PREPARED FOR:
CROWN CASTLE

PLANS PREPARED BY:
POD
POWER OF DESIGN
1033 E. TURKEYFOOT LAKE RD.
SUITE 206 AKRON, OHIO 44312
330-961-7432

CARRIER:
verizon

DRAWING NOTICE:
THESE DOCUMENTS ARE CONFIDENTIAL AND ARE THE SOLE PROPERTY OF CROWN CASTLEW AND MAY NOT BE REPRODUCED, DISSEMINATED OR REDISTRIBUTED WITHOUT THE EXPRESS WRITTEN CONSENT OF CROWN CASTLEW.

MODIFICATION DRAWING

REV.	DATE	DESCRIPTION

SITE INFORMATION:
BRG 123 943084
(NG1905)

21 BERKSHIRE ROAD
NEWTON, CT 06482

SITE NUMBER:
806354

POD NUMBER:	18-29816
DRAWN BY:	UT
CHECKED BY:	JGC
DATE:	10/26/2018

SHEET TITLE:
PLAN & SECTION VIEWS

S-01

MODIFICATION INSPECTION CHECKLIST

BEFORE CONSTRUCTION		DURING CONSTRUCTION		AFTER CONSTRUCTION	
CONSTRUCTION/INSTALLATION INSPECTION AND TESTING REQUIRED (COMPLETED BY ENGINEER OF RECORD)	REPORT ITEM	CONSTRUCTION/INSTALLATION INSPECTION AND TESTING REQUIRED (COMPLETED BY ENGINEER OF RECORD)	REPORT ITEM	CONSTRUCTION/INSTALLATION INSPECTION AND TESTING REQUIRED (COMPLETED BY ENGINEER OF RECORD)	REPORT ITEM
X	MODIFICATION INSPECTION CHECKLIST DWG	X	CONSTRUCTION INSPECTION	X	MODIFICATION INSPECTOR REDLINE OR RECORD DRAWING(S)
X	ENGINEER OF RECORD APPROVED SHOP DRAWINGS	-	FOUNDATION INSPECTION	-	POST INSTALLED ANCHOR ROD PULL-OUT TESTING
-	FABRICATION INSPECTION	-	CONCRETE COMP. STRENGTH AND SLUMP TEST	X	PHOTOGRAPHS
X	MATERIAL TEST REPORT	-	POST INSTALLED ANCHOR ROD VERIFICATION	ADDITIONAL TESTING AND INSPECTION	
-	FABRICATOR NDE INSPECTION	-	BASE PLATE GROUT VERIFICATION		
-	NDE REPORT OF MONOPOLE BASEPLATE (AS REQUIRED)	-	THIRD PARTY CERTIFIED WELD INSPECTION		
X	PACKING SLIP	-	EARTHWORK LIFT AND DENSITY (REPORT REQUIRED)		
ADDITIONAL TESTING AND INSPECTION		X	ON SITE COLD GALVANIZING VERIFICATION		
		-	GUY WIRE TENSION REPORT		
		X	GC AS-BUILT DOCUMENTS		
		ADDITIONAL TESTING AND INSPECTION			

MODIFICATION INSPECTION NOTES:

GENERAL:

1. THE MODIFICATION INSPECTION IS A VISUAL INSPECTION OF TOWER MODIFICATION AND A REVIEW OF CONSTRUCTION INSPECTION AND OTHER REPORTS TO ENSURE THE INSTALLATION WAS CONSTRUCTED IN ACCORDANCE WITH THE CONTRACT DOCUMENTS. NAMELY THE MODIFICATION DRAWINGS., AS DESIGNED BY THE ENGINEER OF RECORD.

2. THE MODIFICATION INSPECTION IS TO CONFIRM INSTALLATION CONFIGURATION AND WORKMANSHIP ONLY AN IS NOT A REVIEW OF THE MODIFICATION DESIGN ITSELF. NOR DOES THE MODIFICATION INSPECTOR TAKE OWNERSHIP OF THE MODIFICATION DESIGN. OWNERSHIP OF THE STRUCTURAL MODIFICATION DESIGN EFFECTIVENESS AND INTENT RESIDES WITH THE ENGINEER OF RECORD AT ALL TIMES.

3. TO ENSURE THAT THE REQUIREMENT OF THE MODIFICATION INSPECTION ARE MET, IT IS VITAL THAT THE GENERAL CONTRACTOR (GC) AND THE MODIFICATION INSPECTOR BEGIN COMMUNICATION AND COORDINATING AS SOON AS A PO OR PAYMENT IS RECEIVED. IT IS EXPECTED THAT EACH PARTY WILL BE PROACTIVE IN REACHING OUT TO THE OTHER PARTY.

MODIFICATION INSPECTOR:

1. THE MODIFICATION INSPECTOR IS REQUIRED TO CONTACT THE GC AS SOON AS RECEIVING A PO OR PAYMENT FOR THE MODIFICATION INSPECTION TO:

- REVIEW THE REQUIREMENT OF THE MODIFICATION INSPECTION CHECKLIST
- WORK WITH THE GC TO DEVELOP A SCHEDULE TO CONDUCT ON-SITE
- INSPECTIONS
- DISCUSS ANY SITE SPECIFIC INSPECTIONS OR CONCERNS

2. THE MODIFICATION INSPECTOR IS RESPONSIBLE FOR COLLECTING ALL GENERAL CONTRACTOR (GC) INSPECTION AND TEST REPORTS. REVIEWING THE DOCUMENTS FOR ADHERENCE TO THE CONTRACT DOCUMENTS, CONDUCTING THE IN-FEILD INSPECTIONS, AND SUBMITTING THE MODIFICATION INSPECTION REPORT.

GENERAL CONTRACTOR:

1. THE GC IS REQUIRED TO CONTACT THE MODIFICATION INSPECTOR AS SOON AS RECEIVING A PO OR PAYMENT FOR THE MODIFICATION INSTALLATION OR TURNKEY PROJECT TO:

- REVIEW THE REQUIREMENT OF THE MODIFICATION INSPECTION CHECKLIST
- WORK WITH THE MI INSPECTOR TO DEVELOP A SCHEDULE TO CONDUCT ON-SITE MODIFICATION INSPECTIONS, INCLUDING FOUNDATION INSPECTIONS
- BETTER UNDERSTAND ALL INSPECTION AND TESTING REQUIREMENTS

2. THE GC SHALL PERFORM AND RECORD THE TEST AND INSPECTION RESULTS IN ACCORDANCE WITH THE REQUIREMENTS OF THE MODIFICATION INSPECTION CHECKLIST.

RECOMMENDATIONS:

1. IT IS SUGGESTED THAT THE GC PROVIDE A MINIMUM OF 5 BUSINESS DAYS NOTICE, TO THE MODIFICATION INSPECTOR AS TO WHEN THE SITE WILL BE READY FOR HE MODIFICATION INSPECTION TO BE CONDUCTED.

- THE GC AND MODIFICATION INSPECTION COORDINATE CLOSELY THROUGHOUT THE ENTIRE PROJECT.
- WHEN POSSIBLE IT IS PREFERRED TO HAVE THE MODIFICATION INSPECTOR AND GC ON-SITE SIMULTANEOUSLY FOR ANY GUY WIRE TENSIONING OR RE-TENSIONING OPERATIONS.
- IT MAY BE BENEFICIAL TO INSTALL ALL TOWER MODIFICATIONS PRIOR TO CONDUCTING THE FOUNDATION INSPECTION TO ALLOW FOUNDATION AND MODIFICATION INSPECTION(S) DONE IN ONE SITE VISIT.
- WHEN POSSIBLE, IT IS PREFERRED TO HAVE THE GC AND MODIFICATION INSPECTOR ON-SITE DURING THE MODIFICATION INSPECTION. THEREFORE, THE GC MAY CHOOSE TO COORDINATE THE MODIFICATION INSPECTION CAREFULLY TO ENSURE ALL CONSTRUCTION FACILITIES AT THEIR DISPOSAL WHEN THE MI INSPECTOR IS ON SITE.

CANCELLATION OR DELAYS IN SCHEDULED MODIFICATION INSPECTION:

1. IF THE GC AND MODIFICATION INSPECTOR AGREE TO A DATE ON WHICH THE MODIFICATION INSPECTION WILL BE CONDUCTED, AND EITHER ARTY CANCELS OR DELAYS, THE TOWER OWNER SHALL NOT BE RESPONSIBLE FOR ANY COSTS, FEES, LOSS OR DEPOSITS AND/OR OTHER PENALTIES RELATE TO THE CANCELLATION OR DELAY INCURRED BY EITHER PARTY FOR ANY TIME. EXCEPTIONS MAY BE MADE IN THE DELAY/ CANCELLATION IS CAUSED BY WEATHER OR OTHER CONDITIONS THAT MAY COMPROMISE THE SAFETY OF THE PARTIES INVOLVED.

CORRECTION OF FAILING MODIFICATION INSPECTION:

1. IF THE MODIFICATION INSTALLATION WOULD FAIL THE MODIFICATION INSPECTION ("FAILED MODIFICATION INSPECTION"), THE GC SHALL WORK WITH MODIFICATION INSPECTOR TO COORDINATE A REMEDIATION PLAN IN ONE OF TWO WAYS:

- CORRECT FAILING ISSUES TO COMPLY WITH THE SPECIFICATIONS CONTAINED IN THE ORIGINAL CONTRACT DOCUMENTS AND COORDINATE A SUPPLEMENT MODIFICATION INSPECTION. OR, WITH TOWER OWNER'S APPROVAL, THE GC MAY WORK WITH THE ENGINEER OF RECORD TO RE-ANALYZE THE MODIFCATION/REINFORCEMENT USING AS-BUILT CONDITION.

VERIFICATION INSPECTIONS:

1. TOWER OWNER RESERVES THE RIGHT TO CONDUCT A VERIFICATION INSPECTION TO VERIFY THE ACCURACY AND COMPLETENESS OF PREVIOUSLY COMPLETED MODIFICATION AND INSPECTION(S) ON TOWER MODIFICATION PRODUCTS.

2. VERIFICATION INSPECTION MAY BE CONDUCTED BY AN INDEPENDENT FIRM AFTER A MODIFICATION PROJECT IS COMPLETED, AS MARKED BY THE DATE OF AN ACCEPTED "PASSING MODIFICATION INSPECTION MODIFICATION INSPECTION" REPORT FOR THE ORIGINAL PROJECT.

REQUIRED PHOTOS:

1. BETWEEN THE GC AND THE MI INSPECTOR THE FOLLOWING PHOTOGRAPHS ARE TO BE TAKEN AND INCLUDED IN THE MODIFICATION INSPECTION REPORT:

- PRE-CONSTRUCTION GENERAL SITE CONDITION
- PHOTOGRAPHS DURING THE REINFORCEMENT MODIFICATION CONSTRUCTION/ERECTION AND INSPECTION

  - RAW MATERIALS
  - PHOTOS OF ALL CRITICAL DETAILS
  - WELD PREPARATION
  - FOUNDATION MODIFICATION
  - BOLT INSTALLATION AND TORQUE
  - FINAL INSTALLED CONDITION
  - SURFACE COATING REPAIR

- POST CONDITION PHOTOGRAPHS
- FINAL INFIELD CONDITION ANY OTHER PHOTOS DEEMED RELEVANT TO SHOW COMPLETE DENTALS OF MODIFICATIONS

2. PHOTOS OF ELEVATED MODIFICATIONS TAKEN FROM THE GROUND SHALL BE CONSIDERED INADEQUATE.

PLANS PREPARED FOR:

CROWN CASTLE

PLANS PREPARED BY:

POD
POWER OF DESIGN
1033 E. TURKEYFOOT LAKE RD.
SUITE 206 AKRON, OHIO 44312
330-961-7432

CARRIER:

verizon

DRAWING NOTICE:
THESE DOCUMENTS ARE CONFIDENTIAL AND ARE THE SOLE PROPERTY OF CROWN CASTLEW AND MAY NOT BE REPRODUCED, DISSEMINATED OR REDISTRIBUTED WITHOUT THE EXPRESS WRITTEN CONSENT OF CROWN CASTLEW.

MODIFICATION DRAWING

REV.	DATE	DESCRIPTION

SITE INFORMATION:
BRG 123 943084
(NG1905)

21 BERKSHIRE ROAD
NEWTON, CT 06482

SITE NUMBER:
806354

POD NUMBER:	18-29816
DRAWN BY:	UT
CHECKED BY:	JGC
DATE:	10/26/2018

SHEET TITLE:

MODIFICATION CHECKLIST

MI-01

Site Name: Newtown CT

Cumulative Power Density

Operator	Operating Frequency	Number of Trans.	ERP Per Trans.	Total ERP	Distance to Target	Calculated Power Density	Maximum Permissible Exposure*	Fraction of MPE
	(MHz)		(watts)	(watts)	(feet)	(mW/cm^2)	(mW/cm^2)	(%)
VZW PCS	1970	1	4889	4889	185	0.0514	1.0	5.14%
VZW Cellular	869	3	477	1431	185	0.0150	0.579333333	2.60%
VZW Cellular	880	1	3085	3085	185	0.0324	0.586666667	5.53%
VZW AWS	2145	1	6155	6155	185	0.0647	1.0	6.47%
VZW 700	746	1	2813	2813	185	0.0296	0.497333333	5.94%

Total Percentage of Maximum Permissible Exposure 25.67%

*Guidelines adopted by the FCC on August 1, 1996, 47 CFR Section 1.13101 based on NCRP Report 86, 1986 and generally on ANSI/IEEE C95.1-1992

MHz = Megahertz
mW/cm^2 = milliwatts per square centimeter
ERP = Effective Radiated Power

Absolute worst case maximum values used, including the following assumptions:
1. closest accessible point is distance from antenna to base of pole;
2. continuous transmission from all available channels at full power for indefinite time period; and,
3. all RF energy is assumed to be directed solely to the base of the pole.