Alex Murshteyn, Site Acquisition Consultant
c/o Cellco Partnership d/b/a Verizon Wireless
Centerline Communications, LLC
750 West Center Street, Floor 3
West Bridgewater, MA 02379
Mobile: (508) 821-0159
AMurshteyn@centerlinecommunications.com

March 16, 2020

Melanie A. Bachman
Acting Executive Director
Connecticut Siting Council
10 Franklin Square
New Britain, CT 06051

RE: Notice of Exempt Modification // Site: New Milford CT (ATC: 302523)
Canterbury Rd (Aspetuck Ave, Taylor Ter; a/k/a 4 Elkington Farm Rd), New Milford, CT
N 41.5909 // W -73.4086

Dear Ms. Bachman:

Cellco Partnership d/b/a Verizon Wireless currently maintains 12 antennas at the 132-foot mount on the existing 150-foot monopole tower, located at 0 Canterbury Road (near Aspetuck Avenue, Taylor Terrace) a/k/a 4 Elkington Farm Road, New Milford, CT. The Council approved Verizon Wireless shared use of the existing tower in 2003. The tower is owned by American Tower. Canterbury School, Inc. owns the land. Verizon Wireless now intends to install 3 antennas and for its LTE (700/850/1900/2100/3500 MHz) as part of it its PCS/LTE/AWS/CBRS upgrade. Additionally, Verizon Wireless will replace all of its remote radio head units (RRUs) with 9 new RRUs, install 3 diplexers and upgrade certain cabling; altogether updating leased equipment rights, as reflected by the final configuration outlined in the structural analysis and proposed hereby.

Please accept this letter as notification pursuant to Regulations of Connecticut State Agencies §16-50j-73, for construction that constitutes an exempt modification pursuant to R.C.S.A. § 16-50j-72(b)(2). In accordance with R.C.S.A. § 16-50j-73, a copy of this letter is being sent to Mayor Pete Bass, for the Town of New Milford, to its Land Use Supervisor/Zoning Enforcement Officer/Town Planner Laura Regan, to American Tower, the tower owner and to the ground owner, Canterbury School, Inc.

The planned modifications to the facility fall squarely within those activities explicitly provided for in R.C.S.A. § 16-50j-72(b)(2). Enclosed to accommodate this filing are construction drawings dated March 9, 2020 by Tower Engineering Professionals, a structural analysis dated November 21, 2019 plus structural mount analysis dated January 17, 2020 by A.T. Engineering

Service, PLLC, and radio frequency (RF) analysis table showing worst-case RF emission calculation by Verizon Wireless RF Design Engineering.

1. The proposed modifications will not result in an increase in the height of the existing structure.

2. The proposed modifications will not require the extension of the site boundary.

3. The proposed modifications will not increase noise levels at the facility by six decibels or more, or to levels that exceed state and local criteria.

4. The operation of the new antennas will not increase radio frequency emissions at the facility to a level at or above the Federal Communications Commission safety standard.

5. The proposed modifications will not cause a change or alteration in the physical or environmental characteristics of the site.

6. The existing structure and its foundation can support the proposed loading, as shown in the attached structural and mount analyses by A.T. Engineering, PLLC, dated November 21, 2019 and January 17, 2020, respectively.

For the foregoing reasons, Verizon Wireless respectfully submits that the proposed modifications to the above referenced telecommunications facility constitute an exempt modification under R.C.S.A. § 16-50j-72(b)(2).

Sincerely,

Alex Murshteyn, Site Acquisition Consultant
c/o Cellco Partnership d/b/a Verizon Wireless
Centerline Communications, LLC
750 West Center Street, Floor 3
West Bridgewater, MA 02379
Mobile: (508) 821-0159
AMurshteyn@centerlinecommunications.com

Attachments

cc: Pete Bass, Mayor, Town of New Milford - as elected official
Laura Regan - Land Use Supervisor/ZEO/Town Planner, Town of New Milford - as P&Z official
Canterbury School, Inc. - as ground owner
American Tower Corporation - as tower owner

UPS CampusShip: View/Print Label

1. **Ensure there are no other shipping or tracking labels attached to your package.** Select the Print button on the print dialog box that appears. Note: If your browser does not support this function select Print from the File menu to print the label.

2. **Fold the printed label at the solid line below.** Place the label in a UPS Shipping Pouch. If you do not have a pouch, affix the folded label using clear plastic shipping tape over the entire label.

3. **GETTING YOUR SHIPMENT TO UPS**
   Customers with a Daily Pickup
   Your driver will pickup your shipment(s) as usual.

   Customers without a Daily Pickup
   Take your package to any location of The UPS Store®, UPS Access Point(TM) location, UPS Drop Box, UPS Customer Center, Staples® or Authorized Shipping Outlet near you. Items sent via UPS Return Services(SM) (including via Ground) are also accepted at Drop Boxes. To find the location nearest you, please visit the Resources area of CampusShip and select UPS Locations.
   Schedule a same day or future day Pickup to have a UPS driver pickup all your CampusShip packages.
   Hand the package to any UPS driver in your area.

UPS Access Point™
CVS STORE # 972
555 WASHINGTON ST
SOUTH EASTON ,MA 02375

UPS Access Point™
CVS STORE # 7232
689 DEPOT ST
NORTH EASTON ,MA 02356

UPS Access Point™
TOWN LINE GENERAL STORE
450 E CENTER ST
WEST BRIDGEWATER ,MA 02379

FOLD HERE

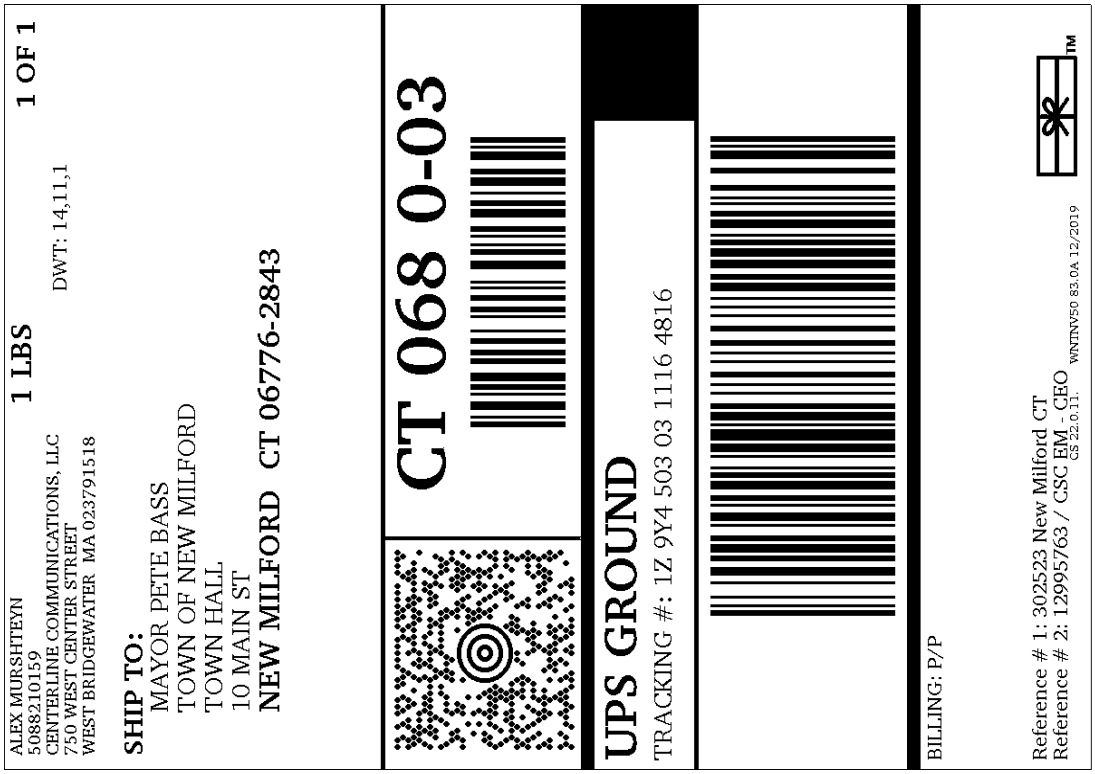

UPS CampusShip: View/Print Label

1. **Ensure there are no other shipping or tracking labels attached to your package.** Select the Print button on the print dialog box that appears. Note: If your browser does not support this function select Print from the File menu to print the label.

2. **Fold the printed label at the solid line below.** Place the label in a UPS Shipping Pouch. If you do not have a pouch, affix the folded label using clear plastic shipping tape over the entire label.

3. **GETTING YOUR SHIPMENT TO UPS**
   Customers with a Daily Pickup
   Your driver will pickup your shipment(s) as usual.

   Customers without a Daily Pickup
   Take your package to any location of The UPS Store®, UPS Access Point(TM) location, UPS Drop Box, UPS Customer Center, Staples® or Authorized Shipping Outlet near you. Items sent via UPS Return Services(SM) (including via Ground) are also accepted at Drop Boxes. To find the location nearest you, please visit the Resources area of CampusShip and select UPS Locations.
   Schedule a same day or future day Pickup to have a UPS driver pickup all your CampusShip packages.
   Hand the package to any UPS driver in your area.

UPS Access Point™
CVS STORE # 972
555 WASHINGTON ST
SOUTH EASTON ,MA 02375

UPS Access Point™
CVS STORE # 7232
689 DEPOT ST
NORTH EASTON ,MA 02356

UPS Access Point™
TOWN LINE GENERAL STORE
450 E CENTER ST
WEST BRIDGEWATER ,MA 02379

FOLD HERE

ALEX MURSHTEYN
5088210159
CENTERLINE COMMUNICATIONS, LLC
750 WEST CENTER STREET
WEST BRIDGEWATER MA 023791518

1 LBS **1 OF 1**

DWT: 14,11,1

SHIP TO:
LAURA REGAN, LAND USE SUPERVISOR /
ZEO / TOWN PLANNER - ZONING
TOWN HALL
TOWN OF NEW MILFORD
10 MAIN ST
NEW MILFORD CT 06776-2843

CT 068 0-03

UPS GROUND
TRACKING #: 1Z 9Y4 503 03 1009 6839

BILLING: P/P

Reference # 1: 302523 aka New Milford CT
Reference # 2: 12995763 / CSC EM - P&Z
CS 22.0.11. WNTNV50 83.0A 12/2019

UPS CampusShip: View/Print Label

1. **Ensure there are no other shipping or tracking labels attached to your package.** Select the Print button on the print dialog box that appears. Note: If your browser does not support this function select Print from the File menu to print the label.

2. **Fold the printed label at the solid line below.** Place the label in a UPS Shipping Pouch. If you do not have a pouch, affix the folded label using clear plastic shipping tape over the entire label.

3. **GETTING YOUR SHIPMENT TO UPS**
   Customers with a Daily Pickup
   Your driver will pickup your shipment(s) as usual.

   Customers without a Daily Pickup
   Take your package to any location of The UPS Store®, UPS Access Point(TM) location, UPS Drop Box, UPS Customer Center, Staples® or Authorized Shipping Outlet near you. Items sent via UPS Return Services(SM) (including via Ground) are also accepted at Drop Boxes. To find the location nearest you, please visit the Resources area of CampusShip and select UPS Locations.
   Schedule a same day or future day Pickup to have a UPS driver pickup all your CampusShip packages.
   Hand the package to any UPS driver in your area.

UPS Access Point™
CVS STORE # 972
555 WASHINGTON ST
SOUTH EASTON ,MA 02375

UPS Access Point™
CVS STORE # 7232
689 DEPOT ST
NORTH EASTON ,MA 02356

UPS Access Point™
TOWN LINE GENERAL STORE
450 E CENTER ST
WEST BRIDGEWATER ,MA 02379

FOLD HERE

ALEX MURSHTEYN
5088210159
CENTERLINE COMMUNICATIONS, LLC
750 WEST CENTER STREET
WEST BRIDGEWATER MA 023791518

1 LBS

1 OF 1

DWT: 14,11,1

SHIP TO:
CANTERBURY SCHOOL, INC.
101 ASPETUCK AVE
NEW MILFORD CT 06776-2825

CT 068 0-03

UPS GROUND
TRACKING #: 1Z 9Y4 503 03 0946 5844

BILLING: P/P

Reference # 1: 302523 aka New Milford CT
Reference # 2: CSC EM - GO

CS 22.0.11. WNTNV50 83.0A 12/2019

UPS CampusShip: View/Print Label

1. **Ensure there are no other shipping or tracking labels attached to your package.** Select the Print button on the print dialog box that appears. Note: If your browser does not support this function select Print from the File menu to print the label.

2. **Fold the printed label at the solid line below.** Place the label in a UPS Shipping Pouch. If you do not have a pouch, affix the folded label using clear plastic shipping tape over the entire label.

3. **GETTING YOUR SHIPMENT TO UPS**
   Customers with a Daily Pickup
   Your driver will pickup your shipment(s) as usual.

   Customers without a Daily Pickup
   Take your package to any location of The UPS Store®, UPS Access Point(TM) location, UPS Drop Box, UPS Customer Center, Staples® or Authorized Shipping Outlet near you. Items sent via UPS Return Services(SM) (including via Ground) are also accepted at Drop Boxes. To find the location nearest you, please visit the Resources area of CampusShip and select UPS Locations.
   Schedule a same day or future day Pickup to have a UPS driver pickup all your CampusShip packages.
   Hand the package to any UPS driver in your area.

UPS Access Point™
CVS STORE # 972
555 WASHINGTON ST
SOUTH EASTON ,MA 02375

UPS Access Point™
CVS STORE # 7232
689 DEPOT ST
NORTH EASTON ,MA 02356

UPS Access Point™
TOWN LINE GENERAL STORE
450 E CENTER ST
WEST BRIDGEWATER ,MA 02379

FOLD HERE

ALEX MURSHTEYN
5088210159
CENTERLINE COMMUNICATIONS, LLC
750 WEST CENTER STREET
WEST BRIDGEWATER MA 023791518

1 LBS

1 OF 1

DWT: 14,11,1

SHIP TO:
BLAKE PAYNTER
AMERICAN TOWER CORP
10 PRESIDENTIAL WAY
WOBURN MA 01801-1053

MA 018 9-04

UPS GROUND
TRACKING #: 1Z 9Y4 503 03 1086 5749

BILLING: P/P

Reference # 1: 302470 aka Ansonia CT &
Reference # 2: 302511 aka Westport S CT
&
302523 aka New Milford CT

CS 22.0.11. WNTNV50 83.0A 12/2019

DOCKET NO. 138 - An application of SNET Cellular, Inc., for a Certificate of Environmental Compatibility and Public Need for the construction, maintenance, and operation of cellular facilities in the Towns of Plymouth, Harwinton, Winchester, and New Milford, Connecticut.

Connecticut Siting Council

November 26, 1990

DECISION AND ORDER

Pursuant to the foregoing Findings of Fact and Opinion, the Connecticut Siting Council finds that the effects associated with the construction, operation, and maintenance of four cellular telecommunications towers and associated equipment at the proposed Plymouth, Harwinton, New Milford, and alternate Winchester sites including effects on the natural environment; ecological integrity and balance; public health and safety; scenic, historic, and recreational values; forests and parks; air and water purity; and fish and wildlife need not be in conflict either alone or cumulatively with other effects, are not in conflict with the policies of the State concerning such effects, and are not sufficient reason to deny the application, and therefore directs that a Certificate of Environmental Compatibility and Public Need (Certificate), as provided by section 16-50k of the Connecticut General Statutes (CGS), be issued to SNET Cellular Inc., for the construction, operation, and maintenance of a cellular telecommunications tower, associated equipment, and building at the proposed Plymouth, Harwinton, New Milford, and alternate Winchester sites.

The facilities shall be constructed, operated, and maintained substantially as specified in the Council's record in this matter, and subject to the following conditions:

1. The facilities shall be constructed in accordance with the State of Connecticut Basic Building Code.

2. The self-supporting monopole towers shall be no taller than necessary to provide the proposed communication service and in no event shall the Plymouth, Harwinton, and Winchester tower structures exceed 192-feet or the New Milford tower structure exceed 162 feet above ground level (AGL), including antennas and appurtenances.

3. The Certificate Holder shall prepare a Development and Management (D&M) Plan, for approval by the Council, for these sites in compliance with sections 16-50j-75 through 16-50j-77 of the Regulations of State Agencies (RSA). The D&M Plan shall include detailed plans for the towers, tower pedestals, tower foundations, soil boring reports, antenna structures, equipment buildings, access roads, security fences, erosion and sedimentation control plans

consistent with the Connecticut Guidelines of Soil Erosion and Sedimentation Control, and landscaping plans where necessary to screen the equipment building from adjacent land uses.

At the proposed Harwinton site, the accessway shall be designed to avoid a direct sight-line of the entire tower structure from the adjacent Fowler residence. To further mitigate the visibility of the facility, the tower's site shall be moved as close to the electric transmission line right-of-way as safety clearances allow.

At the alternate Winchester site, the Certificate Holder shall design the accessway to avoid a direct sight-line from the northern end of Oakdale Avenue. Prior to construction, the Certificate Holder shall secure all necessary permits and approvals to construct a crossing of the Tennessee Gas Company's underground gas transmission line. Prior to any necessary blasting activities, the Certificate Holder shall secure all necessary permits and shall conduct such blasting in accordance with State regulations. Copies of all permits and approvals shall be forwarded to the Council immediately upon receipt.

4. The Certificate Holder shall comply with any existing and future radio frequency (RF) standard promulgated by State or federal regulatory agencies. Upon the establishment of any new governmental RF standards, the facilities granted in this Decision and Order shall be brought into compliance with such standards.

5. The Certificate Holder shall provide the Council a recalculated report of electromagnetic radio frequency power density if and when circumstances in operation cause a change in power densities above the levels originally calculated and provided in the application.

6. The Certificate Holder shall permit public or private entities to share space on the proposed towers for fair consideration, or shall provide any requesting entity with specific legal, technical, environmental, or economic reasons precluding such tower sharing.

7. If the facilities do not initially provide, or permanently cease to provide cellular service following completion of construction, this Decision and Order shall be void, and the tower(s) and all associated equipment shall be dismantled and removed or reapplication for any new use shall be made to the Council before any such new use is made.

8. Unless otherwise approved by the Council, this Decision and Order shall be void if all construction authorized herein is not completed within three years of the effective date of this Decision and Order or within three years after all appeals to this Decision and Order have been resolved.

Pursuant to Section 16-50p, we hereby direct that a copy of the Findings of Fact, Opinion, and Decision and Order be served on each person listed below, and notice of issuance shall be published in The New Milford Times, The Bristol Press, The Registar-Citizen, and The Danbury News-Times.

By this Decision and Order, the Council disposes of the legal rights, duties, and privileges of each party named or admitted to the proceeding in accordance with Section 16-50j-17 of the Regulations of State Agencies.

The parties to this proceeding are:

(PARTIES)	(ITS REPRESENTATIVES)
SNET Cellular, Inc.	Peter J. Tyrrell Senior Attorney SNET Cellular, Inc. 227 Church Street Room 1021 New Haven, CT 06506
(INTERVENORS)	
Pikeville Cellular Partnership	Charles Wolf, Esq. Robinson & Cole One Commercial Plaza Hartford, CT 06103-3597

TEF:bw

4886E-1-3

CERTIFICATION

The undersigned members of the Connecticut Siting Council hereby certify that they have heard this case in Docket No. 138 or read the record thereof, and that we voted as follows:

Dated at New Britain, Connecticut the 26 day of November, 1990.

Council Members	Vote Cast
Gloria Dibble Pond Chairperson	YES
Commissioner Peter Boucher Designee: Mark Marcus	YES
Commissioner Leslie Carothers Designee: Brian Emerick	YES
Harry E. Covey	YES
Mortimer A. Gelston	YES
Daniel P. Lynch, Jr.	YES
Paulann H. Sheets	YES
William H. Smith	ABSENT
Colin C. Tait	YES

4879E-2

STATE OF CONNECTICUT)
:
ss. New Britain, Connecticut
COUNTY OF HARTFORD)

I hereby certify that the foregoing is a true and correct copy of the Decision and Order issued by the Connecticut Siting Council, State of Connecticut.

ATTEST:

Joel M. Rinebold
Executive Director
Connecticut Siting Council

I certify that a copy of the Findings of Fact, Opinion, and Decision and Order in Docket No. 138 have been forwarded by Certified First Class Return Receipt Requested mail on December 3, 1990, to all parties of record as listed on the attached service list, dated August 22, 1990.

ATTEST:

Stanley J. Modzelesky
Executive Assistant
Connecticut Siting Council

4879E-1

Date: August 22, 1990

Docket No. 138

LIST OF PARTIES AND INTERVENORS - SERVICE LIST

Status Granted	Status Holder (name, address & phone number)	Representative (name, address & phone number)
Party [X] Intervenor [ ]	SNET Cellular, Inc.	Peter J. Tyrrell Senior Attorney SNET Cellular, Inc. 227 Church Street Room 1021 New Haven, CT 06506
Party [ ] Intervenor [X]	Pikeville Cellular Partnership	Charles Wolf, Esq. Robinson & Cole One Commercial Plaza Hartford, CT 06103-3597
Party [ ] Intervenor [ ]		

4467E

AMERICAN TOWER®
CORPORATION

Structural Analysis Report

Structure	:	**150 ft Monopole**
ATC Site Name	:	**New Milford CT 2, CT**
ATC Asset Number	:	**302523**
Engineering Number	:	**12995763_C3_04**
Proposed Carrier	:	**Verizon Wireless**
Carrier Site Name	:	**New Milford CT**
Carrier Site Number	:	**467154**
Site Location	:	**4 Elkington Farm Rd** **New Milford, CT 06776-2909** **41.590900,-73.408600**
County	:	**Litchfield**
Date	:	**November 21, 2019**
Max Usage	:	**93%**
Result	:	**Pass**

Prepared By:
Tyler Ferguson, E.I.
Structural Engineer II

Reviewed By:

COA: PEC.0001553

Table of Contents

Introduction 1

Supporting Documents 1

Analysis 1

Conclusion 1

Existing and Reserved Equipment 2

Equipment to be Removed 2

Proposed Equipment 2

Structure Usages 3

Foundations 3

Deflection and Sway 3

Standard Conditions 4

Calculations ..... Attached

Introduction

The purpose of this report is to summarize results of a structural analysis performed on the 150 ft monopole to reflect the change in loading by Verizon Wireless.

Supporting Documents

Tower Drawings	ITT Meyer per AT&T Design Spec. AT-8935, dated April 13, 1984
Foundation Drawing	SNET Job #3C239, dated April 20, 1990
Geotechnical Report	JSEC Job #14974-NM, dated January 28, 2002
Modifications	Scientel CMS Modification Drawings, dated March 7, 2002 ATC Project #41658239, dated December 22, 2008 ATC Project #50496632, dated October 22, 2012 ATC Project #OAA682215_C6_04, dated September 19, 2016 ATC Project #OAA707682_C6_05, dated December 28, 2017

Analysis

The tower was analyzed using tnxTower 8.0.5.0 tower analysis software. This program considers an elastic three-dimensional model and second-order effects per ANSI/TIA-222.

Basic Wind Speed:	90 mph (3-Second Gust, V_{asd}) / 115 mph (3-second Gust, V_{ult})
Basic Wind Speed w/ Ice:	40 mph (3-Second Gust) w/ 3/4" radial ice concurrent
Code:	ANSI/TIA-222-G / 2015 IBC / 2018 Connecticut State Building Code
Structure Class:	II
Exposure Category:	B
Topographic Category:	1
Crest Height:	0 ft
Spectral Response:	Ss = 0.20, S_1 = 0.07
Site Class:	D - Stiff Soil

Conclusion

Based on the analysis results, the structure meets the requirements per the applicable codes listed above. The tower and foundation can support the equipment as described in this report.

If you have any questions or require additional information, please contact American Tower via email at Engineering@americantower.com. Please include the American Tower site name, site number, and engineering number in the subject line for any questions.

Existing and Reserved Equipment

Elev.[1] (ft)	Qty	Antenna	Mount Type	Lines	Carrier
154.0	1	Andrew ABT-DFDM-ADB	Low Profile Platform	(2) 0.39" (10mm) Fiber Trunk (4) 0.78" (19.7mm) 8 AWG 6 (12) 1 1/4" Coax (1) 2" conduit (1) 3" conduit	AT&T MOBILITY
	3	Powerwave Allgon TT19-08BP111-001			
	2	Kathrein Scala 80010768			
	2	KMW AM-X-CD-16-65-00T-RET			
	1	Kathrein Scala 80010767			
	1	Kathrein Scala 800 10764			
	3	Powerwave Allgon 7770.00A			
	3	Ericsson RRUS-12 B2			
	3	Ericsson RRUS 32 B2			
	3	Ericsson RRUS 11 (Band 12)			
	3	Kaelus DBCT108F1V92-1			
	2	Raycap DC6-48-60-18-8F			
140.0	3	RFS APXV9TM14-ALU-I20*	Platform with Handrails	(4) 1 1/4" Hybriflex Cable	SPRINT NEXTEL
	3	Alcatel-Lucent TD-RRH8x20-25 w/ Solar Shield			
	3	RFS APXVSPP18-C-A20			
132.0	2	Antel LPA-80063/6CF	Platform with Handrails	(6) 1 5/8" Coax (2) 1.58" (40.1mm) Hybrid	VERIZON WIRELESS
	6	Commscope JAHH-65B-R3B			
	3	Nokia B5 RRH4x40 w/ Solar Shield			
	2	RFS DB-T1-6Z-8AB-0Z			
	4	Antel LPA-80080/6CF ___			
75.0	1	PCTEL GPS-TMG-HR-26N	Flush	(1) 1/2" Coax	SPRINT NEXTEL

Equipment to be Removed

Elev.[1] (ft)	Qty	Antenna	Mount Type	Lines	Carrier
132.0	3	Nokia B5 RRH4x40-850	-	-	VERIZON WIRELESS
	3	Alcatel-Lucent B66A RRH 4x45			
	3	Alcatel-Lucent B13 RRH4x30-4R 700U			
	3	Alcatel-Lucent B25 RRH4x30			

Proposed Equipment

Elev.[1] (ft)	Qty	Antenna	Mount Type	Lines	Carrier
132.0	3	Commscope CBC78T-DS-43-2X	Platform with Handrails	-	VERIZON WIRELESS
	3	Samsung Outdoor LAA 1W RRH –Clip-on Antenna			
	3	Samsung Outdoor CBRS 20W RRH			
	3	Samsung B5/B13 RRH-BR04C			
	3	Samsung B2/B66A RRH-BR049			

[1] Contracted elevations are shown for appurtenances within contracted installation tolerances. Appurtenances outside of contract limits are shown at installed elevations.

Structure Usages

Structural Component	Controlling Usage	Pass/Fail
Anchor Bolts	60%	Pass
Shaft	82%	Pass
Base Plate	30%	Pass
Flanges	93%	Pass
Reinforcement	47%	Pass

Foundations

Reaction Component	Analysis Reactions	% of Usage
Moment (Kip-Ft)	2257.0	77%
Axial (Kips)	45.0	33%
Shear (Kips)	21.0	15%

The structure base reactions resulting from this analysis were found to be acceptable through analysis based on geotechnical and foundation information, therefore no modification or reinforcement of the foundation will be required.

Deflection and Sway*

Antenna Elevation (ft)	Antenna	Carrier	Deflection (ft)	Sway (Rotation) (°)
132.0	Commscope CBC78T-DS-43-2X	Verizon Wireless	1.372	0.008
	Samsung Outdoor LAA 1W RRH –Clip-on Antenna			
	Samsung Outdoor CBRS 20W RRH			
	Samsung B5/B13 RRH-BR04C			
	Samsung B2/B66A RRH-BR049			

***Deflection and Sway was evaluated considering a design wind speed of 60 mph (3-Second Gust) per ANSI/TIA-222-G**

AMERICAN TOWER®
CORPORATION

Standard Conditions

All engineering services performed by A.T. Engineering Service, PLLC are prepared on the basis that the information used is current and correct. This information may consist of, but is not limited to the following:

- Information supplied by the client regarding antenna, mounts and feed line loading
- Information from drawings, design and analysis documents, and field notes in the possession of A.T. Engineering Service, PLLC

It is the responsibility of the client to ensure that the information provided to A.T. Engineering Service, PLLC and used in the performance of our engineering services is correct and complete.

All assets of American Tower Corporation, its affiliates and subsidiaries (collectively "American Tower") are inspected at regular intervals. Based upon these inspections and in the absence of information to the contrary, American Tower assumes that all structures were constructed in accordance with the drawings and specifications.

Unless explicitly agreed by both the client and A.T. Engineering Service, PLLC, all services will be performed in accordance with the current revision of ANSI/TIA-222.

All services are performed, results obtained, and recommendations made in accordance with generally accepted engineering principles and practices. A.T. Engineering Service, PLLC is not responsible for the conclusions, opinions and recommendations made by others based on the information supplied herein.

Section	Length (ft)	Number of Sides	Thickness (in)	Top Dia (in)	Bot Dia (in)	Grade	Tube Length (ft)	Reinf Size	Reinf Grade	Weight (K)
1	40.00	12	0.1875	15.0000	21.2500	A572-65				1.5
2	25.00	12	0.2500	21.2500	27.6100		33.50	2 1/2	A615-75	1.7
3	15.00	12	0.3722	27.6100	35.6910					1.9
4	15.00	12	0.3918	35.6910	38.0580					2.3
5	23.50	12	0.4720	38.0580	41.5760					4.8
6	16.50	12	0.4977	41.5760	44.0460					3.8
7	15.00	12	0.5362	44.0460	52.0640					4.2
										20.2

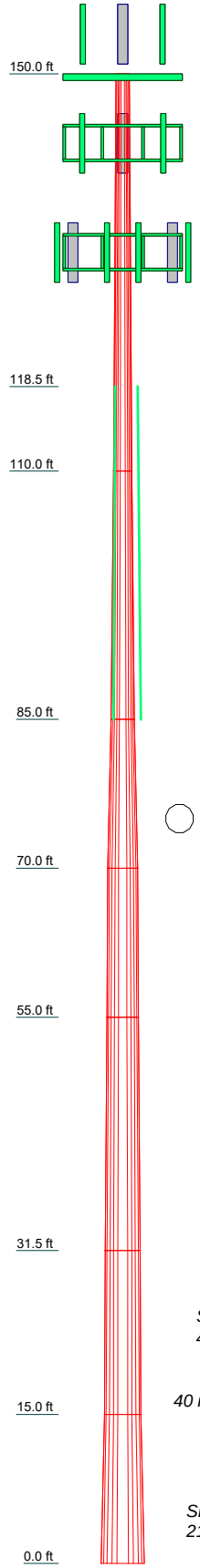

ALL REACTIONS ARE FACTORED

AXIAL 66 K

SHEAR 4 K

MOMENT 477 kip-ft

TORQUE 0 kip-ft
40 mph WIND - 0.7500 in ICE

AXIAL 45 K

SHEAR 21 K

MOMENT 2257 kip-ft

TORQUE 2 kip-ft
REACTIONS - 89 mph WIND

DESIGNED APPURTENANCE LOADING

TYPE	ELEVATION	TYPE	ELEVATION
ABT-DFDM-ADB	150	APXV9TM14-ALU-I20*	143
TT19-08BP111-001	150	APXV9TM14-ALU-I20*	143
TT19-08BP111-001	150	APXV9TM14-ALU-I20*	143
TT19-08BP111-001	150	APXVSPP18-C-A20	143
DBCT108F1V92-1	150	APXVSPP18-C-A20	143
DBCT108F1V92-1	150	APXVSPP18-C-A20	143
DBCT108F1V92-1	150	Round Platform w/ Handrails	143
(2) DC6-48-60-18-8F	150	B5 RRH4x40 w/ Solar Shield	132
RRUS 11 (Band 12)	150	B5 RRH4x40 w/ Solar Shield	132
RRUS 11 (Band 12)	150	B5 RRH4x40 w/ Solar Shield	132
RRUS 11 (Band 12)	150	B25 RRH4x30	132
RRUS 32 B2	150	B25 RRH4x30	132
RRUS 32 B2	150	B25 RRH4x30	132
RRUS 32 B2	150	B13 RRH4x30-4R 700U	132
RRUS-12 B2	150	B13 RRH4x30-4R 700U	132
RRUS-12 B2	150	B13 RRH4x30-4R 700U	132
RRUS-12 B2	150	B66A RRH 4x45	132
7770.00A	150	B66A RRH 4x45	132
7770.00A	150	B66A RRH 4x45	132
7770.00A	150	DB-T1-6Z-8AB-0Z	132
800 10764	150	DB-T1-6Z-8AB-0Z	132
80010767	150	(2) LPA-80080/6CF ___	132
AM-X-CD-16-65-00T-RET	150	(2) LPA-80080/6CF ___	132
AM-X-CD-16-65-00T-RET	150	(2) JAHH-65B-R3B	132
80010768	150	(2) JAHH-65B-R3B	132
80010768	150	(2) JAHH-65B-R3B	132
Round Low Profile Platform	150	(2) LPA-80063/6CF	132
TD-RRH8x20-25 w/ Solar Shield	143	Round Platform w/ Handrails	132
TD-RRH8x20-25 w/ Solar Shield	143	GPS-TMG-HR-26N	75
TD-RRH8x20-25 w/ Solar Shield	143		

MATERIAL STRENGTH

GRADE	Fy	Fu	GRADE	Fy	Fu
A572-65	65 ksi	80 ksi	A615-75	75 ksi	100 ksi

TOWER DESIGN NOTES

1. Tower is located in Litchfield County, Connecticut.
2. Tower designed for Exposure B to the TIA-222-G Standard.
3. Tower designed for a 89 mph basic wind in accordance with the TIA-222-G Standard.
4. Tower is also designed for a 40 mph basic wind with 0.75 in ice. Ice is considered to increase in thickness with height.
5. Deflections are based upon a 60 mph wind.
6. Tower Structure Class II.
7. Topographic Category 1 with Crest Height of 0.00 ft
8. Tower wrap from 0' to 85'. This model considers an equivalent Moment of Inertia for tower Sections 3 through 7.
9. TOWER RATING: 82%

AMERICAN TOWER CORPORATION
Tower Analysis

American Tower Engineering
3500 Regency Parkway, Suite 100
Cary, NC 27518
Phone: (919) 468-0112
FAX: (919) 466-5414

Job: **302523 - New Milford CT 2, CT**			
Project: **12995763_C3_04**			
Client: Verizon Wireless	Drawn by: Tyler.Ferguson	App'd:	
Code: TIA-222-G	Date: 11/21/19	Scale: NTS	
Path: C:\Users\tyler.ferguson\Desktop\302523\302523 - New Milford CT 2, CT.eri		Dwg No. E-1	

Tower Input Data

The tower is a monopole.
This tower is designed using the TIA-222-G standard.
The following design criteria apply:

Tower is located in Litchfield County, Connecticut.
ASCE 7-10 Wind Data is used (wind speeds converted to nominal values).
Basic wind speed of 89 mph.
Structure Class II.
Exposure Category B.
Topographic Category 1.
Crest Height 0.00 ft.
Nominal ice thickness of 0.7500 in.
Ice thickness is considered to increase with height.
Ice density of 56 pcf.
A wind speed of 40 mph is used in combination with ice.
Temperature drop of 50 °F.
Deflections calculated using a wind speed of 60 mph.
Tower wrap from 0' to 85'. This model considers an equivalent Moment of Inertia for tower Sections 3 through 7..
A non-linear (P-delta) analysis was used.
Pressures are calculated at each section.
Stress ratio used in pole design is 1.
Local bending stresses due to climbing loads, feed line supports, and appurtenance mounts are not considered.

Options

Consider Moments - Legs
Consider Moments - Horizontals
Consider Moments - Diagonals
Use Moment Magnification
√ Use Code Stress Ratios
√ Use Code Safety Factors - Guys
Escalate Ice
Always Use Max Kz
Use Special Wind Profile
Include Bolts In Member Capacity
Leg Bolts Are At Top Of Section
Secondary Horizontal Braces Leg
Use Diamond Inner Bracing (4 Sided)
SR Members Have Cut Ends
SR Members Are Concentric

Distribute Leg Loads As Uniform
Assume Legs Pinned
√ Assume Rigid Index Plate
√ Use Clear Spans For Wind Area
Use Clear Spans For KL/r
Retension Guys To Initial Tension
√ Bypass Mast Stability Checks
√ Use Azimuth Dish Coefficients
√ Project Wind Area of Appurt.
Autocalc Torque Arm Areas
Add IBC .6D+W Combination
Sort Capacity Reports By Component
Triangulate Diamond Inner Bracing
Treat Feed Line Bundles As Cylinder
Ignore KL/ry For 60 Deg. Angle Legs

Use ASCE 10 X-Brace Ly Rules
Calculate Redundant Bracing Forces
Ignore Redundant Members in FEA
SR Leg Bolts Resist Compression
All Leg Panels Have Same Allowable
Offset Girt At Foundation
√ Consider Feed Line Torque
Include Angle Block Shear Check
Use TIA-222-G Bracing Resist. Exemption
Use TIA-222-G Tension Splice Exemption
Poles
√ Include Shear-Torsion Interaction
Always Use Sub-Critical Flow
Use Top Mounted Sockets
Pole Without Linear Attachments
Pole With Shroud Or No Appurtenances
Outside and Inside Corner Radii Are Known

Tapered Pole Section Geometry

Section	Elevation ft	Section Length ft	Splice Length ft	Number of Sides	Top Diameter in	Bottom Diameter in	Wall Thickness in	Bend Radius in	Pole Grade
L1	150.00-110.00	40.00	0.00	12	15.0000	21.2500	0.1875	0.7500	A572-65 (65 ksi)
L2	110.00-85.00	25.00	0.00	12	21.2500	27.6100	0.2500	1.0000	A572-65 (65 ksi)
L3	85.00-70.00	15.00	0.00	12	27.6100	35.6910	0.3722	1.4888	A572-65 (65 ksi)
L4	70.00-55.00	15.00	0.00	12	35.6910	38.0580	0.3918	1.5673	A572-65 (65 ksi)
L5	55.00-31.50	23.50	0.00	12	38.0580	41.5760	0.4720	1.8882	A572-65 (65 ksi)
L6	31.50-15.00	16.50	0.00	12	41.5760	44.0460	0.4977	1.9908	A572-65 (65 ksi)
L7	15.00-0.00	15.00		12	44.0460	52.0640	0.5362	2.1449	A572-65 (65 ksi)

Tapered Pole Properties

Section	Tip Dia. in	Area in^2	I in^4	r in	C in	I/C in^3	J in^4	It/Q in^2	w in	w/t
L1	15.4630	8.9430	250.4541	5.3029	7.7700	32.2335	507.4880	4.4015	3.5175	18.76
	21.9335	12.7165	720.0669	7.5404	11.0075	65.4160	1459.0508	6.2587	5.1925	27.693
L2	21.9114	16.9050	951.5678	7.5180	11.0075	86.4472	1928.1342	8.3201	5.0250	20.1
	28.4958	22.0248	2104.4088	9.7949	14.3020	147.1411	4264.1028	10.8399	6.7295	26.918
L3	28.4527	32.6449	3091.3307	9.7511	14.3020	216.1470	6263.8740	16.0668	6.4020	17.2
	36.8187	42.3301	6739.8046	12.6441	18.4879	364.5515	13656.6715	20.8336	8.5677	23.018
L4	36.8118	44.5367	7083.2568	12.6371	18.4879	383.1285	14352.5987	21.9196	8.5151	21.732
	39.2623	47.5231	8605.8524	13.4845	19.7140	436.5341	17437.7901	23.3894	9.1494	23.351
L5	39.2340	57.1295	10301.4312	13.4558	19.7140	522.5428	20873.4924	28.1174	8.9345	18.927
	42.8761	62.4767	13473.2267	14.7152	21.5364	625.6035	27300.4100	30.7491	9.8773	20.925
L6	42.8671	65.8318	14179.0407	14.7060	21.5364	658.3766	28730.5806	32.4004	9.8085	19.708
	45.4242	69.7902	16893.6340	15.5903	22.8158	740.4348	34231.0826	34.3486	10.4705	21.038
L7	45.4106	75.1266	18153.2042	15.5765	22.8158	795.6408	36783.3132	36.9750	10.3672	19.334
	53.7115	88.9710	30152.0589	18.4469	26.9692	1118.0203	61096.2459	43.7888	12.5161	23.341

Tower Elevation ft	Gusset Area (per face) ft^2	Gusset Thickness in	Gusset Grade	Adjust. Factor A_f	Adjust. Factor A_r	Weight Mult.	Double Angle Stitch Bolt Spacing Diagonals in	Double Angle Stitch Bolt Spacing Horizontals in	Double Angle Stitch Bolt Spacing Redundants in
L1 150.00-110.00				1	1	1			
L2 110.00-85.00				1	1	1			
L3 85.00-70.00				1	1	1			
L4 70.00-55.00				1	1	1			
L5 55.00-31.50				1	1	1			
L6 31.50-15.00				1	1	1			
L7 15.00-0.00				1	1	1			

Pole Reinforcing Data

Height Above Base ft	Segment Length ft	No. of Segments	Offset in	Grade	Type	Size	Unbraced Length ft	K	Bolt Hole Dia. in	Bolts per Row	Shear Lag Factor U
85.00	33.50	3	8.1100	A615-75 (75 ksi)	Solid Round	2 1/2	2.50	0.80	0.0000	0	1.000

Feed Line/Linear Appurtenances - Entered As Round Or Flat

Description	Sector	Exclude From Torque Calculation	Component Type	Placement ft	Total Number	Number Per Row	Start/End Position	Width or Diameter in	Perimeter in	Weight plf
**********										
**********										
Wrap Seams	A	No	Surface Ar (CaAa)	85.00 - 0.00	1	1	0.000 0.000	0.1875		2.00
Wrap Seams	B	No	Surface Ar (CaAa)	85.00 - 0.00	1	1	0.000 0.000	0.0000		2.00
Wrap Seams	C	No	Surface Ar (CaAa)	85.00 - 0.00	1	1	0.000 0.000	0.0000		2.00
***										
#20 Dywidag	A	No	Surface Ar (CaAa)	131.00 - 80.00	1	1	0.000 0.000	2.5000		16.70
#20 Dywidag	B	No	Surface Ar (CaAa)	131.00 - 80.00	1	1	0.000 0.000	0.0000		16.70
#20 Dywidag	C	No	Surface Ar (CaAa)	131.00 - 80.00	1	1	0.000 0.000	0.0000		16.70

Feed Line/Linear Appurtenances - Entered As Area

Description	Face or Leg	Allow Shield	Exclude From Torque Calculation	Component Type	Placement ft	Total Number		C_AA_A ft^2/ft	Weight plf
1 1/4" Coax	A	No	No	Inside Pole	150.00 - 10.00	12	No Ice	0.00	0.63
							1/2" Ice	0.00	0.63
							1" Ice	0.00	0.63
0.39" (10mm) Fiber Trunk	A	No	No	Inside Pole	150.00 - 0.00	2	No Ice	0.00	0.07
							1/2" Ice	0.00	0.07
							1" Ice	0.00	0.07
0.78" (19.7 mm) 8 AWG 6	A	No	No	Inside Pole	150.00 - 10.00	4	No Ice	0.00	0.59
							1/2" Ice	0.00	0.59
							1" Ice	0.00	0.59
2" conduit	C	No	No	Inside Pole	150.00 - 0.00	1	No Ice	0.00	3.65
							1/2" Ice	0.00	3.65
							1" Ice	0.00	3.65
3" Conduit	A	No	No	Inside Pole	150.00 - 10.00	1	No Ice	0.00	7.58
							1/2" Ice	0.00	7.58
							1" Ice	0.00	7.58
***									
1 1/4" Hybriflex Cable	A	No	No	Inside Pole	143.00 - 10.00	4	No Ice	0.00	1.00
							1/2" Ice	0.00	1.00
							1" Ice	0.00	1.00
***									
1 5/8" Coax	B	No	No	Inside Pole	85.00 - 10.00	6	No Ice	0.00	0.82
							1/2" Ice	0.00	0.82

Description	Face or Leg	Allow Shield	Exclude From Torque Calculation	Component Type	Placement ft	Total Number		C_AA_A ft^2/ft	Weight plf
							1" Ice	0.00	0.82
1.58" (40.1mm) Hybrid	B	No	No	Inside Pole	85.00 - 10.00	2	No Ice	0.00	1.61
							1/2" Ice	0.00	1.61
							1" Ice	0.00	1.61
***									
1/2" Coax	C	No	No	Inside Pole	75.00 - 10.00	1	No Ice	0.00	0.15
							1/2" Ice	0.00	0.15
							1" Ice	0.00	0.15

Feed Line/Linear Appurtenances Section Areas

Tower Section	Tower Elevation ft	Face	A_R ft^2	A_F ft^2	C_AA_A In Face ft^2	C_AA_A Out Face ft^2	Weight K
L1	150.00-110.00	A	0.000	0.000	5.250	0.000	1.19
		B	0.000	0.000	0.000	0.000	0.35
		C	0.000	0.000	0.000	0.000	0.50
L2	110.00-85.00	A	0.000	0.000	6.250	0.000	0.96
		B	0.000	0.000	0.000	0.000	0.42
		C	0.000	0.000	0.000	0.000	0.51
L3	85.00-70.00	A	0.000	0.000	1.531	0.000	0.44
		B	0.000	0.000	0.000	0.000	0.24
		C	0.000	0.000	0.000	0.000	0.17
L4	70.00-55.00	A	0.000	0.000	0.281	0.000	0.35
		B	0.000	0.000	0.000	0.000	0.15
		C	0.000	0.000	0.000	0.000	0.09
L5	55.00-31.50	A	0.000	0.000	0.441	0.000	0.56
		B	0.000	0.000	0.000	0.000	0.24
		C	0.000	0.000	0.000	0.000	0.14
L6	31.50-15.00	A	0.000	0.000	0.309	0.000	0.39
		B	0.000	0.000	0.000	0.000	0.17
		C	0.000	0.000	0.000	0.000	0.10
L7	15.00-0.00	A	0.000	0.000	0.281	0.000	0.14
		B	0.000	0.000	0.000	0.000	0.07
		C	0.000	0.000	0.000	0.000	0.09

Feed Line/Linear Appurtenances Section Areas - With Ice

Tower Section	Tower Elevation ft	Face or Leg	Ice Thickness in	A_R ft^2	A_F ft^2	C_AA_A In Face ft^2	C_AA_A Out Face ft^2	Weight K
L1	150.00-110.00	A	1.719	0.000	0.000	12.471	0.000	1.37
		B		0.000	0.000	7.221	0.000	0.43
		C		0.000	0.000	7.221	0.000	0.57
L2	110.00-85.00	A	1.671	0.000	0.000	14.603	0.000	1.17
		B		0.000	0.000	8.353	0.000	0.50
		C		0.000	0.000	8.353	0.000	0.59
L3	85.00-70.00	A	1.633	0.000	0.000	8.063	0.000	0.53
		B		0.000	0.000	6.532	0.000	0.30
		C		0.000	0.000	6.532	0.000	0.23
L4	70.00-55.00	A	1.599	0.000	0.000	5.077	0.000	0.41

Tower Section	Tower Elevation ft	Face or Leg	Ice Thickness in	A_R ft^2	A_F ft^2	C_AA_A In Face ft^2	C_AA_A Out Face ft^2	Weight K
		B		0.000	0.000	4.796	0.000	0.20
		C		0.000	0.000	4.796	0.000	0.13
L5	55.00-31.50	A	1.541	0.000	0.000	7.681	0.000	0.63
		B		0.000	0.000	7.240	0.000	0.31
		C		0.000	0.000	7.240	0.000	0.20
L6	31.50-15.00	A	1.448	0.000	0.000	5.087	0.000	0.44
		B		0.000	0.000	4.778	0.000	0.21
		C		0.000	0.000	4.778	0.000	0.14
L7	15.00-0.00	A	1.290	0.000	0.000	4.151	0.000	0.17
		B		0.000	0.000	3.869	0.000	0.10
		C		0.000	0.000	3.869	0.000	0.12

Feed Line Center of Pressure

Section	Elevation ft	CP_X in	CP_Z in	CP_X Ice in	CP_Z Ice in
L1	150.00-110.00	-0.7438	-0.4294	-0.5030	-0.2904
L2	110.00-85.00	-1.2404	-0.7161	-0.7979	-0.4607
L3	85.00-70.00	-0.4939	-0.2851	-0.3077	-0.1776
L4	70.00-55.00	-0.0944	-0.0545	-0.0641	-0.0370
L5	55.00-31.50	-0.0944	-0.0545	-0.0653	-0.0377
L6	31.50-15.00	-0.0944	-0.0545	-0.0666	-0.0385
L7	15.00-0.00	-0.0944	-0.0545	-0.0687	-0.0397

Note: For pole sections, center of pressure calculations do not consider feed line shielding.

Shielding Factor Ka

Tower Section	Feed Line Record No.	Description	Feed Line Segment Elev.	K_a No Ice	K_a Ice
L1	18	#20 Dywidag	110.00 - 131.00	1.0000	1.0000
L1	19	#20 Dywidag	110.00 - 131.00	1.0000	1.0000
L1	20	#20 Dywidag	110.00 - 131.00	1.0000	1.0000
L2	18	#20 Dywidag	85.00 - 110.00	1.0000	1.0000
L2	19	#20 Dywidag	85.00 - 110.00	1.0000	1.0000
L2	20	#20 Dywidag	85.00 - 110.00	1.0000	1.0000
L3	14	Wrap Seams	70.00 - 85.00	1.0000	1.0000
L3	15	Wrap Seams	70.00 - 85.00	1.0000	1.0000
L3	16	Wrap Seams	70.00 - 85.00	1.0000	1.0000
L3	18	#20 Dywidag	80.00 - 85.00	1.0000	1.0000
L3	19	#20 Dywidag	80.00 - 85.00	1.0000	1.0000
L3	20	#20 Dywidag	80.00 - 85.00	1.0000	1.0000
L4	14	Wrap Seams	55.00 - 70.00	1.0000	1.0000
L4	15	Wrap Seams	55.00 - 70.00	1.0000	1.0000
L4	16	Wrap Seams	55.00 - 70.00	1.0000	1.0000

Tower Section	Feed Line Record No.	Description	Feed Line Segment Elev.	K_a No Ice	K_a Ice
L5	14	Wrap Seams	31.50 - 55.00	1.0000	1.0000
L5	15	Wrap Seams	31.50 - 55.00	1.0000	1.0000
L5	16	Wrap Seams	31.50 - 55.00	1.0000	1.0000
L6	14	Wrap Seams	15.00 - 31.50	1.0000	1.0000
L6	15	Wrap Seams	15.00 - 31.50	1.0000	1.0000
L6	16	Wrap Seams	15.00 - 31.50	1.0000	1.0000
L7	14	Wrap Seams	0.00 - 15.00	1.0000	1.0000
L7	15	Wrap Seams	0.00 - 15.00	1.0000	1.0000
L7	16	Wrap Seams	0.00 - 15.00	1.0000	1.0000

Discrete Tower Loads

Description	Face or Leg	Offset Type	Offsets: Horz Lateral Vert ft ft ft	Azimuth Adjustment °	Placement ft		C_AA_A Front ft^2	C_AA_A Side ft^2	Weight K
ABT-DFDM-ADB	C	From Leg	4.00	0.0000	150.00	No Ice	0.05	0.05	0.00
			0.00			1/2" Ice	0.11	0.10	0.00
			4.00			1" Ice	0.17	0.15	0.00
TT19-08BP111-001	A	From Leg	4.00	0.0000	150.00	No Ice	0.64	0.52	0.02
			0.00			1/2" Ice	0.82	0.66	0.02
			4.00			1" Ice	1.00	0.80	0.03
TT19-08BP111-001	B	From Leg	4.00	0.0000	150.00	No Ice	0.64	0.52	0.02
			0.00			1/2" Ice	0.82	0.66	0.02
			4.00			1" Ice	1.00	0.80	0.03
TT19-08BP111-001	C	From Leg	4.00	0.0000	150.00	No Ice	0.64	0.52	0.02
			0.00			1/2" Ice	0.82	0.66	0.02
			4.00			1" Ice	1.00	0.80	0.03
DBCT108F1V92-1	A	From Leg	4.00	0.0000	150.00	No Ice	0.74	0.71	0.01
			0.00			1/2" Ice	0.92	0.88	0.02
			4.00			1" Ice	1.10	1.05	0.03
DBCT108F1V92-1	B	From Leg	4.00	0.0000	150.00	No Ice	0.74	0.71	0.01
			0.00			1/2" Ice	0.92	0.88	0.02
			4.00			1" Ice	1.10	1.05	0.03
DBCT108F1V92-1	C	From Leg	4.00	0.0000	150.00	No Ice	0.74	0.71	0.01
			0.00			1/2" Ice	0.92	0.88	0.02
			4.00			1" Ice	1.10	1.05	0.03
(2) DC6-48-60-18-8F	A	From Leg	4.00	0.0000	150.00	No Ice	1.11	1.11	0.02
			0.00			1/2" Ice	1.46	1.46	0.04
			4.00			1" Ice	1.81	1.81	0.05
RRUS 11 (Band 12)	A	From Leg	4.00	0.0000	150.00	No Ice	2.57	1.07	0.05
			0.00			1/2" Ice	3.34	1.39	0.07
			4.00			1" Ice	4.11	1.71	0.09
RRUS 11 (Band 12)	B	From Leg	4.00	0.0000	150.00	No Ice	2.57	1.07	0.05
			0.00			1/2" Ice	3.34	1.39	0.07
			4.00			1" Ice	4.11	1.71	0.09
RRUS 11 (Band 12)	C	From Leg	4.00	0.0000	150.00	No Ice	2.57	1.07	0.05
			0.00			1/2" Ice	3.34	1.39	0.07
			4.00			1" Ice	4.11	1.71	0.09
RRUS 32 B2	A	From Leg	4.00	0.0000	150.00	No Ice	2.74	1.67	0.05
			0.00			1/2" Ice	3.59	2.18	0.07
			4.00			1" Ice	4.44	2.69	0.10

Description	Face or Leg	Offset Type	Offsets: Horz Lateral Vert ft ft ft	Azimuth Adjustment °	Placement ft		C_AA_A Front ft^2	C_AA_A Side ft^2	Weight K
RRUS 32 B2	B	From Leg	4.00	0.0000	150.00	No Ice	2.74	1.67	0.05
			0.00			1/2" Ice	3.59	2.18	0.07
			4.00			1" Ice	4.44	2.69	0.10
RRUS 32 B2	C	From Leg	4.00	0.0000	150.00	No Ice	2.74	1.67	0.05
			0.00			1/2" Ice	3.59	2.18	0.07
			4.00			1" Ice	4.44	2.69	0.10
RRUS-12 B2	A	From Leg	4.00	0.0000	150.00	No Ice	3.15	1.29	0.06
			0.00			1/2" Ice	4.06	1.66	0.08
			4.00			1" Ice	4.97	2.03	0.10
RRUS-12 B2	B	From Leg	4.00	0.0000	150.00	No Ice	3.15	1.29	0.06
			0.00			1/2" Ice	4.06	1.66	0.08
			4.00			1" Ice	4.97	2.03	0.10
RRUS-12 B2	C	From Leg	4.00	0.0000	150.00	No Ice	3.15	1.29	0.06
			0.00			1/2" Ice	4.06	1.66	0.08
			4.00			1" Ice	4.97	2.03	0.10
7770.00A	A	From Leg	4.00	0.0000	150.00	No Ice	5.56	1.69	0.03
			0.00			1/2" Ice	6.60	2.01	0.06
			4.00			1" Ice	7.64	2.33	0.09
7770.00A	B	From Leg	4.00	0.0000	150.00	No Ice	5.56	1.69	0.03
			0.00			1/2" Ice	6.60	2.01	0.06
			4.00			1" Ice	7.64	2.33	0.09
7770.00A	C	From Leg	4.00	0.0000	150.00	No Ice	5.56	1.69	0.03
			0.00			1/2" Ice	6.60	2.01	0.06
			4.00			1" Ice	7.64	2.33	0.09
800 10764	C	From Leg	4.00	0.0000	150.00	No Ice	5.87	1.95	0.04
			0.00			1/2" Ice	6.99	2.33	0.08
			4.00			1" Ice	8.11	2.71	0.11
80010767	C	From Leg	4.00	0.0000	150.00	No Ice	7.38	2.21	0.06
			0.00			1/2" Ice	8.91	2.67	0.11
			4.00			1" Ice	10.44	3.13	0.15
AM-X-CD-16-65-00T-RET	A	From Leg	4.00	0.0000	150.00	No Ice	8.02	2.70	0.05
			0.00			1/2" Ice	9.08	3.06	0.10
			4.00			1" Ice	10.14	3.42	0.14
AM-X-CD-16-65-00T-RET	B	From Leg	4.00	0.0000	150.00	No Ice	8.02	2.70	0.05
			0.00			1/2" Ice	9.08	3.06	0.10
			4.00			1" Ice	10.14	3.42	0.14
80010768	A	From Leg	4.00	0.0000	150.00	No Ice	10.16	3.13	0.08
			0.00			1/2" Ice	11.71	3.60	0.14
			4.00			1" Ice	13.26	4.07	0.19
80010768	B	From Leg	4.00	0.0000	150.00	No Ice	10.16	3.13	0.08
			0.00			1/2" Ice	11.71	3.60	0.14
			4.00			1" Ice	13.26	4.07	0.19
Round Low Profile Platform	C	None		0.0000	150.00	No Ice	21.70	21.70	1.50
						1/2" Ice	27.20	27.20	1.70
						1" Ice	32.70	32.70	1.90
***									
TD-RRH8x20-25 w/ Solar Shield	A	From Leg	4.00	0.0000	143.00	No Ice	4.05	1.53	0.07
			0.00			1/2" Ice	5.16	1.95	0.10
			0.00			1" Ice	6.27	2.37	0.12
TD-RRH8x20-25 w/ Solar Shield	B	From Leg	4.00	0.0000	143.00	No Ice	4.05	1.53	0.07
			0.00			1/2" Ice	5.16	1.95	0.10
			0.00			1" Ice	6.27	2.37	0.12
TD-RRH8x20-25 w/ Solar Shield	C	From Leg	4.00	0.0000	143.00	No Ice	4.05	1.53	0.07
			0.00			1/2" Ice	5.16	1.95	0.10
			0.00			1" Ice	6.27	2.37	0.12
APXV9TM14-ALU-I20*	A	From Leg	4.00	0.0000	143.00	No Ice	6.34	2.08	0.06
			0.00			1/2" Ice	7.57	2.48	0.09

Description	Face or Leg	Offset Type	Offsets: Horz Lateral Vert ft ft ft	Azimuth Adjustment °	Placement ft		C_AA_A Front ft^2	C_AA_A Side ft^2	Weight K
			0.00			1" Ice	8.80	2.88	0.13
APXV9TM14-ALU-I20*	B	From Leg	4.00	0.0000	143.00	No Ice	6.34	2.08	0.06
			0.00			1/2" Ice	7.57	2.48	0.09
			0.00			1" Ice	8.80	2.88	0.13
APXV9TM14-ALU-I20*	C	From Leg	4.00	0.0000	143.00	No Ice	6.34	2.08	0.06
			0.00			1/2" Ice	7.57	2.48	0.09
			0.00			1" Ice	8.80	2.88	0.13
APXVSPP18-C-A20	A	From Leg	4.00	0.0000	143.00	No Ice	8.02	3.05	0.06
			0.00			1/2" Ice	9.08	3.46	0.11
			0.00			1" Ice	10.14	3.87	0.16
APXVSPP18-C-A20	B	From Leg	4.00	0.0000	143.00	No Ice	8.02	3.05	0.06
			0.00			1/2" Ice	9.08	3.46	0.11
			0.00			1" Ice	10.14	3.87	0.16
APXVSPP18-C-A20	C	From Leg	4.00	0.0000	143.00	No Ice	8.02	3.05	0.06
			0.00			1/2" Ice	9.08	3.46	0.11
			0.00			1" Ice	10.14	3.87	0.16
Round Platform w/ Handrails	C	None		0.0000	143.00	No Ice	27.20	27.20	2.00
						1/2" Ice	34.20	34.20	2.40
						1" Ice	41.20	41.20	2.80
***									
B5 RRH4x40 w/ Solar Shield	A	From Leg	4.00	0.0000	132.00	No Ice	1.74	1.01	0.04
			0.00			1/2" Ice	2.33	1.35	0.06
			0.00			1" Ice	2.92	1.69	0.07
B5 RRH4x40 w/ Solar Shield	B	From Leg	4.00	0.0000	132.00	No Ice	1.74	1.01	0.04
			0.00			1/2" Ice	2.33	1.35	0.06
			0.00			1" Ice	2.92	1.69	0.07
B5 RRH4x40 w/ Solar Shield	C	From Leg	4.00	0.0000	132.00	No Ice	1.74	1.01	0.04
			0.00			1/2" Ice	2.33	1.35	0.06
			0.00			1" Ice	2.92	1.69	0.07
B25 RRH4x30	A	From Leg	4.00	0.0000	132.00	No Ice	2.12	1.29	0.05
			0.00			1/2" Ice	2.81	1.71	0.07
			0.00			1" Ice	3.50	2.13	0.09
B25 RRH4x30	B	From Leg	4.00	0.0000	132.00	No Ice	2.12	1.29	0.05
			0.00			1/2" Ice	2.81	1.71	0.07
			0.00			1" Ice	3.50	2.13	0.09
B25 RRH4x30	C	From Leg	4.00	0.0000	132.00	No Ice	2.12	1.29	0.05
			0.00			1/2" Ice	2.81	1.71	0.07
			0.00			1" Ice	3.50	2.13	0.09
B13 RRH4x30-4R 700U	A	From Leg	4.00	0.0000	132.00	No Ice	2.17	1.63	0.06
			0.00			1/2" Ice	2.87	2.15	0.08
			0.00			1" Ice	3.57	2.67	0.10
B13 RRH4x30-4R 700U	B	From Leg	4.00	0.0000	132.00	No Ice	2.17	1.63	0.06
			0.00			1/2" Ice	2.87	2.15	0.08
			0.00			1" Ice	3.57	2.67	0.10
B13 RRH4x30-4R 700U	C	From Leg	4.00	0.0000	132.00	No Ice	2.17	1.63	0.06
			0.00			1/2" Ice	2.87	2.15	0.08
			0.00			1" Ice	3.57	2.67	0.10
B66A RRH 4x45	A	From Leg	4.00	0.0000	132.00	No Ice	2.58	1.63	0.07
			0.00			1/2" Ice	3.38	2.13	0.09
			0.00			1" Ice	4.18	2.63	0.11
B66A RRH 4x45	B	From Leg	4.00	0.0000	132.00	No Ice	2.58	1.63	0.07
			0.00			1/2" Ice	3.38	2.13	0.09
			0.00			1" Ice	4.18	2.63	0.11
B66A RRH 4x45	C	From Leg	4.00	0.0000	132.00	No Ice	2.58	1.63	0.07
			0.00			1/2" Ice	3.38	2.13	0.09
			0.00			1" Ice	4.18	2.63	0.11
DB-T1-6Z-8AB-0Z	A	From Leg	4.00	0.0000	132.00	No Ice	4.80	2.00	0.04

Description	Face or Leg	Offset Type	Offsets: Horz Lateral Vert ft ft ft	Azimuth Adjustment °	Placement ft		C_AA_A Front ft^2	C_AA_A Side ft^2	Weight K
			0.00			1/2" Ice	6.08	2.53	0.08
			0.00			1" Ice	7.36	3.06	0.12
DB-T1-6Z-8AB-0Z	B	From Leg	4.00	0.0000	132.00	No Ice	4.80	2.00	0.04
			0.00			1/2" Ice	6.08	2.53	0.08
			0.00			1" Ice	7.36	3.06	0.12
(2) LPA-80080/6CF ___	B	From Leg	4.00	0.0000	132.00	No Ice	8.63	14.52	0.02
			0.00			1/2" Ice	9.93	16.71	0.00
			0.00			1" Ice	11.23	18.90	0.00
(2) LPA-80080/6CF ___	C	From Leg	4.00	0.0000	132.00	No Ice	8.63	14.52	0.02
			0.00			1/2" Ice	9.93	16.71	0.00
			0.00			1" Ice	11.23	18.90	0.00
(2) JAHH-65B-R3B	A	From Leg	4.00	0.0000	132.00	No Ice	9.11	3.44	0.06
			0.00			1/2" Ice	10.50	3.97	0.12
			0.00			1" Ice	11.89	4.50	0.18
(2) JAHH-65B-R3B	B	From Leg	4.00	0.0000	132.00	No Ice	9.11	3.44	0.06
			0.00			1/2" Ice	10.50	3.97	0.12
			0.00			1" Ice	11.89	4.50	0.18
(2) JAHH-65B-R3B	C	From Leg	4.00	0.0000	132.00	No Ice	9.11	3.44	0.06
			0.00			1/2" Ice	10.50	3.97	0.12
			0.00			1" Ice	11.89	4.50	0.18
(2) LPA-80063/6CF	A	From Leg	4.00	0.0000	132.00	No Ice	9.59	4.93	0.03
			0.00			1/2" Ice	11.18	5.75	0.00
			0.00			1" Ice	12.77	6.57	0.00
Round Platform w/ Handrails	C	None		0.0000	132.00	No Ice	27.20	27.20	2.00
						1/2" Ice	34.20	34.20	2.40
						1" Ice	41.20	41.20	2.80
***									
GPS-TMG-HR-26N	C	From Leg	4.00	0.0000	75.00	No Ice	0.09	0.09	0.00
			0.00			1/2" Ice	0.14	0.14	0.00
			0.00			1" Ice	0.19	0.19	0.00

Load Combinations

Comb. No.	Description
1	Dead Only
2	1.2 Dead+1.6 Wind 0 deg - No Ice
3	0.9 Dead+1.6 Wind 0 deg - No Ice
4	1.2 Dead+1.6 Wind 30 deg - No Ice
5	0.9 Dead+1.6 Wind 30 deg - No Ice
6	1.2 Dead+1.6 Wind 60 deg - No Ice
7	0.9 Dead+1.6 Wind 60 deg - No Ice
8	1.2 Dead+1.6 Wind 90 deg - No Ice
9	0.9 Dead+1.6 Wind 90 deg - No Ice
10	1.2 Dead+1.6 Wind 120 deg - No Ice
11	0.9 Dead+1.6 Wind 120 deg - No Ice
12	1.2 Dead+1.6 Wind 150 deg - No Ice
13	0.9 Dead+1.6 Wind 150 deg - No Ice
14	1.2 Dead+1.6 Wind 180 deg - No Ice
15	0.9 Dead+1.6 Wind 180 deg - No Ice
16	1.2 Dead+1.6 Wind 210 deg - No Ice

Comb. No.	Description
17	0.9 Dead+1.6 Wind 210 deg - No Ice
18	1.2 Dead+1.6 Wind 240 deg - No Ice
19	0.9 Dead+1.6 Wind 240 deg - No Ice
20	1.2 Dead+1.6 Wind 270 deg - No Ice
21	0.9 Dead+1.6 Wind 270 deg - No Ice
22	1.2 Dead+1.6 Wind 300 deg - No Ice
23	0.9 Dead+1.6 Wind 300 deg - No Ice
24	1.2 Dead+1.6 Wind 330 deg - No Ice
25	0.9 Dead+1.6 Wind 330 deg - No Ice
26	1.2 Dead+1.0 Ice+1.0 Temp
27	1.2 Dead+1.0 Wind 0 deg+1.0 Ice+1.0 Temp
28	1.2 Dead+1.0 Wind 30 deg+1.0 Ice+1.0 Temp
29	1.2 Dead+1.0 Wind 60 deg+1.0 Ice+1.0 Temp
30	1.2 Dead+1.0 Wind 90 deg+1.0 Ice+1.0 Temp
31	1.2 Dead+1.0 Wind 120 deg+1.0 Ice+1.0 Temp
32	1.2 Dead+1.0 Wind 150 deg+1.0 Ice+1.0 Temp
33	1.2 Dead+1.0 Wind 180 deg+1.0 Ice+1.0 Temp
34	1.2 Dead+1.0 Wind 210 deg+1.0 Ice+1.0 Temp
35	1.2 Dead+1.0 Wind 240 deg+1.0 Ice+1.0 Temp
36	1.2 Dead+1.0 Wind 270 deg+1.0 Ice+1.0 Temp
37	1.2 Dead+1.0 Wind 300 deg+1.0 Ice+1.0 Temp
38	1.2 Dead+1.0 Wind 330 deg+1.0 Ice+1.0 Temp
39	Dead+Wind 0 deg - Service
40	Dead+Wind 30 deg - Service
41	Dead+Wind 60 deg - Service
42	Dead+Wind 90 deg - Service
43	Dead+Wind 120 deg - Service
44	Dead+Wind 150 deg - Service
45	Dead+Wind 180 deg - Service
46	Dead+Wind 210 deg - Service
47	Dead+Wind 240 deg - Service
48	Dead+Wind 270 deg - Service
49	Dead+Wind 300 deg - Service
50	Dead+Wind 330 deg - Service

Maximum Tower Deflections - Service Wind

Section No.	Elevation ft	Horz. Deflection in	Gov. Load Comb.	Tilt °	Twist °
L1	150 - 110	21.681	39	1.5566	0.0100
L2	110 - 85	10.789	39	1.0143	0.0046
L3	85 - 70	6.033	39	0.7725	0.0016
L4	70 - 55	3.936	39	0.5787	0.0010
L5	55 - 31.5	2.348	39	0.4319	0.0006
L6	31.5 - 15	0.710	39	0.2322	0.0003
L7	15 - 0	0.142	39	0.0963	0.0001

Critical Deflections and Radius of Curvature - Service Wind

Elevation ft	Appurtenance	Gov. Load Comb.	Deflection in	Tilt °	Twist °	Radius of Curvature ft
150.00	ABT-DFDM-ADB	39	21.681	1.5566	0.0101	28716
143.00	TD-RRH8x20-25 w/ Solar Shield	39	19.624	1.4501	0.0091	20511

Elevation ft	Appurtenance	Gov. Load Comb.	Deflection in	Tilt °	Twist °	Radius of Curvature ft
132.00	B5 RRH4x40 w/ Solar Shield	39	16.460	1.2880	0.0076	7976
75.00	GPS-TMG-HR-26N	39	4.577	0.6421	0.0011	5143

Maximum Tower Deflections - Design Wind

Section No.	Elevation ft	Horz. Deflection in	Gov. Load Comb.	Tilt °	Twist °
L1	150 - 110	86.030	2	6.1724	0.0381
L2	110 - 85	42.842	2	4.0308	0.0182
L3	85 - 70	23.953	2	3.0694	0.0061
L4	70 - 55	15.625	2	2.2985	0.0038
L5	55 - 31.5	9.316	2	1.7148	0.0025
L6	31.5 - 15	2.818	2	0.9215	0.0012
L7	15 - 0	0.564	2	0.3820	0.0004

Critical Deflections and Radius of Curvature - Design Wind

Elevation ft	Appurtenance	Gov. Load Comb.	Deflection in	Tilt °	Twist °	Radius of Curvature ft
150.00	ABT-DFDM-ADB	2	86.030	6.1724	0.0401	7374
143.00	TD-RRH8x20-25 w/ Solar Shield	2	77.875	5.7523	0.0362	5266
132.00	B5 RRH4x40 w/ Solar Shield	2	65.332	5.1128	0.0300	2046
75.00	GPS-TMG-HR-26N	2	18.169	2.5507	0.0043	1297

Compression Checks

Pole Design Data

Section No.	Elevation ft	Size	L ft	L_u ft	Kl/r	A in^2	P_u K	ϕP_n K	Ratio $\frac{P_u}{\phi P_n}$
L1	150 - 148	TP21.25x15x0.1875	40.00	0.00	0.0	9.1317	-2.91	673.10	0.004
	148 - 146					9.3204	-3.10	687.01	0.005
	146 - 144					9.5091	-3.29	700.91	0.005
	144 - 142					9.6977	-6.31	714.82	0.009
	142 - 140					9.8864	-6.50	728.00	0.009
	140 - 138					10.0751	-6.71	737.48	0.009
	138 - 136					10.2638	-6.91	746.79	0.009
	136 - 134					10.4524	-7.12	755.93	0.009
	134 - 132					10.6411	-7.33	764.91	0.010
	132 - 130					10.8298	-10.99	773.73	0.014
	130 - 128					11.0184	-11.21	782.37	0.014
	128 - 126					11.2071	-11.45	790.86	0.014
	126 - 124					11.3958	-11.70	799.17	0.015

Section No.	Elevation ft	Size	L ft	L_u ft	Kl/r	A in^2	P_u K	ϕP_n K	Ratio $\frac{P_u}{\phi P_n}$
	124 - 122					11.5845	-11.95	807.33	0.015
	122 - 120					11.7731	-12.21	815.31	0.015
	120 - 118.5					11.9146	-12.41	821.20	0.015
	118.5 - 118					11.9146	-2.66	821.20	0.003
	118 - 116					11.9618	-2.79	823.13	0.003
	116 - 114					12.3391	-3.15	838.28	0.004
	114 - 112					12.5278	-3.36	845.61	0.004
	112 - 110					12.7165	-3.53	852.77	0.004
L2	110 - 108.75	TP27.61x21.25x0.25	25.00	0.00	0.0	17.1610	-3.73	1264.94	0.003
	108.75 - 107.5					17.4170	-3.93	1283.81	0.003
	107.5 - 106.25					17.6730	-4.13	1299.13	0.003
	106.25 - 105					17.9290	-4.34	1311.95	0.003
	105 - 103.75					18.1849	-4.54	1324.60	0.003
	103.75 - 102.5					18.4409	-4.75	1337.07	0.004
	102.5 - 101.25					18.6969	-4.96	1349.38	0.004
	101.25 - 100					18.9529	-5.18	1361.51	0.004
	100 - 98.75					19.2089	-5.39	1373.47	0.004
	98.75 - 97.5					19.4649	-5.61	1385.26	0.004
	97.5 - 96.25					19.7209	-5.82	1396.88	0.004
	96.25 - 95					19.9769	-6.04	1408.33	0.004
	95 - 93.75					20.2329	-6.26	1419.61	0.004
	93.75 - 92.5					20.4889	-6.49	1430.71	0.005
	92.5 - 91.25					20.7449	-6.71	1441.65	0.005
	91.25 - 90					21.0008	-6.94	1452.41	0.005
	90 - 88.75					21.2568	-7.17	1463.00	0.005
	88.75 - 87.5					21.5128	-7.40	1473.42	0.005
	87.5 - 86.25					21.7688	-7.63	1483.67	0.005
	86.25 - 85					22.0248	-7.86	1493.74	0.005
L3	85 - 84	TP35.691x27.61x0.3722	15.00	0.00	0.0	32.6449	-19.73	2406.26	0.008
	84 - 83					33.2906	-19.95	2453.85	0.008
	83 - 82					33.9363	-20.16	2501.44	0.008
	82 - 81					34.5820	-20.38	2549.04	0.008
	81 - 80					35.2277	-20.60	2596.63	0.008
	80 - 79					35.8733	-20.83	2644.22	0.008
	79 - 78					36.5190	-21.05	2691.82	0.008
	78 - 77					37.1647	-21.28	2739.41	0.008
	77 - 76					37.8104	-21.51	2787.00	0.008
	76 - 75					38.4561	-21.74	2834.60	0.008
	75 - 74					39.1017	-21.98	2876.04	0.008
	74 - 73					39.7474	-22.21	2908.39	0.008
	73 - 72					40.3931	-22.45	2940.26	0.008
	72 - 71					41.0388	-22.69	2971.63	0.008
	71 - 70					41.6845	-22.94	3002.51	0.008
L4	70 - 69	TP38.058x35.691x0.3918	15.00	0.00	0.0	44.7358	-23.41	3257.03	0.007
	69 - 68					44.9349	-23.65	3266.77	0.007
	68 - 67					45.1340	-23.88	3276.46	0.007
	67 - 66					45.3331	-24.12	3286.11	0.007
	66 - 65					45.5322	-24.36	3295.72	0.007
	65 - 64					45.7313	-24.61	3305.29	0.007
	64 - 63					45.9304	-24.85	3314.81	0.007
	63 - 62					46.1295	-25.09	3324.29	0.008
	62 - 61					46.3286	-25.33	3333.73	0.008
	61 - 60					46.5277	-25.58	3343.13	0.008
	60 - 59					46.7267	-25.83	3352.48	0.008
	59 - 58					46.9258	-26.07	3361.80	0.008
	58 - 57					47.1249	-26.32	3371.07	0.008
	57 - 56					47.3240	-26.57	3380.29	0.008
	56 - 55					47.5231	-26.82	3389.48	0.008
L5	55 - 53.825	TP41.576x38.058x0.472	23.50	0.00	0.0	57.3969	-27.16	4230.72	0.006
	53.825 - 52.65					57.6642	-27.50	4250.43	0.006

Section No.	Elevation ft	Size	L ft	L_u ft	Kl/r	A in^2	P_u K	ϕP_n K	Ratio $\frac{P_u}{\phi P_n}$
	52.65 - 51.475					57.9316	-27.84	4270.14	0.007
	51.475 - 50.3					58.1989	-28.18	4289.84	0.007
	50.3 - 49.125					58.4663	-28.53	4309.55	0.007
	49.125 - 47.95					58.7337	-28.88	4329.26	0.007
	47.95 - 46.775					59.0010	-29.22	4348.97	0.007
	46.775 - 45.6					59.2684	-29.57	4368.67	0.007
	45.6 - 44.425					59.5357	-29.92	4388.38	0.007
	44.425 - 43.25					59.8031	-30.28	4408.09	0.007
	43.25 - 42.075					60.0705	-30.63	4427.79	0.007
	42.075 - 40.9					60.3378	-30.98	4447.50	0.007
	40.9 - 39.725					60.6052	-31.34	4467.21	0.007
	39.725 - 38.55					60.8726	-31.70	4486.92	0.007
	38.55 - 37.375					61.1399	-32.06	4506.62	0.007
	37.375 - 36.2					61.4073	-32.42	4526.33	0.007
	36.2 - 35.025					61.6746	-32.78	4546.04	0.007
	35.025 - 33.85					61.9420	-33.14	4565.75	0.007
	33.85 - 32.675					62.2094	-33.51	4585.45	0.007
	32.675 - 31.5					62.4767	-33.87	4605.16	0.007
L6	31.5 - 30.4688	TP44.046x41.576x0.4977	16.50	0.00	0.0	66.0792	-34.21	4870.70	0.007
	30.4688 - 29.4375					66.3266	-34.55	4888.94	0.007
	29.4375 - 28.4063					66.5740	-34.89	4907.17	0.007
	28.4063 - 27.375					66.8214	-35.23	4925.41	0.007
	27.375 - 26.3438					67.0688	-35.57	4943.64	0.007
	26.3438 - 25.3125					67.3162	-35.91	4961.88	0.007
	25.3125 - 24.2813					67.5636	-36.25	4980.12	0.007
	24.2813 - 23.25					67.8110	-36.60	4998.35	0.007
	23.25 - 22.2188					68.0584	-36.94	5016.59	0.007
	22.2188 - 21.1875					68.3058	-37.29	5034.82	0.007
	21.1875 - 20.1563					68.5532	-37.64	5053.06	0.007
	20.1563 - 19.125					68.8006	-37.99	5071.30	0.007
	19.125 - 18.0938					69.0480	-38.34	5089.53	0.008
	18.0938 - 17.0625					69.2954	-38.69	5107.77	0.008
	17.0625 - 16.0313					69.5428	-39.04	5123.54	0.008
	16.0313 - 15					69.7902	-39.40	5136.07	0.008
L7	15 - 14	TP52.064x44.046x0.5362	15.00	0.00	0.0	75.1266	-39.41	5537.58	0.007
	14 - 13					76.0496	-39.75	5605.61	0.007
	13 - 12					76.9725	-40.09	5673.64	0.007
	12 - 11					77.8955	-40.44	5741.68	0.007
	11 - 10					78.8184	-40.80	5809.71	0.007
	10 - 9					79.7414	-41.15	5877.74	0.007
	9 - 8					80.6644	-41.51	5945.77	0.007
	8 - 7					81.5873	-41.88	5990.97	0.007
	7 - 6					82.5103	-42.25	6037.11	0.007
	6 - 5					83.4332	-42.62	6082.76	0.007
	5 - 4					84.3562	-42.99	6127.92	0.007
	4 - 3					85.2791	-43.37	6172.61	0.007

Section No.	Elevation ft	Size	L ft	L_u ft	Kl/r	A in^2	P_u K	ϕP_n K	Ratio $\frac{P_u}{\phi P_n}$
	3 - 2					86.2021	-43.75	6216.81	0.007
	2 - 1					87.1251	-44.14	6260.52	0.007
	1 - 0					88.0480	-44.53	6303.76	0.007

Pole Bending Design Data

Section No.	Elevation ft	Size	M_{ux} kip-ft	ϕM_{nx} kip-ft	Ratio $\frac{M_{ux}}{\phi M_{nx}}$	M_{uy} kip-ft	ϕM_{ny} kip-ft	Ratio $\frac{M_{uy}}{\phi M_{ny}}$
L1	150 - 148	TP21.25x15x0.1875	15.33	206.49	0.074	0.00	206.49	0.000
	148 - 146		22.19	215.16	0.103	0.00	215.16	0.000
	146 - 144		29.28	224.02	0.131	0.00	224.02	0.000
	144 - 142		38.98	233.05	0.167	0.00	233.05	0.000
	142 - 140		51.27	242.02	0.212	0.00	242.02	0.000
	140 - 138		63.79	249.90	0.255	0.00	249.90	0.000
	138 - 136		76.54	257.84	0.297	0.00	257.84	0.000
	136 - 134		89.52	265.85	0.337	0.00	265.85	0.000
	134 - 132		102.72	273.92	0.375	0.00	273.92	0.000
	132 - 130		126.12	282.04	0.447	0.00	282.04	0.000
	130 - 128		149.78	290.21	0.516	0.00	290.21	0.000
	128 - 126		173.72	298.43	0.582	0.00	298.43	0.000
	126 - 124		197.84	306.70	0.645	0.00	306.70	0.000
	124 - 122		222.15	315.01	0.705	0.00	315.01	0.000
	122 - 120		246.62	323.35	0.763	0.00	323.35	0.000
	120 - 118.5		265.09	329.64	0.804	0.00	329.64	0.000
	118.5 - 118		28.21	329.64	0.086	0.00	329.64	0.000
	118 - 116		22.97	331.74	0.069	0.00	331.74	0.000
	116 - 114		20.03	348.60	0.057	0.00	348.60	0.000
	114 - 112		41.53	357.07	0.116	0.00	357.07	0.000
	112 - 110		63.48	365.57	0.174	0.00	365.57	0.000
L2	110 - 108.75	TP27.61x21.25x0.25	77.34	547.30	0.141	0.00	547.30	0.000
	108.75 - 107.5		91.32	563.85	0.162	0.00	563.85	0.000
	107.5 - 106.25		105.40	579.06	0.182	0.00	579.06	0.000
	106.25 - 105		119.61	593.34	0.202	0.00	593.34	0.000
	105 - 103.75		133.92	607.71	0.220	0.00	607.71	0.000
	103.75 - 102.5		148.35	622.16	0.238	0.00	622.16	0.000
	102.5 - 101.25		162.89	636.70	0.256	0.00	636.70	0.000
	101.25 - 100		177.56	651.31	0.273	0.00	651.31	0.000
	100 - 98.75		192.34	666.00	0.289	0.00	666.00	0.000
	98.75 - 97.5		207.23	680.76	0.304	0.00	680.76	0.000
	97.5 - 96.25		222.25	695.59	0.320	0.00	695.59	0.000
	96.25 - 95		237.39	710.49	0.334	0.00	710.49	0.000
	95 - 93.75		252.65	725.45	0.348	0.00	725.45	0.000
	93.75 - 92.5		268.03	740.46	0.362	0.00	740.46	0.000
	92.5 - 91.25		283.53	755.54	0.375	0.00	755.54	0.000
	91.25 - 90		299.16	770.66	0.388	0.00	770.66	0.000
	90 - 88.75		314.91	785.83	0.401	0.00	785.83	0.000
	88.75 - 87.5		330.79	801.05	0.413	0.00	801.05	0.000
	87.5 - 86.25		346.79	816.31	0.425	0.00	816.31	0.000
	86.25 - 85		362.92	831.61	0.436	0.00	831.61	0.000
L3	85 - 84	TP35.691x27.61x0.3722	719.30	1327.68	0.542	0.00	1327.68	0.000
	84 - 83		734.11	1381.08	0.532	0.00	1381.08	0.000
	83 - 82		748.97	1435.54	0.522	0.00	1435.54	0.000
	82 - 81		763.91	1491.04	0.512	0.00	1491.04	0.000
	81 - 80		778.91	1547.60	0.503	0.00	1547.60	0.000
	80 - 79		793.98	1605.22	0.495	0.00	1605.22	0.000

Section No.	Elevation ft	Size	M_{ux} kip-ft	ϕM_{nx} kip-ft	Ratio $\frac{M_{ux}}{\phi M_{nx}}$	M_{uy} kip-ft	ϕM_{ny} kip-ft	Ratio $\frac{M_{uy}}{\phi M_{ny}}$
	79 - 78		809.13	1663.88	0.486	0.00	1663.88	0.000
	78 - 77		824.34	1723.60	0.478	0.00	1723.60	0.000
	77 - 76		839.63	1784.38	0.471	0.00	1784.38	0.000
	76 - 75		855.00	1846.20	0.463	0.00	1846.20	0.000
	75 - 74		870.45	1905.00	0.457	0.00	1905.00	0.000
	74 - 73		885.98	1958.60	0.452	0.00	1958.60	0.000
	73 - 72		901.59	2012.58	0.448	0.00	2012.58	0.000
	72 - 71		917.28	2066.93	0.444	0.00	2066.93	0.000
	71 - 70		933.07	2121.62	0.440	0.00	2121.62	0.000
L4	70 - 69	TP38.058x35.691x0.3918	964.88	2345.45	0.411	0.00	2345.45	0.000
	69 - 68		980.92	2363.04	0.415	0.00	2363.04	0.000
	68 - 67		997.04	2380.67	0.419	0.00	2380.67	0.000
	67 - 66		1013.25	2398.32	0.422	0.00	2398.32	0.000
	66 - 65		1029.53	2416.02	0.426	0.00	2416.02	0.000
	65 - 64		1045.91	2433.74	0.430	0.00	2433.74	0.000
	64 - 63		1062.37	2451.49	0.433	0.00	2451.49	0.000
	63 - 62		1078.90	2469.28	0.437	0.00	2469.28	0.000
	62 - 61		1095.53	2487.08	0.440	0.00	2487.08	0.000
	61 - 60		1112.23	2504.93	0.444	0.00	2504.93	0.000
	60 - 59		1129.03	2522.80	0.448	0.00	2522.80	0.000
	59 - 58		1145.91	2540.70	0.451	0.00	2540.70	0.000
	58 - 57		1162.87	2558.63	0.454	0.00	2558.63	0.000
	57 - 56		1179.91	2576.58	0.458	0.00	2576.58	0.000
	56 - 55		1197.04	2594.57	0.461	0.00	2594.57	0.000
L5	55 - 53.825	TP41.576x38.058x0.472	1217.28	3240.02	0.376	0.00	3240.02	0.000
	53.825 - 52.65		1237.62	3270.46	0.378	0.00	3270.46	0.000
	52.65 - 51.475		1258.07	3301.05	0.381	0.00	3301.05	0.000
	51.475 - 50.3		1278.63	3331.78	0.384	0.00	3331.78	0.000
	50.3 - 49.125		1299.29	3362.64	0.386	0.00	3362.64	0.000
	49.125 - 47.95		1320.07	3393.66	0.389	0.00	3393.66	0.000
	47.95 - 46.775		1340.95	3424.81	0.392	0.00	3424.81	0.000
	46.775 - 45.6		1361.95	3456.11	0.394	0.00	3456.11	0.000
	45.6 - 44.425		1383.05	3487.54	0.397	0.00	3487.54	0.000
	44.425 - 43.25		1404.27	3519.13	0.399	0.00	3519.13	0.000
	43.25 - 42.075		1425.58	3550.85	0.401	0.00	3550.85	0.000
	42.075 - 40.9		1447.02	3582.72	0.404	0.00	3582.72	0.000
	40.9 - 39.725		1468.56	3614.72	0.406	0.00	3614.72	0.000
	39.725 - 38.55		1490.21	3646.88	0.409	0.00	3646.88	0.000
	38.55 - 37.375		1511.97	3679.17	0.411	0.00	3679.17	0.000
	37.375 - 36.2		1533.83	3711.60	0.413	0.00	3711.60	0.000
	36.2 - 35.025		1555.81	3744.18	0.416	0.00	3744.18	0.000
	35.025 - 33.85		1577.89	3776.90	0.418	0.00	3776.90	0.000
	33.85 - 32.675		1600.08	3809.77	0.420	0.00	3809.77	0.000
	32.675 - 31.5		1622.38	3842.77	0.422	0.00	3842.77	0.000
L6	31.5 - 30.4688	TP44.046x41.576x0.4977	1642.04	4074.72	0.403	0.00	4074.72	0.000
	30.4688 - 29.4375		1661.78	4105.47	0.405	0.00	4105.47	0.000
	29.4375 - 28.4063		1681.59	4136.33	0.407	0.00	4136.33	0.000
	28.4063 - 27.375		1701.47	4167.32	0.408	0.00	4167.32	0.000
	27.375 - 26.3438		1721.43	4198.41	0.410	0.00	4198.41	0.000
	26.3438 - 25.3125		1741.46	4229.63	0.412	0.00	4229.63	0.000
	25.3125 - 24.2813		1761.57	4260.96	0.413	0.00	4260.96	0.000
	24.2813 - 23.25		1781.75	4292.40	0.415	0.00	4292.40	0.000
	23.25 -		1802.01	4323.96	0.417	0.00	4323.96	0.000

Section No.	Elevation ft	Size	M_{ux} kip-ft	ϕM_{nx} kip-ft	Ratio $\frac{M_{ux}}{\phi M_{nx}}$	M_{uy} kip-ft	ϕM_{ny} kip-ft	Ratio $\frac{M_{uy}}{\phi M_{ny}}$
	22.2188							
	22.2188 - 21.1875		1822.34	4355.63	0.418	0.00	4355.63	0.000
	21.1875 - 20.1563		1842.75	4387.43	0.420	0.00	4387.43	0.000
	20.1563 - 19.125		1863.22	4419.33	0.422	0.00	4419.33	0.000
	19.125 - 18.0938		1883.78	4451.36	0.423	0.00	4451.36	0.000
	18.0938 - 17.0625		1904.41	4483.50	0.425	0.00	4483.50	0.000
	17.0625 - 16.0313		1925.11	4513.58	0.427	0.00	4513.58	0.000
	16.0313 - 15		1945.89	4540.90	0.429	0.00	4540.90	0.000
L7	15 - 14	TP52.064x44.046x0.5362	1945.89	4887.23	0.398	0.00	4887.23	0.000
	14 - 13		1966.11	5008.78	0.393	0.00	5008.78	0.000
	13 - 12		1986.40	5131.84	0.387	0.00	5131.84	0.000
	12 - 11		2006.77	5256.38	0.382	0.00	5256.38	0.000
	11 - 10		2027.20	5382.43	0.377	0.00	5382.43	0.000
	10 - 9		2047.72	5509.96	0.372	0.00	5509.96	0.000
	9 - 8		2068.31	5638.98	0.367	0.00	5638.98	0.000
	8 - 7		2088.98	5747.61	0.363	0.00	5747.61	0.000
	7 - 6		2109.73	5858.12	0.360	0.00	5858.12	0.000
	6 - 5		2130.57	5969.17	0.357	0.00	5969.17	0.000
	5 - 4		2151.48	6080.76	0.354	0.00	6080.76	0.000
	4 - 3		2172.48	6192.84	0.351	0.00	6192.84	0.000
	3 - 2		2193.57	6305.41	0.348	0.00	6305.41	0.000
	2 - 1		2214.74	6418.46	0.345	0.00	6418.46	0.000
	1 - 0		2235.99	6531.97	0.342	0.00	6531.97	0.000

Pole Shear Design Data

Section No.	Elevation ft	Size	Actual V_u K	ϕV_n K	Ratio $\frac{V_u}{\phi V_n}$	Actual T_u kip-ft	ϕT_n kip-ft	Ratio $\frac{T_u}{\phi T_n}$
L1	150 - 148	TP21.25x15x0.1875	3.37	336.55	0.010	0.39	420.45	0.001
	148 - 146		3.49	343.50	0.010	0.39	438.08	0.001
	146 - 144		3.61	350.46	0.010	0.39	456.06	0.001
	144 - 142		6.09	357.41	0.017	0.39	474.41	0.001
	142 - 140		6.21	364.00	0.017	0.39	492.63	0.001
	140 - 138		6.32	368.74	0.017	0.39	508.64	0.001
	138 - 136		6.44	373.39	0.017	0.39	524.78	0.001
	136 - 134		6.55	377.97	0.017	0.39	541.04	0.001
	134 - 132		6.67	382.46	0.017	0.39	557.42	0.001
	132 - 130		11.73	386.86	0.030	0.56	573.91	0.001
	130 - 128		11.94	391.19	0.031	0.44	590.50	0.001
	128 - 126		12.03	395.43	0.030	0.44	607.20	0.001
	126 - 124		12.13	399.59	0.030	0.44	623.98	0.001
	124 - 122		12.22	403.66	0.030	0.44	640.85	0.001
	122 - 120		12.31	407.66	0.030	0.44	657.80	0.001
	120 - 118.5		12.36	410.60	0.030	0.44	670.55	0.001
	118.5 - 118		10.49	411.57	0.025	0.46	670.55	0.001
	118 - 116		10.63	415.40	0.026	0.46	674.82	0.001
	116 - 114		10.68	419.14	0.025	0.57	709.05	0.001
	114 - 112		10.82	422.80	0.026	0.57	726.25	0.001
	112 - 110		11.05	426.38	0.026	0.43	743.49	0.001

Section No.	Elevation ft	Size	Actual V_u K	ϕV_n K	Ratio $\frac{V_u}{\phi V_n}$	Actual T_u kip-ft	ϕT_n kip-ft	Ratio $\frac{T_u}{\phi T_n}$
L2	110 - 108.75	TP27.61x21.25x0.25	11.14	632.47	0.018	0.43	1114.16	0.000
	108.75 - 107.5		11.22	641.90	0.017	0.43	1147.78	0.000
	107.5 - 106.25		11.31	649.57	0.017	0.43	1178.68	0.000
	106.25 - 105		11.41	655.98	0.017	0.43	1207.68	0.000
	105 - 103.75		11.50	662.30	0.017	0.43	1236.86	0.000
	103.75 - 102.5		11.59	668.54	0.017	0.43	1266.21	0.000
	102.5 - 101.25		11.68	674.69	0.017	0.43	1295.72	0.000
	101.25 - 100		11.78	680.76	0.017	0.43	1325.40	0.000
	100 - 98.75		11.87	686.74	0.017	0.43	1355.23	0.000
	98.75 - 97.5		11.97	692.63	0.017	0.43	1385.21	0.000
	97.5 - 96.25		12.06	698.44	0.017	0.43	1415.32	0.000
	96.25 - 95		12.16	704.16	0.017	0.43	1445.57	0.000
	95 - 93.75		12.26	709.80	0.017	0.43	1475.93	0.000
	93.75 - 92.5		12.36	715.36	0.017	0.43	1506.43	0.000
	92.5 - 91.25		12.45	720.82	0.017	0.43	1537.03	0.000
	91.25 - 90		12.55	726.20	0.017	0.43	1567.72	0.000
	90 - 88.75		12.65	731.50	0.017	0.43	1598.53	0.000
	88.75 - 87.5		12.75	736.71	0.017	0.43	1629.43	0.000
	87.5 - 86.25		12.86	741.83	0.017	0.43	1660.40	0.000
	86.25 - 85		12.96	746.87	0.017	0.43	1691.46	0.000
L3	85 - 84	TP35.691x27.61x0.3722	14.85	1226.93	0.012	0.43	2704.55	0.000
	84 - 83		14.91	1250.72	0.012	0.43	2813.08	0.000
	83 - 82		14.98	1274.52	0.012	0.43	2923.75	0.000
	82 - 81		15.05	1298.32	0.012	0.43	3036.55	0.000
	81 - 80		15.12	1322.11	0.011	0.43	3151.48	0.000
	80 - 79		15.19	1345.91	0.011	0.43	3268.56	0.000
	79 - 78		15.26	1369.70	0.011	0.43	3387.77	0.000
	78 - 77		15.34	1393.50	0.011	0.43	3509.11	0.000
	77 - 76		15.42	1417.30	0.011	0.43	3632.58	0.000
	76 - 75		15.50	1438.02	0.011	0.43	3758.20	0.000
	75 - 74		15.58	1454.20	0.011	0.42	3877.65	0.000
	74 - 73		15.66	1470.13	0.011	0.42	3986.51	0.000
	73 - 72		15.75	1485.82	0.011	0.42	4096.13	0.000
	72 - 71		15.83	1501.26	0.011	0.42	4206.49	0.000
	71 - 70		15.92	1516.45	0.010	0.42	4317.56	0.000
L4	70 - 69	TP38.058x35.691x0.3918	16.00	1628.52	0.010	0.42	4773.62	0.000
	69 - 68		16.09	1633.38	0.010	0.42	4809.34	0.000
	68 - 67		16.17	1638.23	0.010	0.42	4845.14	0.000
	67 - 66		16.25	1643.06	0.010	0.42	4881.00	0.000
	66 - 65		16.34	1647.86	0.010	0.42	4916.93	0.000
	65 - 64		16.42	1652.64	0.010	0.42	4952.91	0.000
	64 - 63		16.51	1657.40	0.010	0.42	4988.96	0.000
	63 - 62		16.59	1662.15	0.010	0.42	5025.07	0.000
	62 - 61		16.68	1666.87	0.010	0.42	5061.24	0.000
	61 - 60		16.76	1671.56	0.010	0.42	5097.48	0.000
	60 - 59		16.84	1676.24	0.010	0.42	5133.77	0.000
	59 - 58		16.93	1680.90	0.010	0.42	5170.11	0.000
	58 - 57		17.01	1685.53	0.010	0.42	5206.52	0.000
	57 - 56		17.10	1690.15	0.010	0.42	5242.98	0.000
	56 - 55		17.18	1694.74	0.010	0.42	5279.49	0.000
L5	55 - 53.825	TP41.576x38.058x0.472	17.27	2115.36	0.008	0.42	6597.50	0.000
	53.825 - 52.65		17.37	2125.21	0.008	0.42	6659.36	0.000
	52.65 - 51.475		17.46	2135.07	0.008	0.42	6721.51	0.000
	51.475 - 50.3		17.55	2144.92	0.008	0.42	6783.95	0.000
	50.3 - 49.125		17.65	2154.78	0.008	0.42	6846.67	0.000
	49.125 - 47.95		17.74	2164.63	0.008	0.42	6909.68	0.000
	47.95 - 46.775		17.83	2174.48	0.008	0.42	6972.99	0.000
	46.775 - 45.6		17.92	2184.34	0.008	0.42	7036.58	0.000
	45.6 - 44.425		18.02	2194.19	0.008	0.42	7100.46	0.000
	44.425 - 43.25		18.11	2204.04	0.008	0.42	7164.63	0.000

Section No.	Elevation ft	Size	Actual V_u K	ϕV_n K	Ratio $\frac{V_u}{\phi V_n}$	Actual T_u kip-ft	ϕT_n kip-ft	Ratio $\frac{T_u}{\phi T_n}$
	43.25 - 42.075		18.20	2213.90	0.008	0.42	7229.09	0.000
	42.075 - 40.9		18.30	2223.75	0.008	0.42	7293.83	0.000
	40.9 - 39.725		18.39	2233.60	0.008	0.42	7358.87	0.000
	39.725 - 38.55		18.48	2243.46	0.008	0.42	7424.19	0.000
	38.55 - 37.375		18.57	2253.31	0.008	0.42	7489.81	0.000
	37.375 - 36.2		18.67	2263.17	0.008	0.42	7555.71	0.000
	36.2 - 35.025		18.76	2273.02	0.008	0.42	7621.90	0.000
	35.025 - 33.85		18.85	2282.87	0.008	0.42	7688.37	0.000
	33.85 - 32.675		18.95	2292.73	0.008	0.42	7755.14	0.000
	32.675 - 31.5		19.04	2302.58	0.008	0.42	7822.20	0.000
L6	31.5 - 30.4688	TP44.046x41.576x0.4977	19.11	2435.35	0.008	0.42	8295.96	0.000
	30.4688 - 29.4375		19.18	2444.47	0.008	0.42	8358.42	0.000
	29.4375 - 28.4063		19.25	2453.59	0.008	0.42	8421.17	0.000
	28.4063 - 27.375		19.33	2462.70	0.008	0.42	8484.08	0.000
	27.375 - 26.3438		19.40	2471.82	0.008	0.42	8547.33	0.000
	26.3438 - 25.3125		19.47	2480.94	0.008	0.42	8610.75	0.000
	25.3125 - 24.2813		19.55	2490.06	0.008	0.42	8674.33	0.000
	24.2813 - 23.25		19.62	2499.18	0.008	0.42	8738.25	0.000
	23.25 - 22.2188		19.69	2508.29	0.008	0.42	8802.42	0.000
	22.2188 - 21.1875		19.76	2517.41	0.008	0.42	8866.75	0.000
	21.1875 - 20.1563		19.83	2526.53	0.008	0.42	8931.33	0.000
	20.1563 - 19.125		19.91	2535.65	0.008	0.42	8996.17	0.000
	19.125 - 18.0938		19.98	2544.77	0.008	0.42	9061.25	0.000
	18.0938 - 17.0625		20.05	2553.88	0.008	0.42	9126.50	0.000
	17.0625 - 16.0313		20.12	2561.77	0.008	0.42	9187.67	0.000
	16.0313 - 15		20.19	2568.04	0.008	0.42	9243.08	0.000
L7	15 - 14	TP52.064x44.046x0.5362	20.27	2802.81	0.007	0.42	9951.08	0.000
	14 - 13		20.34	2836.82	0.007	0.42	10198.08	0.000
	13 - 12		20.41	2870.84	0.007	0.42	10448.08	0.000
	12 - 11		20.49	2904.85	0.007	0.42	10701.17	0.000
	11 - 10		20.56	2938.87	0.007	0.42	10957.25	0.000
	10 - 9		20.64	2972.88	0.007	0.42	11216.33	0.000
	9 - 8		20.72	2995.48	0.007	0.42	11478.50	0.000
	8 - 7		20.80	3018.55	0.007	0.42	11699.08	0.000
	7 - 6		20.88	3041.38	0.007	0.42	11923.50	0.000
	6 - 5		20.97	3063.96	0.007	0.42	12149.08	0.000
	5 - 4		21.05	3086.30	0.007	0.42	12375.67	0.000
	4 - 3		21.14	3108.40	0.007	0.42	12603.25	0.000
	3 - 2		21.22	3130.26	0.007	0.42	12831.83	0.000
	2 - 1		21.31	3151.88	0.007	0.42	13061.42	0.000
	1 - 0		21.40	3173.25	0.007	0.42	13291.92	0.000

Pole Interaction Design Data

Section No.	Elevation ft	Ratio $\frac{P_u}{\phi P_n}$	Ratio $\frac{M_{ux}}{\phi M_{nx}}$	Ratio $\frac{M_{uy}}{\phi M_{ny}}$	Ratio $\frac{V_u}{\phi V_n}$	Ratio $\frac{T_u}{\phi T_n}$	Comb. Stress Ratio	Allow. Stress Ratio	Criteria
L1	150 - 148	0.004	0.074	0.000	0.010	0.001	0.079 ✔	1.000	4.8.2 ✔
	148 - 146	0.005	0.103	0.000	0.010	0.001	0.108 ✔	1.000	4.8.2 ✔
	146 - 144	0.005	0.131	0.000	0.010	0.001	0.136 ✔	1.000	4.8.2 ✔
	144 - 142	0.009	0.167	0.000	0.017	0.001	0.176 ✔	1.000	4.8.2 ✔
	142 - 140	0.009	0.212	0.000	0.017	0.001	0.221 ✔	1.000	4.8.2 ✔
	140 - 138	0.009	0.255	0.000	0.017	0.001	0.265 ✔	1.000	4.8.2 ✔
	138 - 136	0.009	0.297	0.000	0.017	0.001	0.306 ✔	1.000	4.8.2 ✔
	136 - 134	0.009	0.337	0.000	0.017	0.001	0.346 ✔	1.000	4.8.2 ✔
	134 - 132	0.010	0.375	0.000	0.017	0.001	0.385 ✔	1.000	4.8.2 ✔
	132 - 130	0.014	0.447	0.000	0.030	0.001	0.462 ✔	1.000	4.8.2 ✔
	130 - 128	0.014	0.516	0.000	0.031	0.001	0.531 ✔	1.000	4.8.2 ✔
	128 - 126	0.014	0.582	0.000	0.030	0.001	0.598 ✔	1.000	4.8.2 ✔
	126 - 124	0.015	0.645	0.000	0.030	0.001	0.661 ✔	1.000	4.8.2 ✔
	124 - 122	0.015	0.705	0.000	0.030	0.001	0.721 ✔	1.000	4.8.2 ✔
	122 - 120	0.015	0.763	0.000	0.030	0.001	0.779 ✔	1.000	4.8.2 ✔
	120 - 118.5	0.015	0.804	0.000	0.030	0.001	0.820 ✔	1.000	4.8.2 ✔
	118.5 - 118	0.003	0.086	0.000	0.025	0.001	0.089 ✔	1.000	4.8.2 ✔
	118 - 116	0.003	0.069	0.000	0.026	0.001	0.073 ✔	1.000	4.8.2 ✔
	116 - 114	0.004	0.057	0.000	0.025	0.001	0.062 ✔	1.000	4.8.2 ✔
	114 - 112	0.004	0.116	0.000	0.026	0.001	0.121 ✔	1.000	4.8.2 ✔
	112 - 110	0.004	0.174	0.000	0.026	0.001	0.178 ✔	1.000	4.8.2 ✔
L2	110 - 108.75	0.003	0.141	0.000	0.018	0.000	0.145 ✔	1.000	4.8.2 ✔
	108.75 - 107.5	0.003	0.162	0.000	0.017	0.000	0.165 ✔	1.000	4.8.2 ✔
	107.5 - 106.25	0.003	0.182	0.000	0.017	0.000	0.186 ✔	1.000	4.8.2 ✔
	106.25 - 105	0.003	0.202	0.000	0.017	0.000	0.205 ✔	1.000	4.8.2 ✔

Section No.	Elevation ft	Ratio $\frac{P_u}{\phi P_n}$	Ratio $\frac{M_{ux}}{\phi M_{nx}}$	Ratio $\frac{M_{uy}}{\phi M_{ny}}$	Ratio $\frac{V_u}{\phi V_n}$	Ratio $\frac{T_u}{\phi T_n}$	Comb. Stress Ratio	Allow. Stress Ratio	Criteria
	105 - 103.75	0.003	0.220	0.000	0.017	0.000	0.224 ✔	1.000	4.8.2 ✔
	103.75 - 102.5	0.004	0.238	0.000	0.017	0.000	0.242 ✔	1.000	4.8.2 ✔
	102.5 - 101.25	0.004	0.256	0.000	0.017	0.000	0.260 ✔	1.000	4.8.2 ✔
	101.25 - 100	0.004	0.273	0.000	0.017	0.000	0.277 ✔	1.000	4.8.2 ✔
	100 - 98.75	0.004	0.289	0.000	0.017	0.000	0.293 ✔	1.000	4.8.2 ✔
	98.75 - 97.5	0.004	0.304	0.000	0.017	0.000	0.309 ✔	1.000	4.8.2 ✔
	97.5 - 96.25	0.004	0.320	0.000	0.017	0.000	0.324 ✔	1.000	4.8.2 ✔
	96.25 - 95	0.004	0.334	0.000	0.017	0.000	0.339 ✔	1.000	4.8.2 ✔
	95 - 93.75	0.004	0.348	0.000	0.017	0.000	0.353 ✔	1.000	4.8.2 ✔
	93.75 - 92.5	0.005	0.362	0.000	0.017	0.000	0.367 ✔	1.000	4.8.2 ✔
	92.5 - 91.25	0.005	0.375	0.000	0.017	0.000	0.380 ✔	1.000	4.8.2 ✔
	91.25 - 90	0.005	0.388	0.000	0.017	0.000	0.393 ✔	1.000	4.8.2 ✔
	90 - 88.75	0.005	0.401	0.000	0.017	0.000	0.406 ✔	1.000	4.8.2 ✔
	88.75 - 87.5	0.005	0.413	0.000	0.017	0.000	0.418 ✔	1.000	4.8.2 ✔
	87.5 - 86.25	0.005	0.425	0.000	0.017	0.000	0.430 ✔	1.000	4.8.2 ✔
	86.25 - 85	0.005	0.436	0.000	0.017	0.000	0.442 ✔	1.000	4.8.2 ✔
L3	85 - 84	0.008	0.542	0.000	0.012	0.000	0.550 ✔	1.000	4.8.2 ✔
	84 - 83	0.008	0.532	0.000	0.012	0.000	0.540 ✔	1.000	4.8.2 ✔
	83 - 82	0.008	0.522	0.000	0.012	0.000	0.530 ✔	1.000	4.8.2 ✔
	82 - 81	0.008	0.512	0.000	0.012	0.000	0.520 ✔	1.000	4.8.2 ✔
	81 - 80	0.008	0.503	0.000	0.011	0.000	0.511 ✔	1.000	4.8.2 ✔
	80 - 79	0.008	0.495	0.000	0.011	0.000	0.503 ✔	1.000	4.8.2 ✔
	79 - 78	0.008	0.486	0.000	0.011	0.000	0.494 ✔	1.000	4.8.2 ✔
	78 - 77	0.008	0.478	0.000	0.011	0.000	0.486 ✔	1.000	4.8.2 ✔
	77 - 76	0.008	0.471	0.000	0.011	0.000	0.478 ✔	1.000	4.8.2 ✔
	76 - 75	0.008	0.463	0.000	0.011	0.000	0.471 ✔	1.000	4.8.2 ✔

Section No.	Elevation ft	Ratio $\frac{P_u}{\phi P_n}$	Ratio $\frac{M_{ux}}{\phi M_{nx}}$	Ratio $\frac{M_{uy}}{\phi M_{ny}}$	Ratio $\frac{V_u}{\phi V_n}$	Ratio $\frac{T_u}{\phi T_n}$	Comb. Stress Ratio	Allow. Stress Ratio	Criteria
	75 - 74	0.008	0.457	0.000	0.011	0.000	0.465 ✔	1.000	4.8.2 ✔
	74 - 73	0.008	0.452	0.000	0.011	0.000	0.460 ✔	1.000	4.8.2 ✔
	73 - 72	0.008	0.448	0.000	0.011	0.000	0.456 ✔	1.000	4.8.2 ✔
	72 - 71	0.008	0.444	0.000	0.011	0.000	0.452 ✔	1.000	4.8.2 ✔
	71 - 70	0.008	0.440	0.000	0.010	0.000	0.448 ✔	1.000	4.8.2 ✔
L4	70 - 69	0.007	0.411	0.000	0.010	0.000	0.419 ✔	1.000	4.8.2 ✔
	69 - 68	0.007	0.415	0.000	0.010	0.000	0.422 ✔	1.000	4.8.2 ✔
	68 - 67	0.007	0.419	0.000	0.010	0.000	0.426 ✔	1.000	4.8.2 ✔
	67 - 66	0.007	0.422	0.000	0.010	0.000	0.430 ✔	1.000	4.8.2 ✔
	66 - 65	0.007	0.426	0.000	0.010	0.000	0.434 ✔	1.000	4.8.2 ✔
	65 - 64	0.007	0.430	0.000	0.010	0.000	0.437 ✔	1.000	4.8.2 ✔
	64 - 63	0.007	0.433	0.000	0.010	0.000	0.441 ✔	1.000	4.8.2 ✔
	63 - 62	0.008	0.437	0.000	0.010	0.000	0.445 ✔	1.000	4.8.2 ✔
	62 - 61	0.008	0.440	0.000	0.010	0.000	0.448 ✔	1.000	4.8.2 ✔
	61 - 60	0.008	0.444	0.000	0.010	0.000	0.452 ✔	1.000	4.8.2 ✔
	60 - 59	0.008	0.448	0.000	0.010	0.000	0.455 ✔	1.000	4.8.2 ✔
	59 - 58	0.008	0.451	0.000	0.010	0.000	0.459 ✔	1.000	4.8.2 ✔
	58 - 57	0.008	0.454	0.000	0.010	0.000	0.462 ✔	1.000	4.8.2 ✔
	57 - 56	0.008	0.458	0.000	0.010	0.000	0.466 ✔	1.000	4.8.2 ✔
	56 - 55	0.008	0.461	0.000	0.010	0.000	0.469 ✔	1.000	4.8.2 ✔
L5	55 - 53.825	0.006	0.376	0.000	0.008	0.000	0.382 ✔	1.000	4.8.2 ✔
	53.825 - 52.65	0.006	0.378	0.000	0.008	0.000	0.385 ✔	1.000	4.8.2 ✔
	52.65 - 51.475	0.007	0.381	0.000	0.008	0.000	0.388 ✔	1.000	4.8.2 ✔
	51.475 - 50.3	0.007	0.384	0.000	0.008	0.000	0.390 ✔	1.000	4.8.2 ✔
	50.3 - 49.125	0.007	0.386	0.000	0.008	0.000	0.393 ✔	1.000	4.8.2 ✔
	49.125 - 47.95	0.007	0.389	0.000	0.008	0.000	0.396 ✔	1.000	4.8.2 ✔

Section No.	Elevation ft	Ratio $\frac{P_u}{\phi P_n}$	Ratio $\frac{M_{ux}}{\phi M_{nx}}$	Ratio $\frac{M_{uy}}{\phi M_{ny}}$	Ratio $\frac{V_u}{\phi V_n}$	Ratio $\frac{T_u}{\phi T_n}$	Comb. Stress Ratio	Allow. Stress Ratio	Criteria
	47.95 - 46.775	0.007	0.392	0.000	0.008	0.000	0.398 ✔	1.000	4.8.2 ✔
	46.775 - 45.6	0.007	0.394	0.000	0.008	0.000	0.401 ✔	1.000	4.8.2 ✔
	45.6 - 44.425	0.007	0.397	0.000	0.008	0.000	0.403 ✔	1.000	4.8.2 ✔
	44.425 - 43.25	0.007	0.399	0.000	0.008	0.000	0.406 ✔	1.000	4.8.2 ✔
	43.25 - 42.075	0.007	0.401	0.000	0.008	0.000	0.408 ✔	1.000	4.8.2 ✔
	42.075 - 40.9	0.007	0.404	0.000	0.008	0.000	0.411 ✔	1.000	4.8.2 ✔
	40.9 - 39.725	0.007	0.406	0.000	0.008	0.000	0.413 ✔	1.000	4.8.2 ✔
	39.725 - 38.55	0.007	0.409	0.000	0.008	0.000	0.416 ✔	1.000	4.8.2 ✔
	38.55 - 37.375	0.007	0.411	0.000	0.008	0.000	0.418 ✔	1.000	4.8.2 ✔
	37.375 - 36.2	0.007	0.413	0.000	0.008	0.000	0.420 ✔	1.000	4.8.2 ✔
	36.2 - 35.025	0.007	0.416	0.000	0.008	0.000	0.423 ✔	1.000	4.8.2 ✔
	35.025 - 33.85	0.007	0.418	0.000	0.008	0.000	0.425 ✔	1.000	4.8.2 ✔
	33.85 - 32.675	0.007	0.420	0.000	0.008	0.000	0.427 ✔	1.000	4.8.2 ✔
	32.675 - 31.5	0.007	0.422	0.000	0.008	0.000	0.430 ✔	1.000	4.8.2 ✔
L6	31.5 - 30.4688	0.007	0.403	0.000	0.008	0.000	0.410 ✔	1.000	4.8.2 ✔
	30.4688 - 29.4375	0.007	0.405	0.000	0.008	0.000	0.412 ✔	1.000	4.8.2 ✔
	29.4375 - 28.4063	0.007	0.407	0.000	0.008	0.000	0.414 ✔	1.000	4.8.2 ✔
	28.4063 - 27.375	0.007	0.408	0.000	0.008	0.000	0.416 ✔	1.000	4.8.2 ✔
	27.375 - 26.3438	0.007	0.410	0.000	0.008	0.000	0.417 ✔	1.000	4.8.2 ✔
	26.3438 - 25.3125	0.007	0.412	0.000	0.008	0.000	0.419 ✔	1.000	4.8.2 ✔
	25.3125 - 24.2813	0.007	0.413	0.000	0.008	0.000	0.421 ✔	1.000	4.8.2 ✔
	24.2813 - 23.25	0.007	0.415	0.000	0.008	0.000	0.422 ✔	1.000	4.8.2 ✔
	23.25 - 22.2188	0.007	0.417	0.000	0.008	0.000	0.424 ✔	1.000	4.8.2 ✔
	22.2188 - 21.1875	0.007	0.418	0.000	0.008	0.000	0.426 ✔	1.000	4.8.2 ✔
	21.1875 - 20.1563	0.007	0.420	0.000	0.008	0.000	0.428 ✔	1.000	4.8.2 ✔
	20.1563 - 19.125	0.007	0.422	0.000	0.008	0.000	0.429 ✔	1.000	4.8.2 ✔

Section No.	Elevation ft	Ratio $\frac{P_u}{\phi P_n}$	Ratio $\frac{M_{ux}}{\phi M_{nx}}$	Ratio $\frac{M_{uy}}{\phi M_{ny}}$	Ratio $\frac{V_u}{\phi V_n}$	Ratio $\frac{T_u}{\phi T_n}$	Comb. Stress Ratio	Allow. Stress Ratio	Criteria
	19.125 - 18.0938	0.008	0.423	0.000	0.008	0.000	0.431 ✔	1.000	4.8.2 ✔
	18.0938 - 17.0625	0.008	0.425	0.000	0.008	0.000	0.432 ✔	1.000	4.8.2 ✔
	17.0625 - 16.0313	0.008	0.427	0.000	0.008	0.000	0.434 ✔	1.000	4.8.2 ✔
	16.0313 - 15	0.008	0.429	0.000	0.008	0.000	0.436 ✔	1.000	4.8.2 ✔
L7	15 - 14	0.007	0.398	0.000	0.007	0.000	0.405 ✔	1.000	4.8.2 ✔
	14 - 13	0.007	0.393	0.000	0.007	0.000	0.400 ✔	1.000	4.8.2 ✔
	13 - 12	0.007	0.387	0.000	0.007	0.000	0.394 ✔	1.000	4.8.2 ✔
	12 - 11	0.007	0.382	0.000	0.007	0.000	0.389 ✔	1.000	4.8.2 ✔
	11 - 10	0.007	0.377	0.000	0.007	0.000	0.384 ✔	1.000	4.8.2 ✔
	10 - 9	0.007	0.372	0.000	0.007	0.000	0.379 ✔	1.000	4.8.2 ✔
	9 - 8	0.007	0.367	0.000	0.007	0.000	0.374 ✔	1.000	4.8.2 ✔
	8 - 7	0.007	0.363	0.000	0.007	0.000	0.370 ✔	1.000	4.8.2 ✔
	7 - 6	0.007	0.360	0.000	0.007	0.000	0.367 ✔	1.000	4.8.2 ✔
	6 - 5	0.007	0.357	0.000	0.007	0.000	0.364 ✔	1.000	4.8.2 ✔
	5 - 4	0.007	0.354	0.000	0.007	0.000	0.361 ✔	1.000	4.8.2 ✔
	4 - 3	0.007	0.351	0.000	0.007	0.000	0.358 ✔	1.000	4.8.2 ✔
	3 - 2	0.007	0.348	0.000	0.007	0.000	0.355 ✔	1.000	4.8.2 ✔
	2 - 1	0.007	0.345	0.000	0.007	0.000	0.352 ✔	1.000	4.8.2 ✔
	1 - 0	0.007	0.342	0.000	0.007	0.000	0.349 ✔	1.000	4.8.2 ✔

Reinforcing Design Data (Compression)

Section No.	Elevation ft	Size	L ft	L_u ft	Kl/r	A in^2	P_u K	ϕP_n K	Ratio $\frac{P_u}{\phi P_n}$
L2	118.5 - 85	2 1/2	33.50	2.50	38.4 K=0.80	4.9087	-132.85	281.86	0.471 [1]

[1] P_u / ϕP_n controls

Reinforcing Bending Design Data

Section No.	Elevation ft	Size	M_{ux} kip-ft	ϕM_{nx} kip-ft	Ratio $\frac{M_{ux}}{\phi M_{nx}}$	M_{uy} kip-ft	ϕM_{ny} kip-ft	Ratio $\frac{M_{uy}}{\phi M_{ny}}$
L2	118.5 - 85	2 1/2	0.37	14.65	0.025	0.00	14.65	0.000

Reinforcing Interaction Design Data

Section No.	Elevation ft	Size	Ratio $\frac{P_u}{\phi P_n}$	Ratio $\frac{M_{ux}}{\phi M_{nx}}$	Ratio $\frac{M_{uy}}{\phi M_{ny}}$	Comb. Stress Ratio	Allow. Stress Ratio	Criteria
L2	118.5 - 85	2 1/2	0.471	0.025	0.000	0.471 [1] ✔	1.000	4.8.1 ✔

[1] P_u / ϕP_n controls

Tension Checks

Reinforcing Design Data (Tension)

Section No.	Elevation ft	Size	L ft	L_u ft	Kl/r	A in^2	P_u K	ϕP_n K	Ratio $\frac{P_u}{\phi P_n}$
L2	118.5 - 85	2 1/2	33.50	2.50	48.0	4.9087	125.45	331.34	0.379 [1]

[1] P_u / ϕP_n controls

Reinforcing Bending Design Data

Section No.	Elevation ft	Size	M_{ux} kip-ft	ϕM_{nx} kip-ft	Ratio $\frac{M_{ux}}{\phi M_{nx}}$	M_{uy} kip-ft	ϕM_{ny} kip-ft	Ratio $\frac{M_{uy}}{\phi M_{ny}}$
L2	118.5 - 85	2 1/2	0.04	14.65	0.003	0.00	14.65	0.000

Reinforcing Interaction Design Data

Section No.	Elevation ft	Size	Ratio $\frac{P_u}{\phi P_n}$	Ratio $\frac{M_{ux}}{\phi M_{nx}}$	Ratio $\frac{M_{uy}}{\phi M_{ny}}$	Comb. Stress Ratio	Allow. Stress Ratio	Criteria
L2	118.5 - 85	2 1/2	0.379	0.003	0.000	0.379 [1] ✔	1.000	4.8.1 ✔

[1] P_u / ϕP_n controls

Section Capacity Table

Section No.	Elevation ft	Component Type	Size	Critical Element	P K	ϕP_{allow} K	% Capacity	Pass Fail
L1	150 - 110	Pole	TP21.25x15x0.1875	1	-12.41	821.20	82.0	Pass
L2	110 - 85	Pole	TP27.61x21.25x0.25	2	54.99	1288.45	44.2	Pass
	118.5 - 85	Reinforcing	2 1/2	9	-132.85	281.86	47.1	Pass
L3	85 - 70	Pole	TP35.691x27.61x0.3722	3	-19.73	2406.26	55.0	Pass
L4	70 - 55	Pole	TP38.058x35.691x0.3918	4	-26.82	3389.48	46.9	Pass
L5	55 - 31.5	Pole	TP41.576x38.058x0.472	5	-33.87	4605.16	43.0	Pass
L6	31.5 - 15	Pole	TP44.046x41.576x0.4977	6	-39.40	5136.07	43.6	Pass
L7	15 - 0	Pole	TP52.064x44.046x0.5362	7	-39.41	5537.58	40.5	Pass
							Summary	
						Pole (L1)	82.0	Pass
						Reinforcing (L2)	47.1	Pass
						RATING =	**82.0**	**Pass**

Flange Plate Analysis

Flange Plate			
	Plate Type	***Flange***	***@ 110 ft***
	Pole Diameter	21.3	in
	Pole Thickness	3/16	in
	Plate Diameter	28.5	in
	Plate Thickness	1	in
	Plate Fy	60	ksi
	Weld Length	1/4	in
	f_s Resistance	201.01	k-in
	Applied	13.74	k-in

Code Rev.	***G***
Moment	63.5 k-ft
Axial	3.5 k

Date	11/21/2019
Engineer	
Site #	302523
Carrier	

Stiffeners			
	#	***6***	***Show***
	Thickness	0.5	in
	Length	3.5	in
	Height	6	in
	Chamfer	0.5	in
	Offset Angle	0	°
	Fy	50	ksi

Bolts			
	#	***12***	
	Bolt Circle	25.8	in
	(R)adial / (S)quare	R	
	Diameter	1	in
	Hole Diameter	1 1/8	in
	Type	A325	
	Fy	92	ksi
	Fu	120	ksi
	f_s Resistance	54.52	k
	Applied	9.56	k

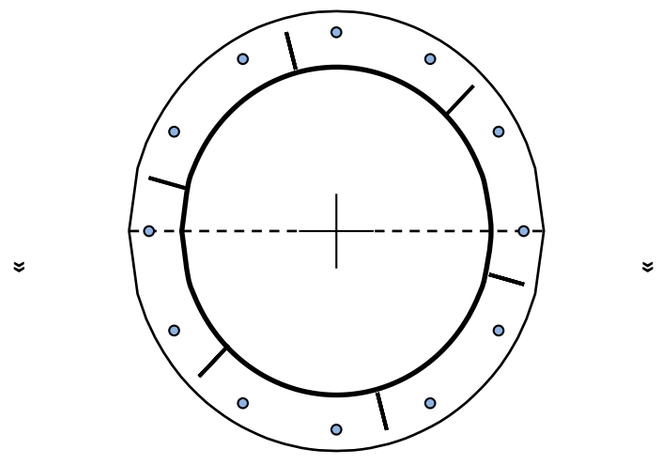

Reinforcement			
	#		

Plate Stress Ratio:

7%	Pass

Bolt Stress Ratio:

18%	Pass

Extra Bolts 0			
	#		

Flange Plate Analysis

Flange Plate

Plate Type	***Flange***	***@ 55 ft***
Pole Diameter	34.5	in
Pole Thickness	1/4	in
Plate Diameter	48.5	in
Plate Thickness	2	in
Plate Fy	60	ksi
Weld Length	1/4	in
f_s Resistance	585.28	k-in
Applied	295.95	k-in

Code Rev.	***G***
Moment	1197.0 k-ft
Act. Moment	809.1 k-ft
Axial	26.8 k

Required Flange Thickness:
1.42 in OK

Date	11/21/2019
Engineer	
Site #	302523
Carrier	

Stiffeners

#	

Bolts

#	***10***	
Bolt Circle	43.5	in
(R)adial / (S)quare	R	
Diameter	1 1/2	in
Hole Diameter	1 5/8	in
Type	A325	
Fy	81	ksi
Fu	105	ksi
f_s Resistance	110.66	k
Applied	86.65	k

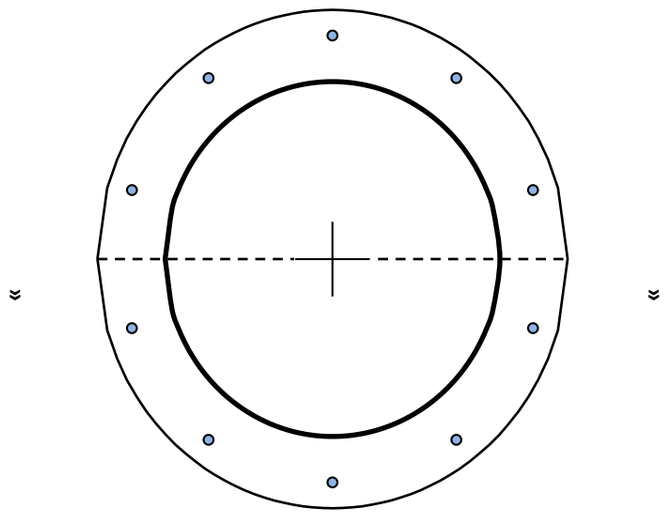

Reinforcement

#	

Plate Stress Ratio:
51% Pass

Bolt Stress Ratio:
78% Pass

Extra Bolts O

#	

Flange Plate Analysis

Flange Plate

Plate Type	***Flange***	***@ 15 ft***
Pole Diameter	39.1	in
Pole Thickness	5/16	in
Plate Diameter	54.7	in
Plate Thickness	2	in
Plate Fy	60	ksi
Weld Length	1/4	in
f_s Resistance	552.76	k-in
Applied	432.48	k-in

Code Rev.	***G***
Moment	1945.9 k-ft
Act. Moment	1315.3 k-ft
Axial	39.4 k

Required Flange Thickness:
1.77 in OK

Date	11/21/2019
Engineer	
Site #	302523
Carrier	

Stiffeners

#	

Bolts

#	***12***	
Bolt Circle	49.7	in
(R)adial / (S)quare	R	
Diameter	1 1/2	in
Hole Diameter	1 5/8	in
Type	A325	
Fy	81	ksi
Fu	105	ksi
f_s Resistance	110.66	k
Applied	102.64	k

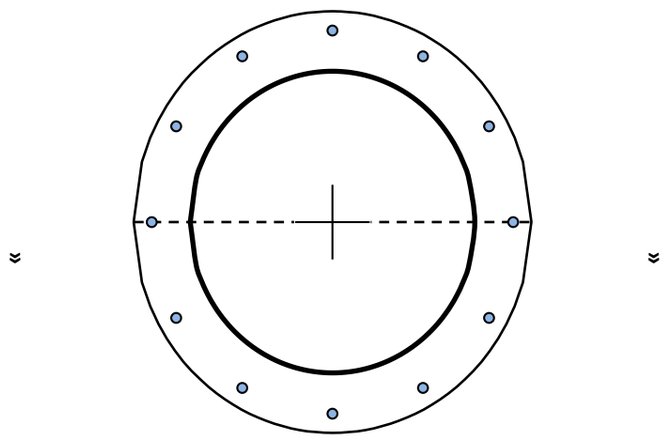

Reinforcement

#	

Plate Stress Ratio:

78% Pass

Bolt Stress Ratio:

93% Pass

Extra Bolts O

#	

Base Plate & Anchor Rod Analysis

Pole Dimensions		
Number of Sides	12	-
Diameter	52.4	in
Thickness	3/8	in
Orientation Offset		°

Base Reactions		
Moment, Mu	2257	k-ft
Axial, Pu	45	k
Shear, Vu	21	k
Neutral Axis	120	°

Report Capacities		
Component	Capacity	Result
Base Plate	30%	Pass
Anchor Rods	60%	Pass
Dwyidag	-	-

Base Plate		
Shape	Round	-
Diameter, ø	63.1	in
Thickness	2	in
Grade	A572-60	
Yield Strength, Fy	60	ksi
Tensile Strength, Fu	75	ksi
Clip	N/A	in
Orientation Offset		°
Anchor Rod Detail	c	η=0.55
Clear Distance	N/A	in
Applied Moment, Mu	324.9	k
Bending Stress, ϕMn	1095.8	k

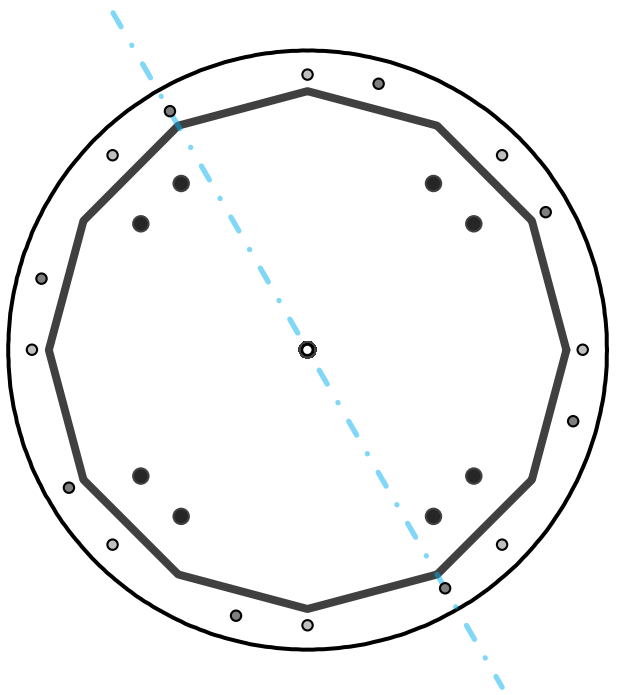

Original Anchor Rods		
Arrangement	Cluster	-
Quantity	8	-
Diameter, ø	2 1/4	in
Bolt Circle	44	in
Grade	A615-75	
Yield Strength, Fy	75	ksi
Tensile Strength, Fu	100	ksi
Spacing	6	in
Orientation Offset		°
Applied Force, Pu	122.6	k
Anchor Rods, ϕPn	259.8	k

Additional Anchor Rods		
Quantity	8	-
Diameter, ø	1 1/2	in
Bolt Circle	58	in
Grade	A325 (>1")	
Yield Strength, Fy	81	ksi
Tensile Strength, Fu	105	ksi
Bypass Base?	No	
Orientation Offset		°
Applied Force, Pu	68.2	k
Additional Rod, ϕPn	118.0	k

Additional Anchor Rods		
Quantity	8	-
Diameter, ø	1 1/2	in
Bolt Circle	58	in
Grade	A325 (>1")	
Yield Strength, Fy	81	ksi
Tensile Strength, Fu	105	ksi
Bypass Base?	No	
Orientation Offset	30	°
Applied Force, Pu	70.6	k
Additional Rod, ϕPn	118.0	k

Calculations for Monopole Base Plate & Anchor Rod Analysis

Reaction Distribution

Reaction	Shear Vu	Moment Mu	Factor
-	k	k-ft	-
Base Forces	21.0	2257.0	1.00
Anchor Rod Forces	15.5	901.9	0.40
Additional Bolt (Grp1) Forces	2.7	677.5	0.30
Additional Bolt (Grp2) Forces	2.7	677.5	0.30
Dywidag Forces	0.0	0.0	0.00
Stiffener Forces	0.0	0.0	0.00

Geometric Properties

Section	Gross Area	Net Area	Individual Inertia	Threads per Inch	Moment of Inertia
-	in^2	in^2	in^4	#	in^4
Pole	60.6200	5.0517	0.2377		20530.58
Bolt	3.9761	3.2477	0.8393	4.5	6294.24
Bolt1	1.7671	1.4053	0.1571	6	4728.53
Bolt2	1.7671	1.4053	0.1571	6	4728.53
Dywidag	0.0000	0.0000	0.0000		0.00
Stiffener	0.0000	0.0000	0.0000		0.00

Base Plate		
Shape	Round	-
Diameter, D	63.084	in
Thickness, t	2	in
Yield Strength, Fy	60	ksi
Tensile Strength, Fu	75	ksi
Base Plate Chord	0.000	in
Detail Type	c	-
Detail Factor	0.55	-
Clear Distance	N/A	-

External Base Plate		
Chord Length AA	0.000	in
Additional AA	4.000	in
Section Modulus, Z	4.000	in^3
Applied Moment, Mu	302.4	k-ft
Bending Capacity, ϕMn	216.0	k-ft
Capacity, Mu/ϕMn		
Chord Length AB	0.000	in
Additional AB	4.000	in
Section Modulus, Z	4.000	in^3
Applied Moment, Mu	173.4	k-ft
Bending Capacity, ϕMn	216.0	k-ft
Capacity, Mu/ϕMn		
Bend Line Length	0.000	in
Additional Bend Line	0.000	in
Section Modulus, Z	0.000	in^3
Applied Moment, Mu	#N/A	k-ft
Bending Capacity, ϕMn	0.0	k-ft
Capacity, Mu/ϕMn		

Internal Base Plate		
Arc Length	20.292	in
Section Modulus, Z	20.292	in^3
Moment Arm	2.649	in
Applied Moment, Mu	324.9	k-ft
Bending Capacity, ϕMn	1095.8	k-ft
Capacity, Mu/ϕMn	0.296	OK

Anchor Rods		
Anchor Rod Quantity, N	8	-
Rod Diameter, d	2.25	in
Bolt Circle, BC	44	in
Yield Strength, Fy	75	ksi
Tensile Strength, Fu	100	ksi
Applied Axial, Pu	122.6	k
Applied Shear, Vu	0.4	k
Compressive Capacity, ϕPn	259.8	k
Tensile Capacity, ϕRnt	0.472	OK
Interaction Capacity	0.475	OK

Additional Bolt Group 1		
Bolt Quantity, N	8	-
Bolt Diameter, d	1.5	in
Bolt Circle, BC	58	in
Yield Strength, Fy	81	ksi
Tensile Strength, Fu	105	ksi
Applied Axial, Pu	68.2	k
Applied Shear, Vu	0.5	k
Compressive Capacity, ϕPn	118.0	k
Compressive Capacity, ϕPn	0.578	OK
Interaction Capacity	0.585	OK

Additional Bolt Group 2		
Bolt Quantity, N	8	-
Bolt Diameter, d	1.5	in
Bolt Circle, BC	58	in
Yield Strength, Fy	81	ksi
Tensile Strength, Fu	105	ksi
Applied Axial, Pu	70.6	k
Applied Shear, Vu	0.4	k
Compressive Capacity, ϕPn	118.0	k
Compressive Capacity, ϕPn	0.598	OK
Interaction Capacity	0.605	OK

Site Name: New Milford CT2, CT
Site Number: 302523
Tower Type: MP
Design Loads (Factored) - Analysis per TIA-222-G Standards

Monolithic Mat & Pier Foundation Analysis

Foundation Analysis Parameters		
Design / Analysis / Mapping:	Analysis	-
Compression/Leg:	45	k
Uplift/Leg:	0	k
Total Shear:	21	k
Moment:	2257	k-ft
Tower + Appurtenance Weight:	45	k
Depth to Base of Foundation (l + t - h):	8	ft
Diameter of Pier (d):	6	ft
Length of Pier (l):	5.5	ft
Height of Pier above Ground (h):	0.5	ft
Width of Pad (W):	24	ft
Length of Pad (L):	18	ft
Thickness of Pad (t):	3	ft
Tower Leg Center to Center:	0	ft
Number of Tower Legs:	1	-
Tower Center from Mat Center:	3	ft
Depth Below Ground Surface to Water Table:	99	ft
Unit Weight of Concrete:	150	pcf
Unit Weight of Soil Above Water Table:	115	pcf
Unit Weight of Water:	62.4	pcf
Unit Weight of Soil Below Water Table:	52.6	pcf
Friction Angle of Uplift:	15	°
Coefficient of Shear Friction:	0.2	-
Ultimate Compressive Bearing Pressure:	9,162	psf
Ultimate Passive Pressure on Pad Face:	1,354	psf
$f_{Soil\ and\ Concrete\ Weight}$:	0.9	-
f_{Soil}:	0.75	-

Foundation Steel Parameters		
Concrete Strength (f'_c):	3,000	psi
Pad Tension Steel Depth:	32.0	in
Dead Load Factor:	0.9	-
f_{Shear}:	0.75	-
$f_{Flexure\ /\ Tension}$:	0.9	-
$f_{Compression:}$	0.65	-
b:	0.85	-
Bottom Pad Rebar Size #:	10	-
# of Bottom Pad Rebar:	36	-
Pad Bottom Steel Area:	45.72	in^2
Pad Steel F_y:	60,000	psi
Top Pad Rebar Size #:	5	-
# of Top Pad Rebar:	36	-
Pad Top Steel Area:	11.16	in^2
Pier Rebar Size #:	11	-
Pier Steel Area (Single Bar):	1.56	in^2
# of Pier Rebar:	14	-
Pier Steel F_y:	60,000	psi
Pier Cage Diameter:	64.0	in
Rebar Strain Limit:	0.008	-
Steel Elastic Modulus:	29,000	ksi
Tie Rebar Size #:	4	-
Tie Steel Area (Single Bar):	0.20	in^2
Tie Spacing:	12	in
Tie Steel F_y:	60,000	psi

Overturning Moment Usage		
Design OTM:	2570.5	k-ft
OTM Resistance:	4363.5	k-ft
Design OTM / OTM Resistance:	59%	Pass

Soil Bearing Pressure Usage		
Net Bearing Pressure:	2292	psf
Factored Nominal Bearing Pressure:	6872	psf
Factored Nominal (Net) Bearing Pressure:	33%	Pass
Load Direction Controling Design Bearing Pressure:	*Diagonal to Pad Edge*	

Sliding Factor of Safety		
Ultimate Friction Resistance:	97.5	k
Ultimate Passive Pressure Resistance:	87.7	k
Total Factored Sliding Resistance:	138.9	k
Sliding Design / Sliding Resistance:	15%	Pass

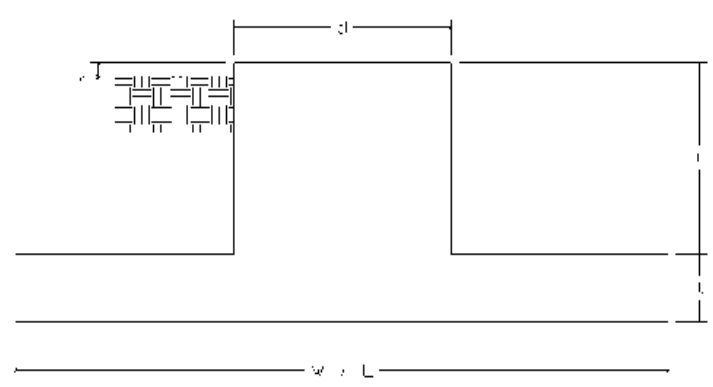

Pad Strength Capacity			
Factored One Way Shear (V_u):	154.3	k	
One Way Shear Capacity (fV_c):	757.2	k	*ACI11.3.1.1*
V_u / fV_c:	20%	Pass	
Load Direction Controling Shear Capacity:	*Parallel to Pad Edge*		
Lower Steel Pad Factored Moment (M_u):	801.7	k-ft	
Lower Steel Pad Moment Capacity (fM_n):	6257.1	k-ft	*ACI10.3*
M_u / fM_n:	13%	Pass	
Load Direction Controling Flexural Capacity:	*Parallel to Pad Edge*		
Upper Steel Pad Factored Moment (M_u):	581.2	k-ft	
Upper Steel Pad Moment Capacity (fM_n):	1587.6	k-ft	
M_u / fM_n:	37%	Pass	
Lower Pad Flexural Reinforcement Ratio:	0.0050		*OK - Minimum Reinforcement Ratio Met - ACI10.5.1*
Upper Pad Flexural Reinforcement Ratio:	0.0012		*OK - Minimum Reinforcement Ratio Met - ACI10.5.1*
Pad Shrinkage Reinforcement Ratio:	0.0062		*OK - Shrinkage Reinforcement Ratio Met - ACI7.12.2.1*
Lower Pad Reinforcement Spacing:	6	in	*Pad Reinforcing Spacing OK - ACI7.12.2.2 & 10.5.4*
Upper Pad Reinforcement Spacing:	6	in	*Pad Reinforcing Spacing OK - ACI7.12.2.2 & 10.5.4*
Factored Punching Shear (V_u):	0.0	k	
Nominal Punching Shear Capacity (f_cV_n):	1718.0	k	*ACI11.12.2.1*
V_u / fV_c:	0%	Pass	

Pier Strength Capacity			
Factored Moment in Pier (M_u):	2372.5	k-ft	
Pier Moment Capacity (fM_n):	3087.5	k-ft	
M_u / fM_n:	77%	Pass	
Factored Shear in Pier (V_u):	21.0	k	
Pier Shear Capacity (fV_n):	422.8	k	
V_u / fV_c:	5%	Pass	
Pier Shear Reinforcement Ratio:	0.0005		*OK - No Ties Necessary for Shear - ACI11.5.6.1*
Factored Tension in Pier (T_u):	0.0	k	
Pier Tension Capacity (fT_n):	1179.4	k	
T_u / fT_n:	0%	Pass	
Factored Compression in Pier (P_u):	45.0	k	
Pier Compression Capacity (fP_n):	5369.9	k	*ACI10.3.6.2*
P_u / fP_n:	1%	Pass	
Pier Compression Reinforcement Ratio:	0.005		*OK - Reinforcement Ratio Met - ACI10.9.1 & 10.8.4*
Minimum Depth to Develop Vertical Rebar:	31	in	*ACI12.2.3*
Minimum Hook Development Length:	22	in	*ACI12.5*
Minimum Mat Thickness / Edge Distance from Pier:	25.0	in	
Minimum Foundation Depth:	4.93	ft	
$M_u/f_BM_n + T_u/f_TT_n$:	77%	Pass	

AMERICAN TOWER®
CORPORATION

Antenna Mount Analysis Report

ATC Site Name	:	**New Milford CT 2, CT**
ATC Site Number	:	**302523**
Engineering Number	:	**12995763_C8_01**
Mount Elevation	:	**132 ft**
Carrier	:	**Verizon Wireless**
Carrier Site Name	:	**NEW MILFORD CT**
Carrier Site Number	:	**467154**
Site Location	:	**4 Elkington Farm Rd** **New Milford, CT 06776-2909** **41.59086111 , -73.4086**
County	:	**Litchfield**
Date	:	**January 17, 2020**
Max Usage	:	**91%**
Result	:	**Contingent Pass**

STATE OF CONNECTICUT
ESHA KAUSHAL MODI
32593
LICENSED
PROFESSIONAL ENGINEER

Prepared By:
Charles Wally
Structural Engineer II

Reviewed By:

COA: PEC.0001553

Table of Contents

Introduction 1

Supporting Documents 1

Analysis 1

Conclusion 1

Antenna Loading 2

Structure Usages 2

Mount Layout 3

Equipment Layout 4

Standard Conditions 7

Calculations ..... Attached

Introduction

The purpose of this report is to summarize results of the antenna mount analysis performed for Verizon Wireless at 132 ft.

Supporting Documents

Mount Mapping	Infinigy Project #1009-Z0003-H/317-505, dated November 13, 2019
RFDS	RFDS dated October 18, 2019
Photos	Site photos from 2019

Analysis

This antenna mount was analyzed using American Tower Corporation's Mount Analysis Program and RISA-3D v17

Basic Wind Speed:	90 mph (3-Second Gust, Vasd) / 115 mph (3-Second Gust, Vult)
Basic Wind Speed w/ Ice:	40 mph (3-Second Gust) w/ 1" radial ice concurrent
Codes:	ANSI/TIA-222-G / 2015 IBC / 2018 Connecticut State Building Code
Structure Class:	II
Exposure Category:	B
Topographic Category:	1
Crest Height:	0 ft
Spectral Response:	Ss = 0.198, S_1 = 0.066
Site Class:	D - Stiff Soil
Live Loads:	Lm = 500 lbs, Lv = 250 lbs

Conclusion

Based on the analysis results, the antenna mount does not meet the requirements per the applicable codes listed above. The mount can support the equipment as described in this report after the below listed modifications are completed:

- Install Site Pro 1 VSK-MHD V-Style Reinforcement Kit at level of existing handrails

If you have any questions or require additional information, please contact American Tower via email at Engineering@americantower.com. Please include the American Tower site name, site number, and engineering number in the subject line for any questions.

Application Loading

Mount Centerline (ft)	Antenna Centerline (ft)	Qty	Antenna Model
132.0	132.0	3	Samsung Outdoor LAA 1W RRH –Clip-on Antenna
		4	Antel LPA-80080/6CF ___
		6	Commscope JAHH-65B-R3B
		2	Antel LPA-80063/6CF
		3	Commscope CBC78T-DS-43-2X
		2	RFS DB-T1-6Z-8AB-0Z
		3	Samsung B2/B66A RRH-BR049
		3	Samsung B5/B13 RRH-BR04C
		3	Samsung Outdoor CBRS 20W RRH

Structure Usages

Structural Component	Controlling Usage	Pass/Fail
Horizontals	91%	Pass
Mount Pipes	54%	Pass
Handrails	36%	Pass
Mod-Kits	17%	Pass

Mount Layout

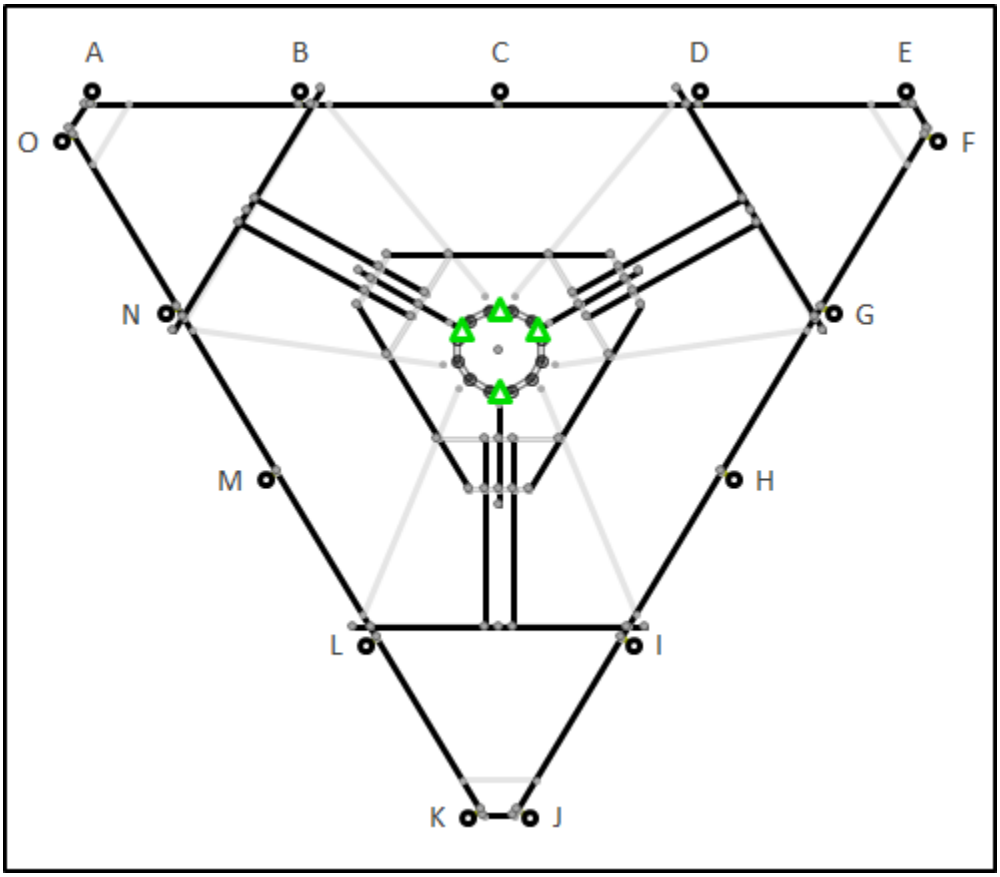

Equipment Layout

Mount Pipe A

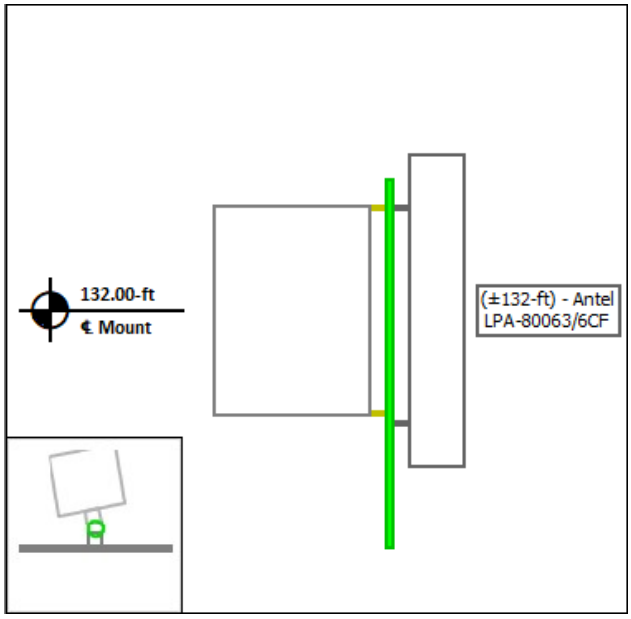

Mount Pipe B

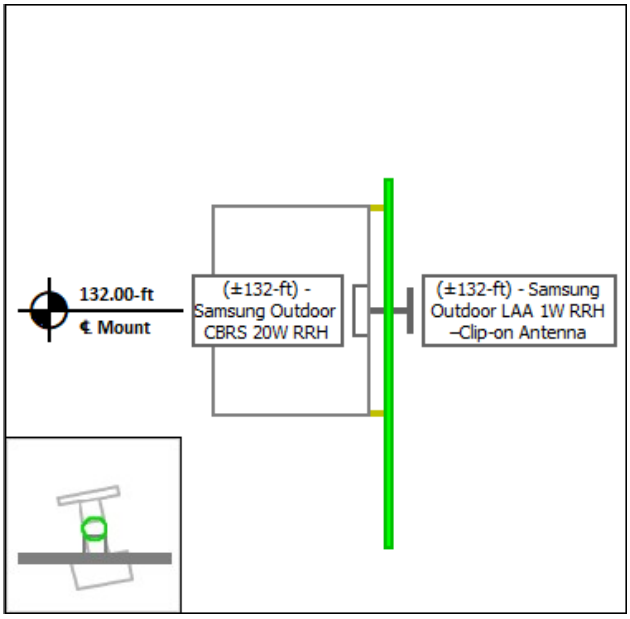

Mount Pipe C

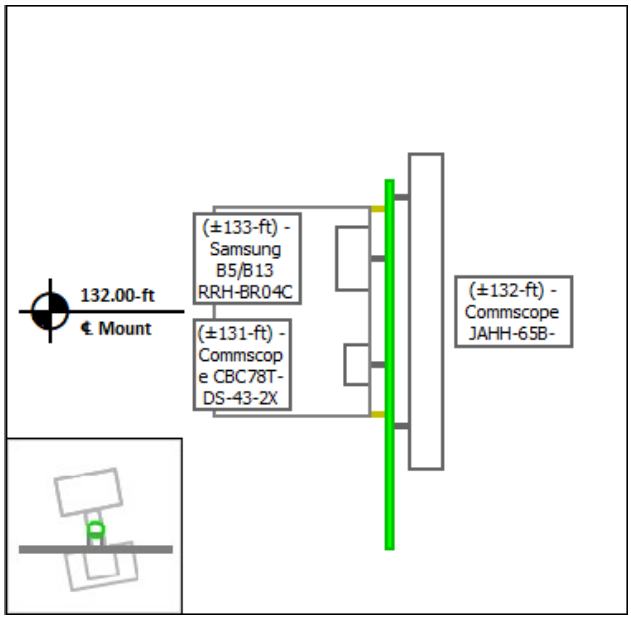

Mount Pipe D

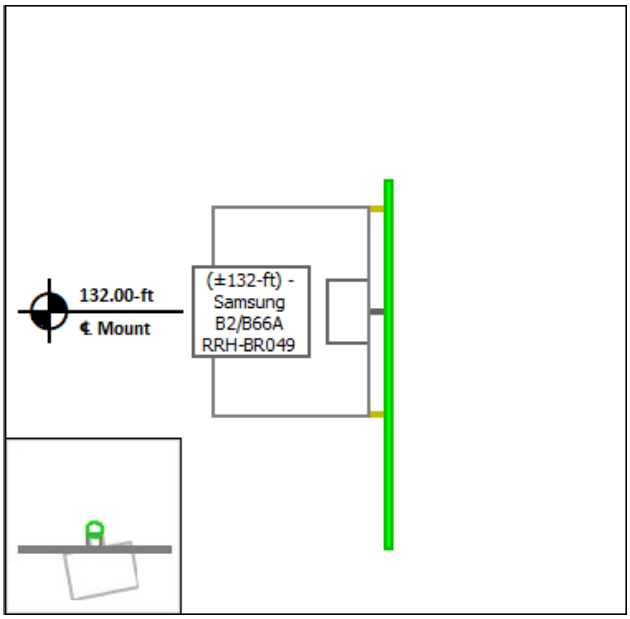

Equipment Layout Cont'd.

Mount Pipe E

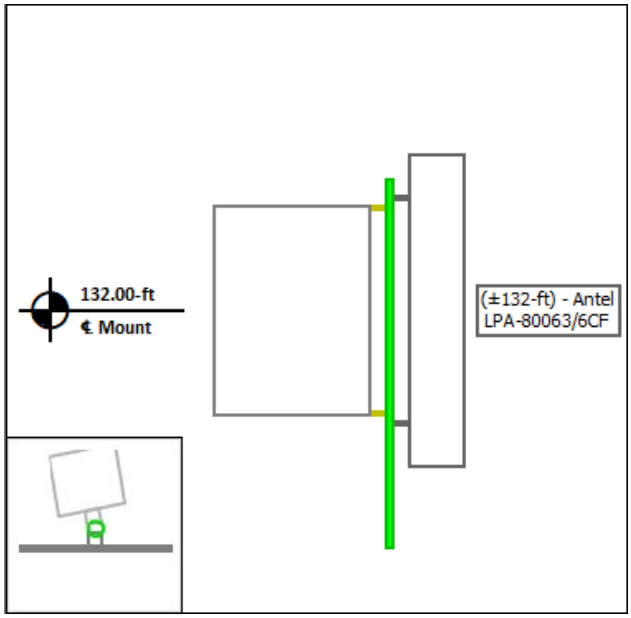

Mount Pipe F

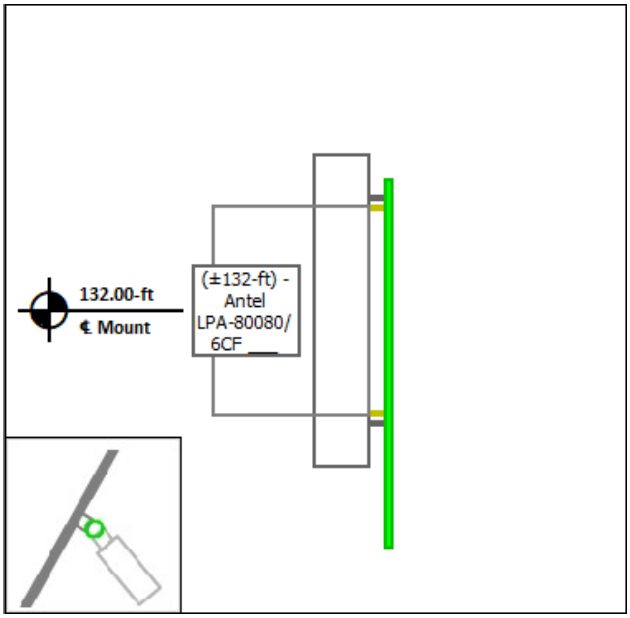

Mount Pipe G

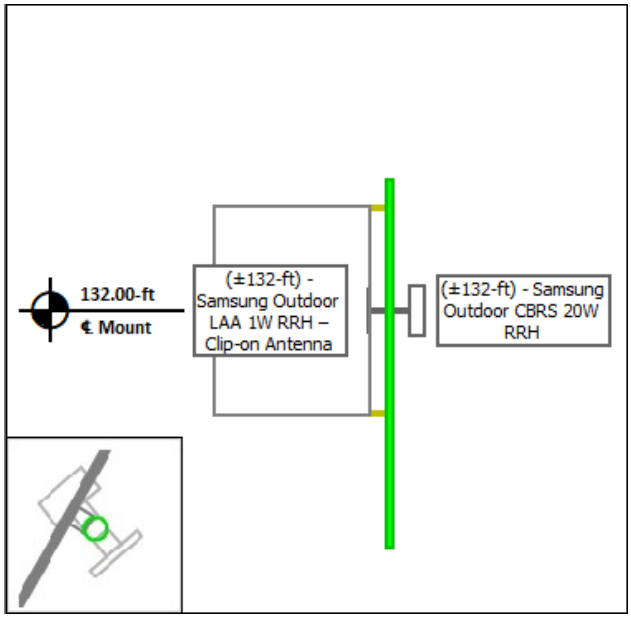

Mount Pipe H

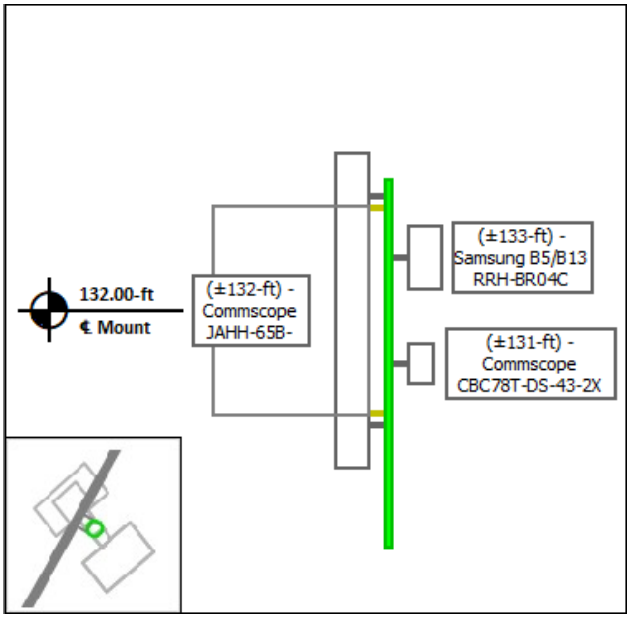

Equipment Layout Cont'd.

Mount Pipe I

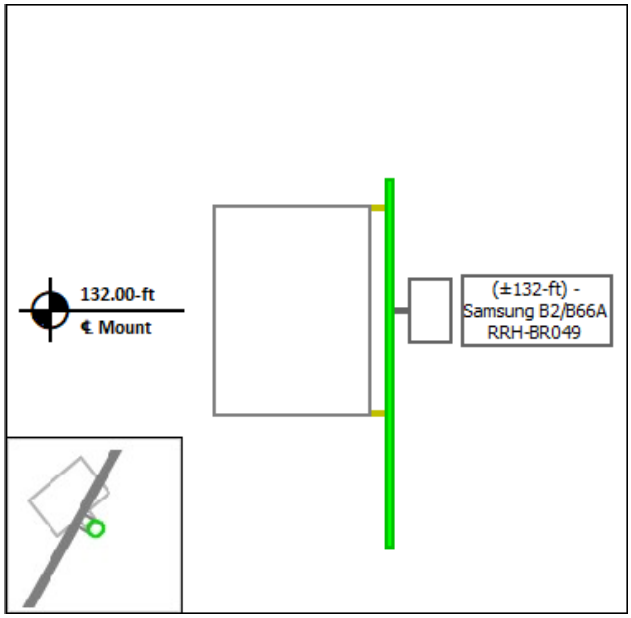

Mount Pipe J

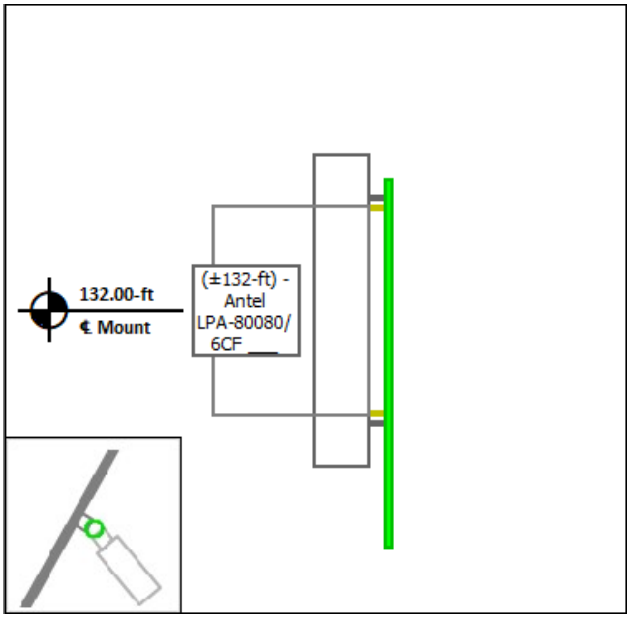

Mount Pipe K

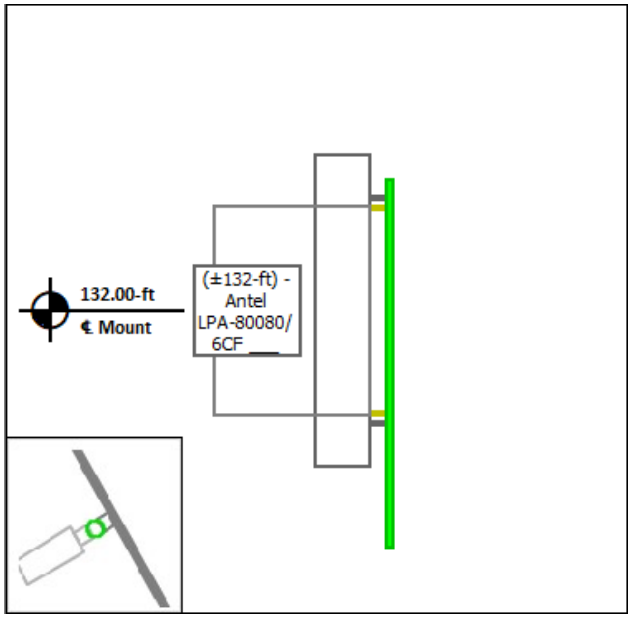

Mount Pipe L

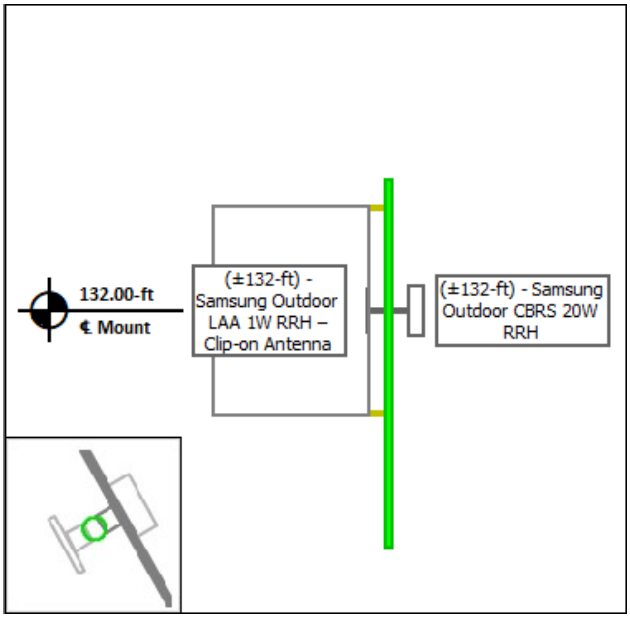

Equipment Layout Cont'd.

Mount Pipe M

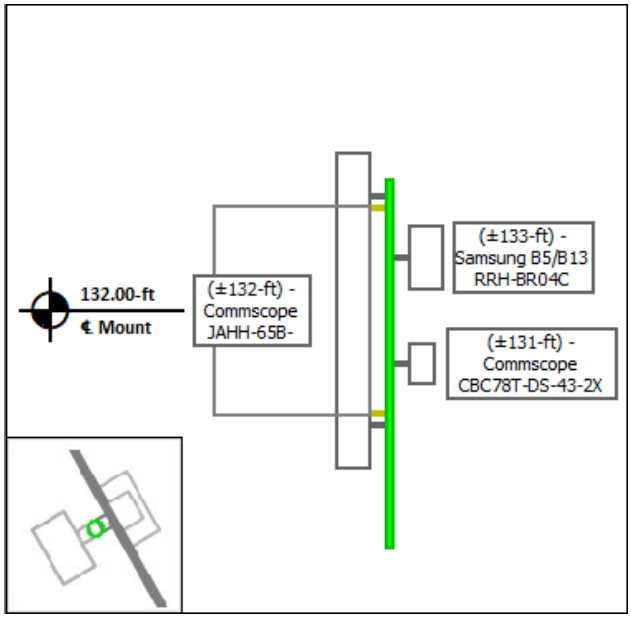

Mount Pipe N

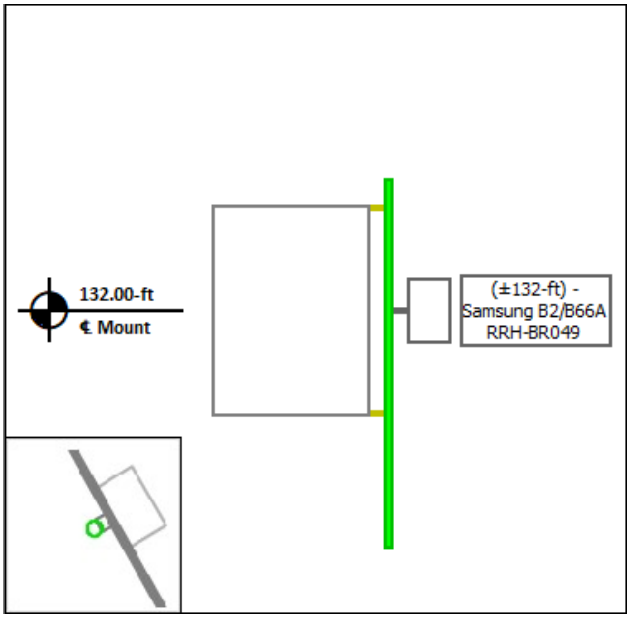

Mount Pipe O

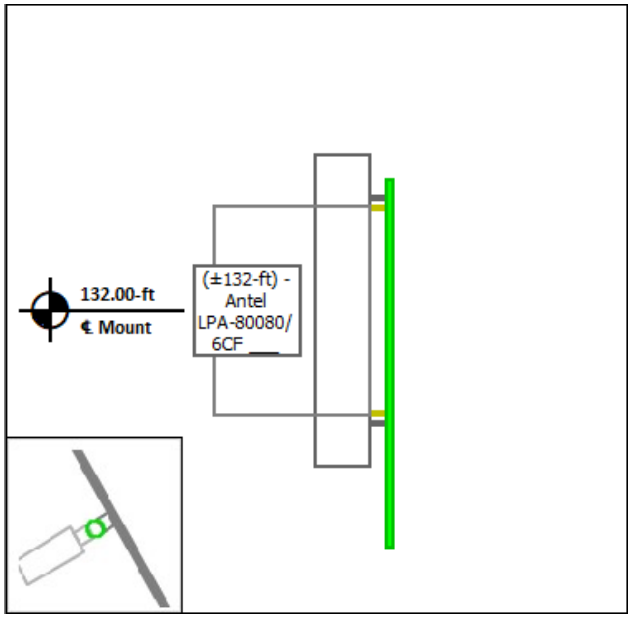

Standard Conditions

All engineering services performed by A.T. Engineering Service, PLLC are prepared on the basis that the information used is current and correct. This information may consist of, but is not limited to the following:

- Information supplied by the client regarding antenna, mounts and feed line loading
- Information from drawings, design and analysis documents, and field notes in the possession of A.T. Engineering Service, PLLC

It is the responsibility of the client to ensure that the information provided to A.T. Engineering Service, PLLC and used in the performance of our engineering services is correct and complete.

All assets of American Tower Corporation, its affiliates and subsidiaries (collectively "American Tower") are inspected at regular intervals. Based upon these inspections and in the absence of information to the contrary, American Tower assumes that all structures were constructed in accordance with the drawings and specifications.

All connections are to be verified for condition and tightness by the installation contractor preceding any changes to the appurtenance mounting system and/or equipment attached to it.

Unless explicitly agreed by both the client and A.T. Engineering Service, PLLC, all services will be performed in accordance with the current revision of ANSI/TIA-222.

All services are performed, results obtained, and recommendations made in accordance with generally accepted engineering principles and practices. A.T. Engineering Service, PLLC is not responsible for the conclusions, opinions and recommendations made by others based on the information supplied herein.

Site Number:	*302523*
Project Number:	*12995763_C8_01*
Carrier:	*Verizon Wireless*
Mount Elevation:	*132 ft*
Date:	1/17/2020

Mount Analysis Force Calculations

Wind & Ice Load Calculations			
Shielding Factor	K_z	1.07	
Topographic Factor	K_{zt}	1.00	
Rooftop Wind Speed-up Factor	K_s	1.00	
Shielding Factor	K_a	0.90	
Ground Elevation Factor	K_e	1.00	
Wind Direction Probability Factor	K_d	0.95	
Basic Wind Speed	V	90	mph
Velocity Pressure	q_z	21.1	psf
Height Escalation Factor	K_{iz}	1.15	
Thickness of Radial Glaze Ice	T_{iz}	2.30	in

Seismic Load Calculations			
Short Period DSRAP	S_{DS}	0.211	
1 Second DSRAP	S_{D1}	0.106	
Importance Factor	I	1.0	
Response Modification Coefficient	R	2.0	
Seismic Response Coefficient	C_S	0.106	
Amplification Factor	A	1.0	
Total Weight	W	2518.4	lbs
Total Shear Force	V_S	265.9	lbs
Horizontal Seismic Load	Eh	265.9	lbs
Vertical Seismic Load	Ev	106.4	lbs

Antenna Calculations

Equipment	Height	Width	Depth	Weight	EPA_N	EPA_T	EPA_{Ni}	EPA_{Ti}
Model #	in	in	in	lbs	sqft	sqft	sqft	sqft
Samsung Outdoor LAA 1W RRH –Clip-on Antenna	10.7	9.1	1.2	4.4	0.81	0.13	1.75	0.90
Antel LPA-80080/6CF ___	70.9	5.5	13.2	21.0	4.32	8.63	8.45	12.39
Commscope JAHH-65B-R3B	72.0	13.8	8.2	60.6	9.11	5.98	12.92	9.93
Antel LPA-80063/6CF	70.9	15.0	13.1	27.0	9.59	8.57	13.34	12.33
Commscope CBC78T-DS-43-2X	9.6	6.9	6.4	20.7	0.55	0.51	1.36	1.30
RFS DB-T1-6Z-8AB-0Z	24.0	24.0	10.0	44.0	N/A	N/A		
Samsung B2/B66A RRH-BR049	15.0	15.0	10.0	84.4	1.88	1.25	3.20	2.38
Samsung B5/B13 RRH-BR04C	15.0	15.0	8.1	70.3	1.88	1.01	3.20	2.07
Samsung Outdoor CBRS 20W RRH	12.1	8.5	4.1	18.6	0.86	0.42	1.82	1.23

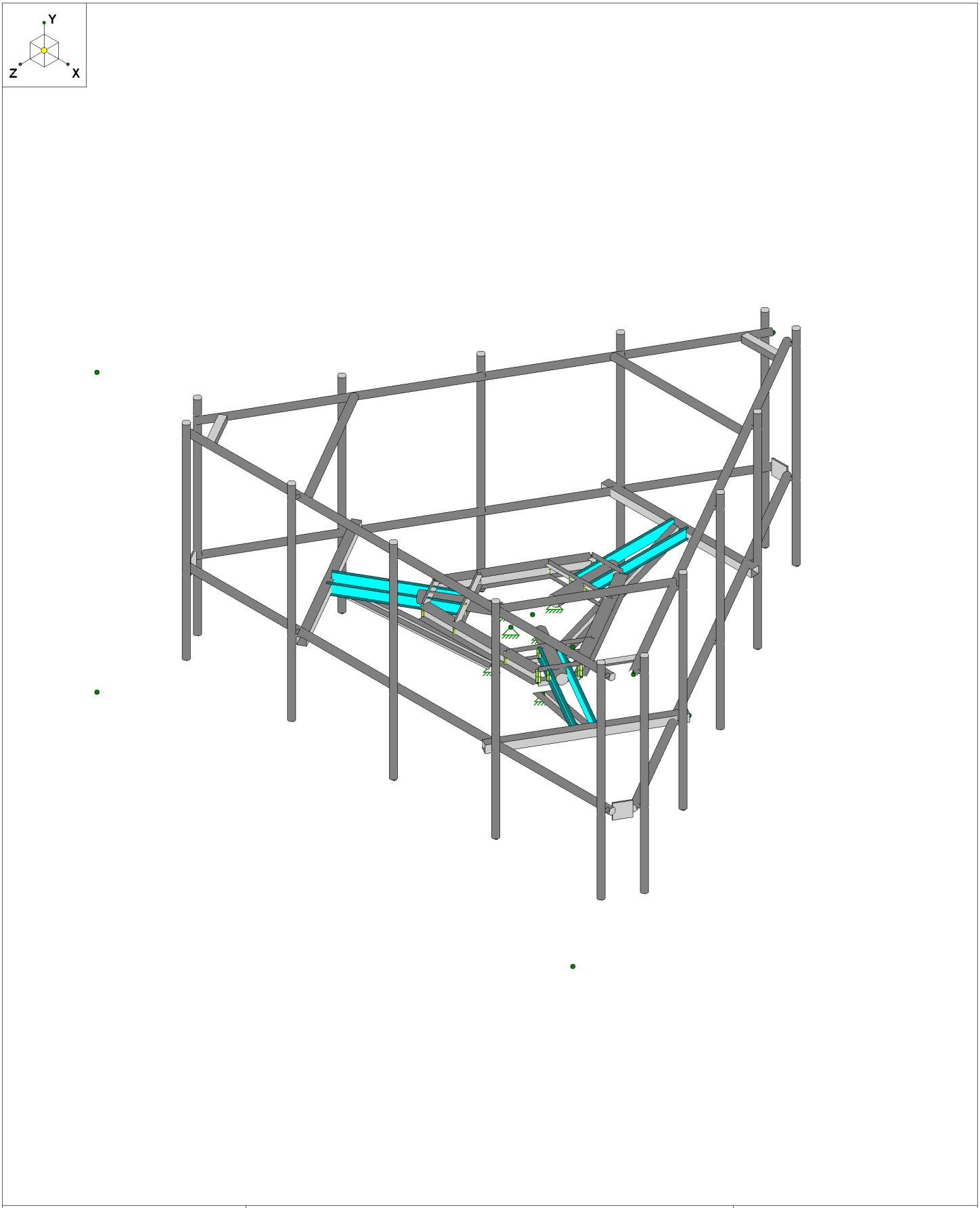

American Tower Corp.		SK - 1
Charles.Wally	302523, New Milford CT 2	Jan 17, 2020 at 1:31 PM
12995763_C8_01	3D Rendering	R3D. VERIZON WIRELESS @ 302...

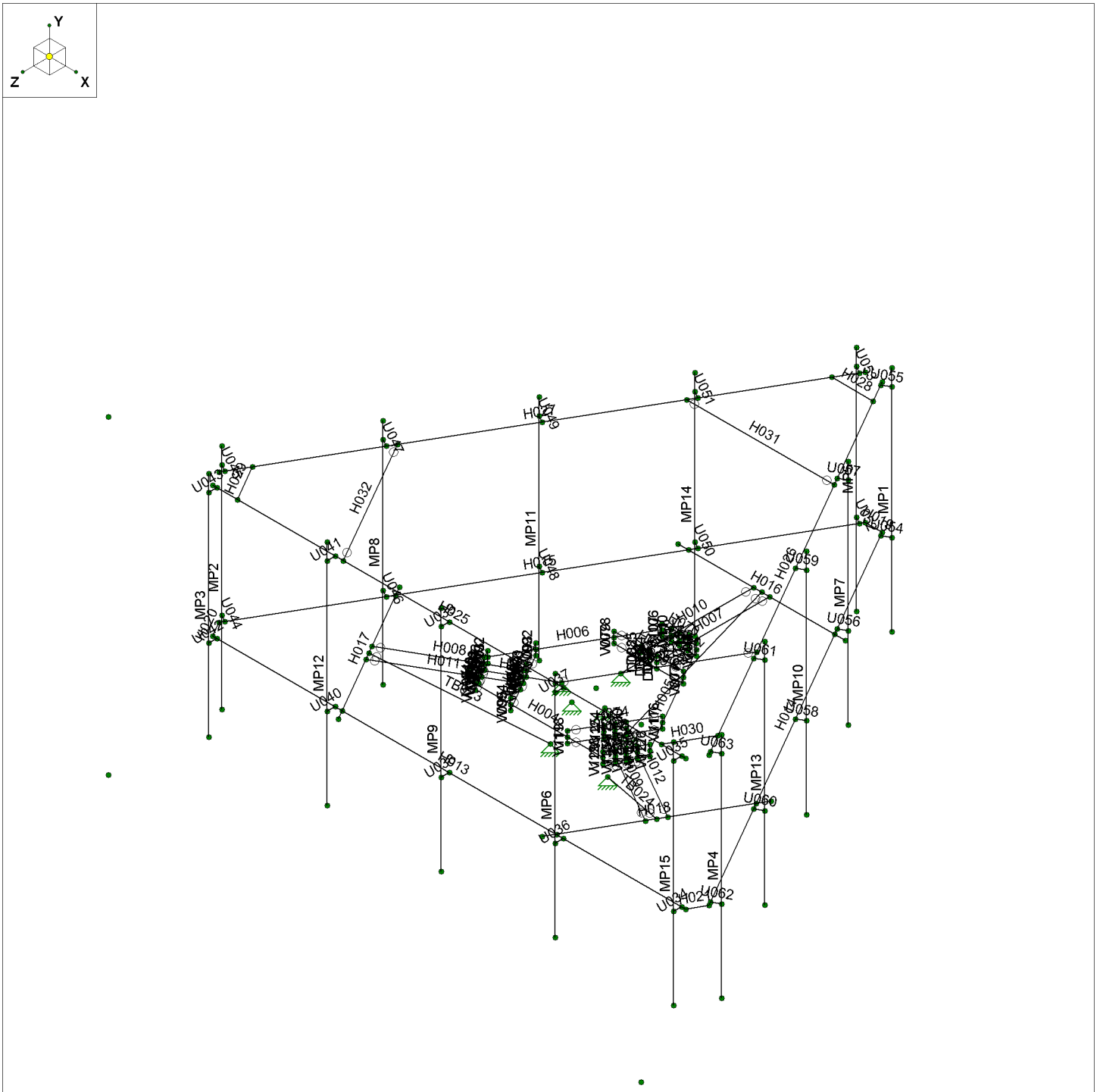

American Tower Corp.		SK - 2
Charles.Wally	302523, New Milford CT 2	Jan 17, 2020 at 1:33 PM
12995763_C8_01	Member Labels	R3D. VERIZON WIRELESS @ 302...

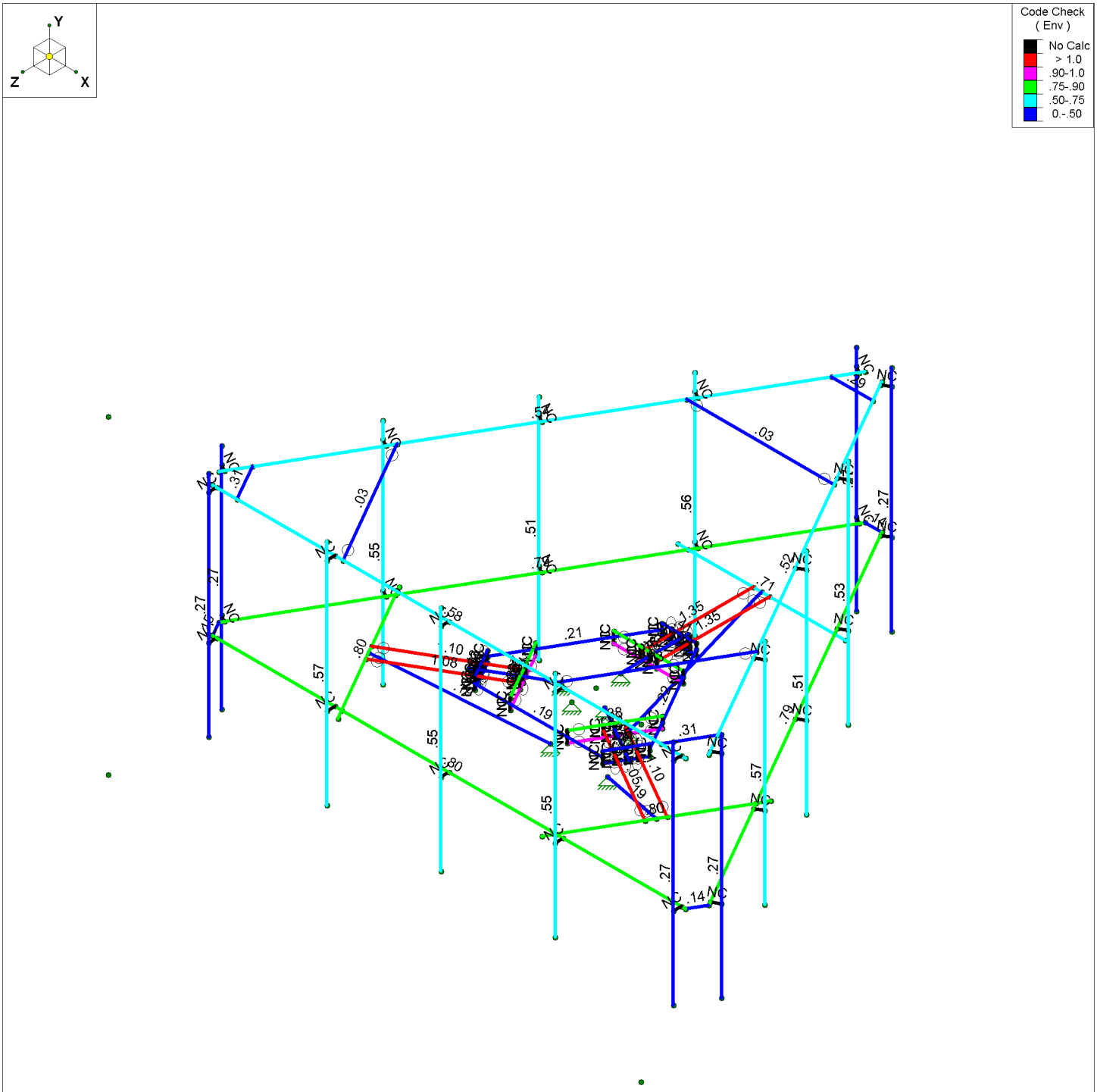

Member Code Checks Displayed (Enveloped)
Results for LC 1, 1.4D

American Tower Corp.		SK - 3
Charles.Wally	302523, New Milford CT 2	Jan 17, 2020 at 1:34 PM
12995763_C8_01	Unity Bending Checks	R3D. VERIZON WIRELESS @ 302...

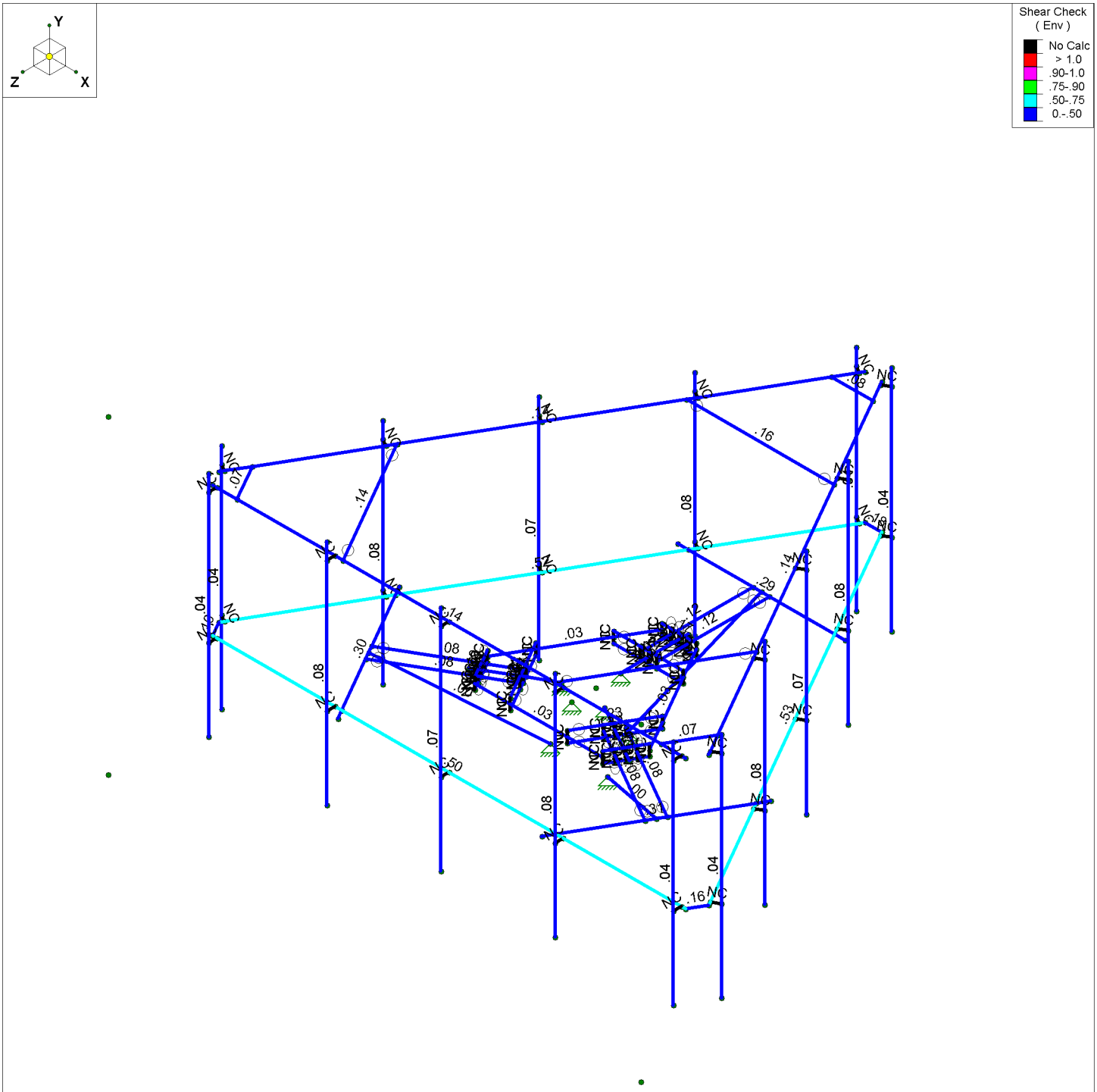

Member Shear Checks Displayed (Enveloped)
Results for LC 1, 1.4D

American Tower Corp.		SK - 4
Charles.Wally	302523, New Milford CT 2	Jan 17, 2020 at 1:34 PM
12995763_C8_01	Shear Checks	R3D. VERIZON WIRELESS @ 302...

Hot Rolled Steel Properties

	Label	E [psi]	G [psi]	Nu	Therm (/1E...	Density[lb/f...	Yield[psi]	Ry	Fu[psi]	Rt
1	A36	2.9e+7	1.115e+7	.3	.65	490	36000	1.5	58000	1.2
2	A572-50	2.9e+7	1.115e+7	.3	.65	490	50000	1.1	65000	1.1
3	A500 Gr. B [RND]	2.9e+7	1.115e+7	.3	.65	527	42000	1.4	58000	1.3
4	A500 Gr. B [SQR]	2.9e+7	1.115e+7	.3	.65	527	46000	1.4	58000	1.3
5	A1085	2.9e+7	1.115e+7	.3	.65	490	50000	1.1	65000	1.1
6	A53 Gr. B	2.9e+7	1.115e+7	.3	.65	490	35000	1.6	60000	1.2
7	A992	2.9e+7	1.115e+7	.3	.65	490	50000	1.1	65000	1.1
8	SAE J429 Gr. 2	2.9e+7	1.115e+7	.3	.65	490	57000	1.1	74000	1.1

Cold Formed Steel Properties

	Label	E [psi]	G [psi]	Nu	Therm (/1...	Density[lb/...	Yield[psi]	Fu[psi]
1	A653 SS Gr33	2.95e+7	1.135e+7	.3	.65	490	33000	45000
2	A36CF	2.95e+7	1.135e+7	.3	.65	490	36000	58000

Member Primary Data

	Label	I Joint	J Joint	K Joint	Rotate(...	Section/Shape	Type	Design List	Material	Design Rules
1	H001	N002	N008			PIPE 3.5X	Beam	None	A53 Gr. B	Typical
2	H002	N003	N009			PIPE 3.5X	Beam	None	A53 Gr. B	Typical
3	H003	N004	N010			PIPE 3.5X	Beam	None	A53 Gr. B	Typical
4	H004	N011	N012			W4X13	Beam	None	A36	Typical
5	H005	N013	N015			W4X13	Beam	None	A36	Typical
6	H006	N014	N016			W4X13	Beam	None	A36	Typical
7	H007	N030	N029			C4x1x1/4	Beam	None	A653 SS Gr33	Typical
8	H008	N033	N037			C4x1x1/4	Beam	None	A653 SS Gr33	Typical
9	H009	N034	N038			C4x1x1/4	Beam	None	A653 SS Gr33	Typical
10	H010	N032	N031		180	C4x1x1/4	Beam	None	A653 SS Gr33	Typical
11	H011	N035	N039		180	C4x1x1/4	Beam	None	A653 SS Gr33	Typical
12	H012	N036	N040		180	C4x1x1/4	Beam	None	A653 SS Gr33	Typical
13	H013	N047	N050			PIPE 2.0	Beam	None	A53 Gr. B	Typical
14	H014	N048	N051			PIPE 2.0	Beam	None	A53 Gr. B	Typical
15	H015	N049	N052			PIPE 2.0	Beam	None	A53 Gr. B	Typical
16	H016	N059	N060			HSS3X3X3	Beam	None	A500 Gr. B [...	Typical
17	H017	N063	N061			HSS3X3X3	Beam	None	A500 Gr. B [...	Typical
18	H018	N064	N062			HSS3X3X3	Beam	None	A500 Gr. B [...	Typical
19	H019	N052	N048			PL6X0.5	Beam	None	A36	Typical
20	H020	N050	N049			PL6X0.5	Beam	None	A36	Typical
21	H021	N051	N047			PL6X0.5	Beam	None	A36	Typical
22	TB022	N065	N005			LL2.5x2.5x4x6	Column	None	A36	Typical
23	TB023	N066	N006			LL2.5x2.5x4x6	Column	None	A36	Typical
24	TB024	N067	N007			LL2.5x2.5x4x6	Column	None	A36	Typical
25	H025	N068	N071			PIPE 2.0	Beam	None	A53 Gr. B	Typical
26	H026	N069	N072			PIPE 2.0	Beam	None	A53 Gr. B	Typical
27	H027	N070	N073			PIPE 2.0	Beam	None	A53 Gr. B	Typical
28	H028	N075	N079		90	L2.5x2.5x4	Beam	None	A36	Typical

Member Primary Data (Continued)

	Label	I Joint	J Joint	K Joint	Rotate(...	Section/Shape	Type	Design List	Material	Design Rules
29	H029	N076	N077		90	L2.5x2.5x4	Beam	None	A36	Typical
30	H030	N074	N078		90	L2.5x2.5x4	Beam	None	A36	Typical
31	H031	N081	N085			PIPE_2.0	Beam	None	A53 Gr. B	Typical
32	H032	N082	N083			PIPE_2.0	Beam	None	A53 Gr. B	Typical
33	H033	N080	N084			PIPE_2.0	Beam	None	A53 Gr. B	Typical
34	U034	N100	N101			(2) 1/2 U-Bolts	Beam	None	A36	Typical
35	U035	N102	N103			(2) 1/2 U-Bolts	Beam	None	A36	Typical
36	U036	N091	N104			(2) 1/2 U-Bolts	Beam	None	A36	Typical
37	U037	N105	N106			(2) 1/2 U-Bolts	Beam	None	A36	Typical
38	U038	N094	N107			(2) 1/2 U-Bolts	Beam	None	A36	Typical
39	U039	N108	N109			(2) 1/2 U-Bolts	Beam	None	A36	Typical
40	U040	N097	N110			(2) 1/2 U-Bolts	Beam	None	A36	Typical
41	U041	N111	N112			(2) 1/2 U-Bolts	Beam	None	A36	Typical
42	U042	N088	N113			(2) 1/2 U-Bolts	Beam	None	A36	Typical
43	U043	N114	N115			(2) 1/2 U-Bolts	Beam	None	A36	Typical
44	U044	N087	N116			(2) 1/2 U-Bolts	Beam	None	A36	Typical
45	U045	N117	N118			(2) 1/2 U-Bolts	Beam	None	A36	Typical
46	U046	N093	N119			(2) 1/2 U-Bolts	Beam	None	A36	Typical
47	U047	N120	N121			(2) 1/2 U-Bolts	Beam	None	A36	Typical
48	U048	N096	N122			(2) 1/2 U-Bolts	Beam	None	A36	Typical
49	U049	N123	N124			(2) 1/2 U-Bolts	Beam	None	A36	Typical
50	U050	N099	N125			(2) 1/2 U-Bolts	Beam	None	A36	Typical
51	U051	N126	N127			(2) 1/2 U-Bolts	Beam	None	A36	Typical
52	U052	N090	N128			(2) 1/2 U-Bolts	Beam	None	A36	Typical
53	U053	N129	N130			(2) 1/2 U-Bolts	Beam	None	A36	Typical
54	U054	N086	N131			(2) 1/2 U-Bolts	Beam	None	A36	Typical
55	U055	N132	N133			(2) 1/2 U-Bolts	Beam	None	A36	Typical
56	U056	N092	N134			(2) 1/2 U-Bolts	Beam	None	A36	Typical
57	U057	N135	N136			(2) 1/2 U-Bolts	Beam	None	A36	Typical
58	U058	N095	N137			(2) 1/2 U-Bolts	Beam	None	A36	Typical
59	U059	N138	N139			(2) 1/2 U-Bolts	Beam	None	A36	Typical
60	U060	N098	N140			(2) 1/2 U-Bolts	Beam	None	A36	Typical
61	U061	N141	N142			(2) 1/2 U-Bolts	Beam	None	A36	Typical
62	U062	N089	N143			(2) 1/2 U-Bolts	Beam	None	A36	Typical
63	U063	N144	N145			(2) 1/2 U-Bolts	Beam	None	A36	Typical
64	H064	N148	N151		180	L 1.75x1.75x4	Beam	None	A36	Typical
65	H065	N149	N147		180	L 1.75x1.75x4	Beam	None	A36	Typical
66	H066	N146	N150		180	L 1.75x1.75x4	Beam	None	A36	Typical
67	H067	N154	N155		180	L 1.5x1.5x4	Beam	None	A36	Typical
68	H068	N152	N156		180	L 1.5x1.5x4	Beam	None	A36	Typical
69	H069	N153	N157		180	L 1.5x1.5x4	Beam	None	A36	Typical
70	H070	N160	N163		270	L 1.75x1.75x4	Beam	None	A36	Typical
71	H071	N161	N159		270	L 1.75x1.75x4	Beam	None	A36	Typical
72	H072	N158	N162		270	L 1.75x1.75x4	Beam	None	A36	Typical
73	H073	N166	N167		270	L 1.5x1.5x4	Beam	None	A36	Typical
74	H074	N164	N168		270	L 1.5x1.5x4	Beam	None	A36	Typical
75	H075	N165	N169		270	L 1.5x1.5x4	Beam	None	A36	Typical
76	V076	N165	N018			RIGID	None	None	RIGID	Typical
77	V077	N153	N018			RIGID	None	None	RIGID	Typical
78	V078	N169	N022			RIGID	None	None	RIGID	Typical
79	V079	N157	N022			RIGID	None	None	RIGID	Typical
80	D080	N030	N170			RIGID	None	None	RIGID	Typical

Member Primary Data (Continued)

	Label	I Joint	J Joint	K Joint	Rotate(...	Section/Shape	Type	Design List	Material	Design Rules
81	D081	N026	N171			RIGID	None	None	RIGID	Typical
82	D082	N032	N172			RIGID	None	None	RIGID	Typical
83	D083	N030	N173			RIGID	None	None	RIGID	Typical
84	D084	N026	N174			RIGID	None	None	RIGID	Typical
85	D085	N032	N175			RIGID	None	None	RIGID	Typical
86	V086	N177	N033			RIGID	None	None	RIGID	Typical
87	V087	N178	N027			RIGID	None	None	RIGID	Typical
88	V088	N179	N035			RIGID	None	None	RIGID	Typical
89	V089	N180	N033			RIGID	None	None	RIGID	Typical
90	V090	N181	N027			RIGID	None	None	RIGID	Typical
91	V091	N182	N035			RIGID	None	None	RIGID	Typical
92	V092	N166	N019			RIGID	None	None	RIGID	Typical
93	V093	N154	N019			RIGID	None	None	RIGID	Typical
94	V094	N167	N020			RIGID	None	None	RIGID	Typical
95	V095	N155	N020			RIGID	None	None	RIGID	Typical
96	V096	N183	N044			RIGID	None	None	RIGID	Typical
97	V097	N184	N044			RIGID	None	None	RIGID	Typical
98	V098	N185	N024			RIGID	None	None	RIGID	Typical
99	V099	N186	N024			RIGID	None	None	RIGID	Typical
100	V100	N187	N045			RIGID	None	None	RIGID	Typical
101	V101	N188	N045			RIGID	None	None	RIGID	Typical
102	V102	N161	N014			RIGID	None	None	RIGID	Typical
103	V103	N149	N014			RIGID	None	None	RIGID	Typical
104	V104	N159	N012			RIGID	None	None	RIGID	Typical
105	V105	N147	N012			RIGID	None	None	RIGID	Typical
106	V106	N163	N016			RIGID	None	None	RIGID	Typical
107	V107	N151	N016			RIGID	None	None	RIGID	Typical
108	V108	N160	N013			RIGID	None	None	RIGID	Typical
109	V109	N148	N013			RIGID	None	None	RIGID	Typical
110	V110	N189	N041			RIGID	None	None	RIGID	Typical
111	V111	N190	N041			RIGID	None	None	RIGID	Typical
112	D112	N191	N023			RIGID	None	None	RIGID	Typical
113	D113	N192	N023			RIGID	None	None	RIGID	Typical
114	V114	N193	N046			RIGID	None	None	RIGID	Typical
115	V115	N194	N046			RIGID	None	None	RIGID	Typical
116	V116	N168	N021			RIGID	None	None	RIGID	Typical
117	V117	N156	N021			RIGID	None	None	RIGID	Typical
118	V118	N164	N017			RIGID	None	None	RIGID	Typical
119	V119	N152	N017			RIGID	None	None	RIGID	Typical
120	V120	N195	N036			RIGID	None	None	RIGID	Typical
121	V121	N196	N036			RIGID	None	None	RIGID	Typical
122	V122	N197	N028			RIGID	None	None	RIGID	Typical
123	V123	N198	N028			RIGID	None	None	RIGID	Typical
124	V124	N199	N034			RIGID	None	None	RIGID	Typical
125	V125	N200	N034			RIGID	None	None	RIGID	Typical
126	V126	N162	N015			RIGID	None	None	RIGID	Typical
127	V127	N150	N015			RIGID	None	None	RIGID	Typical
128	V128	N158	N011			RIGID	None	None	RIGID	Typical
129	V129	N146	N011			RIGID	None	None	RIGID	Typical
130	V130	N201	N042			RIGID	None	None	RIGID	Typical
131	V131	N202	N042			RIGID	None	None	RIGID	Typical
132	V132	N203	N025			RIGID	None	None	RIGID	Typical

Member Primary Data (Continued)

	Label	I Joint	J Joint	K Joint	Rotate(...	Section/Shape	Type	Design List	Material	Design Rules
133	V133	N204	N025			RIGID	None	None	RIGID	Typical
134	V134	N205	N043			RIGID	None	None	RIGID	Typical
135	V135	N206	N043			RIGID	None	None	RIGID	Typical
136	MP1	MP1t	MP1b			PIPE_2.0	Column	None	A53 Gr. B	Typical
137	MP2	MP2t	MP2b			PIPE_2.0	Column	None	A53 Gr. B	Typical
138	MP3	MP3t	MP3b			PIPE_2.0	Column	None	A53 Gr. B	Typical
139	MP4	MP4t	MP4b			PIPE_2.0	Column	None	A53 Gr. B	Typical
140	MP5	MP5t	MP5b			PIPE_2.0	Column	None	A53 Gr. B	Typical
141	MP6	MP6t	MP6b			PIPE_2.0	Column	None	A53 Gr. B	Typical
142	MP7	MP7t	MP7b			PIPE_2.0	Column	None	A53 Gr. B	Typical
143	MP8	MP8t	MP8b			PIPE_2.0	Column	None	A53 Gr. B	Typical
144	MP9	MP9t	MP9b			PIPE_2.0	Column	None	A53 Gr. B	Typical
145	MP10	MP10t	MP10b			PIPE_2.0	Column	None	A53 Gr. B	Typical
146	MP11	MP11t	MP11b			PIPE_2.0	Column	None	A53 Gr. B	Typical
147	MP12	MP12t	MP12b			PIPE_2.0	Column	None	A53 Gr. B	Typical
148	MP13	MP13t	MP13b			PIPE_2.0	Column	None	A53 Gr. B	Typical
149	MP14	MP14t	MP14b			PIPE_2.0	Column	None	A53 Gr. B	Typical
150	MP15	MP15t	MP15b			PIPE_2.0	Column	None	A53 Gr. B	Typical

Hot Rolled Steel Design Parameters

	Label	Shape	Length[in]	Lbyy[in]	Lbzz[in]	Lcomp top[in]	Lcomp bot[in]	L-torqu...	Kyy	Kzz	Cb	Function
1	H001	PIPE_3.5X	25						1	1		Lateral
2	H002	PIPE_3.5X	25						1	1		Lateral
3	H003	PIPE_3.5X	25						1	1		Lateral
4	H004	W4X13	47						.65	.65		Lateral
5	H005	W4X13	47						.65	.65		Lateral
6	H006	W4X13	47						.65	.65		Lateral
7	H013	PIPE_2.0	174						.65	.65		Lateral
8	H014	PIPE_2.0	174						.65	.65		Lateral
9	H015	PIPE_2.0	174						.65	.65		Lateral
10	H016	HSS3X3X3	61.655						.65	.65		Lateral
11	H017	HSS3X3X3	61.655						.65	.65		Lateral
12	H018	HSS3X3X3	61.655						.65	.65		Lateral
13	H019	PL6X0.5	6.262						.65	.65		Lateral
14	H020	PL6X0.5	6.262						.65	.65		Lateral
15	H021	PL6X0.5	6.262						.65	.65		Lateral
16	TB022	LL2.5x2.5x4...	52.873						1	1		Lateral
17	TB023	LL2.5x2.5x4...	52.873						1	1		Lateral
18	TB024	LL2.5x2.5x4...	52.873						1	1		Lateral
19	H025	PIPE_2.0	174						.65	.65		Lateral
20	H026	PIPE_2.0	174						.65	.65		Lateral
21	H027	PIPE_2.0	174						.65	.65		Lateral
22	H028	L2.5x2.5x4	15.262						.65	.65		Lateral
23	H029	L2.5x2.5x4	15.262						.65	.65		Lateral
24	H030	L2.5x2.5x4	15.262						.65	.65		Lateral
25	H031	PIPE_2.0	54.262						1	1		Lateral
26	H032	PIPE_2.0	54.262						1	1		Lateral
27	H033	PIPE_2.0	54.262						1	1		Lateral
28	U034	(2) 1/2 U-B...	3						.5	.5		Lateral
29	U035	(2) 1/2 U-B...	3						.5	.5		Lateral

Hot Rolled Steel Design Parameters (Continued)

	Label	Shape	Length[in]	Lbyy[in]	Lbzz[in]	Lcomp top[in]	Lcomp bot[in]	L-torqu...	Kyy	Kzz	Cb	Function
30	U036	(2) 1/2 U-B...	3						.5	.5		Lateral
31	U037	(2) 1/2 U-B...	3						.5	.5		Lateral
32	U038	(2) 1/2 U-B...	3						.5	.5		Lateral
33	U039	(2) 1/2 U-B...	3						.5	.5		Lateral
34	U040	(2) 1/2 U-B...	3						.5	.5		Lateral
35	U041	(2) 1/2 U-B...	3						.5	.5		Lateral
36	U042	(2) 1/2 U-B...	3						.5	.5		Lateral
37	U043	(2) 1/2 U-B...	3						.5	.5		Lateral
38	U044	(2) 1/2 U-B...	3						.5	.5		Lateral
39	U045	(2) 1/2 U-B...	3						.5	.5		Lateral
40	U046	(2) 1/2 U-B...	3						.5	.5		Lateral
41	U047	(2) 1/2 U-B...	3						.5	.5		Lateral
42	U048	(2) 1/2 U-B...	3						.5	.5		Lateral
43	U049	(2) 1/2 U-B...	3						.5	.5		Lateral
44	U050	(2) 1/2 U-B...	3						.5	.5		Lateral
45	U051	(2) 1/2 U-B...	3						.5	.5		Lateral
46	U052	(2) 1/2 U-B...	3						.5	.5		Lateral
47	U053	(2) 1/2 U-B...	3						.5	.5		Lateral
48	U054	(2) 1/2 U-B...	3						.5	.5		Lateral
49	U055	(2) 1/2 U-B...	3						.5	.5		Lateral
50	U056	(2) 1/2 U-B...	3						.5	.5		Lateral
51	U057	(2) 1/2 U-B...	3						.5	.5		Lateral
52	U058	(2) 1/2 U-B...	3						.5	.5		Lateral
53	U059	(2) 1/2 U-B...	3						.5	.5		Lateral
54	U060	(2) 1/2 U-B...	3						.5	.5		Lateral
55	U061	(2) 1/2 U-B...	3						.5	.5		Lateral
56	U062	(2) 1/2 U-B...	3						.5	.5		Lateral
57	U063	(2) 1/2 U-B...	3						.5	.5		Lateral
58	H064	L 1.75x1.75...	12.605						1	1		Lateral
59	H065	L 1.75x1.75...	12.605						1	1		Lateral
60	H066	L 1.75x1.75...	12.605						1	1		Lateral
61	H067	L 1.5x1.5x4	25.605						1	1		Lateral
62	H068	L 1.5x1.5x4	25.605						1	1		Lateral
63	H069	L 1.5x1.5x4	25.605						1	1		Lateral
64	H070	L 1.75x1.75...	12.605						1	1		Lateral
65	H071	L 1.75x1.75...	12.605						1	1		Lateral
66	H072	L 1.75x1.75...	12.605						1	1		Lateral
67	H073	L 1.5x1.5x4	25.605						1	1		Lateral
68	H074	L 1.5x1.5x4	25.605						1	1		Lateral
69	H075	L 1.5x1.5x4	25.605						1	1		Lateral
70	MP1	PIPE_2.0	84						2.1	2.1		Lateral
71	MP2	PIPE_2.0	84						2.1	2.1		Lateral
72	MP3	PIPE_2.0	84						2.1	2.1		Lateral
73	MP4	PIPE_2.0	84						2.1	2.1		Lateral
74	MP5	PIPE_2.0	84						2.1	2.1		Lateral
75	MP6	PIPE_2.0	84						2.1	2.1		Lateral
76	MP7	PIPE_2.0	84						2.1	2.1		Lateral
77	MP8	PIPE_2.0	84						2.1	2.1		Lateral
78	MP9	PIPE_2.0	84						2.1	2.1		Lateral
79	MP10	PIPE_2.0	84						2.1	2.1		Lateral
80	MP11	PIPE_2.0	84						2.1	2.1		Lateral
81	MP12	PIPE_2.0	84						2.1	2.1		Lateral

Hot Rolled Steel Design Parameters (Continued)

	Label	Shape	Length[in]	Lbyy[in]	Lbzz[in]	Lcomp top[in]	Lcomp bot[in]	L-torqu...	Kyy	Kzz	Cb	Function
82	MP13	PIPE_2.0	84						2.1	2.1		Lateral
83	MP14	PIPE_2.0	84						2.1	2.1		Lateral
84	MP15	PIPE_2.0	84						2.1	2.1		Lateral

Cold Formed Steel Design Parameters

	Label	Shape	Length...	Lbyy[in]	Lbzz[in]	Lcomp to...	Lcomp bo...	L-torque[in]	Kyy	Kzz	Cb	R	a[in]	Funct...
1	H007	C4x1x1/4	41.584						1	1				Lateral
2	H008	C4x1x1/4	41.584						1	1				Lateral
3	H009	C4x1x1/4	41.584						1	1				Lateral
4	H010	C4x1x1/4	41.584						1	1				Lateral
5	H011	C4x1x1/4	41.584						1	1				Lateral
6	H012	C4x1x1/4	41.584						1	1				Lateral

Basic Load Cases

	BLC Description	Category	X Gravity	Y Gravity	Z Gravity	Joint	Point	Distribu...	Area(M...	Surface...
1	Dead	DL		-1			39			
2	Ice	IL					39	120		
3	Wind -Z	WLZ					39		1	
4	Wind -X	WLX					39		1	
5	Wind -Z (Ice)	WL-Z					39	120	1	
6	Wind -X (Ice)	WL-X					39	120	1	
7	Wind -Z (Working)	WLZP1					39		1	
8	Wind -X (Working)	WLXP1					39		1	
9	Ev -Y (Seismic)	ELY						120		
10	Eh -Z (Seismic)	ELZ						120		
11	Eh -X (Seismic)	ELX						120		
12	Lm (1)	LL				1				
13	Lm (2)	LL				1				
14	Lm (3)	LL				1				
15	Lm (4)	LL				1				
16	Lm (5)	LL				1				
17	Lm (6)	LL				1				
18	Lm (7)	LL				1				
19	Lm (8)	LL				1				
20	Lm (9)	LL				1				
21	Lm (10)	LL				1				
22	Lm (11)	LL				1				
23	Lm (12)	LL				1				
24	Lm (13)	LL				1				
25	Lm (14)	LL				1				
26	Lm (15)	LL				1				
27	BLC 3 Transient Area Loads	None						137		
28	BLC 4 Transient Area Loads	None						139		
29	BLC 5 Transient Area Loads	None						137		
30	BLC 6 Transient Area Loads	None						139		
31	BLC 7 Transient Area Loads	None						137		
32	BLC 8 Transient Area Loads	None						139		

Load Combinations

	Description	Solve	PDel..	SRSS	B...	Fact...	BLC	Fa...	B...	Fa...	B...	Fa...	B...	Fa...	B...	Fa...	B...	Fa...	B...	Fa...	B...	Fa...	B...	Fa...
1	1.4D	Yes	Y		DL	1.4																		
2	1.2D + 1.6Wo [0Á]	Yes	Y		DL	1.2	WLX	.001	W...	1.6														
3	1.2D + 1.6Wo [30Á]	Yes	Y		DL	1.2	WLX	.8	W...	1.3...														
4	1.2D + 1.6Wo [60Á]	Yes	Y		DL	1.2	WLX	1.3...	W...	.8														
5	1.2D + 1.6Wo [90Á]	Yes	Y		DL	1.2	WLX	1.6	W...	.001														
6	1.2D + 1.6Wo [120Á]	Yes	Y		DL	1.2	WLX	1.3...	W...	-.8														
7	1.2D + 1.6Wo [150Á]	Yes	Y		DL	1.2	WLX	.8	W...	-1....														
8	1.2D + 1.6Wo [180Á]	Yes	Y		DL	1.2	WLX	.001	W...	-1.6														
9	1.2D + 1.6Wo [210Á]	Yes	Y		DL	1.2	WLX	-.8	W...	-1....														
10	1.2D + 1.6Wo [240Á]	Yes	Y		DL	1.2	WLX	-1....	W...	-.8														
11	1.2D + 1.6Wo [270Á]	Yes	Y		DL	1.2	WLX	-1.6	W...	.001														
12	1.2D + 1.6Wo [300Á]	Yes	Y		DL	1.2	WLX	-1....	W...	.8														
13	1.2D + 1.6Wo [330Á]	Yes	Y		DL	1.2	WLX	-.8	W...	1.3...														
14	0.9D + 1.6Wo [0Á]	Yes	Y		DL	.9	WLX	.001	W...	1.6														
15	0.9D + 1.6Wo [30Á]	Yes	Y		DL	.9	WLX	.8	W...	1.3...														
16	0.9D + 1.6Wo [60Á]	Yes	Y		DL	.9	WLX	1.3...	W...	.8														
17	0.9D + 1.6Wo [90Á]	Yes	Y		DL	.9	WLX	1.6	W...	.001														
18	0.9D + 1.6Wo [120Á]	Yes	Y		DL	.9	WLX	1.3...	W...	-.8														
19	0.9D + 1.6Wo [150Á]	Yes	Y		DL	.9	WLX	.8	W...	-1....														
20	0.9D + 1.6Wo [180Á]	Yes	Y		DL	.9	WLX	.001	W...	-1.6														
21	0.9D + 1.6Wo [210Á]	Yes	Y		DL	.9	WLX	-.8	W...	-1....														
22	0.9D + 1.6Wo [240Á]	Yes	Y		DL	.9	WLX	-1....	W...	-.8														
23	0.9D + 1.6Wo [270Á]	Yes	Y		DL	.9	WLX	-1.6	W...	.001														
24	0.9D + 1.6Wo [300Á]	Yes	Y		DL	.9	WLX	-1....	W...	.8														
25	0.9D + 1.6Wo [330Á]	Yes	Y		DL	.9	WLX	-.8	W...	1.3...														
26	1.2D + 1.0Di + 1.0Wi [...	Yes	Y		DL	1.2	IL	1	W...	.001	W...	1												
27	1.2D + 1.0Di + 1.0Wi [...	Yes	Y		DL	1.2	IL	1	W...	.5	W...	.866												
28	1.2D + 1.0Di + 1.0Wi [...	Yes	Y		DL	1.2	IL	1	W...	.866	W...	.5												
29	1.2D + 1.0Di + 1.0Wi [...	Yes	Y		DL	1.2	IL	1	W...	1	W...	.001												
30	1.2D + 1.0Di + 1.0Wi [...	Yes	Y		DL	1.2	IL	1	W...	.866	W...	-.5												
31	1.2D + 1.0Di + 1.0Wi [...	Yes	Y		DL	1.2	IL	1	W...	.5	W...	-.8...												
32	1.2D + 1.0Di + 1.0Wi [...	Yes	Y		DL	1.2	IL	1	W...	.001	W...	-1												
33	1.2D + 1.0Di + 1.0Wi [...	Yes	Y		DL	1.2	IL	1	W...	-.5	W...	-.8...												
34	1.2D + 1.0Di + 1.0Wi [...	Yes	Y		DL	1.2	IL	1	W...	-.8...	W...	-.5												
35	1.2D + 1.0Di + 1.0Wi [...	Yes	Y		DL	1.2	IL	1	W...	-1	W...	.001												
36	1.2D + 1.0Di + 1.0Wi [...	Yes	Y		DL	1.2	IL	1	W...	-.8...	W...	.5												
37	1.2D + 1.0Di + 1.0Wi [...	Yes	Y		DL	1.2	IL	1	W...	-.5	W...	.866												
38	1.2D + 1.0Ev + 1.0Eh ...	Yes	Y		DL	1.2	ELY	1	ELZ	1	E...	.001												
39	1.2D + 1.0Ev + 1.0Eh ...	Yes	Y		DL	1.2	ELY	1	ELZ	.866	E...	.5												
40	1.2D + 1.0Ev + 1.0Eh ...	Yes	Y		DL	1.2	ELY	1	ELZ	.5	E...	.866												
41	1.2D + 1.0Ev + 1.0Eh ...	Yes	Y		DL	1.2	ELY	1	ELZ	.001	E...	1												
42	1.2D + 1.0Ev + 1.0Eh ...	Yes	Y		DL	1.2	ELY	1	ELZ	-.5	E...	.866												
43	1.2D + 1.0Ev + 1.0Eh ...	Yes	Y		DL	1.2	ELY	1	ELZ	-.8...	E...	.5												
44	1.2D + 1.0Ev + 1.0Eh ...	Yes	Y		DL	1.2	ELY	1	ELZ	-1	E...	.001												
45	1.2D + 1.0Ev + 1.0Eh ...	Yes	Y		DL	1.2	ELY	1	ELZ	-.8...	E...	-.5												
46	1.2D + 1.0Ev + 1.0Eh ...	Yes	Y		DL	1.2	ELY	1	ELZ	-.5	E...	-.8...												
47	1.2D + 1.0Ev + 1.0Eh ...	Yes	Y		DL	1.2	ELY	1	ELZ	.001	E...	-1												
48	1.2D + 1.0Ev + 1.0Eh ...	Yes	Y		DL	1.2	ELY	1	ELZ	.5	E...	-.8...												
49	1.2D + 1.0Ev + 1.0Eh ...	Yes	Y		DL	1.2	ELY	1	ELZ	.866	E...	-.5												
50	0.9D + 1.0Ev + 1.0Eh ...	Yes	Y		DL	.9	ELY	1	ELZ	1	E...	.001												
51	0.9D + 1.0Ev + 1.0Eh ...	Yes	Y		DL	.9	ELY	1	ELZ	.866	E...	.5												

Load Combinations (Continued)

	Description	Solve	PDel...	SRSS	B...	Fact...	BLC	Fa...	B...	Fa...	B...	Fa...	B...	Fa...	B...	Fa...	B...	Fa...	B...	Fa...	B...	Fa...	B...	Fa...
52	0.9D + 1.0Ev + 1.0Eh ...	Yes	Y		DL	.9	ELY	1	ELZ	.5	E...	.866												
53	0.9D + 1.0Ev + 1.0Eh ...	Yes	Y		DL	.9	ELY	1	ELZ	.001	E...	1												
54	0.9D + 1.0Ev + 1.0Eh ...	Yes	Y		DL	.9	ELY	1	ELZ	-.5	E...	.866												
55	0.9D + 1.0Ev + 1.0Eh ...	Yes	Y		DL	.9	ELY	1	ELZ	-.8...	E...	.5												
56	0.9D + 1.0Ev + 1.0Eh ...	Yes	Y		DL	.9	ELY	1	ELZ	-1	E...	.001												
57	0.9D + 1.0Ev + 1.0Eh ...	Yes	Y		DL	.9	ELY	1	ELZ	-.8...	E...	-.5												
58	0.9D + 1.0Ev + 1.0Eh ...	Yes	Y		DL	.9	ELY	1	ELZ	-.5	E...	-.8...												
59	0.9D + 1.0Ev + 1.0Eh ...	Yes	Y		DL	.9	ELY	1	ELZ	.001	E...	-1												
60	0.9D + 1.0Ev + 1.0Eh ...	Yes	Y		DL	.9	ELY	1	ELZ	.5	E...	-.8...												
61	0.9D + 1.0Ev + 1.0Eh ...	Yes	Y		DL	.9	ELY	1	ELZ	.866	E...	-.5												
62	1.2D + 1.5Lm(1) + 1.0...	Yes	Y		DL	1.2	12	1.5	W...	.001	W...	1												
63	1.2D + 1.5Lm(1) + 1.0...	Yes	Y		DL	1.2	12	1.5	W...	.5	W...	.866												
64	1.2D + 1.5Lm(1) + 1.0...	Yes	Y		DL	1.2	12	1.5	W...	.866	W...	.5												
65	1.2D + 1.5Lm(1) + 1.0...	Yes	Y		DL	1.2	12	1.5	W...	1	W...	.001												
66	1.2D + 1.5Lm(1) + 1.0...	Yes	Y		DL	1.2	12	1.5	W...	.866	W...	-.5												
67	1.2D + 1.5Lm(1) + 1.0...	Yes	Y		DL	1.2	12	1.5	W...	.5	W...	-.8...												
68	1.2D + 1.5Lm(1) + 1.0...	Yes	Y		DL	1.2	12	1.5	W...	.001	W...	-.5												
69	1.2D + 1.5Lm(1) + 1.0...	Yes	Y		DL	1.2	12	1.5	W...	-.5	W...	-.8...												
70	1.2D + 1.5Lm(1) + 1.0...	Yes	Y		DL	1.2	12	1.5	W...	-.8...	W...	-.5												
71	1.2D + 1.5Lm(1) + 1.0...	Yes	Y		DL	1.2	12	1.5	W...	-1	W...	.001												
72	1.2D + 1.5Lm(1) + 1.0...	Yes	Y		DL	1.2	12	1.5	W...	-.8...	W...	.5												
73	1.2D + 1.5Lm(1) + 1.0...	Yes	Y		DL	1.2	12	1.5	W...	-.5	W...	.866												
74	1.2D + 1.5Lm(2) + 1.0...	Yes	Y		DL	1.2	13	1.5	W...	.001	W...	1												
75	1.2D + 1.5Lm(2) + 1.0...	Yes	Y		DL	1.2	13	1.5	W...	.5	W...	.866												
76	1.2D + 1.5Lm(2) + 1.0...	Yes	Y		DL	1.2	13	1.5	W...	.866	W...	.5												
77	1.2D + 1.5Lm(2) + 1.0...	Yes	Y		DL	1.2	13	1.5	W...	1	W...	.001												
78	1.2D + 1.5Lm(2) + 1.0...	Yes	Y		DL	1.2	13	1.5	W...	.866	W...	-.5												
79	1.2D + 1.5Lm(2) + 1.0...	Yes	Y		DL	1.2	13	1.5	W...	.5	W...	-.8...												
80	1.2D + 1.5Lm(2) + 1.0...	Yes	Y		DL	1.2	13	1.5	W...	.001	W...	-.5												
81	1.2D + 1.5Lm(2) + 1.0...	Yes	Y		DL	1.2	13	1.5	W...	-.5	W...	-.8...												
82	1.2D + 1.5Lm(2) + 1.0...	Yes	Y		DL	1.2	13	1.5	W...	-.8...	W...	-.5												
83	1.2D + 1.5Lm(2) + 1.0...	Yes	Y		DL	1.2	13	1.5	W...	-1	W...	.001												
84	1.2D + 1.5Lm(2) + 1.0...	Yes	Y		DL	1.2	13	1.5	W...	-.8...	W...	.5												
85	1.2D + 1.5Lm(2) + 1.0...	Yes	Y		DL	1.2	13	1.5	W...	-.5	W...	.866												
86	1.2D + 1.5Lm(3) + 1.0...	Yes	Y		DL	1.2	14	1.5	W...	.001	W...	1												
87	1.2D + 1.5Lm(3) + 1.0...	Yes	Y		DL	1.2	14	1.5	W...	.5	W...	.866												
88	1.2D + 1.5Lm(3) + 1.0...	Yes	Y		DL	1.2	14	1.5	W...	.866	W...	.5												
89	1.2D + 1.5Lm(3) + 1.0...	Yes	Y		DL	1.2	14	1.5	W...	1	W...	.001												
90	1.2D + 1.5Lm(3) + 1.0...	Yes	Y		DL	1.2	14	1.5	W...	.866	W...	-.5												
91	1.2D + 1.5Lm(3) + 1.0...	Yes	Y		DL	1.2	14	1.5	W...	.5	W...	-.8...												
92	1.2D + 1.5Lm(3) + 1.0...	Yes	Y		DL	1.2	14	1.5	W...	.001	W...	-.5												
93	1.2D + 1.5Lm(3) + 1.0...	Yes	Y		DL	1.2	14	1.5	W...	-.5	W...	-.8...												
94	1.2D + 1.5Lm(3) + 1.0...	Yes	Y		DL	1.2	14	1.5	W...	-.8...	W...	-.5												
95	1.2D + 1.5Lm(3) + 1.0...	Yes	Y		DL	1.2	14	1.5	W...	-1	W...	.001												
96	1.2D + 1.5Lm(3) + 1.0...	Yes	Y		DL	1.2	14	1.5	W...	-.8...	W...	.5												
97	1.2D + 1.5Lm(3) + 1.0...	Yes	Y		DL	1.2	14	1.5	W...	-.5	W...	.866												
98	1.2D + 1.5Lm(4) + 1.0...	Yes	Y		DL	1.2	15	1.5	W...	.001	W...	1												
99	1.2D + 1.5Lm(4) + 1.0...	Yes	Y		DL	1.2	15	1.5	W...	.5	W...	.866												
100	1.2D + 1.5Lm(4) + 1.0...	Yes	Y		DL	1.2	15	1.5	W...	.866	W...	.5												
101	1.2D + 1.5Lm(4) + 1.0...	Yes	Y		DL	1.2	15	1.5	W...	1	W...	.001												
102	1.2D + 1.5Lm(4) + 1.0...	Yes	Y		DL	1.2	15	1.5	W...	.866	W...	-.5												
103	1.2D + 1.5Lm(4) + 1.0...	Yes	Y		DL	1.2	15	1.5	W...	.5	W...	-.8...												

Load Combinations (Continued)

	Description	Solve	PDel...	SRSS	B...	Fact...	BLC	Fa...	B...	Fa...	B...	Fa...	B...	Fa...	B...	Fa...	B...	Fa...	B...	Fa...	B...	Fa...	B...	Fa...
104	1.2D + 1.5Lm(4) + 1.0...	Yes	Y		DL	1.2	15	1.5	W...	.001	W...	-.5												
105	1.2D + 1.5Lm(4) + 1.0...	Yes	Y		DL	1.2	15	1.5	W...	-.5	W...	-.8...												
106	1.2D + 1.5Lm(4) + 1.0...	Yes	Y		DL	1.2	15	1.5	W...	-.8...	W...	-.5												
107	1.2D + 1.5Lm(4) + 1.0...	Yes	Y		DL	1.2	15	1.5	W...	-1	W...	.001												
108	1.2D + 1.5Lm(4) + 1.0...	Yes	Y		DL	1.2	15	1.5	W...	-.8...	W...	.5												
109	1.2D + 1.5Lm(4) + 1.0...	Yes	Y		DL	1.2	15	1.5	W...	-.5	W...	.866												
110	1.2D + 1.5Lm(5) + 1.0...	Yes	Y		DL	1.2	16	1.5	W...	.001	W...	1												
111	1.2D + 1.5Lm(5) + 1.0...	Yes	Y		DL	1.2	16	1.5	W...	.5	W...	.866												
112	1.2D + 1.5Lm(5) + 1.0...	Yes	Y		DL	1.2	16	1.5	W...	.866	W...	.5												
113	1.2D + 1.5Lm(5) + 1.0...	Yes	Y		DL	1.2	16	1.5	W...	1	W...	.001												
114	1.2D + 1.5Lm(5) + 1.0...	Yes	Y		DL	1.2	16	1.5	W...	.866	W...	-.5												
115	1.2D + 1.5Lm(5) + 1.0...	Yes	Y		DL	1.2	16	1.5	W...	.5	W...	-.8...												
116	1.2D + 1.5Lm(5) + 1.0...	Yes	Y		DL	1.2	16	1.5	W...	.001	W...	-.5												
117	1.2D + 1.5Lm(5) + 1.0...	Yes	Y		DL	1.2	16	1.5	W...	-.5	W...	-.8...												
118	1.2D + 1.5Lm(5) + 1.0...	Yes	Y		DL	1.2	16	1.5	W...	-.8...	W...	-.5												
119	1.2D + 1.5Lm(5) + 1.0...	Yes	Y		DL	1.2	16	1.5	W...	-1	W...	.001												
120	1.2D + 1.5Lm(5) + 1.0...	Yes	Y		DL	1.2	16	1.5	W...	-.8...	W...	.5												
121	1.2D + 1.5Lm(5) + 1.0...	Yes	Y		DL	1.2	16	1.5	W...	-.5	W...	.866												
122	1.2D + 1.5Lm(6) + 1.0...	Yes	Y		DL	1.2	17	1.5	W...	.001	W...	1												
123	1.2D + 1.5Lm(6) + 1.0...	Yes	Y		DL	1.2	17	1.5	W...	.5	W...	.866												
124	1.2D + 1.5Lm(6) + 1.0...	Yes	Y		DL	1.2	17	1.5	W...	.866	W...	.5												
125	1.2D + 1.5Lm(6) + 1.0...	Yes	Y		DL	1.2	17	1.5	W...	1	W...	.001												
126	1.2D + 1.5Lm(6) + 1.0...	Yes	Y		DL	1.2	17	1.5	W...	.866	W...	-.5												
127	1.2D + 1.5Lm(6) + 1.0...	Yes	Y		DL	1.2	17	1.5	W...	.5	W...	-.8...												
128	1.2D + 1.5Lm(6) + 1.0...	Yes	Y		DL	1.2	17	1.5	W...	.001	W...	-.5												
129	1.2D + 1.5Lm(6) + 1.0...	Yes	Y		DL	1.2	17	1.5	W...	-.5	W...	-.8...												
130	1.2D + 1.5Lm(6) + 1.0...	Yes	Y		DL	1.2	17	1.5	W...	-.8...	W...	-.5												
131	1.2D + 1.5Lm(6) + 1.0...	Yes	Y		DL	1.2	17	1.5	W...	-1	W...	.001												
132	1.2D + 1.5Lm(6) + 1.0...	Yes	Y		DL	1.2	17	1.5	W...	-.8...	W...	.5												
133	1.2D + 1.5Lm(6) + 1.0...	Yes	Y		DL	1.2	17	1.5	W...	-.5	W...	.866												
134	1.2D + 1.5Lm(7) + 1.0...	Yes	Y		DL	1.2	18	1.5	W...	.001	W...	1												
135	1.2D + 1.5Lm(7) + 1.0...	Yes	Y		DL	1.2	18	1.5	W...	.5	W...	.866												
136	1.2D + 1.5Lm(7) + 1.0...	Yes	Y		DL	1.2	18	1.5	W...	.866	W...	.5												
137	1.2D + 1.5Lm(7) + 1.0...	Yes	Y		DL	1.2	18	1.5	W...	1	W...	.001												
138	1.2D + 1.5Lm(7) + 1.0...	Yes	Y		DL	1.2	18	1.5	W...	.866	W...	-.5												
139	1.2D + 1.5Lm(7) + 1.0...	Yes	Y		DL	1.2	18	1.5	W...	.5	W...	-.8...												
140	1.2D + 1.5Lm(7) + 1.0...	Yes	Y		DL	1.2	18	1.5	W...	.001	W...	-.5												
141	1.2D + 1.5Lm(7) + 1.0...	Yes	Y		DL	1.2	18	1.5	W...	-.5	W...	-.8...												
142	1.2D + 1.5Lm(7) + 1.0...	Yes	Y		DL	1.2	18	1.5	W...	-.8...	W...	-.5												
143	1.2D + 1.5Lm(7) + 1.0...	Yes	Y		DL	1.2	18	1.5	W...	-1	W...	.001												
144	1.2D + 1.5Lm(7) + 1.0...	Yes	Y		DL	1.2	18	1.5	W...	-.8...	W...	.5												
145	1.2D + 1.5Lm(7) + 1.0...	Yes	Y		DL	1.2	18	1.5	W...	-.5	W...	.866												
146	1.2D + 1.5Lm(8) + 1.0...	Yes	Y		DL	1.2	19	1.5	W...	.001	W...	1												
147	1.2D + 1.5Lm(8) + 1.0...	Yes	Y		DL	1.2	19	1.5	W...	.5	W...	.866												
148	1.2D + 1.5Lm(8) + 1.0...	Yes	Y		DL	1.2	19	1.5	W...	.866	W...	.5												
149	1.2D + 1.5Lm(8) + 1.0...	Yes	Y		DL	1.2	19	1.5	W...	1	W...	.001												
150	1.2D + 1.5Lm(8) + 1.0...	Yes	Y		DL	1.2	19	1.5	W...	.866	W...	-.5												
151	1.2D + 1.5Lm(8) + 1.0...	Yes	Y		DL	1.2	19	1.5	W...	.5	W...	-.8...												
152	1.2D + 1.5Lm(8) + 1.0...	Yes	Y		DL	1.2	19	1.5	W...	.001	W...	-.5												
153	1.2D + 1.5Lm(8) + 1.0...	Yes	Y		DL	1.2	19	1.5	W...	-.5	W...	-.8...												
154	1.2D + 1.5Lm(8) + 1.0...	Yes	Y		DL	1.2	19	1.5	W...	-.8...	W...	-.5												
155	1.2D + 1.5Lm(8) + 1.0...	Yes	Y		DL	1.2	19	1.5	W...	-1	W...	.001												

Load Combinations (Continued)

	Description	Solve	PDel...	SRSS	B...	Fact...	BLC	Fa...	B...	Fa...	B...	Fa...	B...	Fa...	B...	Fa...	B...	Fa...	B...	Fa...	B...	Fa...	B...	Fa...
156	1.2D + 1.5Lm(8) + 1.0...	Yes	Y		DL	1.2	19	1.5	W...	-.8...	W...	.5												
157	1.2D + 1.5Lm(8) + 1.0...	Yes	Y		DL	1.2	19	1.5	W...	-.5	W...	.866												
158	1.2D + 1.5Lm(9) + 1.0...	Yes	Y		DL	1.2	20	1.5	W...	.001	W...	1												
159	1.2D + 1.5Lm(9) + 1.0...	Yes	Y		DL	1.2	20	1.5	W...	.5	W...	.866												
160	1.2D + 1.5Lm(9) + 1.0...	Yes	Y		DL	1.2	20	1.5	W...	.866	W...	.5												
161	1.2D + 1.5Lm(9) + 1.0...	Yes	Y		DL	1.2	20	1.5	W...	1	W...	.001												
162	1.2D + 1.5Lm(9) + 1.0...	Yes	Y		DL	1.2	20	1.5	W...	.866	W...	-.5												
163	1.2D + 1.5Lm(9) + 1.0...	Yes	Y		DL	1.2	20	1.5	W...	.5	W...	-.8...												
164	1.2D + 1.5Lm(9) + 1.0...	Yes	Y		DL	1.2	20	1.5	W...	.001	W...	-.5												
165	1.2D + 1.5Lm(9) + 1.0...	Yes	Y		DL	1.2	20	1.5	W...	-.5	W...	-.8...												
166	1.2D + 1.5Lm(9) + 1.0...	Yes	Y		DL	1.2	20	1.5	W...	-.8...	W...	-.5												
167	1.2D + 1.5Lm(9) + 1.0...	Yes	Y		DL	1.2	20	1.5	W...	-1	W...	.001												
168	1.2D + 1.5Lm(9) + 1.0...	Yes	Y		DL	1.2	20	1.5	W...	-.8...	W...	.5												
169	1.2D + 1.5Lm(9) + 1.0...	Yes	Y		DL	1.2	20	1.5	W...	-.5	W...	.866												
170	1.2D + 1.5Lm(10) + 1....	Yes	Y		DL	1.2	21	1.5	W...	.001	W...	1												
171	1.2D + 1.5Lm(10) + 1....	Yes	Y		DL	1.2	21	1.5	W...	.5	W...	.866												
172	1.2D + 1.5Lm(10) + 1....	Yes	Y		DL	1.2	21	1.5	W...	.866	W...	.5												
173	1.2D + 1.5Lm(10) + 1....	Yes	Y		DL	1.2	21	1.5	W...	1	W...	.001												
174	1.2D + 1.5Lm(10) + 1....	Yes	Y		DL	1.2	21	1.5	W...	.866	W...	-.5												
175	1.2D + 1.5Lm(10) + 1....	Yes	Y		DL	1.2	21	1.5	W...	.5	W...	-.8...												
176	1.2D + 1.5Lm(10) + 1....	Yes	Y		DL	1.2	21	1.5	W...	.001	W...	-.5												
177	1.2D + 1.5Lm(10) + 1....	Yes	Y		DL	1.2	21	1.5	W...	-.5	W...	-.8...												
178	1.2D + 1.5Lm(10) + 1....	Yes	Y		DL	1.2	21	1.5	W...	-.8...	W...	-.5												
179	1.2D + 1.5Lm(10) + 1....	Yes	Y		DL	1.2	21	1.5	W...	-1	W...	.001												
180	1.2D + 1.5Lm(10) + 1....	Yes	Y		DL	1.2	21	1.5	W...	-.8...	W...	.5												
181	1.2D + 1.5Lm(10) + 1....	Yes	Y		DL	1.2	21	1.5	W...	-.5	W...	.866												
182	1.2D + 1.5Lm(11) + 1....	Yes	Y		DL	1.2	22	1.5	W...	.001	W...	1												
183	1.2D + 1.5Lm(11) + 1....	Yes	Y		DL	1.2	22	1.5	W...	.5	W...	.866												
184	1.2D + 1.5Lm(11) + 1....	Yes	Y		DL	1.2	22	1.5	W...	.866	W...	.5												
185	1.2D + 1.5Lm(11) + 1....	Yes	Y		DL	1.2	22	1.5	W...	1	W...	.001												
186	1.2D + 1.5Lm(11) + 1....	Yes	Y		DL	1.2	22	1.5	W...	.866	W...	-.5												
187	1.2D + 1.5Lm(11) + 1....	Yes	Y		DL	1.2	22	1.5	W...	.5	W...	-.8...												
188	1.2D + 1.5Lm(11) + 1....	Yes	Y		DL	1.2	22	1.5	W...	.001	W...	-.5												
189	1.2D + 1.5Lm(11) + 1....	Yes	Y		DL	1.2	22	1.5	W...	-.5	W...	-.8...												
190	1.2D + 1.5Lm(11) + 1....	Yes	Y		DL	1.2	22	1.5	W...	-.8...	W...	-.5												
191	1.2D + 1.5Lm(11) + 1....	Yes	Y		DL	1.2	22	1.5	W...	-1	W...	.001												
192	1.2D + 1.5Lm(11) + 1....	Yes	Y		DL	1.2	22	1.5	W...	-.8...	W...	.5												
193	1.2D + 1.5Lm(11) + 1....	Yes	Y		DL	1.2	22	1.5	W...	-.5	W...	.866												
194	1.2D + 1.5Lm(12) + 1....	Yes	Y		DL	1.2	23	1.5	W...	.001	W...	1												
195	1.2D + 1.5Lm(12) + 1....	Yes	Y		DL	1.2	23	1.5	W...	.5	W...	.866												
196	1.2D + 1.5Lm(12) + 1....	Yes	Y		DL	1.2	23	1.5	W...	.866	W...	.5												
197	1.2D + 1.5Lm(12) + 1....	Yes	Y		DL	1.2	23	1.5	W...	1	W...	.001												
198	1.2D + 1.5Lm(12) + 1....	Yes	Y		DL	1.2	23	1.5	W...	.866	W...	-.5												
199	1.2D + 1.5Lm(12) + 1....	Yes	Y		DL	1.2	23	1.5	W...	.5	W...	-.8...												
200	1.2D + 1.5Lm(12) + 1....	Yes	Y		DL	1.2	23	1.5	W...	.001	W...	-.5												
201	1.2D + 1.5Lm(12) + 1....	Yes	Y		DL	1.2	23	1.5	W...	-.5	W...	-.8...												
202	1.2D + 1.5Lm(12) + 1....	Yes	Y		DL	1.2	23	1.5	W...	-.8...	W...	-.5												
203	1.2D + 1.5Lm(12) + 1....	Yes	Y		DL	1.2	23	1.5	W...	-1	W...	.001												
204	1.2D + 1.5Lm(12) + 1....	Yes	Y		DL	1.2	23	1.5	W...	-.8...	W...	.5												
205	1.2D + 1.5Lm(12) + 1....	Yes	Y		DL	1.2	23	1.5	W...	-.5	W...	.866												
206	1.2D + 1.5Lm(13) + 1....	Yes	Y		DL	1.2	24	1.5	W...	.001	W...	1												
207	1.2D + 1.5Lm(13) + 1....	Yes	Y		DL	1.2	24	1.5	W...	.5	W...	.866												

Load Combinations (Continued)

	Description	Solve	PDel...	SRSS	B...	Fact...	BLC	Fa...	B...	Fa...	B...	Fa...	B...	Fa...	B...	Fa...	B...	Fa...	B...	Fa...	B...	Fa...	B...	Fa...
208	1.2D + 1.5Lm(13) + 1....	Yes	Y		DL	1.2	24	1.5	W...	.866	W...	.5												
209	1.2D + 1.5Lm(13) + 1....	Yes	Y		DL	1.2	24	1.5	W...	1	W...	.001												
210	1.2D + 1.5Lm(13) + 1....	Yes	Y		DL	1.2	24	1.5	W...	.866	W...	-.5												
211	1.2D + 1.5Lm(13) + 1....	Yes	Y		DL	1.2	24	1.5	W...	.5	W...	-.8...												
212	1.2D + 1.5Lm(13) + 1....	Yes	Y		DL	1.2	24	1.5	W...	.001	W...	-.5												
213	1.2D + 1.5Lm(13) + 1....	Yes	Y		DL	1.2	24	1.5	W...	-.5	W...	-.8...												
214	1.2D + 1.5Lm(13) + 1....	Yes	Y		DL	1.2	24	1.5	W...	-.8...	W...	-.5												
215	1.2D + 1.5Lm(13) + 1....	Yes	Y		DL	1.2	24	1.5	W...	-1	W...	.001												
216	1.2D + 1.5Lm(13) + 1....	Yes	Y		DL	1.2	24	1.5	W...	-.8...	W...	.5												
217	1.2D + 1.5Lm(13) + 1....	Yes	Y		DL	1.2	24	1.5	W...	-.5	W...	.866												
218	1.2D + 1.5Lm(14) + 1....	Yes	Y		DL	1.2	25	1.5	W...	.001	W...	1												
219	1.2D + 1.5Lm(14) + 1....	Yes	Y		DL	1.2	25	1.5	W...	.5	W...	.866												
220	1.2D + 1.5Lm(14) + 1....	Yes	Y		DL	1.2	25	1.5	W...	.866	W...	.5												
221	1.2D + 1.5Lm(14) + 1....	Yes	Y		DL	1.2	25	1.5	W...	1	W...	.001												
222	1.2D + 1.5Lm(14) + 1....	Yes	Y		DL	1.2	25	1.5	W...	.866	W...	-.5												
223	1.2D + 1.5Lm(14) + 1....	Yes	Y		DL	1.2	25	1.5	W...	.5	W...	-.8...												
224	1.2D + 1.5Lm(14) + 1....	Yes	Y		DL	1.2	25	1.5	W...	.001	W...	-.5												
225	1.2D + 1.5Lm(14) + 1....	Yes	Y		DL	1.2	25	1.5	W...	-.5	W...	-.8...												
226	1.2D + 1.5Lm(14) + 1....	Yes	Y		DL	1.2	25	1.5	W...	-.8...	W...	-.5												
227	1.2D + 1.5Lm(14) + 1....	Yes	Y		DL	1.2	25	1.5	W...	-1	W...	.001												
228	1.2D + 1.5Lm(14) + 1....	Yes	Y		DL	1.2	25	1.5	W...	-.8...	W...	.5												
229	1.2D + 1.5Lm(14) + 1....	Yes	Y		DL	1.2	25	1.5	W...	-.5	W...	.866												
230	1.2D + 1.5Lm(15) + 1....	Yes	Y		DL	1.2	26	1.5	W...	.001	W...	1												
231	1.2D + 1.5Lm(15) + 1....	Yes	Y		DL	1.2	26	1.5	W...	.5	W...	.866												
232	1.2D + 1.5Lm(15) + 1....	Yes	Y		DL	1.2	26	1.5	W...	.866	W...	.5												
233	1.2D + 1.5Lm(15) + 1....	Yes	Y		DL	1.2	26	1.5	W...	1	W...	.001												
234	1.2D + 1.5Lm(15) + 1....	Yes	Y		DL	1.2	26	1.5	W...	.866	W...	-.5												
235	1.2D + 1.5Lm(15) + 1....	Yes	Y		DL	1.2	26	1.5	W...	.5	W...	-.8...												
236	1.2D + 1.5Lm(15) + 1....	Yes	Y		DL	1.2	26	1.5	W...	.001	W...	-.5												
237	1.2D + 1.5Lm(15) + 1....	Yes	Y		DL	1.2	26	1.5	W...	-.5	W...	-.8...												
238	1.2D + 1.5Lm(15) + 1....	Yes	Y		DL	1.2	26	1.5	W...	-.8...	W...	-.5												
239	1.2D + 1.5Lm(15) + 1....	Yes	Y		DL	1.2	26	1.5	W...	-1	W...	.001												
240	1.2D + 1.5Lm(15) + 1....	Yes	Y		DL	1.2	26	1.5	W...	-.8...	W...	.5												
241	1.2D + 1.5Lm(15) + 1....	Yes	Y		DL	1.2	26	1.5	W...	-.5	W...	.866												

Envelope Joint Reactions

	Joint		X [lb]	LC	Y [lb]	LC	Z [lb]	LC	MX [lb-ft]	LC	MY [lb-ft]	LC	MZ [lb-ft]	LC
1	N001	max	0	241	0	241	0	241	0	241	0	241	0	241
2		min	0	1	0	1	0	1	0	1	0	1	0	1
3	N002	max	1926.892	5	414.899	26	8142.199	26	0	241	0	241	0	241
4		min	-1928.462	11	30.171	20	-4488.394	20	0	1	0	1	0	1
5	N003	max	7740.686	30	427.992	30	2970.826	24	0	241	0	241	0	241
6		min	-4126.049	24	24.003	24	-4726.642	30	0	1	0	1	0	1
7	N004	max	4145.04	16	428.05	34	2894.412	16	0	241	0	241	0	241
8		min	-7747.26	34	23.833	16	-4698.475	34	0	1	0	1	0	1
9	N065	max	50.314	35	3924.216	26	1504.923	20	0	241	0	241	0	241
10		min	-49.701	29	-604.459	20	-9530.184	26	0	1	0	1	0	1
11	N066	max	1584.775	24	4256.795	30	5178.884	30	0	241	0	241	0	241
12		min	-8959.939	30	-737.139	24	-909.238	24	0	1	0	1	0	1
13	N067	max	8959.769	34	4256.682	34	5178.593	34	0	241	0	241	0	241

Envelope Joint Reactions (Continued)

	Joint		X [lb]	LC	Y [lb]	LC	Z [lb]	LC	MX [lb-ft]	LC	MY [lb-ft]	LC	MZ [lb-ft]	LC
14		min	-1583.687	16	-736.865	16	-909.786	16	0	1	0	1	0	1
15	Totals:	max	6142.508	5	12028.452	31	5473.004	14						
16		min	-6142.508	23	2193.169	25	-5473.003	8						

Envelope AISC 15th(360-16): LRFD Steel Code Checks

	Member	Shape	Code Check	Loc[in]	LC	Shear Ch...	Loc[in]	Dir	LC	phi*Pnc...	phi*Pnt [...	phi*Mn ...	phi*Mn z-z ...	Cb	Eqn
1	H001	PIPE_3.5X	.160	10.417	5	.074	21.615		5	106067...	108045	10683.75	10683.75	1.62	H1-1b
2	H002	PIPE_3.5X	.101	10.156	7	.043	21.615		8	106067...	108045	10683.75	10683.75	1.6...	H1-1b
3	H003	PIPE_3.5X	.092	10.156	9	.039	21.615		2	106067...	108045	10683.75	10683.75	1.6...	H1-1b
4	H004	W4X13	.191	33.781	7	.026	34.271	z	13	118187...	124092	7884	16956	1.3...	H1-1b
5	H005	W4X13	.219	13.219	6	.033	12.729	z	6	118187...	124092	7884	16956	1.2...	H1-1b
6	H006	W4X13	.215	33.781	10	.032	34.271	z	10	118187...	124092	7884	16956	1.2...	H1-1b
7	H013	PIPE_2.0	.798	126.8...	28	.502	126.8...		27	11073.43	32130	1871.625	1871.625	1.4...	H3-6
8	H014	PIPE_2.0	.791	126.8...	32	.531	126.8...		30	11073.43	32130	1871.625	1871.625	1.49	H3-6
9	H015	PIPE_2.0	.793	47.125	32	.522	47.125		34	11073.43	32130	1871.625	1871.625	1.4...	H3-6
10	H016	HSS3X3X3	.708	34.038	2	.290	33.396	z	28	72013....	78246	6796.5	6796.5	1.3...	H1-1b
11	H017	HSS3X3X3	.800	27.616	6	.304	28.258	z	28	72013....	78246	6796.5	6796.5	1.3...	H1-1b
12	H018	HSS3X3X3	.801	34.038	10	.309	33.396	z	36	72013....	78246	6796.5	6796.5	1.3...	H1-1b
13	H019	PL6X0.5	.142	6.262	12	.183	0	y	11	93214....	97200	1012.5	12150	1.2...	H1-1b
14	H020	PL6X0.5	.146	6.262	5	.159	0	y	3	93214....	97200	1012.5	12150	1.0...	H1-1b
15	H021	PL6X0.5	.142	6.262	9	.159	0	y	7	93214....	97200	1012.5	12150	1.0...	H1-1b
16	TB022	LL2.5x2.5x...	.172	0	26	.002	52.873	y	26	59826....	77112	6325.983	3332.364	1.1...	H1-1b*
17	TB023	LL2.5x2.5x...	.187	0	30	.002	52.873	y	30	59826....	77112	6325.983	3332.364	1.1...	H1-1b*
18	TB024	LL2.5x2.5x...	.187	0	34	.002	0	y	34	59826....	77112	6325.983	3332.364	1.1...	H1-1b*
19	H025	PIPE_2.0	.576	45.313	11	.137	166.75		37	11073.43	32130	1871.625	1871.625	1.8...	H1-1b
20	H026	PIPE_2.0	.521	128.6...	10	.139	166.75		30	11073.43	32130	1871.625	1871.625	1.9...	H1-1b
21	H027	PIPE_2.0	.542	45.312	6	.137	166.75		10	11073.43	32130	1871.625	1871.625	1.96	H1-1b
22	H028	L2.5x2.5x4	.292	15.262	34	.080	0	z	11	37705....	38556	1113.554	2537.388	1.2...	H2-1
23	H029	L2.5x2.5x4	.311	15.262	26	.070	0	z	3	37705....	38556	1113.554	2537.388	1.1...	H2-1
24	H030	L2.5x2.5x4	.309	15.262	30	.070	0	z	7	37705....	38556	1113.554	2537.388	1.1...	H2-1
25	H031	PIPE_2.0	.030	27.131	26	.157	0		5	25144....	32130	1871.625	1871.625	1.1...	H1-1b
26	H032	PIPE_2.0	.030	27.131	30	.139	0		9	25144....	32130	1871.625	1871.625	1.1...	H1-1b
27	H033	PIPE_2.0	.030	27.131	34	.138	0		13	25144....	32130	1871.625	1871.625	1.1...	H1-1b
28	H064	L 1.75x1.7...	.390	6.302	26	.158	6.434	z	26	23934....	26519.4	361.531	1234.002	1.0...	H2-1
29	H065	L 1.75x1.7...	.460	6.302	30	.176	6.302	z	30	23934....	26519.4	361.531	1234.002	1.1...	H2-1
30	H066	L 1.75x1.7...	.453	6.302	34	.175	6.302	z	34	23934....	26519.4	361.531	1234.002	1.1...	H2-1
31	H067	L 1.5x1.5x4	.926	9.868	22	.234	12.802	z	4	11418....	22469.4	217.337	893.658	1.7...	H2-1
32	H068	L 1.5x1.5x4	.935	15.736	18	.237	12.802	z	12	11418....	22469.4	217.337	893.658	1.7...	H2-1
33	H069	L 1.5x1.5x4	.939	9.868	17	.214	12.802	z	12	11418....	22469.4	217.337	893.658	1.8...	H2-1
34	H070	L 1.75x1.7...	.408	9.322	27	.173	6.434	y	26	23934....	26519.4	361.531	1234.002	1.1...	H2-1
35	H071	L 1.75x1.7...	.432	3.282	29	.191	6.302	y	30	23934....	26519.4	361.531	1234.002	1.1...	H2-1
36	H072	L 1.75x1.7...	.436	9.322	35	.192	6.302	y	35	23934....	26519.4	361.531	1234.002	1.1...	H2-1
37	H073	L 1.5x1.5x4	.871	9.868	4	.228	12.802	y	4	11418....	22469.4	217.337	893.658	1.8...	H2-1
38	H074	L 1.5x1.5x4	.880	15.736	12	.231	12.802	y	12	11418....	22469.4	217.337	893.658	1.8...	H2-1
39	H075	L 1.5x1.5x4	.883	9.868	11	.210	12.802	y	12	11418....	22469.4	217.337	893.658	1.9...	H2-1
40	MP1	PIPE_2.0	.266	53.375	69	.035	53.375		33	4552.084	32130	1871.625	1871.625	2.1...	H1-1b
41	MP2	PIPE_2.0	.268	53.375	84	.040	53.375		36	4552.084	32130	1871.625	1871.625	2.2...	H1-1b
42	MP3	PIPE_2.0	.270	53.375	35	.037	53.375		35	4552.084	32130	1871.625	1871.625	2.1...	H1-1b
43	MP4	PIPE_2.0	.268	53.375	100	.040	53.375		4	4552.084	32130	1871.625	1871.625	2.2...	H1-1b
44	MP5	PIPE_2.0	.266	53.375	115	.037	53.375		7	4552.084	32130	1871.625	1871.625	2.2...	H1-1b

Envelope AISC 15th(360-16): LRFD Steel Code Checks (Continued)

	Member	Shape	Code Check	Loc[in]	LC	Shear Ch...	Loc[in]	Dir	LC	phi*Pnc...	phi*Pnt [...	phi*Mn ...	phi*Mn z-z ...	Cb	Eqn
45	MP6	PIPE_2.0	.547	53.375	36	.081	53.375		3	4552.084	32130	1871.625	1871.625	2.1...	H1-1a
46	MP7	PIPE_2.0	.533	53.375	28	.081	53.375		6	4552.084	32130	1871.625	1871.625	2.2...	H1-1a
47	MP8	PIPE_2.0	.553	53.375	33	.082	53.375		11	4552.084	32130	1871.625	1871.625	2.0...	H1-1a
48	MP9	PIPE_2.0	.551	53.375	11	.071	53.375		5	4552.084	32130	1871.625	1871.625	2.2...	H1-1b
49	MP10	PIPE_2.0	.510	53.375	3	.068	53.375		9	4552.084	32130	1871.625	1871.625	2.2...	H1-1b
50	MP11	PIPE_2.0	.513	53.375	7	.067	53.375		13	4552.084	32130	1871.625	1871.625	2.1...	H1-1b
51	MP12	PIPE_2.0	.570	53.375	28	.082	53.375		13	4552.084	32130	1871.625	1871.625	2.18	H1-1a
52	MP13	PIPE_2.0	.574	53.375	31	.082	53.375		5	4552.084	32130	1871.625	1871.625	2.0...	H1-1a
53	MP14	PIPE_2.0	.557	53.375	35	.082	53.375		10	4552.084	32130	1871.625	1871.625	2.2...	H1-1a
54	MP15	PIPE_2.0	.273	53.375	29	.039	53.375		29	4552.084	32130	1871.625	1871.625	2.1...	H1-1b

Envelope AISI S100-16: LRFD Cold Formed Steel Code Checks

	Mem...	Shape	Code Ch...	Loc[in]	LC	Shear C...	Loc[i...	Dir	LC	phi*P...	phi*Tn[...	phi*Mny...	phi*Mnzz[...	phi*Vn...	phi*Vnz...	Cb	Eqn
1	H007	C4x1x1/4	1.349	11.2...	17	.123	10.8...	z	17	10105...	36853...	280.772	2609.562	11756...	2351.25	1.407	H1.2-1
2	H008	C4x1x1/4	1.098	11.2...	22	.082	10.8...	z	9	10105...	36853...	280.772	2612.552	11756...	2351.25	1.421	H1.2-1
3	H009	C4x1x1/4	1.049	11.2...	14	.079	10.8...	z	13	10105...	36853...	280.772	2611.336	11756...	2351.25	1.415	H1.2-1
4	H010	C4x1x1/4	1.353	11.2...	22	.123	10.8...	z	23	10105...	36853...	280.772	2612.165	11756...	2351.25	1.419	H1.2-1
5	H011	C4x1x1/4	1.080	11.2...	14	.082	10.8...	z	3	10105...	36853...	280.772	2610.901	11756...	2351.25	1.413	H1.2-1
6	H012	C4x1x1/4	1.096	11.2...	18	.079	10.8...	z	7	10105...	36853...	280.772	2612.315	11756...	2351.25	1.42	H1.2-1

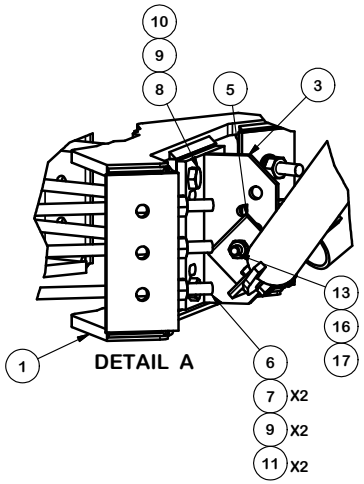

PARTS LIST						
ITEM	QTY	PART NO.	PART DESCRIPTION	LENGTH	UNIT WT.	NET WT.
1	3	X-LWRM	RING MOUNT WELDMENT		68.81	206.42
2	6	X-VSK	SUPPORT WELDMENT FOR VSK REINFORCEMENTS		27.05	162.32
3	3	X-TBW	T-BRACKET WELDMENT		13.60	40.80
4	6	X-VSKBRKT	T-BRACKET WELDMENT FOR VSK REINFORCEMENTS		4.19	25.13
5	6	SHCM-T	CHAIN MOUNT TIGHTENER BRACKET	3 in	1.86	11.15
6	9	G58R-24	5/8" x 24" THREADED ROD (HDG.)		2.09	18.82
6	9	G58R-48	5/8" x 48" THREADED ROD (HDG.)		4.18	37.63
7	18	A58FW	5/8" HDG A325 FLATWASHER		0.03	0.61
8	12	A582114	5/8" x 2-1/4" HDG A325 HEX BOLT	2 1/4 in	0.31	3.75
9	30	G58LW	5/8" HDG LOCKWASHER		0.03	0.78
10	12	G58NUT	5/8" HDG HEAVY 2H HEX NUT		0.13	1.56
11	18	A58NUT	5/8" HDG A325 HEX NUT		0.13	2.34
12	12	X-UB1212	1/2" X 2-1/2" X 4-1/2" X 2" U-BOLT (HDG.)		0.60	7.17
13	3	G12212	1/2" x 2-1/2" HDG HEX BOLT GR5	2 1/2 in	0.20	0.61
14	12	G12112	1/2" x 1-1/2" HDG HEX BOLT GR5	1/2 in	0.15	1.77
15	24	G12FW	1/2" HDG USS FLATWASHER	3/32 in	0.03	0.82
16	39	G12LW	1/2" HDG LOCKWASHER	1/8 in	0.01	0.54
17	39	G12NUT	1/2" HDG HEAVY 2H HEX NUT		0.07	2.79
					TOTAL WT. #	525.02

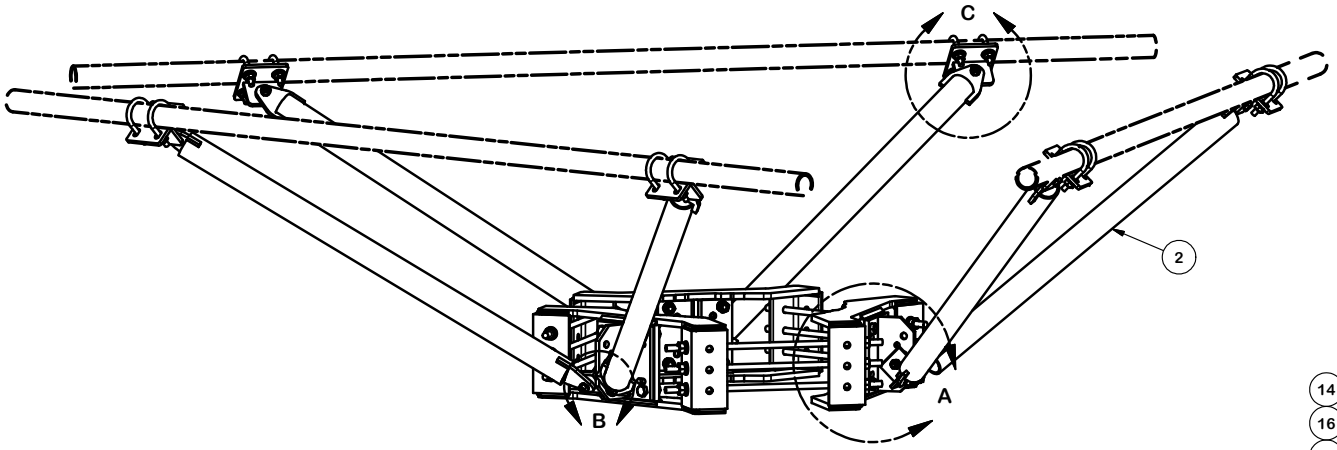

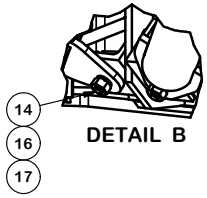

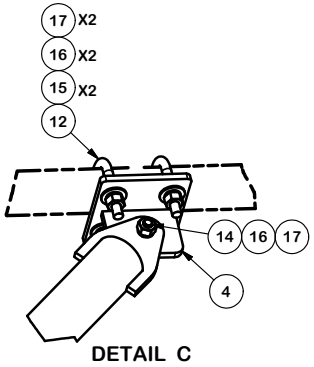

TOLERANCE NOTES

TOLERANCES ON DIMENSIONS, UNLESS OTHERWISE NOTED ARE:
SAWED, SHEARED AND GAS CUT EDGES *(± 0.030")*
DRILLED AND GAS CUT HOLES *(± 0.030")* - NO CONING OF HOLES
LASER CUT EDGES AND HOLES *(± 0.010")* - NO CONING OF HOLES
BENDS AND ANGLES ARE ± 1/2 DEGREE
ALL OTHER MACHINING *(± 0.030")*
ALL OTHER ASSEMBLY *(± 0.060")*

PROPRIETARY NOTE:
THE DATA AND TECHNIQUES CONTAINED IN THIS DRAWING ARE PROPRIETARY INFORMATION OF VALMONT INDUSTRIES AND CONSIDERED A TRADE SECRET. ANY USE OR DISCLOSURE WITHOUT THE CONSENT OF VALMONT INDUSTRIES IS STRICTLY PROHIBITED.

DESCRIPTION
V-STYLE MONOPOLE
REINFORCEMENT KITS

SITE PRO 1
A valmont COMPANY
Engineering Support Team:
1-888-753-7446
Locations:
New York, NY
Atlanta, GA
Los Angeles, CA
Plymouth, IN
Salem, OR
Dallas, TX
Tampa, FL

CPD NO.	DRAWN BY	ENG. APPROVAL	PART NO.
	CEK 8/28/2019		VSK-MHD

CLASS	SUB	DRAWING USAGE	CHECKED BY	DWG. NO.
81	01	CUSTOMER	BMC 8/29/2019	VSK-MHD

Site Name: NEW MILFORD CT
Cumulative Power Density

Operator	Operating Frequency	Number of Trans.	ERP Per Trans.	Total ERP	Distance to Target	Calculated Power Density	Maximum Permissible Exposure*	Fraction of MPE
	(MHz)		(watts)	(watts)	(feet)	(mW/cm^2)	(mW/cm^2)	(%)
VZW PCS	1970	1	1580	1579.79	133	0.0321	1.0	3.21%
VZW Cellular CDMA	869	1	500	500	133	0.0102	0.579333333	1.75%
VZW Cellular LTE	880	1	500	500	133	0.0102	0.586666667	1.73%
VZW AWS	2145	1	1605	1605.46	133	0.0326	1.0	3.26%
VZW 700	746	1	634	633.57	133	0.0129	0.497333333	2.59%
VZW CBRS	3550	1	50	50	133	0.0010	2.366666667	0.04%
Total Percentage of Maximum Permissible Exposure								12.60%

*Guidelines adopted by the FCC on August 1, 1996, 47 CFR Section 1.13101 based on NCRP Report 86, 1986 and generally on ANSI/IEEE C95.1-1992

MHz = Megahertz
mW/cm^2 = milliwatts per square centimeter
ERP = Effective Radiated Power

Absolute worst case maximum values used, including the following assumptions:
1. closest accessible point is distance from antenna to base of pole;
2. continuous transmission from all available channels at full power for indefinite time period; and,
3. all RF energy is assumed to be directed solely to the base of the pole

View Details

Google Maps Link

Town of New Milford Maps

Property Record Card

Hosted Downloadable Data

Property

Address	CANTERBURY RD
ID	35.4/37
Account	6769

Ownership

Name	CANTERBURY SCHOOL INC
Address	101 ASPETUCK AVE , NEW MILFORD CT 06776

Valuation

Total Assessment	$9,900,940
Land Value	$1,378,930

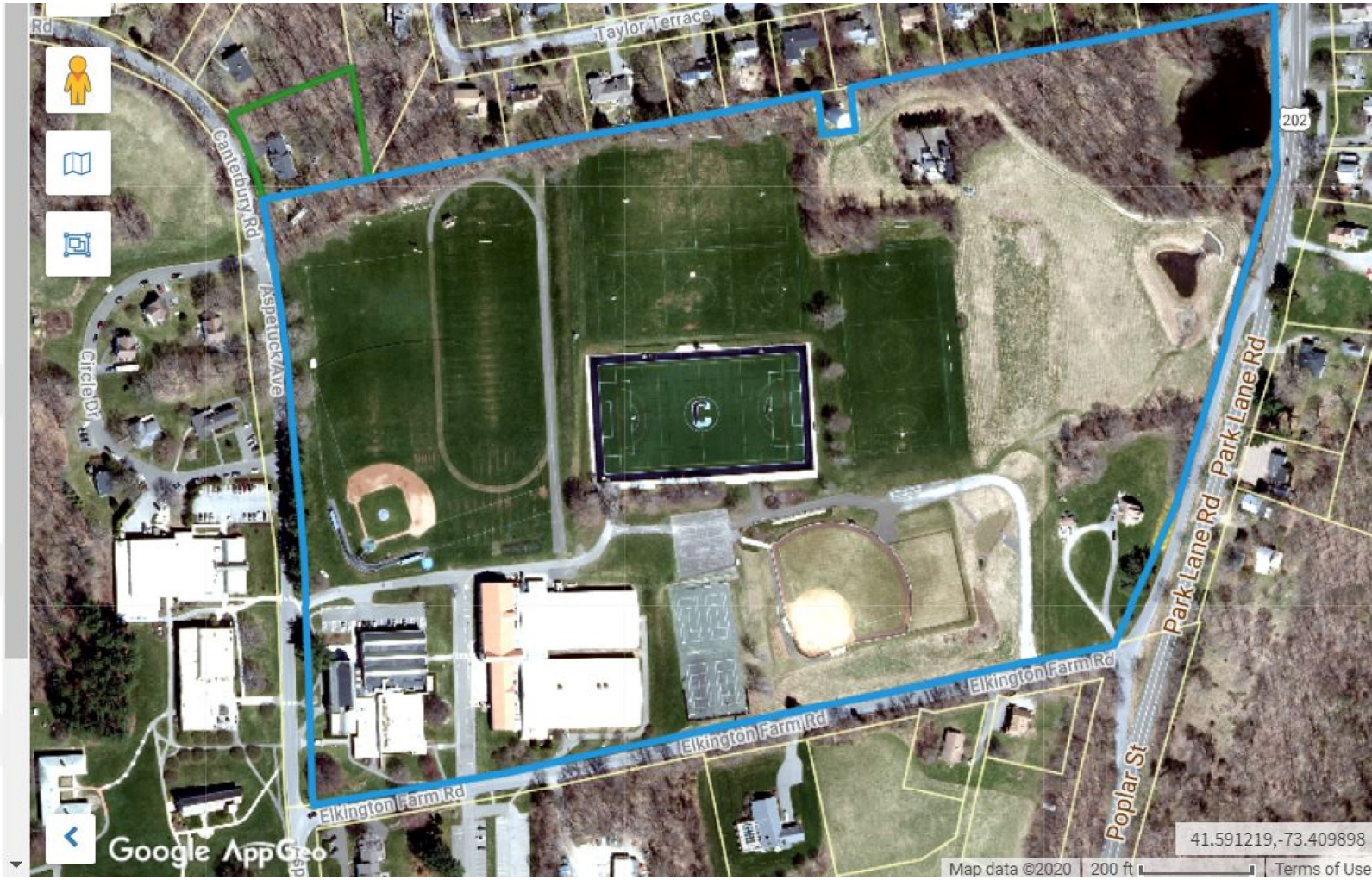

CANTERBURY RD

Location	CANTERBURY RD	**Mblu**	35/4 / 37/ /
Acct#	010997	**Owner**	CANTERBURY SCHOOL INC
Assessment	$9,900,940	**Appraisal**	$14,144,200
PID	6769	**Building Count**	4

Current Value

Appraisal					
Valuation Year	**Building**	**Extra Features**	**Outbuildings**	**Land**	**Total**
2015	$11,679,600	$283,300	$211,400	$1,969,900	$14,144,200
Assessment					
Valuation Year	**Building**	**Extra Features**	**Outbuildings**	**Land**	**Total**
2015	$8,175,720	$198,310	$147,980	$1,378,930	$9,900,940

Parcel Addreses

Additional Addresses
No Additional Addresses available for this parcel

Owner of Record

Owner	CANTERBURY SCHOOL INC	**Sale Price**	$0
Co-Owner		**Certificate**	
Address	101 ASPETUCK AVE NEW MILFORD, CT 06776	**Book & Page**	0000/0000
		Sale Date	

Ownership History

Ownership History				
Owner	**Sale Price**	**Certificate**	**Book & Page**	**Sale Date**
CANTERBURY SCHOOL INC	$0		0000/0000	

Building Information

Building 1 : Section 1

Year Built:	1925
Living Area:	34,613
Replacement Cost:	$3,981,874

Building Percent Good: 60

Replacement Cost Less Depreciation: $2,389,100

Building Attributes	
Field	**Description**
STYLE	Gymnasium
MODEL	Comm/Ind
Grade	B
Stories:	2.5
Occupancy	1.00
Exterior Wall 1	Stone/Masonry
Exterior Wall 2	Brick/Masonry
Roof Structure	Gable
Roof Cover	Slate
Interior Wall 1	Drywall/Sheet
Interior Wall 2	Plastered
Interior Floor 1	Hardwood
Interior Floor 2	Vinyl/Asphalt
Heating Fuel	Oil
Heating Type	Hot Water
AC Type	None
Struct Class	
Bldg Use	Pvt School Com
Total Rooms	
Total Bedrms	00
Total Baths	0
Usrfld 218	
Usrfld 219	
1st Floor Use:	904I
Heat/AC	NONE
Frame Type	MASONRY
Baths/Plumbing	AVERAGE
Ceiling/Wall	CEIL & WALLS
Rooms/Prtns	AVERAGE
Wall Height	22.00
% Comn Wall	0.00

Building Photo

(http://images.vgsi.com/photos/NewMilfordCTPhotos//\00\01\68

Building Layout

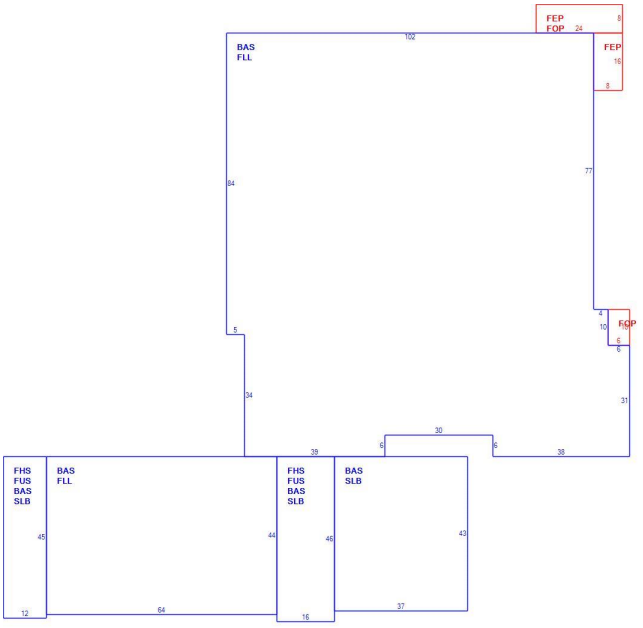

(ParcelSketch.ashx?pid=6769&bid=6920)

Building Sub-Areas (sq ft)			Legend
Code	**Description**	**Gross Area**	**Living Area**
BAS	First Floor	17,719	17,719
FLL	Finished Lower Level	14,852	14,852
FUS	Finished Upper Story	1,276	1,276
FHS	Finished Half Story	1,276	766
FEP	Enclosed Porch	320	0
FOP	Open Porch	252	0
SLB	Slab	2,867	0
		38,562	34,613

Building 2 : Section 1

Year Built: 1977

Building Photo

Living Area: 70,894
Replacement Cost: $9,095,796
Building Percent Good: 78
Replacement Cost Less Depreciation: $7,094,700

Building Attributes : Bldg 2 of 4	
Field	**Description**
STYLE	Gymnasium
MODEL	Comm/Ind
Grade	B+
Stories:	1
Occupancy	1.00
Exterior Wall 1	Pre-finsh Metl
Exterior Wall 2	Stone Veneer
Roof Structure	Gable
Roof Cover	Enamel Metal
Interior Wall 1	Minim/Masonry
Interior Wall 2	
Interior Floor 1	Vinyl/Asphalt
Interior Floor 2	
Heating Fuel	Oil
Heating Type	Forced Air-Duc
AC Type	Partial
Struct Class	
Bldg Use	Pvt School Com
Total Rooms	
Total Bedrms	00
Total Baths	0
Usrfld 218	
Usrfld 219	
1st Floor Use:	904I
Heat/AC	HEAT/AC SPLIT
Frame Type	STEEL
Baths/Plumbing	AVERAGE
Ceiling/Wall	CEIL & WALLS
Rooms/Prtns	AVERAGE
Wall Height	20.00
% Comn Wall	0.00

(http://images.vgsi.com/photos/NewMilfordCTPhotos//default.jpg

Building Layout

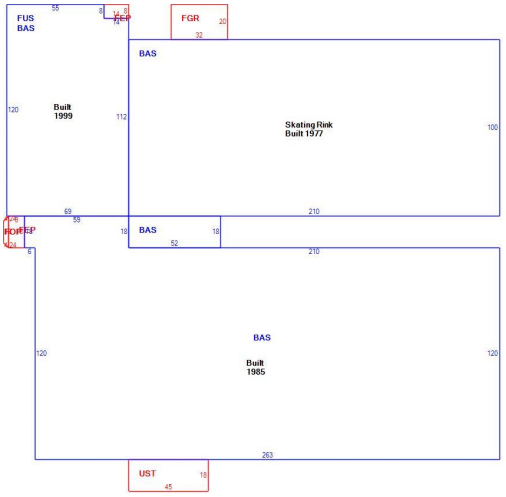

(ParcelSketch.ashx?pid=6769&bid=6922)

Building Sub-Areas (sq ft)			Legend
Code	**Description**	**Gross Area**	**Living Area**
BAS	First Floor	62,726	62,726
FUS	Finished Upper Story	8,168	8,168
FEP	Enclosed Porch	274	0
FGR	Garage	640	0
FOP	Open Porch	45	0
UST	Unfinished Utility Storage	810	0
		72,663	70,894

Building 3 : Section 1

Year Built: 2008
Living Area: 17,020

Replacement Cost: $2,174,816
Building Percent Good: 93
Replacement Cost Less Depreciation: $2,022,600

Building Attributes : Bldg 3 of 4	
Field	**Description**
STYLE	Auditorium
MODEL	Comm/Ind
Grade	B+
Stories:	1
Occupancy	1.00
Exterior Wall 1	Concr/Cinder
Exterior Wall 2	
Roof Structure	Gable
Roof Cover	Slate
Interior Wall 1	Minim/Masonry
Interior Wall 2	
Interior Floor 1	Concr Abv Grad
Interior Floor 2	Concr Abv Grad
Heating Fuel	Oil
Heating Type	Forced Air-Duc
AC Type	Partial
Struct Class	
Bldg Use	Pvt School Com
Total Rooms	1
Total Bedrms	
Total Baths	11
Usrfld 218	
Usrfld 219	
1st Floor Use:	
Heat/AC	HEAT/AC PKGS
Frame Type	STEEL
Baths/Plumbing	AVERAGE
Ceiling/Wall	CEIL & WALLS
Rooms/Prtns	AVERAGE
Wall Height	12.00
% Comn Wall	

Building Photo

(http://images.vgsi.com/photos/NewMilfordCTPhotos//default.jpg

Building Layout

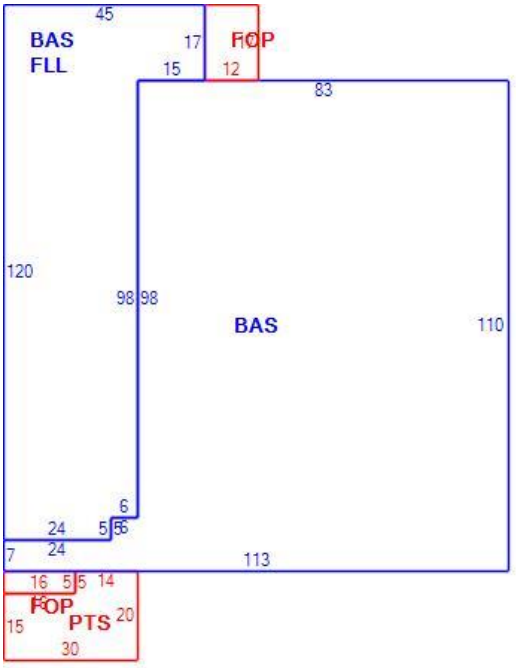

(ParcelSketch.ashx?pid=6769&bid=105410)

Building Sub-Areas (sq ft)			Legend
Code	**Description**	**Gross Area**	**Living Area**
BAS	First Floor	13,195	13,195
FLL	Finished Lower Level	3,825	3,825
FOP	Open Porch	284	0
PTS	Patio - Stone	520	0
		17,824	17,020

Building 4 : Section 1

Building Photo

Year Built:	1900
Living Area:	2,092
Replacement Cost:	$250,990
Building Percent Good:	69
Replacement Cost Less Depreciation:	$173,200

Building Attributes : Bldg 4 of 4	
Field	**Description**
Style	Colonial
Model	Residential
Grade	C
Stories	2
Occupancy	1
Exterior Wall 1	Clapboard
Exterior Wall 2	
Roof Structure	Gable
Roof Cover	Asphalt Shngl
Interior Wall 1	Plastered
Interior Wall 2	
Interior Flr 1	Pine/Soft Wood
Interior Flr 2	
Heat Fuel	Oil
Heat Type	Hot Water
AC Type	None
Total Bedrooms	3 Bedrooms
Full Bathrooms	2
Half Bathrooms	1
Total Xtra Fixtrs	
Total Rooms	6
Bath Style	Average
Kitchen Style	Average
Num Kitchens	
Whirlpool Tub	
Fireplaces	
Usrfld 104	
Fin Bsmt Area	
Usrfld 106	
Usrfld 107	
Bsmt Garages	
Fireplaces_1	
Usrfld 108	
Solar	

Building Photo

(http://images.vgsi.com/photos/NewMilfordCTPhotos//default.jpg

Building Layout

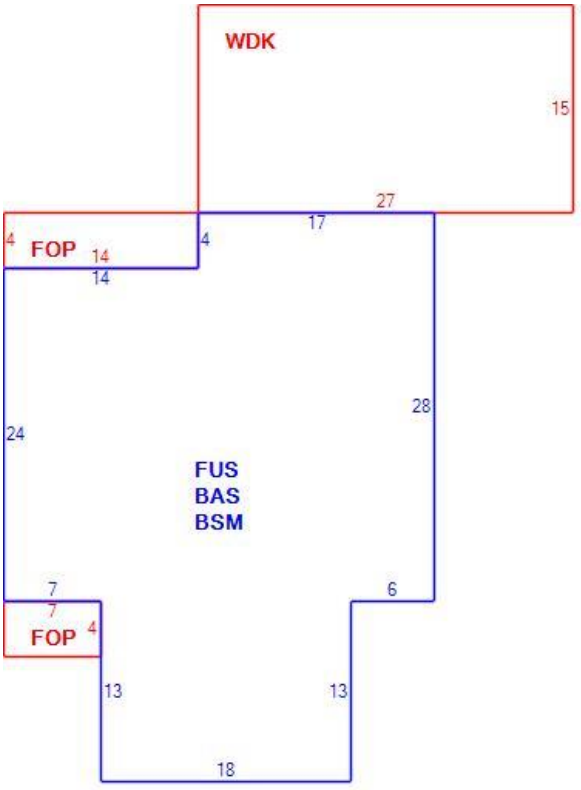

(ParcelSketch.ashx?pid=6769&bid=105411)

Building Sub-Areas (sq ft)			Legend
Code	**Description**	**Gross Area**	**Living Area**
BAS	First Floor	1,046	1,046
FUS	Finished Upper Story	1,046	1,046
BSM	Basement	1,046	0
FOP	Open Porch	84	0
WDK	Wood Deck	405	0
		3,627	2,092

Insp. Letter	
Multi-House	
Usrfld 300	
Usrfld 301	

Extra Features

Extra Features								Legend
Code	**Description**	**Sub Code**	**Sub Description**	**Size**	**Value**	**Assessed Value**	**Bldg #**	**Comment**
SPR	Sprinklers	WT	Wet	1875.00 S.F.	$1,900	$1,330	1	
A/C	Air Conditioning			7650.00 S.F.	$28,500	$19,950	3	
SPR	Sprinklers	WT	Wet	7650.00 S.F.	$12,100	$8,470	3	
ELV	Elevator	CM	Commercial	2.00 Units	$46,500	$32,550	3	
A/C	Air Conditioning			49762.00 S.F.	$155,300	$108,710	2	
ELV	Elevator	CM	Commercial	2.00 Units	$39,000	$27,300	2	

Parcel Information

Use Code 947
Description Pvt School Com
Deeded Acres 41.87

Land

Land Use

Use Code 947
Description Pvt School Com
Zone R40/B1
Neighborhood C110
Alt Land Appr No
Category

Land Line Valuation

Size (Acres) 41.87
Frontage 0
Depth 0
Assessed Value $1,378,930
Appraised Value $1,969,900

Outbuildings

Outbuildings	Legend
No Data for Outbuildings	

Valuation History

Appraisal					
Valuation Year	**Building**	**Extra Features**	**Outbuildings**	**Land**	**Total**
2018	$11,679,600	$283,300	$211,400	$1,969,900	$14,144,200
2014	$11,843,400	$287,300	$211,400	$1,903,600	$14,245,700

Assessment

Valuation Year	Building	Extra Features	Outbuildings	Land	Total
2018	$8,175,720	$198,310	$147,980	$1,378,930	$9,900,940
2014	$8,290,380	$201,110	$147,980	$1,332,520	$9,971,990

(c) 2016 Vision Government Solutions, Inc. All rights reserved.

VZW LOCATION CODE:	467154
VZW SITE NAME:	NEW MILFORD CT
PROJECT DESCRIPTION:	ANTENNA RELOCATION /RECONFIGURATION
TOWER TYPE:	150' MONOPOLE
SITE ADDRESS:	4 ELKINGTON RD (NEAR ASPETUCK AVE) NEW MILFORD, CT 06776 (LITCHFIELD COUNTY)
JURISDICTION:	TOWN OF NEW MILFORD
PRESENT OCCUPANCY TYPE:	TELECOMMUNICATIONS FACILITY
CURRENT ZONING:	R-40/B-1
ACCT #:	010997

PROJECT INFORMATION

*LATITUDE N 41° 35' 27.10"
*LONGITUDE W 73° 24' 30.96"

*GROUND ELEVATION (AMSL) = 482' ±

*INFORMATION PROVIDED BY ATC

SITE COORDINATES

verizon

20 ALEXANDER DR, 2ND FLOOR
WALLINGFORD, CT 06492

VZW LOCATION CODE: 467154
VZW SITE NAME: NEW MILFORD CT

4 ELKINGTON FARM RD (NEAR ASPETUCK AVE)
NEW MILFORD, CT 06776
(LITCHFIELD COUNTY)

PLANS PREPARED BY:

TOWER ENGINEERING PROFESSIONALS
326 TRYON ROAD
RALEIGH, NC 27603-3530
OFFICE: (919) 661-6351
www.tepgroup.net

REV	DATE	ISSUED FOR:
I	03-09-20	100% CONSTRUCTION
O	01-28-20	100% CONSTRUCTION
A	11-26-19	PRELIMINARY

DRAWN BY: JLB CHECKED BY: DEL

SEAL:

STATE OF CONNECTICUT
GRAHAM M. ANDRES
29538
LICENSED
PROFESSIONAL ENGINEER

March 09, 2020

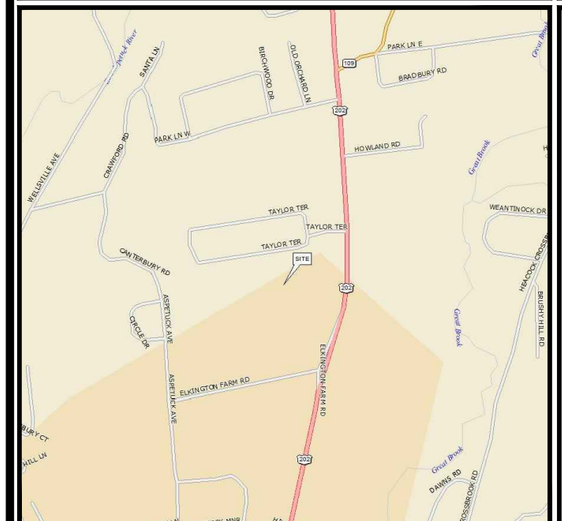

LOCATION MAP

FROM HEARFORD TAKE I-84 WEST TO EXIT 9. FOLLOW RT 25 NORTH TO RT 7/202. TURN RIGHT AND FOLLOW TO SPLIT OF RT 7/202. TURN RIGHT ONTO BRIDGE TO FOLLOW RT 202. FOLLOW RT 202 PAST HOSPITAL AND POLICE STATION. ELKINGTON FARM RD IS PAST POLICE STATION, TURN LEFT ONTO IT AND FOLLOW STRAIGHT TO ACCESS ROAD ON LEFT.

DRIVING DIRECTIONS

LESSEE:
NAME: VERIZON WIRELESS
ADDRESS: 20 ALEXANDER DR, 2ND FLOOR
CITY, STATE, ZIP: WALLINGFORD, CT 06492

TOWER MANAGER:
NAME: AMERICAN TOWER CORPORATION
ADDRESS: 19100 VON KARMAN AVE, STE 200
CITY, STATE, ZIP: IRVINE, CA 92612
CONTACT: AARON DIAL
PHONE: (919) 466-5385
SITE NAME: NEW MILFORD CT 2
SITE NUMBER: 302523

CIVIL ENGINEER:
NAME: TOWER ENGINEERING PROFESSIONALS
ADDRESS: 326 TRYON ROAD
CITY, STATE, ZIP: RALEIGH, NC 27603
CONTACT: GRAHAM M. ANDRES, P.E.
PHONE: (919) 661-6351

PROPERTY OWNER:
NAME: CANTERBURY SCHOOL INC
ADDRESS: 101 ASPETUCK AVE
CITY, STATE, ZIP: NEW MILFORD, CT 06776

CONTACT INFORMATION

ALL WORK AND MATERIALS SHALL BE PERFORMED AND INSTALLED IN ACCORDANCE WITH THE CURRENT EDITIONS OF THE FOLLOWING CODES AS ADOPTED BY THE LOCAL GOVERNING AUTHORITIES. NOTHING IN THESE PLANS IS TO BE CONSTRUED TO PERMIT WORK NOT CONFORMING TO THE LATEST EDITIONS OF THE FOLLOWING:

1. CONNECTICUT STATE BUILDING CODE (2018 EDITION)
2. INTERNATIONAL CODE COUNCIL
3. ANSI/TIA-222-G-2-2009
4. LOCAL BUILDING CODE
5. CITY/COUNTY ORDINANCES

CODE COMPLIANCE

- REMOVE (12) RRHs
- INSTALL MOUNT MODIFICATIONS
- INSTALL (3) ANTENNAS
- INSTALL (9) RRHs
- INSTALL (3) DIPLEXERS

SCOPE OF WORK

SHEET	DESCRIPTION	REV
T1	TITLE SHEET	1
N1	PROJECT NOTES	1
C1	SITE PLAN	1
C2	COMPOUND LAYOUT	1
C3	TOWER ELEVATION	1
C4	ANTENNA LAYOUT	1
C5	FINAL ANTENNA SCHEDULE	1
C6	EQUIPMENT DETAILS	1

INDEX OF SHEETS

SHEET NUMBER: T-1

REVISION: 1

TEP#: 94011.205895

PROJECT NOTES:

1. ALL REFERENCES TO THE OWNER IN THESE DOCUMENTS SHALL BE CONSIDERED VERIZON WIRELESS OR ITS DESIGNATED REPRESENTATIVE.
2. ALL WORK PRESENTED ON THESE DRAWINGS MUST BE COMPLETED BY THE CONTRACTOR UNLESS NOTED OTHERWISE. THE CONTRACTOR MUST HAVE CONSIDERABLE EXPERIENCE IN PERFORMANCE OF WORK SIMILAR TO THAT DESCRIBED HEREIN. BY ACCEPTANCE OF THIS ASSIGNMENT, THE CONTRACTOR IS ATTESTING THAT HE DOES HAVE SUFFICIENT EXPERIENCE AND ABILITY, THAT HE IS KNOWLEDGEABLE OF THE WORK TO BE PERFORMED AND THAT HE IS PROPERLY LICENSED AND PROPERLY REGISTERED TO DO THIS WORK IN THE STATE OF CONNECTICUT.
3. WORK SHALL BE COMPLETED IN ACCORDANCE WITH THE 2018 CONNECTICUT STATE BUILDING CODE.
4. UNLESS SHOWN OR NOTED OTHERWISE ON THE CONTRACT DRAWINGS, OR IN THE SPECIFICATIONS, THE FOLLOWING NOTES SHALL APPLY TO THE MATERIALS LISTED HEREIN, AND TO THE PROCEDURES TO BE USED ON THIS PROJECT.
5. ALL HARDWARE ASSEMBLY MANUFACTURER'S INSTRUCTIONS SHALL BE FOLLOWED EXACTLY AND SHALL SUPERSEDE ANY CONFLICTING NOTES ENCLOSED HEREIN.
6. IT IS THE CONTRACTOR'S SOLE RESPONSIBILITY TO DETERMINE ERECTION PROCEDURE AND SEQUENCE TO INSURE THE SAFETY OF THE STRUCTURE AND IT'S COMPONENT PARTS DURING ERECTION AND/OR FIELD MODIFICATIONS. THIS INCLUDES, BUT IS NOT LIMITED TO, THE ADDITION OF TEMPORARY BRACING, GUYS OR TIE DOWNS THAT MAY BE NECESSARY. SUCH MATERIAL SHALL BE REMOVED AND SHALL REMAIN THE PROPERTY OF THE CONTRACTOR AFTER THE COMPLETION OF THE PROJECT.
7. ALL DIMENSIONS, ELEVATIONS, AND EXISTING CONDITIONS SHOWN ON THE DRAWINGS SHALL BE FIELD VERIFIED BY THE CONTRACTOR PRIOR TO BEGINNING ANY MATERIALS ORDERING, FABRICATION OR CONSTRUCTION WORK ON THIS PROJECT. CONTRACTOR SHALL NOT SCALE CONTRACT DRAWINGS IN LIEU OF FIELD VERIFICATIONS. ANY DISCREPANCIES SHALL BE IMMEDIATELY BROUGHT TO THE ATTENTION OF THE OWNER AND THE OWNER'S ENGINEER. THE DISCREPANCIES MUST BE RESOLVED BEFORE THE CONTRACTOR IS TO PROCEED WITH THE WORK. THE CONTRACT DOCUMENTS DO NOT INDICATE THE METHOD OF CONSTRUCTION. THE CONTRACTOR SHALL SUPERVISE AND DIRECT THE WORK AND SHALL BE SOLELY RESPONSIBLE FOR ALL CONSTRUCTION MEANS, METHODS, TECHNIQUES, SEQUENCES, AND PROCEDURES. OBSERVATION VISITS TO THE SITE BY THE OWNER AND/OR THE ENGINEER SHALL NOT INCLUDE INSPECTION OF THE PROTECTIVE MEASURES OR THE PROCEDURES.
8. ALL MATERIALS AND EQUIPMENT FURNISHED SHALL BE NEW AND OF GOOD QUALITY, FREE FROM FAULTS AND DEFECTS AND IN CONFORMANCE WITH THE CONTRACT DOCUMENTS. ANY AND ALL SUBSTITUTIONS MUST BE PROPERLY APPROVED AND AUTHORIZED IN WRITING BY THE OWNER AND ENGINEER PRIOR TO INSTALLATION. THE CONTRACTOR SHALL FURNISH SATISFACTORY EVIDENCE AS TO THE KIND AND QUALITY OF THE MATERIALS AND EQUIPMENT BEING SUBSTITUTED.
9. THE CONTRACTOR SHALL BE RESPONSIBLE FOR INITIATING, MAINTAINING, AND SUPERVISING ALL SAFETY PRECAUTIONS AND PROGRAMS IN CONNECTION WITH THE WORK. THE CONTRACTOR IS RESPONSIBLE FOR ENSURING THAT THIS PROJECT AND RELATED WORK COMPLIES WITH ALL APPLICABLE LOCAL, STATE, AND FEDERAL SAFETY CODES AND REGULATIONS GOVERNING THIS WORK.
10. ACCESS TO THE PROPOSED WORK SITE MAY BE RESTRICTED. THE CONTRACTOR SHALL COORDINATE INTENDED CONSTRUCTION ACTIVITY, INCLUDING WORK SCHEDULE AND MATERIALS ACCESS, WITH THE RESIDENT LEASING AGENT FOR APPROVAL.
11. ALL PERMITS THAT MUST BE OBTAINED ARE THE RESPONSIBILITY OF THE CONTRACTOR. THE CONTRACTOR WILL BE RESPONSIBLE FOR ABIDING BY ALL CONDITIONS AND REQUIREMENTS OF THE PERMITS.
12. IF APPLICABLE, ALL CONCRETE WORK SHALL COMPLY TO LOCAL CODES AND THE ACI 318–11, "BUILDING REQUIREMENTS FOR STRUCTURAL CONCRETE".
13. ALL TOWER DIMENSIONS SHALL BE VERIFIED WITH THE PLANS (LATEST REVISION) PRIOR TO COMMENCING CONSTRUCTION. NOTIFY THE ENGINEER IMMEDIATELY IF ANY DISCREPANCIES ARE DISCOVERED. THE OWNER SHALL HAVE A SET OF APPROVED PLANS AVAILABLE AT THE SITE AT ALL TIMES WHILE WORK IS BEING PERFORMED. A DESIGNATED RESPONSIBLE EMPLOYEE SHALL BE AVAILABLE FOR CONTACT BY GOVERNING AGENCY INSPECTORS.
14. ALL TOWER MODIFICATION WORK SHALL BE IN ACCORDANCE WITH TIA–1019–A STANDARD FOR INSTALLATION, ALTERATION AND MAINTENANCE OF ANTENNA SUPPORTING STRUCTURES AND ANTENNAS.

PLANS PREPARED FOR:

verizon

20 ALEXANDER DR, 2ND FLOOR
WALLINGFORD, CT 06492

PROJECT INFORMATION:

VZW LOCATION CODE: 467154
VZW SITE NAME: NEW MILFORD CT

44 ELKINGTON FARM RD (NEAR ASPETUCK AVE)
NEW MILFORD, CT 06776
(LITCHFIELD COUNTY)

PLANS PREPARED BY:

TOWER ENGINEERING PROFESSIONALS
326 TRYON ROAD
RALEIGH, NC 27603-3530
OFFICE: (919) 661-6351
www.tepgroup.net

SEAL:

STATE OF CONNECTICUT
GRANT M. ANDRES
29538
LICENSED
PROFESSIONAL ENGINEER

March 09, 2020

REV	DATE	ISSUED FOR:
1	03-09-20	100% CONSTRUCTION
0	01-28-20	100% CONSTRUCTION
A	11-26-19	PRELIMINARY

DRAWN BY: JLB | CHECKED BY: DEL

SHEET TITLE:

PROJECT NOTES

SHEET NUMBER: **N-1**

REVISION: 1

TEP#: 94011.205895

NOTES:

1. SITE PLAN DETAILS SHOWN BELOW PROVIDED BY LOCAL GIS AND ATC RECORDS.
2. ALL GROUNDWORK TO BE PERFORMED WITHIN EXISTING VERIZON LEASE AREA. NO PROPOSED ADDITIONS TO EXISTING SITE FOOTPRINT.
3. SETBACK DIMENSIONS ARE TAKEN FROM CENTER OF ATC TOWER TO ADJACENT PROPERTY LINE.

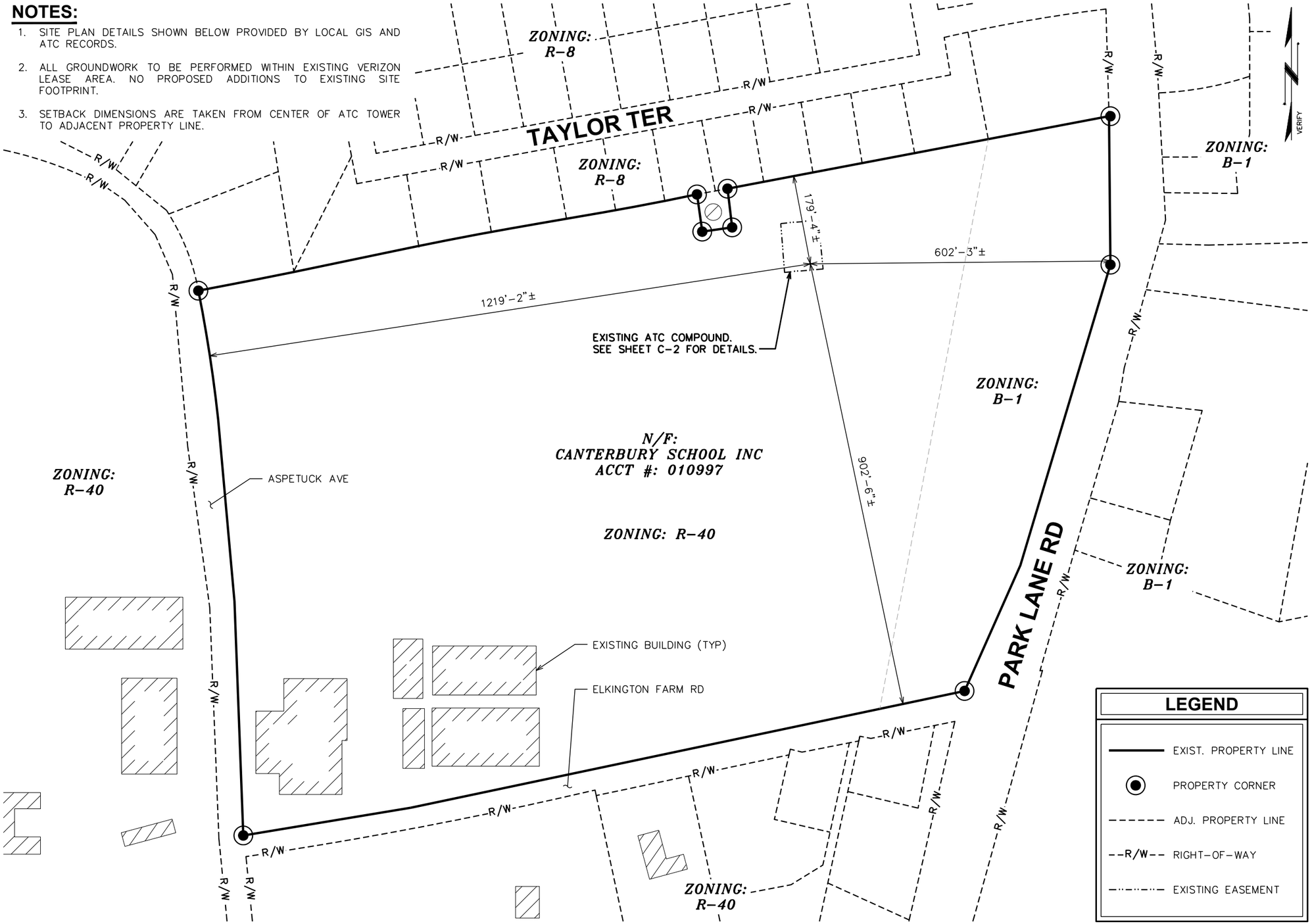

LEGEND

- EXIST. PROPERTY LINE
- PROPERTY CORNER
- ADJ. PROPERTY LINE
- R/W — RIGHT-OF-WAY
- EXISTING EASEMENT

SITE PLAN

SCALE: 1" = 200'

0 200 400
SCALE IN FEET

PLANS PREPARED FOR:

verizon

20 ALEXANDER DR, 2ND FLOOR
WALLINGFORD, CT 06492

PROJECT INFORMATION:

VZW LOCATION CODE: 467154
VZW SITE NAME: NEW MILFORD CT

44 ELKINGTON FARM RD (NEAR ASPETUCK AVE)
NEW MILFORD, CT 06776
(LITCHFIELD COUNTY)

PLANS PREPARED BY:

TOWER ENGINEERING PROFESSIONALS
326 TRYON ROAD
RALEIGH, NC 27603-3530
OFFICE: (919) 661-6351
www.tepgroup.net

SEAL:

STATE OF CONNECTICUT · GRAHAM MCANDREW · 29538 · LICENSED · PROFESSIONAL ENGINEER

March 09, 2020

REV	DATE	ISSUED FOR:
1	03-09-20	100% CONSTRUCTION
0	01-28-20	100% CONSTRUCTION
A	11-26-19	PRELIMINARY

DRAWN BY: JLB | CHECKED BY: DEL

SHEET TITLE:

SITE PLAN

SHEET NUMBER: **C-1**

REVISION: 1

TEP#: 94011.205895

NOTES:

1. COMPOUND DETAIL SHOWN BELOW TAKEN FROM INFORMATION PROVIDED BY ATC. CONTRACTOR TO VERIFY ALL EXISTING INFORMATION IS AS INDICATED ON SITE PLAN. CONTRACTOR IS TO ESTABLISH THE EXISTENCE AND LOCATION OF ALL EXISTING OVERHEAD AND UNDERGROUND UTILITIES. IMMEDIATELY NOTIFY THE CONSTRUCTION MANAGER OF ANY DISCREPANCIES.

2. ALL GROUNDWORK TO BE PERFORMED WITHIN EXISTING VERIZON GROUND SPACE. NO PROPOSED ADDITIONS TO EXISTING SITE FOOTPRINT.

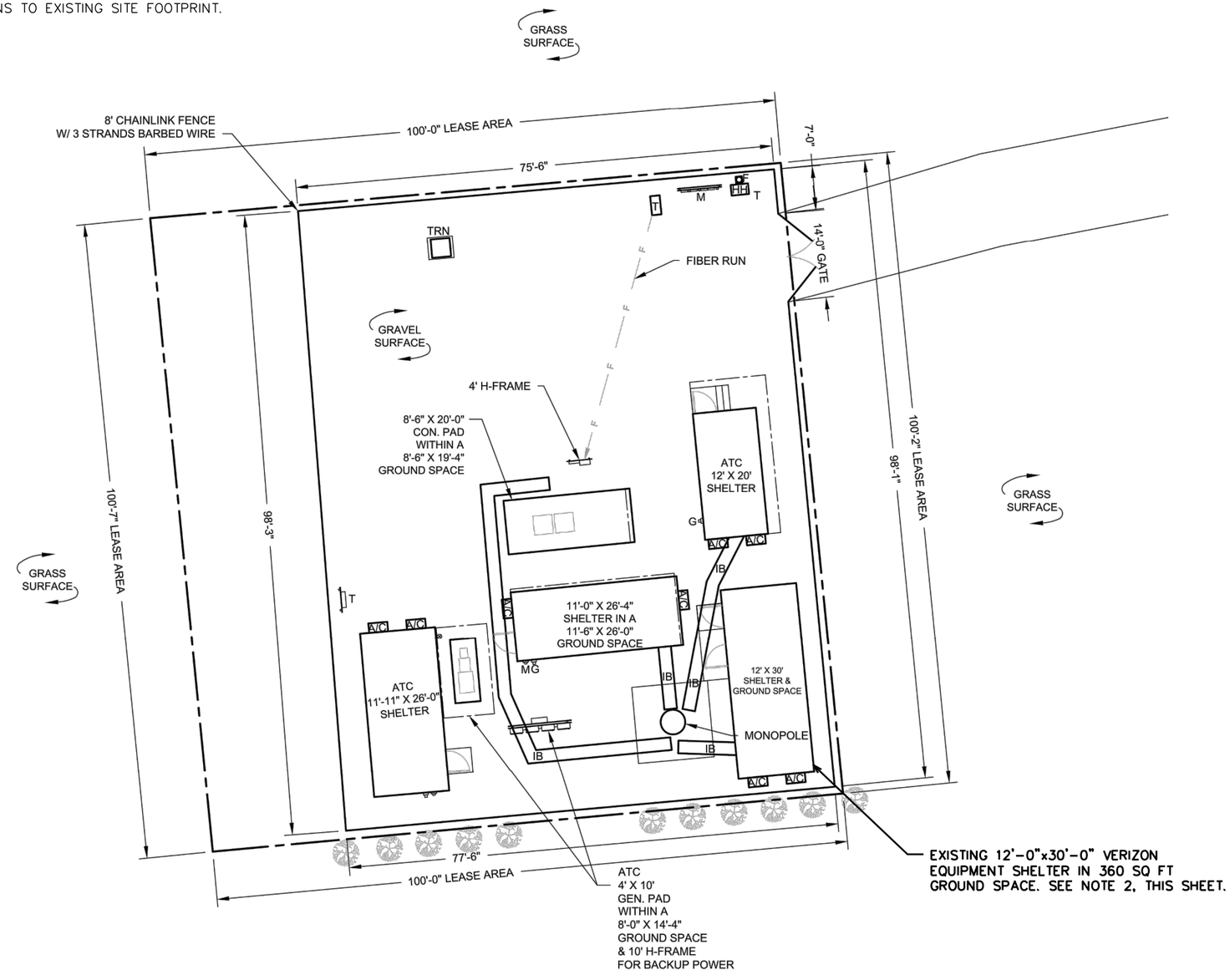

COMPOUND DETAIL

SCALE: N.T.S.

PLANS PREPARED FOR:

verizon

20 ALEXANDER DR, 2ND FLOOR
WALLINGFORD, CT 06492

PROJECT INFORMATION:

VZW LOCATION CODE: 467154
VZW SITE NAME: NEW MILFORD CT

44 ELKINGTON FARM RD (NEAR ASPETUCK AVE)
NEW MILFORD, CT 06776
(LITCHFIELD COUNTY)

PLANS PREPARED BY:

TOWER ENGINEERING PROFESSIONALS
326 TRYON ROAD
RALEIGH, NC 27603-3530
OFFICE: (919) 661-6351
www.tepgroup.net

SEAL:

STATE OF CONNECTICUT · GRAHAM M. ANDRES · 29538 · LICENSED · PROFESSIONAL ENGINEER

March 09, 2020

REV	DATE	ISSUED FOR:
1	03-09-20	100% CONSTRUCTION
0	01-28-20	100% CONSTRUCTION
A	11-26-19	PRELIMINARY

DRAWN BY: JLB | CHECKED BY: DEL

SHEET TITLE:

COMPOUND DETAIL

SHEET NUMBER: **C-2**

REVISION: 1

TEP#: 94011.205895

NOTE:

TOWER ELEVATION IS FOR SCHEMATIC PURPOSES ONLY. TEP DID NOT CONFIRM EXISTING SITE CONDITIONS INCLUDING, BUT NOT LIMITED TO, ANTENNA HEIGHTS, ANTENNA AZIMUTHS, AND MOUNT CONFIGURATIONS.

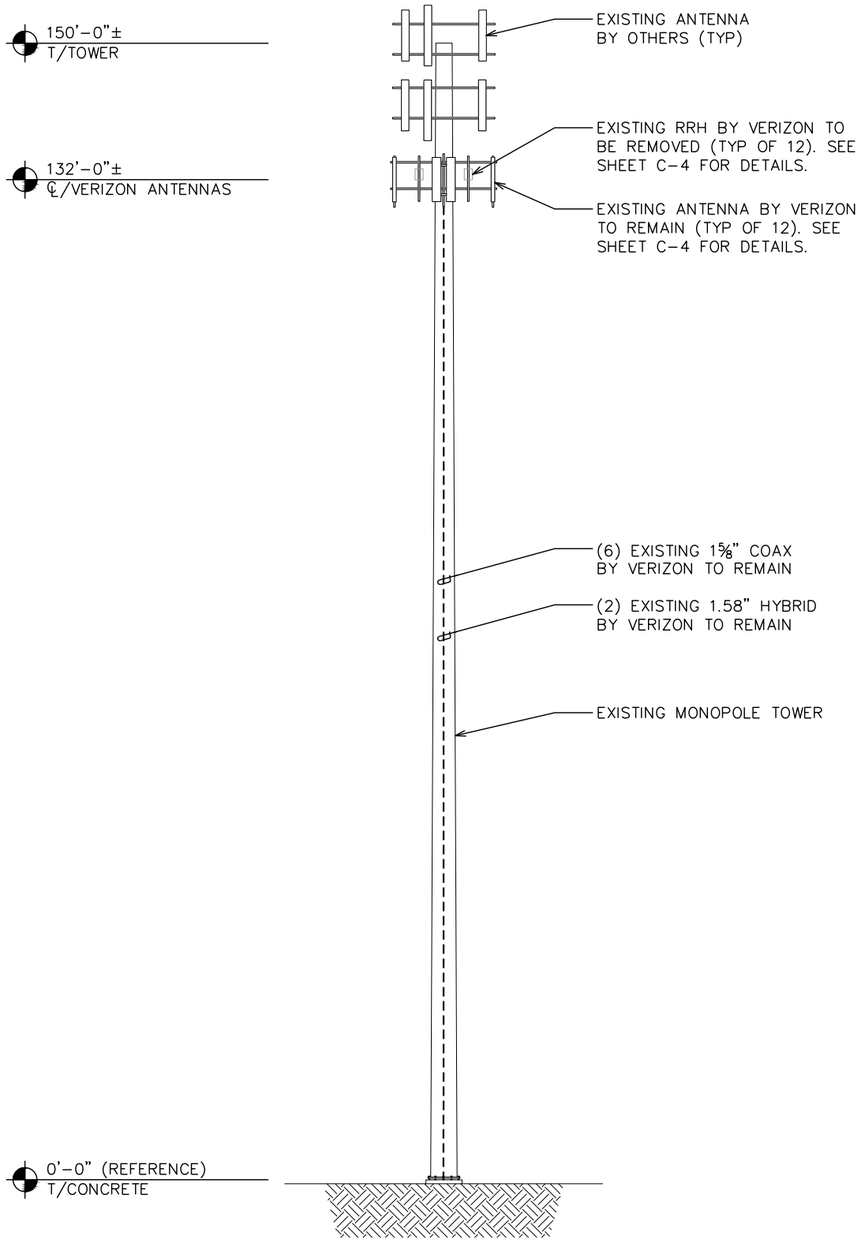

EXISTING TOWER ELEVATION

SCALE: 1" = 20'

0 20 40
SCALE IN FEET

NOTE:

TOWER ELEVATION IS FOR SCHEMATIC PURPOSES ONLY. TEP DID NOT CONFIRM EXISTING SITE CONDITIONS INCLUDING, BUT NOT LIMITED TO, ANTENNA HEIGHTS, ANTENNA AZIMUTHS, AND MOUNT CONFIGURATIONS.

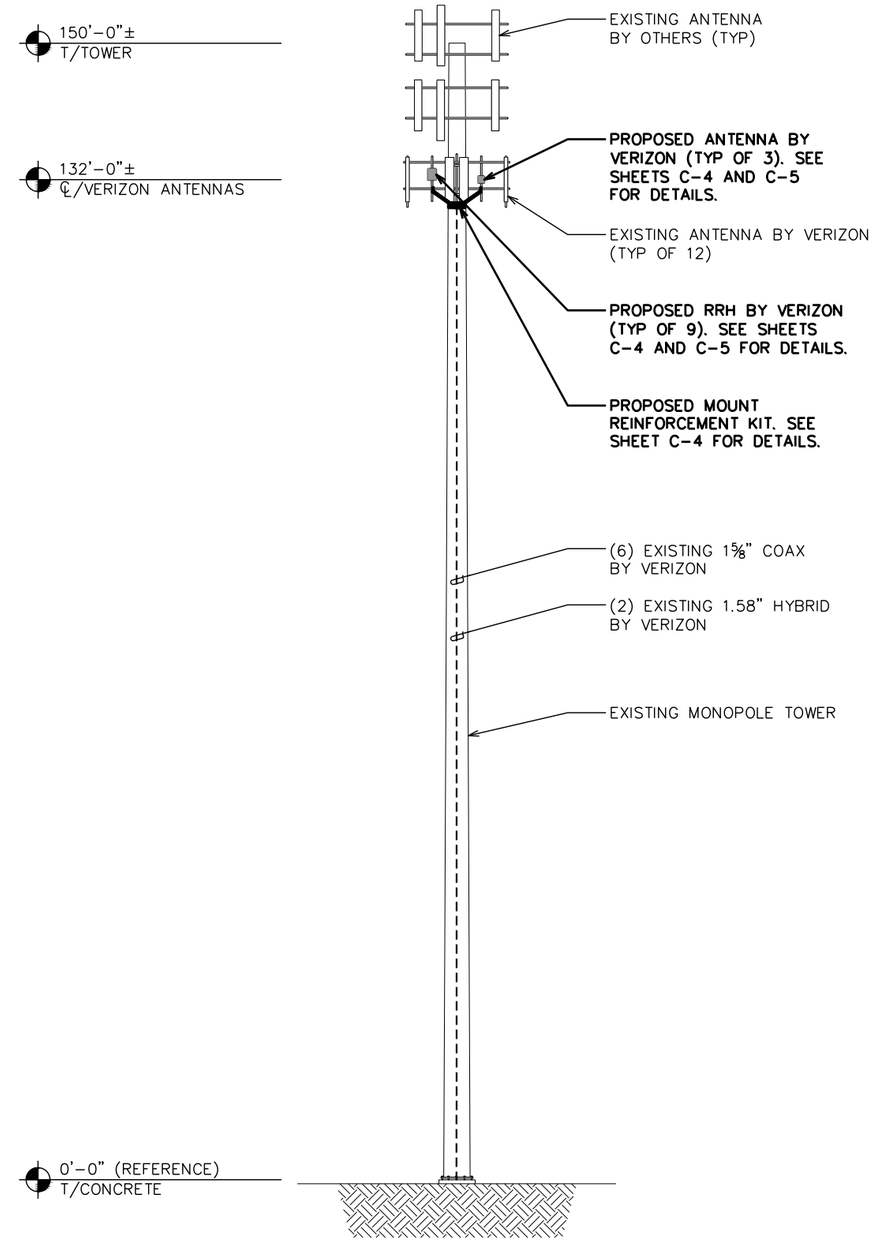

PROPOSED TOWER ELEVATION

SCALE: 1" = 20'

0 20 40
SCALE IN FEET

PLANS PREPARED FOR:

verizon

20 ALEXANDER DR, 2ND FLOOR
WALLINGFORD, CT 06492

PROJECT INFORMATION:

VZW LOCATION CODE: 467154
VZW SITE NAME: NEW MILFORD CT

44 ELKINGTON FARM RD (NEAR ASPETUCK AVE)
NEW MILFORD, CT 06776
(LITCHFIELD COUNTY)

PLANS PREPARED BY:

TOWER ENGINEERING PROFESSIONALS
326 TRYON ROAD
RALEIGH, NC 27603-3530
OFFICE: (919) 661-6351
www.teegroup.net

SEAL:

March 09, 2020

REV	DATE	ISSUED FOR:
1	03-09-20	100% CONSTRUCTION
0	01-28-20	100% CONSTRUCTION
A	11-26-19	PRELIMINARY

DRAWN BY: JLB | CHECKED BY: DEL

SHEET TITLE:

TOWER ELEVATION

SHEET NUMBER: **C-3**

REVISION: 1

TEP#: 94011.205895

NOTE:

TEP HAS NOT VERIFIED ANY EXISTING ANTENNA CONFIGURATION OR MOUNT CONFIGURATION. CONTRACTOR TO VERIFY MOUNT CONFIGURATION HAS SUFFICIENT SPACE FOR PROPOSED LESSEE EQUIPMENT (I.E. CLEARANCES, MOUNT PIPE OF SUFFICIENT LENGTH, ETC.). TEP DID NOT ANALYZE ANTENNA MOUNT TO DETERMINE ADEQUATE STRUCTURAL CAPACITY FOR ANY LESSEE LOADING.

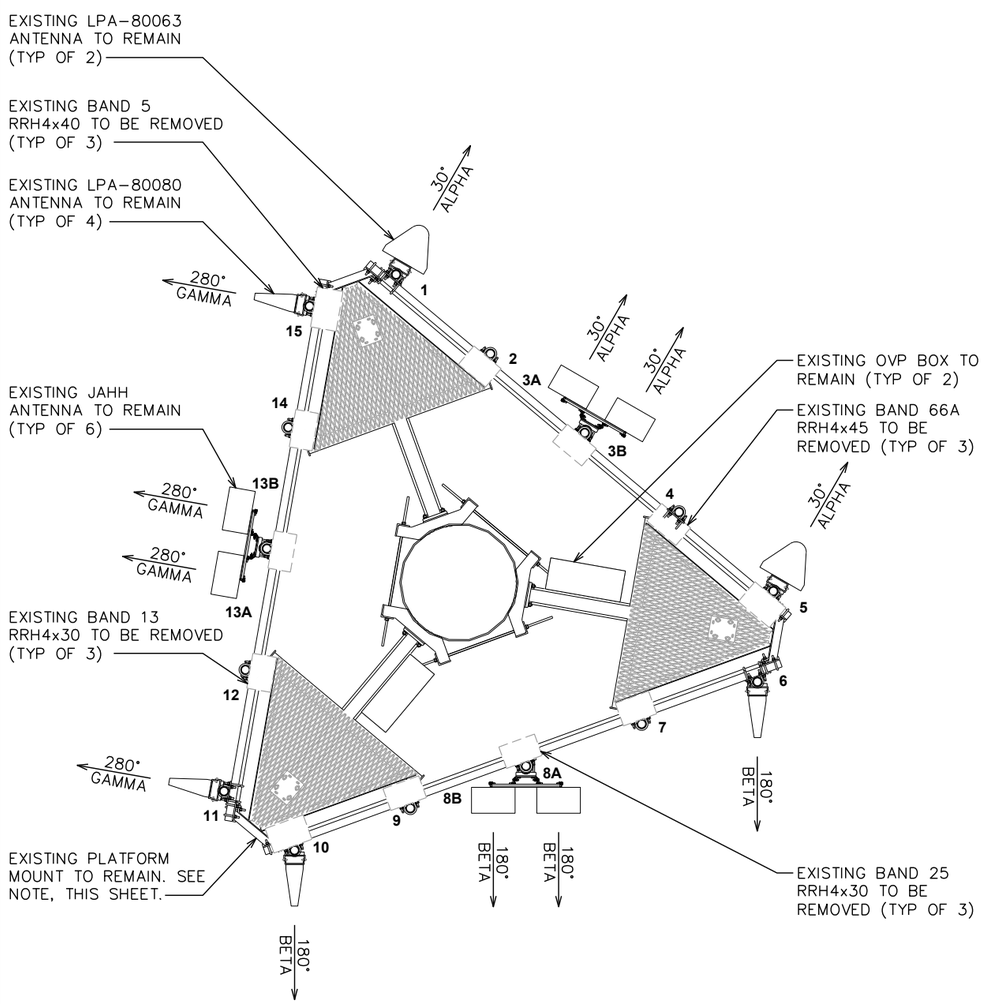

EXISTING ANTENNA PLAN

SCALE: ¼" = 1'-0"

0 4 8
SCALE IN FEET

NOTES:

1. TEP HAS NOT VERIFIED ANY EXISTING ANTENNA CONFIGURATION OR MOUNT CONFIGURATION. CONTRACTOR TO VERIFY MOUNT CONFIGURATION HAS SUFFICIENT SPACE FOR PROPOSED LESSEE EQUIPMENT (I.E. CLEARANCES, MOUNT PIPE OF SUFFICIENT LENGTH, ETC.). TEP DID NOT ANALYZE ANTENNA MOUNT TO DETERMINE ADEQUATE STRUCTURAL CAPACITY FOR ANY LESSEE LOADING.
2. CONTRACTOR TO VERIFY PROPOSED LOADING WITH TOWER STRUCTURAL ANALYSIS PRIOR TO CONSTRUCTION.
3. EXISTING MOUNT DOES NOT HAVE SUFFICIENT STRUCTURAL CAPACITY AND MUST BE MODIFIED. SEE CONTINGENTLY PASSING ANTENNA MOUNT ANALYSIS REPORT BY AMERICAN TOWER CORPORATION, DATED JANUARY 17, 2020 FOR DETAILS.

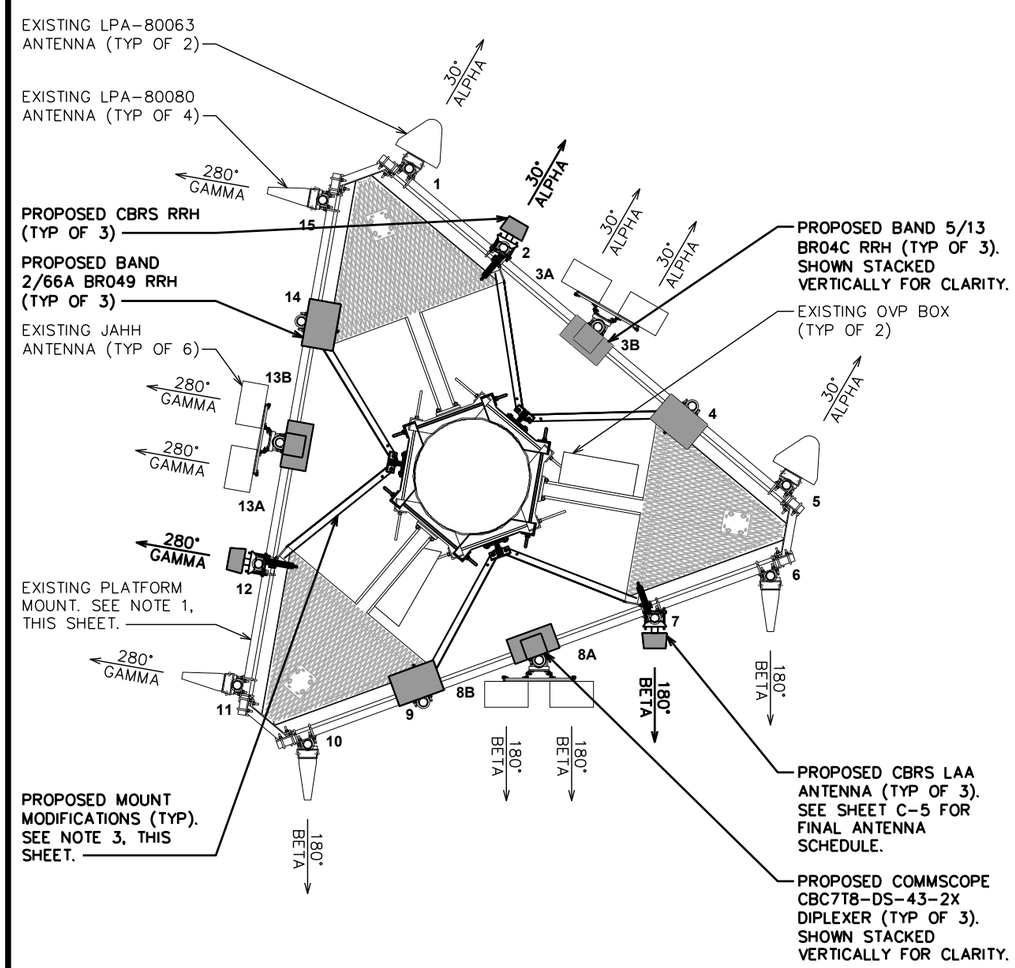

PROPOSED ANTENNA PLAN

SCALE: ¼" = 1'-0"

0 4 8
SCALE IN FEET

PLANS PREPARED FOR:

verizon

20 ALEXANDER DR, 2ND FLOOR
WALLINGFORD, CT 06492

PROJECT INFORMATION:

VZW LOCATION CODE: 467154
VZW SITE NAME: NEW MILFORD CT

44 ELKINGTON FARM RD (NEAR ASPETUCK AVE)
NEW MILFORD, CT 06776
(LITCHFIELD COUNTY)

PLANS PREPARED BY:

TOWER ENGINEERING PROFESSIONALS
326 TRYON ROAD
RALEIGH, NC 27603-3530
OFFICE: (919) 661-6351
www.tepgroup.net

SEAL:

STATE OF CONNECTICUT · GRAHAM M. ANDRES · 29538 · LICENSED · PROFESSIONAL ENGINEER

March 09, 2020

REV	DATE	ISSUED FOR:
1	03-09-20	100% CONSTRUCTION
0	01-28-20	100% CONSTRUCTION
A	11-26-19	PRELIMINARY

DRAWN BY: JLB | CHECKED BY: DEL

SHEET TITLE:

ANTENNA LAYOUT

SHEET NUMBER: **C-4**

REVISION: 1

TEP#: 94011.205895

NOTES:

1. CONTRACTOR TO REFERENCE VERIZON ISSUED RFDS AND GIVE PRECEDENCE TO INFORMATION PROVIDED IN RFDS OVER INFORMATION PROVIDED IN THIS TABLE.
2. VERIFY LOADING WITH STRUCTURAL ANALYSIS PRIOR TO CONSTRUCTION.
3. IF STRUCTURAL ANALYSIS AND RFDS DO NOT MATCH CONTRACTOR IS TO CONTACT AMERICAN TOWER CORPORATION IMMEDIATELY.

PROPOSED EQUIPMENT IN BOLD

FINAL ANTENNA/FEEDLINE SCHEDULE

SECTOR	POS.	MANUFACTURER MODEL #	MOUNTING HEIGHT	CABLE SIZE	AZIMUTH (TN)	**CABLE LENGTH	OVP/RRH/TMA/DIPLEXER [MODEL #]
ALPHA	1	ANTEL LPA-80063/6CF	℄ @ 132'-0"±		30°		(1) RFS OVP BOX [DB-T1-6Z-8AB-0Z] **(1) SAMSUNG RRH [B2/66A RRH-BR049]** **(1) SAMSUNG RRH [B5/13 RRH-BR04C]** **(1) SAMSUNG RRH [OUTDOOR CBRS 20W RRH]** **(1) COMMSCOPE DIPLEXER [CBC78T-DS-43-2X]**
ALPHA	2	**SAMSUNG OUTDOOR CBRS LAA 1W RRH-CLIP ON ANTENNA**	**℄ @ 132'-0"±**		**30°**		
ALPHA	3A	COMMSCOPE JAHH-65B-R3B	℄ @ 132'-0"±		30°		
ALPHA	3B	COMMSCOPE JAHH-65B-R3B	℄ @ 132'-0"±		30°		
ALPHA	4	–	–		–		
ALPHA	5	ANTEL LPA-80063/6CF	℄ @ 132'-0"±		30°		
BETA	6	ANTEL LPA-80080/6CF	℄ @ 132'-0"±		180°		(1) RFS OVP BOX [DB-T1-6Z-8AB-0Z] **(1) SAMSUNG RRH [B2/66A RRH-BR049]** **(1) SAMSUNG RRH [B5/13 RRH-BR04C]** **(1) SAMSUNG RRH [OUTDOOR CBRS 20W RRH]** **(1) COMMSCOPE DIPLEXER [CBC78T-DS-43-2X]**
BETA	7	**SAMSUNG OUTDOOR CBRS LAA 1W RRH-CLIP ON ANTENNA**	**℄ @ 132'-0"±**	(6) 1⅝" COAX (2) 1.58" HYBRID ***(6) 1x2 HYBRID**	**180°**	**180°±**	
BETA	8A	COMMSCOPE JAHH-65B-R3B	℄ @ 132'-0"±		180°		
BETA	8B	COMMSCOPE JAHH-65B-R3B	℄ @ 132'-0"±		180°		
BETA	9	–	–		–		
BETA	10	ANTEL LPA-80080/6CF	℄ @ 132'-0"±		180°		
GAMMA	11	ANTEL LPA-80080/6CF	℄ @ 132'-0"±		280°		(1) SAMSUNG RRH [B2/66A RRH-BR049] **(1) SAMSUNG RRH [B5/13 RRH-BR04C]** **(1) SAMSUNG RRH [OUTDOOR CBRS 20W RRH]** **(1) COMMSCOPE DIPLEXER [CBC78T-DS-43-2X]**
GAMMA	12	**SAMSUNG OUTDOOR CBRS LAA 1W RRH-CLIP ON ANTENNA**	**℄ @ 132'-0"±**		**280°**		
GAMMA	13A	COMMSCOPE JAHH-65B-R3B	℄ @ 132'-0"±		280°		
GAMMA	13B	COMMSCOPE JAHH-65B-R3B	℄ @ 132'-0"±		280°		
GAMMA	14	–	–		–		
GAMMA	15	ANTEL LPA-80080/6CF	℄ @ 132'-0"±		280°		

*(2) 1x2 HYBRID CABLES TO BE ROUTED FROM OVP BOX TO EACH CBRS RRH
**CONTRACTOR TO VERIFY CABLE LENGTH PRIOR TO CONSTRUCTION.
***ANTENNA DESIGN BASED ON INFORMATION PROVIDED BY AMERICAN TOWER CORPORATION IN THE FORM OF AN APPLICATION (ID: 12995763).

FINAL ANTENNA SCHEDULE

SCALE: N.T.S.

PLANS PREPARED FOR:

verizon

20 ALEXANDER DR, 2ND FLOOR
WALLINGFORD, CT 06492

PROJECT INFORMATION:

VZW LOCATION CODE: 467154
VZW SITE NAME: NEW MILFORD CT

44 ELKINGTON FARM RD (NEAR ASPETUCK AVE)
NEW MILFORD, CT 06776
(LITCHFIELD COUNTY)

PLANS PREPARED BY:

TOWER ENGINEERING PROFESSIONALS
326 TRYON ROAD
RALEIGH, NC 27603-3530
OFFICE (919) 661-6351
www.tepgroup.net

SEAL:

STATE OF CONNECTICUT
GRANT MEDORES
29538
LICENSED
PROFESSIONAL ENGINEER

March 09, 2020

REV	DATE	ISSUED FOR:
1	03-09-20	100% CONSTRUCTION
0	01-28-20	100% CONSTRUCTION
A	11-26-19	PRELIMINARY

DRAWN BY: JLB | CHECKED BY: DEL

SHEET TITLE:

FINAL ANTENNA SCHEDULE

SHEET NUMBER: **C-5**

REVISION: 1

TEP#: 94011.205895

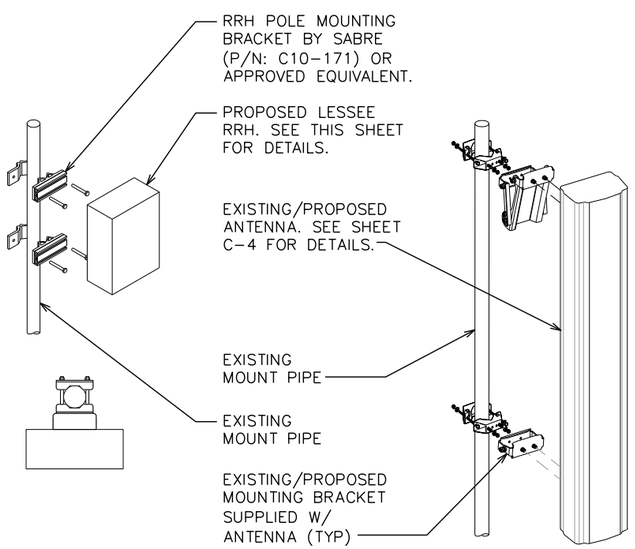

EQUIPMENT MOUNTING DETAIL

SCALE: N.T.S.

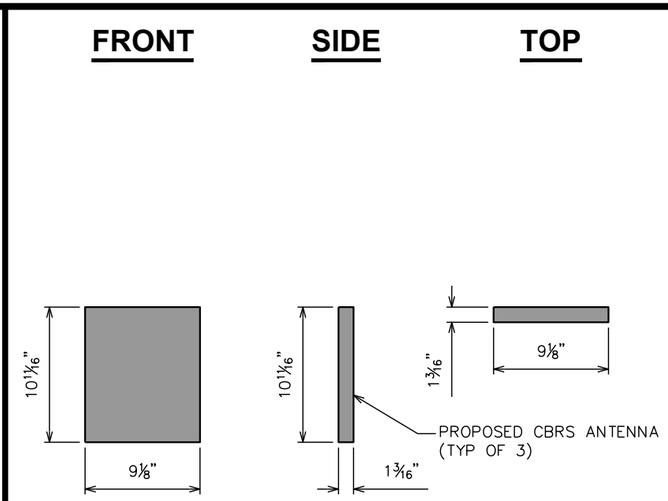

PROPOSED CBRS ANTENNA DETAIL

SCALE: N.T.S.

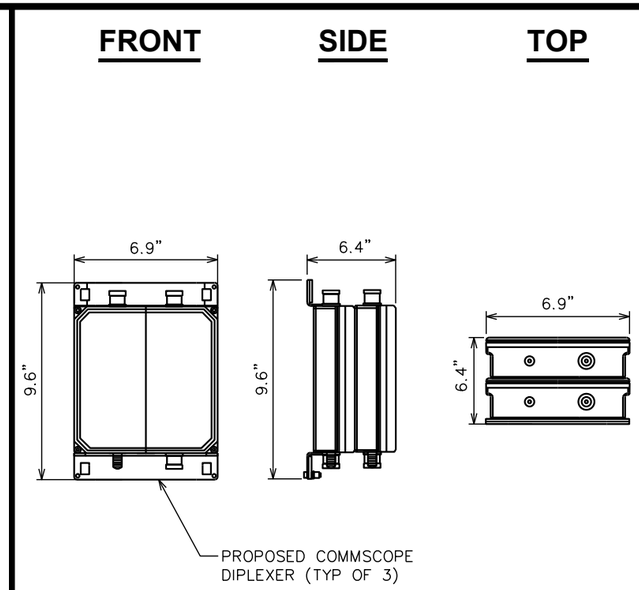

PROPOSED COMMSCOPE DIPLEXER DETAIL

SCALE: N.T.S.

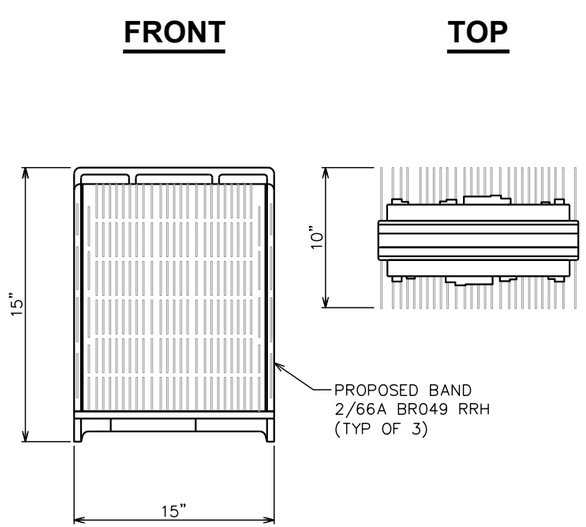

PROPOSED BAND 2/66A BR049 RRH DETAIL

SCALE: N.T.S.

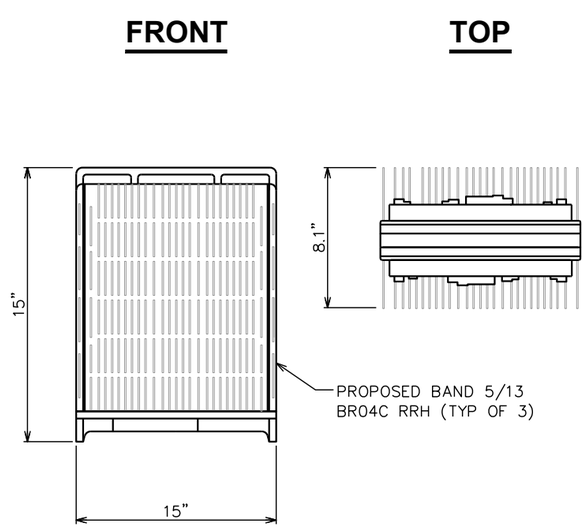

PROPOSED BAND 5/13 BR04C RRH DETAIL

SCALE: N.T.S.

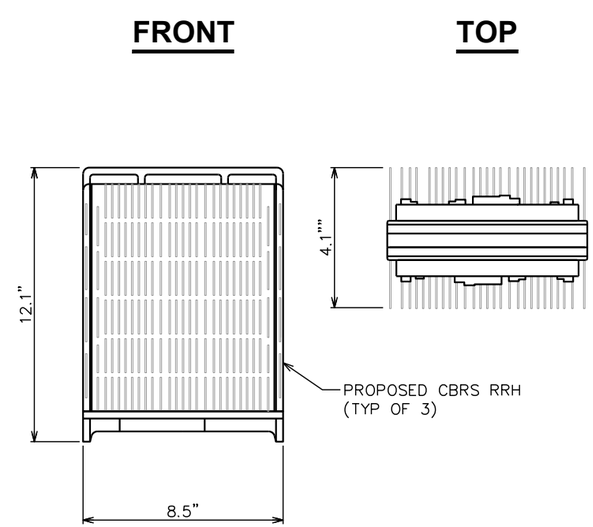

PROPOSED CBRS RRH DETAIL

SCALE: N.T.S.

PLANS PREPARED FOR:

verizon

20 ALEXANDER DR, 2ND FLOOR
WALLINGFORD, CT 06492

PROJECT INFORMATION:

VZW LOCATION CODE: 467154
VZW SITE NAME: NEW MILFORD CT

44 ELKINGTON FARM RD (NEAR ASPETUCK AVE)
NEW MILFORD, CT 06776
(LITCHFIELD COUNTY)

PLANS PREPARED BY:

TOWER ENGINEERING PROFESSIONALS
326 TRYON ROAD
RALEIGH, NC 27603-3530
OFFICE: (919) 661-6351
www.tepgroup.net

SEAL:

STATE OF CONNECTICUT · GRAHAM M. ANDRES · 29538 · LICENSED · PROFESSIONAL ENGINEER

March 09, 2020

REV	DATE	ISSUED FOR:
1	03-09-20	100% CONSTRUCTION
0	01-28-20	100% CONSTRUCTION
A	11-26-19	PRELIMINARY

DRAWN BY: JLB | CHECKED BY: DEL

SHEET TITLE:

EQUIPMENT DETAILS

SHEET NUMBER: **C-6**

REVISION: 1

TEP#: 94011.205895

AMERICAN TOWER®
CORPORATION

Antenna Mount Analysis Report

ATC Site Name	:	**New Milford CT 2, CT**
ATC Site Number	:	**302523**
Engineering Number	:	**12995763_C8_01**
Mount Elevation	:	**132 ft**
Carrier	:	**Verizon Wireless**
Carrier Site Name	:	**NEW MILFORD CT**
Carrier Site Number	:	**467154**
Site Location	:	**4 Elkington Farm Rd** **New Milford, CT 06776-2909** **41.59086111 , -73.4086**
County	:	**Litchfield**
Date	:	**January 17, 2020**
Max Usage	:	**91%**
Result	:	**Contingent Pass**

STATE OF CONNECTICUT
ESHA KAUSHAL MODI
32593
LICENSED
PROFESSIONAL ENGINEER

Prepared By:
Charles Wally
Structural Engineer II

Reviewed By:

COA: PEC.0001553

Table of Contents

Introduction 1

Supporting Documents 1

Analysis 1

Conclusion 1

Antenna Loading 2

Structure Usages 2

Mount Layout 3

Equipment Layout 4

Standard Conditions 7

Calculations ..... Attached

Introduction

The purpose of this report is to summarize results of the antenna mount analysis performed for Verizon Wireless at 132 ft.

Supporting Documents

Mount Mapping	Infinigy Project #1009-Z0003-H/317-505, dated November 13, 2019
RFDS	RFDS dated October 18, 2019
Photos	Site photos from 2019

Analysis

This antenna mount was analyzed using American Tower Corporation's Mount Analysis Program and RISA-3D v17

Basic Wind Speed:	90 mph (3-Second Gust, Vasd) / 115 mph (3-Second Gust, Vult)
Basic Wind Speed w/ Ice:	40 mph (3-Second Gust) w/ 1" radial ice concurrent
Codes:	ANSI/TIA-222-G / 2015 IBC / 2018 Connecticut State Building Code
Structure Class:	II
Exposure Category:	B
Topographic Category:	1
Crest Height:	0 ft
Spectral Response:	Ss = 0.198, S_1 = 0.066
Site Class:	D - Stiff Soil
Live Loads:	Lm = 500 lbs, Lv = 250 lbs

Conclusion

Based on the analysis results, the antenna mount does not meet the requirements per the applicable codes listed above. The mount can support the equipment as described in this report after the below listed modifications are completed:

- Install Site Pro 1 VSK-MHD V-Style Reinforcement Kit at level of existing handrails

If you have any questions or require additional information, please contact American Tower via email at Engineering@americantower.com. Please include the American Tower site name, site number, and engineering number in the subject line for any questions.

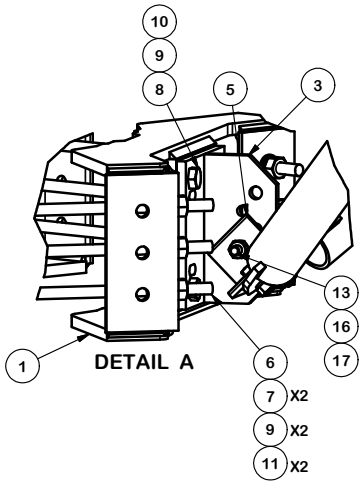

PARTS LIST						
ITEM	QTY	PART NO.	PART DESCRIPTION	LENGTH	UNIT WT.	NET WT.
1	3	X-LWRM	RING MOUNT WELDMENT		68.81	206.42
2	6	X-VSK	SUPPORT WELDMENT FOR VSK REINFORCEMENTS		27.05	162.32
3	3	X-TBW	T-BRACKET WELDMENT		13.60	40.80
4	6	X-VSKBRKT	T-BRACKET WELDMENT FOR VSK REINFORCEMENTS		4.19	25.13
5	6	SHCM-T	CHAIN MOUNT TIGHTENER BRACKET	3 in	1.86	11.15
6	9	G58R-24	5/8" x 24" THREADED ROD (HDG.)		2.09	18.82
6	9	G58R-48	5/8" x 48" THREADED ROD (HDG.)		4.18	37.63
7	18	A58FW	5/8" HDG A325 FLATWASHER		0.03	0.61
8	12	A582114	5/8" x 2-1/4" HDG A325 HEX BOLT	2 1/4 in	0.31	3.75
9	30	G58LW	5/8" HDG LOCKWASHER		0.03	0.78
10	12	G58NUT	5/8" HDG HEAVY 2H HEX NUT		0.13	1.56
11	18	A58NUT	5/8" HDG A325 HEX NUT		0.13	2.34
12	12	X-UB1212	1/2" X 2-1/2" X 4-1/2" X 2" U-BOLT (HDG.)		0.60	7.17
13	3	G12212	1/2" x 2-1/2" HDG HEX BOLT GR5	2 1/2 in	0.20	0.61
14	12	G12112	1/2" x 1-1/2" HDG HEX BOLT GR5	1/2 in	0.15	1.77
15	24	G12FW	1/2" HDG USS FLATWASHER	3/32 in	0.03	0.82
16	39	G12LW	1/2" HDG LOCKWASHER	1/8 in	0.01	0.54
17	39	G12NUT	1/2" HDG HEAVY 2H HEX NUT		0.07	2.79
					TOTAL WT. #	525.02

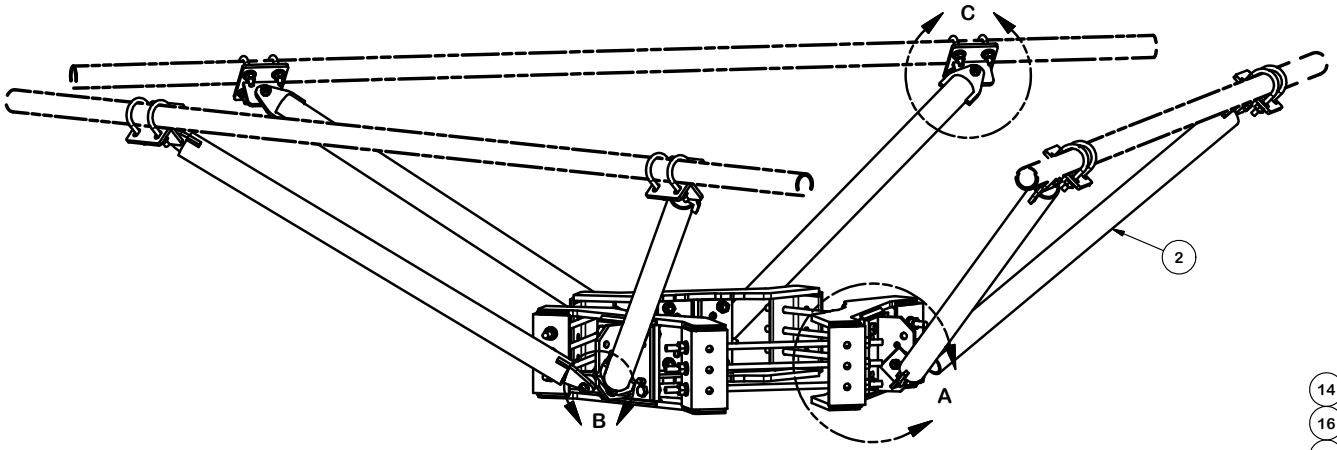

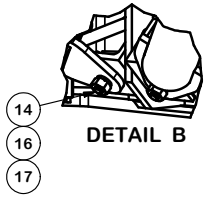

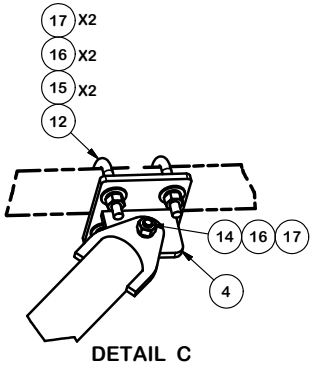

TOLERANCE NOTES

TOLERANCES ON DIMENSIONS, UNLESS OTHERWISE NOTED ARE:
SAWED, SHEARED AND GAS CUT EDGES *(± 0.030")*
DRILLED AND GAS CUT HOLES *(± 0.030")* - NO CONING OF HOLES
LASER CUT EDGES AND HOLES *(± 0.010")* - NO CONING OF HOLES
BENDS AND ANGLES ARE ± 1/2 DEGREE
ALL OTHER MACHINING *(± 0.030")*
ALL OTHER ASSEMBLY *(± 0.060")*

PROPRIETARY NOTE:
THE DATA AND TECHNIQUES CONTAINED IN THIS DRAWING ARE PROPRIETARY INFORMATION OF VALMONT INDUSTRIES AND CONSIDERED A TRADE SECRET. ANY USE OR DISCLOSURE WITHOUT THE CONSENT OF VALMONT INDUSTRIES IS STRICTLY PROHIBITED.

DESCRIPTION
V-STYLE MONOPOLE
REINFORCEMENT KITS

SITE PRO 1
A valmont COMPANY
Engineering Support Team:
1-888-753-7446
Locations:
New York, NY
Atlanta, GA
Los Angeles, CA
Plymouth, IN
Salem, OR
Dallas, TX
Tampa, FL

CPD NO.	DRAWN BY	ENG. APPROVAL	PART NO.
	CEK 8/28/2019		VSK-MHD

CLASS	SUB	DRAWING USAGE	CHECKED BY	DWG. NO.
81	01	CUSTOMER	BMC 8/29/2019	VSK-MHD