STATE OF CONNECTICUT

CONNECTICUT SITING COUNCIL

Ten Franklin Square, New Britain, CT 06051

Phone: (860) 827-2935 Fax: (860) 827-2950

E-Mail: siting.council@ct.gov

Internet: ct.gov/csc

Daniel F. Caruso
Chairman

July 25, 2008

Kenneth C. Baldwin, Esq.
Robinson & Cole LLP
280 Trumbull Street
Hartford, CT 06103-3597

RE: **EM-VER-096-080612** – Cellco Partnership d/b/a Verizon Wireless notice of intent to modify an existing telecommunications facility located at 399 Chestnut Lane, New Milford, Connecticut.

Dear Attorney Baldwin:

The Connecticut Siting Council (Council) hereby acknowledges your notice to modify this existing telecommunications facility, pursuant to Section 16-50j-73 of the Regulations of Connecticut State Agencies, with the condition that all remaining antenna mounts at approximately the 140-foot level of the tower be removed within one year of the date of this letter unless they can be utilized by another carrier within that time period.

The proposed modifications are to be implemented as specified here and in your notice dated June 12, 2008, including the placement of all necessary equipment and shelters within the tower compound. The modifications are in compliance with the exception criteria in Section 16-50j-72 (b) of the Regulations of Connecticut State Agencies as changes to an existing facility site that would not increase tower height, extend the boundaries of the tower site, increase noise levels at the tower site boundary by six decibels, and increase the total radio frequencies electromagnetic radiation power density measured at the tower site boundary to or above the standard adopted by the State Department of Environmental Protection pursuant to General Statutes § 22a-162. This facility has also been carefully modeled to ensure that radio frequency emissions are conservatively below State and federal standards applicable to the frequencies now used on this tower.

This decision is under the exclusive jurisdiction of the Council. Please be advised that the validity of this action shall expire one year from the date of this letter. Any additional change to this facility will require explicit notice to this agency pursuant to Regulations of Connecticut State Agencies Section 16-50j-73. Such notice shall include all relevant information regarding the proposed change with cumulative worst-case modeling of radio frequency exposure at the closest point of uncontrolled access to the tower base, consistent with Federal Communications Commission, Office of Engineering and Technology, Bulletin 65. Any deviation from this format may result in the Council implementing enforcement proceedings pursuant to General Statutes § 16-50u including, without limitation, imposition of expenses resulting from such failure and of civil penalties in an amount not less than one thousand dollars per day for each day of construction or operation in material violation.

Thank you for your attention and cooperation.

Very truly yours,

S. Derek Phelps
Executive Director

SDP/MP/cm

c: The Honorable Patricia A. Murphy, Mayor, Town of New Milford
Crown Castle International

G:\EM\BAM-VERIZON\NewMilford\072508dc.DOC

STATE OF CONNECTICUT

CONNECTICUT SITING COUNCIL

Ten Franklin Square, New Britain, CT 06051
Phone: (860) 827-2935 Fax: (860) 827-2950
E-Mail: siting.council@ct.gov
Internet: ct.gov/csc

Daniel F. Caruso
Chairman

June 13, 2008

The Honorable Patricia A. Murphy
Mayor
Town of New Milford
Town Hall
10 Main Street
New Milford, CT 06776

RE: **EM-VER-096-080612** – Cellco Partnership d/b/a Verizon Wireless notice of intent to modify an existing telecommunications facility located at 399 Chestnut Lane, New Milford, Connecticut.

Dear Mayor Murphy:

The Connecticut Siting Council (Council) received this request to modify an existing telecommunications facility, pursuant to Regulations of Connecticut State Agencies Section 16-50j-72.

If you have any questions or comments regarding this proposal, please call me or inform the Council by June 27, 2008.

Thank you for your cooperation and consideration.

Very truly yours,

S. Derek Phelps
Executive Director

SDP/jb

Enclosure: Notice of Intent

ROBINSON & COLE LLP

KENNETH C. BALDWIN

280 Trumbull Street
Hartford, CT 06103-3597
Main (860) 275-8200
Fax (860) 275-8299
kbaldwin@rc.com
Direct (860) 275-8345

EM-VER-096-080612

ORIGINAL

June 12, 2008

RECEIVED
JUN 12 2008
CONNECTICUT
SITING COUNCIL

Via Hand Delivery

S. Derek Phelps
Executive Director
Connecticut Siting Council
10 Franklin Square
New Britain, CT 06051

Re: **Notice of Exempt Modification – Antenna Swap**
399 Chestnut Lane, New Milford, Connecticut

Dear Mr. Phelps:

Cellco Partnership d/b/a Verizon Wireless ("Cellco") currently maintains a wireless telecommunications facility at the above-referenced address. The Council approved Cellco's shared use of this facility on January 25, 2006. Cellco currently maintains twelve PCS antennas at the 140-foot level on the 160-foot tower. Alltel Communications ("Alltel") maintains three antennas at the 150-foot level on the tower.

On May 30, 2008, Cellco acquired Alltel's CT-1 RSA cellular license for Litchfield County Connecticut. Cellco now intends to remove its twelve antennas and Alltel's three antennas and install six (6) LPA-80080/6CF cellular antennas and six (6) LPA185080/12CF PCS antennas all at the 150-foot level on the tower. The tower is owned by Crown Castle International. Attached behind Tab 1 are the specifications for the proposed replacement antennas.

Please accept this letter as notification pursuant to R.C.S.A. § 16-50j-73, for construction that constitutes an exempt modification pursuant to R.C.S.A. § 16-50j-72(b)(2). In accordance with R.C.S.A. § 16-50j-73, a copy of this letter is being sent to Patricia A. Murphy, Mayor of the Town of New Milford. Pursuant to a Council directive, a copy of this letter is also being sent to Howard G. Kimberly, the owner of the property on which the tower is located.

The planned modifications to the facility fall squarely within those activities explicitly provided for in R.C.S.A. § 16-50j-72(b)(2).

Law Offices
BOSTON
HARTFORD
NEW LONDON
STAMFORD
WHITE PLAINS
NEW YORK CITY
SARASOTA
www.rc.com

1. The proposed modifications will not result in the increase in the overall height of the existing structure. Cellco's replacement antennas will be located at the 150-foot level of the 160-foot tower.

2. The proposed antenna modifications will not require the extension of the site boundaries. Alltel's ground-mounted equipment will be removed from the existing site compound.

3. The proposed modifications will not increase noise levels at the facility by six decibels or more.

4. The operation of the replacement antennas will not increase radio frequency (RF) power density levels at the facility to a level at or above the Federal Communications Commission (FCC) adopted safety standard. A cumulative power density table for the facility is included behind Tab 2.

Also attached is a Structural Analysis Report confirming that the tower can support the proposed modifications. (See Tab 3).

For the foregoing reasons, Cellco respectfully submits that the proposed modifications to the above-referenced telecommunications facility constitutes an exempt modification under R.C.S.A. § 16-50j-72(b)(2).

Sincerely,

Kenneth C. Baldwin

Enclosures
Copy to:
Patricia A. Murphy, New Milford Mayor
Howard G. Kimberly
Sandy M. Carter

Vertically Polarized, Log Periodic 80° / 14 dBd

LPA-80080/6CF ___

When ordering replace "___" with connector type.

Mechanical specifications

Length	1800 mm	70.9 in
Width	140 mm	5.5 in
Depth	335 mm	13.2 in
Depth with z-bracket	375 mm	14.8 in
4) Weight	9.5 kg	21.0 lbs
Wind Area		
Fore/Aft	0.25 m^2	2.7 ft^2
Side	0.60 m^2	6.5 ft^2
Rated Wind Velocity (Safety factor 2.0)	>295 km/hr	>183 mph
Wind Load @ 100 mph (161 km/hr)		
Fore/Aft	415 N	93.3 lbs
Side	870 N	195.6 lbs

Antenna consisting of aluminum alloy with brass feedlines covered by a UV safe fiberglass radome.

Mounting and Downtilting

Mounting brackets attach to a pipe diameter of Ø50-102 mm (2.0-4.0 in). If the lock-down brace is used, the maximum diameter is Ø88.9 mm (3.5 in)

Mounting Bracket & Downtilt Bracket Kit #21699999

Electrical specifications

Frequency Range	806-960 MHz
Impedance	50Ω
3) Connector(s)	NE or E-DIN 1 port / center
1) VSWR	≤ 1.4:1
Polarization	Vertical
1) Gain	14 dBd
2) Power Rating	500 W
1) Half Power Angle	
H-Plane	80°
E-Plane	10°
1) Electrical Downtilt	0°
1) Null Fill	10%
Lightning Protection	Direct Ground

1) Typical values.
2) Power rating limited by connector only.
3) NE indicates an elongated N connector. E-DIN indicates an elongated DIN connector.
4) The antenna weight listed above does not include the bracket weight.

Improvements to mechanical and/or electrical performance of the antenna may be made without notice.

Radiation pattern[1)]

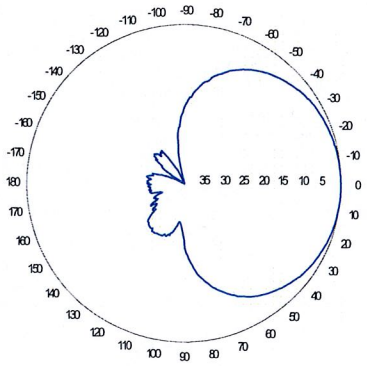

Horizontal

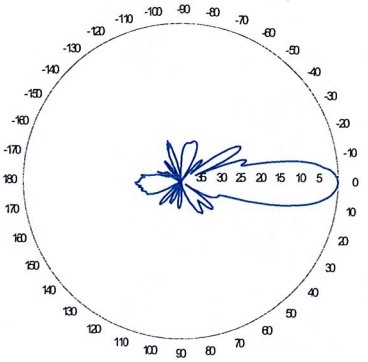

Vertical

Featuring upper side lobe suppression.

Radiation patterns for all antennas are measured with the antenna mounted on a fiberglass pole.

Mounting on a metal pole will typically improve the Front-to-Back ratio.

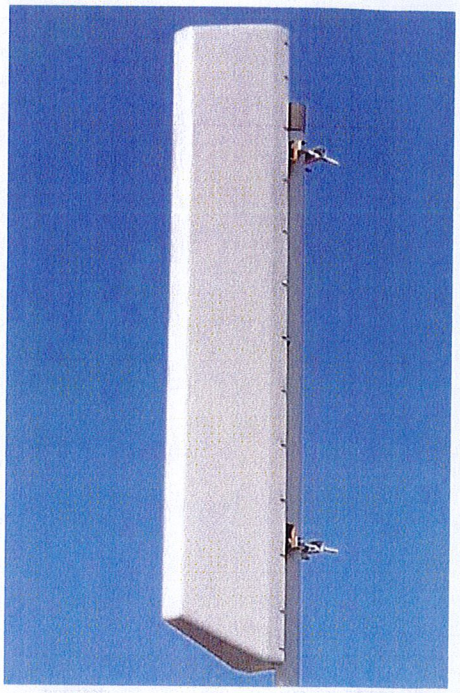

Amphenol Antel's Exclusive 3T (True Transmission Line Technology) Antenna Design:

- True log-periodic design allows for superior front-to-side characteristics to minimize sector overlap.
- Unique feedline design eliminates the need for conventional solder joints in the signal path.
- A non-collinear system with access to every radiating element for broad band-width and superior performance.
- Air as insulation for virtually no internal signal loss.

This Amphenol Antel antenna is under a five-year limited warranty for repair or replacement.

Antenna available with center-fed connector only.

CF Denotes a Center-Fed Connector.

806-960 MHz

Amphenol Antel, Inc.
The Antenna Technology Company

Revision Date: 7/5/07

Amphenol Antel, Inc. 1300 Capital Drive Rockford, Illinois 61109 USA Tel. (815) 399-0001
Toll-Free (888) 417-9562 Fax. (815) 399-0156 antel@antelinc.com www.antelinc.com

Vertically Polarized, Log Periodic 80° / 17.5 dBi

LPA-185080/12CF __ 2°

When ordering replace "___" with connector type.

Mechanical specifications

Length	1806 mm	71.1 in
Width	104 mm	4.1 in
Depth	150 mm	5.9 in
Depth with t-bracket	178 mm	7.0 in
4) Weight	4.8 kg	10.5 lbs
Wind Area		
Fore/Aft	0.19 m^2	2.0 ft^2
Side	0.27 m^2	2.9 ft^2
Rated Wind Velocity (Safety factor 2.0)	>270 km/hr	>168 mph
Wind Load @ 100 mph (161 km/hr)		
Fore/Aft	325 N	73.1 lbs
Side	440 N	98.9 lbs

Antenna consisting of aluminum alloy with brass feedlines covered by a UV safe fiberglass radome.

Mounting and Downtilting

Mounting brackets attach to a pipe diameter of Ø50-102 mm (2.0-4.0 in).

Mounting bracket kit #26799997
Downtilt bracket kit #26799999

The downtil bracket kit includes the mounting bracket kit.

Electrical specifications

Frequency Range	1850-1990 MHz
Impedance	50Ω
3) Connector(s)	NE or E-DIN 1 port / center
1) VSWR	≤ 1.4:1
Polarization	Vertical
1) Gain	17.5 dBi
2) Power Rating	250 W
1) Half Power Angle	
H-Plane	80°
E-Plane	5°
1) Electrical Downtilt	2°
1) Null Fill	10%
Lightning Protection	Direct Ground

Radiation pattern[1)]

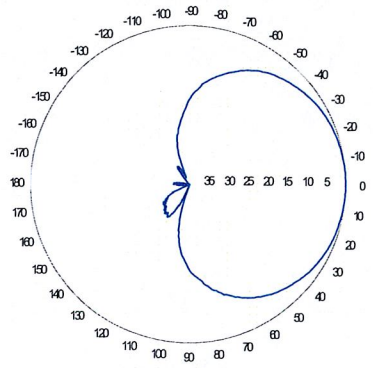

Horizontal

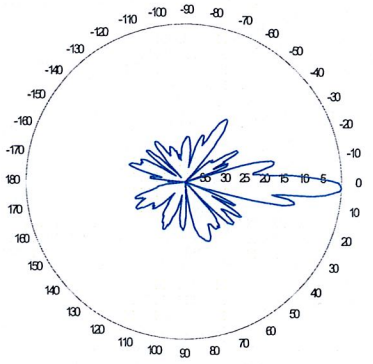

Vertical

Radiation patterns for all antennas are measured with the antenna mounted on a fiberglass pole.

Mounting on a metal pole will typically improve the Front-to-Back ratio.

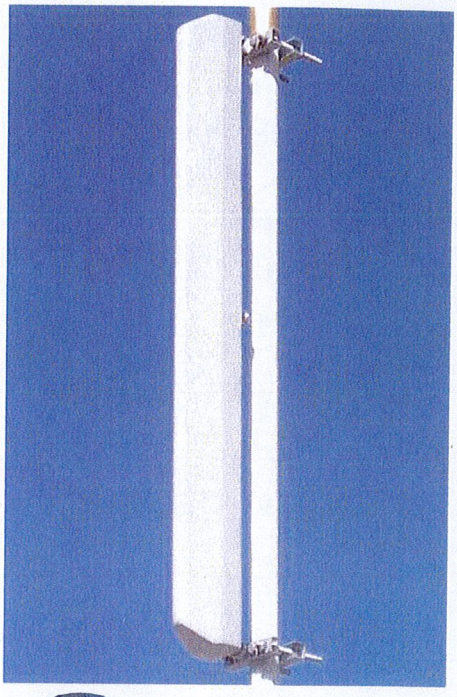

Amphenol Antel's Exclusive 3T (True Transmission Line Technology) Antenna Design:

- True log-periodic design allows for superior front-to-side characteristics to minimize sector overlap.
- Unique feedline design eliminates the need for conventional solder joints in the signal path.
- A non-collinear system with access to every radiating element for broad band-width and superior performance.
- Air as insulation for virtually no internal signal loss.

This Amphenol Antel antenna is under a five-year limited warranty for repair or replacement.

Antenna available with center-fed connector only.

1) Typical values.
2) Power rating limited by connector only.
3) NE indicates an elongated N connector. E-DIN indicates an elongated DIN connector.
4) The antenna weight listed above does not include the bracket weight.

Improvements to mechanical and/or electrical performance of the antenna may be made without notice.

CF Denotes a Center-Fed Connector.

1850-1990 MHz

Amphenol Antel, Inc.
The Antenna Technology Company

Amphenol Antel, Inc. 1300 Capital Drive Rockford, Illinois 61109 USA Tel. (815) 399-0001
Toll-Free (888) 417-9562 Fax. (815) 399-0156 antel@antelinc.com www.antelinc.com

Revision Date: 7/12/07

	General	Power	Density					
Site Name: New Milford East								
Tower Height: Verizon @ 150Ft.								
CARRIER	**# OF CHAN.**	**WATTS ERP**	**HEIGHT**	**CALC. POWER DENS**	**FREQ.**	**MAX. PERMISS. EXP.**	**FRACTION MPE**	**Total**
*Sprint	11	291.49	160	0.0450	1962.5	1.0000	4.50%	
*Alltel/CDMA	1	319.885	149	0.0052	878	0.5853	0.89%	
*Alltel	4	250	150	0.0160	1962.5	1.0000	1.60%	
*Cingular	6	296	130	0.0378	880	0.5867	6.44%	
*Cingular	3	427	130	0.0273	1930	1.0000	2.73%	
Verizon	**9**	**485**	**150**	**0.0698**	**1970**	**1.0000**	**6.98%**	
Verizon	**9**	**200**	**150**	**0.0288**	**875**	**0.5830**	**4.93%**	
								28.06%
* Source: Siting Council								

Date: **January 10, 2008**

Mr. Marco Morales
Crown Castle International
1200 MacArthur Blvd., Suite 200
Mahwah, NJ 07430
Office (201) 236-9032

TOWER ENGINEERING PROFESSIONALS

Tower Engineering Professionals, Inc. (TEP)
3703 Junction Boulevard
Raleigh, NC 27603
(o) (919) 661-6351
whmartin@tepgroup.net

Subject: **Modification Analysis Report**

Carrier Designation:	**Verizon Wireless Co-Locate**	
	Carrier Site Number:	*N/A*
	Carrier Site Name:	*New Milford East*
Crown Castle Designation:	**Crown Castle BU Number:**	*876397*
	Crown Castle Site Name:	*New Milford / Kimberly*
	Crown Castle JDE Job Number:	*98265*
Engineering Firm Designation:	**TEP Project Number:**	***072472***
Site Data:	**399 Chestnut Land Rd., New Milford, Litchfield County, CT 06776** **Latitude *41°-37'-54.93"*, Longitude *-73°-22'-2.82"*** **160 Foot - Monopole Tower**	

Dear Mr. Morales,

TEP is pleased to submit this **"Structural Analysis Report"** to determine the structural integrity of the aforementioned tower. This analysis has been performed in accordance with the Crown Castle Structural 'Statement of Work' and the terms of Crown Castle Purchase Order Number 270950, in accordance with application 55997, revision 1.

The purpose of the analysis is to determine acceptability of the tower stress level. Based on our analysis we have determined the tower stress level for the structure and foundation, under the following load case, to be:

LC1: Existing + Reserved + Proposed Equipment — Sufficient Capacity
Note: See Table I and Table II for the proposed and existing/reserved loading.

This analysis has been performed in accordance with the TIA/EIA-222-F standard based on a 3-second gust wind speed of 100-mph and 80-mph fastest mile wind speed which exceeds the value required by local building authorities.

We at TEP appreciate the opportunity of providing our continuing professional services to you and Crown Castle International. If you have any questions or need further assistance on this or any other projects please give us a call.

Respectfully submitted,

Pete Jernigan, P.E.

STATE OF CONNECTICUT
PETER G. JERNIGAN, JR.
00021509
LICENSED
PROFESSIONAL ENGINEER

1-10-2008

TABLE OF CONTENTS

1) INTRODUCTION

2) ANALYSIS CRITERIA
- Table 1 – Proposed Antenna and Cable Information
- Table 2 – Existing and Reserved Antenna and Cable Information
- Table 3 – Design Antenna and Cable Information

3) ANALYSIS PROCEDURE
- Table 4 – Documents Provided
- 3.1) Analysis Method
- 3.2) Assumptions

4) ANALYSIS RESULTS
- Table 5 – Tower Component Stresses vs. Capacity
- 4.1) Recommendations

5) APPENDIX A
- RISA Tower Output

6) APPENDIX B
- Base Level Drawing

7) APPENDIX C
- Additional Calculations

8) APPENDIX D
- Tower Modification Drawings

1) INTRODUCTION

The subject tower is a 160-foot monopole tower manufactured by Engineered Endeavors Inc.

2) ANALYSIS CRITERIA

The existing, reserved, and proposed antennas, transmission lines, and mountings are shown in the following tables. The site is in Litchfield County, CT. The structural analysis was performed in accordance with the ANSI/TIA/EIA-222-F-1996 (TIA), Structural Standards for Steel Antenna Towers and Antenna Supporting Structures dated June 1996 using a fastest-mile wind speed of 80 mph without ice (69 mph with a ½" radial ice) for an Exposure C and Importance Factor of 1.00.

Table 1 – Proposed Antenna and Cable Information

Center Line Elevation (ft)	Number of Antennas	Antenna Manufacturer	Antenna Model	Mount	Number of Feed Lines	Feed Line Size (in)
150 (Proposed)	6 6	Antel Antel	LPA-80080/6CF LPA-185080/12CFx2	(1) Low Profile Platform	12	1-5/8

Table 2 – Existing and Reserved Antenna and Cable Information

Center Line Elevation (ft)	Number of Antennas	Antenna Manufacturer	Antenna Model	Mount	Number of Feed Lines	Feed Line Size (in)
161 (Existing) [1]	6	Decibel	DB980F65T4E-M	(1) Low Profile Platform	6	1-5/8
161 (MLA) [1]	9	EMS Wireless	FV65-14-00NA2	-	9	1-5/8
150 (Existing) [2]	3	Allgon	7250.00	(3) Pipe Mounts	6	1-5/8
150 (Reserved) [2]	3	Allgon	7250.00	- [3]	6	1-5/8
143 (Existing) [4]	12	Antel	LPA-185063/12CF	(1) Low Profile Platform	12	1-5/8
130 (Existing)	3	Powerwave	7770	(3) Pipe Mounts	6	1-5/8
130 (Existing TMA)	6	Powerwave	LGP2140X	-	-	-
77 (Existing)	1	Lucent	KS24019-L112A	(1) Standoff Mount	1	1/2

1 – MLA loading controls and was used in place of the existing loading
2 – Existing and reserved antennas, feed lines, and mounts to be removed and replaced with Proposed loading
3 – Reserved loading requires a new mount to be installed
4 – Existing antennas, feed lines, and mounts to be removed

Table 3 – Design Antenna and Cable Information

Center Line Elevation (ft)	Number of Antennas	Antenna Manufacturer	Antenna Model	Mount	Number of Feed Lines	Feed Line Size (in)
160	12	Decibel	DB980F65	(1) Low Profile Platform	-	-
150	12	Decibel	DB980F65	(1) Low Profile Platform	-	-
140	12	Decibel	DB980F65	(1) Low Profile Platform	-	-
75	1	-	Generic GPS	(1) Pipe Mount	-	-

3) ANALYSIS PROCEDURE

Table 4 – Documents Provided

Document	Remarks	Crown Document ID
Tower Manufacturer's Drawings	Engineered Endeavors Inc., Job No. 11742, dated June 24, 2003, provided by Crown	1613541
Design Structural Analysis	Engineered Endeavors Inc., Job No. 11742, dated June 24, 2003, provided by Crown	1613541
Tower Structural Analysis Report	Tower Engineering Professionals Inc., Job No. 072472	2162964
CAD Drawings	Crown, BU# 876397, dated Nov. 27, 2007	-

3.1) Analysis Method

RISA Tower (version 5.0.2.0), a commercially available analysis software package, was used to create a three-dimensional model of the tower and calculate member stresses for various dead, live, wind, and ice load cases. Selected output from the analysis is included in Appendix A.

3.2) Assumptions

1. This structural analysis does not include a grouted base plate.
2. All feed lines are installed in the locations noted on the cable routing drawing in *Appendix B*.
3. When applicable, feed lines were considered to be structural components for calculating wind loads, as allowed by the industry standard.
4. Information in the original design drawings and specifications that could not be verified by TEP is assumed to be correct. For this analysis, TEP will assume conformance with the original design drawings and specifications.
5. TEP shall assume that all tower components are in sufficient condition to carry their full design capacity.
6. Serviceability with respect to antenna twist, tilt, roll, or lateral translation, is not checked and is left to the carrier or tower owner to ensure conformance.

4) ANALYSIS RESULTS

Table 5 – Tower Component Stresses vs. Capacity

LC1: Existing + Reserved + Proposed Equipment

Notes	Component	Elevation (ft)	% Capacity	Pass/Fail
RISA Tower Analysis Summary: (Monopole)				
			Summary	
Notes:	**Component**	**Elevation**	**% Capacity**	**Pass/Fail**
	L1	160 – 135.3	43.9	Pass
	L2	135.3 – 89.8	82.1	Pass
	L3	89.8 – 44.4	83.6	Pass
	L4	44.4 – 0	77.9	Pass
	Anchor Bolts	0	81.8	Pass
	Base Plate	0	81.4	Pass
	TOWER RATING =		83.6	Pass
Individual Components:				
Notes:	**Component**	**Elevation**	**% Capacity**	**Pass/Fail**
1	Foundation Capacity		92.4	Pass
Structure Rating (max from all components) =				**92.4%**

* Notes:

1) See additional documentation in "Appendix C – Additional Calculations" for calculations supporting the % capacity listed.

4.1) Recommendations

It should be noted that in order for the tower to pass in the current load scenario, the proposed and reserved coax must be configured as shown in Appendix B. Also the base plate will need to be reinforced as shown in the Tower Modification Drawings shown in Appendix D.

APPENDIX A

RISA TOWER OUTPUT

Section	1	2	3	4
Length (ft)	24.67	48.83	49.79	49.63
Number of Sides	18	18	18	18
Thickness (in)	0.1880	0.2500	0.3130	0.3750
Lap Splice (ft)	3.33	4.33	5.25	
Top Dia (in)	18.0000	21.4208	28.8481	36.1585
Bot Dia (in)	22.3900	30.1200	37.7200	45.0000
Grade	A572-65			
Weight (lb)	1002.1	3364.8	5549.6	8081.3
17997.7				

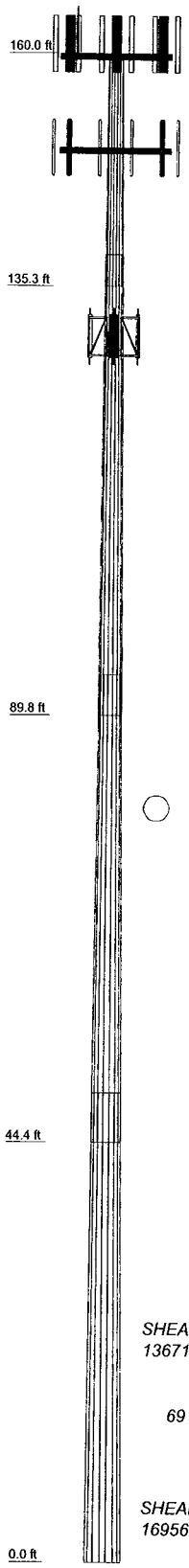

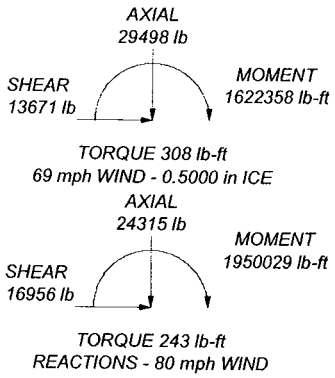

DESIGNED APPURTENANCE LOADING

TYPE	ELEVATION	TYPE	ELEVATION
(3) FV65-14-00NA2 (Sprint (MLA))	160	2-ft Sidearm Mount (Cingular (EM))	130
(3) FV65-14-00NA2 (Sprint (MLA))	160	2-ft Sidearm Mount (Cingular (EM))	130
(3) FV65-14-00NA2 (Sprint (MLA))	160	7770.00 (Cingular (E))	130
EEI 12' Low Profile Platform (Sprint (MLAM))	160	1.9-in x 6-ft Pipe (Cingular (EM))	130
		1.9-in x 6-ft Pipe (Cingular (EM))	130
5/8-in x 5-ft L-Rod	160	1.9-in x 6-ft Pipe (Cingular (EM))	130
(2) LPA-185080/12CF (Verizon (P))	150	(2) LGP214nn (Cingular TMA)	130
(2) LPA-185080/12CF (Verizon (P))	150	(2) LGP214nn (Cingular TMA)	130
(2) LPA-185080/12CF (Verizon (P))	150	(2) LGP214nn (Cingular TMA)	130
(2) LPA-80080/6CF (Verizon (P))	150	7770.00 (Cingular (E))	130
(2) LPA-80080/6CF (Verizon (P))	150	7770.00 (Cingular (E))	130
(2) LPA-80080/6CF (Verizon (P))	150	HSS 4"x4"x3/16" (3' Length Horz) no front wind (Sprint (EM))	77
EEI 12' Low Profile Platform (Verizon (PM))	150	KS24019-L112A (Sprint (E))	77
2-ft Sidearm Mount (Cingular (EM))	130	1.25" dia. pipe x 20" (Sprint (EM))	77

MATERIAL STRENGTH

GRADE	Fy	Fu	GRADE	Fy	Fu
A572-65	65 ksi	80 ksi			

TOWER DESIGN NOTES

1. Tower is located in Litchfield County, Connecticut.
2. Tower designed for a 80 mph basic wind in accordance with the TIA/EIA-222-F Standard.
3. Tower is also designed for a 69 mph basic wind with 0.50 in ice.
4. Deflections are based upon a 50 mph wind.
5. TOWER RATING: 83.6%

Tower Engineering Professionals, Inc.
3703 Junction Blvd.
Raleigh, NC 27603
Phone: (919) 661-6351
FAX: (919) 661-6350

Job: ***BU#876397 "New Milford / Kimberly"***		
Project: ***TEP# 072472***		
Client: CCI	Drawn by: WHM	App'd:
Code: TIA/EIA-222-F	Date: 01/09/08	Scale: NTS
Path: H:\20072472_New Milford - Kimberly\RISA\Passing Structural\876397.ed		Dwg No. E-1

Tower Input Data

There is a pole section.
This tower is designed using the TIA/EIA-222-F standard.
The following design criteria apply:

Tower is located in Litchfield County, Connecticut.
Basic wind speed of 80 mph.
Nominal ice thickness of 0.5000 in.
Ice density of 56 pcf.
A wind speed of 69 mph is used in combination with ice.
Temperature drop of 50 °F.
Deflections calculated using a wind speed of 50 mph.
A non-linear (P-delta) analysis was used.
Pressures are calculated at each section.
Stress ratio used in pole design is 1.333.
Local bending stresses due to climbing loads, feedline supports, and appurtenance mounts are not considered.

Options

Consider Moments - Legs
Consider Moments - Horizontals
Consider Moments - Diagonals
Use Moment Magnification
√ Use Code Stress Ratios
√ Use Code Safety Factors - Guys
Escalate Ice
Always Use Max Kz
Use Special Wind Profile
√ Include Bolts In Member Capacity
Leg Bolts Are At Top Of Section
Secondary Horizontal Braces Leg
Use Diamond Inner Bracing (4 Sided)
Add IBC .6D+W Combination

Distribute Leg Loads As Uniform
Assume Legs Pinned
√ Assume Rigid Index Plate
√ Use Clear Spans For Wind Area
√ Use Clear Spans For KL/r
Retension Guys To Initial Tension
√ Bypass Mast Stability Checks
√ Use Azimuth Dish Coefficients
√ Project Wind Area of Appurt.
Autocalc Torque Arm Areas
SR Members Have Cut Ends
√ Sort Capacity Reports By Component
Triangulate Diamond Inner Bracing

Treat Feedline Bundles As Cylinder
Use ASCE 10 X-Brace Ly Rules
Calculate Redundant Bracing Forces
Ignore Redundant Members in FEA
SR Leg Bolts Resist Compression
All Leg Panels Have Same Allowable
Offset Girt At Foundation
√ Consider Feedline Torque
Include Angle Block Shear Check
Poles
Include Shear-Torsion Interaction
Always Use Sub-Critical Flow
Use Top Mounted Sockets

Tapered Pole Section Geometry

Section	*Elevation* *ft*	*Section Length* *ft*	*Splice Length* *ft*	*Number of Sides*	*Top Diameter* *in*	*Bottom Diameter* *in*	*Wall Thickness* *in*	*Bend Radius* *in*	*Pole Grade*
L1	160.00-135.33	24.67	3.33	18	18.0000	22.3900	0.1880	0.7520	A572-65 (65 ksi)
L2	135.33-89.84	48.83	4.33	18	21.4208	30.1200	0.2500	1.0000	A572-65 (65 ksi)
L3	89.84-44.38	49.79	5.25	18	28.8481	37.7200	0.3130	1.2520	A572-65 (65 ksi)
L4	44.38-0.00	49.63		18	36.1585	45.0000	0.3750	1.5000	A572-65 (65 ksi)

Tapered Pole Properties

Section	Tip Dia. in	Area in^2	I in^4	r in	C in	I/C in^3	J in^4	It/Q in^2	w in	w/t
L1	18.2777	10.6286	426.0301	6.3233	9.1440	46.5912	852.6208	5.3153	2.8371	15.091
	22.7354	13.2482	825.0467	7.8817	11.3741	72.5372	1651.1790	6.6254	3.6098	19.201
L2	22.3542	16.7990	951.2566	7.5156	10.8818	87.4174	1903.7648	8.4011	3.3301	13.32
	30.5846	23.7018	2671.7145	10.6039	15.3010	174.6109	5346.9445	11.8532	4.8611	19.444
L3	30.0771	28.3485	2916.2540	10.1299	14.6548	198.9963	5836.3454	14.1769	4.5264	14.461
	38.3019	37.1624	6569.7274	13.2795	19.1618	342.8562	13148.0994	18.5847	6.0878	19.45
L4	37.6660	42.5913	6890.0876	12.7031	18.3685	375.1029	13789.2414	21.2997	5.7039	15.21
	45.6942	53.1149	13363.1957	15.8419	22.8600	584.5667	26743.9750	26.5625	7.2600	19.36

Tower Elevation ft	Gusset Area (per face) ft^2	Gusset Thickness in	Gusset Grade	Adjust. Factor A_f	Adjust. Factor A_r	Weight Mult.	Double Angle Stitch Bolt Spacing Diagonals in	Double Angle Stitch Bolt Spacing Horizontals in
L1 160.00-135.33				1	1	1		
L2 135.33-89.84				1	1	1		
L3 89.84-44.38				1	1	1		
L4 44.38-0.00				1	1	1		

Monopole Base Plate Data

Base Plate Data	
Base plate is square	
Base plate is grouted	
Anchor bolt grade	A615-75
Anchor bolt size	2.2500 in
Number of bolts	12
Embedment length	60.0000 in
f'_c	3 ksi
Grout space	3.2500 in
Base plate grade	A572-60
Base plate thickness	2.0000 in
Bolt circle diameter	54.0000 in
Outer diameter	60.0000 in
Inner diameter	35.0000 in
Base plate type	Stiffened Plate
Bolts per stiffener	1
Stiffener thickness	0.7500 in
Stiffener height	12.0000 in

Feed Line/Linear Appurtenances - Entered As Area

Description	Face or Leg	Allow Shield	Component Type	Placement ft	Total Number		C_AA_A ft^2/ft	Weight plf
LDF4RN-50A (1/2 FOAM) (Sprint (E))	B	No	Inside Pole	77.00 - 9.00	1	No Ice	0.00	0.15
						1/2" Ice	0.00	0.15

Description	Face or Leg	Allow Shield	Component Type	Placement ft	Total Number		C_AA_A ft^2/ft	Weight plf
LDF7-50A (1-5/8 FOAM) (Cingular (E)) *****	C	No	Inside Pole	130.00 - 9.00	6	No Ice	0.00	0.82
						1/2" Ice	0.00	0.82
LDF7-50A (1-5/8 FOAM) (Sprint (MLA)) *****	B	No	Inside Pole	160.00 - 9.00	9	No Ice	0.00	0.82
						1/2" Ice	0.00	0.82
LDF7-50A (1-5/8 FOAM) (Verizon (P))	A	No	Inside Pole	150.00 - 9.00	12	No Ice	0.00	0.82
						1/2" Ice	0.00	0.82

Feed Line/Linear Appurtenances Section Areas

Tower Section	Tower Elevation ft	Face	A_R ft^2	A_F ft^2	C_AA_A In Face ft^2	C_AA_A Out Face ft^2	Weight lb
L1	160.00-135.33	A	0.000	0.000	0.000	0.000	144.32
		B	0.000	0.000	0.000	0.000	182.04
		C	0.000	0.000	0.000	0.000	0.00
L2	135.33-89.84	A	0.000	0.000	0.000	0.000	447.69
		B	0.000	0.000	0.000	0.000	335.77
		C	0.000	0.000	0.000	0.000	197.61
L3	89.84-44.38	A	0.000	0.000	0.000	0.000	447.30
		B	0.000	0.000	0.000	0.000	340.37
		C	0.000	0.000	0.000	0.000	223.65
L4	44.38-0.00	A	0.000	0.000	0.000	0.000	348.13
		B	0.000	0.000	0.000	0.000	266.40
		C	0.000	0.000	0.000	0.000	174.06

Feed Line/Linear Appurtenances Section Areas - With Ice

Tower Section	Tower Elevation ft	Face or Leg	Ice Thickness in	A_R ft^2	A_F ft^2	C_AA_A In Face ft^2	C_AA_A Out Face ft^2	Weight lb
L1	160.00-135.33	A	0.500	0.000	0.000	0.000	0.000	144.32
		B		0.000	0.000	0.000	0.000	182.04
		C		0.000	0.000	0.000	0.000	0.00
L2	135.33-89.84	A	0.500	0.000	0.000	0.000	0.000	447.69
		B		0.000	0.000	0.000	0.000	335.77
		C		0.000	0.000	0.000	0.000	197.61
L3	89.84-44.38	A	0.500	0.000	0.000	0.000	0.000	447.30
		B		0.000	0.000	0.000	0.000	340.37
		C		0.000	0.000	0.000	0.000	223.65
L4	44.38-0.00	A	0.500	0.000	0.000	0.000	0.000	348.13
		B		0.000	0.000	0.000	0.000	266.40
		C		0.000	0.000	0.000	0.000	174.06

Feed Line Center of Pressure

Section	Elevation	CP_X	CP_Z	CP_X Ice	CP_Z Ice
	ft	in	in	in	in
L1	160.00-135.33	0.0000	0.0000	0.0000	0.0000
L2	135.33-89.84	0.0000	0.0000	0.0000	0.0000
L3	89.84-44.38	0.0000	0.0000	0.0000	0.0000
L4	44.38-0.00	0.0000	0.0000	0.0000	0.0000

Discrete Tower Loads

Description	Face or Leg	Offset Type	Offsets: Horz Lateral Vert	Azimuth Adjustment	Placement		C_AA_A Front	C_AA_A Side	Weight
			ft ft ft	°	ft		ft^2	ft^2	lb
KS24019-L112A (Sprint (E))	A	From Face	3.00 0.00 2.00	0.000	77.00	No Ice	0.10	0.10	5.00
						1/2" Ice	0.18	0.18	6.50
1.25" dia. pipe x 20" (Sprint (EM))	A	From Face	1.50 0.00 0.00	0.000	77.00	No Ice	0.17	0.17	2.50
						1/2" Ice	0.31	0.31	4.37
HSS 4"x4"x3/16" (3' Length Horz) no front wind (Sprint (EM)) *****	A	From Face	1.50 0.00 0.00	0.000	77.00	No Ice	0.00	1.47	28.20
						1/2" Ice	0.00	1.82	37.80
7770.00 (Cingular (E))	A	From Face	2.00 0.00 0.00	0.000	130.00	No Ice	5.88	2.93	35.00
						1/2" Ice	6.31	3.27	67.63
7770.00 (Cingular (E))	B	From Face	2.00 0.00 0.00	0.000	130.00	No Ice	5.88	2.93	35.00
						1/2" Ice	6.31	3.27	67.63
7770.00 (Cingular (E))	C	From Face	2.00 0.00 0.00	0.000	130.00	No Ice	5.88	2.93	35.00
						1/2" Ice	6.31	3.27	67.63
1.9-in x 6-ft Pipe (Cingular (EM))	A	From Face	2.00 0.00 0.00	0.000	130.00	No Ice	1.14	1.14	16.32
						1/2" Ice	1.76	1.76	25.33
1.9-in x 6-ft Pipe (Cingular (EM))	B	From Face	2.00 0.00 0.00	0.000	130.00	No Ice	1.14	1.14	16.32
						1/2" Ice	1.76	1.76	25.33
1.9-in x 6-ft Pipe (Cingular (EM))	C	From Face	2.00 0.00 0.00	0.000	130.00	No Ice	1.14	1.14	16.32
						1/2" Ice	1.76	1.76	25.33
(2) LGP214nn (Cingular TMA)	A	From Face	2.00 0.00 0.00	0.000	130.00	No Ice	1.31	0.58	18.97
						1/2" Ice	1.48	0.80	29.29
(2) LGP214nn (Cingular TMA)	B	From Face	2.00 0.00 0.00	0.000	130.00	No Ice	1.31	0.58	18.97
						1/2" Ice	1.48	0.80	29.29
(2) LGP214nn (Cingular TMA)	C	From Face	2.00 0.00 0.00	0.000	130.00	No Ice	1.31	0.58	18.97
						1/2" Ice	1.48	0.80	29.29
2-ft Sidearm Mount (Cingular (EM))	A	From Face	1.00 0.00 0.00	0.000	130.00	No Ice	0.17	0.70	14.30
						1/2" Ice	0.25	1.05	21.80
2-ft Sidearm Mount (Cingular (EM))	B	From Face	1.00 0.00	0.000	130.00	No Ice	0.17	0.70	14.30
						1/2" Ice	0.25	1.05	21.80

Description	Face or Leg	Offset Type	Offsets: Horz Lateral Vert ft ft ft	Azimuth Adjustment °	Placement ft		C_AA_A Front ft^2	C_AA_A Side ft^2	Weight lb
			0.00						
2-ft Sidearm Mount (Cingular (EM))	C	From Face	1.00	0.000	130.00	No Ice	0.17	0.70	14.30
			0.00			1/2" Ice	0.25	1.05	21.80
			0.00						
(2) LPA-185080/12CF (Verizon (P))	A	From Face	4.00	0.000	150.00	No Ice	3.53	4.57	10.50
			0.00			1/2" Ice	3.96	5.01	36.99
			0.00						
(2) LPA-185080/12CF (Verizon (P))	B	From Face	4.00	0.000	150.00	No Ice	3.53	4.57	10.50
			0.00			1/2" Ice	3.96	5.01	36.99
			0.00						
(2) LPA-185080/12CF (Verizon (P))	C	From Face	4.00	0.000	150.00	No Ice	3.53	4.57	10.50
			0.00			1/2" Ice	3.96	5.01	36.99
			0.00						
(2) LPA-80080/6CF (Verizon (P))	A	From Face	4.00	0.000	150.00	No Ice	4.33	9.09	21.00
			0.00			1/2" Ice	4.76	9.64	69.24
			0.00						
(2) LPA-80080/6CF (Verizon (P))	B	From Face	4.00	0.000	150.00	No Ice	4.33	9.09	21.00
			0.00			1/2" Ice	4.76	9.64	69.24
			0.00						
(2) LPA-80080/6CF (Verizon (P))	C	From Face	4.00	0.000	150.00	No Ice	4.33	9.09	21.00
			0.00			1/2" Ice	4.76	9.64	69.24
			0.00						
EEI 12' Low Profile Platform (Verizon (PM))	A	None		0.000	150.00	No Ice	15.00	15.00	1200.00
						1/2" Ice	18.40	18.40	1650.00
*****									
(3) FV65-14-00NA2 (Sprint (MLA))	A	From Face	4.00	0.000	160.00	No Ice	8.40	5.28	30.00
			0.00			1/2" Ice	8.95	5.74	80.04
			1.00						
(3) FV65-14-00NA2 (Sprint (MLA))	B	From Face	4.00	0.000	160.00	No Ice	8.40	5.28	30.00
			0.00			1/2" Ice	8.95	5.74	80.04
			1.00						
(3) FV65-14-00NA2 (Sprint (MLA))	C	From Face	4.00	0.000	160.00	No Ice	8.40	5.28	30.00
			0.00			1/2" Ice	8.95	5.74	80.04
			1.00						
EEI 12' Low Profile Platform (Sprint (MLAM))	A	None		0.000	160.00	No Ice	15.00	15.00	1200.00
						1/2" Ice	18.40	18.40	1650.00
*****									
5/8-in x 5-ft L-Rod	A	From Face	4.00	0.000	160.00	No Ice	0.31	0.31	5.00
			0.00			1/2" Ice	0.83	0.83	8.50
			2.50						

Load Combinations

Comb. No.	Description
1	Dead Only
2	Dead+Wind 0 deg - No Ice
3	Dead+Wind 30 deg - No Ice
4	Dead+Wind 60 deg - No Ice
5	Dead+Wind 90 deg - No Ice
6	Dead+Wind 120 deg - No Ice

Comb. No.	Description
7	Dead+Wind 150 deg - No Ice
8	Dead+Wind 180 deg - No Ice
9	Dead+Wind 210 deg - No Ice
10	Dead+Wind 240 deg - No Ice
11	Dead+Wind 270 deg - No Ice
12	Dead+Wind 300 deg - No Ice
13	Dead+Wind 330 deg - No Ice
14	Dead+Ice+Temp
15	Dead+Wind 0 deg+Ice+Temp
16	Dead+Wind 30 deg+Ice+Temp
17	Dead+Wind 60 deg+Ice+Temp
18	Dead+Wind 90 deg+Ice+Temp
19	Dead+Wind 120 deg+Ice+Temp
20	Dead+Wind 150 deg+Ice+Temp
21	Dead+Wind 180 deg+Ice+Temp
22	Dead+Wind 210 deg+Ice+Temp
23	Dead+Wind 240 deg+Ice+Temp
24	Dead+Wind 270 deg+Ice+Temp
25	Dead+Wind 300 deg+Ice+Temp
26	Dead+Wind 330 deg+Ice+Temp
27	Dead+Wind 0 deg - Service
28	Dead+Wind 30 deg - Service
29	Dead+Wind 60 deg - Service
30	Dead+Wind 90 deg - Service
31	Dead+Wind 120 deg - Service
32	Dead+Wind 150 deg - Service
33	Dead+Wind 180 deg - Service
34	Dead+Wind 210 deg - Service
35	Dead+Wind 240 deg - Service
36	Dead+Wind 270 deg - Service
37	Dead+Wind 300 deg - Service
38	Dead+Wind 330 deg - Service

Maximum Reactions

Location	Condition	Gov. Load Comb.	Vertical lb	Horizontal, X lb	Horizontal, Z lb
Pole	Max. Vert	15	29497.52	-20.80	13658.62
	Max. H_x	11	24315.39	16917.21	-22.41
	Max. H_z	2	24315.39	-22.41	16943.08
	Max. M_x	2	1949071.35	-22.41	16943.08
	Max. M_z	5	1946843.59	-16917.21	22.41
	Max. Torsion	16	308.45	-6835.30	11839.09
	Min. Vert	1	24315.39	0.00	0.00
	Min. H_x	5	24315.39	-16917.21	22.41
	Min. H_z	8	24315.39	22.41	-16943.08
	Min. M_x	8	-1948932.51	22.41	-16943.08
	Min. M_z	11	-1947084.08	16917.21	-22.41
	Min. Torsion	22	-308.47	6835.30	-11839.09

Tower Mast Reaction Summary

Load Combination	Vertical lb	$Shear_x$ lb	$Shear_z$ lb	Overturning Moment, M_x lb-ft	Overturning Moment, M_z lb-ft	Torque lb-ft
Dead Only	24315.39	0.00	0.00	-66.13	114.54	0.00
Dead+Wind 0 deg - No Ice	24315.39	22.41	-16943.08	-1949071.35	-1649.60	-210.42
Dead+Wind 30 deg - No Ice	24315.39	8478.01	-14684.34	-1688843.51	-974895.28	-242.98
Dead+Wind 60 deg - No Ice	24315.39	14661.93	-8490.94	-976105.40	-1686887.99	-210.46
Dead+Wind 90 deg - No Ice	24315.39	16917.21	-22.41	-1837.68	-1946843.59	-121.52
Dead+Wind 120 deg - No Ice	24315.39	14639.52	8452.13	972906.99	-1685124.34	0.00
Dead+Wind 150 deg - No Ice	24315.39	8439.20	14661.93	1686941.81	-971834.34	121.51
Dead+Wind 180 deg - No Ice	24315.39	-22.41	16943.08	1948932.51	1888.08	210.47
Dead+Wind 210 deg - No Ice	24315.39	-8478.01	14684.34	1688705.83	975133.74	242.99
Dead+Wind 240 deg - No Ice	24315.39	-14661.93	8490.94	975968.31	1687127.47	210.41
Dead+Wind 270 deg - No Ice	24315.39	-16917.21	22.41	1700.00	1947084.08	121.48
Dead+Wind 300 deg - No Ice	24315.39	-14639.52	-8452.13	-973045.84	1685364.83	0.00
Dead+Wind 330 deg - No Ice	24315.39	-8439.20	-14661.93	-1687081.24	972073.82	-121.48
Dead+Ice+Temp	29497.52	0.00	0.00	-93.93	162.68	0.00
Dead+Wind 0 deg+Ice+Temp	29497.52	20.80	-13658.62	-1621502.39	-1483.92	-267.09
Dead+Wind 30 deg+Ice+Temp	29497.52	6835.30	-11839.09	-1405103.35	-811006.38	-308.45
Dead+Wind 60 deg+Ice+Temp	29497.52	11818.29	-6847.31	-812235.58	-1403174.13	-267.20
Dead+Wind 90 deg+Ice+Temp	29497.52	13634.59	-20.80	-1756.53	-1619316.05	-154.28
Dead+Wind 120 deg+Ice+Temp	29497.52	11797.48	6811.28	809168.00	-1401520.06	0.01
Dead+Wind 150 deg+Ice+Temp	29497.52	6799.27	11818.29	1403248.88	-808137.87	154.27
Dead+Wind 180 deg+Ice+Temp	29497.52	-20.80	13658.62	1621300.16	1829.57	267.19
Dead+Wind 210 deg+Ice+Temp	29497.52	-6835.30	11839.09	1404903.79	811352.03	308.47
Dead+Wind 240 deg+Ice+Temp	29497.52	-11818.29	6847.31	812037.35	1403522.08	267.08
Dead+Wind 270 deg+Ice+Temp	29497.52	-13634.59	20.80	1556.96	1619666.32	154.19
Dead+Wind 300 deg+Ice+Temp	29497.52	-11797.48	-6811.28	-809370.23	1401870.33	0.01
Dead+Wind 330 deg+Ice+Temp	29497.52	-6799.27	-11818.29	-1403452.44	808485.83	-154.19
Dead+Wind 0 deg - Service	24315.39	8.75	-6618.39	-762984.06	-570.41	-83.06
Dead+Wind 30 deg - Service	24315.39	3311.72	-5736.07	-661122.29	-381537.86	-95.93
Dead+Wind 60 deg - Service	24315.39	5727.32	-3316.77	-382127.84	-660240.16	-83.11
Dead+Wind 90 deg - Service	24315.39	6608.29	-8.75	-761.21	-761994.95	-47.99
Dead+Wind 120 deg - Service	24315.39	5718.56	3301.61	380790.83	-659549.05	0.00
Dead+Wind 150 deg - Service	24315.39	3296.56	5727.32	660291.45	-380340.49	47.99
Dead+Wind 180 deg - Service	24315.39	-8.75	6618.39	762844.21	812.33	83.11
Dead+Wind 210 deg - Service	24315.39	-3311.72	5736.07	660982.62	381779.77	95.94
Dead+Wind 240 deg - Service	24315.39	-5727.32	3316.77	381988.26	660482.23	83.06
Dead+Wind 270 deg - Service	24315.39	-6608.29	8.75	621.54	762237.18	47.94
Dead+Wind 300 deg - Service	24315.39	-5718.56	-3301.61	-380930.68	659791.28	0.00
Dead+Wind 330 deg - Service	24315.39	-3296.56	-5727.32	-660431.40	380582.56	-47.95

Solution Summary

	Sum of Applied Forces			Sum of Reactions			
Load Comb.	PX lb	PY lb	PZ lb	PX lb	PY lb	PZ lb	% Error
1	0.00	-24315.39	0.00	0.00	24315.39	0.00	0.000%
2	22.41	-24315.39	-16943.08	-22.41	24315.39	16943.08	0.000%
3	8478.01	-24315.39	-14684.34	-8478.01	24315.39	14684.34	0.000%
4	14661.93	-24315.39	-8490.94	-14661.93	24315.39	8490.94	0.000%
5	16917.20	-24315.39	-22.41	-16917.21	24315.39	22.41	0.000%
6	14639.52	-24315.39	8452.13	-14639.52	24315.39	-8452.13	0.000%
7	8439.20	-24315.39	14661.93	-8439.20	24315.39	-14661.93	0.000%
8	-22.41	-24315.39	16943.08	22.41	24315.39	-16943.08	0.000%
9	-8478.01	-24315.39	14684.34	8478.01	24315.39	-14684.34	0.000%
10	-14661.93	-24315.39	8490.94	14661.93	24315.39	-8490.94	0.000%
11	-16917.20	-24315.39	22.41	16917.21	24315.39	-22.41	0.000%
12	-14639.52	-24315.39	-8452.13	14639.52	24315.39	8452.13	0.000%
13	-8439.20	-24315.39	-14661.93	8439.20	24315.39	14661.93	0.000%
14	0.00	-29497.52	0.00	0.00	29497.52	0.00	0.000%

Load Comb.	Sum of Applied Forces PX lb	PY lb	PZ lb	Sum of Reactions PX lb	PY lb	PZ lb	% Error
15	20.80	-29497.52	-13658.59	-20.80	29497.52	13658.62	0.000%
16	6835.30	-29497.52	-11839.09	-6835.30	29497.52	11839.09	0.000%
17	11818.28	-29497.52	-6847.31	-11818.29	29497.52	6847.31	0.000%
18	13634.57	-29497.52	-20.80	-13634.59	29497.52	20.80	0.000%
19	11797.48	-29497.52	6811.28	-11797.48	29497.52	-6811.28	0.000%
20	6799.27	-29497.52	11818.28	-6799.27	29497.52	-11818.29	0.000%
21	-20.80	-29497.52	13658.59	20.80	29497.52	-13658.62	0.000%
22	-6835.30	-29497.52	11839.09	6835.30	29497.52	-11839.09	0.000%
23	-11818.28	-29497.52	6847.31	11818.29	29497.52	-6847.31	0.000%
24	-13634.57	-29497.52	20.80	13634.59	29497.52	-20.80	0.000%
25	-11797.48	-29497.52	-6811.28	11797.48	29497.52	6811.28	0.000%
26	-6799.27	-29497.52	-11818.28	6799.27	29497.52	11818.29	0.000%
27	8.75	-24315.39	-6618.39	-8.75	24315.39	6618.39	0.000%
28	3311.72	-24315.39	-5736.07	-3311.72	24315.39	5736.07	0.000%
29	5727.32	-24315.39	-3316.77	-5727.32	24315.39	3316.77	0.000%
30	6608.28	-24315.39	-8.75	-6608.29	24315.39	8.75	0.000%
31	5718.56	-24315.39	3301.61	-5718.56	24315.39	-3301.61	0.000%
32	3296.56	-24315.39	5727.32	-3296.56	24315.39	-5727.32	0.000%
33	-8.75	-24315.39	6618.39	8.75	24315.39	-6618.39	0.000%
34	-3311.72	-24315.39	5736.07	3311.72	24315.39	-5736.07	0.000%
35	-5727.32	-24315.39	3316.77	5727.32	24315.39	-3316.77	0.000%
36	-6608.28	-24315.39	8.75	6608.29	24315.39	-8.75	0.000%
37	-5718.56	-24315.39	-3301.61	5718.56	24315.39	3301.61	0.000%
38	-3296.56	-24315.39	-5727.32	3296.56	24315.39	5727.32	0.000%

Non-Linear Convergence Results

Load Combination	Converged?	Number of Cycles	Displacement Tolerance	Force Tolerance
1	Yes	4	0.00000001	0.00000001
2	Yes	4	0.00000001	0.00073758
3	Yes	6	0.00000001	0.00012302
4	Yes	6	0.00000001	0.00012413
5	Yes	4	0.00000001	0.00074355
6	Yes	6	0.00000001	0.00012352
7	Yes	6	0.00000001	0.00012320
8	Yes	4	0.00000001	0.00081369
9	Yes	6	0.00000001	0.00012418
10	Yes	6	0.00000001	0.00012315
11	Yes	4	0.00000001	0.00069632
12	Yes	6	0.00000001	0.00012357
13	Yes	6	0.00000001	0.00012382
14	Yes	4	0.00000001	0.00000001
15	Yes	5	0.00000001	0.00053842
16	Yes	6	0.00000001	0.00041192
17	Yes	6	0.00000001	0.00041722
18	Yes	5	0.00000001	0.00053704
19	Yes	6	0.00000001	0.00041399
20	Yes	6	0.00000001	0.00041252
21	Yes	5	0.00000001	0.00054027
22	Yes	6	0.00000001	0.00041762
23	Yes	6	0.00000001	0.00041246
24	Yes	5	0.00000001	0.00053605
25	Yes	6	0.00000001	0.00041433
26	Yes	6	0.00000001	0.00041566
27	Yes	4	0.00000001	0.00021276

28	Yes	5	0.00000001	0.00035662
29	Yes	5	0.00000001	0.00036136
30	Yes	4	0.00000001	0.00020617
31	Yes	5	0.00000001	0.00035820
32	Yes	5	0.00000001	0.00035693
33	Yes	4	0.00000001	0.00021859
34	Yes	5	0.00000001	0.00036184
35	Yes	5	0.00000001	0.00035711
36	Yes	4	0.00000001	0.00020273
37	Yes	5	0.00000001	0.00035872
38	Yes	5	0.00000001	0.00035999

Maximum Tower Deflections - Service Wind

Section No.	Elevation ft	Horz. Deflection in	Gov. Load Comb.	Tilt °	Twist °
L1	160 - 135.333	51.18	27	2.965	0.001
L2	138.666 - 89.836	38.25	28	2.760	0.001
L3	94.169 - 44.379	16.67	28	1.771	0.000
L4	49.629 - 0	4.40	28	0.827	0.000

Critical Deflections and Radius of Curvature - Service Wind

Elevation ft	Appurtenance	Gov. Load Comb.	Deflection in	Tilt °	Twist °	Radius of Curvature ft
160.00	(3) FV65-14-00NA2	27	51.18	2.965	0.001	13315
150.00	(2) LPA-185080/12CF	27	45.01	2.885	0.001	6657
130.00	7770.00	28	33.39	2.621	0.001	2962
77.00	KS24019-L112A	28	10.80	1.333	0.000	2472

Maximum Tower Deflections - Design Wind

Section No.	Elevation ft	Horz. Deflection in	Gov. Load Comb.	Tilt °	Twist °
L1	160 - 135.333	130.35	2	7.555	0.005
L2	138.666 - 89.836	97.47	2	7.035	0.003
L3	94.169 - 44.379	42.52	2	4.519	0.001
L4	49.629 - 0	11.23	3	2.112	0.001

Critical Deflections and Radius of Curvature - Design Wind

Elevation ft	Appurtenance	Gov. Load Comb.	Deflection in	Tilt °	Twist °	Radius of Curvature ft

Elevation ft	Appurtenance	Gov. Load Comb.	Deflection in	Tilt °	Twist °	Radius of Curvature ft
160.00	(3) FV65-14-00NA2	2	130.35	7.555	0.005	5387
150.00	(2) LPA-185080/12CF	2	114.67	7.355	0.004	2692
130.00	7770.00	2	85.09	6.674	0.002	1191
77.00	KS24019-L112A	3	27.56	3.467	0.001	977

Base Plate Design Data

Plate Thickness in	Number of Anchor Bolts	Anchor Bolt Size in	Actual / Allowable Ratio Bolt Tension lb	Actual / Allowable Ratio Bolt Compression lb	Actual / Allowable Ratio Plate Stress ksi	Actual / Allowable Ratio Stiffener Stress ksi	Controlling Condition	Ratio
2.0000	12	2.2500	142421.52 / 131210.58 / 1.09	146471.67 / 217809.56 / 0.67	38.11 / 45.00 / 0.85	16.77 / 45.00 / 0.37	Bolt T	1.09 ✔

Compression Checks

Pole Design Data

Section No.	Elevation ft	Size	L ft	L_u ft	Kl/r	F_a ksi	A in^2	Actual P lb	Allow. P_a lb	Ratio $\frac{P}{P_a}$
L1	160 - 135.333 (1)	TP22.39x18x0.188	24.67	0.00	0.0	39.00	12.8942	-3021.49	502876.00	0.006
L2	135.333 - 89.836 (2)	TP30.12x21.4208x0.25	48.83	0.00	0.0	39.00	23.0893	-7493.83	900483.00	0.008
L3	89.836 - 44.379 (3)	TP37.72x28.8481x0.313	49.79	0.00	0.0	39.00	36.2331	-14135.80	1413090.00	0.010
L4	44.379 - 0 (4)	TP45x36.1585x0.375	49.63	0.00	0.0	39.00	53.1149	-24300.90	2071480.00	0.012

Pole Bending Design Data

Section No.	Elevation ft	Size	Actual M_x lb-ft	Actual f_{bx} ksi	Allow. F_{bx} ksi	Ratio $\frac{f_{bx}}{F_{bx}}$	Actual M_y lb-ft	Actual f_{by} ksi	Allow. F_{by} ksi	Ratio $\frac{f_{by}}{F_{by}}$
L1	160 - 135.333 (1)	TP22.39x18x0.188	129254.17	-22.58	39.00	0.579	0.00	0.00	39.00	0.000
L2	135.333 - 89.836 (2)	TP30.12x21.4208x0.25	585060.83	-42.38	39.00	1.087	0.00	0.00	39.00	0.000
L3	89.836 - 44.379 (3)	TP37.72x28.8481x0.313	1169558.33	-43.07	39.00	1.104	0.00	0.00	39.00	0.000
L4	44.379 - 0 (4)	TP45x36.1585x0.375	1950025.00	-40.03	39.00	1.026	0.00	0.00	39.00	0.000

Section No.	Elevation ft	Size	Actual M_x lb-ft	Actual f_{bx} ksi	Allow. F_{bx} ksi	Ratio $\frac{f_{bx}}{F_{bx}}$	Actual M_y lb-ft	Actual f_{by} ksi	Allow. F_{by} ksi	Ratio $\frac{f_{by}}{F_{by}}$

Pole Interaction Design Data

Section No.	Elevation ft	Size	Ratio $\frac{P}{P_a}$	Ratio $\frac{f_{bx}}{F_{bx}}$	Ratio $\frac{f_{by}}{F_{by}}$	Comb. Stress Ratio	Allow. Stress Ratio	Criteria
L1	160 - 135.333 (1)	TP22.39x18x0.188	0.006	0.579	0.000	0.585 ✔	1.333	H1-3 ✔
L2	135.333 - 89.836 (2)	TP30.12x21.4208x0.25	0.008	1.087	0.000	1.095 ✔	1.333	H1-3 ✔
L3	89.836 - 44.379 (3)	TP37.72x28.8481x0.313	0.010	1.104	0.000	1.114 ✔	1.333	H1-3 ✔
L4	44.379 - 0 (4)	TP45x36.1585x0.375	0.012	1.026	0.000	1.038 ✔	1.333	H1-3 ✔

Section Capacity Table

Section No.	Elevation ft	Component Type	Size	Critical Element	P lb	$SF*P_{allow}$ lb	% Capacity	Pass Fail
L1	160 - 135.333	Pole	TP22.39x18x0.188	1	-3021.49	670333.68	43.9	Pass
L2	135.333 - 89.836	Pole	TP30.12x21.4208x0.25	2	-7493.83	1200343.79	82.1	Pass
L3	89.836 - 44.379	Pole	TP37.72x28.8481x0.313	3	-14135.80	1883648.89	83.6	Pass
L4	44.379 - 0	Pole	TP45x36.1585x0.375	4	-24300.90	2761282.73	77.9	Pass
							Summary	
						Pole (L3)	83.6	Pass
						Base Plate	81.4	Pass
						RATING =	**83.6**	**Pass**

APPENDIX B

BASE LEVEL DRAWING

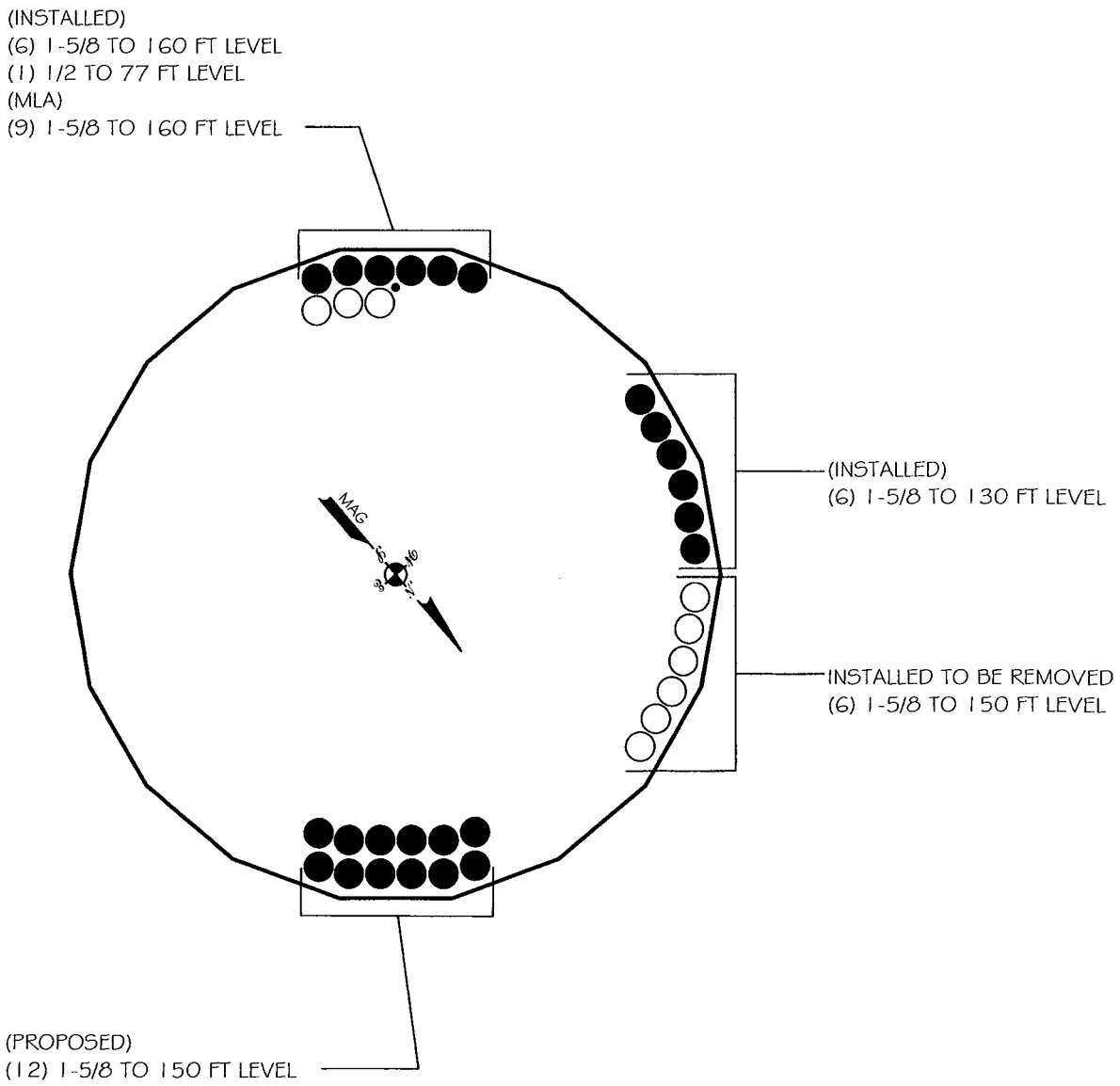

COAX PLAN

SCALE: 1/2" = 1' - 0"

0 2 4

SCALE IN FEET

PREPARED BY:	PREPARED FOR:	PROJECT INFORMATION:	
TOWER ENGINEERING PROFESSIONALS 3703 JUNCTION BOULEVARD RALEIGH, NC 27603-5263 (919) 661-6351	CROWN CASTLE INTERNATIONAL Crown Castle USA Inc. 1200 MACARTHUR BLVD, SUITE 200 MAHWAH, NJ 07430	NEW MILFORD / KIMBERLY SITE # 876397 399 CHESTNUT LAND RD NEW MILFORD, CT 06776 (LITCHFIELD COUNTY)	REVISION: 0 TEP JOB #: 072472 SHEET NUMBER: M-1

APPENDIX C

ADDITIONAL CALCULATIONS

LC1

Design vs. Analysis Reaction Comparison (Max Wind)				
Foundation	**Design**	**Analysis**	**% CAP**	**Notes**
Moment =	2,111.84	1,950.03	92.3	
Download =	22.87	24.32	106.3	**Does Not Control Design**
Shear =	18.36	16.96	92.4	

92.4 %

TOTAL = 92.4 %

Design vs. Analysis Reaction Comparison (0.75 Wind + Ice)				
Foundation	**Design**	**Analysis**	**% CAP**	**Notes**
Moment =	2,111.84	1,622.36	76.8	
Download =	22.87	29.50	129.0	**Does Not Control Design**
Shear =	18.36	13.7	74.5	

76.8 %

TOTAL = 76.8 %

APPENDIX D

TOWER MODIFICATION DRAWINGS

STRUCTURAL MODIFICATION DRAWINGS

SITE NAME:

NEW MILFORD / KIMBERLY

SITE NUMBER:

BU# 876397

SITE ADDRESS:

399 CHESTNUT LANE ROAD
NEW MILFORD, CT 06776
(LITCHFIELD COUNTY)

MODIFICATION PROVISIONS

THE MODIFICATIONS DEPICTED ON THESE DRAWINGS ARE BASED ON THE RECOMMENDATIONS OUTLINED IN THE STRUCTURAL ANALYSIS REPORT COMPLETED BY TOWER ENGINEERING PROFESSIONALS (TEP), TEP PROJECT NUMBER 072472, DATED DECEMBER 4, 2007 (REV 0) THIS REPORT WAS BASED ON A SPECIFIC ANTENNA AND COAX CONFIGURATION. SEE THE REPORT FOR THE ANTENNA AND COAX LOADING INFORMATION. ANY OTHER ANTENNA OR COAX CONFIGURATION REQUIRES REVIEW BY TEP. SATISFACTORY COMPLETION OF THE MODIFICATIONS INDICATED ON THESE DRAWINGS WILL RESULT IN THE STRUCTURE MEETING THE REQUIREMENTS OF THE SPECIFICATIONS UNDER WHICH THE STRUCTURAL WAS COMPLETED. CONTACT TEP FOR A FEE TO PERFORM THE POST CONSTRUCTION INSPECTION.

ATTENTION

TOWER ENGINEERING PROFESSIONALS DID NOT PERFORM AS-BUILT TOWER MEASUREMENTS. REFER TO THE TOWER DESIGN DRAWINGS BY ENGINEERED ENDEAVERS INC (JOB # 11742). THE CONTRACTOR SHALL FIELD VERIFY ALL: DIMENSIONS, MEASUREMENTS, QUANTITIES, PART NUMBERS AND COAX/ANTENNA PLACEMENTS PRIOR TO: BIDDING, ORDERING OF MATERIALS, AND CONSTRUCTION. CROWN CASTLE WELDING SPECIFICATIONS SHALL BE REVIEWED AND ADHERED TO BY THE CONTRACTOR.

INDEX OF SHEETS

NO.	SHEET TITLE	REV
T-1	TITLE SHEET	0
S-1	TOWER ELEVATION AND MODIFICATION SCHEDULE	0
S-2	BASE PLATE STIFFENER DETAILS	0
S-3	PROJECT NOTES	0

PROJECT TEAM

TOWER MANUFACTURER:

NAME: ENGINEERED ENDEAVORS INCORPORATED
ADDRESS: 7610 JENTHER DRIVE
CITY, STATE, ZIP: MENTOR, OHIO 44060
CONTACT: ENGINEERING DEPARTMENT
PHONE: (440) 918-1101

STRUCTURAL ENGINEER:

NAME: TOWER ENGINEERING PROFESSIONALS, INC.
ADDRESS: 3703 JUNCTION BOULEVARD
CITY, STATE, ZIP: RALEIGH, NC 27603
CONTACT: PETER G. JERNIGAN, P.E.
PHONE: (919) 661-6351

GEOTECHNICAL ENGINEER:

NAME: SEA CONSULTANTS, INC.
ADDRESS: 200 CORPORATE PLACE
CITY, STATE, ZIP: ROCKY HILL, CT 06067
CONTACT: MICHAEL CLARK, PE
PHONE: (860) 563-7775

PLANS PREPARED FOR:

CROWN CASTLE INTERNATIONAL

Crown Castle USA Inc.

1200 MacArthur Blvd, Suite 200
Mahwah, NJ 07430
Office: (201) 236-9032

PLANS PREPARED BY:

TOWER ENGINEERING PROFESSIONALS
3703 JUNCTION BOULEVARD
RALEIGH, NC 27603-5263
OFFICE: (919) 661-6351
FAX: (919) 661-6350

SEAL:

STATE OF CONNECTICUT
PETER G. JERNIGAN, JR.
00021509
LICENSED
PROFESSIONAL ENGINEER

January 10, 2008

REV	DATE	ISSUED FOR:
0	01-10-08	CONSTRUCTION

DRAWN BY: JRM | CHECKED BY: KMM

SHEET TITLE:

TITLE SHEET

SHEET NUMBER: **T-1**

REVISION: **0**

TEP #: 072472

TOWER MODIFICATION SCHEDULE

NO.	MODIFICATION DESCRIPTION	ELEVATION (FT.)
1	PROPOSED BASE PLATE STIFFENERS. SEE SHEET S-2 FOR DETAILS.	0
2	POST CONSTRUCTION INSPECTION BY TEP. CONTACT TEP FOR FEE.	-

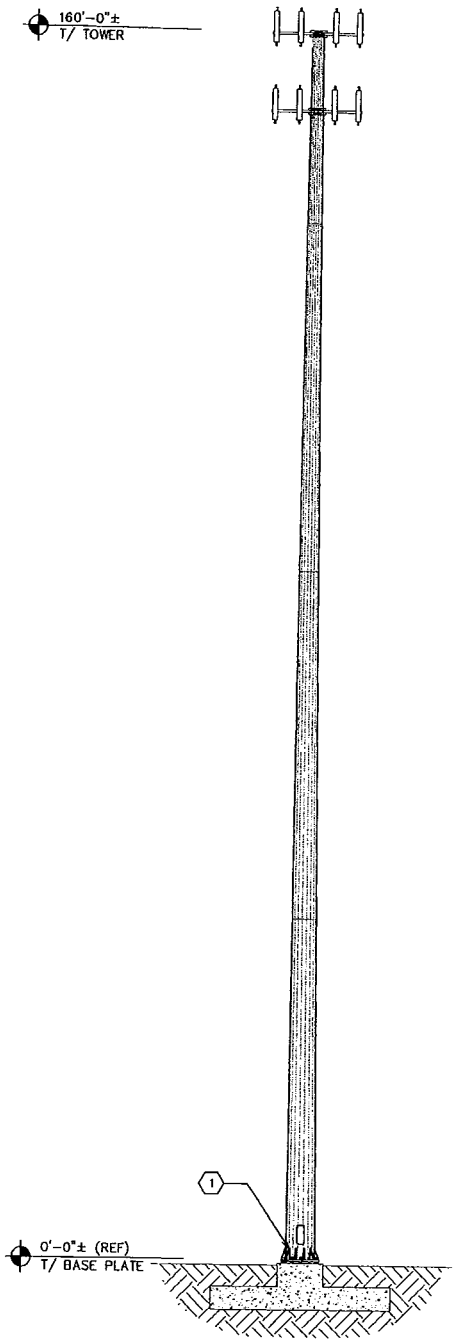

TOWER ELEVATION

SCALE: 1/16" = 1'-0"

0 16 32
SCALE IN FEET

PLANS PREPARED FOR:
CROWN CASTLE INTERNATIONAL
Crown Castle USA Inc.
1200 MacArthur Blvd, Suite 200
Mahwah, NJ 28270
Office: (201) 235-9032

PROJECT INFORMATION:
NEW MILFORD / KIMBERLY
BU # 876397
399 CHESTNUT LAND ROAD
NEW MILFORD, CT 06776
(LITCHFIELD COUNTY)

PLANS PREPARED BY:
TOWER ENGINEERING PROFESSIONALS
3703 JUNCTION BOULEVARD
RALEIGH, NC 27603-5263
OFFICE: (919) 661-6351
FAX: (919) 661-6350

SEAL:
STATE OF CONNECTICUT
PETER G. JERNIGAN JR.
00021509
LICENSED
PROFESSIONAL ENGINEER
January 10, 2008

REV	DATE	ISSUED FOR:
0	01-10-08	CONSTRUCTION

DRAWN BY: JRM CHECKED BY: KMM

SHEET TITLE:
TOWER ELEVATION AND MODIFICATION SCHEDULE

SHEET NUMBER: **S-1**
REVISION: 0
TEP #: 072472

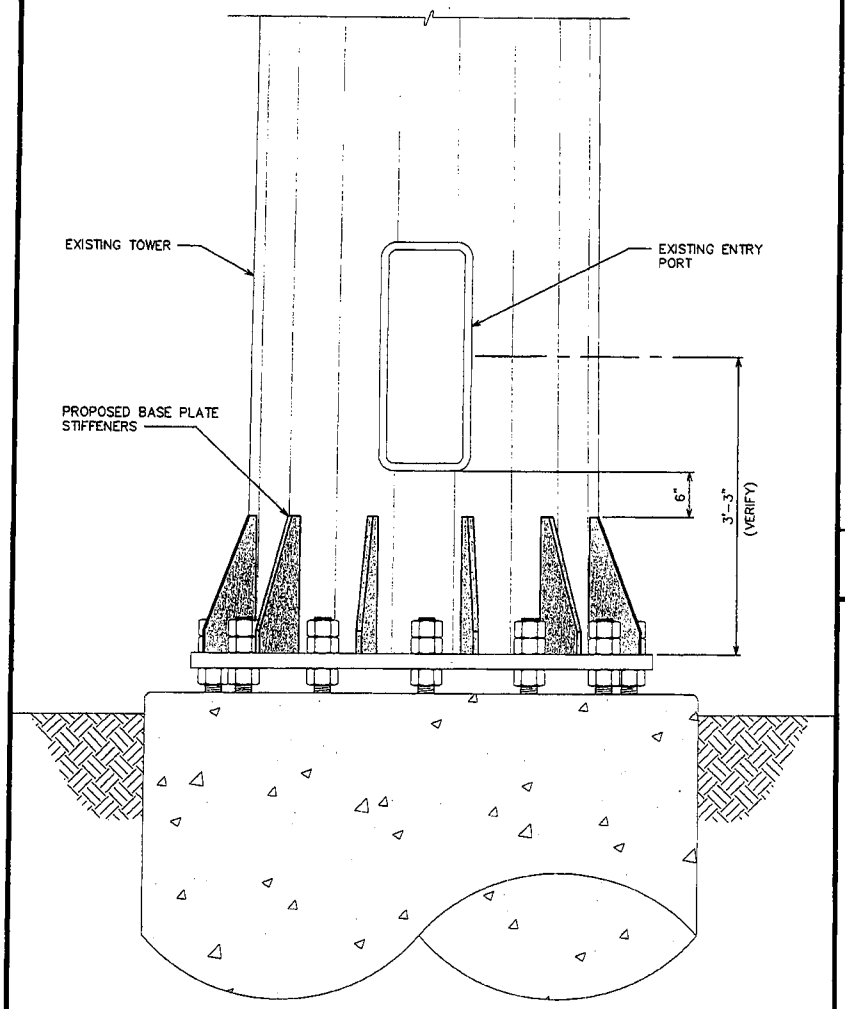

BASE ELEVATION

SCALE: ¾" = 1'-0"

0 1 2 SCALE IN FEET

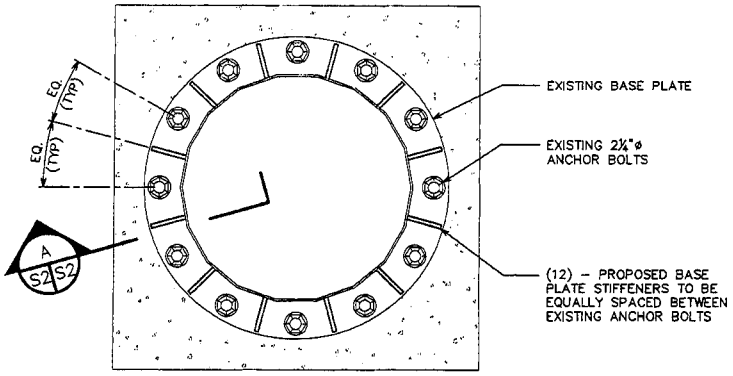

PLAN VIEW

SCALE: ½" = 1'-0"

0 2 4 SCALE IN FEET

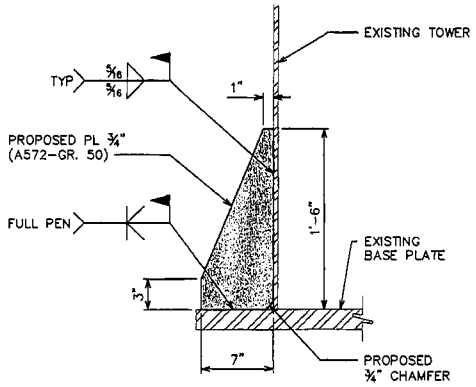

SECTION

SCALE: 1" = 1'-0"

A S2 S2

0 1 2 SCALE IN FEET

PLANS PREPARED FOR:

CROWN CASTLE INTERNATIONAL

Crown Castle USA Inc.
1200 MacArthur Blvd, Suite 200
Mahwah, NJ 28270
Office: (201) 238-9032

PROJECT INFORMATION:

NEW MILFORD / KIMBERLY
BU # 876397

399 CHESTNUT LAND ROAD
NEW MILFORD, CT 06776
(LITCHFIELD COUNTY)

PLANS PREPARED BY:

TOWER ENGINEERING PROFESSIONALS
3703 JUNCTION BOULEVARD
RALEIGH, NC 27603-5263
OFFICE: (919) 661-6351
FAX: (919) 661-6350

SEAL:

STATE OF CONNECTICUT
PETER G. JERNIGAN, JR.
00021509
LICENSED
PROFESSIONAL ENGINEER

January 10, 2008

REV	DATE	ISSUED FOR:
0	01-10-08	CONSTRUCTION

DRAWN BY: JRM CHECKED BY: KMM

SHEET TITLE:

BASE PLATE STIFFENER DETAILS

SHEET NUMBER: **S-2**

REVISION: **0**

TEP #: 072472

GENERAL NOTES:

1. ALL REFERENCES TO OWNER IN THESE DOCUMENTS SHALL BE CONSIDERED CROWN CASTLE OR IT'S DESIGNATED REPRESENTATIVE.
2. ALL WORK PRESENTED ON THESE DRAWINGS MUST BE COMPLETED BY THE CONTRACTOR UNLESS NOTED OTHERWISE. THE CONTRACTOR MUST HAVE CONSIDERABLE EXPERIENCE IN PERFORMANCE OF WORK SIMILAR TO THAT DESCRIBED HEREIN. BY ACCEPTANCE OF THIS ASSIGNMENT, THE CONTRACTOR IS ATTESTING THAT HE DOES HAVE SUFFICIENT EXPERIENCE AND ABILITY, THAT HE IS KNOWLEDGEABLE OF THE WORK TO BE PERFORMED AND THAT HE IS PROPERLY LICENSED AND PROPERLY REGISTERED TO DO THIS WORK IN THE STATE OF CONNECTICUT.
3. WORK SHALL BE COMPLETED IN ACCORDANCE WITH THE INTERNATIONAL BUILDING CODE, 2003 EDITION.
4. UNLESS SHOWN OR NOTED OTHERWISE ON THE CONTRACT DRAWINGS, OR IN THE SPECIFICATIONS, THE FOLLOWING NOTES SHALL APPLY TO THE MATERIALS LISTED HEREIN, AND TO THE PROCEDURES TO BE USED ON THIS PROJECT.
5. ALL HARDWARE ASSEMBLY MANUFACTURER'S INSTRUCTIONS SHALL BE FOLLOWED EXACTLY AND SHALL SUPERCEDE ANY CONFLICTING NOTES ENCLOSED HEREIN.
6. IT IS THE CONTRACTOR'S SOLE RESPONSIBILITY TO DETERMINE ERECTION PROCEDURE AND SEQUENCE TO INSURE THE SAFETY OF THE STRUCTURE AND IT'S COMPONENT PARTS DURING ERECTION AND/OR FIELD MODIFICATIONS. THIS INCLUDES, BUT IS NOT LIMITED TO, THE ADDITION OF TEMPORARY BRACING GUYS OR TIE DOWNS THAT MAY BE NECESSARY. SUCH MATERIAL SHALL BE REMOVED AND SHALL REMAIN THE PROPERTY OF THE CONTRACTOR AFTER THE COMPLETION OF THE PROJECT.
7. ALL DIMENSIONS, ELEVATIONS, AND EXISTING CONDITIONS SHOWN ON THE DRAWINGS SHALL BE FIELD VERIFIED BY THE CONTRACTOR PRIOR TO BEGINNING ANY MATERIALS ORDERING, FABRICATION OR CONSTRUCTION WORK ON THIS PROJECT. CONTRACTOR SHALL NOT SCALE CONTRACT DRAWINGS IN LIEU OF FIELD VERIFICATION. ANY DISCREPANCIES SHALL BE IMMEDIATELY BROUGHT TO THE ATTENTION OF THE OWNER AND THE OWNER'S ENGINEER. THE DISCREPANCIES MUST BE RESOLVED BEFORE THE CONTRACTOR IS TO PROCEED WITH THE WORK. THE CONTRACT DOCUMENTS DO NOT INDICATE THE METHOD OF CONSTRUCTION. THE CONTRACTOR SHALL SUPERVISE AND DIRECT THE WORK AND SHALL BE SOLELY RESPONSIBLE FOR ALL CONSTRUCTION MEANS, METHODS, TECHNIQUES, SEQUENCES, AND PROCEDURES. OBSERVATION VISITS TO THE SITE BY THE OWNER AND/OR THE ENGINEER SHALL NOT INCLUDE INSPECTION OF THE PROTECTIVE MEASURES OR THE PROCEDURES.
8. ALL MATERIALS AND EQUIPMENT FURNISHED SHALL BE NEW AND OF GOOD QUALITY, FREE FROM FAULTS AND DEFECTS AND IN CONFORMANCE WITH THE CONTRACT DOCUMENTS. ANY AND ALL SUBSTITUTIONS MUST BE PROPERLY APPROVED AND AUTHORIZED IN WRITING BY THE OWNER AND ENGINEER PRIOR TO INSTALLATION. THE CONTRACTOR SHALL FURNISH SATISFACTORY EVIDENCE AS TO THE KIND AND QUALITY OF THE MATERIALS AND EQUIPMENT BEING SUBSTITUTED.
9. THE CONTRACTOR SHALL BE RESPONSIBLE FOR INITIATING, MAINTAINING, AND SUPERVISING ALL SAFETY PRECAUTIONS AND PROGRAMS IN CONNECTION WITH THE WORK. THE CONTRACTOR IS RESPONSIBLE FOR INSURING THAT THIS PROJECT AND RELATED WORK COMPLIES WITH ALL APPLICABLE LOCAL, STATE, AND FEDERAL SAFETY CODES AND REGULATIONS GOVERNING THIS WORK.
10. ACCESS TO THE PROPOSED WORK SITE MAY BE RESTRICTED. THE CONTRACTOR SHALL COORDINATE INTENDED CONSTRUCTION ACTIVITY, INCLUDING WORK SCHEDULE AND MATERIALS ACCESS, WITH THE RESIDENT LEASING AGENT FOR APPROVAL.
11. BILL OF MATERIALS AND PART NUMBERS LISTED ON CONSTRUCTION DRAWINGS ARE INTENDED TO AID CONTRACTOR/OWNER. CONTRACTOR/OWNER SHALL VERIFY PARTS AND QUANTITIES WITH MANUFACTURER PRIOR TO BIDDING AND/OR ORDERING MATERIALS.
12. ALL PERMITS THAT MUST BE OBTAINED ARE THE RESPONSIBILITY OF THE CONTRACTOR. THE CONTRACTOR WILL BE RESPONSIBLE FOR ABIDING BY ALL CONDITIONS AND REQUIREMENTS OF THE PERMITS.
13. 24 HOURS PRIOR TO THE BEGINNING OF ANY CONSTRUCTION, THE CONTRACTOR MUST NOTIFY THE APPLICABLE JURISDICTIONAL (STATE, COUNTY OR CITY) ENGINEER.
14. THE CONTRACTOR IS REQUIRED TO MAINTAIN ALL PIPES, DITCHES, AND OTHER DRAINAGE STRUCTURES FREE FROM OBSTRUCTION UNTIL WORK IS ACCEPTED BY THE OWNER. THE CONTRACTOR IS RESPONSIBLE FOR ANY DAMAGES CAUSED BY FAILURE TO MAINTAIN DRAINAGE STRUCTURE IN OPERABLE CONDITION.
15. ALL MATERIALS AND WORKMANSHIP SHALL BE WARRANTED FOR ONE YEAR FROM ACCEPTANCE DATE.
16. ALL DIMENSIONS SHALL BE VERIFIED WITH THE PLANS (LATEST REVISION) PRIOR TO COMMENCING CONSTRUCTION. NOTIFY THE ENGINEER IMMEDIATELY IF ANY DESCREPANCIES ARE DISCOVERED. THE OWNER SHALL HAVE A SET OF APPROVED PLANS AVAILABLE AT THE SITE AT ALL TIMES WHILE WORK IS BEING PERFORMED. A DESIGNATED RESPONSIBLE EMPLOYEE SHALL BE AVAILABLE FOR CONTACT BY GOVERNING AGENCY INSPECTORS.

STRUCTURAL STEEL NOTES:

1. THE FABRICATION AND ERECTION OF STRUCTURAL STEEL SHALL CONFORM TO THE AISC SPECIFICATION FOR MANUAL OF STEEL CONSTRUCTION, ALLOWABLE STRESS DESIGN, 9TH EDITION.
2. UNLESS OTHERWISE NOTED, ALL STRUCTURAL ELEMENTS SHALL CONFORM TO THE FOLLOWING REQUIREMENTS:
   A. STRUCTURAL STEEL, ASTM DESIGNATION A-36.
   B. ALL BOLTS, ASTM A-325 TYPE 1 GALVANIZED HIGH STRENGTH BOLTS.
   C. ALL NUTS, ASTM A-563 CARBON AND ALLOY STEEL NUTS
   D. ALL WASHERS, ASTM F436 HARDENED STEEL WASHERS
3. ALL CONNECTIONS NOT FULLY DETAILED ON THESE PLANS SHALL BE DETAILED BY THE STEEL FABRICATOR IN ACCORDANCE WITH AISC SPECIFICATION FOR MANUAL OF STEEL CONSTRUCTION, ALLOWABLE STRESS DESIGN, 9TH EDITION.
4. HOLES SHALL NOT BE FLAME CUT THRU STEEL UNLESS APPROVED BY THE ENGINEER.
5. HOT-DIP GALVANIZE ALL ITEMS UNLESS OTHERWISE NOTED, AFTER FABRICATION WHERE PRACTICABLE. GALVANIZING: ASTM A 123, ASTM, A 153/A 153M OR ASTM A 653/A 653M, G90, AS APPLICABLE.
6. REPAIR DAMAGED SURFACES WITH GALVANIZING REPAIR METHOD AND PAINT CONFORMING TO ASTM A 780 OR BY APPLICATION OF STICK OR THICK PASTE MATERIAL SPECIFICALLY DESIGNED FOR REPAIR OF GALVANIZING. CLEAN AREAS TO BE REPAIRED AND REMOVE SLAG FROM WELDS. HEAT SURFACES TO WHICH STICK OR PASTE MATERIAL IS APPLIED, WITH A TORCH TO A TEMPERATURE SUFFICIENT TO MELT THE METALLICS IN STICK OR PASTE; SPREAD MOLTEN MATERIAL UNIFORMLY OVER SURFACES TO BE COATED AND WIPE OFF EXCESS MATERIAL.
7. A NUT LOCKING DEVICE SHALL BE INSTALLED ON ALL PROPOSED AND/OR REPLACED BOLTS.
8. ALL PROPOSED AND/OR REPLACED BOLTS SHALL BE OF SUFFICIENT LENGTH TO EXCLUDE THE THREADS FROM THE SHEAR PLANE.
9. ALL PROPOSED AND/OR REPLACED BOLTS SHALL BE OF SUFFICIENT LENGTH SUCH THAT THE END OF THE BOLT BE AT LEAST FLUSH WITH THE FACE OF THE NUT. IT IS NOT PERMITTED FOR THE BOLT END TO BE BELOW THE FACE OF THE NUT AFTER TIGHTENING IS COMPLETED.
10. ALL TOWER ASSEMBLY BOLTS ARE TO BE INSERTED OUT AND/OR UP (i.e. WITH NUTS AND PAL NUTS ON OUTSIDE OF TOWER FACE AND/OR ON TOP FLANGE PLATES) UNLESS PROHIBITED BY LACK OF CLEARANCE.
11. ALL ASSEMBLY AND ANCHOR BOLTS ARE TO BE TIGHTENED IN ACCORDANCE WITH ANSI/TIA/EIA-222-F, 1996 SECTION 1.1.3.2-(WHERE HIGH STRENGTH BOLTS ARE USED FOR BEARING-TYPE CONNECTIONS, AS A MINIMUM, THE BOLTS SHALL BE TIGHTENED TO A "SNUG TIGHT" CONDITION AS DEFINED IN THE JUNE 23, 2000, AISC, "SPECIFICATION FOR STRUCTURAL JOINTS USING ASTM A325 OR A490 BOLTS".)
12. FLAT WASHERS ARE TO BE INSTALLED WITH BOLTS OVER SLOTTED HOLES.
13. DO NOT OVER TORQUE ASSEMBLY BOLTS. GALVANIZING ON BOLTS, NUTS, AND STEEL PARTS MAY ACT AS A LUBRICANT, THUS OVER TIGHTENING MAY OCCUR AND MAY CAUSE BOLTS TO CRACK AND SNAP OFF.
14. PAL NUTS ARE TO BE INSTALLED AFTER NUTS ARE TIGHT AND WITH EDGE LIP OUT. PAL NUTS ARE NOT REQUIRED WHEN SELF-LOCKING NUTS ARE PROVIDED.
15. GALVANIZED ASTM A325 BOLTS SHALL NOT BE REUSED.

WELDING NOTES:

1. ALL WELDING SHALL BE IN ACCORDANCE WITH THE AWS D1.1/D1.1M: 2006 "STRUCTURAL WELDING CODE - STEEL".
2. ALL WELDING SHALL BE PERFORMED BY AWS CERTIFIED WELDERS.
3. CONTRACTOR SHALL RETAIN AN AWS CERTIFIED WELD INSPECTOR TO PERFORM VISUAL INSPECTIONS ON FIELD WELDS. A LETTER AND REPORT SHALL BE ISSUED TO THE CONTRACTOR. CONTRACTOR SHALL SUBMIT LETTER AND REPORT TO TOWER ENGINEERING PROFESSIONALS.
4. GRIND THE SURFACE ADJACENT TO THE WELD FOR A DISTANCE OF 2" MINIMUM ALL AROUND. GRIND THE SURFACE OF THE ROD TO BE INSTALLED FOR A DISTANCE OF 2" MINIMUM ALL AROUND THE AREA TO BE WELDED. ENSURE BOTH AREAS ARE 100% FREE OF ALL GALVANIZING. SURFACES TO BE WELDED SHALL BE FREE FROM SCALE, SLAG, RUST, MOISTURE, GREASE OR ANY OTHER FOREIGN MATERIAL THAT WOULD PREVENT PROPER WELDING.
5. DO NOT WELD IF THE TEMPERATURE OF THE STEEL IN THE VICINITY OF THE WELD AREA IS BELOW 0°F. WHEN THE TEMPERATURE IS BETWEEN 0°F AND 32°F, PREHEAT AND MAINTAIN THE STEEL IN THE VICINITY OF THE WELD AREA AT 70°F DURING THE WELDING PROCESS.
6. DO NOT WELD ON WET OR FROST-COVERED SURFACES AND PROVIDE ADEQUATE PROTECTION FROM HIGH WINDS.
7. FOR ALL WELDING, USE E70XX ELECTRODES.
8. AFTER FINAL INSPECTION, THE AREA OF THE WELDS, THE INSTALLATION AND ALL SURFACES DAMAGED BY WELDING OR GRINDING SHALL RECEIVE A COLD-GALVANIZED COATING. THIS COATING SHALL BE APPLIED BY BRUSH. THE GALVANIZING COMPOUND SHALL CONTAIN A MINIMUM OF 95% PURE ZINC. THE FINISHED COATING SHALL BE A MINIMUM THICKNESS OF 3 MILLS.

PLANS PREPARED FOR:

CROWN CASTLE INTERNATIONAL

Crown Castle USA Inc.
1200 MacArthur Blvd, Suite 200
Mahwah, NJ 28270
Office: (201) 236-9032

PROJECT INFORMATION:

NEW MILFORD / KIMBERLY
BU # 876397

399 CHESTNUT LAND ROAD
NEW MILFORD, CT 06776
(LITCHFIELD COUNTY)

PLANS PREPARED BY:

TOWER ENGINEERING PROFESSIONALS
3703 JUNCTION BOULEVARD
RALEIGH, NC 27603-5263
OFFICE: (919) 661-6351
FAX: (919) 661-6350

SEAL:

STATE OF CONNECTICUT
PETER G. JERNIGAN
00021509
LICENSED
PROFESSIONAL ENGINEER

January 10, 2008

REV	DATE	ISSUED FOR:
0	01-10-08	CONSTRUCTION

DRAWN BY: JRM CHECKED BY: KMM

SHEET TITLE:

PROJECT NOTES

SHEET NUMBER: **S-3**

REVISION: **0**

TEP #: 072472