Robinson+Cole

KENNETH C. BALDWIN

280 Trumbull Street
Hartford, CT 06103-3597
Main (860) 275-8200
Fax (860) 275-8299
kbaldwin@rc.com
Direct (860) 275-8345

Also admitted in Massachusetts

March 15, 2017

Melanie A. Bachman, Esq.
Executive Director/Staff Attorney
Connecticut Siting Council
10 Franklin Square
New Britain, CT 06051

Re: **Notice of Exempt Modification – Facility Modification**
167 Coccomo Circle (a/k/a Lester Street), New Britain, Connecticut

Dear Ms. Bachman:

Cellco Partnership d/b/a Verizon Wireless ("Cellco") currently maintains twelve (12) antennas at the 145-foot level of the existing 188-foot tower at 167 Coccomo Circle in New Britain (the "Property"). The tower and underlying property are owned by Crown Castle. The Council approved Cellco's use of this tower in 2001. Cellco now intends to replace seven (7) of its existing antennas with one (1) model 800 10735V01, 700 MHz antenna, three (3) model SBNHH-1D65B, 1900 MHz antennas; and three (3) model SBNHH-1D65B, 2100 MHz antennas, all at the same level on the tower. Cellco also intends to replace six (6) remote radio heads ("RRHs") and install three (3) new RRHs and one (1) HYBRIFLEX™ fiber optic antenna cable. Included in Attachment 1 are specifications for Cellco's replacement antennas, RRHs and HYBRIFLEX™ cable.

Please accept this letter as notification pursuant to R.C.S.A. § 16-50j-73, for construction that constitutes an exempt modification pursuant to R.C.S.A. § 16-50j-72(b)(2). In accordance with R.C.S.A. § 16-50j-73, a copy of this letter is being sent to Erin Stewart, Mayor of the City of New Britain; Sergio Lupo, New Britain Director of Licenses, Permits and Inspections; and Crown, the tower owner and Property owner.

The planned modifications to the facility fall squarely within those activities explicitly provided for in R.C.S.A. § 16-50j-72(b)(2).

16246216-v1

1. The proposed modifications will not result in an increase in the height of the existing structure. Cellco's replacement antennas and RRHs will be installed on its existing platform at the 145-foot level on the tower.

2. The proposed modifications will not involve any change to ground-mounted equipment and, therefore, will not require the extension of the site boundary.

3. The proposed modifications will not increase noise levels at the facility by six decibels or more, or to levels that exceed state and local criteria.

4. The operation of the replacement antennas will not increase radio frequency (RF) emissions at the facility to a level at or above the Federal Communications Commission (FCC) safety standard. A cumulative General Power Density table for Cellco's modified facility is included in Attachment 2.

5. The proposed modifications will not cause a change or alteration in the physical or environmental characteristics of the site.

6. The tower and its foundation can support Cellco's proposed modifications. (*See* Structural Analysis Report included in Attachment 3).

A copy of the New Britain parcel map and property owner information is included in Attachment 4.

For the foregoing reasons, Cellco respectfully submits that the proposed modifications to the above-referenced telecommunications facility constitutes an exempt modification under R.C.S.A. § 16-50j-72(b)(2).

Sincerely,

Kenneth C. Baldwin

Enclosures
Copy to:
Erin Stewart, New Britain Mayor
Sergio Lupo, New Britain Director of Licenses, Permits and Inspections
Crown Castle
Tim Parks

ATTACHMENT 1

KATHREIN
SCALA DIVISION

800 10735V01

65° Single Band Panel Antenna, 6'

	Antenna
Single Band (MHz)	**698–894**
Dual Polarization	**X**
HPBW	**65°**
Adj. Electrical Downtilt Manual or optional remote control	**0°–10°**

General specifications:

Frequency range	698–894 MHz
VSWR	<1.5:1
Impedance	50 ohms
Intermodulation (2x20w)	IM3: <-150 dBc
Polarization	+45° and -45°
Maximum input power	500 watts per input (at 50°C)
Connector	2 x 7-16 DIN female (long neck) (bottom mounted)
Isolation	>30 dB
Electrical downtilt	0–10 degrees (continuously adjustable)

See reverse for order information.

698–894 MHz

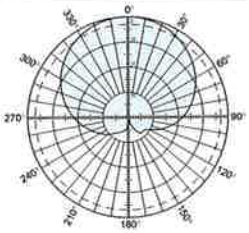

Horizontal pattern
±45°- polarization

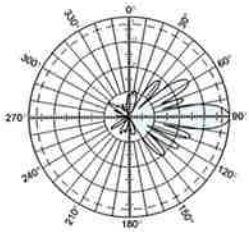

Vertical pattern
±45°- polarization
0°–10° electrical downtilt

Specifications:

	698–806 MHz	824–894 MHz
Gain	15.5 dBi	16 dBi
Front-to-back ratio	>30 dB (co-polar) 35 dB (average)	>30 dB (co-polar) 35 dB (average)
+45° and -45° polarization horizontal beamwidth	67° (half-power)	65° (half-power)
+45° and -45° polarization vertical beamwidth	11.3° (half-power)	10° (half-power)
Min. sidelobe suppression for first sidelobe above main beam average	0° 5° 10° T 16 17 17 dB 16 19 20 dB	0° 5° 10° T 18 17 16 dB 20 20 20 dB
Cross polar ratio Main direction 0° Sector ±60°	25 dB (typical) >11 dB, Average: 15 dB	25 dB (typical) >11 dB, Average: 15 dB

IRT specifications:

Logical interface ex factory[1]	3GPP/AISG 2.0
Protocols	AISG 1.1 and 3GPP/AISG 2.0 compliant
Hardware interface[2]	2 x 8 pin connector acc. IEC 60130-9; according to AISG: – IRT in (male): Control / Daisy chain in – IRT in (female): Daisy chain out
Power supply	10–30 V
Power consumption	<1 watt (standby) <8.5 watts (motor activated)
Adjustment time (full range)	40 sec.
Adjustment cycles	>50,000
Certification	FCC 15.107 Class B Computing Devices

[1] The protocol of the logical interface can be switched from 3GPP/AISG 2.0 to AISG 1.1 and vice versa with a vendor specific command. Start-up operation of the RCU 86010149 is possible in an RET system supporting AISG 1.1 or supporting 3GPP/AISG 2.0 after performing a layer 2 reset before address assignment. The protocol can also be changed as follows: AISG 1.1 to 3GPP: Enter "3GPP" into the additional data filed "Installer's ID" and perform a layer 7 reset or a power reset. 3GPP to AISG 1.1: Enter "AISG 1" into the additional datafield "Installer's ID" and perform a layer 2 reset or a power reset. After switching the protocol any other information can be entered into the "Installer's ID" field.

[2] The tightning torque for fixing the connector must be 0.5 – 1.0 Nm ('hand-tightened'). The connector should be tightened by hand only!

TÜV
11387-D
936.4273/a

RoHS
Lead-Free
Oct 19, 2012

AISG
Antenna Interface Standards Group

Kathrein Inc., Scala Division Post Office Box 4580 Medford, OR 97501 (USA) Phone: (541) 779-6500 Fax: (541) 779-3991
Email: communications@kathrein.com Internet: www.kathrein-scala.com

KATHREIN
SCALA DIVISION

800 10735V01

65° Single Band Panel Antenna, 6'

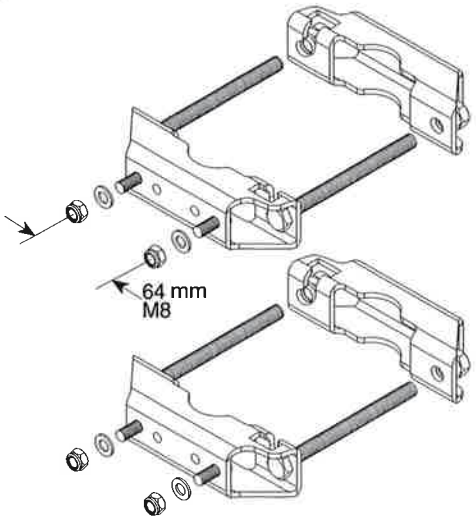

Mounting Brackets

for use with 2-point mount antennas
Mast dia. 2–4.5 inches (50–115 mm)
Weight: 4.4 lb (2 kg)

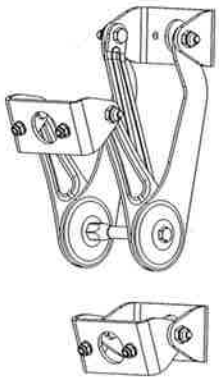

Mechanical Tilt Brackets

for use with 2-point mount antennas
Weight: 9.5 lb (4.3 kg)
(Model 850 10008)

Mechanical specifications:

Weight	30.9 lb (14 kg)	35.3 lb (16 kg) clamps included
Dimensions H x W x D	76.1 x 11.9 x 3.9 inches (1934 x 303 x 99 mm)	
Wind load Front/Side/Rear Mounting category	at 93 mph (150kph) 203 lbf / 70 lbf / 232 lbf (900 N / 310 N / 1030 N) H (Heavy)	
Wind survival rating*	150 mph (240 kph)	
Shipping dimensions	81.1 x 12.4 x 4.5 inches (2060 x 315 x 115 mm)	
Shipping weight	39.7 lb (18 kg)	
Mounting bracket	2-point hot-dip galvanized with stainless steel hardware for 2 to 4.5 inch (50 to 115 mm) OD masts.	

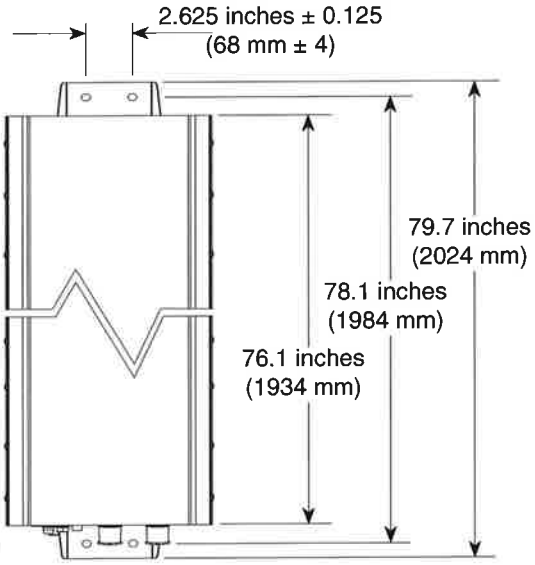

KATHREIN 860 10149

FC Tested To Comply With FCC Standards

This device complies with part 15 of the FCC Rules. Operation is subject to the following two conditions: (1) This device may not cause harmful interference, and (2) this device must accept any interference received, including interference that may cause undesired operation.

Note: Refer to part number 860 10149 for the specifications of the remote control actuator.

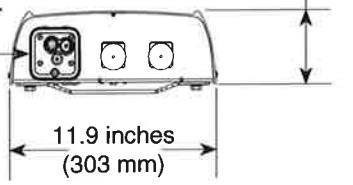

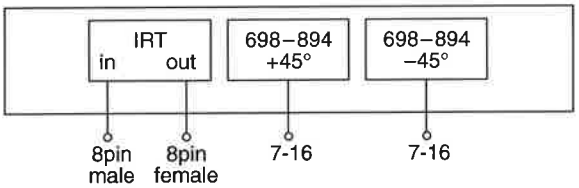

Order Information:

Model	Description
800 10735V01	Antenna with mounting bracket 0°–10° electrical downtilt
800 10735V01K	Antenna with mounting bracket and mechanical tilt bracket 0°–10° electrical downtilt

*Mechanical design is based on environmental conditions as stipulated in TIA-222-G-2 (December 2009) and/or ETS 300 019-1-4 which include the static mechanical load imposed on an antenna by wind at maximum velocity. See the Engineering Section of the catalog for further details.

All specifications are subject to change without notice. The latest specifications are available at www.kathrein-scala.com.

Kathrein Inc., Scala Division Post Office Box 4580 Medford, OR 97501 (USA) Phone: (541) 779-6500 Fax: (541) 779-3991
Email: communications@kathrein.com Internet: www.kathrein-scala.com

Product Specifications

COMMSCOPE®

SBNHH-1D65B

Multiband Antenna, 698–896 and 2x 1695–2360 MHz, 65° horizontal beamwidth, internal RET. Both high bands share the same electrical tilt.

- Interleaved dipole technology providing for attractive, low wind load mechanical package

Electrical Specifications

Frequency Band, MHz	**698–806**	**806–896**	**1695–1880**	**1850–1990**	**1920–2200**	**2300–2360**
Gain, dBi	14.9	14.7	17.7	18.2	18.6	18.6
Beamwidth, Horizontal, degrees	68	66	69	66	63	58
Beamwidth, Vertical, degrees	12.1	10.7	5.6	5.2	5.0	4.5
Beam Tilt, degrees	0–14	0–14	0–7	0–7	0–7	0–7
USLS (First Lobe), dB	14	13	15	15	15	13
Front-to-Back Ratio at 180°, dB	27	29	28	28	28	27
Isolation, dB	25	25	25	25	25	25
Isolation, Intersystem, dB	30	30	30	30	30	30
VSWR | Return Loss, dB	1.5 | 14.0	1.5 | 14.0	1.5 | 14.0	1.5 | 14.0	1.5 | 14.0	1.5 | 14.0
PIM, 3rd Order, 2 x 20 W, dBc	-153	-153	-153	-153	-153	-153
Input Power per Port, maximum, watts	350	350	350	350	350	300
Polarization	±45°	±45°	±45°	±45°	±45°	±45°
Impedance	50 ohm	50 ohm	50 ohm	50 ohm	50 ohm	50 ohm

Electrical Specifications, BASTA*

Frequency Band, MHz	**698–806**	**806–896**	**1695–1880**	**1850–1990**	**1920–2200**	**2300–2360**
Gain by all Beam Tilts, average, dBi	14.5	14.3	17.4	17.9	18.2	18.3
Gain by all Beam Tilts Tolerance, dB	±0.5	±0.8	±0.4	±0.3	±0.5	±0.3
Gain by Beam Tilt, average, dBi	0 ° | 14.6	0 ° | 14.5	0 ° | 17.4	0 ° | 17.8	0 ° | 18.1	0 ° | 18.2
	7 ° | 14.6	7 ° | 14.4	3 ° | 17.5	3 ° | 17.9	3 ° | 18.3	3 ° | 18.4
	14 ° | 14.2	14 ° | 13.6	7 ° | 17.4	7 ° | 17.9	7 ° | 18.2	7 ° | 18.4
Beamwidth, Horizontal Tolerance, degrees	±2.2	±3.4	±2	±4.6	±5.7	±4.3
Beamwidth, Vertical Tolerance, degrees	±0.8	±1	±0.3	±0.2	±0.3	±0.2
USLS, beampeak to 20° above beampeak, dB	16	14	16	16	16	15
Front-to-Back Total Power at 180° ± 30°, dB	25	26	27	26	26	26
CPR at Boresight, dB	22	23	21	20	20	22
CPR at Sector, dB	13	11	16	12	11	4

* CommScope® supports NGMN recommendations on Base Station Antenna Standards (BASTA). To learn more about the benefits of BASTA, download the whitepaper Time to Raise the Bar on BSAs.

Array Layout

©2017 CommScope, Inc. All rights reserved. All trademarks identified by ® or ™ are registered trademarks, respectively, of CommScope. All specifications are subject to change without notice. See www.commscope.com for the most current information. Revised: November 28, 2016

SBNHH 65

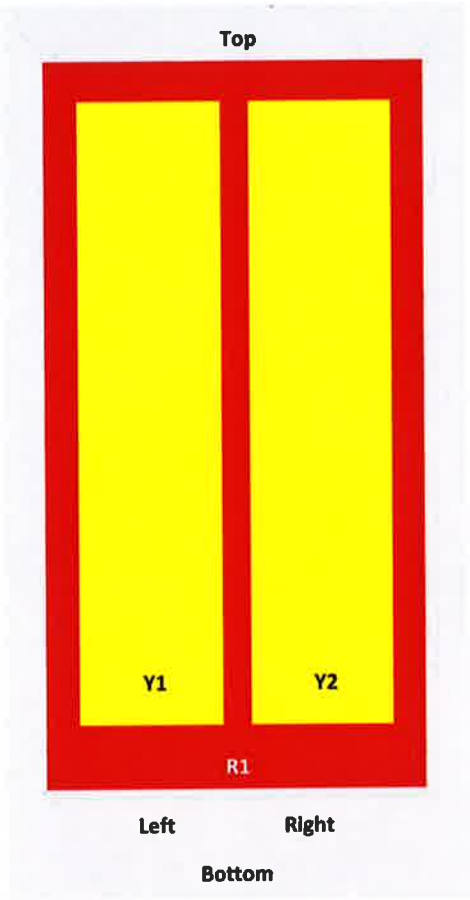

Array	Freq (MHz)	Conns	RET (MRET)	AISG RET UID
R1	698-896	1-2	1	ANxxxxxxxxxxxxxxxx.1
Y1	1695-2360	3-4	2	ANxxxxxxxxxxxxxxxx.2
Y2	1695-2360	5-6		

View from the front of the antenna

(Sizes of colored boxes are not true depictions of array sizes)

General Specifications

Operating Frequency Band	1695 – 2360 MHz | 698 – 896 MHz
Antenna Type	Sector
Band	Multiband
Performance Note	Outdoor usage

Mechanical Specifications

RF Connector Quantity, total	6
RF Connector Quantity, low band	2
RF Connector Quantity, high band	4
RF Connector Interface	7-16 DIN Female

©2017 CommScope, Inc. All rights reserved. All trademarks identified by ® or ™ are registered trademarks, respectively, of CommScope. All specifications are subject to change without notice. See www.commscope.com for the most current information. Revised: November 28, 2016

Product Specifications

COMMSCOPE®

SBNHH-1D65B

Color	Light gray
Grounding Type	RF connector inner conductor and body grounded to reflector and mounting bracket
Radiator Material	Aluminum | Low loss circuit board
Radome Material	Fiberglass, UV resistant
Reflector Material	Aluminum
RF Connector Location	Bottom
Wind Loading, frontal	618.0 N @ 150 km/h 138.9 lbf @ 150 km/h
Wind Loading, lateral	197.0 N @ 150 km/h 44.3 lbf @ 150 km/h
Wind Loading, rear	728.0 N @ 150 km/h 163.7 lbf @ 150 km/h
Wind Speed, maximum	241 km/h | 150 mph

Dimensions

Length	1851.0 mm | 72.9 in
Width	301.0 mm | 11.9 in
Depth	180.0 mm | 7.1 in
Net Weight, without mounting kit	18.4 kg | 40.6 lb

Remote Electrical Tilt (RET) Information

Input Voltage	10–30 Vdc
Internal RET	High band (1) | Low band (1)
Power Consumption, idle state, maximum	2.0 W
Power Consumption, normal conditions, maximum	13.0 W
Protocol	3GPP/AISG 2.0 (Multi-RET)
RET Interface	8-pin DIN Female | 8-pin DIN Male
RET Interface, quantity	1 female | 1 male

Packed Dimensions

Length	2025.0 mm | 79.7 in
Width	390.0 mm | 15.4 in
Depth	296.0 mm | 11.7 in
Shipping Weight	31.0 kg | 68.3 lb

Regulatory Compliance/Certifications

Agency	Classification
RoHS 2011/65/EU	Compliant by Exemption
China RoHS SJ/T 11364-2006	Above Maximum Concentration Value (MCV)
ISO 9001:2008	Designed, manufactured and/or distributed under this quality management system

©2017 CommScope, Inc. All rights reserved. All trademarks identified by ® or ™ are registered trademarks, respectively, of CommScope. All specifications are subject to change without notice. See www.commscope.com for the most current information. Revised: November 28, 2016

Included Products

BSAMNT-1 — Wide Profile Antenna Downtilt Mounting Kit for 2.4 - 4.5 in (60 - 115 mm) OD round members. Kit contains one scissor top bracket set and one bottom bracket set.

* Footnotes

Performance Note	Severe environmental conditions may degrade optimum performance

©2017 CommScope, Inc. All rights reserved. All trademarks identified by ® or ™ are registered trademarks, respectively, of CommScope. All specifications are subject to change without notice. See www.commscope.com for the most current information. Revised: November 28, 2016

ALCATEL-LUCENT B13 RRH4X30-4R

Alcatel-Lucent B13 Remote Radio Head 4x30-4R is the newest addition of Remote Radio Head to the extended product line of Alcatel-Lucent's distributed Base Station solutions, aimed at facilitating smooth RF site acquisition and related civil engineering.

Supporting 2Tx/4Tx MIMO and 4-way Rx diversity, Alcatel-Lucent B13 RRH4x30-4R allows operators to have a compact radio solution to deploy LTE in the 700U band (700 MHz, 3GPP band 13), providing them with the means to achieve high capacity, high quality and high coverage with minimum site requirements.

The Alcatel-Lucent B13 RRH4x30-4R product has four transmit RF paths, offering the possibility to **select, via software only, 2Tx or 4Tx MIMO configurations** with either 2x60 W or 4x30 W RF output power. It supports also 4-way Rx diversity and up to 10MHz instantaneous bandwidth.

The Alcatel-Lucent B13 RRH4x30-4R is a near zero-footprint solution and operates noise free, simplifying negotiations with site property owners and minimizing environmental impacts.

Its compactness and slim design makes the Alcatel-Lucent B13 RRH4x30-4R easy to install close to the antenna: operators can therefore locate this Remote Radio Head where RF design conditions are deemed ideal, minimizing trade-offs between available sites and RF optimum sites, together with reducing the RF feeder needs and installation costs.

FEATURES

- Supporting LTE in 700 MHz band (700U, 3GPP band 13)
- LTE 2Tx or 4Tx MIMO (SW switchable)
- Output power: Up to 2x60W or 4x30W
- 10MHz LTE carrier with 4Rx Diversity
- Convection-cooled (fan-less)
- Supports AISG 2.0 ALD devices (RET, TMA) through RS485 or RF ports

BENEFITS

- Compact to reduce additional footprint when adding LTE in 700U band
- MIMO scheme operation selection (2Tx or 4Tx) by software only
- Improves downlink spectral efficiency through MIMO4
- Increases LTE coverage thanks to 4Rx diversity capability and best in class Rx sensitivity
- Flexible mounting options: Pole or Wall

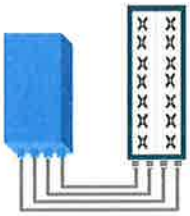

4x30W with 4T4R
or
2x60W with 2T4R

Can be switched between modes via SW w/o site visit

TECHNICAL SPECIFICATIONS

Features & performance	
Number of TX/RX paths	4 duplexed (either 4T4R or 2T4R by SW)
Frequency band	U700 (C) (3GPP bands 13): DL: 746 - 756 MHz / UL: 777 - 787 MHz
Instantaneous bandwidth - #carriers	10MHz – 1 LTE carrier (in 10MHz occupied bandwidth)
LTE carrier bandwidth	10 MHz
RF output power	2x60W or 4x30W (by SW)
Noise figure – RX Diversity scheme	2 dB typ. (<2.5 dB max) – 2 or 4 way Rx diversity
Sizes (HxWxD) in mm (in.) **Volume in L** **Weight in kg (lb) (w/o mounting HW)**	550 x 305 x 230 (21.6" x 12.0" x 9") (with solar shield) 38 (with solar shield) 26 (57.2) (with solar shield)
DC voltage range **DC power consumption**	-40.5 to -57V at full performance, -38 to -57V with relaxation on power consumption 550W typical @100% RF load (in 2Tx or 4TX mode)
Environmental conditions **Wind load (@150km/h or 93mph)**	-40°C (-40°F) /+55°C (+131°F) IP65 Frontal:<200N / Lateral :<150N
Antenna ports	4 ports 7/16 DIN female (50 ohms) VSWR < 1.5
CPRI ports	2 CPRI ports (HW ready for Rate7, 9.8 Gbps) SFP single mode dual fiber
AISG interfaces	1 AISG2.0 output (RS485) Integrated Smart Bias Tees (x2)
Misc. Interfaces	4 external alarms (1 connector) – 4 RF Tx & 4 RF Rx monitor ports - 1 DC connector (2 pins)
Installation conditions	Pole and wall mounting
Regulatory compliance	3GPP 36.141 / 3GPP 36.113 / GR-1089-CORE / GR-3108-CORE / UL 60950-1 / FCC Part 27

www.alcatel-lucent.com Alcatel, Lucent, Alcatel-Lucent and the Alcatel-Lucent logo are trademarks of Alcatel-Lucent. All other trademarks are the property of their respective owners. The information presented is subject to change without notice. Alcatel-Lucent assumes no responsibility for inaccuracies contained herein.
Copyright © 2014 Alcatel-Lucent. All Rights Reserved

ALCATEL-LUCENT B25 RRH4X30

Alcatel-Lucent Band 25 Remote Radio Head 4x30W is the new addition of Remote Radio Head to the extended product line of Alcatel-Lucent's distributed Base Station solutions, aimed at facilitating smooth RF site acquisition and related civil engineering.

Supporting 2Tx/4Tx MIMO and 4-way Rx diversity, Alcatel-Lucent B25 RRH4x30 allows operators to have a compact radio solution to deploy LTE in the PCS band (1.9 GHz, 3GPP band 25), providing them with the means to achieve high capacity, high quality and high coverage with minimum site requirements.

The Alcatel-Lucent B25 RRH4x30 product has four transmit RF paths, offering the possibility to **select, via software only, 2Tx or 4Tx MIMO configurations** with either 2x60 W or 4x30 W RF output power. It supports also 4-way Rx diversity, LTE carriers from 3 MHz up to 20 MHz and up to 65 MHz instantaneous bandwidth.

The Alcatel-Lucent B25 RRH4x30 is a near zero-footprint solution and operates noise free, simplifying negotiations with site property owners and minimizing environmental impacts.

Its compactness and slim design makes the Alcatel-Lucent B25 RRH4x30 easy to install close to the antenna: operators can therefore locate this Remote Radio Head where RF design conditions are deemed ideal, minimizing trade-offs between available sites and RF optimum sites, together with reducing the RF feeder needs and installation costs.

FEATURES

- Supporting LTE in 1.9 GHz band (PCS, 3GPP band 2 & 25)
- LTE 2Tx or 4Tx MIMO (SW switchable)
- Output power: Up to 2x60W or 4x30W
- Ready for 3, 5, 10, 15 or 20MHz LTE carrier operation with 4Rx Diversity
- Ready to support up to 4 carriers anywhere in 65MHz instantaneous bandwidth
- Convection-cooled (fan-less)
- Supports AISG 2.0 devices (RET, TMA) through RS485 or RF ports

BENEFITS

- Compact to reduce additional footprint when adding LTE in PCS band
- MIMO scheme operation selection (2Tx or 4Tx) by software only
- Full flexibility for multiple carriers operation over entire PCS spectrum
- Improves downlink spectral efficiency and cell edge throughput through MIMO4
- Increases LTE coverage thanks to 4-way Rx diversity capability and best in class Rx sensitivity
- Flexible mounting options (Pole or Wall)

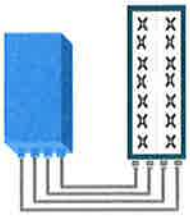

4x30W with 4T4R
or
2x60W with 2T4R

Can be switched between modes via SW w/o site visit

Alcatel·Lucent

TECHNICAL SPECIFICATIONS

Features & performance	
Number of TX/RX paths	4 duplexed (either 4T4R or 2T4R by SW)
Frequency band	3GPP bands 2 & 25 (PCS-G) DL: 1930 - 1995 MHz UL: 1850 - 1915 MHz
Instantaneous bandwidth - #carriers	65MHz – Up to 4 LTE carriers (in 40MHz occupied bandwidth)
LTE carrier bandwidth	3, 5, 10, 15 or 20 MHz
RF output power	2x60W or 4x30W (by SW)
Noise figure (3GPP band 2) **RX Diversity scheme**	2.0 dB typ. (<2.5 dB max) 2 or 4 way Rx diversity
Sizes (HxWxD)(w/ solar shield) in mm (in.) **Volume (w/ solar shield) in L** **Weight (w/ solar shield) in kg (lb)**	538 x 304 x 182 (21.2" x 12.0" x 7.2") 30 24 (53)
DC voltage range **DC power consumption**	-40.5 to -57V at full performance, -38 to -57V with relaxation on power consumption 580W typical @100% RF load
Environmental conditions **Wind load (@150km/h or 93mph)**	-40°C (-40°F) /+55°C (+131°F) IP65 Frontal:<200N / Lateral :<150N
Antenna ports	4 ports 7/16 DIN female (50 ohms) VSWR < 1.5 (> 14dB)
CPRI ports	2 CPRI ports (HW ready for Rate7 / 9.8 Gbps)
AISG interfaces	1 AISG2.0 output (RS485), +24V/2A DC power Integrated Smart Bias Tees (x2)
Misc. Interfaces	1 external alarms connector (4 alarms) 4 RF Tx & 4 RF Rx monitor ports 1 DC connector (2 pins)
Installation conditions	Pole and wall mounting
Regulatory compliance	3GPP 36.141 / 3GPP 36.113 / GR-1089-CORE / GR-3108-CORE / UL 60950-1 / FCC Part 27

www.alcatel-lucent.com Alcatel, Lucent, Alcatel-Lucent and the Alcatel-Lucent logo are trademarks of Alcatel-Lucent. All other trademarks are the property of their respective owners. The information presented is subject to change without notice. Alcatel-Lucent assumes no responsibility for inaccuracies contained herein.
Copyright © 2014 Alcatel-Lucent. All Rights Reserved

ALCATEL-LUCENT B66A RRH4X45

The Alcatel-Lucent B66a Remote Radio Head 4x45 is the newest addition of Remote Radio Head to the extended product line of Alcatel-Lucent's distributed Base Station solutions, aimed at facilitating smooth RF site acquisition and related civil engineering. Its operational range covers beyond that of B4 (AWS) and B10 (AWS+).

Supporting 2Tx/4Tx MIMO and 2-way/4-way Rx diversity, the Alcatel-Lucent B66a RRH4x45 allows operators to have a compact radio solution to deploy LTE in the 2100 band (3GPP band 4, 10, and 66), providing them with the means to achieve high capacity, high quality, high reliability, large instantaneous bandwidth, and high coverage with minimum site requirements.

The Alcatel-Lucent B66a RRH4x45 product has four transmit RF paths, offering the possibility to **select, via software only, 2Tx or 4Tx MIMO configurations** with either 2x90W or 4x45W RF output power. It also supports 4-way Rx diversity at the 70 MHz instantaneous bandwidth.

The Alcatel-Lucent B66a RRH4x45 is a compact (near zero-footprint) solution and operates noise free, simplifying negotiations with site property owners and minimizing environmental impacts.

Its compactness and slim design makes the Alcatel-Lucent B66a RRH4x45 easy to install close to the antenna: operators can therefore locate this Remote Radio Head where RF design conditions are deemed ideal, minimizing trade-offs between available sites and RF optimum sites, together with reducing the RF feeder needs and installation costs.

FEATURES

- Supporting LTE in 2110 - 2180 MHz band/DL, 1710-1780MHz/UL (3GPP band 4, 10, and 66a)
- LTE 2Tx or 4Tx MIMO (SW selectable)
- Configuration: 2T2R/2T4R/4T4R
- Output power: Up to 2x90W or 4x45W (SW configurable)
- 70MHz LTE carrier with 4Rx Diversity
- Convection-cooled (fan-less)
- Supports AISG 2.0 ALD devices (RET, TMA) through RS485 or RF ports

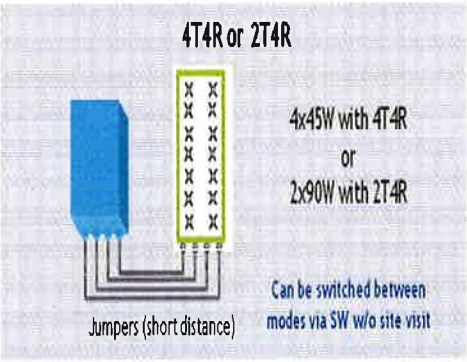

BENEFITS

- Compact to reduce additional footprint when adding LTE in AWS 1-3 band
- Selection of MIMO configuration (2Tx or 4Tx) by software only
- Improves downlink spectral efficiency through 4Tx MIMO
- Increases LTE coverage thanks to 4Rx diversity capability and best in class Rx sensitivity
- Flexible mounting options: Pole or Wall

TECHNICAL SPECIFICATIONS

Features & Performance	
Number of TX/RX paths	4 duplexed (either 4T4R or 2T4R selectable by SW)
Frequency band	AWS 1-3, B4/B66a DL: 2110-2180 MHz / UL: 1710-1780 MHz
Instantaneous bandwidth - #carriers	70 MHz – 4 LTE MIMO carriers (in 70 MHz occupied bandwidth)
LTE carrier bandwidth	5, 10, 15, 20 MHz
RF output power	2x90W or 4x45W (selectable by SW)
Noise figure – RX Diversity scheme **Receiver Sensivity (FRC A1-3)**	2 dB typical (<2.5 dB max) – 2 or 4 way Rx diversity -104.5 dBm maximum
Sizes (HxWxD) in mm (in.) **Volume in Liters** **Weight in kg (lb) (w/o mounting HW)**	655x299x182 (25.8x11.8x7.2) (with solar shield) 640x290x160 (25.2x11.4x6.3) (without solar shield) 35.5 (with solar shield) 29.7 (without solar shield) 25.8kg (56.8lb) (with solar shield)
DC voltage range **DC power consumption**	Nominal: -48V, -40.5 to -57V at full performance, -38 to -57V with relaxation on power consumption 750W typical @100% RF load (In 2Tx or 4Tx mode); Add 58W for 2A*29V for AISG
Environmental conditions **Wind load (@150km/h or 93mph)**	-40°C (-40°F) /+55°C (+131°F) UL50E Type 4 Enclosure 250N (56lb) Frontal/150N (34lb) Lateral
Antenna ports	4 ports 4.3-10 female (50 ohms) VSWR < 1.5
CPRI ports	2 CPRI ports (HW ready for Rate 7, 9.8 Gbps) SFP: SMDF (HW supports also SMSF and MMDF)
AISG interfaces	1 AISG 2.0 output (RS485) Integrated Smart Bias Tees (x2)
Misc. Interfaces	4 external alarms (1 connector) 1 DC connector (2 pins)
Installation conditions	Pole and wall mounting
Regulatory compliance	3GPP 36.141 / 3GPP 36.113 / GR-487 / GR-1089-CORE / GR-3108-CORE / UL 60950-1 / FCC Part 27 / FCC Part 15 / GR-3178-CORE

www.alcatel-lucent.com Alcatel, Lucent, Alcatel-Lucent and the Alcatel-Lucent logo are trademarks of Alcatel-Lucent. All other trademarks are the property of their respective owners. The information presented is subject to change without notice. Alcatel-Lucent assumes no responsibility for inaccuracies contained herein.
Copyright © 2016 Alcatel-Lucent. All Rights Reserved

Product Data Sheet **HB158-1-08U8-S8J18**

HYBRIFLEX™ RRH Hybrid Feeder Cabling Solution, 1-5/8", Single-Mode Fiber

Product Description

RFS' HYBRIFLEX Remote Radio Head (RRH) hybrid feeder cabling solution combines optical fiber and DC power for RRHs in a single lightweight aluminum corrugated cable, making it the world's most innovative solution for RRH deployments.

It was developed to reduce installation complexity and costs at Cellular sites. HYBRIFLEX allows mobile operators deploying an RRH architecture to standardize the RRH installation process and eliminate the need for and cost of cable grounding. HYBRIFLEX combines optical fiber (multi-mode or single-mode) and power in a single corrugated cable. It eliminates the need for junction boxes and can connect multiple RRHs with a single feeder. Standard RFS CELLFLEX® accessories can be used with HYBRIFLEX cable. Both pre-connectorized and on-site options are available.

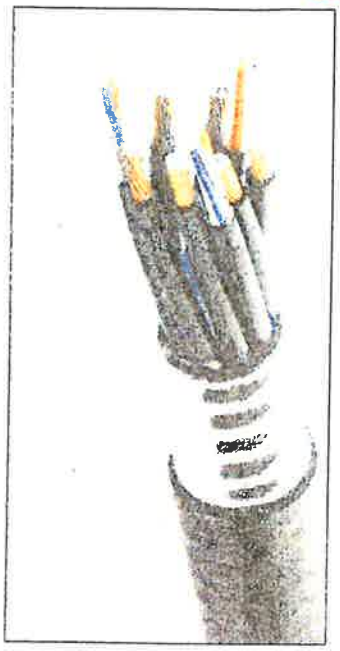

Figure 1: HYBRIFLEX Series

Features/Benefits

- Aluminum corrugated armor with outstanding bending characteristics – minimizes installation time and enables mechanical protection and shielding
- Same accessories as 1 5/8" coaxial cable
- Outer conductor grounding – Eliminates typical grounding requirements and saves on installation costs
- Lightweight solution and compact design – Decreases tower loading
- Robust cabling – Eliminates need for expensive cable trays and ducts
- Installation of tight bundled fiber optic cable pairs directly to the RRH – Reduces CAPEX and wind load by eliminating need for interconnection
- Optical fiber and power cables housed in single corrugated cable – Saves CAPEX by standardizing RRH cable installation and reducing installation requirements
- Outdoor polyethylene jacket – Ensures long-lasting cable protection

Technical Specifications

Outer Conductor Armor	Corrugated Aluminum	[mm (in)]	46.5 (1.83)
Jacket:	Polyethylene, PE	[mm (in)]	50.3 (1.98)
UV-Protection	Individual and External Jacket		Yes
Weight, Approximate		[kg/m (lb/ft)]	1.9 (1.30)
Minimum Bending Radius, Single Bending		[mm (in)]	200 (8)
Minimum Bending Radius, Repeated Bending		[mm (in)]	500 (20)
Recommended/Maximum Clamp Spacing		[m (ft)]	1.0 / 1.2 (3.25 / 4.0)
DC-Resistance Outer Conductor Armor		[Ω/km (Ω/1000ft)]	068 (0.205)
DC-Resistance Power Cable, 8.4mm² (8AWG)		[Ω/km (Ω/1000ft)]	2.1 (0.307)
Version			Single-mode OM3
Quantity, Fiber Count			16 (8 pairs)
Core/Clad		[µm]	50/125
Primary Coating (Acrylate)		[µm]	245
Buffer Diameter, Nominal		[µm]	900
Secondary Protection, Jacket, Nominal		[mm (in)]	2.0 (0.08)
Minimum Bending Radius		[mm (in)]	104 (4.1)
Insertion Loss @ wavelength 850nm		dB/km	3.0
Insertion Loss @ wavelength 1310nm		dB/km	1.0
Standards (Meets or exceeds)			UL94-V0, UL1666 RoHS Compliant
Size (Power)		[mm (AWG)]	8.4 (8)
Quantity, Wire Count (Power)			16 (8 pairs)
Size (Alarm)		[mm (AWG)]	0.8 (18)
Quantity, Wire Count (Alarm)			4 (2 pairs)
Type			UV protected
Strands			19
Primary Jacket Diameter, Nominal		[mm (in)]	6.8 (0.27)
Standards (Meets or exceeds)			NFPA 130, ICEA S-95-658 UL Type XHHW-2, UL 44 UL-LS Limited Smoke, UL VW-1 IEEE-383 (1974), IEEE1202/FT4 RoHS Compliant
Installation Temperature		[°C (°F)]	-40 to +65 (-40 to149)
Operation Temperature		[°C (°F)]	-40 to +65 (-40 to149)

* This data is provisional and subject to change

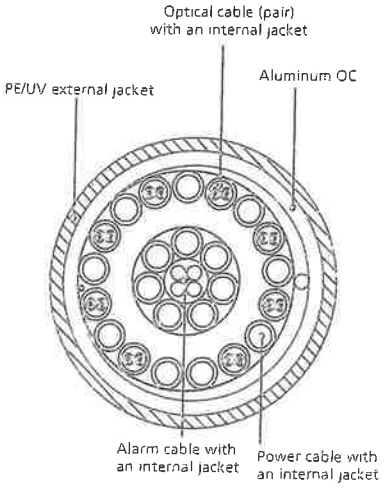

Figure 2: Construction Detail

All information contained in the present datasheet is subject to confirmation at time of ordering.

ATTACHMENT 2

	General	Power	Density					
Site Name: New Britain 3								
Tower Height: 188ft								
CARRIER	**# OF CHAN.**	**WATTS ERP**	**HEIGHT**	**CALC. POWER DENS**	**FREQ.**	**MAX. PERMISS. EXP.**	**FRACTION MPE**	**Total**
*AT&T	1	390	187.7	1900	0.0042	1.0000	0.04%	
*AT&T	2	282	187.7	850	0.0061	0.5667	0.11%	
*AT&T	1	257	187.7	1900	0.0028	1.0000	0.03%	
*AT&T	1	390	187.7	1900	0.0042	1.0000	0.04%	
*AT&T	1	637	187	2300	0.0070	1.0000	0.07%	
*AT&T	1	483	187	737	0.0053	0.4913	0.11%	
*AT&T	1	1057	187	1900	0.0116	1.0000	0.12%	
*T-Mobile	2	2334	163	2100	0.0681	1.0000	0.68%	
*T-Mobile	1	865	163	700	0.0126	0.4667	0.27%	
*T-Mobile	2	1167	163	1900	0.0341	1.0000	0.34%	
*T-Mobile	2	2334	163	2100	0.0681	1.0000	0.68%	
*T-Mobile	2	1167	163	2100	0.0341	1.0000	0.34%	
Verizon PCS	**1**	**5000**	**145**	**0.0855**	**1970**	**1.0000**	**8.55%**	
Verizon Cellular	**9**	**389**	**145**	**0.0599**	**869**	**0.5793**	**10.34%**	
Verizon AWS	**1**	**7400**	**145**	**0.1266**	**2145**	**1.0000**	**12.66%**	
Verizon 700	**1**	**2200**	**145**	**0.0376**	**746**	**0.4973**	**7.57%**	
								41.94%
* Source: Siting Council								

ATTACHMENT 3

Date: **March 3, 2017**

Charles Trask
Crown Castle
3530 Toringdon Way, Suite 300
Charlotte, NC 28277
(980) 209-8228

Tower Engineering Professionals
326 Tryon Road
Raleigh, NC 27603
(919) 661-6351
crown@tepgroup.net

Subject: Structural Analysis Report

Carrier Designation:	***Verizon Wireless* Co-Locate**	
	Carrier Site Number:	119668
	Carrier Site Name:	New Britain 3 CT
Crown Castle Designation:	**Crown Castle BU Number:**	803175
	Crown Castle Site Name:	CT New Britain 3 CAC 803175
	Crown Castle JDE Job Number:	334512
	Crown Castle Work Order Number:	1371080
	Crown Castle Application Number:	296845 Rev. 1
Engineering Firm Designation:	**TEP Project Number:**	25666.110276
Site Data:	**167 Coccomo, New Britain, Hartford County, CT 06051** **Latitude *41° 41' 11.80"*, Longitude *-72° 45' 27.80"*** **188 Foot - Monopole Tower**	

Dear Charles Trask,

Tower Engineering Professionals is pleased to submit this **"Structural Analysis Report"** to determine the structural integrity of the above mentioned tower. This analysis has been performed in accordance with the Crown Castle Structural 'Statement of Work' and the terms of Crown Castle Purchase Order Number 1007859, in accordance with application 296845, revision 1.

The purpose of the analysis is to determine acceptability of the tower stress level. Based on our analysis we have determined the tower stress level for the structure and foundation, under the following load case, to be:

LC7: Existing + Reserved + Proposed Equipment **Sufficient Capacity**
Note: See Table I and Table II for the proposed and existing/reserved loading, respectively.

This analysis has been performed in accordance with the 2016 Connecticut State Building Code (2012 International Building Code) based upon an ultimate 3-second gust wind speed of 125 mph converted to a nominal 3-second gust wind speed of 97 mph per Section 1609.3 and Appendix N as required for use in the TIA-222-G Standard per Exception #5 of Section 1609.1.1. Exposure Category C and Risk Category II were used in this analysis.

All modifications and equipment proposed in this report shall be installed in accordance with the appurtenances listed in Tables 1 and 2 and the attached drawing for the determined available structural capacity to be effective.

We at *Tower Engineering Professionals* appreciate the opportunity of providing our continuing professional services to you and *Crown Castle.* If you have any questions or need further assistance on this or any other projects please give us a call.

Structural analysis prepared by: Joshua Rozina, P.E. / PRS

Respectfully submitted by:

3/3/17

STATE OF CONNECTICUT
WILLIAM H. MARTIN
0029484
LICENSED
PROFESSIONAL ENGINEER

William H. Martin, P.E., S.E.

Electronic Copy

TABLE OF CONTENTS

1) INTRODUCTION

2) ANALYSIS CRITERIA
- Table 1 - Proposed Antenna and Cable Information
- Table 2 - Existing and Reserved Antenna and Cable Information
- Table 3 - Design Antenna and Cable Information

3) ANALYSIS PROCEDURE
- Table 4 - Documents Provided
- 3.1) Analysis Method
- 3.2) Assumptions

4) ANALYSIS RESULTS
- Table 5 - Section Capacity (Summary)
- Table 6 - Tower Component Stresses vs. Capacity
- 4.1) Recommendations

5) APPENDIX A
- tnxTower Output

6) APPENDIX B
- Base Level Drawing

7) APPENDIX C
- Additional Calculations

1) INTRODUCTION

This tower is a 188-ft monopole tower designed by Paul J. Ford and Company in December of 2000. The tower was originally designed for a wind speed of 85 mph per TIA/EIA-222-F for the appurtenances listed in Table 3. TEP visited the site in January of 2010 to perform a foundation mapping. All information provided to TEP was assumed to be accurate and complete.

2) ANALYSIS CRITERIA

The analysis has been performed in accordance with the ANSI/TIA-222-G-2-2009 Structural Standard for Antenna Supporting Structures and Antennas – Addendum 2 using a nominal 3-second gust wind speed of 97 with no ice, 50 mph with 1.0 inch ice thickness, and 60 mph under service loads with the following design criteria:

Type of Analysis: **Rigorous Structural Analysis**
Classification of Structure: **Class II**
Exposure Category: **Exposure C**
Topographic Category: **Category 1**
Earthquake Category: **Not Considered**
Earthquake effects may be ignored per this standard for site locations where Ss does not exceed 1.0. (Hartford County Max Ss = 0.183).

Table 1 - Proposed Antenna and Cable Information

Mounting Level (ft)	Center Line Elevation (ft)	Number of Antennas	Antenna Manufacturer	Antenna Model	Number of Feed Lines	Feed Line Size (in)	Note
145.0	145.0	3	Alcatel Lucent	PCS B25 RRH4x30	1	1-5/8	1
		3	Alcatel Lucent	RRH2x60-700			
		3	Alcatel Lucent	RRH4X45-AWS4 B66			
		6	Andrew	SBNHH-1D65B w/ Mount Pipe			
		1	Kathrein	800 10735V01 w/ Mount Pipe			
		1	RFS Celwave	DB-T1-6Z-8AB-0Z			

Notes:
1) See "Appendix B – Base Level Drawing" for assumed feed line configuration.

Table 2 - Existing and Reserved Antenna and Cable Information

Mounting Level (ft)	Center Line Elevation (ft)	Number of Antennas	Antenna Manufacturer	Antenna Model	Number of Feed Lines	Feed Line Size (in)	Note
188.0	189.0	2	CCI Antennas	OPA-65R-LCUU-H6	2 1	3/4 3/8	1
		1	CCI Antennas	OPA-65R-LCUU-H4			
		2	Quintel Technology	QS66512-2			
		1	Quintel Technology	QS46512-2			
		3	Ericsson	RRUS 32 B2			
		3	Ericsson	RRUS 32 B30			
		6	Kathrein	860 10025			
		1	Raycap	DC6-48-60-18-8F			
		3	Kathrein	800 10121	6 2 1	1-5/8 3/4 3/8	2
		6	Powerwave Technologies	LGP21401			
		3	Ericsson	RRUS-11			
		1	Raycap	DC6-48-60-18-8F			
	188.0	1	Tower Mounts	Platform Mount [LP 1201-1]			
		1	Tower Mounts	Miscellaneous [NA 507-3]			
160.0	163.0	3	Commscope	LNX-6515DS-VTM w/ Mount Pipe	13	1-5/8	2
		3	Ericsson	AIR 21 B2A B4P w/ Mount Pipe			
		3	Ericsson	AIR -32 B2A/B66AA w/ Mount Pipe			
		3	Ericsson	RRUS 11 B12			
		3	RFS Celwave	ATMAA1412D-1A20			
	160.0	1	Tower Mounts	Platform Mount [LP 601-1]			
145.0	150.0	1	GPS	GPS_A	13 1	1-5/8 1/2	2
	145.0	3	Antel	BXA-80063/6 w/ Mount Pipe			
		2	Andrew	LNX-6512DS-T4M w/ Mount Pipe			
		1	Tower Mounts	Platform Mount [LP 601-1]			
		1	Andrew	LNX-6512DS-T4M w/ Mount Pipe	-	-	3
		1	Antel	BXA-171063-8BF-EDIN-2 w/ Mount Pipe			
		2	Antel	BXA-171063-12CF-EDIN-2 w/ Mount Pipe			
		3	Antel	BXA-185090/8CFx2 w/ Mount Pipe			
		3	Alcatel Lucent	RRH 2x40-700 W/SOLAR			
		3	Alcatel Lucent	RRH2x40-AWS			

Notes:
1) Reserved equipment
2) Existing equipment
3) Existing equipment to be removed; not considered in this analysis

Table 3 - Design Antenna and Cable Information

Mounting Level (ft)	Center Line Elevation (ft)	Number of Antennas	Antenna Manufacturer	Antenna Model	Number of Feed Lines	Feed Line Size (in)
188.0	188.0	12	Generic	1-ft x 5-ft x 3-in Panel	-	-
177.0	177.0	12	Generic	1-ft x 5-ft x 3-in Panel	-	-
162.0	162.0	12	Generic	1-ft x 5-ft x 3-in Panel	-	-
147.0	147.0	12	Generic	1-ft x 5-ft x 3-in Panel	-	-

3) ANALYSIS PROCEDURE

Table 4 - Documents Provided

Document	Remarks	Reference	Source
Geotechnical Report	Clough, Harbour & Associates LLP	679661	CCISites
Tower Foundation Drawings	Paul J. Ford and Company	6709261	CCISites
Foundation Mapping Report	Tower Engineering Professionals	679660	CCISites
Tower Manufacturer Drawings	Paul J. Ford and Company	679659	CCISites

3.1) Analysis Method

tnxTower (version 7.0.5.1), a commercially available analysis software package, was used to create a three-dimensional model of the tower and calculate member stresses for various loading cases. Selected output from the analysis is included in Appendix A.

3.2) Assumptions

1) The tower and foundation were built in accordance with the manufacturer's specifications.
2) The tower and foundation have been maintained in accordance with the manufacturer's specification.
3) The configuration of antennas, transmission cables, mounts and other appurtenances are as specified in Tables 1 and 2, and "Appendix B – Base Level Drawing".
4) All tower components are in sufficient condition to carry their full design capacity.
5) Serviceability with respect to antenna twist, tilt, roll, or lateral translation, is not checked and is left to the carrier or tower owner to ensure conformance.
6) All antenna mounts and mounting hardware are structurally sufficient to carry the full design capacity requirements of appurtenance wind area and weight as provided by the original manufacturer specifications. It is the carrier's responsibility to ensure compliance to the structural limitations of the existing and/or proposed antenna mounts. TEP did not analyze antennas supporting mounts as part of this structural analysis report.

This analysis may be affected if any assumptions are not valid or have been made in error. Tower Engineering Professionals should be notified to determine the effect on the structural integrity of the tower.

4) ANALYSIS RESULTS

Table 5 - Section Capacity (Summary)

Section No.	Elevation (ft)	Component Type	Size	Critical Element	P (K)	ΦP_{allow} (K)	% Capacity	Pass / Fail
L1	188 - 137	Pole	TP32.711x22x0.25	1	-12.70	1738.73	54.5	Pass
L2	137 - 90.25	Pole	TP42.03x31.3184x0.3125	2	-22.51	2768.52	81.0	Pass
L3	90.25 - 44.5	Pole	TP51.014x40.3023x0.375	3	-35.90	4014.89	81.9	Pass
L4	44.5 - 0	Pole	TP59.61x48.8988x0.5	4	-58.52	6652.09	65.3	Pass
							Summary	
						Pole (L3)	81.9	Pass
						RATING =	**81.9**	**Pass**

Table 6 - Tower Component Stresses vs. Capacity

Notes	Component	Elevation (ft)	% Capacity	Pass / Fail
1	Anchor Rods	-	74.4	Pass
1	Base Plate	-	71.3	Pass
1	Base Foundation Soil Interaction	-	86.8	Pass
1	Base Foundation Structural	-	54.4	Pass

Structure Rating (max from all components) =	**86.8%**

Notes:
1) See additional documentation in "Appendix C - Additional Calculations" for calculations supporting the % capacity listed.

4.1) Recommendations

1) If the load differs from that described in Tables 1 and 2 of this report, "Appendix B – Base Level Drawing" or the provisions of this analysis are found to be invalid, another structural analysis should be performed.
2) The tower and its foundation have sufficient capacity to carry the proposed load configuration. No modifications are required at this time.

APPENDIX A

TNXTOWER OUTPUT

Section	1	2	3	4
Length (ft)	51.00	51.00	51.00	51.00
Number of Sides	18	18	18	18
Thickness (in)	0.2500	0.3125	0.3750	0.5000
Socket Length (ft)	4.25	5.25	6.50	
Top Dia (in)	22.0000	31.3184	40.3023	48.8988
Bot Dia (in)	32.7110	42.0300	51.0140	59.6100
Grade	A607-65			
Weight (K)	3.7	6.3	9.4	14.8

34.1

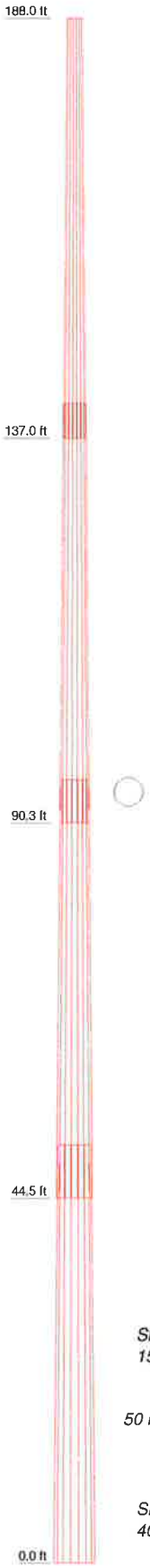

ALL REACTIONS ARE FACTORED

AXIAL 109 K

SHEAR 15 K *MOMENT 1952 kip-ft*

TORQUE 3 kip-ft
50 mph WIND - 1.0000 in ICE

AXIAL 59 K

SHEAR 40 K *MOMENT 5208 kip-ft*

TORQUE 2 kip-ft
REACTIONS - 97 mph WIND

DESIGNED APPURTENANCE LOADING

TYPE	ELEVATION	TYPE	ELEVATION
Lighting Rod 3/4" x 8'	188	RRUS 11 B12	160
DC6-48-60-18-8F	188	ATMAA1412D-1A20	160
800 10121	188	ATMAA1412D-1A20	160
800 10121	188	ATMAA1412D-1A20	160
800 10121	188	Platform Mount [LP 601-1]	160
(2) LGP21401	188	2.4" Dia x 8-ft Mount Pipe	160
(2) LGP21401	188	2.4" Dia x 8-ft Mount Pipe	160
(2) LGP21401	188	2.4" Dia x 8-ft Mount Pipe	160
RRUS-11	188	BXA-80063/6 w/ Mount Pipe	145
RRUS-11	188	BXA-80063/6 w/ Mount Pipe	145
RRUS-11	188	BXA-80063/6 w/ Mount Pipe	145
OPA-65R-LCUU-H6	188	LNX-6512DS-T4M w/ Mount Pipe	145
OPA-65R-LCUU-H4	188	LNX-6512DS-T4M w/ Mount Pipe	145
OPA-65R-LCUU-H6	188	GPS_A	145
QS66512-2	188	(2) SBNHH-1D65B w/ Mount Pipe	145
QS46512-2	188	(2) SBNHH-1D65B w/ Mount Pipe	145
QS66512-2	188	(2) SBNHH-1D65B w/ Mount Pipe	145
RRUS 32 B2	188	800 10735V01 w/ Mount Pipe	145
RRUS 32 B2	188	RRH2x60-700	145
RRUS 32 B2	188	RRH2x60-700	145
RRUS 32 B30	188	RRH2x60-700	145
RRUS 32 B30	188	RRH4X45-AWS4 B66	145
RRUS 32 B30	188	RRH4X45-AWS4 B66	145
(2) 860 10025	188	RRH4X45-AWS4 B66	145
(2) 860 10025	188	DB-T1-6Z-8AB-0Z	145
(2) 860 10025	188	PCS B25 RRH4x30	145
DC6-48-60-18-8F	188	PCS B25 RRH4x30	145
Platform Mount [LP 1201-1]	188	PCS B25 RRH4x30	145
Miscellaneous [NA 507-3]	188	Platform Mount [LP 601-1]	145
LNX-6515DS-VTM w/ Mount Pipe	160	Side Arm Mount [SO 701-3]	133
LNX-6515DS-VTM w/ Mount Pipe	160	1" Dia x 3.5-ft	100
LNX-6515DS-VTM w/ Mount Pipe	160	1" Dia x 3.5-ft	100
ERICSSON AIR 21 B2A B4P w/ Mount Pipe	160	1" Dia x 3.5-ft	100
		1" Dia x 3.5-ft	70
ERICSSON AIR 21 B2A B4P w/ Mount Pipe	160	1" Dia x 3.5-ft	70
		1" Dia x 3.5-ft	70
ERICSSON AIR 21 B2A B4P w/ Mount Pipe	160	1" Dia x 3.5-ft	40
		1" Dia x 3.5-ft	40
AIR -32 B2A/B66AA w/ Mount Pipe	160	1" Dia x 3.5-ft	40
AIR -32 B2A/B66AA w/ Mount Pipe	160	1" Dia x 3.5-ft	10
AIR -32 B2A/B66AA w/ Mount Pipe	160	1" Dia x 3.5-ft	10
RRUS 11 B12	160	1" Dia x 3.5-ft	10
RRUS 11 B12	160		

MATERIAL STRENGTH

GRADE	Fy	Fu	GRADE	Fy	Fu
A607-65	65 ksi	80 ksi			

TOWER DESIGN NOTES

1. Tower is located in Hartford County, Connecticut.
2. Tower designed for Exposure C to the TIA-222-G Standard.
3. Tower designed for a 97 mph basic wind in accordance with the TIA-222-G Standard.
4. Tower is also designed for a 50 mph basic wind with 1.00 in ice. Ice is considered to increase in thickness with height.
5. Deflections are based upon a 60 mph wind.
6. Tower Structure Class II.
7. Topographic Category 1 with Crest Height of 0.00 ft
8. TOWER RATING: 81.9%

Tower Engineering Professionals

Tower Engineering Professionals, Inc.
326 Tryon Road
Raleigh, NC 27603-5263
Phone: (919) 661-6351
FAX: (919) 661-6350

Job:	CT New Britain 3 CAC 803175 (BU 8031		
Project:	TEP No. 25666.110276		
Client: Crown Castle	Drawn by: PRS	App'd:	
Code: TIA-222-G	Date: 03/03/17	Scale: NTS	
Path: C:\Users\pbrewer\Desktop\Structural TNX Files\803175\803175_LC7.eri		Dwg No. E-1	

Tower Input Data

There is a pole section.
This tower is designed using the TIA-222-G standard.
The following design criteria apply:

Tower is located in Hartford County, Connecticut.
Basic wind speed of 97 mph.
Structure Class II.
Exposure Category C.
Topographic Category 1.
Crest Height 0.00 ft.
Nominal ice thickness of 1.0000 in.
Ice thickness is considered to increase with height.
Ice density of 56 pcf.
A wind speed of 50 mph is used in combination with ice.
Temperature drop of 50 °F.
Deflections calculated using a wind speed of 60 mph.
A non-linear (P-delta) analysis was used.
Pressures are calculated at each section.
Stress ratio used in pole design is 1.
Local bending stresses due to climbing loads, feed line supports, and appurtenance mounts are not considered.

Options

Consider Moments - Legs
Consider Moments - Horizontals
Consider Moments - Diagonals
Use Moment Magnification
√ Use Code Stress Ratios
√ Use Code Safety Factors - Guys
Escalate Ice
Always Use Max Kz
Use Special Wind Profile
Include Bolts In Member Capacity
Leg Bolts Are At Top Of Section
Secondary Horizontal Braces Leg
Use Diamond Inner Bracing (4 Sided)
SR Members Have Cut Ends
SR Members Are Concentric

Distribute Leg Loads As Uniform
Assume Legs Pinned
√ Assume Rigid Index Plate
√ Use Clear Spans For Wind Area
Use Clear Spans For KL/r
Retension Guys To Initial Tension
√ Bypass Mast Stability Checks
√ Use Azimuth Dish Coefficients
√ Project Wind Area of Appurt.
Autocalc Torque Arm Areas
Add IBC .6D+W Combination
√ Sort Capacity Reports By Component
Triangulate Diamond Inner Bracing
Treat Feed Line Bundles As Cylinder

Use ASCE 10 X-Brace Ly Rules
Calculate Redundant Bracing Forces
Ignore Redundant Members in FEA
SR Leg Bolts Resist Compression
All Leg Panels Have Same Allowable
Offset Girt At Foundation
√ Consider Feed Line Torque
Include Angle Block Shear Check
Use TIA-222-G Bracing Resist. Exemption
Use TIA-222-G Tension Splice Exemption
Poles
√ Include Shear-Torsion Interaction
Always Use Sub-Critical Flow
Use Top Mounted Sockets

Tapered Pole Section Geometry

Section	Elevation ft	Section Length ft	Splice Length ft	Number of Sides	Top Diameter in	Bottom Diameter in	Wall Thickness in	Bend Radius in	Pole Grade
L1	188.00-137.00	51.00	4.25	18	22.0000	32.7110	0.2500	1.0000	A607-65 (65 ksi)
L2	137.00-90.25	51.00	5.25	18	31.3184	42.0300	0.3125	1.2500	A607-65 (65 ksi)

Section	Elevation ft	Section Length ft	Splice Length ft	Number of Sides	Top Diameter in	Bottom Diameter in	Wall Thickness in	Bend Radius in	Pole Grade
L3	90.25-44.50	51.00	6.50	18	40.3023	51.0140	0.3750	1.5000	A607-65 (65 ksi)
L4	44.50-0.00	51.00		18	48.8988	59.6100	0.5000	2.0000	A607-65 (65 ksi)

Tapered Pole Properties

Section	Tip Dia. in	Area in^2	I in^4	r in	C in	I/C in^3	J in^4	It/Q in^2	w in	w/t
L1	22.3394	17.2586	1031.4832	7.7212	11.1760	92.2945	2064.3237	8.6310	3.4320	13.728
	33.2156	25.7578	3429.0204	11.5237	16.6172	206.3538	6862.5527	12.8813	5.3171	21.269
L2	32.7080	30.7540	3735.3226	11.0071	15.9098	234.7819	7475.5603	15.3799	4.9620	15.879
	42.6784	41.3785	9098.0688	14.8097	21.3512	426.1143	18208.1091	20.6932	6.8473	21.911
L3	42.0437	47.5235	9571.6471	14.1742	20.4736	467.5120	19155.8888	23.7663	6.4332	17.155
	51.8010	60.2731	19526.7966	17.9768	25.9151	753.4907	39079.2871	30.1423	8.3185	22.183
L4	51.0393	76.8089	22730.9631	17.1816	24.8406	915.0736	45491.8362	38.4117	7.7262	15.452
	60.5296	93.8076	41409.2395	20.9841	30.2819	1367.4593	82872.9664	46.9127	9.6114	19.223

Tower Elevation ft	Gusset Area (per face) ft^2	Gusset Thickness in	Gusset Grade	Adjust. Factor A_f	Adjust. Factor A_r	Weight Mult.	Double Angle Stitch Bolt Spacing Diagonals in	Double Angle Stitch Bolt Spacing Horizontals in	Double Angle Stitch Bolt Spacing Redundants in
L1 188.00-137.00				1	1	1			
L2 137.00-90.25				1	1	1			
L3 90.25-44.50				1	1	1			
L4 44.50-0.00				1	1	1			

Feed Line/Linear Appurtenances - Entered As Area

Description	Face or Leg	Allow Shield	Component Type	Placement ft	Total Number		C_AA_A ft^2/ft	Weight plf
*188 LDF7-50A(1-5/8")	B	No	Inside Pole	188.00 - 0.00	6	No Ice	0.00	0.82
						1/2" Ice	0.00	0.82
						1" Ice	0.00	0.82
FB-L98B-002-75000(3/8")	B	No	Inside Pole	188.00 - 0.00	1	No Ice	0.00	0.06
						1/2" Ice	0.00	0.06
						1" Ice	0.00	0.06
WR-VG86ST-BRD(3/4")	B	No	Inside Pole	188.00 - 0.00	2	No Ice	0.00	0.58
						1/2" Ice	0.00	0.58
						1" Ice	0.00	0.58
2" Flex Conduit	B	No	Inside Pole	188.00 - 0.00	1	No Ice	0.00	0.36
						1/2" Ice	0.00	0.36
						1" Ice	0.00	0.36
2" Flex Conduit	B	No	Inside Pole	188.00 - 0.00	1	No Ice	0.00	0.36
						1/2" Ice	0.00	0.36
						1" Ice	0.00	0.36
FB-L98B-034-XXXXXX	B	No	Inside Pole	188.00 - 0.00	1	No Ice	0.00	0.05

Description	Face or Leg	Allow Shield	Component Type	Placement ft	Total Number		C_AA_A ft²/ft	Weight plf
(3/8")						1/2" Ice	0.00	0.05
						1" Ice	0.00	0.05
WR-VG86ST-BRD(3/4")	B	No	Inside Pole	188.00 - 0.00	2	No Ice	0.00	0.58
						1/2" Ice	0.00	0.58
						1" Ice	0.00	0.58
*160								
LCF158-50J(1-5/8")	C	No	Inside Pole	160.00 - 0.00	12	No Ice	0.00	0.92
						1/2" Ice	0.00	0.92
						1" Ice	0.00	0.92
MLE Hybrid 9Power/18Fiber RL 2(1-5/8")	C	No	Inside Pole	160.00 - 0.00	1	No Ice	0.00	1.07
						1/2" Ice	0.00	1.07
						1" Ice	0.00	1.07
*145								
HB158-1-08U8-S8J18(1-5/8")	C	No	Inside Pole	145.00 - 0.00	1	No Ice	0.00	1.30
						1/2" Ice	0.00	1.30
						1" Ice	0.00	1.30
LCF12-50J(1/2")	C	No	Inside Pole	145.00 - 0.00	1	No Ice	0.00	0.15
						1/2" Ice	0.00	0.15
						1" Ice	0.00	0.15
LCF158-50J(1-5/8")	C	No	Inside Pole	145.00 - 0.00	12	No Ice	0.00	0.92
						1/2" Ice	0.00	0.92
						1" Ice	0.00	0.92
HB158-1-08U8-S8J18(1-5/8")	C	No	Inside Pole	145.00 - 0.00	1	No Ice	0.00	1.30
						1/2" Ice	0.00	1.30
						1" Ice	0.00	1.30
***								
Step Pegs (5/8" SR) 7-in. w/30" step	C	No	CaAa (Out Of Face)	188.00 - 0.00	1	No Ice	0.03	0.49
						1/2" Ice	0.14	1.01
						1" Ice	0.23	2.07
Safety Line 3/8	C	No	CaAa (Out Of Face)	188.00 - 0.00	1	No Ice	0.04	0.22
						1/2" Ice	0.14	0.75
						1" Ice	0.24	1.28
***								
3/8-in Detuner Wire	A	No	CaAa (Out Of Face)	133.00 - 0.00	1	No Ice	0.02	0.10
						1/2" Ice	0.12	0.52
						1" Ice	0.22	1.55
3/8-in Detuner Wire	B	No	CaAa (Out Of Face)	133.00 - 0.00	1	No Ice	0.02	0.10
						1/2" Ice	0.12	0.52
						1" Ice	0.22	1.55
3/8-in Detuner Wire	C	No	CaAa (Out Of Face)	133.00 - 0.00	1	No Ice	0.02	0.10
						1/2" Ice	0.12	0.52
						1" Ice	0.22	1.55

Feed Line/Linear Appurtenances Section Areas

Tower Section	Tower Elevation ft	Face	A_R ft²	A_F ft²	C_AA_A In Face ft²	C_AA_A Out Face ft²	Weight K
L1	188.00-137.00	A	0.000	0.000	0.000	0.000	0.00
		B	0.000	0.000	0.000	0.000	0.41
		C	0.000	0.000	0.000	3.697	0.42
L2	137.00-90.25	A	0.000	0.000	0.000	0.802	0.00
		B	0.000	0.000	0.000	0.802	0.38
		C	0.000	0.000	0.000	4.191	1.25
L3	90.25-44.50	A	0.000	0.000	0.000	0.858	0.00
		B	0.000	0.000	0.000	0.858	0.37
		C	0.000	0.000	0.000	4.175	1.22
L4	44.50-0.00	A	0.000	0.000	0.000	0.834	0.00

Tower Section	Tower Elevation ft	Face	A_R ft^2	A_F ft^2	C_AA_A In Face ft^2	C_AA_A Out Face ft^2	Weight K
		B	0.000	0.000	0.000	0.834	0.36
		C	0.000	0.000	0.000	4.061	1.19

Feed Line/Linear Appurtenances Section Areas - With Ice

Tower Section	Tower Elevation ft	Face or Leg	Ice Thickness in	A_R ft^2	A_F ft^2	C_AA_A In Face ft^2	C_AA_A Out Face ft^2	Weight K
L1	188.00-137.00	A	2.344	0.000	0.000	0.000	0.000	0.00
		B		0.000	0.000	0.000	0.000	0.41
		C		0.000	0.000	0.000	51.506	0.97
L2	137.00-90.25	A	2.262	0.000	0.000	0.000	20.839	0.34
		B		0.000	0.000	0.000	20.839	0.72
		C		0.000	0.000	0.000	68.052	2.09
L3	90.25-44.50	A	2.147	0.000	0.000	0.000	21.552	0.34
		B		0.000	0.000	0.000	21.552	0.71
		C		0.000	0.000	0.000	66.257	2.01
L4	44.50-0.00	A	1.925	0.000	0.000	0.000	19.941	0.29
		B		0.000	0.000	0.000	19.941	0.65
		C		0.000	0.000	0.000	61.379	1.88

Feed Line Center of Pressure

Section	Elevation ft	CP_X in	CP_Z in	CP_X Ice in	CP_Z Ice in
L1	188.00-137.00	-0.0899	0.0519	-0.8050	0.4647
L2	137.00-90.25	-0.0892	0.0515	-0.6903	0.3986
L3	90.25-44.50	-0.0898	0.0518	-0.7320	0.4226
L4	44.50-0.00	-0.0902	0.0521	-0.7605	0.4391

Shielding Factor Ka

Tower Section	Feed Line Record No.	Description	Feed Line Segment Elev.	K_a No Ice	K_a Ice

Discrete Tower Loads

Description	Face or Leg	Offset Type	Offsets: Horz Lateral Vert ft ft ft	Azimuth Adjustment °	Placement ft		C_AA_A Front ft^2	C_AA_A Side ft^2	Weight K
Lighting Rod 3/4" x 8'	C	From Leg	0.00 0.00	0.0000	188.00	No Ice	0.60	0.60	0.03
						1/2" Ice	1.41	1.41	0.04

Description	Face or Leg	Offset Type	Offsets: Horz Lateral Vert ft ft ft	Azimuth Adjustment °	Placement ft		C_AA_A Front ft^2	C_AA_A Side ft^2	Weight K
			4.00			1" Ice	2.25	2.25	0.05
188									
DC6-48-60-18-8F	B	From	4.00	0.0000	188.00	No Ice	0.92	0.92	0.02
		Centroid-Fa	0.00			1/2" Ice	1.46	1.46	0.04
		ce	1.00			1" Ice	1.64	1.64	0.06
800 10121	A	From	4.00	0.0000	188.00	No Ice	5.15	3.29	0.05
		Centroid-Fa	0.00			1/2" Ice	5.50	3.63	0.08
		ce	1.00			1" Ice	5.86	3.99	0.12
800 10121	B	From	4.00	0.0000	188.00	No Ice	5.15	3.29	0.05
		Centroid-Fa	0.00			1/2" Ice	5.50	3.63	0.08
		ce	1.00			1" Ice	5.86	3.99	0.12
800 10121	C	From	4.00	0.0000	188.00	No Ice	5.15	3.29	0.05
		Centroid-Fa	0.00			1/2" Ice	5.50	3.63	0.08
		ce	1.00			1" Ice	5.86	3.99	0.12
(2) LGP21401	A	From	4.00	0.0000	188.00	No Ice	1.10	0.21	0.01
		Centroid-Fa	0.00			1/2" Ice	1.24	0.27	0.02
		ce	1.00			1" Ice	1.38	0.35	0.03
(2) LGP21401	B	From	4.00	0.0000	188.00	No Ice	1.10	0.21	0.01
		Centroid-Fa	0.00			1/2" Ice	1.24	0.27	0.02
		ce	1.00			1" Ice	1.38	0.35	0.03
(2) LGP21401	C	From	4.00	0.0000	188.00	No Ice	1.10	0.21	0.01
		Centroid-Fa	0.00			1/2" Ice	1.24	0.27	0.02
		ce	1.00			1" Ice	1.38	0.35	0.03
RRUS-11	A	From	4.00	0.0000	188.00	No Ice	2.79	1.19	0.05
		Centroid-Fa	0.00			1/2" Ice	3.00	1.34	0.07
		ce	1.00			1" Ice	3.21	1.50	0.09
RRUS-11	B	From	4.00	0.0000	188.00	No Ice	2.79	1.19	0.05
		Centroid-Fa	0.00			1/2" Ice	3.00	1.34	0.07
		ce	1.00			1" Ice	3.21	1.50	0.09
RRUS-11	C	From	4.00	0.0000	188.00	No Ice	2.79	1.19	0.05
		Centroid-Fa	0.00			1/2" Ice	3.00	1.34	0.07
		ce	1.00			1" Ice	3.21	1.50	0.09
OPA-65R-LCUU-H6	A	From	4.00	0.0000	188.00	No Ice	9.66	5.52	0.07
		Centroid-Fa	0.00			1/2" Ice	10.13	5.97	0.13
		ce	1.00			1" Ice	10.61	6.43	0.20
OPA-65R-LCUU-H4	B	From	4.00	0.0000	188.00	No Ice	5.94	3.36	0.06
		Centroid-Fa	0.00			1/2" Ice	6.28	3.66	0.10
		ce	1.00			1" Ice	6.62	3.97	0.14
OPA-65R-LCUU-H6	C	From	4.00	0.0000	188.00	No Ice	9.66	5.52	0.07
		Centroid-Fa	0.00			1/2" Ice	10.13	5.97	0.13
		ce	1.00			1" Ice	10.61	6.43	0.20
QS66512-2	A	From	4.00	0.0000	188.00	No Ice	8.13	6.80	0.11
		Centroid-Fa	0.00			1/2" Ice	8.59	7.27	0.17
		ce	1.00			1" Ice	9.05	7.72	0.23
QS46512-2	B	From	4.00	0.0000	188.00	No Ice	5.55	4.61	0.10
		Centroid-Fa	0.00			1/2" Ice	5.90	4.94	0.15
		ce	1.00			1" Ice	6.26	5.29	0.19
QS66512-2	C	From	4.00	0.0000	188.00	No Ice	8.13	6.80	0.11
		Centroid-Fa	0.00			1/2" Ice	8.59	7.27	0.17
		ce	1.00			1" Ice	9.05	7.72	0.23
RRUS 32 B2	A	From	4.00	0.0000	188.00	No Ice	2.73	1.67	0.05
		Centroid-Fa	0.00			1/2" Ice	2.95	1.86	0.07
		ce	1.00			1" Ice	3.18	2.05	0.10
RRUS 32 B2	B	From	4.00	0.0000	188.00	No Ice	2.73	1.67	0.05
		Centroid-Fa	0.00			1/2" Ice	2.95	1.86	0.07
		ce	1.00			1" Ice	3.18	2.05	0.10
RRUS 32 B2	C	From	4.00	0.0000	188.00	No Ice	2.73	1.67	0.05

Description	Face or Leg	Offset Type	Offsets: Horz Lateral Vert ft ft ft	Azimuth Adjustment °	Placement ft		C_AA_A Front ft^2	C_AA_A Side ft^2	Weight K
		Centroid-Fa	0.00			1/2" Ice	2.95	1.86	0.07
		ce	1.00			1" Ice	3.18	2.05	0.10
RRUS 32 B30	A	From	4.00	0.0000	188.00	No Ice	2.74	1.67	0.05
		Centroid-Fa	0.00			1/2" Ice	2.96	1.86	0.07
		ce	1.00			1" Ice	3.19	2.05	0.10
RRUS 32 B30	B	From	4.00	0.0000	188.00	No Ice	2.74	1.67	0.05
		Centroid-Fa	0.00			1/2" Ice	2.96	1.86	0.07
		ce	1.00			1" Ice	3.19	2.05	0.10
RRUS 32 B30	C	From	4.00	0.0000	188.00	No Ice	2.74	1.67	0.05
		Centroid-Fa	0.00			1/2" Ice	2.96	1.86	0.07
		ce	1.00			1" Ice	3.19	2.05	0.10
(2) 860 10025	A	From	4.00	0.0000	188.00	No Ice	0.14	0.12	0.00
		Centroid-Fa	0.00			1/2" Ice	0.20	0.17	0.00
		ce	1.00			1" Ice	0.26	0.23	0.01
(2) 860 10025	B	From	4.00	0.0000	188.00	No Ice	0.14	0.12	0.00
		Centroid-Fa	0.00			1/2" Ice	0.20	0.17	0.00
		ce	1.00			1" Ice	0.26	0.23	0.01
(2) 860 10025	C	From	4.00	0.0000	188.00	No Ice	0.14	0.12	0.00
		Centroid-Fa	0.00			1/2" Ice	0.20	0.17	0.00
		ce	1.00			1" Ice	0.26	0.23	0.01
DC6-48-60-18-8F	B	From	4.00	0.0000	188.00	No Ice	0.92	0.92	0.02
		Centroid-Fa	0.00			1/2" Ice	1.46	1.46	0.04
		ce	1.00			1" Ice	1.64	1.64	0.06
Platform Mount [LP 1201-1]	C	None		0.0000	188.00	No Ice	23.10	23.10	2.10
						1/2" Ice	26.80	26.80	2.50
						1" Ice	30.50	30.50	2.90
Miscellaneous [NA 507-3]	C	None		0.0000	188.00	No Ice	18.50	18.50	0.51
						1/2" Ice	26.40	26.40	0.70
						1" Ice	34.30	34.30	0.90
*160									
LNX-6515DS-VTM w/	A	From	4.00	0.0000	160.00	No Ice	11.68	9.84	0.08
Mount Pipe		Centroid-Fa	0.00			1/2" Ice	12.40	11.37	0.17
		ce	3.00			1" Ice	13.14	12.91	0.27
LNX-6515DS-VTM w/	B	From	4.00	0.0000	160.00	No Ice	11.68	9.84	0.08
Mount Pipe		Centroid-Fa	0.00			1/2" Ice	12.40	11.37	0.17
		ce	3.00			1" Ice	13.14	12.91	0.27
LNX-6515DS-VTM w/	C	From	4.00	0.0000	160.00	No Ice	11.68	9.84	0.08
Mount Pipe		Centroid-Fa	0.00			1/2" Ice	12.40	11.37	0.17
		ce	3.00			1" Ice	13.14	12.91	0.27
ERICSSON AIR 21 B2A	A	From	4.00	0.0000	160.00	No Ice	6.33	5.64	0.11
B4P w/ Mount Pipe		Centroid-Fa	0.00			1/2" Ice	6.78	6.43	0.17
		ce	3.00			1" Ice	7.21	7.13	0.23
ERICSSON AIR 21 B2A	B	From	4.00	0.0000	160.00	No Ice	6.33	5.64	0.11
B4P w/ Mount Pipe		Centroid-Fa	0.00			1/2" Ice	6.78	6.43	0.17
		ce	3.00			1" Ice	7.21	7.13	0.23
ERICSSON AIR 21 B2A	C	From	4.00	0.0000	160.00	No Ice	6.33	5.64	0.11
B4P w/ Mount Pipe		Centroid-Fa	0.00			1/2" Ice	6.78	6.43	0.17
		ce	3.00			1" Ice	7.21	7.13	0.23
AIR -32 B2A/B66AA w/	A	From	4.00	0.0000	160.00	No Ice	6.75	6.07	0.15
Mount Pipe		Centroid-Fa	0.00			1/2" Ice	7.20	6.87	0.21
		ce	3.00			1" Ice	7.65	7.58	0.28
AIR -32 B2A/B66AA w/	B	From	4.00	0.0000	160.00	No Ice	6.75	6.07	0.15
Mount Pipe		Centroid-Fa	0.00			1/2" Ice	7.20	6.87	0.21
		ce	3.00			1" Ice	7.65	7.58	0.28
AIR -32 B2A/B66AA w/	C	From	4.00	0.0000	160.00	No Ice	6.75	6.07	0.15
Mount Pipe		Centroid-Fa	0.00			1/2" Ice	7.20	6.87	0.21
		ce	3.00			1" Ice	7.65	7.58	0.28

Description	Face or Leg	Offset Type	Offsets: Horz Lateral Vert ft ft ft	Azimuth Adjustment °	Placement ft		C_AA_A Front ft^2	C_AA_A Side ft^2	Weight K
RRUS 11 B12	A	From Centroid-Face	4.00 0.00 3.00	0.0000	160.00	No Ice 1/2" Ice 1" Ice	2.83 3.04 3.26	1.18 1.33 1.48	0.05 0.07 0.10
RRUS 11 B12	B	From Centroid-Face	4.00 0.00 3.00	0.0000	160.00	No Ice 1/2" Ice 1" Ice	2.83 3.04 3.26	1.18 1.33 1.48	0.05 0.07 0.10
RRUS 11 B12	C	From Centroid-Face	4.00 0.00 3.00	0.0000	160.00	No Ice 1/2" Ice 1" Ice	2.83 3.04 3.26	1.18 1.33 1.48	0.05 0.07 0.10
ATMAA1412D-1A20	A	From Centroid-Face	4.00 0.00 3.00	0.0000	160.00	No Ice 1/2" Ice 1" Ice	1.00 1.13 1.26	0.41 0.50 0.59	0.01 0.02 0.03
ATMAA1412D-1A20	B	From Centroid-Face	4.00 0.00 3.00	0.0000	160.00	No Ice 1/2" Ice 1" Ice	1.00 1.13 1.26	0.41 0.50 0.59	0.01 0.02 0.03
ATMAA1412D-1A20	C	From Centroid-Face	4.00 0.00 3.00	0.0000	160.00	No Ice 1/2" Ice 1" Ice	0.00 0.00 0.00	0.00 0.00 0.00	0.00 0.00 0.00
Platform Mount [LP 601-1]	C	None		0.0000	160.00	No Ice 1/2" Ice 1" Ice	28.47 33.59 38.71	28.47 33.59 38.71	1.12 1.51 1.91
2.4" Dia x 8-ft Mount Pipe	A	From Centroid-Face	4.00 0.00 0.00	0.0000	160.00	No Ice 1/2" Ice 1" Ice	1.90 2.73 3.40	1.90 2.73 3.40	0.03 0.04 0.06
2.4" Dia x 8-ft Mount Pipe	B	From Centroid-Face	4.00 0.00 0.00	0.0000	160.00	No Ice 1/2" Ice 1" Ice	1.90 2.73 3.40	1.90 2.73 3.40	0.03 0.04 0.06
2.4" Dia x 8-ft Mount Pipe	C	From Centroid-Face	4.00 0.00 0.00	0.0000	160.00	No Ice 1/2" Ice 1" Ice	1.90 2.73 3.40	1.90 2.73 3.40	0.03 0.04 0.06
*145									
BXA-80063/6 w/ Mount Pipe	A	From Centroid-Leg	4.00 0.00 0.00	0.0000	145.00	No Ice 1/2" Ice 1" Ice	7.82 8.37 8.89	5.41 6.56 7.42	0.04 0.10 0.17
BXA-80063/6 w/ Mount Pipe	B	From Centroid-Leg	4.00 0.00 0.00	0.0000	145.00	No Ice 1/2" Ice 1" Ice	7.82 8.37 8.89	5.41 6.56 7.42	0.04 0.10 0.17
BXA-80063/6 w/ Mount Pipe	C	From Centroid-Leg	4.00 0.00 0.00	0.0000	145.00	No Ice 1/2" Ice 1" Ice	7.82 8.37 8.89	5.41 6.56 7.42	0.04 0.10 0.17
LNX-6512DS-T4M w/ Mount Pipe	A	From Centroid-Leg	4.00 0.00 0.00	0.0000	145.00	No Ice 1/2" Ice 1" Ice	5.27 5.65 6.05	4.48 5.08 5.70	0.04 0.09 0.14
LNX-6512DS-T4M w/ Mount Pipe	B	From Centroid-Leg	4.00 0.00 0.00	0.0000	145.00	No Ice 1/2" Ice 1" Ice	5.27 5.65 6.05	4.48 5.08 5.70	0.04 0.09 0.14
GPS_A	A	From Centroid-Leg	4.00 0.00 5.00	0.0000	145.00	No Ice 1/2" Ice 1" Ice	0.26 0.32 0.39	0.26 0.32 0.39	0.00 0.00 0.01
(2) SBNHH-1D65B w/ Mount Pipe	A	From Centroid-Leg	4.00 0.00 0.00	0.0000	145.00	No Ice 1/2" Ice 1" Ice	8.65 9.32 9.90	7.64 8.93 9.88	0.09 0.16 0.25
(2) SBNHH-1D65B w/ Mount Pipe	B	From Centroid-Leg	4.00 0.00 0.00	0.0000	145.00	No Ice 1/2" Ice 1" Ice	8.65 9.32 9.90	7.64 8.93 9.88	0.09 0.16 0.25
(2) SBNHH-1D65B w/ Mount Pipe	C	From Centroid-Le	4.00 0.00	0.0000	145.00	No Ice 1/2" Ice	8.65 9.32	7.64 8.93	0.09 0.16

Description	Face or Leg	Offset Type	Offsets: Horz Lateral Vert ft ft ft	Azimuth Adjustment °	Placement ft		C_AA_A Front ft^2	C_AA_A Side ft^2	Weight K
		g	0.00			1" Ice	9.90	9.88	0.25
800 10735V01 w/ Mount Pipe	C	From Centroid-Le g	4.00 0.00 0.00	0.0000	145.00	No Ice 1/2" Ice 1" Ice	8.87 9.46 10.01	5.49 6.71 7.69	0.06 0.12 0.19
RRH2x60-700	A	From Centroid-Le g	4.00 0.00 0.00	0.0000	145.00	No Ice 1/2" Ice 1" Ice	3.50 3.76 4.03	1.82 2.05 2.29	0.06 0.08 0.11
RRH2x60-700	B	From Centroid-Le g	4.00 0.00 0.00	0.0000	145.00	No Ice 1/2" Ice 1" Ice	3.50 3.76 4.03	1.82 2.05 2.29	0.06 0.08 0.11
RRH2x60-700	C	From Centroid-Le g	4.00 0.00 0.00	0.0000	145.00	No Ice 1/2" Ice 1" Ice	3.50 3.76 4.03	1.82 2.05 2.29	0.06 0.08 0.11
RRH4X45-AWS4 B66	A	From Centroid-Le g	4.00 0.00 0.00	0.0000	145.00	No Ice 1/2" Ice 1" Ice	2.66 2.88 3.10	1.59 1.77 1.96	0.06 0.08 0.11
RRH4X45-AWS4 B66	B	From Centroid-Le g	4.00 0.00 0.00	0.0000	145.00	No Ice 1/2" Ice 1" Ice	2.66 2.88 3.10	1.59 1.77 1.96	0.06 0.08 0.11
RRH4X45-AWS4 B66	C	From Centroid-Le g	4.00 0.00 0.00	0.0000	145.00	No Ice 1/2" Ice 1" Ice	2.66 2.88 3.10	1.59 1.77 1.96	0.06 0.08 0.11
DB-T1-6Z-8AB-0Z	A	From Centroid-Le g	4.00 0.00 0.00	0.0000	145.00	No Ice 1/2" Ice 1" Ice	4.80 5.07 5.35	2.00 2.19 2.39	0.04 0.08 0.12
PCS B25 RRH4x30	A	From Centroid-Le g	4.00 0.00 0.00	0.0000	145.00	No Ice 1/2" Ice 1" Ice	2.20 2.39 2.59	1.74 1.92 2.11	0.06 0.08 0.10
PCS B25 RRH4x30	B	From Centroid-Le g	4.00 0.00 0.00	0.0000	145.00	No Ice 1/2" Ice 1" Ice	2.20 2.39 2.59	1.74 1.92 2.11	0.06 0.08 0.10
PCS B25 RRH4x30	C	From Centroid-Le g	4.00 0.00 0.00	0.0000	145.00	No Ice 1/2" Ice 1" Ice	2.20 2.39 2.59	1.74 1.92 2.11	0.06 0.08 0.10
Platform Mount [LP 601-1]	C	None		0.0000	145.00	No Ice 1/2" Ice 1" Ice	28.47 33.59 38.71	28.47 33.59 38.71	1.12 1.51 1.91
Detuner Side Arm Mount [SO 701-3]	C	None		0.0000	133.00	No Ice 1/2" Ice 1" Ice	2.83 3.92 5.01	2.83 3.92 5.01	0.20 0.24 0.28
*****									
1" Dia x 3.5-ft	A	From Leg	1.50 0.00 0.00	0.0000	100.00	No Ice 1/2" Ice 1" Ice	0.00 0.00 0.00	0.37 0.68 0.90	0.00 0.01 0.01
1" Dia x 3.5-ft	B	From Leg	1.50 0.00 0.00	0.0000	100.00	No Ice 1/2" Ice 1" Ice	0.00 0.00 0.00	0.37 0.68 0.90	0.00 0.01 0.01
1" Dia x 3.5-ft	C	From Leg	1.50 0.00 0.00	0.0000	100.00	No Ice 1/2" Ice 1" Ice	0.00 0.00 0.00	0.37 0.68 0.90	0.00 0.01 0.01
*****									
1" Dia x 3.5-ft	A	From Leg	1.50 0.00 0.00	0.0000	70.00	No Ice 1/2" Ice 1" Ice	0.00 0.00 0.00	0.37 0.68 0.90	0.00 0.01 0.01
1" Dia x 3.5-ft	B	From Leg	1.50 0.00	0.0000	70.00	No Ice 1/2" Ice	0.00 0.00	0.37 0.68	0.00 0.01

Description	Face or Leg	Offset Type	Offsets: Horz Lateral Vert ft ft ft	Azimuth Adjustment °	Placement ft		C_AA_A Front ft^2	C_AA_A Side ft^2	Weight K
			0.00			1" Ice	0.00	0.90	0.01
1" Dia x 3.5-ft	C	From Leg	1.50	0.0000	70.00	No Ice	0.00	0.37	0.00
			0.00			1/2" Ice	0.00	0.68	0.01
			0.00			1" Ice	0.00	0.90	0.01
*****									
1" Dia x 3.5-ft	A	From Leg	1.50	0.0000	40.00	No Ice	0.00	0.37	0.00
			0.00			1/2" Ice	0.00	0.68	0.01
			0.00			1" Ice	0.00	0.90	0.01
1" Dia x 3.5-ft	B	From Leg	1.50	0.0000	40.00	No Ice	0.00	0.37	0.00
			0.00			1/2" Ice	0.00	0.68	0.01
			0.00			1" Ice	0.00	0.90	0.01
1" Dia x 3.5-ft	C	From Leg	1.50	0.0000	40.00	No Ice	0.00	0.37	0.00
			0.00			1/2" Ice	0.00	0.68	0.01
			0.00			1" Ice	0.00	0.90	0.01
*****									
1" Dia x 3.5-ft	A	From Leg	1.50	0.0000	10.00	No Ice	0.00	0.37	0.00
			0.00			1/2" Ice	0.00	0.68	0.01
			0.00			1" Ice	0.00	0.90	0.01
1" Dia x 3.5-ft	B	From Leg	1.50	0.0000	10.00	No Ice	0.00	0.37	0.00
			0.00			1/2" Ice	0.00	0.68	0.01
			0.00			1" Ice	0.00	0.90	0.01
1" Dia x 3.5-ft	C	From Leg	1.50	0.0000	10.00	No Ice	0.00	0.37	0.00
			0.00			1/2" Ice	0.00	0.68	0.01
			0.00			1" Ice	0.00	0.90	0.01

Load Combinations

Comb. No.	Description
1	Dead Only
2	1.2 Dead+1.6 Wind 0 deg - No Ice
3	0.9 Dead+1.6 Wind 0 deg - No Ice
4	1.2 Dead+1.6 Wind 30 deg - No Ice
5	0.9 Dead+1.6 Wind 30 deg - No Ice
6	1.2 Dead+1.6 Wind 60 deg - No Ice
7	0.9 Dead+1.6 Wind 60 deg - No Ice
8	1.2 Dead+1.6 Wind 90 deg - No Ice
9	0.9 Dead+1.6 Wind 90 deg - No Ice
10	1.2 Dead+1.6 Wind 120 deg - No Ice
11	0.9 Dead+1.6 Wind 120 deg - No Ice
12	1.2 Dead+1.6 Wind 150 deg - No Ice
13	0.9 Dead+1.6 Wind 150 deg - No Ice
14	1.2 Dead+1.6 Wind 180 deg - No Ice
15	0.9 Dead+1.6 Wind 180 deg - No Ice
16	1.2 Dead+1.6 Wind 210 deg - No Ice
17	0.9 Dead+1.6 Wind 210 deg - No Ice
18	1.2 Dead+1.6 Wind 240 deg - No Ice
19	0.9 Dead+1.6 Wind 240 deg - No Ice
20	1.2 Dead+1.6 Wind 270 deg - No Ice
21	0.9 Dead+1.6 Wind 270 deg - No Ice
22	1.2 Dead+1.6 Wind 300 deg - No Ice

Comb. No.	Description
23	0.9 Dead+1.6 Wind 300 deg - No Ice
24	1.2 Dead+1.6 Wind 330 deg - No Ice
25	0.9 Dead+1.6 Wind 330 deg - No Ice
26	1.2 Dead+1.0 Ice+1.0 Temp
27	1.2 Dead+1.0 Wind 0 deg+1.0 Ice+1.0 Temp
28	1.2 Dead+1.0 Wind 30 deg+1.0 Ice+1.0 Temp
29	1.2 Dead+1.0 Wind 60 deg+1.0 Ice+1.0 Temp
30	1.2 Dead+1.0 Wind 90 deg+1.0 Ice+1.0 Temp
31	1.2 Dead+1.0 Wind 120 deg+1.0 Ice+1.0 Temp
32	1.2 Dead+1.0 Wind 150 deg+1.0 Ice+1.0 Temp
33	1.2 Dead+1.0 Wind 180 deg+1.0 Ice+1.0 Temp
34	1.2 Dead+1.0 Wind 210 deg+1.0 Ice+1.0 Temp
35	1.2 Dead+1.0 Wind 240 deg+1.0 Ice+1.0 Temp
36	1.2 Dead+1.0 Wind 270 deg+1.0 Ice+1.0 Temp
37	1.2 Dead+1.0 Wind 300 deg+1.0 Ice+1.0 Temp
38	1.2 Dead+1.0 Wind 330 deg+1.0 Ice+1.0 Temp
39	Dead+Wind 0 deg - Service
40	Dead+Wind 30 deg - Service
41	Dead+Wind 60 deg - Service
42	Dead+Wind 90 deg - Service
43	Dead+Wind 120 deg - Service
44	Dead+Wind 150 deg - Service
45	Dead+Wind 180 deg - Service
46	Dead+Wind 210 deg - Service
47	Dead+Wind 240 deg - Service
48	Dead+Wind 270 deg - Service
49	Dead+Wind 300 deg - Service
50	Dead+Wind 330 deg - Service

Maximum Member Forces

Section No.	Elevation ft	Component Type	Condition	Gov. Load Comb.	Axial K	Major Axis Moment kip-ft	Minor Axis Moment kip-ft
L1	188 - 137	Pole	Max Tension	26	0.00	-0.00	-0.00
			Max. Compression	26	-41.67	0.97	1.01
			Max. Mx	20	-12.72	602.49	2.45
			Max. My	2	-12.69	2.25	605.15
			Max. Vy	20	-24.45	602.49	2.45
			Max. Vx	2	-24.55	2.25	605.15
			Max. Torque	3			0.86
L2	137 - 90.25	Pole	Max Tension	1	0.00	0.00	0.00
			Max. Compression	26	-57.91	1.70	0.63
			Max. Mx	20	-22.52	1844.72	2.49
			Max. My	2	-22.51	2.41	1851.97
			Max. Vy	20	-29.77	1844.72	2.49
			Max. Vx	2	-29.87	2.41	1851.97
			Max. Torque	32			-1.20
L3	90.25 - 44.5	Pole	Max Tension	1	0.00	0.00	0.00
			Max. Compression	26	-78.12	2.49	0.17
			Max. Mx	20	-35.90	3283.28	2.50
			Max. My	2	-35.90	2.52	3294.96
			Max. Vy	20	-34.78	3283.28	2.50
			Max. Vx	2	-34.88	2.52	3294.96
			Max. Torque	32			-1.84
L4	44.5 - 0	Pole	Max Tension	1	0.00	0.00	0.00
			Max. Compression	26	-108.99	3.48	-0.40
			Max. Mx	20	-58.52	5191.57	2.47
			Max. My	2	-58.52	2.61	5208.16

Section No.	Elevation ft	Component Type	Condition	Gov. Load Comb.	Axial K	Major Axis Moment kip-ft	Minor Axis Moment kip-ft
			Max. Vy	20	-39.70	5191.57	2.47
			Max. Vx	2	-39.80	2.61	5208.16
			Max. Torque	32			-2.53

Maximum Reactions

Location	Condition	Gov. Load Comb.	Vertical K	Horizontal, X K	Horizontal, Z K
Pole	Max. Vert	36	108.99	14.92	0.00
	Max. H_x	21	43.91	39.66	-0.00
	Max. H_z	3	43.91	-0.00	39.76
	Max. M_x	2	5208.16	-0.00	39.76
	Max. M_z	8	5191.02	-39.66	0.00
	Max. Torsion	38	2.53	7.46	12.94
	Min. Vert	23	43.91	34.35	19.88
	Min. H_x	9	43.91	-39.66	0.00
	Min. H_z	15	43.91	0.00	-39.76
	Min. M_x	14	-5207.95	0.00	-39.76
	Min. M_z	20	-5191.57	39.66	-0.00
	Min. Torsion	32	-2.53	-7.46	-12.94

Tower Mast Reaction Summary

Load Combination	Vertical K	$Shear_x$ K	$Shear_z$ K	Overturning Moment, M_x kip-ft	Overturning Moment, M_z kip-ft	Torque kip-ft
Dead Only	48.79	0.00	0.00	-0.08	0.22	0.00
1.2 Dead+1.6 Wind 0 deg - No Ice	58.55	0.00	-39.76	-5208.16	2.61	-1.60
0.9 Dead+1.6 Wind 0 deg - No Ice	43.91	0.00	-39.76	-5143.89	2.49	-1.60
1.2 Dead+1.6 Wind 30 deg - No Ice	58.55	19.83	-34.43	-4509.27	-2593.32	-1.15
0.9 Dead+1.6 Wind 30 deg - No Ice	43.91	19.83	-34.43	-4453.65	-2561.44	-1.16
1.2 Dead+1.6 Wind 60 deg - No Ice	58.55	34.35	-19.88	-2602.14	-4494.35	-0.39
0.9 Dead+1.6 Wind 60 deg - No Ice	43.91	34.35	-19.88	-2570.04	-4439.02	-0.39
1.2 Dead+1.6 Wind 90 deg - No Ice	58.55	39.66	-0.00	2.25	-5191.02	0.48
0.9 Dead+1.6 Wind 90 deg - No Ice	43.91	39.66	-0.00	2.22	-5127.08	0.48
1.2 Dead+1.6 Wind 120 deg - No Ice	58.55	34.35	19.88	2605.98	-4496.66	1.21
0.9 Dead+1.6 Wind 120 deg - No Ice	43.91	34.35	19.88	2573.84	-4441.27	1.21
1.2 Dead+1.6 Wind 150 deg - No Ice	58.55	19.83	34.43	4511.37	-2597.38	1.61
0.9 Dead+1.6 Wind 150 deg - No Ice	43.91	19.83	34.43	4455.75	-2565.39	1.62
1.2 Dead+1.6 Wind 180 deg -	58.55	-0.00	39.76	5207.95	-2.10	1.58

Load Combination	Vertical K	$Shear_x$ K	$Shear_z$ K	Overturning Moment, M_x kip-ft	Overturning Moment, M_z kip-ft	Torque kip-ft
No Ice						
0.9 Dead+1.6 Wind 180 deg - No Ice	43.91	-0.00	39.76	5143.74	-2.11	1.59
1.2 Dead+1.6 Wind 210 deg - No Ice	58.55	-19.83	34.43	4509.08	2593.85	1.13
0.9 Dead+1.6 Wind 210 deg - No Ice	43.91	-19.83	34.43	4453.51	2561.83	1.14
1.2 Dead+1.6 Wind 240 deg - No Ice	58.55	-34.35	19.88	2601.94	4494.89	0.39
0.9 Dead+1.6 Wind 240 deg - No Ice	43.91	-34.35	19.88	2569.90	4439.42	0.39
1.2 Dead+1.6 Wind 270 deg - No Ice	58.55	-39.66	0.00	-2.47	5191.57	-0.46
0.9 Dead+1.6 Wind 270 deg - No Ice	43.91	-39.66	0.00	-2.38	5127.48	-0.46
1.2 Dead+1.6 Wind 300 deg - No Ice	58.55	-34.35	-19.88	-2606.21	4497.20	-1.19
0.9 Dead+1.6 Wind 300 deg - No Ice	43.91	-34.35	-19.88	-2574.01	4441.67	-1.19
1.2 Dead+1.6 Wind 330 deg - No Ice	58.55	-19.83	-34.43	-4511.60	2597.90	-1.61
0.9 Dead+1.6 Wind 330 deg - No Ice	43.91	-19.83	-34.43	-4455.91	2565.78	-1.61
1.2 Dead+1.0 Ice+1.0 Temp	108.99	-0.00	-0.00	0.40	3.48	-0.00
1.2 Dead+1.0 Wind 0 deg+1.0 Ice+1.0 Temp	108.99	-0.00	-14.94	-1950.11	4.68	-2.23
1.2 Dead+1.0 Wind 30 deg+1.0 Ice+1.0 Temp	108.99	7.46	-12.94	-1688.36	-968.80	-1.34
1.2 Dead+1.0 Wind 60 deg+1.0 Ice+1.0 Temp	108.99	12.92	-7.47	-974.12	-1681.67	-0.09
1.2 Dead+1.0 Wind 90 deg+1.0 Ice+1.0 Temp	108.99	14.92	0.00	1.22	-1942.92	1.19
1.2 Dead+1.0 Wind 120 deg+1.0 Ice+1.0 Temp	108.99	12.93	7.47	976.34	-1682.55	2.15
1.2 Dead+1.0 Wind 150 deg+1.0 Ice+1.0 Temp	108.99	7.46	12.94	1689.95	-970.32	2.53
1.2 Dead+1.0 Wind 180 deg+1.0 Ice+1.0 Temp	108.99	0.00	14.94	1950.84	2.94	2.23
1.2 Dead+1.0 Wind 210 deg+1.0 Ice+1.0 Temp	108.99	-7.46	12.94	1689.10	976.44	1.34
1.2 Dead+1.0 Wind 240 deg+1.0 Ice+1.0 Temp	108.99	-12.92	7.47	974.85	1689.33	0.09
1.2 Dead+1.0 Wind 270 deg+1.0 Ice+1.0 Temp	108.99	-14.92	-0.00	-0.52	1950.58	-1.19
1.2 Dead+1.0 Wind 300 deg+1.0 Ice+1.0 Temp	108.99	-12.93	-7.47	-975.65	1690.19	-2.14
1.2 Dead+1.0 Wind 330 deg+1.0 Ice+1.0 Temp	108.99	-7.46	-12.94	-1689.24	977.94	-2.53
Dead+Wind 0 deg - Service	48.79	0.00	-8.51	-1107.88	0.73	-0.15
Dead+Wind 30 deg - Service	48.79	4.24	-7.37	-959.22	-551.44	-0.13
Dead+Wind 60 deg - Service	48.79	7.35	-4.25	-553.55	-955.80	-0.09
Dead+Wind 90 deg - Service	48.79	8.49	-0.00	0.41	-1103.98	-0.01
Dead+Wind 120 deg - Service	48.79	7.35	4.25	554.24	-956.30	0.06
Dead+Wind 150 deg - Service	48.79	4.24	7.37	959.54	-552.31	0.12
Dead+Wind 180 deg - Service	48.79	-0.00	8.51	1107.71	-0.27	0.14
Dead+Wind 210 deg - Service	48.79	-4.24	7.37	959.04	551.90	0.13
Dead+Wind 240 deg - Service	48.79	-7.35	4.25	553.38	956.26	0.09
Dead+Wind 270 deg - Service	48.79	-8.49	0.00	-0.59	1104.44	0.01
Dead+Wind 300 deg - Service	48.79	-7.35	-4.25	-554.42	956.76	-0.06
Dead+Wind 330 deg - Service	48.79	-4.24	-7.37	-959.72	552.77	-0.12

Solution Summary

Load Comb.	Sum of Applied Forces PX K	PY K	PZ K	Sum of Reactions PX K	PY K	PZ K	% Error
1	0.00	-48.79	0.00	0.00	48.79	0.00	0.000%
2	0.00	-58.55	-39.76	-0.00	58.55	39.76	0.000%
3	0.00	-43.91	-39.76	-0.00	43.91	39.76	0.000%
4	19.83	-58.55	-34.43	-19.83	58.55	34.43	0.000%
5	19.83	-43.91	-34.43	-19.83	43.91	34.43	0.000%
6	34.35	-58.55	-19.88	-34.35	58.55	19.88	0.000%
7	34.35	-43.91	-19.88	-34.35	43.91	19.88	0.000%
8	39.66	-58.55	-0.00	-39.66	58.55	0.00	0.000%
9	39.66	-43.91	-0.00	-39.66	43.91	0.00	0.000%
10	34.35	-58.55	19.88	-34.35	58.55	-19.88	0.000%
11	34.35	-43.91	19.88	-34.35	43.91	-19.88	0.000%
12	19.83	-58.55	34.43	-19.83	58.55	-34.43	0.000%
13	19.83	-43.91	34.43	-19.83	43.91	-34.43	0.000%
14	-0.00	-58.55	39.76	0.00	58.55	-39.76	0.000%
15	-0.00	-43.91	39.76	0.00	43.91	-39.76	0.000%
16	-19.83	-58.55	34.43	19.83	58.55	-34.43	0.000%
17	-19.83	-43.91	34.43	19.83	43.91	-34.43	0.000%
18	-34.35	-58.55	19.88	34.35	58.55	-19.88	0.000%
19	-34.35	-43.91	19.88	34.35	43.91	-19.88	0.000%
20	-39.66	-58.55	0.00	39.66	58.55	-0.00	0.000%
21	-39.66	-43.91	0.00	39.66	43.91	-0.00	0.000%
22	-34.35	-58.55	-19.88	34.35	58.55	19.88	0.000%
23	-34.35	-43.91	-19.88	34.35	43.91	19.88	0.000%
24	-19.83	-58.55	-34.43	19.83	58.55	34.43	0.000%
25	-19.83	-43.91	-34.43	19.83	43.91	34.43	0.000%
26	0.00	-108.99	0.00	0.00	108.99	0.00	0.000%
27	-0.00	-108.99	-14.94	0.00	108.99	14.94	0.000%
28	7.46	-108.99	-12.94	-7.46	108.99	12.94	0.000%
29	12.92	-108.99	-7.47	-12.92	108.99	7.47	0.000%
30	14.92	-108.99	0.00	-14.92	108.99	-0.00	0.000%
31	12.93	-108.99	7.47	-12.93	108.99	-7.47	0.000%
32	7.46	-108.99	12.94	-7.46	108.99	-12.94	0.000%
33	0.00	-108.99	14.94	-0.00	108.99	-14.94	0.000%
34	-7.46	-108.99	12.94	7.46	108.99	-12.94	0.000%
35	-12.92	-108.99	7.47	12.92	108.99	-7.47	0.000%
36	-14.92	-108.99	-0.00	14.92	108.99	0.00	0.000%
37	-12.93	-108.99	-7.47	12.93	108.99	7.47	0.000%
38	-7.46	-108.99	-12.94	7.46	108.99	12.94	0.000%
39	0.00	-48.79	-8.51	-0.00	48.79	8.51	0.000%
40	4.24	-48.79	-7.37	-4.24	48.79	7.37	0.000%
41	7.35	-48.79	-4.25	-7.35	48.79	4.25	0.000%
42	8.49	-48.79	-0.00	-8.49	48.79	0.00	0.000%
43	7.35	-48.79	4.25	-7.35	48.79	-4.25	0.000%
44	4.24	-48.79	7.37	-4.24	48.79	-7.37	0.000%
45	-0.00	-48.79	8.51	0.00	48.79	-8.51	0.000%
46	-4.24	-48.79	7.37	4.24	48.79	-7.37	0.000%
47	-7.35	-48.79	4.25	7.35	48.79	-4.25	0.000%
48	-8.49	-48.79	0.00	8.49	48.79	-0.00	0.000%
49	-7.35	-48.79	-4.25	7.35	48.79	4.25	0.000%
50	-4.24	-48.79	-7.37	4.24	48.79	7.37	0.000%

Non-Linear Convergence Results

Load Combination	Converged?	Number of Cycles	Displacement Tolerance	Force Tolerance
1	Yes	4	0.00000001	0.00000001
2	Yes	5	0.00000001	0.00005536
3	Yes	4	0.00000001	0.00066819
4	Yes	6	0.00000001	0.00013598
5	Yes	6	0.00000001	0.00003893
6	Yes	6	0.00000001	0.00013777
7	Yes	6	0.00000001	0.00003957
8	Yes	5	0.00000001	0.00002099
9	Yes	4	0.00000001	0.00036636
10	Yes	6	0.00000001	0.00013867
11	Yes	6	0.00000001	0.00003980
12	Yes	6	0.00000001	0.00013588
13	Yes	6	0.00000001	0.00003881
14	Yes	5	0.00000001	0.00004412
15	Yes	4	0.00000001	0.00056485
16	Yes	6	0.00000001	0.00013863
17	Yes	6	0.00000001	0.00003986
18	Yes	6	0.00000001	0.00013668
19	Yes	6	0.00000001	0.00003919
20	Yes	5	0.00000001	0.00001457
21	Yes	4	0.00000001	0.00032874
22	Yes	6	0.00000001	0.00013633
23	Yes	6	0.00000001	0.00003897
24	Yes	6	0.00000001	0.00013929
25	Yes	6	0.00000001	0.00004000
26	Yes	4	0.00000001	0.00001299
27	Yes	6	0.00000001	0.00020514
28	Yes	6	0.00000001	0.00039839
29	Yes	6	0.00000001	0.00040426
30	Yes	6	0.00000001	0.00020221
31	Yes	6	0.00000001	0.00041319
32	Yes	6	0.00000001	0.00039557
33	Yes	6	0.00000001	0.00020478
34	Yes	6	0.00000001	0.00041211
35	Yes	6	0.00000001	0.00040503
36	Yes	6	0.00000001	0.00020314
37	Yes	6	0.00000001	0.00040054
38	Yes	6	0.00000001	0.00041950
39	Yes	4	0.00000001	0.00007905
40	Yes	4	0.00000001	0.00064483
41	Yes	4	0.00000001	0.00066368
42	Yes	4	0.00000001	0.00007188
43	Yes	4	0.00000001	0.00066671
44	Yes	4	0.00000001	0.00064884
45	Yes	4	0.00000001	0.00007797
46	Yes	4	0.00000001	0.00067015
47	Yes	4	0.00000001	0.00064846
48	Yes	4	0.00000001	0.00007195
49	Yes	4	0.00000001	0.00065450
50	Yes	4	0.00000001	0.00067523

Maximum Tower Deflections - Service Wind

Section No.	Elevation ft	Horz. Deflection in	Gov. Load Comb.	Tilt °	Twist °
L1	188 - 137	35.117	50	1.7234	0.0018
L2	141.25 - 90.25	19.350	39	1.4164	0.0007
L3	95.5 - 44.5	8.167	39	0.8751	0.0003
L4	51 - 0	2.163	39	0.3928	0.0001

Critical Deflections and Radius of Curvature - Service Wind

Elevation ft	Appurtenance	Gov. Load Comb.	Deflection in	Tilt °	Twist °	Radius of Curvature ft
188.00	Lighting Rod 3/4" x 8'	50	35.117	1.7234	0.0018	46722
160.00	LNX-6515DS-VTM w/ Mount Pipe	39	25.336	1.5655	0.0011	8342
145.00	BXA-80063/6 w/ Mount Pipe	39	20.491	1.4506	0.0007	5433
133.00	Side Arm Mount [SO 701-3]	39	16.959	1.3326	0.0006	4975
100.00	1" Dia x 3.5-ft	39	9.041	0.9311	0.0003	4897
70.00	1" Dia x 3.5-ft	39	4.147	0.5812	0.0001	5029
40.00	1" Dia x 3.5-ft	39	1.391	0.2970	0.0001	6556
10.00	1" Dia x 3.5-ft	39	0.233	0.0701	0.0000	26222

Maximum Tower Deflections - Design Wind

Section No.	Elevation ft	Horz. Deflection in	Gov. Load Comb.	Tilt °	Twist °
L1	188 - 137	164.938	2	8.1095	0.0117
L2	141.25 - 90.25	90.968	2	6.6655	0.0055
L3	95.5 - 44.5	38.414	2	4.1187	0.0030
L4	51 - 0	10.172	2	1.8482	0.0012

Critical Deflections and Radius of Curvature - Design Wind

Elevation ft	Appurtenance	Gov. Load Comb.	Deflection in	Tilt °	Twist °	Radius of Curvature ft
188.00	Lighting Rod 3/4" x 8'	2	164.938	8.1095	0.0117	10304
160.00	LNX-6515DS-VTM w/ Mount Pipe	2	119.068	7.3668	0.0074	1834
145.00	BXA-80063/6 w/ Mount Pipe	2	96.324	6.8264	0.0057	1190
133.00	Side Arm Mount [SO 701-3]	2	79.738	6.2711	0.0050	1084
100.00	1" Dia x 3.5-ft	2	42.523	4.3826	0.0032	1052
70.00	1" Dia x 3.5-ft	2	19.505	2.7349	0.0019	1073
40.00	1" Dia x 3.5-ft	2	6.541	1.3972	0.0009	1394
10.00	1" Dia x 3.5-ft	2	1.097	0.3297	0.0002	5573

Compression Checks

Pole Design Data

Section No.	Elevation ft	Size	L ft	L_u ft	Kl/r	A in^2	P_u K	ϕP_n K	Ratio $\frac{P_u}{\phi P_n}$
L1	188 - 137 (1)	TP32.711x22x0.25	51.00	0.00	0.0	25.0495	-12.70	1738.73	0.007
L2	137 - 90.25 (2)	TP42.03x31.3184x0.3125	51.00	0.00	0.0	40.2848	-22.51	2768.52	0.008
L3	90.25 - 44.5 (3)	TP51.014x40.3023x0.375	51.00	0.00	0.0	58.6481	-35.90	4014.89	0.009
L4	44.5 - 0 (4)	TP59.61x48.8988x0.5	51.00	0.00	0.0	93.8076	-58.52	6652.09	0.009

Pole Bending Design Data

Section No.	Elevation ft	Size	M_{ux} kip-ft	ϕM_{nx} kip-ft	Ratio $\frac{M_{ux}}{\phi M_{nx}}$	M_{uy} kip-ft	ϕM_{ny} kip-ft	Ratio $\frac{M_{uy}}{\phi M_{ny}}$
L1	188 - 137 (1)	TP32.711x22x0.25	606.44	1128.63	0.537	0.00	1128.63	0.000
L2	137 - 90.25 (2)	TP42.03x31.3184x0.3125	1852.18	2312.57	0.801	0.00	2312.57	0.000
L3	90.25 - 44.5 (3)	TP51.014x40.3023x0.375	3294.96	4069.02	0.810	0.00	4069.02	0.000
L4	44.5 - 0 (4)	TP59.61x48.8988x0.5	5208.16	8080.78	0.645	0.00	8080.78	0.000

Pole Shear Design Data

Section No.	Elevation ft	Size	Actual V_u K	ϕV_n K	Ratio $\frac{V_u}{\phi V_n}$	Actual T_u kip-ft	ϕT_n kip-ft	Ratio $\frac{T_u}{\phi T_n}$
L1	188 - 137 (1)	TP32.711x22x0.25	24.52	869.37	0.028	0.76	2260.03	0.000
L2	137 - 90.25 (2)	TP42.03x31.3184x0.3125	29.84	1384.26	0.022	1.01	4630.81	0.000
L3	90.25 - 44.5 (3)	TP51.014x40.3023x0.375	34.88	2007.45	0.017	1.32	8147.98	0.000
L4	44.5 - 0 (4)	TP59.61x48.8988x0.5	39.80	3306.89	0.012	1.60	16181.33	0.000

Pole Interaction Design Data

Section No.	Elevation ft	Ratio $\frac{P_u}{\phi P_n}$	Ratio $\frac{M_{ux}}{\phi M_{nx}}$	Ratio $\frac{M_{uy}}{\phi M_{ny}}$	Ratio $\frac{V_u}{\phi V_n}$	Ratio $\frac{T_u}{\phi T_n}$	Comb. Stress Ratio	Allow. Stress Ratio	Criteria
L1	188 - 137 (1)	0.007	0.537	0.000	0.028	0.000	0.545	1.000	4.8.2
L2	137 - 90.25 (2)	0.008	0.801	0.000	0.022	0.000	0.810	1.000	4.8.2
L3	90.25 - 44.5 (3)	0.009	0.810	0.000	0.017	0.000	0.819	1.000	4.8.2
L4	44.5 - 0 (4)	0.009	0.645	0.000	0.012	0.000	0.653	1.000	4.8.2

Section Capacity Table

Section No.	Elevation ft	Component Type	Size	Critical Element	P K	ϕP_{allow} K	% Capacity	Pass Fail
L1	188 - 137	Pole	TP32.711x22x0.25	1	-12.70	1738.73	54.5	Pass
L2	137 - 90.25	Pole	TP42.03x31.3184x0.3125	2	-22.51	2768.52	81.0	Pass
L3	90.25 - 44.5	Pole	TP51.014x40.3023x0.375	3	-35.90	4014.89	81.9	Pass
L4	44.5 - 0	Pole	TP59.61x48.8988x0.5	4	-58.52	6652.09	65.3	Pass
							Summary	
						Pole (L3)	81.9	Pass
						RATING =	**81.9**	**Pass**

APPENDIX B

BASE LEVEL DRAWING

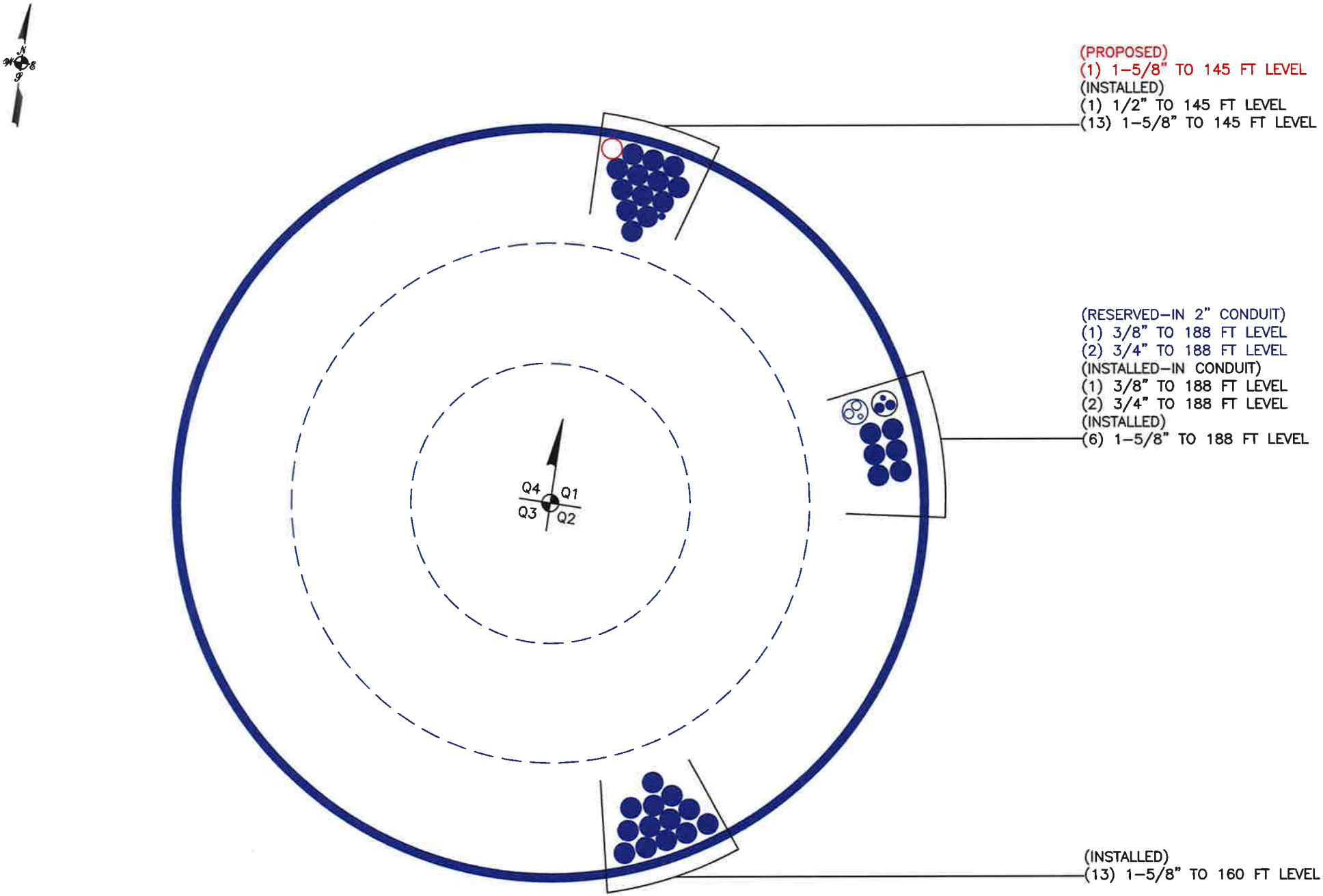

BUSINESS UNIT: 803175 TOWER ID: C_BASELEVEL

APPENDIX C

ADDITIONAL CALCULATIONS

Square, Stiffened / Unstiffened Base Plate, Any Rod Material - Rev. F /G

Assumptions:
1) Rod groups at corners. Total # rods divisible by 4. Maximum total # of rods = 48 (12 per Corner).
2) Rod Spacing = Straight Center-to-Center distance between any (2) adjacent rods (same corner)
3) Clear space between bottom of leveling nut and top of concrete **not** exceeding (1)*(Rod Diameter)

Site Data

BU#: *803175*
Site Name: *CT New Britain 2 CAC 803175*
App #: *296845 Rev. 1*

Anchor Rod Data		
Eta Factor, η	0.5	TIA G (Fig. 4-4)
Qty:	20	
Diam:	2.25	in
Rod Material:	A615-J	
Yield, Fy:	75	ksi
Strength, Fu:	100	ksi
Bolt Circle:	67	in
Anchor Spacing:	6	in

Plate Data		
W=Side:	66	in
Thick:	3	in
Grade:	50	ksi
Clip Distance:	14	in

Stiffener Data (Welding at both sides)		
Configuration:	Unstiffened	
Weld Type:		**
Groove Depth:		<-- Disregard
Groove Angle:		<-- Disregard
Fillet H. Weld:		in
Fillet V. Weld:		in
Width:		in
Height:		in
Thick:		in
Notch:		in
Grade:		ksi
Weld str.:		ksi

Pole Data		
Diam:	59.61	in
Thick:	0.5	in
Grade:	65	ksi
# of Sides:	18	"0" IF Round

Base Reactions		
TIA Revision:	G	
Factored Moment, Mu:	5208	ft-kips
Factored Axial, Pu:	59	kips
Factored Shear, Vu:	40	kips

Anchor Rod Results

TIA G --> Max Rod (Cu+ Vu/η):	193.5 Kips
Axial Design Strength, Φ*Fu*Anet:	260.0 Kips
Anchor Rod Stress Ratio:	74.4% **Pass**

Base Plate Results	Flexural Check
Base Plate Stress:	32.1 ksi
PL Design Bending Strength, Φ*Fy:	45.0 ksi
Base Plate Stress Ratio:	71.3% **Pass**

PL Ref. Data
Yield Line (in): 33.73
Max PL Length: 33.73

N/A - Unstiffened

Stiffener Results

Horizontal Weld :	N/A
Vertical Weld:	N/A
Plate Flex+Shear, fb/Fb+(fv/Fv)^2:	N/A
Plate Tension+Shear, ft/Ft+(fv/Fv)^2:	N/A
Plate Comp. (AISC Bracket):	N/A

Pole Results

Pole Punching Shear Check:	N/A

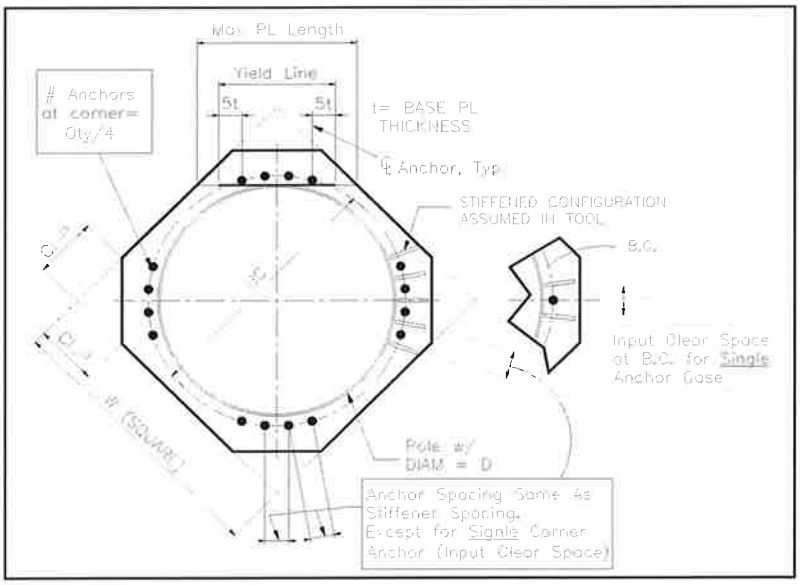

** Note: for complete joint penetration groove welds the groove depth must be exactly 1/2 the stiffener thickness for calculation purposes

TOWER ENGINEERING PROFESSIONALS

JOB:	CT New Britain 2 CAC (BU 803175), TEP No. 25666.110276		
SHEET NUMBER:	1	OF	2
CALCULATED BY:	JDR	DATE	3/3/2017
CHECKED BY:	PRS	DATE	3/3/2017

Pad and Pier Foundation for Monopole - TIA-222-G

q_a, ALLOWABLE SOIL PRESS. (ksf)	6.00
NET or GROSS	NET
SAFETY FACTOR IN q_a	2
SOIL DENSITY (pcf)	110

$\varphi^* q_n$ = 9.0 ksf

F'c (ksi)	3
F'y (ksi)	60

Base Reactions LC1: 1.2D + 1.6W

M, MOMENT (k-ft)	5208.0
P_t, TOTAL DOWNLOAD (k)	59.0
H, HORIZONTAL SHEAR (k)	40.0

Base Reaction LC 2: 0.9D + 1.6W

M (k-ft)	5208.0
P_t (k)	44.3
H (k)	40.0

Try:

L (ft.)	B (ft.)	t (ft.)	Soil depth to TOP of mat (ft.)	Soil depth to BOT. of mat (ft.)	Pier dia./width (ft.)	Pier Height, h (cu.ft.)	Pier Shape
26	26	3	2.92	5.92	8.00	4.00	Square

W_m, Weight of Mat (k) =	304.2
W_p, Weight of Pier (k) =	38.4
W_s, Weight of Soil (k) =	196.4

Concrete Vol. (cu yd) 84.59

CHECK BEARING PRESSURE for LC1: 1.2D + 1.6W

P = P_t + Wf + Ws =	705.7 k
e = M / P =	7.78 ft
L/6 =	4.33 ft
Width of Wedge, L' =	10.45 ft
90° Axis: q_{max} =	1.95 ksf
Diag. Axis: q_{max} =	2.48 ksf

Capacity: 27.6%

CHECK BEARING STABILITY FOR LC2: 0.9D +1.6W

90° Axis	$M_{\varphi qn}$[1] =	6322.7 k-ft
	$M_{ot}/M_{\varphi qn}$=	0.87
Diag. Axis	$M_{\varphi qn}$=	6959.4 k-ft
	$M_{ot}/M_{\varphi qn}$=	0.79

Capacity: 86.8%

[1] $M_{\varphi qn}$ is the overturning moment at which $q_{max} = \varphi q_n$

CHECK OVERTURNING: LC2 CONTROLS

M_{st}= P * (L/2) + (Vf+s * L/2) =	6881.0 k-ft
M_{ot} = M+H*(t+h) =	5488.0 k-ft
M_{ot}/M_{st} =	0.80

Capacity: 79.8%

TOWER ENGINEERING PROFESSIONALS

JOB:	CT New Britain 2 CAC (BU 803175), TEP No. 25666.110276		
SHEET NUMBER:	2	OF	2
CALCULATED BY:	JDR	DATE	3/3/2017
CHECKED BY:	PRS	DATE	3/3/2017

CHECK ONE WAY SHEAR

Vu = 438.1 k
Vc = 810.7 k

Capacity: 54.0%

CHECK TWO WAY SHEAR: PUNCHING + UNBALANCED MOMENT

v_u = 31.7 psi
φv_c = 164.3 psi

Capacity: 19.3%

CALCULATE REINFORCING REQUIRED

F'c = 3.0 ksi F'y = 60.0 ksi

Temp & Shrinkage reinforcing, $A_{s,t}$ = 0.39 in^2/ft (ACI 318 Sec. 10.5.4)

BOTTOM REINFORCING

Bar Size = 11
Bar Spacing, c-c: 9.0
d = 30.9 in.
Mu= 1231.9 in-k/ft

φMn=0.9*As*Fy*d(1-0.59*As*Fy/(b*d*F'c))

Solution: As,req = 0.76 in^2/ft

Check, As = 2.08 in^2/ft

Capacity: 36.3%

TOP REINFORCING

Bar Size = 11
Bar Spacing, c-c: 9.0
d= 30.9 in.
Mu= 323.9 in-k/ft

φMn=0.9*As*Fy*d(1-0.59*As*Fy/(b*d*F'c))

Solution: As,req = 0.20 in^2/ft

Check, As = 2.08 in^2/ft

Capacity: 9.4%

		PASS	PASS
	Results Summary:	LC1	LC2
	Soil Interaction:	N/A	N/A
Drilled Caisson Tool - Input	Foundation Structural:	54.4%	20.1%

CT New Britain 3 CAC 803175 (BU 803175)		
TEP #:	25666.110276	
Analysis:	JDR	3/3/2017
Check:	PRS	3/3/2017

Code Revisions: TIA-222-G ACI 318-11

Tower Type: Monopole

	LC1	LC2	
Moment:	5,368.00	2,012.00	kip-ft
Axial (download):	59.00	109.00	kip
Shear:	40.00	15.00	kip
Axial (uplift):			kip

Shaft Information

Diameter:	8.00	ft
Projection:	1.08	ft
Caisson Length:	4.00	ft
f'c:	3.000	ksi
Max εc:	0.003	in/in

Cage 1 Reinforcement

Tie Bar Size:	5	*(fy = 40.0 ksi)*
Clear Cover to Tie:	4.00	*in (Cage Ø = 85.34in)*
Tie Bar Spacing:	5.00	in
Vertical Bar Size:	11	
Vertical Bar Quantity:	36	*(ρ =0.776%)*
fy:	60.0	ksi
E:	29,000	ksi

Reinforcement Capacity

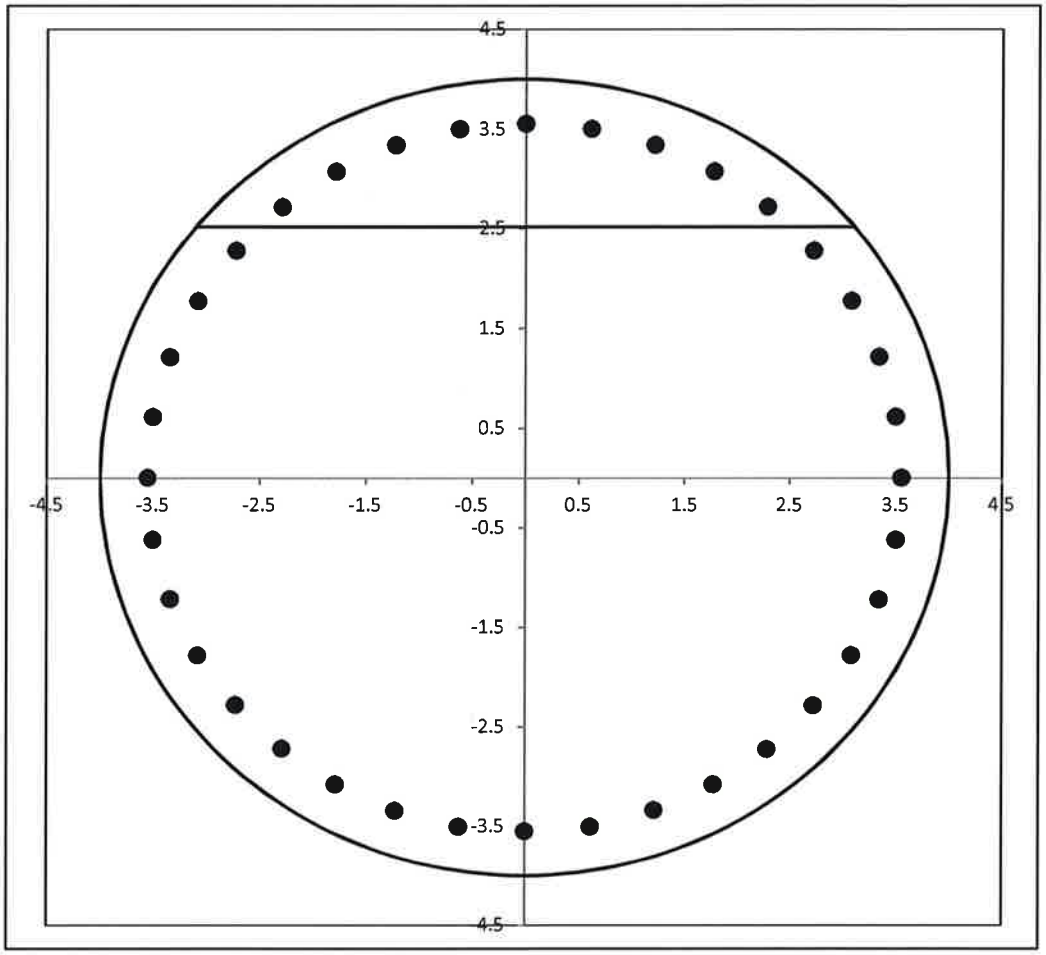

		LC1	LC2	
	Vu =	40.0	40.0	kip
	Vc =	796.1	798.9	kip
fy,tie = 40.0	Vs =	448.9	448.9	kip
	ϕVn =	933.8	935.8	kip
	Capacity =	4.3%	4.3%	
		PASS	PASS	

	LC1	LC2	
Mu =	5368.0	2012.0	kip-ft
ϕMn =	9867.8	9999.8	kip-ft
Capacity =	54.4%	20.1%	
	PASS	PASS	

ATTACHMENT 4

City of New Britain, Connecticut - Assessment Parcel Map

MBL: A5D 22 **Address:** 167 COCCOMO CIR

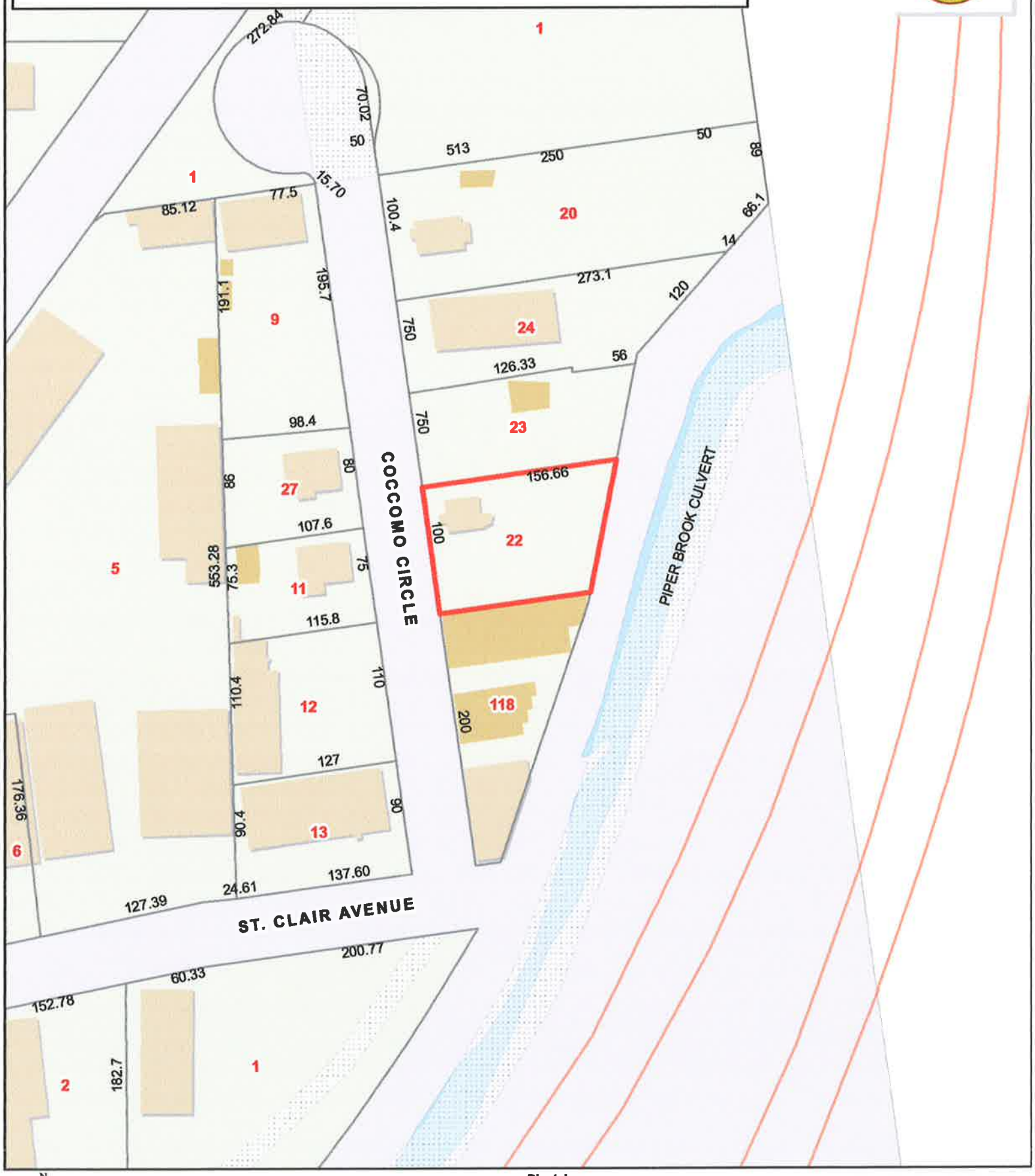

N

Approximate Scale:

Disclaimer:

Map Produced Feb 2017

City of New Britain, CT

Property Listing Report

Map Block Lot	A5D 22	Account	15950167

Property Information

Property Location	167 COCCOMO CIR
Owner	CROWN ATLANTIC COMPANY LLC
Co-Owner	
Mailing Address	4017 WASHINGTON RD PMB 353 MCMURRAY PA 15317
Land Use	1010 Single Family
Land Class	R
Zoning Code	I2
Census Tract	416300

Neighborhood	104
Acreage	0.32
Utilities	All Public
Lot Setting/Desc	Level
Additional Info	

Photo

Sketch

Primary Construction Details

Year Built	1918
Stories	1.25
Building Style	Conventional
Building Use	Residential
Building Condition	C
Floors	Carpet
Total Rooms	4

Bedrooms	2 Bedrooms
Full Bathrooms	1
Half Bathrooms	0
Bath Style	Average
Kitchen Style	Average
Roof Style	Gable
Roof Cover	Asphalt Shingl

Exterior Walls	Vinyl Siding
Interior Walls	Plaster
Heating Type	99
Heating Fuel	Yes
AC Type	None
Gross Bldg Area	1988
Total Living Area	624

Report Created On 3/14/2017

City of New Britain, CT

Property Listing Report | Map Block Lot: A5D 22 | Account: 15950167

Valuation Summary

(Assessed value = 70% of Appraised Value)

Item	Appraised	Assessed
Buildings	39900	27930
Extras	0	0
Improvements	39900	27930
Outbuildings	0	0
Land	32800	22960
Total	72700	50890

Outbuilding and Extra Items

Type	Description

Sub Areas

Subarea Type	Gross Area (sq ft)	Living Area (sq ft)
Open Porch	50	0
First Floor	624	624
Enclosed Porch	66	0
Attic, Expansion, Unfinished	624	0
Unfin Raised Basement	624	0
Total Area	1988	624

Sales History

Owner of Record	Book/ Page	Sale Date	Sale Price
CROWN ATLANTIC COMPANY LLC	1359/ 428	2/13/2001	90000
BALAVENDER JOHN S +	1284/ 180	8/26/1998	44000
	1281/ 173	7/15/1998	
	770/ 808	10/29/1981	
CLARA MARY DOUCETTE	725/ 121	3/2/1977	
FRANCISZKA BARANOWSKI + CLARA	594/ 393	1/20/1966	
FRANCISZKA BARANOWSKI	532/ 263	3/14/1962	
FRANCISZKA + EDWARD R	365/ 244	3/16/1953	

Report Created On 3/14/2017