Crown Castle
3 Corporate Park Drive, Suite 101
Clifton Park, NY 12065

August 31, 2020

Melanie A. Bachman
Executive Director
Connecticut Siting Council
10 Franklin Square
New Britain, CT 06051

RE: **Notice of Exempt Modification for T-Mobile:**
876320 - T-Mobile Site ID: CT11082E
528 Wheelers Farm Road, Milford, CT 06460
Latitude: 41° 14′ 54.35″ / Longitude: -73° 4′ 44.67″

Dear Ms. Bachman:

T-Mobile currently maintains nine (9) antennas at the 105-foot mount on the existing 120-foot Monopole Tower, located at 528 Wheelers Farm Road, Milford, CT. The tower is owned by Crown Castle and the property is owned by The Village Foundation Inc. T-Mobile now intends to add three (3) new 2500 MHz antennas. The new antennas will be installed at the 105-ft level of the tower.

Planned Modifications:
Tower:

Remove:
(6) 1 5/8" Coax
(3) TMA

Install New:
(1) 1 3/8" Hybrid Fiber Line
(3) RRH 4415 B25
(3) AIR6449 B41 Antenna 2500/2500 MHz

Existing to Remain:
(2) 1 3/8" Coax
(1) Fiber line
(3) Radio 4449 B71/B12
(3) AIR3246 B66 Antenna 2100 MHz
(3) RFS-APXVAARR24_43-U-NA20 Antenna 600/700 MHz
(3) AIR32_B66A_B2A Antenna 1900/2100 MHz

Ground:

Remove and replace existing ground cabinet. Internal upgrade to ground cabinet.
Upgrade existing breakers.

The facility was approved by the City of Milford Planning and Zoning Board on March 4, 1997 via a Special Permit Amendment. The approval was given with conditions which this exempt modification is in compliance with.

Please accept this letter as notification pursuant to Regulations of Connecticut State Agencies §16-50j-73, for construction that constitutes an exempt modification pursuant to R.C.S.A. § 16-50j-72(b)(2). In accordance with R.C.S.A. § 16-50j-73, a copy of this letter is being sent to Benjamin Blake, Mayor for the City of Milford, David Sulkis, City Planner, Crown Castle as the tower owner, and The Village Foundation Inc., the property owner.

1. The proposed modifications will not result in an increase in the height of the existing tower.

2. The proposed modifications will not require the extension of the site boundary.

3. The proposed modification will not increase noise levels at the facility by six decibels or more, or to levels that exceed state and local criteria.

4. The operation of the replacement antennas will not increase radio frequency emissions at the facility to a level at or above the Federal Communication Commission safety standard.
5. The proposed modifications will not cause a change or alteration in the physical or environmental characteristics of the site.

6. The existing structure and its foundation can support the proposed loading.

For the foregoing reasons, T-Mobile respectfully submits that the proposed modifications to the above-reference telecommunications facility constitutes an exempt modification under R.C.S.A. § 16-50j-72(b)(2). Please send approval/rejection letter to Attn: Anne Marie Zsamba.

Sincerely,

Anne Marie Zsamba
Site Acquisition Specialist
3 Corporate Park Drive, Suite 101
Clifton Park, NY 12065
(201) 236-9224
AnneMarie.Zsamba@crowncastle.com

Attachments

cc: Benjamin Blake, Mayor *(via email only to bblake@ci.milford.ct.us)*
City of Milford
110 River Street
Milford, CT 06460

David Sulkis, City Planner *(via email only to dsulkis@ci.milford.ct.us)*
City of Milford
70 West River Street
Milford, CT 06460

The Village Foundation, Inc. (*via email only to humc@bgvillage.org*)
528 Wheelers Farm Road
Milford, CT 06461

Crown Castle, Tower Owner

From: Zsamba, Anne Marie
To: humc@bgvillage.org
Subject: Notice of Exempt Modification - T-Mobile - 528 Wheelers Farm Road
Date: Monday, August 31, 2020 11:23:00 AM
Attachments: EM-T-MOBILE-528 WHEELERS FARM RD MILFORD-876320-CT11082E-notice.pdf

---

Dear Village Foundation as Property Owner:

Attached please find T-Mobile's exempt modification application that is being submitted to the Connecticut Siting Council today, August 31, 2020.

In light of the present circumstances with Covid-19, The Council has advised that electronic notification of this filing is acceptable. If you could kindly confirm receipt. Thank you.

Best,
Anne Marie Zsamba

ANNE MARIE ZSAMBA
Site Acquisition Specialist
T: (201) 236-9224
M: (518) 350-3639
F: (724) 416-6112

CROWN CASTLE
3 Corporate Park Drive, Suite 101
Clifton Park, NY 12065
CrownCastle.com

From: Zsamba, Anne Marie
To: "bblake@ci.milford.ct.us"
Subject: Notice of Exempt Modification - T-Mobile - 528 Wheelers Farm Road
Date: Monday, August 31, 2020 11:23:00 AM
Attachments: EM-T-MOBILE-528 WHEELERS FARM RD MILFORD-876320-CT11082E-notice.pdf

---

Dear Mayor Blake:

Attached please find T-Mobile's exempt modification application that is being submitted to the Connecticut Siting Council today, August 31, 2020.

In light of the present circumstances with Covid-19, The Council has advised that electronic notification of this filing is acceptable. If you could kindly confirm receipt. Thank you.

Best,
Anne Marie Zsamba

ANNE MARIE ZSAMBA
Site Acquisition Specialist
T: (201) 236-9224
M: (518) 350-3639
F: (724) 416-6112

CROWN CASTLE
3 Corporate Park Drive, Suite 101
Clifton Park, NY 12065
CrownCastle.com

From: Zsamba, Anne Marie
To: "dsulkis@ci.milford.ct.us"
Subject: Notice of Exempt Modification - T-Mobile - 528 Wheelers Farm Road
Date: Monday, August 31, 2020 11:23:00 AM
Attachments: EM-T-MOBILE-528 WHEELERS FARM RD MILFORD-876320-CT11082E-notice.pdf

---

Dear City Planner Sulkis:

Attached please find T-Mobile's exempt modification application that is being submitted to the Connecticut Siting Council today, August 31, 2020.

In light of the present circumstances with Covid-19, The Council has advised that electronic notification of this filing is acceptable. If you could kindly confirm receipt. Thank you.

Best,
Anne Marie Zsamba

ANNE MARIE ZSAMBA
Site Acquisition Specialist
T: (201) 236-9224
M: (518) 350-3639
F: (724) 416-6112

CROWN CASTLE
3 Corporate Park Drive, Suite 101
Clifton Park, NY 12065
CrownCastle.com

Exhibit A

Original Facility Approval

City of Milford, Connecticut

THIS IS TO CERTIFY THAT Sprint PCS

WAS GRANTED A SPECIAL PERMIT AMENDMENT

BY THE MILFORD PLANNING & ZONING BOARD ON MARCH 4, 1997

FOR PROPERTY LOCATED AT 528 WHEELERS FARMS ROAD

MAP 104 BLOCK 915 PARCEL 13

IN THE CITY OF MILFORD, COUNTY OF NEW HAVEN, STATE OF CONNECTICUT

FOR WHICH VILLAGE FOUNDATION, INC. ARE THE OWNERS.

THE SPECIAL PERMIT AMENDMENT WAS GRANTED TO:

construct a 120' telecommunications monopole and antenna with ancillary support facilities, i.e., 10' graveled access drive and fenced equipment area 20' x 27', at 528 Wheelers Farms Road, aka Boys Village, parcel 13, block 915, Assessor's map 104, of which Village Foundation, Inc. is the owner. This approval shall be in accordance with plans prepared by O'Brien and Gere Engineers, Inc. Said plans consisting of three sheets, Title Sheet dated December, 1996; Site Plan dated 12/4/96; Detail Plan and Elevations dated 11/18/96. With the following stipulations: construction and site development shall comply with Inland Wetland Office letter dated 12/21/96 and Permit #IWJR96-080; Fire Department letter dated 1/21/97; Director of Public Works memo dated 2/4/97 and United Technologies Sikorsky Aircraft letter dated 4/1/97 RE: Review of Sikorsky Aircraft Corporation Flight Operations related to the proposed telecommunication monopole location.

"NO VARIANCE, SPECIAL PERMIT OR SPECIAL EXCEPTION GRANTED PURSUANT TO CHAPTER 124 OF ANY SPECIAL ACT SHALL BE EFFECTIVE UNTIL A COPY THEREOF...IS RECORDED IN THE LAND RECORDS OF THE TOWN IN WHICH SUCH PREMISES ARE LOCATED."
P.A. 75-317

RECORDED 6-12-97

CITY CLERK REC. NO. 5163

Nº 10574

PLANNING & ZONING BOARD

BY: Wade E. Pierce

WADE E. PIERCE
EXECUTIVE SECRETARY

SPCERT (REV.6/96)

Exhibit B

Property Card

City of Milford, CT

Property Listing Report

Map Block Lot	104 915 13	Bldg #	1	Sec #	1	PID	21152	Account	019893

Property Information

Property Location	528 WHEELERS FARMS RD
Owner	VILLAGE FOUNDATION INC THE
Co-Owner	06-00
Mailing Address	528 WHEELERS FARM RD MILFORD CT 06461
Land Use	904R PVT SCHOOL MDL-01
Land Class	E
Zoning Code	DO25
Census Tract	

Neighborhood	GG
Acreage	11.34
Utilities	All Public,Public Sewer
Lot Setting/Desc	UNKNOWN UNKNOWN
Book / Page	00259/0563
Fire District	2

Photo

Sketch

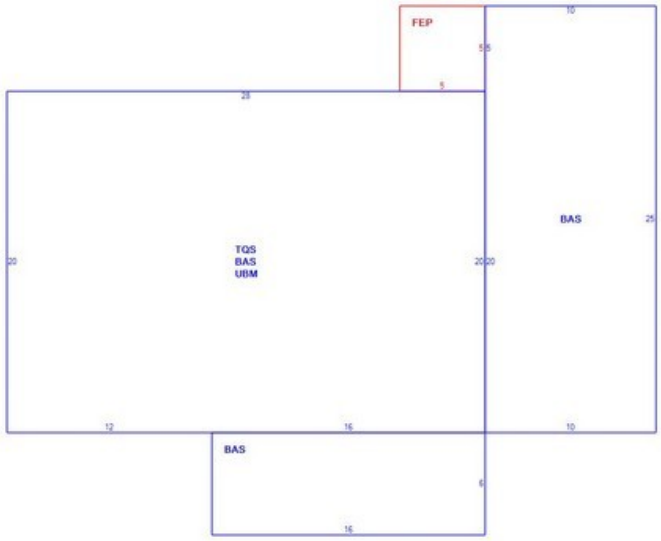

Primary Construction Details

Year Built	1900
Building Desc.	PVT SCHOOL
Building Style	Conventional
Building Grade	Average
Stories	2
Occupancy	1.00
Exterior Walls	Vinyl Siding
Exterior Walls 2	NA
Roof Style	Gable/Hip
Roof Cover	Asph/F Gls/Cmp
Interior Walls	Drywall/Sheet
Interior Walls 2	NA
Interior Floors 1	Carpet
Interior Floors 2	NA

Heating Fuel	Gas
Heating Type	Hot Water
AC Type	XF Per Sq Ft
Bedrooms	00
Full Bathrooms	0
Half Bathrooms	1
Extra Fixtures	0
Total Rooms	0
Bath Style	Updated
Kitchen Style	NA
Fin Bsmt Area	
Fin Bsmt Quality	
Bsmt Gar	
Fireplaces	

(*Industrial / Commercial Details)

Building Use	Residential
Building Condition	4
Sprinkler %	NA
Heat / AC	NA
Frame Type	NA
Baths / Plumbing	NA
Ceiling / Wall	NA
Rooms / Prtns	NA
Wall Height	NA
First Floor Use	NA
Foundation	NA

Report Created On 8/31/2020

City of Milford, CT

Property Listing Report

Map Block Lot	104 915 13	Bldg #	1	Sec #	1	PID	21152	Account	019893

Valuation Summary

(Assessed value = 70% of Appraised Value)

Item	Appraised	Assessed
Buildings	3235090	2264560
Extras	0	0
Improvements		
Outbuildings	35690	24980
Land	461440	323010
Total	3732220	2612550

Sub Areas

Subarea Type	Gross Area (sq ft)	Living Area (sq ft)
First Floor	906	906
Porch, Enclosed, Finished	25	0
Three Quarter Story	560	504
Basement, Unfinished	560	0
Total Area	2051	1410

Outbuilding and Extra Features

Type	Description
SHED FRAME	216 S.F.
SHED FRAME	192 S.F.
SHED FRAME	96 S.F.
OPN PRCH/SCRNHSE	120 S.F.
PAVING-ASPHALT	19000 S.F.
SHED FRAME	448 S.F.

Sales History

Owner of Record	Book/ Page	Sale Date	Sale Price
VILLAGE FOUNDATION INC THE	00259/0563	1942-05-15	0

Report Created On 8/31/2020

City of Milford, CT

Property Listing Report

Map Block Lot	104 915 13	Bldg #	2	Sec #	1	PID	21152	Account	019893

Photo

Sketch

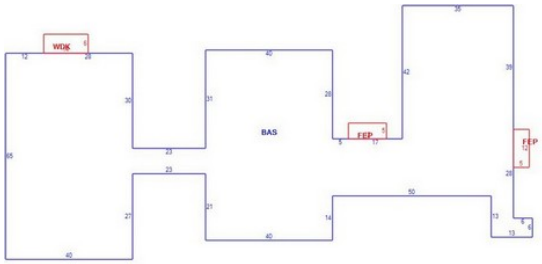

Primary Construction Details

Year Built	1983
Building Desc.	Commercial
Building Style	School/College
Building Grade	AVERAGE
Stories	1
Occupancy	1.00
Exterior Walls	Concr/Cinder
Exterior Walls 2	Pre-Fab Wood
Roof Style	Flat
Roof Cover	Tar & Gravel
Interior Walls	Drywall/Sheet
Interior Walls 2	NA
Interior Floors 1	Carpet
Interior Floors 2	Vinyl/Asphalt

Heating Fuel	Gas
Heating Type	Forced Air-Duc
AC Type	Central
Bedrooms	0
Full Bathrooms	0
Half Bathrooms	0
Extra Fixtures	0
Total Rooms	0
Bath Style	NA
Kitchen Style	NA
Fin Bsmt Area	
Fin Bsmt Quality	
Bsmt Gar	
Fireplaces	

(*Industrial / Commercial Details)

Building Use	PVT SCHOOL MDL-94
Building Condition	4
Sprinkler %	NA
Heat / AC	HEAT/AC SPLIT
Frame Type	STEEL
Baths / Plumbing	AVERAGE
Ceiling / Wall	SUS-CEIL & WL
Rooms / Prtns	AVERAGE
Wall Height	12.00
First Floor Use	NA
Foundation	NA

Sub Areas

Subarea Type	Gross Area (sq ft)	Living Area (sq ft)
First Floor	7807	7807
Porch, Enclosed, Finished	120	0
Deck, Wood	84	0

Subarea Type	Gross Area (sq ft)	Living Area (sq ft)
Total Area	8011	7807

Report Created On 8/31/2020

City of Milford, CT

Property Listing Report

Map Block Lot	104 915 13	Bldg #	3	Sec #	1	PID	21152	Account	019893

Photo

Sketch

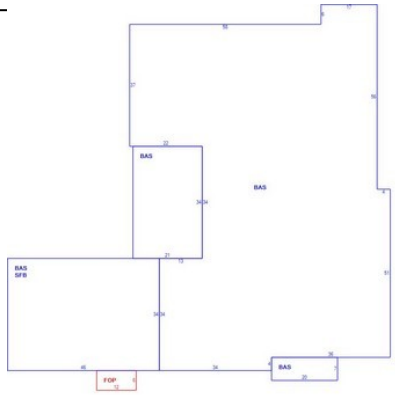

Primary Construction Details

Year Built	1957
Building Desc.	Commercial
Building Style	School/College
Building Grade	AVERAGE
Stories	1
Occupancy	1.00
Exterior Walls	Concr/Cinder
Exterior Walls 2	NA
Roof Style	Flat
Roof Cover	Tar & Gravel
Interior Walls	Minim/Masonry
Interior Walls 2	Drywall/Sheet
Interior Floors 1	Carpet
Interior Floors 2	Vinyl/Asphalt

Heating Fuel	Gas
Heating Type	Forced Air-Duc
AC Type	Central
Bedrooms	0
Full Bathrooms	0
Half Bathrooms	0
Extra Fixtures	0
Total Rooms	0
Bath Style	NA
Kitchen Style	NA
Fin Bsmt Area	
Fin Bsmt Quality	
Bsmt Gar	
Fireplaces	

(*Industrial / Commercial Details)

Building Use	PVT SCHOOL MDL-94
Building Condition	3
Sprinkler %	NA
Heat / AC	NONE
Frame Type	STEEL
Baths / Plumbing	AVERAGE
Ceiling / Wall	CEIL & MIN WL
Rooms / Prtns	AVERAGE
Wall Height	10.00
First Floor Use	NA
Foundation	NA

Sub Areas

Subarea Type	Gross Area (sq ft)	Living Area (sq ft)
First Floor	9417	9417
Porch, Open, Finished	72	0
Base, SL/RR-Finished	1564	0

Subarea Type	Gross Area (sq ft)	Living Area (sq ft)
Total Area	11053	9417

Report Created On 8/31/2020

City of Milford, CT

Property Listing Report

Map Block Lot	104 915 13	Bldg #	4	Sec #	1	PID	21152	Account	019893

Photo

Sketch

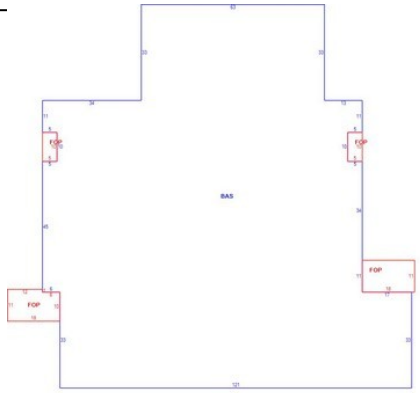

Primary Construction Details

Year Built	1989
Building Desc.	Commercial
Building Style	Auditorium
Building Grade	AVERAGE
Stories	1
Occupancy	1.00
Exterior Walls	Concr/Cinder
Exterior Walls 2	NA
Roof Style	Flat
Roof Cover	Tar & Gravel
Interior Walls	Minim/Masonry
Interior Walls 2	Drywall/Sheet
Interior Floors 1	Vinyl/Asphalt
Interior Floors 2	NA

Heating Fuel	Gas
Heating Type	Hydro-Air
AC Type	Central
Bedrooms	0
Full Bathrooms	0
Half Bathrooms	0
Extra Fixtures	0
Total Rooms	0
Bath Style	NA
Kitchen Style	NA
Fin Bsmt Area	
Fin Bsmt Quality	
Bsmt Gar	
Fireplaces	

(*Industrial / Commercial Details)

Building Use	PVT SCHOOL MDL-94
Building Condition	3
Sprinkler %	NA
Heat / AC	HEAT/AC SPLIT
Frame Type	STEEL
Baths / Plumbing	AVERAGE
Ceiling / Wall	CEIL & MIN WL
Rooms / Prtns	AVERAGE
Wall Height	20.00
First Floor Use	NA
Foundation	NA

Sub Areas

Subarea Type	Gross Area (sq ft)	Living Area (sq ft)
First Floor	13232	13232
Porch, Open, Finished	490	0

Subarea Type	Gross Area (sq ft)	Living Area (sq ft)
Total Area	13722	13232

Report Created On 8/31/2020

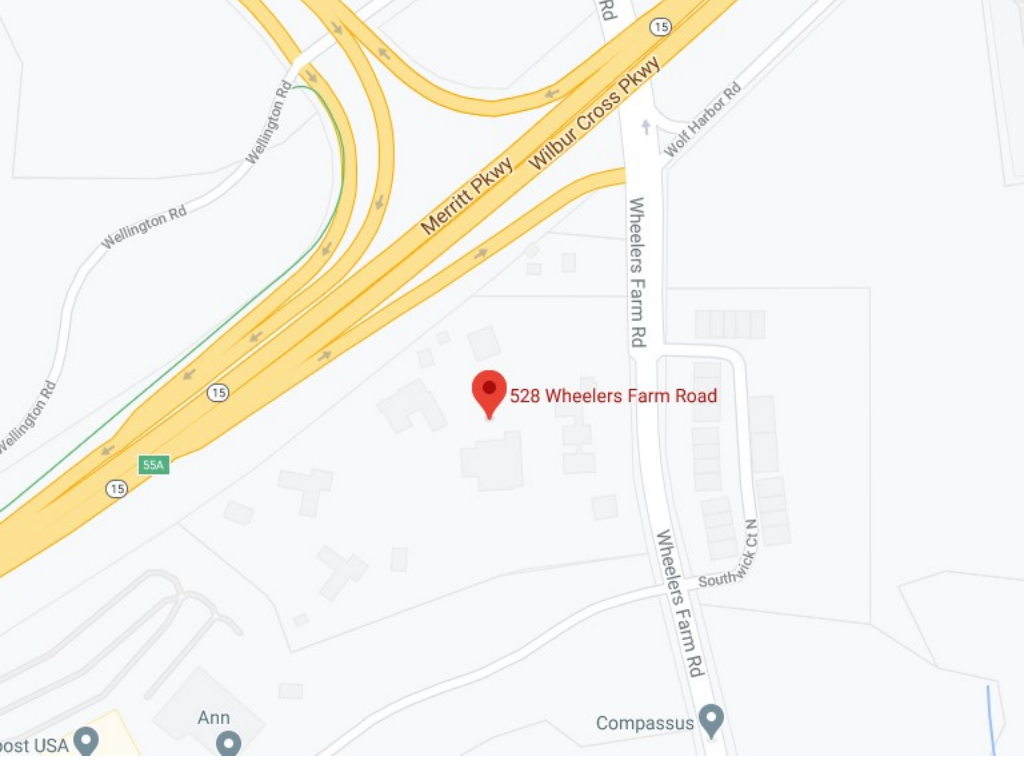
Wellington Rd
Wellington Rd
Wellington Rd
Merritt Pkwy
Wilbur Cross Pkwy
Wolf Harbor Rd
Wheelers Farm Rd
528 Wheelers Farm Road
Southwick Ct N
Wheelers Farm Rd
15
15
15
15
55A
Ann
Compassus
ost USA

Exhibit C

Construction Drawings

T-Mobile

T-MOBILE SITE NUMBER: CT11082E
T-MOBILE SITE NAME: STRATFORM/MP X 53/MAIN
SITE TYPE: MONOPOLE
TOWER HEIGHT: 120'-0"

BUSINESS UNIT #: 876320
SITE ADDRESS: 528 WHEELERS FARM RD MILFORD, CT 06460
COUNTY: NEW HAVEN
JURISDICTION: CITY OF MILFORD

T-MOBILE ANCHOR SITE CONFIGURATION: 67D5A992M

SITE INFORMATION

CROWN CASTLE USA INC. SITE NAME:	528 WHEELERS FARM RD
SITE ADDRESS:	528 WHEELERS FARM RD MILFORD, CT 06460
COUNTY:	NEW HAVEN
MAP/PARCEL #:	104-915-13
AREA OF CONSTRUCTION:	EXISTING
LATITUDE:	41.24846194°
LONGITUDE:	-73.0790583°
LAT/LONG TYPE:	NAD83
GROUND ELEVATION:	214 FT
CURRENT ZONING:	DO25
JURISDICTION:	CITY OF MILFORD
OCCUPANCY CLASSIFICATION:	U
TYPE OF CONSTRUCTION:	IIB
A.D.A. COMPLIANCE:	FACILITY IS UNMANNED AND NOT FOR HUMAN HABITATION
PROPERTY OWNER:	THE VILLAGE FOUNDATION INC 17 PRYDE DR ORANGE, CT 06477
TOWER OWNER:	CROWN CASTLE USE INC 2000 CORPORATE DRIVE CANONSBURG, PA 15317
CARRIER/APPLICANT:	T-MOBILE 12920 SE 38TH STREET BELLEVUE, WA 98006
ELECTRIC PROVIDER:	NOT PROVIDED
TELCO PROVIDER:	NOT PROVIDED

PROJECT TEAM

A&E FIRM:	CROWN CASTLE USA INC. 2000 CORPORATE DRIVE CANONSBURG, PA 15317 CROWNAE.APPROVAL@CROWNCASTLE.COM
CROWN CASTLE USA INC. DISTRICT CONTACTS:	1500 CORPORATE DRIVE CANONSBURG, PA 15317
	KEITH HAHN - PROJECT MANAGER KEITH.HAHN@CROWNCASTLE.COM
	JOSEPH CLARK - A&E SPECIALIST JOSEPH.CLARK@CROWNCASTLE.COM

DRAWING INDEX

SHEET #	SHEET DESCRIPTION
T-1	TITLE SHEET
T-2	GENERAL NOTES
C-1.1	OVERALL SITE PLAN
C-1.2	SITE PLAN & ENLARGED SITE PLAN
C-2	FINAL ELEVATION & ANTENNA PLANS
C-3	ANTENNA & CABLE SCHEDULE
C-4	PLUMBING DIAGRAM
C-5	EQUIPMENT SPECS
E-1	AC PANEL SCHEDULES & ONE LINE DIAGRAM
G-1	ANTENNA GROUNDING DIAGRAM
G-2	GROUNDING DETAILS
G-3	GROUNDING DETAILS

ALL DRAWINGS CONTAINED HEREIN ARE FORMATTED FOR 24X36. CONTRACTOR SHALL VERIFY ALL PLANS AND EXISTING DIMENSIONS AND CONDITIONS ON THE JOB SITE AND SHALL IMMEDIATELY NOTIFY THE ENGINEER IN WRITING OF ANY DISCREPANCIES BEFORE PROCEEDING WITH THE WORK OR BE RESPONSIBLE FOR SAME.

PROJECT DESCRIPTION

THE PURPOSE OF THIS PROJECT IS TO ENHANCE BROADBAND CONNECTIVITY AND CAPACITY TO THE EXISTING ELIGIBLE WIRELESS FACILITY.

TOWER SCOPE OF WORK:
- REMOVE (3) TMAs
- REMOVE (6) 1 5/8" COAX
- RELOCATE (3) ANTENNAS
- RELOCATE (3) RRHS
- INSTALL (3) ANTENNAS
- INSTALL (3) RRUs
- INSTALL (1) 6x12 HCS

GROUND SCOPE OF WORK:
- REMOVE (1) NORTEL CABINET
- RELOCATE BATTERIES
- INSTALL (1) 6160 CABINET
- INSTALL (1) B160 BATTERY CABINET
- INSTALL (1) BBU
- INSTALL (3) BB 6630
- INSTALL (1) BB 6648

NOTE:
PRIOR TO ACCESSING/ENTERING THE SITE YOU MUST CONTACT THE CROWN NOC AT (800) 788-7011 & CROWN CONSTRUCTION MANAGER

LOCATION MAP

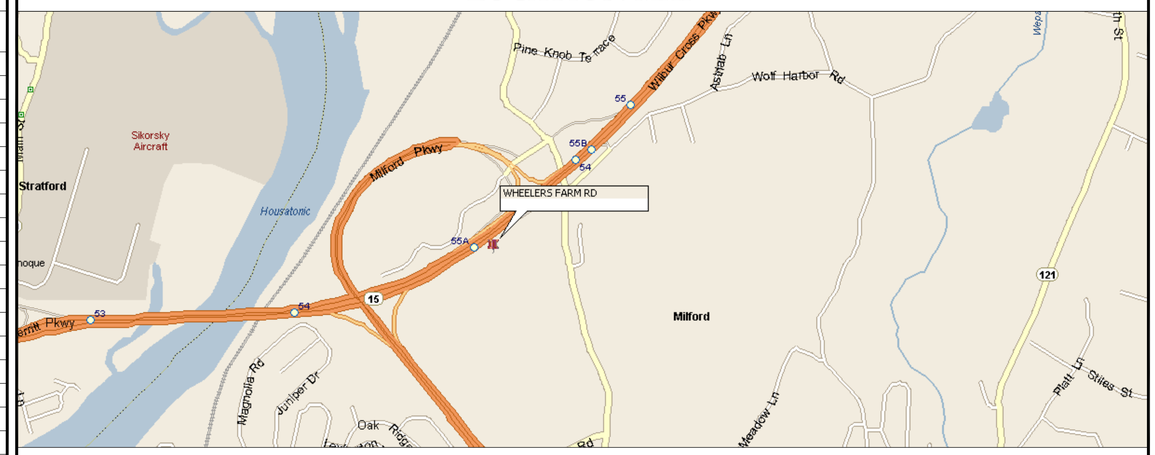

NO SCALE

APPLICABLE CODES/REFERENCE DOCUMENTS

ALL WORK SHALL BE PERFORMED AND MATERIALS INSTALLED IN ACCORDANCE WITH THE CURRENT EDITIONS OF THE FOLLOWING CODES AS ADOPTED BY THE LOCAL GOVERNING AUTHORITIES. NOTHING IN THESE PLANS IS TO BE CONSTRUED TO PERMIT WORK NOT CONFORMING TO THESE CODES:

CODE TYPE	CODE
BUILDING	2018 CT STATE BLDG CODE
MECHANICAL	2018 CT STATE BLDG CODE
ELECTRICAL	2017 NEC

REFERENCE DOCUMENTS:

STRUCTURAL ANALYSIS:	BY OTHERS
DATED:	
MOUNT ANALYSIS:	BY OTHERS
DATED:	
RFDS REVISION:	6
DATED:	5/19/20
ORDER ID:	524457
REVISION:	0

CALL CONNECTICUT ONE CALL
(800) 922-4455 CBYD.COM
CALL 2 WORKING DAYS BEFORE YOU DIG!

APPROVALS

APPROVAL	SIGNATURE	DATE
PROPERTY OWNER OR REP.		
LAND USE PLANNER		
T-MOBILE		
OPERATIONS		
RF		
NETWORK		
BACKHAUL		
CONSTRUCTION MANAGER		

THE PARTIES ABOVE HEREBY APPROVE AND ACCEPT THESE DOCUMENTS AND AUTHORIZE THE CONTRACTOR TO PROCEED WITH THE CONSTRUCTION DESCRIBED HEREIN. ALL CONSTRUCTION DOCUMENTS ARE SUBJECT TO REVIEW BY THE LOCAL BUILDING DEPARTMENT AND ANY CHANGES AND MODIFICATIONS THEY MAY IMPOSE.

T-Mobile
4 SYLVAN WAY
PARSIPPANY, NJ 07054

CROWN CASTLE
3530 TORINGDON WAY, SUITE 300
CHARLOTTE, NC 28277

B+T GRP
1717 S. BOULDER
SUITE 300
TULSA, OK 74119
PH: (918) 587-4630
www.btgrp.com

T-MOBILE SITE NUMBER:
CT11082E

BU #: **876320**
528 WHEELERS FARM RD

528 WHEELERS FARM RD
MILFORD, CT 06460

EXISTING
120'-0" MONOPOLE

ISSUED FOR:

REV	DATE	DRWN	DESCRIPTION	DES./QA
0	7/13/20	FWP	CONSTRUCTION	RMC
1	8/6/20	MTJ	CONSTRUCTION	RMC
1	8/10/20	JJD	CONSTRUCTION	MTJ

STATE OF CONNECTICUT
31627
LICENSED
PROFESSIONAL ENGINEER
8/10/20

B&T ENGINEERING, INC.
PEC.0001564
Expires 2/10/21

IT IS A VIOLATION OF LAW FOR ANY PERSON, UNLESS THEY ARE ACTING UNDER THE DIRECTION OF A LICENSED PROFESSIONAL ENGINEER, TO ALTER THIS DOCUMENT.

SHEET NUMBER: T-1
REVISION: 1

80703_876320_Wheelers Farm Rd.dwg – Sheet:T-1 – User: mjones – Aug 10, 2020 – 11:47am

CROWN CASTLE USA INC. SITE ACTIVITY REQUIREMENTS:

1. NOTICE TO PROCEED– NO WORK SHALL COMMENCE PRIOR TO CROWN CASTLE USA INC. WRITTEN NOTICE TO PROCEED (NTP) AND THE ISSUANCE OF A PURCHASE ORDER. PRIOR TO ACCESSING/ENTERING THE SITE YOU MUST CONTACT THE CROWN CASTLE USA INC. NOC AT 800–788–7011 & THE CROWN CASTLE USA INC. CONSTRUCTION MANAGER.
2. "LOOK UP" – CROWN CASTLE USA INC. SAFETY CLIMB REQUIREMENT:
   THE INTEGRITY OF THE SAFETY CLIMB AND ALL COMPONENTS OF THE CLIMBING FACILITY SHALL BE CONSIDERED DURING ALL STAGES OF DESIGN, INSTALLATION, AND INSPECTION. TOWER MODIFICATION, MOUNT REINFORCEMENTS, AND/OR EQUIPMENT INSTALLATIONS SHALL NOT COMPROMISE THE INTEGRITY OR FUNCTIONAL USE OF THE SAFETY CLIMB OR ANY COMPONENTS OF THE CLIMBING FACILITY ON THE STRUCTURE. THIS SHALL INCLUDE, BUT NOT BE LIMITED TO: PINCHING OF THE WIRE ROPE, BENDING OF THE WIRE ROPE FROM ITS SUPPORTS, DIRECT CONTACT OR CLOSE PROXIMITY TO THE WIRE ROPE WHICH MAY CAUSE FRICTIONAL WEAR, IMPACT TO THE ANCHORAGE POINTS IN ANY WAY, OR TO IMPEDE/BLOCK ITS INTENDED USE. ANY COMPROMISED SAFETY CLIMB, INCLUDING EXISTING CONDITIONS MUST BE TAGGED OUT AND REPORTED TO YOUR CROWN CASTLE USA INC. POC OR CALL THE NOC TO GENERATE A SAFETY CLIMB MAINTENANCE AND CONTRACTOR NOTICE TICKET.
3. PRIOR TO THE START OF CONSTRUCTION, ALL REQUIRED JURISDICTIONAL PERMITS SHALL BE OBTAINED. THIS INCLUDES, BUT IS NOT LIMITED TO, BUILDING, ELECTRICAL, MECHANICAL, FIRE, FLOOD ZONE, ENVIRONMENTAL, AND ZONING. AFTER ONSITE ACTIVITIES AND CONSTRUCTION ARE COMPLETED, ALL REQUIRED PERMITS SHALL BE SATISFIED AND CLOSED OUT ACCORDING TO LOCAL JURISDICTIONAL REQUIREMENTS.
4. ALL CONSTRUCTION MEANS AND METHODS; INCLUDING BUT NOT LIMITED TO, ERECTION PLANS, RIGGING PLANS, CLIMBING PLANS, AND RESCUE PLANS SHALL BE THE RESPONSIBILITY OF THE GENERAL CONTRACTOR RESPONSIBLE FOR THE EXECUTION OF THE WORK CONTAINED HEREIN, AND SHALL MEET ANSI/ASSE A10.48 (LATEST EDITION); FEDERAL, STATE, AND LOCAL REGULATIONS; AND ANY APPLICABLE INDUSTRY CONSENSUS STANDARDS RELATED TO THE CONSTRUCTION ACTIVITIES BEING PERFORMED. ALL RIGGING PLANS SHALL ADHERE TO ANSI/ASSE A10.48 (LATEST EDITION) AND CROWN CASTLE USA INC. STANDARD CED–STD–10253, INCLUDING THE REQUIRED INVOLVEMENT OF A QUALIFIED ENGINEER FOR CLASS IV CONSTRUCTION, TO CERTIFY THE SUPPORTING STRUCTURE(S) IN ACCORDANCE WITH ANSI/TIA–322 (LATEST EDITION).
5. ALL SITE WORK TO COMPLY WITH QAS–STD–10068 "INSTALLATION STANDARDS FOR CONSTRUCTION ACTIVITIES ON CROWN CASTLE USA INC. TOWER SITE" AND LATEST VERSION OF ANSI/TIA–1019–A–2012 "STANDARD FOR INSTALLATION, ALTERATION, AND MAINTENANCE OF ANTENNA SUPPORTING STRUCTURES AND ANTENNAS."
6. IF THE SPECIFIED EQUIPMENT CAN NOT BE INSTALLED AS SHOWN ON THESE DRAWINGS, THE CONTRACTOR SHALL PROPOSE AN ALTERNATIVE INSTALLATION FOR APPROVAL BY CROWN CASTLE USA INC. PRIOR TO PROCEEDING WITH ANY SUCH CHANGE OF INSTALLATION.
7. ALL MATERIALS FURNISHED AND INSTALLED SHALL BE IN STRICT ACCORDANCE WITH ALL APPLICABLE CODES, REGULATIONS AND ORDINANCES. CONTRACTOR SHALL ISSUE ALL APPROPRIATE NOTICES AND COMPLY WITH ALL LAWS, ORDINANCES, RULES, REGULATIONS AND LAWFUL ORDERS OF ANY PUBLIC AUTHORITY REGARDING THE PERFORMANCE OF THE WORK. ALL WORK CARRIED OUT SHALL COMPLY WITH ALL APPLICABLE MUNICIPAL AND UTILITY COMPANY SPECIFICATIONS AND LOCAL JURISDICTIONAL CODES, ORDINANCES AND APPLICABLE REGULATIONS.
8. THE CONTRACTOR SHALL INSTALL ALL EQUIPMENT AND MATERIALS IN ACCORDANCE WITH MANUFACTURER'S RECOMMENDATIONS UNLESS SPECIFICALLY STATED OTHERWISE.
9. THE CONTRACTOR SHALL CONTACT UTILITY LOCATING SERVICES PRIOR TO THE START OF CONSTRUCTION.
10. ALL EXISTING ACTIVE SEWER, WATER, GAS, ELECTRIC AND OTHER UTILITIES WHERE ENCOUNTERED IN THE WORK, SHALL BE PROTECTED AT ALL TIMES AND WHERE REQUIRED FOR THE PROPER EXECUTION OF THE WORK, SHALL BE RELOCATED AS DIRECTED BY CONTRACTOR. EXTREME CAUTION SHOULD BE USED BY THE CONTRACTOR WHEN EXCAVATING OR DRILLING PIERS AROUND OR NEAR UTILITIES. CONTRACTOR SHALL PROVIDE SAFETY TRAINING FOR THE WORKING CREW. THIS WILL INCLUDE BUT NOT BE LIMITED TO A) FALL PROTECTION B) CONFINED SPACE C) ELECTRICAL SAFETY D) TRENCHING AND EXCAVATION E) CONSTRUCTION SAFETY PROCEDURES.
11. ALL SITE WORK SHALL BE AS INDICATED ON THE STAMPED CONSTRUCTION DRAWINGS AND PROJECT SPECIFICATIONS, LATEST APPROVED REVISION.
12. CONTRACTOR SHALL KEEP THE SITE FREE FROM ACCUMULATING WASTE MATERIAL, DEBRIS, AND TRASH AT THE COMPLETION OF THE WORK. IF NECESSARY, RUBBISH, STUMPS, DEBRIS, STICKS, STONES AND OTHER REFUSE SHALL BE REMOVED FROM THE SITE AND DISPOSED OF LEGALLY.
13. ALL EXISTING INACTIVE SEWER, WATER, GAS, ELECTRIC AND OTHER UTILITIES, WHICH INTERFERE WITH THE EXECUTION OF THE WORK, SHALL BE REMOVED AND/OR CAPPED, PLUGGED OR OTHERWISE DISCONTINUED AT POINTS WHICH WILL NOT INTERFERE WITH THE EXECUTION OF THE WORK, SUBJECT TO THE APPROVAL OF CONTRACTOR, TOWER OWNER, CROWN CASTLE USA INC., AND/OR LOCAL UTILITIES.
14. THE CONTRACTOR SHALL PROVIDE SITE SIGNAGE IN ACCORDANCE WITH THE TECHNICAL SPECIFICATION FOR SITE SIGNAGE REQUIRED BY LOCAL JURISDICTION AND SIGNAGE REQUIRED ON INDIVIDUAL PIECES OF EQUIPMENT, ROOMS, AND SHELTERS.
15. THE SITE SHALL BE GRADED TO CAUSE SURFACE WATER TO FLOW AWAY FROM THE CARRIER'S EQUIPMENT AND TOWER AREAS.
16. THE SUB GRADE SHALL BE COMPACTED AND BROUGHT TO A SMOOTH UNIFORM GRADE PRIOR TO FINISHED SURFACE APPLICATION.
17. THE AREAS OF THE OWNERS PROPERTY DISTURBED BY THE WORK AND NOT COVERED BY THE TOWER, EQUIPMENT OR DRIVEWAY, SHALL BE GRADED TO A UNIFORM SLOPE, AND STABILIZED TO PREVENT EROSION AS SPECIFIED ON THE CONSTRUCTION DRAWINGS AND/OR PROJECT SPECIFICATIONS.
18. CONTRACTOR SHALL MINIMIZE DISTURBANCE TO EXISTING SITE DURING CONSTRUCTION. EROSION CONTROL MEASURES, IF REQUIRED DURING CONSTRUCTION, SHALL BE IN CONFORMANCE WITH THE LOCAL GUIDELINES FOR EROSION AND SEDIMENT CONTROL.
19. THE CONTRACTOR SHALL PROTECT EXISTING IMPROVEMENTS, PAVEMENTS, CURBS, LANDSCAPING AND STRUCTURES. ANY DAMAGED PART SHALL BE REPAIRED AT CONTRACTOR'S EXPENSE TO THE SATISFACTION OF OWNER.
20. CONTRACTOR SHALL LEGALLY AND PROPERLY DISPOSE OF ALL SCRAP MATERIALS SUCH AS COAXIAL CABLES AND OTHER ITEMS REMOVED FROM THE EXISTING FACILITY. ANTENNAS REMOVED SHALL BE RETURNED TO THE OWNER'S DESIGNATED LOCATION.
21. CONTRACTOR SHALL LEAVE PREMISES IN CLEAN CONDITION. TRASH AND DEBRIS SHOULD BE REMOVED FROM SITE ON A DAILY BASIS.
22. NO FILL OR EMBANKMENT MATERIAL SHALL BE PLACED ON FROZEN GROUND. FROZEN MATERIALS, SNOW OR ICE SHALL NOT BE PLACED IN ANY FILL OR EMBANKMENT.

GENERAL NOTES:

1. FOR THE PURPOSE OF CONSTRUCTION DRAWING, THE FOLLOWING DEFINITIONS SHALL APPLY:
   CONTRACTOR: GENERAL CONTRACTOR RESPONSIBLE FOR CONSTRUCTION
   CARRIER: T–MOBILE
   TOWER OWNER: CROWN CASTLE USA INC.
2. THESE DRAWINGS HAVE BEEN PREPARED USING STANDARDS OF PROFESSIONAL CARE AND COMPLETENESS NORMALLY EXERCISED UNDER SIMILAR CIRCUMSTANCES BY REPUTABLE ENGINEERS IN THIS OR SIMILAR LOCALITIES. IT IS ASSUMED THAT THE WORK DEPICTED WILL BE PERFORMED BY AN EXPERIENCED CONTRACTOR AND/OR WORKPEOPLE WHO HAVE A WORKING KNOWLEDGE OF THE APPLICABLE CODE STANDARDS AND REQUIREMENTS AND OF INDUSTRY ACCEPTED STANDARD GOOD PRACTICE. AS NOT EVERY CONDITION OR ELEMENT IS (OR CAN BE) EXPLICITLY SHOWN ON THESE DRAWINGS, THE CONTRACTOR SHALL USE INDUSTRY ACCEPTED STANDARD GOOD PRACTICE FOR MISCELLANEOUS WORK NOT EXPLICITLY SHOWN.
3. THESE DRAWINGS REPRESENT THE FINISHED STRUCTURE. THEY DO NOT INDICATE THE MEANS OR METHODS OF CONSTRUCTION. THE CONTRACTOR SHALL BE SOLELY RESPONSIBLE FOR THE CONSTRUCTION MEANS, METHODS, TECHNIQUES, SEQUENCES, AND PROCEDURES. THE CONTRACTOR SHALL PROVIDE ALL MEASURES NECESSARY FOR PROTECTION OF LIFE AND PROPERTY DURING CONSTRUCTION. SUCH MEASURES SHALL INCLUDE, BUT NOT BE LIMITED TO, BRACING, FORMWORK, SHORING, ETC. SITE VISITS BY THE ENGINEER OR HIS REPRESENTATIVE WILL NOT INCLUDE INSPECTION OF THESE ITEMS AND IS FOR STRUCTURAL OBSERVATION OF THE FINISHED STRUCTURE ONLY.
4. NOTES AND DETAILS IN THE CONSTRUCTION DRAWINGS SHALL TAKE PRECEDENCE OVER GENERAL NOTES AND TYPICAL DETAILS. WHERE NO DETAILS ARE SHOWN, CONSTRUCTION SHALL CONFORM TO SIMILAR WORK ON THE PROJECT, AND/OR AS PROVIDED FOR IN THE CONTRACT DOCUMENTS. WHERE DISCREPANCIES OCCUR BETWEEN PLANS, DETAILS, GENERAL NOTES, AND SPECIFICATIONS, THE GREATER, MORE STRICT REQUIREMENTS, SHALL GOVERN. IF FURTHER CLARIFICATION IS REQUIRED CONTACT THE ENGINEER OF RECORD.
5. SUBSTANTIAL EFFORT HAS BEEN MADE TO PROVIDE ACCURATE DIMENSIONS AND MEASUREMENTS ON THE DRAWINGS TO ASSIST IN THE FABRICATION AND/OR PLACEMENT OF CONSTRUCTION ELEMENTS BUT IT IS THE SOLE RESPONSIBILITY OF THE CONTRACTOR TO FIELD VERIFY THE DIMENSIONS, MEASUREMENTS, AND/OR CLEARANCES SHOWN IN THE CONSTRUCTION DRAWINGS PRIOR TO FABRICATION OR CUTTING OF ANY NEW OR EXISTING CONSTRUCTION ELEMENTS. IF IT IS DETERMINED THAT THERE ARE DISCREPANCIES AND/OR CONFLICTS WITH THE CONSTRUCTION DRAWINGS THE ENGINEER OF RECORD IS TO BE NOTIFIED AS SOON AS POSSIBLE.
6. PRIOR TO THE SUBMISSION OF BIDS, THE BIDDING CONTRACTOR SHALL VISIT THE CELL SITE TO FAMILIARIZE WITH THE EXISTING CONDITIONS AND TO CONFIRM THAT THE WORK CAN BE ACCOMPLISHED AS SHOWN ON THE CONSTRUCTION DRAWINGS. ANY DISCREPANCY FOUND SHALL BE BROUGHT TO THE ATTENTION OF CROWN CASTLE.
7. ALL MATERIALS FURNISHED AND INSTALLED SHALL BE IN STRICT ACCORDANCE WITH ALL APPLICABLE CODES, REGULATIONS AND ORDINANCES. CONTRACTOR SHALL ISSUE ALL APPROPRIATE NOTICES AND COMPLY WITH ALL LAWS, ORDINANCES, RULES, REGULATIONS AND LAWFUL ORDERS OF ANY PUBLIC AUTHORITY REGARDING THE PERFORMANCE OF THE WORK. ALL WORK CARRIED OUT SHALL COMPLY WITH ALL APPLICABLE MUNICIPAL AND UTILITY COMPANY SPECIFICATIONS AND LOCAL JURISDICTIONAL CODES, ORDINANCES AND APPLICABLE REGULATIONS.
8. UNLESS NOTED OTHERWISE, THE WORK SHALL INCLUDE FURNISHING MATERIALS, EQUIPMENT, APPURTENANCES AND LABOR NECESSARY TO COMPLETE ALL INSTALLATIONS AS INDICATED ON THE DRAWINGS.
9. THE CONTRACTOR SHALL INSTALL ALL EQUIPMENT AND MATERIALS IN ACCORDANCE WITH MANUFACTURER'S RECOMMENDATIONS UNLESS SPECIFICALLY STATED OTHERWISE.
10. IF THE SPECIFIED EQUIPMENT CAN NOT BE INSTALLED AS SHOWN ON THESE DRAWINGS, THE CONTRACTOR SHALL PROPOSE AN ALTERNATIVE INSTALLATION FOR APPROVAL BY THE CARRIER AND CROWN CASTLE PRIOR TO PROCEEDING WITH ANY SUCH CHANGE OF INSTALLATION.
11. CONTRACTOR IS TO PERFORM A SITE INVESTIGATION AND IS TO DETERMINE THE BEST ROUTING OF ALL CONDUITS FOR POWER, AND TELCO AND FOR GROUNDING CABLES AS SHOWN IN THE POWER, TELCO, AND GROUNDING PLAN DRAWINGS.
12. THE CONTRACTOR SHALL PROTECT EXISTING IMPROVEMENTS, PAVEMENTS, CURBS, LANDSCAPING AND STRUCTURES. ANY DAMAGED PART SHALL BE REPAIRED AT CONTRACTOR'S EXPENSE TO THE SATISFACTION OF CROWN CASTLE USA INC.
13. CONTRACTOR SHALL LEGALLY AND PROPERLY DISPOSE OF ALL SCRAP MATERIALS SUCH AS COAXIAL CABLES AND OTHER ITEMS REMOVED FROM THE EXISTING FACILITY. ANTENNAS REMOVED SHALL BE RETURNED TO THE OWNER'S DESIGNATED LOCATION.
14. CONTRACTOR SHALL LEAVE PREMISES IN CLEAN CONDITION. TRASH AND DEBRIS SHOULD BE REMOVED FROM SITE ON A DAILY BASIS.

CONCRETE, FOUNDATIONS, AND REINFORCING STEEL:

1. ALL CONCRETE WORK SHALL BE IN ACCORDANCE WITH THE ACI 301, ACI 318, ACI 336, ASTM A184, ASTM A185 AND THE DESIGN AND CONSTRUCTION SPECIFICATION FOR CAST–IN–PLACE CONCRETE.
2. UNLESS NOTED OTHERWISE, SOIL BEARING PRESSURE USED FOR DESIGN OF SLABS AND FOUNDATIONS IS ASSUMED TO BE 1000 psf.
3. ALL CONCRETE SHALL HAVE A MINIMUM COMPRESSIVE STRENGTH (f'c) OF 3000 psi AT 28 DAYS, UNLESS NOTED OTHERWISE. NO MORE THAN 90 MINUTES SHALL ELAPSE FROM BATCH TIME TO TIME OF PLACEMENT UNLESS APPROVED BY THE ENGINEER OF RECORD. TEMPERATURE OF CONCRETE SHALL NOT EXCEED 90°f AT TIME OF PLACEMENT.
4. CONCRETE EXPOSED TO FREEZE–THAW CYCLES SHALL CONTAIN AIR ENTRAINING ADMIXTURES. AMOUNT OF AIR ENTRAINMENT TO BE BASED ON SIZE OF AGGREGATE AND F3 CLASS EXPOSURE (VERY SEVERE). CEMENT USED TO BE TYPE II PORTLAND CEMENT WITH A MAXIMUM WATER–TO–CEMENT RATIO (W/C) OF 0.45.
5. ALL STEEL REINFORCING SHALL CONFORM TO ASTM A615. ALL WELDED WIRE FABRIC (WWF) SHALL CONFORM TO ASTM A185. ALL SPLICES SHALL BE CLASS "B" TENSION SPLICES, UNLESS NOTED OTHERWISE. ALL HOOKS SHALL BE STANDARD 90 DEGREE HOOKS, UNLESS NOTED OTHERWISE. YIELD STRENGTH (Fy) OF STANDARD DEFORMED BARS ARE AS FOLLOWS:
   #4 BARS AND SMALLER 40 ksi
   #5 BARS AND LARGER 60 ksi
6. THE FOLLOWING MINIMUM CONCRETE COVER SHALL BE PROVIDED FOR REINFORCING STEEL UNLESS SHOWN OTHERWISE ON DRAWINGS:
   CONCRETE CAST AGAINST AND PERMANENTLY EXPOSED TO EARTH 3"
   CONCRETE EXPOSED TO EARTH OR WEATHER:
   #6 BARS AND LARGER 2"
   #5 BARS AND SMALLER 1–1/2"
   CONCRETE NOT EXPOSED TO EARTH OR WEATHER:
   SLAB AND WALLS 3/4"
   BEAMS AND COLUMNS 1–1/2"
7. A TOOLED EDGE OR A 3/4" CHAMFER SHALL BE PROVIDED AT ALL EXPOSED EDGES OF CONCRETE, UNLESS NOTED OTHERWISE, IN ACCORDANCE WITH ACI 301 SECTION 4.2.4.

GREENFIELD GROUNDING NOTES:

1. ALL GROUND ELECTRODE SYSTEMS (INCLUDING TELECOMMUNICATION, RADIO, LIGHTNING PROTECTION AND AC POWER GES'S) SHALL BE BONDED TOGETHER AT OR BELOW GRADE, BY TWO OR MORE COPPER BONDING CONDUCTORS IN ACCORDANCE WITH THE NEC.
2. THE CONTRACTOR SHALL PERFORM IEEE FALL–OF–POTENTAL RESISTANCE TO EARTH TESTING (PER IEEE 1100 AND 81) FOR GROUND ELECTRODE SYSTEMS, THE CONTRACTOR SHALL FURNISH AND INSTALL SUPPLEMENTAL GROUND ELECTRODES AS NEEDED TO ACHIEVE A TEST RESULT OF 5 OHMS OR LESS.
3. THE CONTRACTOR IS RESPONSIBLE FOR PROPERLY SEQUENCING GROUNDING AND UNDERGROUND CONDUIT INSTALLATION AS TO PREVENT ANY LOSS OF CONTINUITY IN THE GROUNDING SYSTEM OR DAMAGE TO THE CONDUIT AND PROVIDE TESTING RESULTS.
4. METAL CONDUIT AND TRAY SHALL BE GROUNDED AND MADE ELECTRICALLY CONTINUOUS WITH LISTED BONDING FITTINGS OR BY BONDING ACROSS THE DISCONTINUITY WITH #6 COPPER WIRE UL APPROVED GROUNDING TYPE CONDUIT CLAMPS.
5. METAL RACEWAY SHALL NOT BE USED AS THE NEC REQUIRED EQUIPMENT GROUND CONDUCTOR. STRANDED COPPER CONDUCTORS WITH GREEN INSULATION, SIZED IN ACCORDANCE WITH THE NEC, SHALL BE FURNISHED AND INSTALLED WITH THE POWER CIRCUITS TO BTS EQUIPMENT.
6. EACH CABINET FRAME SHALL BE DIRECTLY CONNECTED TO THE MASTER GROUND BAR WITH GREEN INSULATED SUPPLEMENTAL EQUIPMENT GROUND WIRES, #6 STRANDED COPPER OR LARGER FOR INDOOR BTS; #2 BARE SOLID TINNED COPPER FOR OUTDOOR BTS.
7. CONNECTIONS TO THE GROUND BUS SHALL NOT BE DOUBLED UP OR STACKED BACK TO BACK CONNECTIONS ON OPPOSITE SIDE OF THE GROUND BUS ARE PERMITTED.
8. ALL EXTERIOR GROUND CONDUCTORS BETWEEN EQUIPMENT/GROUND BARS AND THE GROUND RING SHALL BE #2 SOLID TINNED COPPER UNLESS OTHERWISE INDICATED.
9. ALUMINUM CONDUCTOR OR COPPER CLAD STEEL CONDUCTOR SHALL NOT BE USED FOR GROUNDING CONNECTIONS.
10. USE OF 90° BENDS IN THE PROTECTION GROUNDING CONDUCTORS SHALL BE AVOIDED WHEN 45° BENDS CAN BE ADEQUATELY SUPPORTED.
11. EXOTHERMIC WELDS SHALL BE USED FOR ALL GROUNDING CONNECTIONS BELOW GRADE.
12. ALL GROUND CONNECTIONS ABOVE GRADE (INTERIOR AND EXTERIOR) SHALL BE FORMED USING HIGH PRESS CRIMPS.
13. COMPRESSION GROUND CONNECTIONS MAY BE REPLACED BY EXOTHERMIC WELD CONNECTIONS.
14. ICE BRIDGE BONDING CONDUCTORS SHALL BE EXOTHERMICALLY BONDED OR BOLTED TO THE BRIDGE AND THE TOWER GROUND BAR.
15. APPROVED ANTIOXIDANT COATINGS (i.e. CONDUCTIVE GEL OR PASTE) SHALL BE USED ON ALL COMPRESSION AND BOLTED GROUND CONNECTIONS.
16. ALL EXTERIOR GROUND CONNECTIONS SHALL BE COATED WITH A CORROSION RESISTANT MATERIAL.
17. MISCELLANEOUS ELECTRICAL AND NON–ELECTRICAL METAL BOXES, FRAMES AND SUPPORTS SHALL BE BONDED TO THE GROUND RING, IN ACCORDANCE WITH THE NEC.
18. BOND ALL METALLIC OBJECTS WITHIN 6 ft OF MAIN GROUND RING WITH (1) #2 BARE SOLID TINNED COPPER GROUND CONDUCTOR.
19. GROUND CONDUCTORS USED FOR THE FACILITY GROUNDING AND LIGHTNING PROTECTION SYSTEMS SHALL NOT BE ROUTED THROUGH METALLIC OBJECTS THAT FORM A RING AROUND THE CONDUCTOR, SUCH AS METALLIC CONDUITS, METAL SUPPORT CLIPS OR SLEEVES THROUGH WALLS OR FLOORS. WHEN IT IS REQUIRED TO BE HOUSED IN CONDUIT TO MEET CODE REQUIREMENTS OR LOCAL CONDITIONS, NON–METALLIC MATERIAL SUCH AS PVC CONDUIT SHALL BE USED. WHERE USE OF METAL CONDUIT IS UNAVOIDABLE (i.e., NONMETALLIC CONDUIT PROHIBITED BY LOCAL CODE) THE GROUND CONDUCTOR SHALL BE BONDED TO EACH END OF THE METAL CONDUIT.
20. ALL GROUNDS THAT TRANSITION FROM BELOW GRADE TO ABOVE GRADE MUST BE #2 BARE SOLID TINNED COPPER IN 3/4" NON–METALLIC, FLEXIBLE CONDUIT FROM 24" BELOW GRADE TO WITHIN 3" TO 6" OF CAD–WELD TERMINATION POINT. THE EXPOSED END OF THE CONDUIT MUST BE SEALED WITH SILICONE CAULK. (ADD TRANSITIONING GROUND STANDARD DETAIL AS WELL).
21. BUILDINGS WHERE THE MAIN GROUNDING CONDUCTORS ARE REQUIRED TO BE ROUTED TO GRADE, THE CONTRACTOR SHALL ROUTE TWO GROUNDING CONDUCTORS FROM THE ROOFTOP, TOWERS, AND WATER TOWERS GROUNDING RING, TO THE EXISTING GROUNDING SYSTEM, THE GROUNDING CONDUCTORS SHALL NOT BE SMALLER THAN 2/0 COPPER. ROOFTOP GROUNDING RING SHALL BE BONDED TO THE EXISTING GROUNDING SYSTEM, THE BUILDING STEEL COLUMNS, LIGHTNING PROTECTION SYSTEM, AND BUILDING MAIN WATER LINE (FERROUS OR NONFERROUS METAL PIPING ONLY).

ELECTRICAL INSTALLATION NOTES:

1. ALL ELECTRICAL WORK SHALL BE PERFORMED IN ACCORDANCE WITH THE PROJECT SPECIFICATIONS, NEC AND ALL APPLICABLE FEDERAL, STATE, AND LOCAL CODES/ORDINANCES.
2. CONDUIT ROUTINGS ARE SCHEMATIC. CONTRACTOR SHALL INSTALL CONDUITS SO THAT ACCESS TO EQUIPMENT IS NOT BLOCKED AND TRIP HAZARDS ARE ELIMINATED.
3. WIRING, RACEWAY AND SUPPORT METHODS AND MATERIALS SHALL COMPLY WITH THE REQUIREMENTS OF THE NEC.
4. ALL CIRCUITS SHALL BE SEGREGATED AND MAINTAIN MINIMUM CABLE SEPARATION AS REQUIRED BY THE NEC.
   4.1. ALL EQUIPMENT SHALL BEAR THE UNDERWRITERS LABORATORIES LABEL OF APPROVAL, AND SHALL CONFORM TO REQUIREMENT OF THE NATIONAL ELECTRICAL CODE.
   4.2. ALL OVERCURRENT DEVICES SHALL HAVE AN INTERRUPTING CURRENT RATING THAT SHALL BE GREATER THAN THE SHORT CIRCUIT CURRENT TO WHICH THEY ARE SUBJECTED, 22,000 AIC MINIMUM. VERYIFY AVAILABLE SHORT CIRCUIT CURRENT DOES NOT EXCEED THE RATING OF ELECTRICAL EQUIPMENT IN ACCORDANCE WITH ARTICLE 110.24 NEC OR THE MOST CURRENT ADOPTED CODE PRE THE GOVERNING JURISDICTION.
5. EACH END OF EVERY POWER PHASE CONDUCTOR, GROUNDING CONDUCTOR, AND TELCO CONDUCTOR OR CABLE SHALL BE LABELED WITH COLOR–CODED INSULATION OR ELECTRICAL TAPE (3M BRAND, 1/2" PLASTIC ELECTRICAL TAPE WITH UV PROTECTION, OR EQUAL). THE IDENTIFICATION METHOD SHALL CONFORM WITH NEC AND OSHA.
6. ALL ELECTRICAL COMPONENTS SHALL BE CLEARLY LABELED WITH LAMICOID TAGS SHOWING THEIR RATED VOLTAGE, PHASE CONFIGURATION, WIRE CONFIGURATION, POWER OR AMPACITY RATING AND BRANCH CIRCUIT ID NUMBERS (i.e. PANEL BOARD AND CIRCUIT ID'S).
7. PANEL BOARDS (ID NUMBERS) SHALL BE CLEARLY LABELED WITH PLASTIC LABELS.
8. ALL TIE WRAPS SHALL BE CUT FLUSH WITH APPROVED CUTTING TOOL TO REMOVE SHARP EDGES.
9. ALL POWER AND EQUIPMENT GROUND WIRING IN TUBING OR CONDUIT SHALL BE SINGLE COPPER CONDUCTOR (#14 OR LARGER) WITH TYPE THHW, THWN, THWN–2, XHHW, XHHW–2, THW, THW–2, RHW, OR RHW–2 INSULATION UNLESS OTHERWISE SPECIFIED.
10. SUPPLEMENTAL EQUIPMENT GROUND WIRING LOCATED INDOORS SHALL BE SINGLE COPPER CONDUCTOR (#6 OR LARGER) WITH TYPE THHW, THWN, THWN–2, XHHW, XHHW–2, THW, THW–2, RHW, OR RHW–2 INSULATION UNLESS OTHERWISE SPECIFIED.
11. POWER AND CONTROL WIRING IN FLEXIBLE CORD SHALL BE MULTI–CONDUCTOR, TYPE SOOW CORD (#14 OR LARGER) UNLESS OTHERWISE SPECIFIED.
12. POWER AND CONTROL WIRING FOR USE IN CABLE TRAY SHALL BE MULTI–CONDUCTOR, TYPE TC CABLE (#14 OR LARGER), WITH TYPE THHW, THWN, THWN–2, XHHW, XHHW–2, THW, THW–2, RHW, OR RHW–2 INSULATION UNLESS OTHERWISE SPECIFIED.
13. ALL POWER AND GROUNDING CONNECTIONS SHALL BE CRIMP–STYLE, COMPRESSION WIRE LUGS AND WIRE NUTS BY THOMAS AND BETTS (OR EQUAL). LUGS AND WIRE NUTS SHALL BE RATED FOR OPERATION NOT LESS THAN 75° C (90° C IF AVAILABLE).
14. RACEWAY AND CABLE TRAY SHALL BE LISTED OR LABELED FOR ELECTRICAL USE IN ACCORDANCE WITH NEMA, UL, ANSI/IEEE AND NEC.
15. ELECTRICAL METALLIC TUBING (EMT), INTERMEDIATE METAL CONDUIT (IMC), OR RIGID METAL CONDUIT (RMC) SHALL BE USED FOR EXPOSED INDOOR LOCATIONS.
16. ELECTRICAL METALLIC TUBING (EMT) OR METAL–CLAD CABLE (MC) SHALL BE USED FOR CONCEALED INDOOR LOCATIONS.
17. SCHEDULE 40 PVC UNDERGROUND ON STRAIGHTS AND SCHEDULE 80 PVC FOR ALL ELBOWS/90s AND ALL APPROVED ABOVE GRADE PVC CONDUIT.
18. LIQUID–TIGHT FLEXIBLE METALLIC CONDUIT (LIQUID–TITE FLEX) SHALL BE USED INDOORS AND OUTDOORS, WHERE VIBRATION OCCURS OR FLEXIBILITY IS NEEDED.
19. CONDUIT AND TUBING FITTINGS SHALL BE THREADED OR COMPRESSION–TYPE AND APPROVED FOR THE LOCATION USED. SET SCREW FITTINGS ARE NOT ACCEPTABLE.
20. CABINETS, BOXES AND WIRE WAYS SHALL BE LABELED FOR ELECTRICAL USE IN ACCORDANCE WITH NEMA, UL, ANSI/IEEE AND THE NEC.
21. WIREWAYS SHALL BE METAL WITH AN ENAMEL FINISH AND INCLUDE A HINGED COVER, DESIGNED TO SWING OPEN DOWNWARDS (WIREMOLD SPECMATE WIREWAY).
22. SLOTTED WIRING DUCT SHALL BE PVC AND INCLUDE COVER (PANDUIT TYPE E OR EQUAL).
23. CONDUITS SHALL BE FASTENED SECURELY IN PLACE WITH APPROVED NON–PERFORATED STRAPS AND HANGERS. EXPLOSIVE DEVICES (i.e. POWDER–ACTUATED) FOR ATTACHING HANGERS TO STRUCTURE WILL NOT BE PERMITTED. CLOSELY FOLLOW THE LINES OF THE STRUCTURE, MAINTAIN CLOSE PROXIMITY TO THE STRUCTURE AND KEEP CONDUITS IN TIGHT ENVELOPES. CHANGES IN DIRECTION TO ROUTE AROUND OBSTACLES SHALL BE MADE WITH CONDUIT OUTLET BODIES. CONDUIT SHALL BE INSTALLED IN A NEAT AND WORKMANLIKE MANNER. PARALLEL AND PERPENDICULAR TO STRUCTURE WALL AND CEILING LINES. ALL CONDUIT SHALL BE FISHED TO CLEAR OBSTRUCTIONS. ENDS OF CONDUITS SHALL BE TEMPORARILY CAPPED FLUSH TO FINISH GRADE TO PREVENT CONCRETE, PLASTER OR DIRT FROM ENTERING. CONDUITS SHALL BE RIGIDLY CLAMPED TO BOXES BY GALVANIZED MALLEABLE IRON BUSHING ON INSIDE AND GALVANIZED MALLEABLE IRON LOCKNUT ON OUTSIDE AND INSIDE.
24. EQUIPMENT CABINETS, TERMINAL BOXES, JUNCTION BOXES AND PULL BOXES SHALL BE GALVANIZED OR EPOXY–COATED SHEET STEEL. SHALL MEET OR EXCEED UL 50 AND BE RATED NEMA 1 (OR BETTER) FOR INTERIOR LOCATIONS AND NEMA 3R (OR BETTER) FOR EXTERIOR LOCATIONS.
25. METAL RECEPTACLE, SWITCH AND DEVICE BOXES SHALL BE GALVANIZED, EPOXY–COATED OR NON–CORRODING; SHALL MEET OR EXCEED UL 514A AND NEMA OS 1 AND BE RATED NEMA 1 (OR BETTER) FOR INTERIOR LOCATIONS AND WEATHER PROTECTED (WP OR BETTER) FOR EXTERIOR LOCATIONS.
26. NONMETALLIC RECEPTACLE, SWITCH AND DEVICE BOXES SHALL MEET OR EXCEED NEMA OS 2 (NEWEST REVISION) AND BE RATED NEMA 1 (OR BETTER) FOR INTERIOR LOCATIONS AND WEATHER PROTECTED (WP OR BETTER) FOR EXTERIOR LOCATIONS.
27. THE CONTRACTOR SHALL NOTIFY AND OBTAIN NECESSARY AUTHORIZATION FROM THE CARRIER AND/OR CROWN CASTLE USA INC. BEFORE COMMENCING WORK ON THE AC POWER DISTRIBUTION PANELS.
28. THE CONTRACTOR SHALL PROVIDE NECESSARY TAGGING ON THE BREAKERS, CABLES AND DISTRIBUTION PANELS IN ACCORDANCE WITH THE APPLICABLE CODES AND STANDARDS TO SAFEGUARD LIFE AND PROPERTY.
29. INSTALL LAMICOID LABEL ON THE METER CENTER TO SHOW "T–MOBILE".
30. ALL EMPTY/SPARE CONDUITS THAT ARE INSTALLED ARE TO HAVE A METERED MULE TAPE PULL CORD INSTALLED.

CONDUCTOR COLOR CODE		
SYSTEM	CONDUCTOR	COLOR
120/240V, 1Ø	A PHASE	BLACK
	B PHASE	RED
	NEUTRAL	WHITE
	GROUND	GREEN
120/208V, 3Ø	A PHASE	BLACK
	B PHASE	RED
	C PHASE	BLUE
	NEUTRAL	WHITE
	GROUND	GREEN
277/480V, 3Ø	A PHASE	BROWN
	B PHASE	ORANGE OR PURPLE
	C PHASE	YELLOW
	NEUTRAL	GREY
	GROUND	GREEN
DC VOLTAGE	POS (+)	RED**
	NEG (–)	BLACK**

* SEE NEC 210.5(C)(1) AND (2)
** POLARITY MARKED AT TERMINATION

APWA UNIFORM COLOR CODE:

WHITE	PROPOSED EXCAVATION
PINK	TEMPORARY SURVEY MARKINGS
RED	ELECTRIC POWER LINES, CABLES, CONDUIT, AND LIGHTING CABLES
YELLOW	GAS, OIL, STEAM, PETROLEUM, OR GASEOUS MATERIALS
ORANGE	COMMUNICATION, ALARM OR SIGNAL LINES, CABLES, OR CONDUIT AND TRAFFIC LOOPS
BLUE	POTABLE WATER
PURPLE	RECLAIMED WATER, IRRIGATION, AND SLURRY LINES
GREEN	SEWERS AND DRAIN LINES

ABBREVIATIONS:

ANT	ANTENNA
(E)	EXISTING
FIF	FACILITY INTERFACE FRAME
GEN	GENERATOR
GPS	GLOBAL POSITIONING SYSTEM
GSM	GLOBAL SYSTEM FOR MOBILE
LTE	LONG TERM EVOLUTION
MGB	MASTER GROUND BAR
MW	MICROWAVE
(N)	NEW
NEC	NATIONAL ELECTRIC CODE
(P)	PROPOSED
PP	POWER PLANT
QTY	QUANTITY
RECT	RECTIFIER
RBS	RADIO BASE STATION
RET	REMOTE ELECTRIC TILT
RFDS	RADIO FREQUENCY DATA SHEET
RRH	REMOTE RADIO HEAD
RRU	REMOTE RADIO UNIT
SIAD	SMART INTEGRATED DEVICE
TMA	TOWER MOUNTED AMPLIFIER
TYP	TYPICAL
UMTS	UNIVERSAL MOBILE TELECOMMUNICATIONS SYSTEM
W.P.	WORK POINT

T–Mobile
4 SYLVAN WAY
PARSIPPANY, NJ 07054

CROWN CASTLE
3530 TORINGDON WAY, SUITE 300
CHARLOTTE, NC 28277

B+T GRP
1717 S. BOULDER
SUITE 300
TULSA, OK 74119
PH: (918) 587-4630
www.btgrp.com

T-MOBILE SITE NUMBER:
CT11082E

BU #: **876320**
528 WHEELERS FARM RD

528 WHEELERS FARM RD
MILFORD, CT 06460

EXISTING
120'-0" MONOPOLE

ISSUED FOR:

REV	DATE	DRWN	DESCRIPTION	DES./QA
0	7/13/20	FWP	CONSTRUCTION	RMC
1	8/6/20	MTJ	CONSTRUCTION	RMC
1	8/10/20	JJD	CONSTRUCTION	MTJ

B&T ENGINEERING, INC.
PEC.0001564
Expires 2/10/21

IT IS A VIOLATION OF LAW FOR ANY PERSON, UNLESS THEY ARE ACTING UNDER THE DIRECTION OF A LICENSED PROFESSIONAL ENGINEER, TO ALTER THIS DOCUMENT.

SHEET NUMBER:	REVISION:
T-2	1

80703_876320_Wheelers Farm Rd.dwg – Sheet:T–2 – User: mjones – Aug 10, 2020 – 11:47am

SITE PLAN DISCLAIMER:

PROPERTY LINES AND STRUCTURES HAVE BEEN DIGITIZED FROM PREVIOUS PLAN SETS OR FROM ASSESSORS MAPS. CROWN CASTLE USA INC. HAS NOT COMPLETED A SITE SURVEY AND THEREFORE MAKES NO CLAIMS AS TO THE ACCURACY OF INFORMATION DEPICTED ON THIS SHEET

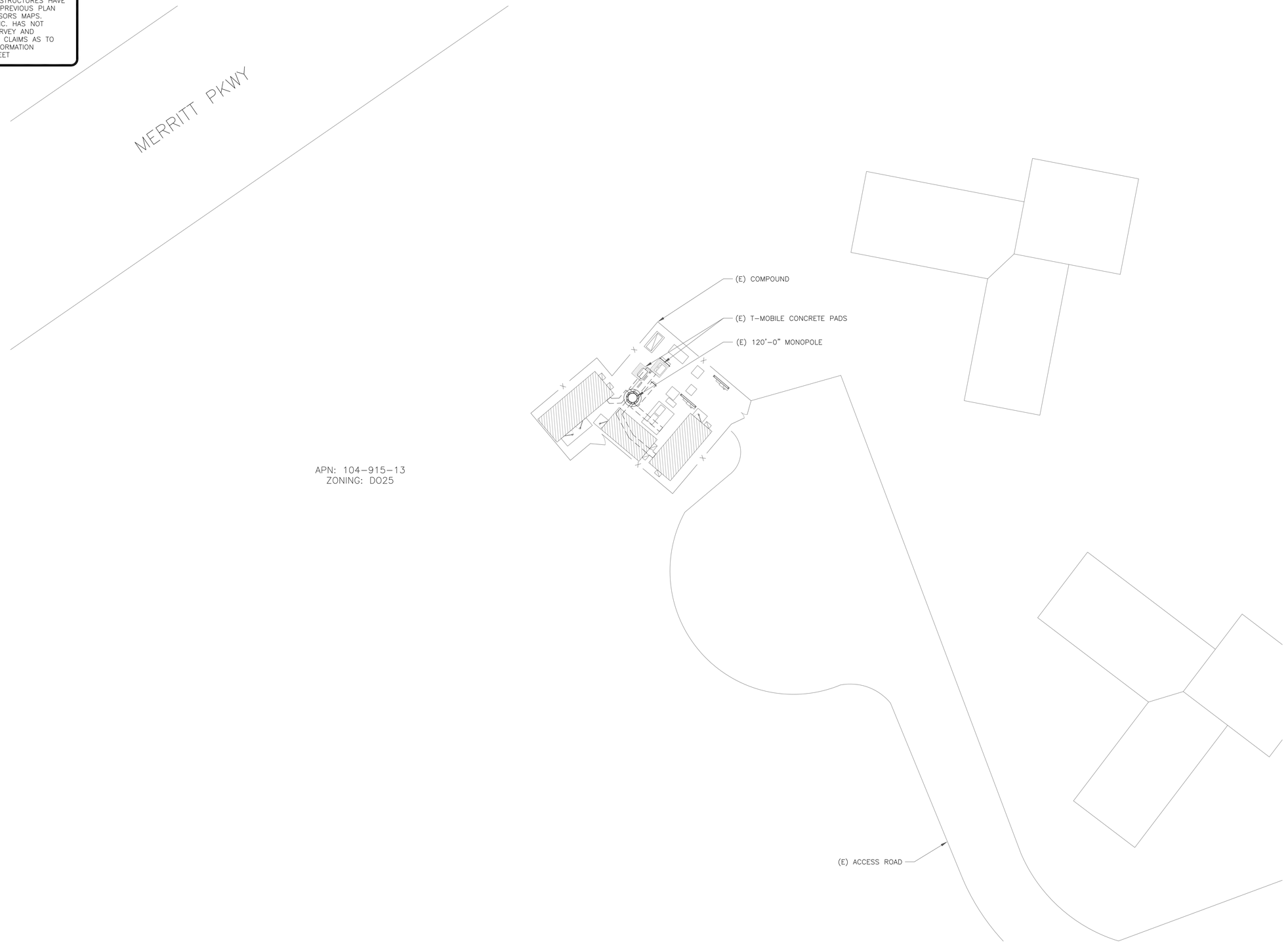

1 OVERALL SITE PLAN
SCALE: 10' 5' 0 10' 1"=10'-0" (FULL SIZE) 1"=20'-0" (11x17)

N

T-Mobile
4 SYLVAN WAY
PARSIPPANY, NJ 07054

CROWN CASTLE
3530 TORINGDON WAY, SUITE 300
CHARLOTTE, NC 28277

B+T GRP
1717 S. BOULDER
SUITE 300
TULSA, OK 74119
PH: (918) 587-4630
www.btgrp.com

T-MOBILE SITE NUMBER:
CT11082E

BU #: **876320**
528 WHEELERS FARM RD

528 WHEELERS FARM RD
MILFORD, CT 06460

EXISTING
120'-0" MONOPOLE

ISSUED FOR:

REV	DATE	DRWN	DESCRIPTION	DES./QA
0	7/13/20	FWP	CONSTRUCTION	RMC
1	8/6/20	MTJ	CONSTRUCTION	RMC
1	8/10/20	JJD	CONSTRUCTION	MTJ

STATE OF CONNECTICUT
31627
LICENSED
PROFESSIONAL ENGINEER
8/10/20

B&T ENGINEERING, INC.
PEC.0001564
Expires 2/10/21

IT IS A VIOLATION OF LAW FOR ANY PERSON, UNLESS THEY ARE ACTING UNDER THE DIRECTION OF A LICENSED PROFESSIONAL ENGINEER, TO ALTER THIS DOCUMENT.

SHEET NUMBER: C-1.1
REVISION: 1

80703_876320_Wheelers Farm Rd.dwg – Sheet:C-1.1 – User: mjones – Aug 10, 2020 – 11:47am

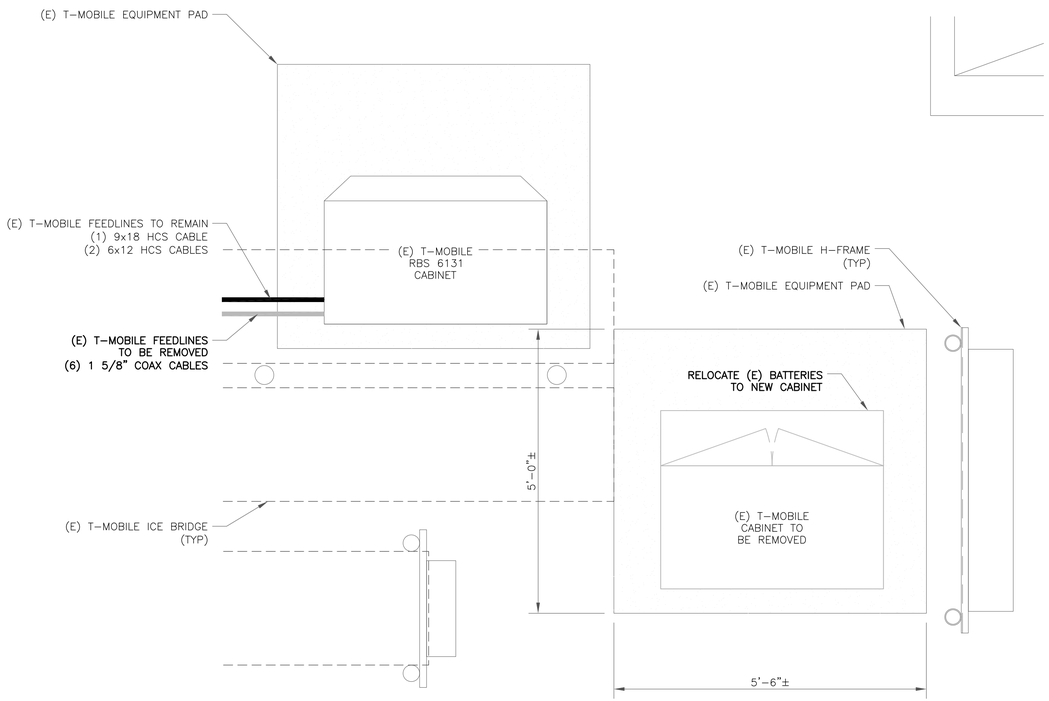

1 SITE PLAN
SCALE: 4' 3' 2' 1' 0 4' 1/4"=1'-0" (FULL SIZE) 1/8"=1'-0" (11x17)

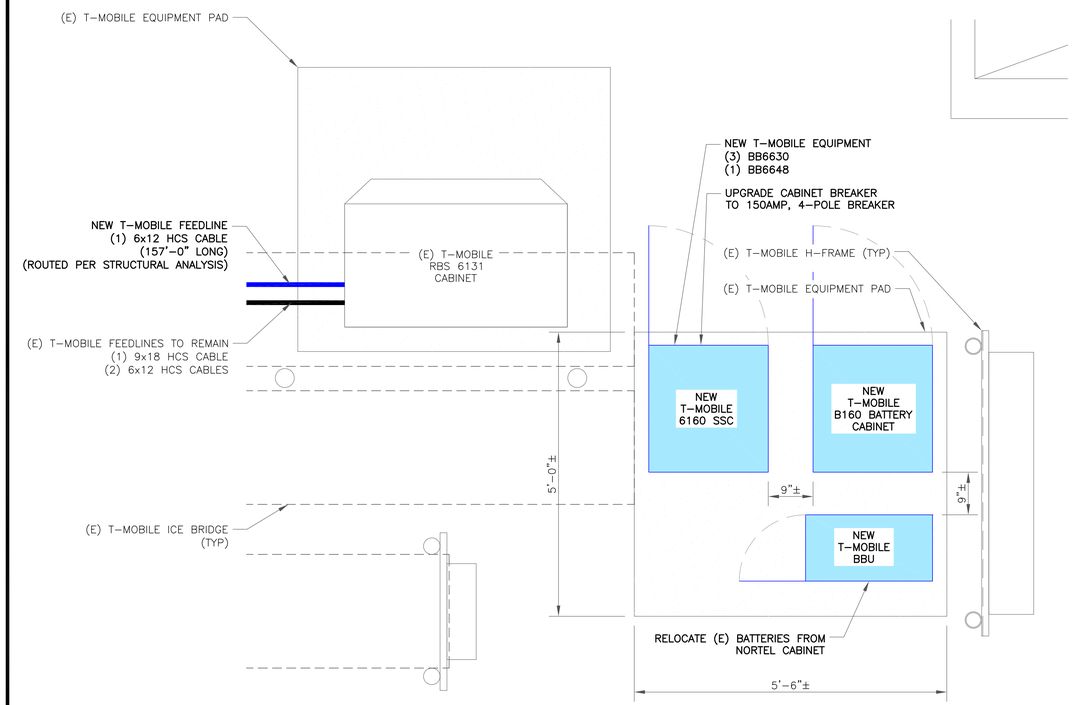

2 ENLARGED SITE PLAN
SCALE: 4' 3' 2' 1' 0 4' 1/4"=1'-0" (FULL SIZE) 1/8"=1'-0" (11x17)

T-Mobile
4 SYLVAN WAY
PARSIPPANY, NJ 07054

CROWN CASTLE
3530 TORINGDON WAY, SUITE 300
CHARLOTTE, NC 28277

B+T GRP
1717 S. BOULDER
SUITE 300
TULSA, OK 74119
PH: (918) 587-4630
www.btgrp.com

T-MOBILE SITE NUMBER:
CT11082E

BU #: **876320**
528 WHEELERS FARM RD

528 WHEELERS FARM RD
MILFORD, CT 06460

EXISTING
120'-0" MONOPOLE

ISSUED FOR:

REV	DATE	DRWN	DESCRIPTION	DES./QA
0	7/13/20	FWP	CONSTRUCTION	RMC
1	8/6/20	MTJ	CONSTRUCTION	RMC
1	8/10/20	JJD	CONSTRUCTION	MTJ

B&T ENGINEERING, INC.
PEC.0001564
Expires 2/10/21

IT IS A VIOLATION OF LAW FOR ANY PERSON, UNLESS THEY ARE ACTING UNDER THE DIRECTION OF A LICENSED PROFESSIONAL ENGINEER, TO ALTER THIS DOCUMENT.

SHEET NUMBER: C-1.2
REVISION: 1

80703_876320_Wheelers Farm Rd.dwg - Sheet:C-1.2 - User: mjones - Aug 10, 2020 - 11:47am

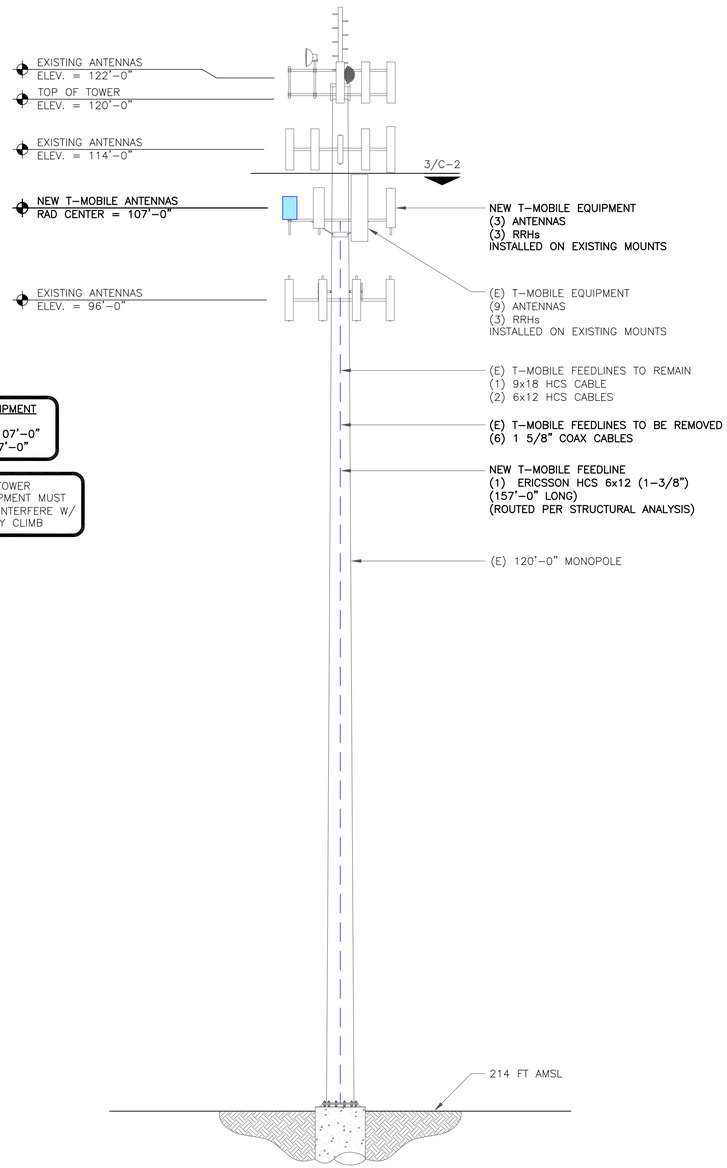

T-MOBILE EQUIPMENT

ANTENNA CL: 107'-0"
MOUNT CL: 107'-0"

ANY AND ALL TOWER MOUNTED EQUIPMENT MUST NOT TRAP OR INTERFERE W/ EXISTING SAFETY CLIMB

1 FINAL ELEVATION
SCALE: NOT TO SCALE

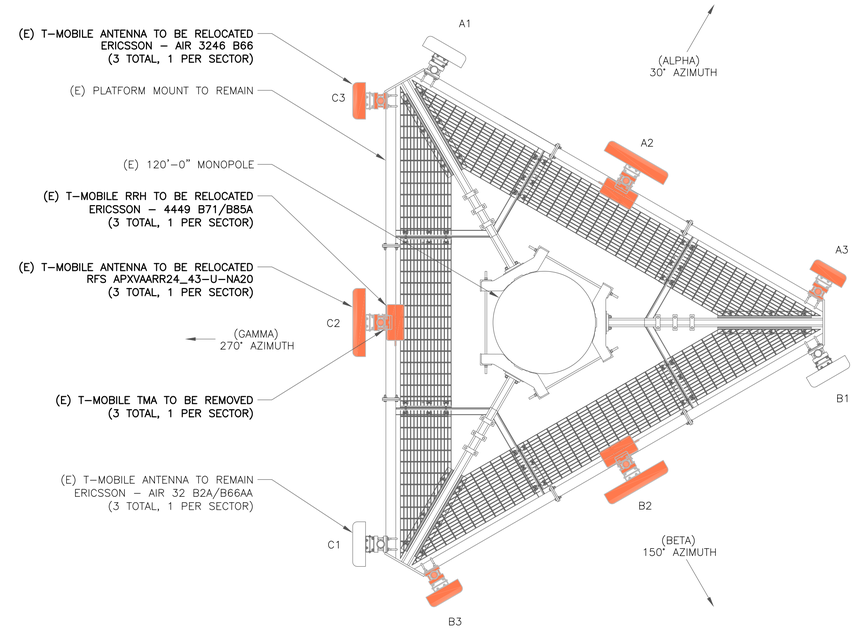

2 EXISTING ANTENNA PLAN
SCALE: NOT TO SCALE

N

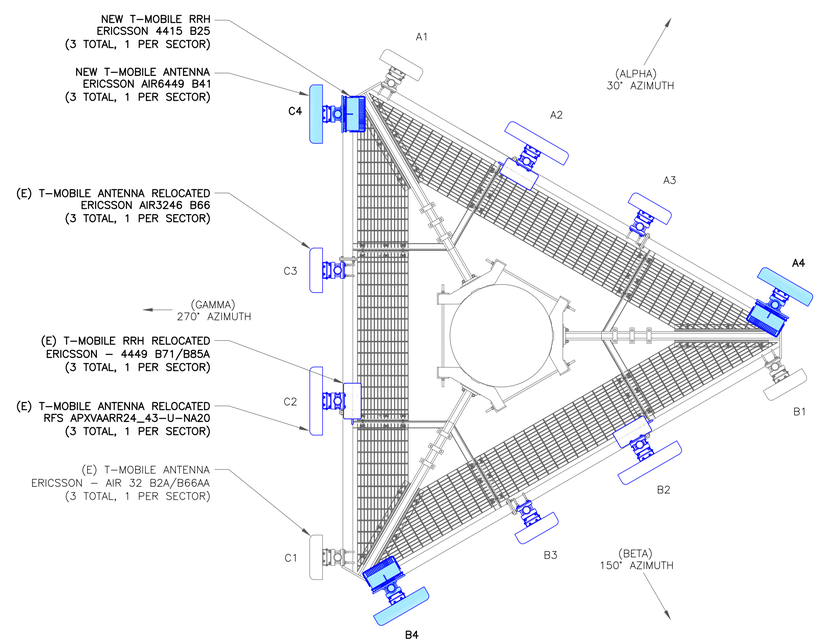

3 FINAL ANTENNA PLAN
SCALE: NOT TO SCALE

N

T-Mobile
4 SYLVAN WAY
PARSIPPANY, NJ 07054

CROWN CASTLE
3530 TORINGDON WAY, SUITE 300
CHARLOTTE, NC 28277

B+T GRP
1717 S. BOULDER
SUITE 300
TULSA, OK 74119
PH: (918) 587-4630
www.btgrp.com

T-MOBILE SITE NUMBER:
CT11082E

BU #: **876320**
528 WHEELERS FARM RD

528 WHEELERS FARM RD
MILFORD, CT 06460

EXISTING
120'-0" MONOPOLE

ISSUED FOR:

REV	DATE	DRWN	DESCRIPTION	DES./QA
0	7/13/20	FWP	CONSTRUCTION	RMC
1	8/6/20	MTJ	CONSTRUCTION	RMC
1	8/10/20	JJD	CONSTRUCTION	MTJ

STATE OF CONNECTICUT
31627
LICENSED
PROFESSIONAL ENGINEER
8/10/20

B&T ENGINEERING, INC.
PEC.0001564
Expires 2/10/21

IT IS A VIOLATION OF LAW FOR ANY PERSON, UNLESS THEY ARE ACTING UNDER THE DIRECTION OF A LICENSED PROFESSIONAL ENGINEER, TO ALTER THIS DOCUMENT.

SHEET NUMBER: C-2

REVISION: 1

80703_876320_Wheelers Farm Rd.dwg - Sheet:C-2 - User: mjones - Aug 10, 2020 - 11:47am

ANTENNA SCHEDULE

SECTOR	POS.	TECHNOLOGY	RAD CENTER	AZIMUTH	ANTENNA MANUFACTURER	ANTENNA MODEL	MECH. TILT	ELECT. TILT	TOWER MOUNTED EQUIPMENT	FEEDLINE TYPE
ALPHA	A1	U2100/G1900/L1900	107'-0"	30°	ERICSSON	AIR 32 B2A/B66A	0°	0°	–	(1) 9x18 HYBRID
ALPHA	A2	L700/L600/N600 /L1900	107'-0"	30°	RFS	APXVAAR25_43-U-NA20	0°	0°	(1) 4449 B71/B85A (1) ERICSSON – RRUS 4415 B25	(1) 6x12 HYBRID
ALPHA	A3	L2100	107'-0"	30°	ERICSSON	AIR 3246 B66	0°	0°	–	(1) 6x12 HYBRID
ALPHA	**A4**	**L2500/N2500**	**107'-0"**	**30°**	**ERICSSON**	**AIR6449 B41**	**0°**	**0°**	**–**	**(1) 6x12 HYBRID**
BETA	B1	U2100/G1900/L1900	107'-0"	150°	ERICSSON	AIR 32 B2A/B66A	0°	0°	–	(SHARED) W/ A1
BETA	B2	L700/L600/N600 /L1900	107'-0"	150°	RFS	APXVAAR25_43-U-NA20	0°	0°	(1) 4449 B71/B85A (1) ERICSSON – RRUS 4415 B25	(SHARED) W/ A2
BETA	B2	L2100	107'-0"	150°	ERICSSON	AIR 3246 B66	0°	0°	–	(SHARED) W/ A3
BETA	**B2**	**L2500/N2500**	**107'-0"**	**150°**	**ERICSSON**	**AIR6449 B41**	**0°**	**0°**		**(SHARED) W/ A4**
GAMMA	C1	U2100/G1900/L1900	107'-0"	270°	ERICSSON	AIR 32 B2A/B66A	0°	0°	–	(SHARED) W/ A1
GAMMA	C2	L700/L600/N600 /L1900	107'-0"	270°	RFS	APXVAAR25_43-U-NA20	0°	0°	(1) 4449 B71/B85A (1) ERICSSON – RRUS 4415 B25	(SHARED) W/ A2
GAMMA	C2	L2100	107'-0"	270°	ERICSSON	AIR 3246 B66	0°	0°	–	(SHARED) W/ A3
GAMMA	**C2**	**L2500/N2500**	**107'-0"**	**270°**	**ERICSSON**	**AIR6449 B41**	**0°**	**0°**		**(SHARED) W/ A4**

1 ANTENNA AND CABLE SCHEDULE
SCALE: NOT TO SCALE

INSTALLER NOTES:

1. COMPLY WITH MANUFACTURERS INSTRUCTIONS TO ENSURE THAT ALL RRHs RECEIVE ELECTRICAL POWER WITHIN 24 HOURS OF BEING REMOVED FROM THE MANUFACTURER'S PACKAGING.
2. DO NOT OPEN RRH PACKAGES IN THE RAIN.
3. ALL PIPES, BRACKETS, AND MISCELLANEOUS HARDWARE TO BE GALVANIZED UNLESS NOTED OTHERWISE.

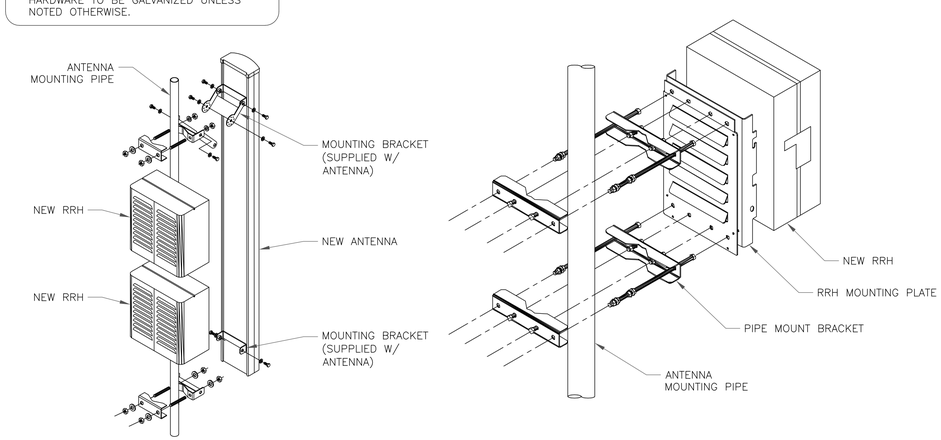

2 ANTENNA WITH RRHs MOUNTING DETAIL
SCALE: NOT TO SCALE

T-Mobile
4 SYLVAN WAY
PARSIPPANY, NJ 07054

CROWN CASTLE
3530 TORINGDON WAY, SUITE 300
CHARLOTTE, NC 28277

B+T GRP
1717 S. BOULDER
SUITE 300
TULSA, OK 74119
PH: (918) 587-4630
www.btgrp.com

T-MOBILE SITE NUMBER:
CT11082E

BU #: **876320**
528 WHEELERS FARM RD

528 WHEELERS FARM RD
MILFORD, CT 06460

EXISTING
120'-0" MONOPOLE

ISSUED FOR:

REV	DATE	DRWN	DESCRIPTION	DES./QA
0	7/13/20	FWP	CONSTRUCTION	RMC
1	8/6/20	MTJ	CONSTRUCTION	RMC
1	8/10/20	JJD	CONSTRUCTION	MTJ

STATE OF CONNECTICUT
31627
LICENSED
PROFESSIONAL ENGINEER
8/10/20

B&T ENGINEERING, INC.
PEC.0001564
Expires 2/10/21

IT IS A VIOLATION OF LAW FOR ANY PERSON, UNLESS THEY ARE ACTING UNDER THE DIRECTION OF A LICENSED PROFESSIONAL ENGINEER, TO ALTER THIS DOCUMENT.

SHEET NUMBER: C-3
REVISION: 1

80703_876320_Wheelers Farm Rd.dwg – Sheet:C-3 – User: mjones – Aug 10, 2020 – 11:47am

67D5992M.JPG

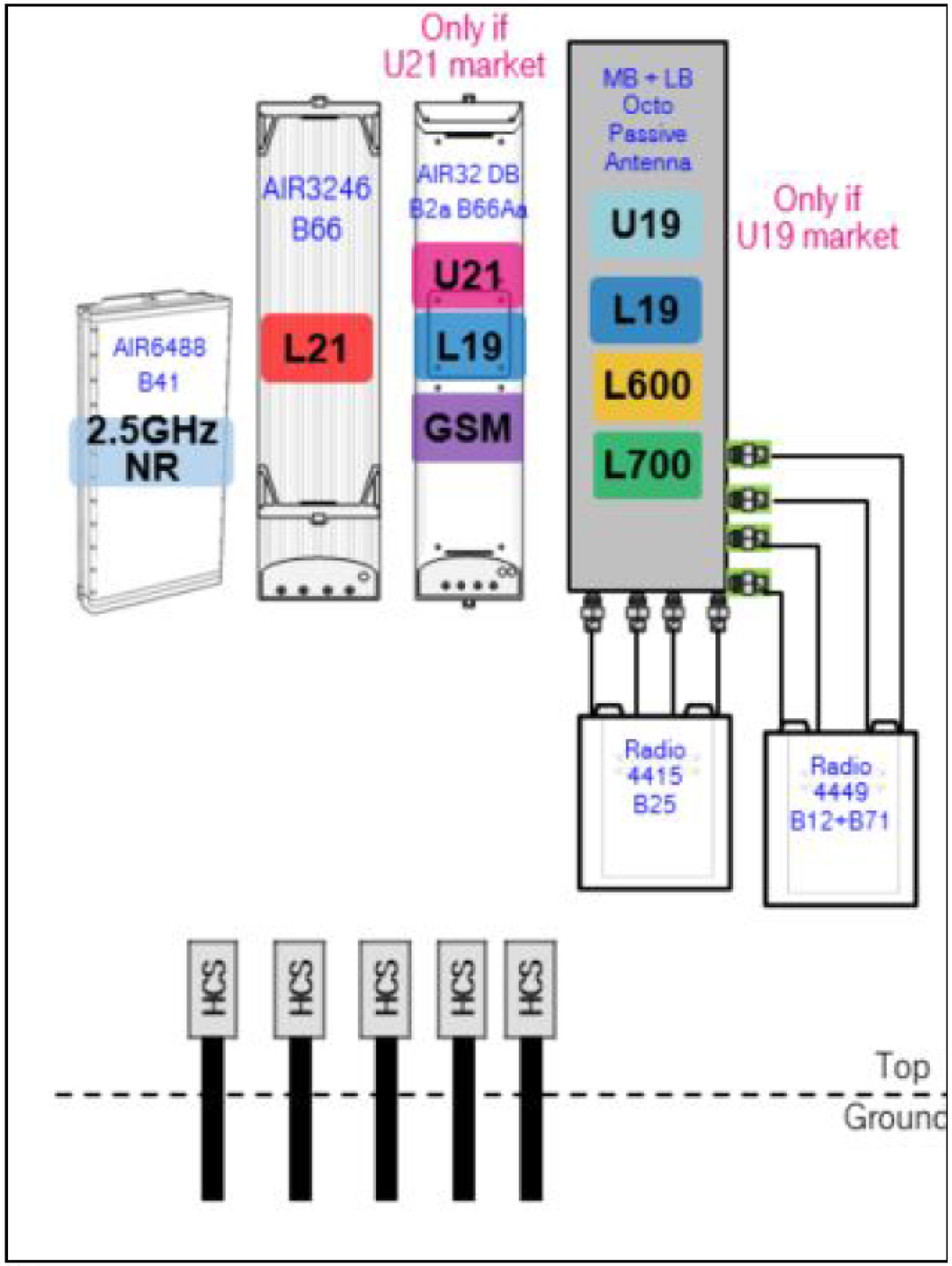

1 PLUMBING DIAGRAM
SCALE: NOT TO SCALE

T-Mobile
4 SYLVAN WAY
PARSIPPANY, NJ 07054

CROWN CASTLE
3530 TORINGDON WAY, SUITE 300
CHARLOTTE, NC 28277

B+T GRP
1717 S. BOULDER
SUITE 300
TULSA, OK 74119
PH: (918) 587-4630
www.btgrp.com

T-MOBILE SITE NUMBER:
CT11082E

BU #: **876320**
528 WHEELERS FARM RD

528 WHEELERS FARM RD
MILFORD, CT 06460

EXISTING
120'-0" MONOPOLE

ISSUED FOR:

REV	DATE	DRWN	DESCRIPTION	DES./QA
0	7/13/20	FWP	CONSTRUCTION	RMC
1	8/6/20	MTJ	CONSTRUCTION	RMC
1	8/10/20	JJD	CONSTRUCTION	MTJ

STATE OF CONNECTICUT
31627
LICENSED
PROFESSIONAL ENGINEER
8/10/20

B&T ENGINEERING, INC.
PEC.0001564
Expires 2/10/21

IT IS A VIOLATION OF LAW FOR ANY PERSON, UNLESS THEY ARE ACTING UNDER THE DIRECTION OF A LICENSED PROFESSIONAL ENGINEER, TO ALTER THIS DOCUMENT.

SHEET NUMBER: C-4
REVISION: 1

80703_876320_Wheelers Farm Rd.dwg – Sheet:C-4 – User: mjones – Aug 10, 2020 – 11:47am

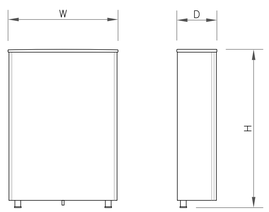

ANTENNA SPECS	
MANUFACTURER	ERICSSON
MODEL #	AIR6449 B41
WIDTH	20.6"
DEPTH	8.6"
HEIGHT	33.1"
WEIGHT	104 LBS

1 ANTENNA SPECS
SCALE: NOT TO SCALE

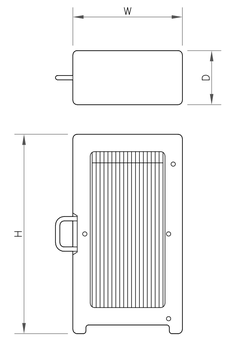

RRU SPECIFICATIONS	
MANUFACTURER	ERICSSON
MODEL #	4415 B25
WIDTH	13.4"
DEPTH	5.9"
HEIGHT	16.5"
WEIGHT	46 LBS

2 RRU SPECS
SCALE: NOT TO SCALE

ERICSSON 6160 SSC
WEIGHT: 60.0 LBS
SIZE (HxWxD): 63"x25.6"x33.5" IN.

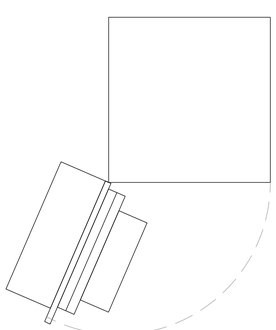

3 ERICSSON 6160 SSC
SCALE: NOT TO SCALE

BATTERY CABINET SPECIFICATIONS	
MODEL #	B160
MANUF.	ERICSSON
HEIGHT	63"
WIDTH	26"
DEPTH	26"
WEIGHT	

4 ERICSSON B160 BATTERY CABINET
SCALE: NOT TO SCALE

Specifications

Maximum Battery Size	190Ah
Maximum Number of Batteries	4
Internal Circuit Breaker Rating (Optional)	200 Amperes Max
Input Circuit Breaker Rating	200 Amperes Max
Input Connections	1/4" inch 2 hole 5/8 inch Spacing
Expansion	Modular / Stringable
Temp Control	Direct Contact Heater Mat Convection Cooled
Local Safety Ground Connection	1/4" inch 2 hole 5/8 inch Spacing
Enclosure Rating	Outdoor
Access Restriction	Front Hatch 5/32 Allen
Dimensions Height Width Depth	Body 32.245" 14.040" 26.305"
Unit Weight / Shipping Weight	60 lbs. / 65 lbs
Paint	Almond Powder Coat
Construction	Aluminum

5 BATTERY CABINET
SCALE: NOT TO SCALE

T-Mobile
4 SYLVAN WAY
PARSIPPANY, NJ 07054

CROWN CASTLE
3530 TORINGDON WAY, SUITE 300
CHARLOTTE, NC 28277

B+T GRP
1717 S. BOULDER
SUITE 300
TULSA, OK 74119
PH: (918) 587-4630
www.btgrp.com

T-MOBILE SITE NUMBER:
CT11082E

BU #: **876320**
528 WHEELERS FARM RD

528 WHEELERS FARM RD
MILFORD, CT 06460

EXISTING
120'-0" MONOPOLE

ISSUED FOR:

REV	DATE	DRWN	DESCRIPTION	DES./QA
0	7/13/20	FWP	CONSTRUCTION	RMC
1	8/6/20	MTJ	CONSTRUCTION	RMC
1	8/10/20	JJD	CONSTRUCTION	MTJ

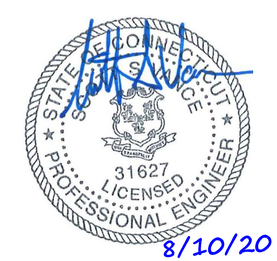

B&T ENGINEERING, INC.
PEC.0001564
Expires 2/10/21

IT IS A VIOLATION OF LAW FOR ANY PERSON, UNLESS THEY ARE ACTING UNDER THE DIRECTION OF A LICENSED PROFESSIONAL ENGINEER, TO ALTER THIS DOCUMENT.

SHEET NUMBER: C-5
REVISION: 1

80703_876320_Wheelers Farm Rd.dwg – Sheet:C-5 – User: mjones – Aug 10, 2020 – 11:47am

T-MOBILE PANEL SCHEDULE

MAIN: 200 AMP MAIN BREAKER | **VOLTAGE/PHASE**: 120/240V, 1-PHASE, 3-WIRE | **SHORT CIRCUIT CURRENT RATING**: ----

MOUNTING: INSIDE PPC ENCLOSURE | **ENCLOSURE**: NEMA 3R | **SURGE PROTECTION DEVICE**: YES

DESCRIPTION	LOAD (VA)	C or NC	C/B	CIR No.	LOAD (VA) A-PHASE	LOAD (VA) B-PHASE	CIR No.	C/B	C or NC	LOAD (VA)	DESCRIPTION
SURGE PROTECTION DEVICE	0	NC	60	1	180		2	20	NC	180	RECEPTACLE
	0	NC		3		200	4	20	NC	200	LIGHT
BTS CABINET **	**3600**	**C**	**150**	5	3600		6				BLANK
	3600	**C**		7		3600	8				
	3600	**C**		9	3600		10				
	3600	**C**		11		3600	12				
BLANK				13	0		14				
				15		0	16				
				17	0		18				
				19		0	20				
				21	0		22				
				23		0	24				
BASE LOAD (VA) =					7380	7400					
25% OF CONTINUOUS LOAD (VA) =					1800	1800					
TOTAL LOAD (VA) =					9180	9200					
TOTAL LOAD (A) =					77	77					

C = CONTINUOUS LOAD; NC = NON-CONTINUOUS LOAD

** INDICATES NEW LOAD. ALL OTHER LOADS ARE EXISTING.
NEW BREAKER TO BE SAME TYPE AND HAVE SAME AIC RATING AS EXISTING.
CUSTOMER HAS NOT PROVIDED LOADS FOR EQUIPMENT CABINETS THEREFORE THE CABINET LOADS SHOWN ARE ESTIMATED VALUES.

1 AC PANEL SCHEDULE
SCALE: NOT TO SCALE

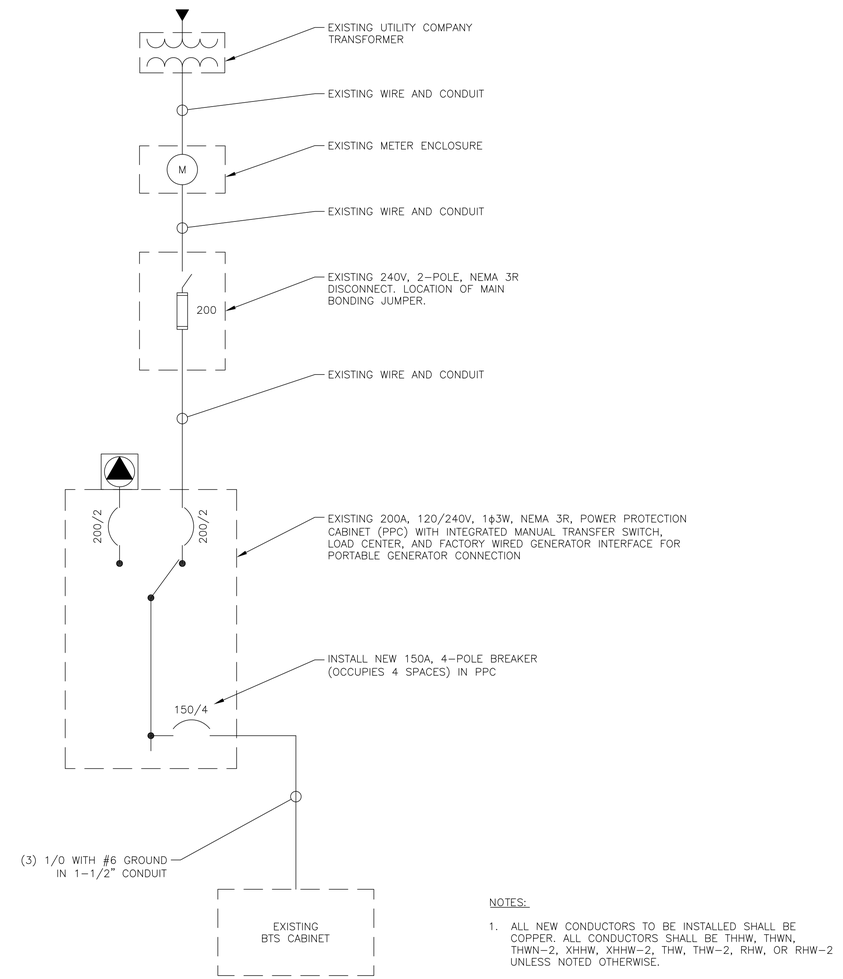

NOTES:

1. ALL NEW CONDUCTORS TO BE INSTALLED SHALL BE COPPER. ALL CONDUCTORS SHALL BE THHW, THWN, THWN-2, XHHW, XHHW-2, THW, THW-2, RHW, OR RHW-2 UNLESS NOTED OTHERWISE.
2. CONTRACTOR IS TO FIELD VERIFY ALL EXISTING ITEMS SHOWN ON THE ELECTRICAL ONE-LINE DIAGRAM AND NOTIFY THE ENGINEER OF ANY DISCREPANCIES.
3. ALL GROUNDING AND BONDING PER THE NEC.

2 ONE LINE DIAGRAM
SCALE: NOT TO SCALE

T-Mobile
4 SYLVAN WAY
PARSIPPANY, NJ 07054

CROWN CASTLE
3530 TORINGDON WAY, SUITE 300
CHARLOTTE, NC 28277

B+T GRP
1717 S. BOULDER
SUITE 300
TULSA, OK 74119
PH: (918) 587-4630
www.btgrp.com

T-MOBILE SITE NUMBER:
CT11082E

BU #: **876320**
528 WHEELERS FARM RD

528 WHEELERS FARM RD
MILFORD, CT 06460

EXISTING
120'-0" MONOPOLE

ISSUED FOR:

REV	DATE	DRWN	DESCRIPTION	DES./QA
0	7/13/20	FWP	CONSTRUCTION	RMC
1	8/6/20	MTJ	CONSTRUCTION	RMC
1	8/10/20	JJD	CONSTRUCTION	MTJ

STATE OF CONNECTICUT
31627
LICENSED
PROFESSIONAL ENGINEER
8/10/20

B&T ENGINEERING, INC.
PEC.0001564
Expires 2/10/21

IT IS A VIOLATION OF LAW FOR ANY PERSON, UNLESS THEY ARE ACTING UNDER THE DIRECTION OF A LICENSED PROFESSIONAL ENGINEER, TO ALTER THIS DOCUMENT.

SHEET NUMBER: E-1
REVISION: 1

80703_876320_Wheelers Farm Rd.dwg – Sheet:E-1 – User: mjones – Aug 10, 2020 – 11:47am

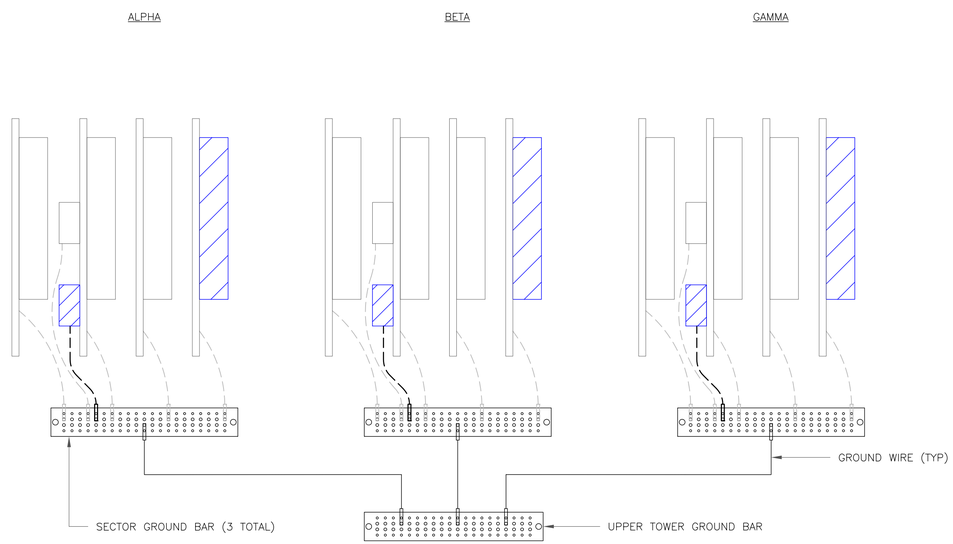

NOTE:

ALL NEW GROUNDS TO BE #6 STRANDED COPPER WITH GREEN INSULATION UNLESS NOTED OTHERWISE.

1 ANTENNA GROUNDING DIAGRAM
SCALE: NOT TO SCALE

T-Mobile
4 SYLVAN WAY
PARSIPPANY, NJ 07054

CROWN CASTLE
3530 TORINGDON WAY, SUITE 300
CHARLOTTE, NC 28277

B+T GRP
1717 S. BOULDER
SUITE 300
TULSA, OK 74119
PH: (918) 587-4630
www.btgrp.com

T-MOBILE SITE NUMBER:
CT11082E

BU #: **876320**
528 WHEELERS FARM RD

528 WHEELERS FARM RD
MILFORD, CT 06460

EXISTING
120'-0" MONOPOLE

ISSUED FOR:

REV	DATE	DRWN	DESCRIPTION	DES./QA
0	7/13/20	FWP	CONSTRUCTION	RMC
1	8/6/20	MTJ	CONSTRUCTION	RMC
1	8/10/20	JJD	CONSTRUCTION	MTJ

STATE OF CONNECTICUT
31627
LICENSED
PROFESSIONAL ENGINEER
8/10/20

B&T ENGINEERING, INC.
PEC.0001564
Expires 2/10/21

IT IS A VIOLATION OF LAW FOR ANY PERSON, UNLESS THEY ARE ACTING UNDER THE DIRECTION OF A LICENSED PROFESSIONAL ENGINEER, TO ALTER THIS DOCUMENT.

SHEET NUMBER: G-1
REVISION: 1

80703_876320_Wheelers Farm Rd.dwg – Sheet:G-1 – User: mjones – Aug 10, 2020 – 11:47am

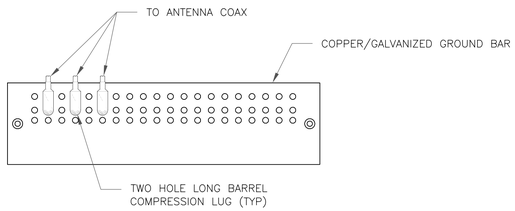

NOTES:

1. DOUBLING UP "OR STACKING" OF CONNECTIONS IS NOT PERMITTED.
2. EXTERIOR ANTIOXIDANT JOINT COMPOUND TO BE USED ON ALL EXTERIOR CONNECTIONS.
3. GROUND BAR SHALL NOT BE ISOLATED FROM TOWER. MOUNT DIRECTLY TO ANTENNA MOUNT STEEL.

1 ANTENNA SECTOR GROUND BAR DETAIL
SCALE: NOT TO SCALE

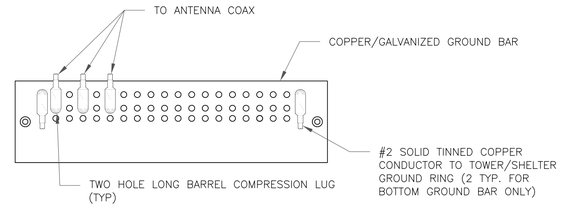

NOTES:

1. EXTERIOR ANTIOXIDANT JOINT COMPOUND TO BE USED ON ALL EXTERIOR CONNECTIONS.
2. GROUND BAR SHALL NOT BE ISOLATED FROM TOWER. MOUNT DIRECTLY TO TOWER STEEL (TOWER ONLY).
3. GROUND BAR SHALL BE ISOLATED FROM BUILDING OR SHELTER.

2 TOWER/SHELTER GROUND BAR DETAIL
SCALE: NOT TO SCALE

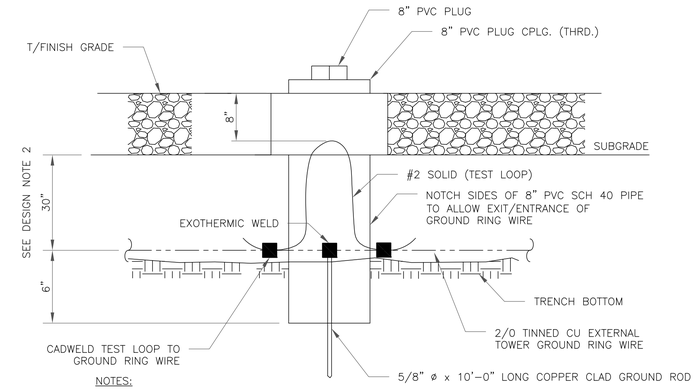

NOTES:

1. GROUND ROD SHALL BE DRIVEN VERTICALLY, NOT TO EXCEED 45 DEGREES FROM THE VERTICAL
2. GROUND WIRE SHALL BE MIN. 30" BELOW GRADE OR 6" BELOW FROST LINE. (WHICH EVER IS GREATER) AS PER N.E.C. ARTICLE 250-50(D)

3 INSPECTION WELL DETAIL
SCALE: NOT TO SCALE

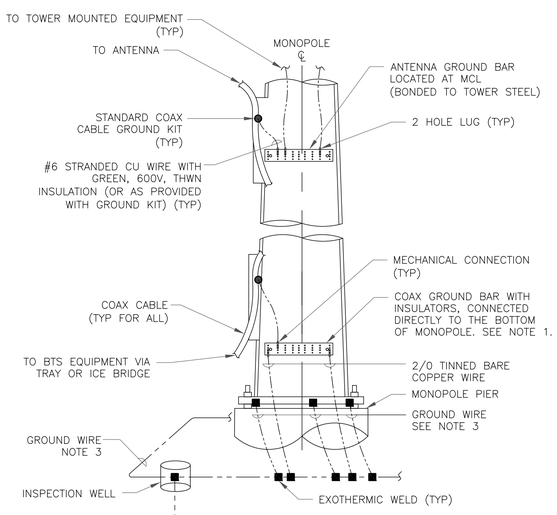

NOTES:

1. NUMBER OF GROUNDING BARS MAY VARY DEPENDING ON THE TYPE OF TOWER, ANTENNA LOCATIONS AND CONNECTION ORIENTATION. COAXIAL CABLES EXCEEDING 200 FEET ON THE TOWER SHALL HAVE GROUND KITS AT THE MIDPOINT. PROVIDE AS REQUIRED.
2. ONLY MECHANICAL CONNECTIONS ARE ALLOWED TO BE MADE TO CROWN CASTLE USA INC. TOWERS. ALL MECHANICAL CONNECTIONS SHALL BE TREATED WITH AN ANTI-OXIDANT COATING.
3. ALL TOWER GROUNDING SYSTEMS SHALL COMPLY WITH THE REQUIREMENTS OF THE RECOGNIZED EDITION OF ANSI/TIA 222 AND NFPA 780.

4 TYPICAL ANTENNA CABLE GROUNDING
SCALE: NOT TO SCALE

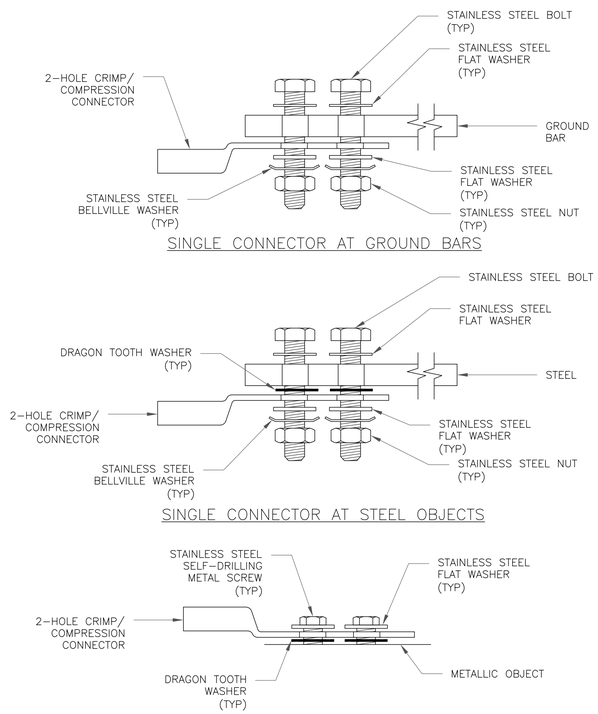

5 HARDWARE DETAIL FOR EXTERIOR CONNECTIONS
SCALE: NOT TO SCALE

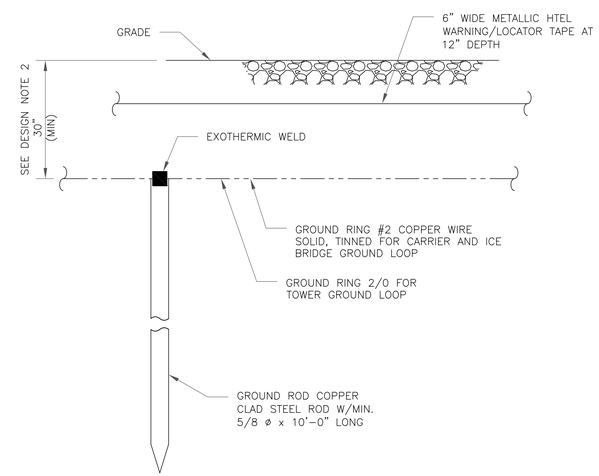

NOTES:

1. GROUND ROD SHALL BE DRIVEN VERTICALLY, NOT TO EXCEED 45 DEGREES FROM THE VERTICAL
2. GROUND WIRE SHALL BE MIN. 30" BELOW GRADE OR 6" BELOW FROST LINE. (WHICH EVER IS GREATER) AS PER N.E.C. ARTICLE 250-50(D)

6 GROUND ROD DETAIL
SCALE: NOT TO SCALE

T-Mobile
4 SYLVAN WAY
PARSIPPANY, NJ 07054

CROWN CASTLE
3530 TORINGDON WAY, SUITE 300
CHARLOTTE, NC 28277

B+T GRP
1717 S. BOULDER
SUITE 300
TULSA, OK 74119
PH: (918) 587-4630
www.btgrp.com

T-MOBILE SITE NUMBER:
CT11082E

BU #: **876320**
528 WHEELERS FARM RD

528 WHEELERS FARM RD
MILFORD, CT 06460

EXISTING
120'-0" MONOPOLE

ISSUED FOR:

REV	DATE	DRWN	DESCRIPTION	DES./QA
0	7/13/20	FWP	CONSTRUCTION	RMC
1	8/6/20	MTJ	CONSTRUCTION	RMC
1	8/10/20	JJD	CONSTRUCTION	MTJ

B&T ENGINEERING, INC.
PEC.0001564
Expires 2/10/21

IT IS A VIOLATION OF LAW FOR ANY PERSON, UNLESS THEY ARE ACTING UNDER THE DIRECTION OF A LICENSED PROFESSIONAL ENGINEER, TO ALTER THIS DOCUMENT.

SHEET NUMBER: G-2
REVISION: 1

80703_876320_Wheelers Farm Rd.dwg - Sheet:G-2 - User: mjones - Aug 10, 2020 - 11:47am

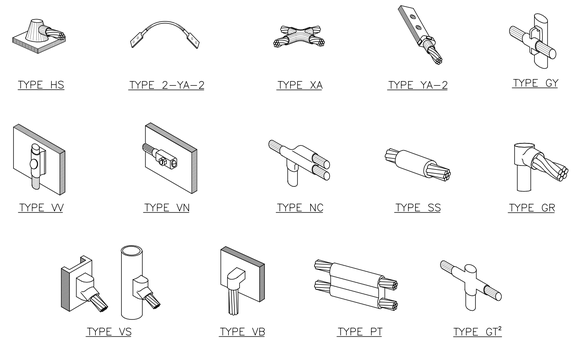

NOTE:

1. ERICO EXOTHERMIC "MOLD TYPES" SHOWN HERE ARE EXAMPLES. CONSULT WITH CONSTRUCTION MANAGER FOR SPECIFIC MOLDS TO BE USED FOR THIS PROJECT.
2. MOLD TYPE ONLY TO BE USED BELOW GRADE WHEN CONNECTING GROUND RING TO GROUND ROD.

1 CADWELD GROUNDING CONNECTIONS
SCALE: NOT TO SCALE

WIRE SIZE	BURNDY LUG	BOLT SIZE
#6 AWG GREEN INSULATED	YA6C-2TC38	3/8" - 16 NC S 2 BOLT
#2 AWG SOLID TINNED	YA3C-2TC38	3/8" - 16 NC S 2 BOLT
#2 AWG STRANDED	YA2C-2TC38	3/8" - 16 NC S 2 BOLT
#2/0 AWG STRANDED	YA26-2TC38	3/8" - 16 NC S 2 BOLT
#4/0 AWG STRANDED	YA28-2N	1/2" - 16 NC S 2 BOLT

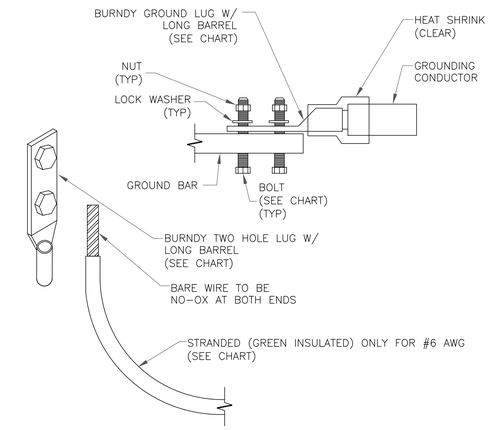

NOTES:

1. ALL GROUNDING LUGS ARE TO BE INSTALLED PER MANUFACTURER'S SPECIFICATIONS. ALL HARDWARE BOLTS, NUTS, LOCK WASHERS SHALL BE STAINLESS STEEL. ALL HARDWARE ARE TO BE AS FOLLOWS: BOLT, FLAT WASHER,GROUND BAR, GROUND LUG, FLAT WASHER AND NUT.

2 MECHANICAL LUG CONNECTION
SCALE: NOT TO SCALE

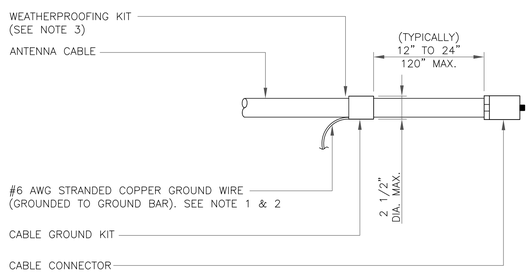

NOTES:

1. DO NOT INSTALL CABLE GROUND KIT AT A BEND AND ALWAYS DIRECT GROUND WIRE DOWN TO GROUND BAR.
2. GROUNDING KIT SHALL BE TYPE AND PART NUMBER AS SUPPLIED OR RECOMMENDED BY CABLE MANUFACTURER.
3. WEATHER PROOFING SHALL BE TWO-PART TAPE KIT, COLD SHRINK SHALL NOT BE USED.

3 CABLE GROUND KIT CONNECTION
SCALE: NOT TO SCALE

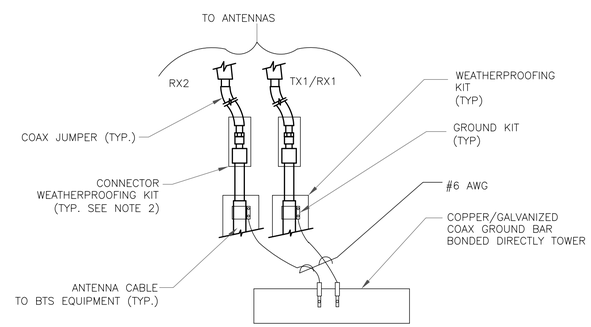

NOTES:

1. DO NOT INSTALL CABLE GROUND KIT AT A BEND AND ALWAYS DIRECT GROUND WIRE DOWN TO ANTENNA GROUND BAR.
2. WEATHER PROOFING SHALL BE TWO-PART TAPE KIT. COLD SHRINK SHALL NOT BE USED.

4 GROUND CABLE CONNECTION
SCALE: NOT TO SCALE

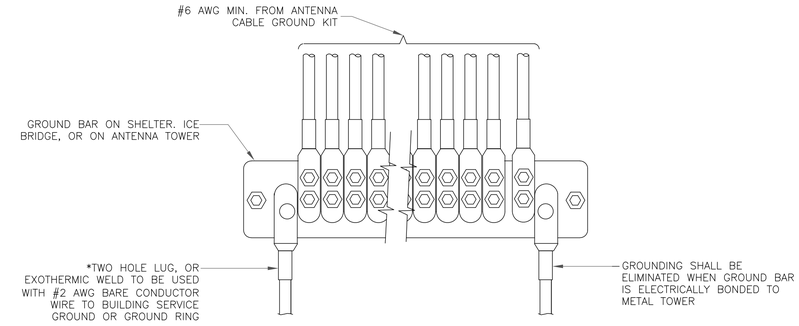

5 GROUNDWIRE INSTALLATION
SCALE: NOT TO SCALE

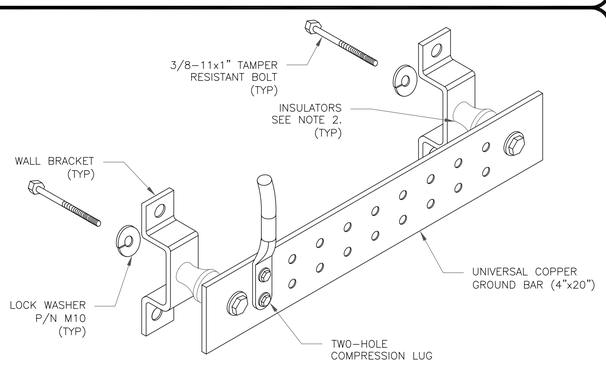

NOTES:

1. DOWN LEAD (HOME RUN) CONDUCTORS ARE NOT TO BE INSTALLED ON CROWN CASTLE USA INC. TOWER, PER THE GROUNDING DOWN CONDUCTOR POLICY QAS-STD-10091. NO MODIFICATION OR DRILLING TO TOWER STEEL IS ALLOWED IN ANY FORM OR FASHION, CAD-WELDING ON THE TOWER AND/OR IN THE AIR ARE NOT PERMITTED.
2. OMIT INSULATOR WHEN MOUNTING TO TOWER STEEL OR PLATFORM STEEL USE INSULATORS WHEN ATTACHING TO BUILDING OR SHELTERS.

6 GROUND BAR DETAIL
SCALE: NOT TO SCALE

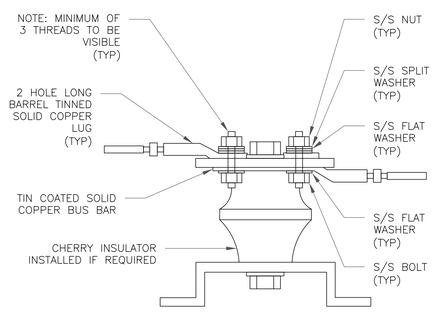

7 LUG DETAIL
SCALE: NOT TO SCALE

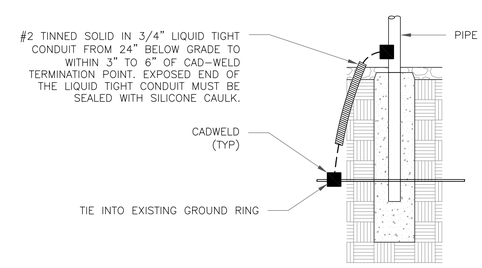

8 TRANSITIONING GROUND DETAIL
SCALE: NOT TO SCALE

T-Mobile
4 SYLVAN WAY
PARSIPPANY, NJ 07054

CROWN CASTLE
3530 TORINGDON WAY, SUITE 300
CHARLOTTE, NC 28277

B+T GRP
1717 S. BOULDER
SUITE 300
TULSA, OK 74119
PH: (918) 587-4630
www.btgrp.com

T-MOBILE SITE NUMBER:
CT11082E

BU #: **876320**
528 WHEELERS FARM RD

528 WHEELERS FARM RD
MILFORD, CT 06460

EXISTING
120'-0" MONOPOLE

ISSUED FOR:

REV	DATE	DRWN	DESCRIPTION	DES./QA
0	7/13/20	FWP	CONSTRUCTION	RMC
1	8/6/20	MTJ	CONSTRUCTION	RMC
1	8/10/20	JJD	CONSTRUCTION	MTJ

B&T ENGINEERING, INC.
PEC.0001564
Expires 2/10/21

IT IS A VIOLATION OF LAW FOR ANY PERSON, UNLESS THEY ARE ACTING UNDER THE DIRECTION OF A LICENSED PROFESSIONAL ENGINEER, TO ALTER THIS DOCUMENT.

SHEET NUMBER: G-3
REVISION: 1

80703_876320_Wheelers Farm Rd.dwg - Sheet:G-3 - User: mjones - Aug 10, 2020 - 11:47am

Exhibit D

Structural Analysis Report

Date: **June 19, 2020**

Andera Slaughter
Crown Castle
8000 Avalon Blvd., Suite 700
Alpharetta, GA 30009

Tower Engineering Professionals
326 Tryon Road
Raleigh, NC 27603
(919) 661-6351

Subject: Structural Analysis Report

Carrier Designation:	***T-Mobile* Co-Locate**	
	Carrier Site Number:	CT11082E
	Carrier Site Name:	Stratford/ MP X 53/ Main
Crown Castle Designation:	**Crown Castle BU Number:**	876320
	Crown Castle Site Name:	528 Wheelers Farm Rd
	Crown Castle JDE Job Number:	614504
	Crown Castle Work Order Number:	1860372
	Crown Castle Order Number:	524457 Rev. 0
Engineering Firm Designation:	**TEP Project Number:**	25570.425141
Site Data:	**528 Wheelers Farm Road, Milford, New Haven County, CT 06460** **Latitude *41° 14' 54.35"*, Longitude *-73° 4' 44.67"*** **120 Foot - Monopole Tower**	

Dear Andera Slaughter,

Tower Engineering Professionals is pleased to submit this **"Structural Analysis Report"** to determine the structural integrity of the above-mentioned tower.

The purpose of the analysis is to determine acceptability of the tower stress level. Based on our analysis we have determined the tower stress level for the structure and foundation, under the following load case, to be:

LC7: Proposed Equipment Configuration **Sufficient Capacity - 98.5%**

This analysis utilizes an ultimate 3-second gust wind speed of 125 mph as required by the 2015 International Building Code. Applicable Standard references and design criteria are listed in Section 2 - Analysis Criteria.

Structural analysis prepared by: Cooper Bowen, E.I. / RKE

Respectfully submitted by:

Aaron T. Rucker, P.E.

STATE OF CONNECTICUT
AARON THOMAS RUCKER
32608
LICENSED
PROFESSIONAL ENGINEER

Electronic Copy

06/19/2020

TABLE OF CONTENTS

1) INTRODUCTION

2) ANALYSIS CRITERIA
- Table 1 - Proposed Equipment Configuration
- Table 2 - Other Considered Equipment

3) ANALYSIS PROCEDURE
- Table 3 - Documents Provided
- 3.1) Analysis Method
- 3.2) Assumptions

4) ANALYSIS RESULTS
- Table 4 - Section Capacity (Summary)
- Table 5 - Tower Component Stresses vs. Capacity
- 4.1) Recommendations

5) APPENDIX A
- tnxTower Output

6) APPENDIX B
- Base Level Drawing

7) APPENDIX C
- Additional Calculations

1) INTRODUCTION

This tower is a 120-ft monopole tower designed by Paul J. Ford and Company. The tower has been modified multiple times in the past to accommodate additional loading. The shaft modifications designed by Semaan Engineering in February of 2004 were determined to be ineffective and not considered structurally in this analysis.

2) ANALYSIS CRITERIA

TIA-222 Revision:	TIA-222-H
Risk Category:	II
Wind Speed:	125 mph
Exposure Category:	C
Topographic Factor:	1.0
Ice Thickness:	1.5 in
Wind Speed with Ice:	50 mph
Service Wind Speed:	60 mph

Table 1 - Proposed Equipment Configuration

Mounting Level (ft)	Center Line Elevation (ft)	Number of Antennas	Antenna Manufacturer	Antenna Model	Number of Feed Lines	Feed Line Size (in)
105.0	107.0	3	Ericsson	AIR6449 B41 w/ Mount Pipe	1 3	1-5/8 1-3/8
		3	Ericsson	AIR 3246 B66 w/ Mount Pipe		
		3	RFS Celwave	APXVAARR24_43-U-NA20 w/ Mount Pipe		
		3	Ericsson	AIR 32 B2a/B66A w/ Mount Pipe		
		3	Ericsson	RADIO 4449 B71/B85A		
		3	Ericsson	RRUS 4415 B25_CCIV2		
	105.0	1	SitePro1	SitePro1 RMQP-4096-HK		

Table 2 - Other Considered Equipment

Mounting Level (ft)	Center Line Elevation (ft)	Number of Antennas	Antenna Manufacturer	Antenna Model	Number of Feed Lines	Feed Line Size (in)
122.0	125.0	2	Andrew	VHLP2-11	6 1 3 4	5/16 1/8 7983A 1-1/4
	123.0	1	MTI Wireless Edge	MT-485025/NVH w/ Mount Pipe		
		1	Andrew	PX2F-52		
	122.0	3	Argus Technologies	LLPX310R w/ Mount Pipe		
		3	Samsung Telecom.	FDD_R6_RRH		
		1	Tower Mounts	Platform Mount [LP 1201-1_HR-1]		
	121.0	3	RFS Celwave	APXVTM14-ALU-I20 w/ Mount Pipe		
		3	RFS Celwave	APXVSPP18-C-A20 w/ Mount Pipe		
		2	Alcatel Lucent	PCS 1900MHz 4x45W-65MHz		
		1	Alcatel Lucent	800MHZ RRH		
		3	Alcatel Lucent	TD-RRH8x20-25		
	120.0	9	RFS Celwave	ACU-A20-N		
		1	Alcatel Lucent	PCS 1900MHz 4x45W-65MHz		
		2	Alcatel Lucent	800MHZ RRH		
		3	Alcatel Lucent	800 External Notch Filter		
113.0	114.0	1	Commscope	JAHH-65B-R3B w/ Mount Pipe	8	1-5/8
		2	Commscope	JAHH-45B-R3B w/ Mount Pipe		
		1	Commscope	JAHH-65B-R3B		
		2	Commscope	JAHH-45B-R3B		
		3	Commscope	SSPX310R w/ Mount Pipe		
		2	Andrew	DB846F65ZAXY w/ Mount Pipe		
		4	Antel	LPA-80063/4CF w/ Mount Pipe		
		3	Commscope	CBC78T-DS-43-2X		
		3	Samsung Telecom.	20W CBRS		
		2	RFS Celwave	DB-T1-6Z-8AB-0Z		
		3	Samsung Telecom.	RFV01U-D1A		
		3	Samsung Telecom.	RFV01U-D2A		
	113.0	1	Tower Mounts	Platform Mount [LP 305-1_KCKR-HR-1]		
97.0	97.0	3	Ericsson	RRUS 32 B30	-	-
		2	Raycap	DC6-48-60-18-8F		
		1	Tower Mounts	Side Arm Mount [SO 102-3]		

Mounting Level (ft)	Center Line Elevation (ft)	Number of Antennas	Antenna Manufacturer	Antenna Model	Number of Feed Lines	Feed Line Size (in)
96.0	98.0	3	Powerwave Technologies	7770.00 w/ Mount Pipe	12 3 6	1-1/4 3/8 3/4
		6	Kathrein	80010965 w/ Mount Pipe		
		3	Quintel Technology	QS66512-2 w/ Mount Pipe		
		6	Powerwave Technologies	LGP21401		
		3	Raycap	DC6-48-60-18-8F		
		6	Kaelus	DBC0061F1V51-2		
		3	Ericsson	RRUS 8843 B2/B66A		
		3	Ericsson	RRUS 32		
		3	Ericsson	RRUS 4478 B14		
		3	Ericsson	RRUS 4449 B5/B12		
		1	Commscope	WCS-IMFQ-AMT		
	96.0	1	Tower Mounts	Platform Mount [LP 712-1]		
		1	Tower Mounts	Miscellaneous [NA 507-1]		
82.0	82.0	-	-	-	12	7/8
75.0	76.0	1	Trimble	ACUTIME 2000	1	1/2
	75.0	1	Tower Mounts	Side Arm Mount [SO 701-1]		

3) ANALYSIS PROCEDURE

Table 3 - Documents Provided

Document	Remarks	Reference	Source
Geotechnical Report	FDH, Inc.	1613534	CCISites
Tower Foundation Drawings	Paul J. Ford and Company	1614583	CCISites
Tower Manufacturer Drawings	Paul J. Ford and Company	1614557	CCISites
Tower Reinforcement Drawings	Semaan Engineering	1613579	CCISites
Post-Modification Inspection	Semaan Engineering	3350209	CCISites
Tower Reinforcement Drawings	B&T Engineering	2460630	CCISites
Post-Modification Inspection	B&T Engineering	2460628	CCISites
Tower Reinforcement Drawings	B&T Engineering	3349207	CCISites
Post-Modification Inspection	B&T Engineering	3349204	CCISites
Tower Reinforcement Drawings	Paul J. Ford and Company	3338935	CCISites
Post-Modification Inspection	Tower Engineering Professionals	3753892	CCISites
Tower Reinforcement Drawings	Paul J. Ford and Company	4961357	CCISites
Post-Modification Inspection	SGS, Inc.	5760332	CCISites
Tower Reinforcement Drawings	Paul J. Ford and Company	5873963	CCISites
Post-Modification Inspection	FDH Velocitel	6112300	CCISites
Tower Reinforcement Drawings	Tower Engineering Professionals	8550831	CCISites
Post-Modification Inspection	Engineered Tower Solutions	8820087	CCISites

3.1) Analysis Method

tnxTower (version 8.0.5.0), a commercially available analysis software package, was used to create a three-dimensional model of the tower and calculate member stresses for various loading cases. Selected output from the analysis is included in Appendix A. When applicable, Crown Castle has calculated and provided the effective area for panel antennas using approved methods following the intent of the TIA-222 Standard.

tnxTower was used to determine the loads on the modified structure. Additional calculations were performed to determine the stresses in the pole and in the reinforcing elements. These calculations are presented in Appendix C.

3.2) Assumptions

1) The tower and structures were maintained in accordance with the TIA-222 Standard.
2) The configuration of antennas, transmission cables, mounts and other appurtenances are as specified in Tables 1 and 2, and the referenced drawings.

This analysis may be affected if any assumptions are not valid or have been made in error. Tower Engineering Professionals should be notified to determine the effect on the structural integrity of the tower.

4) ANALYSIS RESULTS

Table 4 - Section Capacity (Summary)[1,2]

Elevation (ft)	Component Type	Size	Critical Element	% Capacity	Pass / Fail
120 - 115	Pole	TP23.01x22x0.25	Pole	7.4%	Pass
115 - 110	Pole	TP24.02x23.01x0.25	Pole	16.4%	Pass
110 - 105	Pole	TP25.031x24.02x0.25	Pole	25.7%	Pass
105 - 100	Pole	TP26.041x25.031x0.25	Pole	39.7%	Pass
100 - 99.25	Pole	TP26.192x26.041x0.25	Pole	41.5%	Pass
99.25 - 99	Pole + Reinf.	TP26.243x26.192x0.3625	Reinf. 14 Tension Yield	38.4%	Pass
99 - 94	Pole + Reinf.	TP27.253x26.243x0.3563	Reinf. 14 Tension Yield	51.9%	Pass
94 - 90.08	Pole + Reinf.	TP28.045x27.253x0.35	Reinf. 14 Tension Yield	62.6%	Pass
90.08 - 89.83	Pole + Reinf.	TP28.096x28.045x0.5125	Reinf. 11 Tension Rupture	51.9%	Pass
89.83 - 89.5	Pole + Reinf.	TP28.162x28.096x0.5125	Reinf. 11 Tension Rupture	52.6%	Pass
89.5 - 89.25	Pole + Reinf.	TP28.213x28.162x0.725	Reinf. 15 Tension Yield	40.7%	Pass
89.25 - 84.25	Pole + Reinf.	TP29.223x28.213x0.7	Reinf. 15 Tension Yield	49.0%	Pass
84.25 - 81.75	Pole + Reinf.	TP30.486x29.223x0.7	Reinf. 15 Tension Yield	53.0%	Pass
81.75 - 77	Pole + Reinf.	TP30.188x29.228x0.8625	Reinf. 17 Tension Yield	47.8%	Pass
77 - 76.75	Pole + Reinf.	TP30.239x30.188x0.8625	Reinf. 17 Tension Yield	48.1%	Pass
76.75 - 76.5	Pole + Reinf.	TP30.289x30.239x0.9625	Reinf. 14 Tension Yield	45.2%	Pass
76.5 - 75.5	Pole + Reinf.	TP30.491x30.289x0.9625	Reinf. 14 Tension Yield	46.3%	Pass
75.5 - 75.25	Pole + Reinf.	TP30.542x30.491x0.7625	Reinf. 17 Tension Yield	53.3%	Pass
75.25 - 74.5	Pole + Reinf.	TP30.693x30.542x0.7625	Reinf. 17 Tension Yield	54.2%	Pass
74.5 - 74.25	Pole + Reinf.	TP30.744x30.693x0.8375	Reinf. 17 Tension Yield	57.1%	Pass
74.25 - 72	Pole + Reinf.	TP31.198x30.744x0.825	Reinf. 17 Tension Yield	60.0%	Pass
72 - 71.75	Pole + Reinf.	TP31.249x31.198x0.7625	Reinf. 17 Tension Yield	57.5%	Pass
71.75 - 70.5	Pole + Reinf.	TP31.501x31.249x0.7625	Reinf. 17 Tension Yield	59.0%	Pass

Elevation (ft)	Component Type	Size	Critical Element	% Capacity	Pass / Fail
70.5 - 70.25	Pole + Reinf.	TP31.552x31.501x0.7875	Reinf. 17 Tension Yield	59.1%	Pass
70.25 - 70	Pole + Reinf.	TP31.602x31.552x0.7875	Reinf. 17 Tension Yield	59.4%	Pass
70 - 69.75	Pole + Reinf.	TP31.653x31.602x0.725	Reinf. 17 Tension Yield	61.6%	Pass
69.75 - 69.5	Pole + Reinf.	TP31.703x31.653x0.875	Reinf. 4 Tension Yield	52.3%	Pass
69.5 - 69.25	Pole + Reinf.	TP31.754x31.703x0.75	Reinf. 4 Tension Yield	58.4%	Pass
69.25 - 64.25	Pole + Reinf.	TP32.764x31.754x0.7375	Reinf. 4 Tension Yield	63.8%	Pass
64.25 - 59.25	Pole + Reinf.	TP33.774x32.764x0.7125	Reinf. 4 Tension Yield	69.0%	Pass
59.25 - 56	Pole + Reinf.	TP34.431x33.774x0.7125	Reinf. 4 Tension Yield	72.2%	Pass
56 - 55.75	Pole + Reinf.	TP34.481x34.431x0.8125	Reinf. 7 Tension Rupture	69.5%	Pass
55.75 - 55.5	Pole + Reinf.	TP34.532x34.481x0.8125	Reinf. 7 Tension Rupture	69.7%	Pass
55.5 - 55.25	Pole + Reinf.	TP34.582x34.532x0.8875	Reinf. 7 Tension Rupture	62.8%	Pass
55.25 - 54	Pole + Reinf.	TP34.835x34.582x0.875	Reinf. 7 Tension Rupture	63.9%	Pass
54 - 53.75	Pole + Reinf.	TP34.885x34.835x0.75	Reinf. 7 Tension Rupture	73.3%	Pass
53.75 - 53.5	Pole + Reinf.	TP34.936x34.885x0.7375	Reinf. 7 Tension Rupture	73.6%	Pass
53.5 - 53.25	Pole + Reinf.	TP34.986x34.936x0.6625	Reinf. 4 Tension Yield	79.0%	Pass
53.25 - 53	Pole + Reinf.	TP35.037x34.986x0.6	Reinf. 12 Tension Rupture	81.6%	Pass
53 - 48	Pole + Reinf.	TP36.047x35.037x0.5875	Reinf. 12 Tension Rupture	86.8%	Pass
48 - 44.5	Pole + Reinf.	TP37.714x36.047x0.5875	Reinf. 12 Tension Rupture	90.2%	Pass
44.5 - 38.75	Pole + Reinf.	TP37.291x36.129x0.6625	Reinf. 4 Tension Yield	88.2%	Pass
38.75 - 34.75	Pole + Reinf.	TP38.099x37.291x0.6625	Reinf. 4 Tension Yield	91.2%	Pass
34.75 - 34.5	Pole + Reinf.	TP38.15x38.099x0.825	Reinf. 3 Tension Yield	73.1%	Pass
34.5 - 33.75	Pole + Reinf.	TP38.301x38.15x0.825	Reinf. 3 Tension Yield	73.6%	Pass
33.75 - 33.5	Pole + Reinf.	TP38.352x38.301x0.625	Reinf. 6 Tension Rupture	90.6%	Pass
33.5 - 28.5	Pole + Reinf.	TP39.362x38.352x0.6125	Reinf. 6 Tension Rupture	94.0%	Pass
28.5 - 24	Pole + Reinf.	TP40.271x39.362x0.6625	Reinf. 3 Tension Yield	97.0%	Pass
24 - 23.75	Pole + Reinf.	TP40.322x40.271x0.7	Reinf. 3 Tension Yield	92.8%	Pass
23.75 - 18.75	Pole + Reinf.	TP41.332x40.322x0.6875	Reinf. 3 Tension Yield	95.9%	Pass
18.75 - 14.25	Pole + Reinf.	TP42.241x41.332x0.675	Reinf. 3 Tension Yield	98.5%	Pass
14.25 - 14	Pole + Reinf.	TP42.291x42.241x0.775	Reinf. 3 Tension Yield	85.8%	Pass
14 - 9	Pole + Reinf.	TP43.302x42.291x0.7625	Reinf. 3 Tension Yield	88.4%	Pass
9 - 5	Pole + Reinf.	TP44.11x43.302x0.75	Reinf. 3 Tension Yield	90.3%	Pass
5 - 4.75	Pole + Reinf.	TP44.16x44.11x0.9125	Reinf. 3 Tension Yield	81.9%	Pass
4.75 - 4.5	Pole + Reinf.	TP44.211x44.16x0.8	Reinf. 5 Tension Rupture	80.9%	Pass
4.5 - 0	Pole + Reinf.	TP45.12x44.211x0.7875	Reinf. 5 Tension Rupture	83.0%	Pass
				Summary	
			Pole	72.6%	Pass
			Reinforcement	98.5%	Pass
			Overall	**98.5%**	**Pass**

Table 5 - Tower Component Stresses vs. Capacity - LC7

Notes	Component	Elevation (ft)	% Capacity	Pass / Fail
1,2	Anchor Rods	-	76.8	Pass
1,2	Base Plate	-	60.7	Pass
1,2	Base Foundation Soil Interaction	-	65.7	Pass
1,2	Base Foundation Structural	-	57.4	Pass

Structure Rating (max from all components) =	**98.5%**

Notes:
1) See additional documentation in "Appendix C - Additional Calculations" for calculations supporting the % capacity listed.
2) Rating per TIA-222-H Section 15.5

4.1) Recommendations

1) The tower and its foundation have sufficient capacity to carry the proposed load configuration. No modifications are required at this time.

APPENDIX A

TNXTOWER OUTPUT

Section	1	2	3	4	65	7	8	12	13	21	29	30	31	40	41	42	43	47	48	49	50	51	52	53	54	55	57
Length (ft)	5.00	5.00	5.00	5.00	2.75	5.00	3.92	5.00	4.75	8.25	5.00	5.00	5.25	5.00	5.75	8.25	4.00	5.00	4.50	0.25	5.00	4.50	0.25	5.00	4.00	0.25	4.50
Number of Sides	12	12	12	12	12	12	12	12	12	12	12	12	12	12	12	12	12	12	12	12	12	12	12	12	12	12	12
Thickness (in)	0.2500	0.2500	0.2500	0.2500	0.3500	0.3500	0.3500	0.7000	0.7000	0.7000	0.7375	0.7125	0.7125	0.5875	0.5875	0.6625	0.6625	0.6125	0.6625	0.7000	0.6875	0.6750	0.6750	0.7625	0.7500	0.7500	0.7875
Socket Length (ft)									3.75						4.75												
Top Dia (in)	22.0000	23.0102	24.0205	25.0307	26.2426	26.2426	27.2532	28.2126	29.2232	30.2338	31.7500	32.7640	33.7742	35.0338	36.0472	37.1293	38.3536	39.3636	40.3746	41.3846	40.3246	41.3318	42.3418	42.2942	43.3017	44.2142	44.2142
Bot Dia (in)	23.0102	24.0205	25.0307	26.0410	27.2526	27.2526	28.2632	29.2232	30.2338	31.2440	32.7500	33.7742	34.7844	36.0438	37.1293	38.1910	39.3636	40.3746	41.3846	42.3946	41.3346	42.3418	43.3518	43.3047	44.3098	45.1242	45.1242
Grade															A607-60												
Weight (K)	0.3	0.3	0.3	0.3	0.1	0.6	0.5	1.0	1.3	1.3	1.2	1.3	0.8	1.2	2.1	1.5	1.0	1.3	1.2	0.1	1.4	1.3	0.1	1.7	1.4	0.1	1.7

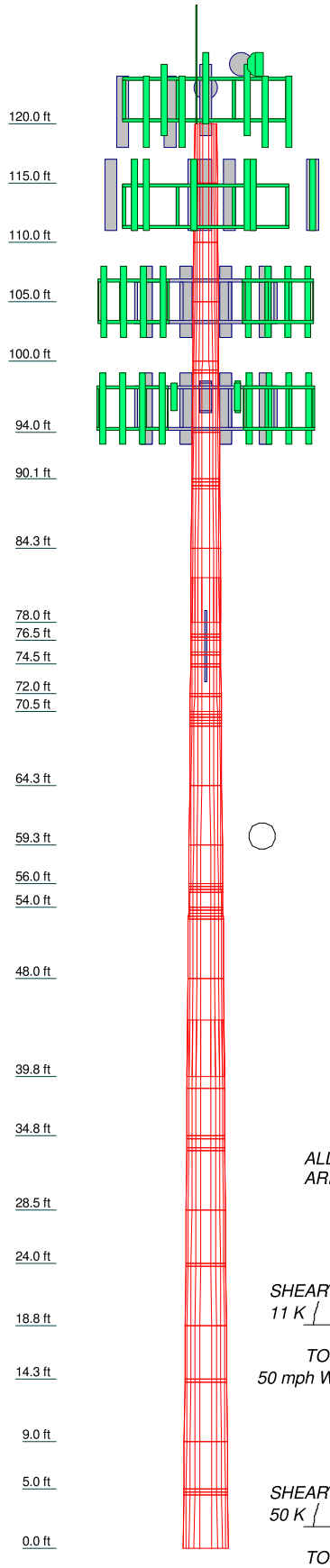

MATERIAL STRENGTH

GRADE	Fy	Fu	GRADE	Fy	Fu
A607-60	60 ksi	75 ksi			

TOWER DESIGN NOTES

1. Tower is located in New Haven County, Connecticut.
2. Tower designed for Exposure C to the TIA-222-H Standard.
3. Tower designed for a 125 mph basic wind in accordance with the TIA-222-H Standard.
4. Tower is also designed for a 50 mph basic wind with 1.50 in ice. Ice is considered to increase in thickness with height.
5. Deflections are based upon a 60 mph wind.
6. Tower Risk Category II.
7. Topographic Category 1 with Crest Height of 0.00 ft
8. TOWER RATING: 98.5%

ALL REACTIONS ARE FACTORED

AXIAL 108 K

SHEAR 11 K — *MOMENT 947 kip-ft*

TORQUE 1 kip-ft
50 mph WIND - 1.5000 in ICE

AXIAL 62 K

SHEAR 50 K — *MOMENT 4209 kip-ft*

TORQUE 2 kip-ft
REACTIONS - 125 mph WIND

Tower Engineering Professionals

Tower Engineering Professionals, Inc.
326 Tryon Road
Raleigh, NC 27603
Phone: (619) 661-6351
FAX: (619) 661-6350

Job: **528 Wheelers Farm Rd (BU 876320)**			
Project: **TEP No. 25570.425141**			
Client: Crown Castle	Drawn by: CJB	App'd:	
Code: TIA-222-H	Date: 06/19/20	Scale: NTS	
Path: C:\Users\cbowen\Desktop\25570 (BU876320)\876320_1860372_LC7.en		Dwg No. E-1	

Tower Input Data

The tower is a monopole.
This tower is designed using the TIA-222-H standard.
The following design criteria apply:

Tower is located in New Haven County, Connecticut.
Tower base elevation above sea level: 213.00 ft.
Basic wind speed of 125 mph.
Risk Category II.
Exposure Category C.
Simplified Topographic Factor Procedure for wind speed-up calculations is used.
Topographic Category: 1.
Crest Height: 0.00 ft.
Nominal ice thickness of 1.5000 in.
Ice thickness is considered to increase with height.
Ice density of 56 pcf.
A wind speed of 50 mph is used in combination with ice.
Temperature drop of 50 °F.
Deflections calculated using a wind speed of 60 mph.
A non-linear (P-delta) analysis was used.
Pressures are calculated at each section.
Stress ratio used in pole design is 1.05.
Tower analysis based on target reliabilities in accordance with Annex S.
Load Modification Factors used: $K_{es}(F_w) = 0.95$, $K_{es}(t_i) = 0.85$.
Local bending stresses due to climbing loads, feed line supports, and appurtenance mounts are not considered.

Options

Consider Moments - Legs
Consider Moments - Horizontals
Consider Moments - Diagonals
Use Moment Magnification
Use Code Stress Ratios
√ Use Code Safety Factors - Guys
Escalate Ice
Always Use Max Kz
Use Special Wind Profile
Include Bolts In Member Capacity
Leg Bolts Are At Top Of Section
Secondary Horizontal Braces Leg
Use Diamond Inner Bracing (4 Sided)
SR Members Have Cut Ends
SR Members Are Concentric

Distribute Leg Loads As Uniform
Assume Legs Pinned
√ Assume Rigid Index Plate
√ Use Clear Spans For Wind Area
Use Clear Spans For KL/r
Retension Guys To Initial Tension
√ Bypass Mast Stability Checks
√ Use Azimuth Dish Coefficients
√ Project Wind Area of Appurt.
Autocalc Torque Arm Areas
Add IBC .6D+W Combination
√ Sort Capacity Reports By Component
Triangulate Diamond Inner Bracing
Treat Feed Line Bundles As Cylinder
Ignore KL/ry For 60 Deg. Angle Legs

Use ASCE 10 X-Brace Ly Rules
Calculate Redundant Bracing Forces
Ignore Redundant Members in FEA
SR Leg Bolts Resist Compression
All Leg Panels Have Same Allowable
Offset Girt At Foundation
√ Consider Feed Line Torque
Include Angle Block Shear Check
Use TIA-222-H Bracing Resist. Exemption
Use TIA-222-H Tension Splice Exemption

Poles

√ Include Shear-Torsion Interaction
Always Use Sub-Critical Flow
Use Top Mounted Sockets
Pole Without Linear Attachments
Pole With Shroud Or No Appurtenances
Outside and Inside Corner Radii Are Known

Tapered Pole Section Geometry

Section	Elevation ft	Section Length ft	Splice Length ft	Number of Sides	Top Diameter in	Bottom Diameter in	Wall Thickness in	Bend Radius in	Pole Grade
L1	120.00-115.00	5.00	0.00	12	22.0000	23.0102	0.2500	1.0000	A607-60 (60 ksi)
L2	115.00-110.00	5.00	0.00	12	23.0102	24.0205	0.2500	1.0000	A607-60 (60 ksi)
L3	110.00-105.00	5.00	0.00	12	24.0205	25.0307	0.2500	1.0000	A607-60 (60 ksi)
L4	105.00-100.00	5.00	0.00	12	25.0307	26.0410	0.2500	1.0000	A607-60 (60 ksi)
L5	100.00-99.25	0.75	0.00	12	26.0410	26.1925	0.2500	1.0000	A607-60 (60 ksi)
L6	99.25-99.00	0.25	0.00	12	26.1925	26.2430	0.3625	1.4500	A607-60 (60 ksi)
L7	99.00-94.00	5.00	0.00	12	26.2430	27.2532	0.3563	1.4250	A607-60 (60 ksi)
L8	94.00-90.08	3.92	0.00	12	27.2532	28.0453	0.3500	1.4000	A607-60 (60 ksi)
L9	90.08-89.83	0.25	0.00	12	28.0453	28.0958	0.5125	2.0500	A607-60 (60 ksi)
L10	89.83-89.50	0.33	0.00	12	28.0958	28.1625	0.5125	2.0500	A607-60 (60 ksi)
L11	89.50-89.25	0.25	0.00	12	28.1625	28.2130	0.7250	2.9000	A607-60 (60 ksi)
L12	89.25-84.25	5.00	0.00	12	28.2130	29.2232	0.7000	2.8000	A607-60 (60 ksi)
L13	84.25-78.00	6.25	3.75	12	29.2232	30.4860	0.7000	2.8000	A607-60 (60 ksi)
L14	78.00-77.00	4.75	0.00	12	29.2283	30.1880	0.8625	3.4500	A607-60 (60 ksi)
L15	77.00-76.75	0.25	0.00	12	30.1880	30.2385	0.8625	3.4500	A607-60 (60 ksi)
L16	76.75-76.50	0.25	0.00	12	30.2385	30.2890	0.9625	3.8500	A607-60 (60 ksi)
L17	76.50-75.50	1.00	0.00	12	30.2890	30.4911	0.9625	3.8500	A607-60 (60 ksi)
L18	75.50-75.25	0.25	0.00	12	30.4911	30.5416	0.7625	3.0500	A607-60 (60 ksi)
L19	75.25-74.50	0.75	0.00	12	30.5416	30.6931	0.7625	3.0500	A607-60 (60 ksi)
L20	74.50-74.25	0.25	0.00	12	30.6931	30.7436	0.8375	3.3500	A607-60 (60 ksi)
L21	74.25-72.00	2.25	0.00	12	30.7436	31.1982	0.8250	3.3000	A607-60 (60 ksi)
L22	72.00-71.75	0.25	0.00	12	31.1982	31.2487	0.7625	3.0500	A607-60 (60 ksi)
L23	71.75-70.50	1.25	0.00	12	31.2487	31.5013	0.7625	3.0500	A607-60 (60 ksi)
L24	70.50-70.25	0.25	0.00	12	31.5013	31.5518	0.7875	3.1500	A607-60 (60 ksi)
L25	70.25-70.00	0.25	0.00	12	31.5518	31.6023	0.7875	3.1500	A607-60 (60 ksi)
L26	70.00-69.75	0.25	0.00	12	31.6023	31.6528	0.7250	2.9000	A607-60 (60 ksi)
L27	69.75-69.50	0.25	0.00	12	31.6528	31.7033	0.8750	3.5000	A607-60 (60 ksi)
L28	69.50-69.25	0.25	0.00	12	31.7033	31.7538	0.7500	3.0000	A607-60 (60 ksi)
L29	69.25-64.25	5.00	0.00	12	31.7538	32.7640	0.7375	2.9500	A607-60 (60 ksi)
L30	64.25-59.25	5.00	0.00	12	32.7640	33.7742	0.7125	2.8500	A607-60 (60 ksi)

Section	Elevation ft	Section Length ft	Splice Length ft	Number of Sides	Top Diameter in	Bottom Diameter in	Wall Thickness in	Bend Radius in	Pole Grade
L31	59.25-56.00	3.25	0.00	12	33.7742	34.4309	0.7125	2.8500	A607-60 (60 ksi)
L32	56.00-55.75	0.25	0.00	12	34.4309	34.4814	0.8125	3.2500	A607-60 (60 ksi)
L33	55.75-55.50	0.25	0.00	12	34.4814	34.5319	0.8125	3.2500	A607-60 (60 ksi)
L34	55.50-55.25	0.25	0.00	12	34.5319	34.5824	0.8875	3.5500	A607-60 (60 ksi)
L35	55.25-54.00	1.25	0.00	12	34.5824	34.8349	0.8750	3.5000	A607-60 (60 ksi)
L36	54.00-53.75	0.25	0.00	12	34.8349	34.8854	0.7500	3.0000	A607-60 (60 ksi)
L37	53.75-53.50	0.25	0.00	12	34.8854	34.9359	0.7375	2.9500	A607-60 (60 ksi)
L38	53.50-53.25	0.25	0.00	12	34.9359	34.9865	0.6625	2.6500	A607-60 (60 ksi)
L39	53.25-53.00	0.25	0.00	12	34.9865	35.0370	0.6000	2.4000	A607-60 (60 ksi)
L40	53.00-48.00	5.00	0.00	12	35.0370	36.0472	0.5875	2.3500	A607-60 (60 ksi)
L41	48.00-39.75	8.25	4.75	12	36.0472	37.7140	0.5875	2.3500	A607-60 (60 ksi)
L42	39.75-38.75	5.75	0.00	12	36.1293	37.2910	0.6625	2.6500	A607-60 (60 ksi)
L43	38.75-34.75	4.00	0.00	12	37.2910	38.0992	0.6625	2.6500	A607-60 (60 ksi)
L44	34.75-34.50	0.25	0.00	12	38.0992	38.1497	0.8250	3.3000	A607-60 (60 ksi)
L45	34.50-33.75	0.75	0.00	12	38.1497	38.3012	0.8250	3.3000	A607-60 (60 ksi)
L46	33.75-33.50	0.25	0.00	12	38.3012	38.3517	0.6250	2.5000	A607-60 (60 ksi)
L47	33.50-28.50	5.00	0.00	12	38.3517	39.3619	0.6125	2.4500	A607-60 (60 ksi)
L48	28.50-24.00	4.50	0.00	12	39.3619	40.2711	0.6625	2.6500	A607-60 (60 ksi)
L49	24.00-23.75	0.25	0.00	12	40.2711	40.3216	0.7000	2.8000	A607-60 (60 ksi)
L50	23.75-18.75	5.00	0.00	12	40.3216	41.3318	0.6875	2.7500	A607-60 (60 ksi)
L51	18.75-14.25	4.50	0.00	12	41.3318	42.2410	0.6750	2.7000	A607-60 (60 ksi)
L52	14.25-14.00	0.25	0.00	12	42.2410	42.2915	0.7750	3.1000	A607-60 (60 ksi)
L53	14.00-9.00	5.00	0.00	12	42.2915	43.3017	0.7625	3.0500	A607-60 (60 ksi)
L54	9.00-5.00	4.00	0.00	12	43.3017	44.1098	0.7500	3.0000	A607-60 (60 ksi)
L55	5.00-4.75	0.25	0.00	12	44.1098	44.1603	0.9125	3.6500	A607-60 (60 ksi)
L56	4.75-4.50	0.25	0.00	12	44.1603	44.2108	0.8000	3.2000	A607-60 (60 ksi)
L57	4.50-0.00	4.50		12	44.2108	45.1200	0.7875	3.1500	A607-60 (60 ksi)

Tapered Pole Properties

Section	Tip Dia. in	Area in^2	I in^4	r in	C in	I/C in^3	J in^4	It/Q in^2	w in	w/t
L1	22.6879	17.5087	1057.2060	7.7865	11.3960	92.7699	2142.1860	8.6173	5.2260	20.904
	23.7338	18.3220	1211.4688	8.1482	11.9193	101.6392	2454.7642	9.0175	5.4967	21.987
L2	23.7338	18.3220	1211.4688	8.1482	11.9193	101.6392	2454.7642	9.0175	5.4967	21.987
	24.7796	19.1352	1380.0520	8.5098	12.4426	110.9134	2796.3596	9.4178	5.7675	23.07
L3	24.7796	19.1352	1380.0520	8.5098	12.4426	110.9134	2796.3596	9.4178	5.7675	23.07
	25.8255	19.9485	1563.5914	8.8715	12.9659	120.5925	3168.2601	9.8180	6.0382	24.153
L4	25.8255	19.9485	1563.5914	8.8715	12.9659	120.5925	3168.2601	9.8180	6.0382	24.153
	26.8714	20.7617	1762.7225	9.2332	13.4892	130.6765	3571.7537	10.2183	6.3090	25.236
L5	26.8714	20.7617	1762.7225	9.2332	13.4892	130.6765	3571.7537	10.2183	6.3090	25.236
	27.0283	20.8837	1793.9763	9.2874	13.5677	132.2240	3635.0824	10.2783	6.3496	25.398
L6	26.9886	30.1501	2567.5709	9.2471	13.5677	189.2413	5202.5948	14.8389	6.0481	16.684
	27.0409	30.2090	2582.6635	9.2652	13.5939	189.9873	5233.1764	14.8680	6.0616	16.722
L7	27.0431	29.6953	2539.9741	9.2675	13.5939	186.8470	5146.6761	14.6151	6.0784	17.062
	28.0890	30.8542	2849.0997	9.6291	14.1172	201.8179	5773.0484	15.1855	6.3491	17.822
L8	28.0912	30.3199	2801.0672	9.6314	14.1172	198.4155	5675.7215	14.9226	6.3659	18.188
	28.9111	31.2126	3055.8107	9.9149	14.5274	210.3474	6191.9009	15.3619	6.5781	18.795
L9	28.8538	45.4359	4396.2783	9.8567	14.5274	302.6188	8908.0517	22.3622	6.1426	11.986
	28.9061	45.5193	4420.5191	9.8748	14.5536	303.7403	8957.1702	22.4032	6.1562	12.012
L10	28.9061	45.5193	4420.5191	9.8748	14.5536	303.7403	8957.1702	22.4032	6.1562	12.012
	28.9751	45.6293	4452.6528	9.8987	14.5882	305.2240	9022.2818	22.4574	6.1740	12.047
L11	28.9002	64.0527	6154.7606	9.8226	14.5882	421.9014	12471.2135	31.5248	5.6045	7.73
	28.9525	64.1707	6188.8157	9.8407	14.6143	423.4763	12540.2184	31.5828	5.6181	7.749
L12	28.9613	62.0142	5991.7268	9.8496	14.6143	409.9902	12140.8629	30.5215	5.6851	8.122
	30.0072	64.2913	6676.2823	10.2113	15.1376	441.0391	13527.9580	31.6422	5.9558	8.508
L13	30.0072	64.2913	6676.2823	10.2113	15.1376	441.0391	13527.9580	31.6422	5.9558	8.508
	31.3145	67.1376	7602.8499	10.6634	15.7917	481.4445	15405.4352	33.0431	6.2942	8.992
L14	30.7395	78.7790	8090.7168	10.1550	15.1403	534.3839	16393.9857	38.7726	5.5217	6.402
	30.9487	81.4443	8940.0035	10.4985	15.6374	571.7069	18114.8709	40.0844	5.7789	6.7
L15	30.9487	81.4443	8940.0035	10.4985	15.6374	571.7069	18114.8709	40.0844	5.7789	6.7
	31.0010	81.5846	8986.2777	10.5166	15.6636	573.7062	18208.6349	40.1534	5.7924	6.716
L16	30.9657	90.7337	9926.1015	10.4808	15.6636	633.7069	20112.9727	44.6564	5.5244	5.74
	31.0180	90.8903	9977.5667	10.4989	15.6897	635.9303	20217.2553	44.7334	5.5380	5.754
L17	31.0180	90.8903	9977.5667	10.4989	15.6897	635.9303	20217.2553	44.7334	5.5380	5.754
	31.2271	91.5164	10185.2068	10.5712	15.7944	644.8629	20637.9903	45.0416	5.5921	5.81
L18	31.2977	72.9911	8233.8656	10.6428	15.7944	521.3163	16684.0439	35.9240	6.1281	8.037
	31.3500	73.1151	8275.9059	10.6609	15.8205	523.1115	16769.2290	35.9850	6.1416	8.055
L19	31.3500	73.1151	8275.9059	10.6609	15.8205	523.1115	16769.2290	35.9850	6.1416	8.055
	31.5069	73.4871	8402.8850	10.7152	15.8990	528.5155	17026.5231	36.1681	6.1823	8.108
L20	31.4804	80.5131	9160.1910	10.6883	15.8990	576.1477	18561.0304	39.6261	5.9813	7.142
	31.5327	80.6493	9206.7616	10.7064	15.9252	578.1255	18655.3950	39.6931	5.9948	7.158
L21	31.5371	79.4788	9080.7242	10.7109	15.9252	570.2112	18400.0092	39.1171	6.0283	7.307
	32.0077	80.6864	9500.9688	10.8736	16.1607	587.9067	19251.5386	39.7114	6.1501	7.455
L22	32.0298	74.7273	8835.5182	10.8960	16.1607	546.7296	17903.1553	36.7785	6.3176	8.285
	32.0821	74.8513	8879.5805	10.9141	16.1868	548.5680	17992.4375	36.8395	6.3312	8.303
L23	32.0821	74.8513	8879.5805	10.9141	16.1868	548.5680	17992.4375	36.8395	6.3312	8.303
	32.3435	75.4714	9102.0909	11.0045	16.3177	557.8062	18443.3039	37.1447	6.3988	8.392
L24	32.3347	77.8824	9377.6023	10.9955	16.3177	574.6904	19001.5646	38.3314	6.3318	8.04
	32.3870	78.0105	9423.9439	11.0136	16.3438	576.6059	19095.4653	38.3944	6.3454	8.058
L25	32.3870	78.0105	9423.9439	11.0136	16.3438	576.6059	19095.4653	38.3944	6.3454	8.058
	32.4393	78.1386	9470.4380	11.0317	16.3700	578.5245	19189.6749	38.4574	6.3589	8.075
L26	32.4613	72.0830	8771.9753	11.0541	16.3700	535.8572	17774.4002	35.4771	6.5264	9.002
	32.5136	72.2010	8815.0942	11.0722	16.3962	537.6319	17861.7706	35.5351	6.5400	9.021
L27	32.4607	86.7165	10484.8600	11.0185	16.3962	639.4708	21245.1690	42.6792	6.1380	7.015
	32.5130	86.8588	10536.5655	11.0365	16.4223	641.6005	21349.9382	42.7492	6.1515	7.03
L28	32.5571	74.7522	9141.6464	11.0813	16.4223	556.6600	18523.4540	36.7908	6.4865	8.649
	32.6094	74.8742	9186.4718	11.0994	16.4485	558.4998	18614.2825	36.8508	6.5000	8.667
L29	32.6138	73.6560	9044.2945	11.1038	16.4485	549.8560	18326.1927	36.2512	6.5335	8.859
	33.6596	76.0550	9957.1062	11.4655	16.9718	586.6866	20175.7967	37.4319	6.8043	9.226
L30	33.6685	73.5342	9642.1220	11.4744	16.9718	568.1273	19537.5533	36.1913	6.8713	9.644
	34.7143	75.8519	10582.8602	11.8361	17.4950	604.9061	21443.7440	37.3320	7.1420	10.024
L31	34.7143	75.8519	10582.8602	11.8361	17.4950	604.9061	21443.7440	37.3320	7.1420	10.024
	35.3941	77.3583	11226.0164	12.0712	17.8352	629.4310	22746.9527	38.0734	7.3180	10.271

Section	Tip Dia. in	Area in^2	I in^4	r in	C in	I/C in^3	J in^4	It/Q in^2	w in	w/t
L32	35.3588	87.9540	12688.0363	12.0354	17.8352	711.4050	25709.4015	43.2883	7.0500	8.677
	35.4111	88.0862	12745.3118	12.0535	17.8613	713.5695	25825.4572	43.3533	7.0635	8.694
L33	35.4111	88.0862	12745.3118	12.0535	17.8613	713.5695	25825.4572	43.3533	7.0635	8.694
	35.4634	88.2183	12802.7595	12.0715	17.8875	715.7374	25941.8616	43.4184	7.0770	8.71
L34	35.4369	96.1472	13891.4450	12.0447	17.8875	776.6003	28147.8337	47.3207	6.8760	7.748
	35.4892	96.2915	13954.1043	12.0628	17.9137	778.9639	28274.7984	47.3918	6.8896	7.763
L35	35.4936	94.9705	13772.8845	12.0672	17.9137	768.8476	27907.5980	46.7416	6.9231	7.912
	35.7551	95.6821	14084.7854	12.1577	18.0445	780.5586	28539.5938	47.0918	6.9908	7.989
L36	35.7992	82.3151	12206.4761	12.2024	18.0445	676.4654	24733.6299	40.5130	7.3258	9.768
	35.8515	82.4371	12260.8224	12.2205	18.0707	678.4934	24843.7502	40.5730	7.3393	9.786
L37	35.8559	81.0928	12069.7250	12.2250	18.0707	667.9184	24456.5351	39.9114	7.3728	9.997
	35.9082	81.2128	12123.3632	12.2430	18.0968	669.9167	24565.2206	39.9705	7.3863	10.015
L38	35.9347	73.1138	10962.2871	12.2699	18.0968	605.7576	22212.5658	35.9844	7.5873	11.453
	35.9869	73.2216	11010.8251	12.2880	18.1230	607.5613	22310.9169	36.0374	7.6009	11.473
L39	36.0090	66.4346	10026.6413	12.3104	18.1230	553.2555	20316.6936	32.6971	7.7684	12.947
	36.0613	66.5322	10070.8904	12.3284	18.1492	554.8960	20406.3543	32.7451	7.7819	12.97
L40	36.0657	65.1698	9871.8223	12.3329	18.1492	543.9275	20002.9883	32.0746	7.8154	13.303
	37.1115	67.0808	10765.9848	12.6946	18.6724	576.5710	21814.8040	33.0151	8.0861	13.764
L41	37.1115	67.0808	10765.9848	12.6946	18.6724	576.5710	21814.8040	33.0151	8.0861	13.764
	38.8372	70.2341	12356.6777	13.2913	19.5359	632.5129	25037.9792	34.5671	8.5329	14.524
L42	38.1636	75.6596	12147.7009	12.6971	18.7150	649.0896	24614.5354	37.2373	7.9072	11.935
	38.3728	78.1378	13380.9250	13.1130	19.3168	692.7109	27113.3819	38.4571	8.2185	12.405
L43	38.3728	78.1378	13380.9250	13.1130	19.3168	692.7109	27113.3819	38.4571	8.2185	12.405
	39.2095	79.8618	14286.2974	13.4023	19.7354	723.8929	28947.9117	39.3055	8.4351	12.732
L44	39.1521	99.0189	17559.8202	13.3442	19.7354	889.7637	35580.9564	48.7341	7.9996	9.696
	39.2044	99.1530	17631.3026	13.3622	19.7615	892.2029	35725.7991	48.8001	8.0131	9.713
L45	39.2044	99.1530	17631.3026	13.3622	19.7615	892.2029	35725.7991	48.8001	8.0131	9.713
	39.3613	99.5556	17846.9103	13.4165	19.8400	899.5404	36162.6788	48.9982	8.0537	9.762
L46	39.4319	75.8234	13738.0073	13.4881	19.8400	692.4388	27836.9273	37.3180	8.5897	13.744
	39.4842	75.9250	13793.3343	13.5062	19.8662	694.3118	27949.0348	37.3680	8.6033	13.765
L47	39.4886	74.4312	13530.9083	13.5106	19.8662	681.1022	27417.2886	36.6328	8.6368	14.101
	40.5344	76.4235	14646.8241	13.8723	20.3895	718.3522	29678.4366	37.6133	8.9075	14.543
L48	40.5168	82.5555	15781.2357	13.8544	20.3895	773.9894	31977.0620	40.6313	8.7735	13.243
	41.4580	84.4950	16919.8231	14.1799	20.8604	811.0968	34284.1489	41.5859	9.0172	13.611
L49	41.4448	89.1932	17826.8196	14.1664	20.8604	854.5761	36121.9695	43.8982	8.9167	12.738
	41.4971	89.3071	17895.1698	14.1845	20.8866	856.7780	36260.4657	43.9542	8.9302	12.757
L50	41.5015	87.7400	17592.2530	14.1890	20.8866	842.2751	35646.6740	43.1830	8.9637	13.038
	42.5473	89.9763	18971.9986	14.5507	21.4099	886.1335	38442.4128	44.2836	9.2344	13.432
L51	42.5517	88.3675	18644.2445	14.5551	21.4099	870.8249	37778.2941	43.4918	9.2679	13.73
	43.4929	90.3436	19923.1961	14.8806	21.8808	910.5326	40369.7967	44.4644	9.5116	14.091
L52	43.4577	103.4783	22710.0801	14.8448	21.8808	1037.8991	46016.7793	50.9289	9.2436	11.927
	43.5100	103.6043	22793.1696	14.8629	21.9070	1040.4524	46185.1411	50.9909	9.2571	11.945
L53	43.5144	101.9640	22445.7999	14.8674	21.9070	1024.5958	45481.2759	50.1836	9.2906	12.184
	44.5602	104.4443	24123.9455	15.2290	22.4303	1075.5090	48881.6539	51.4043	9.5613	12.539
L54	44.5646	102.7623	23749.3947	15.2335	22.4303	1058.8106	48122.7125	50.5765	9.5948	12.793
	45.4013	104.7139	25128.4208	15.5228	22.8489	1099.7659	50916.9933	51.5370	9.8114	13.082
L55	45.3439	126.9245	30230.4634	15.4646	22.8489	1323.0610	61255.1147	62.4684	9.3759	10.275
	45.3962	127.0729	30336.6316	15.4827	22.8750	1326.1889	61470.2403	62.5414	9.3895	10.29
L56	45.4359	111.6962	26804.5947	15.5230	22.8750	1171.7832	54313.3759	54.9735	9.6910	12.114
	45.4882	111.8263	26898.3752	15.5411	22.9012	1174.5395	54503.4007	55.0375	9.7045	12.131
L57	45.4926	110.1107	26500.9675	15.5456	22.9012	1157.1864	53698.1449	54.1931	9.7380	12.366
	46.4339	112.4161	28200.6457	15.8710	23.3722	1206.5913	57142.1538	55.3278	9.9817	12.675

Tower Elevation ft	Gusset Area (per face) ft^2	Gusset Thickness in	Gusset Grade	Adjust. Factor A_f	Adjust. Factor A_r	Weight Mult.	Double Angle Stitch Bolt Spacing Diagonals in	Double Angle Stitch Bolt Spacing Horizontals in	Double Angle Stitch Bolt Spacing Redundants in
L1 120.00-115.00				1	1	1			
L2				1	1	1			

Tower Elevation ft	Gusset Area (per face) ft^2	Gusset Thickness in	Gusset Grade	Adjust. Factor A_f	Adjust. Factor A_r	Weight Mult.	Double Angle Stitch Bolt Spacing Diagonals in	Double Angle Stitch Bolt Spacing Horizontals in	Double Angle Stitch Bolt Spacing Redundants in
115.00-110.00									
L3				1	1	1			
110.00-105.00									
L4				1	1	1			
105.00-100.00									
L5				1	1	1			
100.00-99.25									
L6 99.25-99.00				1	1	1.18991			
L7 99.00-94.00				1	1	1.19138			
L8 94.00-90.08				1	1	1.19813			
L9 90.08-89.83				1	1	1.02045			
L10				1	1	1.01917			
89.83-89.50									
L11				1	1	0.912595			
89.50-89.25									
L12				1	1	0.923531			
89.25-84.25									
L13				1	1	0.913676			
84.25-78.00									
L14				1	1	0.996207			
78.00-77.00									
L15				1	1	0.995117			
77.00-76.75									
L16				1	1	0.948882			
76.75-76.50									
L17				1	1	0.944612			
76.50-75.50									
L18				1	1	1.04608			
75.50-75.25									
L19				1	1	1.04286			
75.25-74.50									
L20				1	1	0.888787			
74.50-74.25									
L21				1	1	0.894048			
74.25-72.00									
L22				1	1	1.07313			
72.00-71.75									
L23				1	1	1.06768			
71.75-70.50									
L24				1	1	1.09135			
70.50-70.25									
L25				1	1	1.09021			
70.25-70.00									
L26				1	1	1.11122			
70.00-69.75									
L27				1	1	0.981926			
69.75-69.50									
L28				1	1	0.979276			
69.50-69.25									
L29				1	1	0.977438			
69.25-64.25									
L30				1	1	0.993457			
64.25-59.25									
L31				1	1	0.982651			
59.25-56.00									
L32				1	1	1.01703			
56.00-55.75									
L33				1	1	1.01608			
55.75-55.50									

Tower Elevation ft	Gusset Area (per face) ft^2	Gusset Thickness in	Gusset Grade	Adjust. Factor A_f	Adjust. Factor A_r	Weight Mult.	Double Angle Stitch Bolt Spacing Diagonals in	Double Angle Stitch Bolt Spacing Horizontals in	Double Angle Stitch Bolt Spacing Redundants in
L34 55.50-55.25				1	1	0.978222			
L35 55.25-54.00				1	1	0.987109			
L36 54.00-53.75				1	1	1.03699			
L37 53.75-53.50				1	1	1.05325			
L38 53.50-53.25				1	1	1.10735			
L39 53.25-53.00				1	1	1.09715			
L40 53.00-48.00				1	1	1.10333			
L41 48.00-39.75				1	1	1.09216			
L42 39.75-38.75				1	1	0.976499			
L43 38.75-34.75				1	1	0.967639			
L44 34.75-34.50				1	1	0.981987			
L45 34.50-33.75				1	1	0.979855			
L46 33.75-33.50				1	1	1.02183			
L47 33.50-28.50				1	1	1.03112			
L48 28.50-24.00				1	1	0.945617			
L49 24.00-23.75				1	1	0.949621			
L50 23.75-18.75				1	1	0.956115			
L51 18.75-14.25				1	1	0.964379			
L52 14.25-14.00				1	1	0.954431			
L53 14.00-9.00				1	1	0.958435			
L54 9.00-5.00				1	1	0.965286			
L55 5.00-4.75				1	1	0.89874			
L56 4.75-4.50				1	1	0.977045			
L57 4.50-0.00				1	1	0.981684			

Feed Line/Linear Appurtenances - Entered As Round Or Flat

Description	Sector	Exclude From Torque Calculation	Component Type	Placement ft	Total Number	Number Per Row	Start/End Position	Width or Diameter in	Perimeter in	Weight plf
Miscl Safety Line 3/8	C	No	Surface Ar (CaAa)	120.00 - 0.00	1	1	0.250 0.250	0.3750		0.22
122 1266A(1/8)	C	No	Surface Ar	120.00 -	1	1	-0.250	0.1430		0.01

Description	Sector	Exclude From Torque Calculation	Component Type	Placement ft	Total Number	Number Per Row	Start/End Position	Width or Diameter in	Perimeter in	Weight plf
			(CaAa)	0.00			-0.250			
7983A(ELLIPTICAL)	C	No	Surface Ar	120.00 -	3	3	-0.250	0.5730		0.08
			(CaAa)	0.00			-0.250			
3" Flexible Conduit	C	No	Surface Ar	120.00 -	2	2	-0.250	3.0000		1.04
			(CaAa)	0.00			-0.250			
HB114-1-0813U4-M5J(1	C	No	Surface Ar	120.00 -	4	4	-0.250	1.5400		1.20
-1/4)			(CaAa)	0.00			-0.250			
113										
LDF7-50A(1-5/8)	A	No	Surface Ar	113.00 -	8	6	0.250	1.9800		0.82
			(CaAa)	0.00			0.250			
105										
MLE Hybrid	B	No	Surface Ar	105.00 -	1	1	-0.250	1.6250		1.07
9Power/18Fiber RL 2(1			(CaAa)	0.00			-0.250			
5/8")										
HCS 6X12 6AWG(1-3/8)	B	No	Surface Ar	105.00 -	3	3	-0.250	1.3800		1.70
			(CaAa)	0.00			-0.250			
Mods										
Mod 1613579										
C6x10.5	A	No	Surface Af	56.00 - 7.67	1	1	0.000	6.0000	16.0600	10.50
			(CaAa)				0.000			
C6x10.5	B	No	Surface Af	56.00 - 8.00	1	1	-0.250	6.0000	16.0600	10.50
			(CaAa)				-0.250			
C6x10.5	B	No	Surface Af	56.00 - 0.00	1	1	0.500	6.0000	16.0600	10.50
			(CaAa)				0.500			
C6x10.5	C	No	Surface Af	56.00 - 0.00	1	1	0.500	6.0000	16.0600	10.50
			(CaAa)				0.500			
Mod 2460630										
(Area) Aero MP3-04 (H)	A	No	Surface Af	25.42 - 0.00	1	1	-0.250	4.7800	12.7800	0.00
			(CaAa)				-0.250			
(Area) Aero MP3-04 (H)	A	No	Surface Af	25.42 - 0.00	1	1	0.250	4.7800	12.7800	0.00
			(CaAa)				0.250			
(Area) Aero MP3-04 (H)	B	No	Surface Af	25.42 - 0.00	1	1	0.250	4.7800	12.7800	0.00
			(CaAa)				0.250			
(Area) Aero MP3-04 (H)	C	No	Surface Af	25.42 - 0.00	1	1	-0.250	4.7800	12.7800	0.00
			(CaAa)				-0.250			
Mod 3338935										
PL 1 x 5	A	No	Surface Af	37.00 - 2.50	1	1	0.500	5.0000	12.0000	0.00
			(CaAa)				0.500			
PL 1 x 5	B	No	Surface Af	37.00 - 2.50	1	1	0.000	5.0000	12.0000	0.00
			(CaAa)				0.000			
PL 1 x 5	C	No	Surface Af	37.00 - 2.50	1	1	0.000	5.0000	12.0000	0.00
			(CaAa)				0.000			
PL 1 x 5	C	No	Surface Af	37.00 - 2.50	1	1	0.500	5.0000	12.0000	0.00
			(CaAa)				0.500			
*										
PL 1 x 5	A	No	Surface Af	72.00 -	1	1	0.500	5.0000	12.0000	0.00
			(CaAa)	31.50			0.500			
PL 1 x 5	B	No	Surface Af	72.00 -	1	1	0.000	5.0000	12.0000	0.00
			(CaAa)	31.50			0.000			
PL 1 x 5	C	No	Surface Af	72.00 -	1	1	0.000	5.0000	12.0000	0.00
			(CaAa)	31.50			0.000			
PL 1 x 5	C	No	Surface Af	72.00 -	1	1	0.500	5.0000	12.0000	0.00
			(CaAa)	31.50			0.500			
Mod 3349207										
(Area) Aero MP3-03 (H)	A	No	Surface Af	15.42 - 0.00	1	1	0.500	4.0600	11.2600	0.00
			(CaAa)				0.500			
(Area) Aero MP3-03 (H)	B	No	Surface Af	15.42 - 0.00	1	1	0.000	4.0600	11.2600	0.00
			(CaAa)				0.000			
(Area) Aero MP3-03 (H)	C	No	Surface Af	15.42 - 0.00	1	1	0.000	4.0600	11.2600	0.00
			(CaAa)				0.000			

Description	Sector	Exclude From Torque Calculation	Component Type	Placement ft	Total Number	Number Per Row	Start/End Position	Width or Diameter in	Perimeter in	Weight plf
(Area) Aero MP3-03 (H)	C	No	Surface Af (CaAa)	15.42 - 0.00	1	1	0.500 0.500	4.0600	11.2600	0.00
*										
(Area) Aero MP3-03 (H)	A	No	Surface Af (CaAa)	45.42 - 25.42	1	1	-0.250 -0.250	4.0600	11.2600	0.00
(Area) Aero MP3-03 (H)	A	No	Surface Af (CaAa)	45.42 - 25.42	1	1	0.250 0.250	4.0600	11.2600	0.00
(Area) Aero MP3-03 (H)	B	No	Surface Af (CaAa)	45.42 - 25.42	1	1	0.250 0.250	4.0600	11.2600	0.00
(Area) Aero MP3-03 (H)	C	No	Surface Af (CaAa)	45.42 - 25.42	1	1	-0.250 -0.250	4.0600	11.2600	0.00
Mod 4961357										
(Area) CCI-65FP-045100 (H)	A	No	Surface Af (CaAa)	72.00 - 52.00	1	1	-0.250 -0.250	4.5000	11.0000	0.00
(Area) CCI-65FP-045100 (H)	A	No	Surface Af (CaAa)	72.00 - 52.00	1	1	0.250 0.250	4.5000	11.0000	0.00
(Area) CCI-65FP-045100 (H)	B	No	Surface Af (CaAa)	72.00 - 52.00	1	1	0.250 0.250	4.5000	11.0000	0.00
PMI 5760332										
(Area) CCI-65FP-065125 (H)	C	No	Surface Af (CaAa)	74.75 - 50.50	1	1	-0.250 -0.250	6.5000	15.5000	0.00
Mod 4961357										
(Area) CCI-65FP-060100 (H)	A	No	Surface Af (CaAa)	92.00 - 67.00	1	1	0.000 0.000	6.0000	14.0000	0.00
(Area) CCI-65FP-060100 (H)	C	No	Surface Af (CaAa)	92.00 - 67.00	1	1	0.250 0.250	6.0000	14.0000	0.00
*										
(Area) CCI-65FP-045100 (H)	A	No	Surface Af (CaAa)	92.08 - 68.00	1	1	0.250 0.250	4.5000	11.0000	0.00
(Area) CCI-65FP-045100 (H)	B	No	Surface Af (CaAa)	92.08 - 68.00	1	1	0.250 0.250	4.5000	11.0000	0.00
Mod 5873963										
(Area) CCI-65FP-045100 (H)	A	No	Surface Af (CaAa)	57.50 - 42.50	1	1	0.500 0.500	4.5000	11.0000	0.00
(Area) CCI-65FP-045100 (H)	B	No	Surface Af (CaAa)	57.50 - 42.50	1	1	0.000 0.000	4.5000	11.0000	0.00
(Area) CCI-65FP-045100 (H)	C	No	Surface Af (CaAa)	57.50 - 42.50	1	1	-0.250 -0.250	4.5000	11.0000	0.00
(Area) CCI-65FP-045100 (H)	C	No	Surface Af (CaAa)	57.25 - 42.25	1	1	0.500 0.500	4.5000	11.0000	0.00
*										
PL 1.25x4	B	No	Surface Af (CaAa)	100.75 - 74.00	1	1	0.000 0.000	4.0000	10.5000	0.00
PL 1.25x4	C	No	Surface Af (CaAa)	100.75 - 74.00	1	1	0.500 0.500	4.0000	10.5000	0.00
PL 1.25x4	C	No	Surface Af (CaAa)	100.75 - 73.00	1	1	-0.250 -0.250	4.0000	10.5000	0.00
*										
PL 1.25x4	A	No	Surface Af (CaAa)	80.00 - 68.50	1	1	-0.250 -0.250	4.0000	10.5000	0.00
PL 1.25x4	A	No	Surface Af (CaAa)	78.25 - 68.25	1	1	0.500 0.500	4.0000	10.5000	0.00
PL 1.25x4	B	No	Surface Af (CaAa)	80.00 - 68.25	1	1	-0.250 -0.250	4.0000	10.5000	0.00
PL 1.25x4	B	No	Surface Af (CaAa)	80.00 - 68.25	1	1	0.500 0.500	4.0000	10.5000	0.00
****										

Feed Line/Linear Appurtenances - Entered As Area

Description	Face or Leg	Allow Shield	Exclude From Torque Calculation	Component Type	Placement ft	Total Number		C_AA_A ft^2/ft	Weight plf
9207(5/16)	C	No	No	Inside Pole	120.00 - 0.00	6	No Ice	0.00	0.06
							1/2" Ice	0.00	0.06
							1" Ice	0.00	0.06
							2" Ice	0.00	0.06
96									
LDF6-50A(1 1/4")	C	No	No	Inside Pole	96.00 - 0.00	12	No Ice	0.00	0.66
							1/2" Ice	0.00	0.66
							1" Ice	0.00	0.66
							2" Ice	0.00	0.66
FB-L98B-034-XXX(3/8)	C	No	No	Inside Pole	96.00 - 0.00	3	No Ice	0.00	0.06
							1/2" Ice	0.00	0.06
							1" Ice	0.00	0.06
							2" Ice	0.00	0.06
WR-VG86ST-BRD(3/4)	C	No	No	Inside Pole	96.00 - 0.00	6	No Ice	0.00	0.58
							1/2" Ice	0.00	0.58
							1" Ice	0.00	0.58
							2" Ice	0.00	0.58
2" Flexible Conduit	C	No	No	Inside Pole	96.00 - 0.00	2	No Ice	0.00	0.34
							1/2" Ice	0.00	0.34
							1" Ice	0.00	0.34
							2" Ice	0.00	0.34
82									
LDF5-50A(7/8)	C	No	No	Inside Pole	82.00 - 0.00	12	No Ice	0.00	0.33
							1/2" Ice	0.00	0.33
							1" Ice	0.00	0.33
							2" Ice	0.00	0.33
75									
LDF4-50A(1/2)	C	No	No	Inside Pole	75.00 - 0.00	1	No Ice	0.00	0.15
							1/2" Ice	0.00	0.15
							1" Ice	0.00	0.15
							2" Ice	0.00	0.15
Mods ****									

Feed Line/Linear Appurtenances Section Areas

Tower Section	Tower Elevation ft	Face	A_R ft^2	A_F ft^2	C_AA_A In Face ft^2	C_AA_A Out Face ft^2	Weight K
L1	120.00-115.00	A	0.000	0.000	0.000	0.000	0.00
		B	0.000	0.000	0.000	0.000	0.00
		C	0.000	0.000	7.199	0.000	0.04
L2	115.00-110.00	A	0.000	0.000	3.564	0.000	0.02
		B	0.000	0.000	0.000	0.000	0.00
		C	0.000	0.000	7.199	0.000	0.04
L3	110.00-105.00	A	0.000	0.000	5.940	0.000	0.03
		B	0.000	0.000	0.000	0.000	0.00
		C	0.000	0.000	7.199	0.000	0.04
L4	105.00-100.00	A	0.000	0.000	5.940	0.000	0.03
		B	0.000	0.000	3.382	0.000	0.03
		C	0.000	0.000	8.198	0.000	0.04

Tower Section	Tower Elevation ft	Face	A_R ft^2	A_F ft^2	C_AA_A In Face ft^2	C_AA_A Out Face ft^2	Weight K
L5	100.00-99.25	A	0.000	0.000	0.891	0.000	0.00
		B	0.000	0.000	0.932	0.000	0.00
		C	0.000	0.000	2.080	0.000	0.01
L6	99.25-99.00	A	0.000	0.000	0.297	0.000	0.00
		B	0.000	0.000	0.311	0.000	0.00
		C	0.000	0.000	0.693	0.000	0.00
L7	99.00-94.00	A	0.000	0.000	5.940	0.000	0.03
		B	0.000	0.000	6.216	0.000	0.03
		C	0.000	0.000	13.865	0.000	0.06
L8	94.00-90.08	A	0.000	0.000	8.077	0.000	0.03
		B	0.000	0.000	6.373	0.000	0.02
		C	0.000	0.000	12.790	0.000	0.08
L9	90.08-89.83	A	0.000	0.000	0.735	0.000	0.00
		B	0.000	0.000	0.498	0.000	0.00
		C	0.000	0.000	0.943	0.000	0.01
L10	89.83-89.50	A	0.000	0.000	0.970	0.000	0.00
		B	0.000	0.000	0.658	0.000	0.00
		C	0.000	0.000	1.245	0.000	0.01
L11	89.50-89.25	A	0.000	0.000	0.735	0.000	0.00
		B	0.000	0.000	0.498	0.000	0.00
		C	0.000	0.000	0.943	0.000	0.01
L12	89.25-84.25	A	0.000	0.000	14.690	0.000	0.03
		B	0.000	0.000	9.966	0.000	0.03
		C	0.000	0.000	18.865	0.000	0.10
L13	84.25-78.00	A	0.000	0.000	19.863	0.000	0.04
		B	0.000	0.000	15.124	0.000	0.04
		C	0.000	0.000	23.581	0.000	0.14
L14	78.00-77.00	A	0.000	0.000	4.271	0.000	0.01
		B	0.000	0.000	3.326	0.000	0.01
		C	0.000	0.000	3.773	0.000	0.02
L15	77.00-76.75	A	0.000	0.000	1.068	0.000	0.00
		B	0.000	0.000	0.832	0.000	0.00
		C	0.000	0.000	0.943	0.000	0.01
L16	76.75-76.50	A	0.000	0.000	1.068	0.000	0.00
		B	0.000	0.000	0.832	0.000	0.00
		C	0.000	0.000	0.943	0.000	0.01
L17	76.50-75.50	A	0.000	0.000	4.271	0.000	0.01
		B	0.000	0.000	3.326	0.000	0.01
		C	0.000	0.000	3.773	0.000	0.02
L18	75.50-75.25	A	0.000	0.000	1.068	0.000	0.00
		B	0.000	0.000	0.832	0.000	0.00
		C	0.000	0.000	0.943	0.000	0.01
L19	75.25-74.50	A	0.000	0.000	3.204	0.000	0.00
		B	0.000	0.000	2.495	0.000	0.00
		C	0.000	0.000	3.101	0.000	0.02
L20	74.50-74.25	A	0.000	0.000	1.068	0.000	0.00
		B	0.000	0.000	0.832	0.000	0.00
		C	0.000	0.000	1.214	0.000	0.01
L21	74.25-72.00	A	0.000	0.000	9.611	0.000	0.01
		B	0.000	0.000	6.151	0.000	0.01
		C	0.000	0.000	8.927	0.000	0.05
L22	72.00-71.75	A	0.000	0.000	1.651	0.000	0.00
		B	0.000	0.000	1.061	0.000	0.00
		C	0.000	0.000	1.297	0.000	0.01
L23	71.75-70.50	A	0.000	0.000	8.256	0.000	0.01
		B	0.000	0.000	5.304	0.000	0.01
		C	0.000	0.000	6.487	0.000	0.03
L24	70.50-70.25	A	0.000	0.000	1.651	0.000	0.00
		B	0.000	0.000	1.061	0.000	0.00
		C	0.000	0.000	1.297	0.000	0.01
L25	70.25-70.00	A	0.000	0.000	1.651	0.000	0.00

Tower Section	Tower Elevation ft	Face	A_R ft^2	A_F ft^2	C_AA_A In Face ft^2	C_AA_A Out Face ft^2	Weight K
		B	0.000	0.000	1.061	0.000	0.00
		C	0.000	0.000	1.297	0.000	0.01
L26	70.00-69.75	A	0.000	0.000	1.651	0.000	0.00
		B	0.000	0.000	1.061	0.000	0.00
		C	0.000	0.000	1.297	0.000	0.01
L27	69.75-69.50	A	0.000	0.000	1.651	0.000	0.00
		B	0.000	0.000	1.061	0.000	0.00
		C	0.000	0.000	1.297	0.000	0.01
L28	69.50-69.25	A	0.000	0.000	1.651	0.000	0.00
		B	0.000	0.000	1.061	0.000	0.00
		C	0.000	0.000	1.297	0.000	0.01
L29	69.25-64.25	A	0.000	0.000	21.961	0.000	0.03
		B	0.000	0.000	13.070	0.000	0.03
		C	0.000	0.000	23.198	0.000	0.12
L30	64.25-59.25	A	0.000	0.000	17.607	0.000	0.03
		B	0.000	0.000	10.799	0.000	0.03
		C	0.000	0.000	20.948	0.000	0.12
L31	59.25-56.00	A	0.000	0.000	12.569	0.000	0.02
		B	0.000	0.000	8.144	0.000	0.02
		C	0.000	0.000	15.679	0.000	0.08
L32	56.00-55.75	A	0.000	0.000	1.318	0.000	0.00
		B	0.000	0.000	1.227	0.000	0.01
		C	0.000	0.000	1.672	0.000	0.01
L33	55.75-55.50	A	0.000	0.000	1.318	0.000	0.00
		B	0.000	0.000	1.227	0.000	0.01
		C	0.000	0.000	1.672	0.000	0.01
L34	55.50-55.25	A	0.000	0.000	1.318	0.000	0.00
		B	0.000	0.000	1.227	0.000	0.01
		C	0.000	0.000	1.672	0.000	0.01
L35	55.25-54.00	A	0.000	0.000	6.589	0.000	0.02
		B	0.000	0.000	6.137	0.000	0.03
		C	0.000	0.000	8.362	0.000	0.04
L36	54.00-53.75	A	0.000	0.000	1.318	0.000	0.00
		B	0.000	0.000	1.227	0.000	0.01
		C	0.000	0.000	1.672	0.000	0.01
L37	53.75-53.50	A	0.000	0.000	1.318	0.000	0.00
		B	0.000	0.000	1.227	0.000	0.01
		C	0.000	0.000	1.672	0.000	0.01
L38	53.50-53.25	A	0.000	0.000	1.318	0.000	0.00
		B	0.000	0.000	1.227	0.000	0.01
		C	0.000	0.000	1.672	0.000	0.01
L39	53.25-53.00	A	0.000	0.000	1.318	0.000	0.00
		B	0.000	0.000	1.227	0.000	0.01
		C	0.000	0.000	1.672	0.000	0.01
L40	53.00-48.00	A	0.000	0.000	20.357	0.000	0.09
		B	0.000	0.000	21.549	0.000	0.14
		C	0.000	0.000	30.740	0.000	0.17
L41	48.00-39.75	A	0.000	0.000	36.724	0.000	0.14
		B	0.000	0.000	36.093	0.000	0.22
		C	0.000	0.000	46.152	0.000	0.29
L42	39.75-38.75	A	0.000	0.000	4.375	0.000	0.02
		B	0.000	0.000	4.087	0.000	0.03
		C	0.000	0.000	4.783	0.000	0.03
L43	38.75-34.75	A	0.000	0.000	19.374	0.000	0.07
		B	0.000	0.000	18.221	0.000	0.11
		C	0.000	0.000	22.882	0.000	0.14
L44	34.75-34.50	A	0.000	0.000	1.302	0.000	0.00
		B	0.000	0.000	1.230	0.000	0.01
		C	0.000	0.000	1.612	0.000	0.01
L45	34.50-33.75	A	0.000	0.000	3.906	0.000	0.01
		B	0.000	0.000	3.690	0.000	0.02

Tower Section	Tower Elevation ft	Face	A_R ft^2	A_F ft^2	C_AA_A In Face ft^2	C_AA_A Out Face ft^2	Weight K
		C	0.000	0.000	4.837	0.000	0.03
L46	33.75-33.50	A	0.000	0.000	1.302	0.000	0.00
		B	0.000	0.000	1.230	0.000	0.01
		C	0.000	0.000	1.612	0.000	0.01
L47	33.50-28.50	A	0.000	0.000	23.540	0.000	0.09
		B	0.000	0.000	22.099	0.000	0.14
		C	0.000	0.000	27.249	0.000	0.17
L48	28.50-24.00	A	0.000	0.000	20.027	0.000	0.08
		B	0.000	0.000	18.560	0.000	0.12
		C	0.000	0.000	21.694	0.000	0.16
L49	24.00-23.75	A	0.000	0.000	1.154	0.000	0.00
		B	0.000	0.000	1.052	0.000	0.01
		C	0.000	0.000	1.226	0.000	0.01
L50	23.75-18.75	A	0.000	0.000	23.073	0.000	0.09
		B	0.000	0.000	21.032	0.000	0.14
		C	0.000	0.000	24.515	0.000	0.17
L51	18.75-14.25	A	0.000	0.000	21.558	0.000	0.08
		B	0.000	0.000	19.721	0.000	0.12
		C	0.000	0.000	23.647	0.000	0.16
L52	14.25-14.00	A	0.000	0.000	1.323	0.000	0.00
		B	0.000	0.000	1.221	0.000	0.01
		C	0.000	0.000	1.564	0.000	0.01
L53	14.00-9.00	A	0.000	0.000	26.457	0.000	0.09
		B	0.000	0.000	24.416	0.000	0.14
		C	0.000	0.000	31.282	0.000	0.17
L54	9.00-5.00	A	0.000	0.000	18.495	0.000	0.04
		B	0.000	0.000	16.533	0.000	0.08
		C	0.000	0.000	25.025	0.000	0.14
L55	5.00-4.75	A	0.000	0.000	1.073	0.000	0.00
		B	0.000	0.000	0.971	0.000	0.00
		C	0.000	0.000	1.564	0.000	0.01
L56	4.75-4.50	A	0.000	0.000	1.073	0.000	0.00
		B	0.000	0.000	0.971	0.000	0.00
		C	0.000	0.000	1.564	0.000	0.01
L57	4.50-0.00	A	0.000	0.000	17.228	0.000	0.03
		B	0.000	0.000	15.391	0.000	0.08
		C	0.000	0.000	23.987	0.000	0.16

Feed Line/Linear Appurtenances Section Areas - With Ice

Tower Section	Tower Elevation ft	Face or Leg	Ice Thickness in	A_R ft^2	A_F ft^2	C_AA_A In Face ft^2	C_AA_A Out Face ft^2	Weight K
L1	120.00-115.00	A	1.448	0.000	0.000	0.000	0.000	0.00
		B		0.000	0.000	0.000	0.000	0.00
		C		0.000	0.000	17.257	0.000	0.21
L2	115.00-110.00	A	1.441	0.000	0.000	5.536	0.000	0.08
		B		0.000	0.000	0.000	0.000	0.00
		C		0.000	0.000	17.221	0.000	0.21
L3	110.00-105.00	A	1.435	0.000	0.000	9.219	0.000	0.14
		B		0.000	0.000	0.000	0.000	0.00
		C		0.000	0.000	17.184	0.000	0.21
L4	105.00-100.00	A	1.428	0.000	0.000	9.210	0.000	0.14
		B		0.000	0.000	7.327	0.000	0.11
		C		0.000	0.000	18.573	0.000	0.22
L5	100.00-99.25	A	1.424	0.000	0.000	1.381	0.000	0.02
		B		0.000	0.000	1.704	0.000	0.02
		C		0.000	0.000	3.995	0.000	0.04

Tower Section	Tower Elevation ft	Face or Leg	Ice Thickness in	A_R ft^2	A_F ft^2	C_AA_A In Face ft^2	C_AA_A Out Face ft^2	Weight K
L6	99.25-99.00	A	1.423	0.000	0.000	0.460	0.000	0.01
		B		0.000	0.000	0.568	0.000	0.01
		C		0.000	0.000	1.332	0.000	0.01
L7	99.00-94.00	A	1.419	0.000	0.000	9.199	0.000	0.14
		B		0.000	0.000	11.346	0.000	0.14
		C		0.000	0.000	26.600	0.000	0.32
L8	94.00-90.08	A	1.413	0.000	0.000	11.733	0.000	0.15
		B		0.000	0.000	10.944	0.000	0.13
		C		0.000	0.000	23.277	0.000	0.30
L9	90.08-89.83	A	1.409	0.000	0.000	1.038	0.000	0.01
		B		0.000	0.000	0.824	0.000	0.01
		C		0.000	0.000	1.647	0.000	0.02
L10	89.83-89.50	A	1.409	0.000	0.000	1.370	0.000	0.02
		B		0.000	0.000	1.087	0.000	0.01
		C		0.000	0.000	2.173	0.000	0.03
L11	89.50-89.25	A	1.409	0.000	0.000	1.038	0.000	0.01
		B		0.000	0.000	0.823	0.000	0.01
		C		0.000	0.000	1.646	0.000	0.02
L12	89.25-84.25	A	1.404	0.000	0.000	20.739	0.000	0.23
		B		0.000	0.000	16.452	0.000	0.19
		C		0.000	0.000	32.888	0.000	0.40
L13	84.25-78.00	A	1.395	0.000	0.000	27.899	0.000	0.31
		B		0.000	0.000	24.145	0.000	0.26
		C		0.000	0.000	41.007	0.000	0.52
L14	78.00-77.00	A	1.389	0.000	0.000	5.896	0.000	0.06
		B		0.000	0.000	5.098	0.000	0.05
		C		0.000	0.000	6.561	0.000	0.08
L15	77.00-76.75	A	1.388	0.000	0.000	1.472	0.000	0.02
		B		0.000	0.000	1.272	0.000	0.01
		C		0.000	0.000	1.637	0.000	0.02
L16	76.75-76.50	A	1.387	0.000	0.000	1.472	0.000	0.02
		B		0.000	0.000	1.272	0.000	0.01
		C		0.000	0.000	1.637	0.000	0.02
L17	76.50-75.50	A	1.386	0.000	0.000	5.887	0.000	0.06
		B		0.000	0.000	5.088	0.000	0.05
		C		0.000	0.000	6.545	0.000	0.08
L18	75.50-75.25	A	1.385	0.000	0.000	1.472	0.000	0.02
		B		0.000	0.000	1.272	0.000	0.01
		C		0.000	0.000	1.636	0.000	0.02
L19	75.25-74.50	A	1.384	0.000	0.000	4.414	0.000	0.05
		B		0.000	0.000	3.814	0.000	0.04
		C		0.000	0.000	5.246	0.000	0.07
L20	74.50-74.25	A	1.383	0.000	0.000	1.471	0.000	0.02
		B		0.000	0.000	1.271	0.000	0.01
		C		0.000	0.000	1.975	0.000	0.02
L21	74.25-72.00	A	1.381	0.000	0.000	13.236	0.000	0.14
		B		0.000	0.000	9.550	0.000	0.10
		C		0.000	0.000	14.936	0.000	0.19
L22	72.00-71.75	A	1.378	0.000	0.000	2.260	0.000	0.02
		B		0.000	0.000	1.568	0.000	0.02
		C		0.000	0.000	2.056	0.000	0.02
L23	71.75-70.50	A	1.377	0.000	0.000	11.298	0.000	0.11
		B		0.000	0.000	7.838	0.000	0.08
		C		0.000	0.000	10.277	0.000	0.12
L24	70.50-70.25	A	1.375	0.000	0.000	2.259	0.000	0.02
		B		0.000	0.000	1.567	0.000	0.02
		C		0.000	0.000	2.055	0.000	0.02
L25	70.25-70.00	A	1.375	0.000	0.000	2.259	0.000	0.02
		B		0.000	0.000	1.567	0.000	0.02
		C		0.000	0.000	2.054	0.000	0.02
L26	70.00-69.75	A	1.374	0.000	0.000	2.259	0.000	0.02

Tower Section	Tower Elevation ft	Face or Leg	Ice Thickness in	A_R ft^2	A_F ft^2	C_AA_A In Face ft^2	C_AA_A Out Face ft^2	Weight K
		B		0.000	0.000	1.567	0.000	0.02
		C		0.000	0.000	2.054	0.000	0.02
L27	69.75-69.50	A	1.374	0.000	0.000	2.259	0.000	0.02
		B		0.000	0.000	1.567	0.000	0.02
		C		0.000	0.000	2.054	0.000	0.02
L28	69.50-69.25	A	1.373	0.000	0.000	2.258	0.000	0.02
		B		0.000	0.000	1.567	0.000	0.02
		C		0.000	0.000	2.054	0.000	0.02
L29	69.25-64.25	A	1.368	0.000	0.000	30.574	0.000	0.31
		B		0.000	0.000	20.220	0.000	0.21
		C		0.000	0.000	37.519	0.000	0.45
L30	64.25-59.25	A	1.357	0.000	0.000	24.861	0.000	0.26
		B		0.000	0.000	17.086	0.000	0.18
		C		0.000	0.000	34.561	0.000	0.42
L31	59.25-56.00	A	1.348	0.000	0.000	17.663	0.000	0.18
		B		0.000	0.000	12.609	0.000	0.13
		C		0.000	0.000	25.215	0.000	0.30
L32	56.00-55.75	A	1.344	0.000	0.000	1.812	0.000	0.02
		B		0.000	0.000	1.741	0.000	0.02
		C		0.000	0.000	2.549	0.000	0.03
L33	55.75-55.50	A	1.343	0.000	0.000	1.812	0.000	0.02
		B		0.000	0.000	1.740	0.000	0.02
		C		0.000	0.000	2.548	0.000	0.03
L34	55.50-55.25	A	1.343	0.000	0.000	1.812	0.000	0.02
		B		0.000	0.000	1.740	0.000	0.02
		C		0.000	0.000	2.548	0.000	0.03
L35	55.25-54.00	A	1.341	0.000	0.000	9.056	0.000	0.10
		B		0.000	0.000	8.697	0.000	0.11
		C		0.000	0.000	12.735	0.000	0.15
L36	54.00-53.75	A	1.339	0.000	0.000	1.811	0.000	0.02
		B		0.000	0.000	1.739	0.000	0.02
		C		0.000	0.000	2.546	0.000	0.03
L37	53.75-53.50	A	1.338	0.000	0.000	1.810	0.000	0.02
		B		0.000	0.000	1.739	0.000	0.02
		C		0.000	0.000	2.545	0.000	0.03
L38	53.50-53.25	A	1.338	0.000	0.000	1.810	0.000	0.02
		B		0.000	0.000	1.738	0.000	0.02
		C		0.000	0.000	2.545	0.000	0.03
L39	53.25-53.00	A	1.337	0.000	0.000	1.810	0.000	0.02
		B		0.000	0.000	1.738	0.000	0.02
		C		0.000	0.000	2.545	0.000	0.03
L40	53.00-48.00	A	1.330	0.000	0.000	28.028	0.000	0.34
		B		0.000	0.000	30.648	0.000	0.40
		C		0.000	0.000	47.442	0.000	0.58
L41	48.00-39.75	A	1.312	0.000	0.000	50.627	0.000	0.60
		B		0.000	0.000	51.240	0.000	0.66
		C		0.000	0.000	72.392	0.000	0.90
L42	39.75-38.75	A	1.297	0.000	0.000	6.049	0.000	0.07
		B		0.000	0.000	5.830	0.000	0.08
		C		0.000	0.000	7.688	0.000	0.10
L43	38.75-34.75	A	1.289	0.000	0.000	26.554	0.000	0.30
		B		0.000	0.000	25.659	0.000	0.33
		C		0.000	0.000	35.482	0.000	0.44
L44	34.75-34.50	A	1.281	0.000	0.000	1.777	0.000	0.02
		B		0.000	0.000	1.720	0.000	0.02
		C		0.000	0.000	2.452	0.000	0.03
L45	34.50-33.75	A	1.279	0.000	0.000	5.328	0.000	0.06
		B		0.000	0.000	5.159	0.000	0.06
		C		0.000	0.000	7.352	0.000	0.09
L46	33.75-33.50	A	1.277	0.000	0.000	1.775	0.000	0.02
		B		0.000	0.000	1.719	0.000	0.02

Tower Section	Tower Elevation ft	Face or Leg	Ice Thickness in	A_R ft^2	A_F ft^2	C_AA_A In Face ft^2	C_AA_A Out Face ft^2	Weight K
		C		0.000	0.000	2.450	0.000	0.03
L47	33.50-28.50	A	1.267	0.000	0.000	32.184	0.000	0.37
		B		0.000	0.000	31.042	0.000	0.39
		C		0.000	0.000	42.350	0.000	0.52
L48	28.50-24.00	A	1.246	0.000	0.000	27.251	0.000	0.31
		B		0.000	0.000	26.035	0.000	0.34
		C		0.000	0.000	34.190	0.000	0.44
L49	24.00-23.75	A	1.234	0.000	0.000	1.552	0.000	0.02
		B		0.000	0.000	1.463	0.000	0.02
		C		0.000	0.000	1.914	0.000	0.02
L50	23.75-18.75	A	1.220	0.000	0.000	30.964	0.000	0.35
		B		0.000	0.000	29.175	0.000	0.37
		C		0.000	0.000	38.145	0.000	0.48
L51	18.75-14.25	A	1.190	0.000	0.000	28.793	0.000	0.31
		B		0.000	0.000	27.156	0.000	0.33
		C		0.000	0.000	36.204	0.000	0.44
L52	14.25-14.00	A	1.171	0.000	0.000	1.763	0.000	0.02
		B		0.000	0.000	1.671	0.000	0.02
		C		0.000	0.000	2.339	0.000	0.03
L53	14.00-9.00	A	1.147	0.000	0.000	35.113	0.000	0.36
		B		0.000	0.000	33.252	0.000	0.39
		C		0.000	0.000	46.498	0.000	0.53
L54	9.00-5.00	A	1.092	0.000	0.000	24.559	0.000	0.23
		B		0.000	0.000	22.624	0.000	0.24
		C		0.000	0.000	36.676	0.000	0.40
L55	5.00-4.75	A	1.053	0.000	0.000	1.424	0.000	0.01
		B		0.000	0.000	1.326	0.000	0.01
		C		0.000	0.000	2.270	0.000	0.02
L56	4.75-4.50	A	1.048	0.000	0.000	1.422	0.000	0.01
		B		0.000	0.000	1.324	0.000	0.01
		C		0.000	0.000	2.266	0.000	0.02
L57	4.50-0.00	A	0.974	0.000	0.000	22.681	0.000	0.19
		B		0.000	0.000	20.850	0.000	0.21
		C		0.000	0.000	34.878	0.000	0.38

Feed Line Center of Pressure

Section	Elevation ft	CP_X in	CP_Z in	CP_X Ice in	CP_Z Ice in
L1	120.00-115.00	2.5592	4.6593	2.1923	4.6294
L2	115.00-110.00	0.9329	1.8063	1.0788	2.5894
L3	110.00-105.00	0.1330	0.4051	0.5079	1.5513
L4	105.00-100.00	0.9201	-0.8982	1.1952	0.0737
L5	100.00-99.25	1.0823	-0.8330	1.3300	-0.0793
L6	99.25-99.00	1.0856	-0.8352	1.3345	-0.0795
L7	99.00-94.00	1.1006	-0.8446	1.3560	-0.0806
L8	94.00-90.08	0.1614	-0.9593	0.6894	-0.2740
L9	90.08-89.83	-0.5601	-1.0197	0.1148	-0.4108
L10	89.83-89.50	-0.5609	-1.0212	0.1149	-0.4116
L11	89.50-89.25	-0.5621	-1.0233	0.1151	-0.4124
L12	89.25-84.25	-0.5693	-1.0365	0.1162	-0.4190
L13	84.25-78.00	-0.6603	-0.8520	0.0255	-0.2890
L14	78.00-77.00	-0.1740	-1.0766	0.3259	-0.5098
L15	77.00-76.75	-0.1745	-1.0798	0.3255	-0.5131
L16	76.75-76.50	-0.1747	-1.0813	0.3259	-0.5139
L17	76.50-75.50	-0.1752	-1.0845	0.3269	-0.5157

Section	Elevation ft	CP_X in	CP_Z in	CP_X Ice in	CP_Z Ice in
L18	75.50-75.25	-0.1756	-1.0872	0.3278	-0.5174
L19	75.25-74.50	0.1738	-0.8236	0.5905	-0.3240
L20	74.50-74.25	0.8185	-0.3355	1.0839	0.0409
L21	74.25-72.00	0.9311	-0.0350	1.2094	0.3442
L22	72.00-71.75	0.7184	-0.8158	0.9490	-0.4285
L23	71.75-70.50	0.7214	-0.8187	0.9530	-0.4303
L24	70.50-70.25	0.7245	-0.8217	0.9570	-0.4321
L25	70.25-70.00	0.7255	-0.8227	0.9584	-0.4327
L26	70.00-69.75	0.7265	-0.8236	0.9596	-0.4332
L27	69.75-69.50	0.7277	-0.8248	0.9611	-0.4339
L28	69.50-69.25	0.7285	-0.8256	0.9623	-0.4344
L29	69.25-64.25	1.2529	-0.6263	1.4324	-0.1797
L30	64.25-59.25	2.1385	-0.5833	2.1511	-0.0883
L31	59.25-56.00	2.6296	-1.0052	2.5827	-0.4849
L32	56.00-55.75	0.8192	-1.6608	1.0847	-1.1908
L33	55.75-55.50	0.8202	-1.6626	1.0860	-1.1923
L34	55.50-55.25	0.8213	-1.6647	1.0874	-1.1940
L35	55.25-54.00	0.8242	-1.6701	1.0912	-1.1986
L36	54.00-53.75	0.8269	-1.6752	1.0948	-1.2030
L37	53.75-53.50	0.8278	-1.6770	1.0961	-1.2045
L38	53.50-53.25	0.8287	-1.6785	1.0972	-1.2059
L39	53.25-53.00	0.8295	-1.6801	1.0984	-1.2074
L40	53.00-48.00	0.5074	-2.1652	0.8768	-1.5599
L41	48.00-39.75	0.0503	-2.0419	0.5241	-1.4025
L42	39.75-38.75	-0.4780	-1.4363	0.0959	-0.8161
L43	38.75-34.75	-0.2078	-1.6892	0.2800	-1.0981
L44	34.75-34.50	-0.0322	-1.8571	0.4060	-1.2862
L45	34.50-33.75	-0.0322	-1.8610	0.4066	-1.2896
L46	33.75-33.50	-0.0322	-1.8643	0.4071	-1.2927
L47	33.50-28.50	-0.2892	-1.6596	0.2286	-1.0548
L48	28.50-24.00	-0.4612	-1.4755	0.1091	-0.8621
L49	24.00-23.75	-0.3791	-1.4161	0.1581	-0.8327
L50	23.75-18.75	-0.3825	-1.4296	0.1564	-0.8456
L51	18.75-14.25	-0.2776	-1.5618	0.2350	-0.9928
L52	14.25-14.00	-0.0072	-1.8386	0.4396	-1.3098
L53	14.00-9.00	-0.0069	-1.8564	0.4387	-1.3301
L54	9.00-5.00	0.5727	-0.7069	0.9542	-0.3300
L55	5.00-4.75	0.9037	-0.2200	1.2405	0.0866
L56	4.75-4.50	0.9044	-0.2202	1.2402	0.0853
L57	4.50-0.00	0.7243	0.2579	1.0991	0.5149

Note: For pole sections, center of pressure calculations do not consider feed line shielding.

Shielding Factor Ka

Tower Section	Feed Line Record No.	Description	Feed Line Segment Elev.	K_a No Ice	K_a Ice
L1	2	Safety Line 3/8	115.00 - 120.00	1.0000	1.0000
L1	5	1266A(1/8)	115.00 - 120.00	1.0000	1.0000
L1	6	7983A(ELLIPTICAL)	115.00 - 120.00	1.0000	1.0000
L1	8	3" Flexible Conduit	115.00 -	1.0000	1.0000

Tower Section	Feed Line Record No.	Description	Feed Line Segment Elev.	K_a No Ice	K_a Ice
			120.00		
L1	9	HB114-1-0813U4-M5J(1-1/4)	115.00 - 120.00	1.0000	1.0000
L2	2	Safety Line 3/8	110.00 - 115.00	1.0000	1.0000
L2	5	1266A(1/8)	110.00 - 115.00	1.0000	1.0000
L2	6	7983A(ELLIPTICAL)	110.00 - 115.00	1.0000	1.0000
L2	8	3" Flexible Conduit	110.00 - 115.00	1.0000	1.0000
L2	9	HB114-1-0813U4-M5J(1-1/4)	110.00 - 115.00	1.0000	1.0000
L2	11	LDF7-50A(1-5/8)	110.00 - 113.00	1.0000	1.0000
L3	2	Safety Line 3/8	105.00 - 110.00	1.0000	1.0000
L3	5	1266A(1/8)	105.00 - 110.00	1.0000	1.0000
L3	6	7983A(ELLIPTICAL)	105.00 - 110.00	1.0000	1.0000
L3	8	3" Flexible Conduit	105.00 - 110.00	1.0000	1.0000
L3	9	HB114-1-0813U4-M5J(1-1/4)	105.00 - 110.00	1.0000	1.0000
L3	11	LDF7-50A(1-5/8)	105.00 - 110.00	1.0000	1.0000
L4	2	Safety Line 3/8	100.00 - 105.00	1.0000	1.0000
L4	5	1266A(1/8)	100.00 - 105.00	1.0000	1.0000
L4	6	7983A(ELLIPTICAL)	100.00 - 105.00	1.0000	1.0000
L4	8	3" Flexible Conduit	100.00 - 105.00	1.0000	1.0000
L4	9	HB114-1-0813U4-M5J(1-1/4)	100.00 - 105.00	1.0000	1.0000
L4	11	LDF7-50A(1-5/8)	100.00 - 105.00	1.0000	1.0000
L4	14	MLE Hybrid 9Power/18Fiber RL 2(1 5/8")	100.00 - 105.00	1.0000	1.0000
L4	15	HCS 6X12 6AWG(1-3/8)	100.00 - 105.00	1.0000	1.0000
L4	74	PL 1.25x4	100.00 - 100.75	1.0000	1.0000
L4	75	PL 1.25x4	100.00 - 100.75	1.0000	1.0000
L4	76	PL 1.25x4	100.00 - 100.75	1.0000	1.0000
L5	2	Safety Line 3/8	99.25 - 100.00	1.0000	1.0000
L5	5	1266A(1/8)	99.25 - 100.00	1.0000	1.0000
L5	6	7983A(ELLIPTICAL)	99.25 - 100.00	1.0000	1.0000
L5	8	3" Flexible Conduit	99.25 - 100.00	1.0000	1.0000
L5	9	HB114-1-0813U4-M5J(1-1/4)	99.25 - 100.00	1.0000	1.0000
L5	11	LDF7-50A(1-5/8)	99.25 - 100.00	1.0000	1.0000
L5	14	MLE Hybrid 9Power/18Fiber RL 2(1 5/8")	99.25 - 100.00	1.0000	1.0000
L5	15	HCS 6X12 6AWG(1-3/8)	99.25 - 100.00	1.0000	1.0000
L5	74	PL 1.25x4	99.25 - 100.00	1.0000	1.0000
L5	75	PL 1.25x4	99.25 - 100.00	1.0000	1.0000
L5	76	PL 1.25x4	99.25 - 100.00	1.0000	1.0000

Tower Section	Feed Line Record No.	Description	Feed Line Segment Elev.	K_a No Ice	K_a Ice
L6	2	Safety Line 3/8	99.00 - 99.25	1.0000	1.0000
L6	5	1266A(1/8)	99.00 - 99.25	1.0000	1.0000
L6	6	7983A(ELLIPTICAL)	99.00 - 99.25	1.0000	1.0000
L6	8	3" Flexible Conduit	99.00 - 99.25	1.0000	1.0000
L6	9	HB114-1-0813U4-M5J(1-1/4)	99.00 - 99.25	1.0000	1.0000
L6	11	LDF7-50A(1-5/8)	99.00 - 99.25	1.0000	1.0000
L6	14	MLE Hybrid 9Power/18Fiber RL 2(1 5/8")	99.00 - 99.25	1.0000	1.0000
L6	15	HCS 6X12 6AWG(1-3/8)	99.00 - 99.25	1.0000	1.0000
L6	74	PL 1.25x4	99.00 - 99.25	1.0000	1.0000
L6	75	PL 1.25x4	99.00 - 99.25	1.0000	1.0000
L6	76	PL 1.25x4	99.00 - 99.25	1.0000	1.0000
L7	2	Safety Line 3/8	94.00 - 99.00	1.0000	1.0000
L7	5	1266A(1/8)	94.00 - 99.00	1.0000	1.0000
L7	6	7983A(ELLIPTICAL)	94.00 - 99.00	1.0000	1.0000
L7	8	3" Flexible Conduit	94.00 - 99.00	1.0000	1.0000
L7	9	HB114-1-0813U4-M5J(1-1/4)	94.00 - 99.00	1.0000	1.0000
L7	11	LDF7-50A(1-5/8)	94.00 - 99.00	1.0000	1.0000
L7	14	MLE Hybrid 9Power/18Fiber RL 2(1 5/8")	94.00 - 99.00	1.0000	1.0000
L7	15	HCS 6X12 6AWG(1-3/8)	94.00 - 99.00	1.0000	1.0000
L7	74	PL 1.25x4	94.00 - 99.00	1.0000	1.0000
L7	75	PL 1.25x4	94.00 - 99.00	1.0000	1.0000
L7	76	PL 1.25x4	94.00 - 99.00	1.0000	1.0000
L8	2	Safety Line 3/8	90.08 - 94.00	1.0000	1.0000
L8	5	1266A(1/8)	90.08 - 94.00	1.0000	1.0000
L8	6	7983A(ELLIPTICAL)	90.08 - 94.00	1.0000	1.0000
L8	8	3" Flexible Conduit	90.08 - 94.00	1.0000	1.0000
L8	9	HB114-1-0813U4-M5J(1-1/4)	90.08 - 94.00	1.0000	1.0000
L8	11	LDF7-50A(1-5/8)	90.08 - 94.00	1.0000	1.0000
L8	14	MLE Hybrid 9Power/18Fiber RL 2(1 5/8")	90.08 - 94.00	1.0000	1.0000
L8	15	HCS 6X12 6AWG(1-3/8)	90.08 - 94.00	1.0000	1.0000
L8	63	(Area) CCI-65FP-060100 (H)	90.08 - 92.00	1.0000	1.0000
L8	64	(Area) CCI-65FP-060100 (H)	90.08 - 92.00	1.0000	1.0000
L8	66	(Area) CCI-65FP-045100 (H)	90.08 - 92.08	1.0000	1.0000
L8	67	(Area) CCI-65FP-045100 (H)	90.08 - 92.08	1.0000	1.0000
L8	74	PL 1.25x4	90.08 - 94.00	1.0000	1.0000
L8	75	PL 1.25x4	90.08 - 94.00	1.0000	1.0000
L8	76	PL 1.25x4	90.08 - 94.00	1.0000	1.0000
L9	2	Safety Line 3/8	89.83 - 90.08	1.0000	1.0000
L9	5	1266A(1/8)	89.83 - 90.08	1.0000	1.0000
L9	6	7983A(ELLIPTICAL)	89.83 - 90.08	1.0000	1.0000
L9	8	3" Flexible Conduit	89.83 - 90.08	1.0000	1.0000
L9	9	HB114-1-0813U4-M5J(1-1/4)	89.83 - 90.08	1.0000	1.0000
L9	11	LDF7-50A(1-5/8)	89.83 - 90.08	1.0000	1.0000
L9	14	MLE Hybrid 9Power/18Fiber RL 2(1 5/8")	89.83 - 90.08	1.0000	1.0000
L9	15	HCS 6X12 6AWG(1-3/8)	89.83 - 90.08	1.0000	1.0000
L9	63	(Area) CCI-65FP-060100 (H)	89.83 - 90.08	1.0000	1.0000
L9	64	(Area) CCI-65FP-060100 (H)	89.83 - 90.08	1.0000	1.0000
L9	66	(Area) CCI-65FP-045100 (H)	89.83 - 90.08	1.0000	1.0000
L9	67	(Area) CCI-65FP-045100 (H)	89.83 - 90.08	1.0000	1.0000
L9	74	PL 1.25x4	89.83 - 90.08	1.0000	1.0000
L9	75	PL 1.25x4	89.83 - 90.08	1.0000	1.0000
L9	76	PL 1.25x4	89.83 - 90.08	1.0000	1.0000
L10	2	Safety Line 3/8	89.50 - 89.83	1.0000	1.0000
L10	5	1266A(1/8)	89.50 - 89.83	1.0000	1.0000

Tower Section	Feed Line Record No.	Description	Feed Line Segment Elev.	K_a No Ice	K_a Ice
L10	6	7983A(ELLIPTICAL)	89.50 - 89.83	1.0000	1.0000
L10	8	3" Flexible Conduit	89.50 - 89.83	1.0000	1.0000
L10	9	HB114-1-0813U4-M5J(1-1/4)	89.50 - 89.83	1.0000	1.0000
L10	11	LDF7-50A(1-5/8)	89.50 - 89.83	1.0000	1.0000
L10	14	MLE Hybrid 9Power/18Fiber RL 2(1 5/8")	89.50 - 89.83	1.0000	1.0000
L10	15	HCS 6X12 6AWG(1-3/8)	89.50 - 89.83	1.0000	1.0000
L10	63	(Area) CCI-65FP-060100 (H)	89.50 - 89.83	1.0000	1.0000
L10	64	(Area) CCI-65FP-060100 (H)	89.50 - 89.83	1.0000	1.0000
L10	66	(Area) CCI-65FP-045100 (H)	89.50 - 89.83	1.0000	1.0000
L10	67	(Area) CCI-65FP-045100 (H)	89.50 - 89.83	1.0000	1.0000
L10	74	PL 1.25x4	89.50 - 89.83	1.0000	1.0000
L10	75	PL 1.25x4	89.50 - 89.83	1.0000	1.0000
L10	76	PL 1.25x4	89.50 - 89.83	1.0000	1.0000
L11	2	Safety Line 3/8	89.25 - 89.50	1.0000	1.0000
L11	5	1266A(1/8)	89.25 - 89.50	1.0000	1.0000
L11	6	7983A(ELLIPTICAL)	89.25 - 89.50	1.0000	1.0000
L11	8	3" Flexible Conduit	89.25 - 89.50	1.0000	1.0000
L11	9	HB114-1-0813U4-M5J(1-1/4)	89.25 - 89.50	1.0000	1.0000
L11	11	LDF7-50A(1-5/8)	89.25 - 89.50	1.0000	1.0000
L11	14	MLE Hybrid 9Power/18Fiber RL 2(1 5/8")	89.25 - 89.50	1.0000	1.0000
L11	15	HCS 6X12 6AWG(1-3/8)	89.25 - 89.50	1.0000	1.0000
L11	63	(Area) CCI-65FP-060100 (H)	89.25 - 89.50	1.0000	1.0000
L11	64	(Area) CCI-65FP-060100 (H)	89.25 - 89.50	1.0000	1.0000
L11	66	(Area) CCI-65FP-045100 (H)	89.25 - 89.50	1.0000	1.0000
L11	67	(Area) CCI-65FP-045100 (H)	89.25 - 89.50	1.0000	1.0000
L11	74	PL 1.25x4	89.25 - 89.50	1.0000	1.0000
L11	75	PL 1.25x4	89.25 - 89.50	1.0000	1.0000
L11	76	PL 1.25x4	89.25 - 89.50	1.0000	1.0000
L12	2	Safety Line 3/8	84.25 - 89.25	1.0000	1.0000
L12	5	1266A(1/8)	84.25 - 89.25	1.0000	1.0000
L12	6	7983A(ELLIPTICAL)	84.25 - 89.25	1.0000	1.0000
L12	8	3" Flexible Conduit	84.25 - 89.25	1.0000	1.0000
L12	9	HB114-1-0813U4-M5J(1-1/4)	84.25 - 89.25	1.0000	1.0000
L12	11	LDF7-50A(1-5/8)	84.25 - 89.25	1.0000	1.0000
L12	14	MLE Hybrid 9Power/18Fiber RL 2(1 5/8")	84.25 - 89.25	1.0000	1.0000
L12	15	HCS 6X12 6AWG(1-3/8)	84.25 - 89.25	1.0000	1.0000
L12	63	(Area) CCI-65FP-060100 (H)	84.25 - 89.25	1.0000	1.0000
L12	64	(Area) CCI-65FP-060100 (H)	84.25 - 89.25	1.0000	1.0000
L12	66	(Area) CCI-65FP-045100 (H)	84.25 - 89.25	1.0000	1.0000
L12	67	(Area) CCI-65FP-045100 (H)	84.25 - 89.25	1.0000	1.0000
L12	74	PL 1.25x4	84.25 - 89.25	1.0000	1.0000
L12	75	PL 1.25x4	84.25 - 89.25	1.0000	1.0000
L12	76	PL 1.25x4	84.25 - 89.25	1.0000	1.0000
L13	2	Safety Line 3/8	78.00 - 84.25	1.0000	1.0000
L13	5	1266A(1/8)	78.00 - 84.25	1.0000	1.0000
L13	6	7983A(ELLIPTICAL)	78.00 - 84.25	1.0000	1.0000
L13	8	3" Flexible Conduit	78.00 - 84.25	1.0000	1.0000
L13	9	HB114-1-0813U4-M5J(1-1/4)	78.00 - 84.25	1.0000	1.0000
L13	11	LDF7-50A(1-5/8)	78.00 - 84.25	1.0000	1.0000
L13	14	MLE Hybrid 9Power/18Fiber RL 2(1 5/8")	78.00 - 84.25	1.0000	1.0000
L13	15	HCS 6X12 6AWG(1-3/8)	78.00 - 84.25	1.0000	1.0000
L13	63	(Area) CCI-65FP-060100 (H)	78.00 - 84.25	1.0000	1.0000
L13	64	(Area) CCI-65FP-060100 (H)	78.00 - 84.25	1.0000	1.0000
L13	66	(Area) CCI-65FP-045100 (H)	78.00 - 84.25	1.0000	1.0000

Tower Section	Feed Line Record No.	Description	Feed Line Segment Elev.	K_a No Ice	K_a Ice
L13	67	(Area) CCI-65FP-045100 (H)	78.00 - 84.25	1.0000	1.0000
L13	74	PL 1.25x4	78.00 - 84.25	1.0000	1.0000
L13	75	PL 1.25x4	78.00 - 84.25	1.0000	1.0000
L13	76	PL 1.25x4	78.00 - 84.25	1.0000	1.0000
L13	78	PL 1.25x4	78.00 - 80.00	1.0000	1.0000
L13	79	PL 1.25x4	78.00 - 78.25	1.0000	1.0000
L13	80	PL 1.25x4	78.00 - 80.00	1.0000	1.0000
L13	81	PL 1.25x4	78.00 - 80.00	1.0000	1.0000
L15	2	Safety Line 3/8	76.75 - 77.00	1.0000	1.0000
L15	5	1266A(1/8)	76.75 - 77.00	1.0000	1.0000
L15	6	7983A(ELLIPTICAL)	76.75 - 77.00	1.0000	1.0000
L15	8	3" Flexible Conduit	76.75 - 77.00	1.0000	1.0000
L15	9	HB114-1-0813U4-M5J(1-1/4)	76.75 - 77.00	1.0000	1.0000
L15	11	LDF7-50A(1-5/8)	76.75 - 77.00	1.0000	1.0000
L15	14	MLE Hybrid 9Power/18Fiber RL 2(1 5/8")	76.75 - 77.00	1.0000	1.0000
L15	15	HCS 6X12 6AWG(1-3/8)	76.75 - 77.00	1.0000	1.0000
L15	63	(Area) CCI-65FP-060100 (H)	76.75 - 77.00	1.0000	1.0000
L15	64	(Area) CCI-65FP-060100 (H)	76.75 - 77.00	1.0000	1.0000
L15	66	(Area) CCI-65FP-045100 (H)	76.75 - 77.00	1.0000	1.0000
L15	67	(Area) CCI-65FP-045100 (H)	76.75 - 77.00	1.0000	1.0000
L15	74	PL 1.25x4	76.75 - 77.00	1.0000	1.0000
L15	75	PL 1.25x4	76.75 - 77.00	1.0000	1.0000
L15	76	PL 1.25x4	76.75 - 77.00	1.0000	1.0000
L15	78	PL 1.25x4	76.75 - 77.00	1.0000	1.0000
L15	79	PL 1.25x4	76.75 - 77.00	1.0000	1.0000
L15	80	PL 1.25x4	76.75 - 77.00	1.0000	1.0000
L15	81	PL 1.25x4	76.75 - 77.00	1.0000	1.0000
L16	2	Safety Line 3/8	76.50 - 76.75	1.0000	1.0000
L16	5	1266A(1/8)	76.50 - 76.75	1.0000	1.0000
L16	6	7983A(ELLIPTICAL)	76.50 - 76.75	1.0000	1.0000
L16	8	3" Flexible Conduit	76.50 - 76.75	1.0000	1.0000
L16	9	HB114-1-0813U4-M5J(1-1/4)	76.50 - 76.75	1.0000	1.0000
L16	11	LDF7-50A(1-5/8)	76.50 - 76.75	1.0000	1.0000
L16	14	MLE Hybrid 9Power/18Fiber RL 2(1 5/8")	76.50 - 76.75	1.0000	1.0000
L16	15	HCS 6X12 6AWG(1-3/8)	76.50 - 76.75	1.0000	1.0000
L16	63	(Area) CCI-65FP-060100 (H)	76.50 - 76.75	1.0000	1.0000
L16	64	(Area) CCI-65FP-060100 (H)	76.50 - 76.75	1.0000	1.0000
L16	66	(Area) CCI-65FP-045100 (H)	76.50 - 76.75	1.0000	1.0000
L16	67	(Area) CCI-65FP-045100 (H)	76.50 - 76.75	1.0000	1.0000
L16	74	PL 1.25x4	76.50 - 76.75	1.0000	1.0000
L16	75	PL 1.25x4	76.50 - 76.75	1.0000	1.0000
L16	76	PL 1.25x4	76.50 - 76.75	1.0000	1.0000
L16	78	PL 1.25x4	76.50 - 76.75	1.0000	1.0000
L16	79	PL 1.25x4	76.50 - 76.75	1.0000	1.0000
L16	80	PL 1.25x4	76.50 - 76.75	1.0000	1.0000
L16	81	PL 1.25x4	76.50 - 76.75	1.0000	1.0000
L17	2	Safety Line 3/8	75.50 - 76.50	1.0000	1.0000
L17	5	1266A(1/8)	75.50 - 76.50	1.0000	1.0000
L17	6	7983A(ELLIPTICAL)	75.50 - 76.50	1.0000	1.0000
L17	8	3" Flexible Conduit	75.50 - 76.50	1.0000	1.0000
L17	9	HB114-1-0813U4-M5J(1-1/4)	75.50 - 76.50	1.0000	1.0000
L17	11	LDF7-50A(1-5/8)	75.50 - 76.50	1.0000	1.0000
L17	14	MLE Hybrid 9Power/18Fiber RL 2(1 5/8")	75.50 - 76.50	1.0000	1.0000
L17	15	HCS 6X12 6AWG(1-3/8)	75.50 - 76.50	1.0000	1.0000
L17	63	(Area) CCI-65FP-060100 (H)	75.50 - 76.50	1.0000	1.0000
L17	64	(Area) CCI-65FP-060100 (H)	75.50 - 76.50	1.0000	1.0000

Tower Section	Feed Line Record No.	Description	Feed Line Segment Elev.	K_a No Ice	K_a Ice
L17	66	(Area) CCI-65FP-045100 (H)	75.50 - 76.50	1.0000	1.0000
L17	67	(Area) CCI-65FP-045100 (H)	75.50 - 76.50	1.0000	1.0000
L17	74	PL 1.25x4	75.50 - 76.50	1.0000	1.0000
L17	75	PL 1.25x4	75.50 - 76.50	1.0000	1.0000
L17	76	PL 1.25x4	75.50 - 76.50	1.0000	1.0000
L17	78	PL 1.25x4	75.50 - 76.50	1.0000	1.0000
L17	79	PL 1.25x4	75.50 - 76.50	1.0000	1.0000
L17	80	PL 1.25x4	75.50 - 76.50	1.0000	1.0000
L17	81	PL 1.25x4	75.50 - 76.50	1.0000	1.0000
L18	2	Safety Line 3/8	75.25 - 75.50	1.0000	1.0000
L18	5	1266A(1/8)	75.25 - 75.50	1.0000	1.0000
L18	6	7983A(ELLIPTICAL)	75.25 - 75.50	1.0000	1.0000
L18	8	3" Flexible Conduit	75.25 - 75.50	1.0000	1.0000
L18	9	HB114-1-0813U4-M5J(1-1/4)	75.25 - 75.50	1.0000	1.0000
L18	11	LDF7-50A(1-5/8)	75.25 - 75.50	1.0000	1.0000
L18	14	MLE Hybrid 9Power/18Fiber RL 2(1 5/8")	75.25 - 75.50	1.0000	1.0000
L18	15	HCS 6X12 6AWG(1-3/8)	75.25 - 75.50	1.0000	1.0000
L18	63	(Area) CCI-65FP-060100 (H)	75.25 - 75.50	1.0000	1.0000
L18	64	(Area) CCI-65FP-060100 (H)	75.25 - 75.50	1.0000	1.0000
L18	66	(Area) CCI-65FP-045100 (H)	75.25 - 75.50	1.0000	1.0000
L18	67	(Area) CCI-65FP-045100 (H)	75.25 - 75.50	1.0000	1.0000
L18	74	PL 1.25x4	75.25 - 75.50	1.0000	1.0000
L18	75	PL 1.25x4	75.25 - 75.50	1.0000	1.0000
L18	76	PL 1.25x4	75.25 - 75.50	1.0000	1.0000
L18	78	PL 1.25x4	75.25 - 75.50	1.0000	1.0000
L18	79	PL 1.25x4	75.25 - 75.50	1.0000	1.0000
L18	80	PL 1.25x4	75.25 - 75.50	1.0000	1.0000
L18	81	PL 1.25x4	75.25 - 75.50	1.0000	1.0000
L19	2	Safety Line 3/8	74.50 - 75.25	1.0000	1.0000
L19	5	1266A(1/8)	74.50 - 75.25	1.0000	1.0000
L19	6	7983A(ELLIPTICAL)	74.50 - 75.25	1.0000	1.0000
L19	8	3" Flexible Conduit	74.50 - 75.25	1.0000	1.0000
L19	9	HB114-1-0813U4-M5J(1-1/4)	74.50 - 75.25	1.0000	1.0000
L19	11	LDF7-50A(1-5/8)	74.50 - 75.25	1.0000	1.0000
L19	14	MLE Hybrid 9Power/18Fiber RL 2(1 5/8")	74.50 - 75.25	1.0000	1.0000
L19	15	HCS 6X12 6AWG(1-3/8)	74.50 - 75.25	1.0000	1.0000
L19	61	(Area) CCI-65FP-065125 (H)	74.50 - 74.75	1.0000	1.0000
L19	63	(Area) CCI-65FP-060100 (H)	74.50 - 75.25	1.0000	1.0000
L19	64	(Area) CCI-65FP-060100 (H)	74.50 - 75.25	1.0000	1.0000
L19	66	(Area) CCI-65FP-045100 (H)	74.50 - 75.25	1.0000	1.0000
L19	67	(Area) CCI-65FP-045100 (H)	74.50 - 75.25	1.0000	1.0000
L19	74	PL 1.25x4	74.50 - 75.25	1.0000	1.0000
L19	75	PL 1.25x4	74.50 - 75.25	1.0000	1.0000
L19	76	PL 1.25x4	74.50 - 75.25	1.0000	1.0000
L19	78	PL 1.25x4	74.50 - 75.25	1.0000	1.0000
L19	79	PL 1.25x4	74.50 - 75.25	1.0000	1.0000
L19	80	PL 1.25x4	74.50 - 75.25	1.0000	1.0000
L19	81	PL 1.25x4	74.50 - 75.25	1.0000	1.0000
L20	2	Safety Line 3/8	74.25 - 74.50	1.0000	1.0000
L20	5	1266A(1/8)	74.25 - 74.50	1.0000	1.0000
L20	6	7983A(ELLIPTICAL)	74.25 - 74.50	1.0000	1.0000
L20	8	3" Flexible Conduit	74.25 - 74.50	1.0000	1.0000
L20	9	HB114-1-0813U4-M5J(1-1/4)	74.25 - 74.50	1.0000	1.0000
L20	11	LDF7-50A(1-5/8)	74.25 - 74.50	1.0000	1.0000
L20	14	MLE Hybrid 9Power/18Fiber RL 2(1 5/8")	74.25 - 74.50	1.0000	1.0000
L20	15	HCS 6X12 6AWG(1-3/8)	74.25 - 74.50	1.0000	1.0000

Tower Section	Feed Line Record No.	Description	Feed Line Segment Elev.	K_a No Ice	K_a Ice
L20	61	(Area) CCI-65FP-065125 (H)	74.25 - 74.50	1.0000	1.0000
L20	63	(Area) CCI-65FP-060100 (H)	74.25 - 74.50	1.0000	1.0000
L20	64	(Area) CCI-65FP-060100 (H)	74.25 - 74.50	1.0000	1.0000
L20	66	(Area) CCI-65FP-045100 (H)	74.25 - 74.50	1.0000	1.0000
L20	67	(Area) CCI-65FP-045100 (H)	74.25 - 74.50	1.0000	1.0000
L20	74	PL 1.25x4	74.25 - 74.50	1.0000	1.0000
L20	75	PL 1.25x4	74.25 - 74.50	1.0000	1.0000
L20	76	PL 1.25x4	74.25 - 74.50	1.0000	1.0000
L20	78	PL 1.25x4	74.25 - 74.50	1.0000	1.0000
L20	79	PL 1.25x4	74.25 - 74.50	1.0000	1.0000
L20	80	PL 1.25x4	74.25 - 74.50	1.0000	1.0000
L20	81	PL 1.25x4	74.25 - 74.50	1.0000	1.0000
L21	2	Safety Line 3/8	72.00 - 74.25	1.0000	1.0000
L21	5	1266A(1/8)	72.00 - 74.25	1.0000	1.0000
L21	6	7983A(ELLIPTICAL)	72.00 - 74.25	1.0000	1.0000
L21	8	3" Flexible Conduit	72.00 - 74.25	1.0000	1.0000
L21	9	HB114-1-0813U4-M5J(1-1/4)	72.00 - 74.25	1.0000	1.0000
L21	11	LDF7-50A(1-5/8)	72.00 - 74.25	1.0000	1.0000
L21	14	MLE Hybrid 9Power/18Fiber RL 2(1 5/8")	72.00 - 74.25	1.0000	1.0000
L21	15	HCS 6X12 6AWG(1-3/8)	72.00 - 74.25	1.0000	1.0000
L21	61	(Area) CCI-65FP-065125 (H)	72.00 - 74.25	1.0000	1.0000
L21	63	(Area) CCI-65FP-060100 (H)	72.00 - 74.25	1.0000	1.0000
L21	64	(Area) CCI-65FP-060100 (H)	72.00 - 74.25	1.0000	1.0000
L21	66	(Area) CCI-65FP-045100 (H)	72.00 - 74.25	1.0000	1.0000
L21	67	(Area) CCI-65FP-045100 (H)	72.00 - 74.25	1.0000	1.0000
L21	74	PL 1.25x4	74.00 - 74.25	1.0000	1.0000
L21	75	PL 1.25x4	74.00 - 74.25	1.0000	1.0000
L21	76	PL 1.25x4	73.00 - 74.25	1.0000	1.0000
L21	78	PL 1.25x4	72.00 - 74.25	1.0000	1.0000
L21	79	PL 1.25x4	72.00 - 74.25	1.0000	1.0000
L21	80	PL 1.25x4	72.00 - 74.25	1.0000	1.0000
L21	81	PL 1.25x4	72.00 - 74.25	1.0000	1.0000
L22	2	Safety Line 3/8	71.75 - 72.00	1.0000	1.0000
L22	5	1266A(1/8)	71.75 - 72.00	1.0000	1.0000
L22	6	7983A(ELLIPTICAL)	71.75 - 72.00	1.0000	1.0000
L22	8	3" Flexible Conduit	71.75 - 72.00	1.0000	1.0000
L22	9	HB114-1-0813U4-M5J(1-1/4)	71.75 - 72.00	1.0000	1.0000
L22	11	LDF7-50A(1-5/8)	71.75 - 72.00	1.0000	1.0000
L22	14	MLE Hybrid 9Power/18Fiber RL 2(1 5/8")	71.75 - 72.00	1.0000	1.0000
L22	15	HCS 6X12 6AWG(1-3/8)	71.75 - 72.00	1.0000	1.0000
L22	42	PL 1 x 5	71.75 - 72.00	1.0000	1.0000
L22	43	PL 1 x 5	71.75 - 72.00	1.0000	1.0000
L22	44	PL 1 x 5	71.75 - 72.00	1.0000	1.0000
L22	45	PL 1 x 5	71.75 - 72.00	1.0000	1.0000
L22	57	(Area) CCI-65FP-045100 (H)	71.75 - 72.00	1.0000	1.0000
L22	58	(Area) CCI-65FP-045100 (H)	71.75 - 72.00	1.0000	1.0000
L22	59	(Area) CCI-65FP-045100 (H)	71.75 - 72.00	1.0000	1.0000
L22	61	(Area) CCI-65FP-065125 (H)	71.75 - 72.00	1.0000	1.0000
L22	63	(Area) CCI-65FP-060100 (H)	71.75 - 72.00	1.0000	1.0000
L22	64	(Area) CCI-65FP-060100 (H)	71.75 - 72.00	1.0000	1.0000
L22	66	(Area) CCI-65FP-045100 (H)	71.75 - 72.00	1.0000	1.0000
L22	67	(Area) CCI-65FP-045100 (H)	71.75 - 72.00	1.0000	1.0000
L22	78	PL 1.25x4	71.75 - 72.00	1.0000	1.0000
L22	79	PL 1.25x4	71.75 - 72.00	1.0000	1.0000
L22	80	PL 1.25x4	71.75 - 72.00	1.0000	1.0000
L22	81	PL 1.25x4	71.75 - 72.00	1.0000	1.0000
L23	2	Safety Line 3/8	70.50 - 71.75	1.0000	1.0000
L23	5	1266A(1/8)	70.50 - 71.75	1.0000	1.0000

Tower Section	Feed Line Record No.	Description	Feed Line Segment Elev.	K_a No Ice	K_a Ice
L23	6	7983A(ELLIPTICAL)	70.50 - 71.75	1.0000	1.0000
L23	8	3" Flexible Conduit	70.50 - 71.75	1.0000	1.0000
L23	9	HB114-1-0813U4-M5J(1-1/4)	70.50 - 71.75	1.0000	1.0000
L23	11	LDF7-50A(1-5/8)	70.50 - 71.75	1.0000	1.0000
L23	14	MLE Hybrid 9Power/18Fiber RL 2(1 5/8")	70.50 - 71.75	1.0000	1.0000
L23	15	HCS 6X12 6AWG(1-3/8)	70.50 - 71.75	1.0000	1.0000
L23	42	PL 1 x 5	70.50 - 71.75	1.0000	1.0000
L23	43	PL 1 x 5	70.50 - 71.75	1.0000	1.0000
L23	44	PL 1 x 5	70.50 - 71.75	1.0000	1.0000
L23	45	PL 1 x 5	70.50 - 71.75	1.0000	1.0000
L23	57	(Area) CCI-65FP-045100 (H)	70.50 - 71.75	1.0000	1.0000
L23	58	(Area) CCI-65FP-045100 (H)	70.50 - 71.75	1.0000	1.0000
L23	59	(Area) CCI-65FP-045100 (H)	70.50 - 71.75	1.0000	1.0000
L23	61	(Area) CCI-65FP-065125 (H)	70.50 - 71.75	1.0000	1.0000
L23	63	(Area) CCI-65FP-060100 (H)	70.50 - 71.75	1.0000	1.0000
L23	64	(Area) CCI-65FP-060100 (H)	70.50 - 71.75	1.0000	1.0000
L23	66	(Area) CCI-65FP-045100 (H)	70.50 - 71.75	1.0000	1.0000
L23	67	(Area) CCI-65FP-045100 (H)	70.50 - 71.75	1.0000	1.0000
L23	78	PL 1.25x4	70.50 - 71.75	1.0000	1.0000
L23	79	PL 1.25x4	70.50 - 71.75	1.0000	1.0000
L23	80	PL 1.25x4	70.50 - 71.75	1.0000	1.0000
L23	81	PL 1.25x4	70.50 - 71.75	1.0000	1.0000
L24	2	Safety Line 3/8	70.25 - 70.50	1.0000	1.0000
L24	5	1266A(1/8)	70.25 - 70.50	1.0000	1.0000
L24	6	7983A(ELLIPTICAL)	70.25 - 70.50	1.0000	1.0000
L24	8	3" Flexible Conduit	70.25 - 70.50	1.0000	1.0000
L24	9	HB114-1-0813U4-M5J(1-1/4)	70.25 - 70.50	1.0000	1.0000
L24	11	LDF7-50A(1-5/8)	70.25 - 70.50	1.0000	1.0000
L24	14	MLE Hybrid 9Power/18Fiber RL 2(1 5/8")	70.25 - 70.50	1.0000	1.0000
L24	15	HCS 6X12 6AWG(1-3/8)	70.25 - 70.50	1.0000	1.0000
L24	42	PL 1 x 5	70.25 - 70.50	1.0000	1.0000
L24	43	PL 1 x 5	70.25 - 70.50	1.0000	1.0000
L24	44	PL 1 x 5	70.25 - 70.50	1.0000	1.0000
L24	45	PL 1 x 5	70.25 - 70.50	1.0000	1.0000
L24	57	(Area) CCI-65FP-045100 (H)	70.25 - 70.50	1.0000	1.0000
L24	58	(Area) CCI-65FP-045100 (H)	70.25 - 70.50	1.0000	1.0000
L24	59	(Area) CCI-65FP-045100 (H)	70.25 - 70.50	1.0000	1.0000
L24	61	(Area) CCI-65FP-065125 (H)	70.25 - 70.50	1.0000	1.0000
L24	63	(Area) CCI-65FP-060100 (H)	70.25 - 70.50	1.0000	1.0000
L24	64	(Area) CCI-65FP-060100 (H)	70.25 - 70.50	1.0000	1.0000
L24	66	(Area) CCI-65FP-045100 (H)	70.25 - 70.50	1.0000	1.0000
L24	67	(Area) CCI-65FP-045100 (H)	70.25 - 70.50	1.0000	1.0000
L24	78	PL 1.25x4	70.25 - 70.50	1.0000	1.0000
L24	79	PL 1.25x4	70.25 - 70.50	1.0000	1.0000
L24	80	PL 1.25x4	70.25 - 70.50	1.0000	1.0000
L24	81	PL 1.25x4	70.25 - 70.50	1.0000	1.0000
L25	2	Safety Line 3/8	70.00 - 70.25	1.0000	1.0000
L25	5	1266A(1/8)	70.00 - 70.25	1.0000	1.0000
L25	6	7983A(ELLIPTICAL)	70.00 - 70.25	1.0000	1.0000
L25	8	3" Flexible Conduit	70.00 - 70.25	1.0000	1.0000
L25	9	HB114-1-0813U4-M5J(1-1/4)	70.00 - 70.25	1.0000	1.0000
L25	11	LDF7-50A(1-5/8)	70.00 - 70.25	1.0000	1.0000
L25	14	MLE Hybrid 9Power/18Fiber RL 2(1 5/8")	70.00 - 70.25	1.0000	1.0000
L25	15	HCS 6X12 6AWG(1-3/8)	70.00 - 70.25	1.0000	1.0000
L25	42	PL 1 x 5	70.00 - 70.25	1.0000	1.0000
L25	43	PL 1 x 5	70.00 - 70.25	1.0000	1.0000

Tower Section	Feed Line Record No.	Description	Feed Line Segment Elev.	K_a No Ice	K_a Ice
L25	44	PL 1 x 5	70.00 - 70.25	1.0000	1.0000
L25	45	PL 1 x 5	70.00 - 70.25	1.0000	1.0000
L25	57	(Area) CCI-65FP-045100 (H)	70.00 - 70.25	1.0000	1.0000
L25	58	(Area) CCI-65FP-045100 (H)	70.00 - 70.25	1.0000	1.0000
L25	59	(Area) CCI-65FP-045100 (H)	70.00 - 70.25	1.0000	1.0000
L25	61	(Area) CCI-65FP-065125 (H)	70.00 - 70.25	1.0000	1.0000
L25	63	(Area) CCI-65FP-060100 (H)	70.00 - 70.25	1.0000	1.0000
L25	64	(Area) CCI-65FP-060100 (H)	70.00 - 70.25	1.0000	1.0000
L25	66	(Area) CCI-65FP-045100 (H)	70.00 - 70.25	1.0000	1.0000
L25	67	(Area) CCI-65FP-045100 (H)	70.00 - 70.25	1.0000	1.0000
L25	78	PL 1.25x4	70.00 - 70.25	1.0000	1.0000
L25	79	PL 1.25x4	70.00 - 70.25	1.0000	1.0000
L25	80	PL 1.25x4	70.00 - 70.25	1.0000	1.0000
L25	81	PL 1.25x4	70.00 - 70.25	1.0000	1.0000
L26	2	Safety Line 3/8	69.75 - 70.00	1.0000	1.0000
L26	5	1266A(1/8)	69.75 - 70.00	1.0000	1.0000
L26	6	7983A(ELLIPTICAL)	69.75 - 70.00	1.0000	1.0000
L26	8	3" Flexible Conduit	69.75 - 70.00	1.0000	1.0000
L26	9	HB114-1-0813U4-M5J(1-1/4)	69.75 - 70.00	1.0000	1.0000
L26	11	LDF7-50A(1-5/8)	69.75 - 70.00	1.0000	1.0000
L26	14	MLE Hybrid 9Power/18Fiber RL 2(1 5/8")	69.75 - 70.00	1.0000	1.0000
L26	15	HCS 6X12 6AWG(1-3/8)	69.75 - 70.00	1.0000	1.0000
L26	42	PL 1 x 5	69.75 - 70.00	1.0000	1.0000
L26	43	PL 1 x 5	69.75 - 70.00	1.0000	1.0000
L26	44	PL 1 x 5	69.75 - 70.00	1.0000	1.0000
L26	45	PL 1 x 5	69.75 - 70.00	1.0000	1.0000
L26	57	(Area) CCI-65FP-045100 (H)	69.75 - 70.00	1.0000	1.0000
L26	58	(Area) CCI-65FP-045100 (H)	69.75 - 70.00	1.0000	1.0000
L26	59	(Area) CCI-65FP-045100 (H)	69.75 - 70.00	1.0000	1.0000
L26	61	(Area) CCI-65FP-065125 (H)	69.75 - 70.00	1.0000	1.0000
L26	63	(Area) CCI-65FP-060100 (H)	69.75 - 70.00	1.0000	1.0000
L26	64	(Area) CCI-65FP-060100 (H)	69.75 - 70.00	1.0000	1.0000
L26	66	(Area) CCI-65FP-045100 (H)	69.75 - 70.00	1.0000	1.0000
L26	67	(Area) CCI-65FP-045100 (H)	69.75 - 70.00	1.0000	1.0000
L26	78	PL 1.25x4	69.75 - 70.00	1.0000	1.0000
L26	79	PL 1.25x4	69.75 - 70.00	1.0000	1.0000
L26	80	PL 1.25x4	69.75 - 70.00	1.0000	1.0000
L26	81	PL 1.25x4	69.75 - 70.00	1.0000	1.0000
L27	2	Safety Line 3/8	69.50 - 69.75	1.0000	1.0000
L27	5	1266A(1/8)	69.50 - 69.75	1.0000	1.0000
L27	6	7983A(ELLIPTICAL)	69.50 - 69.75	1.0000	1.0000
L27	8	3" Flexible Conduit	69.50 - 69.75	1.0000	1.0000
L27	9	HB114-1-0813U4-M5J(1-1/4)	69.50 - 69.75	1.0000	1.0000
L27	11	LDF7-50A(1-5/8)	69.50 - 69.75	1.0000	1.0000
L27	14	MLE Hybrid 9Power/18Fiber RL 2(1 5/8")	69.50 - 69.75	1.0000	1.0000
L27	15	HCS 6X12 6AWG(1-3/8)	69.50 - 69.75	1.0000	1.0000
L27	42	PL 1 x 5	69.50 - 69.75	1.0000	1.0000
L27	43	PL 1 x 5	69.50 - 69.75	1.0000	1.0000
L27	44	PL 1 x 5	69.50 - 69.75	1.0000	1.0000
L27	45	PL 1 x 5	69.50 - 69.75	1.0000	1.0000
L27	57	(Area) CCI-65FP-045100 (H)	69.50 - 69.75	1.0000	1.0000
L27	58	(Area) CCI-65FP-045100 (H)	69.50 - 69.75	1.0000	1.0000
L27	59	(Area) CCI-65FP-045100 (H)	69.50 - 69.75	1.0000	1.0000
L27	61	(Area) CCI-65FP-065125 (H)	69.50 - 69.75	1.0000	1.0000
L27	63	(Area) CCI-65FP-060100 (H)	69.50 - 69.75	1.0000	1.0000
L27	64	(Area) CCI-65FP-060100 (H)	69.50 - 69.75	1.0000	1.0000
L27	66	(Area) CCI-65FP-045100 (H)	69.50 - 69.75	1.0000	1.0000
L27	67	(Area) CCI-65FP-045100 (H)	69.50 - 69.75	1.0000	1.0000

Tower Section	Feed Line Record No.	Description	Feed Line Segment Elev.	K_a No Ice	K_a Ice
L27	78	PL 1.25x4	69.50 - 69.75	1.0000	1.0000
L27	79	PL 1.25x4	69.50 - 69.75	1.0000	1.0000
L27	80	PL 1.25x4	69.50 - 69.75	1.0000	1.0000
L27	81	PL 1.25x4	69.50 - 69.75	1.0000	1.0000
L28	2	Safety Line 3/8	69.25 - 69.50	1.0000	1.0000
L28	5	1266A(1/8)	69.25 - 69.50	1.0000	1.0000
L28	6	7983A(ELLIPTICAL)	69.25 - 69.50	1.0000	1.0000
L28	8	3" Flexible Conduit	69.25 - 69.50	1.0000	1.0000
L28	9	HB114-1-0813U4-M5J(1-1/4)	69.25 - 69.50	1.0000	1.0000
L28	11	LDF7-50A(1-5/8)	69.25 - 69.50	1.0000	1.0000
L28	14	MLE Hybrid 9Power/18Fiber RL 2(1 5/8")	69.25 - 69.50	1.0000	1.0000
L28	15	HCS 6X12 6AWG(1-3/8)	69.25 - 69.50	1.0000	1.0000
L28	42	PL 1 x 5	69.25 - 69.50	1.0000	1.0000
L28	43	PL 1 x 5	69.25 - 69.50	1.0000	1.0000
L28	44	PL 1 x 5	69.25 - 69.50	1.0000	1.0000
L28	45	PL 1 x 5	69.25 - 69.50	1.0000	1.0000
L28	57	(Area) CCI-65FP-045100 (H)	69.25 - 69.50	1.0000	1.0000
L28	58	(Area) CCI-65FP-045100 (H)	69.25 - 69.50	1.0000	1.0000
L28	59	(Area) CCI-65FP-045100 (H)	69.25 - 69.50	1.0000	1.0000
L28	61	(Area) CCI-65FP-065125 (H)	69.25 - 69.50	1.0000	1.0000
L28	63	(Area) CCI-65FP-060100 (H)	69.25 - 69.50	1.0000	1.0000
L28	64	(Area) CCI-65FP-060100 (H)	69.25 - 69.50	1.0000	1.0000
L28	66	(Area) CCI-65FP-045100 (H)	69.25 - 69.50	1.0000	1.0000
L28	67	(Area) CCI-65FP-045100 (H)	69.25 - 69.50	1.0000	1.0000
L28	78	PL 1.25x4	69.25 - 69.50	1.0000	1.0000
L28	79	PL 1.25x4	69.25 - 69.50	1.0000	1.0000
L28	80	PL 1.25x4	69.25 - 69.50	1.0000	1.0000
L28	81	PL 1.25x4	69.25 - 69.50	1.0000	1.0000
L29	2	Safety Line 3/8	64.25 - 69.25	1.0000	1.0000
L29	5	1266A(1/8)	64.25 - 69.25	1.0000	1.0000
L29	6	7983A(ELLIPTICAL)	64.25 - 69.25	1.0000	1.0000
L29	8	3" Flexible Conduit	64.25 - 69.25	1.0000	1.0000
L29	9	HB114-1-0813U4-M5J(1-1/4)	64.25 - 69.25	1.0000	1.0000
L29	11	LDF7-50A(1-5/8)	64.25 - 69.25	1.0000	1.0000
L29	14	MLE Hybrid 9Power/18Fiber RL 2(1 5/8")	64.25 - 69.25	1.0000	1.0000
L29	15	HCS 6X12 6AWG(1-3/8)	64.25 - 69.25	1.0000	1.0000
L29	42	PL 1 x 5	64.25 - 69.25	1.0000	1.0000
L29	43	PL 1 x 5	64.25 - 69.25	1.0000	1.0000
L29	44	PL 1 x 5	64.25 - 69.25	1.0000	1.0000
L29	45	PL 1 x 5	64.25 - 69.25	1.0000	1.0000
L29	57	(Area) CCI-65FP-045100 (H)	64.25 - 69.25	1.0000	1.0000
L29	58	(Area) CCI-65FP-045100 (H)	64.25 - 69.25	1.0000	1.0000
L29	59	(Area) CCI-65FP-045100 (H)	64.25 - 69.25	1.0000	1.0000
L29	61	(Area) CCI-65FP-065125 (H)	64.25 - 69.25	1.0000	1.0000
L29	63	(Area) CCI-65FP-060100 (H)	67.00 - 69.25	1.0000	1.0000
L29	64	(Area) CCI-65FP-060100 (H)	67.00 - 69.25	1.0000	1.0000
L29	66	(Area) CCI-65FP-045100 (H)	68.00 - 69.25	1.0000	1.0000
L29	67	(Area) CCI-65FP-045100 (H)	68.00 - 69.25	1.0000	1.0000
L29	78	PL 1.25x4	68.50 - 69.25	1.0000	1.0000
L29	79	PL 1.25x4	68.25 - 69.25	1.0000	1.0000
L29	80	PL 1.25x4	68.25 - 69.25	1.0000	1.0000
L29	81	PL 1.25x4	68.25 - 69.25	1.0000	1.0000
L30	2	Safety Line 3/8	59.25 - 64.25	1.0000	1.0000
L30	5	1266A(1/8)	59.25 - 64.25	1.0000	1.0000
L30	6	7983A(ELLIPTICAL)	59.25 - 64.25	1.0000	1.0000
L30	8	3" Flexible Conduit	59.25 - 64.25	1.0000	1.0000
L30	9	HB114-1-0813U4-M5J(1-1/4)	59.25 - 64.25	1.0000	1.0000

Tower Section	Feed Line Record No.	Description	Feed Line Segment Elev.	K_a No Ice	K_a Ice
L30	11	LDF7-50A(1-5/8)	59.25 - 64.25	1.0000	1.0000
L30	14	MLE Hybrid 9Power/18Fiber RL 2(1 5/8")	59.25 - 64.25	1.0000	1.0000
L30	15	HCS 6X12 6AWG(1-3/8)	59.25 - 64.25	1.0000	1.0000
L30	42	PL 1 x 5	59.25 - 64.25	1.0000	1.0000
L30	43	PL 1 x 5	59.25 - 64.25	1.0000	1.0000
L30	44	PL 1 x 5	59.25 - 64.25	1.0000	1.0000
L30	45	PL 1 x 5	59.25 - 64.25	1.0000	1.0000
L30	57	(Area) CCI-65FP-045100 (H)	59.25 - 64.25	1.0000	1.0000
L30	58	(Area) CCI-65FP-045100 (H)	59.25 - 64.25	1.0000	1.0000
L30	59	(Area) CCI-65FP-045100 (H)	59.25 - 64.25	1.0000	1.0000
L30	61	(Area) CCI-65FP-065125 (H)	59.25 - 64.25	1.0000	1.0000
L31	2	Safety Line 3/8	56.00 - 59.25	1.0000	1.0000
L31	5	1266A(1/8)	56.00 - 59.25	1.0000	1.0000
L31	6	7983A(ELLIPTICAL)	56.00 - 59.25	1.0000	1.0000
L31	8	3" Flexible Conduit	56.00 - 59.25	1.0000	1.0000
L31	9	HB114-1-0813U4-M5J(1-1/4)	56.00 - 59.25	1.0000	1.0000
L31	11	LDF7-50A(1-5/8)	56.00 - 59.25	1.0000	1.0000
L31	14	MLE Hybrid 9Power/18Fiber RL 2(1 5/8")	56.00 - 59.25	1.0000	1.0000
L31	15	HCS 6X12 6AWG(1-3/8)	56.00 - 59.25	1.0000	1.0000
L31	42	PL 1 x 5	56.00 - 59.25	1.0000	1.0000
L31	43	PL 1 x 5	56.00 - 59.25	1.0000	1.0000
L31	44	PL 1 x 5	56.00 - 59.25	1.0000	1.0000
L31	45	PL 1 x 5	56.00 - 59.25	1.0000	1.0000
L31	57	(Area) CCI-65FP-045100 (H)	56.00 - 59.25	1.0000	1.0000
L31	58	(Area) CCI-65FP-045100 (H)	56.00 - 59.25	1.0000	1.0000
L31	59	(Area) CCI-65FP-045100 (H)	56.00 - 59.25	1.0000	1.0000
L31	61	(Area) CCI-65FP-065125 (H)	56.00 - 59.25	1.0000	1.0000
L31	69	(Area) CCI-65FP-045100 (H)	56.00 - 57.50	1.0000	1.0000
L31	70	(Area) CCI-65FP-045100 (H)	56.00 - 57.50	1.0000	1.0000
L31	71	(Area) CCI-65FP-045100 (H)	56.00 - 57.50	1.0000	1.0000
L31	72	(Area) CCI-65FP-045100 (H)	56.00 - 57.25	1.0000	1.0000
L32	2	Safety Line 3/8	55.75 - 56.00	1.0000	1.0000
L32	5	1266A(1/8)	55.75 - 56.00	1.0000	1.0000
L32	6	7983A(ELLIPTICAL)	55.75 - 56.00	1.0000	1.0000
L32	8	3" Flexible Conduit	55.75 - 56.00	1.0000	1.0000
L32	9	HB114-1-0813U4-M5J(1-1/4)	55.75 - 56.00	1.0000	1.0000
L32	11	LDF7-50A(1-5/8)	55.75 - 56.00	1.0000	1.0000
L32	14	MLE Hybrid 9Power/18Fiber RL 2(1 5/8")	55.75 - 56.00	1.0000	1.0000
L32	15	HCS 6X12 6AWG(1-3/8)	55.75 - 56.00	1.0000	1.0000
L32	27	C6x10.5	55.75 - 56.00	1.0000	1.0000
L32	28	C6x10.5	55.75 - 56.00	1.0000	1.0000
L32	29	C6x10.5	55.75 - 56.00	1.0000	1.0000
L32	30	C6x10.5	55.75 - 56.00	1.0000	1.0000
L32	42	PL 1 x 5	55.75 - 56.00	1.0000	1.0000
L32	43	PL 1 x 5	55.75 - 56.00	1.0000	1.0000
L32	44	PL 1 x 5	55.75 - 56.00	1.0000	1.0000
L32	45	PL 1 x 5	55.75 - 56.00	1.0000	1.0000
L32	57	(Area) CCI-65FP-045100 (H)	55.75 - 56.00	1.0000	1.0000
L32	58	(Area) CCI-65FP-045100 (H)	55.75 - 56.00	1.0000	1.0000
L32	59	(Area) CCI-65FP-045100 (H)	55.75 - 56.00	1.0000	1.0000
L32	61	(Area) CCI-65FP-065125 (H)	55.75 - 56.00	1.0000	1.0000
L32	69	(Area) CCI-65FP-045100 (H)	55.75 - 56.00	1.0000	1.0000
L32	70	(Area) CCI-65FP-045100 (H)	55.75 - 56.00	1.0000	1.0000
L32	71	(Area) CCI-65FP-045100 (H)	55.75 - 56.00	1.0000	1.0000
L32	72	(Area) CCI-65FP-045100 (H)	55.75 - 56.00	1.0000	1.0000
L33	2	Safety Line 3/8	55.50 - 55.75	1.0000	1.0000
L33	5	1266A(1/8)	55.50 - 55.75	1.0000	1.0000

Tower Section	Feed Line Record No.	Description	Feed Line Segment Elev.	K_a No Ice	K_a Ice
L33	6	7983A(ELLIPTICAL)	55.50 - 55.75	1.0000	1.0000
L33	8	3" Flexible Conduit	55.50 - 55.75	1.0000	1.0000
L33	9	HB114-1-0813U4-M5J(1-1/4)	55.50 - 55.75	1.0000	1.0000
L33	11	LDF7-50A(1-5/8)	55.50 - 55.75	1.0000	1.0000
L33	14	MLE Hybrid 9Power/18Fiber RL 2(1 5/8")	55.50 - 55.75	1.0000	1.0000
L33	15	HCS 6X12 6AWG(1-3/8)	55.50 - 55.75	1.0000	1.0000
L33	27	C6x10.5	55.50 - 55.75	1.0000	1.0000
L33	28	C6x10.5	55.50 - 55.75	1.0000	1.0000
L33	29	C6x10.5	55.50 - 55.75	1.0000	1.0000
L33	30	C6x10.5	55.50 - 55.75	1.0000	1.0000
L33	42	PL 1 x 5	55.50 - 55.75	1.0000	1.0000
L33	43	PL 1 x 5	55.50 - 55.75	1.0000	1.0000
L33	44	PL 1 x 5	55.50 - 55.75	1.0000	1.0000
L33	45	PL 1 x 5	55.50 - 55.75	1.0000	1.0000
L33	57	(Area) CCI-65FP-045100 (H)	55.50 - 55.75	1.0000	1.0000
L33	58	(Area) CCI-65FP-045100 (H)	55.50 - 55.75	1.0000	1.0000
L33	59	(Area) CCI-65FP-045100 (H)	55.50 - 55.75	1.0000	1.0000
L33	61	(Area) CCI-65FP-065125 (H)	55.50 - 55.75	1.0000	1.0000
L33	69	(Area) CCI-65FP-045100 (H)	55.50 - 55.75	1.0000	1.0000
L33	70	(Area) CCI-65FP-045100 (H)	55.50 - 55.75	1.0000	1.0000
L33	71	(Area) CCI-65FP-045100 (H)	55.50 - 55.75	1.0000	1.0000
L33	72	(Area) CCI-65FP-045100 (H)	55.50 - 55.75	1.0000	1.0000
L34	2	Safety Line 3/8	55.25 - 55.50	1.0000	1.0000
L34	5	1266A(1/8)	55.25 - 55.50	1.0000	1.0000
L34	6	7983A(ELLIPTICAL)	55.25 - 55.50	1.0000	1.0000
L34	8	3" Flexible Conduit	55.25 - 55.50	1.0000	1.0000
L34	9	HB114-1-0813U4-M5J(1-1/4)	55.25 - 55.50	1.0000	1.0000
L34	11	LDF7-50A(1-5/8)	55.25 - 55.50	1.0000	1.0000
L34	14	MLE Hybrid 9Power/18Fiber RL 2(1 5/8")	55.25 - 55.50	1.0000	1.0000
L34	15	HCS 6X12 6AWG(1-3/8)	55.25 - 55.50	1.0000	1.0000
L34	27	C6x10.5	55.25 - 55.50	1.0000	1.0000
L34	28	C6x10.5	55.25 - 55.50	1.0000	1.0000
L34	29	C6x10.5	55.25 - 55.50	1.0000	1.0000
L34	30	C6x10.5	55.25 - 55.50	1.0000	1.0000
L34	42	PL 1 x 5	55.25 - 55.50	1.0000	1.0000
L34	43	PL 1 x 5	55.25 - 55.50	1.0000	1.0000
L34	44	PL 1 x 5	55.25 - 55.50	1.0000	1.0000
L34	45	PL 1 x 5	55.25 - 55.50	1.0000	1.0000
L34	57	(Area) CCI-65FP-045100 (H)	55.25 - 55.50	1.0000	1.0000
L34	58	(Area) CCI-65FP-045100 (H)	55.25 - 55.50	1.0000	1.0000
L34	59	(Area) CCI-65FP-045100 (H)	55.25 - 55.50	1.0000	1.0000
L34	61	(Area) CCI-65FP-065125 (H)	55.25 - 55.50	1.0000	1.0000
L34	69	(Area) CCI-65FP-045100 (H)	55.25 - 55.50	1.0000	1.0000
L34	70	(Area) CCI-65FP-045100 (H)	55.25 - 55.50	1.0000	1.0000
L34	71	(Area) CCI-65FP-045100 (H)	55.25 - 55.50	1.0000	1.0000
L34	72	(Area) CCI-65FP-045100 (H)	55.25 - 55.50	1.0000	1.0000
L35	2	Safety Line 3/8	54.00 - 55.25	1.0000	1.0000
L35	5	1266A(1/8)	54.00 - 55.25	1.0000	1.0000
L35	6	7983A(ELLIPTICAL)	54.00 - 55.25	1.0000	1.0000
L35	8	3" Flexible Conduit	54.00 - 55.25	1.0000	1.0000
L35	9	HB114-1-0813U4-M5J(1-1/4)	54.00 - 55.25	1.0000	1.0000
L35	11	LDF7-50A(1-5/8)	54.00 - 55.25	1.0000	1.0000
L35	14	MLE Hybrid 9Power/18Fiber RL 2(1 5/8")	54.00 - 55.25	1.0000	1.0000
L35	15	HCS 6X12 6AWG(1-3/8)	54.00 - 55.25	1.0000	1.0000
L35	27	C6x10.5	54.00 - 55.25	1.0000	1.0000
L35	28	C6x10.5	54.00 - 55.25	1.0000	1.0000

Tower Section	Feed Line Record No.	Description	Feed Line Segment Elev.	K_a No Ice	K_a Ice
L35	29	C6x10.5	54.00 - 55.25	1.0000	1.0000
L35	30	C6x10.5	54.00 - 55.25	1.0000	1.0000
L35	42	PL 1 x 5	54.00 - 55.25	1.0000	1.0000
L35	43	PL 1 x 5	54.00 - 55.25	1.0000	1.0000
L35	44	PL 1 x 5	54.00 - 55.25	1.0000	1.0000
L35	45	PL 1 x 5	54.00 - 55.25	1.0000	1.0000
L35	57	(Area) CCI-65FP-045100 (H)	54.00 - 55.25	1.0000	1.0000
L35	58	(Area) CCI-65FP-045100 (H)	54.00 - 55.25	1.0000	1.0000
L35	59	(Area) CCI-65FP-045100 (H)	54.00 - 55.25	1.0000	1.0000
L35	61	(Area) CCI-65FP-065125 (H)	54.00 - 55.25	1.0000	1.0000
L35	69	(Area) CCI-65FP-045100 (H)	54.00 - 55.25	1.0000	1.0000
L35	70	(Area) CCI-65FP-045100 (H)	54.00 - 55.25	1.0000	1.0000
L35	71	(Area) CCI-65FP-045100 (H)	54.00 - 55.25	1.0000	1.0000
L35	72	(Area) CCI-65FP-045100 (H)	54.00 - 55.25	1.0000	1.0000
L36	2	Safety Line 3/8	53.75 - 54.00	1.0000	1.0000
L36	5	1266A(1/8)	53.75 - 54.00	1.0000	1.0000
L36	6	7983A(ELLIPTICAL)	53.75 - 54.00	1.0000	1.0000
L36	8	3" Flexible Conduit	53.75 - 54.00	1.0000	1.0000
L36	9	HB114-1-0813U4-M5J(1-1/4)	53.75 - 54.00	1.0000	1.0000
L36	11	LDF7-50A(1-5/8)	53.75 - 54.00	1.0000	1.0000
L36	14	MLE Hybrid 9Power/18Fiber RL 2(1 5/8")	53.75 - 54.00	1.0000	1.0000
L36	15	HCS 6X12 6AWG(1-3/8)	53.75 - 54.00	1.0000	1.0000
L36	27	C6x10.5	53.75 - 54.00	1.0000	1.0000
L36	28	C6x10.5	53.75 - 54.00	1.0000	1.0000
L36	29	C6x10.5	53.75 - 54.00	1.0000	1.0000
L36	30	C6x10.5	53.75 - 54.00	1.0000	1.0000
L36	42	PL 1 x 5	53.75 - 54.00	1.0000	1.0000
L36	43	PL 1 x 5	53.75 - 54.00	1.0000	1.0000
L36	44	PL 1 x 5	53.75 - 54.00	1.0000	1.0000
L36	45	PL 1 x 5	53.75 - 54.00	1.0000	1.0000
L36	57	(Area) CCI-65FP-045100 (H)	53.75 - 54.00	1.0000	1.0000
L36	58	(Area) CCI-65FP-045100 (H)	53.75 - 54.00	1.0000	1.0000
L36	59	(Area) CCI-65FP-045100 (H)	53.75 - 54.00	1.0000	1.0000
L36	61	(Area) CCI-65FP-065125 (H)	53.75 - 54.00	1.0000	1.0000
L36	69	(Area) CCI-65FP-045100 (H)	53.75 - 54.00	1.0000	1.0000
L36	70	(Area) CCI-65FP-045100 (H)	53.75 - 54.00	1.0000	1.0000
L36	71	(Area) CCI-65FP-045100 (H)	53.75 - 54.00	1.0000	1.0000
L36	72	(Area) CCI-65FP-045100 (H)	53.75 - 54.00	1.0000	1.0000
L37	2	Safety Line 3/8	53.50 - 53.75	1.0000	1.0000
L37	5	1266A(1/8)	53.50 - 53.75	1.0000	1.0000
L37	6	7983A(ELLIPTICAL)	53.50 - 53.75	1.0000	1.0000
L37	8	3" Flexible Conduit	53.50 - 53.75	1.0000	1.0000
L37	9	HB114-1-0813U4-M5J(1-1/4)	53.50 - 53.75	1.0000	1.0000
L37	11	LDF7-50A(1-5/8)	53.50 - 53.75	1.0000	1.0000
L37	14	MLE Hybrid 9Power/18Fiber RL 2(1 5/8")	53.50 - 53.75	1.0000	1.0000
L37	15	HCS 6X12 6AWG(1-3/8)	53.50 - 53.75	1.0000	1.0000
L37	27	C6x10.5	53.50 - 53.75	1.0000	1.0000
L37	28	C6x10.5	53.50 - 53.75	1.0000	1.0000
L37	29	C6x10.5	53.50 - 53.75	1.0000	1.0000
L37	30	C6x10.5	53.50 - 53.75	1.0000	1.0000
L37	42	PL 1 x 5	53.50 - 53.75	1.0000	1.0000
L37	43	PL 1 x 5	53.50 - 53.75	1.0000	1.0000
L37	44	PL 1 x 5	53.50 - 53.75	1.0000	1.0000
L37	45	PL 1 x 5	53.50 - 53.75	1.0000	1.0000
L37	57	(Area) CCI-65FP-045100 (H)	53.50 - 53.75	1.0000	1.0000
L37	58	(Area) CCI-65FP-045100 (H)	53.50 - 53.75	1.0000	1.0000
L37	59	(Area) CCI-65FP-045100 (H)	53.50 - 53.75	1.0000	1.0000
L37	61	(Area) CCI-65FP-065125 (H)	53.50 - 53.75	1.0000	1.0000

Tower Section	Feed Line Record No.	Description	Feed Line Segment Elev.	K_a No Ice	K_a Ice
L37	69	(Area) CCI-65FP-045100 (H)	53.50 - 53.75	1.0000	1.0000
L37	70	(Area) CCI-65FP-045100 (H)	53.50 - 53.75	1.0000	1.0000
L37	71	(Area) CCI-65FP-045100 (H)	53.50 - 53.75	1.0000	1.0000
L37	72	(Area) CCI-65FP-045100 (H)	53.50 - 53.75	1.0000	1.0000
L38	2	Safety Line 3/8	53.25 - 53.50	1.0000	1.0000
L38	5	1266A(1/8)	53.25 - 53.50	1.0000	1.0000
L38	6	7983A(ELLIPTICAL)	53.25 - 53.50	1.0000	1.0000
L38	8	3" Flexible Conduit	53.25 - 53.50	1.0000	1.0000
L38	9	HB114-1-0813U4-M5J(1-1/4)	53.25 - 53.50	1.0000	1.0000
L38	11	LDF7-50A(1-5/8)	53.25 - 53.50	1.0000	1.0000
L38	14	MLE Hybrid 9Power/18Fiber RL 2(1 5/8")	53.25 - 53.50	1.0000	1.0000
L38	15	HCS 6X12 6AWG(1-3/8)	53.25 - 53.50	1.0000	1.0000
L38	27	C6x10.5	53.25 - 53.50	1.0000	1.0000
L38	28	C6x10.5	53.25 - 53.50	1.0000	1.0000
L38	29	C6x10.5	53.25 - 53.50	1.0000	1.0000
L38	30	C6x10.5	53.25 - 53.50	1.0000	1.0000
L38	42	PL 1 x 5	53.25 - 53.50	1.0000	1.0000
L38	43	PL 1 x 5	53.25 - 53.50	1.0000	1.0000
L38	44	PL 1 x 5	53.25 - 53.50	1.0000	1.0000
L38	45	PL 1 x 5	53.25 - 53.50	1.0000	1.0000
L38	57	(Area) CCI-65FP-045100 (H)	53.25 - 53.50	1.0000	1.0000
L38	58	(Area) CCI-65FP-045100 (H)	53.25 - 53.50	1.0000	1.0000
L38	59	(Area) CCI-65FP-045100 (H)	53.25 - 53.50	1.0000	1.0000
L38	61	(Area) CCI-65FP-065125 (H)	53.25 - 53.50	1.0000	1.0000
L38	69	(Area) CCI-65FP-045100 (H)	53.25 - 53.50	1.0000	1.0000
L38	70	(Area) CCI-65FP-045100 (H)	53.25 - 53.50	1.0000	1.0000
L38	71	(Area) CCI-65FP-045100 (H)	53.25 - 53.50	1.0000	1.0000
L38	72	(Area) CCI-65FP-045100 (H)	53.25 - 53.50	1.0000	1.0000
L39	2	Safety Line 3/8	53.00 - 53.25	1.0000	1.0000
L39	5	1266A(1/8)	53.00 - 53.25	1.0000	1.0000
L39	6	7983A(ELLIPTICAL)	53.00 - 53.25	1.0000	1.0000
L39	8	3" Flexible Conduit	53.00 - 53.25	1.0000	1.0000
L39	9	HB114-1-0813U4-M5J(1-1/4)	53.00 - 53.25	1.0000	1.0000
L39	11	LDF7-50A(1-5/8)	53.00 - 53.25	1.0000	1.0000
L39	14	MLE Hybrid 9Power/18Fiber RL 2(1 5/8")	53.00 - 53.25	1.0000	1.0000
L39	15	HCS 6X12 6AWG(1-3/8)	53.00 - 53.25	1.0000	1.0000
L39	27	C6x10.5	53.00 - 53.25	1.0000	1.0000
L39	28	C6x10.5	53.00 - 53.25	1.0000	1.0000
L39	29	C6x10.5	53.00 - 53.25	1.0000	1.0000
L39	30	C6x10.5	53.00 - 53.25	1.0000	1.0000
L39	42	PL 1 x 5	53.00 - 53.25	1.0000	1.0000
L39	43	PL 1 x 5	53.00 - 53.25	1.0000	1.0000
L39	44	PL 1 x 5	53.00 - 53.25	1.0000	1.0000
L39	45	PL 1 x 5	53.00 - 53.25	1.0000	1.0000
L39	57	(Area) CCI-65FP-045100 (H)	53.00 - 53.25	1.0000	1.0000
L39	58	(Area) CCI-65FP-045100 (H)	53.00 - 53.25	1.0000	1.0000
L39	59	(Area) CCI-65FP-045100 (H)	53.00 - 53.25	1.0000	1.0000
L39	61	(Area) CCI-65FP-065125 (H)	53.00 - 53.25	1.0000	1.0000
L39	69	(Area) CCI-65FP-045100 (H)	53.00 - 53.25	1.0000	1.0000
L39	70	(Area) CCI-65FP-045100 (H)	53.00 - 53.25	1.0000	1.0000
L39	71	(Area) CCI-65FP-045100 (H)	53.00 - 53.25	1.0000	1.0000
L39	72	(Area) CCI-65FP-045100 (H)	53.00 - 53.25	1.0000	1.0000
L40	2	Safety Line 3/8	48.00 - 53.00	1.0000	1.0000
L40	5	1266A(1/8)	48.00 - 53.00	1.0000	1.0000
L40	6	7983A(ELLIPTICAL)	48.00 - 53.00	1.0000	1.0000
L40	8	3" Flexible Conduit	48.00 - 53.00	1.0000	1.0000
L40	9	HB114-1-0813U4-M5J(1-1/4)	48.00 - 53.00	1.0000	1.0000

Tower Section	Feed Line Record No.	Description	Feed Line Segment Elev.	K_a No Ice	K_a Ice
L40	11	LDF7-50A(1-5/8)	48.00 - 53.00	1.0000	1.0000
L40	14	MLE Hybrid 9Power/18Fiber RL 2(1 5/8")	48.00 - 53.00	1.0000	1.0000
L40	15	HCS 6X12 6AWG(1-3/8)	48.00 - 53.00	1.0000	1.0000
L40	27	C6x10.5	48.00 - 53.00	1.0000	1.0000
L40	28	C6x10.5	48.00 - 53.00	1.0000	1.0000
L40	29	C6x10.5	48.00 - 53.00	1.0000	1.0000
L40	30	C6x10.5	48.00 - 53.00	1.0000	1.0000
L40	42	PL 1 x 5	48.00 - 53.00	1.0000	1.0000
L40	43	PL 1 x 5	48.00 - 53.00	1.0000	1.0000
L40	44	PL 1 x 5	48.00 - 53.00	1.0000	1.0000
L40	45	PL 1 x 5	48.00 - 53.00	1.0000	1.0000
L40	57	(Area) CCI-65FP-045100 (H)	52.00 - 53.00	1.0000	1.0000
L40	58	(Area) CCI-65FP-045100 (H)	52.00 - 53.00	1.0000	1.0000
L40	59	(Area) CCI-65FP-045100 (H)	52.00 - 53.00	1.0000	1.0000
L40	61	(Area) CCI-65FP-065125 (H)	50.50 - 53.00	1.0000	1.0000
L40	69	(Area) CCI-65FP-045100 (H)	48.00 - 53.00	1.0000	1.0000
L40	70	(Area) CCI-65FP-045100 (H)	48.00 - 53.00	1.0000	1.0000
L40	71	(Area) CCI-65FP-045100 (H)	48.00 - 53.00	1.0000	1.0000
L40	72	(Area) CCI-65FP-045100 (H)	48.00 - 53.00	1.0000	1.0000
L41	2	Safety Line 3/8	39.75 - 48.00	1.0000	1.0000
L41	5	1266A(1/8)	39.75 - 48.00	1.0000	1.0000
L41	6	7983A(ELLIPTICAL)	39.75 - 48.00	1.0000	1.0000
L41	8	3" Flexible Conduit	39.75 - 48.00	1.0000	1.0000
L41	9	HB114-1-0813U4-M5J(1-1/4)	39.75 - 48.00	1.0000	1.0000
L41	11	LDF7-50A(1-5/8)	39.75 - 48.00	1.0000	1.0000
L41	14	MLE Hybrid 9Power/18Fiber RL 2(1 5/8")	39.75 - 48.00	1.0000	1.0000
L41	15	HCS 6X12 6AWG(1-3/8)	39.75 - 48.00	1.0000	1.0000
L41	27	C6x10.5	39.75 - 48.00	1.0000	1.0000
L41	28	C6x10.5	39.75 - 48.00	1.0000	1.0000
L41	29	C6x10.5	39.75 - 48.00	1.0000	1.0000
L41	30	C6x10.5	39.75 - 48.00	1.0000	1.0000
L41	42	PL 1 x 5	39.75 - 48.00	1.0000	1.0000
L41	43	PL 1 x 5	39.75 - 48.00	1.0000	1.0000
L41	44	PL 1 x 5	39.75 - 48.00	1.0000	1.0000
L41	45	PL 1 x 5	39.75 - 48.00	1.0000	1.0000
L41	52	(Area) Aero MP3-03 (H)	39.75 - 45.42	1.0000	1.0000
L41	53	(Area) Aero MP3-03 (H)	39.75 - 45.42	1.0000	1.0000
L41	54	(Area) Aero MP3-03 (H)	39.75 - 45.42	1.0000	1.0000
L41	55	(Area) Aero MP3-03 (H)	39.75 - 45.42	1.0000	1.0000
L41	69	(Area) CCI-65FP-045100 (H)	42.50 - 48.00	1.0000	1.0000
L41	70	(Area) CCI-65FP-045100 (H)	42.50 - 48.00	1.0000	1.0000
L41	71	(Area) CCI-65FP-045100 (H)	42.50 - 48.00	1.0000	1.0000
L41	72	(Area) CCI-65FP-045100 (H)	42.25 - 48.00	1.0000	1.0000
L43	2	Safety Line 3/8	34.75 - 38.75	1.0000	1.0000
L43	5	1266A(1/8)	34.75 - 38.75	1.0000	1.0000
L43	6	7983A(ELLIPTICAL)	34.75 - 38.75	1.0000	1.0000
L43	8	3" Flexible Conduit	34.75 - 38.75	1.0000	1.0000
L43	9	HB114-1-0813U4-M5J(1-1/4)	34.75 - 38.75	1.0000	1.0000
L43	11	LDF7-50A(1-5/8)	34.75 - 38.75	1.0000	1.0000
L43	14	MLE Hybrid 9Power/18Fiber RL 2(1 5/8")	34.75 - 38.75	1.0000	1.0000
L43	15	HCS 6X12 6AWG(1-3/8)	34.75 - 38.75	1.0000	1.0000
L43	27	C6x10.5	34.75 - 38.75	1.0000	1.0000
L43	28	C6x10.5	34.75 - 38.75	1.0000	1.0000
L43	29	C6x10.5	34.75 - 38.75	1.0000	1.0000
L43	30	C6x10.5	34.75 - 38.75	1.0000	1.0000
L43	37	PL 1 x 5	34.75 - 37.00	1.0000	1.0000
L43	38	PL 1 x 5	34.75 - 37.00	1.0000	1.0000

Tower Section	Feed Line Record No.	Description	Feed Line Segment Elev.	K_a No Ice	K_a Ice
L43	39	PL 1 x 5	34.75 - 37.00	1.0000	1.0000
L43	40	PL 1 x 5	34.75 - 37.00	1.0000	1.0000
L43	42	PL 1 x 5	34.75 - 38.75	1.0000	1.0000
L43	43	PL 1 x 5	34.75 - 38.75	1.0000	1.0000
L43	44	PL 1 x 5	34.75 - 38.75	1.0000	1.0000
L43	45	PL 1 x 5	34.75 - 38.75	1.0000	1.0000
L43	52	(Area) Aero MP3-03 (H)	34.75 - 38.75	1.0000	1.0000
L43	53	(Area) Aero MP3-03 (H)	34.75 - 38.75	1.0000	1.0000
L43	54	(Area) Aero MP3-03 (H)	34.75 - 38.75	1.0000	1.0000
L43	55	(Area) Aero MP3-03 (H)	34.75 - 38.75	1.0000	1.0000
L44	2	Safety Line 3/8	34.50 - 34.75	1.0000	1.0000
L44	5	1266A(1/8)	34.50 - 34.75	1.0000	1.0000
L44	6	7983A(ELLIPTICAL)	34.50 - 34.75	1.0000	1.0000
L44	8	3" Flexible Conduit	34.50 - 34.75	1.0000	1.0000
L44	9	HB114-1-0813U4-M5J(1-1/4)	34.50 - 34.75	1.0000	1.0000
L44	11	LDF7-50A(1-5/8)	34.50 - 34.75	1.0000	1.0000
L44	14	MLE Hybrid 9Power/18Fiber RL 2(1 5/8")	34.50 - 34.75	1.0000	1.0000
L44	15	HCS 6X12 6AWG(1-3/8)	34.50 - 34.75	1.0000	1.0000
L44	27	C6x10.5	34.50 - 34.75	1.0000	1.0000
L44	28	C6x10.5	34.50 - 34.75	1.0000	1.0000
L44	29	C6x10.5	34.50 - 34.75	1.0000	1.0000
L44	30	C6x10.5	34.50 - 34.75	1.0000	1.0000
L44	37	PL 1 x 5	34.50 - 34.75	1.0000	1.0000
L44	38	PL 1 x 5	34.50 - 34.75	1.0000	1.0000
L44	39	PL 1 x 5	34.50 - 34.75	1.0000	1.0000
L44	40	PL 1 x 5	34.50 - 34.75	1.0000	1.0000
L44	42	PL 1 x 5	34.50 - 34.75	1.0000	1.0000
L44	43	PL 1 x 5	34.50 - 34.75	1.0000	1.0000
L44	44	PL 1 x 5	34.50 - 34.75	1.0000	1.0000
L44	45	PL 1 x 5	34.50 - 34.75	1.0000	1.0000
L44	52	(Area) Aero MP3-03 (H)	34.50 - 34.75	1.0000	1.0000
L44	53	(Area) Aero MP3-03 (H)	34.50 - 34.75	1.0000	1.0000
L44	54	(Area) Aero MP3-03 (H)	34.50 - 34.75	1.0000	1.0000
L44	55	(Area) Aero MP3-03 (H)	34.50 - 34.75	1.0000	1.0000
L45	2	Safety Line 3/8	33.75 - 34.50	1.0000	1.0000
L45	5	1266A(1/8)	33.75 - 34.50	1.0000	1.0000
L45	6	7983A(ELLIPTICAL)	33.75 - 34.50	1.0000	1.0000
L45	8	3" Flexible Conduit	33.75 - 34.50	1.0000	1.0000
L45	9	HB114-1-0813U4-M5J(1-1/4)	33.75 - 34.50	1.0000	1.0000
L45	11	LDF7-50A(1-5/8)	33.75 - 34.50	1.0000	1.0000
L45	14	MLE Hybrid 9Power/18Fiber RL 2(1 5/8")	33.75 - 34.50	1.0000	1.0000
L45	15	HCS 6X12 6AWG(1-3/8)	33.75 - 34.50	1.0000	1.0000
L45	27	C6x10.5	33.75 - 34.50	1.0000	1.0000
L45	28	C6x10.5	33.75 - 34.50	1.0000	1.0000
L45	29	C6x10.5	33.75 - 34.50	1.0000	1.0000
L45	30	C6x10.5	33.75 - 34.50	1.0000	1.0000
L45	37	PL 1 x 5	33.75 - 34.50	1.0000	1.0000
L45	38	PL 1 x 5	33.75 - 34.50	1.0000	1.0000
L45	39	PL 1 x 5	33.75 - 34.50	1.0000	1.0000
L45	40	PL 1 x 5	33.75 - 34.50	1.0000	1.0000
L45	42	PL 1 x 5	33.75 - 34.50	1.0000	1.0000
L45	43	PL 1 x 5	33.75 - 34.50	1.0000	1.0000
L45	44	PL 1 x 5	33.75 - 34.50	1.0000	1.0000
L45	45	PL 1 x 5	33.75 - 34.50	1.0000	1.0000
L45	52	(Area) Aero MP3-03 (H)	33.75 - 34.50	1.0000	1.0000
L45	53	(Area) Aero MP3-03 (H)	33.75 - 34.50	1.0000	1.0000
L45	54	(Area) Aero MP3-03 (H)	33.75 - 34.50	1.0000	1.0000
L45	55	(Area) Aero MP3-03 (H)	33.75 - 34.50	1.0000	1.0000

Tower Section	Feed Line Record No.	Description	Feed Line Segment Elev.	K_a No Ice	K_a Ice
L46	2	Safety Line 3/8	33.50 - 33.75	1.0000	1.0000
L46	5	1266A(1/8)	33.50 - 33.75	1.0000	1.0000
L46	6	7983A(ELLIPTICAL)	33.50 - 33.75	1.0000	1.0000
L46	8	3" Flexible Conduit	33.50 - 33.75	1.0000	1.0000
L46	9	HB114-1-0813U4-M5J(1-1/4)	33.50 - 33.75	1.0000	1.0000
L46	11	LDF7-50A(1-5/8)	33.50 - 33.75	1.0000	1.0000
L46	14	MLE Hybrid 9Power/18Fiber RL 2(1 5/8")	33.50 - 33.75	1.0000	1.0000
L46	15	HCS 6X12 6AWG(1-3/8)	33.50 - 33.75	1.0000	1.0000
L46	27	C6x10.5	33.50 - 33.75	1.0000	1.0000
L46	28	C6x10.5	33.50 - 33.75	1.0000	1.0000
L46	29	C6x10.5	33.50 - 33.75	1.0000	1.0000
L46	30	C6x10.5	33.50 - 33.75	1.0000	1.0000
L46	37	PL 1 x 5	33.50 - 33.75	1.0000	1.0000
L46	38	PL 1 x 5	33.50 - 33.75	1.0000	1.0000
L46	39	PL 1 x 5	33.50 - 33.75	1.0000	1.0000
L46	40	PL 1 x 5	33.50 - 33.75	1.0000	1.0000
L46	42	PL 1 x 5	33.50 - 33.75	1.0000	1.0000
L46	43	PL 1 x 5	33.50 - 33.75	1.0000	1.0000
L46	44	PL 1 x 5	33.50 - 33.75	1.0000	1.0000
L46	45	PL 1 x 5	33.50 - 33.75	1.0000	1.0000
L46	52	(Area) Aero MP3-03 (H)	33.50 - 33.75	1.0000	1.0000
L46	53	(Area) Aero MP3-03 (H)	33.50 - 33.75	1.0000	1.0000
L46	54	(Area) Aero MP3-03 (H)	33.50 - 33.75	1.0000	1.0000
L46	55	(Area) Aero MP3-03 (H)	33.50 - 33.75	1.0000	1.0000
L47	2	Safety Line 3/8	28.50 - 33.50	1.0000	1.0000
L47	5	1266A(1/8)	28.50 - 33.50	1.0000	1.0000
L47	6	7983A(ELLIPTICAL)	28.50 - 33.50	1.0000	1.0000
L47	8	3" Flexible Conduit	28.50 - 33.50	1.0000	1.0000
L47	9	HB114-1-0813U4-M5J(1-1/4)	28.50 - 33.50	1.0000	1.0000
L47	11	LDF7-50A(1-5/8)	28.50 - 33.50	1.0000	1.0000
L47	14	MLE Hybrid 9Power/18Fiber RL 2(1 5/8")	28.50 - 33.50	1.0000	1.0000
L47	15	HCS 6X12 6AWG(1-3/8)	28.50 - 33.50	1.0000	1.0000
L47	27	C6x10.5	28.50 - 33.50	1.0000	1.0000
L47	28	C6x10.5	28.50 - 33.50	1.0000	1.0000
L47	29	C6x10.5	28.50 - 33.50	1.0000	1.0000
L47	30	C6x10.5	28.50 - 33.50	1.0000	1.0000
L47	37	PL 1 x 5	28.50 - 33.50	1.0000	1.0000
L47	38	PL 1 x 5	28.50 - 33.50	1.0000	1.0000
L47	39	PL 1 x 5	28.50 - 33.50	1.0000	1.0000
L47	40	PL 1 x 5	28.50 - 33.50	1.0000	1.0000
L47	42	PL 1 x 5	31.50 - 33.50	1.0000	1.0000
L47	43	PL 1 x 5	31.50 - 33.50	1.0000	1.0000
L47	44	PL 1 x 5	31.50 - 33.50	1.0000	1.0000
L47	45	PL 1 x 5	31.50 - 33.50	1.0000	1.0000
L47	52	(Area) Aero MP3-03 (H)	28.50 - 33.50	1.0000	1.0000
L47	53	(Area) Aero MP3-03 (H)	28.50 - 33.50	1.0000	1.0000
L47	54	(Area) Aero MP3-03 (H)	28.50 - 33.50	1.0000	1.0000
L47	55	(Area) Aero MP3-03 (H)	28.50 - 33.50	1.0000	1.0000
L48	2	Safety Line 3/8	24.00 - 28.50	1.0000	1.0000
L48	5	1266A(1/8)	24.00 - 28.50	1.0000	1.0000
L48	6	7983A(ELLIPTICAL)	24.00 - 28.50	1.0000	1.0000
L48	8	3" Flexible Conduit	24.00 - 28.50	1.0000	1.0000
L48	9	HB114-1-0813U4-M5J(1-1/4)	24.00 - 28.50	1.0000	1.0000
L48	11	LDF7-50A(1-5/8)	24.00 - 28.50	1.0000	1.0000
L48	14	MLE Hybrid 9Power/18Fiber RL 2(1 5/8")	24.00 - 28.50	1.0000	1.0000
L48	15	HCS 6X12 6AWG(1-3/8)	24.00 - 28.50	1.0000	1.0000

Tower Section	Feed Line Record No.	Description	Feed Line Segment Elev.	K_a No Ice	K_a Ice
L48	27	C6x10.5	24.00 - 28.50	1.0000	1.0000
L48	28	C6x10.5	24.00 - 28.50	1.0000	1.0000
L48	29	C6x10.5	24.00 - 28.50	1.0000	1.0000
L48	30	C6x10.5	24.00 - 28.50	1.0000	1.0000
L48	32	(Area) Aero MP3-04 (H)	24.00 - 25.42	1.0000	1.0000
L48	33	(Area) Aero MP3-04 (H)	24.00 - 25.42	1.0000	1.0000
L48	34	(Area) Aero MP3-04 (H)	24.00 - 25.42	1.0000	1.0000
L48	35	(Area) Aero MP3-04 (H)	24.00 - 25.42	1.0000	1.0000
L48	37	PL 1 x 5	24.00 - 28.50	1.0000	1.0000
L48	38	PL 1 x 5	24.00 - 28.50	1.0000	1.0000
L48	39	PL 1 x 5	24.00 - 28.50	1.0000	1.0000
L48	40	PL 1 x 5	24.00 - 28.50	1.0000	1.0000
L48	52	(Area) Aero MP3-03 (H)	25.42 - 28.50	1.0000	1.0000
L48	53	(Area) Aero MP3-03 (H)	25.42 - 28.50	1.0000	1.0000
L48	54	(Area) Aero MP3-03 (H)	25.42 - 28.50	1.0000	1.0000
L48	55	(Area) Aero MP3-03 (H)	25.42 - 28.50	1.0000	1.0000
L49	2	Safety Line 3/8	23.75 - 24.00	1.0000	1.0000
L49	5	1266A(1/8)	23.75 - 24.00	1.0000	1.0000
L49	6	7983A(ELLIPTICAL)	23.75 - 24.00	1.0000	1.0000
L49	8	3" Flexible Conduit	23.75 - 24.00	1.0000	1.0000
L49	9	HB114-1-0813U4-M5J(1-1/4)	23.75 - 24.00	1.0000	1.0000
L49	11	LDF7-50A(1-5/8)	23.75 - 24.00	1.0000	1.0000
L49	14	MLE Hybrid 9Power/18Fiber RL 2(1 5/8")	23.75 - 24.00	1.0000	1.0000
L49	15	HCS 6X12 6AWG(1-3/8)	23.75 - 24.00	1.0000	1.0000
L49	27	C6x10.5	23.75 - 24.00	1.0000	1.0000
L49	28	C6x10.5	23.75 - 24.00	1.0000	1.0000
L49	29	C6x10.5	23.75 - 24.00	1.0000	1.0000
L49	30	C6x10.5	23.75 - 24.00	1.0000	1.0000
L49	32	(Area) Aero MP3-04 (H)	23.75 - 24.00	1.0000	1.0000
L49	33	(Area) Aero MP3-04 (H)	23.75 - 24.00	1.0000	1.0000
L49	34	(Area) Aero MP3-04 (H)	23.75 - 24.00	1.0000	1.0000
L49	35	(Area) Aero MP3-04 (H)	23.75 - 24.00	1.0000	1.0000
L49	37	PL 1 x 5	23.75 - 24.00	1.0000	1.0000
L49	38	PL 1 x 5	23.75 - 24.00	1.0000	1.0000
L49	39	PL 1 x 5	23.75 - 24.00	1.0000	1.0000
L49	40	PL 1 x 5	23.75 - 24.00	1.0000	1.0000
L50	2	Safety Line 3/8	18.75 - 23.75	1.0000	1.0000
L50	5	1266A(1/8)	18.75 - 23.75	1.0000	1.0000
L50	6	7983A(ELLIPTICAL)	18.75 - 23.75	1.0000	1.0000
L50	8	3" Flexible Conduit	18.75 - 23.75	1.0000	1.0000
L50	9	HB114-1-0813U4-M5J(1-1/4)	18.75 - 23.75	1.0000	1.0000
L50	11	LDF7-50A(1-5/8)	18.75 - 23.75	1.0000	1.0000
L50	14	MLE Hybrid 9Power/18Fiber RL 2(1 5/8")	18.75 - 23.75	1.0000	1.0000
L50	15	HCS 6X12 6AWG(1-3/8)	18.75 - 23.75	1.0000	1.0000
L50	27	C6x10.5	18.75 - 23.75	1.0000	1.0000
L50	28	C6x10.5	18.75 - 23.75	1.0000	1.0000
L50	29	C6x10.5	18.75 - 23.75	1.0000	1.0000
L50	30	C6x10.5	18.75 - 23.75	1.0000	1.0000
L50	32	(Area) Aero MP3-04 (H)	18.75 - 23.75	1.0000	1.0000
L50	33	(Area) Aero MP3-04 (H)	18.75 - 23.75	1.0000	1.0000
L50	34	(Area) Aero MP3-04 (H)	18.75 - 23.75	1.0000	1.0000
L50	35	(Area) Aero MP3-04 (H)	18.75 - 23.75	1.0000	1.0000
L50	37	PL 1 x 5	18.75 - 23.75	1.0000	1.0000
L50	38	PL 1 x 5	18.75 - 23.75	1.0000	1.0000
L50	39	PL 1 x 5	18.75 - 23.75	1.0000	1.0000
L50	40	PL 1 x 5	18.75 - 23.75	1.0000	1.0000
L51	2	Safety Line 3/8	14.25 - 18.75	1.0000	1.0000
L51	5	1266A(1/8)	14.25 - 18.75	1.0000	1.0000

Tower Section	Feed Line Record No.	Description	Feed Line Segment Elev.	K_a No Ice	K_a Ice
L51	6	7983A(ELLIPTICAL)	14.25 - 18.75	1.0000	1.0000
L51	8	3" Flexible Conduit	14.25 - 18.75	1.0000	1.0000
L51	9	HB114-1-0813U4-M5J(1-1/4)	14.25 - 18.75	1.0000	1.0000
L51	11	LDF7-50A(1-5/8)	14.25 - 18.75	1.0000	1.0000
L51	14	MLE Hybrid 9Power/18Fiber RL 2(1 5/8")	14.25 - 18.75	1.0000	1.0000
L51	15	HCS 6X12 6AWG(1-3/8)	14.25 - 18.75	1.0000	1.0000
L51	27	C6x10.5	14.25 - 18.75	1.0000	1.0000
L51	28	C6x10.5	14.25 - 18.75	1.0000	1.0000
L51	29	C6x10.5	14.25 - 18.75	1.0000	1.0000
L51	30	C6x10.5	14.25 - 18.75	1.0000	1.0000
L51	32	(Area) Aero MP3-04 (H)	14.25 - 18.75	1.0000	1.0000
L51	33	(Area) Aero MP3-04 (H)	14.25 - 18.75	1.0000	1.0000
L51	34	(Area) Aero MP3-04 (H)	14.25 - 18.75	1.0000	1.0000
L51	35	(Area) Aero MP3-04 (H)	14.25 - 18.75	1.0000	1.0000
L51	37	PL 1 x 5	14.25 - 18.75	1.0000	1.0000
L51	38	PL 1 x 5	14.25 - 18.75	1.0000	1.0000
L51	39	PL 1 x 5	14.25 - 18.75	1.0000	1.0000
L51	40	PL 1 x 5	14.25 - 18.75	1.0000	1.0000
L51	47	(Area) Aero MP3-03 (H)	14.25 - 15.42	1.0000	1.0000
L51	48	(Area) Aero MP3-03 (H)	14.25 - 15.42	1.0000	1.0000
L51	49	(Area) Aero MP3-03 (H)	14.25 - 15.42	1.0000	1.0000
L51	50	(Area) Aero MP3-03 (H)	14.25 - 15.42	1.0000	1.0000
L52	2	Safety Line 3/8	14.00 - 14.25	1.0000	1.0000
L52	5	1266A(1/8)	14.00 - 14.25	1.0000	1.0000
L52	6	7983A(ELLIPTICAL)	14.00 - 14.25	1.0000	1.0000
L52	8	3" Flexible Conduit	14.00 - 14.25	1.0000	1.0000
L52	9	HB114-1-0813U4-M5J(1-1/4)	14.00 - 14.25	1.0000	1.0000
L52	11	LDF7-50A(1-5/8)	14.00 - 14.25	1.0000	1.0000
L52	14	MLE Hybrid 9Power/18Fiber RL 2(1 5/8")	14.00 - 14.25	1.0000	1.0000
L52	15	HCS 6X12 6AWG(1-3/8)	14.00 - 14.25	1.0000	1.0000
L52	27	C6x10.5	14.00 - 14.25	1.0000	1.0000
L52	28	C6x10.5	14.00 - 14.25	1.0000	1.0000
L52	29	C6x10.5	14.00 - 14.25	1.0000	1.0000
L52	30	C6x10.5	14.00 - 14.25	1.0000	1.0000
L52	32	(Area) Aero MP3-04 (H)	14.00 - 14.25	1.0000	1.0000
L52	33	(Area) Aero MP3-04 (H)	14.00 - 14.25	1.0000	1.0000
L52	34	(Area) Aero MP3-04 (H)	14.00 - 14.25	1.0000	1.0000
L52	35	(Area) Aero MP3-04 (H)	14.00 - 14.25	1.0000	1.0000
L52	37	PL 1 x 5	14.00 - 14.25	1.0000	1.0000
L52	38	PL 1 x 5	14.00 - 14.25	1.0000	1.0000
L52	39	PL 1 x 5	14.00 - 14.25	1.0000	1.0000
L52	40	PL 1 x 5	14.00 - 14.25	1.0000	1.0000
L52	47	(Area) Aero MP3-03 (H)	14.00 - 14.25	1.0000	1.0000
L52	48	(Area) Aero MP3-03 (H)	14.00 - 14.25	1.0000	1.0000
L52	49	(Area) Aero MP3-03 (H)	14.00 - 14.25	1.0000	1.0000
L52	50	(Area) Aero MP3-03 (H)	14.00 - 14.25	1.0000	1.0000
L53	2	Safety Line 3/8	9.00 - 14.00	1.0000	1.0000
L53	5	1266A(1/8)	9.00 - 14.00	1.0000	1.0000
L53	6	7983A(ELLIPTICAL)	9.00 - 14.00	1.0000	1.0000
L53	8	3" Flexible Conduit	9.00 - 14.00	1.0000	1.0000
L53	9	HB114-1-0813U4-M5J(1-1/4)	9.00 - 14.00	1.0000	1.0000
L53	11	LDF7-50A(1-5/8)	9.00 - 14.00	1.0000	1.0000
L53	14	MLE Hybrid 9Power/18Fiber RL 2(1 5/8")	9.00 - 14.00	1.0000	1.0000
L53	15	HCS 6X12 6AWG(1-3/8)	9.00 - 14.00	1.0000	1.0000
L53	27	C6x10.5	9.00 - 14.00	1.0000	1.0000
L53	28	C6x10.5	9.00 - 14.00	1.0000	1.0000

Tower Section	Feed Line Record No.	Description	Feed Line Segment Elev.	K_a No Ice	K_a Ice
L53	29	C6x10.5	9.00 - 14.00	1.0000	1.0000
L53	30	C6x10.5	9.00 - 14.00	1.0000	1.0000
L53	32	(Area) Aero MP3-04 (H)	9.00 - 14.00	1.0000	1.0000
L53	33	(Area) Aero MP3-04 (H)	9.00 - 14.00	1.0000	1.0000
L53	34	(Area) Aero MP3-04 (H)	9.00 - 14.00	1.0000	1.0000
L53	35	(Area) Aero MP3-04 (H)	9.00 - 14.00	1.0000	1.0000
L53	37	PL 1 x 5	9.00 - 14.00	1.0000	1.0000
L53	38	PL 1 x 5	9.00 - 14.00	1.0000	1.0000
L53	39	PL 1 x 5	9.00 - 14.00	1.0000	1.0000
L53	40	PL 1 x 5	9.00 - 14.00	1.0000	1.0000
L53	47	(Area) Aero MP3-03 (H)	9.00 - 14.00	1.0000	1.0000
L53	48	(Area) Aero MP3-03 (H)	9.00 - 14.00	1.0000	1.0000
L53	49	(Area) Aero MP3-03 (H)	9.00 - 14.00	1.0000	1.0000
L53	50	(Area) Aero MP3-03 (H)	9.00 - 14.00	1.0000	1.0000
L54	2	Safety Line 3/8	5.00 - 9.00	1.0000	1.0000
L54	5	1266A(1/8)	5.00 - 9.00	1.0000	1.0000
L54	6	7983A(ELLIPTICAL)	5.00 - 9.00	1.0000	1.0000
L54	8	3" Flexible Conduit	5.00 - 9.00	1.0000	1.0000
L54	9	HB114-1-0813U4-M5J(1-1/4)	5.00 - 9.00	1.0000	1.0000
L54	11	LDF7-50A(1-5/8)	5.00 - 9.00	1.0000	1.0000
L54	14	MLE Hybrid 9Power/18Fiber RL 2(1 5/8")	5.00 - 9.00	1.0000	1.0000
L54	15	HCS 6X12 6AWG(1-3/8)	5.00 - 9.00	1.0000	1.0000
L54	27	C6x10.5	7.67 - 9.00	1.0000	1.0000
L54	28	C6x10.5	8.00 - 9.00	1.0000	1.0000
L54	29	C6x10.5	5.00 - 9.00	1.0000	1.0000
L54	30	C6x10.5	5.00 - 9.00	1.0000	1.0000
L54	32	(Area) Aero MP3-04 (H)	5.00 - 9.00	1.0000	1.0000
L54	33	(Area) Aero MP3-04 (H)	5.00 - 9.00	1.0000	1.0000
L54	34	(Area) Aero MP3-04 (H)	5.00 - 9.00	1.0000	1.0000
L54	35	(Area) Aero MP3-04 (H)	5.00 - 9.00	1.0000	1.0000
L54	37	PL 1 x 5	5.00 - 9.00	1.0000	1.0000
L54	38	PL 1 x 5	5.00 - 9.00	1.0000	1.0000
L54	39	PL 1 x 5	5.00 - 9.00	1.0000	1.0000
L54	40	PL 1 x 5	5.00 - 9.00	1.0000	1.0000
L54	47	(Area) Aero MP3-03 (H)	5.00 - 9.00	1.0000	1.0000
L54	48	(Area) Aero MP3-03 (H)	5.00 - 9.00	1.0000	1.0000
L54	49	(Area) Aero MP3-03 (H)	5.00 - 9.00	1.0000	1.0000
L54	50	(Area) Aero MP3-03 (H)	5.00 - 9.00	1.0000	1.0000
L55	2	Safety Line 3/8	4.75 - 5.00	1.0000	1.0000
L55	5	1266A(1/8)	4.75 - 5.00	1.0000	1.0000
L55	6	7983A(ELLIPTICAL)	4.75 - 5.00	1.0000	1.0000
L55	8	3" Flexible Conduit	4.75 - 5.00	1.0000	1.0000
L55	9	HB114-1-0813U4-M5J(1-1/4)	4.75 - 5.00	1.0000	1.0000
L55	11	LDF7-50A(1-5/8)	4.75 - 5.00	1.0000	1.0000
L55	14	MLE Hybrid 9Power/18Fiber RL 2(1 5/8")	4.75 - 5.00	1.0000	1.0000
L55	15	HCS 6X12 6AWG(1-3/8)	4.75 - 5.00	1.0000	1.0000
L55	29	C6x10.5	4.75 - 5.00	1.0000	1.0000
L55	30	C6x10.5	4.75 - 5.00	1.0000	1.0000
L55	32	(Area) Aero MP3-04 (H)	4.75 - 5.00	1.0000	1.0000
L55	33	(Area) Aero MP3-04 (H)	4.75 - 5.00	1.0000	1.0000
L55	34	(Area) Aero MP3-04 (H)	4.75 - 5.00	1.0000	1.0000
L55	35	(Area) Aero MP3-04 (H)	4.75 - 5.00	1.0000	1.0000
L55	37	PL 1 x 5	4.75 - 5.00	1.0000	1.0000
L55	38	PL 1 x 5	4.75 - 5.00	1.0000	1.0000
L55	39	PL 1 x 5	4.75 - 5.00	1.0000	1.0000
L55	40	PL 1 x 5	4.75 - 5.00	1.0000	1.0000
L55	47	(Area) Aero MP3-03 (H)	4.75 - 5.00	1.0000	1.0000
L55	48	(Area) Aero MP3-03 (H)	4.75 - 5.00	1.0000	1.0000

Tower Section	Feed Line Record No.	Description	Feed Line Segment Elev.	K_a No Ice	K_a Ice
L55	49	(Area) Aero MP3-03 (H)	4.75 - 5.00	1.0000	1.0000
L55	50	(Area) Aero MP3-03 (H)	4.75 - 5.00	1.0000	1.0000
L56	2	Safety Line 3/8	4.50 - 4.75	1.0000	1.0000
L56	5	1266A(1/8)	4.50 - 4.75	1.0000	1.0000
L56	6	7983A(ELLIPTICAL)	4.50 - 4.75	1.0000	1.0000
L56	8	3" Flexible Conduit	4.50 - 4.75	1.0000	1.0000
L56	9	HB114-1-0813U4-M5J(1-1/4)	4.50 - 4.75	1.0000	1.0000
L56	11	LDF7-50A(1-5/8)	4.50 - 4.75	1.0000	1.0000
L56	14	MLE Hybrid 9Power/18Fiber RL 2(1 5/8")	4.50 - 4.75	1.0000	1.0000
L56	15	HCS 6X12 6AWG(1-3/8)	4.50 - 4.75	1.0000	1.0000
L56	29	C6x10.5	4.50 - 4.75	1.0000	1.0000
L56	30	C6x10.5	4.50 - 4.75	1.0000	1.0000
L56	32	(Area) Aero MP3-04 (H)	4.50 - 4.75	1.0000	1.0000
L56	33	(Area) Aero MP3-04 (H)	4.50 - 4.75	1.0000	1.0000
L56	34	(Area) Aero MP3-04 (H)	4.50 - 4.75	1.0000	1.0000
L56	35	(Area) Aero MP3-04 (H)	4.50 - 4.75	1.0000	1.0000
L56	37	PL 1 x 5	4.50 - 4.75	1.0000	1.0000
L56	38	PL 1 x 5	4.50 - 4.75	1.0000	1.0000
L56	39	PL 1 x 5	4.50 - 4.75	1.0000	1.0000
L56	40	PL 1 x 5	4.50 - 4.75	1.0000	1.0000
L56	47	(Area) Aero MP3-03 (H)	4.50 - 4.75	1.0000	1.0000
L56	48	(Area) Aero MP3-03 (H)	4.50 - 4.75	1.0000	1.0000
L56	49	(Area) Aero MP3-03 (H)	4.50 - 4.75	1.0000	1.0000
L56	50	(Area) Aero MP3-03 (H)	4.50 - 4.75	1.0000	1.0000
L57	2	Safety Line 3/8	0.00 - 4.50	1.0000	1.0000
L57	5	1266A(1/8)	0.00 - 4.50	1.0000	1.0000
L57	6	7983A(ELLIPTICAL)	0.00 - 4.50	1.0000	1.0000
L57	8	3" Flexible Conduit	0.00 - 4.50	1.0000	1.0000
L57	9	HB114-1-0813U4-M5J(1-1/4)	0.00 - 4.50	1.0000	1.0000
L57	11	LDF7-50A(1-5/8)	0.00 - 4.50	1.0000	1.0000
L57	14	MLE Hybrid 9Power/18Fiber RL 2(1 5/8")	0.00 - 4.50	1.0000	1.0000
L57	15	HCS 6X12 6AWG(1-3/8)	0.00 - 4.50	1.0000	1.0000
L57	29	C6x10.5	0.00 - 4.50	1.0000	1.0000
L57	30	C6x10.5	0.00 - 4.50	1.0000	1.0000
L57	32	(Area) Aero MP3-04 (H)	0.00 - 4.50	1.0000	1.0000
L57	33	(Area) Aero MP3-04 (H)	0.00 - 4.50	1.0000	1.0000
L57	34	(Area) Aero MP3-04 (H)	0.00 - 4.50	1.0000	1.0000
L57	35	(Area) Aero MP3-04 (H)	0.00 - 4.50	1.0000	1.0000
L57	37	PL 1 x 5	2.50 - 4.50	1.0000	1.0000
L57	38	PL 1 x 5	2.50 - 4.50	1.0000	1.0000
L57	39	PL 1 x 5	2.50 - 4.50	1.0000	1.0000
L57	40	PL 1 x 5	2.50 - 4.50	1.0000	1.0000
L57	47	(Area) Aero MP3-03 (H)	0.00 - 4.50	1.0000	1.0000
L57	48	(Area) Aero MP3-03 (H)	0.00 - 4.50	1.0000	1.0000
L57	49	(Area) Aero MP3-03 (H)	0.00 - 4.50	1.0000	1.0000
L57	50	(Area) Aero MP3-03 (H)	0.00 - 4.50	1.0000	1.0000

Discrete Tower Loads

Description	Face or Leg	Offset Type	Offsets: Horz Lateral Vert ft ft ft	Azimuth Adjustment °	Placement ft		C_AA_A Front ft^2	C_AA_A Side ft^2	Weight K
Miscl									
Pipe 6" x 10'	C	From Leg	0.00 0.00 5.00	0.0000	120.00	No Ice 1/2" Ice 1" Ice 2" Ice	3.23 6.05 6.66 7.92	3.23 6.05 6.66 7.92	0.19 0.23 0.28 0.40
122									
APXVTM14-ALU-I20 w/ Mount Pipe	A	From Centroid-Leg	4.00 -7.00 -1.00	30.0000	122.00	No Ice 1/2" Ice 1" Ice 2" Ice	4.09 4.48 4.88 5.71	2.86 3.23 3.61 4.40	0.08 0.13 0.19 0.33
APXVTM14-ALU-I20 w/ Mount Pipe	B	From Centroid-Leg	4.00 -7.00 -1.00	10.0000	122.00	No Ice 1/2" Ice 1" Ice 2" Ice	4.09 4.48 4.88 5.71	2.86 3.23 3.61 4.40	0.08 0.13 0.19 0.33
APXVTM14-ALU-I20 w/ Mount Pipe	C	From Centroid-Leg	4.00 3.00 -1.00	30.0000	122.00	No Ice 1/2" Ice 1" Ice 2" Ice	4.09 4.48 4.88 5.71	2.86 3.23 3.61 4.40	0.08 0.13 0.19 0.33
APXVSPP18-C-A20 w/ Mount Pipe	A	From Centroid-Leg	4.00 -3.00 -1.00	30.0000	122.00	No Ice 1/2" Ice 1" Ice 2" Ice	4.60 5.05 5.50 6.44	4.01 4.45 4.89 5.82	0.10 0.16 0.23 0.42
APXVSPP18-C-A20 w/ Mount Pipe	B	From Centroid-Leg	4.00 -3.00 -1.00	10.0000	122.00	No Ice 1/2" Ice 1" Ice 2" Ice	4.60 5.05 5.50 6.44	4.01 4.45 4.89 5.82	0.10 0.16 0.23 0.42
APXVSPP18-C-A20 w/ Mount Pipe	C	From Centroid-Leg	4.00 -3.00 -1.00	30.0000	122.00	No Ice 1/2" Ice 1" Ice 2" Ice	4.60 5.05 5.50 6.44	4.01 4.45 4.89 5.82	0.10 0.16 0.23 0.42
LLPX310R w/ Mount Pipe	A	From Centroid-Leg	4.00 0.00 0.00	30.0000	122.00	No Ice 1/2" Ice 1" Ice 2" Ice	3.88 4.29 4.72 5.61	2.36 2.73 3.12 3.94	0.06 0.09 0.13 0.24
LLPX310R w/ Mount Pipe	B	From Centroid-Leg	4.00 0.00 0.00	30.0000	122.00	No Ice 1/2" Ice 1" Ice 2" Ice	3.88 4.29 4.72 5.61	2.36 2.73 3.12 3.94	0.06 0.09 0.13 0.24
LLPX310R w/ Mount Pipe	C	From Centroid-Leg	4.00 0.00 0.00	30.0000	122.00	No Ice 1/2" Ice 1" Ice 2" Ice	3.88 4.29 4.72 5.61	2.36 2.73 3.12 3.94	0.06 0.09 0.13 0.24
MT-485025/NVH w/ Mount Pipe	C	From Centroid-Leg	4.00 -7.00 1.00	30.0000	122.00	No Ice 1/2" Ice 1" Ice 2" Ice	1.95 2.18 2.43 2.94	0.62 0.86 1.11 1.65	0.01 0.03 0.05 0.10
(3) ACU-A20-N	A	From Centroid-Leg	4.00 -3.00 -2.00	30.0000	122.00	No Ice 1/2" Ice 1" Ice 2" Ice	0.07 0.10 0.15 0.26	0.12 0.16 0.21 0.34	0.00 0.00 0.00 0.01
(3) ACU-A20-N	B	From Centroid-Leg	4.00 -3.00 -2.00	10.0000	122.00	No Ice 1/2" Ice 1" Ice 2" Ice	0.07 0.10 0.15 0.26	0.12 0.16 0.21 0.34	0.00 0.00 0.00 0.01
(3) ACU-A20-N	C	From Centroid-Leg	4.00 -3.00 -2.00	30.0000	122.00	No Ice 1/2" Ice 1" Ice	0.07 0.10 0.15	0.12 0.16 0.21	0.00 0.00 0.00

Description	Face or Leg	Offset Type	Offsets: Horz Lateral Vert ft ft ft	Azimuth Adjustment °	Placement ft		C_AA_A Front ft^2	C_AA_A Side ft^2	Weight K
						2" Ice	0.26	0.34	0.01
PCS 1900MHz 4x45W-65MHz	A	From Centroid-Leg	4.00 -3.00 -1.00	30.0000	122.00	No Ice	2.32	2.24	0.06
						1/2" Ice	2.53	2.44	0.08
						1" Ice	2.74	2.65	0.11
						2" Ice	3.19	3.09	0.17
PCS 1900MHz 4x45W-65MHz	B	From Centroid-Leg	4.00 -3.00 -2.00	10.0000	122.00	No Ice	2.32	2.24	0.06
						1/2" Ice	2.53	2.44	0.08
						1" Ice	2.74	2.65	0.11
						2" Ice	3.19	3.09	0.17
PCS 1900MHz 4x45W-65MHz	C	From Centroid-Leg	4.00 -3.00 -1.00	30.0000	122.00	No Ice	2.32	2.24	0.06
						1/2" Ice	2.53	2.44	0.08
						1" Ice	2.74	2.65	0.11
						2" Ice	3.19	3.09	0.17
800MHZ RRH	A	From Centroid-Leg	4.00 -3.00 -2.00	30.0000	122.00	No Ice	2.13	1.77	0.05
						1/2" Ice	2.32	1.95	0.07
						1" Ice	2.51	2.13	0.10
						2" Ice	2.92	2.51	0.16
800MHZ RRH	B	From Centroid-Leg	4.00 -3.00 -1.00	10.0000	122.00	No Ice	2.13	1.77	0.05
						1/2" Ice	2.32	1.95	0.07
						1" Ice	2.51	2.13	0.10
						2" Ice	2.92	2.51	0.16
800MHZ RRH	C	From Centroid-Leg	4.00 -3.00 -2.00	30.0000	122.00	No Ice	2.13	1.77	0.05
						1/2" Ice	2.32	1.95	0.07
						1" Ice	2.51	2.13	0.10
						2" Ice	2.92	2.51	0.16
800 EXTERNAL NOTCH FILTER	A	From Centroid-Leg	4.00 -3.00 -2.00	30.0000	122.00	No Ice	0.66	0.32	0.01
						1/2" Ice	0.76	0.40	0.02
						1" Ice	0.87	0.48	0.02
						2" Ice	1.11	0.67	0.04
800 EXTERNAL NOTCH FILTER	B	From Centroid-Leg	4.00 -3.00 -2.00	10.0000	122.00	No Ice	0.66	0.32	0.01
						1/2" Ice	0.76	0.40	0.02
						1" Ice	0.87	0.48	0.02
						2" Ice	1.11	0.67	0.04
800 EXTERNAL NOTCH FILTER	C	From Centroid-Leg	4.00 -3.00 -2.00	30.0000	122.00	No Ice	0.66	0.32	0.01
						1/2" Ice	0.76	0.40	0.02
						1" Ice	0.87	0.48	0.02
						2" Ice	1.11	0.67	0.04
FDD_R6_RRH	A	From Centroid-Leg	4.00 0.00 0.00	25.0000	122.00	No Ice	1.53	0.68	0.03
						1/2" Ice	1.69	0.80	0.04
						1" Ice	1.85	0.92	0.06
						2" Ice	2.20	1.19	0.09
FDD_R6_RRH	B	From Centroid-Leg	4.00 0.00 0.00	10.0000	122.00	No Ice	1.53	0.68	0.03
						1/2" Ice	1.69	0.80	0.04
						1" Ice	1.85	0.92	0.06
						2" Ice	2.20	1.19	0.09
FDD_R6_RRH	C	From Centroid-Leg	4.00 0.00 0.00	30.0000	122.00	No Ice	1.53	0.68	0.03
						1/2" Ice	1.69	0.80	0.04
						1" Ice	1.85	0.92	0.06
						2" Ice	2.20	1.19	0.09
TD-RRH8x20-25	A	From Centroid-Leg	4.00 3.00 -1.00	37.0000	122.00	No Ice	3.70	1.29	0.07
						1/2" Ice	3.95	1.46	0.09
						1" Ice	4.20	1.64	0.12
						2" Ice	4.72	2.02	0.18
TD-RRH8x20-25	B	From Centroid-Leg	4.00 3.00 -1.00	10.0000	122.00	No Ice	3.70	1.29	0.07
						1/2" Ice	3.95	1.46	0.09
						1" Ice	4.20	1.64	0.12
						2" Ice	4.72	2.02	0.18

Description	Face or Leg	Offset Type	Offsets: Horz Lateral Vert ft ft ft	Azimuth Adjustment °	Placement ft		C_AA_A Front ft^2	C_AA_A Side ft^2	Weight K
TD-RRH8x20-25	C	From Centroid-Leg	4.00 3.00 -1.00	30.0000	122.00	No Ice 1/2" Ice 1" Ice 2" Ice	3.70 3.95 4.20 4.72	1.29 1.46 1.64 2.02	0.07 0.09 0.12 0.18
(2) 2.4" Dia x 6-ft Pipe	A	From Centroid-Leg	4.00 5.00 0.00	0.0000	122.00	No Ice 1/2" Ice 1" Ice 2" Ice	1.43 1.93 2.30 3.06	1.43 1.93 2.30 3.06	0.02 0.03 0.05 0.09
(2) 2.4" Dia x 6-ft Pipe	B	From Centroid-Leg	4.00 5.00 0.00	0.0000	122.00	No Ice 1/2" Ice 1" Ice 2" Ice	1.43 1.93 2.30 3.06	1.43 1.93 2.30 3.06	0.02 0.03 0.05 0.09
2.4" Dia x 6-ft Pipe	C	From Centroid-Leg	4.00 7.00 0.00	0.0000	122.00	No Ice 1/2" Ice 1" Ice 2" Ice	1.43 1.93 2.30 3.06	1.43 1.93 2.30 3.06	0.02 0.03 0.05 0.09
Platform Mount [LP 1201-1_HR-1]	C	None		0.0000	122.00	No Ice 1/2" Ice 1" Ice 2" Ice	26.39 31.40 36.20 45.40	26.39 31.40 36.20 45.40	2.36 3.06 3.86 5.76
113									
JAHH-65B-R3B w/ Mount Pipe	A	From Centroid-Leg	4.00 -3.00 1.00	0.0000	113.00	No Ice 1/2" Ice 1" Ice 2" Ice	5.50 5.97 6.45 7.44	4.38 4.84 5.30 6.26	0.10 0.17 0.25 0.46
JAHH-45B-R3B w/ Mount Pipe	B	From Centroid-Leg	4.00 -6.00 1.00	-40.0000	113.00	No Ice 1/2" Ice 1" Ice 2" Ice	8.26 8.83 9.41 10.61	4.39 4.91 5.43 6.53	0.12 0.20 0.29 0.50
JAHH-45B-R3B w/ Mount Pipe	C	From Centroid-Leg	4.00 0.00 1.00	30.0000	113.00	No Ice 1/2" Ice 1" Ice 2" Ice	8.26 8.83 9.41 10.61	4.39 4.91 5.43 6.53	0.12 0.20 0.29 0.50
JAHH-65B-R3B	A	From Centroid-Leg	4.00 -3.00 1.00	0.0000	113.00	No Ice 1/2" Ice 1" Ice 2" Ice	5.29 5.75 6.22 7.20	3.05 3.48 3.93 4.84	0.06 0.12 0.19 0.33
JAHH-45B-R3B	B	From Centroid-Leg	4.00 -6.00 1.00	-40.0000	113.00	No Ice 1/2" Ice 1" Ice 2" Ice	8.33 8.91 9.51 10.74	3.24 3.76 4.28 5.37	0.10 0.16 0.24 0.40
JAHH-45B-R3B	C	From Centroid-Leg	4.00 0.00 1.00	30.0000	113.00	No Ice 1/2" Ice 1" Ice 2" Ice	8.33 8.91 9.51 10.74	3.24 3.76 4.28 5.37	0.10 0.16 0.24 0.40
SSPX310R w/ Mount Pipe	A	From Centroid-Leg	4.00 0.00 1.00	0.0000	113.00	No Ice 1/2" Ice 1" Ice 2" Ice	2.67 2.97 3.29 3.97	1.64 1.91 2.20 2.81	0.04 0.07 0.10 0.18
SSPX310R w/ Mount Pipe	B	From Centroid-Leg	4.00 0.00 1.00	-40.0000	113.00	No Ice 1/2" Ice 1" Ice 2" Ice	2.67 2.97 3.29 3.97	1.64 1.91 2.20 2.81	0.04 0.07 0.10 0.18
SSPX310R w/ Mount Pipe	C	From Centroid-Leg	4.00 3.00 1.00	30.0000	113.00	No Ice 1/2" Ice 1" Ice 2" Ice	2.67 2.97 3.29 3.97	1.64 1.91 2.20 2.81	0.04 0.07 0.10 0.18

Description	Face or Leg	Offset Type	Offsets: Horz Lateral Vert ft ft ft	Azimuth Adjustment °	Placement ft		C_AA_A Front ft^2	C_AA_A Side ft^2	Weight K
(2) DB846F65ZAXY w/ Mount Pipe	A	From Centroid-Leg	4.00 4.00 1.00	30.0000	113.00	No Ice	7.27	7.82	0.05
						1/2" Ice	7.83	9.01	0.11
						1" Ice	8.35	9.91	0.19
						2" Ice	9.40	11.73	0.37
(2) LPA-80063/4CF w/ Mount Pipe	B	From Centroid-Leg	4.00 4.00 1.00	10.0000	113.00	No Ice	6.40	6.61	0.04
						1/2" Ice	6.80	7.25	0.10
						1" Ice	7.21	7.90	0.18
						2" Ice	8.06	9.24	0.34
(2) LPA-80063/4CF w/ Mount Pipe	C	From Centroid-Leg	4.00 0.00 1.00	30.0000	113.00	No Ice	6.40	6.61	0.04
						1/2" Ice	6.80	7.25	0.10
						1" Ice	7.21	7.90	0.18
						2" Ice	8.06	9.24	0.34
CBC78T-DS-43-2X	A	From Centroid-Leg	4.00 -3.00 1.00	0.0000	113.00	No Ice	0.37	0.51	0.02
						1/2" Ice	0.45	0.60	0.03
						1" Ice	0.53	0.70	0.04
						2" Ice	0.72	0.93	0.06
CBC78T-DS-43-2X	B	From Centroid-Leg	4.00 -6.00 1.00	-40.0000	113.00	No Ice	0.37	0.51	0.02
						1/2" Ice	0.45	0.60	0.03
						1" Ice	0.53	0.70	0.04
						2" Ice	0.72	0.93	0.06
CBC78T-DS-43-2X	C	From Centroid-Leg	4.00 3.00 1.00	30.0000	113.00	No Ice	0.37	0.51	0.02
						1/2" Ice	0.45	0.60	0.03
						1" Ice	0.53	0.70	0.04
						2" Ice	0.72	0.93	0.06
20W CBRS	A	From Centroid-Leg	4.00 -3.00 1.00	0.0000	113.00	No Ice	0.86	0.42	0.02
						1/2" Ice	0.98	0.51	0.03
						1" Ice	1.10	0.61	0.03
						2" Ice	1.37	0.83	0.06
(2) 20W CBRS	C	From Centroid-Leg	4.00 1.00 1.00	30.0000	113.00	No Ice	0.86	0.42	0.02
						1/2" Ice	0.98	0.51	0.03
						1" Ice	1.10	0.61	0.03
						2" Ice	1.37	0.83	0.06
DB-T1-6Z-8AB-0Z	A	From Centroid-Leg	4.00 0.00 1.00	0.0000	113.00	No Ice	4.80	2.00	0.04
						1/2" Ice	5.07	2.19	0.08
						1" Ice	5.35	2.39	0.12
						2" Ice	5.93	2.81	0.21
DB-T1-6Z-8AB-0Z	B	From Centroid-Leg	4.00 0.00 1.00	-40.0000	113.00	No Ice	4.80	2.00	0.04
						1/2" Ice	5.07	2.19	0.08
						1" Ice	5.35	2.39	0.12
						2" Ice	5.93	2.81	0.21
(2) RFV01U-D1A	A	From Centroid-Leg	4.00 4.00 1.00	30.0000	113.00	No Ice	1.88	1.25	0.08
						1/2" Ice	2.05	1.39	0.10
						1" Ice	2.22	1.54	0.12
						2" Ice	2.60	1.86	0.18
RFV01U-D1A	C	From Centroid-Leg	4.00 0.00 1.00	30.0000	113.00	No Ice	1.88	1.25	0.08
						1/2" Ice	2.05	1.39	0.10
						1" Ice	2.22	1.54	0.12
						2" Ice	2.60	1.86	0.18
(2) RFV01U-D2A	B	From Centroid-Leg	4.00 4.00 1.00	10.0000	113.00	No Ice	1.88	1.01	0.07
						1/2" Ice	2.05	1.14	0.09
						1" Ice	2.22	1.28	0.11
						2" Ice	2.60	1.59	0.15
RFV01U-D2A	C	From Centroid-Leg	4.00 -6.00 1.00	30.0000	113.00	No Ice	1.88	1.01	0.07
						1/2" Ice	2.05	1.14	0.09
						1" Ice	2.22	1.28	0.11
						2" Ice	2.60	1.59	0.15
Platform Mount [LP	C	None		0.0000	113.00	No Ice	30.81	30.81	1.64

Description	Face or Leg	Offset Type	Offsets: Horz Lateral Vert ft ft ft	Azimuth Adjustment °	Placement ft		C_AA_A Front ft^2	C_AA_A Side ft^2	Weight K
305-1_KCKR-HR-1]						1/2" Ice	38.70	38.70	2.20
						1" Ice	46.63	46.63	2.88
						2" Ice	62.74	62.74	4.65
105									
AIR6449 B41 w/ Mount Pipe	A	From Centroid-Leg	4.00 6.00 2.00	30.0000	105.00	No Ice	5.95	3.36	0.12
						1/2" Ice	6.33	3.83	0.17
						1" Ice	6.72	4.32	0.22
						2" Ice	7.52	5.34	0.35
AIR6449 B41 w/ Mount Pipe	B	From Centroid-Leg	4.00 6.00 2.00	30.0000	105.00	No Ice	5.95	3.36	0.12
						1/2" Ice	6.33	3.83	0.17
						1" Ice	6.72	4.32	0.22
						2" Ice	7.52	5.34	0.35
AIR6449 B41 w/ Mount Pipe	C	From Centroid-Leg	4.00 6.00 2.00	30.0000	105.00	No Ice	5.95	3.36	0.12
						1/2" Ice	6.33	3.83	0.17
						1" Ice	6.72	4.32	0.22
						2" Ice	7.52	5.34	0.35
AIR 3246 B66 w/ Mount Pipe	A	From Centroid-Leg	4.00 -6.00 2.00	30.0000	105.00	No Ice	8.18	6.56	0.20
						1/2" Ice	8.66	7.39	0.27
						1" Ice	9.12	8.13	0.35
						2" Ice	10.09	9.65	0.53
AIR 3246 B66 w/ Mount Pipe	B	From Centroid-Leg	4.00 -6.00 2.00	30.0000	105.00	No Ice	8.18	6.56	0.20
						1/2" Ice	8.66	7.39	0.27
						1" Ice	9.12	8.13	0.35
						2" Ice	10.09	9.65	0.53
AIR 3246 B66 w/ Mount Pipe	C	From Centroid-Leg	4.00 -6.00 2.00	30.0000	105.00	No Ice	8.18	6.56	0.20
						1/2" Ice	8.66	7.39	0.27
						1" Ice	9.12	8.13	0.35
						2" Ice	10.09	9.65	0.53
APXVAARR24_43-U-NA20 w/ Mount Pipe	A	From Centroid-Leg	4.00 -2.00 2.00	30.0000	105.00	No Ice	14.69	6.87	0.19
						1/2" Ice	15.46	7.55	0.31
						1" Ice	16.23	8.25	0.46
						2" Ice	17.82	9.67	0.79
APXVAARR24_43-U-NA20 w/ Mount Pipe	B	From Centroid-Leg	4.00 -2.00 2.00	30.0000	105.00	No Ice	14.69	6.87	0.19
						1/2" Ice	15.46	7.55	0.31
						1" Ice	16.23	8.25	0.46
						2" Ice	17.82	9.67	0.79
APXVAARR24_43-U-NA20 w/ Mount Pipe	C	From Centroid-Leg	4.00 -2.00 2.00	30.0000	105.00	No Ice	14.69	6.87	0.19
						1/2" Ice	15.46	7.55	0.31
						1" Ice	16.23	8.25	0.46
						2" Ice	17.82	9.67	0.79
AIR 32 B2a/B66Aa w/ Mount Pipe	A	From Centroid-Leg	4.00 2.00 2.00	30.0000	105.00	No Ice	6.75	6.07	0.15
						1/2" Ice	7.20	6.87	0.21
						1" Ice	7.65	7.58	0.28
						2" Ice	8.57	9.06	0.44
AIR 32 B2a/B66Aa w/ Mount Pipe	B	From Centroid-Leg	4.00 2.00 2.00	30.0000	105.00	No Ice	6.75	6.07	0.15
						1/2" Ice	7.20	6.87	0.21
						1" Ice	7.65	7.58	0.28
						2" Ice	8.57	9.06	0.44
AIR 32 B2a/B66Aa w/ Mount Pipe	C	From Centroid-Leg	4.00 2.00 2.00	30.0000	105.00	No Ice	6.75	6.07	0.15
						1/2" Ice	7.20	6.87	0.21
						1" Ice	7.65	7.58	0.28
						2" Ice	8.57	9.06	0.44
RADIO 4449 B71/B85A	A	From Centroid-Leg	4.00 -2.00 2.00	30.0000	105.00	No Ice	1.64	1.31	0.07
						1/2" Ice	1.80	1.46	0.09
						1" Ice	1.97	1.61	0.11
						2" Ice	2.33	1.94	0.16
RADIO 4449 B71/B85A	B	From	4.00	30.0000	105.00	No Ice	1.64	1.31	0.07

Description	Face or Leg	Offset Type	Offsets: Horz Lateral Vert ft ft ft	Azimuth Adjustment °	Placement ft		C_AA_A Front ft^2	C_AA_A Side ft^2	Weight K
		Centroid-Leg	-2.00 2.00			1/2" Ice 1" Ice 2" Ice	1.80 1.97 2.33	1.46 1.61 1.94	0.09 0.11 0.16
RADIO 4449 B71/B85A	C	From Centroid-Leg	4.00 -2.00 2.00	30.0000	105.00	No Ice 1/2" Ice 1" Ice 2" Ice	1.64 1.80 1.97 2.33	1.31 1.46 1.61 1.94	0.07 0.09 0.11 0.16
RRUS 4415 B25_CCIV2	A	From Centroid-Leg	4.00 6.00 2.00	30.0000	105.00	No Ice 1/2" Ice 1" Ice 2" Ice	1.84 2.01 2.19 2.57	0.82 0.94 1.07 1.37	0.05 0.06 0.08 0.12
RRUS 4415 B25_CCIV2	B	From Centroid-Leg	4.00 6.00 2.00	30.0000	105.00	No Ice 1/2" Ice 1" Ice 2" Ice	1.84 2.01 2.19 2.57	0.82 0.94 1.07 1.37	0.05 0.06 0.08 0.12
RRUS 4415 B25_CCIV2	C	From Centroid-Leg	4.00 6.00 2.00	30.0000	105.00	No Ice 1/2" Ice 1" Ice 2" Ice	1.84 2.01 2.19 2.57	0.82 0.94 1.07 1.37	0.05 0.06 0.08 0.12
SitePro1 RMQP-4096-HK	C	None		0.0000	105.00	No Ice 1/2" Ice 1" Ice 2" Ice	23.14 28.17 33.23 43.26	21.40 26.44 31.60 41.56	1.95 2.34 2.85 3.50
97									
DC6-48-60-18-8F	A	From Leg	2.00 0.00 0.00	30.0000	97.00	No Ice 1/2" Ice 1" Ice 2" Ice	1.21 1.89 2.11 2.57	1.21 1.89 2.11 2.57	0.03 0.05 0.08 0.14
DC6-48-60-18-8F	B	From Leg	2.00 0.00 0.00	30.0000	97.00	No Ice 1/2" Ice 1" Ice 2" Ice	1.21 1.89 2.11 2.57	1.21 1.89 2.11 2.57	0.03 0.05 0.08 0.14
RRUS 32 B30	A	From Leg	2.00 0.00 0.00	30.0000	97.00	No Ice 1/2" Ice 1" Ice 2" Ice	2.74 2.96 3.19 3.68	1.67 1.86 2.05 2.46	0.05 0.07 0.10 0.16
RRUS 32 B30	B	From Leg	2.00 0.00 0.00	30.0000	97.00	No Ice 1/2" Ice 1" Ice 2" Ice	2.74 2.96 3.19 3.68	1.67 1.86 2.05 2.46	0.05 0.07 0.10 0.16
RRUS 32 B30	C	From Leg	2.00 0.00 0.00	30.0000	97.00	No Ice 1/2" Ice 1" Ice 2" Ice	2.74 2.96 3.19 3.68	1.67 1.86 2.05 2.46	0.05 0.07 0.10 0.16
2.4" Dia. x 5-ft Pipe	A	From Leg	2.00 0.00 0.00	0.0000	97.00	No Ice 1/2" Ice 1" Ice 2" Ice	1.20 1.50 1.81 2.47	1.20 1.50 1.81 2.47	0.02 0.03 0.04 0.08
2.4" Dia. x 5-ft Pipe	B	From Leg	2.00 0.00 0.00	0.0000	97.00	No Ice 1/2" Ice 1" Ice 2" Ice	1.20 1.50 1.81 2.47	1.20 1.50 1.81 2.47	0.02 0.03 0.04 0.08
2.4" Dia. x 5-ft Pipe	C	From Leg	2.00 0.00 0.00	0.0000	97.00	No Ice 1/2" Ice 1" Ice 2" Ice	1.20 1.50 1.81 2.47	1.20 1.50 1.81 2.47	0.02 0.03 0.04 0.08
Side Arm Mount [SO 102-3]	C	None		0.0000	97.00	No Ice	3.60	3.60	0.07

Description	Face or Leg	Offset Type	Offsets: Horz Lateral Vert ft ft ft	Azimuth Adjustment °	Placement ft		C_AA_A Front ft^2	C_AA_A Side ft^2	Weight K
						1/2" Ice	4.18	4.18	0.11
						1" Ice	4.75	4.75	0.14
						2" Ice	5.90	5.90	0.20
96									
7770.00 w/ Mount Pipe	A	From Centroid-Leg	4.00 -6.00 2.00	23.0000	96.00	No Ice	5.75	4.25	0.06
						1/2" Ice	6.18	5.01	0.10
						1" Ice	6.61	5.71	0.16
						2" Ice	7.49	7.16	0.29
7770.00 w/ Mount Pipe	B	From Centroid-Leg	4.00 -6.00 2.00	23.0000	96.00	No Ice	5.75	4.25	0.06
						1/2" Ice	6.18	5.01	0.10
						1" Ice	6.61	5.71	0.16
						2" Ice	7.49	7.16	0.29
7770.00 w/ Mount Pipe	C	From Centroid-Leg	4.00 -6.00 2.00	23.0000	96.00	No Ice	5.75	4.25	0.06
						1/2" Ice	6.18	5.01	0.10
						1" Ice	6.61	5.71	0.16
						2" Ice	7.49	7.16	0.29
(2) 80010965 w/ Mount Pipe	A	From Centroid-Leg	4.00 0.00 2.00	30.0000	96.00	No Ice	12.26	5.79	0.14
						1/2" Ice	13.03	6.47	0.23
						1" Ice	13.80	7.17	0.33
						2" Ice	15.41	8.60	0.57
(2) 80010965 w/ Mount Pipe	B	From Centroid-Leg	4.00 0.00 2.00	30.0000	96.00	No Ice	12.26	5.79	0.14
						1/2" Ice	13.03	6.47	0.23
						1" Ice	13.80	7.17	0.33
						2" Ice	15.41	8.60	0.57
(2) 80010965 w/ Mount Pipe	C	From Centroid-Leg	4.00 0.00 2.00	30.0000	96.00	No Ice	12.26	5.79	0.14
						1/2" Ice	13.03	6.47	0.23
						1" Ice	13.80	7.17	0.33
						2" Ice	15.41	8.60	0.57
QS66512-2 w/ Mount Pipe	A	From Centroid-Leg	4.00 6.00 2.00	30.0000	96.00	No Ice	4.04	4.18	0.14
						1/2" Ice	4.42	4.57	0.21
						1" Ice	4.82	4.97	0.29
						2" Ice	5.63	5.79	0.48
QS66512-2 w/ Mount Pipe	B	From Centroid-Leg	4.00 6.00 2.00	30.0000	96.00	No Ice	4.04	4.18	0.14
						1/2" Ice	4.42	4.57	0.21
						1" Ice	4.82	4.97	0.29
						2" Ice	5.63	5.79	0.48
QS66512-2 w/ Mount Pipe	C	From Centroid-Leg	4.00 6.00 2.00	30.0000	96.00	No Ice	4.04	4.18	0.14
						1/2" Ice	4.42	4.57	0.21
						1" Ice	4.82	4.97	0.29
						2" Ice	5.63	5.79	0.48
LGP21401	A	From Centroid-Leg	4.00 -6.00 2.00	23.0000	96.00	No Ice	1.10	0.21	0.01
						1/2" Ice	1.24	0.27	0.02
						1" Ice	1.38	0.35	0.03
						2" Ice	1.69	0.52	0.05
LGP21401	A	From Centroid-Leg	4.00 6.00 2.00	30.0000	96.00	No Ice	1.10	0.21	0.01
						1/2" Ice	1.24	0.27	0.02
						1" Ice	1.38	0.35	0.03
						2" Ice	1.69	0.52	0.05
LGP21401	B	From Centroid-Leg	4.00 -6.00 2.00	23.0000	96.00	No Ice	1.10	0.21	0.01
						1/2" Ice	1.24	0.27	0.02
						1" Ice	1.38	0.35	0.03
						2" Ice	1.69	0.52	0.05
LGP21401	B	From Centroid-Leg	4.00 6.00 2.00	30.0000	96.00	No Ice	1.10	0.21	0.01
						1/2" Ice	1.24	0.27	0.02
						1" Ice	1.38	0.35	0.03
						2" Ice	1.69	0.52	0.05
LGP21401	C	From	4.00	23.0000	96.00	No Ice	1.10	0.21	0.01

Description	Face or Leg	Offset Type	Offsets: Horz Lateral Vert ft ft ft	Azimuth Adjustment °	Placement ft		C_AA_A Front ft^2	C_AA_A Side ft^2	Weight K
		Centroid-Le	-6.00			1/2" Ice	1.24	0.27	0.02
		g	2.00			1" Ice	1.38	0.35	0.03
						2" Ice	1.69	0.52	0.05
LGP21401	C	From	4.00	30.0000	96.00	No Ice	1.10	0.21	0.01
		Centroid-Le	6.00			1/2" Ice	1.24	0.27	0.02
		g	2.00			1" Ice	1.38	0.35	0.03
						2" Ice	1.69	0.52	0.05
DC6-48-60-18-8F	A	From	4.00	23.0000	96.00	No Ice	1.21	1.21	0.03
		Centroid-Le	-6.00			1/2" Ice	1.89	1.89	0.05
		g	2.00			1" Ice	2.11	2.11	0.08
						2" Ice	2.57	2.57	0.14
DC6-48-60-18-8F	B	From	4.00	23.0000	96.00	No Ice	1.21	1.21	0.03
		Centroid-Le	-6.00			1/2" Ice	1.89	1.89	0.05
		g	2.00			1" Ice	2.11	2.11	0.08
						2" Ice	2.57	2.57	0.14
DC6-48-60-18-8F	C	From	4.00	23.0000	96.00	No Ice	1.21	1.21	0.03
		Centroid-Le	-6.00			1/2" Ice	1.89	1.89	0.05
		g	2.00			1" Ice	2.11	2.11	0.08
						2" Ice	2.57	2.57	0.14
DBC0061F1V51-2	A	From	4.00	23.0000	96.00	No Ice	0.43	0.41	0.03
		Centroid-Le	-6.00			1/2" Ice	0.51	0.50	0.03
		g	2.00			1" Ice	0.61	0.59	0.04
						2" Ice	0.81	0.79	0.06
DBC0061F1V51-2	A	From	4.00	30.0000	96.00	No Ice	0.43	0.41	0.03
		Centroid-Le	-2.00			1/2" Ice	0.51	0.50	0.03
		g	2.00			1" Ice	0.61	0.59	0.04
						2" Ice	0.81	0.79	0.06
DBC0061F1V51-2	B	From	4.00	23.0000	96.00	No Ice	0.43	0.41	0.03
		Centroid-Le	-6.00			1/2" Ice	0.51	0.50	0.03
		g	2.00			1" Ice	0.61	0.59	0.04
						2" Ice	0.81	0.79	0.06
DBC0061F1V51-2	B	From	4.00	30.0000	96.00	No Ice	0.43	0.41	0.03
		Centroid-Le	-2.00			1/2" Ice	0.51	0.50	0.03
		g	2.00			1" Ice	0.61	0.59	0.04
						2" Ice	0.81	0.79	0.06
DBC0061F1V51-2	C	From	4.00	23.0000	96.00	No Ice	0.43	0.41	0.03
		Centroid-Le	-6.00			1/2" Ice	0.51	0.50	0.03
		g	2.00			1" Ice	0.61	0.59	0.04
						2" Ice	0.81	0.79	0.06
DBC0061F1V51-2	C	From	4.00	30.0000	96.00	No Ice	0.43	0.41	0.03
		Centroid-Le	-2.00			1/2" Ice	0.51	0.50	0.03
		g	2.00			1" Ice	0.61	0.59	0.04
						2" Ice	0.81	0.79	0.06
RRUS 8843 B2/B66A	A	From	4.00	23.0000	96.00	No Ice	1.64	1.35	0.07
		Centroid-Le	-6.00			1/2" Ice	1.80	1.50	0.09
		g	2.00			1" Ice	1.97	1.65	0.11
						2" Ice	2.32	1.99	0.16
RRUS 8843 B2/B66A	B	From	4.00	23.0000	96.00	No Ice	1.64	1.35	0.07
		Centroid-Le	-6.00			1/2" Ice	1.80	1.50	0.09
		g	2.00			1" Ice	1.97	1.65	0.11
						2" Ice	2.32	1.99	0.16
RRUS 8843 B2/B66A	C	From	4.00	23.0000	96.00	No Ice	1.64	1.35	0.07
		Centroid-Le	-6.00			1/2" Ice	1.80	1.50	0.09
		g	2.00			1" Ice	1.97	1.65	0.11
						2" Ice	2.32	1.99	0.16
RRUS 32	A	From	4.00	30.0000	96.00	No Ice	2.86	1.78	0.06
		Centroid-Le	-2.00			1/2" Ice	3.08	1.97	0.08

Description	Face or Leg	Offset Type	Offsets: Horz Lateral Vert ft ft ft	Azimuth Adjustment °	Placement ft		C_AA_A Front ft^2	C_AA_A Side ft^2	Weight K
		g	2.00			1" Ice	3.32	2.17	0.10
						2" Ice	3.81	2.58	0.16
RRUS 32	B	From Centroid-Leg	4.00 -2.00 2.00	30.0000	96.00	No Ice	2.86	1.78	0.06
						1/2" Ice	3.08	1.97	0.08
						1" Ice	3.32	2.17	0.10
						2" Ice	3.81	2.58	0.16
RRUS 32	C	From Centroid-Leg	4.00 -2.00 2.00	30.0000	96.00	No Ice	2.86	1.78	0.06
						1/2" Ice	3.08	1.97	0.08
						1" Ice	3.32	2.17	0.10
						2" Ice	3.81	2.58	0.16
RRUS 4478 B14	A	From Centroid-Leg	4.00 2.00 2.00	30.0000	96.00	No Ice	1.84	1.06	0.06
						1/2" Ice	2.01	1.20	0.08
						1" Ice	2.19	1.34	0.09
						2" Ice	2.57	1.66	0.14
RRUS 4478 B14	B	From Centroid-Leg	4.00 2.00 2.00	30.0000	96.00	No Ice	1.84	1.06	0.06
						1/2" Ice	2.01	1.20	0.08
						1" Ice	2.19	1.34	0.09
						2" Ice	2.57	1.66	0.14
RRUS 4478 B14	C	From Centroid-Leg	4.00 2.00 2.00	30.0000	96.00	No Ice	1.84	1.06	0.06
						1/2" Ice	2.01	1.20	0.08
						1" Ice	2.19	1.34	0.09
						2" Ice	2.57	1.66	0.14
RRUS 4449 B5/B12	A	From Centroid-Leg	4.00 6.00 2.00	30.0000	96.00	No Ice	1.97	1.41	0.07
						1/2" Ice	2.14	1.56	0.09
						1" Ice	2.33	1.73	0.11
						2" Ice	2.72	2.07	0.16
RRUS 4449 B5/B12	B	From Centroid-Leg	4.00 6.00 2.00	30.0000	96.00	No Ice	1.97	1.41	0.07
						1/2" Ice	2.14	1.56	0.09
						1" Ice	2.33	1.73	0.11
						2" Ice	2.72	2.07	0.16
RRUS 4449 B5/B12	C	From Centroid-Leg	4.00 6.00 2.00	30.0000	96.00	No Ice	1.97	1.41	0.07
						1/2" Ice	2.14	1.56	0.09
						1" Ice	2.33	1.73	0.11
						2" Ice	2.72	2.07	0.16
WCS-IMFQ-AMT	C	From Centroid-Leg	4.00 -2.00 2.00	30.0000	96.00	No Ice	0.99	0.64	0.03
						1/2" Ice	1.11	0.75	0.04
						1" Ice	1.25	0.86	0.05
						2" Ice	1.53	1.11	0.08
Platform Mount [LP 712-1]	C	None		0.0000	96.00	No Ice	24.56	24.56	1.34
						1/2" Ice	27.92	27.92	1.91
						1" Ice	31.27	31.27	2.55
						2" Ice	37.98	37.98	3.97
Miscellaneous [NA 507-1]	C	None		0.0000	96.00	No Ice	4.56	4.56	0.25
						1/2" Ice	6.39	6.39	0.31
						1" Ice	8.18	8.18	0.40
						2" Ice	11.66	11.66	0.66
75									
ACUTIME 2000	A	From Leg	3.00 0.00 1.00	0.0000	75.00	No Ice	0.26	0.26	0.00
						1/2" Ice	0.32	0.32	0.00
						1" Ice	0.39	0.39	0.01
						2" Ice	0.56	0.56	0.02
Side Arm Mount [SO 701-1]	A	From Leg	1.50 0.00 0.00	0.0000	75.00	No Ice	0.85	1.67	0.07
						1/2" Ice	1.14	2.34	0.08
						1" Ice	1.43	3.01	0.09
						2" Ice	2.01	4.35	0.12
*									

Dishes

Description	Face or Leg	Dish Type	Offset Type	Offsets: Horz Lateral Vert ft	Azimuth Adjustment °	3 dB Beam Width °	Elevation ft	Outside Diameter ft		Aperture Area ft^2	Weight K
PX2F-52	A	Paraboloid w/Radome	From Centroid -Leg	4.00 0.00 1.00	25.0000		122.00	2.09	No Ice	3.44	0.02
									1/2" Ice	3.72	0.04
									1" Ice	3.99	0.06
									2" Ice	4.55	0.09
VHLP2-11	A	Paraboloid w/Shroud (HP)	From Centroid -Leg	4.00 3.00 3.00	37.0000		122.00	2.00	No Ice	3.72	0.03
									1/2" Ice	4.01	0.05
									1" Ice	4.30	0.07
									2" Ice	4.88	0.11
VHLP2-11	B	Paraboloid w/Shroud (HP)	From Centroid -Leg	4.00 0.00 3.00	10.0000		122.00	2.00	No Ice	3.72	0.03
									1/2" Ice	4.01	0.05
									1" Ice	4.30	0.07
									2" Ice	4.88	0.11

Load Combinations

Comb. No.	Description
1	Dead Only
2	1.2 Dead+1.0 Wind 0 deg - No Ice
3	0.9 Dead+1.0 Wind 0 deg - No Ice
4	1.2 Dead+1.0 Wind 30 deg - No Ice
5	0.9 Dead+1.0 Wind 30 deg - No Ice
6	1.2 Dead+1.0 Wind 60 deg - No Ice
7	0.9 Dead+1.0 Wind 60 deg - No Ice
8	1.2 Dead+1.0 Wind 90 deg - No Ice
9	0.9 Dead+1.0 Wind 90 deg - No Ice
10	1.2 Dead+1.0 Wind 120 deg - No Ice
11	0.9 Dead+1.0 Wind 120 deg - No Ice
12	1.2 Dead+1.0 Wind 150 deg - No Ice
13	0.9 Dead+1.0 Wind 150 deg - No Ice
14	1.2 Dead+1.0 Wind 180 deg - No Ice
15	0.9 Dead+1.0 Wind 180 deg - No Ice
16	1.2 Dead+1.0 Wind 210 deg - No Ice
17	0.9 Dead+1.0 Wind 210 deg - No Ice
18	1.2 Dead+1.0 Wind 240 deg - No Ice
19	0.9 Dead+1.0 Wind 240 deg - No Ice
20	1.2 Dead+1.0 Wind 270 deg - No Ice
21	0.9 Dead+1.0 Wind 270 deg - No Ice
22	1.2 Dead+1.0 Wind 300 deg - No Ice
23	0.9 Dead+1.0 Wind 300 deg - No Ice
24	1.2 Dead+1.0 Wind 330 deg - No Ice
25	0.9 Dead+1.0 Wind 330 deg - No Ice
26	1.2 Dead+1.0 Ice+1.0 Temp
27	1.2 Dead+1.0 Wind 0 deg+1.0 Ice+1.0 Temp
28	1.2 Dead+1.0 Wind 30 deg+1.0 Ice+1.0 Temp
29	1.2 Dead+1.0 Wind 60 deg+1.0 Ice+1.0 Temp
30	1.2 Dead+1.0 Wind 90 deg+1.0 Ice+1.0 Temp

Comb. No.	Description
31	1.2 Dead+1.0 Wind 120 deg+1.0 Ice+1.0 Temp
32	1.2 Dead+1.0 Wind 150 deg+1.0 Ice+1.0 Temp
33	1.2 Dead+1.0 Wind 180 deg+1.0 Ice+1.0 Temp
34	1.2 Dead+1.0 Wind 210 deg+1.0 Ice+1.0 Temp
35	1.2 Dead+1.0 Wind 240 deg+1.0 Ice+1.0 Temp
36	1.2 Dead+1.0 Wind 270 deg+1.0 Ice+1.0 Temp
37	1.2 Dead+1.0 Wind 300 deg+1.0 Ice+1.0 Temp
38	1.2 Dead+1.0 Wind 330 deg+1.0 Ice+1.0 Temp
39	Dead+Wind 0 deg - Service
40	Dead+Wind 30 deg - Service
41	Dead+Wind 60 deg - Service
42	Dead+Wind 90 deg - Service
43	Dead+Wind 120 deg - Service
44	Dead+Wind 150 deg - Service
45	Dead+Wind 180 deg - Service
46	Dead+Wind 210 deg - Service
47	Dead+Wind 240 deg - Service
48	Dead+Wind 270 deg - Service
49	Dead+Wind 300 deg - Service
50	Dead+Wind 330 deg - Service

Maximum Member Forces

Section No.	Elevation ft	Component Type	Condition	Gov. Load Comb.	Axial K	Major Axis Moment kip-ft	Minor Axis Moment kip-ft
L1	120 - 115	Pole	Max Tension	26	0.00	0.00	-0.00
			Max. Compression	26	-11.20	0.66	1.82
			Max. Mx	20	-4.86	41.53	0.29
			Max. My	2	-4.90	0.81	39.76
			Max. Vy	20	-6.46	41.53	0.29
			Max. Vx	14	6.19	0.25	-38.85
			Max. Torque	18			-1.64
L2	115 - 110	Pole	Max Tension	1	0.00	0.00	0.00
			Max. Compression	26	-21.76	-1.64	3.01
			Max. Mx	20	-8.77	97.45	0.24
			Max. My	2	-8.87	0.01	92.58
			Max. Vy	20	-13.25	97.45	0.24
			Max. Vx	14	12.31	-0.35	-91.32
			Max. Torque	20			-1.61
L3	110 - 105	Pole	Max Tension	1	0.00	0.00	0.00
			Max. Compression	26	-22.75	-1.51	2.88
			Max. Mx	20	-9.24	165.05	-0.27
			Max. My	2	-9.35	0.01	155.08
			Max. Vy	20	-13.77	165.05	-0.27
			Max. Vx	14	12.83	-0.00	-154.17
			Max. Torque	22			-1.44
L4	105 - 100	Pole	Max Tension	1	0.00	0.00	0.00
			Max. Compression	26	-33.53	-1.47	2.80
			Max. Mx	20	-14.56	269.98	-0.76
			Max. My	2	-14.68	-0.02	254.91
			Max. Vy	20	-19.69	269.98	-0.76
			Max. Vx	14	18.73	0.31	-254.29
			Max. Torque	22			-1.45
L5	100 - 99.25	Pole	Max Tension	1	0.00	0.00	0.00
			Max. Compression	26	-33.72	-1.47	2.78
			Max. Mx	20	-14.65	284.78	-0.83
			Max. My	2	-14.76	-0.02	268.95
			Max. Vy	20	-19.79	284.78	-0.83

Section No.	Elevation ft	Component Type	Condition	Gov. Load Comb.	Axial K	Major Axis Moment kip-ft	Minor Axis Moment kip-ft
			Max. Vx	14	18.81	0.35	-268.36
			Max. Torque	22			-1.45
L6	99.25 - 99	Pole	Max Tension	1	0.00	0.00	0.00
			Max. Compression	26	-33.80	-1.46	2.77
			Max. Mx	20	-14.70	289.73	-0.86
			Max. My	2	-14.81	-0.03	273.64
			Max. Vy	20	-19.82	289.73	-0.86
			Max. Vx	14	18.83	0.37	-273.07
			Max. Torque	22			-1.45
L7	99 - 94	Pole	Max Tension	1	0.00	0.00	0.00
			Max. Compression	26	-47.60	-1.56	2.52
			Max. Mx	20	-20.53	414.24	-1.43
			Max. My	2	-20.66	-0.06	392.90
			Max. Vy	20	-27.49	414.24	-1.43
			Max. Vx	2	-26.45	-0.06	392.90
			Max. Torque	22			-1.58
L8	94 - 90.08	Pole	Max Tension	1	0.00	0.00	0.00
			Max. Compression	26	-48.98	-1.52	2.39
			Max. Mx	20	-21.32	523.06	-1.82
			Max. My	2	-21.44	-0.08	497.63
			Max. Vy	20	-28.05	523.06	-1.82
			Max. Vx	2	-27.01	-0.08	497.63
			Max. Torque	22			-1.42
L9	90.08 - 89.83	Pole	Max Tension	1	0.00	0.00	0.00
			Max. Compression	26	-49.09	-1.51	2.38
			Max. Mx	20	-21.39	530.08	-1.84
			Max. My	2	-21.51	-0.08	504.39
			Max. Vy	20	-28.08	530.08	-1.84
			Max. Vx	2	-27.04	-0.08	504.39
			Max. Torque	22			-1.42
L10	89.83 - 89.5	Pole	Max Tension	1	0.00	0.00	0.00
			Max. Compression	26	-49.22	-1.50	2.37
			Max. Mx	20	-21.47	539.35	-1.87
			Max. My	2	-21.59	-0.09	513.32
			Max. Vy	20	-28.13	539.35	-1.87
			Max. Vx	2	-27.09	-0.09	513.32
			Max. Torque	22			-1.42
L11	89.5 - 89.25	Pole	Max Tension	1	0.00	0.00	0.00
			Max. Compression	26	-49.34	-1.50	2.37
			Max. Mx	20	-21.54	546.39	-1.90
			Max. My	2	-21.66	-0.09	520.10
			Max. Vy	20	-28.17	546.39	-1.90
			Max. Vx	2	-27.13	-0.09	520.10
			Max. Torque	22			-1.42
L12	89.25 - 84.25	Pole	Max Tension	1	0.00	0.00	0.00
			Max. Compression	26	-51.65	-1.40	2.21
			Max. Mx	20	-22.94	689.19	-2.40
			Max. My	2	-23.06	-0.12	657.73
			Max. Vy	20	-28.96	689.19	-2.40
			Max. Vx	2	-27.94	-0.12	657.73
			Max. Torque	22			-1.42
L13	84.25 - 78	Pole	Max Tension	1	0.00	0.00	0.00
			Max. Compression	26	-52.84	-1.36	2.13
			Max. Mx	20	-23.67	762.08	-2.65
			Max. My	2	-23.78	-0.13	728.05
			Max. Vy	20	-29.37	762.08	-2.65
			Max. Vx	2	-28.34	-0.13	728.05
			Max. Torque	22			-1.42
L14	78 - 77	Pole	Max Tension	1	0.00	0.00	0.00
			Max. Compression	26	-56.67	-1.29	2.01
			Max. Mx	20	-26.34	903.65	-3.12

Section No.	Elevation ft	Component Type	Condition	Gov. Load Comb.	Axial K	Major Axis Moment kip-ft	Minor Axis Moment kip-ft
			Max. My	2	-26.46	-0.16	864.74
			Max. Vy	20	-30.25	903.65	-3.12
			Max. Vx	2	-29.21	-0.16	864.74
			Max. Torque	22			-1.42
L15	77 - 76.75	Pole	Max Tension	1	0.00	0.00	0.00
			Max. Compression	26	-56.82	-1.28	2.01
			Max. Mx	20	-26.45	911.22	-3.15
			Max. My	2	-26.56	-0.16	872.04
			Max. Vy	20	-30.28	911.22	-3.15
			Max. Vx	2	-29.25	-0.16	872.04
			Max. Torque	22			-1.42
L16	76.75 - 76.5	Pole	Max Tension	1	0.00	0.00	0.00
			Max. Compression	26	-56.97	-1.28	2.00
			Max. Mx	20	-26.55	918.79	-3.17
			Max. My	2	-26.66	-0.16	879.36
			Max. Vy	20	-30.33	918.79	-3.17
			Max. Vx	2	-29.30	-0.16	879.36
			Max. Torque	22			-1.42
L17	76.5 - 75.5	Pole	Max Tension	1	0.00	0.00	0.00
			Max. Compression	26	-57.59	-1.26	1.99
			Max. Mx	20	-26.94	949.21	-3.27
			Max. My	2	-27.05	-0.17	908.74
			Max. Vy	20	-30.51	949.21	-3.27
			Max. Vx	2	-29.47	-0.17	908.74
			Max. Torque	22			-1.42
L18	75.5 - 75.25	Pole	Max Tension	1	0.00	0.00	0.00
			Max. Compression	26	-57.73	-1.26	1.99
			Max. Mx	20	-27.04	956.84	-3.30
			Max. My	2	-27.15	-0.17	916.11
			Max. Vy	20	-30.55	956.84	-3.30
			Max. Vx	2	-29.51	-0.17	916.11
			Max. Torque	22			-1.42
L19	75.25 - 74.5	Pole	Max Tension	1	0.00	0.00	0.00
			Max. Compression	26	-58.30	-1.25	2.37
			Max. Mx	20	-27.38	979.86	-3.17
			Max. My	2	-27.49	-0.17	938.55
			Max. Vy	20	-30.78	979.86	-3.17
			Max. Vx	2	-29.70	-0.17	938.55
			Max. Torque	22			-1.65
L20	74.5 - 74.25	Pole	Max Tension	1	0.00	0.00	0.00
			Max. Compression	26	-58.44	-1.25	2.36
			Max. Mx	20	-27.47	987.56	-3.19
			Max. My	2	-27.58	-0.17	945.98
			Max. Vy	20	-30.82	987.56	-3.19
			Max. Vx	2	-29.74	-0.17	945.98
			Max. Torque	22			-1.65
L21	74.25 - 72	Pole	Max Tension	1	0.00	0.00	0.00
			Max. Compression	26	-59.67	-1.23	2.33
			Max. Mx	20	-28.24	1057.33	-3.42
			Max. My	2	-28.35	-0.19	1013.31
			Max. Vy	20	-31.21	1057.33	-3.42
			Max. Vx	2	-30.13	-0.19	1013.31
			Max. Torque	22			-1.65
L22	72 - 71.75	Pole	Max Tension	1	0.00	0.00	0.00
			Max. Compression	26	-59.83	-1.22	2.33
			Max. Mx	20	-28.34	1065.14	-3.44
			Max. My	2	-28.45	-0.19	1020.84
			Max. Vy	20	-31.25	1065.14	-3.44
			Max. Vx	2	-30.16	-0.19	1020.84
			Max. Torque	22			-1.65
L23	71.75 - 70.5	Pole	Max Tension	1	0.00	0.00	0.00

Section No.	Elevation ft	Component Type	Condition	Gov. Load Comb.	Axial K	Major Axis Moment kip-ft	Minor Axis Moment kip-ft
			Max. Compression	26	-60.63	-1.19	2.33
			Max. Mx	20	-28.81	1104.35	-3.57
			Max. My	2	-28.91	-0.20	1058.68
			Max. Vy	20	-31.49	1104.35	-3.57
			Max. Vx	2	-30.40	-0.20	1058.68
			Max. Torque	22			-1.65
L24	70.5 - 70.25	Pole	Max Tension	1	0.00	0.00	0.00
			Max. Compression	26	-60.79	-1.18	2.33
			Max. Mx	20	-28.91	1112.23	-3.59
			Max. My	2	-29.02	-0.20	1066.28
			Max. Vy	20	-31.53	1112.23	-3.59
			Max. Vx	2	-30.44	-0.20	1066.28
			Max. Torque	22			-1.65
L25	70.25 - 70	Pole	Max Tension	1	0.00	0.00	0.00
			Max. Compression	26	-60.96	-1.18	2.33
			Max. Mx	20	-29.01	1120.11	-3.62
			Max. My	2	-29.12	-0.20	1073.90
			Max. Vy	20	-31.58	1120.11	-3.62
			Max. Vx	2	-30.48	-0.20	1073.90
			Max. Torque	22			-1.65
L26	70 - 69.75	Pole	Max Tension	1	0.00	0.00	0.00
			Max. Compression	26	-61.12	-1.17	2.33
			Max. Mx	20	-29.11	1128.01	-3.64
			Max. My	2	-29.22	-0.20	1081.52
			Max. Vy	20	-31.62	1128.01	-3.64
			Max. Vx	2	-30.53	-0.20	1081.52
			Max. Torque	22			-1.65
L27	69.75 - 69.5	Pole	Max Tension	1	0.00	0.00	0.00
			Max. Compression	26	-61.28	-1.17	2.33
			Max. Mx	20	-29.21	1135.92	-3.67
			Max. My	2	-29.32	-0.20	1089.16
			Max. Vy	20	-31.67	1135.92	-3.67
			Max. Vx	2	-30.57	-0.20	1089.16
			Max. Torque	22			-1.65
L28	69.5 - 69.25	Pole	Max Tension	1	0.00	0.00	0.00
			Max. Compression	26	-61.43	-1.16	2.33
			Max. Mx	20	-29.30	1143.85	-3.69
			Max. My	2	-29.41	-0.20	1096.81
			Max. Vy	20	-31.71	1143.85	-3.69
			Max. Vx	2	-30.62	-0.20	1096.81
			Max. Torque	22			-1.65
L29	69.25 - 64.25	Pole	Max Tension	1	0.00	0.00	0.00
			Max. Compression	26	-64.22	-1.04	2.22
			Max. Mx	20	-31.06	1304.48	-4.20
			Max. My	2	-31.17	-0.23	1251.96
			Max. Vy	20	-32.55	1304.48	-4.20
			Max. Vx	2	-31.46	-0.23	1251.96
			Max. Torque	22			-1.65
L30	64.25 - 59.25	Pole	Max Tension	1	0.00	0.00	0.00
			Max. Compression	26	-66.94	-0.95	2.09
			Max. Mx	20	-32.87	1469.19	-4.70
			Max. My	2	-32.97	-0.26	1411.25
			Max. Vy	20	-33.36	1469.19	-4.70
			Max. Vx	2	-32.27	-0.26	1411.25
			Max. Torque	22			-1.65
L31	59.25 - 56	Pole	Max Tension	1	0.00	0.00	0.00
			Max. Compression	26	-68.76	-0.89	2.00
			Max. Mx	20	-34.06	1578.44	-5.03
			Max. My	2	-34.16	-0.27	1516.97
			Max. Vy	20	-33.90	1578.44	-5.03
			Max. Vx	2	-32.82	-0.27	1516.97

Section No.	Elevation ft	Component Type	Condition	Gov. Load Comb.	Axial K	Major Axis Moment kip-ft	Minor Axis Moment kip-ft
			Max. Torque	22			-1.65
L32	56 - 55.75	Pole	Max Tension	1	0.00	0.00	0.00
			Max. Compression	26	-68.95	-0.89	1.99
			Max. Mx	20	-34.19	1586.92	-5.05
			Max. My	2	-34.28	-0.28	1525.18
			Max. Vy	20	-33.93	1586.92	-5.05
			Max. Vx	2	-32.85	-0.28	1525.18
			Max. Torque	22			-1.65
L33	55.75 - 55.5	Pole	Max Tension	1	0.00	0.00	0.00
			Max. Compression	26	-69.13	-0.89	1.98
			Max. Mx	20	-34.31	1595.41	-5.08
			Max. My	2	-34.40	-0.28	1533.40
			Max. Vy	20	-33.98	1595.41	-5.08
			Max. Vx	2	-32.90	-0.28	1533.40
			Max. Torque	22			-1.65
L34	55.5 - 55.25	Pole	Max Tension	1	0.00	0.00	0.00
			Max. Compression	26	-69.32	-0.88	1.98
			Max. Mx	20	-34.43	1603.91	-5.10
			Max. My	2	-34.52	-0.28	1541.63
			Max. Vy	20	-34.03	1603.91	-5.10
			Max. Vx	2	-32.95	-0.28	1541.63
			Max. Torque	22			-1.65
L35	55.25 - 54	Pole	Max Tension	1	0.00	0.00	0.00
			Max. Compression	26	-70.26	-0.87	1.95
			Max. Mx	20	-35.04	1646.59	-5.23
			Max. My	2	-35.13	-0.29	1582.97
			Max. Vy	20	-34.28	1646.59	-5.23
			Max. Vx	2	-33.20	-0.29	1582.97
			Max. Torque	22			-1.65
L36	54 - 53.75	Pole	Max Tension	1	0.00	0.00	0.00
			Max. Compression	26	-70.44	-0.86	1.94
			Max. Mx	20	-35.16	1655.17	-5.25
			Max. My	2	-35.25	-0.29	1591.27
			Max. Vy	20	-34.32	1655.17	-5.25
			Max. Vx	2	-33.24	-0.29	1591.27
			Max. Torque	22			-1.65
L37	53.75 - 53.5	Pole	Max Tension	1	0.00	0.00	0.00
			Max. Compression	26	-70.62	-0.86	1.93
			Max. Mx	20	-35.28	1663.75	-5.28
			Max. My	2	-35.36	-0.30	1599.59
			Max. Vy	20	-34.37	1663.75	-5.28
			Max. Vx	2	-33.29	-0.30	1599.59
			Max. Torque	22			-1.65
L38	53.5 - 53.25	Pole	Max Tension	1	0.00	0.00	0.00
			Max. Compression	26	-70.79	-0.86	1.93
			Max. Mx	20	-35.39	1672.35	-5.30
			Max. My	2	-35.47	-0.30	1607.92
			Max. Vy	20	-34.42	1672.35	-5.30
			Max. Vx	2	-33.34	-0.30	1607.92
			Max. Torque	22			-1.65
L39	53.25 - 53	Pole	Max Tension	1	0.00	0.00	0.00
			Max. Compression	26	-70.96	-0.85	1.92
			Max. Mx	20	-35.49	1680.96	-5.33
			Max. My	2	-35.58	-0.30	1616.25
			Max. Vy	20	-34.46	1680.96	-5.33
			Max. Vx	2	-33.38	-0.30	1616.25
			Max. Torque	22			-1.65
L40	53 - 48	Pole	Max Tension	1	0.00	0.00	0.00
			Max. Compression	26	-74.15	-0.80	1.77
			Max. Mx	20	-37.55	1855.40	-5.82
			Max. My	2	-37.63	-0.34	1785.38

Section No.	Elevation ft	Component Type	Condition	Gov. Load Comb.	Axial K	Major Axis Moment kip-ft	Minor Axis Moment kip-ft
			Max. Vy	20	-35.34	1855.40	-5.82
			Max. Vx	2	-34.29	-0.34	1785.38
			Max. Torque	22			-1.65
L41	48 - 39.75	Pole	Max Tension	1	0.00	0.00	0.00
			Max. Compression	26	-76.40	-0.74	1.69
			Max. Mx	20	-39.02	1980.02	-6.17
			Max. My	2	-39.09	-0.37	1906.36
			Max. Vy	20	-35.92	1980.02	-6.17
			Max. Vx	2	-34.88	-0.37	1906.36
			Max. Torque	22			-1.65
L42	39.75 - 38.75	Pole	Max Tension	1	0.00	0.00	0.00
			Max. Compression	26	-81.88	-0.65	1.56
			Max. Mx	20	-42.87	2189.60	-6.73
			Max. My	2	-42.93	-0.42	2110.05
			Max. Vy	20	-36.99	2189.60	-6.73
			Max. Vx	2	-35.97	-0.42	2110.05
			Max. Torque	22			-1.65
L43	38.75 - 34.75	Pole	Max Tension	1	0.00	0.00	0.00
			Max. Compression	26	-84.50	-0.58	1.47
			Max. Mx	20	-44.59	2338.75	-7.13
			Max. My	2	-44.65	-0.45	2255.17
			Max. Vy	18	-37.74	2256.45	-1259.50
			Max. Vx	2	-36.62	-0.45	2255.17
			Max. Torque	22			-1.65
L44	34.75 - 34.5	Pole	Max Tension	1	0.00	0.00	0.00
			Max. Compression	26	-84.69	-0.57	1.46
			Max. Mx	20	-44.73	2348.15	-7.15
			Max. My	2	-44.79	-0.45	2264.32
			Max. Vy	18	-37.78	2265.89	-1264.82
			Max. Vx	2	-36.66	-0.45	2264.32
			Max. Torque	22			-1.65
L45	34.5 - 33.75	Pole	Max Tension	1	0.00	0.00	0.00
			Max. Compression	26	-85.26	-0.55	1.44
			Max. Mx	20	-45.11	2376.43	-7.23
			Max. My	2	-45.17	-0.46	2291.86
			Max. Vy	18	-37.94	2294.28	-1280.82
			Max. Vx	2	-36.79	-0.46	2291.86
			Max. Torque	22			-1.65
L46	33.75 - 33.5	Pole	Max Tension	1	0.00	0.00	0.00
			Max. Compression	26	-85.43	-0.55	1.44
			Max. Mx	20	-45.23	2385.88	-7.25
			Max. My	2	-45.28	-0.46	2301.06
			Max. Vy	18	-37.98	2303.76	-1286.16
			Max. Vx	2	-36.83	-0.46	2301.06
			Max. Torque	22			-1.65
L47	33.5 - 28.5	Pole	Max Tension	1	0.00	0.00	0.00
			Max. Compression	26	-88.70	-0.46	1.33
			Max. Mx	20	-47.42	2576.77	-7.74
			Max. My	2	-47.47	-0.50	2487.09
			Max. Vy	18	-38.90	2495.90	-1394.48
			Max. Vx	2	-37.61	-0.50	2487.09
			Max. Torque	22			-1.65
L48	28.5 - 24	Pole	Max Tension	1	0.00	0.00	0.00
			Max. Compression	26	-91.59	-0.38	1.23
			Max. Mx	20	-49.42	2751.70	-8.18
			Max. My	2	-49.46	-0.54	2657.70
			Max. Vy	18	-39.68	2672.60	-1494.17
			Max. Vx	2	-38.26	-0.54	2657.70
			Max. Torque	22			-1.65
L49	24 - 23.75	Pole	Max Tension	1	0.00	0.00	0.00
			Max. Compression	26	-91.76	-0.38	1.23

Section No.	Elevation ft	Component Type	Condition	Gov. Load Comb.	Axial K	Major Axis Moment kip-ft	Minor Axis Moment kip-ft
			Max. Mx	20	-49.56	2761.50	-8.21
			Max. My	2	-49.59	-0.54	2667.26
			Max. Vy	18	-39.70	2682.52	-1499.76
			Max. Vx	2	-38.28	-0.54	2667.26
			Max. Torque	22			-1.65
L50	23.75 - 18.75	Pole	Max Tension	1	0.00	0.00	0.00
			Max. Compression	26	-95.09	-0.30	1.12
			Max. Mx	20	-51.89	2959.39	-8.70
			Max. My	2	-51.92	-0.58	2860.40
			Max. Vy	18	-40.55	2883.07	-1612.97
			Max. Vx	2	-39.00	-0.58	2860.40
			Max. Torque	22			-1.65
L51	18.75 - 14.25	Pole	Max Tension	1	0.00	0.00	0.00
			Max. Compression	26	-98.12	-0.22	1.03
			Max. Mx	20	-54.03	3140.37	-9.13
			Max. My	2	-54.05	-0.62	3037.15
			Max. Vy	18	-41.25	3067.02	-1716.87
			Max. Vx	2	-39.60	-0.62	3037.15
			Max. Torque	22			-1.65
L52	14.25 - 14	Pole	Max Tension	1	0.00	0.00	0.00
			Max. Compression	26	-98.30	-0.21	1.02
			Max. Mx	20	-54.18	3150.51	-9.16
			Max. My	2	-54.20	-0.62	3047.05
			Max. Vy	18	-41.28	3077.33	-1722.69
			Max. Vx	2	-39.62	-0.62	3047.05
			Max. Torque	22			-1.65
L53	14 - 9	Pole	Max Tension	1	0.00	0.00	0.00
			Max. Compression	26	-101.99	-0.10	0.91
			Max. Mx	20	-56.79	3354.93	-9.64
			Max. My	2	-56.81	-0.66	3246.89
			Max. Vy	18	-42.11	3285.72	-1840.45
			Max. Vx	2	-40.34	-0.66	3246.89
			Max. Torque	22			-1.65
L54	9 - 5	Pole	Max Tension	1	0.00	0.00	0.00
			Max. Compression	26	-104.80	-0.03	0.66
			Max. Mx	20	-58.85	3520.87	-10.13
			Max. My	2	-58.86	-0.70	3409.19
			Max. Vy	18	-42.74	3455.30	-1936.44
			Max. Vx	2	-40.90	-0.70	3409.19
			Max. Torque	22			-1.65
L55	5 - 4.75	Pole	Max Tension	1	0.00	0.00	0.00
			Max. Compression	26	-104.98	-0.03	0.64
			Max. Mx	20	-59.00	3531.31	-10.16
			Max. My	2	-59.01	-0.70	3419.41
			Max. Vy	18	-42.76	3465.98	-1942.49
			Max. Vx	2	-40.92	-0.70	3419.41
			Max. Torque	22			-1.65
L56	4.75 - 4.5	Pole	Max Tension	1	0.00	0.00	0.00
			Max. Compression	26	-105.16	-0.03	0.62
			Max. Mx	20	-59.14	3541.76	-10.19
			Max. My	2	-59.14	-0.71	3429.64
			Max. Vy	18	-42.80	3476.67	-1948.54
			Max. Vx	2	-40.96	-0.71	3429.64
			Max. Torque	22			-1.65
L57	4.5 - 0	Pole	Max Tension	1	0.00	0.00	0.00
			Max. Compression	26	-108.25	0.02	0.29
			Max. Mx	20	-61.57	3731.19	-10.78
			Max. My	2	-61.57	-0.77	3615.17
			Max. Vy	18	-43.51	3670.77	-2058.51
			Max. Vx	2	-41.60	-0.77	3615.17
			Max. Torque	22			-1.65

Section No.	Elevation ft	Component Type	Condition	Gov. Load Comb.	Axial K	Major Axis Moment kip-ft	Minor Axis Moment kip-ft

Maximum Reactions

Location	Condition	Gov. Load Comb.	Vertical K	Horizontal, X K	Horizontal, Z K
Pole	Max. Vert	26	108.25	0.03	0.00
	Max. H_x	19	46.19	43.48	-24.60
	Max. H_z	2	61.58	-0.01	41.57
	Max. M_x	2	3615.17	-0.01	41.57
	Max. M_z	8	3709.36	-42.16	0.05
	Max. Torsion	10	1.54	-36.94	-20.80
	Min. Vert	25	46.19	20.82	35.27
	Min. H_x	6	61.58	-43.45	24.59
	Min. H_z	14	61.58	0.06	-41.34
	Min. M_x	14	-3602.22	0.06	-41.34
	Min. M_z	20	-3731.19	42.39	-0.10
	Min. Torsion	22	-1.65	36.79	20.69

Tower Mast Reaction Summary

Load Combination	Vertical K	$Shear_x$ K	$Shear_z$ K	Overturning Moment, M_x kip-ft	Overturning Moment, M_z kip-ft	Torque kip-ft
Dead Only	51.32	0.00	0.00	-0.68	-0.57	-0.00
1.2 Dead+1.0 Wind 0 deg - No Ice	61.58	0.01	-41.57	-3615.17	-0.77	0.92
0.9 Dead+1.0 Wind 0 deg - No Ice	46.19	0.01	-41.57	-3583.22	-0.59	0.91
1.2 Dead+1.0 Wind 30 deg - No Ice	61.58	21.29	-35.99	-3133.76	-1870.08	0.35
0.9 Dead+1.0 Wind 30 deg - No Ice	46.19	21.29	-35.99	-3106.03	-1853.42	0.35
1.2 Dead+1.0 Wind 60 deg - No Ice	61.58	43.45	-24.59	-2059.41	-3667.61	-0.75
0.9 Dead+1.0 Wind 60 deg - No Ice	46.19	43.45	-24.59	-2041.45	-3635.70	-0.74
1.2 Dead+1.0 Wind 90 deg - No Ice	61.58	42.16	-0.05	-6.12	-3709.36	-1.12
0.9 Dead+1.0 Wind 90 deg - No Ice	46.19	42.16	-0.05	-5.84	-3676.48	-1.10
1.2 Dead+1.0 Wind 120 deg - No Ice	61.58	36.94	20.80	1797.72	-3225.58	-1.54
0.9 Dead+1.0 Wind 120 deg - No Ice	46.19	36.94	20.80	1782.21	-3197.03	-1.52
1.2 Dead+1.0 Wind 150 deg - No Ice	61.58	20.81	35.37	3090.22	-1829.86	-1.38
0.9 Dead+1.0 Wind 150 deg - No Ice	46.19	20.81	35.37	3063.28	-1813.55	-1.36
1.2 Dead+1.0 Wind 180 deg - No Ice	61.58	-0.06	41.34	3602.22	6.39	-0.90
0.9 Dead+1.0 Wind 180 deg - No Ice	46.19	-0.06	41.34	3570.82	6.51	-0.89

Load Combination	Vertical K	$Shear_x$ K	$Shear_z$ K	Overturning Moment, M_x kip-ft	Overturning Moment, M_z kip-ft	Torque kip-ft
1.2 Dead+1.0 Wind 210 deg - No Ice	61.58	-21.17	35.79	3121.18	1860.97	-0.36
0.9 Dead+1.0 Wind 210 deg - No Ice	46.19	-21.17	35.79	3093.99	1844.74	-0.35
1.2 Dead+1.0 Wind 240 deg - No Ice	61.58	-43.48	24.60	2058.51	3670.77	0.97
0.9 Dead+1.0 Wind 240 deg - No Ice	46.19	-43.48	24.60	2041.00	3639.19	0.96
1.2 Dead+1.0 Wind 270 deg - No Ice	61.58	-42.39	0.10	10.78	3731.19	1.18
0.9 Dead+1.0 Wind 270 deg - No Ice	46.19	-42.39	0.10	10.89	3698.47	1.16
1.2 Dead+1.0 Wind 300 deg - No Ice	61.58	-36.79	-20.69	-1800.31	3229.43	1.65
0.9 Dead+1.0 Wind 300 deg - No Ice	46.19	-36.79	-20.69	-1784.30	3201.16	1.62
1.2 Dead+1.0 Wind 330 deg - No Ice	61.58	-20.82	-35.27	-3094.27	1839.59	1.55
0.9 Dead+1.0 Wind 330 deg - No Ice	46.19	-20.82	-35.27	-3066.82	1823.52	1.53
1.2 Dead+1.0 Ice+1.0 Temp	108.25	-0.03	-0.00	-0.29	0.02	-0.00
1.2 Dead+1.0 Wind 0 deg+1.0 Ice+1.0 Temp	108.25	-0.00	-8.40	-795.67	0.54	0.28
1.2 Dead+1.0 Wind 30 deg+1.0 Ice+1.0 Temp	108.25	4.28	-7.27	-689.39	-408.33	0.06
1.2 Dead+1.0 Wind 60 deg+1.0 Ice+1.0 Temp	108.25	9.21	-5.23	-465.31	-823.90	-0.15
1.2 Dead+1.0 Wind 90 deg+1.0 Ice+1.0 Temp	108.25	8.53	-0.00	-0.92	-815.05	-0.41
1.2 Dead+1.0 Wind 120 deg+1.0 Ice+1.0 Temp	108.25	7.45	4.21	396.61	-706.92	-0.52
1.2 Dead+1.0 Wind 150 deg+1.0 Ice+1.0 Temp	108.25	4.23	7.21	685.94	-404.23	-0.46
1.2 Dead+1.0 Wind 180 deg+1.0 Ice+1.0 Temp	108.25	-0.01	8.39	796.04	0.81	-0.28
1.2 Dead+1.0 Wind 210 deg+1.0 Ice+1.0 Temp	108.25	-4.28	7.26	689.49	408.50	-0.06
1.2 Dead+1.0 Wind 240 deg+1.0 Ice+1.0 Temp	108.25	-9.22	5.23	464.69	824.91	0.19
1.2 Dead+1.0 Wind 270 deg+1.0 Ice+1.0 Temp	108.25	-8.54	0.01	1.35	816.37	0.42
1.2 Dead+1.0 Wind 300 deg+1.0 Ice+1.0 Temp	108.25	-7.41	-4.18	-396.57	706.01	0.54
1.2 Dead+1.0 Wind 330 deg+1.0 Ice+1.0 Temp	108.25	-4.22	-7.18	-685.50	405.39	0.49
Dead+Wind 0 deg - Service	51.32	0.00	-9.02	-780.98	-0.61	0.20
Dead+Wind 30 deg - Service	51.32	4.62	-7.81	-677.06	-404.15	0.08
Dead+Wind 60 deg - Service	51.32	9.43	-5.34	-445.26	-792.43	-0.16
Dead+Wind 90 deg - Service	51.32	9.15	-0.01	-1.86	-801.24	-0.24
Dead+Wind 120 deg - Service	51.32	8.02	4.51	387.57	-696.80	-0.33
Dead+Wind 150 deg - Service	51.32	4.51	7.68	666.57	-395.46	-0.30
Dead+Wind 180 deg - Service	51.32	-0.01	8.97	777.10	0.94	-0.19
Dead+Wind 210 deg - Service	51.32	-4.59	7.77	673.27	401.30	-0.08
Dead+Wind 240 deg - Service	51.32	-9.44	5.34	443.99	792.23	0.21
Dead+Wind 270 deg - Service	51.32	-9.20	0.02	1.79	805.07	0.26
Dead+Wind 300 deg - Service	51.32	-7.98	-4.49	-389.21	696.74	0.36
Dead+Wind 330 deg - Service	51.32	-4.52	-7.65	-668.52	396.68	0.33

Solution Summary

Load Comb.	Sum of Applied Forces PX K	PY K	PZ K	Sum of Reactions PX K	PY K	PZ K	% Error
1	0.00	-51.32	0.00	0.00	51.32	0.00	0.000%
2	0.01	-61.58	-41.57	-0.01	61.58	41.57	0.000%
3	0.01	-46.19	-41.57	-0.01	46.19	41.57	0.000%
4	21.29	-61.58	-35.99	-21.29	61.58	35.99	0.000%
5	21.29	-46.19	-35.99	-21.29	46.19	35.99	0.000%
6	43.45	-61.58	-24.59	-43.45	61.58	24.59	0.000%
7	43.45	-46.19	-24.59	-43.45	46.19	24.59	0.000%
8	42.16	-61.58	-0.05	-42.16	61.58	0.05	0.000%
9	42.16	-46.19	-0.05	-42.16	46.19	0.05	0.000%
10	36.94	-61.58	20.80	-36.94	61.58	-20.80	0.000%
11	36.94	-46.19	20.80	-36.94	46.19	-20.80	0.000%
12	20.81	-61.58	35.37	-20.81	61.58	-35.37	0.000%
13	20.81	-46.19	35.37	-20.81	46.19	-35.37	0.000%
14	-0.06	-61.58	41.34	0.06	61.58	-41.34	0.000%
15	-0.06	-46.19	41.34	0.06	46.19	-41.34	0.000%
16	-21.17	-61.58	35.79	21.17	61.58	-35.79	0.000%
17	-21.17	-46.19	35.79	21.17	46.19	-35.79	0.000%
18	-43.48	-61.58	24.60	43.48	61.58	-24.60	0.000%
19	-43.48	-46.19	24.60	43.48	46.19	-24.60	0.000%
20	-42.39	-61.58	0.10	42.39	61.58	-0.10	0.000%
21	-42.39	-46.19	0.10	42.39	46.19	-0.10	0.000%
22	-36.79	-61.58	-20.69	36.79	61.58	20.69	0.000%
23	-36.79	-46.19	-20.69	36.79	46.19	20.69	0.000%
24	-20.82	-61.58	-35.27	20.82	61.58	35.27	0.000%
25	-20.82	-46.19	-35.27	20.82	46.19	35.27	0.000%
26	0.00	-108.25	0.00	0.03	108.25	0.00	0.027%
27	-0.00	-108.25	-8.40	0.00	108.25	8.40	0.000%
28	4.28	-108.25	-7.27	-4.28	108.25	7.27	0.000%
29	9.21	-108.25	-5.23	-9.21	108.25	5.23	0.000%
30	8.53	-108.25	-0.00	-8.53	108.25	0.00	0.000%
31	7.45	-108.25	4.21	-7.45	108.25	-4.21	0.000%
32	4.23	-108.25	7.21	-4.23	108.25	-7.21	0.000%
33	-0.01	-108.25	8.39	0.01	108.25	-8.39	0.000%
34	-4.28	-108.25	7.26	4.28	108.25	-7.26	0.000%
35	-9.22	-108.25	5.23	9.22	108.25	-5.23	0.000%
36	-8.54	-108.25	0.01	8.54	108.25	-0.01	0.000%
37	-7.41	-108.25	-4.18	7.41	108.25	4.18	0.000%
38	-4.22	-108.25	-7.18	4.22	108.25	7.18	0.000%
39	0.00	-51.32	-9.02	-0.00	51.32	9.02	0.000%
40	4.62	-51.32	-7.81	-4.62	51.32	7.81	0.000%
41	9.43	-51.32	-5.34	-9.43	51.32	5.34	0.000%
42	9.15	-51.32	-0.01	-9.15	51.32	0.01	0.000%
43	8.02	-51.32	4.51	-8.02	51.32	-4.51	0.000%
44	4.51	-51.32	7.68	-4.51	51.32	-7.68	0.000%
45	-0.01	-51.32	8.97	0.01	51.32	-8.97	0.000%
46	-4.59	-51.32	7.77	4.59	51.32	-7.77	0.000%
47	-9.44	-51.32	5.34	9.44	51.32	-5.34	0.000%
48	-9.20	-51.32	0.02	9.20	51.32	-0.02	0.000%
49	-7.98	-51.32	-4.49	7.98	51.32	4.49	0.000%
50	-4.52	-51.32	-7.65	4.52	51.32	7.65	0.000%

Non-Linear Convergence Results

Load Combination	Converged?	Number of Cycles	Displacement Tolerance	Force Tolerance
1	Yes	4	0.00000001	0.00000001
2	Yes	5	0.00000001	0.00030783
3	Yes	5	0.00000001	0.00013821
4	Yes	6	0.00000001	0.00039651
5	Yes	6	0.00000001	0.00013244
6	Yes	6	0.00000001	0.00048913
7	Yes	6	0.00000001	0.00015677
8	Yes	5	0.00000001	0.00040096
9	Yes	5	0.00000001	0.00018122
10	Yes	6	0.00000001	0.00038096
11	Yes	6	0.00000001	0.00012686
12	Yes	6	0.00000001	0.00038973
13	Yes	6	0.00000001	0.00013105
14	Yes	5	0.00000001	0.00026220
15	Yes	5	0.00000001	0.00011571
16	Yes	6	0.00000001	0.00038862
17	Yes	6	0.00000001	0.00012993
18	Yes	6	0.00000001	0.00048099
19	Yes	6	0.00000001	0.00015402
20	Yes	5	0.00000001	0.00031006
21	Yes	5	0.00000001	0.00013743
22	Yes	6	0.00000001	0.00040648
23	Yes	6	0.00000001	0.00013575
24	Yes	6	0.00000001	0.00037622
25	Yes	6	0.00000001	0.00012590
26	Yes	4	0.00000001	0.00020039
27	Yes	6	0.00000001	0.00042661
28	Yes	6	0.00000001	0.00048212
29	Yes	6	0.00000001	0.00056536
30	Yes	6	0.00000001	0.00043738
31	Yes	6	0.00000001	0.00048117
32	Yes	6	0.00000001	0.00047574
33	Yes	6	0.00000001	0.00042272
34	Yes	6	0.00000001	0.00047651
35	Yes	6	0.00000001	0.00055902
36	Yes	6	0.00000001	0.00043614
37	Yes	6	0.00000001	0.00048541
38	Yes	6	0.00000001	0.00047742
39	Yes	4	0.00000001	0.00078904
40	Yes	5	0.00000001	0.00012509
41	Yes	5	0.00000001	0.00016744
42	Yes	4	0.00000001	0.00085175
43	Yes	5	0.00000001	0.00011366
44	Yes	5	0.00000001	0.00012565
45	Yes	4	0.00000001	0.00077332
46	Yes	5	0.00000001	0.00011878
47	Yes	5	0.00000001	0.00015836
48	Yes	4	0.00000001	0.00085170
49	Yes	5	0.00000001	0.00013456
50	Yes	5	0.00000001	0.00011250

Compression Checks

Pole Design Data

Section No.	Elevation ft	Size	L ft	L_u ft	Kl/r	A in^2	P_u K	ϕP_n K	Ratio $\frac{P_u}{\phi P_n}$
L1	120 - 115 (1)	TP23.0102x22x0.25	5.00	0.00	0.0	18.3220	-4.80	989.39	0.005
L2	115 - 110 (2)	TP24.0205x23.0102x0.25	5.00	0.00	0.0	19.1352	-8.65	1033.30	0.008
L3	110 - 105 (3)	TP25.0307x24.0205x0.25	5.00	0.00	0.0	19.9485	-9.08	1077.22	0.008
L4	105 - 100 (4)	TP26.041x25.0307x0.25	5.00	0.00	0.0	20.7617	-14.34	1121.13	0.013
L5	100 - 99.25 (5)	TP26.1925x26.041x0.25	0.75	0.00	0.0	20.8837	-14.42	1127.72	0.013
L6	99.25 - 99 (6)	TP26.243x26.1925x0.3625	0.25	0.00	0.0	30.2090	-14.47	1631.29	0.009
L7	99 - 94 (7)	TP27.2532x26.243x0.3563	5.00	0.00	0.0	30.8542	-20.24	1666.13	0.012
L8	94 - 90.08 (8)	TP28.0453x27.2532x0.35	3.92	0.00	0.0	31.2126	-21.02	1685.48	0.012
L9	90.08 - 89.83 (9)	TP28.0958x28.0453x0.5125	0.25	0.00	0.0	45.5193	-21.09	2458.04	0.009
L10	89.83 - 89.5 (10)	TP28.1625x28.0958x0.5125	0.33	0.00	0.0	45.6293	-21.17	2463.98	0.009
L11	89.5 - 89.25 (11)	TP28.213x28.1625x0.725	0.25	0.00	0.0	64.1707	-21.24	3465.22	0.006
L12	89.25 - 84.25 (12)	TP29.2232x28.213x0.7	5.00	0.00	0.0	64.2913	-22.63	3471.73	0.007
L13	84.25 - 78 (13)	TP30.486x29.2232x0.7	6.25	0.00	0.0	65.4298	-23.35	3533.21	0.007
L14	78 - 77 (14)	TP30.188x29.2283x0.8625	4.75	0.00	0.0	81.4443	-26.01	4397.99	0.006
L15	77 - 76.75 (15)	TP30.2385x30.188x0.8625	0.25	0.00	0.0	81.5846	-26.11	4405.57	0.006
L16	76.75 - 76.5 (16)	TP30.289x30.2385x0.9625	0.25	0.00	0.0	90.8903	-26.21	4908.07	0.005
L17	76.5 - 75.5 (17)	TP30.4911x30.289x0.9625	1.00	0.00	0.0	91.5164	-26.60	4941.89	0.005
L18	75.5 - 75.25 (18)	TP30.5416x30.4911x0.7625	0.25	0.00	0.0	73.1151	-26.70	3948.21	0.007
L19	75.25 - 74.5 (19)	TP30.6931x30.5416x0.7625	0.75	0.00	0.0	73.4871	-27.04	3968.31	0.007
L20	74.5 - 74.25 (20)	TP30.7436x30.6931x0.8375	0.25	0.00	0.0	80.6493	-27.13	4355.06	0.006
L21	74.25 - 72 (21)	TP31.1982x30.7436x0.825	2.25	0.00	0.0	80.6864	-27.89	4357.07	0.006
L22	72 - 71.75 (22)	TP31.2487x31.1982x0.7625	0.25	0.00	0.0	74.8513	-27.99	4041.97	0.007
L23	71.75 - 70.5 (23)	TP31.5013x31.2487x0.7625	1.25	0.00	0.0	75.4714	-28.45	4075.45	0.007
L24	70.5 - 70.25 (24)	TP31.5518x31.5013x0.7875	0.25	0.00	0.0	78.0105	-28.56	4212.57	0.007
L25	70.25 - 70 (25)	TP31.6023x31.5518x0.7875	0.25	0.00	0.0	78.1386	-28.66	4219.48	0.007
L26	70 - 69.75 (26)	TP31.6528x31.6023x0.725	0.25	0.00	0.0	72.2010	-28.76	3898.85	0.007
L27	69.75 - 69.5 (27)	TP31.7033x31.6528x0.875	0.25	0.00	0.0	86.8588	-28.86	4690.37	0.006
L28	69.5 - 69.25 (28)	TP31.7538x31.7033x0.75	0.25	0.00	0.0	74.8742	-28.95	4043.21	0.007
L29	69.25 - 64.25 (29)	TP32.764x31.7538x0.7375	5.00	0.00	0.0	76.0550	-30.71	4106.97	0.007
L30	64.25 - 59.25 (30)	TP33.7742x32.764x0.7125	5.00	0.00	0.0	75.8519	-32.52	4096.00	0.008
L31	59.25 - 56 (31)	TP34.4309x33.7742x0.7125	3.25	0.00	0.0	77.3583	-33.72	4177.35	0.008
L32	56 - 55.75 (32)	TP34.4814x34.4309x0.8125	0.25	0.00	0.0	88.0862	-33.85	4756.65	0.007
L33	55.75 - 55.5 (33)	TP34.5319x34.4814x0.8125	0.25	0.00	0.0	88.2183	-33.97	4763.79	0.007
L34	55.5 - 55.25 (34)	TP34.5824x34.5319x0.8875	0.25	0.00	0.0	96.2915	-34.09	5199.74	0.007
L35	55.25 - 54 (35)	TP34.8349x34.5824x0.875	1.25	0.00	0.0	95.6821	-34.69	5166.83	0.007
L36	54 - 53.75 (36)	TP34.8854x34.8349x0.75	0.25	0.00	0.0	82.4371	-34.82	4451.60	0.008
L37	53.75 - 53.5 (37)	TP34.936x34.8854x0.7375	0.25	0.00	0.0	81.2128	-34.93	4385.49	0.008
L38	53.5 - 53.25 (38)	TP34.9865x34.936x0.6625	0.25	0.00	0.0	73.2216	-35.04	3953.97	0.009
L39	53.25 - 53 (39)	TP35.037x34.9865x0.6	0.25	0.00	0.0	66.5322	-35.15	3592.74	0.010
L40	53 - 48 (40)	TP36.0472x35.037x0.5875	5.00	0.00	0.0	67.0808	-37.22	3622.36	0.010
L41	48 - 39.75 (41)	TP37.714x36.0472x0.5875	8.25	0.00	0.0	68.4186	-38.71	3694.60	0.010
L42	39.75 - 38.75	TP37.291x36.1293x0.6625	5.75	0.00	0.0	78.1378	-42.56	4219.44	0.010

Section No.	Elevation ft	Size	L ft	L_u ft	Kl/r	A in^2	P_u K	ϕP_n K	Ratio $\frac{P_u}{\phi P_n}$
	(42)								
L43	38.75 - 34.75 (43)	TP38.0992x37.291x0.6625	4.00	0.00	0.0	79.8618	-44.31	4312.54	0.010
L44	34.75 - 34.5 (44)	TP38.1497x38.0992x0.825	0.25	0.00	0.0	99.1530	-44.46	5354.26	0.008
L45	34.5 - 33.75 (45)	TP38.3012x38.1497x0.825	0.75	0.00	0.0	99.5556	-44.84	5376.00	0.008
L46	33.75 - 33.5 (46)	TP38.3517x38.3012x0.625	0.25	0.00	0.0	75.9250	-44.95	4099.95	0.011
L47	33.5 - 28.5 (47)	TP39.3619x38.3517x0.6125	5.00	0.00	0.0	76.4235	-47.18	4126.87	0.011
L48	28.5 - 24 (48)	TP40.2711x39.3619x0.6625	4.50	0.00	0.0	84.4950	-49.22	4562.73	0.011
L49	24 - 23.75 (49)	TP40.3216x40.2711x0.7	0.25	0.00	0.0	89.3071	-49.35	4822.58	0.010
L50	23.75 - 18.75 (50)	TP41.3318x40.3216x0.6875	5.00	0.00	0.0	89.9763	-51.73	4858.72	0.011
L51	18.75 - 14.25 (51)	TP42.241x41.3318x0.675	4.50	0.00	0.0	90.3436	-53.90	4878.56	0.011
L52	14.25 - 14 (52)	TP42.2915x42.241x0.775	0.25	0.00	0.0	103.6040	-54.06	5594.63	0.010
L53	14 - 9 (53)	TP43.3017x42.2915x0.7625	5.00	0.00	0.0	104.4440	-56.71	5639.99	0.010
L54	9 - 5 (54)	TP44.1098x43.3017x0.75	4.00	0.00	0.0	104.7140	-58.80	5654.55	0.010
L55	5 - 4.75 (55)	TP44.1603x44.1098x0.9125	0.25	0.00	0.0	127.0730	-58.96	6861.94	0.009
L56	4.75 - 4.5 (56)	TP44.2108x44.1603x0.8	0.25	0.00	0.0	111.8260	-59.09	6038.62	0.010
L57	4.5 - 0 (57)	TP45.12x44.2108x0.7875	4.50	0.00	0.0	112.4160	-61.56	6070.47	0.010

Pole Bending Design Data

Section No.	Elevation ft	Size	M_{ux} kip-ft	ϕM_{nx} kip-ft	Ratio $\frac{M_{ux}}{\phi M_{nx}}$	M_{uy} kip-ft	ϕM_{ny} kip-ft	Ratio $\frac{M_{uy}}{\phi M_{ny}}$
L1	120 - 115 (1)	TP23.0102x22x0.25	41.75	564.83	0.074	0.00	564.83	0.000
L2	115 - 110 (2)	TP24.0205x23.0102x0.25	100.22	607.66	0.165	0.00	607.66	0.000
L3	110 - 105 (3)	TP25.0307x24.0205x0.25	171.07	651.21	0.263	0.00	651.21	0.000
L4	105 - 100 (4)	TP26.041x25.0307x0.25	282.18	695.40	0.406	0.00	695.40	0.000
L5	100 - 99.25 (5)	TP26.1925x26.041x0.25	298.09	702.08	0.425	0.00	702.08	0.000
L6	99.25 - 99 (6)	TP26.243x26.1925x0.3625	303.42	1077.22	0.282	0.00	1077.22	0.000
L7	99 - 94 (7)	TP27.2532x26.243x0.3563	436.34	1144.31	0.381	0.00	1144.31	0.000
L8	94 - 90.08 (8)	TP28.0453x27.2532x0.35	552.88	1192.67	0.464	0.00	1192.67	0.000
L9	90.08 - 89.83 (9)	TP28.0958x28.0453x0.5125	560.42	1722.21	0.325	0.00	1722.21	0.000
L10	89.83 - 89.5 (10)	TP28.1625x28.0958x0.5125	570.39	1730.62	0.330	0.00	1730.62	0.000
L11	89.5 - 89.25 (11)	TP28.213x28.1625x0.725	577.96	2401.11	0.241	0.00	2401.11	0.000
L12	89.25 - 84.25 (12)	TP29.2232x28.213x0.7	732.27	2500.69	0.293	0.00	2500.69	0.000
L13	84.25 - 78 (13)	TP30.486x29.2232x0.7	811.51	2591.13	0.313	0.00	2591.13	0.000
L14	78 - 77 (14)	TP30.188x29.2283x0.8625	966.27	3241.57	0.298	0.00	3241.57	0.000
L15	77 - 76.75 (15)	TP30.2385x30.188x0.8625	974.58	3252.92	0.300	0.00	3252.92	0.000
L16	76.75 - 76.5 (16)	TP30.289x30.2385x0.9625	982.89	3605.72	0.273	0.00	3605.72	0.000
L17	76.5 - 75.5 (17)	TP30.4911x30.289x0.9625	1016.32	3656.38	0.278	0.00	3656.38	0.000

Section No.	Elevation ft	Size	M_{ux} kip-ft	ϕM_{nx} kip-ft	Ratio $\frac{M_{ux}}{\phi M_{nx}}$	M_{uy} kip-ft	ϕM_{ny} kip-ft	Ratio $\frac{M_{uy}}{\phi M_{ny}}$
L18	75.5 - 75.25 (18)	TP30.5416x30.4911x0.7625	1024.71	2966.04	0.345	0.00	2966.04	0.000
L19	75.25 - 74.5 (19)	TP30.6931x30.5416x0.7625	1049.93	2996.68	0.350	0.00	2996.68	0.000
L20	74.5 - 74.25 (20)	TP30.7436x30.6931x0.8375	1058.41	3277.97	0.323	0.00	3277.97	0.000
L21	74.25 - 72 (21)	TP31.1982x30.7436x0.825	1135.36	3333.43	0.341	0.00	3333.43	0.000
L22	72 - 71.75 (22)	TP31.2487x31.1982x0.7625	1143.98	3110.38	0.368	0.00	3110.38	0.000
L23	71.75 - 70.5 (23)	TP31.5013x31.2487x0.7625	1187.35	3162.76	0.375	0.00	3162.76	0.000
L24	70.5 - 70.25 (24)	TP31.5518x31.5013x0.7875	1196.08	3269.36	0.366	0.00	3269.36	0.000
L25	70.25 - 70 (25)	TP31.6023x31.5518x0.7875	1204.81	3280.23	0.367	0.00	3280.23	0.000
L26	70 - 69.75 (26)	TP31.6528x31.6023x0.725	1213.57	3048.38	0.398	0.00	3048.38	0.000
L27	69.75 - 69.5 (27)	TP31.7033x31.6528x0.875	1222.34	3637.88	0.336	0.00	3637.88	0.000
L28	69.5 - 69.25 (28)	TP31.7538x31.7033x0.75	1231.13	3166.69	0.389	0.00	3166.69	0.000
L29	69.25 - 64.25 (29)	TP32.764x31.7538x0.7375	1409.94	3326.52	0.424	0.00	3326.52	0.000
L30	64.25 - 59.25 (30)	TP33.7742x32.764x0.7125	1594.46	3429.82	0.465	0.00	3429.82	0.000
L31	59.25 - 56 (31)	TP34.4309x33.7742x0.7125	1717.42	3568.88	0.481	0.00	3568.88	0.000
L32	56 - 55.75 (32)	TP34.4814x34.4309x0.8125	1726.97	4045.94	0.427	0.00	4045.94	0.000
L33	55.75 - 55.5 (33)	TP34.5319x34.4814x0.8125	1736.56	4058.23	0.428	0.00	4058.23	0.000
L34	55.5 - 55.25 (34)	TP34.5824x34.5319x0.8875	1746.15	4416.73	0.395	0.00	4416.73	0.000
L35	55.25 - 54 (35)	TP34.8349x34.5824x0.875	1794.36	4425.77	0.405	0.00	4425.77	0.000
L36	54 - 53.75 (36)	TP34.8854x34.8349x0.75	1804.04	3847.06	0.469	0.00	3847.06	0.000
L37	53.75 - 53.5 (37)	TP34.936x34.8854x0.7375	1813.75	3798.43	0.478	0.00	3798.43	0.000
L38	53.5 - 53.25 (38)	TP34.9865x34.936x0.6625	1823.47	3444.88	0.529	0.00	3444.88	0.000
L39	53.25 - 53 (39)	TP35.037x34.9865x0.6	1833.22	3146.26	0.583	0.00	3146.26	0.000
L40	53 - 48 (40)	TP36.0472x35.037x0.5875	2031.05	3269.16	0.621	0.00	3269.16	0.000
L41	48 - 39.75 (41)	TP37.714x36.0472x0.5875	2172.98	3401.93	0.639	0.00	3401.93	0.000
L42	39.75 - 38.75 (42)	TP37.291x36.1293x0.6625	2412.74	3927.67	0.614	0.00	3927.67	0.000
L43	38.75 - 34.75 (43)	TP38.0992x37.291x0.6625	2584.17	4104.48	0.630	0.00	4104.48	0.000
L44	34.75 - 34.5 (44)	TP38.1497x38.0992x0.825	2595.00	5058.79	0.513	0.00	5058.79	0.000
L45	34.5 - 33.75 (45)	TP38.3012x38.1497x0.825	2627.58	5100.39	0.515	0.00	5100.39	0.000
L46	33.75 - 33.5 (46)	TP38.3517x38.3012x0.625	2638.47	3936.75	0.670	0.00	3936.75	0.000
L47	33.5 - 28.5 (47)	TP39.3619x38.3517x0.6125	2859.03	4073.06	0.702	0.00	4073.06	0.000
L48	28.5 - 24 (48)	TP40.2711x39.3619x0.6625	3061.92	4598.92	0.666	0.00	4598.92	0.000
L49	24 - 23.75 (49)	TP40.3216x40.2711x0.7	3073.30	4857.93	0.633	0.00	4857.93	0.000
L50	23.75 - 18.75 (50)	TP41.3318x40.3216x0.6875	3303.60	5024.38	0.658	0.00	5024.38	0.000
L51	18.75 - 14.25 (51)	TP42.241x41.3318x0.675	3514.86	5162.72	0.681	0.00	5162.72	0.000
L52	14.25 - 14 (52)	TP42.2915x42.241x0.775	3526.71	5899.37	0.598	0.00	5899.37	0.000
L53	14 - 9 (53)	TP43.3017x42.2915x0.7625	3766.06	6098.13	0.618	0.00	6098.13	0.000
L54	9 - 5 (54)	TP44.1098x43.3017x0.75	3960.92	6235.67	0.635	0.00	6235.67	0.000
L55	5 - 4.75 (55)	TP44.1603x44.1098x0.9125	3973.20	7519.49	0.528	0.00	7519.49	0.000
L56	4.75 - 4.5 (56)	TP44.2108x44.1603x0.8	3985.48	6659.64	0.598	0.00	6659.64	0.000
L57	4.5 - 0 (57)	TP45.12x44.2108x0.7875	4208.57	6841.37	0.615	0.00	6841.37	0.000

Section No.	Elevation ft	Size	M_{ux} kip-ft	ϕM_{nx} kip-ft	Ratio $\frac{M_{ux}}{\phi M_{nx}}$	M_{uy} kip-ft	ϕM_{ny} kip-ft	Ratio $\frac{M_{uy}}{\phi M_{ny}}$

Pole Shear Design Data

Section No.	Elevation ft	Size	Actual V_u K	ϕV_n K	Ratio $\frac{V_u}{\phi V_n}$	Actual T_u kip-ft	ϕT_n kip-ft	Ratio $\frac{T_u}{\phi T_n}$
L1	120 - 115 (1)	TP23.0102x22x0.25	6.73	296.82	0.023	1.54	594.24	0.003
L2	115 - 110 (2)	TP24.0205x23.0102x0.25	13.72	309.99	0.044	0.04	648.17	0.000
L3	110 - 105 (3)	TP25.0307x24.0205x0.25	14.77	323.17	0.046	0.27	704.43	0.000
L4	105 - 100 (4)	TP26.041x25.0307x0.25	21.15	336.34	0.063	0.27	763.04	0.000
L5	100 - 99.25 (5)	TP26.1925x26.041x0.25	21.29	338.32	0.063	0.27	772.03	0.000
L6	99.25 - 99 (6)	TP26.243x26.1925x0.3625	21.34	489.39	0.044	0.27	1114.10	0.000
L7	99 - 94 (7)	TP27.2532x26.243x0.3563	29.34	499.84	0.059	0.17	1182.58	0.000
L8	94 - 90.08 (8)	TP28.0453x27.2532x0.35	30.14	505.64	0.060	0.19	1231.83	0.000
L9	90.08 - 89.83 (9)	TP28.0958x28.0453x0.5125	30.18	737.41	0.041	0.19	1789.19	0.000
L10	89.83 - 89.5 (10)	TP28.1625x28.0958x0.5125	30.26	739.20	0.041	0.20	1797.85	0.000
L11	89.5 - 89.25 (11)	TP28.213x28.1625x0.725	30.31	1039.56	0.029	0.20	2513.58	0.000
L12	89.25 - 84.25 (12)	TP29.2232x28.213x0.7	31.42	1041.52	0.030	0.24	2613.16	0.000
L13	84.25 - 78 (13)	TP30.486x29.2232x0.7	31.99	1059.96	0.030	0.26	2706.53	0.000
L14	78 - 77 (14)	TP30.188x29.2283x0.8625	33.18	1319.40	0.025	0.30	3403.47	0.000
L15	77 - 76.75 (15)	TP30.2385x30.188x0.8625	33.24	1321.67	0.025	0.31	3415.20	0.000
L16	76.75 - 76.5 (16)	TP30.289x30.2385x0.9625	33.30	1472.42	0.023	0.31	3798.33	0.000
L17	76.5 - 75.5 (17)	TP30.4911x30.289x0.9625	33.55	1482.57	0.023	0.31	3850.85	0.000
L18	75.5 - 75.25 (18)	TP30.5416x30.4911x0.7625	33.61	1184.46	0.028	0.32	3102.65	0.000
L19	75.25 - 74.5 (19)	TP30.6931x30.5416x0.7625	33.88	1190.49	0.028	0.55	3134.31	0.000
L20	74.5 - 74.25 (20)	TP30.7436x30.6931x0.8375	33.94	1306.52	0.026	0.55	3436.97	0.000
L21	74.25 - 72 (21)	TP31.1982x30.7436x0.825	34.48	1307.12	0.026	0.54	3492.26	0.000
L22	72 - 71.75 (22)	TP31.2487x31.1982x0.7625	34.54	1212.59	0.028	0.54	3251.76	0.000
L23	71.75 - 70.5 (23)	TP31.5013x31.2487x0.7625	34.87	1222.64	0.029	0.54	3305.85	0.000
L24	70.5 - 70.25 (24)	TP31.5518x31.5013x0.7875	34.93	1263.77	0.028	0.55	3419.91	0.000
L25	70.25 - 70 (25)	TP31.6023x31.5518x0.7875	34.99	1265.85	0.028	0.55	3431.15	0.000
L26	70 - 69.75 (26)	TP31.6528x31.6023x0.725	35.06	1169.66	0.030	0.55	3182.05	0.000
L27	69.75 - 69.5 (27)	TP31.7033x31.6528x0.875	35.12	1407.11	0.025	0.55	3815.73	0.000
L28	69.5 - 69.25 (28)	TP31.7538x31.7033x0.75	35.19	1212.96	0.029	0.55	3307.97	0.000
L29	69.25 - 64.25 (29)	TP32.764x31.7538x0.7375	36.36	1232.09	0.030	0.55	3470.98	0.000
L30	64.25 - 59.25 (30)	TP33.7742x32.764x0.7125	37.47	1228.80	0.030	0.53	3573.61	0.000
L31	59.25 - 56 (31)	TP34.4309x33.7742x0.7125	38.22	1253.20	0.030	0.52	3716.97	0.000
L32	56 - 55.75 (32)	TP34.4814x34.4309x0.8125	38.28	1427.00	0.027	0.51	4226.21	0.000
L33	55.75 - 55.5 (33)	TP34.5319x34.4814x0.8125	38.34	1429.14	0.027	0.52	4238.90	0.000
L34	55.5 - 55.25 (34)	TP34.5824x34.5319x0.8875	38.41	1559.92	0.025	0.52	4623.46	0.000

Section No.	Elevation ft	Size	Actual V_u K	ϕV_n K	Ratio $\frac{V_u}{\phi V_n}$	Actual T_u kip-ft	ϕT_n kip-ft	Ratio $\frac{T_u}{\phi T_n}$
L35	55.25 - 54 (35)	TP34.8349x34.5824x0.875	38.75	1550.05	0.025	0.53	4630.33	0.000
L36	54 - 53.75 (36)	TP34.8854x34.8349x0.75	38.80	1335.48	0.029	0.53	4009.98	0.000
L37	53.75 - 53.5 (37)	TP34.936x34.8854x0.7375	38.87	1315.65	0.030	0.53	3957.72	0.000
L38	53.5 - 53.25 (38)	TP34.9865x34.936x0.6625	38.93	1186.19	0.033	0.53	3581.39	0.000
L39	53.25 - 53 (39)	TP35.037x34.9865x0.6	38.99	1077.82	0.036	0.54	3264.92	0.000
L40	53 - 48 (40)	TP36.0472x35.037x0.5875	40.17	1086.71	0.037	0.59	3389.60	0.000
L41	48 - 39.75 (41)	TP37.714x36.0472x0.5875	40.97	1108.38	0.037	0.63	3526.13	0.000
L42	39.75 - 38.75 (42)	TP37.291x36.1293x0.6625	42.43	1265.83	0.034	0.70	4078.45	0.000
L43	38.75 - 34.75 (43)	TP38.0992x37.291x0.6625	43.32	1293.76	0.033	0.74	4260.41	0.000
L44	34.75 - 34.5 (44)	TP38.1497x38.0992x0.825	43.37	1606.28	0.027	0.74	5273.72	0.000
L45	34.5 - 33.75 (45)	TP38.3012x38.1497x0.825	43.55	1612.80	0.027	0.75	5316.63	0.000
L46	33.75 - 33.5 (46)	TP38.3517x38.3012x0.625	43.60	1229.99	0.035	0.75	4081.78	0.000
L47	33.5 - 28.5 (47)	TP39.3619x38.3517x0.6125	44.66	1238.06	0.036	0.80	4219.95	0.000
L48	28.5 - 24 (48)	TP40.2711x39.3619x0.6625	45.56	1368.82	0.033	0.85	4769.09	0.000
L49	24 - 23.75 (49)	TP40.3216x40.2711x0.7	45.59	1446.77	0.032	0.85	5042.35	0.000
L50	23.75 - 18.75 (50)	TP41.3318x40.3216x0.6875	46.56	1457.62	0.032	0.90	5211.26	0.000
L51	18.75 - 14.25 (51)	TP42.241x41.3318x0.675	47.38	1463.57	0.032	0.94	5351.18	0.000
L52	14.25 - 14 (52)	TP42.2915x42.241x0.775	47.41	1678.39	0.028	0.94	6129.33	0.000
L53	14 - 9 (53)	TP43.3017x42.2915x0.7625	48.37	1692.00	0.029	0.98	6331.23	0.000
L54	9 - 5 (54)	TP44.1098x43.3017x0.75	49.10	1696.37	0.029	0.99	6470.03	0.000
L55	5 - 4.75 (55)	TP44.1603x44.1098x0.9125	49.12	2058.58	0.024	0.99	7831.27	0.000
L56	4.75 - 4.5 (56)	TP44.2108x44.1603x0.8	49.17	1811.59	0.027	0.99	6917.62	0.000
L57	4.5 - 0 (57)	TP45.12x44.2108x0.7875	49.99	1821.14	0.027	0.98	7101.76	0.000

APPENDIX B

BASE LEVEL DRAWING

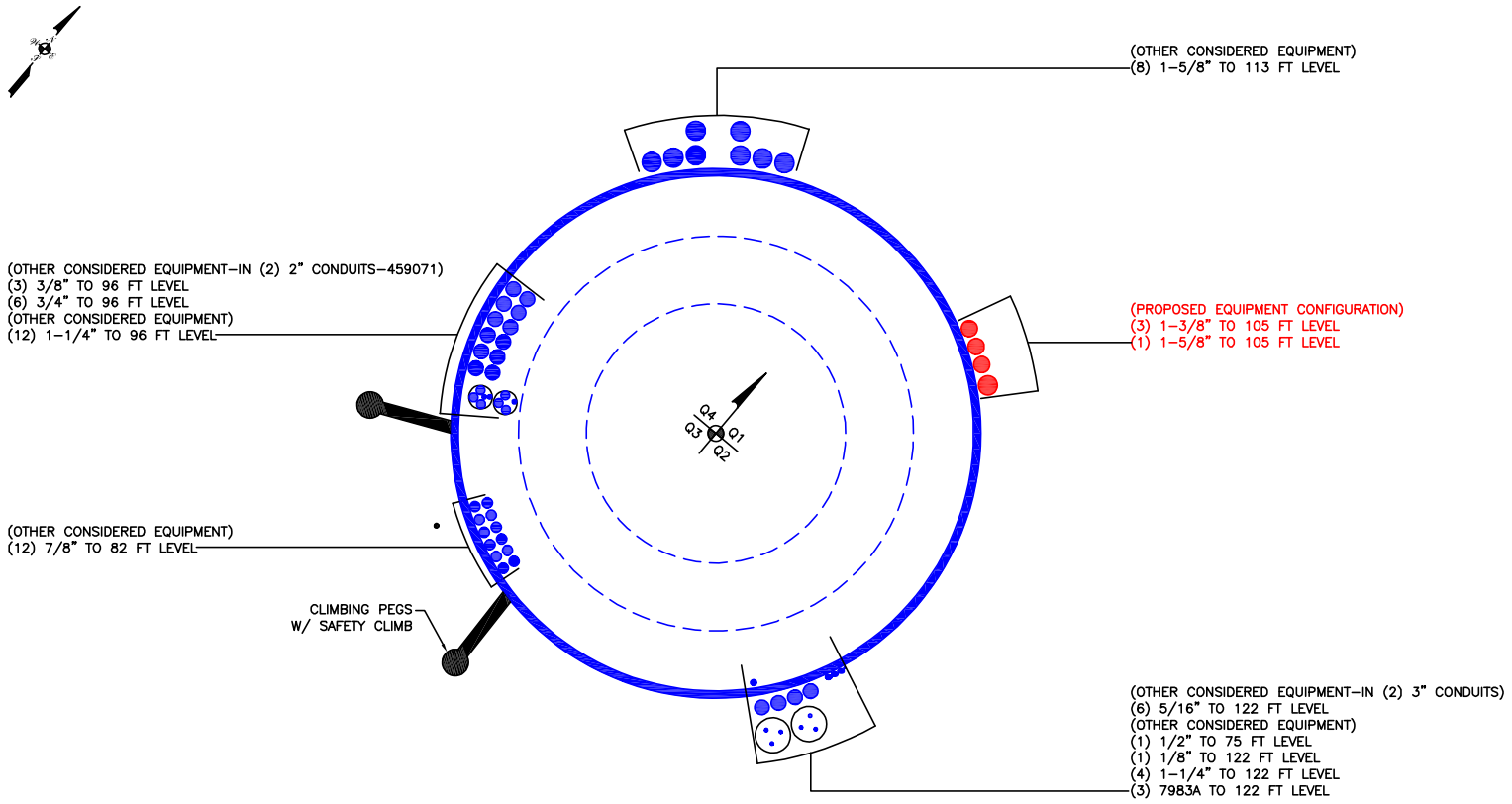
(OTHER CONSIDERED EQUIPMENT)
(8) 1-5/8" TO 113 FT LEVEL
(OTHER CONSIDERED EQUIPMENT-IN (2) 2" CONDUITS-459071)
(3) 3/8" TO 96 FT LEVEL
(6) 3/4" TO 96 FT LEVEL
(OTHER CONSIDERED EQUIPMENT)
(12) 1-1/4" TO 96 FT LEVEL
(PROPOSED EQUIPMENT CONFIGURATION)
(3) 1-3/8" TO 105 FT LEVEL
(1) 1-5/8" TO 105 FT LEVEL
Q4
Q1
Q3
Q2
(OTHER CONSIDERED EQUIPMENT)
(12) 7/8" TO 82 FT LEVEL
CLIMBING PEGS
W/ SAFETY CLIMB
(OTHER CONSIDERED EQUIPMENT-IN (2) 3" CONDUITS)
(6) 5/16" TO 122 FT LEVEL
(OTHER CONSIDERED EQUIPMENT)
(1) 1/2" TO 75 FT LEVEL
(1) 1/8" TO 122 FT LEVEL
(4) 1-1/4" TO 122 FT LEVEL
(3) 7983A TO 122 FT LEVEL

APPENDIX C

ADDITIONAL CALCULATIONS

ASCE 7 Hazards Report

Address:
No Address at This Location

Standard: ASCE/SEI 7-10
Risk Category: II
Soil Class: D - Stiff Soil

Elevation: 212.97 ft (NAVD 88)
Latitude: 41.248431
Longitude: -73.079075

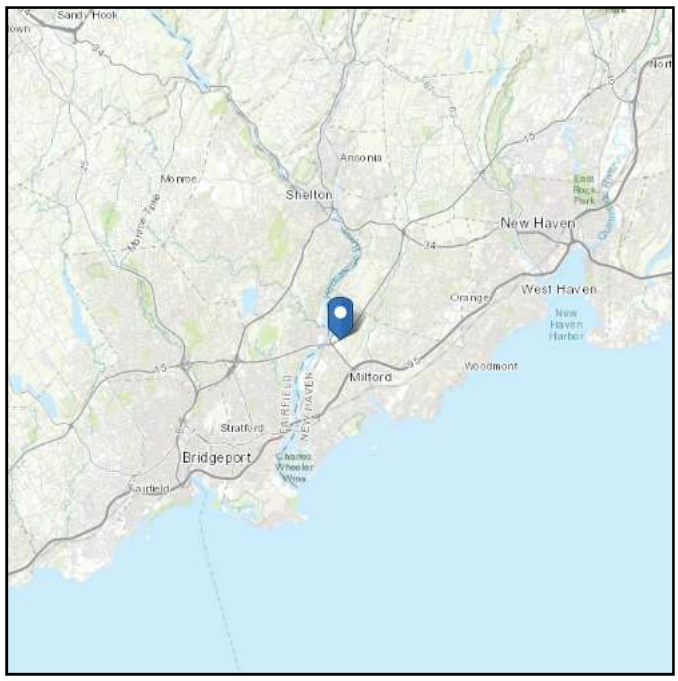

Wind

Results:

Wind Speed:	124 Vmph	***Milford, CT Requires 125 mph Vult***
10-year MRI	77 Vmph	
25-year MRI	87 Vmph	
50-year MRI	93 Vmph	
100-year MRI	100 Vmph	

Data Source: ASCE/SEI 7-10, Fig. 26.5-1A and Figs. CC-1–CC-4, incorporating errata of March 12, 2014

Date Accessed: Wed Jun 17 2020

Value provided is 3-second gust wind speeds at 33 ft above ground for Exposure C Category, based on linear interpolation between contours. Wind speeds are interpolated in accordance with the 7-10 Standard. Wind speeds correspond to approximately a 7% probability of exceedance in 50 years (annual exceedance probability = 0.00143, MRI = 700 years).

Site is in a hurricane-prone region as defined in ASCE/SEI 7-10 Section 26.2. Glazed openings need not be protected against wind-borne debris.

Mountainous terrain, gorges, ocean promontories, and special wind regions should be examined for unusual wind conditions.

Seismic

Site Soil Class: D - Stiff Soil

Results:

S_S :	0.196	S_{DS} :	0.209
S_1 :	0.063	S_{D1} :	0.101
F_a :	1.6	T_L :	6
F_v :	2.4	PGA :	0.104
S_{MS} :	0.314	PGA_M :	0.166
S_{M1} :	0.152	F_{PGA} :	1.591
		I_e :	1

Seismic Design Category B

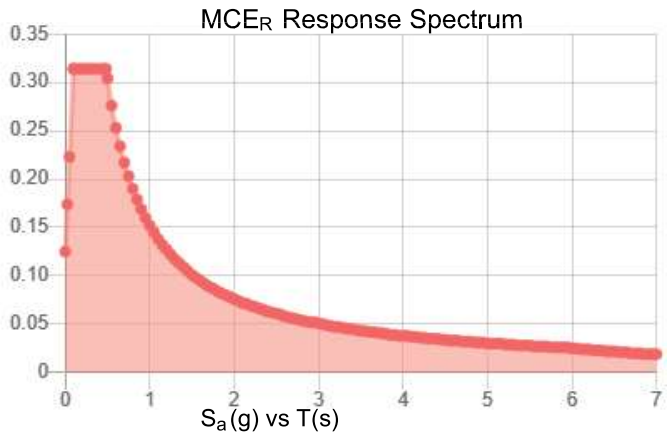

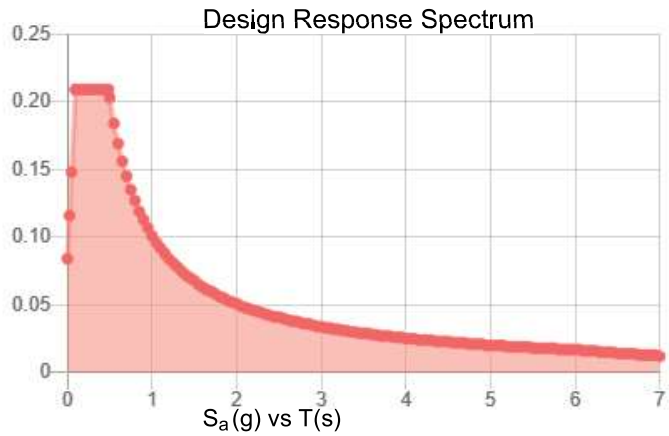

Data Accessed: Wed Jun 17 2020

Date Source: USGS Seismic Design Maps based on ASCE/SEI 7-10, incorporating Supplement 1 and errata of March 31, 2013, and ASCE/SEI 7-10 Table 1.5-2. Additional data for site-specific ground motion procedures in accordance with ASCE/SEI 7-10 Ch. 21 are available from USGS.

Ice

Results:

Ice Thickness:	0.75 in.
Concurrent Temperature:	15 F
Gust Speed:	50 mph
Data Source:	Standard ASCE/SEI 7-10, Figs. 10-2 through 10-8
Date Accessed:	Wed Jun 17 2020

Ice thicknesses on structures in exposed locations at elevations higher than the surrounding terrain and in valleys and gorges may exceed the mapped values.

Values provided are equivalent radial ice thicknesses due to freezing rain with concurrent 3-second gust speeds, for a 50-year mean recurrence interval, and temperatures concurrent with ice thicknesses due to freezing rain. Thicknesses for ice accretions caused by other sources shall be obtained from local meteorological studies. Ice thicknesses in exposed locations at elevations higher than the surrounding terrain and in valleys and gorges may exceed the mapped values.

The ASCE 7 Hazard Tool is provided for your convenience, for informational purposes only, and is provided “as is” and without warranties of any kind. The location data included herein has been obtained from information developed, produced, and maintained by third party providers; or has been extrapolated from maps incorporated in the ASCE 7 standard. While ASCE has made every effort to use data obtained from reliable sources or methodologies, ASCE does not make any representations or warranties as to the accuracy, completeness, reliability, currency, or quality of any data provided herein. Any third-party links provided by this Tool should not be construed as an endorsement, affiliation, relationship, or sponsorship of such third-party content by or from ASCE.

ASCE does not intend, nor should anyone interpret, the results provided by this Tool to replace the sound judgment of a competent professional, having knowledge and experience in the appropriate field(s) of practice, nor to substitute for the standard of care required of such professionals in interpreting and applying the contents of this Tool or the ASCE 7 standard.

In using this Tool, you expressly assume all risks associated with your use. Under no circumstances shall ASCE or its officers, directors, employees, members, affiliates, or agents be liable to you or any other person for any direct, indirect, special, incidental, or consequential damages arising from or related to your use of, or reliance on, the Tool or any information obtained therein. To the fullest extent permitted by law, you agree to release and hold harmless ASCE from any and all liability of any nature arising out of or resulting from any use of data provided by the ASCE 7 Hazard Tool.

CCIpole

per TIA-222- H

Site BU: 876320

Work Order: 1860372

CROWN CASTLE

Copyright © 2019 Crown Castle

Pole Geometry

	Pole Height Above Base (ft)	Section Length (ft)	Lap Splice Length (ft)	Number of Sides	Top Diameter (in)	Bottom Diameter (in)	Wall Thickness (in)	Bend Radius (in)	Pole Material
1	120	42	3.75	12	22	30.486	0.25	Auto	A607-60
2	81.75	42	4.75	12	29.23	37.714	0.3125	Auto	A607-60
3	44.5	44.5	0	12	36.13	45.12	0.375	Auto	A607-60

Reinforcement Configuration

	Bottom Effective Elevation (ft)	Top Effective Elevation (ft)	Type	Model	Number	1	2	3	4	5	6	7	8	9	10	11	12
1	0	4.75	plate	(TS) 1.25x4.00 (65 ksi	3			0		0						0	
2	0	24	channel	MP3-04 (1.25in)	4			0		0				0		0	
3	4.75	34.75	plate	PL 1" X 5"	4		3				-3		-4				-3.3
4	33.75	69.75	plate	PL 1" X 5"	4		-2.5				2.5		2.5				2.5
5	0	14.25	channel	MP3-03 (1.25in)	4		-1.8				1.5		1.5				1.75
6	24	44.25	channel	MP3-03 (1.25in)	4			0		0				0		0	
7	53.5	70.5	plate	CCI-SFP-045100	1											2.25	
8	53.25	72	plate	CCI-SFP-065125	1			0									
9	54	70	plate	CCI-AFP-045100	2					0				0			
10	69.5	89.5	plate	CCI-AFP-060100	2	0									0		
11	70	90.08	plate	CCI-AFP-045100	2					0				0			
12	44	56	plate	CCI-SFP-045100	3			-3			-3		-3				
13	43.75	55.5	plate	CCI-SFP-045100	1												-3
14	74.5	99.25	plate	PL 1.25" X 4"	1			0									
15	75.5	99.25	plate	PL 1.25" X 4"	1						0						
16	75.5	99.25	plate	PL 1.25" X 4"	1												0
17	69.75	78.5	plate	PL 1.25" X 4"	2				0			0					
18	70	78.5	plate	PL 1.25" X 4"	1											-2	
19	69.75	76.75	plate	PL 1.25" X 4"	1								-3				
20	0	5	plate	(TS) 1.25x6.00	1										0		
21	0	5	plate	(TS) 1.25x6.00 (mod)	1							0					
22																	

Reinforcement Details

	B (in)	H (in)	Gross Area (in^2)	Pole Face to Centroid (in)	Bottom Termination Length (in)	Top Termination Length (in)	L_u (in)	Net Area (in^2)	Bolt Hole Size (in)	Reinforcement Material
1	1.25	4	5	8	n/a	n/a	6.000	5.000	0.0000	A572-65
2	4.78	1.61	4.13	0.61	17.000	17.000	18.000	3.566	1.2500	A572-65
3	5	1	5	0.5	27.000	27.000	18.000	3.750	1.1875	A572-65
4	5	1	5	0.5	27.000	27.000	18.000	3.750	1.1875	A572-65
5	4.06	1.57	2.92	0.59	14.000	14.000	18.000	2.526	1.2500	A572-65
6	4.06	1.57	2.92	0.59	14.000	14.000	18.000	2.526	1.2500	A572-65
7	4.5	1	4.5	0.5	18.000	18.000	20.000	3.250	1.1875	A572-65
8	6.5	1.25	8.125	0.625	33.000	33.000	19.000	6.563	1.1875	A572-65
9	4.5	1	4.5	0.5	24.000	24.000	20.000	3.250	1.1875	A572-65
10	6	1	6	0.5	30.000	30.000	16.000	4.750	1.1875	A572-65
11	4.5	1	4.5	0.5	24.000	24.000	20.000	3.250	1.1875	A572-65
12	4.5	1	4.5	0.5	18.000	18.000	20.000	3.250	1.1875	A572-65
13	4.5	1	4.5	0.5	18.000	18.000	20.000	3.250	1.1875	A572-65
14	4	1.25	5	0.625	18.000	18.000	27.000	3.438	1.1875	A572-65
15	4	1.25	5	0.625	18.000	18.000	27.000	3.438	1.1875	A572-65
16	4	1.25	5	0.625	18.000	18.000	27.000	3.438	1.1875	A572-65
17	4	1.25	5	0.625	18.000	18.000	27.000	3.438	1.1875	A572-65
18	4	1.25	5	0.625	18.000	18.000	27.000	3.438	1.1875	A572-65
19	4	1.25	5	0.625	18.000	18.000	27.000	3.438	1.1875	A572-65
20	1.25	5.25	6.5625	3.375	n/a	n/a	1.250	6.563	0.0000	A572-65
21	1.25	5.1875	6.484375	3.34375	n/a	n/a	1.250	6.484	0.0000	A572-65

TNX Geometry Input

Increment (ft): 5 Export to TNX

	Section Height (ft)	Section Length (ft)	Lap Splice Length (ft)	Number of Sides	Top Diameter (in)	Bottom Diameter (in)	Wall Thickness (in)	Tapered Pole Grade	Weight Multiplier
1	120 - 115	5		12	22.000	23.010	0.25	A607-60	1.000
2	115 - 110	5		12	23.010	24.020	0.25	A607-60	1.000
3	110 - 105	5		12	24.020	25.031	0.25	A607-60	1.000
4	105 - 100	5		12	25.031	26.041	0.25	A607-60	1.000
5	100 - 99.25	0.75		12	26.041	26.192	0.25	A607-60	1.000
6	99.25 - 99	0.25		12	26.192	26.243	0.3625	A607-60	1.190
7	99 - 94	5		12	26.243	27.253	0.35625	A607-60	1.191
8	94 - 90.08	3.92		12	27.253	28.045	0.35	A607-60	1.198
9	90.08 - 89.83	0.25		12	28.045	28.096	0.5125	A607-60	1.020
10	89.83 - 89.5	0.33		12	28.096	28.162	0.5125	A607-60	1.019
11	89.5 - 89.25	0.25		12	28.162	28.213	0.725	A607-60	0.913
12	89.25 - 84.25	5		12	28.213	29.223	0.7	A607-60	0.924
13	84.25 - 81.75	6.25	3.75	12	29.223	30.486	0.7	A607-60	0.914
14	81.75 - 77	4.75		12	29.228	30.188	0.8625	A607-60	0.996
15	77 - 76.75	0.25		12	30.188	30.239	0.8625	A607-60	0.995
16	76.75 - 76.5	0.25		12	30.239	30.289	0.9625	A607-60	0.949
17	76.5 - 75.5	1		12	30.289	30.491	0.9625	A607-60	0.945
18	75.5 - 75.25	0.25		12	30.491	30.542	0.7625	A607-60	1.046
19	75.25 - 74.5	0.75		12	30.542	30.693	0.7625	A607-60	1.043
20	74.5 - 74.25	0.25		12	30.693	30.744	0.8375	A607-60	0.889
21	74.25 - 72	2.25		12	30.744	31.198	0.825	A607-60	0.894
22	72 - 71.75	0.25		12	31.198	31.249	0.7625	A607-60	1.073
23	71.75 - 70.5	1.25		12	31.249	31.501	0.7625	A607-60	1.068
24	70.5 - 70.25	0.25		12	31.501	31.552	0.7875	A607-60	1.091
25	70.25 - 70	0.25		12	31.552	31.602	0.7875	A607-60	1.090
26	70 - 69.75	0.25		12	31.602	31.653	0.725	A607-60	1.111
27	69.75 - 69.5	0.25		12	31.653	31.703	0.875	A607-60	0.982
28	69.5 - 69.25	0.25		12	31.703	31.754	0.75	A607-60	0.979
29	69.25 - 64.25	5		12	31.754	32.764	0.7375	A607-60	0.977
30	64.25 - 59.25	5		12	32.764	33.774	0.7125	A607-60	0.993
31	59.25 - 56	3.25		12	33.774	34.431	0.7125	A607-60	0.983
32	56 - 55.75	0.25		12	34.431	34.481	0.8125	A607-60	1.017
33	55.75 - 55.5	0.25		12	34.481	34.532	0.8125	A607-60	1.016
34	55.5 - 55.25	0.25		12	34.532	34.582	0.8875	A607-60	0.978
35	55.25 - 54	1.25		12	34.582	34.835	0.875	A607-60	0.987
36	54 - 53.75	0.25		12	34.835	34.885	0.75	A607-60	1.037
37	53.75 - 53.5	0.25		12	34.885	34.936	0.7375	A607-60	1.053
38	53.5 - 53.25	0.25		12	34.936	34.986	0.6625	A607-60	1.107
39	53.25 - 53	0.25		12	34.986	35.037	0.6	A607-60	1.097
40	53 - 48	5		12	35.037	36.047	0.5875	A607-60	1.103
41	48 - 44.5	8.25	4.75	12	36.047	37.714	0.5875	A607-60	1.092
42	44.5 - 38.75	5.75		12	36.129	37.291	0.6625	A607-60	0.976
43	38.75 - 34.75	4		12	37.291	38.099	0.6625	A607-60	0.968
44	34.75 - 34.5	0.25		12	38.099	38.150	0.825	A607-60	0.982
45	34.5 - 33.75	0.75		12	38.150	38.301	0.825	A607-60	0.980
46	33.75 - 33.5	0.25		12	38.301	38.352	0.625	A607-60	1.022
47	33.5 - 28.5	5		12	38.352	39.362	0.6125	A607-60	1.031
48	28.5 - 24	4.5		12	39.362	40.271	0.6625	A607-60	0.946
49	24 - 23.75	0.25		12	40.271	40.322	0.7	A607-60	0.950
50	23.75 - 18.75	5		12	40.322	41.332	0.6875	A607-60	0.956
51	18.75 - 14.25	4.5		12	41.332	42.241	0.675	A607-60	0.964
52	14.25 - 14	0.25		12	42.241	42.291	0.775	A607-60	0.954
53	14 - 9	5		12	42.291	43.302	0.7625	A607-60	0.958
54	9 - 5	4		12	43.302	44.110	0.75	A607-60	0.965
55	5 - 4.75	0.25		12	44.110	44.160	0.9125	A607-60	0.899
56	4.75 - 4.5	0.25		12	44.160	44.211	0.8	A607-60	0.977
57	4.5 - 0	4.5		12	44.211	45.120	0.7875	A607-60	0.982

TNX Section Forces

Increment (ft): 5

	Section Height (ft)	TNX Output P_u (K)	M_{ux} (kip-ft)	V_u (K)
1	120 - 115	4.80	41.75	6.73
2	115 - 110	8.65	100.22	13.72
3	110 - 105	9.09	171.10	14.66
4	105 - 100	14.34	282.18	21.15
5	100 - 99.25	14.42	298.09	21.29
6	99.25 - 99	14.47	303.42	21.34
7	99 - 94	20.24	436.34	29.34
8	94 - 90.08	21.02	552.88	30.14
9	90.08 - 89.83	21.09	560.42	30.18
10	89.83 - 89.5	21.17	570.39	30.26
11	89.5 - 89.25	21.24	577.96	30.31
12	89.25 - 84.25	22.63	732.27	31.42
13	84.25 - 81.75	23.35	811.51	31.99
14	81.75 - 77	26.01	966.28	33.18
15	77 - 76.75	26.11	974.58	33.24
16	76.75 - 76.5	26.21	982.90	33.30
17	76.5 - 75.5	26.60	1016.32	33.55
18	75.5 - 75.25	26.70	1024.71	33.61
19	75.25 - 74.5	27.04	1049.93	33.88
20	74.5 - 74.25	27.13	1058.40	33.94
21	74.25 - 72	27.89	1135.35	34.48
22	72 - 71.75	27.99	1143.98	34.54
23	71.75 - 70.5	28.45	1187.35	34.87
24	70.5 - 70.25	28.56	1196.07	34.93
25	70.25 - 70	28.66	1204.81	34.99
26	70 - 69.75	28.76	1213.57	35.06
27	69.75 - 69.5	28.86	1222.34	35.12
28	69.5 - 69.25	28.95	1231.13	35.19
29	69.25 - 64.25	30.71	1409.94	36.36
30	64.25 - 59.25	32.52	1594.46	37.47
31	59.25 - 56	33.72	1717.42	38.22
32	56 - 55.75	33.85	1726.98	38.28
33	55.75 - 55.5	33.97	1736.55	38.34
34	55.5 - 55.25	34.09	1746.15	38.41
35	55.25 - 54	34.69	1794.35	38.75
36	54 - 53.75	34.82	1804.05	38.80
37	53.75 - 53.5	34.93	1813.75	38.87
38	53.5 - 53.25	35.04	1823.48	38.93
39	53.25 - 53	35.15	1833.21	38.99
40	53 - 48	37.22	2031.05	40.17
41	48 - 44.5	38.71	2172.98	40.97
42	44.5 - 38.75	42.56	2412.74	42.43
43	38.75 - 34.75	44.31	2584.16	43.32
44	34.75 - 34.5	44.46	2595.00	43.37
45	34.5 - 33.75	44.84	2627.58	43.55
46	33.75 - 33.5	44.95	2638.47	43.60
47	33.5 - 28.5	47.18	2859.04	44.66
48	28.5 - 24	49.22	3061.91	45.56
49	24 - 23.75	49.35	3073.30	45.59
50	23.75 - 18.75	51.73	3303.60	46.56
51	18.75 - 14.25	53.90	3514.86	47.38
52	14.25 - 14	54.06	3526.71	47.41
53	14 - 9	56.71	3766.06	48.37
54	9 - 5	58.80	3960.92	49.10
55	5 - 4.75	58.96	3973.20	49.12
56	4.75 - 4.5	59.09	3985.48	49.17
57	4.5 - 0	61.56	4208.56	49.99

Analysis Results

Elevation (ft)	Component Type	Size	Critical Element	% Capacity	Pass / Fail
120 - 115	Pole	TP23.01x22x0.25	Pole	7.4%	Pass
115 - 110	Pole	TP24.02x23.01x0.25	Pole	16.4%	Pass
110 - 105	Pole	TP25.031x24.02x0.25	Pole	25.7%	Pass
105 - 100	Pole	TP26.041x25.031x0.25	Pole	39.7%	Pass
100 - 99.25	Pole	TP26.192x26.041x0.25	Pole	41.5%	Pass
99.25 - 99	Pole + Reinf.	TP26.243x26.192x0.3625	Reinf. 14 Tension Yield	38.4%	Pass
99 - 94	Pole + Reinf.	TP27.253x26.243x0.3563	Reinf. 14 Tension Yield	51.9%	Pass
94 - 90.08	Pole + Reinf.	TP28.045x27.253x0.35	Reinf. 14 Tension Yield	62.6%	Pass
90.08 - 89.83	Pole + Reinf.	TP28.096x28.045x0.5125	Reinf. 11 Tension Rupture	51.9%	Pass
89.83 - 89.5	Pole + Reinf.	TP28.162x28.096x0.5125	Reinf. 11 Tension Rupture	52.6%	Pass
89.5 - 89.25	Pole + Reinf.	TP28.213x28.162x0.725	Reinf. 15 Tension Yield	40.7%	Pass
89.25 - 84.25	Pole + Reinf.	TP29.223x28.213x0.7	Reinf. 15 Tension Yield	49.0%	Pass
84.25 - 81.75	Pole + Reinf.	TP30.486x29.223x0.7	Reinf. 15 Tension Yield	53.0%	Pass
81.75 - 77	Pole + Reinf.	TP30.188x29.228x0.8625	Reinf. 17 Tension Yield	47.8%	Pass
77 - 76.75	Pole + Reinf.	TP30.239x30.188x0.8625	Reinf. 17 Tension Yield	48.1%	Pass
76.75 - 76.5	Pole + Reinf.	TP30.289x30.239x0.9625	Reinf. 14 Tension Yield	45.2%	Pass
76.5 - 75.5	Pole + Reinf.	TP30.491x30.289x0.9625	Reinf. 14 Tension Yield	46.3%	Pass
75.5 - 75.25	Pole + Reinf.	TP30.542x30.491x0.7625	Reinf. 17 Tension Yield	53.3%	Pass
75.25 - 74.5	Pole + Reinf.	TP30.693x30.542x0.7625	Reinf. 17 Tension Yield	54.2%	Pass
74.5 - 74.25	Pole + Reinf.	TP30.744x30.693x0.8375	Reinf. 17 Tension Yield	57.1%	Pass
74.25 - 72	Pole + Reinf.	TP31.198x30.744x0.825	Reinf. 17 Tension Yield	60.0%	Pass
72 - 71.75	Pole + Reinf.	TP31.249x31.198x0.7625	Reinf. 17 Tension Yield	57.5%	Pass
71.75 - 70.5	Pole + Reinf.	TP31.501x31.249x0.7625	Reinf. 17 Tension Yield	59.0%	Pass
70.5 - 70.25	Pole + Reinf.	TP31.552x31.501x0.7875	Reinf. 17 Tension Yield	59.1%	Pass
70.25 - 70	Pole + Reinf.	TP31.602x31.552x0.7875	Reinf. 17 Tension Yield	59.4%	Pass
70 - 69.75	Pole + Reinf.	TP31.653x31.602x0.725	Reinf. 17 Tension Yield	61.6%	Pass
69.75 - 69.5	Pole + Reinf.	TP31.703x31.653x0.875	Reinf. 4 Tension Yield	52.3%	Pass
69.5 - 69.25	Pole + Reinf.	TP31.754x31.703x0.75	Reinf. 4 Tension Yield	58.4%	Pass
69.25 - 64.25	Pole + Reinf.	TP32.764x31.754x0.7375	Reinf. 4 Tension Yield	63.8%	Pass
64.25 - 59.25	Pole + Reinf.	TP33.774x32.764x0.7125	Reinf. 4 Tension Yield	69.0%	Pass
59.25 - 56	Pole + Reinf.	TP34.431x33.774x0.7125	Reinf. 4 Tension Yield	72.2%	Pass
56 - 55.75	Pole + Reinf.	TP34.481x34.431x0.8125	Reinf. 7 Tension Rupture	69.5%	Pass
55.75 - 55.5	Pole + Reinf.	TP34.532x34.481x0.8125	Reinf. 7 Tension Rupture	69.7%	Pass
55.5 - 55.25	Pole + Reinf.	TP34.582x34.532x0.8875	Reinf. 7 Tension Rupture	62.8%	Pass
55.25 - 54	Pole + Reinf.	TP34.835x34.582x0.875	Reinf. 7 Tension Rupture	63.9%	Pass
54 - 53.75	Pole + Reinf.	TP34.885x34.835x0.75	Reinf. 7 Tension Rupture	73.3%	Pass
53.75 - 53.5	Pole + Reinf.	TP34.936x34.885x0.7375	Reinf. 7 Tension Rupture	73.6%	Pass
53.5 - 53.25	Pole + Reinf.	TP34.986x34.936x0.6625	Reinf. 4 Tension Yield	79.0%	Pass
53.25 - 53	Pole + Reinf.	TP35.037x34.986x0.6	Reinf. 12 Tension Rupture	81.6%	Pass
53 - 48	Pole + Reinf.	TP36.047x35.037x0.5875	Reinf. 12 Tension Rupture	86.8%	Pass
48 - 44.5	Pole + Reinf.	TP37.714x36.047x0.5875	Reinf. 12 Tension Rupture	90.2%	Pass
44.5 - 38.75	Pole + Reinf.	TP37.291x36.129x0.6625	Reinf. 4 Tension Yield	88.2%	Pass
38.75 - 34.75	Pole + Reinf.	TP38.099x37.291x0.6625	Reinf. 4 Tension Yield	91.2%	Pass
34.75 - 34.5	Pole + Reinf.	TP38.15x38.099x0.825	Reinf. 3 Tension Yield	73.1%	Pass
34.5 - 33.75	Pole + Reinf.	TP38.301x38.15x0.825	Reinf. 3 Tension Yield	73.6%	Pass
33.75 - 33.5	Pole + Reinf.	TP38.352x38.301x0.625	Reinf. 6 Tension Rupture	90.6%	Pass
33.5 - 28.5	Pole + Reinf.	TP39.362x38.352x0.6125	Reinf. 6 Tension Rupture	94.0%	Pass
28.5 - 24	Pole + Reinf.	TP40.271x39.362x0.6625	Reinf. 3 Tension Yield	97.0%	Pass
24 - 23.75	Pole + Reinf.	TP40.322x40.271x0.7	Reinf. 3 Tension Yield	92.8%	Pass
23.75 - 18.75	Pole + Reinf.	TP41.332x40.322x0.6875	Reinf. 3 Tension Yield	95.9%	Pass
18.75 - 14.25	Pole + Reinf.	TP42.241x41.332x0.675	Reinf. 3 Tension Yield	98.5%	Pass
14.25 - 14	Pole + Reinf.	TP42.291x42.241x0.775	Reinf. 3 Tension Yield	85.8%	Pass
14 - 9	Pole + Reinf.	TP43.302x42.291x0.7625	Reinf. 3 Tension Yield	88.4%	Pass
9 - 5	Pole + Reinf.	TP44.11x43.302x0.75	Reinf. 3 Tension Yield	90.3%	Pass
5 - 4.75	Pole + Reinf.	TP44.16x44.11x0.9125	Reinf. 3 Tension Yield	81.9%	Pass
4.75 - 4.5	Pole + Reinf.	TP44.211x44.16x0.8	Reinf. 5 Tension Rupture	80.9%	Pass
4.5 - 0	Pole + Reinf.	TP45.12x44.211x0.7875	Reinf. 5 Tension Rupture	83.0%	Pass
				Summary	
			Pole	72.6%	Pass
			Reinforcement	98.5%	Pass
			Overall	98.5%	Pass

Additional Calculations

Section Elevation (ft)	Moment of Inertia (in^4)			Area (in^2)			% Capacity*																					
	Pole	Reinf.	Total	Pole	Reinf.	Total	Pole	R1	R2	R3	R4	R5	R6	R7	R8	R9	R10	R11	R12	R13	R14	R15	R16	R17	R18	R19	R20	R21
120 - 115	1213	n/a	1213	18.30	n/a	18.30	7.4%																					
115 - 110	1382	n/a	1382	19.11	n/a	19.11	16.4%																					
110 - 105	1566	n/a	1566	19.92	n/a	19.92	25.7%																					
105 - 100	1765	n/a	1765	20.73	n/a	20.73	39.7%																					
100 - 99.25	1796	n/a	1796	20.85	n/a	20.85	41.5%																					
99.25 - 99	1884	751	2634	20.89	15.00	35.89	31.7%														38.4%	32.5%	32.5%					
99 - 94	2108	809	2917	21.71	15.00	36.71	43.3%														51.9%	44.1%	44.1%					
94 - 90.08	2295	857	3153	22.34	15.00	37.34	52.6%														62.6%	53.3%	53.3%					
90.08 - 89.83	2235	2180	4415	22.38	24.00	46.38	36.1%											51.9%			49.8%	43.4%	50.0%					
89.83 - 89.5	2251	2190	4441	22.44	24.00	46.44	36.6%											52.6%			50.5%	44.0%	50.7%					
89.5 - 89.25	2276	3952	6228	22.48	36.00	58.48	27.4%										33.2%	39.8%			40.6%	40.7%	35.1%					
89.25 - 84.25	2531	4227	6758	23.29	36.00	59.29	33.6%										40.0%	47.9%			48.9%	49.0%	42.4%					
84.25 - 81.75	2665	4368	7033	23.70	36.00	59.70	36.6%										43.3%	51.8%			52.9%	53.0%	45.9%					
81.75 - 77	3434	5537	8970	30.02	51.00	81.02	30.4%										39.4%	46.0%			47.7%	42.5%	40.3%	47.8%	38.5%			
77 - 76.75	3451	5554	9005	30.07	51.00	81.07	30.6%										39.6%	46.3%			48.0%	42.7%	40.5%	48.1%	38.7%			
76.75 - 76.5	3483	6565	10048	30.12	56.00	86.12	28.2%										38.1%	38.7%			45.2%	40.6%	40.7%	42.6%	38.9%	42.8%		
76.5 - 75.5	3554	6648	10202	30.32	56.00	86.32	28.9%										39.0%	39.6%			46.3%	41.6%	41.7%	43.7%	39.9%	43.8%		
75.5 - 75.25	3556	4807	8362	30.37	46.00	76.37	34.6%										47.8%	48.4%			47.2%			53.3%	51.0%	46.5%		
75.25 - 74.5	3609	4852	8461	30.53	46.00	76.53	35.2%										48.6%	49.3%			48.0%			54.2%	51.8%	47.3%		
74.5 - 74.25	3738	5532	9270	30.58	41.00	71.58	35.8%										53.3%	52.7%						57.1%	51.8%	50.4%		
74.25 - 72	3906	5690	9596	31.03	41.00	72.03	37.8%										56.0%	55.3%						60.0%	54.4%	53.0%		
72 - 71.75	3808	5092	8900	31.09	49.13	80.21	37.1%								38.8%		49.8%	51.1%						57.5%	55.1%	49.1%		
71.75 - 70.5	3902	5171	9072	31.34	49.13	80.46	38.2%								39.8%		51.1%	52.4%						59.0%	56.6%	50.4%		
70.5 - 70.25	3925	5537	9462	31.39	53.63	85.01	37.3%							43.2%	40.1%		48.9%	50.3%						59.1%	49.6%	50.7%		
70.25 - 70	3944	5554	9498	31.44	53.63	85.07	37.5%							43.4%	40.3%		49.1%	50.5%						59.4%	49.9%	50.9%		
70 - 69.75	3961	4823	8785	31.49	48.63	80.12	41.2%							52.7%	40.3%	54.3%	55.0%							61.6%		50.9%		
69.75 - 69.5	4028	6551	10579	31.54	53.63	85.17	35.6%				52.3%			44.8%	39.7%	50.9%	42.7%											
69.5 - 69.25	4004	5187	9190	31.59	41.63	73.22	40.1%				58.4%			57.9%	45.1%	55.4%												
69.25 - 64.25	4401	5507	9909	32.61	41.63	74.23	44.4%				63.8%			63.4%	49.5%	60.7%												
64.25 - 59.25	4825	5838	10663	33.62	41.63	75.25	48.6%				69.0%			68.6%	53.7%	65.7%												
59.25 - 56	5114	6058	11172	34.28	41.63	75.91	51.3%				72.2%			71.9%	56.3%	68.9%												
56 - 55.75	5209	7530	12738	34.33	55.13	89.46	47.2%				68.6%			69.5%	46.7%	59.0%			60.1%									
55.75 - 55.5	5232	7551	12782	34.38	55.13	89.51	47.4%				68.8%			69.7%	46.9%	59.2%			60.3%									
55.5 - 55.25	5199	8671	13870	34.43	59.63	94.06	43.2%				59.3%			62.8%	46.8%	57.2%			56.8%	59.4%								
55.25 - 54	5314	8793	14107	34.69	59.63	94.31	44.1%				60.3%			63.9%	47.7%	58.2%			57.8%	60.4%								
54 - 53.75	5328	6906	12234	34.74	50.63	85.36	51.1%				65.5%			73.3%	53.8%				65.3%	63.2%								
53.75 - 53.5	5351	6925	12276	34.79	50.63	85.41	51.3%				65.7%			73.6%	54.0%				65.5%	63.4%								
53.5 - 53.25	5418	5610	11027	34.84	46.13	80.97	58.9%				79.0%				56.2%				70.9%	73.8%								
53.25 - 53	5388	4730	10118	34.89	38.00	72.89	62.2%				79.3%								81.6%	73.3%								
53 - 48	5872	4982	10854	35.91	38.00	73.91	66.8%				83.9%								86.8%	78.0%								
48 - 44.5	6228	5162	11390	36.62	38.00	74.62	70.0%				87.0%								90.2%	81.1%								
44.5 - 38.75	7765	5730	13494	44.51	31.68	76.19	61.5%				88.2%		82.2%															
38.75 - 34.75	8286	5977	14263	45.49	31.68	77.17	64.2%				91.2%		85.1%															
34.75 - 34.5	8319	9340	17659	45.55	51.68	97.23	51.5%			73.1%	72.0%		72.0%															
34.5 - 33.75	8419	9410	17829	45.73	51.68	97.41	51.9%			73.6%	72.4%		72.5%															
33.75 - 33.5	8462	5245	13707	45.79	31.68	77.47	69.3%			90.4%			90.6%															
33.5 - 28.5	9155	5523	14678	47.01	31.68	78.69	72.6%			94.0%			94.0%															
28.5 - 24	9807	7211	17019	48.11	31.68	79.79	67.8%			97.0%			96.8%															
24 - 23.75	9844	8023	17867	48.17	36.52	84.69	64.9%		88.5%	92.8%																		
23.75 - 18.75	10609	8417	19026	49.38	36.52	85.90	67.8%		91.3%	95.9%																		
18.75 - 14.25	11331	8779	20110	50.48	36.52	87.00	70.3%		93.7%	98.5%																		
14.25 - 14	11366	11460	22827	50.54	48.20	98.74	63.4%		84.1%	85.8%		79.1%																
14 - 9	12208	11986	24194	51.76	48.20	99.96	66.0%		86.5%	88.3%		81.4%																
9 - 5	12911	12415	25326	52.73	48.20	100.93	68.1%		88.4%	90.3%		83.2%																
5 - 4.75	13162	17431	30593	52.80	61.25	114.04	59.7%		81.1%	81.9%		77.1%															66.9%	58.7%
4.75 - 4.5	13043	13915	26958	52.86	56.25	109.10	66.2%	78.5%	72.2%			80.8%															55.0%	70.4%
4.5 - 0	13871	14430	28301	53.95	56.25	110.20	68.5%	80.3%	74.2%			82.9%															56.5%	72.1%

Note: Section capacity checked in 5 degree increments.
Rating per TIA-222-H Section 15.5.

Monopole Base Plate Connection

Site Info	
BU #	876320
Site Name	528 Wheelers Farm Rd
Order #	524457 Rev. 0

Analysis Considerations	
TIA-222 Revision	H
Grout Considered:	No
l_{ar} (in)	2

Applied Loads	
Moment (kip-ft)	4208.56
Axial Force (kips)	61.56
Shear Force (kips)	49.99

**TIA-222-H Section 15.5 Applied*

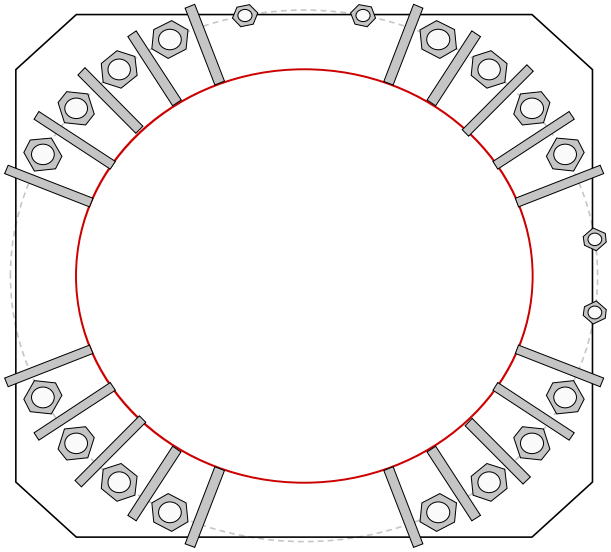

Connection Properties

Anchor Rod Data

GROUP 1: (16) 2-1/4" ø bolts (A615-75 N; Fy=75 ksi, Fu=100 ksi) on 58" BC

Anchor Spacing: 6 in

GROUP 2: (4) 1-3/8" ø bolts (R71 150ksi 1-3/8" N; Fy=120 ksi, Fu=125 ksi) on 58" BC

pos. (deg): 7.9, 78.4, 101.6, 352.1

Base Plate Data

57" OD x 3.25" Plate (A572-50; Fy=50 ksi, Fu=65 ksi)

Stiffener Data

(20) 18"H x 9"W x 1"T, Notch: 0.75"

plate: Fy= 50 ksi ; weld: Fy= 80 ksi

horiz. weld: 0.5" groove, 45° dbl bevel, 0.5" fillet

vert. weld: 0.375" fillet

Pole Data

45.12" x 0.375" 12-sided pole (A607-60; Fy=60 ksi, Fu=75 ksi)

Analysis Results

Anchor Rod Summary *(units of kips, kip-in)*

GROUP 1:		
Pu_c = 216.34	ϕPn_c = 268.39	**Stress Rating**
Vu = 3.12	ϕVn = 120.77	**76.8%**
Mu = n/a	ϕMn = n/a	Pass
GROUP 2:		
Pu_c = 69.37	ϕPn_c = 160.37	**Stress Rating**
Vu = 0	ϕVn = 72.17	**41.2%**
Mu = n/a	ϕMn = n/a	Pass

Base Plate Summary

Max Stress (ksi):	4.14	(Shear)
Allowable Stress (ksi):	29.25	
Stress Rating:	**13.5%**	Pass

Stiffener Summary

Horizontal Weld:	**42.1%**	Pass
Vertical Weld:	**54.6%**	Pass
Plate Flexure+Shear:	**22.1%**	Pass
Plate Tension+Shear:	**43.8%**	Pass
Plate Compression:	**60.7%**	Pass

Pole Summary

Punching Shear:	**23.7%**	Pass

Drilled Pier Foundation

BU # :	876320
Site Name:	528 Wheelers Farm Rc
Order Number:	524457 Rev.0

TIA-222 Revison:	H
Tower Type:	Monopole

Applied Loads

	Comp.	Uplift
Moment (kip-ft)	4209	
Axial Force (kips)	62	
Shear Force (kips)	50	

Material Properties

Concrete Strength, f'c:	3	ksi
Rebar Strength, Fy:	60	ksi

Pier Design Data

Depth	19	ft
Ext. Above Grade	0.5	ft
Pier Section 1		
From 0.5' above grade to 19' below grade		
Pier Diameter	7	ft
Rebar Quantity	32	
Rebar Size	11	
Clear Cover to Ties	4	in
Tie Size	5	

Rebar & Pier Options

Embedded Pole Inputs

Belled Pier Inputs

Analysis Results

Soil Lateral Check	*Compression*	*Uplift*
$D_{v=0}$ (ft from TOC)	5.74	-
Soil Safety Factor	1.93	-
Max Moment (kip-ft)	4547.33	-
Rating*	*65.7%*	-
Soil Vertical Check	*Compression*	*Uplift*
Skin Friction (kips)	525.00	-
End Bearing (kips)	600.00	-
Weight of Concrete (kips)	100.50	-
Total Capacity (kips)	1125.00	-
Axial (kips)	162.50	-
Rating*	*13.8%*	-
Reinforced Concrete Check	*Compression*	*Uplift*
Critical Depth (ft from TOC)	5.57	-
Critical Moment (kip-ft)	4546.77	-
Critical Moment Capacity	7545.74	-
Rating*	*57.4%*	-

Soil Interaction Rating*	**65.7%**
Structural Foundation Rating*	**57.4%**

*Rating per TIA-222-H Section 15.5

Check Limitation

Apply TIA-222-H Section 15.5:	☑
N/A	☐

Soil Profile

Groundwater Depth	7	# of Layers	7

Layer	Top (ft)	Bottom (ft)	Thickness (ft)	γ_{soil} (pcf)	$\gamma_{concrete}$ (pcf)	Cohesion (ksf)	Angle of Friction (degrees)	Calculated Ultimate Skin Friction Comp (ksf)	Calculated Ultimate Skin Friction Uplift (ksf)	Ultimate Skin Friction Comp Override (ksf)	Ultimate Skin Friction Uplift Override (ksf)	Ult. Gross Bearing Capacity (ksf)	SPT Blow Count	Soil Type
1	0	2	2	100	150	0	0	0.000	0.000	0.00	0.00			Cohesionless
2	2	3.5	1.5	135	150	0	0	0.000	0.000	0.00	0.00			Cohesionless
3	3.5	6	2.5	135	150	0	42	0.000	0.000	0.00	0.00			Cohesionless
4	6	7	1	135	150	0	42	0.000	0.000	1.28	1.28			Cohesionless
5	7	13.5	6.5	72.6	87.6	0	42	0.000	0.000	1.28	1.28			Cohesionless
6	13.5	14	0.5	77.6	87.6	8	0	3.600	3.600	1.28	1.28			Cohesive
7	14	19	5	77.6	87.6	8	0	3.60	3.60	4.32	4.32	20.78758		Cohesive

Exhibit E

Mount Analysis

Date: **June 12, 2020**

Darcy Tarr
Crown Castle
3530 Toringdon Way, Suite 300
Charlotte, NC 28277
704-405-6589

POD Group
1033 E Turkeyfoot Lake Rd. Suite 206
Akron, OH 44312
(330) 961.7432
mhoudeshell@podgrp.com

Subject:	**Mount Analysis Report**	
Carrier Designation:	**T-Mobile**	
	Carrier Site Number:	**CT11082E**
	Carrier Site Name:	**Stratford/ MP X 53/ Main**
Crown Castle Designation:	**Crown Castle BU Number:**	**876320**
	Crown Castle Site Name:	**528 WHEELERS FARM RD**
	Crown Castle JDE Job Number:	**614504**
	Crown Castle Order Number:	**524457 Rev. 0**
Engineering Firm Designation:	**POD Report Designation:**	**20-65180**
Site Data:	**528 Wheelers Farm Rd., Milford, New Haven, CT 06460**	
	Latitude 41°14'54.35" Longitude 73°4'44.67"	
Structure Information:	**Tower Height & Type:**	**120 ft Monopole**
	Mount Elevation:	**105 ft**
	Mount Type:	**12.5 ft Platform with Support Rails**

Dear Darcy Tarr,

POD Group is pleased to submit this "Mount Analysis Report" to determine the structural integrity of T-Mobile's antenna mounting system with the proposed appurtenance and equipment addition on the abovementioned supporting tower structure. Analysis of the existing supporting tower structure is to be completed by others and therefore is not part of this analysis. Analysis of the antenna mounting system as a tie-off point for fall protection or rigging is not part of this document.

The purpose of the analysis is to determine acceptability of the mount stress level. Based on our analysis we have determined the mount stress level to be:

12.5 ft Platform with Support Rails (Multiple Sector) **Sufficient**

This analysis utilizes an ultimate 3-second gust wind speed of 125 mph as required by the 2018 Connecticut State Building Code. Applicable Standard references and design criteria are listed in Section 2 - Analysis Criteria.

Mount structural analysis prepared by: Nathan Gilkerson

Respectfully submitted by:

STATE OF CONNECTICUT
JASON CHERONIS
PEN.0032793
LICENSED
PROFESSIONAL ENGINEER

6/12/2020

Jason Cheronis, P.E.
Connecticut PE #: PEN.0032793

TABLE OF CONTENTS

1) INTRODUCTION

2) ANALYSIS CRITERIA
Table 1 – Final Equipment Configuration

3) ANALYSIS PROCEDURE
Table 2 – Documents Provided
3.1) Analysis Method
3.2) Assumptions

4) ANALYSIS RESULTS
Table 3 - Mount Component Stresses vs. Capacity
4.1) Recommendations

5) DISCLAIMER OF WARRANTIES

6) APPENDIX A
Wire Frame and Rendered Models

7) APPENDIX B
Software Input Calculations

8) APPENDIX C
Software Analysis Output

9) APPENDIX D
Additional Calculations

1) INTRODUCTION

This mount is an existing 12.5 ft Platform with Support Rails designed by SitePro1 (Part #: RMQP-4096-HK). This mount is installed at the 105 ft elevation on the 120 ft Monopole.

2) ANALYSIS CRITERIA

Building Code: 2018 Connecticut Building Code
TIA-222 Revision: TIA-222-H
Risk Category: II
Ultimate Wind Speed: 125 mph
Exposure Category: C
Topographic Factor at Base: 1.000
Topographic Factor at Mount: 1.000
Ice Thickness: 1.5 in
Wind Speed with Ice: 50 mph
Seismic S_s: 0.186
Seismic S_1: 0.062
Live Loading Wind Speed: 30 mph
Man Live Load at Mid/End-Points: 250 lb
Man Live Load at Mount Pipes: 500 lb

Table 1 - Final Equipment Configuration

Mount Centerline (ft)	Antenna Centerline (ft)	Number of Antennas	Antenna Manufacturer	Antenna Model	Mount / Modification Details	Note
105	107	3	Ericsson	AIR 32 B2A/B66AA	12.5 ft Platform with Support Rails (RMQP-4096-HK)	-
		3	Ericsson	AIR 3246 B66		
		3	Ericsson	AIR6449 B41		
		3	RFS	APXVAARR24_43-U-NA20		
		3	Ericsson	Radio 4449 B71/B85A		
		3	Ericsson	RRUS 4415 B25_CCIV2		

3) ANALYSIS PROCEDURE

Table 2 - Documents Provided

Document	Remarks	Reference	Source
Crown Application	-	Crown Castle App ID: 524457 Rev. 0 Dated: 06/09/2020	Crown Castle
RFDS	-	T-Mobile Site ID: CT11082E Dated: 05/19/2020	Crown Castle
Elevation Drawings	-	Crown Castle Drawing #: A1-105 Dated: 06/10/2020	Crown Castle
Structural Analysis	-	Tower Engineering Professionals Project #: 25570.281668 Dated: 07/26/2019	Crown Castle
Mount Specifications	-	SitePro1 Drawing #: RMQP-4096-HK Dated: 07/14/2014	POD

3.1) Analysis Method

RISA-3D (Version 17.0.4), a commercially available analysis software package, was used to create a three-dimensional model of the antenna mounting system and calculate member stresses for various loading cases. Selected output from the analysis are included in the Appendices.

A tool internally developed, using Microsoft Excel, by POD Group, was used to calculate wind loading on all appurtenances, dishes, and mount members for various load cases. Selected output from the calculations is included in Appendix B.

This analysis was performed in accordance with Crown Castle's ENG-SOW-10208 Tower Mount Analysis (Revision B).

3.2) Assumptions

1) The antenna mounting system was properly fabricated, installed, and maintained in good condition in accordance with its original design, TIA Standards, and/or manufacturer's specifications.
2) The configuration of antennas, mounts, and other appurtenances are as specified in Table 1 and the referenced drawings.
3) All member connections are assumed to have been designed to meet or exceed the load carrying capacity of the connected member unless otherwise specified in this report.
4) The weight of the mount was increased 10% in the analysis to account for connections, coax, and jumpers.
5) The analysis will be required to be revised if the existing conditions in the field differ from those shown in the above-referenced documents or assumed in this analysis. No allowance was made for any damaged, missing, or rusted members.
6) Steel grades have been assumed as follows, unless noted otherwise:
    a. Angle, Plate — ASTM A36 (GR 36)
    b. HSS (Rectangular) — ASTM 500 (GR B-46)
    c. Pipe — ASTM A53 (GR 35)
    d. Connection Bolts — ASTM A325

If any of these assumptions are not valid or have been made in error, this analysis may be affected, and POD Group should be allowed to review any new information to determine its effect on the structural integrity of the mount.

4) ANALYSIS RESULTS

Table 3 - Mount Component Stresses vs. Capacity (12.5 ft Platform with Support Rails)

Notes	Component	Critical Member	Centerline (ft)	% Capacity	Pass / Fail
	Support	SUP3A	105	21.3	Pass
	Standoff	SO3	105	16.5	Pass
	Corner Plate	PLATECORNER1B	105	85.1	Pass
	Plate	PLATE2	105	86.4	Pass
	Mount Pipe	MP ALPHA2	105	58.3	Pass
	Kicker	KICKER1	105	15.8	Pass
	Rail	RAIL2	105	46.9	Pass
	Face	FACE3	105	12.7	Pass
	Corner	CR1A	105	13.5	Pass
	Angle	ANGLE1	105	45.1	Pass
	Flange Plate	-	-	12.4	Pass
	Flange Bolts	-	-	1.3	Pass

Structure Rating (max from all components) =	**86.4%**

Notes:
1) See additional documentation in “Appendix D – Additional Calculations” for calculations supporting the % capacity

4.1) Recommendations

The mount has sufficient capacity to carry the proposed loading configuration. No modifications are required at this time.

5) DISCLAIMER OF WARRANTIES

POD Group has not performed a site visit to the structure to verify the member sizes or antenna/coax loading unless noted otherwise. If the existing conditions are not as represented in this report, we should be contacted immediately to evaluate the significance of the discrepancy. This is not a condition assessment of the structure or foundation. This report does not replace a full structure inspection. The structure, foundations, and mounting systems are assumed to have been properly fabricated, erected, maintained, in good condition, twist free, and plumb.

The engineering services rendered by POD Group in connection with this Structural Analysis are limited to a computer analysis of the structure and theoretical capacity of its main structural members. No allowance was made for any damaged, bent, missing, loose, or rusted members (above and below ground). No allowance was made for loose bolts or cracked welds.

POD Group does not analyze the fabrication of the structure (including welding). It is not possible to have all the very detailed information needed to perform a thorough analysis of every structural sub-component and connection of an existing structure. POD Group provides a limited scope of service in that we cannot verify the adequacy of every weld, plate connection detail, etc. The purpose of this report is to assess the feasibility of adding appurtenances usually accompanied by transmission lines to the structure.

It is the owner's responsibility to determine the amount of ice accumulation in excess of the code specified amount, if any, that should be considered in the structural analysis.

The attached sketches are a schematic representation of the analyzed structure. If any material is fabricated from these sketches, the contractor shall be responsible for field verifying the existing conditions, proper fit, and clearance in the field. Any mentions of structural modifications are reasonable estimates and should not be used as a precise construction document. Precise modification drawings are obtainable from POD Group, but are beyond the scope of this report.

POD Group makes no warranties, expressed and/or implied, in connection with this report and disclaims any liability arising from material, fabrication, and erection of this structure. POD Group will not be responsible whatsoever, for or on account of, consequential or incidental damages sustained by any person, firm, or organization as a result of any data or conclusions contained in this report. The maximum liability of POD Group pursuant to this report will be limited to the total fee received for preparation of this report.

APPENDIX A

Wire Frame and Rendered Models

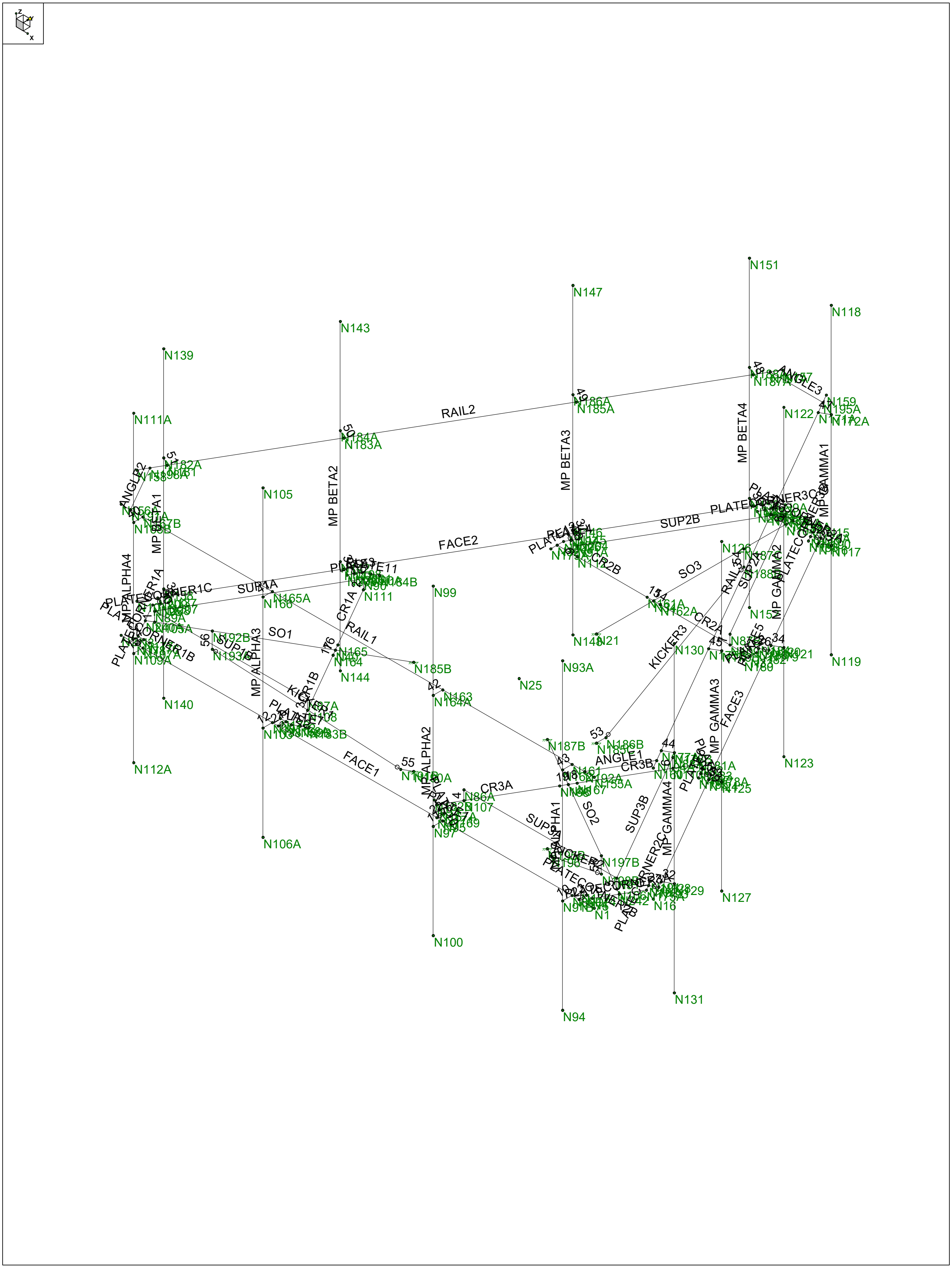
N151
N147
N143
N139
N118
N111A
N159
N122
N172A
RAIL2
N182A
N183A
N184A
N185A
N186A
N187A
ANGLE2
ANGLE3
MP BETA1
MP BETA2
MP BETA3
MP BETA4
MP GAMMA1
MP GAMMA2
MP GAMMA3
MP GAMMA4
MP ALPHA2
MP ALPHA3
MP ALPHA4
N105
N99
FACE2
SUP2B
SUB1A
N165A
N166
N111
CR1A
CR1B
SO1
SO2
SO3
RAIL1
N165
N164
N144
N185B
N25
N93A
N148
N121
N161A
N162A
CR2A
CR2B
KICKER3
N130
N119
N163
N164A
N187B
N186B
ANGLE1
CR3A
CR3B
SUP3B
FACE1
FACE3
N86A
N107
N169
N97
N123
N127
N16
N1
N140
N112A
N106A
N100
N131
N94
N109A
N192B
N193B
N183B
N155A
N197B
N139
N140

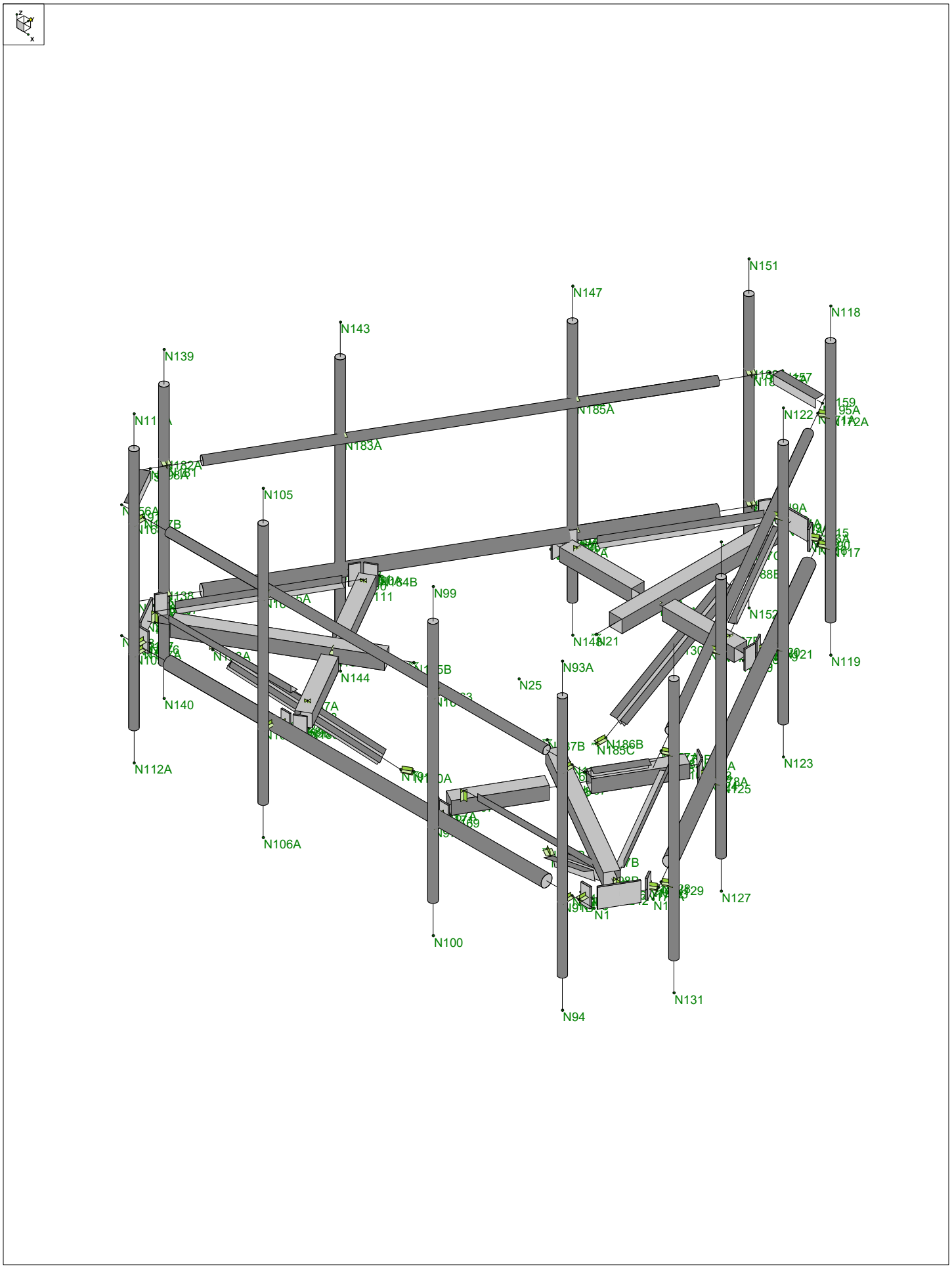
N151
N147
N118
N143
N139
N185A
N122
N183A
N105
N99
N152
N119
N93A
N25
N144
N140
N112A
N123
N106A
N127
N100
N131
N94

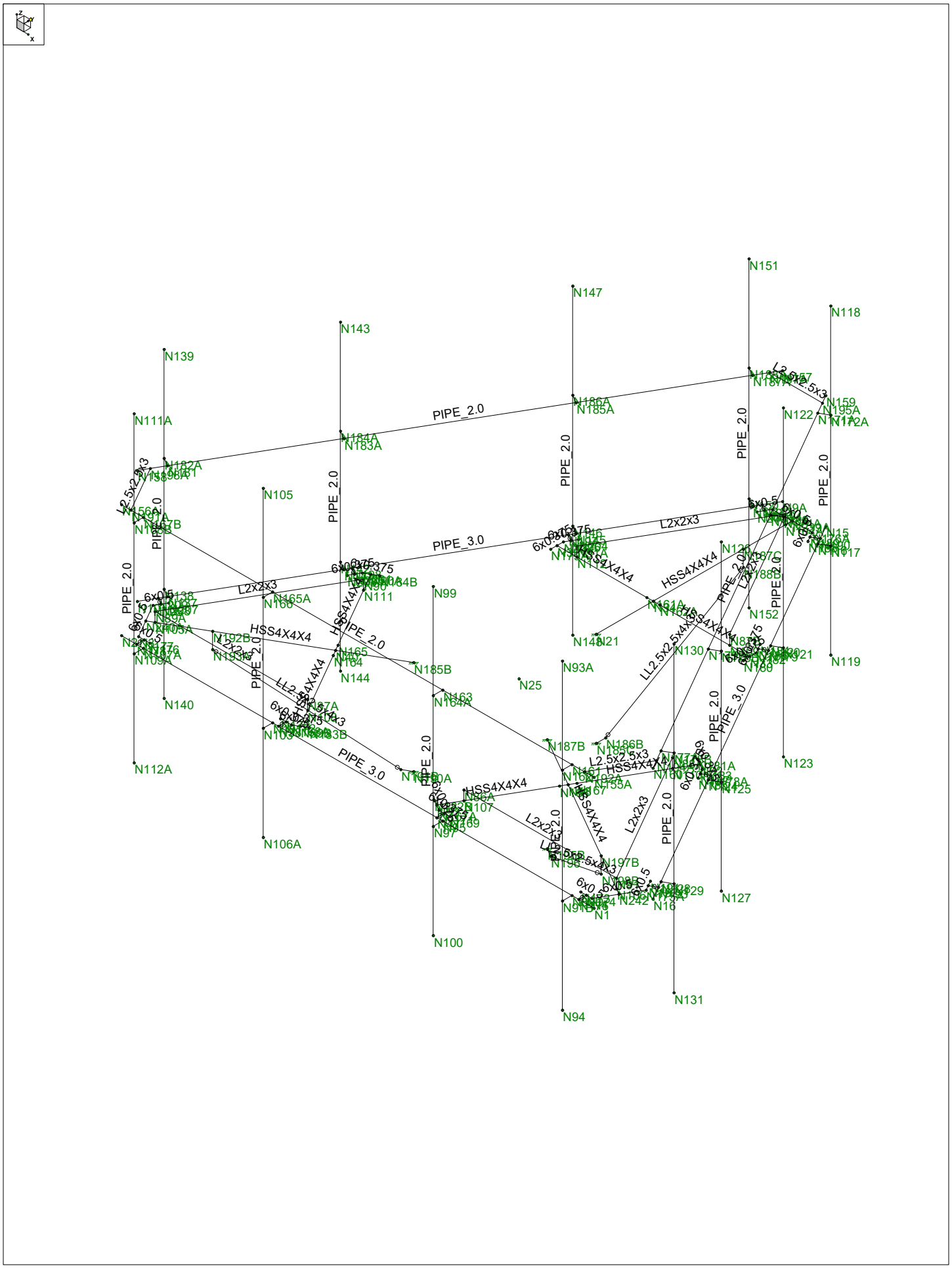
N151
N147
N118
N143
N139
N159
N195A
N172A
N111A
N122
N186A
N185A
N184A
N183A
N182A
N105
PIPE_2.0
PIPE_3.0
L2x2x3
HSS4X4X4
N165A
N111
N99
N152
N119
N140
N112A
N106A
N100
N94
N131
N123
N127
N25
N93A
N185B
N163
N164A
N144
N165
N130
N187B
N186B
N197B
N107
N97
N1
N16
N125

APPENDIX B

Software Input Calculations

POD Job #	**20-65180**
Site Number	**876320**
Site Name	**528 WHEELERS FARM RD**

General Site Information

Mount Type	SFP	Risk Category	II	I (seismic)	1	
V (Wind Speed)	125	I(ice)	1	Sms	0.298	
Z_s	217			Sm1	0.149	
ti	1.5	Ss	0.186	Sds	0.198	
Vi	50	S1	0.062	Sd1	0.099	
Kzt	1	Soil Site Class	D (assumed)	Seismic Design Category		
Exposure	C	Fa	1.600		B	
zg	900	Fv	2.400	Seismic Analysis Not Required		
α	9.5			R	2	TIA-222-H 16.7
Kmin	0.85	Tower Type	Monopole	As	1	TIA-222-H 16.7
G_H	1	Tower Height	120	Cs, Min	0.03	TIA-222-H 2.7.7.1.1
Ke	0.99			Cs	0.0992	TIA-222-H 2.7.7.1.1
K_D	0.95					
K_a	0.9					

Appurtenance Information

Model	Shielded	% Shielded	Centerline	Centerline on MP	Spacing (in)	Azimuth	Sector	Quantity		MP #
AIR 32 B2A/B66AA			107	6	40		A/B/C	1	1	
AIR 3246 B66			107	6	40		A/B/C	1	3	
AIR6449 B41			107	6	20		A/B/C	1	4	
APXVAARR24_43-U-NA20			105	4	70		A/B/C	1	2	
Radio 4449 B71/B85A			107	6			A/B/C	1	2	
RRUS 4415 B25_CCIV2			107	6			A/B/C	1	4	

Mount Information

Elevation (ft)	105	Grating Thickness (in)	1
K_z	1.28	Grating Ice Weight (k/ft^2)	0.019
Kiz	1.12		
tiz	1.68		

	Length (ft)	Width (in)	Centerline
Mount Pipes	8	2.375	105

Round Members

Member	Length (ft)	Width (in)	Frame Member	# of Members
Rail (on)	12.5	2.375	Yes	2
Rail (off)	12.5	2.375	No	1
Face (on)	12.5	3.5	Yes	2
Face (off)	12.5	3.5	No	1

Flat Members

Member	Length (ft)	Width (in)	Shape	A	B	C	D	Frame Member	# of Members
Support	4	2	Angle	2	0.1875			No	6
Standoff	5.2	4	Square HSS	4	0.25	4		No	3
Corner Plate	1	6	Channel	0	6	0	0.5	No	9
Plate	0.3	6	Channel	0	6	0	0.375	No	12
Kicker	4.2	2.5	D. Angle	2.5	0.1875	0.375		No	3
Corner Support	2.38	4	Square HSS	4	0.25	4		No	6
Angle	1.4	2.5	Angle	2.5	0.1875			No	3

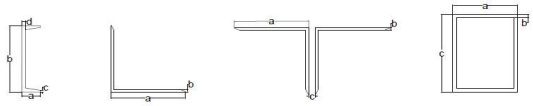

Version 3.2

Appurtenance Wind Calculations

Model	Height	Width	Depth	Weight (lbs)	Kz	qz (lb/ft$_2$)	$(EPA)_N$ (ft^2)	$(EPA)_T$(ft^2)	Wind Force (Kips) Front	Side	Alpha	Beta	Gamma
AIR 32 B2A/B66AA	56.6	12.9	8.7	132.2	1.28	48.40	5.86	4.24	0.284	0.205	0.264	0.264	0.205
AIR 3246 B66	58.1	15.7	9.4	180.0	1.28	48.40	7.15	4.65	0.346	0.225	0.316	0.316	0.225
AIR6449 B41	33.1	20.6	8.6	104.0	1.28	48.40	5.11	2.24	0.248	0.108	0.213	0.213	0.108
APXVAARR24_43-U-NA20	95.9	24.0	8.7	96.8	1.28	48.21	14.67	5.32	0.707	0.257	0.594	0.594	0.257
Radio 4449 B71/B85A	15.0	13.2	8.7	75.0	1.28	48.40	1.48	0.98	0.072	0.047	0.066	0.066	0.047
RRUS 4415 B25_CCIV2	16.5	13.4	5.9	46.0	1.28	48.40	1.66	0.74	0.080	0.036	0.069	0.069	0.036

Appurtenance Ice Calculations

Model	tiz (in)	Height	Width	Depth	Weight (lbs)	Kiz	qz (lb/ft$_2$)	$(EPA)_N$ (ft^2)	$(EPA)_T$(ft^2)	Wind Force (Kips) Front	Side	Alpha	Beta	Gamma
AIR 32 B2A/B66AA	1.69	59.97	16.27	12.07	176.07	1.12	7.74	4.43	3.42	0.034	0.026	0.032	0.032	0.026
AIR 3246 B66	1.69	61.47	19.07	12.77	207.57	1.12	7.74	5.25	3.69	0.041	0.029	0.038	0.038	0.029
AIR6449 B41	1.69	36.47	23.97	11.97	149.31	1.12	7.74	3.83	1.95	0.030	0.015	0.026	0.026	0.015
APXVAARR24_43-U-NA20	1.68	99.27	27.37	12.07	414.48	1.12	7.71	15.58	6.87	0.120	0.053	0.103	0.103	0.053
Radio 4449 B71/B85A	1.69	18.33	16.56	12.07	63.21	1.12	7.74	1.33	0.97	0.010	0.008	0.010	0.010	0.008
RRUS 4415 B25_CCIV2	1.69	19.87	16.77	9.27	57.93	1.12	7.74	1.46	0.81	0.011	0.006	0.010	0.010	0.006

Round Members

Member	q_z (lb/ft^2)	Wind Calculations Ar	C	Rr	Cf	EPA (ft^2)	Load (k/ft)	Width (in)	Weight (k/ft)	q_z (lb/ft^2)	Ice Calculations Arice	Rrice	Cf	EPA (ft^2)	Load (k/ft)
Rail (on)	48.21	4.95	27.27	0.61	1.20	1.62	0.006	5.74	0.01	7.71	11.96	0.76	1.20	4.92	0.003
Rail (off)	48.21	2.47	27.27	0.61	1.20	1.62	0.003	5.74	0.01	7.71	5.98	0.76	1.20	4.92	0.002
Face (on)	48.21	7.29	40.18	0.61	1.20	2.38	0.009	6.87	0.01	7.71	14.31	0.76	1.20	5.88	0.004
Face (off)	48.21	3.65	40.18	0.61	1.20	2.38	0.005	6.87	0.01	7.71	7.15	0.76	1.20	5.88	0.002

Flat Members

Member	q_z (lb/ft^2)	Wind Calculations Af	Cf	EPA	Load (k/ft)	Width (in)	Weight (k/ft)	q_z (lb/ft^2)	Ice Calculations Arice	Rrice	Cf	EPA	Load (k/ft)
Support	48.21	4.00	2.00	1.20	0.007	5.37	0.01	7.71	10.74	0.76	2.00	2.45	0.002
Standoff	48.21	5.20	1.25	1.95	0.009	7.37	0.01	7.71	9.58	0.76	1.25	2.73	0.002
Corner Plate	48.21	4.50	2.00	0.90	0.022	9.37	0.01	7.71	7.03	0.76	2.00	1.07	0.004
Plate	48.21	1.80	2.00	0.27	0.022	9.37	0.01	7.71	2.81	0.76	2.00	0.32	0.004
Kicker	48.21	2.63	2.00	1.58	0.009	5.87	0.02	7.71	6.16	0.76	2.00	2.81	0.003
Corner Support	48.21	4.76	1.25	0.89	0.009	7.37	0.01	7.71	8.77	0.76	1.25	1.25	0.002
Angle	48.21	0.88	2.00	0.53	0.009	5.87	0.01	7.71	2.05	0.76	2.00	0.94	0.003

Appurtenance Seismic Calculations

Model	Weight	Sds	ρ	Cs	As	Ev	Eh
AIR 32 B2A/B66AA	132.2	0.198	1.000	0.099	1.000	0.005	0.013
AIR 3246 B66	180.0	0.198	1.000	0.099	1.000	0.007	0.018
AIR6449 B41	104.0	0.198	1.000	0.099	1.000	0.004	0.010
APXVAARR24_43-U-NA20	96.8	0.198	1.000	0.099	1.000	0.004	0.010
Radio 4449 B71/B85A	75.0	0.198	1.000	0.099	1.000	0.003	0.007
RRUS 4415 B25_CCIV2	46.0	0.198	1.000	0.099	1.000	0.002	0.005

Version 3.2

APPENDIX C

Software Analysis Output

Member Primary Data

	Label	I Joint	J Joint	K Joint	Rotat...	Section/Shape	Type	Design List	Material	Design...
1	SUP3B	N91	N88A		180	L2x2x3	Beam	Single Angle	A36 Gr.36	Typical
2	SUP3A	N86A	N91			L2x2x3	Beam	Single Angle	A36 Gr.36	Typical
3	SUP2B	N89	N91A		180	L2x2x3	Beam	Single Angle	A36 Gr.36	Typical
4	SUP2A	N89	N87B		90	L2x2x3	Beam	Single Angle	A36 Gr.36	Typical
5	SUP1B	N89A	N87A			L2x2x3	Beam	Single Angle	A36 Gr.36	Typical
6	SUP1A	N90	N89A		180	L2x2x3	Beam	Single Angle	A36 Gr.36	Typical
7	SO3	N239A	N21			HSS4X4X4	Beam	SquareTube	A500 Gr.B Rect	Typical
8	SO2	N242	N187B			HSS4X4X4	Beam	SquareTube	A500 Gr.B Rect	Typical
9	SO1	N240A	N185B			HSS4X4X4	Beam	SquareTube	A500 Gr.B Rect	Typical
10	PLATECORN...	N194	N210		90	6x0.5	Beam	RECT	A36 Gr.36	Typical
11	PLATECORN...	N188	N176A		90	6x0.5	Beam	RECT	A36 Gr.36	Typical
12	PLATECORN...	N4	N175A		90	6x0.5	Beam	RECT	A36 Gr.36	Typical
13	PLATECORN...	N175A	N191		90	6x0.5	Beam	RECT	A36 Gr.36	Typical
14	PLATECORN...	N173	N4		90	6x0.5	Beam	RECT	A36 Gr.36	Typical
15	PLATECORN...	N176A	N194		90	6x0.5	Beam	RECT	A36 Gr.36	Typical
16	PLATECORN...	N207	N195		90	6x0.5	Beam	RECT	A36 Gr.36	Typical
17	PLATECORN...	N3	N176		90	6x0.5	Beam	RECT	A36 Gr.36	Typical
18	PLATECORN...	N195	N3		90	6x0.5	Beam	RECT	A36 Gr.36	Typical
19	PLATE12	N179A	N202		90	6x0.375	Beam	RECT	A36 Gr.36	Typical
20	PLATE11	N184B	N201		90	6x0.375	Beam	RECT	A36 Gr.36	Typical
21	PLATE10	N182B	N167A		90	6x0.375	Beam	RECT	A36 Gr.36	Typical
22	PLATE9	N181A	N183		90	6x0.375	Beam	RECT	A36 Gr.36	Typical
23	PLATE8	N180	N182		90	6x0.375	Beam	RECT	A36 Gr.36	Typical
24	PLATE7	N183B	N168A		90	6x0.375	Beam	RECT	A36 Gr.36	Typical
25	PLATE6	N185	N183		90	6x0.375	Beam	RECT	A36 Gr.36	Typical
26	PLATE5	N182	N184		90	6x0.375	Beam	RECT	A36 Gr.36	Typical
27	PLATE4	N204	N202		90	6x0.375	Beam	RECT	A36 Gr.36	Typical
28	PLATE3	N201	N203		90	6x0.375	Beam	RECT	A36 Gr.36	Typical
29	PLATE2	N170	N168A		90	6x0.375	Beam	RECT	A36 Gr.36	Typical
30	PLATE1	N167A	N169		90	6x0.375	Beam	RECT	A36 Gr.36	Typical
31	MP GAMMA4	N131	N130			PIPE_2.0	Beam	Pipe	A53 Gr.B	Typical
32	MP GAMMA3	N127	N126			PIPE_2.0	Beam	Pipe	A53 Gr.B	Typical
33	MP GAMMA2	N123	N122			PIPE_2.0	Beam	Pipe	A53 Gr.B	Typical
34	MP GAMMA1	N119	N118			PIPE_2.0	Beam	Pipe	A53 Gr.B	Typical
35	MP BETA4	N152	N151			PIPE_2.0	Beam	Pipe	A53 Gr.B	Typical
36	MP BETA3	N148	N147			PIPE_2.0	Beam	Pipe	A53 Gr.B	Typical
37	MP BETA2	N144	N143			PIPE_2.0	Beam	Pipe	A53 Gr.B	Typical
38	MP BETA1	N140	N139			PIPE_2.0	Beam	Pipe	A53 Gr.B	Typical
39	MP ALPHA4	N112A	N111A			PIPE_2.0	Beam	Pipe	A53 Gr.B	Typical
40	MP ALPHA3	N106A	N105			PIPE_2.0	Beam	Pipe	A53 Gr.B	Typical
41	MP ALPHA2	N100	N99			PIPE_2.0	Beam	Pipe	A53 Gr.B	Typical
42	MP ALPHA1	N94	N93A			PIPE_2.0	Beam	Pipe	A53 Gr.B	Typical
43	KICKER3	N186B	N188B		180	LL2.5x2.5x4x3	Beam	Double Angle (...	A36 Gr.36	Typical
44	KICKER2	N196	N198B		75	LL2.5x2.5x4x3	Beam	Double Angle (...	A36 Gr.36	Typical
45	KICKER1	N191B	N193A		285	LL2.5x2.5x4x3	Beam	Double Angle (...	A36 Gr.36	Typical
46	RAIL3	N159	N160			PIPE_2.0	Beam	Pipe	A53 Gr.B	Typical
47	RAIL2	N158	N157			PIPE_2.0	Beam	Pipe	A53 Gr.B	Typical
48	RAIL1	N156A	N155A			PIPE_2.0	Beam	Pipe	A53 Gr.B	Typical
49	FACE3	N15	N16			PIPE_3.0	Beam	Pipe	A53 Gr.B	Typical
50	FACE2	N10	N9A			PIPE_3.0	Beam	Pipe	A53 Gr.B	Typical
51	FACE1	N2	N1			PIPE_3.0	Beam	Pipe	A53 Gr.B	Typical
52	CR3B	N92	N167			HSS4X4X4	Beam	SquareTube	A500 Gr.B Rect	Typical
53	CR3A	N168	N93			HSS4X4X4	Beam	SquareTube	A500 Gr.B Rect	Typical
54	CR2B	N32	N161A			HSS4X4X4	Beam	SquareTube	A500 Gr.B Rect	Typical
55	CR2A	N33	N162A			HSS4X4X4	Beam	SquareTube	A500 Gr.B Rect	Typical
56	CR1B	N164	N89B			HSS4X4X4	Beam	SquareTube	A500 Gr.B Rect	Typical

Member Primary Data (Continued)

	Label	I Joint	J Joint	K Joint	Rotat...	Section/Shape	Type	Design List	Material	Design...
57	CR1A	N165	N90A			HSS4X4X4	Beam	SquareTube	A500 Gr.B Rect	Typical
58	ANGLE3	N197A	N195A		270	L2.5x2.5x3	Beam	Single Angle	A36 Gr.36	Typical
59	ANGLE2	N191A	N198A		90	L2.5x2.5x3	Beam	Single Angle	A36 Gr.36	Typical
60	ANGLE1	N194A	N192A		90	L2.5x2.5x3	Beam	Single Angle	A36 Gr.36	Typical
61	58	N197B	N198B			RIGID	None	None	RIGID	Typical
62	57	N195B	N196			RIGID	None	None	RIGID	Typical
63	56	N192B	N193A			RIGID	None	None	RIGID	Typical
64	55	N190A	N191B			RIGID	None	None	RIGID	Typical
65	54	N187C	N188B			RIGID	None	None	RIGID	Typical
66	53	N185C	N186B			RIGID	None	None	RIGID	Typical
67	52	N189	N190			RIGID	None	None	RIGID	Typical
68	51	N181	N182A			RIGID	None	None	RIGID	Typical
69	50	N183A	N184A			RIGID	None	None	RIGID	Typical
70	49	N185A	N186A			RIGID	None	None	RIGID	Typical
71	48	N187A	N188A			RIGID	None	None	RIGID	Typical
72	47	N171A	N172A			RIGID	None	None	RIGID	Typical
73	46	N173A	N174A			RIGID	None	None	RIGID	Typical
74	45	N175B	N176B			RIGID	None	None	RIGID	Typical
75	44	N177A	N178B			RIGID	None	None	RIGID	Typical
76	43	N161	N162			RIGID	None	None	RIGID	Typical
77	42	N163	N164A			RIGID	None	None	RIGID	Typical
78	41	N165A	N166			RIGID	None	None	RIGID	Typical
79	40	N167B	N168B			RIGID	None	None	RIGID	Typical
80	39	N137	N138			RIGID	None	None	RIGID	Typical
81	38	N141	N142			RIGID	None	None	RIGID	Typical
82	37	N145	N146			RIGID	None	None	RIGID	Typical
83	36	N149	N150			RIGID	None	None	RIGID	Typical
84	35	N116	N117			RIGID	None	None	RIGID	Typical
85	34	N120	N121			RIGID	None	None	RIGID	Typical
86	33	N124	N125			RIGID	None	None	RIGID	Typical
87	32	N128	N129			RIGID	None	None	RIGID	Typical
88	31	N211	N212			RIGID	None	None	RIGID	Typical
89	30	N208	N209			RIGID	None	None	RIGID	Typical
90	29	N205	N198			RIGID	None	None	RIGID	Typical
91	28	N206	N197			RIGID	None	None	RIGID	Typical
92	27	N192	N193			RIGID	None	None	RIGID	Typical
93	26	N186	N179			RIGID	None	None	RIGID	Typical
94	25	N187	N178A			RIGID	None	None	RIGID	Typical
95	24	N177	N178			RIGID	None	None	RIGID	Typical
96	23	N174	N175			RIGID	None	None	RIGID	Typical
97	22	N171	N47			RIGID	None	None	RIGID	Typical
98	21	N172	N38			RIGID	None	None	RIGID	Typical
99	19	N48	N168			RIGID	None	None	RIGID	Typical
100	18	N167	N48			RIGID	None	None	RIGID	Typical
101	17	N164	N40			RIGID	None	None	RIGID	Typical
102	16	N165	N40			RIGID	None	None	RIGID	Typical
103	15	N34	N161A			RIGID	None	None	RIGID	Typical
104	14	N34	N162A			RIGID	None	None	RIGID	Typical
105	13	N107A	N109A			RIGID	None	None	RIGID	Typical
106	12	N101	N103			RIGID	None	None	RIGID	Typical
107	11	N95	N97			RIGID	None	None	RIGID	Typical
108	10	N89D	N91B			RIGID	None	None	RIGID	Typical
109	9	N112	N91A			RIGID	None	None	RIGID	Typical
110	8	N104A	N89			RIGID	None	None	RIGID	Typical
111	7	N109	N87B			RIGID	None	None	RIGID	Typical
112	6	N110	N88A			RIGID	None	None	RIGID	Typical
113	5	N106	N91			RIGID	None	None	RIGID	Typical

Member Primary Data (Continued)

	Label	I Joint	J Joint	K Joint	Rotat...	Section/Shape	Type	Design List	Material	Design...
114	4	N107	N86A			RIGID	None	None	RIGID	Typical
115	3	N108	N87A			RIGID	None	None	RIGID	Typical
116	2	N111	N90			RIGID	None	None	RIGID	Typical
117	1	N105A	N89A			RIGID	None	None	RIGID	Typical

Member Advanced Data

	Label	I Release	J Release	I Offset[in]	J Offset[in]	T/C Only	Physical	Defl Rat...	Analysis ...	Inactive	Seismic...
1	SUP3B						Yes				None
2	SUP3A						Yes				None
3	SUP2B						Yes				None
4	SUP2A						Yes				None
5	SUP1B						Yes				None
6	SUP1A						Yes				None
7	SO3						Yes				None
8	SO2						Yes				None
9	SO1						Yes				None
10	PLATECO...						Yes				None
11	PLATECO...						Yes				None
12	PLATECO...						Yes				None
13	PLATECO...						Yes				None
14	PLATECO...						Yes				None
15	PLATECO...						Yes				None
16	PLATECO...						Yes				None
17	PLATECO...						Yes				None
18	PLATECO...						Yes				None
19	PLATE12						Yes				None
20	PLATE11						Yes				None
21	PLATE10						Yes				None
22	PLATE9						Yes				None
23	PLATE8						Yes				None
24	PLATE7						Yes				None
25	PLATE6						Yes				None
26	PLATE5						Yes				None
27	PLATE4						Yes				None
28	PLATE3						Yes				None
29	PLATE2						Yes				None
30	PLATE1						Yes				None
31	MP GAMM...						Yes				None
32	MP GAMM...						Yes				None
33	MP GAMM...						Yes				None
34	MP GAMM...						Yes				None
35	MP BETA4						Yes				None
36	MP BETA3						Yes				None
37	MP BETA2						Yes				None
38	MP BETA1						Yes				None
39	MP ALPHA4						Yes				None
40	MP ALPHA3						Yes				None
41	MP ALPHA2						Yes				None
42	MP ALPHA1						Yes				None
43	KICKER3	OOOOOX	OOOOOX				Yes	Default			None
44	KICKER2	OOOOOX	OOOOOX				Yes	Default			None
45	KICKER1	OOOOOX	OOOOOX				Yes	Default			None
46	RAIL3						Yes				None
47	RAIL2						Yes				None
48	RAIL1						Yes				None

Member Advanced Data (Continued)

	Label	I Release	J Release	I Offset[in]	J Offset[in]	T/C Only	Physical	Defl Rat...	Analysis ...	Inactive	Seismic...
49	FACE3						Yes				None
50	FACE2						Yes				None
51	FACE1						Yes				None
52	CR3B						Yes				None
53	CR3A						Yes				None
54	CR2B						Yes				None
55	CR2A						Yes				None
56	CR1B						Yes				None
57	CR1A						Yes				None
58	ANGLE3						Yes				None
59	ANGLE2						Yes				None
60	ANGLE1						Yes				None
61	58						Yes	** NA **			None
62	57						Yes	** NA **			None
63	56						Yes	** NA **			None
64	55						Yes	** NA **			None
65	54						Yes	** NA **			None
66	53						Yes	** NA **			None
67	52		OOOXOO				Yes	** NA **			None
68	51						Yes	** NA **			None
69	50						Yes	** NA **			None
70	49						Yes	** NA **			None
71	48						Yes	** NA **			None
72	47						Yes	** NA **			None
73	46						Yes	** NA **			None
74	45						Yes	** NA **			None
75	44						Yes	** NA **			None
76	43						Yes	** NA **			None
77	42						Yes	** NA **			None
78	41						Yes	** NA **			None
79	40						Yes	** NA **			None
80	39						Yes	** NA **			None
81	38						Yes	** NA **			None
82	37						Yes	** NA **			None
83	36						Yes	** NA **			None
84	35						Yes	** NA **			None
85	34						Yes	** NA **			None
86	33						Yes	** NA **			None
87	32						Yes	** NA **			None
88	31		OOOXOO				Yes	** NA **			None
89	30		OOOXOO				Yes	** NA **			None
90	29		OOOXOO				Yes	** NA **			None
91	28		OOOXOO				Yes	** NA **			None
92	27		OOOXOO				Yes	** NA **			None
93	26		OOOXOO				Yes	** NA **			None
94	25		OOOXOO				Yes	** NA **			None
95	24		OOOXOO				Yes	** NA **			None
96	23		OOOXOO				Yes	** NA **			None
97	22		OOOXOO				Yes	** NA **			None
98	21		OOOXOO				Yes	** NA **			None
99	19						Yes	** NA **			None
100	18						Yes	** NA **			None
101	17						Yes	** NA **			None
102	16						Yes	** NA **			None
103	15						Yes	** NA **			None
104	14						Yes	** NA **			None
105	13						Yes	** NA **			None

Member Advanced Data (Continued)

	Label	I Release	J Release	I Offset[in]	J Offset[in]	T/C Only	Physical	Defl Rat...	Analysis ...	Inactive	Seismic...
106	12						Yes	** NA **			None
107	11						Yes	** NA **			None
108	10						Yes	** NA **			None
109	9						Yes	** NA **			None
110	8						Yes	** NA **			None
111	7						Yes	** NA **			None
112	6						Yes	** NA **			None
113	5						Yes	** NA **			None
114	4						Yes	** NA **			None
115	3						Yes	** NA **			None
116	2						Yes	** NA **			None
117	1						Yes	** NA **			None

Hot Rolled Steel Design Parameters

	Label	Shape	Length[...	Lbyy[ft]	Lbzz[ft]	Lcomp top[ft]	Lcomp bot[ft]	L-torqu...	Kyy	Kzz	Cb	Funct...
1	SUP3B	L2x2x3	4.041			Lbyy						Lateral
2	SUP3A	L2x2x3	4.041			Lbyy						Lateral
3	SUP2B	L2x2x3	4.041			Lbyy						Lateral
4	SUP2A	L2x2x3	4.041			Lbyy						Lateral
5	SUP1B	L2x2x3	4.041			Lbyy						Lateral
6	SUP1A	L2x2x3	4.041			Lbyy						Lateral
7	SO3	HSS4X4X4	5.188			Lbyy						Lateral
8	SO2	HSS4X4X4	5.188			Lbyy						Lateral
9	SO1	HSS4X4X4	5.188			Lbyy						Lateral
10	PLATECORN...	6x0.5	.3			Lbyy						Lateral
11	PLATECORN...	6x0.5	.3			Lbyy						Lateral
12	PLATECORN...	6x0.5	1.049			Lbyy						Lateral
13	PLATECORN...	6x0.5	.3			Lbyy						Lateral
14	PLATECORN...	6x0.5	.3			Lbyy						Lateral
15	PLATECORN...	6x0.5	1.049			Lbyy						Lateral
16	PLATECORN...	6x0.5	.3			Lbyy						Lateral
17	PLATECORN...	6x0.5	.3			Lbyy						Lateral
18	PLATECORN...	6x0.5	1.049			Lbyy						Lateral
19	PLATE12	6x0.375	.338			Lbyy						Lateral
20	PLATE11	6x0.375	.338			Lbyy						Lateral
21	PLATE10	6x0.375	.338			Lbyy						Lateral
22	PLATE9	6x0.375	.338			Lbyy						Lateral
23	PLATE8	6x0.375	.338			Lbyy						Lateral
24	PLATE7	6x0.375	.338			Lbyy						Lateral
25	PLATE6	6x0.375	.292			Lbyy						Lateral
26	PLATE5	6x0.375	.292			Lbyy						Lateral
27	PLATE4	6x0.375	.292			Lbyy						Lateral
28	PLATE3	6x0.375	.292			Lbyy						Lateral
29	PLATE2	6x0.375	.292			Lbyy						Lateral
30	PLATE1	6x0.375	.292			Lbyy						Lateral
31	MP GAMMA4	PIPE_2.0	8			Lbyy						Lateral
32	MP GAMMA3	PIPE_2.0	8			Lbyy						Lateral
33	MP GAMMA2	PIPE_2.0	8			Lbyy						Lateral
34	MP GAMMA1	PIPE_2.0	8			Lbyy						Lateral
35	MP BETA4	PIPE_2.0	8			Lbyy						Lateral
36	MP BETA3	PIPE_2.0	8			Lbyy						Lateral
37	MP BETA2	PIPE_2.0	8			Lbyy						Lateral
38	MP BETA1	PIPE_2.0	8			Lbyy						Lateral
39	MP ALPHA4	PIPE_2.0	8			Lbyy						Lateral
40	MP ALPHA3	PIPE_2.0	8			Lbyy						Lateral

Hot Rolled Steel Design Parameters (Continued)

	Label	Shape	Length[...	Lbyy[ft]	Lbzz[ft]	Lcomp top[ft]	Lcomp bot[ft]	L-torqu...	Kyy	Kzz	Cb	Funct...
41	MP ALPHA2	PIPE_2.0	8			Lbyy						Lateral
42	MP ALPHA1	PIPE_2.0	8			Lbyy						Lateral
43	KICKER3	LL2.5x2.5...	4.198			Lbyy						Lateral
44	KICKER2	LL2.5x2.5...	4.198			Lbyy						Lateral
45	KICKER1	LL2.5x2.5...	4.198			Lbyy						Lateral
46	RAIL3	PIPE_2.0	12.5			Lbyy						Lateral
47	RAIL2	PIPE_2.0	12.5			Lbyy						Lateral
48	RAIL1	PIPE_2.0	12.5			Lbyy						Lateral
49	FACE3	PIPE_3.0	12.5			Lbyy						Lateral
50	FACE2	PIPE_3.0	12.5			Lbyy						Lateral
51	FACE1	PIPE_3.0	12.5			Lbyy						Lateral
52	CR3B	HSS4X4X4	2.38			Lbyy						Lateral
53	CR3A	HSS4X4X4	2.38			Lbyy						Lateral
54	CR2B	HSS4X4X4	2.38			Lbyy						Lateral
55	CR2A	HSS4X4X4	2.38			Lbyy						Lateral
56	CR1B	HSS4X4X4	2.38			Lbyy						Lateral
57	CR1A	HSS4X4X4	2.38			Lbyy						Lateral
58	ANGLE3	L2.5x2.5x3	1.395			Lbyy						Lateral
59	ANGLE2	L2.5x2.5x3	1.395			Lbyy						Lateral
60	ANGLE1	L2.5x2.5x3	1.395			Lbyy						Lateral

Hot Rolled Steel Properties

	Label	E [ksi]	G [ksi]	Nu	Therm (/1E...	Density[k/ft...	Yield[ksi]	Ry	Fu[ksi]	Rt
1	A992	29000	11154	.3	.65	.49	50	1.1	65	1.1
2	A36 Gr.36	29000	11154	.3	.65	.49	36	1.5	58	1.2
3	A572 Gr.50	29000	11154	.3	.65	.49	50	1.1	65	1.1
4	A500 Gr.B RND	29000	11154	.3	.65	.527	42	1.4	58	1.3
5	A500 Gr.B Rect	29000	11154	.3	.65	.527	46	1.4	58	1.3
6	A53 Gr.B	29000	11154	.3	.65	.49	35	1.6	60	1.2
7	A1085	29000	11154	.3	.65	.49	50	1.4	65	1.3

Member Point Loads (BLC 1 : Live Load)

	Member Label	Direction	Magnitude[k,k-ft]	Location[ft,%]
1	RAIL1	Z	-.5	0

Member Point Loads (BLC 2 : Wind Load (0))

	Member Label	Direction	Magnitude[k,k-ft]	Location[ft,%]
1	MP ALPHA1	Y	-.142	7.667
2	MP ALPHA1	Y	-.142	4.333
3	MP BETA1	Y	-.112	7.667
4	MP BETA1	Y	-.112	4.333
5	MP GAMMA1	Y	-.112	7.667
6	MP GAMMA1	Y	-.112	4.333
7	MP ALPHA3	Y	-.173	7.667
8	MP ALPHA3	Y	-.173	4.333
9	MP BETA3	Y	-.128	7.667
10	MP BETA3	Y	-.128	4.333
11	MP GAMMA3	Y	-.128	7.667
12	MP GAMMA3	Y	-.128	4.333
13	MP ALPHA4	Y	-.124	6.833
14	MP ALPHA4	Y	-.124	5.167
15	MP BETA4	Y	-.072	6.833
16	MP BETA4	Y	-.072	5.167

Member Point Loads (BLC 2 : Wind Load (0)) (Continued)

	Member Label	Direction	Magnitude[k,k-ft]	Location[ft,%]
17	MP GAMMA4	Y	-.072	6.833
18	MP GAMMA4	Y	-.072	5.167
19	MP ALPHA2	Y	-.354	6.917
20	MP ALPHA2	Y	-.354	1.083
21	MP BETA2	Y	-.185	6.917
22	MP BETA2	Y	-.185	1.083
23	MP GAMMA2	Y	-.185	6.917
24	MP GAMMA2	Y	-.185	1.083
25	MP ALPHA2	Y	-.072	6
26	MP BETA2	Y	-.053	6
27	MP GAMMA2	Y	-.053	6
28	MP ALPHA4	Y	-.08	6
29	MP BETA4	Y	-.047	6
30	MP GAMMA4	Y	-.047	6

Member Point Loads (BLC 3 : Dead Load)

	Member Label	Direction	Magnitude[k,k-ft]	Location[ft,%]
1	MP ALPHA1	Z	-.066	7.667
2	MP ALPHA1	Z	-.066	4.333
3	MP BETA1	Z	-.066	7.667
4	MP BETA1	Z	-.066	4.333
5	MP GAMMA1	Z	-.066	7.667
6	MP GAMMA1	Z	-.066	4.333
7	MP ALPHA3	Z	-.09	7.667
8	MP ALPHA3	Z	-.09	4.333
9	MP BETA3	Z	-.09	7.667
10	MP BETA3	Z	-.09	4.333
11	MP GAMMA3	Z	-.09	7.667
12	MP GAMMA3	Z	-.09	4.333
13	MP ALPHA4	Z	-.052	6.833
14	MP ALPHA4	Z	-.052	5.167
15	MP BETA4	Z	-.052	6.833
16	MP BETA4	Z	-.052	5.167
17	MP GAMMA4	Z	-.052	6.833
18	MP GAMMA4	Z	-.052	5.167
19	MP ALPHA2	Z	-.048	6.917
20	MP ALPHA2	Z	-.048	1.083
21	MP BETA2	Z	-.048	6.917
22	MP BETA2	Z	-.048	1.083
23	MP GAMMA2	Z	-.048	6.917
24	MP GAMMA2	Z	-.048	1.083
25	MP ALPHA2	Z	-.075	6
26	MP BETA2	Z	-.075	6
27	MP GAMMA2	Z	-.075	6
28	MP ALPHA4	Z	-.046	6
29	MP BETA4	Z	-.046	6
30	MP GAMMA4	Z	-.046	6

Member Point Loads (BLC 4 : Wind Load (30))

	Member Label	Direction	Magnitude[k,k-ft]	Location[ft,%]
1	MP ALPHA1	Y	-.114	7.667
2	MP ALPHA1	Y	-.114	4.333
3	MP ALPHA1	X	-.066	7.667
4	MP ALPHA1	X	-.066	4.333
5	MP BETA1	Y	-.089	7.667
6	MP BETA1	Y	-.089	4.333

Member Point Loads (BLC 4 : Wind Load (30)) (Continued)

	Member Label	Direction	Magnitude[k,k-ft]	Location[ft,%]
7	MP BETA1	X	-.051	7.667
8	MP BETA1	X	-.051	4.333
9	MP GAMMA1	Y	-.114	7.667
10	MP GAMMA1	Y	-.114	4.333
11	MP GAMMA1	X	-.066	7.667
12	MP GAMMA1	X	-.066	4.333
13	MP ALPHA3	Y	-.137	7.667
14	MP ALPHA3	Y	-.137	4.333
15	MP ALPHA3	X	-.079	7.667
16	MP ALPHA3	X	-.079	4.333
17	MP BETA3	Y	-.098	7.667
18	MP BETA3	Y	-.098	4.333
19	MP BETA3	X	-.056	7.667
20	MP BETA3	X	-.056	4.333
21	MP GAMMA3	Y	-.137	7.667
22	MP GAMMA3	Y	-.137	4.333
23	MP GAMMA3	X	-.079	7.667
24	MP GAMMA3	X	-.079	4.333
25	MP ALPHA4	Y	-.092	6.833
26	MP ALPHA4	Y	-.092	5.167
27	MP ALPHA4	X	-.053	6.833
28	MP ALPHA4	X	-.053	5.167
29	MP BETA4	Y	-.047	6.833
30	MP BETA4	Y	-.047	5.167
31	MP BETA4	X	-.027	6.833
32	MP BETA4	X	-.027	5.167
33	MP GAMMA4	Y	-.092	6.833
34	MP GAMMA4	Y	-.092	5.167
35	MP GAMMA4	X	-.053	6.833
36	MP GAMMA4	X	-.053	5.167
37	MP ALPHA2	Y	-.257	6.917
38	MP ALPHA2	Y	-.257	1.083
39	MP ALPHA2	X	-.149	6.917
40	MP ALPHA2	X	-.149	1.083
41	MP BETA2	Y	-.111	6.917
42	MP BETA2	Y	-.111	1.083
43	MP BETA2	X	-.064	6.917
44	MP BETA2	X	-.064	1.083
45	MP GAMMA2	Y	-.257	6.917
46	MP GAMMA2	Y	-.257	1.083
47	MP GAMMA2	X	-.149	6.917
48	MP GAMMA2	X	-.149	1.083
49	MP ALPHA2	Y	-.057	6
50	MP ALPHA2	X	-.033	6
51	MP BETA2	Y	-.041	6
52	MP BETA2	X	-.024	6
53	MP GAMMA2	Y	-.057	6
54	MP GAMMA2	X	-.033	6
55	MP ALPHA4	Y	-.06	6
56	MP ALPHA4	X	-.035	6
57	MP BETA4	Y	-.031	6
58	MP BETA4	X	-.018	6
59	MP GAMMA4	Y	-.06	6
60	MP GAMMA4	X	-.035	6

Member Point Loads (BLC 5 : Wind Load (60))

Member Label	Direction	Magnitude[k,k-ft]	Location[ft,%]

Member Point Loads (BLC 5 : Wind Load (60)) (Continued)

	Member Label	Direction	Magnitude[k,k-ft]	Location[ft,%]
1	MP ALPHA1	Y	-.056	7.667
2	MP ALPHA1	Y	-.056	4.333
3	MP ALPHA1	X	-.097	7.667
4	MP ALPHA1	X	-.097	4.333
5	MP BETA1	Y	-.056	7.667
6	MP BETA1	Y	-.056	4.333
7	MP BETA1	X	-.097	7.667
8	MP BETA1	X	-.097	4.333
9	MP GAMMA1	Y	-.071	7.667
10	MP GAMMA1	Y	-.071	4.333
11	MP GAMMA1	X	-.123	7.667
12	MP GAMMA1	X	-.123	4.333
13	MP ALPHA3	Y	-.064	7.667
14	MP ALPHA3	Y	-.064	4.333
15	MP ALPHA3	X	-.111	7.667
16	MP ALPHA3	X	-.111	4.333
17	MP BETA3	Y	-.064	7.667
18	MP BETA3	Y	-.064	4.333
19	MP BETA3	X	-.111	7.667
20	MP BETA3	X	-.111	4.333
21	MP GAMMA3	Y	-.086	7.667
22	MP GAMMA3	Y	-.086	4.333
23	MP GAMMA3	X	-.15	7.667
24	MP GAMMA3	X	-.15	4.333
25	MP ALPHA4	Y	-.036	6.833
26	MP ALPHA4	Y	-.036	5.167
27	MP ALPHA4	X	-.062	6.833
28	MP ALPHA4	X	-.062	5.167
29	MP BETA4	Y	-.036	6.833
30	MP BETA4	Y	-.036	5.167
31	MP BETA4	X	-.062	6.833
32	MP BETA4	X	-.062	5.167
33	MP GAMMA4	Y	-.062	6.833
34	MP GAMMA4	Y	-.062	5.167
35	MP GAMMA4	X	-.107	6.833
36	MP GAMMA4	X	-.107	5.167
37	MP ALPHA2	Y	-.092	6.917
38	MP ALPHA2	Y	-.092	1.083
39	MP ALPHA2	X	-.16	6.917
40	MP ALPHA2	X	-.16	1.083
41	MP BETA2	Y	-.092	6.917
42	MP BETA2	Y	-.092	1.083
43	MP BETA2	X	-.16	6.917
44	MP BETA2	X	-.16	1.083
45	MP GAMMA2	Y	-.177	6.917
46	MP GAMMA2	Y	-.177	1.083
47	MP GAMMA2	X	-.306	6.917
48	MP GAMMA2	X	-.306	1.083
49	MP ALPHA2	Y	-.027	6
50	MP ALPHA2	X	-.046	6
51	MP BETA2	Y	-.027	6
52	MP BETA2	X	-.046	6
53	MP GAMMA2	Y	-.036	6
54	MP GAMMA2	X	-.062	6
55	MP ALPHA4	Y	-.023	6
56	MP ALPHA4	X	-.041	6
57	MP BETA4	Y	-.023	6

Member Point Loads (BLC 5 : Wind Load (60)) (Continued)

	Member Label	Direction	Magnitude[k,k-ft]	Location[ft,%]
58	MP BETA4	X	-.041	6
59	MP GAMMA4	Y	-.04	6
60	MP GAMMA4	X	-.07	6

Member Point Loads (BLC 6 : Wind Load (90))

	Member Label	Direction	Magnitude[k,k-ft]	Location[ft,%]
1	MP ALPHA1	X	-.103	7.667
2	MP ALPHA1	X	-.103	4.333
3	MP BETA1	X	-.132	7.667
4	MP BETA1	X	-.132	4.333
5	MP GAMMA1	X	-.132	7.667
6	MP GAMMA1	X	-.132	4.333
7	MP ALPHA3	X	-.113	7.667
8	MP ALPHA3	X	-.113	4.333
9	MP BETA3	X	-.158	7.667
10	MP BETA3	X	-.158	4.333
11	MP GAMMA3	X	-.158	7.667
12	MP GAMMA3	X	-.158	4.333
13	MP ALPHA4	X	-.054	6.833
14	MP ALPHA4	X	-.054	5.167
15	MP BETA4	X	-.106	6.833
16	MP BETA4	X	-.106	5.167
17	MP GAMMA4	X	-.106	6.833
18	MP GAMMA4	X	-.106	5.167
19	MP ALPHA2	X	-.128	6.917
20	MP ALPHA2	X	-.128	1.083
21	MP BETA2	X	-.297	6.917
22	MP BETA2	X	-.297	1.083
23	MP GAMMA2	X	-.297	6.917
24	MP GAMMA2	X	-.297	1.083
25	MP ALPHA2	X	-.047	6
26	MP BETA2	X	-.066	6
27	MP GAMMA2	X	-.066	6
28	MP ALPHA4	X	-.036	6
29	MP BETA4	X	-.069	6
30	MP GAMMA4	X	-.069	6

Member Point Loads (BLC 7 : Wind Load (120))

	Member Label	Direction	Magnitude[k,k-ft]	Location[ft,%]
1	MP ALPHA1	Y	.056	7.667
2	MP ALPHA1	Y	.056	4.333
3	MP ALPHA1	X	-.097	7.667
4	MP ALPHA1	X	-.097	4.333
5	MP BETA1	Y	.071	7.667
6	MP BETA1	Y	.071	4.333
7	MP BETA1	X	-.123	7.667
8	MP BETA1	X	-.123	4.333
9	MP GAMMA1	Y	.056	7.667
10	MP GAMMA1	Y	.056	4.333
11	MP GAMMA1	X	-.097	7.667
12	MP GAMMA1	X	-.097	4.333
13	MP ALPHA3	Y	.064	7.667
14	MP ALPHA3	Y	.064	4.333
15	MP ALPHA3	X	-.111	7.667
16	MP ALPHA3	X	-.111	4.333
17	MP BETA3	Y	.086	7.667

Member Point Loads (BLC 7 : Wind Load (120)) (Continued)

	Member Label	Direction	Magnitude[k,k-ft]	Location[ft,%]
18	MP BETA3	Y	.086	4.333
19	MP BETA3	X	-.15	7.667
20	MP BETA3	X	-.15	4.333
21	MP GAMMA3	Y	.064	7.667
22	MP GAMMA3	Y	.064	4.333
23	MP GAMMA3	X	-.111	7.667
24	MP GAMMA3	X	-.111	4.333
25	MP ALPHA4	Y	.036	6.833
26	MP ALPHA4	Y	.036	5.167
27	MP ALPHA4	X	-.062	6.833
28	MP ALPHA4	X	-.062	5.167
29	MP BETA4	Y	.062	6.833
30	MP BETA4	Y	.062	5.167
31	MP BETA4	X	-.107	6.833
32	MP BETA4	X	-.107	5.167
33	MP GAMMA4	Y	.036	6.833
34	MP GAMMA4	Y	.036	5.167
35	MP GAMMA4	X	-.062	6.833
36	MP GAMMA4	X	-.062	5.167
37	MP ALPHA2	Y	.092	6.917
38	MP ALPHA2	Y	.092	1.083
39	MP ALPHA2	X	-.16	6.917
40	MP ALPHA2	X	-.16	1.083
41	MP BETA2	Y	.177	6.917
42	MP BETA2	Y	.177	1.083
43	MP BETA2	X	-.306	6.917
44	MP BETA2	X	-.306	1.083
45	MP GAMMA2	Y	.092	6.917
46	MP GAMMA2	Y	.092	1.083
47	MP GAMMA2	X	-.16	6.917
48	MP GAMMA2	X	-.16	1.083
49	MP ALPHA2	Y	.027	6
50	MP ALPHA2	X	-.046	6
51	MP BETA2	Y	.036	6
52	MP BETA2	X	-.062	6
53	MP GAMMA2	Y	.027	6
54	MP GAMMA2	X	-.046	6
55	MP ALPHA4	Y	.023	6
56	MP ALPHA4	X	-.041	6
57	MP BETA4	Y	.04	6
58	MP BETA4	X	-.07	6
59	MP GAMMA4	Y	.023	6
60	MP GAMMA4	X	-.041	6

Member Point Loads (BLC 8 : Wind Load (150))

	Member Label	Direction	Magnitude[k,k-ft]	Location[ft,%]
1	MP ALPHA1	Y	.114	7.667
2	MP ALPHA1	Y	.114	4.333
3	MP ALPHA1	X	-.066	7.667
4	MP ALPHA1	X	-.066	4.333
5	MP BETA1	Y	.114	7.667
6	MP BETA1	Y	.114	4.333
7	MP BETA1	X	-.066	7.667
8	MP BETA1	X	-.066	4.333
9	MP GAMMA1	Y	.089	7.667
10	MP GAMMA1	Y	.089	4.333

Member Point Loads (BLC 8 : Wind Load (150)) (Continued)

	Member Label	Direction	Magnitude[k,k-ft]	Location[ft,%]
11	MP GAMMA1	X	-.051	7.667
12	MP GAMMA1	X	-.051	4.333
13	MP ALPHA3	Y	.137	7.667
14	MP ALPHA3	Y	.137	4.333
15	MP ALPHA3	X	-.079	7.667
16	MP ALPHA3	X	-.079	4.333
17	MP BETA3	Y	.137	7.667
18	MP BETA3	Y	.137	4.333
19	MP BETA3	X	-.079	7.667
20	MP BETA3	X	-.079	4.333
21	MP GAMMA3	Y	.098	7.667
22	MP GAMMA3	Y	.098	4.333
23	MP GAMMA3	X	-.056	7.667
24	MP GAMMA3	X	-.056	4.333
25	MP ALPHA4	Y	.092	6.833
26	MP ALPHA4	Y	.092	5.167
27	MP ALPHA4	X	-.053	6.833
28	MP ALPHA4	X	-.053	5.167
29	MP BETA4	Y	.092	6.833
30	MP BETA4	Y	.092	5.167
31	MP BETA4	X	-.053	6.833
32	MP BETA4	X	-.053	5.167
33	MP GAMMA4	Y	.047	6.833
34	MP GAMMA4	Y	.047	5.167
35	MP GAMMA4	X	-.027	6.833
36	MP GAMMA4	X	-.027	5.167
37	MP ALPHA2	Y	.257	6.917
38	MP ALPHA2	Y	.257	1.083
39	MP ALPHA2	X	-.149	6.917
40	MP ALPHA2	X	-.149	1.083
41	MP BETA2	Y	.257	6.917
42	MP BETA2	Y	.257	1.083
43	MP BETA2	X	-.149	6.917
44	MP BETA2	X	-.149	1.083
45	MP GAMMA2	Y	.111	6.917
46	MP GAMMA2	Y	.111	1.083
47	MP GAMMA2	X	-.064	6.917
48	MP GAMMA2	X	-.064	1.083
49	MP ALPHA2	Y	.057	6
50	MP ALPHA2	X	-.033	6
51	MP BETA2	Y	.057	6
52	MP BETA2	X	-.033	6
53	MP GAMMA2	Y	.041	6
54	MP GAMMA2	X	-.024	6
55	MP ALPHA4	Y	.06	6
56	MP ALPHA4	X	-.035	6
57	MP BETA4	Y	.06	6
58	MP BETA4	X	-.035	6
59	MP GAMMA4	Y	.031	6
60	MP GAMMA4	X	-.018	6

Member Point Loads (BLC 9 : Wind Load (180))

	Member Label	Direction	Magnitude[k,k-ft]	Location[ft,%]
1	MP ALPHA1	Y	.142	7.667
2	MP ALPHA1	Y	.142	4.333
3	MP BETA1	Y	.112	7.667

Member Point Loads (BLC 9 : Wind Load (180)) (Continued)

	Member Label	Direction	Magnitude[k,k-ft]	Location[ft,%]
4	MP BETA1	Y	.112	4.333
5	MP GAMMA1	Y	.112	7.667
6	MP GAMMA1	Y	.112	4.333
7	MP ALPHA3	Y	.173	7.667
8	MP ALPHA3	Y	.173	4.333
9	MP BETA3	Y	.128	7.667
10	MP BETA3	Y	.128	4.333
11	MP GAMMA3	Y	.128	7.667
12	MP GAMMA3	Y	.128	4.333
13	MP ALPHA4	Y	.124	6.833
14	MP ALPHA4	Y	.124	5.167
15	MP BETA4	Y	.072	6.833
16	MP BETA4	Y	.072	5.167
17	MP GAMMA4	Y	.072	6.833
18	MP GAMMA4	Y	.072	5.167
19	MP ALPHA2	Y	.354	6.917
20	MP ALPHA2	Y	.354	1.083
21	MP BETA2	Y	.185	6.917
22	MP BETA2	Y	.185	1.083
23	MP GAMMA2	Y	.185	6.917
24	MP GAMMA2	Y	.185	1.083
25	MP ALPHA2	Y	.072	6
26	MP BETA2	Y	.053	6
27	MP GAMMA2	Y	.053	6
28	MP ALPHA4	Y	.08	6
29	MP BETA4	Y	.047	6
30	MP GAMMA4	Y	.047	6

Member Point Loads (BLC 10 : Wind Load (210))

	Member Label	Direction	Magnitude[k,k-ft]	Location[ft,%]
1	MP ALPHA1	Y	.114	7.667
2	MP ALPHA1	Y	.114	4.333
3	MP ALPHA1	X	.066	7.667
4	MP ALPHA1	X	.066	4.333
5	MP BETA1	Y	.089	7.667
6	MP BETA1	Y	.089	4.333
7	MP BETA1	X	.051	7.667
8	MP BETA1	X	.051	4.333
9	MP GAMMA1	Y	.114	7.667
10	MP GAMMA1	Y	.114	4.333
11	MP GAMMA1	X	.066	7.667
12	MP GAMMA1	X	.066	4.333
13	MP ALPHA3	Y	.137	7.667
14	MP ALPHA3	Y	.137	4.333
15	MP ALPHA3	X	.079	7.667
16	MP ALPHA3	X	.079	4.333
17	MP BETA3	Y	.098	7.667
18	MP BETA3	Y	.098	4.333
19	MP BETA3	X	.056	7.667
20	MP BETA3	X	.056	4.333
21	MP GAMMA3	Y	.137	7.667
22	MP GAMMA3	Y	.137	4.333
23	MP GAMMA3	X	.079	7.667
24	MP GAMMA3	X	.079	4.333
25	MP ALPHA4	Y	.092	6.833
26	MP ALPHA4	Y	.092	5.167

Member Point Loads (BLC 10 : Wind Load (210)) (Continued)

	Member Label	Direction	Magnitude[k,k-ft]	Location[ft,%]
27	MP ALPHA4	X	.053	6.833
28	MP ALPHA4	X	.053	5.167
29	MP BETA4	Y	.047	6.833
30	MP BETA4	Y	.047	5.167
31	MP BETA4	X	.027	6.833
32	MP BETA4	X	.027	5.167
33	MP GAMMA4	Y	.092	6.833
34	MP GAMMA4	Y	.092	5.167
35	MP GAMMA4	X	.053	6.833
36	MP GAMMA4	X	.053	5.167
37	MP ALPHA2	Y	.257	6.917
38	MP ALPHA2	Y	.257	1.083
39	MP ALPHA2	X	.149	6.917
40	MP ALPHA2	X	.149	1.083
41	MP BETA2	Y	.111	6.917
42	MP BETA2	Y	.111	1.083
43	MP BETA2	X	.064	6.917
44	MP BETA2	X	.064	1.083
45	MP GAMMA2	Y	.257	6.917
46	MP GAMMA2	Y	.257	1.083
47	MP GAMMA2	X	.149	6.917
48	MP GAMMA2	X	.149	1.083
49	MP ALPHA2	Y	.057	6
50	MP ALPHA2	X	.033	6
51	MP BETA2	Y	.041	6
52	MP BETA2	X	.024	6
53	MP GAMMA2	Y	.057	6
54	MP GAMMA2	X	.033	6
55	MP ALPHA4	Y	.06	6
56	MP ALPHA4	X	.035	6
57	MP BETA4	Y	.031	6
58	MP BETA4	X	.018	6
59	MP GAMMA4	Y	.06	6
60	MP GAMMA4	X	.035	6

Member Point Loads (BLC 11 : Wind Load (240))

	Member Label	Direction	Magnitude[k,k-ft]	Location[ft,%]
1	MP ALPHA1	Y	.056	7.667
2	MP ALPHA1	Y	.056	4.333
3	MP ALPHA1	X	.097	7.667
4	MP ALPHA1	X	.097	4.333
5	MP BETA1	Y	.056	7.667
6	MP BETA1	Y	.056	4.333
7	MP BETA1	X	.097	7.667
8	MP BETA1	X	.097	4.333
9	MP GAMMA1	Y	.071	7.667
10	MP GAMMA1	Y	.071	4.333
11	MP GAMMA1	X	.123	7.667
12	MP GAMMA1	X	.123	4.333
13	MP ALPHA3	Y	.064	7.667
14	MP ALPHA3	Y	.064	4.333
15	MP ALPHA3	X	.111	7.667
16	MP ALPHA3	X	.111	4.333
17	MP BETA3	Y	.064	7.667
18	MP BETA3	Y	.064	4.333
19	MP BETA3	X	.111	7.667

Member Point Loads (BLC 11 : Wind Load (240)) (Continued)

	Member Label	Direction	Magnitude[k,k-ft]	Location[ft,%]
20	MP BETA3	X	.111	4.333
21	MP GAMMA3	Y	.086	7.667
22	MP GAMMA3	Y	.086	4.333
23	MP GAMMA3	X	.15	7.667
24	MP GAMMA3	X	.15	4.333
25	MP ALPHA4	Y	.036	6.833
26	MP ALPHA4	Y	.036	5.167
27	MP ALPHA4	X	.062	6.833
28	MP ALPHA4	X	.062	5.167
29	MP BETA4	Y	.036	6.833
30	MP BETA4	Y	.036	5.167
31	MP BETA4	X	.062	6.833
32	MP BETA4	X	.062	5.167
33	MP GAMMA4	Y	.062	6.833
34	MP GAMMA4	Y	.062	5.167
35	MP GAMMA4	X	.107	6.833
36	MP GAMMA4	X	.107	5.167
37	MP ALPHA2	Y	.092	6.917
38	MP ALPHA2	Y	.092	1.083
39	MP ALPHA2	X	.16	6.917
40	MP ALPHA2	X	.16	1.083
41	MP BETA2	Y	.092	6.917
42	MP BETA2	Y	.092	1.083
43	MP BETA2	X	.16	6.917
44	MP BETA2	X	.16	1.083
45	MP GAMMA2	Y	.177	6.917
46	MP GAMMA2	Y	.177	1.083
47	MP GAMMA2	X	.306	6.917
48	MP GAMMA2	X	.306	1.083
49	MP ALPHA2	Y	.027	6
50	MP ALPHA2	X	.046	6
51	MP BETA2	Y	.027	6
52	MP BETA2	X	.046	6
53	MP GAMMA2	Y	.036	6
54	MP GAMMA2	X	.062	6
55	MP ALPHA4	Y	.023	6
56	MP ALPHA4	X	.041	6
57	MP BETA4	Y	.023	6
58	MP BETA4	X	.041	6
59	MP GAMMA4	Y	.04	6
60	MP GAMMA4	X	.07	6

Member Point Loads (BLC 12 : Wind Load (270))

	Member Label	Direction	Magnitude[k,k-ft]	Location[ft,%]
1	MP ALPHA1	X	.103	7.667
2	MP ALPHA1	X	.103	4.333
3	MP BETA1	X	.132	7.667
4	MP BETA1	X	.132	4.333
5	MP GAMMA1	X	.132	7.667
6	MP GAMMA1	X	.132	4.333
7	MP ALPHA3	X	.113	7.667
8	MP ALPHA3	X	.113	4.333
9	MP BETA3	X	.158	7.667
10	MP BETA3	X	.158	4.333
11	MP GAMMA3	X	.158	7.667
12	MP GAMMA3	X	.158	4.333

Member Point Loads (BLC 12 : Wind Load (270)) (Continued)

	Member Label	Direction	Magnitude[k,k-ft]	Location[ft,%]
13	MP ALPHA4	X	.054	6.833
14	MP ALPHA4	X	.054	5.167
15	MP BETA4	X	.106	6.833
16	MP BETA4	X	.106	5.167
17	MP GAMMA4	X	.106	6.833
18	MP GAMMA4	X	.106	5.167
19	MP ALPHA2	X	.128	6.917
20	MP ALPHA2	X	.128	1.083
21	MP BETA2	X	.297	6.917
22	MP BETA2	X	.297	1.083
23	MP GAMMA2	X	.297	6.917
24	MP GAMMA2	X	.297	1.083
25	MP ALPHA2	X	.047	6
26	MP BETA2	X	.066	6
27	MP GAMMA2	X	.066	6
28	MP ALPHA4	X	.036	6
29	MP BETA4	X	.069	6
30	MP GAMMA4	X	.069	6

Member Point Loads (BLC 13 : Wind Load (300))

	Member Label	Direction	Magnitude[k,k-ft]	Location[ft,%]
1	MP ALPHA1	Y	-.056	7.667
2	MP ALPHA1	Y	-.056	4.333
3	MP ALPHA1	X	.097	7.667
4	MP ALPHA1	X	.097	4.333
5	MP BETA1	Y	-.071	7.667
6	MP BETA1	Y	-.071	4.333
7	MP BETA1	X	.123	7.667
8	MP BETA1	X	.123	4.333
9	MP GAMMA1	Y	-.056	7.667
10	MP GAMMA1	Y	-.056	4.333
11	MP GAMMA1	X	.097	7.667
12	MP GAMMA1	X	.097	4.333
13	MP ALPHA3	Y	-.064	7.667
14	MP ALPHA3	Y	-.064	4.333
15	MP ALPHA3	X	.111	7.667
16	MP ALPHA3	X	.111	4.333
17	MP BETA3	Y	-.086	7.667
18	MP BETA3	Y	-.086	4.333
19	MP BETA3	X	.15	7.667
20	MP BETA3	X	.15	4.333
21	MP GAMMA3	Y	-.064	7.667
22	MP GAMMA3	Y	-.064	4.333
23	MP GAMMA3	X	.111	7.667
24	MP GAMMA3	X	.111	4.333
25	MP ALPHA4	Y	-.036	6.833
26	MP ALPHA4	Y	-.036	5.167
27	MP ALPHA4	X	.062	6.833
28	MP ALPHA4	X	.062	5.167
29	MP BETA4	Y	-.062	6.833
30	MP BETA4	Y	-.062	5.167
31	MP BETA4	X	.107	6.833
32	MP BETA4	X	.107	5.167
33	MP GAMMA4	Y	-.036	6.833
34	MP GAMMA4	Y	-.036	5.167
35	MP GAMMA4	X	.062	6.833

Member Point Loads (BLC 13 : Wind Load (300)) (Continued)

	Member Label	Direction	Magnitude[k,k-ft]	Location[ft,%]
36	MP GAMMA4	X	.062	5.167
37	MP ALPHA2	Y	-.092	6.917
38	MP ALPHA2	Y	-.092	1.083
39	MP ALPHA2	X	.16	6.917
40	MP ALPHA2	X	.16	1.083
41	MP BETA2	Y	-.177	6.917
42	MP BETA2	Y	-.177	1.083
43	MP BETA2	X	.306	6.917
44	MP BETA2	X	.306	1.083
45	MP GAMMA2	Y	-.092	6.917
46	MP GAMMA2	Y	-.092	1.083
47	MP GAMMA2	X	.16	6.917
48	MP GAMMA2	X	.16	1.083
49	MP ALPHA2	Y	-.027	6
50	MP ALPHA2	X	.046	6
51	MP BETA2	Y	-.036	6
52	MP BETA2	X	.062	6
53	MP GAMMA2	Y	-.027	6
54	MP GAMMA2	X	.046	6
55	MP ALPHA4	Y	-.023	6
56	MP ALPHA4	X	.041	6
57	MP BETA4	Y	-.04	6
58	MP BETA4	X	.07	6
59	MP GAMMA4	Y	-.023	6
60	MP GAMMA4	X	.041	6

Member Point Loads (BLC 14 : Wind Load (330))

	Member Label	Direction	Magnitude[k,k-ft]	Location[ft,%]
1	MP ALPHA1	Y	-.114	7.667
2	MP ALPHA1	Y	-.114	4.333
3	MP ALPHA1	X	.066	7.667
4	MP ALPHA1	X	.066	4.333
5	MP BETA1	Y	-.114	7.667
6	MP BETA1	Y	-.114	4.333
7	MP BETA1	X	.066	7.667
8	MP BETA1	X	.066	4.333
9	MP GAMMA1	Y	-.089	7.667
10	MP GAMMA1	Y	-.089	4.333
11	MP GAMMA1	X	.051	7.667
12	MP GAMMA1	X	.051	4.333
13	MP ALPHA3	Y	-.137	7.667
14	MP ALPHA3	Y	-.137	4.333
15	MP ALPHA3	X	.079	7.667
16	MP ALPHA3	X	.079	4.333
17	MP BETA3	Y	-.137	7.667
18	MP BETA3	Y	-.137	4.333
19	MP BETA3	X	.079	7.667
20	MP BETA3	X	.079	4.333
21	MP GAMMA3	Y	-.098	7.667
22	MP GAMMA3	Y	-.098	4.333
23	MP GAMMA3	X	.056	7.667
24	MP GAMMA3	X	.056	4.333
25	MP ALPHA4	Y	-.092	6.833
26	MP ALPHA4	Y	-.092	5.167
27	MP ALPHA4	X	.053	6.833
28	MP ALPHA4	X	.053	5.167

Member Point Loads (BLC 14 : Wind Load (330)) (Continued)

	Member Label	Direction	Magnitude[k,k-ft]	Location[ft,%]
29	MP BETA4	Y	-.092	6.833
30	MP BETA4	Y	-.092	5.167
31	MP BETA4	X	.053	6.833
32	MP BETA4	X	.053	5.167
33	MP GAMMA4	Y	-.047	6.833
34	MP GAMMA4	Y	-.047	5.167
35	MP GAMMA4	X	.027	6.833
36	MP GAMMA4	X	.027	5.167
37	MP ALPHA2	Y	-.257	6.917
38	MP ALPHA2	Y	-.257	1.083
39	MP ALPHA2	X	.149	6.917
40	MP ALPHA2	X	.149	1.083
41	MP BETA2	Y	-.257	6.917
42	MP BETA2	Y	-.257	1.083
43	MP BETA2	X	.149	6.917
44	MP BETA2	X	.149	1.083
45	MP GAMMA2	Y	-.111	6.917
46	MP GAMMA2	Y	-.111	1.083
47	MP GAMMA2	X	.064	6.917
48	MP GAMMA2	X	.064	1.083
49	MP ALPHA2	Y	-.057	6
50	MP ALPHA2	X	.033	6
51	MP BETA2	Y	-.057	6
52	MP BETA2	X	.033	6
53	MP GAMMA2	Y	-.041	6
54	MP GAMMA2	X	.024	6
55	MP ALPHA4	Y	-.06	6
56	MP ALPHA4	X	.035	6
57	MP BETA4	Y	-.06	6
58	MP BETA4	X	.035	6
59	MP GAMMA4	Y	-.031	6
60	MP GAMMA4	X	.018	6

Member Point Loads (BLC 15 : Maintanence (0))

	Member Label	Direction	Magnitude[k,k-ft]	Location[ft,%]
1	MP ALPHA1	Y	-.008	7.667
2	MP ALPHA1	Y	-.008	4.333
3	MP BETA1	Y	-.006	7.667
4	MP BETA1	Y	-.006	4.333
5	MP GAMMA1	Y	-.006	7.667
6	MP GAMMA1	Y	-.006	4.333
7	MP ALPHA3	Y	-.01	7.667
8	MP ALPHA3	Y	-.01	4.333
9	MP BETA3	Y	-.007	7.667
10	MP BETA3	Y	-.007	4.333
11	MP GAMMA3	Y	-.007	7.667
12	MP GAMMA3	Y	-.007	4.333
13	MP ALPHA4	Y	-.007	6.833
14	MP ALPHA4	Y	-.007	5.167
15	MP BETA4	Y	-.004	6.833
16	MP BETA4	Y	-.004	5.167
17	MP GAMMA4	Y	-.004	6.833
18	MP GAMMA4	Y	-.004	5.167
19	MP ALPHA2	Y	-.02	6.917
20	MP ALPHA2	Y	-.02	1.083
21	MP BETA2	Y	-.011	6.917

Member Point Loads (BLC 15 : Maintanence (0)) (Continued)

	Member Label	Direction	Magnitude[k,k-ft]	Location[ft,%]
22	MP BETA2	Y	-.011	1.083
23	MP GAMMA2	Y	-.011	6.917
24	MP GAMMA2	Y	-.011	1.083
25	MP ALPHA2	Y	-.004	6
26	MP BETA2	Y	-.003	6
27	MP GAMMA2	Y	-.003	6
28	MP ALPHA4	Y	-.005	6
29	MP BETA4	Y	-.003	6
30	MP GAMMA4	Y	-.003	6

Member Point Loads (BLC 16 : Maintanence (30))

	Member Label	Direction	Magnitude[k,k-ft]	Location[ft,%]
1	MP ALPHA1	Y	-.007	7.667
2	MP ALPHA1	Y	-.007	4.333
3	MP ALPHA1	X	-.004	7.667
4	MP ALPHA1	X	-.004	4.333
5	MP BETA1	Y	-.005	7.667
6	MP BETA1	Y	-.005	4.333
7	MP BETA1	X	-.003	7.667
8	MP BETA1	X	-.003	4.333
9	MP GAMMA1	Y	-.007	7.667
10	MP GAMMA1	Y	-.007	4.333
11	MP GAMMA1	X	-.004	7.667
12	MP GAMMA1	X	-.004	4.333
13	MP ALPHA3	Y	-.008	7.667
14	MP ALPHA3	Y	-.008	4.333
15	MP ALPHA3	X	-.005	7.667
16	MP ALPHA3	X	-.005	4.333
17	MP BETA3	Y	-.006	7.667
18	MP BETA3	Y	-.006	4.333
19	MP BETA3	X	-.003	7.667
20	MP BETA3	X	-.003	4.333
21	MP GAMMA3	Y	-.008	7.667
22	MP GAMMA3	Y	-.008	4.333
23	MP GAMMA3	X	-.005	7.667
24	MP GAMMA3	X	-.005	4.333
25	MP ALPHA4	Y	-.005	6.833
26	MP ALPHA4	Y	-.005	5.167
27	MP ALPHA4	X	-.003	6.833
28	MP ALPHA4	X	-.003	5.167
29	MP BETA4	Y	-.003	6.833
30	MP BETA4	Y	-.003	5.167
31	MP BETA4	X	-.002	6.833
32	MP BETA4	X	-.002	5.167
33	MP GAMMA4	Y	-.005	6.833
34	MP GAMMA4	Y	-.005	5.167
35	MP GAMMA4	X	-.003	6.833
36	MP GAMMA4	X	-.003	5.167
37	MP ALPHA2	Y	-.015	6.917
38	MP ALPHA2	Y	-.015	1.083
39	MP ALPHA2	X	-.009	6.917
40	MP ALPHA2	X	-.009	1.083
41	MP BETA2	Y	-.006	6.917
42	MP BETA2	Y	-.006	1.083
43	MP BETA2	X	-.004	6.917
44	MP BETA2	X	-.004	1.083

Member Point Loads (BLC 16 : Maintanence (30)) (Continued)

	Member Label	Direction	Magnitude[k,k-ft]	Location[ft,%]
45	MP GAMMA2	Y	-.015	6.917
46	MP GAMMA2	Y	-.015	1.083
47	MP GAMMA2	X	-.009	6.917
48	MP GAMMA2	X	-.009	1.083
49	MP ALPHA2	Y	-.003	6
50	MP ALPHA2	X	-.002	6
51	MP BETA2	Y	-.002	6
52	MP BETA2	X	-.001	6
53	MP GAMMA2	Y	-.003	6
54	MP GAMMA2	X	-.002	6
55	MP ALPHA4	Y	-.003	6
56	MP ALPHA4	X	-.002	6
57	MP BETA4	Y	-.002	6
58	MP BETA4	X	-.001	6
59	MP GAMMA4	Y	-.003	6
60	MP GAMMA4	X	-.002	6

Member Point Loads (BLC 17 : Maintanence (60))

	Member Label	Direction	Magnitude[k,k-ft]	Location[ft,%]
1	MP ALPHA1	Y	-.003	7.667
2	MP ALPHA1	Y	-.003	4.333
3	MP ALPHA1	X	-.006	7.667
4	MP ALPHA1	X	-.006	4.333
5	MP BETA1	Y	-.003	7.667
6	MP BETA1	Y	-.003	4.333
7	MP BETA1	X	-.006	7.667
8	MP BETA1	X	-.006	4.333
9	MP GAMMA1	Y	-.004	7.667
10	MP GAMMA1	Y	-.004	4.333
11	MP GAMMA1	X	-.007	7.667
12	MP GAMMA1	X	-.007	4.333
13	MP ALPHA3	Y	-.004	7.667
14	MP ALPHA3	Y	-.004	4.333
15	MP ALPHA3	X	-.006	7.667
16	MP ALPHA3	X	-.006	4.333
17	MP BETA3	Y	-.004	7.667
18	MP BETA3	Y	-.004	4.333
19	MP BETA3	X	-.006	7.667
20	MP BETA3	X	-.006	4.333
21	MP GAMMA3	Y	-.005	7.667
22	MP GAMMA3	Y	-.005	4.333
23	MP GAMMA3	X	-.009	7.667
24	MP GAMMA3	X	-.009	4.333
25	MP ALPHA4	Y	-.002	6.833
26	MP ALPHA4	Y	-.002	5.167
27	MP ALPHA4	X	-.004	6.833
28	MP ALPHA4	X	-.004	5.167
29	MP BETA4	Y	-.002	6.833
30	MP BETA4	Y	-.002	5.167
31	MP BETA4	X	-.004	6.833
32	MP BETA4	X	-.004	5.167
33	MP GAMMA4	Y	-.004	6.833
34	MP GAMMA4	Y	-.004	5.167
35	MP GAMMA4	X	-.006	6.833
36	MP GAMMA4	X	-.006	5.167
37	MP ALPHA2	Y	-.005	6.917

Member Point Loads (BLC 17 : Maintanence (60)) (Continued)

	Member Label	Direction	Magnitude[k,k-ft]	Location[ft,%]
38	MP ALPHA2	Y	-.005	1.083
39	MP ALPHA2	X	-.009	6.917
40	MP ALPHA2	X	-.009	1.083
41	MP BETA2	Y	-.005	6.917
42	MP BETA2	Y	-.005	1.083
43	MP BETA2	X	-.009	6.917
44	MP BETA2	X	-.009	1.083
45	MP GAMMA2	Y	-.01	6.917
46	MP GAMMA2	Y	-.01	1.083
47	MP GAMMA2	X	-.018	6.917
48	MP GAMMA2	X	-.018	1.083
49	MP ALPHA2	Y	-.002	6
50	MP ALPHA2	X	-.003	6
51	MP BETA2	Y	-.002	6
52	MP BETA2	X	-.003	6
53	MP GAMMA2	Y	-.002	6
54	MP GAMMA2	X	-.004	6
55	MP ALPHA4	Y	-.001	6
56	MP ALPHA4	X	-.002	6
57	MP BETA4	Y	-.001	6
58	MP BETA4	X	-.002	6
59	MP GAMMA4	Y	-.002	6
60	MP GAMMA4	X	-.004	6

Member Point Loads (BLC 18 : Maintanence (90))

	Member Label	Direction	Magnitude[k,k-ft]	Location[ft,%]
1	MP ALPHA1	X	-.006	7.667
2	MP ALPHA1	X	-.006	4.333
3	MP BETA1	X	-.008	7.667
4	MP BETA1	X	-.008	4.333
5	MP GAMMA1	X	-.008	7.667
6	MP GAMMA1	X	-.008	4.333
7	MP ALPHA3	X	-.006	7.667
8	MP ALPHA3	X	-.006	4.333
9	MP BETA3	X	-.009	7.667
10	MP BETA3	X	-.009	4.333
11	MP GAMMA3	X	-.009	7.667
12	MP GAMMA3	X	-.009	4.333
13	MP ALPHA4	X	-.003	6.833
14	MP ALPHA4	X	-.003	5.167
15	MP BETA4	X	-.006	6.833
16	MP BETA4	X	-.006	5.167
17	MP GAMMA4	X	-.006	6.833
18	MP GAMMA4	X	-.006	5.167
19	MP ALPHA2	X	-.007	6.917
20	MP ALPHA2	X	-.007	1.083
21	MP BETA2	X	-.017	6.917
22	MP BETA2	X	-.017	1.083
23	MP GAMMA2	X	-.017	6.917
24	MP GAMMA2	X	-.017	1.083
25	MP ALPHA2	X	-.003	6
26	MP BETA2	X	-.004	6
27	MP GAMMA2	X	-.004	6
28	MP ALPHA4	X	-.002	6
29	MP BETA4	X	-.004	6
30	MP GAMMA4	X	-.004	6

Member Point Loads (BLC 19 : Maintanence (120))

	Member Label	Direction	Magnitude[k,k-ft]	Location[ft,%]
1	MP ALPHA1	Y	.003	7.667
2	MP ALPHA1	Y	.003	4.333
3	MP ALPHA1	X	-.006	7.667
4	MP ALPHA1	X	-.006	4.333
5	MP BETA1	Y	.004	7.667
6	MP BETA1	Y	.004	4.333
7	MP BETA1	X	-.007	7.667
8	MP BETA1	X	-.007	4.333
9	MP GAMMA1	Y	.003	7.667
10	MP GAMMA1	Y	.003	4.333
11	MP GAMMA1	X	-.006	7.667
12	MP GAMMA1	X	-.006	4.333
13	MP ALPHA3	Y	.004	7.667
14	MP ALPHA3	Y	.004	4.333
15	MP ALPHA3	X	-.006	7.667
16	MP ALPHA3	X	-.006	4.333
17	MP BETA3	Y	.005	7.667
18	MP BETA3	Y	.005	4.333
19	MP BETA3	X	-.009	7.667
20	MP BETA3	X	-.009	4.333
21	MP GAMMA3	Y	.004	7.667
22	MP GAMMA3	Y	.004	4.333
23	MP GAMMA3	X	-.006	7.667
24	MP GAMMA3	X	-.006	4.333
25	MP ALPHA4	Y	.002	6.833
26	MP ALPHA4	Y	.002	5.167
27	MP ALPHA4	X	-.004	6.833
28	MP ALPHA4	X	-.004	5.167
29	MP BETA4	Y	.004	6.833
30	MP BETA4	Y	.004	5.167
31	MP BETA4	X	-.006	6.833
32	MP BETA4	X	-.006	5.167
33	MP GAMMA4	Y	.002	6.833
34	MP GAMMA4	Y	.002	5.167
35	MP GAMMA4	X	-.004	6.833
36	MP GAMMA4	X	-.004	5.167
37	MP ALPHA2	Y	.005	6.917
38	MP ALPHA2	Y	.005	1.083
39	MP ALPHA2	X	-.009	6.917
40	MP ALPHA2	X	-.009	1.083
41	MP BETA2	Y	.01	6.917
42	MP BETA2	Y	.01	1.083
43	MP BETA2	X	-.018	6.917
44	MP BETA2	X	-.018	1.083
45	MP GAMMA2	Y	.005	6.917
46	MP GAMMA2	Y	.005	1.083
47	MP GAMMA2	X	-.009	6.917
48	MP GAMMA2	X	-.009	1.083
49	MP ALPHA2	Y	.002	6
50	MP ALPHA2	X	-.003	6
51	MP BETA2	Y	.002	6
52	MP BETA2	X	-.004	6
53	MP GAMMA2	Y	.002	6
54	MP GAMMA2	X	-.003	6
55	MP ALPHA4	Y	.001	6
56	MP ALPHA4	X	-.002	6
57	MP BETA4	Y	.002	6

Member Point Loads (BLC 19 : Maintanence (120)) (Continued)

	Member Label	Direction	Magnitude[k,k-ft]	Location[ft,%]
58	MP BETA4	X	-.004	6
59	MP GAMMA4	Y	.001	6
60	MP GAMMA4	X	-.002	6

Member Point Loads (BLC 20 : Maintanence (150))

	Member Label	Direction	Magnitude[k,k-ft]	Location[ft,%]
1	MP ALPHA1	Y	.007	7.667
2	MP ALPHA1	Y	.007	4.333
3	MP ALPHA1	X	-.004	7.667
4	MP ALPHA1	X	-.004	4.333
5	MP BETA1	Y	.007	7.667
6	MP BETA1	Y	.007	4.333
7	MP BETA1	X	-.004	7.667
8	MP BETA1	X	-.004	4.333
9	MP GAMMA1	Y	.005	7.667
10	MP GAMMA1	Y	.005	4.333
11	MP GAMMA1	X	-.003	7.667
12	MP GAMMA1	X	-.003	4.333
13	MP ALPHA3	Y	.008	7.667
14	MP ALPHA3	Y	.008	4.333
15	MP ALPHA3	X	-.005	7.667
16	MP ALPHA3	X	-.005	4.333
17	MP BETA3	Y	.008	7.667
18	MP BETA3	Y	.008	4.333
19	MP BETA3	X	-.005	7.667
20	MP BETA3	X	-.005	4.333
21	MP GAMMA3	Y	.006	7.667
22	MP GAMMA3	Y	.006	4.333
23	MP GAMMA3	X	-.003	7.667
24	MP GAMMA3	X	-.003	4.333
25	MP ALPHA4	Y	.005	6.833
26	MP ALPHA4	Y	.005	5.167
27	MP ALPHA4	X	-.003	6.833
28	MP ALPHA4	X	-.003	5.167
29	MP BETA4	Y	.005	6.833
30	MP BETA4	Y	.005	5.167
31	MP BETA4	X	-.003	6.833
32	MP BETA4	X	-.003	5.167
33	MP GAMMA4	Y	.003	6.833
34	MP GAMMA4	Y	.003	5.167
35	MP GAMMA4	X	-.002	6.833
36	MP GAMMA4	X	-.002	5.167
37	MP ALPHA2	Y	.015	6.917
38	MP ALPHA2	Y	.015	1.083
39	MP ALPHA2	X	-.009	6.917
40	MP ALPHA2	X	-.009	1.083
41	MP BETA2	Y	.015	6.917
42	MP BETA2	Y	.015	1.083
43	MP BETA2	X	-.009	6.917
44	MP BETA2	X	-.009	1.083
45	MP GAMMA2	Y	.006	6.917
46	MP GAMMA2	Y	.006	1.083
47	MP GAMMA2	X	-.004	6.917
48	MP GAMMA2	X	-.004	1.083
49	MP ALPHA2	Y	.003	6
50	MP ALPHA2	X	-.002	6

Member Point Loads (BLC 20 : Maintanence (150)) (Continued)

	Member Label	Direction	Magnitude[k,k-ft]	Location[ft,%]
51	MP BETA2	Y	.003	6
52	MP BETA2	X	-.002	6
53	MP GAMMA2	Y	.002	6
54	MP GAMMA2	X	-.001	6
55	MP ALPHA4	Y	.003	6
56	MP ALPHA4	X	-.002	6
57	MP BETA4	Y	.003	6
58	MP BETA4	X	-.002	6
59	MP GAMMA4	Y	.002	6
60	MP GAMMA4	X	-.001	6

Member Point Loads (BLC 21 : Maintanence (180))

	Member Label	Direction	Magnitude[k,k-ft]	Location[ft,%]
1	MP ALPHA1	Y	.008	7.667
2	MP ALPHA1	Y	.008	4.333
3	MP BETA1	Y	.006	7.667
4	MP BETA1	Y	.006	4.333
5	MP GAMMA1	Y	.006	7.667
6	MP GAMMA1	Y	.006	4.333
7	MP ALPHA3	Y	.01	7.667
8	MP ALPHA3	Y	.01	4.333
9	MP BETA3	Y	.007	7.667
10	MP BETA3	Y	.007	4.333
11	MP GAMMA3	Y	.007	7.667
12	MP GAMMA3	Y	.007	4.333
13	MP ALPHA4	Y	.007	6.833
14	MP ALPHA4	Y	.007	5.167
15	MP BETA4	Y	.004	6.833
16	MP BETA4	Y	.004	5.167
17	MP GAMMA4	Y	.004	6.833
18	MP GAMMA4	Y	.004	5.167
19	MP ALPHA2	Y	.02	6.917
20	MP ALPHA2	Y	.02	1.083
21	MP BETA2	Y	.011	6.917
22	MP BETA2	Y	.011	1.083
23	MP GAMMA2	Y	.011	6.917
24	MP GAMMA2	Y	.011	1.083
25	MP ALPHA2	Y	.004	6
26	MP BETA2	Y	.003	6
27	MP GAMMA2	Y	.003	6
28	MP ALPHA4	Y	.005	6
29	MP BETA4	Y	.003	6
30	MP GAMMA4	Y	.003	6

Member Point Loads (BLC 22 : Maintanence (210))

	Member Label	Direction	Magnitude[k,k-ft]	Location[ft,%]
1	MP ALPHA1	Y	.007	7.667
2	MP ALPHA1	Y	.007	4.333
3	MP ALPHA1	X	.004	7.667
4	MP ALPHA1	X	.004	4.333
5	MP BETA1	Y	.005	7.667
6	MP BETA1	Y	.005	4.333
7	MP BETA1	X	.003	7.667
8	MP BETA1	X	.003	4.333
9	MP GAMMA1	Y	.007	7.667
10	MP GAMMA1	Y	.007	4.333

Member Point Loads (BLC 22 : Maintanence (210)) (Continued)

	Member Label	Direction	Magnitude[k,k-ft]	Location[ft,%]
11	MP GAMMA1	X	.004	7.667
12	MP GAMMA1	X	.004	4.333
13	MP ALPHA3	Y	.008	7.667
14	MP ALPHA3	Y	.008	4.333
15	MP ALPHA3	X	.005	7.667
16	MP ALPHA3	X	.005	4.333
17	MP BETA3	Y	.006	7.667
18	MP BETA3	Y	.006	4.333
19	MP BETA3	X	.003	7.667
20	MP BETA3	X	.003	4.333
21	MP GAMMA3	Y	.008	7.667
22	MP GAMMA3	Y	.008	4.333
23	MP GAMMA3	X	.005	7.667
24	MP GAMMA3	X	.005	4.333
25	MP ALPHA4	Y	.005	6.833
26	MP ALPHA4	Y	.005	5.167
27	MP ALPHA4	X	.003	6.833
28	MP ALPHA4	X	.003	5.167
29	MP BETA4	Y	.003	6.833
30	MP BETA4	Y	.003	5.167
31	MP BETA4	X	.002	6.833
32	MP BETA4	X	.002	5.167
33	MP GAMMA4	Y	.005	6.833
34	MP GAMMA4	Y	.005	5.167
35	MP GAMMA4	X	.003	6.833
36	MP GAMMA4	X	.003	5.167
37	MP ALPHA2	Y	.015	6.917
38	MP ALPHA2	Y	.015	1.083
39	MP ALPHA2	X	.009	6.917
40	MP ALPHA2	X	.009	1.083
41	MP BETA2	Y	.006	6.917
42	MP BETA2	Y	.006	1.083
43	MP BETA2	X	.004	6.917
44	MP BETA2	X	.004	1.083
45	MP GAMMA2	Y	.015	6.917
46	MP GAMMA2	Y	.015	1.083
47	MP GAMMA2	X	.009	6.917
48	MP GAMMA2	X	.009	1.083
49	MP ALPHA2	Y	.003	6
50	MP ALPHA2	X	.002	6
51	MP BETA2	Y	.002	6
52	MP BETA2	X	.001	6
53	MP GAMMA2	Y	.003	6
54	MP GAMMA2	X	.002	6
55	MP ALPHA4	Y	.003	6
56	MP ALPHA4	X	.002	6
57	MP BETA4	Y	.002	6
58	MP BETA4	X	.001	6
59	MP GAMMA4	Y	.003	6
60	MP GAMMA4	X	.002	6

Member Point Loads (BLC 23 : Maintanence (240))

	Member Label	Direction	Magnitude[k,k-ft]	Location[ft,%]
1	MP ALPHA1	Y	.003	7.667
2	MP ALPHA1	Y	.003	4.333
3	MP ALPHA1	X	.006	7.667

Member Point Loads (BLC 23 : Maintanence (240)) (Continued)

	Member Label	Direction	Magnitude[k,k-ft]	Location[ft,%]
4	MP ALPHA1	X	.006	4.333
5	MP BETA1	Y	.003	7.667
6	MP BETA1	Y	.003	4.333
7	MP BETA1	X	.006	7.667
8	MP BETA1	X	.006	4.333
9	MP GAMMA1	Y	.004	7.667
10	MP GAMMA1	Y	.004	4.333
11	MP GAMMA1	X	.007	7.667
12	MP GAMMA1	X	.007	4.333
13	MP ALPHA3	Y	.004	7.667
14	MP ALPHA3	Y	.004	4.333
15	MP ALPHA3	X	.006	7.667
16	MP ALPHA3	X	.006	4.333
17	MP BETA3	Y	.004	7.667
18	MP BETA3	Y	.004	4.333
19	MP BETA3	X	.006	7.667
20	MP BETA3	X	.006	4.333
21	MP GAMMA3	Y	.005	7.667
22	MP GAMMA3	Y	.005	4.333
23	MP GAMMA3	X	.009	7.667
24	MP GAMMA3	X	.009	4.333
25	MP ALPHA4	Y	.002	6.833
26	MP ALPHA4	Y	.002	5.167
27	MP ALPHA4	X	.004	6.833
28	MP ALPHA4	X	.004	5.167
29	MP BETA4	Y	.002	6.833
30	MP BETA4	Y	.002	5.167
31	MP BETA4	X	.004	6.833
32	MP BETA4	X	.004	5.167
33	MP GAMMA4	Y	.004	6.833
34	MP GAMMA4	Y	.004	5.167
35	MP GAMMA4	X	.006	6.833
36	MP GAMMA4	X	.006	5.167
37	MP ALPHA2	Y	.005	6.917
38	MP ALPHA2	Y	.005	1.083
39	MP ALPHA2	X	.009	6.917
40	MP ALPHA2	X	.009	1.083
41	MP BETA2	Y	.005	6.917
42	MP BETA2	Y	.005	1.083
43	MP BETA2	X	.009	6.917
44	MP BETA2	X	.009	1.083
45	MP GAMMA2	Y	.01	6.917
46	MP GAMMA2	Y	.01	1.083
47	MP GAMMA2	X	.018	6.917
48	MP GAMMA2	X	.018	1.083
49	MP ALPHA2	Y	.002	6
50	MP ALPHA2	X	.003	6
51	MP BETA2	Y	.002	6
52	MP BETA2	X	.003	6
53	MP GAMMA2	Y	.002	6
54	MP GAMMA2	X	.004	6
55	MP ALPHA4	Y	.001	6
56	MP ALPHA4	X	.002	6
57	MP BETA4	Y	.001	6
58	MP BETA4	X	.002	6
59	MP GAMMA4	Y	.002	6
60	MP GAMMA4	X	.004	6

Member Point Loads (BLC 24 : Maintanence (270))

	Member Label	Direction	Magnitude[k,k-ft]	Location[ft,%]
1	MP ALPHA1	X	.006	7.667
2	MP ALPHA1	X	.006	4.333
3	MP BETA1	X	.008	7.667
4	MP BETA1	X	.008	4.333
5	MP GAMMA1	X	.008	7.667
6	MP GAMMA1	X	.008	4.333
7	MP ALPHA3	X	.006	7.667
8	MP ALPHA3	X	.006	4.333
9	MP BETA3	X	.009	7.667
10	MP BETA3	X	.009	4.333
11	MP GAMMA3	X	.009	7.667
12	MP GAMMA3	X	.009	4.333
13	MP ALPHA4	X	.003	6.833
14	MP ALPHA4	X	.003	5.167
15	MP BETA4	X	.006	6.833
16	MP BETA4	X	.006	5.167
17	MP GAMMA4	X	.006	6.833
18	MP GAMMA4	X	.006	5.167
19	MP ALPHA2	X	.007	6.917
20	MP ALPHA2	X	.007	1.083
21	MP BETA2	X	.017	6.917
22	MP BETA2	X	.017	1.083
23	MP GAMMA2	X	.017	6.917
24	MP GAMMA2	X	.017	1.083
25	MP ALPHA2	X	.003	6
26	MP BETA2	X	.004	6
27	MP GAMMA2	X	.004	6
28	MP ALPHA4	X	.002	6
29	MP BETA4	X	.004	6
30	MP GAMMA4	X	.004	6

Member Point Loads (BLC 25 : Maintanence (300))

	Member Label	Direction	Magnitude[k,k-ft]	Location[ft,%]
1	MP ALPHA1	Y	-.003	7.667
2	MP ALPHA1	Y	-.003	4.333
3	MP ALPHA1	X	.006	7.667
4	MP ALPHA1	X	.006	4.333
5	MP BETA1	Y	-.004	7.667
6	MP BETA1	Y	-.004	4.333
7	MP BETA1	X	.007	7.667
8	MP BETA1	X	.007	4.333
9	MP GAMMA1	Y	-.003	7.667
10	MP GAMMA1	Y	-.003	4.333
11	MP GAMMA1	X	.006	7.667
12	MP GAMMA1	X	.006	4.333
13	MP ALPHA3	Y	-.004	7.667
14	MP ALPHA3	Y	-.004	4.333
15	MP ALPHA3	X	.006	7.667
16	MP ALPHA3	X	.006	4.333
17	MP BETA3	Y	-.005	7.667
18	MP BETA3	Y	-.005	4.333
19	MP BETA3	X	.009	7.667
20	MP BETA3	X	.009	4.333
21	MP GAMMA3	Y	-.004	7.667
22	MP GAMMA3	Y	-.004	4.333
23	MP GAMMA3	X	.006	7.667

Member Point Loads (BLC 25 : Maintanence (300)) (Continued)

	Member Label	Direction	Magnitude[k,k-ft]	Location[ft,%]
24	MP GAMMA3	X	.006	4.333
25	MP ALPHA4	Y	-.002	6.833
26	MP ALPHA4	Y	-.002	5.167
27	MP ALPHA4	X	.004	6.833
28	MP ALPHA4	X	.004	5.167
29	MP BETA4	Y	-.004	6.833
30	MP BETA4	Y	-.004	5.167
31	MP BETA4	X	.006	6.833
32	MP BETA4	X	.006	5.167
33	MP GAMMA4	Y	-.002	6.833
34	MP GAMMA4	Y	-.002	5.167
35	MP GAMMA4	X	.004	6.833
36	MP GAMMA4	X	.004	5.167
37	MP ALPHA2	Y	-.005	6.917
38	MP ALPHA2	Y	-.005	1.083
39	MP ALPHA2	X	.009	6.917
40	MP ALPHA2	X	.009	1.083
41	MP BETA2	Y	-.01	6.917
42	MP BETA2	Y	-.01	1.083
43	MP BETA2	X	.018	6.917
44	MP BETA2	X	.018	1.083
45	MP GAMMA2	Y	-.005	6.917
46	MP GAMMA2	Y	-.005	1.083
47	MP GAMMA2	X	.009	6.917
48	MP GAMMA2	X	.009	1.083
49	MP ALPHA2	Y	-.002	6
50	MP ALPHA2	X	.003	6
51	MP BETA2	Y	-.002	6
52	MP BETA2	X	.004	6
53	MP GAMMA2	Y	-.002	6
54	MP GAMMA2	X	.003	6
55	MP ALPHA4	Y	-.001	6
56	MP ALPHA4	X	.002	6
57	MP BETA4	Y	-.002	6
58	MP BETA4	X	.004	6
59	MP GAMMA4	Y	-.001	6
60	MP GAMMA4	X	.002	6

Member Point Loads (BLC 26 : Maintanence (330))

	Member Label	Direction	Magnitude[k,k-ft]	Location[ft,%]
1	MP ALPHA1	Y	-.007	7.667
2	MP ALPHA1	Y	-.007	4.333
3	MP ALPHA1	X	.004	7.667
4	MP ALPHA1	X	.004	4.333
5	MP BETA1	Y	-.007	7.667
6	MP BETA1	Y	-.007	4.333
7	MP BETA1	X	.004	7.667
8	MP BETA1	X	.004	4.333
9	MP GAMMA1	Y	-.005	7.667
10	MP GAMMA1	Y	-.005	4.333
11	MP GAMMA1	X	.003	7.667
12	MP GAMMA1	X	.003	4.333
13	MP ALPHA3	Y	-.008	7.667
14	MP ALPHA3	Y	-.008	4.333
15	MP ALPHA3	X	.005	7.667
16	MP ALPHA3	X	.005	4.333

Member Point Loads (BLC 26 : Maintanence (330)) (Continued)

	Member Label	Direction	Magnitude[k,k-ft]	Location[ft,%]
17	MP BETA3	Y	-.008	7.667
18	MP BETA3	Y	-.008	4.333
19	MP BETA3	X	.005	7.667
20	MP BETA3	X	.005	4.333
21	MP GAMMA3	Y	-.006	7.667
22	MP GAMMA3	Y	-.006	4.333
23	MP GAMMA3	X	.003	7.667
24	MP GAMMA3	X	.003	4.333
25	MP ALPHA4	Y	-.005	6.833
26	MP ALPHA4	Y	-.005	5.167
27	MP ALPHA4	X	.003	6.833
28	MP ALPHA4	X	.003	5.167
29	MP BETA4	Y	-.005	6.833
30	MP BETA4	Y	-.005	5.167
31	MP BETA4	X	.003	6.833
32	MP BETA4	X	.003	5.167
33	MP GAMMA4	Y	-.003	6.833
34	MP GAMMA4	Y	-.003	5.167
35	MP GAMMA4	X	.002	6.833
36	MP GAMMA4	X	.002	5.167
37	MP ALPHA2	Y	-.015	6.917
38	MP ALPHA2	Y	-.015	1.083
39	MP ALPHA2	X	.009	6.917
40	MP ALPHA2	X	.009	1.083
41	MP BETA2	Y	-.015	6.917
42	MP BETA2	Y	-.015	1.083
43	MP BETA2	X	.009	6.917
44	MP BETA2	X	.009	1.083
45	MP GAMMA2	Y	-.006	6.917
46	MP GAMMA2	Y	-.006	1.083
47	MP GAMMA2	X	.004	6.917
48	MP GAMMA2	X	.004	1.083
49	MP ALPHA2	Y	-.003	6
50	MP ALPHA2	X	.002	6
51	MP BETA2	Y	-.003	6
52	MP BETA2	X	.002	6
53	MP GAMMA2	Y	-.002	6
54	MP GAMMA2	X	.001	6
55	MP ALPHA4	Y	-.003	6
56	MP ALPHA4	X	.002	6
57	MP BETA4	Y	-.003	6
58	MP BETA4	X	.002	6
59	MP GAMMA4	Y	-.002	6
60	MP GAMMA4	X	.001	6

Member Point Loads (BLC 27 : Ice Dead Load)

	Member Label	Direction	Magnitude[k,k-ft]	Location[ft,%]
1	MP ALPHA1	Z	-.088	7.667
2	MP ALPHA1	Z	-.088	4.333
3	MP BETA1	Z	-.088	7.667
4	MP BETA1	Z	-.088	4.333
5	MP GAMMA1	Z	-.088	7.667
6	MP GAMMA1	Z	-.088	4.333
7	MP ALPHA3	Z	-.104	7.667
8	MP ALPHA3	Z	-.104	4.333
9	MP BETA3	Z	-.104	7.667

Member Point Loads (BLC 27 : Ice Dead Load) (Continued)

	Member Label	Direction	Magnitude[k,k-ft]	Location[ft,%]
10	MP BETA3	Z	-.104	4.333
11	MP GAMMA3	Z	-.104	7.667
12	MP GAMMA3	Z	-.104	4.333
13	MP ALPHA4	Z	-.075	6.833
14	MP ALPHA4	Z	-.075	5.167
15	MP BETA4	Z	-.075	6.833
16	MP BETA4	Z	-.075	5.167
17	MP GAMMA4	Z	-.075	6.833
18	MP GAMMA4	Z	-.075	5.167
19	MP ALPHA2	Z	-.207	6.917
20	MP ALPHA2	Z	-.207	1.083
21	MP BETA2	Z	-.207	6.917
22	MP BETA2	Z	-.207	1.083
23	MP GAMMA2	Z	-.207	6.917
24	MP GAMMA2	Z	-.207	1.083
25	MP ALPHA2	Z	-.063	6
26	MP BETA2	Z	-.063	6
27	MP GAMMA2	Z	-.063	6
28	MP ALPHA4	Z	-.058	6
29	MP BETA4	Z	-.058	6
30	MP GAMMA4	Z	-.058	6

Member Point Loads (BLC 28 : Ice Wind Load (0))

	Member Label	Direction	Magnitude[k,k-ft]	Location[ft,%]
1	MP ALPHA1	Y	-.017	7.667
2	MP ALPHA1	Y	-.017	4.333
3	MP BETA1	Y	-.014	7.667
4	MP BETA1	Y	-.014	4.333
5	MP GAMMA1	Y	-.014	7.667
6	MP GAMMA1	Y	-.014	4.333
7	MP ALPHA3	Y	-.02	7.667
8	MP ALPHA3	Y	-.02	4.333
9	MP BETA3	Y	-.016	7.667
10	MP BETA3	Y	-.016	4.333
11	MP GAMMA3	Y	-.016	7.667
12	MP GAMMA3	Y	-.016	4.333
13	MP ALPHA4	Y	-.015	6.833
14	MP ALPHA4	Y	-.015	5.167
15	MP BETA4	Y	-.009	6.833
16	MP BETA4	Y	-.009	5.167
17	MP GAMMA4	Y	-.009	6.833
18	MP GAMMA4	Y	-.009	5.167
19	MP ALPHA2	Y	-.06	6.917
20	MP ALPHA2	Y	-.06	1.083
21	MP BETA2	Y	-.035	6.917
22	MP BETA2	Y	-.035	1.083
23	MP GAMMA2	Y	-.035	6.917
24	MP GAMMA2	Y	-.035	1.083
25	MP ALPHA2	Y	-.01	6
26	MP BETA2	Y	-.008	6
27	MP GAMMA2	Y	-.008	6
28	MP ALPHA4	Y	-.011	6
29	MP BETA4	Y	-.008	6
30	MP GAMMA4	Y	-.008	6

Member Point Loads (BLC 29 : Ice Wind Load (30))

	Member Label	Direction	Magnitude[k,k-ft]	Location[ft,%]
1	MP ALPHA1	Y	-.014	7.667
2	MP ALPHA1	Y	-.014	4.333
3	MP ALPHA1	X	-.008	7.667
4	MP ALPHA1	X	-.008	4.333
5	MP BETA1	Y	-.011	7.667
6	MP BETA1	Y	-.011	4.333
7	MP BETA1	X	-.007	7.667
8	MP BETA1	X	-.007	4.333
9	MP GAMMA1	Y	-.014	7.667
10	MP GAMMA1	Y	-.014	4.333
11	MP GAMMA1	X	-.008	7.667
12	MP GAMMA1	X	-.008	4.333
13	MP ALPHA3	Y	-.016	7.667
14	MP ALPHA3	Y	-.016	4.333
15	MP ALPHA3	X	-.009	7.667
16	MP ALPHA3	X	-.009	4.333
17	MP BETA3	Y	-.012	7.667
18	MP BETA3	Y	-.012	4.333
19	MP BETA3	X	-.007	7.667
20	MP BETA3	X	-.007	4.333
21	MP GAMMA3	Y	-.016	7.667
22	MP GAMMA3	Y	-.016	4.333
23	MP GAMMA3	X	-.009	7.667
24	MP GAMMA3	X	-.009	4.333
25	MP ALPHA4	Y	-.011	6.833
26	MP ALPHA4	Y	-.011	5.167
27	MP ALPHA4	X	-.007	6.833
28	MP ALPHA4	X	-.007	5.167
29	MP BETA4	Y	-.007	6.833
30	MP BETA4	Y	-.007	5.167
31	MP BETA4	X	-.004	6.833
32	MP BETA4	X	-.004	5.167
33	MP GAMMA4	Y	-.011	6.833
34	MP GAMMA4	Y	-.011	5.167
35	MP GAMMA4	X	-.007	6.833
36	MP GAMMA4	X	-.007	5.167
37	MP ALPHA2	Y	-.045	6.917
38	MP ALPHA2	Y	-.045	1.083
39	MP ALPHA2	X	-.026	6.917
40	MP ALPHA2	X	-.026	1.083
41	MP BETA2	Y	-.023	6.917
42	MP BETA2	Y	-.023	1.083
43	MP BETA2	X	-.013	6.917
44	MP BETA2	X	-.013	1.083
45	MP GAMMA2	Y	-.045	6.917
46	MP GAMMA2	Y	-.045	1.083
47	MP GAMMA2	X	-.026	6.917
48	MP GAMMA2	X	-.026	1.083
49	MP ALPHA2	Y	-.008	6
50	MP ALPHA2	X	-.005	6
51	MP BETA2	Y	-.007	6
52	MP BETA2	X	-.004	6
53	MP GAMMA2	Y	-.008	6
54	MP GAMMA2	X	-.005	6
55	MP ALPHA4	Y	-.009	6
56	MP ALPHA4	X	-.005	6
57	MP BETA4	Y	-.005	6

Member Point Loads (BLC 29 : Ice Wind Load (30)) (Continued)

	Member Label	Direction	Magnitude[k,k-ft]	Location[ft,%]
58	MP BETA4	X	-.003	6
59	MP GAMMA4	Y	-.009	6
60	MP GAMMA4	X	-.005	6

Member Point Loads (BLC 30 : Ice Wind Load (60))

	Member Label	Direction	Magnitude[k,k-ft]	Location[ft,%]
1	MP ALPHA1	Y	-.007	7.667
2	MP ALPHA1	Y	-.007	4.333
3	MP ALPHA1	X	-.012	7.667
4	MP ALPHA1	X	-.012	4.333
5	MP BETA1	Y	-.007	7.667
6	MP BETA1	Y	-.007	4.333
7	MP BETA1	X	-.012	7.667
8	MP BETA1	X	-.012	4.333
9	MP GAMMA1	Y	-.009	7.667
10	MP GAMMA1	Y	-.009	4.333
11	MP GAMMA1	X	-.015	7.667
12	MP GAMMA1	X	-.015	4.333
13	MP ALPHA3	Y	-.008	7.667
14	MP ALPHA3	Y	-.008	4.333
15	MP ALPHA3	X	-.014	7.667
16	MP ALPHA3	X	-.014	4.333
17	MP BETA3	Y	-.008	7.667
18	MP BETA3	Y	-.008	4.333
19	MP BETA3	X	-.014	7.667
20	MP BETA3	X	-.014	4.333
21	MP GAMMA3	Y	-.01	7.667
22	MP GAMMA3	Y	-.01	4.333
23	MP GAMMA3	X	-.018	7.667
24	MP GAMMA3	X	-.018	4.333
25	MP ALPHA4	Y	-.005	6.833
26	MP ALPHA4	Y	-.005	5.167
27	MP ALPHA4	X	-.008	6.833
28	MP ALPHA4	X	-.008	5.167
29	MP BETA4	Y	-.005	6.833
30	MP BETA4	Y	-.005	5.167
31	MP BETA4	X	-.008	6.833
32	MP BETA4	X	-.008	5.167
33	MP GAMMA4	Y	-.007	6.833
34	MP GAMMA4	Y	-.007	5.167
35	MP GAMMA4	X	-.013	6.833
36	MP GAMMA4	X	-.013	5.167
37	MP ALPHA2	Y	-.017	6.917
38	MP ALPHA2	Y	-.017	1.083
39	MP ALPHA2	X	-.03	6.917
40	MP ALPHA2	X	-.03	1.083
41	MP BETA2	Y	-.017	6.917
42	MP BETA2	Y	-.017	1.083
43	MP BETA2	X	-.03	6.917
44	MP BETA2	X	-.03	1.083
45	MP GAMMA2	Y	-.03	6.917
46	MP GAMMA2	Y	-.03	1.083
47	MP GAMMA2	X	-.052	6.917
48	MP GAMMA2	X	-.052	1.083
49	MP ALPHA2	Y	-.004	6
50	MP ALPHA2	X	-.007	6

Member Point Loads (BLC 30 : Ice Wind Load (60)) (Continued)

	Member Label	Direction	Magnitude[k,k-ft]	Location[ft,%]
51	MP BETA2	Y	-.004	6
52	MP BETA2	X	-.007	6
53	MP GAMMA2	Y	-.005	6
54	MP GAMMA2	X	-.009	6
55	MP ALPHA4	Y	-.004	6
56	MP ALPHA4	X	-.007	6
57	MP BETA4	Y	-.004	6
58	MP BETA4	X	-.007	6
59	MP GAMMA4	Y	-.006	6
60	MP GAMMA4	X	-.01	6

Member Point Loads (BLC 31 : Ice Wind Load (90))

	Member Label	Direction	Magnitude[k,k-ft]	Location[ft,%]
1	MP ALPHA1	X	-.013	7.667
2	MP ALPHA1	X	-.013	4.333
3	MP BETA1	X	-.016	7.667
4	MP BETA1	X	-.016	4.333
5	MP GAMMA1	X	-.016	7.667
6	MP GAMMA1	X	-.016	4.333
7	MP ALPHA3	X	-.014	7.667
8	MP ALPHA3	X	-.014	4.333
9	MP BETA3	X	-.019	7.667
10	MP BETA3	X	-.019	4.333
11	MP GAMMA3	X	-.019	7.667
12	MP GAMMA3	X	-.019	4.333
13	MP ALPHA4	X	-.008	6.833
14	MP ALPHA4	X	-.008	5.167
15	MP BETA4	X	-.013	6.833
16	MP BETA4	X	-.013	5.167
17	MP GAMMA4	X	-.013	6.833
18	MP GAMMA4	X	-.013	5.167
19	MP ALPHA2	X	-.027	6.917
20	MP ALPHA2	X	-.027	1.083
21	MP BETA2	X	-.052	6.917
22	MP BETA2	X	-.052	1.083
23	MP GAMMA2	X	-.052	6.917
24	MP GAMMA2	X	-.052	1.083
25	MP ALPHA2	X	-.008	6
26	MP BETA2	X	-.01	6
27	MP GAMMA2	X	-.01	6
28	MP ALPHA4	X	-.006	6
29	MP BETA4	X	-.01	6
30	MP GAMMA4	X	-.01	6

Member Point Loads (BLC 32 : Ice Wind Load (120))

	Member Label	Direction	Magnitude[k,k-ft]	Location[ft,%]
1	MP ALPHA1	Y	.007	7.667
2	MP ALPHA1	Y	.007	4.333
3	MP ALPHA1	X	-.012	7.667
4	MP ALPHA1	X	-.012	4.333
5	MP BETA1	Y	.009	7.667
6	MP BETA1	Y	.009	4.333
7	MP BETA1	X	-.015	7.667
8	MP BETA1	X	-.015	4.333
9	MP GAMMA1	Y	.007	7.667
10	MP GAMMA1	Y	.007	4.333

Member Point Loads (BLC 32 : Ice Wind Load (120)) (Continued)

	Member Label	Direction	Magnitude[k,k-ft]	Location[ft,%]
11	MP GAMMA1	X	-.012	7.667
12	MP GAMMA1	X	-.012	4.333
13	MP ALPHA3	Y	.008	7.667
14	MP ALPHA3	Y	.008	4.333
15	MP ALPHA3	X	-.014	7.667
16	MP ALPHA3	X	-.014	4.333
17	MP BETA3	Y	.01	7.667
18	MP BETA3	Y	.01	4.333
19	MP BETA3	X	-.018	7.667
20	MP BETA3	X	-.018	4.333
21	MP GAMMA3	Y	.008	7.667
22	MP GAMMA3	Y	.008	4.333
23	MP GAMMA3	X	-.014	7.667
24	MP GAMMA3	X	-.014	4.333
25	MP ALPHA4	Y	.005	6.833
26	MP ALPHA4	Y	.005	5.167
27	MP ALPHA4	X	-.008	6.833
28	MP ALPHA4	X	-.008	5.167
29	MP BETA4	Y	.007	6.833
30	MP BETA4	Y	.007	5.167
31	MP BETA4	X	-.013	6.833
32	MP BETA4	X	-.013	5.167
33	MP GAMMA4	Y	.005	6.833
34	MP GAMMA4	Y	.005	5.167
35	MP GAMMA4	X	-.008	6.833
36	MP GAMMA4	X	-.008	5.167
37	MP ALPHA2	Y	.017	6.917
38	MP ALPHA2	Y	.017	1.083
39	MP ALPHA2	X	-.03	6.917
40	MP ALPHA2	X	-.03	1.083
41	MP BETA2	Y	.03	6.917
42	MP BETA2	Y	.03	1.083
43	MP BETA2	X	-.052	6.917
44	MP BETA2	X	-.052	1.083
45	MP GAMMA2	Y	.017	6.917
46	MP GAMMA2	Y	.017	1.083
47	MP GAMMA2	X	-.03	6.917
48	MP GAMMA2	X	-.03	1.083
49	MP ALPHA2	Y	.004	6
50	MP ALPHA2	X	-.007	6
51	MP BETA2	Y	.005	6
52	MP BETA2	X	-.009	6
53	MP GAMMA2	Y	.004	6
54	MP GAMMA2	X	-.007	6
55	MP ALPHA4	Y	.004	6
56	MP ALPHA4	X	-.007	6
57	MP BETA4	Y	.006	6
58	MP BETA4	X	-.01	6
59	MP GAMMA4	Y	.004	6
60	MP GAMMA4	X	-.007	6

Member Point Loads (BLC 33 : Ice Wind Load (150))

	Member Label	Direction	Magnitude[k,k-ft]	Location[ft,%]
1	MP ALPHA1	Y	.014	7.667
2	MP ALPHA1	Y	.014	4.333
3	MP ALPHA1	X	-.008	7.667

Member Point Loads (BLC 33 : Ice Wind Load (150)) (Continued)

	Member Label	Direction	Magnitude[k,k-ft]	Location[ft,%]
4	MP ALPHA1	X	-.008	4.333
5	MP BETA1	Y	.014	7.667
6	MP BETA1	Y	.014	4.333
7	MP BETA1	X	-.008	7.667
8	MP BETA1	X	-.008	4.333
9	MP GAMMA1	Y	.011	7.667
10	MP GAMMA1	Y	.011	4.333
11	MP GAMMA1	X	-.007	7.667
12	MP GAMMA1	X	-.007	4.333
13	MP ALPHA3	Y	.016	7.667
14	MP ALPHA3	Y	.016	4.333
15	MP ALPHA3	X	-.009	7.667
16	MP ALPHA3	X	-.009	4.333
17	MP BETA3	Y	.016	7.667
18	MP BETA3	Y	.016	4.333
19	MP BETA3	X	-.009	7.667
20	MP BETA3	X	-.009	4.333
21	MP GAMMA3	Y	.012	7.667
22	MP GAMMA3	Y	.012	4.333
23	MP GAMMA3	X	-.007	7.667
24	MP GAMMA3	X	-.007	4.333
25	MP ALPHA4	Y	.011	6.833
26	MP ALPHA4	Y	.011	5.167
27	MP ALPHA4	X	-.007	6.833
28	MP ALPHA4	X	-.007	5.167
29	MP BETA4	Y	.011	6.833
30	MP BETA4	Y	.011	5.167
31	MP BETA4	X	-.007	6.833
32	MP BETA4	X	-.007	5.167
33	MP GAMMA4	Y	.007	6.833
34	MP GAMMA4	Y	.007	5.167
35	MP GAMMA4	X	-.004	6.833
36	MP GAMMA4	X	-.004	5.167
37	MP ALPHA2	Y	.045	6.917
38	MP ALPHA2	Y	.045	1.083
39	MP ALPHA2	X	-.026	6.917
40	MP ALPHA2	X	-.026	1.083
41	MP BETA2	Y	.045	6.917
42	MP BETA2	Y	.045	1.083
43	MP BETA2	X	-.026	6.917
44	MP BETA2	X	-.026	1.083
45	MP GAMMA2	Y	.023	6.917
46	MP GAMMA2	Y	.023	1.083
47	MP GAMMA2	X	-.013	6.917
48	MP GAMMA2	X	-.013	1.083
49	MP ALPHA2	Y	.008	6
50	MP ALPHA2	X	-.005	6
51	MP BETA2	Y	.008	6
52	MP BETA2	X	-.005	6
53	MP GAMMA2	Y	.007	6
54	MP GAMMA2	X	-.004	6
55	MP ALPHA4	Y	.009	6
56	MP ALPHA4	X	-.005	6
57	MP BETA4	Y	.009	6
58	MP BETA4	X	-.005	6
59	MP GAMMA4	Y	.005	6
60	MP GAMMA4	X	-.003	6

Member Point Loads (BLC 34 : Ice Wind Load (180))

	Member Label	Direction	Magnitude[k,k-ft]	Location[ft,%]
1	MP ALPHA1	Y	.017	7.667
2	MP ALPHA1	Y	.017	4.333
3	MP BETA1	Y	.014	7.667
4	MP BETA1	Y	.014	4.333
5	MP GAMMA1	Y	.014	7.667
6	MP GAMMA1	Y	.014	4.333
7	MP ALPHA3	Y	.02	7.667
8	MP ALPHA3	Y	.02	4.333
9	MP BETA3	Y	.016	7.667
10	MP BETA3	Y	.016	4.333
11	MP GAMMA3	Y	.016	7.667
12	MP GAMMA3	Y	.016	4.333
13	MP ALPHA4	Y	.015	6.833
14	MP ALPHA4	Y	.015	5.167
15	MP BETA4	Y	.009	6.833
16	MP BETA4	Y	.009	5.167
17	MP GAMMA4	Y	.009	6.833
18	MP GAMMA4	Y	.009	5.167
19	MP ALPHA2	Y	.06	6.917
20	MP ALPHA2	Y	.06	1.083
21	MP BETA2	Y	.035	6.917
22	MP BETA2	Y	.035	1.083
23	MP GAMMA2	Y	.035	6.917
24	MP GAMMA2	Y	.035	1.083
25	MP ALPHA2	Y	.01	6
26	MP BETA2	Y	.008	6
27	MP GAMMA2	Y	.008	6
28	MP ALPHA4	Y	.011	6
29	MP BETA4	Y	.008	6
30	MP GAMMA4	Y	.008	6

Member Point Loads (BLC 35 : Ice Wind Load (210))

	Member Label	Direction	Magnitude[k,k-ft]	Location[ft,%]
1	MP ALPHA1	Y	.014	7.667
2	MP ALPHA1	Y	.014	4.333
3	MP ALPHA1	X	.008	7.667
4	MP ALPHA1	X	.008	4.333
5	MP BETA1	Y	.011	7.667
6	MP BETA1	Y	.011	4.333
7	MP BETA1	X	.007	7.667
8	MP BETA1	X	.007	4.333
9	MP GAMMA1	Y	.014	7.667
10	MP GAMMA1	Y	.014	4.333
11	MP GAMMA1	X	.008	7.667
12	MP GAMMA1	X	.008	4.333
13	MP ALPHA3	Y	.016	7.667
14	MP ALPHA3	Y	.016	4.333
15	MP ALPHA3	X	.009	7.667
16	MP ALPHA3	X	.009	4.333
17	MP BETA3	Y	.012	7.667
18	MP BETA3	Y	.012	4.333
19	MP BETA3	X	.007	7.667
20	MP BETA3	X	.007	4.333
21	MP GAMMA3	Y	.016	7.667
22	MP GAMMA3	Y	.016	4.333
23	MP GAMMA3	X	.009	7.667

Member Point Loads (BLC 35 : Ice Wind Load (210)) (Continued)

	Member Label	Direction	Magnitude[k,k-ft]	Location[ft,%]
24	MP GAMMA3	X	.009	4.333
25	MP ALPHA4	Y	.011	6.833
26	MP ALPHA4	Y	.011	5.167
27	MP ALPHA4	X	.007	6.833
28	MP ALPHA4	X	.007	5.167
29	MP BETA4	Y	.007	6.833
30	MP BETA4	Y	.007	5.167
31	MP BETA4	X	.004	6.833
32	MP BETA4	X	.004	5.167
33	MP GAMMA4	Y	.011	6.833
34	MP GAMMA4	Y	.011	5.167
35	MP GAMMA4	X	.007	6.833
36	MP GAMMA4	X	.007	5.167
37	MP ALPHA2	Y	.045	6.917
38	MP ALPHA2	Y	.045	1.083
39	MP ALPHA2	X	.026	6.917
40	MP ALPHA2	X	.026	1.083
41	MP BETA2	Y	.023	6.917
42	MP BETA2	Y	.023	1.083
43	MP BETA2	X	.013	6.917
44	MP BETA2	X	.013	1.083
45	MP GAMMA2	Y	.045	6.917
46	MP GAMMA2	Y	.045	1.083
47	MP GAMMA2	X	.026	6.917
48	MP GAMMA2	X	.026	1.083
49	MP ALPHA2	Y	.008	6
50	MP ALPHA2	X	.005	6
51	MP BETA2	Y	.007	6
52	MP BETA2	X	.004	6
53	MP GAMMA2	Y	.008	6
54	MP GAMMA2	X	.005	6
55	MP ALPHA4	Y	.009	6
56	MP ALPHA4	X	.005	6
57	MP BETA4	Y	.005	6
58	MP BETA4	X	.003	6
59	MP GAMMA4	Y	.009	6
60	MP GAMMA4	X	.005	6

Member Point Loads (BLC 36 : Ice Wind Load (240))

	Member Label	Direction	Magnitude[k,k-ft]	Location[ft,%]
1	MP ALPHA1	Y	.007	7.667
2	MP ALPHA1	Y	.007	4.333
3	MP ALPHA1	X	.012	7.667
4	MP ALPHA1	X	.012	4.333
5	MP BETA1	Y	.007	7.667
6	MP BETA1	Y	.007	4.333
7	MP BETA1	X	.012	7.667
8	MP BETA1	X	.012	4.333
9	MP GAMMA1	Y	.009	7.667
10	MP GAMMA1	Y	.009	4.333
11	MP GAMMA1	X	.015	7.667
12	MP GAMMA1	X	.015	4.333
13	MP ALPHA3	Y	.008	7.667
14	MP ALPHA3	Y	.008	4.333
15	MP ALPHA3	X	.014	7.667
16	MP ALPHA3	X	.014	4.333

Member Point Loads (BLC 36 : Ice Wind Load (240)) (Continued)

	Member Label	Direction	Magnitude[k,k-ft]	Location[ft,%]
17	MP BETA3	Y	.008	7.667
18	MP BETA3	Y	.008	4.333
19	MP BETA3	X	.014	7.667
20	MP BETA3	X	.014	4.333
21	MP GAMMA3	Y	.01	7.667
22	MP GAMMA3	Y	.01	4.333
23	MP GAMMA3	X	.018	7.667
24	MP GAMMA3	X	.018	4.333
25	MP ALPHA4	Y	.005	6.833
26	MP ALPHA4	Y	.005	5.167
27	MP ALPHA4	X	.008	6.833
28	MP ALPHA4	X	.008	5.167
29	MP BETA4	Y	.005	6.833
30	MP BETA4	Y	.005	5.167
31	MP BETA4	X	.008	6.833
32	MP BETA4	X	.008	5.167
33	MP GAMMA4	Y	.007	6.833
34	MP GAMMA4	Y	.007	5.167
35	MP GAMMA4	X	.013	6.833
36	MP GAMMA4	X	.013	5.167
37	MP ALPHA2	Y	.017	6.917
38	MP ALPHA2	Y	.017	1.083
39	MP ALPHA2	X	.03	6.917
40	MP ALPHA2	X	.03	1.083
41	MP BETA2	Y	.017	6.917
42	MP BETA2	Y	.017	1.083
43	MP BETA2	X	.03	6.917
44	MP BETA2	X	.03	1.083
45	MP GAMMA2	Y	.03	6.917
46	MP GAMMA2	Y	.03	1.083
47	MP GAMMA2	X	.052	6.917
48	MP GAMMA2	X	.052	1.083
49	MP ALPHA2	Y	.004	6
50	MP ALPHA2	X	.007	6
51	MP BETA2	Y	.004	6
52	MP BETA2	X	.007	6
53	MP GAMMA2	Y	.005	6
54	MP GAMMA2	X	.009	6
55	MP ALPHA4	Y	.004	6
56	MP ALPHA4	X	.007	6
57	MP BETA4	Y	.004	6
58	MP BETA4	X	.007	6
59	MP GAMMA4	Y	.006	6
60	MP GAMMA4	X	.01	6

Member Point Loads (BLC 37 : Ice Wind Load (270))

	Member Label	Direction	Magnitude[k,k-ft]	Location[ft,%]
1	MP ALPHA1	X	.013	7.667
2	MP ALPHA1	X	.013	4.333
3	MP BETA1	X	.016	7.667
4	MP BETA1	X	.016	4.333
5	MP GAMMA1	X	.016	7.667
6	MP GAMMA1	X	.016	4.333
7	MP ALPHA3	X	.014	7.667
8	MP ALPHA3	X	.014	4.333
9	MP BETA3	X	.019	7.667

Member Point Loads (BLC 37 : Ice Wind Load (270)) (Continued)

	Member Label	Direction	Magnitude[k,k-ft]	Location[ft,%]
10	MP BETA3	X	.019	4.333
11	MP GAMMA3	X	.019	7.667
12	MP GAMMA3	X	.019	4.333
13	MP ALPHA4	X	.008	6.833
14	MP ALPHA4	X	.008	5.167
15	MP BETA4	X	.013	6.833
16	MP BETA4	X	.013	5.167
17	MP GAMMA4	X	.013	6.833
18	MP GAMMA4	X	.013	5.167
19	MP ALPHA2	X	.027	6.917
20	MP ALPHA2	X	.027	1.083
21	MP BETA2	X	.052	6.917
22	MP BETA2	X	.052	1.083
23	MP GAMMA2	X	.052	6.917
24	MP GAMMA2	X	.052	1.083
25	MP ALPHA2	X	.008	6
26	MP BETA2	X	.01	6
27	MP GAMMA2	X	.01	6
28	MP ALPHA4	X	.006	6
29	MP BETA4	X	.01	6
30	MP GAMMA4	X	.01	6

Member Point Loads (BLC 38 : Ice Wind Load (300))

	Member Label	Direction	Magnitude[k,k-ft]	Location[ft,%]
1	MP ALPHA1	Y	-.007	7.667
2	MP ALPHA1	Y	-.007	4.333
3	MP ALPHA1	X	.012	7.667
4	MP ALPHA1	X	.012	4.333
5	MP BETA1	Y	-.009	7.667
6	MP BETA1	Y	-.009	4.333
7	MP BETA1	X	.015	7.667
8	MP BETA1	X	.015	4.333
9	MP GAMMA1	Y	-.007	7.667
10	MP GAMMA1	Y	-.007	4.333
11	MP GAMMA1	X	.012	7.667
12	MP GAMMA1	X	.012	4.333
13	MP ALPHA3	Y	-.008	7.667
14	MP ALPHA3	Y	-.008	4.333
15	MP ALPHA3	X	.014	7.667
16	MP ALPHA3	X	.014	4.333
17	MP BETA3	Y	-.01	7.667
18	MP BETA3	Y	-.01	4.333
19	MP BETA3	X	.018	7.667
20	MP BETA3	X	.018	4.333
21	MP GAMMA3	Y	-.008	7.667
22	MP GAMMA3	Y	-.008	4.333
23	MP GAMMA3	X	.014	7.667
24	MP GAMMA3	X	.014	4.333
25	MP ALPHA4	Y	-.005	6.833
26	MP ALPHA4	Y	-.005	5.167
27	MP ALPHA4	X	.008	6.833
28	MP ALPHA4	X	.008	5.167
29	MP BETA4	Y	-.007	6.833
30	MP BETA4	Y	-.007	5.167
31	MP BETA4	X	.013	6.833
32	MP BETA4	X	.013	5.167

Member Point Loads (BLC 38 : Ice Wind Load (300)) (Continued)

	Member Label	Direction	Magnitude[k,k-ft]	Location[ft,%]
33	MP GAMMA4	Y	-.005	6.833
34	MP GAMMA4	Y	-.005	5.167
35	MP GAMMA4	X	.008	6.833
36	MP GAMMA4	X	.008	5.167
37	MP ALPHA2	Y	-.017	6.917
38	MP ALPHA2	Y	-.017	1.083
39	MP ALPHA2	X	.03	6.917
40	MP ALPHA2	X	.03	1.083
41	MP BETA2	Y	-.03	6.917
42	MP BETA2	Y	-.03	1.083
43	MP BETA2	X	.052	6.917
44	MP BETA2	X	.052	1.083
45	MP GAMMA2	Y	-.017	6.917
46	MP GAMMA2	Y	-.017	1.083
47	MP GAMMA2	X	.03	6.917
48	MP GAMMA2	X	.03	1.083
49	MP ALPHA2	Y	-.004	6
50	MP ALPHA2	X	.007	6
51	MP BETA2	Y	-.005	6
52	MP BETA2	X	.009	6
53	MP GAMMA2	Y	-.004	6
54	MP GAMMA2	X	.007	6
55	MP ALPHA4	Y	-.004	6
56	MP ALPHA4	X	.007	6
57	MP BETA4	Y	-.006	6
58	MP BETA4	X	.01	6
59	MP GAMMA4	Y	-.004	6
60	MP GAMMA4	X	.007	6

Member Point Loads (BLC 39 : Ice Wind Load (330))

	Member Label	Direction	Magnitude[k,k-ft]	Location[ft,%]
1	MP ALPHA1	Y	-.014	7.667
2	MP ALPHA1	Y	-.014	4.333
3	MP ALPHA1	X	.008	7.667
4	MP ALPHA1	X	.008	4.333
5	MP BETA1	Y	-.014	7.667
6	MP BETA1	Y	-.014	4.333
7	MP BETA1	X	.008	7.667
8	MP BETA1	X	.008	4.333
9	MP GAMMA1	Y	-.011	7.667
10	MP GAMMA1	Y	-.011	4.333
11	MP GAMMA1	X	.007	7.667
12	MP GAMMA1	X	.007	4.333
13	MP ALPHA3	Y	-.016	7.667
14	MP ALPHA3	Y	-.016	4.333
15	MP ALPHA3	X	.009	7.667
16	MP ALPHA3	X	.009	4.333
17	MP BETA3	Y	-.016	7.667
18	MP BETA3	Y	-.016	4.333
19	MP BETA3	X	.009	7.667
20	MP BETA3	X	.009	4.333
21	MP GAMMA3	Y	-.012	7.667
22	MP GAMMA3	Y	-.012	4.333
23	MP GAMMA3	X	.007	7.667
24	MP GAMMA3	X	.007	4.333
25	MP ALPHA4	Y	-.011	6.833

Member Point Loads (BLC 39 : Ice Wind Load (330)) (Continued)

	Member Label	Direction	Magnitude[k,k-ft]	Location[ft,%]
26	MP ALPHA4	Y	-.011	5.167
27	MP ALPHA4	X	.007	6.833
28	MP ALPHA4	X	.007	5.167
29	MP BETA4	Y	-.011	6.833
30	MP BETA4	Y	-.011	5.167
31	MP BETA4	X	.007	6.833
32	MP BETA4	X	.007	5.167
33	MP GAMMA4	Y	-.007	6.833
34	MP GAMMA4	Y	-.007	5.167
35	MP GAMMA4	X	.004	6.833
36	MP GAMMA4	X	.004	5.167
37	MP ALPHA2	Y	-.045	6.917
38	MP ALPHA2	Y	-.045	1.083
39	MP ALPHA2	X	.026	6.917
40	MP ALPHA2	X	.026	1.083
41	MP BETA2	Y	-.045	6.917
42	MP BETA2	Y	-.045	1.083
43	MP BETA2	X	.026	6.917
44	MP BETA2	X	.026	1.083
45	MP GAMMA2	Y	-.023	6.917
46	MP GAMMA2	Y	-.023	1.083
47	MP GAMMA2	X	.013	6.917
48	MP GAMMA2	X	.013	1.083
49	MP ALPHA2	Y	-.008	6
50	MP ALPHA2	X	.005	6
51	MP BETA2	Y	-.008	6
52	MP BETA2	X	.005	6
53	MP GAMMA2	Y	-.007	6
54	MP GAMMA2	X	.004	6
55	MP ALPHA4	Y	-.009	6
56	MP ALPHA4	X	.005	6
57	MP BETA4	Y	-.009	6
58	MP BETA4	X	.005	6
59	MP GAMMA4	Y	-.005	6
60	MP GAMMA4	X	.003	6

Member Point Loads (BLC 40 : Earthquake (x-direction))

	Member Label	Direction	Magnitude[k,k-ft]	Location[ft,%]
1	MP ALPHA1	X	-.007	7.667
2	MP ALPHA1	X	-.007	4.333
3	MP BETA1	X	-.007	7.667
4	MP BETA1	X	-.007	4.333
5	MP GAMMA1	X	-.007	7.667
6	MP GAMMA1	X	-.007	4.333
7	MP ALPHA3	X	-.009	7.667
8	MP ALPHA3	X	-.009	4.333
9	MP BETA3	X	-.009	7.667
10	MP BETA3	X	-.009	4.333
11	MP GAMMA3	X	-.009	7.667
12	MP GAMMA3	X	-.009	4.333
13	MP ALPHA4	X	-.005	6.833
14	MP ALPHA4	X	-.005	5.167
15	MP BETA4	X	-.005	6.833
16	MP BETA4	X	-.005	5.167
17	MP GAMMA4	X	-.005	6.833
18	MP GAMMA4	X	-.005	5.167

Member Point Loads (BLC 40 : Earthquake (x-direction)) (Continued)

	Member Label	Direction	Magnitude[k,k-ft]	Location[ft,%]
19	MP ALPHA2	X	-.005	6.917
20	MP ALPHA2	X	-.005	1.083
21	MP BETA2	X	-.005	6.917
22	MP BETA2	X	-.005	1.083
23	MP GAMMA2	X	-.005	6.917
24	MP GAMMA2	X	-.005	1.083
25	MP ALPHA2	X	-.007	6
26	MP BETA2	X	-.007	6
27	MP GAMMA2	X	-.007	6
28	MP ALPHA4	X	-.005	6
29	MP BETA4	X	-.005	6
30	MP GAMMA4	X	-.005	6

Member Point Loads (BLC 41 : Earthquake (y-direction))

	Member Label	Direction	Magnitude[k,k-ft]	Location[ft,%]
1	MP ALPHA1	Y	-.007	7.667
2	MP ALPHA1	Y	-.007	4.333
3	MP BETA1	Y	-.007	7.667
4	MP BETA1	Y	-.007	4.333
5	MP GAMMA1	Y	-.007	7.667
6	MP GAMMA1	Y	-.007	4.333
7	MP ALPHA3	Y	-.009	7.667
8	MP ALPHA3	Y	-.009	4.333
9	MP BETA3	Y	-.009	7.667
10	MP BETA3	Y	-.009	4.333
11	MP GAMMA3	Y	-.009	7.667
12	MP GAMMA3	Y	-.009	4.333
13	MP ALPHA4	Y	-.005	6.833
14	MP ALPHA4	Y	-.005	5.167
15	MP BETA4	Y	-.005	6.833
16	MP BETA4	Y	-.005	5.167
17	MP GAMMA4	Y	-.005	6.833
18	MP GAMMA4	Y	-.005	5.167
19	MP ALPHA2	Y	-.005	6.917
20	MP ALPHA2	Y	-.005	1.083
21	MP BETA2	Y	-.005	6.917
22	MP BETA2	Y	-.005	1.083
23	MP GAMMA2	Y	-.005	6.917
24	MP GAMMA2	Y	-.005	1.083
25	MP ALPHA2	Y	-.007	6
26	MP BETA2	Y	-.007	6
27	MP GAMMA2	Y	-.007	6
28	MP ALPHA4	Y	-.005	6
29	MP BETA4	Y	-.005	6
30	MP GAMMA4	Y	-.005	6

Member Point Loads (BLC 42 : Earthquake (z-direction))

	Member Label	Direction	Magnitude[k,k-ft]	Location[ft,%]
1	MP ALPHA1	Z	-.003	7.667
2	MP ALPHA1	Z	-.003	4.333
3	MP BETA1	Z	-.003	7.667
4	MP BETA1	Z	-.003	4.333
5	MP GAMMA1	Z	-.003	7.667
6	MP GAMMA1	Z	-.003	4.333
7	MP ALPHA3	Z	-.004	7.667
8	MP ALPHA3	Z	-.004	4.333

Member Point Loads (BLC 42 : Earthquake (z-direction)) (Continued)

	Member Label	Direction	Magnitude[k,k-ft]	Location[ft,%]
9	MP BETA3	Z	-.004	7.667
10	MP BETA3	Z	-.004	4.333
11	MP GAMMA3	Z	-.004	7.667
12	MP GAMMA3	Z	-.004	4.333
13	MP ALPHA4	Z	-.002	6.833
14	MP ALPHA4	Z	-.002	5.167
15	MP BETA4	Z	-.002	6.833
16	MP BETA4	Z	-.002	5.167
17	MP GAMMA4	Z	-.002	6.833
18	MP GAMMA4	Z	-.002	5.167
19	MP ALPHA2	Z	-.002	6.917
20	MP ALPHA2	Z	-.002	1.083
21	MP BETA2	Z	-.002	6.917
22	MP BETA2	Z	-.002	1.083
23	MP GAMMA2	Z	-.002	6.917
24	MP GAMMA2	Z	-.002	1.083
25	MP ALPHA2	Z	-.003	6
26	MP BETA2	Z	-.003	6
27	MP GAMMA2	Z	-.003	6
28	MP ALPHA4	Z	-.002	6
29	MP BETA4	Z	-.002	6
30	MP GAMMA4	Z	-.002	6

Member Distributed Loads (BLC 2 : Wind Load (0))

	Member Label	Direction	Start Magnitude[k/ft,...	End Magnitude[k/ft,F...	Start Location[ft,%]	End Location[ft,%]
1	SUP3B	PY	-.007	-.007	0	0
2	SUP3A	PY	-.007	-.007	0	0
3	SUP2B	PY	-.007	-.007	0	0
4	SUP2A	PY	-.007	-.007	0	0
5	SUP1B	PY	-.007	-.007	0	0
6	SUP1A	PY	-.007	-.007	0	0
7	SO3	PY	-.009	-.009	0	0
8	SO2	PY	-.009	-.009	0	0
9	SO1	PY	-.009	-.009	0	0
10	PLATECORNER3C	PY	-.022	-.022	0	0
11	PLATECORNER3B	PY	-.022	-.022	0	0
12	PLATECORNER3A	PY	-.022	-.022	0	0
13	PLATECORNER2C	PY	-.022	-.022	0	0
14	PLATECORNER2B	PY	-.022	-.022	0	0
15	PLATECORNER2A	PY	-.022	-.022	0	0
16	PLATECORNER1C	PY	-.022	-.022	0	0
17	PLATECORNER1B	PY	-.022	-.022	0	0
18	PLATECORNER1A	PY	-.022	-.022	0	0
19	PLATE12	PY	-.022	-.022	0	0
20	PLATE11	PY	-.022	-.022	0	0
21	PLATE10	PY	-.022	-.022	0	0
22	PLATE9	PY	-.022	-.022	0	0
23	PLATE8	PY	-.022	-.022	0	0
24	PLATE7	PY	-.022	-.022	0	0
25	PLATE6	PY	-.022	-.022	0	0
26	PLATE5	PY	-.022	-.022	0	0
27	PLATE4	PY	-.022	-.022	0	0
28	PLATE3	PY	-.022	-.022	0	0
29	PLATE2	PY	-.022	-.022	0	0
30	PLATE1	PY	-.022	-.022	0	0

Member Distributed Loads (BLC 2 : Wind Load (0)) (Continued)

	Member Label	Direction	Start Magnitude[k/ft,...	End Magnitude[k/ft,F...	Start Location[ft,%]	End Location[ft,%]
31	MP GAMMA4	PY	-.01	-.01	0	0
32	MP GAMMA3	PY	-.01	-.01	0	0
33	MP GAMMA2	PY	-.01	-.01	0	0
34	MP GAMMA1	PY	-.01	-.01	0	0
35	MP BETA4	PY	-.01	-.01	0	0
36	MP BETA3	PY	-.01	-.01	0	0
37	MP BETA2	PY	-.01	-.01	0	0
38	MP BETA1	PY	-.01	-.01	0	0
39	MP ALPHA4	PY	-.01	-.01	0	0
40	MP ALPHA3	PY	-.01	-.01	0	0
41	MP ALPHA2	PY	-.01	-.01	0	0
42	MP ALPHA1	PY	-.01	-.01	0	0
43	KICKER3	PY	-.009	-.009	0	0
44	KICKER2	PY	-.009	-.009	0	0
45	KICKER1	PY	-.009	-.009	0	0
46	RAIL3	PY	-.006	-.006	0	0
47	RAIL2	PY	-.006	-.006	0	0
48	RAIL1	PY	-.003	-.003	0	0
49	FACE3	PY	-.009	-.009	0	0
50	FACE2	PY	-.009	-.009	0	0
51	FACE1	PY	-.005	-.005	0	0
52	CR3B	PY	-.009	-.009	0	0
53	CR3A	PY	-.009	-.009	0	0
54	CR2B	PY	-.009	-.009	0	0
55	CR2A	PY	-.009	-.009	0	0
56	CR1B	PY	-.009	-.009	0	0
57	CR1A	PY	-.009	-.009	0	0
58	ANGLE3	PY	-.009	-.009	0	0
59	ANGLE2	PY	-.009	-.009	0	0
60	ANGLE1	PY	-.009	-.009	0	0

Member Distributed Loads (BLC 4 : Wind Load (30))

	Member Label	Direction	Start Magnitude[k/ft,...	End Magnitude[k/ft,F...	Start Location[ft,%]	End Location[ft,%]
1	SUP3B	PY	-.006	-.006	0	0
2	SUP3A	PY	-.006	-.006	0	0
3	SUP2B	PY	-.006	-.006	0	0
4	SUP2A	PY	-.006	-.006	0	0
5	SUP1B	PY	-.006	-.006	0	0
6	SUP1A	PY	-.006	-.006	0	0
7	SO3	PY	-.008	-.008	0	0
8	SO2	PY	-.008	-.008	0	0
9	SO1	PY	-.008	-.008	0	0
10	PLATECORNER3C	PY	-.019	-.019	0	0
11	PLATECORNER3B	PY	-.019	-.019	0	0
12	PLATECORNER3A	PY	-.019	-.019	0	0
13	PLATECORNER2C	PY	-.019	-.019	0	0
14	PLATECORNER2B	PY	-.019	-.019	0	0
15	PLATECORNER2A	PY	-.019	-.019	0	0
16	PLATECORNER1C	PY	-.019	-.019	0	0
17	PLATECORNER1B	PY	-.019	-.019	0	0
18	PLATECORNER1A	PY	-.019	-.019	0	0
19	PLATE12	PY	-.019	-.019	0	0
20	PLATE11	PY	-.019	-.019	0	0
21	PLATE10	PY	-.019	-.019	0	0
22	PLATE9	PY	-.019	-.019	0	0
23	PLATE8	PY	-.019	-.019	0	0

Member Distributed Loads (BLC 4 : Wind Load (30)) (Continued)

	Member Label	Direction	Start Magnitude[k/ft,...	End Magnitude[k/ft,F...	Start Location[ft,%]	End Location[ft,%]
24	PLATE7	PY	-.019	-.019	0	0
25	PLATE6	PY	-.019	-.019	0	0
26	PLATE5	PY	-.019	-.019	0	0
27	PLATE4	PY	-.019	-.019	0	0
28	PLATE3	PY	-.019	-.019	0	0
29	PLATE2	PY	-.019	-.019	0	0
30	PLATE1	PY	-.019	-.019	0	0
31	MP GAMMA4	PY	-.009	-.009	0	0
32	MP GAMMA3	PY	-.009	-.009	0	0
33	MP GAMMA2	PY	-.009	-.009	0	0
34	MP GAMMA1	PY	-.009	-.009	0	0
35	MP BETA4	PY	-.009	-.009	0	0
36	MP BETA3	PY	-.009	-.009	0	0
37	MP BETA2	PY	-.009	-.009	0	0
38	MP BETA1	PY	-.009	-.009	0	0
39	MP ALPHA4	PY	-.009	-.009	0	0
40	MP ALPHA3	PY	-.009	-.009	0	0
41	MP ALPHA2	PY	-.009	-.009	0	0
42	MP ALPHA1	PY	-.009	-.009	0	0
43	KICKER3	PY	-.008	-.008	0	0
44	KICKER2	PY	-.008	-.008	0	0
45	KICKER1	PY	-.008	-.008	0	0
46	RAIL3	PY	-.005	-.005	0	0
47	RAIL2	PY	-.005	-.005	0	0
48	RAIL1	PY	-.003	-.003	0	0
49	FACE3	PY	-.008	-.008	0	0
50	FACE2	PY	-.008	-.008	0	0
51	FACE1	PY	-.004	-.004	0	0
52	CR3B	PY	-.008	-.008	0	0
53	CR3A	PY	-.008	-.008	0	0
54	CR2B	PY	-.008	-.008	0	0
55	CR2A	PY	-.008	-.008	0	0
56	CR1B	PY	-.008	-.008	0	0
57	CR1A	PY	-.008	-.008	0	0
58	ANGLE3	PY	-.008	-.008	0	0
59	ANGLE2	PY	-.008	-.008	0	0
60	ANGLE1	PY	-.008	-.008	0	0
61	SUP3B	PX	-.004	-.004	0	0
62	SUP3A	PX	-.004	-.004	0	0
63	SUP2B	PX	-.004	-.004	0	0
64	SUP2A	PX	-.004	-.004	0	0
65	SUP1B	PX	-.004	-.004	0	0
66	SUP1A	PX	-.004	-.004	0	0
67	SO3	PX	-.005	-.005	0	0
68	SO2	PX	-.005	-.005	0	0
69	SO1	PX	-.005	-.005	0	0
70	PLATECORNER3C	PX	-.011	-.011	0	0
71	PLATECORNER3B	PX	-.011	-.011	0	0
72	PLATECORNER3A	PX	-.011	-.011	0	0
73	PLATECORNER2C	PX	-.011	-.011	0	0
74	PLATECORNER2B	PX	-.011	-.011	0	0
75	PLATECORNER2A	PX	-.011	-.011	0	0
76	PLATECORNER1C	PX	-.011	-.011	0	0
77	PLATECORNER1B	PX	-.011	-.011	0	0
78	PLATECORNER1A	PX	-.011	-.011	0	0
79	PLATE12	PX	-.011	-.011	0	0
80	PLATE11	PX	-.011	-.011	0	0

Member Distributed Loads (BLC 4 : Wind Load (30)) (Continued)

	Member Label	Direction	Start Magnitude[k/ft,...	End Magnitude[k/ft,F...	Start Location[ft,%]	End Location[ft,%]
81	PLATE10	PX	-.011	-.011	0	0
82	PLATE9	PX	-.011	-.011	0	0
83	PLATE8	PX	-.011	-.011	0	0
84	PLATE7	PX	-.011	-.011	0	0
85	PLATE6	PX	-.011	-.011	0	0
86	PLATE5	PX	-.011	-.011	0	0
87	PLATE4	PX	-.011	-.011	0	0
88	PLATE3	PX	-.011	-.011	0	0
89	PLATE2	PX	-.011	-.011	0	0
90	PLATE1	PX	-.011	-.011	0	0
91	MP GAMMA4	PX	-.005	-.005	0	0
92	MP GAMMA3	PX	-.005	-.005	0	0
93	MP GAMMA2	PX	-.005	-.005	0	0
94	MP GAMMA1	PX	-.005	-.005	0	0
95	MP BETA4	PX	-.005	-.005	0	0
96	MP BETA3	PX	-.005	-.005	0	0
97	MP BETA2	PX	-.005	-.005	0	0
98	MP BETA1	PX	-.005	-.005	0	0
99	MP ALPHA4	PX	-.005	-.005	0	0
100	MP ALPHA3	PX	-.005	-.005	0	0
101	MP ALPHA2	PX	-.005	-.005	0	0
102	MP ALPHA1	PX	-.005	-.005	0	0
103	KICKER3	PX	-.005	-.005	0	0
104	KICKER2	PX	-.005	-.005	0	0
105	KICKER1	PX	-.005	-.005	0	0
106	RAIL3	PX	-.003	-.003	0	0
107	RAIL2	PX	-.003	-.003	0	0
108	RAIL1	PX	-.002	-.002	0	0
109	FACE3	PX	-.005	-.005	0	0
110	FACE2	PX	-.005	-.005	0	0
111	FACE1	PX	-.002	-.002	0	0
112	CR3B	PX	-.005	-.005	0	0
113	CR3A	PX	-.005	-.005	0	0
114	CR2B	PX	-.005	-.005	0	0
115	CR2A	PX	-.005	-.005	0	0
116	CR1B	PX	-.005	-.005	0	0
117	CR1A	PX	-.005	-.005	0	0
118	ANGLE3	PX	-.005	-.005	0	0
119	ANGLE2	PX	-.005	-.005	0	0
120	ANGLE1	PX	-.005	-.005	0	0

Member Distributed Loads (BLC 5 : Wind Load (60))

	Member Label	Direction	Start Magnitude[k/ft,...	End Magnitude[k/ft,F...	Start Location[ft,%]	End Location[ft,%]
1	SUP3B	PY	-.004	-.004	0	0
2	SUP3A	PY	-.004	-.004	0	0
3	SUP2B	PY	-.004	-.004	0	0
4	SUP2A	PY	-.004	-.004	0	0
5	SUP1B	PY	-.004	-.004	0	0
6	SUP1A	PY	-.004	-.004	0	0
7	SO3	PY	-.005	-.005	0	0
8	SO2	PY	-.005	-.005	0	0
9	SO1	PY	-.005	-.005	0	0
10	PLATECORNER3C	PY	-.011	-.011	0	0
11	PLATECORNER3B	PY	-.011	-.011	0	0
12	PLATECORNER3A	PY	-.011	-.011	0	0
13	PLATECORNER2C	PY	-.011	-.011	0	0

Member Distributed Loads (BLC 5 : Wind Load (60)) (Continued)

	Member Label	Direction	Start Magnitude[k/ft,...	End Magnitude[k/ft,F...	Start Location[ft,%]	End Location[ft,%]
14	PLATECORNER2B	PY	-.011	-.011	0	0
15	PLATECORNER2A	PY	-.011	-.011	0	0
16	PLATECORNER1C	PY	-.011	-.011	0	0
17	PLATECORNER1B	PY	-.011	-.011	0	0
18	PLATECORNER1A	PY	-.011	-.011	0	0
19	PLATE12	PY	-.011	-.011	0	0
20	PLATE11	PY	-.011	-.011	0	0
21	PLATE10	PY	-.011	-.011	0	0
22	PLATE9	PY	-.011	-.011	0	0
23	PLATE8	PY	-.011	-.011	0	0
24	PLATE7	PY	-.011	-.011	0	0
25	PLATE6	PY	-.011	-.011	0	0
26	PLATE5	PY	-.011	-.011	0	0
27	PLATE4	PY	-.011	-.011	0	0
28	PLATE3	PY	-.011	-.011	0	0
29	PLATE2	PY	-.011	-.011	0	0
30	PLATE1	PY	-.011	-.011	0	0
31	MP GAMMA4	PY	-.005	-.005	0	0
32	MP GAMMA3	PY	-.005	-.005	0	0
33	MP GAMMA2	PY	-.005	-.005	0	0
34	MP GAMMA1	PY	-.005	-.005	0	0
35	MP BETA4	PY	-.005	-.005	0	0
36	MP BETA3	PY	-.005	-.005	0	0
37	MP BETA2	PY	-.005	-.005	0	0
38	MP BETA1	PY	-.005	-.005	0	0
39	MP ALPHA4	PY	-.005	-.005	0	0
40	MP ALPHA3	PY	-.005	-.005	0	0
41	MP ALPHA2	PY	-.005	-.005	0	0
42	MP ALPHA1	PY	-.005	-.005	0	0
43	KICKER3	PY	-.005	-.005	0	0
44	KICKER2	PY	-.005	-.005	0	0
45	KICKER1	PY	-.005	-.005	0	0
46	RAIL3	PY	-.003	-.003	0	0
47	RAIL2	PY	-.003	-.003	0	0
48	RAIL1	PY	-.002	-.002	0	0
49	FACE3	PY	-.005	-.005	0	0
50	FACE2	PY	-.005	-.005	0	0
51	FACE1	PY	-.002	-.002	0	0
52	CR3B	PY	-.005	-.005	0	0
53	CR3A	PY	-.005	-.005	0	0
54	CR2B	PY	-.005	-.005	0	0
55	CR2A	PY	-.005	-.005	0	0
56	CR1B	PY	-.005	-.005	0	0
57	CR1A	PY	-.005	-.005	0	0
58	ANGLE3	PY	-.005	-.005	0	0
59	ANGLE2	PY	-.005	-.005	0	0
60	ANGLE1	PY	-.005	-.005	0	0
61	SUP3B	PX	-.006	-.006	0	0
62	SUP3A	PX	-.006	-.006	0	0
63	SUP2B	PX	-.006	-.006	0	0
64	SUP2A	PX	-.006	-.006	0	0
65	SUP1B	PX	-.006	-.006	0	0
66	SUP1A	PX	-.006	-.006	0	0
67	SO3	PX	-.008	-.008	0	0
68	SO2	PX	-.008	-.008	0	0
69	SO1	PX	-.008	-.008	0	0
70	PLATECORNER3C	PX	-.019	-.019	0	0

Member Distributed Loads (BLC 5 : Wind Load (60)) (Continued)

	Member Label	Direction	Start Magnitude[k/ft,...	End Magnitude[k/ft,F...	Start Location[ft,%]	End Location[ft,%]
71	PLATECORNER3B	PX	-.019	-.019	0	0
72	PLATECORNER3A	PX	-.019	-.019	0	0
73	PLATECORNER2C	PX	-.019	-.019	0	0
74	PLATECORNER2B	PX	-.019	-.019	0	0
75	PLATECORNER2A	PX	-.019	-.019	0	0
76	PLATECORNER1C	PX	-.019	-.019	0	0
77	PLATECORNER1B	PX	-.019	-.019	0	0
78	PLATECORNER1A	PX	-.019	-.019	0	0
79	PLATE12	PX	-.019	-.019	0	0
80	PLATE11	PX	-.019	-.019	0	0
81	PLATE10	PX	-.019	-.019	0	0
82	PLATE9	PX	-.019	-.019	0	0
83	PLATE8	PX	-.019	-.019	0	0
84	PLATE7	PX	-.019	-.019	0	0
85	PLATE6	PX	-.019	-.019	0	0
86	PLATE5	PX	-.019	-.019	0	0
87	PLATE4	PX	-.019	-.019	0	0
88	PLATE3	PX	-.019	-.019	0	0
89	PLATE2	PX	-.019	-.019	0	0
90	PLATE1	PX	-.019	-.019	0	0
91	MP GAMMA4	PX	-.009	-.009	0	0
92	MP GAMMA3	PX	-.009	-.009	0	0
93	MP GAMMA2	PX	-.009	-.009	0	0
94	MP GAMMA1	PX	-.009	-.009	0	0
95	MP BETA4	PX	-.009	-.009	0	0
96	MP BETA3	PX	-.009	-.009	0	0
97	MP BETA2	PX	-.009	-.009	0	0
98	MP BETA1	PX	-.009	-.009	0	0
99	MP ALPHA4	PX	-.009	-.009	0	0
100	MP ALPHA3	PX	-.009	-.009	0	0
101	MP ALPHA2	PX	-.009	-.009	0	0
102	MP ALPHA1	PX	-.009	-.009	0	0
103	KICKER3	PX	-.008	-.008	0	0
104	KICKER2	PX	-.008	-.008	0	0
105	KICKER1	PX	-.008	-.008	0	0
106	RAIL3	PX	-.005	-.005	0	0
107	RAIL2	PX	-.005	-.005	0	0
108	RAIL1	PX	-.003	-.003	0	0
109	FACE3	PX	-.008	-.008	0	0
110	FACE2	PX	-.008	-.008	0	0
111	FACE1	PX	-.004	-.004	0	0
112	CR3B	PX	-.008	-.008	0	0
113	CR3A	PX	-.008	-.008	0	0
114	CR2B	PX	-.008	-.008	0	0
115	CR2A	PX	-.008	-.008	0	0
116	CR1B	PX	-.008	-.008	0	0
117	CR1A	PX	-.008	-.008	0	0
118	ANGLE3	PX	-.008	-.008	0	0
119	ANGLE2	PX	-.008	-.008	0	0
120	ANGLE1	PX	-.008	-.008	0	0

Member Distributed Loads (BLC 6 : Wind Load (90))

	Member Label	Direction	Start Magnitude[k/ft,...	End Magnitude[k/ft,F...	Start Location[ft,%]	End Location[ft,%]
1	SUP3B	PX	-.007	-.007	0	0
2	SUP3A	PX	-.007	-.007	0	0
3	SUP2B	PX	-.007	-.007	0	0

Member Distributed Loads (BLC 6 : Wind Load (90)) (Continued)

	Member Label	Direction	Start Magnitude[k/ft,...	End Magnitude[k/ft,F...	Start Location[ft,%]	End Location[ft,%]
4	SUP2A	PX	-.007	-.007	0	0
5	SUP1B	PX	-.007	-.007	0	0
6	SUP1A	PX	-.007	-.007	0	0
7	SO3	PX	-.009	-.009	0	0
8	SO2	PX	-.009	-.009	0	0
9	SO1	PX	-.009	-.009	0	0
10	PLATECORNER3C	PX	-.022	-.022	0	0
11	PLATECORNER3B	PX	-.022	-.022	0	0
12	PLATECORNER3A	PX	-.022	-.022	0	0
13	PLATECORNER2C	PX	-.022	-.022	0	0
14	PLATECORNER2B	PX	-.022	-.022	0	0
15	PLATECORNER2A	PX	-.022	-.022	0	0
16	PLATECORNER1C	PX	-.022	-.022	0	0
17	PLATECORNER1B	PX	-.022	-.022	0	0
18	PLATECORNER1A	PX	-.022	-.022	0	0
19	PLATE12	PX	-.022	-.022	0	0
20	PLATE11	PX	-.022	-.022	0	0
21	PLATE10	PX	-.022	-.022	0	0
22	PLATE9	PX	-.022	-.022	0	0
23	PLATE8	PX	-.022	-.022	0	0
24	PLATE7	PX	-.022	-.022	0	0
25	PLATE6	PX	-.022	-.022	0	0
26	PLATE5	PX	-.022	-.022	0	0
27	PLATE4	PX	-.022	-.022	0	0
28	PLATE3	PX	-.022	-.022	0	0
29	PLATE2	PX	-.022	-.022	0	0
30	PLATE1	PX	-.022	-.022	0	0
31	MP GAMMA4	PX	-.01	-.01	0	0
32	MP GAMMA3	PX	-.01	-.01	0	0
33	MP GAMMA2	PX	-.01	-.01	0	0
34	MP GAMMA1	PX	-.01	-.01	0	0
35	MP BETA4	PX	-.01	-.01	0	0
36	MP BETA3	PX	-.01	-.01	0	0
37	MP BETA2	PX	-.01	-.01	0	0
38	MP BETA1	PX	-.01	-.01	0	0
39	MP ALPHA4	PX	-.01	-.01	0	0
40	MP ALPHA3	PX	-.01	-.01	0	0
41	MP ALPHA2	PX	-.01	-.01	0	0
42	MP ALPHA1	PX	-.01	-.01	0	0
43	KICKER3	PX	-.009	-.009	0	0
44	KICKER2	PX	-.009	-.009	0	0
45	KICKER1	PX	-.009	-.009	0	0
46	RAIL3	PX	-.006	-.006	0	0
47	RAIL1	PX	-.006	-.006	0	0
48	RAIL2	PX	-.003	-.003	0	0
49	FACE3	PX	-.009	-.009	0	0
50	FACE1	PX	-.009	-.009	0	0
51	FACE2	PX	-.005	-.005	0	0
52	CR3B	PX	-.009	-.009	0	0
53	CR3A	PX	-.009	-.009	0	0
54	CR2B	PX	-.009	-.009	0	0
55	CR2A	PX	-.009	-.009	0	0
56	CR1B	PX	-.009	-.009	0	0
57	CR1A	PX	-.009	-.009	0	0
58	ANGLE3	PX	-.009	-.009	0	0
59	ANGLE2	PX	-.009	-.009	0	0
60	ANGLE1	PX	-.009	-.009	0	0

Member Distributed Loads (BLC 7 : Wind Load (120))

	Member Label	Direction	Start Magnitude[k/ft,...	End Magnitude[k/ft,F...	Start Location[ft,%]	End Location[ft,%]
1	SUP3B	PY	.004	.004	0	0
2	SUP3A	PY	.004	.004	0	0
3	SUP2B	PY	.004	.004	0	0
4	SUP2A	PY	.004	.004	0	0
5	SUP1B	PY	.004	.004	0	0
6	SUP1A	PY	.004	.004	0	0
7	SO3	PY	.005	.005	0	0
8	SO2	PY	.005	.005	0	0
9	SO1	PY	.005	.005	0	0
10	PLATECORNER3C	PY	.011	.011	0	0
11	PLATECORNER3B	PY	.011	.011	0	0
12	PLATECORNER3A	PY	.011	.011	0	0
13	PLATECORNER2C	PY	.011	.011	0	0
14	PLATECORNER2B	PY	.011	.011	0	0
15	PLATECORNER2A	PY	.011	.011	0	0
16	PLATECORNER1C	PY	.011	.011	0	0
17	PLATECORNER1B	PY	.011	.011	0	0
18	PLATECORNER1A	PY	.011	.011	0	0
19	PLATE12	PY	.011	.011	0	0
20	PLATE11	PY	.011	.011	0	0
21	PLATE10	PY	.011	.011	0	0
22	PLATE9	PY	.011	.011	0	0
23	PLATE8	PY	.011	.011	0	0
24	PLATE7	PY	.011	.011	0	0
25	PLATE6	PY	.011	.011	0	0
26	PLATE5	PY	.011	.011	0	0
27	PLATE4	PY	.011	.011	0	0
28	PLATE3	PY	.011	.011	0	0
29	PLATE2	PY	.011	.011	0	0
30	PLATE1	PY	.011	.011	0	0
31	MP GAMMA4	PY	.005	.005	0	0
32	MP GAMMA3	PY	.005	.005	0	0
33	MP GAMMA2	PY	.005	.005	0	0
34	MP GAMMA1	PY	.005	.005	0	0
35	MP BETA4	PY	.005	.005	0	0
36	MP BETA3	PY	.005	.005	0	0
37	MP BETA2	PY	.005	.005	0	0
38	MP BETA1	PY	.005	.005	0	0
39	MP ALPHA4	PY	.005	.005	0	0
40	MP ALPHA3	PY	.005	.005	0	0
41	MP ALPHA2	PY	.005	.005	0	0
42	MP ALPHA1	PY	.005	.005	0	0
43	KICKER3	PY	.005	.005	0	0
44	KICKER2	PY	.005	.005	0	0
45	KICKER1	PY	.005	.005	0	0
46	RAIL3	PY	.003	.003	0	0
47	RAIL1	PY	.003	.003	0	0
48	RAIL2	PY	.002	.002	0	0
49	FACE3	PY	.005	.005	0	0
50	FACE1	PY	.005	.005	0	0
51	FACE2	PY	.002	.002	0	0
52	CR3B	PY	.005	.005	0	0
53	CR3A	PY	.005	.005	0	0
54	CR2B	PY	.005	.005	0	0
55	CR2A	PY	.005	.005	0	0
56	CR1B	PY	.005	.005	0	0
57	CR1A	PY	.005	.005	0	0

Member Distributed Loads (BLC 7 : Wind Load (120)) (Continued)

	Member Label	Direction	Start Magnitude[k/ft,...	End Magnitude[k/ft,F...	Start Location[ft,%]	End Location[ft,%]
58	ANGLE3	PY	.005	.005	0	0
59	ANGLE2	PY	.005	.005	0	0
60	ANGLE1	PY	.005	.005	0	0
61	SUP3B	PX	-.006	-.006	0	0
62	SUP3A	PX	-.006	-.006	0	0
63	SUP2B	PX	-.006	-.006	0	0
64	SUP2A	PX	-.006	-.006	0	0
65	SUP1B	PX	-.006	-.006	0	0
66	SUP1A	PX	-.006	-.006	0	0
67	SO3	PX	-.008	-.008	0	0
68	SO2	PX	-.008	-.008	0	0
69	SO1	PX	-.008	-.008	0	0
70	PLATECORNER3C	PX	-.019	-.019	0	0
71	PLATECORNER3B	PX	-.019	-.019	0	0
72	PLATECORNER3A	PX	-.019	-.019	0	0
73	PLATECORNER2C	PX	-.019	-.019	0	0
74	PLATECORNER2B	PX	-.019	-.019	0	0
75	PLATECORNER2A	PX	-.019	-.019	0	0
76	PLATECORNER1C	PX	-.019	-.019	0	0
77	PLATECORNER1B	PX	-.019	-.019	0	0
78	PLATECORNER1A	PX	-.019	-.019	0	0
79	PLATE12	PX	-.019	-.019	0	0
80	PLATE11	PX	-.019	-.019	0	0
81	PLATE10	PX	-.019	-.019	0	0
82	PLATE9	PX	-.019	-.019	0	0
83	PLATE8	PX	-.019	-.019	0	0
84	PLATE7	PX	-.019	-.019	0	0
85	PLATE6	PX	-.019	-.019	0	0
86	PLATE5	PX	-.019	-.019	0	0
87	PLATE4	PX	-.019	-.019	0	0
88	PLATE3	PX	-.019	-.019	0	0
89	PLATE2	PX	-.019	-.019	0	0
90	PLATE1	PX	-.019	-.019	0	0
91	MP GAMMA4	PX	-.009	-.009	0	0
92	MP GAMMA3	PX	-.009	-.009	0	0
93	MP GAMMA2	PX	-.009	-.009	0	0
94	MP GAMMA1	PX	-.009	-.009	0	0
95	MP BETA4	PX	-.009	-.009	0	0
96	MP BETA3	PX	-.009	-.009	0	0
97	MP BETA2	PX	-.009	-.009	0	0
98	MP BETA1	PX	-.009	-.009	0	0
99	MP ALPHA4	PX	-.009	-.009	0	0
100	MP ALPHA3	PX	-.009	-.009	0	0
101	MP ALPHA2	PX	-.009	-.009	0	0
102	MP ALPHA1	PX	-.009	-.009	0	0
103	KICKER3	PX	-.008	-.008	0	0
104	KICKER2	PX	-.008	-.008	0	0
105	KICKER1	PX	-.008	-.008	0	0
106	RAIL3	PX	-.005	-.005	0	0
107	RAIL1	PX	-.005	-.005	0	0
108	RAIL2	PX	-.003	-.003	0	0
109	FACE3	PX	-.008	-.008	0	0
110	FACE1	PX	-.008	-.008	0	0
111	FACE2	PX	-.004	-.004	0	0
112	CR3B	PX	-.008	-.008	0	0
113	CR3A	PX	-.008	-.008	0	0
114	CR2B	PX	-.008	-.008	0	0

Member Distributed Loads (BLC 7 : Wind Load (120)) (Continued)

	Member Label	Direction	Start Magnitude[k/ft,...	End Magnitude[k/ft,F...	Start Location[ft,%]	End Location[ft,%]
115	CR2A	PX	-.008	-.008	0	0
116	CR1B	PX	-.008	-.008	0	0
117	CR1A	PX	-.008	-.008	0	0
118	ANGLE3	PX	-.008	-.008	0	0
119	ANGLE2	PX	-.008	-.008	0	0
120	ANGLE1	PX	-.008	-.008	0	0

Member Distributed Loads (BLC 8 : Wind Load (150))

	Member Label	Direction	Start Magnitude[k/ft,...	End Magnitude[k/ft,F...	Start Location[ft,%]	End Location[ft,%]
1	SUP3B	PY	.006	.006	0	0
2	SUP3A	PY	.006	.006	0	0
3	SUP2B	PY	.006	.006	0	0
4	SUP2A	PY	.006	.006	0	0
5	SUP1B	PY	.006	.006	0	0
6	SUP1A	PY	.006	.006	0	0
7	SO3	PY	.008	.008	0	0
8	SO2	PY	.008	.008	0	0
9	SO1	PY	.008	.008	0	0
10	PLATECORNER3C	PY	.019	.019	0	0
11	PLATECORNER3B	PY	.019	.019	0	0
12	PLATECORNER3A	PY	.019	.019	0	0
13	PLATECORNER2C	PY	.019	.019	0	0
14	PLATECORNER2B	PY	.019	.019	0	0
15	PLATECORNER2A	PY	.019	.019	0	0
16	PLATECORNER1C	PY	.019	.019	0	0
17	PLATECORNER1B	PY	.019	.019	0	0
18	PLATECORNER1A	PY	.019	.019	0	0
19	PLATE12	PY	.019	.019	0	0
20	PLATE11	PY	.019	.019	0	0
21	PLATE10	PY	.019	.019	0	0
22	PLATE9	PY	.019	.019	0	0
23	PLATE8	PY	.019	.019	0	0
24	PLATE7	PY	.019	.019	0	0
25	PLATE6	PY	.019	.019	0	0
26	PLATE5	PY	.019	.019	0	0
27	PLATE4	PY	.019	.019	0	0
28	PLATE3	PY	.019	.019	0	0
29	PLATE2	PY	.019	.019	0	0
30	PLATE1	PY	.019	.019	0	0
31	MP GAMMA4	PY	.009	.009	0	0
32	MP GAMMA3	PY	.009	.009	0	0
33	MP GAMMA2	PY	.009	.009	0	0
34	MP GAMMA1	PY	.009	.009	0	0
35	MP BETA4	PY	.009	.009	0	0
36	MP BETA3	PY	.009	.009	0	0
37	MP BETA2	PY	.009	.009	0	0
38	MP BETA1	PY	.009	.009	0	0
39	MP ALPHA4	PY	.009	.009	0	0
40	MP ALPHA3	PY	.009	.009	0	0
41	MP ALPHA2	PY	.009	.009	0	0
42	MP ALPHA1	PY	.009	.009	0	0
43	KICKER3	PY	.008	.008	0	0
44	KICKER2	PY	.008	.008	0	0
45	KICKER1	PY	.008	.008	0	0
46	RAIL3	PY	.005	.005	0	0
47	RAIL1	PY	.005	.005	0	0

Member Distributed Loads (BLC 8 : Wind Load (150)) (Continued)

	Member Label	Direction	Start Magnitude[k/ft,...	End Magnitude[k/ft,F...	Start Location[ft,%]	End Location[ft,%]
48	RAIL2	PY	.003	.003	0	0
49	FACE3	PY	.008	.008	0	0
50	FACE1	PY	.008	.008	0	0
51	FACE2	PY	.004	.004	0	0
52	CR3B	PY	.008	.008	0	0
53	CR3A	PY	.008	.008	0	0
54	CR2B	PY	.008	.008	0	0
55	CR2A	PY	.008	.008	0	0
56	CR1B	PY	.008	.008	0	0
57	CR1A	PY	.008	.008	0	0
58	ANGLE3	PY	.008	.008	0	0
59	ANGLE2	PY	.008	.008	0	0
60	ANGLE1	PY	.008	.008	0	0
61	SUP3B	PX	-.004	-.004	0	0
62	SUP3A	PX	-.004	-.004	0	0
63	SUP2B	PX	-.004	-.004	0	0
64	SUP2A	PX	-.004	-.004	0	0
65	SUP1B	PX	-.004	-.004	0	0
66	SUP1A	PX	-.004	-.004	0	0
67	SO3	PX	-.005	-.005	0	0
68	SO2	PX	-.005	-.005	0	0
69	SO1	PX	-.005	-.005	0	0
70	PLATECORNER3C	PX	-.011	-.011	0	0
71	PLATECORNER3B	PX	-.011	-.011	0	0
72	PLATECORNER3A	PX	-.011	-.011	0	0
73	PLATECORNER2C	PX	-.011	-.011	0	0
74	PLATECORNER2B	PX	-.011	-.011	0	0
75	PLATECORNER2A	PX	-.011	-.011	0	0
76	PLATECORNER1C	PX	-.011	-.011	0	0
77	PLATECORNER1B	PX	-.011	-.011	0	0
78	PLATECORNER1A	PX	-.011	-.011	0	0
79	PLATE12	PX	-.011	-.011	0	0
80	PLATE11	PX	-.011	-.011	0	0
81	PLATE10	PX	-.011	-.011	0	0
82	PLATE9	PX	-.011	-.011	0	0
83	PLATE8	PX	-.011	-.011	0	0
84	PLATE7	PX	-.011	-.011	0	0
85	PLATE6	PX	-.011	-.011	0	0
86	PLATE5	PX	-.011	-.011	0	0
87	PLATE4	PX	-.011	-.011	0	0
88	PLATE3	PX	-.011	-.011	0	0
89	PLATE2	PX	-.011	-.011	0	0
90	PLATE1	PX	-.011	-.011	0	0
91	MP GAMMA4	PX	-.005	-.005	0	0
92	MP GAMMA3	PX	-.005	-.005	0	0
93	MP GAMMA2	PX	-.005	-.005	0	0
94	MP GAMMA1	PX	-.005	-.005	0	0
95	MP BETA4	PX	-.005	-.005	0	0
96	MP BETA3	PX	-.005	-.005	0	0
97	MP BETA2	PX	-.005	-.005	0	0
98	MP BETA1	PX	-.005	-.005	0	0
99	MP ALPHA4	PX	-.005	-.005	0	0
100	MP ALPHA3	PX	-.005	-.005	0	0
101	MP ALPHA2	PX	-.005	-.005	0	0
102	MP ALPHA1	PX	-.005	-.005	0	0
103	KICKER3	PX	-.005	-.005	0	0
104	KICKER2	PX	-.005	-.005	0	0

Member Distributed Loads (BLC 8 : Wind Load (150)) (Continued)

	Member Label	Direction	Start Magnitude[k/ft,...	End Magnitude[k/ft,F...	Start Location[ft,%]	End Location[ft,%]
105	KICKER1	PX	-.005	-.005	0	0
106	RAIL3	PX	-.003	-.003	0	0
107	RAIL1	PX	-.003	-.003	0	0
108	RAIL2	PX	-.002	-.002	0	0
109	FACE3	PX	-.005	-.005	0	0
110	FACE1	PX	-.005	-.005	0	0
111	FACE2	PX	-.002	-.002	0	0
112	CR3B	PX	-.005	-.005	0	0
113	CR3A	PX	-.005	-.005	0	0
114	CR2B	PX	-.005	-.005	0	0
115	CR2A	PX	-.005	-.005	0	0
116	CR1B	PX	-.005	-.005	0	0
117	CR1A	PX	-.005	-.005	0	0
118	ANGLE3	PX	-.005	-.005	0	0
119	ANGLE2	PX	-.005	-.005	0	0
120	ANGLE1	PX	-.005	-.005	0	0

Member Distributed Loads (BLC 9 : Wind Load (180))

	Member Label	Direction	Start Magnitude[k/ft,...	End Magnitude[k/ft,F...	Start Location[ft,%]	End Location[ft,%]
1	SUP3B	PY	.007	.007	0	0
2	SUP3A	PY	.007	.007	0	0
3	SUP2B	PY	.007	.007	0	0
4	SUP2A	PY	.007	.007	0	0
5	SUP1B	PY	.007	.007	0	0
6	SUP1A	PY	.007	.007	0	0
7	SO3	PY	.009	.009	0	0
8	SO2	PY	.009	.009	0	0
9	SO1	PY	.009	.009	0	0
10	PLATECORNER3C	PY	.022	.022	0	0
11	PLATECORNER3B	PY	.022	.022	0	0
12	PLATECORNER3A	PY	.022	.022	0	0
13	PLATECORNER2C	PY	.022	.022	0	0
14	PLATECORNER2B	PY	.022	.022	0	0
15	PLATECORNER2A	PY	.022	.022	0	0
16	PLATECORNER1C	PY	.022	.022	0	0
17	PLATECORNER1B	PY	.022	.022	0	0
18	PLATECORNER1A	PY	.022	.022	0	0
19	PLATE12	PY	.022	.022	0	0
20	PLATE11	PY	.022	.022	0	0
21	PLATE10	PY	.022	.022	0	0
22	PLATE9	PY	.022	.022	0	0
23	PLATE8	PY	.022	.022	0	0
24	PLATE7	PY	.022	.022	0	0
25	PLATE6	PY	.022	.022	0	0
26	PLATE5	PY	.022	.022	0	0
27	PLATE4	PY	.022	.022	0	0
28	PLATE3	PY	.022	.022	0	0
29	PLATE2	PY	.022	.022	0	0
30	PLATE1	PY	.022	.022	0	0
31	MP GAMMA4	PY	.01	.01	0	0
32	MP GAMMA3	PY	.01	.01	0	0
33	MP GAMMA2	PY	.01	.01	0	0
34	MP GAMMA1	PY	.01	.01	0	0
35	MP BETA4	PY	.01	.01	0	0
36	MP BETA3	PY	.01	.01	0	0
37	MP BETA2	PY	.01	.01	0	0

Member Distributed Loads (BLC 9 : Wind Load (180)) (Continued)

	Member Label	Direction	Start Magnitude[k/ft,...	End Magnitude[k/ft,F...	Start Location[ft,%]	End Location[ft,%]
38	MP BETA1	PY	.01	.01	0	0
39	MP ALPHA4	PY	.01	.01	0	0
40	MP ALPHA3	PY	.01	.01	0	0
41	MP ALPHA2	PY	.01	.01	0	0
42	MP ALPHA1	PY	.01	.01	0	0
43	KICKER3	PY	.009	.009	0	0
44	KICKER2	PY	.009	.009	0	0
45	KICKER1	PY	.009	.009	0	0
46	RAIL3	PY	.006	.006	0	0
47	RAIL1	PY	.006	.006	0	0
48	RAIL2	PY	.003	.003	0	0
49	FACE3	PY	.009	.009	0	0
50	FACE1	PY	.009	.009	0	0
51	FACE2	PY	.005	.005	0	0
52	CR3B	PY	.009	.009	0	0
53	CR3A	PY	.009	.009	0	0
54	CR2B	PY	.009	.009	0	0
55	CR2A	PY	.009	.009	0	0
56	CR1B	PY	.009	.009	0	0
57	CR1A	PY	.009	.009	0	0
58	ANGLE3	PY	.009	.009	0	0
59	ANGLE2	PY	.009	.009	0	0
60	ANGLE1	PY	.009	.009	0	0

Member Distributed Loads (BLC 10 : Wind Load (210))

	Member Label	Direction	Start Magnitude[k/ft,...	End Magnitude[k/ft,F...	Start Location[ft,%]	End Location[ft,%]
1	SUP3B	PY	.006	.006	0	0
2	SUP3A	PY	.006	.006	0	0
3	SUP2B	PY	.006	.006	0	0
4	SUP2A	PY	.006	.006	0	0
5	SUP1B	PY	.006	.006	0	0
6	SUP1A	PY	.006	.006	0	0
7	SO3	PY	.008	.008	0	0
8	SO2	PY	.008	.008	0	0
9	SO1	PY	.008	.008	0	0
10	PLATECORNER3C	PY	.019	.019	0	0
11	PLATECORNER3B	PY	.019	.019	0	0
12	PLATECORNER3A	PY	.019	.019	0	0
13	PLATECORNER2C	PY	.019	.019	0	0
14	PLATECORNER2B	PY	.019	.019	0	0
15	PLATECORNER2A	PY	.019	.019	0	0
16	PLATECORNER1C	PY	.019	.019	0	0
17	PLATECORNER1B	PY	.019	.019	0	0
18	PLATECORNER1A	PY	.019	.019	0	0
19	PLATE12	PY	.019	.019	0	0
20	PLATE11	PY	.019	.019	0	0
21	PLATE10	PY	.019	.019	0	0
22	PLATE9	PY	.019	.019	0	0
23	PLATE8	PY	.019	.019	0	0
24	PLATE7	PY	.019	.019	0	0
25	PLATE6	PY	.019	.019	0	0
26	PLATE5	PY	.019	.019	0	0
27	PLATE4	PY	.019	.019	0	0
28	PLATE3	PY	.019	.019	0	0
29	PLATE2	PY	.019	.019	0	0
30	PLATE1	PY	.019	.019	0	0

Member Distributed Loads (BLC 10 : Wind Load (210)) (Continued)

	Member Label	Direction	Start Magnitude[k/ft,...	End Magnitude[k/ft,F...	Start Location[ft,%]	End Location[ft,%]
31	MP GAMMA4	PY	.009	.009	0	0
32	MP GAMMA3	PY	.009	.009	0	0
33	MP GAMMA2	PY	.009	.009	0	0
34	MP GAMMA1	PY	.009	.009	0	0
35	MP BETA4	PY	.009	.009	0	0
36	MP BETA3	PY	.009	.009	0	0
37	MP BETA2	PY	.009	.009	0	0
38	MP BETA1	PY	.009	.009	0	0
39	MP ALPHA4	PY	.009	.009	0	0
40	MP ALPHA3	PY	.009	.009	0	0
41	MP ALPHA2	PY	.009	.009	0	0
42	MP ALPHA1	PY	.009	.009	0	0
43	KICKER3	PY	.008	.008	0	0
44	KICKER2	PY	.008	.008	0	0
45	KICKER1	PY	.008	.008	0	0
46	RAIL1	PY	.005	.005	0	0
47	RAIL2	PY	.005	.005	0	0
48	RAIL3	PY	.003	.003	0	0
49	FACE1	PY	.008	.008	0	0
50	FACE2	PY	.008	.008	0	0
51	FACE3	PY	.004	.004	0	0
52	CR3B	PY	.008	.008	0	0
53	CR3A	PY	.008	.008	0	0
54	CR2B	PY	.008	.008	0	0
55	CR2A	PY	.008	.008	0	0
56	CR1B	PY	.008	.008	0	0
57	CR1A	PY	.008	.008	0	0
58	ANGLE3	PY	.008	.008	0	0
59	ANGLE2	PY	.008	.008	0	0
60	ANGLE1	PY	.008	.008	0	0
61	SUP3B	PX	.004	.004	0	0
62	SUP3A	PX	.004	.004	0	0
63	SUP2B	PX	.004	.004	0	0
64	SUP2A	PX	.004	.004	0	0
65	SUP1B	PX	.004	.004	0	0
66	SUP1A	PX	.004	.004	0	0
67	SO3	PX	.005	.005	0	0
68	SO2	PX	.005	.005	0	0
69	SO1	PX	.005	.005	0	0
70	PLATECORNER3C	PX	.011	.011	0	0
71	PLATECORNER3B	PX	.011	.011	0	0
72	PLATECORNER3A	PX	.011	.011	0	0
73	PLATECORNER2C	PX	.011	.011	0	0
74	PLATECORNER2B	PX	.011	.011	0	0
75	PLATECORNER2A	PX	.011	.011	0	0
76	PLATECORNER1C	PX	.011	.011	0	0
77	PLATECORNER1B	PX	.011	.011	0	0
78	PLATECORNER1A	PX	.011	.011	0	0
79	PLATE12	PX	.011	.011	0	0
80	PLATE11	PX	.011	.011	0	0
81	PLATE10	PX	.011	.011	0	0
82	PLATE9	PX	.011	.011	0	0
83	PLATE8	PX	.011	.011	0	0
84	PLATE7	PX	.011	.011	0	0
85	PLATE6	PX	.011	.011	0	0
86	PLATE5	PX	.011	.011	0	0
87	PLATE4	PX	.011	.011	0	0

Member Distributed Loads (BLC 10 : Wind Load (210)) (Continued)

	Member Label	Direction	Start Magnitude[k/ft,...	End Magnitude[k/ft,F...	Start Location[ft,%]	End Location[ft,%]
88	PLATE3	PX	.011	.011	0	0
89	PLATE2	PX	.011	.011	0	0
90	PLATE1	PX	.011	.011	0	0
91	MP GAMMA4	PX	.005	.005	0	0
92	MP GAMMA3	PX	.005	.005	0	0
93	MP GAMMA2	PX	.005	.005	0	0
94	MP GAMMA1	PX	.005	.005	0	0
95	MP BETA4	PX	.005	.005	0	0
96	MP BETA3	PX	.005	.005	0	0
97	MP BETA2	PX	.005	.005	0	0
98	MP BETA1	PX	.005	.005	0	0
99	MP ALPHA4	PX	.005	.005	0	0
100	MP ALPHA3	PX	.005	.005	0	0
101	MP ALPHA2	PX	.005	.005	0	0
102	MP ALPHA1	PX	.005	.005	0	0
103	KICKER3	PX	.005	.005	0	0
104	KICKER2	PX	.005	.005	0	0
105	KICKER1	PX	.005	.005	0	0
106	RAIL1	PX	.003	.003	0	0
107	RAIL2	PX	.003	.003	0	0
108	RAIL3	PX	.002	.002	0	0
109	FACE1	PX	.005	.005	0	0
110	FACE2	PX	.005	.005	0	0
111	FACE3	PX	.002	.002	0	0
112	CR3B	PX	.005	.005	0	0
113	CR3A	PX	.005	.005	0	0
114	CR2B	PX	.005	.005	0	0
115	CR2A	PX	.005	.005	0	0
116	CR1B	PX	.005	.005	0	0
117	CR1A	PX	.005	.005	0	0
118	ANGLE3	PX	.005	.005	0	0
119	ANGLE2	PX	.005	.005	0	0
120	ANGLE1	PX	.005	.005	0	0

Member Distributed Loads (BLC 11 : Wind Load (240))

	Member Label	Direction	Start Magnitude[k/ft,...	End Magnitude[k/ft,F...	Start Location[ft,%]	End Location[ft,%]
1	SUP3B	PY	.004	.004	0	0
2	SUP3A	PY	.004	.004	0	0
3	SUP2B	PY	.004	.004	0	0
4	SUP2A	PY	.004	.004	0	0
5	SUP1B	PY	.004	.004	0	0
6	SUP1A	PY	.004	.004	0	0
7	SO3	PY	.005	.005	0	0
8	SO2	PY	.005	.005	0	0
9	SO1	PY	.005	.005	0	0
10	PLATECORNER3C	PY	.011	.011	0	0
11	PLATECORNER3B	PY	.011	.011	0	0
12	PLATECORNER3A	PY	.011	.011	0	0
13	PLATECORNER2C	PY	.011	.011	0	0
14	PLATECORNER2B	PY	.011	.011	0	0
15	PLATECORNER2A	PY	.011	.011	0	0
16	PLATECORNER1C	PY	.011	.011	0	0
17	PLATECORNER1B	PY	.011	.011	0	0
18	PLATECORNER1A	PY	.011	.011	0	0
19	PLATE12	PY	.011	.011	0	0
20	PLATE11	PY	.011	.011	0	0

Member Distributed Loads (BLC 11 : Wind Load (240)) (Continued)

	Member Label	Direction	Start Magnitude[k/ft,...	End Magnitude[k/ft,F...	Start Location[ft,%]	End Location[ft,%]
21	PLATE10	PY	.011	.011	0	0
22	PLATE9	PY	.011	.011	0	0
23	PLATE8	PY	.011	.011	0	0
24	PLATE7	PY	.011	.011	0	0
25	PLATE6	PY	.011	.011	0	0
26	PLATE5	PY	.011	.011	0	0
27	PLATE4	PY	.011	.011	0	0
28	PLATE3	PY	.011	.011	0	0
29	PLATE2	PY	.011	.011	0	0
30	PLATE1	PY	.011	.011	0	0
31	MP GAMMA4	PY	.005	.005	0	0
32	MP GAMMA3	PY	.005	.005	0	0
33	MP GAMMA2	PY	.005	.005	0	0
34	MP GAMMA1	PY	.005	.005	0	0
35	MP BETA4	PY	.005	.005	0	0
36	MP BETA3	PY	.005	.005	0	0
37	MP BETA2	PY	.005	.005	0	0
38	MP BETA1	PY	.005	.005	0	0
39	MP ALPHA4	PY	.005	.005	0	0
40	MP ALPHA3	PY	.005	.005	0	0
41	MP ALPHA2	PY	.005	.005	0	0
42	MP ALPHA1	PY	.005	.005	0	0
43	KICKER3	PY	.005	.005	0	0
44	KICKER2	PY	.005	.005	0	0
45	KICKER1	PY	.005	.005	0	0
46	RAIL1	PY	.003	.003	0	0
47	RAIL2	PY	.003	.003	0	0
48	RAIL3	PY	.002	.002	0	0
49	FACE1	PY	.005	.005	0	0
50	FACE2	PY	.005	.005	0	0
51	FACE3	PY	.002	.002	0	0
52	CR3B	PY	.005	.005	0	0
53	CR3A	PY	.005	.005	0	0
54	CR2B	PY	.005	.005	0	0
55	CR2A	PY	.005	.005	0	0
56	CR1B	PY	.005	.005	0	0
57	CR1A	PY	.005	.005	0	0
58	ANGLE3	PY	.005	.005	0	0
59	ANGLE2	PY	.005	.005	0	0
60	ANGLE1	PY	.005	.005	0	0
61	SUP3B	PX	.006	.006	0	0
62	SUP3A	PX	.006	.006	0	0
63	SUP2B	PX	.006	.006	0	0
64	SUP2A	PX	.006	.006	0	0
65	SUP1B	PX	.006	.006	0	0
66	SUP1A	PX	.006	.006	0	0
67	SO3	PX	.008	.008	0	0
68	SO2	PX	.008	.008	0	0
69	SO1	PX	.008	.008	0	0
70	PLATECORNER3C	PX	.019	.019	0	0
71	PLATECORNER3B	PX	.019	.019	0	0
72	PLATECORNER3A	PX	.019	.019	0	0
73	PLATECORNER2C	PX	.019	.019	0	0
74	PLATECORNER2B	PX	.019	.019	0	0
75	PLATECORNER2A	PX	.019	.019	0	0
76	PLATECORNER1C	PX	.019	.019	0	0
77	PLATECORNER1B	PX	.019	.019	0	0

Member Distributed Loads (BLC 11 : Wind Load (240)) (Continued)

	Member Label	Direction	Start Magnitude[k/ft,...	End Magnitude[k/ft,F...	Start Location[ft,%]	End Location[ft,%]
78	PLATECORNER1A	PX	.019	.019	0	0
79	PLATE12	PX	.019	.019	0	0
80	PLATE11	PX	.019	.019	0	0
81	PLATE10	PX	.019	.019	0	0
82	PLATE9	PX	.019	.019	0	0
83	PLATE8	PX	.019	.019	0	0
84	PLATE7	PX	.019	.019	0	0
85	PLATE6	PX	.019	.019	0	0
86	PLATE5	PX	.019	.019	0	0
87	PLATE4	PX	.019	.019	0	0
88	PLATE3	PX	.019	.019	0	0
89	PLATE2	PX	.019	.019	0	0
90	PLATE1	PX	.019	.019	0	0
91	MP GAMMA4	PX	.009	.009	0	0
92	MP GAMMA3	PX	.009	.009	0	0
93	MP GAMMA2	PX	.009	.009	0	0
94	MP GAMMA1	PX	.009	.009	0	0
95	MP BETA4	PX	.009	.009	0	0
96	MP BETA3	PX	.009	.009	0	0
97	MP BETA2	PX	.009	.009	0	0
98	MP BETA1	PX	.009	.009	0	0
99	MP ALPHA4	PX	.009	.009	0	0
100	MP ALPHA3	PX	.009	.009	0	0
101	MP ALPHA2	PX	.009	.009	0	0
102	MP ALPHA1	PX	.009	.009	0	0
103	KICKER3	PX	.008	.008	0	0
104	KICKER2	PX	.008	.008	0	0
105	KICKER1	PX	.008	.008	0	0
106	RAIL1	PX	.005	.005	0	0
107	RAIL2	PX	.005	.005	0	0
108	RAIL3	PX	.003	.003	0	0
109	FACE1	PX	.008	.008	0	0
110	FACE2	PX	.008	.008	0	0
111	FACE3	PX	.004	.004	0	0
112	CR3B	PX	.008	.008	0	0
113	CR3A	PX	.008	.008	0	0
114	CR2B	PX	.008	.008	0	0
115	CR2A	PX	.008	.008	0	0
116	CR1B	PX	.008	.008	0	0
117	CR1A	PX	.008	.008	0	0
118	ANGLE3	PX	.008	.008	0	0
119	ANGLE2	PX	.008	.008	0	0
120	ANGLE1	PX	.008	.008	0	0

Member Distributed Loads (BLC 12 : Wind Load (270))

	Member Label	Direction	Start Magnitude[k/ft,...	End Magnitude[k/ft,F...	Start Location[ft,%]	End Location[ft,%]
1	SUP3B	PX	.007	.007	0	0
2	SUP3A	PX	.007	.007	0	0
3	SUP2B	PX	.007	.007	0	0
4	SUP2A	PX	.007	.007	0	0
5	SUP1B	PX	.007	.007	0	0
6	SUP1A	PX	.007	.007	0	0
7	SO3	PX	.009	.009	0	0
8	SO2	PX	.009	.009	0	0
9	SO1	PX	.009	.009	0	0
10	PLATECORNER3C	PX	.022	.022	0	0

Member Distributed Loads (BLC 12 : Wind Load (270)) (Continued)

	Member Label	Direction	Start Magnitude[k/ft,...	End Magnitude[k/ft,F...	Start Location[ft,%]	End Location[ft,%]
11	PLATECORNER3B	PX	.022	.022	0	0
12	PLATECORNER3A	PX	.022	.022	0	0
13	PLATECORNER2C	PX	.022	.022	0	0
14	PLATECORNER2B	PX	.022	.022	0	0
15	PLATECORNER2A	PX	.022	.022	0	0
16	PLATECORNER1C	PX	.022	.022	0	0
17	PLATECORNER1B	PX	.022	.022	0	0
18	PLATECORNER1A	PX	.022	.022	0	0
19	PLATE12	PX	.022	.022	0	0
20	PLATE11	PX	.022	.022	0	0
21	PLATE10	PX	.022	.022	0	0
22	PLATE9	PX	.022	.022	0	0
23	PLATE8	PX	.022	.022	0	0
24	PLATE7	PX	.022	.022	0	0
25	PLATE6	PX	.022	.022	0	0
26	PLATE5	PX	.022	.022	0	0
27	PLATE4	PX	.022	.022	0	0
28	PLATE3	PX	.022	.022	0	0
29	PLATE2	PX	.022	.022	0	0
30	PLATE1	PX	.022	.022	0	0
31	MP GAMMA4	PX	.01	.01	0	0
32	MP GAMMA3	PX	.01	.01	0	0
33	MP GAMMA2	PX	.01	.01	0	0
34	MP GAMMA1	PX	.01	.01	0	0
35	MP BETA4	PX	.01	.01	0	0
36	MP BETA3	PX	.01	.01	0	0
37	MP BETA2	PX	.01	.01	0	0
38	MP BETA1	PX	.01	.01	0	0
39	MP ALPHA4	PX	.01	.01	0	0
40	MP ALPHA3	PX	.01	.01	0	0
41	MP ALPHA2	PX	.01	.01	0	0
42	MP ALPHA1	PX	.01	.01	0	0
43	KICKER3	PX	.009	.009	0	0
44	KICKER2	PX	.009	.009	0	0
45	KICKER1	PX	.009	.009	0	0
46	RAIL1	PX	.006	.006	0	0
47	RAIL2	PX	.006	.006	0	0
48	RAIL3	PX	.003	.003	0	0
49	FACE1	PX	.009	.009	0	0
50	FACE2	PX	.009	.009	0	0
51	FACE3	PX	.005	.005	0	0
52	CR3B	PX	.009	.009	0	0
53	CR3A	PX	.009	.009	0	0
54	CR2B	PX	.009	.009	0	0
55	CR2A	PX	.009	.009	0	0
56	CR1B	PX	.009	.009	0	0
57	CR1A	PX	.009	.009	0	0
58	ANGLE3	PX	.009	.009	0	0
59	ANGLE2	PX	.009	.009	0	0
60	ANGLE1	PX	.009	.009	0	0

Member Distributed Loads (BLC 13 : Wind Load (300))

	Member Label	Direction	Start Magnitude[k/ft,...	End Magnitude[k/ft,F...	Start Location[ft,%]	End Location[ft,%]
1	SUP3B	PY	-.004	-.004	0	0
2	SUP3A	PY	-.004	-.004	0	0
3	SUP2B	PY	-.004	-.004	0	0

Member Distributed Loads (BLC 13 : Wind Load (300)) (Continued)

	Member Label	Direction	Start Magnitude[k/ft,...	End Magnitude[k/ft,F...	Start Location[ft,%]	End Location[ft,%]
4	SUP2A	PY	-.004	-.004	0	0
5	SUP1B	PY	-.004	-.004	0	0
6	SUP1A	PY	-.004	-.004	0	0
7	SO3	PY	-.005	-.005	0	0
8	SO2	PY	-.005	-.005	0	0
9	SO1	PY	-.005	-.005	0	0
10	PLATECORNER3C	PY	-.011	-.011	0	0
11	PLATECORNER3B	PY	-.011	-.011	0	0
12	PLATECORNER3A	PY	-.011	-.011	0	0
13	PLATECORNER2C	PY	-.011	-.011	0	0
14	PLATECORNER2B	PY	-.011	-.011	0	0
15	PLATECORNER2A	PY	-.011	-.011	0	0
16	PLATECORNER1C	PY	-.011	-.011	0	0
17	PLATECORNER1B	PY	-.011	-.011	0	0
18	PLATECORNER1A	PY	-.011	-.011	0	0
19	PLATE12	PY	-.011	-.011	0	0
20	PLATE11	PY	-.011	-.011	0	0
21	PLATE10	PY	-.011	-.011	0	0
22	PLATE9	PY	-.011	-.011	0	0
23	PLATE8	PY	-.011	-.011	0	0
24	PLATE7	PY	-.011	-.011	0	0
25	PLATE6	PY	-.011	-.011	0	0
26	PLATE5	PY	-.011	-.011	0	0
27	PLATE4	PY	-.011	-.011	0	0
28	PLATE3	PY	-.011	-.011	0	0
29	PLATE2	PY	-.011	-.011	0	0
30	PLATE1	PY	-.011	-.011	0	0
31	MP GAMMA4	PY	-.005	-.005	0	0
32	MP GAMMA3	PY	-.005	-.005	0	0
33	MP GAMMA2	PY	-.005	-.005	0	0
34	MP GAMMA1	PY	-.005	-.005	0	0
35	MP BETA4	PY	-.005	-.005	0	0
36	MP BETA3	PY	-.005	-.005	0	0
37	MP BETA2	PY	-.005	-.005	0	0
38	MP BETA1	PY	-.005	-.005	0	0
39	MP ALPHA4	PY	-.005	-.005	0	0
40	MP ALPHA3	PY	-.005	-.005	0	0
41	MP ALPHA2	PY	-.005	-.005	0	0
42	MP ALPHA1	PY	-.005	-.005	0	0
43	KICKER3	PY	-.005	-.005	0	0
44	KICKER2	PY	-.005	-.005	0	0
45	KICKER1	PY	-.005	-.005	0	0
46	RAIL1	PY	-.003	-.003	0	0
47	RAIL2	PY	-.003	-.003	0	0
48	RAIL3	PY	-.002	-.002	0	0
49	FACE1	PY	-.005	-.005	0	0
50	FACE2	PY	-.005	-.005	0	0
51	FACE3	PY	-.002	-.002	0	0
52	CR3B	PY	-.005	-.005	0	0
53	CR3A	PY	-.005	-.005	0	0
54	CR2B	PY	-.005	-.005	0	0
55	CR2A	PY	-.005	-.005	0	0
56	CR1B	PY	-.005	-.005	0	0
57	CR1A	PY	-.005	-.005	0	0
58	ANGLE3	PY	-.005	-.005	0	0
59	ANGLE2	PY	-.005	-.005	0	0
60	ANGLE1	PY	-.005	-.005	0	0

Member Distributed Loads (BLC 13 : Wind Load (300)) (Continued)

	Member Label	Direction	Start Magnitude[k/ft,...	End Magnitude[k/ft,F...	Start Location[ft,%]	End Location[ft,%]
61	SUP3B	PX	.006	.006	0	0
62	SUP3A	PX	.006	.006	0	0
63	SUP2B	PX	.006	.006	0	0
64	SUP2A	PX	.006	.006	0	0
65	SUP1B	PX	.006	.006	0	0
66	SUP1A	PX	.006	.006	0	0
67	SO3	PX	.008	.008	0	0
68	SO2	PX	.008	.008	0	0
69	SO1	PX	.008	.008	0	0
70	PLATECORNER3C	PX	.019	.019	0	0
71	PLATECORNER3B	PX	.019	.019	0	0
72	PLATECORNER3A	PX	.019	.019	0	0
73	PLATECORNER2C	PX	.019	.019	0	0
74	PLATECORNER2B	PX	.019	.019	0	0
75	PLATECORNER2A	PX	.019	.019	0	0
76	PLATECORNER1C	PX	.019	.019	0	0
77	PLATECORNER1B	PX	.019	.019	0	0
78	PLATECORNER1A	PX	.019	.019	0	0
79	PLATE12	PX	.019	.019	0	0
80	PLATE11	PX	.019	.019	0	0
81	PLATE10	PX	.019	.019	0	0
82	PLATE9	PX	.019	.019	0	0
83	PLATE8	PX	.019	.019	0	0
84	PLATE7	PX	.019	.019	0	0
85	PLATE6	PX	.019	.019	0	0
86	PLATE5	PX	.019	.019	0	0
87	PLATE4	PX	.019	.019	0	0
88	PLATE3	PX	.019	.019	0	0
89	PLATE2	PX	.019	.019	0	0
90	PLATE1	PX	.019	.019	0	0
91	MP GAMMA4	PX	.009	.009	0	0
92	MP GAMMA3	PX	.009	.009	0	0
93	MP GAMMA2	PX	.009	.009	0	0
94	MP GAMMA1	PX	.009	.009	0	0
95	MP BETA4	PX	.009	.009	0	0
96	MP BETA3	PX	.009	.009	0	0
97	MP BETA2	PX	.009	.009	0	0
98	MP BETA1	PX	.009	.009	0	0
99	MP ALPHA4	PX	.009	.009	0	0
100	MP ALPHA3	PX	.009	.009	0	0
101	MP ALPHA2	PX	.009	.009	0	0
102	MP ALPHA1	PX	.009	.009	0	0
103	KICKER3	PX	.008	.008	0	0
104	KICKER2	PX	.008	.008	0	0
105	KICKER1	PX	.008	.008	0	0
106	RAIL1	PX	.005	.005	0	0
107	RAIL2	PX	.005	.005	0	0
108	RAIL3	PX	.003	.003	0	0
109	FACE1	PX	.008	.008	0	0
110	FACE2	PX	.008	.008	0	0
111	FACE3	PX	.004	.004	0	0
112	CR3B	PX	.008	.008	0	0
113	CR3A	PX	.008	.008	0	0
114	CR2B	PX	.008	.008	0	0
115	CR2A	PX	.008	.008	0	0
116	CR1B	PX	.008	.008	0	0
117	CR1A	PX	.008	.008	0	0

Member Distributed Loads (BLC 13 : Wind Load (300)) (Continued)

	Member Label	Direction	Start Magnitude[k/ft,...	End Magnitude[k/ft,F...	Start Location[ft,%]	End Location[ft,%]
118	ANGLE3	PX	.008	.008	0	0
119	ANGLE2	PX	.008	.008	0	0
120	ANGLE1	PX	.008	.008	0	0

Member Distributed Loads (BLC 14 : Wind Load (330))

	Member Label	Direction	Start Magnitude[k/ft,...	End Magnitude[k/ft,F...	Start Location[ft,%]	End Location[ft,%]
1	SUP3B	PY	-.006	-.006	0	0
2	SUP3A	PY	-.006	-.006	0	0
3	SUP2B	PY	-.006	-.006	0	0
4	SUP2A	PY	-.006	-.006	0	0
5	SUP1B	PY	-.006	-.006	0	0
6	SUP1A	PY	-.006	-.006	0	0
7	SO3	PY	-.008	-.008	0	0
8	SO2	PY	-.008	-.008	0	0
9	SO1	PY	-.008	-.008	0	0
10	PLATECORNER3C	PY	-.019	-.019	0	0
11	PLATECORNER3B	PY	-.019	-.019	0	0
12	PLATECORNER3A	PY	-.019	-.019	0	0
13	PLATECORNER2C	PY	-.019	-.019	0	0
14	PLATECORNER2B	PY	-.019	-.019	0	0
15	PLATECORNER2A	PY	-.019	-.019	0	0
16	PLATECORNER1C	PY	-.019	-.019	0	0
17	PLATECORNER1B	PY	-.019	-.019	0	0
18	PLATECORNER1A	PY	-.019	-.019	0	0
19	PLATE12	PY	-.019	-.019	0	0
20	PLATE11	PY	-.019	-.019	0	0
21	PLATE10	PY	-.019	-.019	0	0
22	PLATE9	PY	-.019	-.019	0	0
23	PLATE8	PY	-.019	-.019	0	0
24	PLATE7	PY	-.019	-.019	0	0
25	PLATE6	PY	-.019	-.019	0	0
26	PLATE5	PY	-.019	-.019	0	0
27	PLATE4	PY	-.019	-.019	0	0
28	PLATE3	PY	-.019	-.019	0	0
29	PLATE2	PY	-.019	-.019	0	0
30	PLATE1	PY	-.019	-.019	0	0
31	MP GAMMA4	PY	-.009	-.009	0	0
32	MP GAMMA3	PY	-.009	-.009	0	0
33	MP GAMMA2	PY	-.009	-.009	0	0
34	MP GAMMA1	PY	-.009	-.009	0	0
35	MP BETA4	PY	-.009	-.009	0	0
36	MP BETA3	PY	-.009	-.009	0	0
37	MP BETA2	PY	-.009	-.009	0	0
38	MP BETA1	PY	-.009	-.009	0	0
39	MP ALPHA4	PY	-.009	-.009	0	0
40	MP ALPHA3	PY	-.009	-.009	0	0
41	MP ALPHA2	PY	-.009	-.009	0	0
42	MP ALPHA1	PY	-.009	-.009	0	0
43	KICKER3	PY	-.008	-.008	0	0
44	KICKER2	PY	-.008	-.008	0	0
45	KICKER1	PY	-.008	-.008	0	0
46	RAIL3	PY	-.005	-.005	0	0
47	RAIL2	PY	-.005	-.005	0	0
48	RAIL1	PY	-.003	-.003	0	0
49	FACE3	PY	-.008	-.008	0	0
50	FACE2	PY	-.008	-.008	0	0

Member Distributed Loads (BLC 14 : Wind Load (330)) (Continued)

	Member Label	Direction	Start Magnitude[k/ft,...	End Magnitude[k/ft,F...	Start Location[ft,%]	End Location[ft,%]
51	FACE1	PY	-.004	-.004	0	0
52	CR3B	PY	-.008	-.008	0	0
53	CR3A	PY	-.008	-.008	0	0
54	CR2B	PY	-.008	-.008	0	0
55	CR2A	PY	-.008	-.008	0	0
56	CR1B	PY	-.008	-.008	0	0
57	CR1A	PY	-.008	-.008	0	0
58	ANGLE3	PY	-.008	-.008	0	0
59	ANGLE2	PY	-.008	-.008	0	0
60	ANGLE1	PY	-.008	-.008	0	0
61	SUP3B	PX	.004	.004	0	0
62	SUP3A	PX	.004	.004	0	0
63	SUP2B	PX	.004	.004	0	0
64	SUP2A	PX	.004	.004	0	0
65	SUP1B	PX	.004	.004	0	0
66	SUP1A	PX	.004	.004	0	0
67	SO3	PX	.005	.005	0	0
68	SO2	PX	.005	.005	0	0
69	SO1	PX	.005	.005	0	0
70	PLATECORNER3C	PX	.011	.011	0	0
71	PLATECORNER3B	PX	.011	.011	0	0
72	PLATECORNER3A	PX	.011	.011	0	0
73	PLATECORNER2C	PX	.011	.011	0	0
74	PLATECORNER2B	PX	.011	.011	0	0
75	PLATECORNER2A	PX	.011	.011	0	0
76	PLATECORNER1C	PX	.011	.011	0	0
77	PLATECORNER1B	PX	.011	.011	0	0
78	PLATECORNER1A	PX	.011	.011	0	0
79	PLATE12	PX	.011	.011	0	0
80	PLATE11	PX	.011	.011	0	0
81	PLATE10	PX	.011	.011	0	0
82	PLATE9	PX	.011	.011	0	0
83	PLATE8	PX	.011	.011	0	0
84	PLATE7	PX	.011	.011	0	0
85	PLATE6	PX	.011	.011	0	0
86	PLATE5	PX	.011	.011	0	0
87	PLATE4	PX	.011	.011	0	0
88	PLATE3	PX	.011	.011	0	0
89	PLATE2	PX	.011	.011	0	0
90	PLATE1	PX	.011	.011	0	0
91	MP GAMMA4	PX	.005	.005	0	0
92	MP GAMMA3	PX	.005	.005	0	0
93	MP GAMMA2	PX	.005	.005	0	0
94	MP GAMMA1	PX	.005	.005	0	0
95	MP BETA4	PX	.005	.005	0	0
96	MP BETA3	PX	.005	.005	0	0
97	MP BETA2	PX	.005	.005	0	0
98	MP BETA1	PX	.005	.005	0	0
99	MP ALPHA4	PX	.005	.005	0	0
100	MP ALPHA3	PX	.005	.005	0	0
101	MP ALPHA2	PX	.005	.005	0	0
102	MP ALPHA1	PX	.005	.005	0	0
103	KICKER3	PX	.005	.005	0	0
104	KICKER2	PX	.005	.005	0	0
105	KICKER1	PX	.005	.005	0	0
106	RAIL3	PX	.003	.003	0	0
107	RAIL2	PX	.003	.003	0	0

Member Distributed Loads (BLC 14 : Wind Load (330)) (Continued)

	Member Label	Direction	Start Magnitude[k/ft,...	End Magnitude[k/ft,F...	Start Location[ft,%]	End Location[ft,%]
108	RAIL1	PX	.002	.002	0	0
109	FACE3	PX	.005	.005	0	0
110	FACE2	PX	.005	.005	0	0
111	FACE1	PX	.002	.002	0	0
112	CR3B	PX	.005	.005	0	0
113	CR3A	PX	.005	.005	0	0
114	CR2B	PX	.005	.005	0	0
115	CR2A	PX	.005	.005	0	0
116	CR1B	PX	.005	.005	0	0
117	CR1A	PX	.005	.005	0	0
118	ANGLE3	PX	.005	.005	0	0
119	ANGLE2	PX	.005	.005	0	0
120	ANGLE1	PX	.005	.005	0	0

Member Distributed Loads (BLC 15 : Maintanence (0))

	Member Label	Direction	Start Magnitude[k/ft,...	End Magnitude[k/ft,F...	Start Location[ft,%]	End Location[ft,%]
1	SUP3B	PY	-.000417	-.000417	0	0
2	SUP3A	PY	-.000417	-.000417	0	0
3	SUP2B	PY	-.000417	-.000417	0	0
4	SUP2A	PY	-.000417	-.000417	0	0
5	SUP1B	PY	-.000417	-.000417	0	0
6	SUP1A	PY	-.000417	-.000417	0	0
7	SO3	PY	-.000521	-.000521	0	0
8	SO2	PY	-.000521	-.000521	0	0
9	SO1	PY	-.000521	-.000521	0	0
10	PLATECORNER3C	PY	-.001	-.001	0	0
11	PLATECORNER3B	PY	-.001	-.001	0	0
12	PLATECORNER3A	PY	-.001	-.001	0	0
13	PLATECORNER2C	PY	-.001	-.001	0	0
14	PLATECORNER2B	PY	-.001	-.001	0	0
15	PLATECORNER2A	PY	-.001	-.001	0	0
16	PLATECORNER1C	PY	-.001	-.001	0	0
17	PLATECORNER1B	PY	-.001	-.001	0	0
18	PLATECORNER1A	PY	-.001	-.001	0	0
19	PLATE12	PY	-.001	-.001	0	0
20	PLATE11	PY	-.001	-.001	0	0
21	PLATE10	PY	-.001	-.001	0	0
22	PLATE9	PY	-.001	-.001	0	0
23	PLATE8	PY	-.001	-.001	0	0
24	PLATE7	PY	-.001	-.001	0	0
25	PLATE6	PY	-.001	-.001	0	0
26	PLATE5	PY	-.001	-.001	0	0
27	PLATE4	PY	-.001	-.001	0	0
28	PLATE3	PY	-.001	-.001	0	0
29	PLATE2	PY	-.001	-.001	0	0
30	PLATE1	PY	-.001	-.001	0	0
31	MP GAMMA4	PY	-.000594	-.000594	0	0
32	MP GAMMA3	PY	-.000594	-.000594	0	0
33	MP GAMMA2	PY	-.000594	-.000594	0	0
34	MP GAMMA1	PY	-.000594	-.000594	0	0
35	MP BETA4	PY	-.000594	-.000594	0	0
36	MP BETA3	PY	-.000594	-.000594	0	0
37	MP BETA2	PY	-.000594	-.000594	0	0
38	MP BETA1	PY	-.000594	-.000594	0	0
39	MP ALPHA4	PY	-.000594	-.000594	0	0
40	MP ALPHA3	PY	-.000594	-.000594	0	0

Member Distributed Loads (BLC 15 : Maintanence (0)) (Continued)

	Member Label	Direction	Start Magnitude[k/ft,...	End Magnitude[k/ft,F...	Start Location[ft,%]	End Location[ft,%]
41	MP ALPHA2	PY	-.000594	-.000594	0	0
42	MP ALPHA1	PY	-.000594	-.000594	0	0
43	KICKER3	PY	-.000521	-.000521	0	0
44	KICKER2	PY	-.000521	-.000521	0	0
45	KICKER1	PY	-.000521	-.000521	0	0
46	RAIL3	PY	-.000361	-.000361	0	0
47	RAIL2	PY	-.000361	-.000361	0	0
48	RAIL1	PY	-.00018	-.00018	0	0
49	FACE3	PY	-.000531	-.000531	0	0
50	FACE2	PY	-.000531	-.000531	0	0
51	FACE1	PY	-.000266	-.000266	0	0
52	CR3B	PY	-.000521	-.000521	0	0
53	CR3A	PY	-.000521	-.000521	0	0
54	CR2B	PY	-.000521	-.000521	0	0
55	CR2A	PY	-.000521	-.000521	0	0
56	CR1B	PY	-.000521	-.000521	0	0
57	CR1A	PY	-.000521	-.000521	0	0
58	ANGLE3	PY	-.000521	-.000521	0	0
59	ANGLE2	PY	-.000521	-.000521	0	0
60	ANGLE1	PY	-.000521	-.000521	0	0

Member Distributed Loads (BLC 16 : Maintanence (30))

	Member Label	Direction	Start Magnitude[k/ft,...	End Magnitude[k/ft,F...	Start Location[ft,%]	End Location[ft,%]
1	SUP3B	PY	-.000361	-.000361	0	0
2	SUP3A	PY	-.000361	-.000361	0	0
3	SUP2B	PY	-.000361	-.000361	0	0
4	SUP2A	PY	-.000361	-.000361	0	0
5	SUP1B	PY	-.000361	-.000361	0	0
6	SUP1A	PY	-.000361	-.000361	0	0
7	SO3	PY	-.000451	-.000451	0	0
8	SO2	PY	-.000451	-.000451	0	0
9	SO1	PY	-.000451	-.000451	0	0
10	PLATECORNER3C	PY	-.001	-.001	0	0
11	PLATECORNER3B	PY	-.001	-.001	0	0
12	PLATECORNER3A	PY	-.001	-.001	0	0
13	PLATECORNER2C	PY	-.001	-.001	0	0
14	PLATECORNER2B	PY	-.001	-.001	0	0
15	PLATECORNER2A	PY	-.001	-.001	0	0
16	PLATECORNER1C	PY	-.001	-.001	0	0
17	PLATECORNER1B	PY	-.001	-.001	0	0
18	PLATECORNER1A	PY	-.001	-.001	0	0
19	PLATE12	PY	-.001	-.001	0	0
20	PLATE11	PY	-.001	-.001	0	0
21	PLATE10	PY	-.001	-.001	0	0
22	PLATE9	PY	-.001	-.001	0	0
23	PLATE8	PY	-.001	-.001	0	0
24	PLATE7	PY	-.001	-.001	0	0
25	PLATE6	PY	-.001	-.001	0	0
26	PLATE5	PY	-.001	-.001	0	0
27	PLATE4	PY	-.001	-.001	0	0
28	PLATE3	PY	-.001	-.001	0	0
29	PLATE2	PY	-.001	-.001	0	0
30	PLATE1	PY	-.001	-.001	0	0
31	MP GAMMA4	PY	-.000514	-.000514	0	0
32	MP GAMMA3	PY	-.000514	-.000514	0	0
33	MP GAMMA2	PY	-.000514	-.000514	0	0

Member Distributed Loads (BLC 16 : Maintanence (30)) (Continued)

	Member Label	Direction	Start Magnitude[k/ft,...	End Magnitude[k/ft,F...	Start Location[ft,%]	End Location[ft,%]
34	MP GAMMA1	PY	-.000514	-.000514	0	0
35	MP BETA4	PY	-.000514	-.000514	0	0
36	MP BETA3	PY	-.000514	-.000514	0	0
37	MP BETA2	PY	-.000514	-.000514	0	0
38	MP BETA1	PY	-.000514	-.000514	0	0
39	MP ALPHA4	PY	-.000514	-.000514	0	0
40	MP ALPHA3	PY	-.000514	-.000514	0	0
41	MP ALPHA2	PY	-.000514	-.000514	0	0
42	MP ALPHA1	PY	-.000514	-.000514	0	0
43	KICKER3	PY	-.000451	-.000451	0	0
44	KICKER2	PY	-.000451	-.000451	0	0
45	KICKER1	PY	-.000451	-.000451	0	0
46	RAIL3	PY	-.000312	-.000312	0	0
47	RAIL2	PY	-.000312	-.000312	0	0
48	RAIL1	PY	-.000156	-.000156	0	0
49	FACE3	PY	-.00046	-.00046	0	0
50	FACE2	PY	-.00046	-.00046	0	0
51	FACE1	PY	-.00023	-.00023	0	0
52	CR3B	PY	-.000451	-.000451	0	0
53	CR3A	PY	-.000451	-.000451	0	0
54	CR2B	PY	-.000451	-.000451	0	0
55	CR2A	PY	-.000451	-.000451	0	0
56	CR1B	PY	-.000451	-.000451	0	0
57	CR1A	PY	-.000451	-.000451	0	0
58	ANGLE3	PY	-.000451	-.000451	0	0
59	ANGLE2	PY	-.000451	-.000451	0	0
60	ANGLE1	PY	-.000451	-.000451	0	0
61	SUP3B	PX	-.000208	-.000208	0	0
62	SUP3A	PX	-.000208	-.000208	0	0
63	SUP2B	PX	-.000208	-.000208	0	0
64	SUP2A	PX	-.000208	-.000208	0	0
65	SUP1B	PX	-.000208	-.000208	0	0
66	SUP1A	PX	-.000208	-.000208	0	0
67	SO3	PX	-.00026	-.00026	0	0
68	SO2	PX	-.00026	-.00026	0	0
69	SO1	PX	-.00026	-.00026	0	0
70	PLATECORNER3C	PX	-.000625	-.000625	0	0
71	PLATECORNER3B	PX	-.000625	-.000625	0	0
72	PLATECORNER3A	PX	-.000625	-.000625	0	0
73	PLATECORNER2C	PX	-.000625	-.000625	0	0
74	PLATECORNER2B	PX	-.000625	-.000625	0	0
75	PLATECORNER2A	PX	-.000625	-.000625	0	0
76	PLATECORNER1C	PX	-.000625	-.000625	0	0
77	PLATECORNER1B	PX	-.000625	-.000625	0	0
78	PLATECORNER1A	PX	-.000625	-.000625	0	0
79	PLATE12	PX	-.000625	-.000625	0	0
80	PLATE11	PX	-.000625	-.000625	0	0
81	PLATE10	PX	-.000625	-.000625	0	0
82	PLATE9	PX	-.000625	-.000625	0	0
83	PLATE8	PX	-.000625	-.000625	0	0
84	PLATE7	PX	-.000625	-.000625	0	0
85	PLATE6	PX	-.000625	-.000625	0	0
86	PLATE5	PX	-.000625	-.000625	0	0
87	PLATE4	PX	-.000625	-.000625	0	0
88	PLATE3	PX	-.000625	-.000625	0	0
89	PLATE2	PX	-.000625	-.000625	0	0
90	PLATE1	PX	-.000625	-.000625	0	0

Member Distributed Loads (BLC 16 : Maintanence (30)) (Continued)

	Member Label	Direction	Start Magnitude[k/ft,...	End Magnitude[k/ft,F...	Start Location[ft,%]	End Location[ft,%]
91	MP GAMMA4	PX	-.000297	-.000297	0	0
92	MP GAMMA3	PX	-.000297	-.000297	0	0
93	MP GAMMA2	PX	-.000297	-.000297	0	0
94	MP GAMMA1	PX	-.000297	-.000297	0	0
95	MP BETA4	PX	-.000297	-.000297	0	0
96	MP BETA3	PX	-.000297	-.000297	0	0
97	MP BETA2	PX	-.000297	-.000297	0	0
98	MP BETA1	PX	-.000297	-.000297	0	0
99	MP ALPHA4	PX	-.000297	-.000297	0	0
100	MP ALPHA3	PX	-.000297	-.000297	0	0
101	MP ALPHA2	PX	-.000297	-.000297	0	0
102	MP ALPHA1	PX	-.000297	-.000297	0	0
103	KICKER3	PX	-.00026	-.00026	0	0
104	KICKER2	PX	-.00026	-.00026	0	0
105	KICKER1	PX	-.00026	-.00026	0	0
106	RAIL3	PX	-.00018	-.00018	0	0
107	RAIL2	PX	-.00018	-.00018	0	0
108	RAIL1	PX	-9e-5	-9e-5	0	0
109	FACE3	PX	-.000266	-.000266	0	0
110	FACE2	PX	-.000266	-.000266	0	0
111	FACE1	PX	-.000133	-.000133	0	0
112	CR3B	PX	-.00026	-.00026	0	0
113	CR3A	PX	-.00026	-.00026	0	0
114	CR2B	PX	-.00026	-.00026	0	0
115	CR2A	PX	-.00026	-.00026	0	0
116	CR1B	PX	-.00026	-.00026	0	0
117	CR1A	PX	-.00026	-.00026	0	0
118	ANGLE3	PX	-.00026	-.00026	0	0
119	ANGLE2	PX	-.00026	-.00026	0	0
120	ANGLE1	PX	-.00026	-.00026	0	0

Member Distributed Loads (BLC 17 : Maintanence (60))

	Member Label	Direction	Start Magnitude[k/ft,...	End Magnitude[k/ft,F...	Start Location[ft,%]	End Location[ft,%]
1	SUP3B	PY	-.000208	-.000208	0	0
2	SUP3A	PY	-.000208	-.000208	0	0
3	SUP2B	PY	-.000208	-.000208	0	0
4	SUP2A	PY	-.000208	-.000208	0	0
5	SUP1B	PY	-.000208	-.000208	0	0
6	SUP1A	PY	-.000208	-.000208	0	0
7	SO3	PY	-.00026	-.00026	0	0
8	SO2	PY	-.00026	-.00026	0	0
9	SO1	PY	-.00026	-.00026	0	0
10	PLATECORNER3C	PY	-.000625	-.000625	0	0
11	PLATECORNER3B	PY	-.000625	-.000625	0	0
12	PLATECORNER3A	PY	-.000625	-.000625	0	0
13	PLATECORNER2C	PY	-.000625	-.000625	0	0
14	PLATECORNER2B	PY	-.000625	-.000625	0	0
15	PLATECORNER2A	PY	-.000625	-.000625	0	0
16	PLATECORNER1C	PY	-.000625	-.000625	0	0
17	PLATECORNER1B	PY	-.000625	-.000625	0	0
18	PLATECORNER1A	PY	-.000625	-.000625	0	0
19	PLATE12	PY	-.000625	-.000625	0	0
20	PLATE11	PY	-.000625	-.000625	0	0
21	PLATE10	PY	-.000625	-.000625	0	0
22	PLATE9	PY	-.000625	-.000625	0	0
23	PLATE8	PY	-.000625	-.000625	0	0

Member Distributed Loads (BLC 17 : Maintanence (60)) (Continued)

	Member Label	Direction	Start Magnitude[k/ft,...	End Magnitude[k/ft,F...	Start Location[ft,%]	End Location[ft,%]
24	PLATE7	PY	-.000625	-.000625	0	0
25	PLATE6	PY	-.000625	-.000625	0	0
26	PLATE5	PY	-.000625	-.000625	0	0
27	PLATE4	PY	-.000625	-.000625	0	0
28	PLATE3	PY	-.000625	-.000625	0	0
29	PLATE2	PY	-.000625	-.000625	0	0
30	PLATE1	PY	-.000625	-.000625	0	0
31	MP GAMMA4	PY	-.000297	-.000297	0	0
32	MP GAMMA3	PY	-.000297	-.000297	0	0
33	MP GAMMA2	PY	-.000297	-.000297	0	0
34	MP GAMMA1	PY	-.000297	-.000297	0	0
35	MP BETA4	PY	-.000297	-.000297	0	0
36	MP BETA3	PY	-.000297	-.000297	0	0
37	MP BETA2	PY	-.000297	-.000297	0	0
38	MP BETA1	PY	-.000297	-.000297	0	0
39	MP ALPHA4	PY	-.000297	-.000297	0	0
40	MP ALPHA3	PY	-.000297	-.000297	0	0
41	MP ALPHA2	PY	-.000297	-.000297	0	0
42	MP ALPHA1	PY	-.000297	-.000297	0	0
43	KICKER3	PY	-.00026	-.00026	0	0
44	KICKER2	PY	-.00026	-.00026	0	0
45	KICKER1	PY	-.00026	-.00026	0	0
46	RAIL3	PY	-.00018	-.00018	0	0
47	RAIL2	PY	-.00018	-.00018	0	0
48	RAIL1	PY	-9e-5	-9e-5	0	0
49	FACE3	PY	-.000266	-.000266	0	0
50	FACE2	PY	-.000266	-.000266	0	0
51	FACE1	PY	-.000133	-.000133	0	0
52	CR3B	PY	-.00026	-.00026	0	0
53	CR3A	PY	-.00026	-.00026	0	0
54	CR2B	PY	-.00026	-.00026	0	0
55	CR2A	PY	-.00026	-.00026	0	0
56	CR1B	PY	-.00026	-.00026	0	0
57	CR1A	PY	-.00026	-.00026	0	0
58	ANGLE3	PY	-.00026	-.00026	0	0
59	ANGLE2	PY	-.00026	-.00026	0	0
60	ANGLE1	PY	-.00026	-.00026	0	0
61	SUP3B	PX	-.000361	-.000361	0	0
62	SUP3A	PX	-.000361	-.000361	0	0
63	SUP2B	PX	-.000361	-.000361	0	0
64	SUP2A	PX	-.000361	-.000361	0	0
65	SUP1B	PX	-.000361	-.000361	0	0
66	SUP1A	PX	-.000361	-.000361	0	0
67	SO3	PX	-.000451	-.000451	0	0
68	SO2	PX	-.000451	-.000451	0	0
69	SO1	PX	-.000451	-.000451	0	0
70	PLATECORNER3C	PX	-.001	-.001	0	0
71	PLATECORNER3B	PX	-.001	-.001	0	0
72	PLATECORNER3A	PX	-.001	-.001	0	0
73	PLATECORNER2C	PX	-.001	-.001	0	0
74	PLATECORNER2B	PX	-.001	-.001	0	0
75	PLATECORNER2A	PX	-.001	-.001	0	0
76	PLATECORNER1C	PX	-.001	-.001	0	0
77	PLATECORNER1B	PX	-.001	-.001	0	0
78	PLATECORNER1A	PX	-.001	-.001	0	0
79	PLATE12	PX	-.001	-.001	0	0
80	PLATE11	PX	-.001	-.001	0	0

Member Distributed Loads (BLC 17 : Maintanence (60)) (Continued)

	Member Label	Direction	Start Magnitude[k/ft,...	End Magnitude[k/ft,F...	Start Location[ft,%]	End Location[ft,%]
81	PLATE10	PX	-.001	-.001	0	0
82	PLATE9	PX	-.001	-.001	0	0
83	PLATE8	PX	-.001	-.001	0	0
84	PLATE7	PX	-.001	-.001	0	0
85	PLATE6	PX	-.001	-.001	0	0
86	PLATE5	PX	-.001	-.001	0	0
87	PLATE4	PX	-.001	-.001	0	0
88	PLATE3	PX	-.001	-.001	0	0
89	PLATE2	PX	-.001	-.001	0	0
90	PLATE1	PX	-.001	-.001	0	0
91	MP GAMMA4	PX	-.000514	-.000514	0	0
92	MP GAMMA3	PX	-.000514	-.000514	0	0
93	MP GAMMA2	PX	-.000514	-.000514	0	0
94	MP GAMMA1	PX	-.000514	-.000514	0	0
95	MP BETA4	PX	-.000514	-.000514	0	0
96	MP BETA3	PX	-.000514	-.000514	0	0
97	MP BETA2	PX	-.000514	-.000514	0	0
98	MP BETA1	PX	-.000514	-.000514	0	0
99	MP ALPHA4	PX	-.000514	-.000514	0	0
100	MP ALPHA3	PX	-.000514	-.000514	0	0
101	MP ALPHA2	PX	-.000514	-.000514	0	0
102	MP ALPHA1	PX	-.000514	-.000514	0	0
103	KICKER3	PX	-.000451	-.000451	0	0
104	KICKER2	PX	-.000451	-.000451	0	0
105	KICKER1	PX	-.000451	-.000451	0	0
106	RAIL3	PX	-.000312	-.000312	0	0
107	RAIL2	PX	-.000312	-.000312	0	0
108	RAIL1	PX	-.000156	-.000156	0	0
109	FACE3	PX	-.00046	-.00046	0	0
110	FACE2	PX	-.00046	-.00046	0	0
111	FACE1	PX	-.00023	-.00023	0	0
112	CR3B	PX	-.000451	-.000451	0	0
113	CR3A	PX	-.000451	-.000451	0	0
114	CR2B	PX	-.000451	-.000451	0	0
115	CR2A	PX	-.000451	-.000451	0	0
116	CR1B	PX	-.000451	-.000451	0	0
117	CR1A	PX	-.000451	-.000451	0	0
118	ANGLE3	PX	-.000451	-.000451	0	0
119	ANGLE2	PX	-.000451	-.000451	0	0
120	ANGLE1	PX	-.000451	-.000451	0	0

Member Distributed Loads (BLC 18 : Maintanence (90))

	Member Label	Direction	Start Magnitude[k/ft,...	End Magnitude[k/ft,F...	Start Location[ft,%]	End Location[ft,%]
1	SUP3B	PX	-.000417	-.000417	0	0
2	SUP3A	PX	-.000417	-.000417	0	0
3	SUP2B	PX	-.000417	-.000417	0	0
4	SUP2A	PX	-.000417	-.000417	0	0
5	SUP1B	PX	-.000417	-.000417	0	0
6	SUP1A	PX	-.000417	-.000417	0	0
7	SO3	PX	-.000521	-.000521	0	0
8	SO2	PX	-.000521	-.000521	0	0
9	SO1	PX	-.000521	-.000521	0	0
10	PLATECORNER3C	PX	-.001	-.001	0	0
11	PLATECORNER3B	PX	-.001	-.001	0	0
12	PLATECORNER3A	PX	-.001	-.001	0	0
13	PLATECORNER2C	PX	-.001	-.001	0	0

Member Distributed Loads (BLC 18 : Maintanence (90)) (Continued)

	Member Label	Direction	Start Magnitude[k/ft,...	End Magnitude[k/ft,F...	Start Location[ft,%]	End Location[ft,%]
14	PLATECORNER2B	PX	-.001	-.001	0	0
15	PLATECORNER2A	PX	-.001	-.001	0	0
16	PLATECORNER1C	PX	-.001	-.001	0	0
17	PLATECORNER1B	PX	-.001	-.001	0	0
18	PLATECORNER1A	PX	-.001	-.001	0	0
19	PLATE12	PX	-.001	-.001	0	0
20	PLATE11	PX	-.001	-.001	0	0
21	PLATE10	PX	-.001	-.001	0	0
22	PLATE9	PX	-.001	-.001	0	0
23	PLATE8	PX	-.001	-.001	0	0
24	PLATE7	PX	-.001	-.001	0	0
25	PLATE6	PX	-.001	-.001	0	0
26	PLATE5	PX	-.001	-.001	0	0
27	PLATE4	PX	-.001	-.001	0	0
28	PLATE3	PX	-.001	-.001	0	0
29	PLATE2	PX	-.001	-.001	0	0
30	PLATE1	PX	-.001	-.001	0	0
31	MP GAMMA4	PX	-.000594	-.000594	0	0
32	MP GAMMA3	PX	-.000594	-.000594	0	0
33	MP GAMMA2	PX	-.000594	-.000594	0	0
34	MP GAMMA1	PX	-.000594	-.000594	0	0
35	MP BETA4	PX	-.000594	-.000594	0	0
36	MP BETA3	PX	-.000594	-.000594	0	0
37	MP BETA2	PX	-.000594	-.000594	0	0
38	MP BETA1	PX	-.000594	-.000594	0	0
39	MP ALPHA4	PX	-.000594	-.000594	0	0
40	MP ALPHA3	PX	-.000594	-.000594	0	0
41	MP ALPHA2	PX	-.000594	-.000594	0	0
42	MP ALPHA1	PX	-.000594	-.000594	0	0
43	KICKER3	PX	-.000521	-.000521	0	0
44	KICKER2	PX	-.000521	-.000521	0	0
45	KICKER1	PX	-.000521	-.000521	0	0
46	RAIL3	PX	-.000361	-.000361	0	0
47	RAIL1	PX	-.000361	-.000361	0	0
48	RAIL2	PX	-.00018	-.00018	0	0
49	FACE3	PX	-.000531	-.000531	0	0
50	FACE1	PX	-.000531	-.000531	0	0
51	FACE2	PX	-.000266	-.000266	0	0
52	CR3B	PX	-.000521	-.000521	0	0
53	CR3A	PX	-.000521	-.000521	0	0
54	CR2B	PX	-.000521	-.000521	0	0
55	CR2A	PX	-.000521	-.000521	0	0
56	CR1B	PX	-.000521	-.000521	0	0
57	CR1A	PX	-.000521	-.000521	0	0
58	ANGLE3	PX	-.000521	-.000521	0	0
59	ANGLE2	PX	-.000521	-.000521	0	0
60	ANGLE1	PX	-.000521	-.000521	0	0

Member Distributed Loads (BLC 19 : Maintanence (120))

	Member Label	Direction	Start Magnitude[k/ft,...	End Magnitude[k/ft,F...	Start Location[ft,%]	End Location[ft,%]
1	SUP3B	PY	.000208	.000208	0	0
2	SUP3A	PY	.000208	.000208	0	0
3	SUP2B	PY	.000208	.000208	0	0
4	SUP2A	PY	.000208	.000208	0	0
5	SUP1B	PY	.000208	.000208	0	0
6	SUP1A	PY	.000208	.000208	0	0

Member Distributed Loads (BLC 19 : Maintanence (120)) (Continued)

	Member Label	Direction	Start Magnitude[k/ft,...	End Magnitude[k/ft,F...	Start Location[ft,%]	End Location[ft,%]
7	SO3	PY	.00026	.00026	0	0
8	SO2	PY	.00026	.00026	0	0
9	SO1	PY	.00026	.00026	0	0
10	PLATECORNER3C	PY	.000625	.000625	0	0
11	PLATECORNER3B	PY	.000625	.000625	0	0
12	PLATECORNER3A	PY	.000625	.000625	0	0
13	PLATECORNER2C	PY	.000625	.000625	0	0
14	PLATECORNER2B	PY	.000625	.000625	0	0
15	PLATECORNER2A	PY	.000625	.000625	0	0
16	PLATECORNER1C	PY	.000625	.000625	0	0
17	PLATECORNER1B	PY	.000625	.000625	0	0
18	PLATECORNER1A	PY	.000625	.000625	0	0
19	PLATE12	PY	.000625	.000625	0	0
20	PLATE11	PY	.000625	.000625	0	0
21	PLATE10	PY	.000625	.000625	0	0
22	PLATE9	PY	.000625	.000625	0	0
23	PLATE8	PY	.000625	.000625	0	0
24	PLATE7	PY	.000625	.000625	0	0
25	PLATE6	PY	.000625	.000625	0	0
26	PLATE5	PY	.000625	.000625	0	0
27	PLATE4	PY	.000625	.000625	0	0
28	PLATE3	PY	.000625	.000625	0	0
29	PLATE2	PY	.000625	.000625	0	0
30	PLATE1	PY	.000625	.000625	0	0
31	MP GAMMA4	PY	.000297	.000297	0	0
32	MP GAMMA3	PY	.000297	.000297	0	0
33	MP GAMMA2	PY	.000297	.000297	0	0
34	MP GAMMA1	PY	.000297	.000297	0	0
35	MP BETA4	PY	.000297	.000297	0	0
36	MP BETA3	PY	.000297	.000297	0	0
37	MP BETA2	PY	.000297	.000297	0	0
38	MP BETA1	PY	.000297	.000297	0	0
39	MP ALPHA4	PY	.000297	.000297	0	0
40	MP ALPHA3	PY	.000297	.000297	0	0
41	MP ALPHA2	PY	.000297	.000297	0	0
42	MP ALPHA1	PY	.000297	.000297	0	0
43	KICKER3	PY	.00026	.00026	0	0
44	KICKER2	PY	.00026	.00026	0	0
45	KICKER1	PY	.00026	.00026	0	0
46	RAIL3	PY	.00018	.00018	0	0
47	RAIL1	PY	.00018	.00018	0	0
48	RAIL2	PY	9e-5	9e-5	0	0
49	FACE3	PY	.000266	.000266	0	0
50	FACE1	PY	.000266	.000266	0	0
51	FACE2	PY	.000133	.000133	0	0
52	CR3B	PY	.00026	.00026	0	0
53	CR3A	PY	.00026	.00026	0	0
54	CR2B	PY	.00026	.00026	0	0
55	CR2A	PY	.00026	.00026	0	0
56	CR1B	PY	.00026	.00026	0	0
57	CR1A	PY	.00026	.00026	0	0
58	ANGLE3	PY	.00026	.00026	0	0
59	ANGLE2	PY	.00026	.00026	0	0
60	ANGLE1	PY	.00026	.00026	0	0
61	SUP3B	PX	-.000361	-.000361	0	0
62	SUP3A	PX	-.000361	-.000361	0	0
63	SUP2B	PX	-.000361	-.000361	0	0

Member Distributed Loads (BLC 19 : Maintanence (120)) (Continued)

	Member Label	Direction	Start Magnitude[k/ft,...	End Magnitude[k/ft,F...	Start Location[ft,%]	End Location[ft,%]
64	SUP2A	PX	-.000361	-.000361	0	0
65	SUP1B	PX	-.000361	-.000361	0	0
66	SUP1A	PX	-.000361	-.000361	0	0
67	SO3	PX	-.000451	-.000451	0	0
68	SO2	PX	-.000451	-.000451	0	0
69	SO1	PX	-.000451	-.000451	0	0
70	PLATECORNER3C	PX	-.001	-.001	0	0
71	PLATECORNER3B	PX	-.001	-.001	0	0
72	PLATECORNER3A	PX	-.001	-.001	0	0
73	PLATECORNER2C	PX	-.001	-.001	0	0
74	PLATECORNER2B	PX	-.001	-.001	0	0
75	PLATECORNER2A	PX	-.001	-.001	0	0
76	PLATECORNER1C	PX	-.001	-.001	0	0
77	PLATECORNER1B	PX	-.001	-.001	0	0
78	PLATECORNER1A	PX	-.001	-.001	0	0
79	PLATE12	PX	-.001	-.001	0	0
80	PLATE11	PX	-.001	-.001	0	0
81	PLATE10	PX	-.001	-.001	0	0
82	PLATE9	PX	-.001	-.001	0	0
83	PLATE8	PX	-.001	-.001	0	0
84	PLATE7	PX	-.001	-.001	0	0
85	PLATE6	PX	-.001	-.001	0	0
86	PLATE5	PX	-.001	-.001	0	0
87	PLATE4	PX	-.001	-.001	0	0
88	PLATE3	PX	-.001	-.001	0	0
89	PLATE2	PX	-.001	-.001	0	0
90	PLATE1	PX	-.001	-.001	0	0
91	MP GAMMA4	PX	-.000514	-.000514	0	0
92	MP GAMMA3	PX	-.000514	-.000514	0	0
93	MP GAMMA2	PX	-.000514	-.000514	0	0
94	MP GAMMA1	PX	-.000514	-.000514	0	0
95	MP BETA4	PX	-.000514	-.000514	0	0
96	MP BETA3	PX	-.000514	-.000514	0	0
97	MP BETA2	PX	-.000514	-.000514	0	0
98	MP BETA1	PX	-.000514	-.000514	0	0
99	MP ALPHA4	PX	-.000514	-.000514	0	0
100	MP ALPHA3	PX	-.000514	-.000514	0	0
101	MP ALPHA2	PX	-.000514	-.000514	0	0
102	MP ALPHA1	PX	-.000514	-.000514	0	0
103	KICKER3	PX	-.000451	-.000451	0	0
104	KICKER2	PX	-.000451	-.000451	0	0
105	KICKER1	PX	-.000451	-.000451	0	0
106	RAIL3	PX	-.000312	-.000312	0	0
107	RAIL1	PX	-.000312	-.000312	0	0
108	RAIL2	PX	-.000156	-.000156	0	0
109	FACE3	PX	-.00046	-.00046	0	0
110	FACE1	PX	-.00046	-.00046	0	0
111	FACE2	PX	-.00023	-.00023	0	0
112	CR3B	PX	-.000451	-.000451	0	0
113	CR3A	PX	-.000451	-.000451	0	0
114	CR2B	PX	-.000451	-.000451	0	0
115	CR2A	PX	-.000451	-.000451	0	0
116	CR1B	PX	-.000451	-.000451	0	0
117	CR1A	PX	-.000451	-.000451	0	0
118	ANGLE3	PX	-.000451	-.000451	0	0
119	ANGLE2	PX	-.000451	-.000451	0	0
120	ANGLE1	PX	-.000451	-.000451	0	0

Member Distributed Loads (BLC 20 : Maintanence (150))

	Member Label	Direction	Start Magnitude[k/ft,...	End Magnitude[k/ft,F...	Start Location[ft,%]	End Location[ft,%]
1	SUP3B	PY	.000361	.000361	0	0
2	SUP3A	PY	.000361	.000361	0	0
3	SUP2B	PY	.000361	.000361	0	0
4	SUP2A	PY	.000361	.000361	0	0
5	SUP1B	PY	.000361	.000361	0	0
6	SUP1A	PY	.000361	.000361	0	0
7	SO3	PY	.000451	.000451	0	0
8	SO2	PY	.000451	.000451	0	0
9	SO1	PY	.000451	.000451	0	0
10	PLATECORNER3C	PY	.001	.001	0	0
11	PLATECORNER3B	PY	.001	.001	0	0
12	PLATECORNER3A	PY	.001	.001	0	0
13	PLATECORNER2C	PY	.001	.001	0	0
14	PLATECORNER2B	PY	.001	.001	0	0
15	PLATECORNER2A	PY	.001	.001	0	0
16	PLATECORNER1C	PY	.001	.001	0	0
17	PLATECORNER1B	PY	.001	.001	0	0
18	PLATECORNER1A	PY	.001	.001	0	0
19	PLATE12	PY	.001	.001	0	0
20	PLATE11	PY	.001	.001	0	0
21	PLATE10	PY	.001	.001	0	0
22	PLATE9	PY	.001	.001	0	0
23	PLATE8	PY	.001	.001	0	0
24	PLATE7	PY	.001	.001	0	0
25	PLATE6	PY	.001	.001	0	0
26	PLATE5	PY	.001	.001	0	0
27	PLATE4	PY	.001	.001	0	0
28	PLATE3	PY	.001	.001	0	0
29	PLATE2	PY	.001	.001	0	0
30	PLATE1	PY	.001	.001	0	0
31	MP GAMMA4	PY	.000514	.000514	0	0
32	MP GAMMA3	PY	.000514	.000514	0	0
33	MP GAMMA2	PY	.000514	.000514	0	0
34	MP GAMMA1	PY	.000514	.000514	0	0
35	MP BETA4	PY	.000514	.000514	0	0
36	MP BETA3	PY	.000514	.000514	0	0
37	MP BETA2	PY	.000514	.000514	0	0
38	MP BETA1	PY	.000514	.000514	0	0
39	MP ALPHA4	PY	.000514	.000514	0	0
40	MP ALPHA3	PY	.000514	.000514	0	0
41	MP ALPHA2	PY	.000514	.000514	0	0
42	MP ALPHA1	PY	.000514	.000514	0	0
43	KICKER3	PY	.000451	.000451	0	0
44	KICKER2	PY	.000451	.000451	0	0
45	KICKER1	PY	.000451	.000451	0	0
46	RAIL3	PY	.000312	.000312	0	0
47	RAIL1	PY	.000312	.000312	0	0
48	RAIL2	PY	.000156	.000156	0	0
49	FACE3	PY	.00046	.00046	0	0
50	FACE1	PY	.00046	.00046	0	0
51	FACE2	PY	.00023	.00023	0	0
52	CR3B	PY	.000451	.000451	0	0
53	CR3A	PY	.000451	.000451	0	0
54	CR2B	PY	.000451	.000451	0	0
55	CR2A	PY	.000451	.000451	0	0
56	CR1B	PY	.000451	.000451	0	0
57	CR1A	PY	.000451	.000451	0	0

Member Distributed Loads (BLC 20 : Maintanence (150)) (Continued)

	Member Label	Direction	Start Magnitude[k/ft,...	End Magnitude[k/ft,F...	Start Location[ft,%]	End Location[ft,%]
58	ANGLE3	PY	.000451	.000451	0	0
59	ANGLE2	PY	.000451	.000451	0	0
60	ANGLE1	PY	.000451	.000451	0	0
61	SUP3B	PX	-.000208	-.000208	0	0
62	SUP3A	PX	-.000208	-.000208	0	0
63	SUP2B	PX	-.000208	-.000208	0	0
64	SUP2A	PX	-.000208	-.000208	0	0
65	SUP1B	PX	-.000208	-.000208	0	0
66	SUP1A	PX	-.000208	-.000208	0	0
67	SO3	PX	-.00026	-.00026	0	0
68	SO2	PX	-.00026	-.00026	0	0
69	SO1	PX	-.00026	-.00026	0	0
70	PLATECORNER3C	PX	-.000625	-.000625	0	0
71	PLATECORNER3B	PX	-.000625	-.000625	0	0
72	PLATECORNER3A	PX	-.000625	-.000625	0	0
73	PLATECORNER2C	PX	-.000625	-.000625	0	0
74	PLATECORNER2B	PX	-.000625	-.000625	0	0
75	PLATECORNER2A	PX	-.000625	-.000625	0	0
76	PLATECORNER1C	PX	-.000625	-.000625	0	0
77	PLATECORNER1B	PX	-.000625	-.000625	0	0
78	PLATECORNER1A	PX	-.000625	-.000625	0	0
79	PLATE12	PX	-.000625	-.000625	0	0
80	PLATE11	PX	-.000625	-.000625	0	0
81	PLATE10	PX	-.000625	-.000625	0	0
82	PLATE9	PX	-.000625	-.000625	0	0
83	PLATE8	PX	-.000625	-.000625	0	0
84	PLATE7	PX	-.000625	-.000625	0	0
85	PLATE6	PX	-.000625	-.000625	0	0
86	PLATE5	PX	-.000625	-.000625	0	0
87	PLATE4	PX	-.000625	-.000625	0	0
88	PLATE3	PX	-.000625	-.000625	0	0
89	PLATE2	PX	-.000625	-.000625	0	0
90	PLATE1	PX	-.000625	-.000625	0	0
91	MP GAMMA4	PX	-.000297	-.000297	0	0
92	MP GAMMA3	PX	-.000297	-.000297	0	0
93	MP GAMMA2	PX	-.000297	-.000297	0	0
94	MP GAMMA1	PX	-.000297	-.000297	0	0
95	MP BETA4	PX	-.000297	-.000297	0	0
96	MP BETA3	PX	-.000297	-.000297	0	0
97	MP BETA2	PX	-.000297	-.000297	0	0
98	MP BETA1	PX	-.000297	-.000297	0	0
99	MP ALPHA4	PX	-.000297	-.000297	0	0
100	MP ALPHA3	PX	-.000297	-.000297	0	0
101	MP ALPHA2	PX	-.000297	-.000297	0	0
102	MP ALPHA1	PX	-.000297	-.000297	0	0
103	KICKER3	PX	-.00026	-.00026	0	0
104	KICKER2	PX	-.00026	-.00026	0	0
105	KICKER1	PX	-.00026	-.00026	0	0
106	RAIL3	PX	-.00018	-.00018	0	0
107	RAIL1	PX	-.00018	-.00018	0	0
108	RAIL2	PX	-9e-5	-9e-5	0	0
109	FACE3	PX	-.000266	-.000266	0	0
110	FACE1	PX	-.000266	-.000266	0	0
111	FACE2	PX	-.000133	-.000133	0	0
112	CR3B	PX	-.00026	-.00026	0	0
113	CR3A	PX	-.00026	-.00026	0	0
114	CR2B	PX	-.00026	-.00026	0	0

Member Distributed Loads (BLC 20 : Maintanence (150)) (Continued)

	Member Label	Direction	Start Magnitude[k/ft,...	End Magnitude[k/ft,F...	Start Location[ft,%]	End Location[ft,%]
115	CR2A	PX	-.00026	-.00026	0	0
116	CR1B	PX	-.00026	-.00026	0	0
117	CR1A	PX	-.00026	-.00026	0	0
118	ANGLE3	PX	-.00026	-.00026	0	0
119	ANGLE2	PX	-.00026	-.00026	0	0
120	ANGLE1	PX	-.00026	-.00026	0	0

Member Distributed Loads (BLC 21 : Maintanence (180))

	Member Label	Direction	Start Magnitude[k/ft,...	End Magnitude[k/ft,F...	Start Location[ft,%]	End Location[ft,%]
1	SUP3B	PY	.000417	.000417	0	0
2	SUP3A	PY	.000417	.000417	0	0
3	SUP2B	PY	.000417	.000417	0	0
4	SUP2A	PY	.000417	.000417	0	0
5	SUP1B	PY	.000417	.000417	0	0
6	SUP1A	PY	.000417	.000417	0	0
7	SO3	PY	.000521	.000521	0	0
8	SO2	PY	.000521	.000521	0	0
9	SO1	PY	.000521	.000521	0	0
10	PLATECORNER3C	PY	.001	.001	0	0
11	PLATECORNER3B	PY	.001	.001	0	0
12	PLATECORNER3A	PY	.001	.001	0	0
13	PLATECORNER2C	PY	.001	.001	0	0
14	PLATECORNER2B	PY	.001	.001	0	0
15	PLATECORNER2A	PY	.001	.001	0	0
16	PLATECORNER1C	PY	.001	.001	0	0
17	PLATECORNER1B	PY	.001	.001	0	0
18	PLATECORNER1A	PY	.001	.001	0	0
19	PLATE12	PY	.001	.001	0	0
20	PLATE11	PY	.001	.001	0	0
21	PLATE10	PY	.001	.001	0	0
22	PLATE9	PY	.001	.001	0	0
23	PLATE8	PY	.001	.001	0	0
24	PLATE7	PY	.001	.001	0	0
25	PLATE6	PY	.001	.001	0	0
26	PLATE5	PY	.001	.001	0	0
27	PLATE4	PY	.001	.001	0	0
28	PLATE3	PY	.001	.001	0	0
29	PLATE2	PY	.001	.001	0	0
30	PLATE1	PY	.001	.001	0	0
31	MP GAMMA4	PY	.000594	.000594	0	0
32	MP GAMMA3	PY	.000594	.000594	0	0
33	MP GAMMA2	PY	.000594	.000594	0	0
34	MP GAMMA1	PY	.000594	.000594	0	0
35	MP BETA4	PY	.000594	.000594	0	0
36	MP BETA3	PY	.000594	.000594	0	0
37	MP BETA2	PY	.000594	.000594	0	0
38	MP BETA1	PY	.000594	.000594	0	0
39	MP ALPHA4	PY	.000594	.000594	0	0
40	MP ALPHA3	PY	.000594	.000594	0	0
41	MP ALPHA2	PY	.000594	.000594	0	0
42	MP ALPHA1	PY	.000594	.000594	0	0
43	KICKER3	PY	.000521	.000521	0	0
44	KICKER2	PY	.000521	.000521	0	0
45	KICKER1	PY	.000521	.000521	0	0
46	RAIL3	PY	.000361	.000361	0	0
47	RAIL1	PY	.000361	.000361	0	0

Member Distributed Loads (BLC 21 : Maintanence (180)) (Continued)

	Member Label	Direction	Start Magnitude[k/ft,...	End Magnitude[k/ft,F...	Start Location[ft,%]	End Location[ft,%]
48	RAIL2	PY	.00018	.00018	0	0
49	FACE3	PY	.000531	.000531	0	0
50	FACE1	PY	.000531	.000531	0	0
51	FACE2	PY	.000266	.000266	0	0
52	CR3B	PY	.000521	.000521	0	0
53	CR3A	PY	.000521	.000521	0	0
54	CR2B	PY	.000521	.000521	0	0
55	CR2A	PY	.000521	.000521	0	0
56	CR1B	PY	.000521	.000521	0	0
57	CR1A	PY	.000521	.000521	0	0
58	ANGLE3	PY	.000521	.000521	0	0
59	ANGLE2	PY	.000521	.000521	0	0
60	ANGLE1	PY	.000521	.000521	0	0

Member Distributed Loads (BLC 22 : Maintanence (210))

	Member Label	Direction	Start Magnitude[k/ft,...	End Magnitude[k/ft,F...	Start Location[ft,%]	End Location[ft,%]
1	SUP3B	PY	.000361	.000361	0	0
2	SUP3A	PY	.000361	.000361	0	0
3	SUP2B	PY	.000361	.000361	0	0
4	SUP2A	PY	.000361	.000361	0	0
5	SUP1B	PY	.000361	.000361	0	0
6	SUP1A	PY	.000361	.000361	0	0
7	SO3	PY	.000451	.000451	0	0
8	SO2	PY	.000451	.000451	0	0
9	SO1	PY	.000451	.000451	0	0
10	PLATECORNER3C	PY	.001	.001	0	0
11	PLATECORNER3B	PY	.001	.001	0	0
12	PLATECORNER3A	PY	.001	.001	0	0
13	PLATECORNER2C	PY	.001	.001	0	0
14	PLATECORNER2B	PY	.001	.001	0	0
15	PLATECORNER2A	PY	.001	.001	0	0
16	PLATECORNER1C	PY	.001	.001	0	0
17	PLATECORNER1B	PY	.001	.001	0	0
18	PLATECORNER1A	PY	.001	.001	0	0
19	PLATE12	PY	.001	.001	0	0
20	PLATE11	PY	.001	.001	0	0
21	PLATE10	PY	.001	.001	0	0
22	PLATE9	PY	.001	.001	0	0
23	PLATE8	PY	.001	.001	0	0
24	PLATE7	PY	.001	.001	0	0
25	PLATE6	PY	.001	.001	0	0
26	PLATE5	PY	.001	.001	0	0
27	PLATE4	PY	.001	.001	0	0
28	PLATE3	PY	.001	.001	0	0
29	PLATE2	PY	.001	.001	0	0
30	PLATE1	PY	.001	.001	0	0
31	MP GAMMA4	PY	.000514	.000514	0	0
32	MP GAMMA3	PY	.000514	.000514	0	0
33	MP GAMMA2	PY	.000514	.000514	0	0
34	MP GAMMA1	PY	.000514	.000514	0	0
35	MP BETA4	PY	.000514	.000514	0	0
36	MP BETA3	PY	.000514	.000514	0	0
37	MP BETA2	PY	.000514	.000514	0	0
38	MP BETA1	PY	.000514	.000514	0	0
39	MP ALPHA4	PY	.000514	.000514	0	0
40	MP ALPHA3	PY	.000514	.000514	0	0

Member Distributed Loads (BLC 22 : Maintanence (210)) (Continued)

	Member Label	Direction	Start Magnitude[k/ft,...	End Magnitude[k/ft,F...	Start Location[ft,%]	End Location[ft,%]
41	MP ALPHA2	PY	.000514	.000514	0	0
42	MP ALPHA1	PY	.000514	.000514	0	0
43	KICKER3	PY	.000451	.000451	0	0
44	KICKER2	PY	.000451	.000451	0	0
45	KICKER1	PY	.000451	.000451	0	0
46	RAIL1	PY	.000312	.000312	0	0
47	RAIL2	PY	.000312	.000312	0	0
48	RAIL3	PY	.000156	.000156	0	0
49	FACE1	PY	.00046	.00046	0	0
50	FACE2	PY	.00046	.00046	0	0
51	FACE3	PY	.00023	.00023	0	0
52	CR3B	PY	.000451	.000451	0	0
53	CR3A	PY	.000451	.000451	0	0
54	CR2B	PY	.000451	.000451	0	0
55	CR2A	PY	.000451	.000451	0	0
56	CR1B	PY	.000451	.000451	0	0
57	CR1A	PY	.000451	.000451	0	0
58	ANGLE3	PY	.000451	.000451	0	0
59	ANGLE2	PY	.000451	.000451	0	0
60	ANGLE1	PY	.000451	.000451	0	0
61	SUP3B	PX	.000208	.000208	0	0
62	SUP3A	PX	.000208	.000208	0	0
63	SUP2B	PX	.000208	.000208	0	0
64	SUP2A	PX	.000208	.000208	0	0
65	SUP1B	PX	.000208	.000208	0	0
66	SUP1A	PX	.000208	.000208	0	0
67	SO3	PX	.00026	.00026	0	0
68	SO2	PX	.00026	.00026	0	0
69	SO1	PX	.00026	.00026	0	0
70	PLATECORNER3C	PX	.000625	.000625	0	0
71	PLATECORNER3B	PX	.000625	.000625	0	0
72	PLATECORNER3A	PX	.000625	.000625	0	0
73	PLATECORNER2C	PX	.000625	.000625	0	0
74	PLATECORNER2B	PX	.000625	.000625	0	0
75	PLATECORNER2A	PX	.000625	.000625	0	0
76	PLATECORNER1C	PX	.000625	.000625	0	0
77	PLATECORNER1B	PX	.000625	.000625	0	0
78	PLATECORNER1A	PX	.000625	.000625	0	0
79	PLATE12	PX	.000625	.000625	0	0
80	PLATE11	PX	.000625	.000625	0	0
81	PLATE10	PX	.000625	.000625	0	0
82	PLATE9	PX	.000625	.000625	0	0
83	PLATE8	PX	.000625	.000625	0	0
84	PLATE7	PX	.000625	.000625	0	0
85	PLATE6	PX	.000625	.000625	0	0
86	PLATE5	PX	.000625	.000625	0	0
87	PLATE4	PX	.000625	.000625	0	0
88	PLATE3	PX	.000625	.000625	0	0
89	PLATE2	PX	.000625	.000625	0	0
90	PLATE1	PX	.000625	.000625	0	0
91	MP GAMMA4	PX	.000297	.000297	0	0
92	MP GAMMA3	PX	.000297	.000297	0	0
93	MP GAMMA2	PX	.000297	.000297	0	0
94	MP GAMMA1	PX	.000297	.000297	0	0
95	MP BETA4	PX	.000297	.000297	0	0
96	MP BETA3	PX	.000297	.000297	0	0
97	MP BETA2	PX	.000297	.000297	0	0

Member Distributed Loads (BLC 22 : Maintanence (210)) (Continued)

	Member Label	Direction	Start Magnitude[k/ft,...	End Magnitude[k/ft,F...	Start Location[ft,%]	End Location[ft,%]
98	MP BETA1	PX	.000297	.000297	0	0
99	MP ALPHA4	PX	.000297	.000297	0	0
100	MP ALPHA3	PX	.000297	.000297	0	0
101	MP ALPHA2	PX	.000297	.000297	0	0
102	MP ALPHA1	PX	.000297	.000297	0	0
103	KICKER3	PX	.00026	.00026	0	0
104	KICKER2	PX	.00026	.00026	0	0
105	KICKER1	PX	.00026	.00026	0	0
106	RAIL1	PX	.00018	.00018	0	0
107	RAIL2	PX	.00018	.00018	0	0
108	RAIL3	PX	9e-5	9e-5	0	0
109	FACE1	PX	.000266	.000266	0	0
110	FACE2	PX	.000266	.000266	0	0
111	FACE3	PX	.000133	.000133	0	0
112	CR3B	PX	.00026	.00026	0	0
113	CR3A	PX	.00026	.00026	0	0
114	CR2B	PX	.00026	.00026	0	0
115	CR2A	PX	.00026	.00026	0	0
116	CR1B	PX	.00026	.00026	0	0
117	CR1A	PX	.00026	.00026	0	0
118	ANGLE3	PX	.00026	.00026	0	0
119	ANGLE2	PX	.00026	.00026	0	0
120	ANGLE1	PX	.00026	.00026	0	0

Member Distributed Loads (BLC 23 : Maintanence (240))

	Member Label	Direction	Start Magnitude[k/ft,...	End Magnitude[k/ft,F...	Start Location[ft,%]	End Location[ft,%]
1	SUP3B	PY	.000208	.000208	0	0
2	SUP3A	PY	.000208	.000208	0	0
3	SUP2B	PY	.000208	.000208	0	0
4	SUP2A	PY	.000208	.000208	0	0
5	SUP1B	PY	.000208	.000208	0	0
6	SUP1A	PY	.000208	.000208	0	0
7	SO3	PY	.00026	.00026	0	0
8	SO2	PY	.00026	.00026	0	0
9	SO1	PY	.00026	.00026	0	0
10	PLATECORNER3C	PY	.000625	.000625	0	0
11	PLATECORNER3B	PY	.000625	.000625	0	0
12	PLATECORNER3A	PY	.000625	.000625	0	0
13	PLATECORNER2C	PY	.000625	.000625	0	0
14	PLATECORNER2B	PY	.000625	.000625	0	0
15	PLATECORNER2A	PY	.000625	.000625	0	0
16	PLATECORNER1C	PY	.000625	.000625	0	0
17	PLATECORNER1B	PY	.000625	.000625	0	0
18	PLATECORNER1A	PY	.000625	.000625	0	0
19	PLATE12	PY	.000625	.000625	0	0
20	PLATE11	PY	.000625	.000625	0	0
21	PLATE10	PY	.000625	.000625	0	0
22	PLATE9	PY	.000625	.000625	0	0
23	PLATE8	PY	.000625	.000625	0	0
24	PLATE7	PY	.000625	.000625	0	0
25	PLATE6	PY	.000625	.000625	0	0
26	PLATE5	PY	.000625	.000625	0	0
27	PLATE4	PY	.000625	.000625	0	0
28	PLATE3	PY	.000625	.000625	0	0
29	PLATE2	PY	.000625	.000625	0	0
30	PLATE1	PY	.000625	.000625	0	0

Member Distributed Loads (BLC 23 : Maintanence (240)) (Continued)

	Member Label	Direction	Start Magnitude[k/ft,...	End Magnitude[k/ft,F...	Start Location[ft,%]	End Location[ft,%]
31	MP GAMMA4	PY	.000297	.000297	0	0
32	MP GAMMA3	PY	.000297	.000297	0	0
33	MP GAMMA2	PY	.000297	.000297	0	0
34	MP GAMMA1	PY	.000297	.000297	0	0
35	MP BETA4	PY	.000297	.000297	0	0
36	MP BETA3	PY	.000297	.000297	0	0
37	MP BETA2	PY	.000297	.000297	0	0
38	MP BETA1	PY	.000297	.000297	0	0
39	MP ALPHA4	PY	.000297	.000297	0	0
40	MP ALPHA3	PY	.000297	.000297	0	0
41	MP ALPHA2	PY	.000297	.000297	0	0
42	MP ALPHA1	PY	.000297	.000297	0	0
43	KICKER3	PY	.00026	.00026	0	0
44	KICKER2	PY	.00026	.00026	0	0
45	KICKER1	PY	.00026	.00026	0	0
46	RAIL1	PY	.00018	.00018	0	0
47	RAIL2	PY	.00018	.00018	0	0
48	RAIL3	PY	9e-5	9e-5	0	0
49	FACE1	PY	.000266	.000266	0	0
50	FACE2	PY	.000266	.000266	0	0
51	FACE3	PY	.000133	.000133	0	0
52	CR3B	PY	.00026	.00026	0	0
53	CR3A	PY	.00026	.00026	0	0
54	CR2B	PY	.00026	.00026	0	0
55	CR2A	PY	.00026	.00026	0	0
56	CR1B	PY	.00026	.00026	0	0
57	CR1A	PY	.00026	.00026	0	0
58	ANGLE3	PY	.00026	.00026	0	0
59	ANGLE2	PY	.00026	.00026	0	0
60	ANGLE1	PY	.00026	.00026	0	0
61	SUP3B	PX	.000361	.000361	0	0
62	SUP3A	PX	.000361	.000361	0	0
63	SUP2B	PX	.000361	.000361	0	0
64	SUP2A	PX	.000361	.000361	0	0
65	SUP1B	PX	.000361	.000361	0	0
66	SUP1A	PX	.000361	.000361	0	0
67	SO3	PX	.000451	.000451	0	0
68	SO2	PX	.000451	.000451	0	0
69	SO1	PX	.000451	.000451	0	0
70	PLATECORNER3C	PX	.001	.001	0	0
71	PLATECORNER3B	PX	.001	.001	0	0
72	PLATECORNER3A	PX	.001	.001	0	0
73	PLATECORNER2C	PX	.001	.001	0	0
74	PLATECORNER2B	PX	.001	.001	0	0
75	PLATECORNER2A	PX	.001	.001	0	0
76	PLATECORNER1C	PX	.001	.001	0	0
77	PLATECORNER1B	PX	.001	.001	0	0
78	PLATECORNER1A	PX	.001	.001	0	0
79	PLATE12	PX	.001	.001	0	0
80	PLATE11	PX	.001	.001	0	0
81	PLATE10	PX	.001	.001	0	0
82	PLATE9	PX	.001	.001	0	0
83	PLATE8	PX	.001	.001	0	0
84	PLATE7	PX	.001	.001	0	0
85	PLATE6	PX	.001	.001	0	0
86	PLATE5	PX	.001	.001	0	0
87	PLATE4	PX	.001	.001	0	0

Member Distributed Loads (BLC 23 : Maintanence (240)) (Continued)

	Member Label	Direction	Start Magnitude[k/ft,...	End Magnitude[k/ft,F...	Start Location[ft,%]	End Location[ft,%]
88	PLATE3	PX	.001	.001	0	0
89	PLATE2	PX	.001	.001	0	0
90	PLATE1	PX	.001	.001	0	0
91	MP GAMMA4	PX	.000514	.000514	0	0
92	MP GAMMA3	PX	.000514	.000514	0	0
93	MP GAMMA2	PX	.000514	.000514	0	0
94	MP GAMMA1	PX	.000514	.000514	0	0
95	MP BETA4	PX	.000514	.000514	0	0
96	MP BETA3	PX	.000514	.000514	0	0
97	MP BETA2	PX	.000514	.000514	0	0
98	MP BETA1	PX	.000514	.000514	0	0
99	MP ALPHA4	PX	.000514	.000514	0	0
100	MP ALPHA3	PX	.000514	.000514	0	0
101	MP ALPHA2	PX	.000514	.000514	0	0
102	MP ALPHA1	PX	.000514	.000514	0	0
103	KICKER3	PX	.000451	.000451	0	0
104	KICKER2	PX	.000451	.000451	0	0
105	KICKER1	PX	.000451	.000451	0	0
106	RAIL1	PX	.000312	.000312	0	0
107	RAIL2	PX	.000312	.000312	0	0
108	RAIL3	PX	.000156	.000156	0	0
109	FACE1	PX	.00046	.00046	0	0
110	FACE2	PX	.00046	.00046	0	0
111	FACE3	PX	.00023	.00023	0	0
112	CR3B	PX	.000451	.000451	0	0
113	CR3A	PX	.000451	.000451	0	0
114	CR2B	PX	.000451	.000451	0	0
115	CR2A	PX	.000451	.000451	0	0
116	CR1B	PX	.000451	.000451	0	0
117	CR1A	PX	.000451	.000451	0	0
118	ANGLE3	PX	.000451	.000451	0	0
119	ANGLE2	PX	.000451	.000451	0	0
120	ANGLE1	PX	.000451	.000451	0	0

Member Distributed Loads (BLC 24 : Maintanence (270))

	Member Label	Direction	Start Magnitude[k/ft,...	End Magnitude[k/ft,F...	Start Location[ft,%]	End Location[ft,%]
1	SUP3B	PX	.000417	.000417	0	0
2	SUP3A	PX	.000417	.000417	0	0
3	SUP2B	PX	.000417	.000417	0	0
4	SUP2A	PX	.000417	.000417	0	0
5	SUP1B	PX	.000417	.000417	0	0
6	SUP1A	PX	.000417	.000417	0	0
7	SO3	PX	.000521	.000521	0	0
8	SO2	PX	.000521	.000521	0	0
9	SO1	PX	.000521	.000521	0	0
10	PLATECORNER3C	PX	.001	.001	0	0
11	PLATECORNER3B	PX	.001	.001	0	0
12	PLATECORNER3A	PX	.001	.001	0	0
13	PLATECORNER2C	PX	.001	.001	0	0
14	PLATECORNER2B	PX	.001	.001	0	0
15	PLATECORNER2A	PX	.001	.001	0	0
16	PLATECORNER1C	PX	.001	.001	0	0
17	PLATECORNER1B	PX	.001	.001	0	0
18	PLATECORNER1A	PX	.001	.001	0	0
19	PLATE12	PX	.001	.001	0	0
20	PLATE11	PX	.001	.001	0	0

Member Distributed Loads (BLC 24 : Maintanence (270)) (Continued)

	Member Label	Direction	Start Magnitude[k/ft,...	End Magnitude[k/ft,F...	Start Location[ft,%]	End Location[ft,%]
21	PLATE10	PX	.001	.001	0	0
22	PLATE9	PX	.001	.001	0	0
23	PLATE8	PX	.001	.001	0	0
24	PLATE7	PX	.001	.001	0	0
25	PLATE6	PX	.001	.001	0	0
26	PLATE5	PX	.001	.001	0	0
27	PLATE4	PX	.001	.001	0	0
28	PLATE3	PX	.001	.001	0	0
29	PLATE2	PX	.001	.001	0	0
30	PLATE1	PX	.001	.001	0	0
31	MP GAMMA4	PX	.000594	.000594	0	0
32	MP GAMMA3	PX	.000594	.000594	0	0
33	MP GAMMA2	PX	.000594	.000594	0	0
34	MP GAMMA1	PX	.000594	.000594	0	0
35	MP BETA4	PX	.000594	.000594	0	0
36	MP BETA3	PX	.000594	.000594	0	0
37	MP BETA2	PX	.000594	.000594	0	0
38	MP BETA1	PX	.000594	.000594	0	0
39	MP ALPHA4	PX	.000594	.000594	0	0
40	MP ALPHA3	PX	.000594	.000594	0	0
41	MP ALPHA2	PX	.000594	.000594	0	0
42	MP ALPHA1	PX	.000594	.000594	0	0
43	KICKER3	PX	.000521	.000521	0	0
44	KICKER2	PX	.000521	.000521	0	0
45	KICKER1	PX	.000521	.000521	0	0
46	RAIL1	PX	.000361	.000361	0	0
47	RAIL2	PX	.000361	.000361	0	0
48	RAIL3	PX	.00018	.00018	0	0
49	FACE1	PX	.000531	.000531	0	0
50	FACE2	PX	.000531	.000531	0	0
51	FACE3	PX	.000266	.000266	0	0
52	CR3B	PX	.000521	.000521	0	0
53	CR3A	PX	.000521	.000521	0	0
54	CR2B	PX	.000521	.000521	0	0
55	CR2A	PX	.000521	.000521	0	0
56	CR1B	PX	.000521	.000521	0	0
57	CR1A	PX	.000521	.000521	0	0
58	ANGLE3	PX	.000521	.000521	0	0
59	ANGLE2	PX	.000521	.000521	0	0
60	ANGLE1	PX	.000521	.000521	0	0

Member Distributed Loads (BLC 25 : Maintanence (300))

	Member Label	Direction	Start Magnitude[k/ft,...	End Magnitude[k/ft,F...	Start Location[ft,%]	End Location[ft,%]
1	SUP3B	PY	-.000208	-.000208	0	0
2	SUP3A	PY	-.000208	-.000208	0	0
3	SUP2B	PY	-.000208	-.000208	0	0
4	SUP2A	PY	-.000208	-.000208	0	0
5	SUP1B	PY	-.000208	-.000208	0	0
6	SUP1A	PY	-.000208	-.000208	0	0
7	SO3	PY	-.00026	-.00026	0	0
8	SO2	PY	-.00026	-.00026	0	0
9	SO1	PY	-.00026	-.00026	0	0
10	PLATECORNER3C	PY	-.000625	-.000625	0	0
11	PLATECORNER3B	PY	-.000625	-.000625	0	0
12	PLATECORNER3A	PY	-.000625	-.000625	0	0
13	PLATECORNER2C	PY	-.000625	-.000625	0	0

Member Distributed Loads (BLC 25 : Maintanence (300)) (Continued)

	Member Label	Direction	Start Magnitude[k/ft,...	End Magnitude[k/ft,F...	Start Location[ft,%]	End Location[ft,%]
14	PLATECORNER2B	PY	-.000625	-.000625	0	0
15	PLATECORNER2A	PY	-.000625	-.000625	0	0
16	PLATECORNER1C	PY	-.000625	-.000625	0	0
17	PLATECORNER1B	PY	-.000625	-.000625	0	0
18	PLATECORNER1A	PY	-.000625	-.000625	0	0
19	PLATE12	PY	-.000625	-.000625	0	0
20	PLATE11	PY	-.000625	-.000625	0	0
21	PLATE10	PY	-.000625	-.000625	0	0
22	PLATE9	PY	-.000625	-.000625	0	0
23	PLATE8	PY	-.000625	-.000625	0	0
24	PLATE7	PY	-.000625	-.000625	0	0
25	PLATE6	PY	-.000625	-.000625	0	0
26	PLATE5	PY	-.000625	-.000625	0	0
27	PLATE4	PY	-.000625	-.000625	0	0
28	PLATE3	PY	-.000625	-.000625	0	0
29	PLATE2	PY	-.000625	-.000625	0	0
30	PLATE1	PY	-.000625	-.000625	0	0
31	MP GAMMA4	PY	-.000297	-.000297	0	0
32	MP GAMMA3	PY	-.000297	-.000297	0	0
33	MP GAMMA2	PY	-.000297	-.000297	0	0
34	MP GAMMA1	PY	-.000297	-.000297	0	0
35	MP BETA4	PY	-.000297	-.000297	0	0
36	MP BETA3	PY	-.000297	-.000297	0	0
37	MP BETA2	PY	-.000297	-.000297	0	0
38	MP BETA1	PY	-.000297	-.000297	0	0
39	MP ALPHA4	PY	-.000297	-.000297	0	0
40	MP ALPHA3	PY	-.000297	-.000297	0	0
41	MP ALPHA2	PY	-.000297	-.000297	0	0
42	MP ALPHA1	PY	-.000297	-.000297	0	0
43	KICKER3	PY	-.00026	-.00026	0	0
44	KICKER2	PY	-.00026	-.00026	0	0
45	KICKER1	PY	-.00026	-.00026	0	0
46	RAIL1	PY	-.00018	-.00018	0	0
47	RAIL2	PY	-.00018	-.00018	0	0
48	RAIL3	PY	-9e-5	-9e-5	0	0
49	FACE1	PY	-.000266	-.000266	0	0
50	FACE2	PY	-.000266	-.000266	0	0
51	FACE3	PY	-.000133	-.000133	0	0
52	CR3B	PY	-.00026	-.00026	0	0
53	CR3A	PY	-.00026	-.00026	0	0
54	CR2B	PY	-.00026	-.00026	0	0
55	CR2A	PY	-.00026	-.00026	0	0
56	CR1B	PY	-.00026	-.00026	0	0
57	CR1A	PY	-.00026	-.00026	0	0
58	ANGLE3	PY	-.00026	-.00026	0	0
59	ANGLE2	PY	-.00026	-.00026	0	0
60	ANGLE1	PY	-.00026	-.00026	0	0
61	SUP3B	PX	.000361	.000361	0	0
62	SUP3A	PX	.000361	.000361	0	0
63	SUP2B	PX	.000361	.000361	0	0
64	SUP2A	PX	.000361	.000361	0	0
65	SUP1B	PX	.000361	.000361	0	0
66	SUP1A	PX	.000361	.000361	0	0
67	SO3	PX	.000451	.000451	0	0
68	SO2	PX	.000451	.000451	0	0
69	SO1	PX	.000451	.000451	0	0
70	PLATECORNER3C	PX	.001	.001	0	0

Member Distributed Loads (BLC 25 : Maintanence (300)) (Continued)

	Member Label	Direction	Start Magnitude[k/ft,...	End Magnitude[k/ft,F...	Start Location[ft,%]	End Location[ft,%]
71	PLATECORNER3B	PX	.001	.001	0	0
72	PLATECORNER3A	PX	.001	.001	0	0
73	PLATECORNER2C	PX	.001	.001	0	0
74	PLATECORNER2B	PX	.001	.001	0	0
75	PLATECORNER2A	PX	.001	.001	0	0
76	PLATECORNER1C	PX	.001	.001	0	0
77	PLATECORNER1B	PX	.001	.001	0	0
78	PLATECORNER1A	PX	.001	.001	0	0
79	PLATE12	PX	.001	.001	0	0
80	PLATE11	PX	.001	.001	0	0
81	PLATE10	PX	.001	.001	0	0
82	PLATE9	PX	.001	.001	0	0
83	PLATE8	PX	.001	.001	0	0
84	PLATE7	PX	.001	.001	0	0
85	PLATE6	PX	.001	.001	0	0
86	PLATE5	PX	.001	.001	0	0
87	PLATE4	PX	.001	.001	0	0
88	PLATE3	PX	.001	.001	0	0
89	PLATE2	PX	.001	.001	0	0
90	PLATE1	PX	.001	.001	0	0
91	MP GAMMA4	PX	.000514	.000514	0	0
92	MP GAMMA3	PX	.000514	.000514	0	0
93	MP GAMMA2	PX	.000514	.000514	0	0
94	MP GAMMA1	PX	.000514	.000514	0	0
95	MP BETA4	PX	.000514	.000514	0	0
96	MP BETA3	PX	.000514	.000514	0	0
97	MP BETA2	PX	.000514	.000514	0	0
98	MP BETA1	PX	.000514	.000514	0	0
99	MP ALPHA4	PX	.000514	.000514	0	0
100	MP ALPHA3	PX	.000514	.000514	0	0
101	MP ALPHA2	PX	.000514	.000514	0	0
102	MP ALPHA1	PX	.000514	.000514	0	0
103	KICKER3	PX	.000451	.000451	0	0
104	KICKER2	PX	.000451	.000451	0	0
105	KICKER1	PX	.000451	.000451	0	0
106	RAIL1	PX	.000312	.000312	0	0
107	RAIL2	PX	.000312	.000312	0	0
108	RAIL3	PX	.000156	.000156	0	0
109	FACE1	PX	.00046	.00046	0	0
110	FACE2	PX	.00046	.00046	0	0
111	FACE3	PX	.00023	.00023	0	0
112	CR3B	PX	.000451	.000451	0	0
113	CR3A	PX	.000451	.000451	0	0
114	CR2B	PX	.000451	.000451	0	0
115	CR2A	PX	.000451	.000451	0	0
116	CR1B	PX	.000451	.000451	0	0
117	CR1A	PX	.000451	.000451	0	0
118	ANGLE3	PX	.000451	.000451	0	0
119	ANGLE2	PX	.000451	.000451	0	0
120	ANGLE1	PX	.000451	.000451	0	0

Member Distributed Loads (BLC 26 : Maintanence (330))

	Member Label	Direction	Start Magnitude[k/ft,...	End Magnitude[k/ft,F...	Start Location[ft,%]	End Location[ft,%]
1	SUP3B	PY	-.000361	-.000361	0	0
2	SUP3A	PY	-.000361	-.000361	0	0
3	SUP2B	PY	-.000361	-.000361	0	0

Member Distributed Loads (BLC 26 : Maintanence (330)) (Continued)

	Member Label	Direction	Start Magnitude[k/ft,...	End Magnitude[k/ft,F...	Start Location[ft,%]	End Location[ft,%]
4	SUP2A	PY	-.000361	-.000361	0	0
5	SUP1B	PY	-.000361	-.000361	0	0
6	SUP1A	PY	-.000361	-.000361	0	0
7	SO3	PY	-.000451	-.000451	0	0
8	SO2	PY	-.000451	-.000451	0	0
9	SO1	PY	-.000451	-.000451	0	0
10	PLATECORNER3C	PY	-.001	-.001	0	0
11	PLATECORNER3B	PY	-.001	-.001	0	0
12	PLATECORNER3A	PY	-.001	-.001	0	0
13	PLATECORNER2C	PY	-.001	-.001	0	0
14	PLATECORNER2B	PY	-.001	-.001	0	0
15	PLATECORNER2A	PY	-.001	-.001	0	0
16	PLATECORNER1C	PY	-.001	-.001	0	0
17	PLATECORNER1B	PY	-.001	-.001	0	0
18	PLATECORNER1A	PY	-.001	-.001	0	0
19	PLATE12	PY	-.001	-.001	0	0
20	PLATE11	PY	-.001	-.001	0	0
21	PLATE10	PY	-.001	-.001	0	0
22	PLATE9	PY	-.001	-.001	0	0
23	PLATE8	PY	-.001	-.001	0	0
24	PLATE7	PY	-.001	-.001	0	0
25	PLATE6	PY	-.001	-.001	0	0
26	PLATE5	PY	-.001	-.001	0	0
27	PLATE4	PY	-.001	-.001	0	0
28	PLATE3	PY	-.001	-.001	0	0
29	PLATE2	PY	-.001	-.001	0	0
30	PLATE1	PY	-.001	-.001	0	0
31	MP GAMMA4	PY	-.000514	-.000514	0	0
32	MP GAMMA3	PY	-.000514	-.000514	0	0
33	MP GAMMA2	PY	-.000514	-.000514	0	0
34	MP GAMMA1	PY	-.000514	-.000514	0	0
35	MP BETA4	PY	-.000514	-.000514	0	0
36	MP BETA3	PY	-.000514	-.000514	0	0
37	MP BETA2	PY	-.000514	-.000514	0	0
38	MP BETA1	PY	-.000514	-.000514	0	0
39	MP ALPHA4	PY	-.000514	-.000514	0	0
40	MP ALPHA3	PY	-.000514	-.000514	0	0
41	MP ALPHA2	PY	-.000514	-.000514	0	0
42	MP ALPHA1	PY	-.000514	-.000514	0	0
43	KICKER3	PY	-.000451	-.000451	0	0
44	KICKER2	PY	-.000451	-.000451	0	0
45	KICKER1	PY	-.000451	-.000451	0	0
46	RAIL3	PY	-.000312	-.000312	0	0
47	RAIL2	PY	-.000312	-.000312	0	0
48	RAIL1	PY	-.000156	-.000156	0	0
49	FACE3	PY	-.00046	-.00046	0	0
50	FACE2	PY	-.00046	-.00046	0	0
51	FACE1	PY	-.00023	-.00023	0	0
52	CR3B	PY	-.000451	-.000451	0	0
53	CR3A	PY	-.000451	-.000451	0	0
54	CR2B	PY	-.000451	-.000451	0	0
55	CR2A	PY	-.000451	-.000451	0	0
56	CR1B	PY	-.000451	-.000451	0	0
57	CR1A	PY	-.000451	-.000451	0	0
58	ANGLE3	PY	-.000451	-.000451	0	0
59	ANGLE2	PY	-.000451	-.000451	0	0
60	ANGLE1	PY	-.000451	-.000451	0	0

Member Distributed Loads (BLC 26 : Maintanence (330)) (Continued)

	Member Label	Direction	Start Magnitude[k/ft,...	End Magnitude[k/ft,F...	Start Location[ft,%]	End Location[ft,%]
61	SUP3B	PX	.000208	.000208	0	0
62	SUP3A	PX	.000208	.000208	0	0
63	SUP2B	PX	.000208	.000208	0	0
64	SUP2A	PX	.000208	.000208	0	0
65	SUP1B	PX	.000208	.000208	0	0
66	SUP1A	PX	.000208	.000208	0	0
67	SO3	PX	.00026	.00026	0	0
68	SO2	PX	.00026	.00026	0	0
69	SO1	PX	.00026	.00026	0	0
70	PLATECORNER3C	PX	.000625	.000625	0	0
71	PLATECORNER3B	PX	.000625	.000625	0	0
72	PLATECORNER3A	PX	.000625	.000625	0	0
73	PLATECORNER2C	PX	.000625	.000625	0	0
74	PLATECORNER2B	PX	.000625	.000625	0	0
75	PLATECORNER2A	PX	.000625	.000625	0	0
76	PLATECORNER1C	PX	.000625	.000625	0	0
77	PLATECORNER1B	PX	.000625	.000625	0	0
78	PLATECORNER1A	PX	.000625	.000625	0	0
79	PLATE12	PX	.000625	.000625	0	0
80	PLATE11	PX	.000625	.000625	0	0
81	PLATE10	PX	.000625	.000625	0	0
82	PLATE9	PX	.000625	.000625	0	0
83	PLATE8	PX	.000625	.000625	0	0
84	PLATE7	PX	.000625	.000625	0	0
85	PLATE6	PX	.000625	.000625	0	0
86	PLATE5	PX	.000625	.000625	0	0
87	PLATE4	PX	.000625	.000625	0	0
88	PLATE3	PX	.000625	.000625	0	0
89	PLATE2	PX	.000625	.000625	0	0
90	PLATE1	PX	.000625	.000625	0	0
91	MP GAMMA4	PX	.000297	.000297	0	0
92	MP GAMMA3	PX	.000297	.000297	0	0
93	MP GAMMA2	PX	.000297	.000297	0	0
94	MP GAMMA1	PX	.000297	.000297	0	0
95	MP BETA4	PX	.000297	.000297	0	0
96	MP BETA3	PX	.000297	.000297	0	0
97	MP BETA2	PX	.000297	.000297	0	0
98	MP BETA1	PX	.000297	.000297	0	0
99	MP ALPHA4	PX	.000297	.000297	0	0
100	MP ALPHA3	PX	.000297	.000297	0	0
101	MP ALPHA2	PX	.000297	.000297	0	0
102	MP ALPHA1	PX	.000297	.000297	0	0
103	KICKER3	PX	.00026	.00026	0	0
104	KICKER2	PX	.00026	.00026	0	0
105	KICKER1	PX	.00026	.00026	0	0
106	RAIL3	PX	.00018	.00018	0	0
107	RAIL2	PX	.00018	.00018	0	0
108	RAIL1	PX	9e-5	9e-5	0	0
109	FACE3	PX	.000266	.000266	0	0
110	FACE2	PX	.000266	.000266	0	0
111	FACE1	PX	.000133	.000133	0	0
112	CR3B	PX	.00026	.00026	0	0
113	CR3A	PX	.00026	.00026	0	0
114	CR2B	PX	.00026	.00026	0	0
115	CR2A	PX	.00026	.00026	0	0
116	CR1B	PX	.00026	.00026	0	0
117	CR1A	PX	.00026	.00026	0	0

Member Distributed Loads (BLC 26 : Maintanence (330)) (Continued)

	Member Label	Direction	Start Magnitude[k/ft,...	End Magnitude[k/ft,F...	Start Location[ft,%]	End Location[ft,%]
118	ANGLE3	PX	.00026	.00026	0	0
119	ANGLE2	PX	.00026	.00026	0	0
120	ANGLE1	PX	.00026	.00026	0	0

Member Distributed Loads (BLC 27 : Ice Dead Load)

	Member Label	Direction	Start Magnitude[k/ft,...	End Magnitude[k/ft,F...	Start Location[ft,%]	End Location[ft,%]
1	SUP3B	Z	-.01	-.01	0	0
2	SUP3A	Z	-.01	-.01	0	0
3	SUP2B	Z	-.01	-.01	0	0
4	SUP2A	Z	-.01	-.01	0	0
5	SUP1B	Z	-.01	-.01	0	0
6	SUP1A	Z	-.01	-.01	0	0
7	SO3	Z	-.015	-.015	0	0
8	SO2	Z	-.015	-.015	0	0
9	SO1	Z	-.015	-.015	0	0
10	PLATECORNER3C	Z	-.013	-.013	0	0
11	PLATECORNER3B	Z	-.013	-.013	0	0
12	PLATECORNER3A	Z	-.013	-.013	0	0
13	PLATECORNER2C	Z	-.013	-.013	0	0
14	PLATECORNER2B	Z	-.013	-.013	0	0
15	PLATECORNER2A	Z	-.013	-.013	0	0
16	PLATECORNER1C	Z	-.013	-.013	0	0
17	PLATECORNER1B	Z	-.013	-.013	0	0
18	PLATECORNER1A	Z	-.013	-.013	0	0
19	PLATE12	Z	-.013	-.013	0	0
20	PLATE11	Z	-.013	-.013	0	0
21	PLATE10	Z	-.013	-.013	0	0
22	PLATE9	Z	-.013	-.013	0	0
23	PLATE8	Z	-.013	-.013	0	0
24	PLATE7	Z	-.013	-.013	0	0
25	PLATE6	Z	-.013	-.013	0	0
26	PLATE5	Z	-.013	-.013	0	0
27	PLATE4	Z	-.013	-.013	0	0
28	PLATE3	Z	-.013	-.013	0	0
29	PLATE2	Z	-.013	-.013	0	0
30	PLATE1	Z	-.013	-.013	0	0
31	MP GAMMA4	Z	-.008	-.008	0	0
32	MP GAMMA3	Z	-.008	-.008	0	0
33	MP GAMMA2	Z	-.008	-.008	0	0
34	MP GAMMA1	Z	-.008	-.008	0	0
35	MP BETA4	Z	-.008	-.008	0	0
36	MP BETA3	Z	-.008	-.008	0	0
37	MP BETA2	Z	-.008	-.008	0	0
38	MP BETA1	Z	-.008	-.008	0	0
39	MP ALPHA4	Z	-.008	-.008	0	0
40	MP ALPHA3	Z	-.008	-.008	0	0
41	MP ALPHA2	Z	-.008	-.008	0	0
42	MP ALPHA1	Z	-.008	-.008	0	0
43	KICKER3	Z	-.017	-.017	0	0
44	KICKER2	Z	-.017	-.017	0	0
45	KICKER1	Z	-.017	-.017	0	0
46	RAIL3	Z	-.008	-.008	0	0
47	RAIL2	Z	-.008	-.008	0	0
48	RAIL1	Z	-.008	-.008	0	0
49	FACE3	Z	-.011	-.011	0	0
50	FACE2	Z	-.011	-.011	0	0

Member Distributed Loads (BLC 27 : Ice Dead Load) (Continued)

	Member Label	Direction	Start Magnitude[k/ft,...	End Magnitude[k/ft,F...	Start Location[ft,%]	End Location[ft,%]
51	FACE1	Z	-.011	-.011	0	0
52	CR3B	Z	-.015	-.015	0	0
53	CR3A	Z	-.015	-.015	0	0
54	CR2B	Z	-.015	-.015	0	0
55	CR2A	Z	-.015	-.015	0	0
56	CR1B	Z	-.015	-.015	0	0
57	CR1A	Z	-.015	-.015	0	0
58	ANGLE3	Z	-.011	-.011	0	0
59	ANGLE2	Z	-.011	-.011	0	0
60	ANGLE1	Z	-.011	-.011	0	0

Member Distributed Loads (BLC 28 : Ice Wind Load (0))

	Member Label	Direction	Start Magnitude[k/ft,...	End Magnitude[k/ft,F...	Start Location[ft,%]	End Location[ft,%]
1	SUP3B	PY	-.002	-.002	0	0
2	SUP3A	PY	-.002	-.002	0	0
3	SUP2B	PY	-.002	-.002	0	0
4	SUP2A	PY	-.002	-.002	0	0
5	SUP1B	PY	-.002	-.002	0	0
6	SUP1A	PY	-.002	-.002	0	0
7	SO3	PY	-.002	-.002	0	0
8	SO2	PY	-.002	-.002	0	0
9	SO1	PY	-.002	-.002	0	0
10	PLATECORNER3C	PY	-.004	-.004	0	0
11	PLATECORNER3B	PY	-.004	-.004	0	0
12	PLATECORNER3A	PY	-.004	-.004	0	0
13	PLATECORNER2C	PY	-.004	-.004	0	0
14	PLATECORNER2B	PY	-.004	-.004	0	0
15	PLATECORNER2A	PY	-.004	-.004	0	0
16	PLATECORNER1C	PY	-.004	-.004	0	0
17	PLATECORNER1B	PY	-.004	-.004	0	0
18	PLATECORNER1A	PY	-.004	-.004	0	0
19	PLATE12	PY	-.004	-.004	0	0
20	PLATE11	PY	-.004	-.004	0	0
21	PLATE10	PY	-.004	-.004	0	0
22	PLATE9	PY	-.004	-.004	0	0
23	PLATE8	PY	-.004	-.004	0	0
24	PLATE7	PY	-.004	-.004	0	0
25	PLATE6	PY	-.004	-.004	0	0
26	PLATE5	PY	-.004	-.004	0	0
27	PLATE4	PY	-.004	-.004	0	0
28	PLATE3	PY	-.004	-.004	0	0
29	PLATE2	PY	-.004	-.004	0	0
30	PLATE1	PY	-.004	-.004	0	0
31	MP GAMMA4	PY	-.004	-.004	0	0
32	MP GAMMA3	PY	-.004	-.004	0	0
33	MP GAMMA2	PY	-.004	-.004	0	0
34	MP GAMMA1	PY	-.004	-.004	0	0
35	MP BETA4	PY	-.004	-.004	0	0
36	MP BETA3	PY	-.004	-.004	0	0
37	MP BETA2	PY	-.004	-.004	0	0
38	MP BETA1	PY	-.004	-.004	0	0
39	MP ALPHA4	PY	-.004	-.004	0	0
40	MP ALPHA3	PY	-.004	-.004	0	0
41	MP ALPHA2	PY	-.004	-.004	0	0
42	MP ALPHA1	PY	-.004	-.004	0	0
43	KICKER3	PY	-.003	-.003	0	0

Member Distributed Loads (BLC 28 : Ice Wind Load (0)) (Continued)

	Member Label	Direction	Start Magnitude[k/ft,...	End Magnitude[k/ft,F...	Start Location[ft,%]	End Location[ft,%]
44	KICKER2	PY	-.003	-.003	0	0
45	KICKER1	PY	-.003	-.003	0	0
46	RAIL3	PY	-.003	-.003	0	0
47	RAIL2	PY	-.003	-.003	0	0
48	RAIL1	PY	-.002	-.002	0	0
49	FACE3	PY	-.004	-.004	0	0
50	FACE2	PY	-.004	-.004	0	0
51	FACE1	PY	-.002	-.002	0	0
52	CR3B	PY	-.002	-.002	0	0
53	CR3A	PY	-.002	-.002	0	0
54	CR2B	PY	-.002	-.002	0	0
55	CR2A	PY	-.002	-.002	0	0
56	CR1B	PY	-.002	-.002	0	0
57	CR1A	PY	-.002	-.002	0	0
58	ANGLE3	PY	-.003	-.003	0	0
59	ANGLE2	PY	-.003	-.003	0	0
60	ANGLE1	PY	-.003	-.003	0	0

Member Distributed Loads (BLC 29 : Ice Wind Load (30))

	Member Label	Direction	Start Magnitude[k/ft,...	End Magnitude[k/ft,F...	Start Location[ft,%]	End Location[ft,%]
1	SUP3B	PY	-.002	-.002	0	0
2	SUP3A	PY	-.002	-.002	0	0
3	SUP2B	PY	-.002	-.002	0	0
4	SUP2A	PY	-.002	-.002	0	0
5	SUP1B	PY	-.002	-.002	0	0
6	SUP1A	PY	-.002	-.002	0	0
7	SO3	PY	-.002	-.002	0	0
8	SO2	PY	-.002	-.002	0	0
9	SO1	PY	-.002	-.002	0	0
10	PLATECORNER3C	PY	-.004	-.004	0	0
11	PLATECORNER3B	PY	-.004	-.004	0	0
12	PLATECORNER3A	PY	-.004	-.004	0	0
13	PLATECORNER2C	PY	-.004	-.004	0	0
14	PLATECORNER2B	PY	-.004	-.004	0	0
15	PLATECORNER2A	PY	-.004	-.004	0	0
16	PLATECORNER1C	PY	-.004	-.004	0	0
17	PLATECORNER1B	PY	-.004	-.004	0	0
18	PLATECORNER1A	PY	-.004	-.004	0	0
19	PLATE12	PY	-.004	-.004	0	0
20	PLATE11	PY	-.004	-.004	0	0
21	PLATE10	PY	-.004	-.004	0	0
22	PLATE9	PY	-.004	-.004	0	0
23	PLATE8	PY	-.004	-.004	0	0
24	PLATE7	PY	-.004	-.004	0	0
25	PLATE6	PY	-.004	-.004	0	0
26	PLATE5	PY	-.004	-.004	0	0
27	PLATE4	PY	-.004	-.004	0	0
28	PLATE3	PY	-.004	-.004	0	0
29	PLATE2	PY	-.004	-.004	0	0
30	PLATE1	PY	-.004	-.004	0	0
31	MP GAMMA4	PY	-.003	-.003	0	0
32	MP GAMMA3	PY	-.003	-.003	0	0
33	MP GAMMA2	PY	-.003	-.003	0	0
34	MP GAMMA1	PY	-.003	-.003	0	0
35	MP BETA4	PY	-.003	-.003	0	0
36	MP BETA3	PY	-.003	-.003	0	0

Member Distributed Loads (BLC 29 : Ice Wind Load (30)) (Continued)

	Member Label	Direction	Start Magnitude[k/ft,...	End Magnitude[k/ft,F...	Start Location[ft,%]	End Location[ft,%]
37	MP BETA2	PY	-.003	-.003	0	0
38	MP BETA1	PY	-.003	-.003	0	0
39	MP ALPHA4	PY	-.003	-.003	0	0
40	MP ALPHA3	PY	-.003	-.003	0	0
41	MP ALPHA2	PY	-.003	-.003	0	0
42	MP ALPHA1	PY	-.003	-.003	0	0
43	KICKER3	PY	-.002	-.002	0	0
44	KICKER2	PY	-.002	-.002	0	0
45	KICKER1	PY	-.002	-.002	0	0
46	RAIL3	PY	-.003	-.003	0	0
47	RAIL2	PY	-.003	-.003	0	0
48	RAIL1	PY	-.001	-.001	0	0
49	FACE3	PY	-.003	-.003	0	0
50	FACE2	PY	-.003	-.003	0	0
51	FACE1	PY	-.002	-.002	0	0
52	CR3B	PY	-.002	-.002	0	0
53	CR3A	PY	-.002	-.002	0	0
54	CR2B	PY	-.002	-.002	0	0
55	CR2A	PY	-.002	-.002	0	0
56	CR1B	PY	-.002	-.002	0	0
57	CR1A	PY	-.002	-.002	0	0
58	ANGLE3	PY	-.002	-.002	0	0
59	ANGLE2	PY	-.002	-.002	0	0
60	ANGLE1	PY	-.002	-.002	0	0
61	SUP3B	PX	-.001	-.001	0	0
62	SUP3A	PX	-.001	-.001	0	0
63	SUP2B	PX	-.001	-.001	0	0
64	SUP2A	PX	-.001	-.001	0	0
65	SUP1B	PX	-.001	-.001	0	0
66	SUP1A	PX	-.001	-.001	0	0
67	SO3	PX	-.001	-.001	0	0
68	SO2	PX	-.001	-.001	0	0
69	SO1	PX	-.001	-.001	0	0
70	PLATECORNER3C	PX	-.002	-.002	0	0
71	PLATECORNER3B	PX	-.002	-.002	0	0
72	PLATECORNER3A	PX	-.002	-.002	0	0
73	PLATECORNER2C	PX	-.002	-.002	0	0
74	PLATECORNER2B	PX	-.002	-.002	0	0
75	PLATECORNER2A	PX	-.002	-.002	0	0
76	PLATECORNER1C	PX	-.002	-.002	0	0
77	PLATECORNER1B	PX	-.002	-.002	0	0
78	PLATECORNER1A	PX	-.002	-.002	0	0
79	PLATE12	PX	-.002	-.002	0	0
80	PLATE11	PX	-.002	-.002	0	0
81	PLATE10	PX	-.002	-.002	0	0
82	PLATE9	PX	-.002	-.002	0	0
83	PLATE8	PX	-.002	-.002	0	0
84	PLATE7	PX	-.002	-.002	0	0
85	PLATE6	PX	-.002	-.002	0	0
86	PLATE5	PX	-.002	-.002	0	0
87	PLATE4	PX	-.002	-.002	0	0
88	PLATE3	PX	-.002	-.002	0	0
89	PLATE2	PX	-.002	-.002	0	0
90	PLATE1	PX	-.002	-.002	0	0
91	MP GAMMA4	PX	-.002	-.002	0	0
92	MP GAMMA3	PX	-.002	-.002	0	0
93	MP GAMMA2	PX	-.002	-.002	0	0

Member Distributed Loads (BLC 29 : Ice Wind Load (30)) (Continued)

	Member Label	Direction	Start Magnitude[k/ft,...	End Magnitude[k/ft,F...	Start Location[ft,%]	End Location[ft,%]
94	MP GAMMA1	PX	-.002	-.002	0	0
95	MP BETA4	PX	-.002	-.002	0	0
96	MP BETA3	PX	-.002	-.002	0	0
97	MP BETA2	PX	-.002	-.002	0	0
98	MP BETA1	PX	-.002	-.002	0	0
99	MP ALPHA4	PX	-.002	-.002	0	0
100	MP ALPHA3	PX	-.002	-.002	0	0
101	MP ALPHA2	PX	-.002	-.002	0	0
102	MP ALPHA1	PX	-.002	-.002	0	0
103	KICKER3	PX	-.001	-.001	0	0
104	KICKER2	PX	-.001	-.001	0	0
105	KICKER1	PX	-.001	-.001	0	0
106	RAIL3	PX	-.002	-.002	0	0
107	RAIL2	PX	-.002	-.002	0	0
108	RAIL1	PX	-.000758	-.000758	0	0
109	FACE3	PX	-.002	-.002	0	0
110	FACE2	PX	-.002	-.002	0	0
111	FACE1	PX	-.000907	-.000907	0	0
112	CR3B	PX	-.001	-.001	0	0
113	CR3A	PX	-.001	-.001	0	0
114	CR2B	PX	-.001	-.001	0	0
115	CR2A	PX	-.001	-.001	0	0
116	CR1B	PX	-.001	-.001	0	0
117	CR1A	PX	-.001	-.001	0	0
118	ANGLE3	PX	-.001	-.001	0	0
119	ANGLE2	PX	-.001	-.001	0	0
120	ANGLE1	PX	-.001	-.001	0	0

Member Distributed Loads (BLC 30 : Ice Wind Load (60))

	Member Label	Direction	Start Magnitude[k/ft,...	End Magnitude[k/ft,F...	Start Location[ft,%]	End Location[ft,%]
1	SUP3B	PY	-.001	-.001	0	0
2	SUP3A	PY	-.001	-.001	0	0
3	SUP2B	PY	-.001	-.001	0	0
4	SUP2A	PY	-.001	-.001	0	0
5	SUP1B	PY	-.001	-.001	0	0
6	SUP1A	PY	-.001	-.001	0	0
7	SO3	PY	-.001	-.001	0	0
8	SO2	PY	-.001	-.001	0	0
9	SO1	PY	-.001	-.001	0	0
10	PLATECORNER3C	PY	-.002	-.002	0	0
11	PLATECORNER3B	PY	-.002	-.002	0	0
12	PLATECORNER3A	PY	-.002	-.002	0	0
13	PLATECORNER2C	PY	-.002	-.002	0	0
14	PLATECORNER2B	PY	-.002	-.002	0	0
15	PLATECORNER2A	PY	-.002	-.002	0	0
16	PLATECORNER1C	PY	-.002	-.002	0	0
17	PLATECORNER1B	PY	-.002	-.002	0	0
18	PLATECORNER1A	PY	-.002	-.002	0	0
19	PLATE12	PY	-.002	-.002	0	0
20	PLATE11	PY	-.002	-.002	0	0
21	PLATE10	PY	-.002	-.002	0	0
22	PLATE9	PY	-.002	-.002	0	0
23	PLATE8	PY	-.002	-.002	0	0
24	PLATE7	PY	-.002	-.002	0	0
25	PLATE6	PY	-.002	-.002	0	0
26	PLATE5	PY	-.002	-.002	0	0

Member Distributed Loads (BLC 30 : Ice Wind Load (60)) (Continued)

	Member Label	Direction	Start Magnitude[k/ft,...	End Magnitude[k/ft,F...	Start Location[ft,%]	End Location[ft,%]
27	PLATE4	PY	-.002	-.002	0	0
28	PLATE3	PY	-.002	-.002	0	0
29	PLATE2	PY	-.002	-.002	0	0
30	PLATE1	PY	-.002	-.002	0	0
31	MP GAMMA4	PY	-.002	-.002	0	0
32	MP GAMMA3	PY	-.002	-.002	0	0
33	MP GAMMA2	PY	-.002	-.002	0	0
34	MP GAMMA1	PY	-.002	-.002	0	0
35	MP BETA4	PY	-.002	-.002	0	0
36	MP BETA3	PY	-.002	-.002	0	0
37	MP BETA2	PY	-.002	-.002	0	0
38	MP BETA1	PY	-.002	-.002	0	0
39	MP ALPHA4	PY	-.002	-.002	0	0
40	MP ALPHA3	PY	-.002	-.002	0	0
41	MP ALPHA2	PY	-.002	-.002	0	0
42	MP ALPHA1	PY	-.002	-.002	0	0
43	KICKER3	PY	-.001	-.001	0	0
44	KICKER2	PY	-.001	-.001	0	0
45	KICKER1	PY	-.001	-.001	0	0
46	RAIL3	PY	-.002	-.002	0	0
47	RAIL2	PY	-.002	-.002	0	0
48	RAIL1	PY	-.000758	-.000758	0	0
49	FACE3	PY	-.002	-.002	0	0
50	FACE2	PY	-.002	-.002	0	0
51	FACE1	PY	-.000907	-.000907	0	0
52	CR3B	PY	-.001	-.001	0	0
53	CR3A	PY	-.001	-.001	0	0
54	CR2B	PY	-.001	-.001	0	0
55	CR2A	PY	-.001	-.001	0	0
56	CR1B	PY	-.001	-.001	0	0
57	CR1A	PY	-.001	-.001	0	0
58	ANGLE3	PY	-.001	-.001	0	0
59	ANGLE2	PY	-.001	-.001	0	0
60	ANGLE1	PY	-.001	-.001	0	0
61	SUP3B	PX	-.002	-.002	0	0
62	SUP3A	PX	-.002	-.002	0	0
63	SUP2B	PX	-.002	-.002	0	0
64	SUP2A	PX	-.002	-.002	0	0
65	SUP1B	PX	-.002	-.002	0	0
66	SUP1A	PX	-.002	-.002	0	0
67	SO3	PX	-.002	-.002	0	0
68	SO2	PX	-.002	-.002	0	0
69	SO1	PX	-.002	-.002	0	0
70	PLATECORNER3C	PX	-.004	-.004	0	0
71	PLATECORNER3B	PX	-.004	-.004	0	0
72	PLATECORNER3A	PX	-.004	-.004	0	0
73	PLATECORNER2C	PX	-.004	-.004	0	0
74	PLATECORNER2B	PX	-.004	-.004	0	0
75	PLATECORNER2A	PX	-.004	-.004	0	0
76	PLATECORNER1C	PX	-.004	-.004	0	0
77	PLATECORNER1B	PX	-.004	-.004	0	0
78	PLATECORNER1A	PX	-.004	-.004	0	0
79	PLATE12	PX	-.004	-.004	0	0
80	PLATE11	PX	-.004	-.004	0	0
81	PLATE10	PX	-.004	-.004	0	0
82	PLATE9	PX	-.004	-.004	0	0
83	PLATE8	PX	-.004	-.004	0	0

Member Distributed Loads (BLC 30 : Ice Wind Load (60)) (Continued)

	Member Label	Direction	Start Magnitude[k/ft,...	End Magnitude[k/ft,F...	Start Location[ft,%]	End Location[ft,%]
84	PLATE7	PX	-.004	-.004	0	0
85	PLATE6	PX	-.004	-.004	0	0
86	PLATE5	PX	-.004	-.004	0	0
87	PLATE4	PX	-.004	-.004	0	0
88	PLATE3	PX	-.004	-.004	0	0
89	PLATE2	PX	-.004	-.004	0	0
90	PLATE1	PX	-.004	-.004	0	0
91	MP GAMMA4	PX	-.003	-.003	0	0
92	MP GAMMA3	PX	-.003	-.003	0	0
93	MP GAMMA2	PX	-.003	-.003	0	0
94	MP GAMMA1	PX	-.003	-.003	0	0
95	MP BETA4	PX	-.003	-.003	0	0
96	MP BETA3	PX	-.003	-.003	0	0
97	MP BETA2	PX	-.003	-.003	0	0
98	MP BETA1	PX	-.003	-.003	0	0
99	MP ALPHA4	PX	-.003	-.003	0	0
100	MP ALPHA3	PX	-.003	-.003	0	0
101	MP ALPHA2	PX	-.003	-.003	0	0
102	MP ALPHA1	PX	-.003	-.003	0	0
103	KICKER3	PX	-.002	-.002	0	0
104	KICKER2	PX	-.002	-.002	0	0
105	KICKER1	PX	-.002	-.002	0	0
106	RAIL3	PX	-.003	-.003	0	0
107	RAIL2	PX	-.003	-.003	0	0
108	RAIL1	PX	-.001	-.001	0	0
109	FACE3	PX	-.003	-.003	0	0
110	FACE2	PX	-.003	-.003	0	0
111	FACE1	PX	-.002	-.002	0	0
112	CR3B	PX	-.002	-.002	0	0
113	CR3A	PX	-.002	-.002	0	0
114	CR2B	PX	-.002	-.002	0	0
115	CR2A	PX	-.002	-.002	0	0
116	CR1B	PX	-.002	-.002	0	0
117	CR1A	PX	-.002	-.002	0	0
118	ANGLE3	PX	-.002	-.002	0	0
119	ANGLE2	PX	-.002	-.002	0	0
120	ANGLE1	PX	-.002	-.002	0	0

Member Distributed Loads (BLC 31 : Ice Wind Load (90))

	Member Label	Direction	Start Magnitude[k/ft,...	End Magnitude[k/ft,F...	Start Location[ft,%]	End Location[ft,%]
1	SUP3B	PX	-.002	-.002	0	0
2	SUP3A	PX	-.002	-.002	0	0
3	SUP2B	PX	-.002	-.002	0	0
4	SUP2A	PX	-.002	-.002	0	0
5	SUP1B	PX	-.002	-.002	0	0
6	SUP1A	PX	-.002	-.002	0	0
7	SO3	PX	-.002	-.002	0	0
8	SO2	PX	-.002	-.002	0	0
9	SO1	PX	-.002	-.002	0	0
10	PLATECORNER3C	PX	-.004	-.004	0	0
11	PLATECORNER3B	PX	-.004	-.004	0	0
12	PLATECORNER3A	PX	-.004	-.004	0	0
13	PLATECORNER2C	PX	-.004	-.004	0	0
14	PLATECORNER2B	PX	-.004	-.004	0	0
15	PLATECORNER2A	PX	-.004	-.004	0	0
16	PLATECORNER1C	PX	-.004	-.004	0	0

Member Distributed Loads (BLC 31 : Ice Wind Load (90)) (Continued)

	Member Label	Direction	Start Magnitude[k/ft,...	End Magnitude[k/ft,F...	Start Location[ft,%]	End Location[ft,%]
17	PLATECORNER1B	PX	-.004	-.004	0	0
18	PLATECORNER1A	PX	-.004	-.004	0	0
19	PLATE12	PX	-.004	-.004	0	0
20	PLATE11	PX	-.004	-.004	0	0
21	PLATE10	PX	-.004	-.004	0	0
22	PLATE9	PX	-.004	-.004	0	0
23	PLATE8	PX	-.004	-.004	0	0
24	PLATE7	PX	-.004	-.004	0	0
25	PLATE6	PX	-.004	-.004	0	0
26	PLATE5	PX	-.004	-.004	0	0
27	PLATE4	PX	-.004	-.004	0	0
28	PLATE3	PX	-.004	-.004	0	0
29	PLATE2	PX	-.004	-.004	0	0
30	PLATE1	PX	-.004	-.004	0	0
31	MP GAMMA4	PX	-.004	-.004	0	0
32	MP GAMMA3	PX	-.004	-.004	0	0
33	MP GAMMA2	PX	-.004	-.004	0	0
34	MP GAMMA1	PX	-.004	-.004	0	0
35	MP BETA4	PX	-.004	-.004	0	0
36	MP BETA3	PX	-.004	-.004	0	0
37	MP BETA2	PX	-.004	-.004	0	0
38	MP BETA1	PX	-.004	-.004	0	0
39	MP ALPHA4	PX	-.004	-.004	0	0
40	MP ALPHA3	PX	-.004	-.004	0	0
41	MP ALPHA2	PX	-.004	-.004	0	0
42	MP ALPHA1	PX	-.004	-.004	0	0
43	KICKER3	PX	-.003	-.003	0	0
44	KICKER2	PX	-.003	-.003	0	0
45	KICKER1	PX	-.003	-.003	0	0
46	RAIL3	PX	-.003	-.003	0	0
47	RAIL1	PX	-.003	-.003	0	0
48	RAIL2	PX	-.002	-.002	0	0
49	FACE3	PX	-.004	-.004	0	0
50	FACE1	PX	-.004	-.004	0	0
51	FACE2	PX	-.002	-.002	0	0
52	CR3B	PX	-.002	-.002	0	0
53	CR3A	PX	-.002	-.002	0	0
54	CR2B	PX	-.002	-.002	0	0
55	CR2A	PX	-.002	-.002	0	0
56	CR1B	PX	-.002	-.002	0	0
57	CR1A	PX	-.002	-.002	0	0
58	ANGLE3	PX	-.003	-.003	0	0
59	ANGLE2	PX	-.003	-.003	0	0
60	ANGLE1	PX	-.003	-.003	0	0

Member Distributed Loads (BLC 32 : Ice Wind Load (120))

	Member Label	Direction	Start Magnitude[k/ft,...	End Magnitude[k/ft,F...	Start Location[ft,%]	End Location[ft,%]
1	SUP3B	PY	.001	.001	0	0
2	SUP3A	PY	.001	.001	0	0
3	SUP2B	PY	.001	.001	0	0
4	SUP2A	PY	.001	.001	0	0
5	SUP1B	PY	.001	.001	0	0
6	SUP1A	PY	.001	.001	0	0
7	SO3	PY	.001	.001	0	0
8	SO2	PY	.001	.001	0	0
9	SO1	PY	.001	.001	0	0

Member Distributed Loads (BLC 32 : Ice Wind Load (120)) (Continued)

	Member Label	Direction	Start Magnitude[k/ft,...	End Magnitude[k/ft,F...	Start Location[ft,%]	End Location[ft,%]
10	PLATECORNER3C	PY	.002	.002	0	0
11	PLATECORNER3B	PY	.002	.002	0	0
12	PLATECORNER3A	PY	.002	.002	0	0
13	PLATECORNER2C	PY	.002	.002	0	0
14	PLATECORNER2B	PY	.002	.002	0	0
15	PLATECORNER2A	PY	.002	.002	0	0
16	PLATECORNER1C	PY	.002	.002	0	0
17	PLATECORNER1B	PY	.002	.002	0	0
18	PLATECORNER1A	PY	.002	.002	0	0
19	PLATE12	PY	.002	.002	0	0
20	PLATE11	PY	.002	.002	0	0
21	PLATE10	PY	.002	.002	0	0
22	PLATE9	PY	.002	.002	0	0
23	PLATE8	PY	.002	.002	0	0
24	PLATE7	PY	.002	.002	0	0
25	PLATE6	PY	.002	.002	0	0
26	PLATE5	PY	.002	.002	0	0
27	PLATE4	PY	.002	.002	0	0
28	PLATE3	PY	.002	.002	0	0
29	PLATE2	PY	.002	.002	0	0
30	PLATE1	PY	.002	.002	0	0
31	MP GAMMA4	PY	.002	.002	0	0
32	MP GAMMA3	PY	.002	.002	0	0
33	MP GAMMA2	PY	.002	.002	0	0
34	MP GAMMA1	PY	.002	.002	0	0
35	MP BETA4	PY	.002	.002	0	0
36	MP BETA3	PY	.002	.002	0	0
37	MP BETA2	PY	.002	.002	0	0
38	MP BETA1	PY	.002	.002	0	0
39	MP ALPHA4	PY	.002	.002	0	0
40	MP ALPHA3	PY	.002	.002	0	0
41	MP ALPHA2	PY	.002	.002	0	0
42	MP ALPHA1	PY	.002	.002	0	0
43	KICKER3	PY	.001	.001	0	0
44	KICKER2	PY	.001	.001	0	0
45	KICKER1	PY	.001	.001	0	0
46	RAIL3	PY	.002	.002	0	0
47	RAIL1	PY	.002	.002	0	0
48	RAIL2	PY	.000758	.000758	0	0
49	FACE3	PY	.002	.002	0	0
50	FACE1	PY	.002	.002	0	0
51	FACE2	PY	.000907	.000907	0	0
52	CR3B	PY	.001	.001	0	0
53	CR3A	PY	.001	.001	0	0
54	CR2B	PY	.001	.001	0	0
55	CR2A	PY	.001	.001	0	0
56	CR1B	PY	.001	.001	0	0
57	CR1A	PY	.001	.001	0	0
58	ANGLE3	PY	.001	.001	0	0
59	ANGLE2	PY	.001	.001	0	0
60	ANGLE1	PY	.001	.001	0	0
61	SUP3B	PX	-.002	-.002	0	0
62	SUP3A	PX	-.002	-.002	0	0
63	SUP2B	PX	-.002	-.002	0	0
64	SUP2A	PX	-.002	-.002	0	0
65	SUP1B	PX	-.002	-.002	0	0
66	SUP1A	PX	-.002	-.002	0	0

Member Distributed Loads (BLC 32 : Ice Wind Load (120)) (Continued)

	Member Label	Direction	Start Magnitude[k/ft,...	End Magnitude[k/ft,F...	Start Location[ft,%]	End Location[ft,%]
67	SO3	PX	-.002	-.002	0	0
68	SO2	PX	-.002	-.002	0	0
69	SO1	PX	-.002	-.002	0	0
70	PLATECORNER3C	PX	-.004	-.004	0	0
71	PLATECORNER3B	PX	-.004	-.004	0	0
72	PLATECORNER3A	PX	-.004	-.004	0	0
73	PLATECORNER2C	PX	-.004	-.004	0	0
74	PLATECORNER2B	PX	-.004	-.004	0	0
75	PLATECORNER2A	PX	-.004	-.004	0	0
76	PLATECORNER1C	PX	-.004	-.004	0	0
77	PLATECORNER1B	PX	-.004	-.004	0	0
78	PLATECORNER1A	PX	-.004	-.004	0	0
79	PLATE12	PX	-.004	-.004	0	0
80	PLATE11	PX	-.004	-.004	0	0
81	PLATE10	PX	-.004	-.004	0	0
82	PLATE9	PX	-.004	-.004	0	0
83	PLATE8	PX	-.004	-.004	0	0
84	PLATE7	PX	-.004	-.004	0	0
85	PLATE6	PX	-.004	-.004	0	0
86	PLATE5	PX	-.004	-.004	0	0
87	PLATE4	PX	-.004	-.004	0	0
88	PLATE3	PX	-.004	-.004	0	0
89	PLATE2	PX	-.004	-.004	0	0
90	PLATE1	PX	-.004	-.004	0	0
91	MP GAMMA4	PX	-.003	-.003	0	0
92	MP GAMMA3	PX	-.003	-.003	0	0
93	MP GAMMA2	PX	-.003	-.003	0	0
94	MP GAMMA1	PX	-.003	-.003	0	0
95	MP BETA4	PX	-.003	-.003	0	0
96	MP BETA3	PX	-.003	-.003	0	0
97	MP BETA2	PX	-.003	-.003	0	0
98	MP BETA1	PX	-.003	-.003	0	0
99	MP ALPHA4	PX	-.003	-.003	0	0
100	MP ALPHA3	PX	-.003	-.003	0	0
101	MP ALPHA2	PX	-.003	-.003	0	0
102	MP ALPHA1	PX	-.003	-.003	0	0
103	KICKER3	PX	-.002	-.002	0	0
104	KICKER2	PX	-.002	-.002	0	0
105	KICKER1	PX	-.002	-.002	0	0
106	RAIL3	PX	-.003	-.003	0	0
107	RAIL1	PX	-.003	-.003	0	0
108	RAIL2	PX	-.001	-.001	0	0
109	FACE3	PX	-.003	-.003	0	0
110	FACE1	PX	-.003	-.003	0	0
111	FACE2	PX	-.002	-.002	0	0
112	CR3B	PX	-.002	-.002	0	0
113	CR3A	PX	-.002	-.002	0	0
114	CR2B	PX	-.002	-.002	0	0
115	CR2A	PX	-.002	-.002	0	0
116	CR1B	PX	-.002	-.002	0	0
117	CR1A	PX	-.002	-.002	0	0
118	ANGLE3	PX	-.002	-.002	0	0
119	ANGLE2	PX	-.002	-.002	0	0
120	ANGLE1	PX	-.002	-.002	0	0

Member Distributed Loads (BLC 33 : Ice Wind Load (150))

	Member Label	Direction	Start Magnitude[k/ft,...	End Magnitude[k/ft,F...	Start Location[ft,%]	End Location[ft,%]

Member Distributed Loads (BLC 33 : Ice Wind Load (150)) (Continued)

	Member Label	Direction	Start Magnitude[k/ft,...	End Magnitude[k/ft,F...	Start Location[ft,%]	End Location[ft,%]
1	SUP3B	PY	.002	.002	0	0
2	SUP3A	PY	.002	.002	0	0
3	SUP2B	PY	.002	.002	0	0
4	SUP2A	PY	.002	.002	0	0
5	SUP1B	PY	.002	.002	0	0
6	SUP1A	PY	.002	.002	0	0
7	SO3	PY	.002	.002	0	0
8	SO2	PY	.002	.002	0	0
9	SO1	PY	.002	.002	0	0
10	PLATECORNER3C	PY	.004	.004	0	0
11	PLATECORNER3B	PY	.004	.004	0	0
12	PLATECORNER3A	PY	.004	.004	0	0
13	PLATECORNER2C	PY	.004	.004	0	0
14	PLATECORNER2B	PY	.004	.004	0	0
15	PLATECORNER2A	PY	.004	.004	0	0
16	PLATECORNER1C	PY	.004	.004	0	0
17	PLATECORNER1B	PY	.004	.004	0	0
18	PLATECORNER1A	PY	.004	.004	0	0
19	PLATE12	PY	.004	.004	0	0
20	PLATE11	PY	.004	.004	0	0
21	PLATE10	PY	.004	.004	0	0
22	PLATE9	PY	.004	.004	0	0
23	PLATE8	PY	.004	.004	0	0
24	PLATE7	PY	.004	.004	0	0
25	PLATE6	PY	.004	.004	0	0
26	PLATE5	PY	.004	.004	0	0
27	PLATE4	PY	.004	.004	0	0
28	PLATE3	PY	.004	.004	0	0
29	PLATE2	PY	.004	.004	0	0
30	PLATE1	PY	.004	.004	0	0
31	MP GAMMA4	PY	.003	.003	0	0
32	MP GAMMA3	PY	.003	.003	0	0
33	MP GAMMA2	PY	.003	.003	0	0
34	MP GAMMA1	PY	.003	.003	0	0
35	MP BETA4	PY	.003	.003	0	0
36	MP BETA3	PY	.003	.003	0	0
37	MP BETA2	PY	.003	.003	0	0
38	MP BETA1	PY	.003	.003	0	0
39	MP ALPHA4	PY	.003	.003	0	0
40	MP ALPHA3	PY	.003	.003	0	0
41	MP ALPHA2	PY	.003	.003	0	0
42	MP ALPHA1	PY	.003	.003	0	0
43	KICKER3	PY	.002	.002	0	0
44	KICKER2	PY	.002	.002	0	0
45	KICKER1	PY	.002	.002	0	0
46	RAIL3	PY	.003	.003	0	0
47	RAIL1	PY	.003	.003	0	0
48	RAIL2	PY	.001	.001	0	0
49	FACE3	PY	.003	.003	0	0
50	FACE1	PY	.003	.003	0	0
51	FACE2	PY	.002	.002	0	0
52	CR3B	PY	.002	.002	0	0
53	CR3A	PY	.002	.002	0	0
54	CR2B	PY	.002	.002	0	0
55	CR2A	PY	.002	.002	0	0
56	CR1B	PY	.002	.002	0	0
57	CR1A	PY	.002	.002	0	0

Member Distributed Loads (BLC 33 : Ice Wind Load (150)) (Continued)

	Member Label	Direction	Start Magnitude[k/ft,...	End Magnitude[k/ft,F...	Start Location[ft,%]	End Location[ft,%]
58	ANGLE3	PY	.002	.002	0	0
59	ANGLE2	PY	.002	.002	0	0
60	ANGLE1	PY	.002	.002	0	0
61	SUP3B	PX	-.001	-.001	0	0
62	SUP3A	PX	-.001	-.001	0	0
63	SUP2B	PX	-.001	-.001	0	0
64	SUP2A	PX	-.001	-.001	0	0
65	SUP1B	PX	-.001	-.001	0	0
66	SUP1A	PX	-.001	-.001	0	0
67	SO3	PX	-.001	-.001	0	0
68	SO2	PX	-.001	-.001	0	0
69	SO1	PX	-.001	-.001	0	0
70	PLATECORNER3C	PX	-.002	-.002	0	0
71	PLATECORNER3B	PX	-.002	-.002	0	0
72	PLATECORNER3A	PX	-.002	-.002	0	0
73	PLATECORNER2C	PX	-.002	-.002	0	0
74	PLATECORNER2B	PX	-.002	-.002	0	0
75	PLATECORNER2A	PX	-.002	-.002	0	0
76	PLATECORNER1C	PX	-.002	-.002	0	0
77	PLATECORNER1B	PX	-.002	-.002	0	0
78	PLATECORNER1A	PX	-.002	-.002	0	0
79	PLATE12	PX	-.002	-.002	0	0
80	PLATE11	PX	-.002	-.002	0	0
81	PLATE10	PX	-.002	-.002	0	0
82	PLATE9	PX	-.002	-.002	0	0
83	PLATE8	PX	-.002	-.002	0	0
84	PLATE7	PX	-.002	-.002	0	0
85	PLATE6	PX	-.002	-.002	0	0
86	PLATE5	PX	-.002	-.002	0	0
87	PLATE4	PX	-.002	-.002	0	0
88	PLATE3	PX	-.002	-.002	0	0
89	PLATE2	PX	-.002	-.002	0	0
90	PLATE1	PX	-.002	-.002	0	0
91	MP GAMMA4	PX	-.002	-.002	0	0
92	MP GAMMA3	PX	-.002	-.002	0	0
93	MP GAMMA2	PX	-.002	-.002	0	0
94	MP GAMMA1	PX	-.002	-.002	0	0
95	MP BETA4	PX	-.002	-.002	0	0
96	MP BETA3	PX	-.002	-.002	0	0
97	MP BETA2	PX	-.002	-.002	0	0
98	MP BETA1	PX	-.002	-.002	0	0
99	MP ALPHA4	PX	-.002	-.002	0	0
100	MP ALPHA3	PX	-.002	-.002	0	0
101	MP ALPHA2	PX	-.002	-.002	0	0
102	MP ALPHA1	PX	-.002	-.002	0	0
103	KICKER3	PX	-.001	-.001	0	0
104	KICKER2	PX	-.001	-.001	0	0
105	KICKER1	PX	-.001	-.001	0	0
106	RAIL3	PX	-.002	-.002	0	0
107	RAIL1	PX	-.002	-.002	0	0
108	RAIL2	PX	-.000758	-.000758	0	0
109	FACE3	PX	-.002	-.002	0	0
110	FACE1	PX	-.002	-.002	0	0
111	FACE2	PX	-.000907	-.000907	0	0
112	CR3B	PX	-.001	-.001	0	0
113	CR3A	PX	-.001	-.001	0	0
114	CR2B	PX	-.001	-.001	0	0

Member Distributed Loads (BLC 33 : Ice Wind Load (150)) (Continued)

	Member Label	Direction	Start Magnitude[k/ft,...	End Magnitude[k/ft,F...	Start Location[ft,%]	End Location[ft,%]
115	CR2A	PX	-.001	-.001	0	0
116	CR1B	PX	-.001	-.001	0	0
117	CR1A	PX	-.001	-.001	0	0
118	ANGLE3	PX	-.001	-.001	0	0
119	ANGLE2	PX	-.001	-.001	0	0
120	ANGLE1	PX	-.001	-.001	0	0

Member Distributed Loads (BLC 34 : Ice Wind Load (180))

	Member Label	Direction	Start Magnitude[k/ft,...	End Magnitude[k/ft,F...	Start Location[ft,%]	End Location[ft,%]
1	SUP3B	PY	.002	.002	0	0
2	SUP3A	PY	.002	.002	0	0
3	SUP2B	PY	.002	.002	0	0
4	SUP2A	PY	.002	.002	0	0
5	SUP1B	PY	.002	.002	0	0
6	SUP1A	PY	.002	.002	0	0
7	SO3	PY	.002	.002	0	0
8	SO2	PY	.002	.002	0	0
9	SO1	PY	.002	.002	0	0
10	PLATECORNER3C	PY	.004	.004	0	0
11	PLATECORNER3B	PY	.004	.004	0	0
12	PLATECORNER3A	PY	.004	.004	0	0
13	PLATECORNER2C	PY	.004	.004	0	0
14	PLATECORNER2B	PY	.004	.004	0	0
15	PLATECORNER2A	PY	.004	.004	0	0
16	PLATECORNER1C	PY	.004	.004	0	0
17	PLATECORNER1B	PY	.004	.004	0	0
18	PLATECORNER1A	PY	.004	.004	0	0
19	PLATE12	PY	.004	.004	0	0
20	PLATE11	PY	.004	.004	0	0
21	PLATE10	PY	.004	.004	0	0
22	PLATE9	PY	.004	.004	0	0
23	PLATE8	PY	.004	.004	0	0
24	PLATE7	PY	.004	.004	0	0
25	PLATE6	PY	.004	.004	0	0
26	PLATE5	PY	.004	.004	0	0
27	PLATE4	PY	.004	.004	0	0
28	PLATE3	PY	.004	.004	0	0
29	PLATE2	PY	.004	.004	0	0
30	PLATE1	PY	.004	.004	0	0
31	MP GAMMA4	PY	.004	.004	0	0
32	MP GAMMA3	PY	.004	.004	0	0
33	MP GAMMA2	PY	.004	.004	0	0
34	MP GAMMA1	PY	.004	.004	0	0
35	MP BETA4	PY	.004	.004	0	0
36	MP BETA3	PY	.004	.004	0	0
37	MP BETA2	PY	.004	.004	0	0
38	MP BETA1	PY	.004	.004	0	0
39	MP ALPHA4	PY	.004	.004	0	0
40	MP ALPHA3	PY	.004	.004	0	0
41	MP ALPHA2	PY	.004	.004	0	0
42	MP ALPHA1	PY	.004	.004	0	0
43	KICKER3	PY	.003	.003	0	0
44	KICKER2	PY	.003	.003	0	0
45	KICKER1	PY	.003	.003	0	0
46	RAIL3	PY	.003	.003	0	0
47	RAIL1	PY	.003	.003	0	0

Member Distributed Loads (BLC 34 : Ice Wind Load (180)) (Continued)

	Member Label	Direction	Start Magnitude[k/ft,...	End Magnitude[k/ft,F...	Start Location[ft,%]	End Location[ft,%]
48	RAIL2	PY	.002	.002	0	0
49	FACE3	PY	.004	.004	0	0
50	FACE1	PY	.004	.004	0	0
51	FACE2	PY	.002	.002	0	0
52	CR3B	PY	.002	.002	0	0
53	CR3A	PY	.002	.002	0	0
54	CR2B	PY	.002	.002	0	0
55	CR2A	PY	.002	.002	0	0
56	CR1B	PY	.002	.002	0	0
57	CR1A	PY	.002	.002	0	0
58	ANGLE3	PY	.003	.003	0	0
59	ANGLE2	PY	.003	.003	0	0
60	ANGLE1	PY	.003	.003	0	0

Member Distributed Loads (BLC 35 : Ice Wind Load (210))

	Member Label	Direction	Start Magnitude[k/ft,...	End Magnitude[k/ft,F...	Start Location[ft,%]	End Location[ft,%]
1	SUP3B	PY	.002	.002	0	0
2	SUP3A	PY	.002	.002	0	0
3	SUP2B	PY	.002	.002	0	0
4	SUP2A	PY	.002	.002	0	0
5	SUP1B	PY	.002	.002	0	0
6	SUP1A	PY	.002	.002	0	0
7	SO3	PY	.002	.002	0	0
8	SO2	PY	.002	.002	0	0
9	SO1	PY	.002	.002	0	0
10	PLATECORNER3C	PY	.004	.004	0	0
11	PLATECORNER3B	PY	.004	.004	0	0
12	PLATECORNER3A	PY	.004	.004	0	0
13	PLATECORNER2C	PY	.004	.004	0	0
14	PLATECORNER2B	PY	.004	.004	0	0
15	PLATECORNER2A	PY	.004	.004	0	0
16	PLATECORNER1C	PY	.004	.004	0	0
17	PLATECORNER1B	PY	.004	.004	0	0
18	PLATECORNER1A	PY	.004	.004	0	0
19	PLATE12	PY	.004	.004	0	0
20	PLATE11	PY	.004	.004	0	0
21	PLATE10	PY	.004	.004	0	0
22	PLATE9	PY	.004	.004	0	0
23	PLATE8	PY	.004	.004	0	0
24	PLATE7	PY	.004	.004	0	0
25	PLATE6	PY	.004	.004	0	0
26	PLATE5	PY	.004	.004	0	0
27	PLATE4	PY	.004	.004	0	0
28	PLATE3	PY	.004	.004	0	0
29	PLATE2	PY	.004	.004	0	0
30	PLATE1	PY	.004	.004	0	0
31	MP GAMMA4	PY	.003	.003	0	0
32	MP GAMMA3	PY	.003	.003	0	0
33	MP GAMMA2	PY	.003	.003	0	0
34	MP GAMMA1	PY	.003	.003	0	0
35	MP BETA4	PY	.003	.003	0	0
36	MP BETA3	PY	.003	.003	0	0
37	MP BETA2	PY	.003	.003	0	0
38	MP BETA1	PY	.003	.003	0	0
39	MP ALPHA4	PY	.003	.003	0	0
40	MP ALPHA3	PY	.003	.003	0	0

Member Distributed Loads (BLC 35 : Ice Wind Load (210)) (Continued)

	Member Label	Direction	Start Magnitude[k/ft,...	End Magnitude[k/ft,F...	Start Location[ft,%]	End Location[ft,%]
41	MP ALPHA2	PY	.003	.003	0	0
42	MP ALPHA1	PY	.003	.003	0	0
43	KICKER3	PY	.002	.002	0	0
44	KICKER2	PY	.002	.002	0	0
45	KICKER1	PY	.002	.002	0	0
46	RAIL1	PY	.003	.003	0	0
47	RAIL2	PY	.003	.003	0	0
48	RAIL3	PY	.001	.001	0	0
49	FACE1	PY	.003	.003	0	0
50	FACE2	PY	.003	.003	0	0
51	FACE3	PY	.002	.002	0	0
52	CR3B	PY	.002	.002	0	0
53	CR3A	PY	.002	.002	0	0
54	CR2B	PY	.002	.002	0	0
55	CR2A	PY	.002	.002	0	0
56	CR1B	PY	.002	.002	0	0
57	CR1A	PY	.002	.002	0	0
58	ANGLE3	PY	.002	.002	0	0
59	ANGLE2	PY	.002	.002	0	0
60	ANGLE1	PY	.002	.002	0	0
61	SUP3B	PX	.001	.001	0	0
62	SUP3A	PX	.001	.001	0	0
63	SUP2B	PX	.001	.001	0	0
64	SUP2A	PX	.001	.001	0	0
65	SUP1B	PX	.001	.001	0	0
66	SUP1A	PX	.001	.001	0	0
67	SO3	PX	.001	.001	0	0
68	SO2	PX	.001	.001	0	0
69	SO1	PX	.001	.001	0	0
70	PLATECORNER3C	PX	.002	.002	0	0
71	PLATECORNER3B	PX	.002	.002	0	0
72	PLATECORNER3A	PX	.002	.002	0	0
73	PLATECORNER2C	PX	.002	.002	0	0
74	PLATECORNER2B	PX	.002	.002	0	0
75	PLATECORNER2A	PX	.002	.002	0	0
76	PLATECORNER1C	PX	.002	.002	0	0
77	PLATECORNER1B	PX	.002	.002	0	0
78	PLATECORNER1A	PX	.002	.002	0	0
79	PLATE12	PX	.002	.002	0	0
80	PLATE11	PX	.002	.002	0	0
81	PLATE10	PX	.002	.002	0	0
82	PLATE9	PX	.002	.002	0	0
83	PLATE8	PX	.002	.002	0	0
84	PLATE7	PX	.002	.002	0	0
85	PLATE6	PX	.002	.002	0	0
86	PLATE5	PX	.002	.002	0	0
87	PLATE4	PX	.002	.002	0	0
88	PLATE3	PX	.002	.002	0	0
89	PLATE2	PX	.002	.002	0	0
90	PLATE1	PX	.002	.002	0	0
91	MP GAMMA4	PX	.002	.002	0	0
92	MP GAMMA3	PX	.002	.002	0	0
93	MP GAMMA2	PX	.002	.002	0	0
94	MP GAMMA1	PX	.002	.002	0	0
95	MP BETA4	PX	.002	.002	0	0
96	MP BETA3	PX	.002	.002	0	0
97	MP BETA2	PX	.002	.002	0	0

Member Distributed Loads (BLC 35 : Ice Wind Load (210)) (Continued)

	Member Label	Direction	Start Magnitude[k/ft,...	End Magnitude[k/ft,F...	Start Location[ft,%]	End Location[ft,%]
98	MP BETA1	PX	.002	.002	0	0
99	MP ALPHA4	PX	.002	.002	0	0
100	MP ALPHA3	PX	.002	.002	0	0
101	MP ALPHA2	PX	.002	.002	0	0
102	MP ALPHA1	PX	.002	.002	0	0
103	KICKER3	PX	.001	.001	0	0
104	KICKER2	PX	.001	.001	0	0
105	KICKER1	PX	.001	.001	0	0
106	RAIL1	PX	.002	.002	0	0
107	RAIL2	PX	.002	.002	0	0
108	RAIL3	PX	.000758	.000758	0	0
109	FACE1	PX	.002	.002	0	0
110	FACE2	PX	.002	.002	0	0
111	FACE3	PX	.000907	.000907	0	0
112	CR3B	PX	.001	.001	0	0
113	CR3A	PX	.001	.001	0	0
114	CR2B	PX	.001	.001	0	0
115	CR2A	PX	.001	.001	0	0
116	CR1B	PX	.001	.001	0	0
117	CR1A	PX	.001	.001	0	0
118	ANGLE3	PX	.001	.001	0	0
119	ANGLE2	PX	.001	.001	0	0
120	ANGLE1	PX	.001	.001	0	0

Member Distributed Loads (BLC 36 : Ice Wind Load (240))

	Member Label	Direction	Start Magnitude[k/ft,...	End Magnitude[k/ft,F...	Start Location[ft,%]	End Location[ft,%]
1	SUP3B	PY	.001	.001	0	0
2	SUP3A	PY	.001	.001	0	0
3	SUP2B	PY	.001	.001	0	0
4	SUP2A	PY	.001	.001	0	0
5	SUP1B	PY	.001	.001	0	0
6	SUP1A	PY	.001	.001	0	0
7	SO3	PY	.001	.001	0	0
8	SO2	PY	.001	.001	0	0
9	SO1	PY	.001	.001	0	0
10	PLATECORNER3C	PY	.002	.002	0	0
11	PLATECORNER3B	PY	.002	.002	0	0
12	PLATECORNER3A	PY	.002	.002	0	0
13	PLATECORNER2C	PY	.002	.002	0	0
14	PLATECORNER2B	PY	.002	.002	0	0
15	PLATECORNER2A	PY	.002	.002	0	0
16	PLATECORNER1C	PY	.002	.002	0	0
17	PLATECORNER1B	PY	.002	.002	0	0
18	PLATECORNER1A	PY	.002	.002	0	0
19	PLATE12	PY	.002	.002	0	0
20	PLATE11	PY	.002	.002	0	0
21	PLATE10	PY	.002	.002	0	0
22	PLATE9	PY	.002	.002	0	0
23	PLATE8	PY	.002	.002	0	0
24	PLATE7	PY	.002	.002	0	0
25	PLATE6	PY	.002	.002	0	0
26	PLATE5	PY	.002	.002	0	0
27	PLATE4	PY	.002	.002	0	0
28	PLATE3	PY	.002	.002	0	0
29	PLATE2	PY	.002	.002	0	0
30	PLATE1	PY	.002	.002	0	0

Member Distributed Loads (BLC 36 : Ice Wind Load (240)) (Continued)

	Member Label	Direction	Start Magnitude[k/ft,...	End Magnitude[k/ft,F...	Start Location[ft,%]	End Location[ft,%]
31	MP GAMMA4	PY	.002	.002	0	0
32	MP GAMMA3	PY	.002	.002	0	0
33	MP GAMMA2	PY	.002	.002	0	0
34	MP GAMMA1	PY	.002	.002	0	0
35	MP BETA4	PY	.002	.002	0	0
36	MP BETA3	PY	.002	.002	0	0
37	MP BETA2	PY	.002	.002	0	0
38	MP BETA1	PY	.002	.002	0	0
39	MP ALPHA4	PY	.002	.002	0	0
40	MP ALPHA3	PY	.002	.002	0	0
41	MP ALPHA2	PY	.002	.002	0	0
42	MP ALPHA1	PY	.002	.002	0	0
43	KICKER3	PY	.001	.001	0	0
44	KICKER2	PY	.001	.001	0	0
45	KICKER1	PY	.001	.001	0	0
46	RAIL1	PY	.002	.002	0	0
47	RAIL2	PY	.002	.002	0	0
48	RAIL3	PY	.000758	.000758	0	0
49	FACE1	PY	.002	.002	0	0
50	FACE2	PY	.002	.002	0	0
51	FACE3	PY	.000907	.000907	0	0
52	CR3B	PY	.001	.001	0	0
53	CR3A	PY	.001	.001	0	0
54	CR2B	PY	.001	.001	0	0
55	CR2A	PY	.001	.001	0	0
56	CR1B	PY	.001	.001	0	0
57	CR1A	PY	.001	.001	0	0
58	ANGLE3	PY	.001	.001	0	0
59	ANGLE2	PY	.001	.001	0	0
60	ANGLE1	PY	.001	.001	0	0
61	SUP3B	PX	.002	.002	0	0
62	SUP3A	PX	.002	.002	0	0
63	SUP2B	PX	.002	.002	0	0
64	SUP2A	PX	.002	.002	0	0
65	SUP1B	PX	.002	.002	0	0
66	SUP1A	PX	.002	.002	0	0
67	SO3	PX	.002	.002	0	0
68	SO2	PX	.002	.002	0	0
69	SO1	PX	.002	.002	0	0
70	PLATECORNER3C	PX	.004	.004	0	0
71	PLATECORNER3B	PX	.004	.004	0	0
72	PLATECORNER3A	PX	.004	.004	0	0
73	PLATECORNER2C	PX	.004	.004	0	0
74	PLATECORNER2B	PX	.004	.004	0	0
75	PLATECORNER2A	PX	.004	.004	0	0
76	PLATECORNER1C	PX	.004	.004	0	0
77	PLATECORNER1B	PX	.004	.004	0	0
78	PLATECORNER1A	PX	.004	.004	0	0
79	PLATE12	PX	.004	.004	0	0
80	PLATE11	PX	.004	.004	0	0
81	PLATE10	PX	.004	.004	0	0
82	PLATE9	PX	.004	.004	0	0
83	PLATE8	PX	.004	.004	0	0
84	PLATE7	PX	.004	.004	0	0
85	PLATE6	PX	.004	.004	0	0
86	PLATE5	PX	.004	.004	0	0
87	PLATE4	PX	.004	.004	0	0

Member Distributed Loads (BLC 36 : Ice Wind Load (240)) (Continued)

	Member Label	Direction	Start Magnitude[k/ft,...	End Magnitude[k/ft,F...	Start Location[ft,%]	End Location[ft,%]
88	PLATE3	PX	.004	.004	0	0
89	PLATE2	PX	.004	.004	0	0
90	PLATE1	PX	.004	.004	0	0
91	MP GAMMA4	PX	.003	.003	0	0
92	MP GAMMA3	PX	.003	.003	0	0
93	MP GAMMA2	PX	.003	.003	0	0
94	MP GAMMA1	PX	.003	.003	0	0
95	MP BETA4	PX	.003	.003	0	0
96	MP BETA3	PX	.003	.003	0	0
97	MP BETA2	PX	.003	.003	0	0
98	MP BETA1	PX	.003	.003	0	0
99	MP ALPHA4	PX	.003	.003	0	0
100	MP ALPHA3	PX	.003	.003	0	0
101	MP ALPHA2	PX	.003	.003	0	0
102	MP ALPHA1	PX	.003	.003	0	0
103	KICKER3	PX	.002	.002	0	0
104	KICKER2	PX	.002	.002	0	0
105	KICKER1	PX	.002	.002	0	0
106	RAIL1	PX	.003	.003	0	0
107	RAIL2	PX	.003	.003	0	0
108	RAIL3	PX	.001	.001	0	0
109	FACE1	PX	.003	.003	0	0
110	FACE2	PX	.003	.003	0	0
111	FACE3	PX	.002	.002	0	0
112	CR3B	PX	.002	.002	0	0
113	CR3A	PX	.002	.002	0	0
114	CR2B	PX	.002	.002	0	0
115	CR2A	PX	.002	.002	0	0
116	CR1B	PX	.002	.002	0	0
117	CR1A	PX	.002	.002	0	0
118	ANGLE3	PX	.002	.002	0	0
119	ANGLE2	PX	.002	.002	0	0
120	ANGLE1	PX	.002	.002	0	0

Member Distributed Loads (BLC 37 : Ice Wind Load (270))

	Member Label	Direction	Start Magnitude[k/ft,...	End Magnitude[k/ft,F...	Start Location[ft,%]	End Location[ft,%]
1	SUP3B	PX	.002	.002	0	0
2	SUP3A	PX	.002	.002	0	0
3	SUP2B	PX	.002	.002	0	0
4	SUP2A	PX	.002	.002	0	0
5	SUP1B	PX	.002	.002	0	0
6	SUP1A	PX	.002	.002	0	0
7	SO3	PX	.002	.002	0	0
8	SO2	PX	.002	.002	0	0
9	SO1	PX	.002	.002	0	0
10	PLATECORNER3C	PX	.004	.004	0	0
11	PLATECORNER3B	PX	.004	.004	0	0
12	PLATECORNER3A	PX	.004	.004	0	0
13	PLATECORNER2C	PX	.004	.004	0	0
14	PLATECORNER2B	PX	.004	.004	0	0
15	PLATECORNER2A	PX	.004	.004	0	0
16	PLATECORNER1C	PX	.004	.004	0	0
17	PLATECORNER1B	PX	.004	.004	0	0
18	PLATECORNER1A	PX	.004	.004	0	0
19	PLATE12	PX	.004	.004	0	0
20	PLATE11	PX	.004	.004	0	0

Member Distributed Loads (BLC 37 : Ice Wind Load (270)) (Continued)

	Member Label	Direction	Start Magnitude[k/ft,...	End Magnitude[k/ft,F...	Start Location[ft,%]	End Location[ft,%]
21	PLATE10	PX	.004	.004	0	0
22	PLATE9	PX	.004	.004	0	0
23	PLATE8	PX	.004	.004	0	0
24	PLATE7	PX	.004	.004	0	0
25	PLATE6	PX	.004	.004	0	0
26	PLATE5	PX	.004	.004	0	0
27	PLATE4	PX	.004	.004	0	0
28	PLATE3	PX	.004	.004	0	0
29	PLATE2	PX	.004	.004	0	0
30	PLATE1	PX	.004	.004	0	0
31	MP GAMMA4	PX	.004	.004	0	0
32	MP GAMMA3	PX	.004	.004	0	0
33	MP GAMMA2	PX	.004	.004	0	0
34	MP GAMMA1	PX	.004	.004	0	0
35	MP BETA4	PX	.004	.004	0	0
36	MP BETA3	PX	.004	.004	0	0
37	MP BETA2	PX	.004	.004	0	0
38	MP BETA1	PX	.004	.004	0	0
39	MP ALPHA4	PX	.004	.004	0	0
40	MP ALPHA3	PX	.004	.004	0	0
41	MP ALPHA2	PX	.004	.004	0	0
42	MP ALPHA1	PX	.004	.004	0	0
43	KICKER3	PX	.003	.003	0	0
44	KICKER2	PX	.003	.003	0	0
45	KICKER1	PX	.003	.003	0	0
46	RAIL1	PX	.003	.003	0	0
47	RAIL2	PX	.003	.003	0	0
48	RAIL3	PX	.002	.002	0	0
49	FACE1	PX	.004	.004	0	0
50	FACE2	PX	.004	.004	0	0
51	FACE3	PX	.002	.002	0	0
52	CR3B	PX	.002	.002	0	0
53	CR3A	PX	.002	.002	0	0
54	CR2B	PX	.002	.002	0	0
55	CR2A	PX	.002	.002	0	0
56	CR1B	PX	.002	.002	0	0
57	CR1A	PX	.002	.002	0	0
58	ANGLE3	PX	.003	.003	0	0
59	ANGLE2	PX	.003	.003	0	0
60	ANGLE1	PX	.003	.003	0	0

Member Distributed Loads (BLC 38 : Ice Wind Load (300))

	Member Label	Direction	Start Magnitude[k/ft,...	End Magnitude[k/ft,F...	Start Location[ft,%]	End Location[ft,%]
1	SUP3B	PY	-.001	-.001	0	0
2	SUP3A	PY	-.001	-.001	0	0
3	SUP2B	PY	-.001	-.001	0	0
4	SUP2A	PY	-.001	-.001	0	0
5	SUP1B	PY	-.001	-.001	0	0
6	SUP1A	PY	-.001	-.001	0	0
7	SO3	PY	-.001	-.001	0	0
8	SO2	PY	-.001	-.001	0	0
9	SO1	PY	-.001	-.001	0	0
10	PLATECORNER3C	PY	-.002	-.002	0	0
11	PLATECORNER3B	PY	-.002	-.002	0	0
12	PLATECORNER3A	PY	-.002	-.002	0	0
13	PLATECORNER2C	PY	-.002	-.002	0	0

Member Distributed Loads (BLC 38 : Ice Wind Load (300)) (Continued)

	Member Label	Direction	Start Magnitude[k/ft,...	End Magnitude[k/ft,F...	Start Location[ft,%]	End Location[ft,%]
14	PLATECORNER2B	PY	-.002	-.002	0	0
15	PLATECORNER2A	PY	-.002	-.002	0	0
16	PLATECORNER1C	PY	-.002	-.002	0	0
17	PLATECORNER1B	PY	-.002	-.002	0	0
18	PLATECORNER1A	PY	-.002	-.002	0	0
19	PLATE12	PY	-.002	-.002	0	0
20	PLATE11	PY	-.002	-.002	0	0
21	PLATE10	PY	-.002	-.002	0	0
22	PLATE9	PY	-.002	-.002	0	0
23	PLATE8	PY	-.002	-.002	0	0
24	PLATE7	PY	-.002	-.002	0	0
25	PLATE6	PY	-.002	-.002	0	0
26	PLATE5	PY	-.002	-.002	0	0
27	PLATE4	PY	-.002	-.002	0	0
28	PLATE3	PY	-.002	-.002	0	0
29	PLATE2	PY	-.002	-.002	0	0
30	PLATE1	PY	-.002	-.002	0	0
31	MP GAMMA4	PY	-.002	-.002	0	0
32	MP GAMMA3	PY	-.002	-.002	0	0
33	MP GAMMA2	PY	-.002	-.002	0	0
34	MP GAMMA1	PY	-.002	-.002	0	0
35	MP BETA4	PY	-.002	-.002	0	0
36	MP BETA3	PY	-.002	-.002	0	0
37	MP BETA2	PY	-.002	-.002	0	0
38	MP BETA1	PY	-.002	-.002	0	0
39	MP ALPHA4	PY	-.002	-.002	0	0
40	MP ALPHA3	PY	-.002	-.002	0	0
41	MP ALPHA2	PY	-.002	-.002	0	0
42	MP ALPHA1	PY	-.002	-.002	0	0
43	KICKER3	PY	-.001	-.001	0	0
44	KICKER2	PY	-.001	-.001	0	0
45	KICKER1	PY	-.001	-.001	0	0
46	RAIL1	PY	-.002	-.002	0	0
47	RAIL2	PY	-.002	-.002	0	0
48	RAIL3	PY	-.000758	-.000758	0	0
49	FACE1	PY	-.002	-.002	0	0
50	FACE2	PY	-.002	-.002	0	0
51	FACE3	PY	-.000907	-.000907	0	0
52	CR3B	PY	-.001	-.001	0	0
53	CR3A	PY	-.001	-.001	0	0
54	CR2B	PY	-.001	-.001	0	0
55	CR2A	PY	-.001	-.001	0	0
56	CR1B	PY	-.001	-.001	0	0
57	CR1A	PY	-.001	-.001	0	0
58	ANGLE3	PY	-.001	-.001	0	0
59	ANGLE2	PY	-.001	-.001	0	0
60	ANGLE1	PY	-.001	-.001	0	0
61	SUP3B	PX	.002	.002	0	0
62	SUP3A	PX	.002	.002	0	0
63	SUP2B	PX	.002	.002	0	0
64	SUP2A	PX	.002	.002	0	0
65	SUP1B	PX	.002	.002	0	0
66	SUP1A	PX	.002	.002	0	0
67	SO3	PX	.002	.002	0	0
68	SO2	PX	.002	.002	0	0
69	SO1	PX	.002	.002	0	0
70	PLATECORNER3C	PX	.004	.004	0	0

Member Distributed Loads (BLC 38 : Ice Wind Load (300)) (Continued)

	Member Label	Direction	Start Magnitude[k/ft,...	End Magnitude[k/ft,F...	Start Location[ft,%]	End Location[ft,%]
71	PLATECORNER3B	PX	.004	.004	0	0
72	PLATECORNER3A	PX	.004	.004	0	0
73	PLATECORNER2C	PX	.004	.004	0	0
74	PLATECORNER2B	PX	.004	.004	0	0
75	PLATECORNER2A	PX	.004	.004	0	0
76	PLATECORNER1C	PX	.004	.004	0	0
77	PLATECORNER1B	PX	.004	.004	0	0
78	PLATECORNER1A	PX	.004	.004	0	0
79	PLATE12	PX	.004	.004	0	0
80	PLATE11	PX	.004	.004	0	0
81	PLATE10	PX	.004	.004	0	0
82	PLATE9	PX	.004	.004	0	0
83	PLATE8	PX	.004	.004	0	0
84	PLATE7	PX	.004	.004	0	0
85	PLATE6	PX	.004	.004	0	0
86	PLATE5	PX	.004	.004	0	0
87	PLATE4	PX	.004	.004	0	0
88	PLATE3	PX	.004	.004	0	0
89	PLATE2	PX	.004	.004	0	0
90	PLATE1	PX	.004	.004	0	0
91	MP GAMMA4	PX	.003	.003	0	0
92	MP GAMMA3	PX	.003	.003	0	0
93	MP GAMMA2	PX	.003	.003	0	0
94	MP GAMMA1	PX	.003	.003	0	0
95	MP BETA4	PX	.003	.003	0	0
96	MP BETA3	PX	.003	.003	0	0
97	MP BETA2	PX	.003	.003	0	0
98	MP BETA1	PX	.003	.003	0	0
99	MP ALPHA4	PX	.003	.003	0	0
100	MP ALPHA3	PX	.003	.003	0	0
101	MP ALPHA2	PX	.003	.003	0	0
102	MP ALPHA1	PX	.003	.003	0	0
103	KICKER3	PX	.002	.002	0	0
104	KICKER2	PX	.002	.002	0	0
105	KICKER1	PX	.002	.002	0	0
106	RAIL1	PX	.003	.003	0	0
107	RAIL2	PX	.003	.003	0	0
108	RAIL3	PX	.001	.001	0	0
109	FACE1	PX	.003	.003	0	0
110	FACE2	PX	.003	.003	0	0
111	FACE3	PX	.002	.002	0	0
112	CR3B	PX	.002	.002	0	0
113	CR3A	PX	.002	.002	0	0
114	CR2B	PX	.002	.002	0	0
115	CR2A	PX	.002	.002	0	0
116	CR1B	PX	.002	.002	0	0
117	CR1A	PX	.002	.002	0	0
118	ANGLE3	PX	.002	.002	0	0
119	ANGLE2	PX	.002	.002	0	0
120	ANGLE1	PX	.002	.002	0	0

Member Distributed Loads (BLC 39 : Ice Wind Load (330))

	Member Label	Direction	Start Magnitude[k/ft,...	End Magnitude[k/ft,F...	Start Location[ft,%]	End Location[ft,%]
1	SUP3B	PY	-.002	-.002	0	0
2	SUP3A	PY	-.002	-.002	0	0
3	SUP2B	PY	-.002	-.002	0	0

Member Distributed Loads (BLC 39 : Ice Wind Load (330)) (Continued)

	Member Label	Direction	Start Magnitude[k/ft,...	End Magnitude[k/ft,F...	Start Location[ft,%]	End Location[ft,%]
4	SUP2A	PY	-.002	-.002	0	0
5	SUP1B	PY	-.002	-.002	0	0
6	SUP1A	PY	-.002	-.002	0	0
7	SO3	PY	-.002	-.002	0	0
8	SO2	PY	-.002	-.002	0	0
9	SO1	PY	-.002	-.002	0	0
10	PLATECORNER3C	PY	-.004	-.004	0	0
11	PLATECORNER3B	PY	-.004	-.004	0	0
12	PLATECORNER3A	PY	-.004	-.004	0	0
13	PLATECORNER2C	PY	-.004	-.004	0	0
14	PLATECORNER2B	PY	-.004	-.004	0	0
15	PLATECORNER2A	PY	-.004	-.004	0	0
16	PLATECORNER1C	PY	-.004	-.004	0	0
17	PLATECORNER1B	PY	-.004	-.004	0	0
18	PLATECORNER1A	PY	-.004	-.004	0	0
19	PLATE12	PY	-.004	-.004	0	0
20	PLATE11	PY	-.004	-.004	0	0
21	PLATE10	PY	-.004	-.004	0	0
22	PLATE9	PY	-.004	-.004	0	0
23	PLATE8	PY	-.004	-.004	0	0
24	PLATE7	PY	-.004	-.004	0	0
25	PLATE6	PY	-.004	-.004	0	0
26	PLATE5	PY	-.004	-.004	0	0
27	PLATE4	PY	-.004	-.004	0	0
28	PLATE3	PY	-.004	-.004	0	0
29	PLATE2	PY	-.004	-.004	0	0
30	PLATE1	PY	-.004	-.004	0	0
31	MP GAMMA4	PY	-.003	-.003	0	0
32	MP GAMMA3	PY	-.003	-.003	0	0
33	MP GAMMA2	PY	-.003	-.003	0	0
34	MP GAMMA1	PY	-.003	-.003	0	0
35	MP BETA4	PY	-.003	-.003	0	0
36	MP BETA3	PY	-.003	-.003	0	0
37	MP BETA2	PY	-.003	-.003	0	0
38	MP BETA1	PY	-.003	-.003	0	0
39	MP ALPHA4	PY	-.003	-.003	0	0
40	MP ALPHA3	PY	-.003	-.003	0	0
41	MP ALPHA2	PY	-.003	-.003	0	0
42	MP ALPHA1	PY	-.003	-.003	0	0
43	KICKER3	PY	-.002	-.002	0	0
44	KICKER2	PY	-.002	-.002	0	0
45	KICKER1	PY	-.002	-.002	0	0
46	RAIL3	PY	-.003	-.003	0	0
47	RAIL2	PY	-.003	-.003	0	0
48	RAIL1	PY	-.001	-.001	0	0
49	FACE3	PY	-.003	-.003	0	0
50	FACE2	PY	-.003	-.003	0	0
51	FACE1	PY	-.002	-.002	0	0
52	CR3B	PY	-.002	-.002	0	0
53	CR3A	PY	-.002	-.002	0	0
54	CR2B	PY	-.002	-.002	0	0
55	CR2A	PY	-.002	-.002	0	0
56	CR1B	PY	-.002	-.002	0	0
57	CR1A	PY	-.002	-.002	0	0
58	ANGLE3	PY	-.002	-.002	0	0
59	ANGLE2	PY	-.002	-.002	0	0
60	ANGLE1	PY	-.002	-.002	0	0

Member Distributed Loads (BLC 39 : Ice Wind Load (330)) (Continued)

	Member Label	Direction	Start Magnitude[k/ft,...	End Magnitude[k/ft,F...	Start Location[ft,%]	End Location[ft,%]
61	SUP3B	PX	.001	.001	0	0
62	SUP3A	PX	.001	.001	0	0
63	SUP2B	PX	.001	.001	0	0
64	SUP2A	PX	.001	.001	0	0
65	SUP1B	PX	.001	.001	0	0
66	SUP1A	PX	.001	.001	0	0
67	SO3	PX	.001	.001	0	0
68	SO2	PX	.001	.001	0	0
69	SO1	PX	.001	.001	0	0
70	PLATECORNER3C	PX	.002	.002	0	0
71	PLATECORNER3B	PX	.002	.002	0	0
72	PLATECORNER3A	PX	.002	.002	0	0
73	PLATECORNER2C	PX	.002	.002	0	0
74	PLATECORNER2B	PX	.002	.002	0	0
75	PLATECORNER2A	PX	.002	.002	0	0
76	PLATECORNER1C	PX	.002	.002	0	0
77	PLATECORNER1B	PX	.002	.002	0	0
78	PLATECORNER1A	PX	.002	.002	0	0
79	PLATE12	PX	.002	.002	0	0
80	PLATE11	PX	.002	.002	0	0
81	PLATE10	PX	.002	.002	0	0
82	PLATE9	PX	.002	.002	0	0
83	PLATE8	PX	.002	.002	0	0
84	PLATE7	PX	.002	.002	0	0
85	PLATE6	PX	.002	.002	0	0
86	PLATE5	PX	.002	.002	0	0
87	PLATE4	PX	.002	.002	0	0
88	PLATE3	PX	.002	.002	0	0
89	PLATE2	PX	.002	.002	0	0
90	PLATE1	PX	.002	.002	0	0
91	MP GAMMA4	PX	.002	.002	0	0
92	MP GAMMA3	PX	.002	.002	0	0
93	MP GAMMA2	PX	.002	.002	0	0
94	MP GAMMA1	PX	.002	.002	0	0
95	MP BETA4	PX	.002	.002	0	0
96	MP BETA3	PX	.002	.002	0	0
97	MP BETA2	PX	.002	.002	0	0
98	MP BETA1	PX	.002	.002	0	0
99	MP ALPHA4	PX	.002	.002	0	0
100	MP ALPHA3	PX	.002	.002	0	0
101	MP ALPHA2	PX	.002	.002	0	0
102	MP ALPHA1	PX	.002	.002	0	0
103	KICKER3	PX	.001	.001	0	0
104	KICKER2	PX	.001	.001	0	0
105	KICKER1	PX	.001	.001	0	0
106	RAIL3	PX	.002	.002	0	0
107	RAIL2	PX	.002	.002	0	0
108	RAIL1	PX	.000758	.000758	0	0
109	FACE3	PX	.002	.002	0	0
110	FACE2	PX	.002	.002	0	0
111	FACE1	PX	.000907	.000907	0	0
112	CR3B	PX	.001	.001	0	0
113	CR3A	PX	.001	.001	0	0
114	CR2B	PX	.001	.001	0	0
115	CR2A	PX	.001	.001	0	0
116	CR1B	PX	.001	.001	0	0
117	CR1A	PX	.001	.001	0	0

Member Distributed Loads (BLC 39 : Ice Wind Load (330)) (Continued)

	Member Label	Direction	Start Magnitude[k/ft,...	End Magnitude[k/ft,F...	Start Location[ft,%]	End Location[ft,%]
118	ANGLE3	PX	.001	.001	0	0
119	ANGLE2	PX	.001	.001	0	0
120	ANGLE1	PX	.001	.001	0	0

Member Distributed Loads (BLC 43 : BLC 3 Transient Area Loads)

	Member Label	Direction	Start Magnitude[k/ft,...	End Magnitude[k/ft,F...	Start Location[ft,%]	End Location[ft,%]
1	SUP1B	Z	-.002	-.011	0	1.347
2	SUP1B	Z	-.011	-.014	1.347	2.694
3	SUP1B	Z	-.014	-.009	2.694	4.041
4	SUP1A	Z	-.015	-.009	0	1.617
5	SUP1A	Z	-.009	-.003	1.617	3.233
6	SUP3B	Z	-.003	-.009	.808	2.425
7	SUP3B	Z	-.009	-.015	2.425	4.041
8	SUP3A	Z	-.009	-.014	0	1.347
9	SUP3A	Z	-.014	-.011	1.347	2.694
10	SUP3A	Z	-.011	-.002	2.694	4.041
11	SUP2B	Z	-.003	-.009	.808	2.425
12	SUP2B	Z	-.009	-.015	2.425	4.041
13	SUP2A	Z	-.002	-.011	0	1.347
14	SUP2A	Z	-.011	-.014	1.347	2.694
15	SUP2A	Z	-.014	-.009	2.694	4.041

Member Distributed Loads (BLC 44 : BLC 27 Transient Area Loads)

	Member Label	Direction	Start Magnitude[k/ft,...	End Magnitude[k/ft,F...	Start Location[ft,%]	End Location[ft,%]
1	SUP1B	Z	-.006	-.018	.808	2.425
2	SUP1B	Z	-.018	-.029	2.425	4.041
3	SUP1A	Z	-.017	-.026	0	1.347
4	SUP1A	Z	-.026	-.021	1.347	2.694
5	SUP1A	Z	-.021	-.004	2.694	4.041
6	SUP3B	Z	-.006	-.018	.808	2.425
7	SUP3B	Z	-.018	-.029	2.425	4.041
8	SUP3A	Z	-.017	-.026	0	1.347
9	SUP3A	Z	-.026	-.021	1.347	2.694
10	SUP3A	Z	-.021	-.004	2.694	4.041
11	SUP2B	Z	-.006	-.018	.808	2.425
12	SUP2B	Z	-.018	-.029	2.425	4.041
13	SUP2A	Z	-.004	-.021	0	1.347
14	SUP2A	Z	-.021	-.026	1.347	2.694
15	SUP2A	Z	-.026	-.017	2.694	4.041

Member Area Loads (BLC 3 : Dead Load)

	Joint A	Joint B	Joint C	Joint D	Direction	Distribution	Magnitude[ksf]
1	N89A	N87A	N90		Z	Two Way	-.01
2	N86A	N91	N88A		Z	Two Way	-.01
3	N87B	N89	N91A		Z	Two Way	-.01

Member Area Loads (BLC 27 : Ice Dead Load)

	Joint A	Joint B	Joint C	Joint D	Direction	Distribution	Magnitude[ksf]
1	N89A	N87A	N90		Z	Two Way	-.019
2	N86A	N91	N88A		Z	Two Way	-.019
3	N87B	N89	N91A		Z	Two Way	-.019

Envelope Joint Reactions

	Joint		X [k]	LC	Y [k]	LC	Z [k]	LC	MX [k-ft]	LC	MY [k-ft]	LC	MZ [k-ft]	LC
1	N21	max	1.716	11	3.261	2	1.352	3	1.623	3	1.066	11	1.96	29
2		min	-1.713	29	-5.936	20	.283	20	.319	20	-1.05	29	-1.968	11
3	N185B	max	5.186	8	3.045	5	1.353	27	.595	17	1.515	21	1.816	17
4		min	-2.85	26	-1.735	23	.283	8	-1.244	35	-.032	2	-1.825	35
5	N187B	max	2.745	14	3.304	35	1.354	15	.604	23	.045	2	1.817	5
6		min	-5.039	32	-2.001	17	.285	32	-1.219	5	-1.405	21	-1.824	23
7	N185C	max	.216	29	4.095	21	2.398	21	.6	21	.147	26	.323	8
8		min	-.22	11	-.492	2	-.264	2	-.066	2	-.151	8	-.315	26
9	N190A	max	.424	26	.244	23	2.399	9	.154	29	.516	6	.368	32
10		min	-3.555	9	-2.029	9	-.262	26	-.376	11	-.087	23	-.361	14
11	N195B	max	3.534	33	.243	17	2.395	33	.149	11	.088	17	.354	26
12		min	-.421	14	-2.056	33	-.261	14	-.379	29	-.526	36	-.349	8
13	Totals:	max	5.654	11	5.72	2	10.493	24						
14		min	-5.654	29	-5.768	20	4.318	5						

Basic Load Cases

	BLC Description	Category	X Grav...	Y Grav...	Z Grav...	Joint	Point	Distrib...	Area(Member)	Surface(Plate/Wall)
1	Live Load	DL					1			
2	Wind Load (0)	DL					30	60		
3	Dead Load	DL			-1.1		30		3	
4	Wind Load (30)	DL					60	120		
5	Wind Load (60)	DL					60	120		
6	Wind Load (90)	DL					30	60		
7	Wind Load (120)	DL					60	120		
8	Wind Load (150)	DL					60	120		
9	Wind Load (180)	DL					30	60		
10	Wind Load (210)	DL					60	120		
11	Wind Load (240)	DL					60	120		
12	Wind Load (270)	DL					30	60		
13	Wind Load (300)	DL					60	120		
14	Wind Load (330)	DL					60	120		
15	Maintanence (0)	DL					30	60		
16	Maintanence (30)	DL					60	120		
17	Maintanence (60)	DL					60	120		
18	Maintanence (90)	DL					30	60		
19	Maintanence (120)	DL					60	120		
20	Maintanence (150)	DL					60	120		
21	Maintanence (180)	DL					30	60		
22	Maintanence (210)	DL					60	120		
23	Maintanence (240)	DL					60	120		
24	Maintanence (270)	DL					30	60		
25	Maintanence (300)	DL					60	120		
26	Maintanence (330)	DL					60	120		
27	Ice Dead Load	DL					30	60	3	
28	Ice Wind Load (0)	DL					30	60		
29	Ice Wind Load (30)	DL					60	120		
30	Ice Wind Load (60)	DL					60	120		
31	Ice Wind Load (90)	DL					30	60		
32	Ice Wind Load (120)	DL					60	120		
33	Ice Wind Load (150)	DL					60	120		
34	Ice Wind Load (180)	DL					30	60		
35	Ice Wind Load (210)	DL					60	120		
36	Ice Wind Load (240)	DL					60	120		
37	Ice Wind Load (270)	DL					30	60		

Basic Load Cases (Continued)

	BLC Description	Category	X Grav...	Y Grav...	Z Grav...	Joint	Point	Distrib...	Area(Member)	Surface(Plate/Wall)
38	Ice Wind Load (300)	DL					60	120		
39	Ice Wind Load (330)	DL					60	120		
40	Earthquake (x-direction)	DL	-.109				30			
41	Earthquake (y-direction)	DL		-.109			30			
42	Earthquake (z-direction)	DL			-.044		30			
43	BLC 3 Transient Area L...	None						15		
44	BLC 27 Transient Area ...	None						15		

Load Combinations

	Description	S...	P...	SRSS	B...	Fa...	B...	Fa...	B...	Fa...	B...	Fa...	B...	Fa...	B...	Fa...	B...	Fa...	B...	Fa...	B...	Fa...	B...	Fa...
1	1.4D	Y...	Y		3	1.4																		
2	1.2D + 1.0W(0)	Y...	Y		3	1.2	2	1																
3	1.2D + 1.0Di + 1.0Wi(0)	Y...	Y		3	1.2	27	1	28	1														
4	1.2D + 1.5L + 1.0Wl(0)	Y...	Y		3	1.2	1	1.5	15	1														
5	1.2D + 1.0W(30)	Y...	Y		3	1.2	4	1																
6	1.2D + 1.0Di + 1.0Wi(30)	Y...	Y		3	1.2	27	1	29	1														
7	1.2D + 1.5L + 1.0Wl(30)	Y...	Y		3	1.2	1	1.5	16	1														
8	1.2D + 1.0W(60)	Y...	Y		3	1.2	5	1																
9	1.2D + 1.0Di + 1.0Wi(60)	Y...	Y		3	1.2	27	1	30	1														
10	1.2D + 1.5L + 1.0Wl(60)	Y...	Y		3	1.2	1	1.5	17	1														
11	1.2D + 1.0W(90)	Y...	Y		3	1.2	6	1																
12	1.2D + 1.0Di + 1.0Wi(90)	Y...	Y		3	1.2	27	1	31	1														
13	1.2D + 1.5L + 1.0Wl(90)	Y...	Y		3	1.2	1	1.5	18	1														
14	1.2D + 1.0W(120)	Y...	Y		3	1.2	7	1																
15	1.2D + 1.0Di + 1.0Wi(120)	Y...	Y		3	1.2	27	1	32	1														
16	1.2D + 1.5L + 1.0Wl(120)	Y...	Y		3	1.2	1	1.5	19	1														
17	1.2D + 1.0W(150)	Y...	Y		3	1.2	8	1																
18	1.2D + 1.0Di + 1.0Wi(150)	Y...	Y		3	1.2	27	1	33	1														
19	1.2D + 1.5L + 1.0Wl(150)	Y...	Y		3	1.2	1	1.5	20	1														
20	1.2D + 1.0W(180)	Y...	Y		3	1.2	9	1																
21	1.2D + 1.0Di + 1.0Wi(180)	Y...	Y		3	1.2	27	1	34	1														
22	1.2D + 1.5L + 1.0Wl(180)	Y...	Y		3	1.2	1	1.5	21	1														
23	1.2D + 1.0W(210)	Y...	Y		3	1.2	10	1																
24	1.2D + 1.0Di + 1.0Wi(210)	Y...	Y		3	1.2	27	1	35	1														
25	1.2D + 1.5L + 1.0Wl(210)	Y...	Y		3	1.2	1	1.5	22	1														
26	1.2D + 1.0W(240)	Y...	Y		3	1.2	11	1																
27	1.2D + 1.0Di + 1.0Wi(240)	Y...	Y		3	1.2	27	1	36	1														
28	1.2D + 1.5L + 1.0Wl(240)	Y...	Y		3	1.2	1	1.5	23	1														
29	1.2D + 1.0W(270)	Y...	Y		3	1.2	12	1																
30	1.2D + 1.0Di + 1.0Wi(270)	Y...	Y		3	1.2	27	1	37	1														
31	1.2D + 1.5L + 1.0Wl(270)	Y...	Y		3	1.2	1	1.5	24	1														
32	1.2D + 1.0W(300)	Y...	Y		3	1.2	13	1																
33	1.2D + 1.0Di + 1.0Wi(300)	Y...	Y		3	1.2	27	1	38	1														
34	1.2D + 1.5L + 1.0Wl(300)	Y...	Y		3	1.2	1	1.5	25	1														
35	1.2D + 1.0W(330)	Y...	Y		3	1.2	14	1																
36	1.2D + 1.0Di + 1.0Wi(330)	Y...	Y		3	1.2	27	1	39	1														
37	1.2D + 1.5L + 1.0Wl(330)	Y...	Y		3	1.2	1	1.5	26	1														
38	1.2D + 1.0E(x) + 1.0E(z) + L	Y...	Y		3	1.2	40	1	42	1	1	1												
39	1.2D + 1.0E(y) + 1.0E(z) + L	Y...	Y		3	1.2	41	1	42	1	1	1												
40	1.2D - 1.0E(x) + 1.0E(z) + L	Y...	Y		3	1.2	40	-1	42	1	1	1												
41	1.2D - 1.0E(y) + 1.0E(z) + L	Y...	Y		3	1.2	41	-1	42	1	1	1												

Envelope AISC 14th(360-10): LRFD Steel Code Checks

	Member	Shape	Code Check	Loc...	LC	Shear Check	Loc[ft]	...	LC	phi*Pnc [...	phi*...	phi*...	phi*...	... Eqn
1	SUP3B	L2x2x3	.173	0	6	.014	0	z	6	10.321	23.3...	.558	1.239	...H2-1
2	SUP3A	L2x2x3	.213	4.041	24	.019	4.041	z	24	10.321	23.3...	.558	1.239	...H2-1
3	SUP2B	L2x2x3	.172	0	30	.014	0	z	30	10.321	23.3...	.558	1.239	...H2-1
4	SUP2A	L2x2x3	.213	0	12	.019	0	y	12	10.321	23.3...	.558	1.239	...H2-1
5	SUP1B	L2x2x3	.186	0	18	.016	0	z	18	10.321	23.3...	.558	1.239	...H2-1
6	SUP1A	L2x2x3	.200	4.041	36	.017	4.041	z	36	10.321	23.3...	.558	1.239	...H2-1
7	SO3	HSS4X4...	.165	5.188	11	.123	5.188	y	11	124.655	139....	16.1...	16.1...	...H1-...
8	SO2	HSS4X4...	.156	5.188	5	.121	5.188	y	23	124.655	139....	16.1...	16.1...	...H1-...
9	SO1	HSS4X4...	.157	5.188	35	.121	5.188	y	35	124.655	139....	16.1...	16.1...	...H1-...
10	PLATECO...	6x0.5	.125	0	5	.851	0	y	14	94.068	97.2	1.012	12.15	...H1-...
11	PLATECO...	6x0.5	.123	.3	35	.804	.3	y	26	94.068	97.2	1.012	12.15	...H1-...
12	PLATECO...	6x0.5	.259	.524	35	.280	.524	y	26	65.136	97.2	1.012	12.15	...H1-...
13	PLATECO...	6x0.5	.123	0	17	.851	0	y	26	94.068	97.2	1.012	12.15	...H1-...
14	PLATECO...	6x0.5	.122	.3	11	.805	.3	y	2	94.068	97.2	1.012	12.15	...H1-...
15	PLATECO...	6x0.5	.263	.524	17	.280	.524	y	14	65.136	97.2	1.012	12.15	...H1-...
16	PLATECO...	6x0.5	.121	.3	23	.805	.3	y	14	94.068	97.2	1.012	12.15	...H1-...
17	PLATECO...	6x0.5	.124	0	29	.851	0	y	2	94.068	97.2	1.012	12.15	...H1-...
18	PLATECO...	6x0.5	.261	.524	5	.280	.524	y	2	65.136	97.2	1.012	12.15	...H1-...
19	PLATE12	6x0.375	.138	.169	11	.756	.169	y	32	67.49	72.9	.57	9.113	...H1-...
20	PLATE11	6x0.375	.186	.169	14	.686	.169	y	32	67.49	72.9	.57	9.113	...H1-...
21	PLATE10	6x0.375	.193	.169	2	.692	.169	y	20	67.49	72.9	.57	9.113	...H1-...
22	PLATE9	6x0.375	.128	.169	23	.756	.169	y	8	67.49	72.9	.57	9.113	...H1-...
23	PLATE8	6x0.375	.196	.169	26	.688	.169	y	8	67.49	72.9	.57	9.113	...H1-...
24	PLATE7	6x0.375	.130	.169	35	.761	.169	y	20	67.49	72.9	.57	9.113	...H1-...
25	PLATE6	6x0.375	.135	.146	5	.863	.292	y	26	68.794	72.9	.57	9.113	...H1-...
26	PLATE5	6x0.375	.199	.146	11	.789	0	y	26	68.794	72.9	.57	9.113	...H1-...
27	PLATE4	6x0.375	.149	.146	29	.864	.292	y	14	68.794	72.9	.57	9.113	...H1-...
28	PLATE3	6x0.375	.185	.146	35	.788	0	y	14	68.794	72.9	.57	9.113	...H1-...
29	PLATE2	6x0.375	.138	.146	17	.864	.292	y	2	68.794	72.9	.57	9.113	...H1-...
30	PLATE1	6x0.375	.193	.146	20	.789	0	y	2	68.794	72.9	.57	9.113	...H1-...
31	MP GAMM...	PIPE_2.0	.399	2.5	35	.234	5.5		26	14.916	32.13	1.872	1.872	...H1-...
32	MP GAMM...	PIPE_2.0	.528	2.5	5	.151	2.5		29	14.916	32.13	1.872	1.872	...H1-...
33	MP GAMM...	PIPE_2.0	.580	2.5	8	.151	5.5		26	14.916	32.13	1.872	1.872	...H1-...
34	MP GAMM...	PIPE_2.0	.398	2.5	17	.243	5.5		26	14.916	32.13	1.872	1.872	...H1-...
35	MP BETA4	PIPE_2.0	.398	2.5	23	.234	5.5		14	14.916	32.13	1.872	1.872	...H1-...
36	MP BETA3	PIPE_2.0	.533	2.5	29	.150	2.5		17	14.916	32.13	1.872	1.872	...H1-...
37	MP BETA2	PIPE_2.0	.578	2.5	32	.152	5.5		14	14.916	32.13	1.872	1.872	...H1-...
38	MP BETA1	PIPE_2.0	.399	2.5	5	.244	5.5		14	14.916	32.13	1.872	1.872	...H1-...
39	MP ALPHA4	PIPE_2.0	.393	2.5	11	.234	5.5		2	14.916	32.13	1.872	1.872	...H1-...
40	MP ALPHA3	PIPE_2.0	.531	2.5	17	.151	2.5		5	14.916	32.13	1.872	1.872	...H1-...
41	MP ALPHA2	PIPE_2.0	.583	2.5	20	.152	5.5		2	14.916	32.13	1.872	1.872	...H1-...
42	MP ALPHA1	PIPE_2.0	.393	2.5	29	.244	5.5		2	14.916	32.13	1.872	1.872	...H1-...
43	KICKER3	LL2.5x2....	.157	4.198	11	.017	4.198	z	11	61.242	77.1...	5.321	3.332	...H1-...
44	KICKER2	LL2.5x2....	.158	4.198	23	.018	4.198	z	23	61.242	77.1...	5.321	3.332	...H1-...
45	KICKER1	LL2.5x2....	.158	4.198	35	.018	4.198	z	35	61.242	77.1...	5.321	3.332	...H1-...
46	RAIL3	PIPE_2.0	.465	.521	29	.340	.26		11	6.295	32.13	1.872	1.872	...H3-6
47	RAIL2	PIPE_2.0	.469	.521	17	.340	.26		35	6.295	32.13	1.872	1.872	...H3-6
48	RAIL1	PIPE_2.0	.466	11....	5	.341	12.24		23	6.295	32.13	1.872	1.872	...H3-6
49	FACE3	PIPE_3.0	.127	8.464	17	.139	8.464		5	28.251	65.2...	5.749	5.749	...H1-...
50	FACE2	PIPE_3.0	.126	8.464	5	.141	8.464		29	28.251	65.2...	5.749	5.749	...H1-...
51	FACE1	PIPE_3.0	.125	4.036	29	.140	4.036		17	28.251	65.2...	5.749	5.749	...H1-...
52	CR3B	HSS4X4...	.125	2.38	30	.045	2.38	z	12	136.249	139....	16.1...	16.1...	...H1-...
53	CR3A	HSS4X4...	.135	0	36	.049	0	z	18	136.249	139....	16.1...	16.1...	...H1-...
54	CR2B	HSS4X4...	.125	2.38	18	.045	2.38	z	3	136.249	139....	16.1...	16.1...	...H1-...
55	CR2A	HSS4X4...	.135	2.38	24	.049	2.38	z	6	136.249	139....	16.1...	16.1...	...H1-...
56	CR1B	HSS4X4...	.125	0	6	.046	0	z	24	136.249	139....	16.1...	16.1...	...H1-...

Envelope AISC 14th(360-10): LRFD Steel Code Checks (Continued)

	Member	Shape	Code Check	Loc...	LC	Shear Check	Loc[ft]	...	LC	phi*Pnc [...	phi*...	phi*...	phi*...	...	Eqn
57	CR1A	HSS4X4...	.135	0	12	.049	0	z	30	136.249	139....	16.1...	16.1...	....	H1-...
58	ANGLE3	L2.5x2.5...	.450	1.395	8	.150	1.395	y	29	26.983	29.1...	.873	1.972	...	H2-1
59	ANGLE2	L2.5x2.5...	.445	1.395	32	.150	1.395	y	17	26.983	29.1...	.873	1.972	...	H2-1
60	ANGLE1	L2.5x2.5...	.451	1.395	20	.150	1.395	y	5	26.983	29.1...	.873	1.972	...	H2-1

APPENDIX D

Additional Calculations

POD Job #	**20-65180**
Site Number	**876320**
Site Name	**528 WHEELERS FARM RD**

Calculations Based on *TIA-222-H*

Reactions from RISA-3D

Moment	1.968	ft-kip
Axial	1.211	kips
Shear	1.716	kips

Capacities

Bolts	*1.3%*
Flange Plate	*12.4%*

Bolt Information

Grade	A325	
Threads in Shear Plane	Included	
Diameter	0.625	in.
Bolt Spacing	6	in.
Number of Rods	4	

Flange Plate Inforation

Width	8	in.
Thickness	0.75	in.
Grade	A36	

Standoff Information

Standoff Member	HSS	
Flat-Flat	4	in.
Thickness	0.25	in.

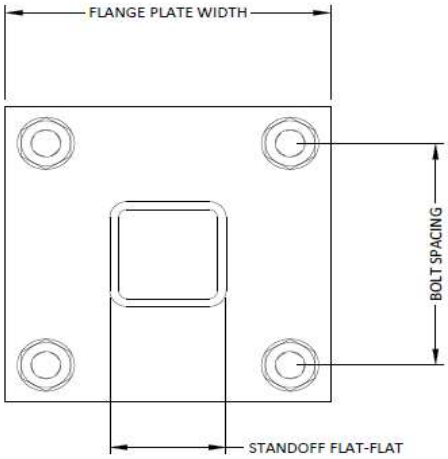

Bolt Calculations

ϕ	0.75	
A_{nt}	0.226	in^2
A_b	0.307	in^2
Fu	120	ksi
ϕR_{nV}	13.81	kips
ϕR_{nt}	20.34	kips
V	0.43	kips
F	2.27	kips
Capacity	1.3%	

Flange Plate Calculations

ϕ	0.9	
Fy	36	ksi
t_{min}	0.14	in
Z	1.1	in^3
ϕM_n	36.5	in-kip
M_u	4.5	in-kip
Capacity	12.4%	

Ver 1.0 - 3/5/2019

Exhibit F

Power Density/RF Emissions Report

EBI Consulting

environmental | engineering | due diligence

RADIO FREQUENCY EMISSIONS ANALYSIS REPORT EVALUATION OF HUMAN EXPOSURE POTENTIAL TO NON-IONIZING EMISSIONS

T-Mobile Existing Facility

Site ID: CT11082E

Stratford/ MP X 53/ Main
528 Wheelers Farm Road
Milford, Connecticut 06460

July 14, 2020

EBI Project Number: 6220003047

Site Compliance Summary	
Compliance Status:	**COMPLIANT**
Site total MPE% of FCC general population allowable limit:	**67.07%**

21 B Street, Burlington, MA 01803 · Tel: (781) 273.2500 · Fax: (781) 273.3311

July 14, 2020

T-Mobile
Attn: Jason Overbey, RF Manager
35 Griffin Road South
Bloomfield, Connecticut 06002

Emissions Analysis for Site: CT11082E - Stratford/ MP X 53/ Main

EBI Consulting was directed to analyze the proposed T-Mobile facility located at **528 Wheelers Farm Road** in **Milford, Connecticut** for the purpose of determining whether the emissions from the Proposed T-Mobile Antenna Installation located on this property are within specified federal limits.

All information used in this report was analyzed as a percentage of current Maximum Permissible Exposure (% MPE) as listed in the FCC OET Bulletin 65 Edition 97-01and ANSI/IEEE Std C95.1. The FCC regulates Maximum Permissible Exposure in units of microwatts per square centimeter ($\mu W/cm^2$). The number of $\mu W/cm^2$ calculated at each sample point is called the power density. The exposure limit for power density varies depending upon the frequencies being utilized. Wireless Carriers and Paging Services use different frequency bands each with different exposure limits; therefore, it is necessary to report results and limits in terms of percent MPE rather than power density.

All results were compared to the FCC (Federal Communications Commission) radio frequency exposure rules, 47 CFR 1.1307(b)(1) – (b)(3), to determine compliance with the Maximum Permissible Exposure (MPE) limits for General Population/Uncontrolled environments as defined below.

General population/uncontrolled exposure limits apply to situations in which the general population may be exposed or in which persons who are exposed as a consequence of their employment may not be made fully aware of the potential for exposure or cannot exercise control over their exposure. Therefore, members of the general population would always be considered under this category when exposure is not employment related, for example, in the case of a telecommunications tower that exposes persons in a nearby residential area.

Public exposure to radio frequencies is regulated and enforced in units of microwatts per square centimeter ($\mu W/cm^2$). The general population exposure limits for the 600 MHz and 700 MHz frequency bands are approximately 400 $\mu W/cm^2$ and 467 $\mu W/cm^2$, respectively. The general population exposure limit for the 1900 MHz (PCS), 2100 MHz (AWS) and 11 GHz frequency bands is 1000 $\mu W/cm^2$. Because each carrier will be using different frequency bands, and each frequency band has different exposure limits, it is necessary to report percent of MPE rather than power density.

Occupational/controlled exposure limits apply to situations in which persons are exposed as a consequence of their employment and in which those persons who are exposed have been made fully aware of the potential for exposure and can exercise control over their exposure. Occupational/controlled exposure limits also apply where exposure is of a transient nature as a result of incidental passage through a location where exposure levels may be above general population/uncontrolled limits (see below), as long as the exposed person has been made fully aware of the potential for exposure and can exercise control over his or her exposure by leaving the area or by some other appropriate means.

Additional details can be found in FCC OET 65.

CALCULATIONS

Calculations were done for the proposed T-Mobile Wireless antenna facility located at 528 Wheelers Farm Road in Milford, Connecticut using the equipment information listed below. All calculations were performed per the specifications under FCC OET 65. Since T-Mobile is proposing highly focused directional panel antennas, which project most of the emitted energy out toward the horizon, all calculations were performed assuming a lobe representing the maximum gain of the antenna per the antenna manufacturer's supplied specifications, minus 10 dB for directional panel antennas and 20 dB for highly focused parabolic microwave dishes, was focused at the base of the tower. For this report, the sample point is the top of a 6-foot person standing at the base of the tower.

For all calculations, all equipment was calculated using the following assumptions:

1) 2 LTE channels (600 MHz Band) were considered for each sector of the proposed installation. These Channels have a transmit power of 30 Watts per Channel.

2) 1 NR channel (600 MHz Band) was considered for each sector of the proposed installation. This Channel has a transmit power of 80 Watts.

3) 2 LTE channels (700 MHz Band) were considered for each sector of the proposed installation. These Channels have a transmit power of 30 Watts per Channel.

4) 4 GSM channels (PCS Band - 1900 MHz) were considered for each sector of the proposed installation. These Channels have a transmit power of 30 Watts per Channel.

5) 4 LTE channels (PCS Band - 1900 MHz) were considered for each sector of the proposed installation. These Channels have a transmit power of 60 Watts per Channel.

6) 2 UMTS channels (AWS Band - 2100 MHz) were considered for each sector of the proposed installation. These Channels have a transmit power of 30 Watts per Channel.

7) 4 LTE channels (AWS Band – 2100 MHz) were considered for each sector of the proposed installation. These Channels have a transmit power of 40 Watts per Channel.

8) 2 LTE channels (BRS Band - 2500 MHz) were considered for each sector of the proposed installation. These Channels have a transmit power of 40 Watts per Channel.

9) 2 NR channels (BRS Band - 2500 MHz) were considered for each sector of the proposed installation. These Channels have a transmit power of 40 Watts per Channel.

10) All radios at the proposed installation were considered to be running at full power and were uncombined in their RF transmissions paths per carrier prescribed configuration. Per FCC OET Bulletin No. 65 - Edition 97-01 recommendations to achieve the maximum anticipated value at each sample point, all power levels emitting from the proposed antenna installation are increased by a factor of 2.56 to account for possible in-phase reflections from the surrounding environment. This is rarely the case, and if so, is never continuous.

11) For the following calculations, the sample point was the top of a 6-foot person standing at the base of the tower. The maximum gain of the antenna per the antenna manufacturer's supplied specifications, minus 10 dB for directional panel antennas and 20 dB for highly focused parabolic microwave dishes, was used in this direction. This value is a very conservative estimate as gain reductions for these particular antennas are typically much higher in this direction.

12) 0 This is based on feedback from the carrier with regard to anticipated antenna selection. All Antenna gain values and associated transmit power levels are shown in the Site Inventory and Power Data table below. The maximum gain of the antenna per the antenna manufacturer's supplied specifications, minus 10 dB for directional panel antennas and 20 dB for highly focused parabolic microwave dishes, was used for all calculations. This value is a very conservative estimate as gain reductions for these particular antennas are typically much higher in this direction.

13) The antenna mounting height centerline of the proposed antennas is 107 feet above ground level (AGL).

14) Emissions values for additional carriers were taken from the Connecticut Siting Council active database. Values in this database are provided by the individual carriers themselves.

15) All calculations were done with respect to uncontrolled / general population threshold limits.

T-Mobile Site Inventory and Power Data

Sector:	A	Sector:	B	Sector:	C
Antenna #:	**1**	Antenna #:	**1**	Antenna #:	**1**
Make / Model:	Ericsson AIR 32	Make / Model:	Ericsson AIR 32	Make / Model:	Ericsson AIR 32
Frequency Bands:	1900 MHz / 1900 MHz / 2100 MHz	Frequency Bands:	1900 MHz / 1900 MHz / 2100 MHz	Frequency Bands:	1900 MHz / 1900 MHz / 2100 MHz
Gain:	15.35 dBd / 15.35 dBd / 15.85 dBd	Gain:	15.35 dBd / 15.35 dBd / 15.85 dBd	Gain:	15.35 dBd / 15.35 dBd / 15.85 dBd
Height (AGL):	107 feet	Height (AGL):	107 feet	Height (AGL):	107 feet
Channel Count:	8	Channel Count:	8	Channel Count:	8
Total TX Power (W):	300 Watts	Total TX Power (W):	300 Watts	Total TX Power (W):	300 Watts
ERP (W):	10,533.98	ERP (W):	10,533.98	ERP (W):	10,533.98
Antenna A1 MPE %:	**3.31%**	Antenna B1 MPE %:	**3.31%**	Antenna C1 MPE %:	**3.31%**
Antenna #:	**2**	Antenna #:	**2**	Antenna #:	**2**
Make / Model:	RFS APXVAARR24_43-U-NA20	Make / Model:	RFS APXVAARR24_43-U-NA20	Make / Model:	RFS APXVAARR24_43-U-NA20
Frequency Bands:	600 MHz / 600 MHz / 700 MHz / 1900 MHz	Frequency Bands:	600 MHz / 600 MHz / 700 MHz / 1900 MHz	Frequency Bands:	600 MHz / 600 MHz / 700 MHz / 1900 MHz
Gain:	12.95 dBd / 12.95 dBd / 13.35 dBd / 15.65 dBd	Gain:	12.95 dBd / 12.95 dBd / 13.35 dBd / 15.65 dBd	Gain:	12.95 dBd / 12.95 dBd / 13.35 dBd / 15.65 dBd
Height (AGL):	107 feet	Height (AGL):	107 feet	Height (AGL):	107 feet
Channel Count:	7	Channel Count:	7	Channel Count:	7
Total TX Power (W):	320 Watts	Total TX Power (W):	320 Watts	Total TX Power (W):	320 Watts
ERP (W):	8,466.41	ERP (W):	8,466.41	ERP (W):	8,466.41
Antenna A2 MPE %:	**4.42%**	Antenna B2 MPE %:	**4.42%**	Antenna C2 MPE %:	**4.42%**
Antenna #:	**3**	Antenna #:	**3**	Antenna #:	**3**
Make / Model:	Ericsson AIR 3246	Make / Model:	Ericsson AIR 3246	Make / Model:	Ericsson AIR 3246
Frequency Bands:	2100 MHz	Frequency Bands:	2100 MHz	Frequency Bands:	2100 MHz
Gain:	15.85 dBd	Gain:	15.85 dBd	Gain:	15.85 dBd
Height (AGL):	107 feet	Height (AGL):	107 feet	Height (AGL):	107 feet
Channel Count:	4	Channel Count:	4	Channel Count:	4
Total TX Power (W):	160 Watts	Total TX Power (W):	160 Watts	Total TX Power (W):	160 Watts
ERP (W):	6,153.47	ERP (W):	6,153.47	ERP (W):	6,153.47
Antenna A3 MPE %:	**1.93%**	Antenna B3 MPE %:	**1.93%**	Antenna C3 MPE %:	**1.93%**
Antenna #:	**4**	Antenna #:	**4**	Antenna #:	**4**
Make / Model:	Ericsson AIR 6449	Make / Model:	Ericsson AIR 6449	Make / Model:	Ericsson AIR 6449
Frequency Bands:	2500 MHz / 2500 MHz	Frequency Bands:	2500 MHz / 2500 MHz	Frequency Bands:	2500 MHz / 2500 MHz
Gain:	22.05 dBd / 22.05 dBd	Gain:	22.05 dBd / 22.05 dBd	Gain:	22.05 dBd / 22.05 dBd
Height (AGL):	107 feet	Height (AGL):	107 feet	Height (AGL):	107 feet
Channel Count:	4	Channel Count:	4	Channel Count:	4
Total TX Power (W):	160 Watts	Total TX Power (W):	160 Watts	Total TX Power (W):	160 Watts
ERP (W):	25,651.93	ERP (W):	25,651.93	ERP (W):	25,651.93
Antenna A4 MPE %:	**8.06%**	Antenna B4 MPE %:	**8.06%**	Antenna C4 MPE %:	**8.06%**

Site Composite MPE %	
Carrier	MPE %
T-Mobile (Max at Sector A):	17.72%
AT&T	7.22%
XM Radio	0.2%
Clearwire	0.15%
Sprint	4.09%
Metricom	0.67%
Verizon	37.02%
Site Total MPE % :	67.07%

T-Mobile MPE % Per Sector	
T-Mobile Sector A Total:	17.72%
T-Mobile Sector B Total:	17.72%
T-Mobile Sector C Total:	17.72%
Site Total MPE % :	67.07%

T-Mobile Maximum MPE Power Values (Sector A)

T-Mobile Frequency Band / Technology (Sector A)	# Channels	Watts ERP (Per Channel)	Height (feet)	Total Power Density (μW/cm²)	Frequency (MHz)	Allowable MPE (μW/cm²)	Calculated % MPE
T-Mobile 1900 MHz GSM	4	1028.30	107.0	12.92	1900 MHz GSM	1000	1.29%
T-Mobile 1900 MHz LTE	2	2056.61	107.0	12.92	1900 MHz LTE	1000	1.29%
T-Mobile 2100 MHz UMTS	2	1153.78	107.0	7.25	2100 MHz UMTS	1000	0.72%
T-Mobile 600 MHz LTE	2	591.73	107.0	3.72	600 MHz LTE	400	0.93%
T-Mobile 600 MHz NR	1	1577.94	107.0	4.95	600 MHz NR	400	1.24%
T-Mobile 700 MHz LTE	2	648.82	107.0	4.07	700 MHz LTE	467	0.87%
T-Mobile 1900 MHz LTE	2	2203.69	107.0	13.84	1900 MHz LTE	1000	1.38%
T-Mobile 2100 MHz LTE	4	1538.37	107.0	19.32	2100 MHz LTE	1000	1.93%
T-Mobile 2500 MHz LTE	2	6412.98	107.0	40.28	2500 MHz LTE	1000	4.03%
T-Mobile 2500 MHz NR	2	6412.98	107.0	40.28	2500 MHz NR	1000	4.03%
						Total:	**17.72%**

• NOTE: Totals may vary by approximately 0.01% due to summation of remainders in calculations.

Summary

All calculations performed for this analysis yielded results that were **within** the allowable limits for general population exposure to RF Emissions.

The anticipated maximum composite contributions from the T-Mobile facility as well as the site composite emissions value with regards to compliance with FCC's allowable limits for general population exposure to RF Emissions are shown here:

T-Mobile Sector	Power Density Value (%)
Sector A:	17.72%
Sector B:	17.72%
Sector C:	17.72%
T-Mobile Maximum MPE % (Sector A):	17.72%
Site Total:	67.07%
Site Compliance Status:	**COMPLIANT**

The anticipated composite MPE value for this site assuming all carriers present is **67.07%** of the allowable FCC established general population limit sampled at the ground level. This is based upon values listed in the Connecticut Siting Council database for existing carrier emissions.

FCC guidelines state that if a site is found to be out of compliance (over allowable thresholds), that carriers over a 5% contribution to the composite value will require measures to bring the site into compliance. For this facility, the composite values calculated were well within the allowable 100% threshold standard per the federal government.