[redacted]

Filed by:
G. Scott Shepherd, Sr. Property Specialist - SBA Communications
134 Flanders Rd., Suite 125, Westborough, MA 01581
508.251.0720 x 3807 - GShepherd@sbasite.com

August 9, 2019

Melanie A. Bachman
Acting Executive Director
Connecticut Siting Council
Ten Franklin Square
New Britain, CT 06051

Notice of Exempt Modification
1825 South Main Street (aka 1279 Long Hill Road), Middletown, CT 06457
N – 41.511221 / W-72.670719
T-Mobile #: CT11247E_L600

Dear Ms. Bachman:

T-Moble currently maintains six (6) panel antennas at the 137-foot level of the existing 158-foot Monopole Tower at 1825 South Main Street (aka 1279 Long Hill Road) in Middletown, CT. The tower is owned by SBA Properties, LLC. The property is owned by SBA Properties, LLC. T-Mobile intends to replace six (6) existing antennas with six (6) new 600/700/1900/2100 MH antennas. The new antennas would be installed at the 137-foot level of the tower.

Planned Modifications:

TOWER

Remove:

- (3) Allen Telecom FE15S01P77/75 TMA's
- (3) 1-5/8" lines

Remove and Replace:

- (3) RFS APXV18-209014-02 - Panel (Remove) - Ericsson Air32 KRD901146-1_B66A_B2A 1900/2100 MHz (Replace)
- (3) Commscope LNX-6515DS - Panel (Remove) - RFS APXVAARR24_43-U-NA20 600/700/1900 MHz (Replace)

Install New:

- (3) Ericsson KRY 112 489/2
- (3) Ericsson Radio 4449 B71+B12
- (3) 1-5/8" fiber
- (1) Support rail w/ end connection MS-HRECP-35

Existing Equipment to Remain:

- (3) Kathrein 782 11056 Diplexer
- (1) Low Profile Platform with Metrosite support rail w/end connection MS-HRECP-35
- (9) 1-5/8" lines

Entitlements:

- (9) Allen Telecom FE15S01P77/75 TMA's

GROUND

Install New:

- U/G 2" electrical conduit from proposed 6102 cabinet

Remove:

- (6) Diplexers
- (6) TMAs

Remove and Replace:

- (1) RBS 6201 cabinet (Remove) – (1) RBS 6102 cabinet (Replace) – same location within compound

This facility was originally approved by the Middletown Planning and Zoning Commission prior to Council's jurisdiction. On September 8, 1999, the City gave Notice of Decision granting Special Exception for a wireless communication facility under application SE99-7. No post construction stipulations were set. Please see attached.

Please accept this letter as notification pursuant to Regulations of Connecticut State Agencies §16-50j-73, for construction that constitutes an exempt modification pursuant to R.C.S.A. §16.50j-72(b)(2). In accordance with R.C.S.A. § 16.50j-73, a copy of this letter is being sent to the City of Middletown's Mayor, Daniel T. Drew, and Zoning Officer, Ronald Baia. (Separate notice is not being sent to property / tower owner, as it is SBA.)

The planned modifications to the facility fall squarely within those activities explicitly provided for in R.C.S.A. §16.50j-72(b)(2).

1. The proposed modifications will not result in an increase in the height of the existing structure.
2. The proposed modification will not require the extension of the site boundary.
3. The proposed modifications will not increase noise levels at the facility by six decibels or more, or to levels that exceed state and local criteria.
4. The operation of the replacement antennas will not increase radio frequency emissions at the facility to a level at or above the Federal Communications Commission safety standard.
5. The proposed modification will not cause a change or alteration in the physical or environmental characteristics of the site.
6. The existing structure and its foundation can support the proposed loading

For the foregoing reasons, T-Mobile respectfully submits that the proposed modifications to the above-referenced telecommunication facility constitute an exempt modifications under R.C.S.A. § 16-50j-72(b)(2).

Sincerely,

G. Scott Shepherd
Sr. Property Specialist
SBA COMMUNICATIONS CORPORATION
134 Flanders Rd., Suite 125
Westborough, MA 01581
508.251.0720 x3807 + T
508.366.2610 + F
203.446.7700 + C
GShepherd@sbasite.com
Attachments

cc: Daniel T. Drew, Mayor -- w/ attachments
The City of Middletown, City Hall, 245 deKoven Drive, Middletown, CT 06457
Ronald Baia, Zoning Officer -- w/ attachments
The City of Middletown, City Hall, 245 deKoven Drive, Suite 202, Middletown, CT 06457

Exhibit List

Exhibit 1	Check Copy	x
Exhibit 2	Notification Receipts	x
Exhibit 3	Property Card	x
Exhibit 4	Property Map	x
Exhibit 5	Original Zoning Approval	Middletown P&Z 9/8/99
Exhibit 6	Construction Drawings	Chappell 8/2/19
Exhibit 7	Structural Analysis	TES 7/17/19
Exhibit 8	Post Mod Mount Analysis	TESS 7/25/19
Exhibit 9	Mount Mod Drawings	7/1/19
Exhibit 10	EME Report	5/15/19

EXHIBIT 1

EXHIBIT 2

ORIGIN ID:BBFA (508) 251-0720
KRI PELLETIER
SBA NETWORK SERVICES INC
134 FLANDERS RD.
SUITE 125
WESTBOROUGH, MA 01581
UNITED STATES US

SHIP DATE: 09AUG19
ACTWGT: 1.00 LB
CAD: 105843304/INET4160

BILL SENDER

TO MELANIE A. BACHMAN ACTING EXEC. DIR
CONNECTICUT SITING COUNCIL
TEN FRANKLIN SQUARE
NEW BRITAIN CT 06051
(508) 251-0720 X 302
REF: 10-56-92009-6089
INV:
PO:
DEPT:

567J3/E9E7/05A2

J192019062401uv

FedEx Express

MON - 12 AUG 10:30A
PRIORITY OVERNIGHT

TRK# 0201 7759 4967 5898

SE BDLA

CT-US BDL

06051

After printing this label:
1. Use the 'Print' button on this page to print your label to your laser or inkjet printer.
2. Fold the printed page along the horizontal line.
3. Place label in shipping pouch and affix it to your shipment so that the barcode portion of the label can be read and scanned.

Warning: Use only the printed original label for shipping. Using a photocopy of this label for shipping purposes is fraudulent and could result in additional billing charges, along with the cancellation of your FedEx account number.
Use of this system constitutes your agreement to the service conditions in the current FedEx Service Guide, available on fedex.com.FedEx will not be responsible for any claim in excess of $100 per package, whether the result of loss, damage, delay, non-delivery,misdelivery,or misinformation, unless you declare a higher value, pay an additional charge, document your actual loss and file a timely claim.Limitations found in the current FedEx Service Guide apply. Your right to recover from FedEx for any loss, including intrinsic value of the package, loss of sales, income interest, profit, attorney's fees, costs, and other forms of damage whether direct, incidental,consequential, or special is limited to the greater of $100 or the authorized declared value. Recovery cannot exceed actual documented loss.Maximum for items of extraordinary value is $1,000, e.g. jewelry, precious metals, negotiable instruments and other items listed in our ServiceGuide. Written claims must be filed within strict time limits, see current FedEx Service Guide.

ORIGIN ID:BBFA (508) 251-0720
KRI PELLETIER
SBA COMMUNICATIONS CORPORATION
134 FLANDERS RD
SUITE 125
WESTBOROUGH, MA 01581
UNITED STATES US

SHIP DATE: 09AUG19
ACTWGT: 1.00 LB
CAD: 105843304/INET4160

BILL SENDER

TO DANIEL T. DREW
MAYOR
CITY HALL
245 DEKAOVEN DRIVE
MIDDLETOWN CT 06457
(508) 251-0720 X 3807
INV:
PO:
REF: 10-56-92009-6089
DEPT:

567J3/E9E7/05A2

J192019062401uv

FedEx Express

MON - 12 AUG 9:00A
FIRST OVERNIGHT

TRK# 0201 7759 4973 0840

X1 BDLA

06457
CT-US BDL

After printing this label:
1. Use the 'Print' button on this page to print your label to your laser or inkjet printer.
2. Fold the printed page along the horizontal line.
3. Place label in shipping pouch and affix it to your shipment so that the barcode portion of the label can be read and scanned.

Warning: Use only the printed original label for shipping. Using a photocopy of this label for shipping purposes is fraudulent and could result in additional billing charges, along with the cancellation of your FedEx account number.
Use of this system constitutes your agreement to the service conditions in the current FedEx Service Guide, available on fedex.com.FedEx will not be responsible for any claim in excess of $100 per package, whether the result of loss, damage, delay, non-delivery,misdelivery,or misinformation, unless you declare a higher value, pay an additional charge, document your actual loss and file a timely claim.Limitations found in the current FedEx Service Guide apply. Your right to recover from FedEx for any loss, including intrinsic value of the package, loss of sales, income interest, profit, attorney's fees, costs, and other forms of damage whether direct, incidental,consequential, or special is limited to the greater of $100 or the authorized declared value. Recovery cannot exceed actual documented loss.Maximum for items of extraordinary value is $1,000, e.g. jewelry, precious metals, negotiable instruments and other items listed in our ServiceGuide. Written claims must be filed within strict time limits, see current FedEx Service Guide.

ORIGIN ID:BBFA (508) 251-0720
KRI PELLETIER
SBA COMMUNICATIONS CORPORATION
134 FLANDERS RD
SUITE 125
WESTBOROUGH, MA 01581
UNITED STATES US

SHIP DATE: 09AUG19
ACTWGT: 1.00 LB
CAD: 105843304/INET4160

BILL SENDER

TO RONALD BAIA
ZONING OFFICER
CITY HALL
245 DEKAOVEN DRIVE
MIDDLETOWN CT 06457
(508) 251-0720 X 3807
INV:
PO:
REF: 10-56-92009-6089
DEPT:

567JJ/E9E7/05A2

J192019062401uv

FedEx Express

MON - 12 AUG 9:00A
FIRST OVERNIGHT

TRK# 0201 7759 4974 3807

06457
BDL
CT-US

X1 BDLA

After printing this label:
1. Use the 'Print' button on this page to print your label to your laser or inkjet printer.
2. Fold the printed page along the horizontal line.
3. Place label in shipping pouch and affix it to your shipment so that the barcode portion of the label can be read and scanned.

Warning: Use only the printed original label for shipping. Using a photocopy of this label for shipping purposes is fraudulent and could result in additional billing charges, along with the cancellation of your FedEx account number.
Use of this system constitutes your agreement to the service conditions in the current FedEx Service Guide, available on fedex.com.FedEx will not be responsible for any claim in excess of $100 per package, whether the result of loss, damage, delay, non-delivery,misdelivery,or misinformation, unless you declare a higher value, pay an additional charge, document your actual loss and file a timely claim.Limitations found in the current FedEx Service Guide apply. Your right to recover from FedEx for any loss, including intrinsic value of the package, loss of sales, income interest, profit, attorney's fees, costs, and other forms of damage whether direct, incidental,consequential, or special is limited to the greater of $100 or the authorized declared value. Recovery cannot exceed actual documented loss.Maximum for items of extraordinary value is $1,000, e.g. jewelry, precious metals, negotiable instruments and other items listed in our ServiceGuide. Written claims must be filed within strict time limits, see current FedEx Service Guide.

EXHIBIT 3

Property Location 1825 SOUTH MAIN ST | Map ID 17/ / 0003/ / | Bldg Name | State Use 100
Vision ID 3758 | Account # R02249 | Bldg # 1 | Sec # 1 of 1 | Card # 1 of 1 | Print Date 5/30/2019 6:25:18 PM

CURRENT OWNER

SBA PROPERTIES INC

8051 CONGRESS AVE

BOCA RATON FL 33487

TOPO / UTILITIES / STRT / ROAD / LOCATION

TOPO		UTILITIES		STRT / ROAD		LOCATION	
2	Above Street			1	Paved		
						3	Heavy Traf

SUPPLEMENTAL DATA

Alt Prcl ID	31 41-2 2AA P	Class	Res
		State Clas	130
		Supl Info	
Color	0	Unsold	P:
Census	5422		9.4
District	1:City Fire		
GIS ID	R02249	Assoc Pid#	

CURRENT ASSESSMENT

Description	Code	Appraised	Assessed
COM LAND	2-1	228,000	159,600
VAC RS LN	5-1	117,500	82,250
VAC OUTBL	5-5	49,460	34,620
Total		394,960	276,470

6083

MIDDLETOWN, CT

VISION

RECORD OF OWNERSHIP

RECORD OF OWNERSHIP	BK-VOL/PAGE		SALE DATE	Q/U	V/I	SALE PRICE	VC
SBA PROPERTIES INC	1289	0876	12-21-2001	U	I	0	29
SBA TOWERS INC	1289	0872	12-21-2001	U	V	275,000	25
CONN LIGHT & POWER CO	0624	0211	07-02-1982	U	I	0	29

PREVIOUS ASSESSMENTS (HISTORY)

Year	Code	Assessed	Year	Code	Assessed V	Year	Code	Assessed
2018	2-1	159,600	2018	2-1	159,600	2017	2-1	159,600
	5-1	82,250		5-1	82,250		5-1	82,250
	5-5	34,620		5-5	34,620		5-5	34,620
	Total	276470		Total	276470		Total	276470

EXEMPTIONS

Year	Code	Description	Amount
		Total	0.00

OTHER ASSESSMENTS

Code	Description	Number	Amount	Comm Int

This signature acknowledges a visit by a Data Collector or Assessor

ASSESSING NEIGHBORHOOD

Nbhd	Nbhd Name	B	Tracing	Batch
0001				

NOTES

4/30/13 - CELL PHONE TOWER -SPRINT-VERIZON-OCS-CINGULAR-POCKET
SBA TOWERS - WWW.SBASITE.COM WIRELESS-AT+T-NEXTELL
LEASING PHONE#800-487-SITE(7483) CELL SITE VALUE BASED ON MARKET RENTS
CSHD - EST - FENCE 24000-5% VAC-10% EXP/.09 CAP = $228,000
SITE ID#CT01080
FCC#1218900

APPRAISED VALUE SUMMARY

Appraised Bldg. Value (Card)	0
Appraised Xf (B) Value (Bldg)	0
Appraised Ob (B) Value (Bldg)	49,460
Appraised Land Value (Bldg)	345,500
Special Land Value	0
Total Appraised Parcel Value	394,960
Valuation Method	C
Total Appraised Parcel Value	394,960

BUILDING PERMIT RECORD

Permit Id	Issue Date	Type	Description	Amount	Insp Date	% Comp	Date Comp	Comments
201811355	06-15-2018	GN	Generator	7,500		100	10-01-2018	15 KW GENERATOR
201710376	11-30-2017	EL	Electric	40,000		100	10-01-2018	CITY EMERGENCY COMMU
20168862	01-19-2017	EL	Electric	15,000		100	10-01-2017	3 RADIO UNITS
20167523	04-05-2016	EL	Electric	15,000		100	10-01-2016	SWAP OUT THREE ANTENN
20167292	02-17-2016	EL	Electric	15,000		100	10-01-2016	REPLACE ANTENNA PANELS
20155795	05-05-2015	EL	Electric	15,000		100	10-01-2015	INSTALL 3 NEW CELL ANTEN
20144319	06-24-2014	EL	Electric	15,000	11-12-2014	100	11-12-2014	3 NEW ANTENNA & ASSOC.

VISIT / CHANGE HISTORY

Date	Id	Type	Is	Cd	Purpost/Result
09-01-2013	KL			41	Field Review
04-30-2013	RH			99	Vacant Land

LAND LINE VALUATION SECTION

B	Use Code	Description	Zone	Land Type	Land Units		Unit Price	Size Adj	Site Index	Cond.	Nbhd.	Nbhd. Adj	Notes	Location Adjustment		Adj Unit P	Land Value
1	100	Resid Vacant	I-4	Undevelop	9.400	AC	12,500.00	1.00000	0	1.00		1.000			1.0000	12,500.00	117,500
1	204	Cell Site	I-4		1.000	BL	228,000.00	1.00000	0	1.00	12	1.000	CELL SITE		1.0000	228,000.0	228,000
		Total Card Land Units			9.400	AC	Parcel Total Land Area			9.4000						Total Land Value	345,500

Property Location 1825 SOUTH MAIN ST | Map ID 17/ / 0003/ / | Bldg Name | State Use 100
Vision ID 3758 | Account # R02249 | Bldg # 1 | Sec # 1 of 1 | Card # 1 of 1 | Print Date 5/30/2019 6:25:19 PM

CONSTRUCTION DETAIL

Element	Cd	Description
Style	94	Outbuildings
Model	00	Vacant
Grade		
Stories		
Occupancy		
Exterior Wall 1		
Exterior Wall 2		
Roof Structure		
Roof Cover		
Interior Wall 1		
Interior Wall 2		
Interior Floor 1		
Interior Floor 2		
Heat Fuel		
Heat Type		
Bedrooms		
Full Baths		
Half Baths		
Extra Fixtures		
Total Rooms		
Bath Remodel		
Kitchen Remod		
Extra Kitchens		
Fireplaces		
Extra Openings		
Gas Fireplace		
Int vs Ext		
A/C Type		
A/C %		
Fin Bsmt Area		
FBM grade		
Bsmt Garage		
In Law		

CONSTRUCTION DETAIL (CONTINUED)

Element	Cd	Description
Bsmt Garage		
In Law		

MIXED USE

Code	Description	Percentage
100	Resid Vacant	100
		0
		0

COST / MARKET VALUATION

Building Value New	
Year Built	0
Effective Year Built	0
Depreciation Code	A
Remodel Rating	
Year Remodeled	
Depreciation %	
Functional Obsol	
External Obsol	
Trend Factor	1
Condition	
Condition %	
Percent Good	
Cns Sect Rcnld	
Dep % Ovr	
Dep Ovr Comment	
Misc Imp Ovr	
Misc Imp Ovr Comment	
Cost to Cure Ovr	
Cost to Cure Ovr Comment	

No Sketch

OB - OUTBUILDING & YARD ITEMS(L) / XF - BUILDING EXTRA FEATURES(B)

Code	Description	L/B	Units	Unit Price	Yr Blt	Cond. Cd	% Gd	Grade	Grade Adj.	Appr. Value
FN3	Fence-6' Chai	L	360	22.00	2013	5	45	C	1.00	3,560
CSHD	Cell Shed	L	336	125.00	2013	5	45	C	1.00	18,900
CSHD	Cell Shed	L	240	125.00	2013	5	45	C	1.00	13,500
CSHD	Cell Shed	L	240	125.00	2013	5	45	C	1.00	13,500

BUILDING SUB-AREA SUMMARY SECTION

Code	Description	Living Area	Floor Area	Eff Area	Unit Cost	Undeprec Value
	Ttl Gross Liv / Lease Area	0	0	0		0

EXHIBIT 4

Google Maps 1825 S Main St

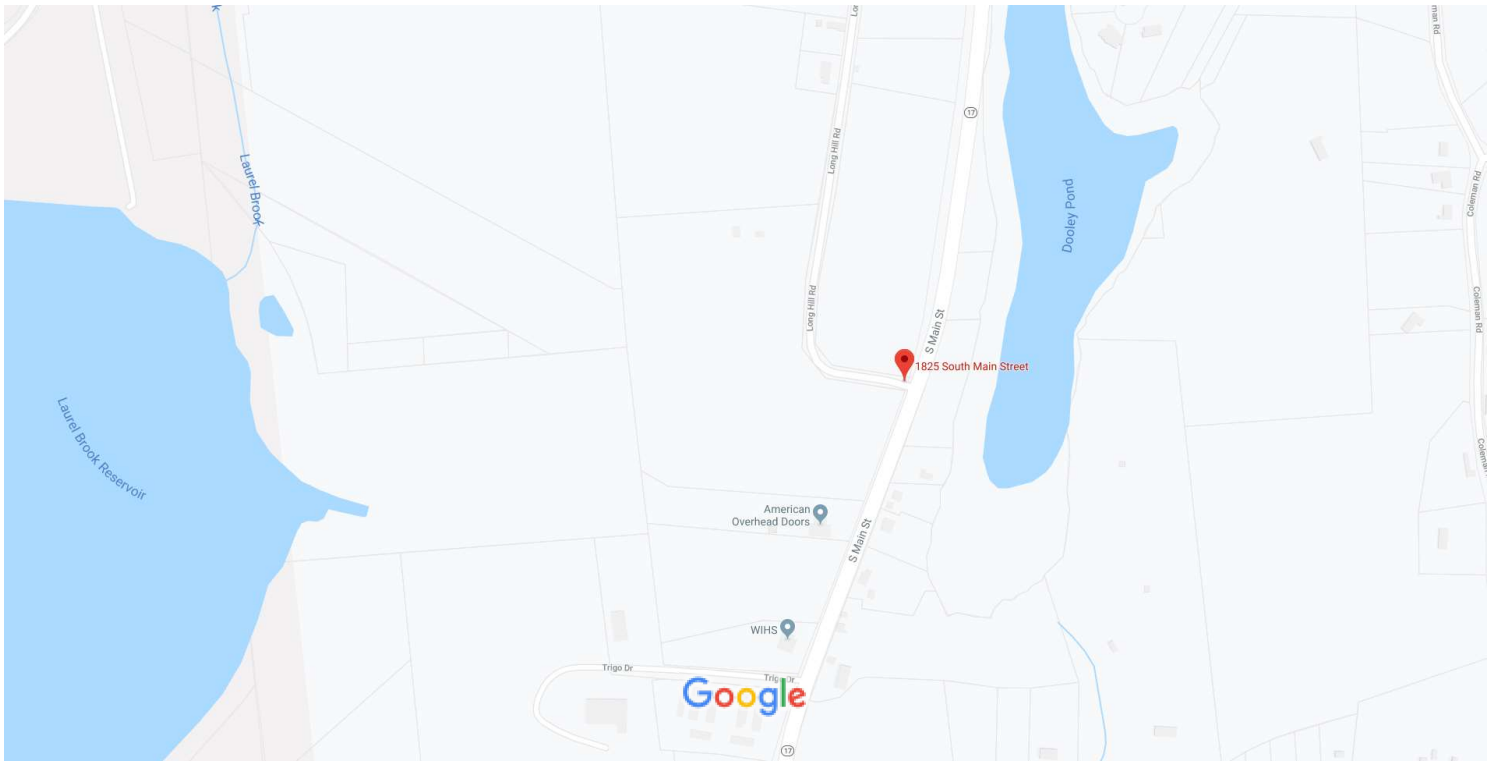

Map data ©2019 200 ft

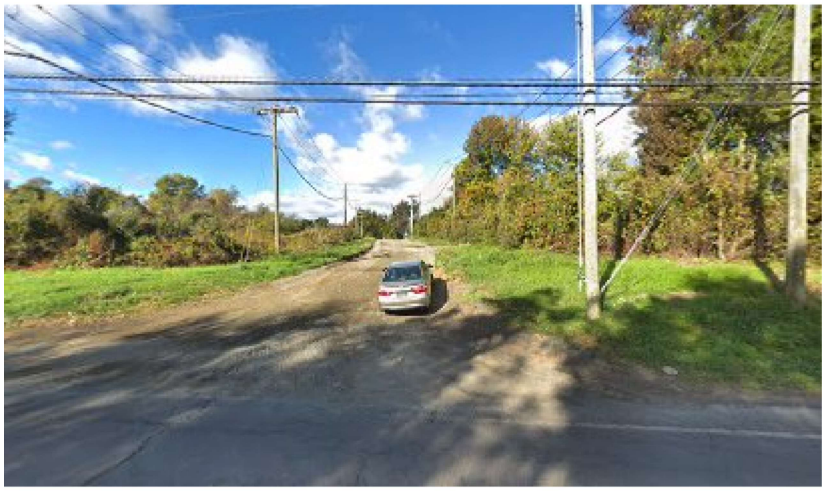

1825 S Main St

Middletown, CT 06457

Directions Save Nearby Send to your phone Share

G85H+XR Middletown, Connecticut

Photos

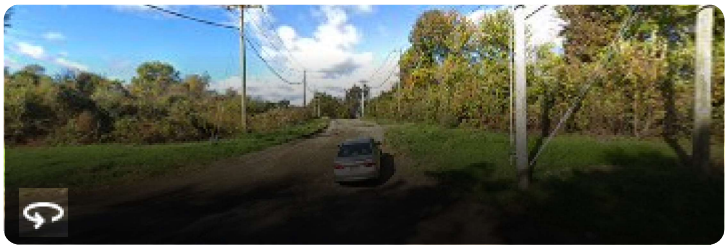

EXHIBIT 5

LEGAL NOTICE

NOTICE OF DECISION BY THE MIDDLETOWN PLANNING AND ZONING COMMISSION at its meeting of September 8, 1999

1. Granted a waiver of the road and sidewalk standards for Steeplegate Subdivision (formerly Sunrise Farms) with the condition that: 1) the Association maintain the sidewalks; and 2) each lot have a hammerhead or circle to allow turning and a fifty (50) foot setback. Applicant/agent Attorney Michael Dowley S95-15

2. Approved a request for reduction of the cash bond for Old Farms Subdivision, Phase 3. Applicant/agent Old Farms Associates/Robert C. Fusari, President S88-7

3. Granted Final Approval of the first portion of Greenview Terrace in The Meadows at Riverbend Subdivision, Section 4 with the condition that a cash bond in the amount of $75,000 be posted. Applicant/agent Tuttle Road Associates/Robert C. Fusari, President S95-6

4. Granted a Special Exception for a wireless communication facility to be located on the west side of South Main Street south of Brush Hill Road. Applicant/agent SBA Inc./Sprint PCS SE99-7

5. Granted a Special Exception for a golf course, clubhouse and maintenance facilities, and uses accessory, thereto to be located between Mile Lane, Tuttle Road, Ridgewood Road and Newfield Street. Applicant/agent Quattro Development Corp./Mark H. Quattro SE99-6

W. Lee Osborne, Chairman
Planning and Zoning Commission

P. O. No. 2000-00673, Account No. 067419

The above legal notice to appear in the Hartford Courant ONCE

Thursday, September 16, 1999

THE MUNICIPAL BUILDING IS WHEELCHAIR ACCESSIBLE

EXHIBIT 6

SPECIAL CONSTRUCTION NOTE (SBA-PROVIDED ANTENNA MOUNT STRUCTURAL MOD SPECIAL EQUIPMENT INSTALLATION REQUIREMENTS): GENERAL CONTRACTOR SHALL FURNISH AND INSTALL ALL ANTENNA MOUNT STRUCTURAL AUGMENTS (STRUCTURAL MODIFICATIONS) AT THE T-MOBILE RAD/VERTICAL EQUIPMENT SPACE PER RECOMMENDATIONS FROM SBA-PROVIDED ANTENNA MOUNT STRUCTURAL ANALYSIS AND ANY SUPPLEMENTAL CONSTRUCTION DRAWINGS (PROVIDED BY OTHERS).

MIDDLETOWN

APPROVALS

PROJECT MANAGER:	DATE:	ZONING/SITE ACQ.:	DATE:
CONSTRUCTION:	DATE:	OPERATIONS:	DATE:
RF ENGINEERING:	DATE:	TOWER OWNER:	DATE:

T-MOBILE TECHNICIAN SITE SAFETY NOTES

LOCATION	SPECIAL RESTRICTIONS
SECTOR A:	ACCESS BY CERTIFIED CLIMBER
SECTOR B:	ACCESS BY CERTIFIED CLIMBER
SECTOR C:	ACCESS BY CERTIFIED CLIMBER
GPS/LMU:	UNRESTRICTED
RADIO CABINETS:	UNRESTRICTED
PPC DISCONNECT:	UNRESTRICTED
MAIN CIRCUIT D/C:	UNRESTRICTED
NIU/T DEMARC:	UNRESTRICTED
OTHER/SPECIAL:	NONE

1279 LONG HILL ROAD
MIDDLETOWN, CT 06457
MIDDLESEX COUNTY

SITE NO.: CT11247E

SITE TYPE: 158'± MONOPOLE

RF DESIGN GUIDELINE: 67D95FDB

SITE NOTES

1. THIS IS AN UNMANNED AND RESTRICTED ACCESS TELECOMMUNICATION FACILITY, AND IS NOT FOR HUMAN HABITATION. IT WILL BE USED FOR THE TRANSMISSION OF RADIO SIGNAL FOR THE PURPOSE OF PROVIDING PUBLIC CELLULAR SERVICE.
   - ADA COMPLIANCE NOT REQUIRED.
   - POTABLE WATER OR SANITARY SERVICE IS NOT REQUIRED.
   - NO OUTDOOR STORAGE OR ANY SOLID WASTE RECEPTACLES REQUIRED.
2. CONTRACTOR SHALL VERIFY ALL PLANS, EXISTING DIMENSIONS, AND CONDITIONS ON JOB SITE. CONTRACTOR SHALL IMMEDIATELY NOTIFY THE ARCHITECT/ENGINEER IN WRITING OF ANY DISCREPANCIES BEFORE PROCEEDING WITH THE WORK. FAILURE TO NOTIFY THE ARCHITECT/ENGINEER PLACE THE RESPONSIBILITY ON THE CONTRACTOR TO CORRECT THE DISCREPANCIES AT THE CONTRACTOR'S EXPENSE.
3. NEW CONSTRUCTION WILL CONFORM TO ALL APPLICABLE CODES AND ORDINANCES.
   - BUILDING CODE: 2018 CONNECTICUT STATE BUILDING CODE
   - ELECTRICAL CODE: 2017 NATIONAL ELECTRICAL CODE
   - STRUCTURAL CODE: TIA/EIA-222-G STRUCTURAL STANDARDS FOR ANTENNA SUPPORTING STRUCTURES AND ANTENNAS.

GENERAL NOTES

1. THE CONTRACTOR SHALL GIVE ALL NOTICES AND COMPLY WITH ALL LAWS, ORDINANCES, RULES, REGULATIONS AND LAWFUL ORDERS OF ANY PUBLIC AUTHORITY, MUNICIPAL AND UTILITY COMPANY SPECIFICATIONS, AND LOCAL AND STATE JURISDICTIONAL CODES BEARING ON THE PERFORMANCE OF THE WORK. THE WORK PERFORMED ON THE PROJECT AND THE MATERIALS INSTALLED SHALL BE IN STRICT ACCORDANCE WITH ALL APPLICABLE CODES, REGULATIONS, AND ORDINANCES.
2. THE ARCHITECT/ENGINEER HAVE MADE EVERY EFFORT TO SET FORTH IN THE CONSTRUCTION AND CONTRACT DOCUMENTS THE COMPLETE SCOPE OF WORK. THE CONTRACTOR BIDDING THE JOB IS NEVERTHELESS CAUTIONED THAT MINOR OMISSIONS OR ERRORS IN THE DRAWINGS AND OR SPECIFICATIONS SHALL NOT EXCUSE SAID CONTRACTOR FROM COMPLETING THE PROJECT AND IMPROVEMENTS IN ACCORDANCE WITH THE INTENT OF THESE DOCUMENTS.
3. THE CONTRACTOR OR BIDDER SHALL BEAR THE RESPONSIBILITY OF NOTIFYING (IN WRITING) THE OMNIPOINT REPRESENTATIVE OF ANY CONFLICTS, ERRORS, OR OMISSIONS PRIOR TO THE SUBMISSION OF CONTRACTOR'S PROPOSAL OR PERFORMANCE OF WORK. IN THE EVENT OF DISCREPANCIES THE CONTRACTOR SHALL PRICE THE MORE COSTLY OR EXTENSIVE WORK, UNLESS DIRECTED IN WRITING OTHERWISE.
4. THE SCOPE OF WORK SHALL INCLUDE FURNISHING ALL MATERIALS, EQUIPMENT, LABOR AND ALL OTHER MATERIALS AND LABOR DEEMED NECESSARY TO COMPLETE THE WORK/PROJECT AS DESCRIBED HEREIN.
5. THE CONTRACTOR SHALL VISIT THE JOB SITE PRIOR TO THE SUBMISSION OF BIDS OR PERFORMING WORK TO FAMILIARIZE HIMSELF WITH THE FIELD CONDITIONS AND TO VERIFY THAT THE PROJECT CAN BE CONSTRUCTED IN ACCORDANCE WITH THE CONTRACT DOCUMENTS.
6. THE CONTRACTOR SHALL OBTAIN AUTHORIZATION TO PROCEED WITH CONSTRUCTION PRIOR TO STARTING WORK ON ANY ITEM NOT CLEARLY DEFINED BY THE CONSTRUCTION DRAWINGS/CONTRACT DOCUMENTS.
7. THE CONTRACTOR SHALL INSTALL ALL EQUIPMENT AND MATERIALS ACCORDING TO THE MANUFACTURER'S/VENDOR'S SPECIFICATIONS UNLESS NOTED OTHERWISE OR WHERE LOCAL CODES OR ORDINANCES TAKE PRECEDENCE.
8. THE CONTRACTOR SHALL PROVIDE A FULL SET OF CONSTRUCTION DOCUMENTS AT THE SITE UPDATED WITH THE LATEST REVISIONS AND ADDENDUMS OR CLARIFICATIONS AVAILABLE FOR THE USE BY ALL PERSONNEL INVOLVED WITH THE PROJECT.
9. THE CONTRACTOR SHALL SUPERVISE AND DIRECT THE PROJECT DESCRIBED HEREIN. THE CONTRACTOR SHALL BE SOLELY RESPONSIBLE FOR ALL CONSTRUCTION MEANS, METHODS, TECHNIQUES, SEQUENCES AND PROCEDURES AND FOR COORDINATING ALL PORTIONS OF THE WORK UNDER THE CONTRACT.
10. THE CONTRACTOR IS RESPONSIBLE FOR PROVIDING ALL NECESSARY CONSTRUCTION CONTROL SURVEYS, ESTABLISHING AND MAINTAINING ALL LINES AND GRADES REQUIRED TO CONSTRUCT ALL IMPROVEMENTS AS SHOWN HEREIN.
11. THE CONTRACTOR SHALL BE RESPONSIBLE FOR OBTAINING ALL PERMITS AND INSPECTIONS WHICH MAY BE REQUIRED FOR THE WORK BY THE ARCHITECT/ENGINEER, THE STATE, COUNTY OR LOCAL GOVERNMENT AUTHORITY.
12. THE CONTRACTOR SHALL MAKE NECESSARY PROVISIONS TO PROTECT EXISTING IMPROVEMENTS, EASEMENTS, PAVING, CURBING, ETC. DURING CONSTRUCTION. UPON COMPLETION OF WORK, THE CONTRACTOR SHALL REPAIR ANY DAMAGE THAT MAY HAVE OCCURRED DUE TO CONSTRUCTION ON OR ABOUT THE PROPERTY.
13. THE CONTRACTOR SHALL KEEP THE GENERAL WORK AREA CLEAN AND HAZARD FREE DURING CONSTRUCTION AND DISPOSE OF ALL DIRT, DEBRIS, RUBBISH AND REMOVE EQUIPMENT NOT SPECIFIED AS REMAINING ON THE PROPERTY. PREMISES SHALL BE LEFT IN CLEAN CONDITION AND FREE FROM PAINT SPOTS, DUST, OR SMUDGES OF ANY NATURE.
14. THE CONTRACTOR SHALL COMPLY WITH ALL OSHA REQUIREMENTS AS THEY APPLY TO THIS PROJECT.
15. THE CONTRACTOR SHALL NOTIFY THE PROJECT OWNER'S REPRESENTATIVE WHERE A CONFLICT OCCURS ON ANY OF THE CONTRACT DOCUMENTS. THE CONTRACTOR IS NOT TO ORDER MATERIAL OR CONSTRUCT ANY PORTION OF THE WORK THAT IS IN CONFLICT UNTIL CONFLICT IS RESOLVED BY THE LESSEE/LICENSEE REPRESENTATIVE.
16. THE CONTRACTOR SHALL VERIFY ALL DIMENSIONS, ELEVATIONS, PROPERTY LINES, ETC. ON THE JOB.
17. ALL UNDERGROUND UTILITY INFORMATION WAS DETERMINED FROM SURFACE INVESTIGATIONS AND EXISTING PLANS OF RECORD. THE CONTRACTOR SHALL LOCATE ALL UNDERGROUND UTILITIES IN THE FIELD PRIOR TO ANY SITE WORK.

AT LEAST 72 HOURS PRIOR TO DIGGING, THE CONTRACTOR IS REQUIRED TO CALL DIG SAFE AT 811

VICINITY MAP

SCALE: 1" = 1000'-0"

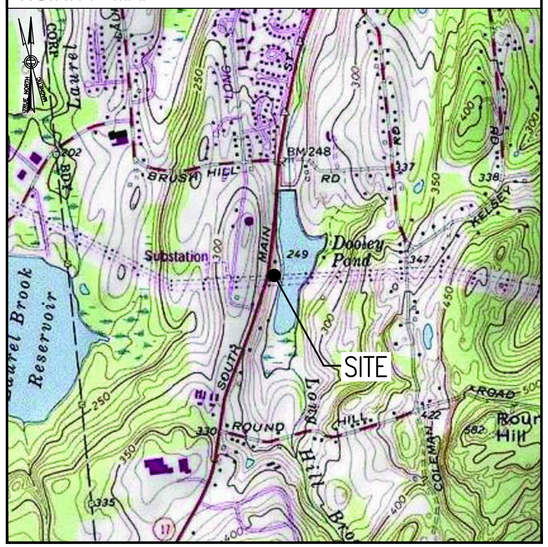

DO NOT SCALE DRAWINGS

CONTRACTOR SHALL VERIFY ALL PLANS AND EXISTING DIMENSIONS AND CONDITIONS ON THE JOB SITE AND SHALL IMMEDIATELY NOTIFY THE PROJECT OWNER'S REPRESENTATIVE IN WRITING OF DISCREPANCIES BEFORE PROCEEDING WITH THE WORK OR BE RESPONSIBLE FOR SAME.

SHEET INDEX

SHEET NO.	DESCRIPTION	REV. NO.
T-1	TITLE SHEET	1
GN-1	GENERAL NOTES	1
A-1	COMPOUND & EQUIPMENT PLAN	1
A-2	TOWER ELEVATIONS & ANTENNA PLAN	1
A-3	SITE DETAILS	1
E-1	ELECTRIC & GROUNDING DETAILS	1

SPECIAL ZONING NOTE:
BASED ON INFORMATION PROVIDED BY T-MOBILE REGULATORY COMPLIANCE PROFESSIONALS AND LEGAL COUNSEL, THIS TELECOMMUNICATIONS EQUIPMENT DEPLOYMENT IS CONSIDERED AN ELIGIBLE FACILITY UNDER THE MIDDLE CLASS TAX RELIEF AND JOB CREATION ACT OF 2012, 47 USC 1455(A), SECTION 6409(A), AND IS SUBJECT TO AN ELIGIBLE FACILITY REQUEST, EXPEDITED REVIEW, AND LIMITED/PARTIAL ZONING PRE-EMPTION FOR LOCAL DISCRETIONARY PERMITS (VARIANCE, SPECIAL PERMIT, SITE PLAN REVIEW, OR ADMINISTRATIVE REVIEW).

PROJECT SUMMARY

SITE NUMBER:	CT11247E
SBA SITE NUMBER:	CT01080-S
SBA SITE NAME:	MIDDLETOWN
SITE ADDRESS:	1279 LONG HILL ROAD MIDDLETOWN, CT 06457
PROPERTY OWNER:	SBA PROPERTIES, INC. ATTEN: TAX DEPARTMENT 8051 CONGRESS AVE. BOCA RATON, FL 33487
TOWER OWNER:	SBA PROPERTIES, LLC. 8501 CONGRESS AVENUE BOCA RATON, FL 33487 PHONE: 561-226-9523
COUNTY:	MIDDLESEX COUNTY
ZONING DISTRICT:	I-4, LIMITED INDUSTRY
STRUCTURE TYPE:	MONOPOLE
STRUCTURE HEIGHT:	158'
APPLICANT:	T-MOBILE NORTHEAST LLC 15 COMMERCE WAY, SUITE B NORTON, MA 02766
SBA RSM:	STEPHEN ROTH PHONE: 860-539-4920 EMAIL: SRoth@sbasite.com
ARCHITECT:	CHAPPELL ENGINEERING ASSOCIATES, LLC. 201 BOSTON POST ROAD WEST, SUITE 101 MARLBOROUGH, MA 01752
STRUCTURAL ENGINEER:	CHAPPELL ENGINEERING ASSOCIATES, LLC. 201 BOSTON POST ROAD WEST, SUITE 101 MARLBOROUGH, MA 01752
SITE CONTROL POINT:	LATITUDE: N.41.511221° (41°-30'-40.40") LONGITUDE W.-72.670719° (-72°-40'-14.59")

T-MOBILE NORTHEAST LLC
15 COMMERCE WAY, SUITE B
NORTON, MA 02766
(508) 286-2700

SBA
SBA COMMUNICATIONS CORP.
134 FLANDERS ROAD, SUITE 125
WESTBOROUGH, MA 01581
(508) 251-0720

CHAPPELL ENGINEERING ASSOCIATES, LLC
Civil · Structural · Land Surveying
R.K. EXECUTIVE CENTRE
201 BOSTON POST ROAD WEST, SUITE 101
MARLBOROUGH, MA 01752
(508) 481-7400
www.chappellengineering.com

STATE OF CONNECTICUT · CLEMENT J. SAMK · No. 26876 · LICENSED PROFESSIONAL ENGINEER

CHECKED BY: JMT

APPROVED BY: JMT

SUBMITTALS

REV.	DATE	DESCRIPTION	BY
1	08/02/19	ISSUED FOR CONSTRUCTION	BDJ
0	05/06/19	ISSUED FOR REVIEW	BDJ

SITE NUMBER:
CT11247E

SITE ADDRESS:
1279 LONG HILL ROAD
MIDDLETOWN, CT 06457

SHEET TITLE
TITLE SHEET

SHEET NUMBER
T-1

1815.058

GENERAL NOTES:

1. FOR THE PURPOSE OF CONSTRUCTION DRAWINGS, THE FOLLOWING DEFINITIONS SHALL APPLY:
   CONTRACTOR – T-MOBILE
   SUBCONTRACTOR – GENERAL CONTRACTOR (CONSTRUCTION)
   OWNER – T-MOBILE
   OEM – ORIGINAL EQUIPMENT MANUFACTURER

2. PRIOR TO THE SUBMISSION OF BIDS, THE BIDDING SUBCONTRACTOR SHALL VISIT THE CELL SITE TO FAMILIARIZE WITH THE EXISTING CONDITIONS AND TO CONFIRM THAT THE WORK CAN BE ACCOMPLISHED AS SHOWN ON THE CONSTRUCTION DRAWINGS. ANY DISCREPANCY FOUND SHALL BE BROUGHT TO THE ATTENTION OF CONTRACTOR.

3. ALL MATERIALS FURNISHED AND INSTALLED SHALL BE IN STRICT ACCORDANCE WITH ALL APPLICABLE CODES, REGULATIONS, AND ORDINANCES. SUBCONTRACTOR SHALL ISSUE ALL APPROPRIATE NOTICES AND COMPLY WITH ALL LAWS, ORDINANCES, RULES, REGULATIONS, AND LAWFUL ORDERS OF ANY PUBLIC AUTHORITY REGARDING THE PERFORMANCE OF THE WORK.

4. ALL WORK CARRIED OUT SHALL COMPLY WITH ALL APPLICABLE MUNICIPAL AND UTILITY COMPANY SPECIFICATIONS AND LOCAL, STATE AND FEDERAL JURISDICTIONAL CODES, ORDINANCES AND APPLICABLE REGULATIONS.

5. DRAWINGS PROVIDED HERE ARE NOT TO BE SCALED AND ARE INTENDED TO SHOW OUTLINE ONLY.

6. UNLESS NOTED OTHERWISE, THE WORK SHALL INCLUDE FURNISHING MATERIALS, EQUIPMENT, APPURTENANCES, AND LABOR NECESSARY TO COMPLETE ALL INSTALLATIONS AS INDICATED ON THE DRAWINGS.

7. THE SUBCONTRACTOR SHALL INSTALL ALL EQUIPMENT AND MATERIALS IN ACCORDANCE WITH MANUFACTURER'S RECOMMENDATIONS UNLESS SPECIFICALLY STATED OTHERWISE.

8. IF THE SPECIFIED EQUIPMENT CANNOT BE INSTALLED AS SHOWN ON THESE DRAWINGS, THE SUBCONTRACTOR SHALL PROPOSE AN ALTERNATIVE INSTALLATION FOR APPROVAL BY THE CONTRACTOR.

9. SUBCONTRACTOR SHALL DETERMINE ACTUAL ROUTING OF CONDUIT, POWER, T1 CABLES AND GROUNDING CABLES AS SHOWN ON THE POWER, GROUNDING AND TELCO PLAN DRAWING. SUBCONTRACTOR SHALL UTILIZE EXISTING TRAYS AND/OR SHALL ADD NEW TRAYS AS NECESSARY. SUBCONTRACTOR SHALL CONFIRM THE ACTUAL ROUTING WITH THE CONTRACTOR AND/OR LANDLORD PRIOR TO CONSTRUCTION.

10. THE SUBCONTRACTOR SHALL PROTECT EXISTING IMPROVEMENTS, PAVEMENTS, CURBS, LANDSCAPING AND STRUCTURES. ANY DAMAGED PART SHALL BE REPAIRED AT SUBCONTRACTOR'S EXPENSE TO THE SATISFACTION OF THE OWNER.

11. SUBCONTRACTOR SHALL LEGALLY AND PROPERLY DISPOSE OF ALL SCRAP MATERIALS SUCH AS COAXIAL CABLES AND OTHER ITEMS REMOVED FROM THE EXISTING FACILITY.

12. SUBCONTRACTOR SHALL LEAVE PREMISES IN CLEAN CONDITION AND RETURN DISTURBED AREAS TO ORIGINAL CONDITIONS.

13. THE SUBCONTRACTOR SHALL SUPERVISE AND DIRECT THE PROJECT DESCRIBED HEREIN. THE SUBCONTRACTOR SHALL BE SOLELY RESPONSIBLE FOR ALL CONSTRUCTION MEANS, METHODS, TECHNIQUES, SEQUENCES, AND PROCEDURES FOR COORDINATING ALL PORTIONS OF THE WORK UNDER THE CONTRACT.

14. SUBCONTRACTOR SHALL NOTIFY CHAPPELL ENGINEERING ASSOCIATES, LLC 48 HOURS IN ADVANCE OF POURING CONCRETE OR BACKFILLING TRENCHES, SEALING ROOF AND WALL PENETRATIONS AND POST DOWNS, FINISHING NEW WALLS OR FINAL ELECTRICAL CONNECTIONS FOR ENGINEERING REVIEW.

15. CONSTRUCTION SHALL COMPLY WITH ALL T-MOBILE STANDARDS AND SPECIFICATIONS.

16. SUBCONTRACTOR SHALL VERIFY ALL EXISTING DIMENSIONS AND CONDITIONS PRIOR TO COMMENCING ANY WORK. ALL DIMENSIONS OF EXISTING CONSTRUCTION SHOWN ON THE DRAWINGS MUST BE VERIFIED. SUBCONTRACTOR SHALL NOTIFY THE CONTRACTOR OF ANY DISCREPANCIES PRIOR TO ORDERING MATERIAL OR PROCEEDING WITH CONSTRUCTION.

17. THE EXISTING CELL SITES ARE IN FULL COMMERCIAL OPERATION. ANY CONSTRUCTION WORK BY SUBCONTRACTOR SHALL NOT DISRUPT THE EXISTING NORMAL OPERATION. ANY WORK ON EXISTING EQUIPMENT MUST BE COORDINATED WITH CONTRACTOR. ALSO, WORK SHOULD BE SCHEDULED FOR AN APPROPRIATE MAINTENANCE WINDOW USUALLY IN LOW TRAFFIC PERIODS AFTER MIDNIGHT.

18. IF THE EXISTING CELL SITE IS ACTIVE, ALL SAFETY PRECAUTIONS MUST BE TAKEN WHEN WORKING AROUND HIGH LEVELS OF ELECTROMAGNETIC RADIATION. EQUIPMENT SHOULD BE SHUTDOWN PRIOR TO PERFORMING ANY WORK THAT COULD EXPOSE THE WORKERS TO DANGER. PERSONAL RF EXPOSURE MONITORS ARE TO BE WORN TO ALERT OF ANY DANGEROUS EXPOSURE LEVELS.

SITE WORK GENERAL NOTES:

1. THE SUBCONTRACTOR SHALL CONTACT UTILITY LOCATING SERVICES PRIOR TO THE START OF CONSTRUCTION.

2. ALL EXISTING ACTIVE SEWER, WATER, GAS, ELECTRIC, AND OTHER UTILITIES WHERE ENCOUNTERED IN THE WORK, SHALL BE PROTECTED AT ALL TIMES, AND WHERE REQUIRED FOR THE PROPER EXECUTION OF THE WORK, SHALL BE RELOCATED AS DIRECTED BY ENGINEERS. EXTREME CAUTION SHOULD BE USED BY THE SUBCONTRACTOR WHEN EXCAVATING OR DRILLING PIERS AROUND OR NEAR UTILITIES. SUBCONTRACTOR SHALL PROVIDE SAFETY TRAINING FOR THE WORKING CREW. THIS WILL INCLUDE BUT NOT BE LIMITED TO A) FALL PROTECTION B) CONFINED SPACE C) ELECTRICAL SAFETY D) TRENCHING AND EXCAVATION.

3. ALL SITE WORK SHALL BE AS INDICATED ON THE DRAWINGS AND PROJECT SPECIFICATIONS.

4. IF NECESSARY, RUBBISH, STUMPS, DEBRIS, STICKS, STONES AND OTHER REFUSE SHALL BE REMOVED FROM THE SITE AND DISPOSED OF LEGALLY.

5. THE SITE SHALL BE GRADED TO CAUSE SURFACE WATER TO FLOW AWAY FROM THE BTS EQUIPMENT AND TOWER AREAS.

6. NO FILL OR EMBANKMENT MATERIAL SHALL BE PLACED ON FROZEN GROUND. FROZEN MATERIALS, SNOW OR ICE SHALL NOT BE PLACED IN ANY FILL OR EMBANKMENT.

7. THE SUB GRADE SHALL BE COMPACTED AND BROUGHT TO A SMOOTH UNIFORM GRADE PRIOR TO FINISHED SURFACE APPLICATION.

8. ALL EXISTING INACTIVE SEWER, WATER, GAS, ELECTRIC AND OTHER UTILITIES, WHICH INTERFERE WITH THE EXECUTION OF THE WORK, SHALL BE REMOVED AND/OR CAPPED, PLUGGED OR OTHERWISE DISCONTINUED AT POINTS WHICH WILL NOT INTERFERE WITH THE EXECUTION OF THE WORK, SUBJECT TO THE APPROVAL OF ENGINEERING, OWNER AND/OR LOCAL UTILITIES.

9. THE AREAS OF THE OWNERS PROPERTY DISTURBED BY THE WORK AND NOT COVERED BY THE TOWER, EQUIPMENT OR DRIVEWAY, SHALL BE GRADED TO A UNIFORM SLOPE AND STABILIZED TO PREVENT EROSION AS SPECIFIED IN THE PROJECT SPECIFICATIONS.

10. SUBCONTRACTOR SHALL MINIMIZE DISTURBANCE TO EXISTING SITE DURING CONSTRUCTION. EROSION CONTROL MEASURES, IF REQUIRED DURING CONSTRUCTION, SHALL BE IN CONFORMANCE WITH THE LOCAL GUIDELINES FOR EROSION AND SEDIMENT CONTROL.

11. THE SUBCONTRACTOR SHALL PROVIDE SITE SIGNAGE IN ACCORDANCE WITH THE T-MOBILE SPECIFICATION FOR SITE SIGNAGE.

CONCRETE AND REINFORCING STEEL NOTES:

1. ALL CONCRETE WORK SHALL BE IN ACCORDANCE WITH THE ACI 301, ACI 318, ACI 336, ASTM A184, ASTM A185 AND THE DESIGN AND CONSTRUCTION SPECIFICATION FOR CAST-IN-PLACE CONCRETE.

2. ALL CONCRETE SHALL HAVE A MINIMUM COMPRESSIVE STRENGTH OF 3000 PSI AT 28 DAYS, UNLESS NOTED OTHERWISE. A HIGHER STRENGTH (400PSI) MAY BE USED. ALL CONCRETE WORK SHALL BE IN ACCORDANCE WITH THE ACI 381 CODE REQUIREMENTS

3. REINFORCING STEEL SHALL CONFORM TO ASTM A 615, GRADE 60, DEFORMED UNLESS NOTED OTHERWISE. WELDED WIRE FABRIC SHALL CONFORM TO ASTM A 185 WELDED STEEL WIRE FABRIC UNLESS NOTED OTHERWISE. SPLICES SHALL BE CLASS "B" AND ALL HOOKS SHALL BE STANDARD, UNO.

4. THE FOLLOWING MINIMUM CONCRETE COVER SHALL BE PROVIDED FOR REINFORCING STEEL UNLESS SHOWN OTHERWISE ON DRAWINGS:
   CONCRETE CAST AGAINST EARTH.....3 IN.
   CONCRETE EXPOSED TO EARTH OR WEATHER:
   #6 AND LARGER .....2 IN.
   #5 AND SMALLER & WWF .....½ IN.
   CONCRETE NOT EXPOSED TO EARTH OR WEATHER
   OR NOT CAST AGAINST THE GROUND:
   SLAB AND WALL .....¾ IN.
   BEAMS AND COLUMNS .....½ IN.

5. A CHAMFER ¾" SHALL BE PROVIDED AT ALL EXPOSED EDGES OF CONCRETE, UNO, IN ACCORDANCE WITH ACI 301 SECTION 4.2.4.

6. INSTALLATION OF CONCRETE EXPANSION/WEDGE ANCHORS SHALL BE PER MANUFACTURER'S WRITTEN RECOMMENDED PROCEDURE. THE ANCHOR BOLT, DOWEL OR ROD SHALL CONFORM TO THE MANUFACTURERS RECOMMENDATION FOR EMBEDMENT DEPTH OR AS SHOWN ON THE DRAWINGS. NO REBAR SHALL BE CUT WITHOUT PRIOR CONTRACTOR APPROVAL WHEN DRILLING HOLES IN CONCRETE. SPECIAL INSPECTIONS, REQUIRED BY GOVERNING CODES, SHALL BE PERFORMED IN ORDER TO MAINTAIN MANUFACTURER'S MAXIMUM ALLOWABLE LOADS. ALL EXPANSION/WEDGE ANCHORS SHALL BE STAINLESS STEEL OR HOT DIPPED GALVANIZED. EXPANSION BOLTS SHALL BE PROVIDED BY SIMPSON OR APPROVED EQUAL.

7. CONCRETE CYLINDER TIES ARE NOT REQUIRED FOR SLAB ON GRADE WHEN CONCRETE IS LESS THAN 50 CUBIC YARDS (IBC1905.6.2.3) IN THAT EVENT THE FOLLOWING RECORDS SHALL BE PROVIDED BY THE CONCRETE SUPPLIER;
   (A) RESULTS OF CONCRETE CYLINDER TEST PERFORMED AT THE SUPPLIERS PLANT.
   (B) CERTIFICATION OF MINIMUM COMPRESSIVE STRENGTH FOR THE CONCRETE GRADE SUPPLIED.
FOR GREATER THAN 50 CUBIC YARDS THE GC SHALL PERFORM THE CONCRETE CYLINDER TEST.

8. AS AN ALTERNATIVE TO ITEM 7. TEST CYLINDERS SHALL BE TAKEN INITIALLY AND THEREAFTER FOR EVERY 50 YARDS OF CONCRETE FROM EACH DIFFERENT BATCH PLANT.

9. EQUIPMENT SHALL NOT BE PLACED ON NEW PADS FOR SEVEN DAYS AFTER PAD IS POURED, UNLESS IT IS VERIFIED BY CYLINDER TESTS THAT COMPRESSIVE STRENGTH HAS BEEN ATTAINED.

STRUCTURAL STEEL NOTES:

1. ALL STEEL WORK SHALL BE PAINTED OR GALVANIZED IN ACCORDANCE WITH THE DRAWINGS AND T-MOBILE SPECIFICATIONS UNLESS OTHERWISE NOTED. STRUCTURAL STEEL SHALL BE ASTM-A-36 UNLESS OTHERWISE NOTED ON THE SITE SPECIFIC DRAWINGS. STEEL DESIGN, INSTALLATION AND BOLTING SHALL BE IN ACCORDANCE WITH THE AMERICAN INSTITUTE OF STEEL CONSTRUCTION (AISC) "MANUAL OF STEEL CONSTRUCTION".

2. ALL WELDING SHALL BE PERFORMED USING E70XX ELECTRODES AND WELDING SHALL CONFORM TO AISC AND AWS D1.1. WHERE FILLET WELD SIZES ARE NOT SHOWN, PROVIDE THE MINIMUM SIZE PER TABLE J2.4 IN THE AISC "MANUAL OF STEEL CONSTRUCTION", 9TH EDITION. PAINTED SURFACES SHALL BE TOUCHED UP.

3. BOLTED CONNECTIONS SHALL USE BEARING TYPE ASTM A325 BOLTS (¾"ø) AND SHALL HAVE MINIMUM OF TWO BOLTS UNLESS NOTED OTHERWISE. ALL BOLTS SHALL BE GALVANIZED OR STAINLESS STEEL.

4. NON-STRUCTURAL CONNECTIONS FOR STEEL GRATING MAY USE ⅝" DIA. ASTM A 307 BOLTS (GALV) UNLESS NOTED OTHERWISE.

5. CONTRACTOR SHALL SUBMIT SHOP DRAWINGS FOR ENGINEER REVIEW & APPROVAL ON PROJECTS REQUIRING STRUCTURAL STEEL

6. ALL STRUCTURAL STEEL WORK SHALL BE DONE IN ACCORDANCE WITH AISC SPECIFICATIONS.

SOIL COMPACTION NOTES FOR SLAB ON GRADE:

1. EXCAVATE AS REQUIRED TO REMOVE VEGETATION AND TOPSOIL TO EXPOSE NATURAL SUBGRADE AND PLACE CRUSHED STONE AS REQUIRED.

2. COMPACTION CERTIFICATION: AN INSPECTION AND WRITTEN CERTIFICATION BY A QUALIFIED GEOTECHNICAL TECHNICIAN OR ENGINEER IS ACCEPTABLE.

3. AS AN ALTERNATE TO INSPECTION AND WRITTEN CERTIFICATION, THE "UNDISTURBED SOIL" BASE SHALL BE COMPACTED WITH "COMPACTION EQUIPMENT", LISTED BELOW, TO AT LEAST 90% MODIFIED PROCTOR MAXIMUM DENSITY PER ASTM D 1557 METHOD C.

4. COMPACTED SUBBASE SHALL BE UNIFORM AND LEVELED. PROVIDE 6" MINIMUM CRUSHED STONE OR GRAVEL COMPACTED IN 3" LIFTS ABOVE COMPACTED SOIL. GRAVEL SHALL BE NATURAL OR CRUSHED WITH 100% PASSING #1 SIEVE.

5. AS AN ALTERNATE TO ITEMS 2 AND 3, THE SUBGRADE SOILS WITH 5 PASSES OR A MEDIUM SIZED VIBRATORY PLATE COMPACTOR (SUCH AS BOMAG BPR 30/38) OR HAND-OPERATED SINGLE DRUM VIBRATORY ROLLER (SUCH AS BOMAG BW 55E). AND SOFT AREAS THAT ARE ENCOUNTERED SHOULD BE REMOVED AND REPLACED WITH A WELL-GRADED GRANULAR FILL AND COMPACTED AS STATED ABOVE.

COMPACTION EQUIPMENT:

1. HAND OPERATED DOUBLE DRUN, VIBRATORY ROLLER, VIBRATORY PLATE COMPACTOR OR JUMPING JACK COMPACTOR.

CONSTRUCTION NOTES:

1. FIELD VERIFICATION:
SUBCONTRACTOR SHALL FIELD VERIFY SCOPE OF WORK, T-MOBILE ANTENNA PLATFORM LOCATION AND UTILITY TRENCHWORK.

2. COORDINATION OF WORK:
SUBCONTRACTOR SHALL COORDINATE RF WORK AND PROCEDURES WITH CONTRACTOR.

3. CABLE LADDER RACK:
SUBCONTRACTOR SHALL FURNISH AND INSTALL CABLE LADDER RACK, CABLE TRAY AND/OR ICE BRIDGE, AND CONDUIT AS REQUIRED TO SUPPORT CABLES TO THE NEW BTS LOCATION.

ELECTRICAL INSTALLATION NOTES:

1. WIRING, RACEWAY, AND SUPPORT METHODS AND MATERIALS SHALL COMPLY WITH THE REQUIREMENTS OF THE NEC AND TELCORDIA.

2. SUBCONTRACTOR SHALL MODIFY OR INSTALL CABLE TRAY SYSTEM AS REQUIRED TO SUPPORT RF AND TRANSPORT CABLING TO THE NEW BTS EQUIPMENT. SUBCONTRACTOR SHALL SUBMIT MODIFICATIONS TO CONTRACTOR FOR APPROVAL.

3. ALL CIRCUITS SHALL BE SEGREGATED AND MAINTAIN MINIMUM CABLE SEPARATION AS REQUIRED BY THE NEC AND TELCORDIA.

4. CABLES SHALL NOT BE ROUTED THROUGH LADDER-STYLE CABLE TRAY RUNGS.

5. EACH END OF EVERY POWER, GROUNDING, AND T1 CONDUCTOR AND CABLE SHALL BE LABELED WITH COLOR-CODED INSULATION OR ELECTRICAL TAPE (3M BRAND, 1/2 INCH PLASTIC ELECTRICAL TAPE WITH UV PROTECTION, OR EQUAL). THE IDENTIFICATION METHOD SHALL CONFORM WITH NEC AND OSHA, AND MATCH INSTALLATION REQUIREMENTS.

6. POWER PHASE CONDUCTORS (I.E., HOTS) SHALL BE LABELED WITH COLOR-CODED INSULATION OR ELECTRICAL TAPE (3M BRAND, ½ INCH PLASTIC ELECTRICAL TAPE WITH UV PROTECTION, OR EQUAL). PHASE CONDUCTOR COLOR CODES SHALL CONFORM WITH THE NEC AND OSHA.

7. ALL ELECTRICAL COMPONENTS SHALL BE CLEARLY LABELED WITH ENGRAVED LAMACOID PLASTIC LABELS. ALL EQUIPMENT SHALL BE LABELED WITH THEIR VOLTAGE RATING, PHASE CONFIGURATION, WIRE CONFIGURATION, POWER OR AMPACITY RATING, AND BRANCH CIRCUIT ID NUMBERS (I.E., PANELBOARD AND CIRCUIT ID'S).

8. PANELBOARDS (ID NUMBERS) AND INTERNAL CIRCUIT BREAKERS (CIRCUIT ID NUMBERS) SHALL BE CLEARLY LABELED WITH ENGRAVED LAMACOID PLASTIC LABELS.

9. ALL TIE WRAPS SHALL BE CUT FLUSH WITH APPROVED CUTTING TOOL TO REMOVE SHARP EDGES.

10. POWER, CONTROL, AND EQUIPMENT GROUND WIRING IN TUBING OR CONDUIT SHALL BE SINGLE CONDUCTOR (#34 AWG OR LARGER), 600 V, OIL RESISTANT THHN OR THWN-2, CLASS B STRANDED COPPER CABLE RATED FOR 90 °C (WET AND DRY) OPERATION; LISTED OR LABELED FOR THE LOCATION AND RACEWAY SYSTEM USED, UNLESS OTHERWISE SPECIFIED.

11. SUPPLEMENTAL EQUIPMENT GROUND WIRING LOCATED INDOORS SHALL BE SINGLE CONDUCTOR (#6 AWG OR LARGER), 600 V, OIL RESISTANT THHN OR THWN-2 GREEN INSULATION, CLASS B STRANDED COPPER CABLE RATED FOR 90 °C (WET AND DRY) OPERATION; LISTED OR LABELED FOR THE LOCATION AND RACEWAY SYSTEM USED, UNLESS OTHERWISE SPECIFIED.

12. SUPPLEMENTAL EQUIPMENT GROUND WIRING LOCATED OUTDOORS, OR BELOW GRADE, SHALL BE SINGLE CONDUCTOR #2 AWG SOLID TINNED COPPER CABLE, UNLESS OTHERWISE SPECIFIED.

13. POWER AND CONTROL WIRING, NOT IN TUBING OR CONDUIT, SHALL BE MULTI-CONDUCTOR, TYPE TC CABLE (#34 AWG OR LARGER), 600 V, OIL RESISTANT THHN OR THWN-2, CLASS B STRANDED COPPER CABLE RATED FOR 90 °C (WET AND DRY) OPERATION; WITH OUTER JACKET; LISTED OR LABELED FOR THE LOCATION USED, UNLESS OTHERWISE SPECIFIED.

14. ALL POWER AND GROUNDING CONNECTIONS SHALL BE CRIMP-STYLE, COMPRESSION WIRE LUGS AND WIRENUTS BY HARGER (OR EQUAL). LUGS AND WIRENUTS SHALL BE RATED FOR OPERATION AT NO LESS THAN 75°C (90°C IF AVAILABLE).

15. RACEWAY AND CABLE TRAY SHALL BE LISTED OR LABELED FOR ELECTRICAL USE IN ACCORDANCE WITH NEMA, UL, ANSI/IEEE AND NEC.

16. NEW RACEWAY OR CABLE TRAY WILL MATCH THE EXISTING INSTALLATION WHERE POSSIBLE.

17. ELECTRICAL METALLIC TUBING (EMT) OR RIGID NONMETALLIC CONDUIT (I.E., RIGID PVC SCHEDULE 40 OR RIGID PVC SCHEDULE 80 FOR LOCATIONS SUBJECT TO PHYSICAL DAMAGE) SHALL BE USED FOR EXPOSED INDOOR LOCATIONS.

18. ELECTRICAL METALLIC TUBING (EMT), ELECTRICAL NONMETALLIC TUBING (ENT), OR RIGID NONMETALLIC CONDUIT (RIGID PVC, SCHEDULE 40) SHALL BE USED FOR CONCEALED INDOOR LOCATIONS.

19. GALVANIZED STEEL INTERMEDIATE METALLIC CONDUIT (IMC) SHALL BE USED FOR OUTDOOR LOCATIONS ABOVE GRADE.

20. RIGID NONMETALLIC CONDUIT (I.E., RIGID PVC SCHEDULE 40 OR RIGID PVC SCHEDULE 80) SHALL BE USED UNDERGROUND; DIRECT BURIED, IN AREAS OF OCCASIONAL LIGHT VEHICLE TRAFFIC OR ENCASED IN REINFORCED CONCRETE IN AREAS OF HEAVY VEHICLE TRAFFIC.

21. LIQUID-TIGHT FLEXIBLE METALLIC CONDUIT (LIQUID-TITE FLEX) SHALL BE USED INDOORS AND OUTDOORS, WHERE VIBRATION OCCURS OR FLEXIBILITY IS NEEDED.

22. CONDUIT AND TUBING FITTINGS SHALL BE THREADED OR COMPRESSION-TYPE AND APPROVED FOR THE LOCATION USED. SETSCREW FITTINGS ARE NOT ACCEPTABLE.

23. CABINETS, BOXES AND WIREWAYS SHALL BE LISTED OR LABELED FOR ELECTRICAL USE IN ACCORDANCE WITH NEMA, UL, ANSI/IEEE AND NEC.

24. CABINETS, BOXES AND WIREWAYS TO MATCH THE EXISTING INSTALLATION WHERE POSSIBLE.

25. WIREWAYS SHALL BE EPOXY-COATED (GRAY) AND INCLUDE A HINGED COVER, DESIGNED TO SWING OPEN DOWNWARD; SHALL BE PANDUIT TYPE E (OR EQUAL); AND RATED NEMA 1 (OR BETTER) INDOORS, OR NEMA 3R (OR BETTER) OUTDOORS.

26. EQUIPMENT CABINETS, TERMINAL BOXES, JUNCTION BOXES, AND PULL BOXES SHALL BE GALVANIZED OR EPOXY-COATED SHEET STEEL, SHALL MEET OR EXCEED UL 50, AND RATED NEMA 1 (OR BETTER) INDOORS, OR NEMA 3R (OR BETTER) OUTDOORS.

27. METAL RECEPTACLE, SWITCH, AND DEVICE BOXES SHALL BE GALVANIZED, EPOXY-COATED, OR NON-CORRODING; SHALL MEET OR EXCEED UL 514A AND NEMA OS 1; AND RATED NEMA 1 (OR BETTER) INDOORS, OR WEATHER PROTECTED (WP OR BETTER) OUTDOORS.

28. NONMETALLIC RECEPTACLE, SWITCH, AND DEVICE BOXES SHALL MEET OR EXCEED NEMA OS 2; AND RATED NEMA 1 (OR BETTER) INDOORS, OR WEATHER PROTECTED (WP OR BETTER) OUTDOORS.

29. THE SUBCONTRACTOR SHALL NOTIFY AND OBTAIN NECESSARY AUTHORIZATION FROM THE CONTRACTOR BEFORE COMMENCING WORK ON THE AC POWER DISTRIBUTION PANELS.

30. THE SUBCONTRACTOR SHALL PROVIDE NECESSARY TAGGING ON THE BREAKERS, CABLES AND DISTRIBUTION PANELS IN ACCORDANCE WITH THE APPLICABLE CODES AND STANDARDS TO SAFEGUARD AGAINST LIFE AND PROPERTY.

31. ALL ELECTRICAL WORK SHALL BE PERFORMED IN ACCORDANCE WITH THE PROJECT SPECIFICATIONS, NEC AND ALL APPLICABLE LOCAL CODES.

32. CONDUIT ROUTINGS ARE SCHEMATIC. SUBCONTRACTOR SHALL INSTALL CONDUITS SO THAT ACCESS TO EQUIPMENT IS NOT BLOCKED.

T-MOBILE
NORTHEAST LLC

15 COMMERCE WAY, SUITE B
NORTON, MA 02766
(508) 286-2700

SBA

SBA COMMUNICATIONS CORP.
134 FLANDERS ROAD, SUITE 125
WESTBOROUGH, MA 01581
(508) 251-0720

CHAPPELL ENGINEERING ASSOCIATES, LLC
Civil ·Structural ·Land Surveying

R.K. EXECUTIVE CENTRE
201 BOSTON POST ROAD WEST, SUITE 101
MARLBOROUGH, MA 01752
(508) 481-7400
www.chappellengineering.com

STATE OF CONNECTICUT
CLEMENT J. SAJK
No. 26876
LICENSED
PROFESSIONAL ENGINEER

CHECKED BY: JMT

APPROVED BY: JMT

SUBMITTALS

REV.	DATE	DESCRIPTION	BY
1	08/02/19	ISSUED FOR CONSTRUCTION	BDJ
0	05/06/19	ISSUED FOR REVIEW	BDJ

SITE NUMBER:
CT11247E

SITE ADDRESS:
1279 LONG HILL ROAD
MIDDLETOWN, CT 06457

SHEET TITLE

GENERAL NOTES

SHEET NUMBER

GN-1

1815.058

SPECIAL PRE-CONSTRUCTION WORK NOTE (SBA-PROVIDED TOWER STRUCTURAL ANALYSIS SPECIAL EQUIPMENT INSTALLATION REQUIREMENTS):
GENERAL CONTRACTOR SHALL FURNISH AND INSTALL ALL SPECIAL OR SUPPLEMENTAL ADDITIONAL TOWER-MOUNTED EQUIPMENT PER RECOMMENDATIONS FROM SBA-PROVIDED TOWER STRUCTURAL ANALYSIS FOR ANY SPECIAL SHIELDING OF TOWER TOP EQUIPMENT AND FOR ANY SPECIAL FEEDLINE BUNDLING OR RELOCATION.

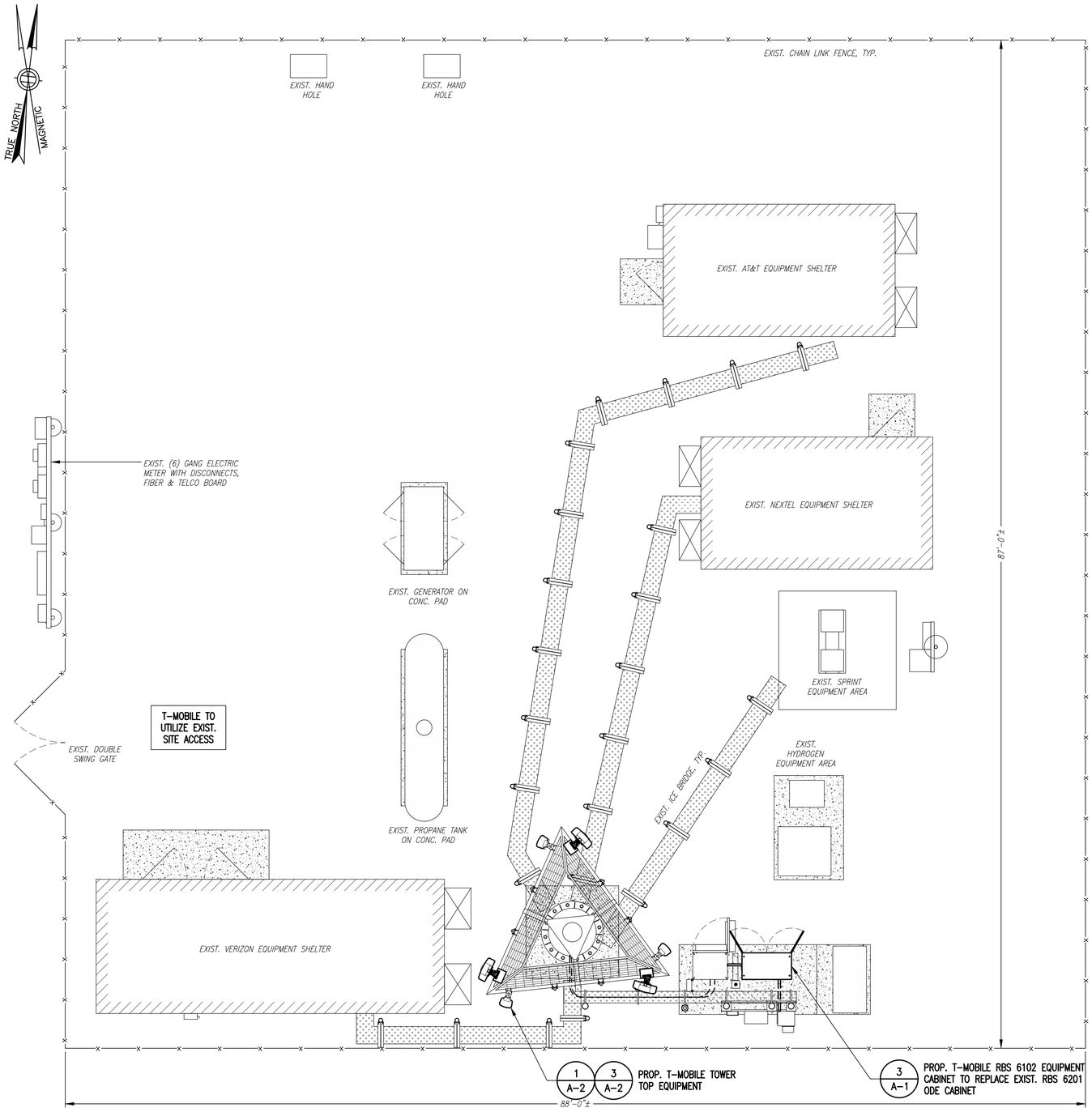

COMPOUND PLAN (1 / A-1)

SCALE: 1" = 5'-0"

0 5'-0" 10'-0" 15'-0"

FEEDLINE SCHEDULE	FEEDLINES	LOCATION
A	EXISTING TO REMAIN: (9) 1-5/8" COAX CABLES, (6) CONNECTED (3) DISCONNECTED EXISTING TO BE REMOVED: (3) 1-5/8" COAX CABLES	ROUTED PER TOWER STRUCTURAL ANALYSIS
B	PROPOSED: (3) 1-5/8" HCS FIBER	

NOTE:
EXISTING T-MOBILE EQUIPMENT FEEDLINE INVENTORY BASED ON OBSERVED FIELD CONDITIONS, RFDS AND FEEDLINE LEASING ENTITLEMENTS MAY DIFFER.

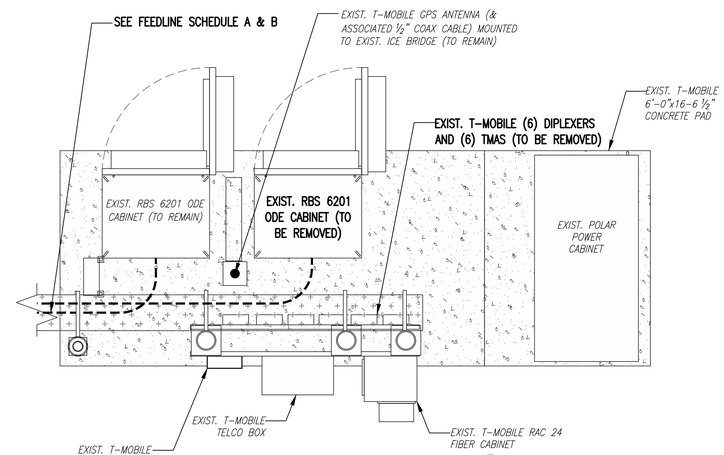

EXISTING EQUIPMENT PLAN (2 / A-1)

SCALE: 1/2" = 1'-0"

0 2'-0" 4'-0" 6'-0"

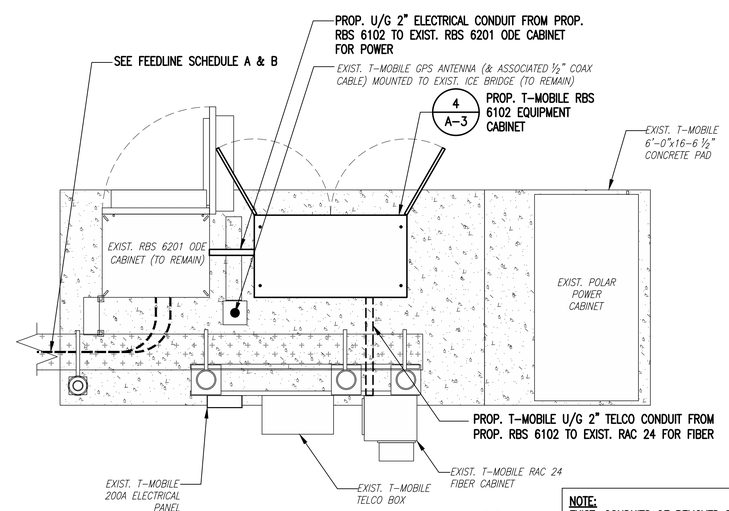

PROPOSED EQUIPMENT PLAN (3 / A-1)

SCALE: 1/2" = 1'-0"

0 2'-0" 4'-0" 6'-0"

NOTE:
EXIST. CONDUITS OF REMOVED RBS 6201 CABINET TO BE REROUTED OR REMOVED TO ACCOMMODATE PROP. RBS 6102 EQUIPMENT CABINET.

T-MOBILE NORTHEAST LLC
15 COMMERCE WAY, SUITE B
NORTON, MA 02766
(508) 286-2700

SBA
SBA COMMUNICATIONS CORP.
134 FLANDERS ROAD, SUITE 125
WESTBOROUGH, MA 01581
(508) 251-0720

CHAPPELL ENGINEERING ASSOCIATES, LLC
Civil · Structural · Land Surveying
R.K. EXECUTIVE CENTRE
201 BOSTON POST ROAD WEST, SUITE 101
MARLBOROUGH, MA 01752
(508) 481-7400
www.chappellengineering.com

STATE OF CONNECTICUT · CLEMENT J. SAMK · No. 26876 · LICENSED PROFESSIONAL ENGINEER

CHECKED BY: JMT

APPROVED BY: JMT

SUBMITTALS

REV.	DATE	DESCRIPTION	BY
1	08/02/19	ISSUED FOR CONSTRUCTION	BDJ
0	05/06/19	ISSUED FOR REVIEW	BDJ

SITE NUMBER:
CT11247E

SITE ADDRESS:
1279 LONG HILL ROAD
MIDDLETOWN, CT 06457

SHEET TITLE
COMPOUND & EQUIPMENT PLAN

SHEET NUMBER
A-1

1815.058

SPECIAL CONSTRUCTION NOTE (SBA-PROVIDED ANTENNA MOUNT STRUCTURAL MOD SPECIAL EQUIPMENT INSTALLATION REQUIREMENTS):
GENERAL CONTRACTOR SHALL FURNISH AND INSTALL ALL ANTENNA MOUNT STRUCTURAL AUGMENTS (STRUCTURAL MODIFICATIONS) AT THE T-MOBILE RAD/VERTICAL EQUIPMENT SPACE PER RECOMMENDATIONS FROM SBA-PROVIDED ANTENNA MOUNT STRUCTURAL ANALYSIS AND ANY SUPPLEMENTAL CONSTRUCTION DRAWINGS (PROVIDED BY OTHERS).

SPECIAL PRE-CONSTRUCTION WORK NOTE (SBA-PROVIDED TOWER STRUCTURAL ANALYSIS SPECIAL EQUIPMENT INSTALLATION REQUIREMENTS):
GENERAL CONTRACTOR SHALL FURNISH AND INSTALL ALL SPECIAL OR SUPPLEMENTAL ADDITIONAL TOWER-MOUNTED EQUIPMENT PER RECOMMENDATIONS FROM SBA-PROVIDED TOWER STRUCTURAL ANALYSIS FOR ANY SPECIAL SHIELDING OF TOWER TOP EQUIPMENT AND FOR ANY SPECIAL FEEDLINE BUNDLING OR RELOCATION.

RAD CENTER NOTE:
T-MOBILE RAD CENTER SHOWN IN RED TEXT BASED ON SBA-PROVIDED CO-LOCATION APPLICATION, EQUIPMENT DATABASE, AND STRUCTURAL ANALYSIS. THE SBA-PROVIDED ANTENNA RAD CENTER SHALL SUPERSEDE ANY CONFLICTING INFORMATION DERIVED FROM THE T-MOBILE RFDS.

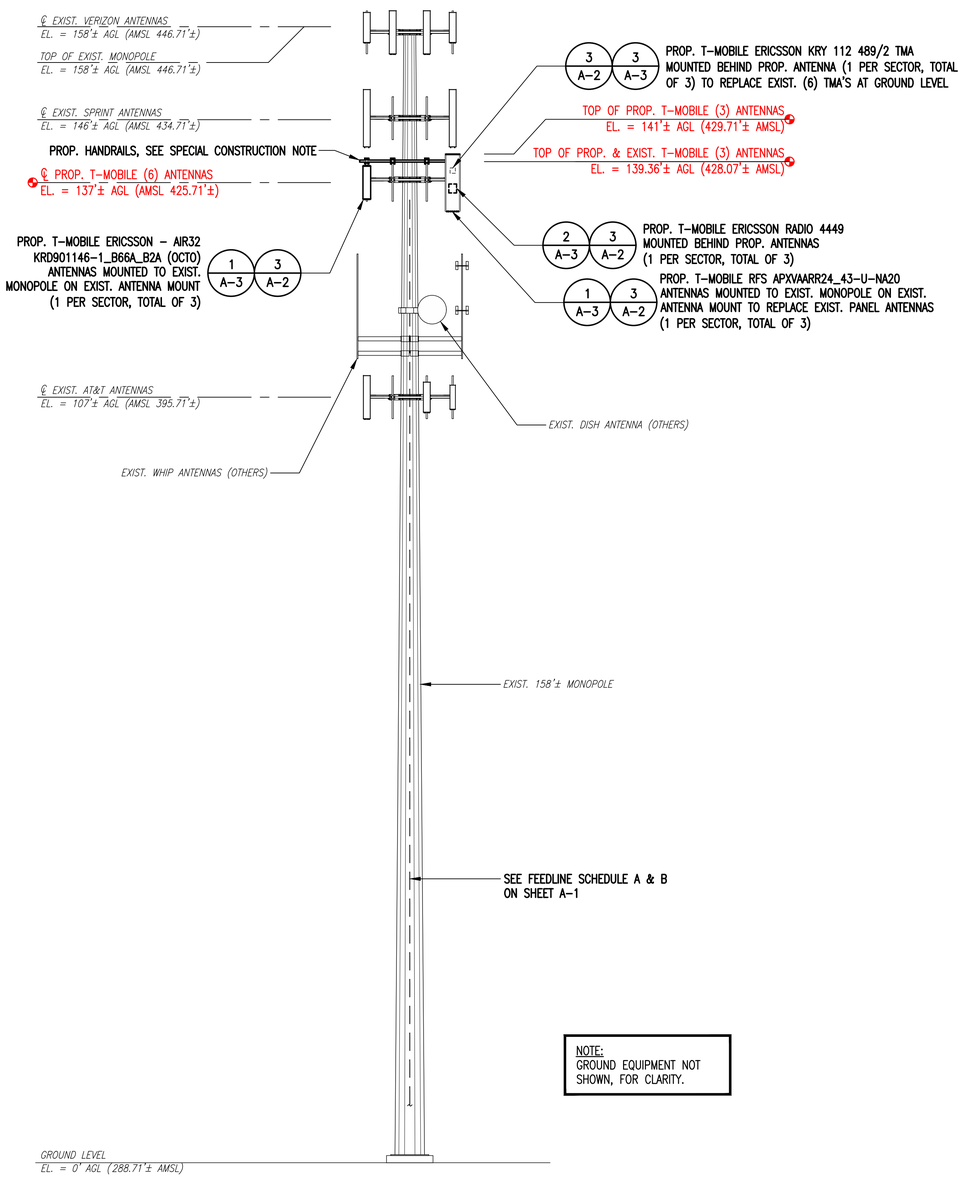

NOTE: GROUND EQUIPMENT NOT SHOWN, FOR CLARITY.

NOTE: ABOVE MEAN SEA LEVEL (AMSL) SOURCE-GOOGLE MAP

TOWER ELEVATION
1 / A-2
SCALE: 1" = 10'-0"
0 5' 10' 20' 30'

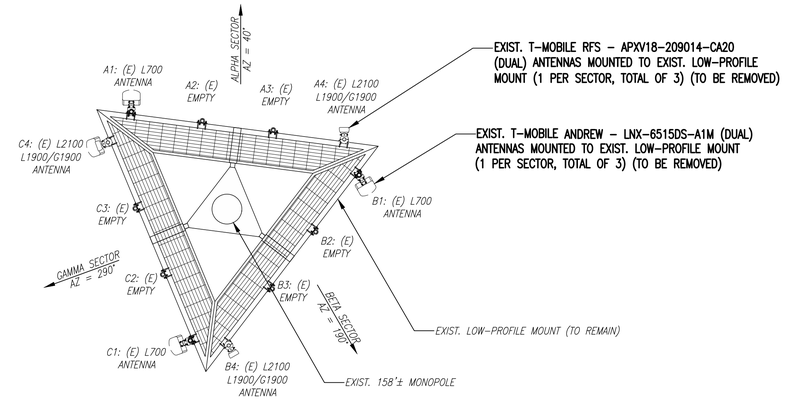

EXISTING ANTENNA PLAN
2 / A-2
SCALE: N.T.S.
NORTH

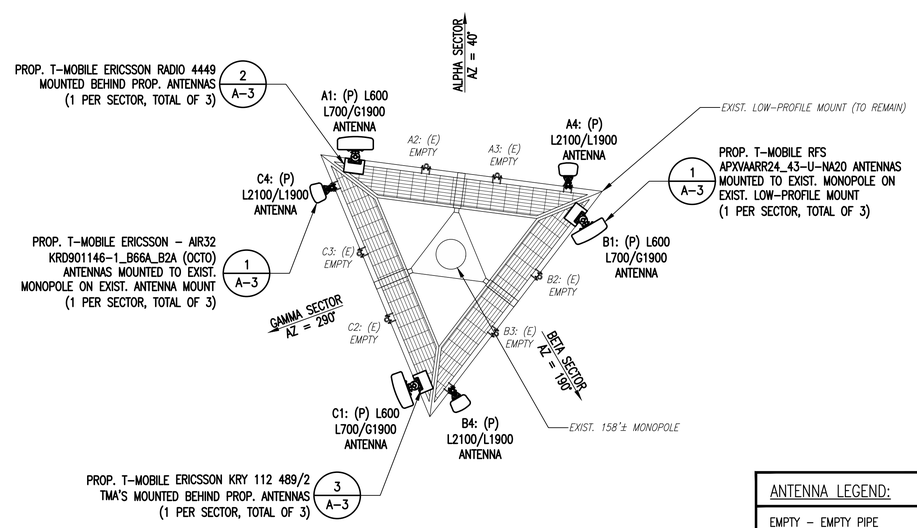

PROPOSED ANTENNA PLAN
3 / A-2
SCALE: N.T.S.
NORTH

ANTENNA LEGEND:
EMPTY – EMPTY PIPE
(E) – EXISTING
(P) – INSTALL

NOTE:
VERIFY PROPOSED AZIMUTHS WITH RF ENGINEER PRIOR TO INSTALLATION.

T-MOBILE NORTHEAST LLC
15 COMMERCE WAY, SUITE B
NORTON, MA 02766
(508) 286-2700

SBA COMMUNICATIONS CORP.
134 FLANDERS ROAD, SUITE 125
WESTBOROUGH, MA 01581
(508) 251-0720

CHAPPELL ENGINEERING ASSOCIATES, LLC
Civil Structural Land Surveying
R.K. EXECUTIVE CENTRE
201 BOSTON POST ROAD WEST, SUITE 101
MARLBOROUGH, MA 01752
(508) 481-7400
www.chappellengineering.com

STATE OF CONNECTICUT
CLEMENT J. SAMK
No. 26876
LICENSED
PROFESSIONAL ENGINEER

CHECKED BY: JMT

APPROVED BY: JMT

SUBMITTALS

REV.	DATE	DESCRIPTION	BY
1	08/02/19	ISSUED FOR CONSTRUCTION	BDJ
0	05/06/19	ISSUED FOR REVIEW	BDJ

SITE NUMBER:
CT11247E

SITE ADDRESS:
1279 LONG HILL ROAD
MIDDLETOWN, CT 06457

SHEET TITLE
TOWER ELEVATIONS & ANTENNA PLAN

SHEET NUMBER
A-2

1815.058

FINAL ANTENNA CONFIGURATION

SECTOR	ANTENNA	RAD CENTER	AZIMUTH (TRUE NORTH)	MECHANICAL DOWNTILT	ELECTRICAL DOWNTILT	BAND	TMA/RADIOS	CABLES
ALPHA	RFS APXVAARR24_43-U-NA20	137'± AGL	40°	0°	2°	L600/L700	ERICSSON RADIO 4449 B71+B12	(1) 6x12 HCS CABLE (SHARED)
						G1900	ERICSSON KRY 112 489/2	*(2) 1-5/8" COAXIAL CABLES*
	EMPTY	*N/A*	*N/A*	*N/A*	*N/A*	*N/A*	*N/A*	*N/A*
	EMPTY	*N/A*	*N/A*	*N/A*	*N/A*	*N/A*	*N/A*	*N/A*
	ERICSSON AIR32 KRD901146-1_B66A_B2A	137'± AGL	40°	0°	2°	L2100/L1900	–	(1) 6x12 HYBRID CABLE TRUNK (SHARED)
BETA	RFS APXVAARR24_43-U-NA20	137'± AGL	190°	0°	2°	L600/L700	ERICSSON RADIO 4449 B71+B12	(1) 6x12 HCS CABLE (SHARED)
						G1900	ERICSSON KRY 112 489/2	*(2) 1-5/8" COAXIAL CABLES*
	EMPTY	*N/A*	*N/A*	*N/A*	*N/A*	*N/A*	*N/A*	*N/A*
	EMPTY	*N/A*	*N/A*	*N/A*	*N/A*	*N/A*	*N/A*	*N/A*
	ERICSSON AIR32 KRD901146-1_B66A_B2A	137'± AGL	190°	0°	2°	L2100/L1900	–	(1) 6x12 HYBRID CABLE TRUNK (SHARED)
GAMMA	RFS APXVAARR24_43-U-NA20	137'± AGL	290°	0°	2°	L600/L700	ERICSSON RADIO 4449 B71+B12	(1) 6x12 HCS CABLE (SHARED)
						G1900	ERICSSON KRY 112 489/2	*(2) 1-5/8" COAXIAL CABLES*
	EMPTY	*N/A*	*N/A*	*N/A*	*N/A*	*N/A*	*N/A*	*N/A*
	EMPTY	*N/A*	*N/A*	*N/A*	*N/A*	*N/A*	*N/A*	*N/A*
	ERICSSON AIR32 KRD901146-1_B66A_B2A	137'± AGL	290°	0°	2°	L2100/L1900	–	(1) 6x12 HYBRID CABLE TRUNK (SHARED)

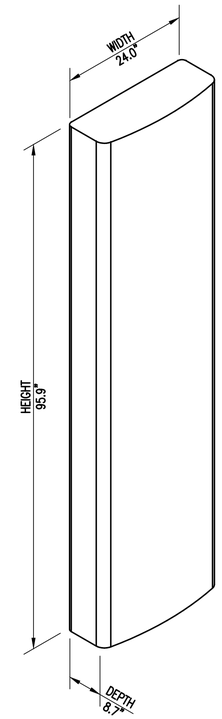

RFS APXVAARR24_43-U-NA20 PANEL ANTENNA
DIMENSIONS: 95.9"H x 24.0"W x 8.7"D
WEIGHT: 128.0 LBS
1 PER SECTOR, TOTAL OF 3

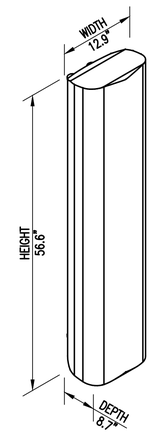

ERICSSON AIR32 KRD901146-1 B66A/B2A ANTENNA
DIMENSIONS: 56.6"H x 12.9"W x 8.7"D
WEIGHT: 132.2 LBS
1 PER SECTOR, TOTAL OF 3

ANTENNA DETAILS (1 / A-3)
SCALE: N.T.S.

ERICSSON RADIO 4449 B12+B71
DIMENSIONS: 14.9"H x 13.2"W x 9.3"D
WEIGHT: 74.0 LBS
1 PER SECTOR, TOTAL OF 3

RRU DETAIL (2 / A-3)
SCALE: N.T.S.

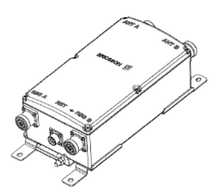

ERICSSON KRY 112 489/2
DIMENSIONS: 11.0"H x 6.1"W x 3.94"D
WEIGHT: 15.4 LBS
1 PER SECTOR, TOTAL OF 3

TMA DETAIL (3 / A-3)
SCALE: N.T.S.

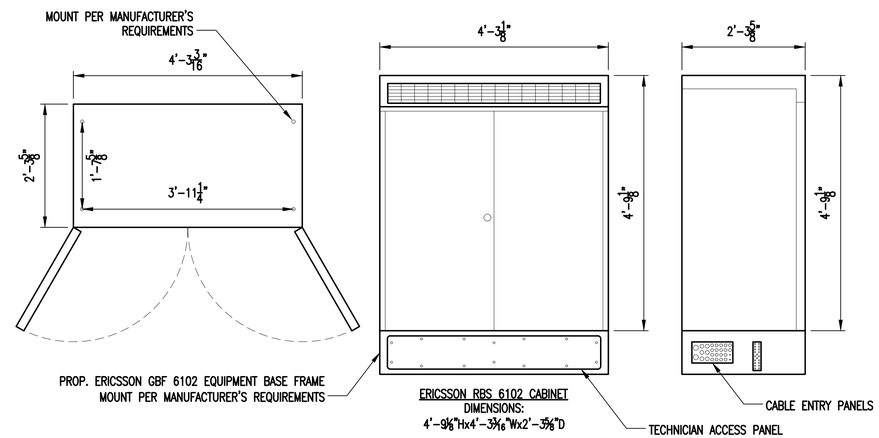

ERICSSON RBS 6102 CABINET
DIMENSIONS:
4'-9 1/8"Hx4'-3 3/16"Wx2'-3 5/8"D

RBS6102 DETAILS (4 / A-3)
SCALE: N.T.S.

T-MOBILE NORTHEAST LLC
15 COMMERCE WAY, SUITE B
NORTON, MA 02766
(508) 286-2700

SBA COMMUNICATIONS CORP.
134 FLANDERS ROAD, SUITE 125
WESTBOROUGH, MA 01581
(508) 251-0720

CHAPPELL ENGINEERING ASSOCIATES, LLC
Civil · Structural · Land Surveying
R.K. EXECUTIVE CENTRE
201 BOSTON POST ROAD WEST, SUITE 101
MARLBOROUGH, MA 01752
(508) 481-7400
www.chappellengineering.com

STATE OF CONNECTICUT · CLEMENT J. SAMK · No. 26876 · LICENSED PROFESSIONAL ENGINEER

CHECKED BY: JMT

APPROVED BY: JMT

SUBMITTALS

REV.	DATE	DESCRIPTION	BY
1	08/02/19	ISSUED FOR CONSTRUCTION	BDJ
0	05/06/19	ISSUED FOR REVIEW	BDJ

SITE NUMBER:
CT11247E

SITE ADDRESS:
1279 LONG HILL ROAD
MIDDLETOWN, CT 06457

SHEET TITLE
SITE DETAILS

SHEET NUMBER
A-3

1815.058

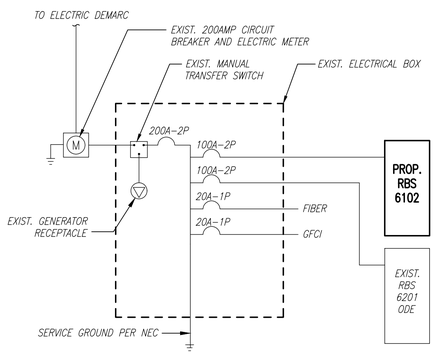

ONE LINE DIAGRAM

SCALE: NOT TO SCALE

1 / E-1

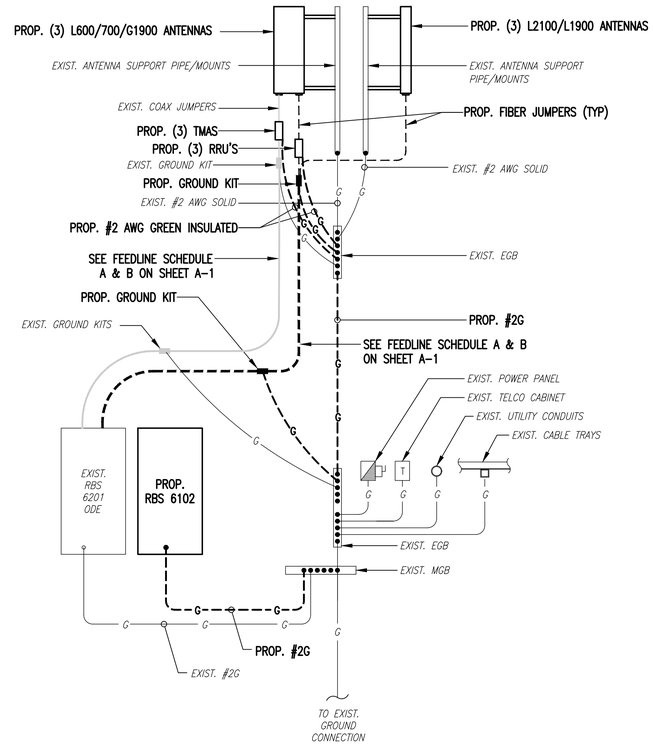

GROUNDING RISER DIAGRAM

SCALE: NOT TO SCALE

2 / E-1

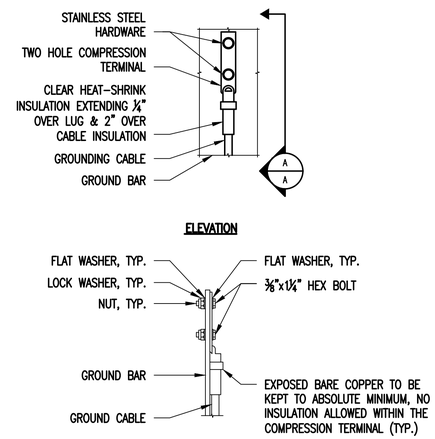

NOTES:

1. "DOUBLING UP" OR "STACKING" OF CONNECTION IS NOT PERMITTED.
2. OXIDE INHIBITING COMPOUND TO BE USED AT ALL LOCATIONS.
3. CADWELL DOWNLEADS FROM UPPER EGB, LOWER EGB AND MGB.

TYPICAL GROUND BAR CONNECTIONS DETAIL

SCALE: NOT TO SCALE

3 / E-1

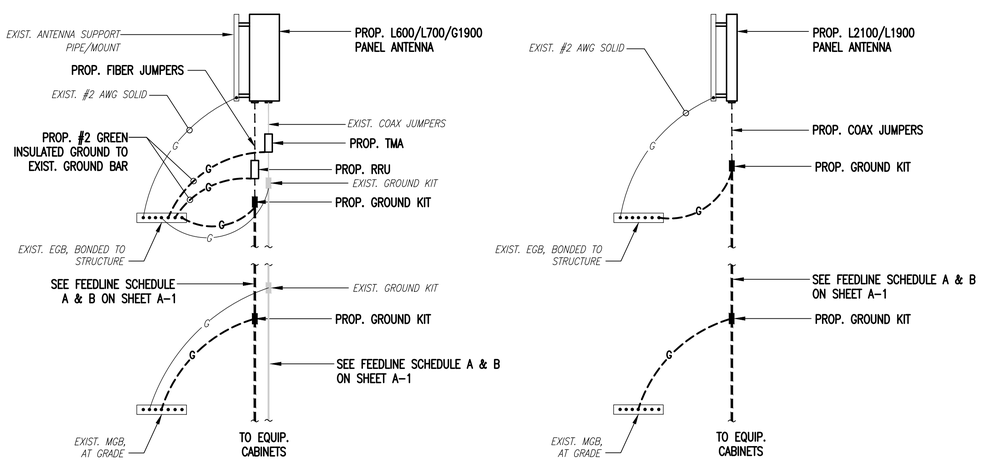

COAX CABLE CONNECTION AND GROUNDING DETAIL

SCALE: NOT TO SCALE

4 / E-1

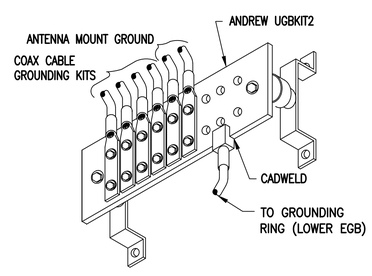

GROUND BAR (EGB)

SCALE: NOT TO SCALE

5 / E-1

ELECTRICAL AND GROUNDING NOTES

1. ALL ELECTRICAL WORK SHALL CONFORM TO THE REQUIREMENTS OF THE NATIONAL ELECTRICAL CODE (NEC) AS WELL AS APPLICABLE STATE AND LOCAL CODES.
2. ALL ELECTRICAL ITEMS SHALL BE U.L. APPROVED OR LISTED AND PROCURED PER SPECIFICATION REQUIREMENTS.
3. THE ELECTRICAL WORK INCLUDES ALL LABOR AND MATERIAL DESCRIBED BY DRAWINGS AND SPECIFICATION INCLUDING INCIDENTAL WORK TO PROVIDE COMPLETE OPERATING AND APPROVED ELECTRICAL SYSTEM.
4. GENERAL CONTRACTOR SHALL PAY FEES FOR PERMITS, AND IS RESPONSIBLE FOR OBTAINING SAID PERMITS AND COORDINATION OF INSPECTIONS.
5. ELECTRICAL AND TELCO WIRING OUTSIDE A BUILDING AND EXPOSED TO WEATHER SHALL BE IN WATER TIGHT GALVANIZED RIGID STEEL CONDUITS OR SCHEDULE 80 PVC (AS PERMITTED BY CODE) AND WHERE REQUIRED IN LIQUID TIGHT FLEXIBLE METAL OR NONMETALLIC CONDUITS.
6. BURIED CONDUIT SHALL BE SCHEDULE 40 PVC.
7. ELECTRICAL WIRING SHALL BE COPPER WITH TYPE XHHW, THWN, OR THHNINSULATION.
8. RUN ELECTRICAL CONDUIT OR CABLE BETWEEN ELECTRICAL UTILITY DEMARCATION POINT AND PROJECT OWNER CELL SITE PPC AS INDICATED ON THIS DRAWING. PROVIDE FULL LENGTH PULL ROPE. COORDINATE INSTALLATION WITH UTILITY COMPANY.
9. RUN TELCO CONDUIT OR CABLE BETWEEN TELEPHONE UTILITY DEMARCATION POINT AND PROJECT OWNER CELL SITE TELCO CABINET AND BTS CABINET AS INDICATED ON THIS DRAWING PROVIDE FULL LENGTH PULL ROPE IN INSTALLED TELCO CONDUIT. PROVIDE GREENLEE CONDUIT MEASURING TAPE AT EACH END.
10. WHERE CONDUIT BETWEEN BTS AND PROJECT OWNER CELL SITE PPC AND BETWEEN BTS AND PROJECT OWNER CELL SITE TELCO SERVICE CABINET ARE UNDERGROUND USE PVC, SCHEDULE 40 CONDUIT. ABOVE THE GROUND PORTION OF THESE CONDUITS SHALL BE PVC CONDUIT.
11. ALL EQUIPMENT LOCATED OUTSIDE SHALL HAVE NEMA 3R ENCLOSURE.
12. PPC SUPPLIED BY PROJECT OWNER.
13. GROUNDING SHALL COMPLY WITH NEC ART. 250. ADDITIONALLY, GROUNDING, BONDING AND LIGHTNING PROTECTION SHALL BE DONE IN ACCORDANCE WITH "T-MOBILE BTS SITE GROUNDING STANDARDS".
14. GROUND COAXIAL CABLE SHIELDS MINIMUM AT BOTH ENDS USING MANUFACTURERS COAX CABLE GROUNDING KITS SUPPLIED BY PROJECT OWNER.
15. USE #6 COPPER STRANDED WIRE WITH GREEN COLOR INSULATION FOR ABOVE GRADE GROUNDING (UNLESS OTHERWISE SPECIFIED) AND #2 SOLID TINNED BARE COPPER WIRE FOR BELOW GRADE GROUNDING AS INDICATED ON THE DRAWING.
16. ALL GROUND CONNECTIONS TO BE BURNDY HYGROUND COMPRESSION TYPE CONNECTORS OR CADWELD EXOTHERMIC WELD. DO NOT ALLOW BARE COPPER WIRE TO BE IN CONTACT WITH GALVANIZED STEEL.
17. ROUTE GROUNDING CONDUCTORS ALONG THE SHORTEST AND STRAIGHTEST PATH POSSIBLE. EXCEPT AS OTHERWISE INDICATED. GROUNDING LEADS SHOULD NEVER BE BENT AT RIGHT ANGLE. ALWAYS MAKE AT LEAST 12" RADIUS BENDS. #6 WIRE CAN BE BENT AT 6" RADIUS WHEN NECESSARY. BOND ANY METAL OBJECTS WITHIN 6 FEET OF PROJECT OWNER EQUIPMENT OR CABINET TO MASTER GROUND BAR OR GROUNDING RING.
18. CONNECTIONS TO GROUND BARS SHALL BE MADE WITH TWO HOLE COMPRESSION TYPE COPPER LUGS. APPLY OXIDE INHIBITING COMPOUND TO ALL LOCATIONS.
19. APPLY OXIDE INHIBITING COMPOUND TO ALL COMPRESSION TYPE GROUND CONNECTIONS.
20. CONTRACTOR SHALL PROVIDE AND INSTALL OMNI DIRECTIONAL ELECTRONIC MARKER SYSTEM (EMS) BALLS OVER EACH GROUND ROD AND BONDING POINT BETWEEN EXIST. TOWER/ MONOPOLE GROUNDING RING AND EQUIPMENT GROUNDING RING.
21. CONTRACTOR SHALL TEST COMPLETED GROUND SYSTEM AND RECORD RESULTS FOR PROJECT CLOSE-OUT DOCUMENTATION. 5 OHMNS MINIMUM RESISTANCE REQUIRED.
22. CONTRACTOR SHALL CONDUCT ANTENNA, COAX, AND LNA RETURN-LOSS AND DISTANCE- TO-FAULT MEASUREMENTS (SWEEP TESTS) AND RECORD RESULTS FOR PROJECT CLOSE OUT.

T-MOBILE NORTHEAST LLC

15 COMMERCE WAY, SUITE B
NORTON, MA 02766
(508) 286-2700

SBA

SBA COMMUNICATIONS CORP.
134 FLANDERS ROAD, SUITE 125
WESTBOROUGH, MA 01581
(508) 251-0720

CHAPPELL ENGINEERING ASSOCIATES, LLC
Civil Structural Land Surveying

R.K. EXECUTIVE CENTRE
201 BOSTON POST ROAD WEST, SUITE 101
MARLBOROUGH, MA 01752
(508) 481-7400
www.chappellengineering.com

STATE OF CONNECTICUT
CLEMENT J. SAMK
No. 26876
LICENSED
PROFESSIONAL ENGINEER

CHECKED BY: JMT

APPROVED BY: JMT

SUBMITTALS

REV.	DATE	DESCRIPTION	BY
1	08/02/19	ISSUED FOR CONSTRUCTION	BDJ
0	05/06/19	ISSUED FOR REVIEW	BDJ

SITE NUMBER:
CT11247E

SITE ADDRESS:
1279 LONG HILL ROAD
MIDDLETOWN, CT 06457

SHEET TITLE
ELECTRICAL & GROUNDING DETAILS

SHEET NUMBER
E-1

1815.058

EXHIBIT 7

Tower Engineering Solutions
Phone (972) 483-0607, Fax (972) 975-9615
1320 Greenway Drive, Suite 600, Irving, Texas 75038

Structural Analysis Report

Existing 158 ft SUMMIT Monopole

Customer Name: SBA Communications Corp

Customer Site Number: CT01080-S

Customer Site Name: Long Hill #1

Carrier Name: T-Mobile (App#: 115951, V1)

Carrier Site ID / Name: CT11247E / Middletown

Site Location: 1279 Long Hill Road

Middletown, Connecticut

Middlesex County

Latitude: 41.511231

Longitude: -72.670744

STATE OF CONNECTICUT
HANMING YOU
28931
LICENSED
PROFESSIONAL ENGINEER

7/17/19

Analysis Result:

Max Structural Usage: 91.5% [Pass]

Max Foundation Usage: 59.0% [Pass]

Additional Usage Caused by Mount Modification: +0.6%

Report Prepared By : Dipika Dhungana

Introduction

The purpose of this report is to summarize the analysis results on the 158 ft SUMMIT Monopole to support the proposed antennas and transmission lines in addition to those currently installed. Any modification listed under Sources of Information was assumed completed and was included in this analysis.

Sources of Information

Tower Drawings	Tower drawings prepared by Summit Manufacturing, Inc., Job No. 5173 dated 11/08/1999
Foundation Drawing	Foundation drawings prepared by Paul J. Ford & Company, Job No. 29299-641 dated 10/22/1999
Geotechnical Report	Geotechnical report prepared by Jawarski Geotech, Inc., Project No. C98590G dated 02/04/1999
Modification Drawings	N/A

Analysis Criteria

The rigorous analysis was performed in accordance with the requirements and stipulations of the ANSI/TIA/EIA 222-G**.** In accordance with this standard, the structure was analyzed using **TESPoles,** a proprietary analysis software. The program considers the structure as an elastic 3-D model with second-order effects and temperature effects incorporated in the analysis. The analysis was performed using multiple wind directions.

Wind Speed Used in the Analysis:	Ultimate Design Wind Speed V_{ult} =130.0 mph (3-Sec. Gust)/ Nominal Design Wind Speed V_{asd} = 101.0 mph (3-Sec. Gust)
Wind Speed with Ice:	50 mph (3-Sec. Gust) with 3/4" radial ice concurrent
Operational Wind Speed:	60 mph + 0" Radial ice
Standard/Codes:	ANSI/TIA/EIA 222-G / 2015 IBC / 2018 Connecticut State Building Code
Exposure Category:	C
Structure Class:	II
Topographic Category:	1
Crest Height:	0 ft
Seismic Parameters:	S_S = 0.18, S_1 = 0.062

This structural analysis is based upon the tower being classified as a Structure Class II; however, if a different classification is required subsequent to the date hereof, the tower classification will be changed to meet such requirement and a new structural analysis will be run.

Existing Antennas, Mounts and Transmission Lines

The table below summarizes the antennas, mounts and transmission lines that were considered in the analysis as existing on the tower.

Items	Elevation (ft.)	Qty.	Antenna Descriptions	Mount Type & Qty.	Transmission Lines	Owner
1	158.0	6	Commscope SBNHH-1D65B - Panel	(1) Low Profile Platform	(10) 1 5/8"; (2) 1 5/8" Hybrid	Verizon
2		2	Amphenol LPA-80063-6CF-EDIN-5 - Panel			
3		4	RFS APL866513-42T0			
4		3	Alcatel RRH2X60-AWS			
5		3	Alcatel RRH2X60-700			
6		3	Alcatel RRH2X60-PCS			
7		6	RFS FD9R6004/2CL-3CL Diplexer			
8		2	RFS DB-T1-6C-8AB-0Z Distribution Box			
9	151.0	1	Andrew VHLP2.5 - Dish	(1) Pipe Mount	(1) 1/2"	Clearwire
10		1	ODU			
11	146.0	3	RFS APXVSPP18-C-A20 w/ Mount Pipe - Panel	(1) Low Profile Platform	(3) 1 1/4"; (1) 1-1/4" Power / Fiber	Sprint
12		3	RFS APXVTM14-C-120 w/ Mount Pipe - Panel			
13		3	Alcatel TD-RRH8x20-25			
14		3	Alcatel 1900MHz RRH			
15		3	Alcatel 800 MHz RRH			
16		3	Alcatel 800MHz Filters			
17		4	RFS ACU-A20-N RET			
18		1	GPS			
19		3	Kathrein Scala 840 10054 - Panel		(2) 1/2"; (6) 5/16"	Clearwire
20		3	RRUs			
-	137.0	3	RFS APXV18-209014-02 - Panel	(1) Low Profile Platform w/ Support Kit	(12) 1 5/8"	T-Mobile
-		3	Commscope LNX-6515DS - Panel			
-		12	Allen Telecom FE15S01P77/75 TMA's			
-		3	Kathrein 782 11056 Diplexer			
27	120.225	2	SC479-HF1LDF(D00-E5749) - Omni	(1) Pipe Mount	(1) 1/2" (3) 7/8"	City of Middletown
28	124.583	1	SC229-DFLN - Omni			
29	113.0	1	DS428E83I01T - TTA			
30	120.0	1	Cambium Network HP3-11- Dish	(1) Ring Mount (DCH8)	(1) EW90	
31	116.0	3	Kathrein 742 213 - Panel	(1) Low Profile Platform (Assumed)	(6) 1 5/8"	Metro PCS
32	107.0	3	CCI HPA-65R-BUU-H6 - Panel	(1) Low Profile Platform	(12) 1 5/8"; (1) 1/2" Fiber; (2) 3/4" DC	AT&T
33		3	Powerwave 7770.00 - Panel			
34		3	KMW AM-X-CD-16-65-00T-RET - Panel			
35		3	Powerwave TT19-08BP111-0011 TMA's			
36		3	CCI DTMAP7819VG12A TMA's			
37		6	Powerwave 7020.00 RET's			
38		3	Ericsson RRUS 11			
39		3	Ericsson RRUS-32 B2			
40		6	Powerwave LGP21903 Diplexer			
41		1	Raycap DC6-48-60-18-8F			

Proposed Carrier's Final Configuration of Antennas, Mounts and Transmission Lines

Information pertaining to the proposed carrier's final configuration of antennas and transmission lines was provided by SBA Communications Corp. The proposed antennas and lines are listed below.

Items	Elevation (ft)	Qty.	Antenna Descriptions	Mount Type & Qty.	Transmission Lines	Owner
21	137.0	3	RFS APXVAARR24_43-U-NA20	Low Profile Platform w/ Support rail w/ end connection MS-HRECP-35	(9) 1 5/8" (3) 1 5/8"Fiber	T-Mobile
22		3	Ericsson Air32 KRD901146-1_B66A_B2A			
23		9	Allen Telecom FE15501P77/75			
24		3	Ericsson KRY 112 489/2			
25		3	Ericsson Radio 4449 B71+B12			
26		3	Kathrein 782 11056			

See the attached coax layout for the line placement considered in the analysis.

Analysis Results

The results of the structural analysis, performed for the wind and ice loading and antenna equipment as defined above, are summarized as the following:

	Pole shafts	Anchor Bolts	Base Plate
Max. Usage:	**91.5%**	**62.2%**	**91.4%**
Pass/Fail	**Pass**	**Pass**	**Pass**

Foundations

	Moment (Kip-Ft)	Shear (Kips)	Axial (Kips)
Original Design Reactions	4350.0	37.5	51.0
Analysis Reactions	5101.0	43.8	86.8

The foundation has been investigated using the supplied documents and soils report and was found adequate. Therefore, no modification to the foundation will be required.

Operational Condition (Rigidity):

Operational characteristics of the tower are found to be within the limits prescribed by ANSI/TIA/EIA 222-G for the installed antennas. The maximum twist/sway at the elevation of the proposed equipment is 1.4977 degrees under the operational wind speed as specified in the Analysis Criteria.

Conclusions

Based on the analysis results, the existing structure and its foundation were found to be adequate to safely support the existing and proposed equipment and meet the minimum requirements per the ANSI/TIA/EIA 222-G Standard under the design basic wind speed as specified in the Analysis Criteria.

Standard Conditions

1. This analysis was performed based on the information supplied to **(TES) Tower Engineering Solutions, LLC.** Verification of the information provided was not included in the Scope of Work for **TES**. The accuracy of the analysis is dependent on the accuracy of the information provided.

2. The structural analysis was performance based upon the evidence available at the time of this report. All information provided by the client is considered to be accurate.

3. The analyses will be performed based on the codes as specified by the client or based on the best knowledge of the engineering staff of **TES**. In the absence of information to the contrary, all work will be performed in accordance with the latest relevant revision of ANSI/TIA-222. If wind speed and/or ice loads are different from the minimum values recommended by the EIA/TIA-222 standard or other codes, **TES** should be notified in writing and the applicable minimum values provided by the client.

4. The configuration of the existing mounts, antennas, coax and other appurtenances were supplied by the customer for the current structural analysis. **TES** has not visited the tower site to verify the adequacy of the information provided. If there is any discrepancy found in the report regarding the existing conditions, **TES** should be notified immediately to evaluate the effect of the discrepancy on the analysis results.

5. The client will assume responsibility for rework associated with the differences in initially provided information, including tower and foundation information, existing and/or proposed equipment and transmission lines.

6. If a feasibility analysis was performed, final acceptance of changed conditions shall be based upon a rigorous structural analysis.

Usage Diagram - Max Ratio 91.54% at 96.5ft

Structure:	CT01080-S-SBA	**Code:**	EIA/TIA-222-G	7/9/2019	
Site Name:	Long Hill #1	**Exposure:**	C		
Height:	158.00 (ft)	**Gh:**	1.1		
Base Elev:	0.000 (ft)			Page: 1	

Tower Engineering Solutions

Dead Load Factor: 1.20

Wind Load Factor: 1.60

Load Case : 1.2D + 1.6W 101 mph Wind

Iterations: 25

Copyright © 2019 by Tower Engineering Solutions, LLC. All rights reserved.

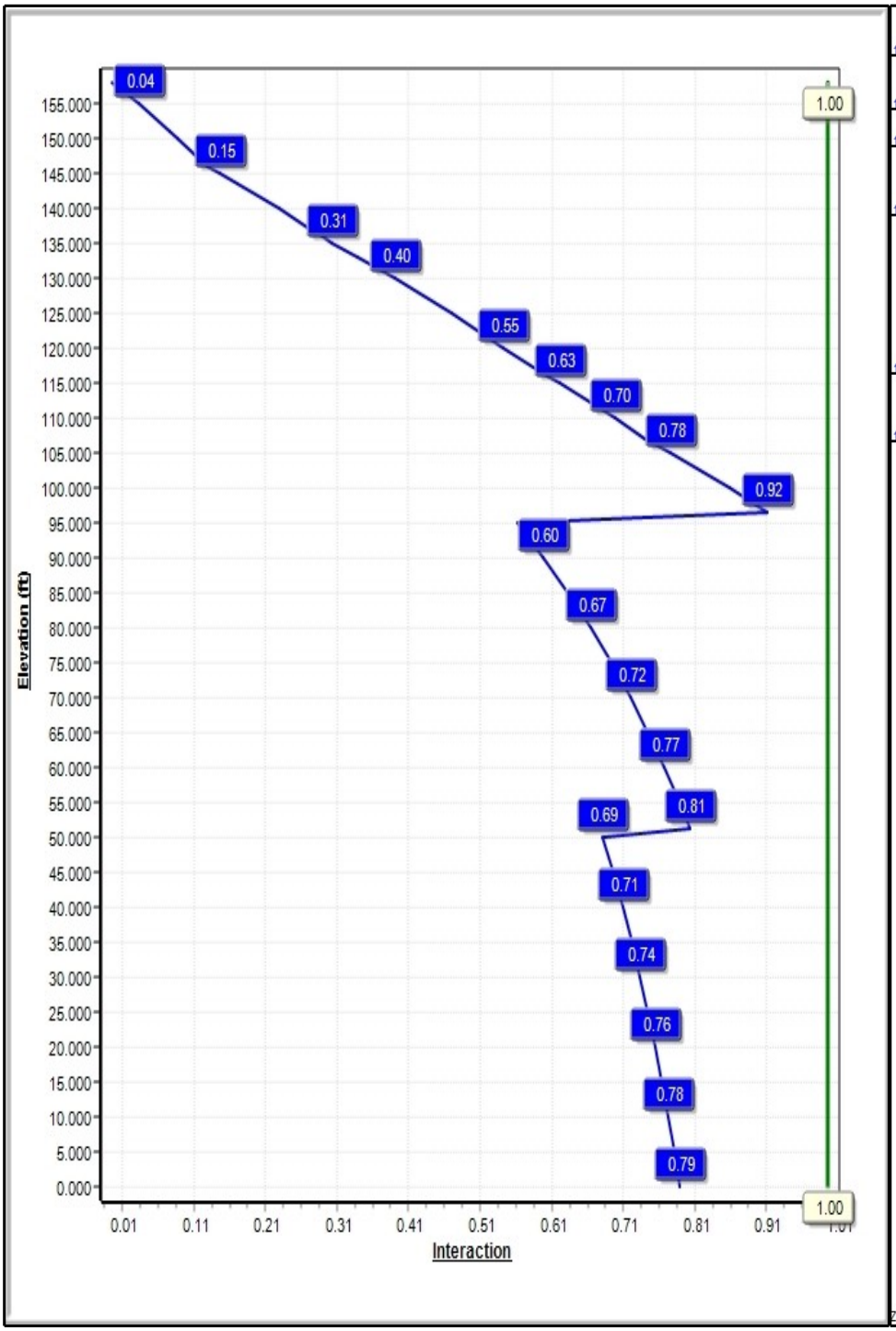

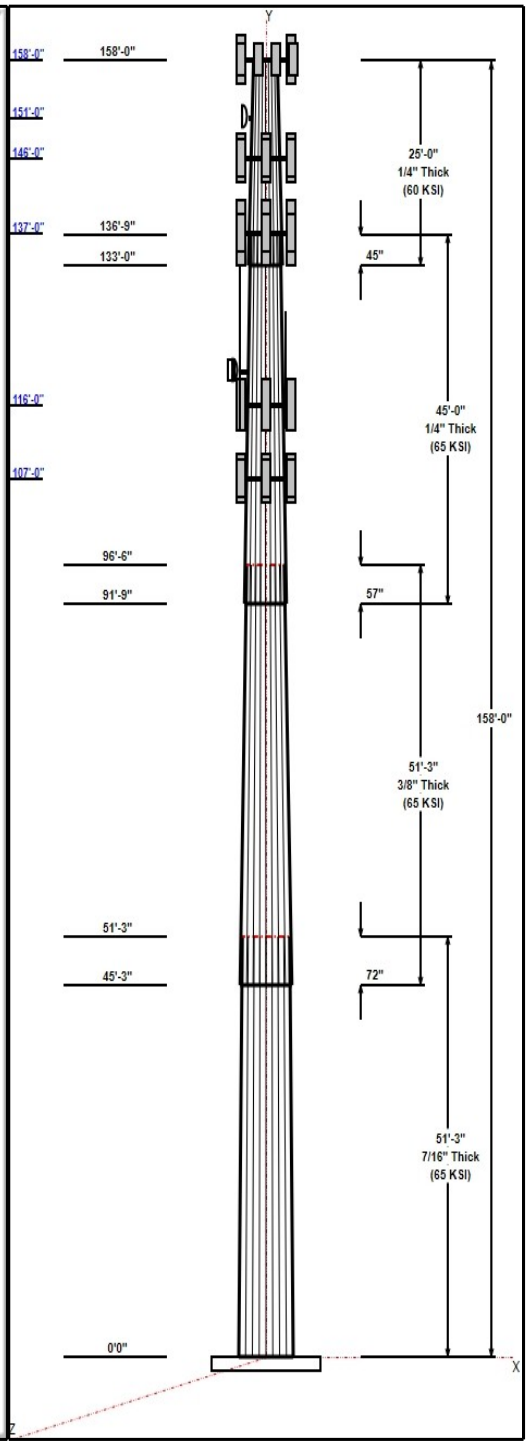

Structure: CT01080-S-SBA

Type:	Tapered	**Base Shape:**	18 Sided	7/9/2019
Site Name:	Long Hill #1	**Taper:**	0.23500	
Height:	158.00 (ft)			
Base Elev:	0.00 (ft)			Page: 2

TES Tower Engineering Solutions

Shaft Properties

Seq	Length (ft)	Top (in)	Bottom (in)	Thick (in)	Joint Type	Taper	Grade (ksi)
1	51.25	46.34	58.38	0.438		0.23500	65
2	51.25	36.45	48.50	0.375	Slip	0.23500	65
3	45.00	27.49	38.07	0.250	Slip	0.23500	65
4	25.00	23.00	28.88	0.250	Slip	0.23500	60

Discrete Appurtenances

Attach Elev (ft)	Force Elev (ft)	Qty	Description	Carrier
158.00	158.00	6	Commscope	Verizon
158.00	158.00	2	Amphenol	Verizon
158.00	158.00	4	RFS APL866513-42T0 w/	Verizon
158.00	158.00	3	Alcatel RRH2X60-AWS	Verizon
158.00	158.00	3	Alcatel RRH2X60-700	Verizon
158.00	158.00	3	Alcatel RRH2X60-PCS	Verizon
158.00	158.00	6	RFS FD9R6004/2CL-3CL	Verizon
158.00	158.00	2	RFS DB-T1-6C-8AB-0Z	Verizon
158.00	158.00	1	Low Profile Platform	Verizon
158.00	158.00	1	6' Lightning rod	
151.00	151.00	1	Andrew VHLP2.5	Clearwire
151.00	151.00	1	Pipe Mount	Clearwire
151.00	151.00	1	ODU	Clearwire
146.00	146.00	3	RFS APXVTM14-C-120 w/	Sprint
146.00	146.00	3	Alcatel TD-RRH8x20-25	Sprint
146.00	146.00	3	Alcatel 1900MHz RRH	Sprint
146.00	146.00	3	Alcatel 800 MHz RRH	Sprint
146.00	146.00	3	Alcatel 800MHz Filters	Sprint
146.00	146.00	4	RFS ACU-A20-N RET	Sprint
146.00	146.00	1	GPS	Sprint
146.00	146.00	3	Kathrein Scala 840 10054	Clearwire
146.00	146.00	3	RRUs	Clearwire
146.00	146.00	1	Low Profile Platform	Sprint
146.00	146.00	3	RFS APXVSPP18-C-A20	Sprint
137.00	137.00	3	KRD 9011461-B66A-B2A	T-Mobile
137.00	137.00	3	KRY 112 489/2	T-Mobile
137.00	137.00	3	4449	T-Mobile
137.00	137.00	1	HRK12 (Handrail Kit)	T-Mobile
137.00	137.00	3	APXVAARR24_43-U-NA20	T-Mobile
137.00	137.00	3	Kathrein 782 11056	T-Mobile
137.00	137.00	12	Allen Telecom	T-Mobile
137.00	137.00	1	Low Profile Platform w/	T-Mobile
120.00	120.22	2	SC479-HF1LDF(D00-E574	city of middletown
120.00	124.58	1	SC229-DFLN	city of middletown
120.00	120.00	1	Cambium Network	city of middletown
120.00	120.00	1	Flush Mount	City of Middletown
120.00	120.00	1	Pipe Mount	City Of Middletown
120.00	120.00	1	DS428E83I01T - TTA	City of Middletown
116.00	116.00	3	Kathrein 742 213	Metro PCS
116.00	116.00	1	Low Profile Platform	Metro PCS
107.00	107.00	3	KMW	AT&T
107.00	107.00	6	Powerwave 7020.00 RET's	AT&T
107.00	107.00	3	Ericsson RRUS-32 B2	AT&T
107.00	107.00	3	CCI HPA-65R-BUU-H6	AT&T
107.00	107.00	3	Powerwave 7770.00	AT&T

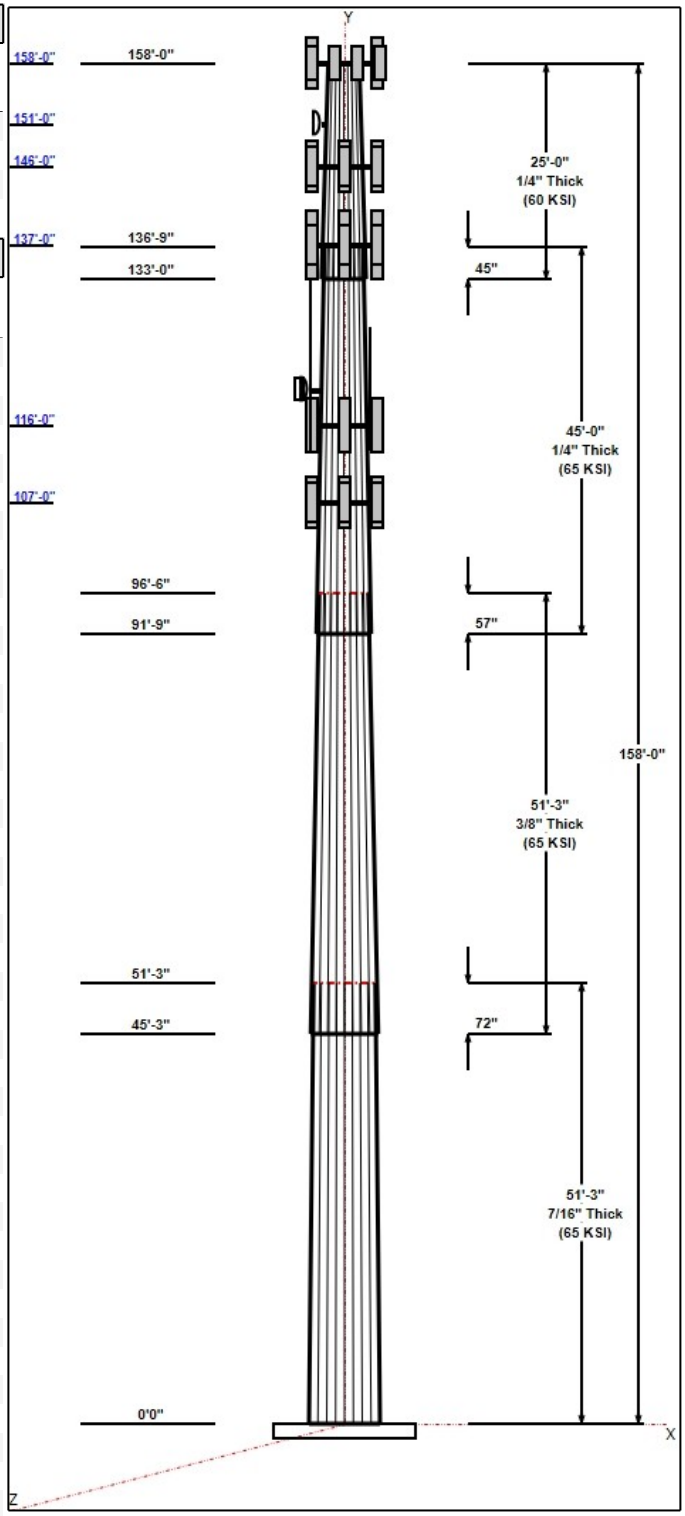

Copyright © 2019 by Tower Engineering Solutions, LLC. All rights reserved.

107.00	107.00	3	Powerwave	AT&T
107.00	107.00	6	Powerwave LGP21903	AT&T
107.00	107.00	3	Ericsson RRUS 11	AT&T
107.00	107.00	3	CCI DTMAP7819VG12A	AT&T
107.00	107.00	1	Low Profile Platform	AT&T
107.00	107.00	1	Raycap DC6-48-60-18-8F	AT&T

Linear Appurtenances

Elev From (ft)	Elev To (ft)	Placement	Description	Carrier
3.00	158.00	Inside	1 5/8" Coax	Verizon
3.00	158.00	Outside	1 5/8" Hybrid	Verizon
3.00	151.00	Inside	1/2" Coax	Clearwire
3.00	146.00	Inside	1 1/4" Coax	Sprint
3.00	146.00	Inside	1-1/4" Power / Fiber	Sprint
3.00	146.00	Inside	1/2" Coax	Clearwire
3.00	146.00	Inside	5/16" Coax	Clearwire
3.00	137.00	Inside	1 5/8" Coax	T-Mobile
3.00	120.00	Inside	1/2" Coax	City Of Middletown
3.00	120.00	Inside	7/8" Coax	City Of Middletown
3.00	120.00	Inside	EW90	City Of Middletown
3.00	116.00	Inside	1 5/8" Coax	Metro PCS
3.00	107.00	Inside	1 5/8" Coax	AT&T
3.00	107.00	Inside	1/2" Fiber	AT&T
3.00	107.00	Inside	3" Conduit	AT&T
3.00	107.00	Inside	3/4" DC	AT&T

Anchor Bolts

Qty	Specifications	Grade (ksi)	Arrangement
24	2.25" 18J	75.0	Cluster

Base Plate

Thickness (in)	Specifications (in)	Grade (ksi)	Geometry
2.7500	67.0	50.0	Clipped

Reactions

Load Case	Moment (FT-Kips)	Shear (Kips)	Axial (Kips)
1.2D + 1.6W 101 mph Wind	5101.0	43.8	55.3
0.9D + 1.6W 101 mph Wind	5047.6	43.8	41.5
1.2D + 1.0Di + 1.0Wi 50 mph Wind	1316.8	11.3	86.8
1.2D + 1.0E	239.0	2.0	55.4
0.9D + 1.0E	236.2	2.0	41.5
1.0D + 1.0W 60 mph Wind	1119.3	9.7	46.2

Copyright © 2019 by Tower Engineering Solutions, LLC. All rights reserved.

Structure: CT01080-S-SBA - Coax Line Placement

Type: Monopole
Site Name: Long Hill #1
Height: 158.00 (ft)

7/9/2019

Tower Engineering Solutions

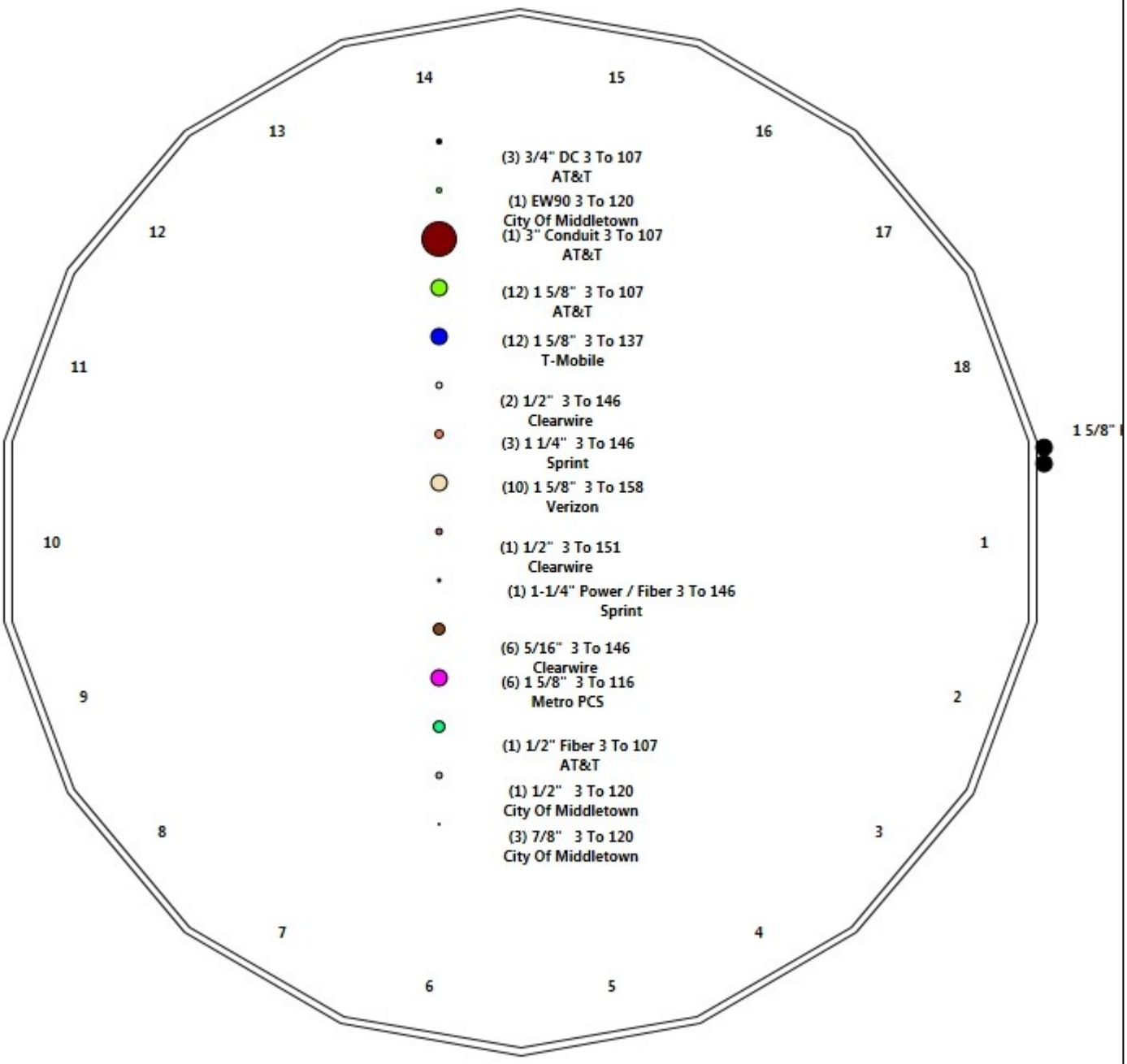

Copyright © 2019 by Tower Engineering Solutions, LLC. All rights reserved.

Shaft Properties

Structure:	CT01080-S-SBA		**Code:**	EIA/TIA-222-G	7/9/2019
Site Name:	Long Hill #1		**Exposure:**	C	
Height:	158.00 (ft)		**Crest Height:**	0.00	
Base Elev:	0.000 (ft)		**Site Class:**	D - Stiff Soil	
Gh:	1.1	**Topography:** 1	**Struct Class:**	II	Page: 5

Tower Engineering Solutions

Sec. No.	Shape	Length (ft)	Thick (in)	Fy (ksi)	Joint Type	Overlap (in)	Weight (lb)
1	18	51.250	0.4375	65		0.00	12,573
2	18	51.250	0.3750	65	Slip	72.00	8,738
3	18	45.000	0.2500	65	Slip	57.00	3,953
4	18	25.000	0.2500	60	Slip	45.00	1,734
					Total Shaft Weight:		**26,998**

	Bottom						Top						
Sec. No.	**Dia (in)**	**Elev (ft)**	**Area (sqin)**	**Ix (in^4)**	**W/t Ratio**	**D/t Ratio**	**Dia (in)**	**Elev (ft)**	**Area (sqin)**	**Ix (in^4)**	**W/t Ratio**	**D/t Ratio**	**Taper**
1	58.38	0.00	80.46	34128.26	22.12	133.44	46.34	51.25	63.73	16963.8	17.26	105.9	0.235000
2	48.50	45.25	57.27	16756.62	21.39	129.32	36.45	96.50	42.94	7061.30	15.73	97.21	0.235000
3	38.07	91.75	30.01	5422.58	25.44	152.28	27.49	136.75	21.62	2027.15	17.98	109.9	0.235000
4	28.88	133.0	22.71	2351.37	18.96	115.50	23.00	158.00	18.05	1180.40	14.81	92.00	0.235000

Copyright © 2019 by Tower Engineering Solutions, LLC. All rights reserved.

Load Summary

Structure:	CT01080-S-SBA		**Code:**	EIA/TIA-222-G	7/9/2019
Site Name:	Long Hill #1		**Exposure:**	C	
Height:	158.00 (ft)		**Crest Height:**	0.00	
Base Elev:	0.000 (ft)		**Site Class:**	D - Stiff Soil	
Gh:	1.1	**Topography:** 1	**Struct Class:**	II	Page: 6

Tower Engineering Solutions

Discrete Appurtenances

				No Ice			Ice				
No.	Elev (ft)	Description	Qty	Weight (lb)	CaAa (sf)	CaAa Factor	Weight (lb)	CaAa (sf)	CaAa Factor	Hor. Ecc. (ft)	Vert Ecc (ft)
1	158.00	Commscope SBNHH-1D65B	6	50.71	8.05	0.83	253.10	9.351	0.83	0.00	0.00
2	158.00	Amphenol LPA-80063-6CF-EDIN-5	2	27.00	9.73	0.94	289.85	12.488	0.94	0.00	0.00
3	158.00	RFS APL866513-42T0 w/ Mount	4	48.70	5.65	0.95	389.21	8.263	0.95	0.00	0.00
4	158.00	Alcatel RRH2X60-AWS	3	60.00	3.50	0.67	147.74	4.293	0.67	0.00	0.00
5	158.00	Alcatel RRH2X60-700	3	60.00	3.50	0.67	147.74	4.293	0.67	0.00	0.00
6	158.00	Alcatel RRH2X60-PCS	3	55.00	2.20	0.67	135.43	2.699	0.67	0.00	0.00
7	158.00	RFS FD9R6004/2CL-3CL Diplexer	6	3.00	0.31	0.60	10.81	0.694	0.60	0.00	0.00
8	158.00	RFS DB-T1-6C-8AB-0Z Distribution	2	44.00	4.80	0.60	289.15	5.743	0.60	0.00	0.00
9	158.00	Low Profile Platform	1	1200.00	25.00	1.00	2252.58	46.052	1.00	0.00	0.00
10	158.00	6' Lightning rod	1	6.50	0.38	1.00	42.99	1.473	1.00	0.00	0.00
11	151.00	Andrew VHLP2.5	1	47.60	8.43	1.00	220.41	10.138	1.00	1.00	0.00
12	151.00	Pipe Mount	1	40.00	2.63	1.00	120.33	8.603	1.00	0.00	0.00
13	151.00	ODU	1	13.20	1.24	0.60	42.82	2.041	0.60	0.00	0.00
14	146.00	RFS APXVTM14-C-120 w/ Mount	3	89.00	7.94	0.78	248.89	7.450	0.78	0.00	0.00
15	146.00	Alcatel TD-RRH8x20-25	3	70.00	4.05	0.67	180.10	4.861	0.67	0.00	0.00
16	146.00	Alcatel 1900MHz RRH	3	44.00	2.38	0.67	152.87	3.248	0.67	0.00	0.00
17	146.00	Alcatel 800 MHz RRH	3	53.00	2.13	0.67	126.76	3.106	0.67	0.00	0.00
18	146.00	Alcatel 800MHz Filters	3	8.80	0.67	0.60	26.40	1.224	0.60	0.00	0.00
19	146.00	RFS ACU-A20-N RET	4	1.00	0.12	0.60	5.28	0.374	0.60	0.00	0.00
20	146.00	GPS	1	10.00	1.00	1.00	39.24	1.710	1.00	0.00	0.00
21	146.00	Kathrein Scala 840 10054	3	35.00	4.59	0.61	119.04	6.258	0.61	0.00	0.00
22	146.00	RRUs	3	3.13	2.92	0.67	8.71	4.207	0.67	0.00	0.00
23	146.00	Low Profile Platform	1	1200.00	25.00	1.00	2244.30	45.886	1.00	0.00	0.00
24	146.00	RFS APXVSPP18-C-A20 w/ Mount	3	90.00	9.62	0.83	362.19	12.962	0.83	0.00	0.00
25	137.00	KRD 9011461-B66A-B2A	3	132.20	6.51	0.87	313.48	7.621	0.87	0.00	0.00
26	137.00	KRY 112 489/2	3	10.00	0.42	0.67	32.68	0.742	0.67	0.00	0.00
27	137.00	4449	3	70.00	1.65	0.67	137.47	2.182	0.67	0.00	0.00
28	137.00	HRK12 (Handrail Kit)	1	261.72	6.75	1.00	569.51	13.287	1.00	0.00	0.00
29	137.00	APXVAARR24_43-U-NA20	3	128.00	20.24	0.70	541.69	22.122	0.75	0.00	0.00
30	137.00	Kathrein 782 11056 Diplexer	3	11.00	0.15	0.67	28.48	0.312	0.67	0.00	0.00
31	137.00	Allen Telecom FE15S01P77/75	12	8.20	0.54	0.67	21.98	1.076	0.60	0.00	0.00
32	137.00	Low Profile Platform w/ Support Kit	1	1200.00	25.00	1.00	2237.68	45.754	1.00	0.00	0.00
33	120.00	SC479-HF1LDF(D00-E5749)	2	34.00	5.03	1.00	155.65	10.064	1.00	0.00	0.22
34	120.00	SC229-DFLN	1	32.00	6.72	1.00	197.57	14.739	1.00	0.00	4.58
35	120.00	Cambium Network HP3-11- Dish	1	50.00	8.92	1.00	228.42	10.637	1.00	0.00	0.00
36	120.00	Flush Mount	1	350.00	5.00	1.00	636.73	8.413	1.00	0.00	0.00
37	120.00	Pipe Mount	1	400.00	10.00	1.00	673.07	18.534	1.00	0.00	0.00
38	120.00	DS428E83I01T - TTA	1	50.00	8.92	0.67	388.68	12.051	0.75	0.00	0.00
39	116.00	Kathrein 742 213	3	22.00	5.14	0.78	131.30	6.378	0.78	0.00	0.00
40	116.00	Low Profile Platform (Assumed)	1	1500.00	22.00	1.00	2775.70	39.213	1.00	0.00	0.00
41	107.00	KMW AM-X-CD-16-65-00T-RET	3	48.50	8.02	0.79	205.39	10.721	0.79	0.00	0.00
42	107.00	Powerwave 7020.00 RET's	6	2.20	0.34	0.60	12.10	0.738	0.60	0.00	0.00
43	107.00	Ericsson RRUS-32 B2	3	53.00	3.01	0.67	154.33	3.734	0.67	0.00	0.00
44	107.00	CCI HPA-65R-BUU-H6	3	51.00	11.84	0.77	326.47	13.245	0.77	0.00	0.00
45	107.00	Powerwave 7770.00	3	35.00	5.51	0.77	164.70	6.527	0.70	0.00	0.00
46	107.00	Powerwave TT19-08BP111-001	3	16.00	0.55	0.60	35.57	1.043	0.60	0.00	0.00
47	107.00	Powerwave LGP21903 Diplexer	6	5.30	0.23	0.60	13.15	0.557	0.60	0.00	0.00
48	107.00	Ericsson RRUS 11	3	55.00	2.52	0.67	132.24	3.148	0.67	0.00	0.00
49	107.00	CCI DTMAP7819VG12A TMA's	3	19.18	0.98	0.60	43.83	1.620	0.60	0.00	0.00
50	107.00	Low Profile Platform	1	1500.00	22.00	0.00	2765.43	39.075	0.00	0.00	0.00

Copyright © 2019 by Tower Engineering Solutions, LLC. All rights reserved.

Discrete Appurtenances

No.	Elev (ft)	Description	Qty	No Ice Weight (lb)	No Ice CaAa (sf)	No Ice CaAa Factor	Ice Weight (lb)	Ice CaAa (sf)	Ice CaAa Factor	Hor. Ecc. (ft)	Vert Ecc (ft)
51	107.00	Raycap DC6-48-60-18-8F	1	32.80	2.20	0.67	94.45	3.213	0.67	0.00	0.00
		Totals:	**139**	**12,424.71**			**32,286.35**				

Linear Appurtenances

Bottom Elev. (ft)	Top Elev. (ft)	Description	Exposed Width	Exposed
3.00	158.00	(10) 1 5/8" Coax	0.00	Inside
3.00	158.00	(2) 1 5/8" Hybrid	0.00	Outside
3.00	151.00	(1) 1/2" Coax	0.00	Inside
3.00	146.00	(3) 1 1/4" Coax	0.00	Inside
3.00	146.00	(1) 1-1/4" Power / Fiber	0.00	Inside
3.00	146.00	(2) 1/2" Coax	0.00	Inside
3.00	146.00	(6) 5/16" Coax	0.00	Inside
3.00	137.00	(12) 1 5/8" Coax	0.00	Inside
3.00	120.00	(1) 1/2" Coax	0.00	Inside
3.00	120.00	(3) 7/8" Coax	0.00	Inside
3.00	120.00	(1) EW90	0.00	Inside
3.00	116.00	(6) 1 5/8" Coax	0.00	Inside
3.00	107.00	(12) 1 5/8" Coax	0.00	Inside
3.00	107.00	(1) 1/2" Fiber	0.00	Inside
3.00	107.00	(1) 3" Conduit	0.00	Inside
3.00	107.00	(3) 3/4" DC	0.00	Inside

Copyright © 2019 by Tower Engineering Solutions, LLC. All rights reserved.

Shaft Section Properties

Structure:	CT01080-S-SBA		**Code:**	EIA/TIA-222-G	7/9/2019
Site Name:	Long Hill #1		**Exposure:**	C	
Height:	158.00 (ft)		**Crest Height:**	0.00	
Base Elev:	0.000 (ft)		**Site Class:**	D - Stiff Soil	
Gh:	1.1	**Topography:** 1	**Struct Class:**	II	Page: 8

Tower Engineering Solutions

Increment Length: **5 (ft)**

Elev (ft)	Description	Thick (in)	Dia (in)	Area (in^2)	Ix (in^4)	W/t Ratio	D/t Ratio	Fpy (ksi)	S (in^3)	Weight (lb)
0.00		0.4375	58.380	80.458	34128.3	22.12	133.44	75.4	1151.	0.0
5.00		0.4375	57.205	78.826	32093.8	21.64	130.75	75.9	1105.	1355.0
10.00		0.4375	56.030	77.194	30141.9	21.17	128.07	76.5	1059.	1327.3
15.00		0.4375	54.855	75.563	28270.8	20.70	125.38	77.1	1015.	1299.5
20.00		0.4375	53.680	73.931	26478.8	20.22	122.70	77.6	971.6	1271.7
25.00		0.4375	52.505	72.300	24764.1	19.75	120.01	78.2	929.0	1244.0
30.00		0.4375	51.330	70.668	23125.1	19.28	117.33	78.7	887.3	1216.2
35.00		0.4375	50.155	69.036	21560.1	18.80	114.64	79.3	846.7	1188.5
40.00		0.4375	48.980	67.405	20067.3	18.33	111.95	79.8	807.0	1160.7
45.00		0.4375	47.805	65.773	18645.1	17.86	109.27	80.4	768.2	1132.9
45.25	Bot - Section 2	0.4375	47.746	65.692	18575.8	17.83	109.13	80.4	766.3	55.9
50.00		0.4375	46.630	64.142	17291.7	17.38	106.58	81.0	730.4	1964.3
51.25	Top - Section 1	0.3750	47.086	55.596	15326.4	20.73	125.56	0.0	0.0	509.2
55.00		0.3750	46.205	54.547	14475.2	20.32	123.21	77.5	617.0	702.7
60.00		0.3750	45.030	53.149	13390.2	19.76	120.08	78.2	585.7	916.2
65.00		0.3750	43.855	51.750	12360.7	19.21	116.95	78.8	555.1	892.4
70.00		0.3750	42.680	50.352	11385.5	18.66	113.81	79.5	525.4	868.6
75.00		0.3750	41.505	48.953	10462.9	18.11	110.68	80.1	496.5	844.8
80.00		0.3750	40.330	47.555	9591.6	17.55	107.55	80.8	468.4	821.0
85.00		0.3750	39.155	46.156	8770.0	17.00	104.41	81.4	441.2	797.2
90.00		0.3750	37.980	44.758	7996.7	16.45	101.28	82.1	414.7	773.4
91.75	Bot - Section 3	0.3750	37.569	44.268	7737.2	16.25	100.18	82.3	405.6	265.1
95.00		0.3750	36.805	43.359	7270.3	15.90	98.15	82.5	389.1	813.0
96.50	Top - Section 2	0.2500	36.953	29.122	4956.5	24.65	147.81	0.0	0.0	369.6
100.00		0.2500	36.130	28.470	4630.6	24.07	144.52	73.1	252.4	343.0
105.00		0.2500	34.955	27.537	4190.4	23.24	139.82	74.1	236.1	476.4
107.00		0.2500	34.485	27.164	4022.5	22.91	137.94	74.5	229.7	186.1
110.00		0.2500	33.780	26.605	3779.1	22.41	135.12	75.0	220.3	274.4
115.00		0.2500	32.605	25.673	3395.5	21.59	130.42	76.0	205.1	444.7
116.00		0.2500	32.370	25.486	3322.1	21.42	129.48	76.2	202.1	87.0
120.00		0.2500	31.430	24.740	3038.9	20.76	125.72	77.0	190.4	341.8
125.00		0.2500	30.255	23.808	2708.1	19.93	121.02	78.0	176.3	413.0
130.00		0.2500	29.080	22.876	2402.3	19.10	116.32	78.9	162.7	397.1
133.00	Bot - Section 4	0.2500	28.375	22.316	2230.3	18.60	113.50	79.5	154.8	230.7
135.00		0.2500	27.905	21.943	2120.3	18.27	111.62	79.9	149.7	303.9
136.75	Top - Section 3	0.2500	27.994	22.014	2140.8	18.33	111.97	0.0	0.0	261.8
137.00		0.2500	27.935	21.967	2127.2	18.29	111.74	74.5	150.0	18.7
140.00		0.2500	27.230	21.408	1968.8	17.79	108.92	75.0	142.4	221.4
145.00		0.2500	26.055	20.476	1722.6	16.97	104.22	75.9	130.2	356.3
146.00		0.2500	25.820	20.289	1676.0	16.80	103.28	76.1	127.9	69.4
150.00		0.2500	24.880	19.543	1497.9	16.14	99.52	76.2	118.6	271.1
151.00		0.2500	24.645	19.357	1455.4	15.97	98.58	76.2	116.3	66.2
155.00		0.2500	23.705	18.611	1293.6	15.31	94.82	76.2	107.5	258.4
158.00		0.2500	23.000	18.051	1180.4	14.81	92.00	76.2	101.1	187.1
										26997.7

Copyright © 2019 by Tower Engineering Solutions, LLC. All rights reserved.

Wind Loading - Shaft

Structure:	CT01080-S-SBA		**Code:**	EIA/TIA-222-G	7/9/2019
Site Name:	Long Hill #1		**Exposure:**	C	
Height:	158.00 (ft)		**Crest Height:**	0.00	
Base Elev:	0.000 (ft)		**Site Class:**	D - Stiff Soil	
Gh:	1.1	**Topography:** 1	**Struct Class:**	II	Page: 9

Tower Engineering Solutions

Load Case: 1.2D + 1.6W 101 mph Wind

Dead Load Factor 1.20

Wind Load Factor 1.60

Iterations 25

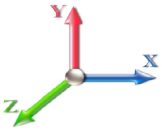

Elev (ft)	Description	Kzt	Kz	qz (psf)	qzGh (psf)	C (mph-ft)	Cf	Ice Thick (in)	Tributary (ft)	Aa (sf)	CfAa (sf)	Wind Force X (lb)	Dead Load Ice (lb)	Tot Dead Load (lb)
0.00		1.00	0.85	21.088	23.20	460.00	0.650	0.000	0.00	0.000	0.00	0.0	0.0	0.0
5.00		1.00	0.85	21.088	23.20	450.75	0.650	0.000	5.00	24.452	15.89	589.9	0.0	1626.0
10.00		1.00	0.85	21.088	23.20	441.49	0.650	0.000	5.00	23.955	15.57	577.9	0.0	1592.7
15.00		1.00	0.85	21.088	23.20	432.23	0.650	0.000	5.00	23.457	15.25	565.9	0.0	1559.4
20.00		1.00	0.90	22.375	24.61	435.69	0.650	0.000	5.00	22.960	14.92	587.7	0.0	1526.1
25.00		1.00	0.95	23.451	25.80	436.28	0.650	0.000	5.00	22.463	14.60	602.6	0.0	1492.8
30.00		1.00	0.98	24.369	26.81	434.78	0.650	0.000	5.00	21.966	14.28	612.4	0.0	1459.5
35.00		1.00	1.01	25.172	27.69	431.78	0.650	0.000	5.00	21.469	13.95	618.2	0.0	1426.2
40.00		1.00	1.04	25.890	28.48	427.63	0.650	0.000	5.00	20.972	13.63	621.1	0.0	1392.8
45.00		1.00	1.07	26.540	29.19	422.58	0.650	0.000	5.00	20.475	13.31	621.6	0.0	1359.5
45.25	Bot - Section 2	1.00	1.07	26.571	29.23	422.31	0.650	0.000	0.25	1.011	0.66	30.7	0.0	67.1
50.00		1.00	1.09	27.135	29.85	416.79	0.650	0.000	4.75	19.268	12.52	598.1	0.0	2357.1
51.25	Top - Section 1	1.00	1.10	27.277	30.00	415.24	0.650	0.000	1.25	4.996	3.25	155.9	0.0	611.0
55.00		1.00	1.12	27.685	30.45	417.16	0.650	0.000	3.75	14.802	9.62	468.8	0.0	843.3
60.00		1.00	1.14	28.197	31.02	410.29	0.650	0.000	5.00	19.301	12.55	622.6	0.0	1099.4
65.00		1.00	1.16	28.676	31.54	402.96	0.650	0.000	5.00	18.803	12.22	616.9	0.0	1070.8
70.00		1.00	1.17	29.127	32.04	395.24	0.650	0.000	5.00	18.306	11.90	610.0	0.0	1042.3
75.00		1.00	1.19	29.553	32.51	387.16	0.650	0.000	5.00	17.809	11.58	602.1	0.0	1013.7
80.00		1.00	1.21	29.958	32.95	378.76	0.650	0.000	5.00	17.312	11.25	593.3	0.0	985.2
85.00		1.00	1.22	30.342	33.38	370.08	0.650	0.000	5.00	16.815	10.93	583.7	0.0	956.6
90.00		1.00	1.24	30.710	33.78	361.14	0.650	0.000	5.00	16.318	10.61	573.3	0.0	928.1
91.75	Bot - Section 3	1.00	1.24	30.834	33.92	357.96	0.650	0.000	1.75	5.594	3.64	197.3	0.0	318.1
95.00		1.00	1.25	31.061	34.17	351.97	0.650	0.000	3.25	10.364	6.74	368.3	0.0	975.7
96.50	Top - Section 2	1.00	1.26	31.164	34.28	349.17	0.650	0.000	1.50	4.713	3.06	168.0	0.0	443.5
100.00		1.00	1.27	31.399	34.54	347.38	0.650	0.000	3.50	10.822	7.03	388.7	0.0	411.5
105.00		1.00	1.28	31.723	34.89	337.82	0.650	0.000	5.00	15.038	9.77	545.7	0.0	571.7
107.00	Appurtenance(s)	1.00	1.28	31.849	35.03	333.94	0.650	0.000	2.00	5.876	3.82	214.1	0.0	223.4
110.00		1.00	1.29	32.035	35.24	328.06	0.650	0.000	3.00	8.665	5.63	317.5	0.0	329.3
115.00		1.00	1.30	32.336	35.57	318.14	0.650	0.000	5.00	14.044	9.13	519.5	0.0	533.7
116.00	Appurtenance(s)	1.00	1.31	32.395	35.63	316.13	0.650	0.000	1.00	2.749	1.79	101.9	0.0	104.4
120.00	Appurtenance(s)	1.00	1.32	32.627	35.89	308.05	0.650	0.000	4.00	10.797	7.02	403.0	0.0	410.2
125.00		1.00	1.33	32.909	36.20	297.81	0.650	0.000	5.00	13.049	8.48	491.3	0.0	495.6
130.00		1.00	1.34	33.182	36.50	287.43	0.650	0.000	5.00	12.552	8.16	476.5	0.0	476.6
133.00	Bot - Section 4	1.00	1.34	33.341	36.68	281.13	0.650	0.000	3.00	7.293	4.74	278.2	0.0	276.8
135.00		1.00	1.35	33.446	36.79	276.91	0.650	0.000	2.00	4.847	3.15	185.5	0.0	364.7
136.75	Top - Section 3	1.00	1.35	33.537	36.89	273.20	0.650	0.000	1.75	4.176	2.71	160.2	0.0	314.1
137.00	Appurtenance(s)	1.00	1.35	33.550	36.90	277.64	0.650	0.000	0.25	0.592	0.38	22.7	0.0	22.4
140.00		1.00	1.36	33.703	37.07	271.25	0.650	0.000	3.00	7.002	4.55	270.0	0.0	265.7
145.00		1.00	1.37	33.953	37.35	260.51	0.650	0.000	5.00	11.272	7.33	437.8	0.0	427.6
146.00	Appurtenance(s)	1.00	1.37	34.002	37.40	258.34	0.650	0.000	1.00	2.195	1.43	85.4	0.0	83.2
150.00		1.00	1.38	34.196	37.62	249.65	0.650	0.000	4.00	8.580	5.58	335.7	0.0	325.3
151.00	Appurtenance(s)	1.00	1.38	34.244	37.67	247.46	0.650	0.000	1.00	2.095	1.36	82.1	0.0	79.4
155.00		1.00	1.39	34.433	37.88	238.68	0.650	0.000	4.00	8.183	5.32	322.3	0.0	310.1
158.00	Appurtenance(s)	1.00	1.39	34.573	38.03	232.05	0.650	0.000	3.00	5.928	3.85	234.5	0.0	224.6
								Totals:	**158.00**			**17,458.9**		**32,397.2**

Copyright © 2019 by Tower Engineering Solutions, LLC. All rights reserved.

Discrete Appurtenance Forces

Structure:	CT01080-S-SBA		**Code:**	EIA/TIA-222-G	7/9/2019
Site Name:	Long Hill #1		**Exposure:**	C	
Height:	158.00 (ft)		**Crest Height:**	0.00	
Base Elev:	0.000 (ft)		**Site Class:**	D - Stiff Soil	
Gh:	1.1	**Topography:** 1	**Struct Class:**	II	Page: 10

Tower Engineering Solutions

Load Case: 1.2D + 1.6W 101 mph Wind

Dead Load Factor 1.20

Wind Load Factor 1.60

Iterations 25

No.	Elev (ft)	Description	Qty	qz (psf)	qzGh (psf)	Orient Factor x Ka	Ka	Total CaAa (sf)	Dead Load (lb)	Horiz Ecc (ft)	Vert Ecc (ft)	Wind FX (lb)	Mom Y (lb-ft)	Mom Z (lb-ft)
1	158.00	Alcatel RRH2X60-700	3	34.573	38.030	0.54	0.80	5.63	216.00	0.000	0.000	342.45	0.00	0.00
2	158.00	Commscope	6	34.573	38.030	0.66	0.80	32.07	365.11	0.000	0.000	1951.46	0.00	0.00
3	158.00	Amphenol	2	34.573	38.030	0.75	0.80	14.63	64.80	0.000	0.000	890.44	0.00	0.00
4	158.00	RFS APL866513-42T0 w/	4	34.573	38.030	0.76	0.80	17.18	233.76	0.000	0.000	1045.12	0.00	0.00
5	158.00	Alcatel RRH2X60-AWS	3	34.573	38.030	0.54	0.80	5.63	216.00	0.000	0.000	342.45	0.00	0.00
6	158.00	6' Lightning rod	1	34.573	38.030	1.00	1.00	0.38	7.80	0.000	0.000	23.12	0.00	0.00
7	158.00	Alcatel RRH2X60-PCS	3	34.573	38.030	0.54	0.80	3.54	198.00	0.000	0.000	215.25	0.00	0.00
8	158.00	RFS FD9R6004/2CL-3CL	6	34.573	38.030	0.48	0.80	0.89	21.60	0.000	0.000	54.32	0.00	0.00
9	158.00	RFS DB-T1-6C-8AB-0Z	2	34.573	38.030	0.48	0.80	4.61	105.60	0.000	0.000	280.39	0.00	0.00
10	158.00	Low Profile Platform	1	34.573	38.030	1.00	1.00	25.00	1440.00	0.000	0.000	1521.19	0.00	0.00
11	151.00	Pipe Mount	1	34.244	37.669	1.00	1.00	2.63	48.00	0.000	0.000	158.51	0.00	0.00
12	151.00	Andrew VHLP2.5	1	34.244	37.669	0.80	0.80	6.74	57.12	2.043	0.000	406.46	518.93	0.00
13	151.00	ODU	1	34.244	37.669	0.60	1.00	0.74	15.84	0.000	0.000	44.84	0.00	0.00
14	146.00	RFS APXVTM14-C-120 w/	3	34.002	37.403	0.62	0.80	14.86	320.40	0.000	0.000	889.51	0.00	0.00
15	146.00	Alcatel TD-RRH8x20-25	3	34.002	37.403	0.54	0.80	6.51	252.00	0.000	0.000	389.73	0.00	0.00
16	146.00	Alcatel 1900MHz RRH	3	34.002	37.403	0.54	0.80	3.83	158.40	0.000	0.000	229.03	0.00	0.00
17	146.00	Alcatel 800 MHz RRH	3	34.002	37.403	0.54	0.80	3.43	190.80	0.000	0.000	204.97	0.00	0.00
18	146.00	Alcatel 800MHz Filters	3	34.002	37.403	0.48	0.80	0.96	31.68	0.000	0.000	57.74	0.00	0.00
19	146.00	RFS ACU-A20-N RET	4	34.002	37.403	0.48	0.80	0.23	4.80	0.000	0.000	13.79	0.00	0.00
20	146.00	GPS	1	34.002	37.403	1.00	1.00	1.00	12.00	0.000	0.000	59.84	0.00	0.00
21	146.00	Kathrein Scala 840 10054	3	34.002	37.403	0.49	0.80	6.72	126.00	0.000	0.000	402.14	0.00	0.00
22	146.00	RRUs	3	34.002	37.403	0.54	0.80	4.70	11.27	0.000	0.000	280.99	0.00	0.00
23	146.00	Low Profile Platform	1	34.002	37.403	1.00	1.00	25.00	1440.00	0.000	0.000	1496.11	0.00	0.00
24	146.00	RFS APXVSPP18-C-A20	3	34.002	37.403	0.66	0.80	19.16	324.00	0.000	0.000	1146.80	0.00	0.00
25	137.00	KRD 9011461-B66A-B2A	3	33.550	36.905	0.65	0.75	12.74	475.92	0.000	0.000	752.47	0.00	0.00
26	137.00	HRK12 (Handrail Kit)	1	33.550	36.905	1.00	1.00	6.75	314.06	0.000	0.000	398.57	0.00	0.00
27	137.00	KRY 112 489/2	3	33.550	36.905	0.50	0.75	0.63	36.00	0.000	0.000	37.39	0.00	0.00
28	137.00	Low Profile Platform w/	1	33.550	36.905	1.00	1.00	25.00	1440.00	0.000	0.000	1476.20	0.00	0.00
29	137.00	Allen Telecom	12	33.550	36.905	0.50	0.75	3.26	118.08	0.000	0.000	192.27	0.00	0.00
30	137.00	Kathrein 782 11056	3	33.550	36.905	0.50	0.75	0.23	39.60	0.000	0.000	13.35	0.00	0.00
31	137.00	APXVAARR24_43-U-NA2	3	33.550	36.905	0.52	0.75	31.88	460.80	0.000	0.000	1882.33	0.00	0.00
32	137.00	4449	3	33.550	36.905	0.50	0.75	2.49	252.00	0.000	0.000	146.87	0.00	0.00
33	120.00	Cambium Network	1	32.627	35.890	1.00	1.00	8.92	60.00	0.000	0.000	512.22	0.00	0.00
34	120.00	SC479-HF1LDF(D00-E574	2	32.640	35.904	0.80	0.80	8.05	81.60	0.000	0.220	462.32	0.00	101.71
35	120.00	SC229-DFLN	1	32.885	36.174	0.80	0.80	5.38	38.40	0.000	4.580	311.15	0.00	1425.09
36	120.00	DS428E83I01T - TTA	1	32.627	35.890	0.54	0.80	4.78	60.00	0.000	0.000	274.55	0.00	0.00
37	120.00	Flush Mount	1	32.627	35.890	1.00	1.00	5.00	420.00	0.000	0.000	287.12	0.00	0.00
38	120.00	Pipe Mount	1	32.627	35.890	1.00	1.00	10.00	480.00	0.000	0.000	574.24	0.00	0.00
39	116.00	Kathrein 742 213	3	32.395	35.635	0.62	0.80	9.62	79.20	0.000	0.000	548.61	0.00	0.00
40	116.00	Low Profile Platform	1	32.395	35.635	1.00	1.00	22.00	1800.00	0.000	0.000	1254.34	0.00	0.00
41	107.00	Powerwave 7770.00	3	31.849	35.034	0.62	0.80	10.18	126.00	0.000	0.000	570.77	0.00	0.00
42	107.00	KMW	3	31.849	35.034	0.63	0.80	15.21	174.60	0.000	0.000	852.36	0.00	0.00
43	107.00	Powerwave 7020.00	6	31.849	35.034	0.48	0.80	0.98	15.84	0.000	0.000	54.89	0.00	0.00
44	107.00	Ericsson RRUS-32 B2	3	31.849	35.034	0.54	0.80	4.84	190.80	0.000	0.000	271.31	0.00	0.00
45	107.00	CCI HPA-65R-BUU-H6	3	31.849	35.034	0.62	0.80	21.88	183.60	0.000	0.000	1226.48	0.00	0.00
46	107.00	Raycap DC6-48-60-18-8F	1	31.849	35.034	0.54	0.80	1.18	39.36	0.000	0.000	66.10	0.00	0.00
47	107.00	Powerwave	3	31.849	35.034	0.48	0.80	0.79	57.60	0.000	0.000	44.39	0.00	0.00

Copyright © 2019 by Tower Engineering Solutions, LLC. All rights reserved.

Discrete Appurtenance Forces

Structure:	CT01080-S-SBA		**Code:**	EIA/TIA-222-G	7/9/2019
Site Name:	Long Hill #1		**Exposure:**	C	
Height:	158.00 (ft)		**Crest Height:**	0.00	
Base Elev:	0.000 (ft)		**Site Class:**	D - Stiff Soil	
Gh:	1.1	**Topography:** 1	**Struct Class:**	II	Page: 11

Tower Engineering Solutions

48	107.00	Powerwave LGP21903	6	31.849	35.034	0.48	0.80	0.66	38.16	0.000	0.000	37.13	0.00	0.00
49	107.00	Ericsson RRUS 11	3	31.849	35.034	0.54	0.80	4.05	198.00	0.000	0.000	227.14	0.00	0.00
50	107.00	CCI DTMAP7819VG12A	3	31.849	35.034	0.48	0.80	1.41	69.05	0.000	0.000	79.10	0.00	0.00
51	107.00	Low Profile Platform	1	31.849	35.034	0.00	1.00	22.00	1800.00	0.000	0.000	1233.19	0.00	0.00
							Totals:		**14,909.65**			**26,233.52**		

Copyright © 2019 by Tower Engineering Solutions, LLC. All rights reserved.

Total Applied Force Summary

Structure:	CT01080-S-SBA		**Code:**	EIA/TIA-222-G	7/9/2019
Site Name:	Long Hill #1		**Exposure:**	C	
Height:	158.00 (ft)		**Crest Height:**	0.00	
Base Elev:	0.000 (ft)		**Site Class:**	D - Stiff Soil	
Gh:	1.1	**Topography:** 1	**Struct Class:**	II	Page: 12

Tower Engineering Solutions

Load Case: 1.2D + 1.6W 101 mph Wind

Dead Load Factor 1.20

Wind Load Factor 1.60

Iterations 25

Elev (ft)	Description	Lateral FX (-) (lb)	Axial FY (-) (lb)	Torsion MY (lb-ft)	Moment MZ (lb-ft)
0.00		0.00	0.00	0.00	0.00
5.00		589.88	1752.68	0.00	0.00
10.00		577.88	1909.35	0.00	0.00
15.00		565.89	1876.04	0.00	0.00
20.00		587.71	1842.73	0.00	0.00
25.00		602.64	1809.42	0.00	0.00
30.00		612.36	1776.11	0.00	0.00
35.00		618.24	1742.79	0.00	0.00
40.00		621.14	1709.48	0.00	0.00
45.00		621.65	1676.17	0.00	0.00
45.25		30.72	82.93	0.00	0.00
50.00		598.14	2657.92	0.00	0.00
51.25		155.90	690.17	0.00	0.00
55.00		468.80	1080.77	0.00	0.00
60.00		622.59	1416.04	0.00	0.00
65.00		616.86	1387.49	0.00	0.00
70.00		609.99	1358.93	0.00	0.00
75.00		602.11	1330.38	0.00	0.00
80.00		593.31	1301.83	0.00	0.00
85.00		583.67	1273.28	0.00	0.00
90.00		573.27	1244.72	0.00	0.00
91.75		197.32	428.91	0.00	0.00
95.00		368.29	1181.47	0.00	0.00
96.50		168.01	538.51	0.00	0.00
100.00		388.74	633.19	0.00	0.00
105.00		545.73	888.38	0.00	0.00
107.00	(35) attachments	4876.96	3243.03	0.00	0.00
110.00		317.55	463.45	0.00	0.00
115.00		519.51	757.19	0.00	0.00
116.00	(4) attachments	1904.82	2028.35	0.00	0.00
120.00	(7) attachments	2824.62	1699.05	0.00	1526.80
125.00		491.27	669.44	0.00	0.00
130.00		476.48	650.41	0.00	0.00
133.00		278.16	381.11	0.00	0.00
135.00		185.46	434.23	0.00	0.00
136.75		160.21	374.96	0.00	0.00
137.00	(29) attachments	4922.16	3167.60	0.00	0.00
140.00		269.97	325.05	0.00	0.00
145.00		437.84	526.52	0.00	0.00
146.00	(30) attachments	5256.01	2974.37	0.00	0.00
150.00		335.67	386.54	0.00	0.00
151.00	(3) attachments	691.90	215.69	518.93	0.00
155.00		322.33	370.55	0.00	0.00
158.00	(31) attachments	6900.67	3138.59	0.00	0.00
	Totals:	**43,692.42**	**55,395.88**	**518.93**	**1,526.80**

Copyright © 2019 by Tower Engineering Solutions, LLC. All rights reserved.

Linear Appurtenance Segment Forces (Factored)

Structure:	CT01080-S-SBA	**Code:**	EIA/TIA-222-G	7/9/2019	
Site Name:	Long Hill #1	**Exposure:**	C		
Height:	158.00 (ft)	**Crest Height:**	0.00		
Base Elev:	0.000 (ft)	**Site Class:**	D - Stiff Soil		
Gh:	1.1 **Topography:** 1	**Struct Class:**	II	Page: 13	

Load Case: 1.2D + 1.6W 101 mph Wind

Dead Load Factor 1.20

Wind Load Factor 1.60

Iterations 25

Top Elev (ft)	Description	Wind Exposed	Length (ft)	Ca	Exposed Width (in)	Area (sqft)	CaAa (sqft)	Ra	Cf Adjust Factor	qz (psf)	F X (lb)	Dead Load (lb)
5.00	1 5/8" Hybrid	Yes	2.00	0.000	0.00	0.00	0.00	0.000	0.000	21.088	0.00	5.28
10.00	1 5/8" Hybrid	Yes	5.00	0.000	0.00	0.00	0.00	0.000	0.000	21.088	0.00	13.20
15.00	1 5/8" Hybrid	Yes	5.00	0.000	0.00	0.00	0.00	0.000	0.000	21.088	0.00	13.20
20.00	1 5/8" Hybrid	Yes	5.00	0.000	0.00	0.00	0.00	0.000	0.000	22.375	0.00	13.20
25.00	1 5/8" Hybrid	Yes	5.00	0.000	0.00	0.00	0.00	0.000	0.000	23.451	0.00	13.20
30.00	1 5/8" Hybrid	Yes	5.00	0.000	0.00	0.00	0.00	0.000	0.000	24.369	0.00	13.20
35.00	1 5/8" Hybrid	Yes	5.00	0.000	0.00	0.00	0.00	0.000	0.000	25.172	0.00	13.20
40.00	1 5/8" Hybrid	Yes	5.00	0.000	0.00	0.00	0.00	0.000	0.000	25.890	0.00	13.20
45.00	1 5/8" Hybrid	Yes	5.00	0.000	0.00	0.00	0.00	0.000	0.000	26.540	0.00	13.20
45.25	1 5/8" Hybrid	Yes	0.25	0.000	0.00	0.00	0.00	0.000	0.000	26.571	0.00	0.66
50.00	1 5/8" Hybrid	Yes	4.75	0.000	0.00	0.00	0.00	0.000	0.000	27.135	0.00	12.54
51.25	1 5/8" Hybrid	Yes	1.25	0.000	0.00	0.00	0.00	0.000	0.000	27.277	0.00	3.30
55.00	1 5/8" Hybrid	Yes	3.75	0.000	0.00	0.00	0.00	0.000	0.000	27.685	0.00	9.90
60.00	1 5/8" Hybrid	Yes	5.00	0.000	0.00	0.00	0.00	0.000	0.000	28.197	0.00	13.20
65.00	1 5/8" Hybrid	Yes	5.00	0.000	0.00	0.00	0.00	0.000	0.000	28.676	0.00	13.20
70.00	1 5/8" Hybrid	Yes	5.00	0.000	0.00	0.00	0.00	0.000	0.000	29.127	0.00	13.20
75.00	1 5/8" Hybrid	Yes	5.00	0.000	0.00	0.00	0.00	0.000	0.000	29.553	0.00	13.20
80.00	1 5/8" Hybrid	Yes	5.00	0.000	0.00	0.00	0.00	0.000	0.000	29.958	0.00	13.20
85.00	1 5/8" Hybrid	Yes	5.00	0.000	0.00	0.00	0.00	0.000	0.000	30.342	0.00	13.20
90.00	1 5/8" Hybrid	Yes	5.00	0.000	0.00	0.00	0.00	0.000	0.000	30.710	0.00	13.20
91.75	1 5/8" Hybrid	Yes	1.75	0.000	0.00	0.00	0.00	0.000	0.000	30.834	0.00	4.62
95.00	1 5/8" Hybrid	Yes	3.25	0.000	0.00	0.00	0.00	0.000	0.000	31.061	0.00	8.58
96.50	1 5/8" Hybrid	Yes	1.50	0.000	0.00	0.00	0.00	0.000	0.000	31.164	0.00	3.96
100.00	1 5/8" Hybrid	Yes	3.50	0.000	0.00	0.00	0.00	0.000	0.000	31.399	0.00	9.24
105.00	1 5/8" Hybrid	Yes	5.00	0.000	0.00	0.00	0.00	0.000	0.000	31.723	0.00	13.20
107.00	1 5/8" Hybrid	Yes	2.00	0.000	0.00	0.00	0.00	0.000	0.000	31.849	0.00	5.28
110.00	1 5/8" Hybrid	Yes	3.00	0.000	0.00	0.00	0.00	0.000	0.000	32.035	0.00	7.92
115.00	1 5/8" Hybrid	Yes	5.00	0.000	0.00	0.00	0.00	0.000	0.000	32.336	0.00	13.20
116.00	1 5/8" Hybrid	Yes	1.00	0.000	0.00	0.00	0.00	0.000	0.000	32.395	0.00	2.64
120.00	1 5/8" Hybrid	Yes	4.00	0.000	0.00	0.00	0.00	0.000	0.000	32.627	0.00	10.56
125.00	1 5/8" Hybrid	Yes	5.00	0.000	0.00	0.00	0.00	0.000	0.000	32.909	0.00	13.20
130.00	1 5/8" Hybrid	Yes	5.00	0.000	0.00	0.00	0.00	0.000	0.000	33.182	0.00	13.20
133.00	1 5/8" Hybrid	Yes	3.00	0.000	0.00	0.00	0.00	0.000	0.000	33.341	0.00	7.92
135.00	1 5/8" Hybrid	Yes	2.00	0.000	0.00	0.00	0.00	0.000	0.000	33.446	0.00	5.28
136.75	1 5/8" Hybrid	Yes	1.75	0.000	0.00	0.00	0.00	0.000	0.000	33.537	0.00	4.62
137.00	1 5/8" Hybrid	Yes	0.25	0.000	0.00	0.00	0.00	0.000	0.000	33.550	0.00	0.66
140.00	1 5/8" Hybrid	Yes	3.00	0.000	0.00	0.00	0.00	0.000	0.000	33.703	0.00	7.92
145.00	1 5/8" Hybrid	Yes	5.00	0.000	0.00	0.00	0.00	0.000	0.000	33.953	0.00	13.20
146.00	1 5/8" Hybrid	Yes	1.00	0.000	0.00	0.00	0.00	0.000	0.000	34.002	0.00	2.64
150.00	1 5/8" Hybrid	Yes	4.00	0.000	0.00	0.00	0.00	0.000	0.000	34.196	0.00	10.56
151.00	1 5/8" Hybrid	Yes	1.00	0.000	0.00	0.00	0.00	0.000	0.000	34.244	0.00	2.64
155.00	1 5/8" Hybrid	Yes	4.00	0.000	0.00	0.00	0.00	0.000	0.000	34.433	0.00	10.56
158.00	1 5/8" Hybrid	Yes	3.00	0.000	0.00	0.00	0.00	0.000	0.000	34.573	0.00	7.92
										Totals:	**0.0**	**409.2**

Copyright © 2019 by Tower Engineering Solutions, LLC. All rights reserved.

Calculated Forces

Structure:	CT01080-S-SBA		**Code:**	EIA/TIA-222-G	7/9/2019
Site Name:	Long Hill #1		**Exposure:**	C	
Height:	158.00 (ft)		**Crest Height:**	0.00	
Base Elev:	0.000 (ft)		**Site Class:**	D - Stiff Soil	
Gh:	1.1	**Topography:** 1	**Struct Class:**	II	Page: 14

TES Tower Engineering Solutions

Load Case: 1.2D + 1.6W 101 mph Wind

Dead Load Factor 1.20

Wind Load Factor 1.60

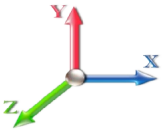

Iterations 25

Seg Elev (ft)	Pu FY (-) (kips)	Vu FX (-) (kips)	Tu MY (-) (ft-kips)	Mu MZ (ft-kips)	Mu MX (ft-kips)	Resultant Moment (ft-kips)	phi Pn (kips)	phi Vn (kips)	phi Tn (ft-kips)	phi Mn (ft-kips)	Total Deflect (in)	Rotation Sway (deg)	Rotation Twist (deg)	Stress Ratio
0.00	-55.31	-43.80	-0.50	-5100.9	-0.01	5100.99	5458.79	2729.40	13000.6	6509.99	0.00	0.000	0.000	0.794
5.00	-53.40	-43.40	-0.50	-4882.0	-0.01	4882.02	5387.61	2693.80	12568.9	6293.83	0.11	-0.208	0.000	0.786
10.00	-51.34	-43.00	-0.50	-4665.0	-0.01	4665.03	5314.79	2657.39	12140.4	6079.27	0.44	-0.420	0.000	0.777
15.00	-49.31	-42.60	-0.50	-4450.0	-0.01	4450.03	5240.33	2620.17	11715.4	5866.42	1.00	-0.635	0.000	0.768
20.00	-47.31	-42.18	-0.50	-4237.0	-0.01	4237.01	5164.24	2582.12	11294.0	5655.41	1.78	-0.853	0.000	0.759
25.00	-45.35	-41.72	-0.50	-4026.1	-0.01	4026.14	5086.52	2543.26	10876.5	5446.36	2.79	-1.075	0.000	0.748
30.00	-43.42	-41.24	-0.50	-3817.5	-0.01	3817.55	5007.16	2503.58	10463.2	5239.39	4.04	-1.301	0.000	0.738
35.00	-41.53	-40.75	-0.50	-3611.3	-0.01	3611.34	4926.16	2463.08	10054.2	5034.61	5.53	-1.529	0.000	0.726
40.00	-39.68	-40.24	-0.50	-3407.6	-0.02	3407.60	4843.52	2421.76	9649.95	4832.15	7.25	-1.761	0.000	0.714
45.00	-37.94	-39.65	-0.50	-3206.4	-0.01	3206.40	4759.26	2379.63	9250.49	4632.12	9.22	-1.995	0.000	0.700
45.25	-37.77	-39.69	-0.50	-3196.4	-0.02	3196.49	4755.00	2377.50	9230.65	4622.19	9.33	-2.007	0.000	0.700
50.00	-35.04	-39.08	-0.50	-3007.9	-0.02	3007.96	4673.35	2336.67	8856.13	4434.65	11.44	-2.233	0.000	0.686
51.25	-34.28	-38.97	-0.50	-2959.1	-0.02	2959.11	3853.76	1926.88	7395.56	3703.28	12.03	-2.294	0.000	0.808
55.00	-33.06	-38.59	-0.50	-2812.9	-0.02	2812.97	3804.98	1902.49	7163.10	3586.87	13.91	-2.476	0.000	0.793
60.00	-31.50	-38.05	-0.50	-2620.0	-0.02	2620.03	3738.51	1869.25	6856.06	3433.13	16.64	-2.743	0.000	0.772
65.00	-29.97	-37.51	-0.50	-2429.7	-0.02	2429.78	3670.40	1835.20	6552.57	3281.16	19.66	-3.011	0.000	0.749
70.00	-28.47	-36.96	-0.50	-2242.2	-0.02	2242.26	3600.66	1800.33	6252.87	3131.08	22.96	-3.280	0.000	0.724
75.00	-27.01	-36.40	-0.50	-2057.4	-0.02	2057.48	3529.28	1764.64	5957.19	2983.02	26.53	-3.548	-0.001	0.698
80.00	-25.58	-35.85	-0.51	-1875.4	-0.02	1875.48	3456.27	1728.13	5665.78	2837.10	30.39	-3.816	-0.001	0.669
85.00	-24.19	-35.29	-0.51	-1696.2	-0.03	1696.25	3381.62	1690.81	5378.88	2693.44	34.53	-4.081	-0.001	0.637
90.00	-22.89	-34.69	-0.51	-1519.8	-0.03	1519.82	3305.34	1652.67	5096.71	2552.14	38.94	-4.341	-0.001	0.603
91.75	-22.40	-34.52	-0.51	-1459.1	-0.03	1459.11	3278.25	1639.13	4999.12	2503.28	40.55	-4.434	-0.001	0.590
95.00	-21.17	-34.10	-0.51	-1346.9	-0.03	1346.94	3221.38	1610.69	4810.51	2408.83	43.62	-4.602	-0.001	0.566
96.50	-20.58	-33.93	-0.51	-1295.7	-0.03	1295.79	1897.75	948.88	2865.01	1434.63	45.08	-4.679	-0.001	0.915
100.00	-19.83	-33.58	-0.51	-1177.0	-0.03	1177.02	1872.71	936.35	2763.41	1383.76	48.57	-4.854	-0.001	0.862
105.00	-18.86	-33.04	-0.51	-1009.1	-0.03	1009.10	1835.54	917.77	2619.24	1311.57	53.83	-5.190	-0.001	0.781
107.00	-15.99	-27.93	-0.51	-943.02	-0.04	943.02	1820.21	910.11	2561.95	1282.88	56.04	-5.322	-0.001	0.745
110.00	-15.44	-27.64	-0.51	-859.23	-0.04	859.23	1796.73	898.37	2476.44	1240.06	59.44	-5.513	-0.001	0.702
115.00	-14.66	-27.09	-0.51	-721.04	-0.04	721.04	1756.29	878.14	2335.25	1169.36	65.37	-5.811	-0.002	0.626
116.00	-12.77	-25.02	-0.51	-693.95	-0.04	693.95	1748.00	874.00	2307.22	1155.32	66.59	-5.870	-0.002	0.609
120.00	-11.29	-22.08	-0.51	-592.34	-0.04	592.34	1714.21	857.11	2195.89	1099.58	71.59	-6.091	-0.002	0.546
125.00	-10.59	-21.57	-0.51	-481.93	-0.05	481.93	1670.50	835.25	2058.61	1030.84	78.10	-6.342	-0.002	0.475
130.00	-9.93	-21.05	-0.51	-374.11	-0.05	374.11	1625.15	812.57	1923.65	963.25	84.85	-6.567	-0.002	0.395
133.00	-9.55	-20.74	-0.51	-310.97	-0.05	310.97	1597.15	798.58	1843.89	923.31	89.01	-6.689	-0.002	0.343
135.00	-9.12	-20.52	-0.51	-269.48	-0.05	269.48	1578.16	789.08	1791.25	896.95	91.82	-6.763	-0.003	0.307
136.75	-8.75	-20.32	-0.51	-233.57	-0.05	233.57	1475.57	737.78	1680.22	841.36	94.31	-6.822	-0.003	0.284
137.00	-6.18	-15.06	-0.51	-228.49	-0.05	228.49	1473.30	736.65	1674.05	838.27	94.67	-6.830	-0.003	0.277
140.00	-5.86	-14.77	-0.52	-183.30	-0.05	183.30	1445.77	722.89	1600.57	801.47	98.98	-6.912	-0.003	0.233
145.00	-5.38	-14.27	-0.52	-109.48	-0.06	109.48	1398.74	699.37	1480.44	741.32	106.26	-7.018	-0.003	0.152
146.00	-3.07	-8.69	-0.52	-95.21	-0.06	95.21	1389.16	694.58	1456.78	729.47	107.73	-7.035	-0.003	0.133
150.00	-2.72	-8.31	-0.52	-60.43	-0.06	60.43	1340.27	670.14	1353.35	677.68	113.63	-7.088	-0.004	0.091
151.00	-2.59	-7.60	0.00	-52.12	0.00	52.12	1327.48	663.74	1327.52	664.75	115.11	-7.099	-0.004	0.080
155.00	-2.26	-7.24	0.00	-21.71	0.00	21.71	1276.33	638.17	1226.69	614.25	121.06	-7.127	-0.004	0.037
158.00	0.00	-6.90	0.00	0.00	0.00	0.00	1237.97	618.99	1153.67	577.69	125.53	-7.135	-0.004	0.000

Copyright © 2019 by Tower Engineering Solutions, LLC. All rights reserved.

Wind Loading - Shaft

Structure:	CT01080-S-SBA		**Code:**	EIA/TIA-222-G	7/9/2019
Site Name:	Long Hill #1		**Exposure:**	C	
Height:	158.00 (ft)		**Crest Height:**	0.00	
Base Elev:	0.000 (ft)		**Site Class:**	D - Stiff Soil	
Gh:	1.1	**Topography:** 1	**Struct Class:**	II	Page: 15

Tower Engineering Solutions

Load Case: 0.9D + 1.6W 101 mph Wind

Dead Load Factor 0.90

Wind Load Factor 1.60

Iterations 25

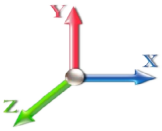

Elev (ft)	Description	Kzt	Kz	qz (psf)	qzGh (psf)	C (mph-ft)	Cf	Ice Thick (in)	Tributary (ft)	Aa (sf)	CfAa (sf)	Wind Force X (lb)	Dead Load Ice (lb)	Tot Dead Load (lb)
0.00		1.00	0.85	21.088	23.20	460.00	0.650	0.000	0.00	0.000	0.00	0.0	0.0	0.0
5.00		1.00	0.85	21.088	23.20	450.75	0.650	0.000	5.00	24.452	15.89	589.9	0.0	1219.5
10.00		1.00	0.85	21.088	23.20	441.49	0.650	0.000	5.00	23.955	15.57	577.9	0.0	1194.5
15.00		1.00	0.85	21.088	23.20	432.23	0.650	0.000	5.00	23.457	15.25	565.9	0.0	1169.5
20.00		1.00	0.90	22.375	24.61	435.69	0.650	0.000	5.00	22.960	14.92	587.7	0.0	1144.6
25.00		1.00	0.95	23.451	25.80	436.28	0.650	0.000	5.00	22.463	14.60	602.6	0.0	1119.6
30.00		1.00	0.98	24.369	26.81	434.78	0.650	0.000	5.00	21.966	14.28	612.4	0.0	1094.6
35.00		1.00	1.01	25.172	27.69	431.78	0.650	0.000	5.00	21.469	13.95	618.2	0.0	1069.6
40.00		1.00	1.04	25.890	28.48	427.63	0.650	0.000	5.00	20.972	13.63	621.1	0.0	1044.6
45.00		1.00	1.07	26.540	29.19	422.58	0.650	0.000	5.00	20.475	13.31	621.6	0.0	1019.6
45.25	Bot - Section 2	1.00	1.07	26.571	29.23	422.31	0.650	0.000	0.25	1.011	0.66	30.7	0.0	50.3
50.00		1.00	1.09	27.135	29.85	416.79	0.650	0.000	4.75	19.268	12.52	598.1	0.0	1767.8
51.25	Top - Section 1	1.00	1.10	27.277	30.00	415.24	0.650	0.000	1.25	4.996	3.25	155.9	0.0	458.3
55.00		1.00	1.12	27.685	30.45	417.16	0.650	0.000	3.75	14.802	9.62	468.8	0.0	632.5
60.00		1.00	1.14	28.197	31.02	410.29	0.650	0.000	5.00	19.301	12.55	622.6	0.0	824.5
65.00		1.00	1.16	28.676	31.54	402.96	0.650	0.000	5.00	18.803	12.22	616.9	0.0	803.1
70.00		1.00	1.17	29.127	32.04	395.24	0.650	0.000	5.00	18.306	11.90	610.0	0.0	781.7
75.00		1.00	1.19	29.553	32.51	387.16	0.650	0.000	5.00	17.809	11.58	602.1	0.0	760.3
80.00		1.00	1.21	29.958	32.95	378.76	0.650	0.000	5.00	17.312	11.25	593.3	0.0	738.9
85.00		1.00	1.22	30.342	33.38	370.08	0.650	0.000	5.00	16.815	10.93	583.7	0.0	717.5
90.00		1.00	1.24	30.710	33.78	361.14	0.650	0.000	5.00	16.318	10.61	573.3	0.0	696.1
91.75	Bot - Section 3	1.00	1.24	30.834	33.92	357.96	0.650	0.000	1.75	5.594	3.64	197.3	0.0	238.6
95.00		1.00	1.25	31.061	34.17	351.97	0.650	0.000	3.25	10.364	6.74	368.3	0.0	731.7
96.50	Top - Section 2	1.00	1.26	31.164	34.28	349.17	0.650	0.000	1.50	4.713	3.06	168.0	0.0	332.6
100.00		1.00	1.27	31.399	34.54	347.38	0.650	0.000	3.50	10.822	7.03	388.7	0.0	308.7
105.00		1.00	1.28	31.723	34.89	337.82	0.650	0.000	5.00	15.038	9.77	545.7	0.0	428.8
107.00	Appurtenance(s)	1.00	1.28	31.849	35.03	333.94	0.650	0.000	2.00	5.876	3.82	214.1	0.0	167.5
110.00		1.00	1.29	32.035	35.24	328.06	0.650	0.000	3.00	8.665	5.63	317.5	0.0	247.0
115.00		1.00	1.30	32.336	35.57	318.14	0.650	0.000	5.00	14.044	9.13	519.5	0.0	400.3
116.00	Appurtenance(s)	1.00	1.31	32.395	35.63	316.13	0.650	0.000	1.00	2.749	1.79	101.9	0.0	78.3
120.00	Appurtenance(s)	1.00	1.32	32.627	35.89	308.05	0.650	0.000	4.00	10.797	7.02	403.0	0.0	307.6
125.00		1.00	1.33	32.909	36.20	297.81	0.650	0.000	5.00	13.049	8.48	491.3	0.0	371.7
130.00		1.00	1.34	33.182	36.50	287.43	0.650	0.000	5.00	12.552	8.16	476.5	0.0	357.4
133.00	Bot - Section 4	1.00	1.34	33.341	36.68	281.13	0.650	0.000	3.00	7.293	4.74	278.2	0.0	207.6
135.00		1.00	1.35	33.446	36.79	276.91	0.650	0.000	2.00	4.847	3.15	185.5	0.0	273.5
136.75	Top - Section 3	1.00	1.35	33.537	36.89	273.20	0.650	0.000	1.75	4.176	2.71	160.2	0.0	235.6
137.00	Appurtenance(s)	1.00	1.35	33.550	36.90	277.64	0.650	0.000	0.25	0.592	0.38	22.7	0.0	16.8
140.00		1.00	1.36	33.703	37.07	271.25	0.650	0.000	3.00	7.002	4.55	270.0	0.0	199.3
145.00		1.00	1.37	33.953	37.35	260.51	0.650	0.000	5.00	11.272	7.33	437.8	0.0	320.7
146.00	Appurtenance(s)	1.00	1.37	34.002	37.40	258.34	0.650	0.000	1.00	2.195	1.43	85.4	0.0	62.4
150.00		1.00	1.38	34.196	37.62	249.65	0.650	0.000	4.00	8.580	5.58	335.7	0.0	244.0
151.00	Appurtenance(s)	1.00	1.38	34.244	37.67	247.46	0.650	0.000	1.00	2.095	1.36	82.1	0.0	59.6
155.00		1.00	1.39	34.433	37.88	238.68	0.650	0.000	4.00	8.183	5.32	322.3	0.0	232.6
158.00	Appurtenance(s)	1.00	1.39	34.573	38.03	232.05	0.650	0.000	3.00	5.928	3.85	234.5	0.0	168.4
								Totals:	**158.00**			**17,458.9**		**24,297.9**

Copyright © 2019 by Tower Engineering Solutions, LLC. All rights reserved.

Discrete Appurtenance Forces

Structure:	CT01080-S-SBA		**Code:**	EIA/TIA-222-G	7/9/2019
Site Name:	Long Hill #1		**Exposure:**	C	
Height:	158.00 (ft)		**Crest Height:**	0.00	
Base Elev:	0.000 (ft)		**Site Class:**	D - Stiff Soil	
Gh:	1.1	**Topography:** 1	**Struct Class:**	II	Page: 16

Tower Engineering Solutions

Load Case: 0.9D + 1.6W 101 mph Wind

Dead Load Factor 0.90

Wind Load Factor 1.60

Iterations 25

No.	Elev (ft)	Description	Qty	qz (psf)	qzGh (psf)	Orient Factor x Ka	Ka	Total CaAa (sf)	Dead Load (lb)	Horiz Ecc (ft)	Vert Ecc (ft)	Wind FX (lb)	Mom Y (lb-ft)	Mom Z (lb-ft)
1	158.00	Alcatel RRH2X60-700	3	34.573	38.030	0.54	0.80	5.63	162.00	0.000	0.000	342.45	0.00	0.00
2	158.00	Commscope	6	34.573	38.030	0.66	0.80	32.07	273.83	0.000	0.000	1951.46	0.00	0.00
3	158.00	Amphenol	2	34.573	38.030	0.75	0.80	14.63	48.60	0.000	0.000	890.44	0.00	0.00
4	158.00	RFS APL866513-42T0 w/	4	34.573	38.030	0.76	0.80	17.18	175.32	0.000	0.000	1045.12	0.00	0.00
5	158.00	Alcatel RRH2X60-AWS	3	34.573	38.030	0.54	0.80	5.63	162.00	0.000	0.000	342.45	0.00	0.00
6	158.00	6' Lightning rod	1	34.573	38.030	1.00	1.00	0.38	5.85	0.000	0.000	23.12	0.00	0.00
7	158.00	Alcatel RRH2X60-PCS	3	34.573	38.030	0.54	0.80	3.54	148.50	0.000	0.000	215.25	0.00	0.00
8	158.00	RFS FD9R6004/2CL-3CL	6	34.573	38.030	0.48	0.80	0.89	16.20	0.000	0.000	54.32	0.00	0.00
9	158.00	RFS DB-T1-6C-8AB-0Z	2	34.573	38.030	0.48	0.80	4.61	79.20	0.000	0.000	280.39	0.00	0.00
10	158.00	Low Profile Platform	1	34.573	38.030	1.00	1.00	25.00	1080.00	0.000	0.000	1521.19	0.00	0.00
11	151.00	Pipe Mount	1	34.244	37.669	1.00	1.00	2.63	36.00	0.000	0.000	158.51	0.00	0.00
12	151.00	Andrew VHLP2.5	1	34.244	37.669	0.80	0.80	6.74	42.84	2.043	0.000	406.46	518.93	0.00
13	151.00	ODU	1	34.244	37.669	0.60	1.00	0.74	11.88	0.000	0.000	44.84	0.00	0.00
14	146.00	RFS APXVTM14-C-120 w/	3	34.002	37.403	0.62	0.80	14.86	240.30	0.000	0.000	889.51	0.00	0.00
15	146.00	Alcatel TD-RRH8x20-25	3	34.002	37.403	0.54	0.80	6.51	189.00	0.000	0.000	389.73	0.00	0.00
16	146.00	Alcatel 1900MHz RRH	3	34.002	37.403	0.54	0.80	3.83	118.80	0.000	0.000	229.03	0.00	0.00
17	146.00	Alcatel 800 MHz RRH	3	34.002	37.403	0.54	0.80	3.43	143.10	0.000	0.000	204.97	0.00	0.00
18	146.00	Alcatel 800MHz Filters	3	34.002	37.403	0.48	0.80	0.96	23.76	0.000	0.000	57.74	0.00	0.00
19	146.00	RFS ACU-A20-N RET	4	34.002	37.403	0.48	0.80	0.23	3.60	0.000	0.000	13.79	0.00	0.00
20	146.00	GPS	1	34.002	37.403	1.00	1.00	1.00	9.00	0.000	0.000	59.84	0.00	0.00
21	146.00	Kathrein Scala 840 10054	3	34.002	37.403	0.49	0.80	6.72	94.50	0.000	0.000	402.14	0.00	0.00
22	146.00	RRUs	3	34.002	37.403	0.54	0.80	4.70	8.45	0.000	0.000	280.99	0.00	0.00
23	146.00	Low Profile Platform	1	34.002	37.403	1.00	1.00	25.00	1080.00	0.000	0.000	1496.11	0.00	0.00
24	146.00	RFS APXVSPP18-C-A20	3	34.002	37.403	0.66	0.80	19.16	243.00	0.000	0.000	1146.80	0.00	0.00
25	137.00	KRD 9011461-B66A-B2A	3	33.550	36.905	0.65	0.75	12.74	356.94	0.000	0.000	752.47	0.00	0.00
26	137.00	HRK12 (Handrail Kit)	1	33.550	36.905	1.00	1.00	6.75	235.55	0.000	0.000	398.57	0.00	0.00
27	137.00	KRY 112 489/2	3	33.550	36.905	0.50	0.75	0.63	27.00	0.000	0.000	37.39	0.00	0.00
28	137.00	Low Profile Platform w/	1	33.550	36.905	1.00	1.00	25.00	1080.00	0.000	0.000	1476.20	0.00	0.00
29	137.00	Allen Telecom	12	33.550	36.905	0.50	0.75	3.26	88.56	0.000	0.000	192.27	0.00	0.00
30	137.00	Kathrein 782 11056	3	33.550	36.905	0.50	0.75	0.23	29.70	0.000	0.000	13.35	0.00	0.00
31	137.00	APXVAARR24_43-U-NA2	3	33.550	36.905	0.52	0.75	31.88	345.60	0.000	0.000	1882.33	0.00	0.00
32	137.00	4449	3	33.550	36.905	0.50	0.75	2.49	189.00	0.000	0.000	146.87	0.00	0.00
33	120.00	Cambium Network	1	32.627	35.890	1.00	1.00	8.92	45.00	0.000	0.000	512.22	0.00	0.00
34	120.00	SC479-HF1LDF(D00-E574	2	32.640	35.904	0.80	0.80	8.05	61.20	0.000	0.220	462.32	0.00	101.71
35	120.00	SC229-DFLN	1	32.885	36.174	0.80	0.80	5.38	28.80	0.000	4.580	311.15	0.00	1425.09
36	120.00	DS428E83I01T - TTA	1	32.627	35.890	0.54	0.80	4.78	45.00	0.000	0.000	274.55	0.00	0.00
37	120.00	Flush Mount	1	32.627	35.890	1.00	1.00	5.00	315.00	0.000	0.000	287.12	0.00	0.00
38	120.00	Pipe Mount	1	32.627	35.890	1.00	1.00	10.00	360.00	0.000	0.000	574.24	0.00	0.00
39	116.00	Kathrein 742 213	3	32.395	35.635	0.62	0.80	9.62	59.40	0.000	0.000	548.61	0.00	0.00
40	116.00	Low Profile Platform	1	32.395	35.635	1.00	1.00	22.00	1350.00	0.000	0.000	1254.34	0.00	0.00
41	107.00	Powerwave 7770.00	3	31.849	35.034	0.62	0.80	10.18	94.50	0.000	0.000	570.77	0.00	0.00
42	107.00	KMW	3	31.849	35.034	0.63	0.80	15.21	130.95	0.000	0.000	852.36	0.00	0.00
43	107.00	Powerwave 7020.00	6	31.849	35.034	0.48	0.80	0.98	11.88	0.000	0.000	54.89	0.00	0.00
44	107.00	Ericsson RRUS-32 B2	3	31.849	35.034	0.54	0.80	4.84	143.10	0.000	0.000	271.31	0.00	0.00
45	107.00	CCI HPA-65R-BUU-H6	3	31.849	35.034	0.62	0.80	21.88	137.70	0.000	0.000	1226.48	0.00	0.00
46	107.00	Raycap DC6-48-60-18-8F	1	31.849	35.034	0.54	0.80	1.18	29.52	0.000	0.000	66.10	0.00	0.00
47	107.00	Powerwave	3	31.849	35.034	0.48	0.80	0.79	43.20	0.000	0.000	44.39	0.00	0.00

Copyright © 2019 by Tower Engineering Solutions, LLC. All rights reserved.

Discrete Appurtenance Forces

Structure:	CT01080-S-SBA		**Code:**	EIA/TIA-222-G	7/9/2019
Site Name:	Long Hill #1		**Exposure:**	C	
Height:	158.00 (ft)		**Crest Height:**	0.00	
Base Elev:	0.000 (ft)		**Site Class:**	D - Stiff Soil	
Gh:	1.1	**Topography:** 1	**Struct Class:**	II	Page: 17

Tower Engineering Solutions

48	107.00	Powerwave LGP21903	6	31.849	35.034	0.48	0.80	0.66	28.62	0.000	0.000	37.13	0.00	0.00
49	107.00	Ericsson RRUS 11	3	31.849	35.034	0.54	0.80	4.05	148.50	0.000	0.000	227.14	0.00	0.00
50	107.00	CCI DTMAP7819VG12A	3	31.849	35.034	0.48	0.80	1.41	51.79	0.000	0.000	79.10	0.00	0.00
51	107.00	Low Profile Platform	1	31.849	35.034	0.00	1.00	22.00	1350.00	0.000	0.000	1233.19	0.00	0.00
							Totals:		**11,182.24**			**26,233.52**		

Copyright © 2019 by Tower Engineering Solutions, LLC. All rights reserved.

Total Applied Force Summary

Structure:	CT01080-S-SBA		**Code:**	EIA/TIA-222-G	7/9/2019
Site Name:	Long Hill #1		**Exposure:**	C	
Height:	158.00 (ft)		**Crest Height:**	0.00	
Base Elev:	0.000 (ft)		**Site Class:**	D - Stiff Soil	
Gh:	1.1	**Topography:** 1	**Struct Class:**	II	Page: 18

Tower Engineering Solutions

Load Case: 0.9D + 1.6W 101 mph Wind

Dead Load Factor 0.90

Wind Load Factor 1.60

Iterations 25

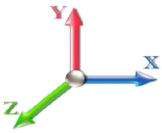

Elev (ft)	Description	Lateral FX (-) (lb)	Axial FY (-) (lb)	Torsion MY (lb-ft)	Moment MZ (lb-ft)
0.00		0.00	0.00	0.00	0.00
5.00		589.88	1314.51	0.00	0.00
10.00		577.88	1432.01	0.00	0.00
15.00		565.89	1407.03	0.00	0.00
20.00		587.71	1382.05	0.00	0.00
25.00		602.64	1357.06	0.00	0.00
30.00		612.36	1332.08	0.00	0.00
35.00		618.24	1307.10	0.00	0.00
40.00		621.14	1282.11	0.00	0.00
45.00		621.65	1257.13	0.00	0.00
45.25		30.72	62.20	0.00	0.00
50.00		598.14	1993.44	0.00	0.00
51.25		155.90	517.63	0.00	0.00
55.00		468.80	810.58	0.00	0.00
60.00		622.59	1062.03	0.00	0.00
65.00		616.86	1040.62	0.00	0.00
70.00		609.99	1019.20	0.00	0.00
75.00		602.11	997.79	0.00	0.00
80.00		593.31	976.37	0.00	0.00
85.00		583.67	954.96	0.00	0.00
90.00		573.27	933.54	0.00	0.00
91.75		197.32	321.68	0.00	0.00
95.00		368.29	886.11	0.00	0.00
96.50		168.01	403.89	0.00	0.00
100.00		388.74	474.90	0.00	0.00
105.00		545.73	666.29	0.00	0.00
107.00	(35) attachments	4876.96	2432.27	0.00	0.00
110.00		317.55	347.59	0.00	0.00
115.00		519.51	567.90	0.00	0.00
116.00	(4) attachments	1904.82	1521.27	0.00	0.00
120.00	(7) attachments	2824.62	1274.29	0.00	1526.80
125.00		491.27	502.08	0.00	0.00
130.00		476.48	487.81	0.00	0.00
133.00		278.16	285.83	0.00	0.00
135.00		185.46	325.67	0.00	0.00
136.75		160.21	281.22	0.00	0.00
137.00	(29) attachments	4922.16	2375.70	0.00	0.00
140.00		269.97	243.79	0.00	0.00
145.00		437.84	394.89	0.00	0.00
146.00	(30) attachments	5256.01	2230.78	0.00	0.00
150.00		335.67	289.91	0.00	0.00
151.00	(3) attachments	691.90	161.77	518.93	0.00
155.00		322.33	277.91	0.00	0.00
158.00	(31) attachments	6900.67	2353.94	0.00	0.00
	Totals:	**43,692.42**	**41,546.91**	**518.93**	**1,526.80**

Copyright © 2019 by Tower Engineering Solutions, LLC. All rights reserved.

Linear Appurtenance Segment Forces (Factored)

Structure:	CT01080-S-SBA	**Code:**	EIA/TIA-222-G	7/9/2019	
Site Name:	Long Hill #1	**Exposure:**	C		
Height:	158.00 (ft)	**Crest Height:**	0.00		
Base Elev:	0.000 (ft)	**Site Class:**	D - Stiff Soil		
Gh:	1.1 **Topography:** 1	**Struct Class:**	II	Page: 19	

Load Case: 0.9D + 1.6W 101 mph Wind

Dead Load Factor 0.90

Wind Load Factor 1.60

Iterations 25

Top Elev (ft)	Description	Wind Exposed	Length (ft)	Ca	Exposed Width (in)	Area (sqft)	CaAa (sqft)	Ra	Cf Adjust Factor	qz (psf)	F X (lb)	Dead Load (lb)
5.00	1 5/8" Hybrid	Yes	2.00	0.000	0.00	0.00	0.00	0.000	0.000	21.088	0.00	3.96
10.00	1 5/8" Hybrid	Yes	5.00	0.000	0.00	0.00	0.00	0.000	0.000	21.088	0.00	9.90
15.00	1 5/8" Hybrid	Yes	5.00	0.000	0.00	0.00	0.00	0.000	0.000	21.088	0.00	9.90
20.00	1 5/8" Hybrid	Yes	5.00	0.000	0.00	0.00	0.00	0.000	0.000	22.375	0.00	9.90
25.00	1 5/8" Hybrid	Yes	5.00	0.000	0.00	0.00	0.00	0.000	0.000	23.451	0.00	9.90
30.00	1 5/8" Hybrid	Yes	5.00	0.000	0.00	0.00	0.00	0.000	0.000	24.369	0.00	9.90
35.00	1 5/8" Hybrid	Yes	5.00	0.000	0.00	0.00	0.00	0.000	0.000	25.172	0.00	9.90
40.00	1 5/8" Hybrid	Yes	5.00	0.000	0.00	0.00	0.00	0.000	0.000	25.890	0.00	9.90
45.00	1 5/8" Hybrid	Yes	5.00	0.000	0.00	0.00	0.00	0.000	0.000	26.540	0.00	9.90
45.25	1 5/8" Hybrid	Yes	0.25	0.000	0.00	0.00	0.00	0.000	0.000	26.571	0.00	0.50
50.00	1 5/8" Hybrid	Yes	4.75	0.000	0.00	0.00	0.00	0.000	0.000	27.135	0.00	9.41
51.25	1 5/8" Hybrid	Yes	1.25	0.000	0.00	0.00	0.00	0.000	0.000	27.277	0.00	2.48
55.00	1 5/8" Hybrid	Yes	3.75	0.000	0.00	0.00	0.00	0.000	0.000	27.685	0.00	7.43
60.00	1 5/8" Hybrid	Yes	5.00	0.000	0.00	0.00	0.00	0.000	0.000	28.197	0.00	9.90
65.00	1 5/8" Hybrid	Yes	5.00	0.000	0.00	0.00	0.00	0.000	0.000	28.676	0.00	9.90
70.00	1 5/8" Hybrid	Yes	5.00	0.000	0.00	0.00	0.00	0.000	0.000	29.127	0.00	9.90
75.00	1 5/8" Hybrid	Yes	5.00	0.000	0.00	0.00	0.00	0.000	0.000	29.553	0.00	9.90
80.00	1 5/8" Hybrid	Yes	5.00	0.000	0.00	0.00	0.00	0.000	0.000	29.958	0.00	9.90
85.00	1 5/8" Hybrid	Yes	5.00	0.000	0.00	0.00	0.00	0.000	0.000	30.342	0.00	9.90
90.00	1 5/8" Hybrid	Yes	5.00	0.000	0.00	0.00	0.00	0.000	0.000	30.710	0.00	9.90
91.75	1 5/8" Hybrid	Yes	1.75	0.000	0.00	0.00	0.00	0.000	0.000	30.834	0.00	3.47
95.00	1 5/8" Hybrid	Yes	3.25	0.000	0.00	0.00	0.00	0.000	0.000	31.061	0.00	6.44
96.50	1 5/8" Hybrid	Yes	1.50	0.000	0.00	0.00	0.00	0.000	0.000	31.164	0.00	2.97
100.00	1 5/8" Hybrid	Yes	3.50	0.000	0.00	0.00	0.00	0.000	0.000	31.399	0.00	6.93
105.00	1 5/8" Hybrid	Yes	5.00	0.000	0.00	0.00	0.00	0.000	0.000	31.723	0.00	9.90
107.00	1 5/8" Hybrid	Yes	2.00	0.000	0.00	0.00	0.00	0.000	0.000	31.849	0.00	3.96
110.00	1 5/8" Hybrid	Yes	3.00	0.000	0.00	0.00	0.00	0.000	0.000	32.035	0.00	5.94
115.00	1 5/8" Hybrid	Yes	5.00	0.000	0.00	0.00	0.00	0.000	0.000	32.336	0.00	9.90
116.00	1 5/8" Hybrid	Yes	1.00	0.000	0.00	0.00	0.00	0.000	0.000	32.395	0.00	1.98
120.00	1 5/8" Hybrid	Yes	4.00	0.000	0.00	0.00	0.00	0.000	0.000	32.627	0.00	7.92
125.00	1 5/8" Hybrid	Yes	5.00	0.000	0.00	0.00	0.00	0.000	0.000	32.909	0.00	9.90
130.00	1 5/8" Hybrid	Yes	5.00	0.000	0.00	0.00	0.00	0.000	0.000	33.182	0.00	9.90
133.00	1 5/8" Hybrid	Yes	3.00	0.000	0.00	0.00	0.00	0.000	0.000	33.341	0.00	5.94
135.00	1 5/8" Hybrid	Yes	2.00	0.000	0.00	0.00	0.00	0.000	0.000	33.446	0.00	3.96
136.75	1 5/8" Hybrid	Yes	1.75	0.000	0.00	0.00	0.00	0.000	0.000	33.537	0.00	3.47
137.00	1 5/8" Hybrid	Yes	0.25	0.000	0.00	0.00	0.00	0.000	0.000	33.550	0.00	0.50
140.00	1 5/8" Hybrid	Yes	3.00	0.000	0.00	0.00	0.00	0.000	0.000	33.703	0.00	5.94
145.00	1 5/8" Hybrid	Yes	5.00	0.000	0.00	0.00	0.00	0.000	0.000	33.953	0.00	9.90
146.00	1 5/8" Hybrid	Yes	1.00	0.000	0.00	0.00	0.00	0.000	0.000	34.002	0.00	1.98
150.00	1 5/8" Hybrid	Yes	4.00	0.000	0.00	0.00	0.00	0.000	0.000	34.196	0.00	7.92
151.00	1 5/8" Hybrid	Yes	1.00	0.000	0.00	0.00	0.00	0.000	0.000	34.244	0.00	1.98
155.00	1 5/8" Hybrid	Yes	4.00	0.000	0.00	0.00	0.00	0.000	0.000	34.433	0.00	7.92
158.00	1 5/8" Hybrid	Yes	3.00	0.000	0.00	0.00	0.00	0.000	0.000	34.573	0.00	5.94
										Totals:	**0.0**	**306.9**

Copyright © 2019 by Tower Engineering Solutions, LLC. All rights reserved.

Calculated Forces

Structure:	CT01080-S-SBA		**Code:**	EIA/TIA-222-G	7/9/2019
Site Name:	Long Hill #1		**Exposure:**	C	
Height:	158.00 (ft)		**Crest Height:**	0.00	
Base Elev:	0.000 (ft)		**Site Class:**	D - Stiff Soil	
Gh:	1.1	**Topography:** 1	**Struct Class:**	II	Page: 20

Tower Engineering Solutions

Load Case: 0.9D + 1.6W 101 mph Wind

Dead Load Factor 0.90

Wind Load Factor 1.60

Iterations 25

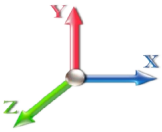

Seg Elev (ft)	Pu FY (-) (kips)	Vu FX (-) (kips)	Tu MY (-) (ft-kips)	Mu MZ (ft-kips)	Mu MX (ft-kips)	Resultant Moment (ft-kips)	phi Pn (kips)	phi Vn (kips)	phi Tn (ft-kips)	phi Mn (ft-kips)	Total Deflect (in)	Rotation Sway (deg)	Rotation Twist (deg)	Stress Ratio
0.00	-41.47	-43.77	-0.50	-5047.5	-0.01	5047.57	5458.79	2729.40	13000.6	6509.99	0.00	0.000	0.000	0.783
5.00	-40.00	-43.32	-0.50	-4828.7	-0.01	4828.73	5387.61	2693.80	12568.9	6293.83	0.11	-0.206	0.000	0.775
10.00	-38.41	-42.88	-0.50	-4612.1	-0.01	4612.12	5314.79	2657.39	12140.4	6079.27	0.44	-0.415	0.000	0.766
15.00	-36.85	-42.44	-0.50	-4397.7	-0.01	4397.74	5240.33	2620.17	11715.4	5866.42	0.99	-0.628	0.000	0.757
20.00	-35.32	-41.97	-0.50	-4185.5	-0.01	4185.56	5164.24	2582.12	11294.0	5655.41	1.76	-0.844	0.000	0.747
25.00	-33.81	-41.47	-0.50	-3975.7	-0.01	3975.73	5086.52	2543.26	10876.5	5446.36	2.76	-1.063	0.000	0.737
30.00	-32.33	-40.96	-0.50	-3768.3	-0.01	3768.38	5007.16	2503.58	10463.2	5239.39	4.00	-1.285	0.000	0.726
35.00	-30.88	-40.43	-0.50	-3563.5	-0.01	3563.59	4926.16	2463.08	10054.2	5034.61	5.46	-1.511	0.000	0.714
40.00	-29.45	-39.89	-0.50	-3361.4	-0.01	3361.43	4843.52	2421.76	9649.95	4832.15	7.17	-1.739	0.000	0.702
45.00	-28.14	-39.29	-0.50	-3161.9	-0.01	3161.98	4759.26	2379.63	9250.49	4632.12	9.11	-1.970	0.000	0.689
45.25	-27.99	-39.31	-0.50	-3152.1	-0.01	3152.15	4755.00	2377.50	9230.65	4622.19	9.22	-1.982	0.000	0.688
50.00	-25.93	-38.71	-0.50	-2965.4	-0.01	2965.41	4673.35	2336.67	8856.13	4434.65	11.30	-2.205	0.000	0.675
51.25	-25.34	-38.59	-0.50	-2917.0	-0.01	2917.03	3853.76	1926.88	7395.56	3703.28	11.89	-2.265	0.000	0.795
55.00	-24.40	-38.18	-0.50	-2772.3	-0.01	2772.34	3804.98	1902.49	7163.10	3586.87	13.74	-2.444	0.000	0.780
60.00	-23.19	-37.62	-0.50	-2581.4	-0.02	2581.45	3738.51	1869.25	6856.06	3433.13	16.44	-2.707	0.000	0.759
65.00	-22.01	-37.05	-0.50	-2393.3	-0.02	2393.37	3670.40	1835.20	6552.57	3281.16	19.42	-2.972	0.000	0.736
70.00	-20.86	-36.48	-0.50	-2208.1	-0.02	2208.13	3600.66	1800.33	6252.87	3131.08	22.67	-3.236	0.000	0.711
75.00	-19.73	-35.91	-0.51	-2025.7	-0.02	2025.72	3529.28	1764.64	5957.19	2983.02	26.20	-3.501	-0.001	0.685
80.00	-18.64	-35.35	-0.51	-1846.1	-0.02	1846.15	3456.27	1728.13	5665.78	2837.10	30.01	-3.764	-0.001	0.657
85.00	-17.57	-34.78	-0.51	-1669.4	-0.02	1669.42	3381.62	1690.81	5378.88	2693.44	34.09	-4.025	-0.001	0.625
90.00	-16.57	-34.19	-0.51	-1495.5	-0.02	1495.54	3305.34	1652.67	5096.71	2552.14	38.44	-4.282	-0.001	0.591
91.75	-16.19	-34.00	-0.51	-1435.7	-0.03	1435.71	3278.25	1639.13	4999.12	2503.28	40.03	-4.373	-0.001	0.579
95.00	-15.27	-33.60	-0.51	-1325.2	-0.03	1325.20	3221.38	1610.69	4810.51	2408.83	43.06	-4.538	-0.001	0.555
96.50	-14.80	-33.43	-0.51	-1274.8	-0.03	1274.80	1897.75	948.88	2865.01	1434.63	44.50	-4.614	-0.001	0.898
100.00	-14.22	-33.07	-0.51	-1157.7	-0.03	1157.78	1872.71	936.35	2763.41	1383.76	47.94	-4.786	-0.001	0.846
105.00	-13.47	-32.52	-0.51	-992.44	-0.03	992.44	1835.54	917.77	2619.24	1311.57	53.13	-5.116	-0.001	0.765
107.00	-11.41	-27.48	-0.51	-927.40	-0.03	927.40	1820.21	910.11	2561.95	1282.88	55.30	-5.246	-0.001	0.730
110.00	-10.98	-27.18	-0.51	-844.97	-0.03	844.97	1796.73	898.37	2476.44	1240.06	58.65	-5.434	-0.001	0.688
115.00	-10.39	-26.63	-0.51	-709.09	-0.04	709.09	1756.29	878.14	2335.25	1169.36	64.49	-5.727	-0.002	0.613
116.00	-9.00	-24.61	-0.51	-682.46	-0.04	682.46	1748.00	874.00	2307.22	1155.32	65.70	-5.785	-0.002	0.597
120.00	-7.94	-21.70	-0.51	-582.50	-0.04	582.50	1714.21	857.11	2195.89	1099.58	70.63	-6.002	-0.002	0.535
125.00	-7.40	-21.19	-0.51	-474.00	-0.04	474.00	1670.50	835.25	2058.61	1030.84	77.04	-6.249	-0.002	0.465
130.00	-6.91	-20.68	-0.51	-368.06	-0.05	368.06	1625.15	812.57	1923.65	963.25	83.70	-6.470	-0.002	0.387
133.00	-6.63	-20.38	-0.51	-306.01	-0.05	306.01	1597.15	798.58	1843.89	923.31	87.80	-6.590	-0.002	0.336
135.00	-6.30	-20.17	-0.51	-265.25	-0.05	265.25	1578.16	789.08	1791.25	896.95	90.57	-6.663	-0.003	0.300
136.75	-6.03	-19.98	-0.51	-229.95	-0.05	229.95	1475.57	737.78	1680.22	841.36	93.02	-6.721	-0.003	0.278
137.00	-4.23	-14.82	-0.51	-224.96	-0.05	224.96	1473.30	736.65	1674.05	838.27	93.37	-6.729	-0.003	0.272
140.00	-4.00	-14.53	-0.52	-180.50	-0.05	180.50	1445.77	722.89	1600.57	801.47	97.61	-6.810	-0.003	0.228
145.00	-3.65	-14.05	-0.52	-107.87	-0.06	107.87	1398.74	699.37	1480.44	741.32	104.79	-6.915	-0.003	0.149
146.00	-2.06	-8.56	-0.52	-93.82	-0.06	93.82	1389.16	694.58	1456.78	729.47	106.24	-6.931	-0.003	0.130
150.00	-1.81	-8.20	-0.52	-59.57	-0.06	59.57	1340.27	670.14	1353.35	677.68	112.05	-6.983	-0.004	0.089
151.00	-1.73	-7.49	0.00	-51.37	0.00	51.37	1327.48	663.74	1327.52	664.75	113.51	-6.994	-0.004	0.079
155.00	-1.49	-7.14	0.00	-21.41	0.00	21.41	1276.33	638.17	1226.69	614.25	119.37	-7.022	-0.004	0.036
158.00	0.00	-6.90	0.00	0.00	0.00	0.00	1237.97	618.99	1153.67	577.69	123.78	-7.029	-0.004	0.000

Copyright © 2019 by Tower Engineering Solutions, LLC. All rights reserved.

Wind Loading - Shaft

Structure:	CT01080-S-SBA		**Code:**	EIA/TIA-222-G	7/9/2019
Site Name:	Long Hill #1		**Exposure:**	C	
Height:	158.00 (ft)		**Crest Height:**	0.00	
Base Elev:	0.000 (ft)		**Site Class:**	D - Stiff Soil	
Gh:	1.1	**Topography:** 1	**Struct Class:**	II	Page: 21

Tower Engineering Solutions

Load Case: 1.2D + 1.0Di + 1.0Wi 50 mph Wind

Dead Load Factor 1.20

Wind Load Factor 1.00

Iterations 24

Elev (ft)	Description	Kzt	Kz	qz (psf)	qzGh (psf)	C (mph-ft)	Cf	Ice Thick (in)	Tributary (ft)	Aa (sf)	CfAa (sf)	Wind Force X (lb)	Dead Load Ice (lb)	Tot Dead Load (lb)
0.00		1.00	0.85	5.168	5.68	0.00	1.200	0.000	0.00	0.000	0.00	0.0	0.0	0.0
5.00		1.00	0.85	5.168	5.68	0.00	1.200	1.242	5.00	25.487	30.58	173.9	454.8	2080.8
10.00		1.00	0.85	5.168	5.68	0.00	1.200	1.331	5.00	25.064	30.08	171.0	478.3	2071.1
15.00		1.00	0.85	5.168	5.68	0.00	1.200	1.386	5.00	24.613	29.54	167.9	488.4	2047.8
20.00		1.00	0.90	5.483	6.03	0.00	1.200	1.427	5.00	24.149	28.98	174.8	492.5	2018.6
25.00		1.00	0.95	5.747	6.32	0.00	1.200	1.459	5.00	23.679	28.41	179.6	493.2	1985.9
30.00		1.00	0.98	5.972	6.57	0.00	1.200	1.486	5.00	23.204	27.84	182.9	491.5	1951.0
35.00		1.00	1.01	6.169	6.79	0.00	1.200	1.509	5.00	22.726	27.27	185.1	488.3	1914.4
40.00		1.00	1.04	6.345	6.98	0.00	1.200	1.529	5.00	22.246	26.70	186.3	483.8	1876.6
45.00		1.00	1.07	6.504	7.15	0.00	1.200	1.547	5.00	21.764	26.12	186.9	478.3	1837.8
45.25	Bot - Section 2	1.00	1.07	6.512	7.16	0.00	1.200	1.548	0.25	1.075	1.29	9.2	23.9	91.0
50.00		1.00	1.09	6.650	7.32	0.00	1.200	1.564	4.75	20.506	24.61	180.0	455.4	2812.5
51.25	Top - Section 1	1.00	1.10	6.685	7.35	0.00	1.200	1.568	1.25	5.323	6.39	47.0	119.4	730.4
55.00		1.00	1.12	6.785	7.46	0.00	1.200	1.579	3.75	15.788	18.95	141.4	354.4	1197.6
60.00		1.00	1.14	6.910	7.60	0.00	1.200	1.592	5.00	20.628	24.75	188.2	465.0	1564.4
65.00		1.00	1.16	7.028	7.73	0.00	1.200	1.605	5.00	20.141	24.17	186.8	457.1	1527.9
70.00		1.00	1.17	7.138	7.85	0.00	1.200	1.617	5.00	19.654	23.58	185.2	448.7	1491.0
75.00		1.00	1.19	7.243	7.97	0.00	1.200	1.628	5.00	19.166	23.00	183.2	439.9	1453.6
80.00		1.00	1.21	7.342	8.08	0.00	1.200	1.639	5.00	18.678	22.41	181.0	430.8	1416.0
85.00		1.00	1.22	7.436	8.18	0.00	1.200	1.649	5.00	18.189	21.83	178.5	421.4	1378.0
90.00		1.00	1.24	7.526	8.28	0.00	1.200	1.658	5.00	17.700	21.24	175.8	411.7	1339.7
91.75	Bot - Section 3	1.00	1.24	7.557	8.31	0.00	1.200	1.662	1.75	6.078	7.29	60.6	142.9	461.0
95.00		1.00	1.25	7.612	8.37	0.00	1.200	1.667	3.25	11.267	13.52	113.2	264.5	1240.2
96.50	Top - Section 2	1.00	1.26	7.637	8.40	0.00	1.200	1.670	1.50	5.130	6.16	51.7	121.2	564.7
100.00		1.00	1.27	7.695	8.46	0.00	1.200	1.676	3.50	11.800	14.16	119.9	277.7	689.3
105.00		1.00	1.28	7.774	8.55	0.00	1.200	1.684	5.00	16.441	19.73	168.7	386.4	958.1
107.00	Appurtenance(s)	1.00	1.28	7.805	8.59	0.00	1.200	1.687	2.00	6.438	7.73	66.3	152.9	376.2
110.00		1.00	1.29	7.851	8.64	0.00	1.200	1.692	3.00	9.511	11.41	98.6	225.5	554.8
115.00		1.00	1.30	7.925	8.72	0.00	1.200	1.699	5.00	15.460	18.55	161.7	365.1	898.7
116.00	Appurtenance(s)	1.00	1.31	7.939	8.73	0.00	1.200	1.701	1.00	3.033	3.64	31.8	72.6	177.0
120.00	Appurtenance(s)	1.00	1.32	7.996	8.80	0.00	1.200	1.707	4.00	11.935	14.32	126.0	283.3	693.5
125.00		1.00	1.33	8.065	8.87	0.00	1.200	1.714	5.00	14.477	17.37	154.1	343.0	838.6
130.00		1.00	1.34	8.132	8.95	0.00	1.200	1.720	5.00	13.986	16.78	150.1	331.8	808.4
133.00	Bot - Section 4	1.00	1.34	8.171	8.99	0.00	1.200	1.724	3.00	8.155	9.79	88.0	195.0	471.8
135.00		1.00	1.35	8.197	9.02	0.00	1.200	1.727	2.00	5.423	6.51	58.7	130.3	495.0
136.75	Top - Section 3	1.00	1.35	8.219	9.04	0.00	1.200	1.729	1.75	4.680	5.62	50.8	112.6	426.7
137.00	Appurtenance(s)	1.00	1.35	8.222	9.04	0.00	1.200	1.729	0.25	0.664	0.80	7.2	16.1	38.5
140.00		1.00	1.36	8.260	9.09	0.00	1.200	1.733	3.00	7.869	9.44	85.8	188.6	454.3
145.00		1.00	1.37	8.321	9.15	0.00	1.200	1.739	5.00	12.722	15.27	139.7	302.7	730.2
146.00	Appurtenance(s)	1.00	1.37	8.333	9.17	0.00	1.200	1.741	1.00	2.485	2.98	27.3	60.1	143.3
150.00		1.00	1.38	8.381	9.22	0.00	1.200	1.745	4.00	9.744	11.69	107.8	232.7	558.0
151.00	Appurtenance(s)	1.00	1.38	8.392	9.23	0.00	1.200	1.746	1.00	2.386	2.86	26.4	57.7	137.1
155.00		1.00	1.39	8.439	9.28	0.00	1.200	1.751	4.00	9.350	11.22	104.1	223.2	533.3
158.00	Appurtenance(s)	1.00	1.39	8.473	9.32	0.00	1.200	1.754	3.00	6.805	8.17	76.1	163.1	387.7
								Totals:	**158.00**			**5,339.5**		**45,422.7**

Copyright © 2019 by Tower Engineering Solutions, LLC. All rights reserved.

Discrete Appurtenance Forces

Structure:	CT01080-S-SBA		**Code:**	EIA/TIA-222-G	7/9/2019
Site Name:	Long Hill #1		**Exposure:**	C	
Height:	158.00 (ft)		**Crest Height:**	0.00	
Base Elev:	0.000 (ft)		**Site Class:**	D - Stiff Soil	
Gh:	1.1	**Topography:** 1	**Struct Class:**	II	Page: 22

Tower Engineering Solutions

Load Case: 1.2D + 1.0Di + 1.0Wi 50 mph Wind

Dead Load Factor 1.20

Wind Load Factor 1.00

Iterations 24

No.	Elev (ft)	Description	Qty	qz (psf)	qzGh (psf)	Orient Factor x Ka	Ka	Total CaAa (sf)	Dead Load (lb)	Horiz Ecc (ft)	Vert Ecc (ft)	Wind FX (lb)	Mom Y (lb-ft)	Mom Z (lb-ft)
1	158.00	Alcatel RRH2X60-700	3	8.473	9.320	0.54	0.80	6.90	418.93	0.000	0.000	64.34	0.00	0.00
2	158.00	Commscope	6	8.473	9.320	0.66	0.80	37.25	1579.45	0.000	0.000	347.20	0.00	0.00
3	158.00	Amphenol	2	8.473	9.320	0.75	0.80	18.78	440.69	0.000	0.000	175.06	0.00	0.00
4	158.00	RFS APL866513-42T0 w/	4	8.473	9.320	0.76	0.80	25.12	1602.59	0.000	0.000	234.11	0.00	0.00
5	158.00	Alcatel RRH2X60-AWS	3	8.473	9.320	0.54	0.80	6.90	418.93	0.000	0.000	64.34	0.00	0.00
6	158.00	6' Lightning rod	1	8.473	9.320	1.00	1.00	1.47	38.99	0.000	0.000	13.73	0.00	0.00
7	158.00	Alcatel RRH2X60-PCS	3	8.473	9.320	0.54	0.80	4.34	363.99	0.000	0.000	40.44	0.00	0.00
8	158.00	RFS FD9R6004/2CL-3CL	6	8.473	9.320	0.48	0.80	2.00	54.05	0.000	0.000	18.62	0.00	0.00
9	158.00	RFS DB-T1-6C-8AB-0Z	2	8.473	9.320	0.48	0.80	5.51	581.71	0.000	0.000	51.39	0.00	0.00
10	158.00	Low Profile Platform	1	8.473	9.320	1.00	1.00	46.05	2192.58	0.000	0.000	429.21	0.00	0.00
11	151.00	Pipe Mount	1	8.392	9.232	1.00	1.00	8.60	105.33	0.000	0.000	79.42	0.00	0.00
12	151.00	Andrew VHLP2.5	1	8.392	9.232	0.80	0.80	8.11	180.53	2.043	0.000	74.87	152.94	0.00
13	151.00	ODU	1	8.392	9.232	0.60	1.00	1.22	36.96	0.000	0.000	11.31	0.00	0.00
14	146.00	RFS APXVTM14-C-120 w/	3	8.333	9.166	0.62	0.80	13.95	800.07	0.000	0.000	127.84	0.00	0.00
15	146.00	Alcatel TD-RRH8x20-25	3	8.333	9.166	0.54	0.80	7.82	582.31	0.000	0.000	71.65	0.00	0.00
16	146.00	Alcatel 1900MHz RRH	3	8.333	9.166	0.54	0.80	5.22	391.41	0.000	0.000	47.88	0.00	0.00
17	146.00	Alcatel 800 MHz RRH	3	8.333	9.166	0.54	0.80	4.99	348.78	0.000	0.000	45.78	0.00	0.00
18	146.00	Alcatel 800MHz Filters	3	8.333	9.166	0.48	0.80	1.76	69.47	0.000	0.000	16.16	0.00	0.00
19	146.00	RFS ACU-A20-N RET	4	8.333	9.166	0.48	0.80	0.72	16.74	0.000	0.000	6.58	0.00	0.00
20	146.00	GPS	1	8.333	9.166	1.00	1.00	1.71	33.24	0.000	0.000	15.68	0.00	0.00
21	146.00	Kathrein Scala 840 10054	3	8.333	9.166	0.49	0.80	9.16	305.83	0.000	0.000	83.98	0.00	0.00
22	146.00	RRUs	3	8.333	9.166	0.54	0.80	6.76	-157.59	0.000	0.000	62.01	0.00	0.00
23	146.00	Low Profile Platform	1	8.333	9.166	1.00	1.00	45.89	2184.30	0.000	0.000	420.61	0.00	0.00
24	146.00	RFS APXVSPP18-C-A20	3	8.333	9.166	0.66	0.80	25.82	1091.06	0.000	0.000	236.68	0.00	0.00
25	137.00	KRD 9011461-B66A-B2A	3	8.222	9.044	0.65	0.75	14.92	1019.77	0.000	0.000	134.92	0.00	0.00
26	137.00	HRK12 (Handrail Kit)	1	8.222	9.044	1.00	1.00	13.29	883.58	0.000	0.000	120.18	0.00	0.00
27	137.00	KRY 112 489/2	3	8.222	9.044	0.50	0.75	1.12	104.03	0.000	0.000	10.12	0.00	0.00
28	137.00	Low Profile Platform w/	1	8.222	9.044	1.00	1.00	45.75	2177.68	0.000	0.000	413.82	0.00	0.00
29	137.00	Allen Telecom	12	8.222	9.044	0.45	0.75	5.81	236.63	0.000	0.000	52.56	0.00	0.00
30	137.00	Kathrein 782 11056	3	8.222	9.044	0.50	0.75	0.47	77.04	0.000	0.000	4.25	0.00	0.00
31	137.00	APXVAARR24_43-U-NA2	3	8.222	9.044	0.56	0.75	37.33	1701.86	0.000	0.000	337.64	0.00	0.00
32	137.00	4449	3	8.222	9.044	0.50	0.75	3.29	454.42	0.000	0.000	29.75	0.00	0.00
33	120.00	Cambium Network	1	7.996	8.796	1.00	1.00	10.64	186.22	0.000	0.000	93.56	0.00	0.00
34	120.00	SC479-HF1LDF(D00-E574	2	7.999	8.799	0.80	0.80	16.10	253.70	0.000	0.220	141.69	0.00	31.17
35	120.00	SC229-DFLN	1	8.059	8.865	0.80	0.80	11.79	155.47	0.000	4.580	104.53	0.00	478.76
36	120.00	DS428E83I01T - TTA	1	7.996	8.796	0.60	0.80	7.23	398.68	0.000	0.000	63.60	0.00	0.00
37	120.00	Flush Mount	1	7.996	8.796	1.00	1.00	8.41	606.73	0.000	0.000	74.00	0.00	0.00
38	120.00	Pipe Mount	1	7.996	8.796	1.00	1.00	18.53	673.07	0.000	0.000	163.01	0.00	0.00
39	116.00	Kathrein 742 213	3	7.939	8.733	0.62	0.80	11.94	407.10	0.000	0.000	104.27	0.00	0.00
40	116.00	Low Profile Platform	1	7.939	8.733	1.00	1.00	39.21	2775.70	0.000	0.000	342.46	0.00	0.00
41	107.00	Powerwave 7770.00	3	7.805	8.586	0.56	0.80	10.97	515.09	0.000	0.000	94.16	0.00	0.00
42	107.00	KMW	3	7.805	8.586	0.63	0.80	20.33	505.76	0.000	0.000	174.52	0.00	0.00
43	107.00	Powerwave 7020.00	6	7.805	8.586	0.48	0.80	2.12	57.82	0.000	0.000	18.24	0.00	0.00
44	107.00	Ericsson RRUS-32 B2	3	7.805	8.586	0.54	0.80	6.00	494.80	0.000	0.000	51.56	0.00	0.00
45	107.00	CCI HPA-65R-BUU-H6	3	7.805	8.586	0.62	0.80	24.48	1010.01	0.000	0.000	210.15	0.00	0.00
46	107.00	Raycap DC6-48-60-18-8F	1	7.805	8.586	0.54	0.80	1.72	84.31	0.000	0.000	14.78	0.00	0.00
47	107.00	Powerwave	3	7.805	8.586	0.48	0.80	1.50	98.90	0.000	0.000	12.89	0.00	0.00

Copyright © 2019 by Tower Engineering Solutions, LLC. All rights reserved.

Discrete Appurtenance Forces

Structure:	CT01080-S-SBA		**Code:**	EIA/TIA-222-G	7/9/2019
Site Name:	Long Hill #1		**Exposure:**	C	
Height:	158.00 (ft)		**Crest Height:**	0.00	
Base Elev:	0.000 (ft)		**Site Class:**	D - Stiff Soil	
Gh:	1.1	**Topography:** 1	**Struct Class:**	II	Page: 23

Tower Engineering Solutions

48	107.00	Powerwave LGP21903	6	7.805	8.586	0.48	0.80	1.61	69.67	0.000	0.000	13.79	0.00	0.00
49	107.00	Ericsson RRUS 11	3	7.805	8.586	0.54	0.80	5.06	429.71	0.000	0.000	43.46	0.00	0.00
50	107.00	CCI DTMAP7819VG12A	3	7.805	8.586	0.48	0.80	2.33	121.03	0.000	0.000	20.02	0.00	0.00
51	107.00	Low Profile Platform	1	7.805	8.586	0.00	1.00	39.07	2765.43	0.000	0.000	335.49	0.00	0.00
								Totals:	**31,944.54**			**5,918.29**		

Copyright © 2019 by Tower Engineering Solutions, LLC. All rights reserved.

Total Applied Force Summary

Structure:	CT01080-S-SBA		**Code:**	EIA/TIA-222-G	7/9/2019
Site Name:	Long Hill #1		**Exposure:**	C	
Height:	158.00 (ft)		**Crest Height:**	0.00	
Base Elev:	0.000 (ft)		**Site Class:**	D - Stiff Soil	
Gh:	1.1	**Topography:** 1	**Struct Class:**	II	Page: 24

Tower Engineering Solutions

Load Case: 1.2D + 1.0Di + 1.0Wi 50 mph Wind

Dead Load Factor 1.20

Wind Load Factor 1.00

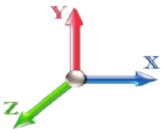

Iterations 24

Elev (ft)	Description	Lateral FX (-) (lb)	Axial FY (-) (lb)	Torsion MY (lb-ft)	Moment MZ (lb-ft)
0.00		0.00	0.00	0.00	0.00
5.00		173.86	2220.28	0.00	0.00
10.00		170.98	2422.57	0.00	0.00
15.00		167.90	2401.08	0.00	0.00
20.00		174.80	2373.20	0.00	0.00
25.00		179.64	2341.62	0.00	0.00
30.00		182.92	2307.59	0.00	0.00
35.00		185.06	2271.80	0.00	0.00
40.00		186.32	2234.68	0.00	0.00
45.00		186.86	2196.50	0.00	0.00
45.25		9.24	108.94	0.00	0.00
50.00		180.01	3153.78	0.00	0.00
51.25		46.97	820.28	0.00	0.00
55.00		141.40	1467.46	0.00	0.00
60.00		188.16	1924.65	0.00	0.00
65.00		186.84	1888.59	0.00	0.00
70.00		185.19	1852.07	0.00	0.00
75.00		183.24	1815.14	0.00	0.00
80.00		181.01	1777.85	0.00	0.00
85.00		178.54	1740.23	0.00	0.00
90.00		175.84	1702.32	0.00	0.00
91.75		60.63	587.90	0.00	0.00
95.00		113.22	1476.05	0.00	0.00
96.50		51.72	673.59	0.00	0.00
100.00		119.86	943.53	0.00	0.00
105.00		168.72	1321.64	0.00	0.00
107.00	(35) attachments	1055.40	6674.22	0.00	0.00
110.00		98.56	717.23	0.00	0.00
115.00		161.72	1169.67	0.00	0.00
116.00	(4) attachments	478.51	3414.02	0.00	0.00
120.00	(7) attachments	766.37	3154.37	0.00	509.94
125.00		154.12	1060.41	0.00	0.00
130.00		150.13	1030.38	0.00	0.00
133.00		87.96	605.08	0.00	0.00
135.00		58.67	583.92	0.00	0.00
136.75		50.78	504.56	0.00	0.00
137.00	(29) attachments	1110.44	6704.63	0.00	0.00
140.00		85.79	542.82	0.00	0.00
145.00		139.73	878.06	0.00	0.00
146.00	(30) attachments	1162.17	5838.48	0.00	0.00
150.00		107.79	658.54	0.00	0.00
151.00	(3) attachments	192.03	485.08	152.94	0.00
155.00		104.15	633.21	0.00	0.00
158.00	(31) attachments	1514.55	8154.60	0.00	0.00
	Totals:	**11,257.78**	**86,832.58**	**152.94**	**509.94**

Copyright © 2019 by Tower Engineering Solutions, LLC. All rights reserved.

Linear Appurtenance Segment Forces (Factored)

Structure:	CT01080-S-SBA	**Code:**	EIA/TIA-222-G	7/9/2019	
Site Name:	Long Hill #1	**Exposure:**	C		
Height:	158.00 (ft)	**Crest Height:**	0.00		
Base Elev:	0.000 (ft)	**Site Class:**	D - Stiff Soil		
Gh:	1.1 **Topography:** 1	**Struct Class:**	II	Page: 25	

Load Case: 1.2D + 1.0Di + 1.0Wi 50 mph Wind

Dead Load Factor 1.20

Wind Load Factor 1.00

Iterations 24

Top Elev (ft)	Description	Wind Exposed	Length (ft)	Ca	Exposed Width (in)	Area (sqft)	CaAa (sqft)	Ra	Cf Adjust Factor	qz (psf)	F X (lb)	Dead Load (lb)
5.00	1 5/8" Hybrid	Yes	2.00	0.000	0.00	0.00	0.00	0.000	0.000	5.168	0.00	18.11
10.00	1 5/8" Hybrid	Yes	5.00	0.000	0.00	0.00	0.00	0.000	0.000	5.168	0.00	48.07
15.00	1 5/8" Hybrid	Yes	5.00	0.000	0.00	0.00	0.00	0.000	0.000	5.168	0.00	49.84
20.00	1 5/8" Hybrid	Yes	5.00	0.000	0.00	0.00	0.00	0.000	0.000	5.483	0.00	51.17
25.00	1 5/8" Hybrid	Yes	5.00	0.000	0.00	0.00	0.00	0.000	0.000	5.747	0.00	52.23
30.00	1 5/8" Hybrid	Yes	5.00	0.000	0.00	0.00	0.00	0.000	0.000	5.972	0.00	53.14
35.00	1 5/8" Hybrid	Yes	5.00	0.000	0.00	0.00	0.00	0.000	0.000	6.169	0.00	53.92
40.00	1 5/8" Hybrid	Yes	5.00	0.000	0.00	0.00	0.00	0.000	0.000	6.345	0.00	54.61
45.00	1 5/8" Hybrid	Yes	5.00	0.000	0.00	0.00	0.00	0.000	0.000	6.504	0.00	55.23
45.25	1 5/8" Hybrid	Yes	0.25	0.000	0.00	0.00	0.00	0.000	0.000	6.512	0.00	2.76
50.00	1 5/8" Hybrid	Yes	4.75	0.000	0.00	0.00	0.00	0.000	0.000	6.650	0.00	53.01
51.25	1 5/8" Hybrid	Yes	1.25	0.000	0.00	0.00	0.00	0.000	0.000	6.685	0.00	13.98
55.00	1 5/8" Hybrid	Yes	3.75	0.000	0.00	0.00	0.00	0.000	0.000	6.785	0.00	42.24
60.00	1 5/8" Hybrid	Yes	5.00	0.000	0.00	0.00	0.00	0.000	0.000	6.910	0.00	56.80
65.00	1 5/8" Hybrid	Yes	5.00	0.000	0.00	0.00	0.00	0.000	0.000	7.028	0.00	57.25
70.00	1 5/8" Hybrid	Yes	5.00	0.000	0.00	0.00	0.00	0.000	0.000	7.138	0.00	57.67
75.00	1 5/8" Hybrid	Yes	5.00	0.000	0.00	0.00	0.00	0.000	0.000	7.243	0.00	58.07
80.00	1 5/8" Hybrid	Yes	5.00	0.000	0.00	0.00	0.00	0.000	0.000	7.342	0.00	58.44
85.00	1 5/8" Hybrid	Yes	5.00	0.000	0.00	0.00	0.00	0.000	0.000	7.436	0.00	58.79
90.00	1 5/8" Hybrid	Yes	5.00	0.000	0.00	0.00	0.00	0.000	0.000	7.526	0.00	59.13
91.75	1 5/8" Hybrid	Yes	1.75	0.000	0.00	0.00	0.00	0.000	0.000	7.557	0.00	20.74
95.00	1 5/8" Hybrid	Yes	3.25	0.000	0.00	0.00	0.00	0.000	0.000	7.612	0.00	38.65
96.50	1 5/8" Hybrid	Yes	1.50	0.000	0.00	0.00	0.00	0.000	0.000	7.637	0.00	17.86
100.00	1 5/8" Hybrid	Yes	3.50	0.000	0.00	0.00	0.00	0.000	0.000	7.695	0.00	41.83
105.00	1 5/8" Hybrid	Yes	5.00	0.000	0.00	0.00	0.00	0.000	0.000	7.774	0.00	60.06
107.00	1 5/8" Hybrid	Yes	2.00	0.000	0.00	0.00	0.00	0.000	0.000	7.805	0.00	24.07
110.00	1 5/8" Hybrid	Yes	3.00	0.000	0.00	0.00	0.00	0.000	0.000	7.851	0.00	36.21
115.00	1 5/8" Hybrid	Yes	5.00	0.000	0.00	0.00	0.00	0.000	0.000	7.925	0.00	60.62
116.00	1 5/8" Hybrid	Yes	1.00	0.000	0.00	0.00	0.00	0.000	0.000	7.939	0.00	12.13
120.00	1 5/8" Hybrid	Yes	4.00	0.000	0.00	0.00	0.00	0.000	0.000	7.996	0.00	48.70
125.00	1 5/8" Hybrid	Yes	5.00	0.000	0.00	0.00	0.00	0.000	0.000	8.065	0.00	61.13
130.00	1 5/8" Hybrid	Yes	5.00	0.000	0.00	0.00	0.00	0.000	0.000	8.132	0.00	61.38
133.00	1 5/8" Hybrid	Yes	3.00	0.000	0.00	0.00	0.00	0.000	0.000	8.171	0.00	36.91
135.00	1 5/8" Hybrid	Yes	2.00	0.000	0.00	0.00	0.00	0.000	0.000	8.197	0.00	24.65
136.75	1 5/8" Hybrid	Yes	1.75	0.000	0.00	0.00	0.00	0.000	0.000	8.219	0.00	21.60
137.00	1 5/8" Hybrid	Yes	0.25	0.000	0.00	0.00	0.00	0.000	0.000	8.222	0.00	3.09
140.00	1 5/8" Hybrid	Yes	3.00	0.000	0.00	0.00	0.00	0.000	0.000	8.260	0.00	37.11
145.00	1 5/8" Hybrid	Yes	5.00	0.000	0.00	0.00	0.00	0.000	0.000	8.321	0.00	62.07
146.00	1 5/8" Hybrid	Yes	1.00	0.000	0.00	0.00	0.00	0.000	0.000	8.333	0.00	12.42
150.00	1 5/8" Hybrid	Yes	4.00	0.000	0.00	0.00	0.00	0.000	0.000	8.381	0.00	49.83
151.00	1 5/8" Hybrid	Yes	1.00	0.000	0.00	0.00	0.00	0.000	0.000	8.392	0.00	12.47
155.00	1 5/8" Hybrid	Yes	4.00	0.000	0.00	0.00	0.00	0.000	0.000	8.439	0.00	50.00
158.00	1 5/8" Hybrid	Yes	3.00	0.000	0.00	0.00	0.00	0.000	0.000	8.473	0.00	37.58
										Totals:	**0.0**	**1,785.6**

Copyright © 2019 by Tower Engineering Solutions, LLC. All rights reserved.

Calculated Forces

Structure:	CT01080-S-SBA	**Code:**	EIA/TIA-222-G	7/9/2019	
Site Name:	Long Hill #1	**Exposure:**	C		
Height:	158.00 (ft)	**Crest Height:**	0.00		
Base Elev:	0.000 (ft)	**Site Class:**	D - Stiff Soil		
Gh:	1.1 **Topography:** 1	**Struct Class:**	II	Page: 26	

Tower Engineering Solutions

Load Case: 1.2D + 1.0Di + 1.0Wi 50 mph Wind

Dead Load Factor 1.20

Wind Load Factor 1.00

Iterations 24

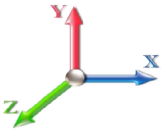

Seg Elev (ft)	Pu FY (-) (kips)	Vu FX (-) (kips)	Tu MY (-) (ft-kips)	Mu MZ (ft-kips)	Mu MX (ft-kips)	Resultant Moment (ft-kips)	phi Pn (kips)	phi Vn (kips)	phi Tn (ft-kips)	phi Mn (ft-kips)	Total Deflect (in)	Rotation Sway (deg)	Rotation Twist (deg)	Stress Ratio
0.00	-86.83	-11.30	-0.15	-1316.7	0.00	1316.79	5458.79	2729.40	13000.6	6509.99	0.00	0.000	0.000	0.218
5.00	-84.60	-11.20	-0.15	-1260.3	0.00	1260.30	5387.61	2693.80	12568.9	6293.83	0.03	-0.054	0.000	0.216
10.00	-82.16	-11.11	-0.15	-1204.2	0.00	1204.28	5314.79	2657.39	12140.4	6079.27	0.11	-0.108	0.000	0.214
15.00	-79.75	-11.01	-0.15	-1148.7	0.00	1148.74	5240.33	2620.17	11715.4	5866.42	0.26	-0.164	0.000	0.211
20.00	-77.37	-10.91	-0.15	-1093.6	0.00	1093.67	5164.24	2582.12	11294.0	5655.41	0.46	-0.220	0.000	0.208
25.00	-75.02	-10.79	-0.15	-1039.1	0.00	1039.14	5086.52	2543.26	10876.5	5446.36	0.72	-0.278	0.000	0.206
30.00	-72.70	-10.67	-0.15	-985.18	0.00	985.18	5007.16	2503.58	10463.2	5239.39	1.04	-0.336	0.000	0.203
35.00	-70.42	-10.55	-0.15	-931.82	0.00	931.82	4926.16	2463.08	10054.2	5034.61	1.43	-0.395	0.000	0.199
40.00	-68.17	-10.41	-0.15	-879.09	0.00	879.09	4843.52	2421.76	9649.95	4832.15	1.87	-0.454	0.000	0.196
45.00	-65.97	-10.24	-0.15	-827.03	0.00	827.03	4759.26	2379.63	9250.49	4632.12	2.38	-0.515	0.000	0.192
45.25	-65.86	-10.27	-0.15	-824.47	0.00	824.47	4755.00	2377.50	9230.65	4622.19	2.41	-0.518	0.000	0.192
50.00	-62.70	-10.10	-0.15	-775.68	0.00	775.68	4673.35	2336.67	8856.13	4434.65	2.95	-0.576	0.000	0.188
51.25	-61.88	-10.08	-0.15	-763.06	0.00	763.06	3853.76	1926.88	7395.56	3703.28	3.11	-0.592	0.000	0.222
55.00	-60.40	-9.98	-0.15	-725.27	0.00	725.27	3804.98	1902.49	7163.10	3586.87	3.59	-0.639	0.000	0.218
60.00	-58.47	-9.84	-0.15	-675.35	0.00	675.35	3738.51	1869.25	6856.06	3433.13	4.30	-0.708	0.000	0.212
65.00	-56.57	-9.70	-0.15	-626.14	0.00	626.14	3670.40	1835.20	6552.57	3281.16	5.07	-0.777	0.000	0.206
70.00	-54.71	-9.55	-0.15	-577.65	0.00	577.65	3600.66	1800.33	6252.87	3131.08	5.93	-0.846	0.000	0.200
75.00	-52.88	-9.41	-0.15	-529.88	0.00	529.88	3529.28	1764.64	5957.19	2983.02	6.85	-0.915	0.000	0.193
80.00	-51.10	-9.26	-0.15	-482.84	0.00	482.84	3456.27	1728.13	5665.78	2837.10	7.84	-0.984	0.000	0.185
85.00	-49.35	-9.11	-0.15	-436.56	0.00	436.56	3381.62	1690.81	5378.88	2693.44	8.91	-1.052	0.000	0.177
90.00	-47.64	-8.94	-0.15	-391.03	0.00	391.03	3305.34	1652.67	5096.71	2552.14	10.05	-1.119	0.000	0.168
91.75	-47.05	-8.89	-0.15	-375.39	0.00	375.39	3278.25	1639.13	4999.12	2503.28	10.47	-1.143	0.000	0.164
95.00	-45.57	-8.77	-0.15	-346.49	0.00	346.49	3221.38	1610.69	4810.51	2408.83	11.26	-1.186	0.000	0.158
96.50	-44.90	-8.73	-0.15	-333.33	0.00	333.33	1897.75	948.88	2865.01	1434.63	11.64	-1.206	0.000	0.256
100.00	-43.95	-8.64	-0.15	-302.77	0.00	302.77	1872.71	936.35	2763.41	1383.76	12.54	-1.251	0.000	0.242
105.00	-42.62	-8.49	-0.15	-259.55	0.00	259.55	1835.54	917.77	2619.24	1311.57	13.89	-1.338	0.000	0.221
107.00	-35.97	-7.30	-0.15	-242.58	0.00	242.58	1820.21	910.11	2561.95	1282.88	14.46	-1.372	0.000	0.209
110.00	-35.25	-7.23	-0.15	-220.67	0.00	220.67	1796.73	898.37	2476.44	1240.06	15.34	-1.421	0.000	0.198
115.00	-34.07	-7.06	-0.15	-184.54	0.00	184.54	1756.29	878.14	2335.25	1169.36	16.87	-1.497	0.000	0.177
116.00	-30.67	-6.51	-0.15	-177.48	0.00	177.48	1748.00	874.00	2307.22	1155.32	17.19	-1.512	0.000	0.171
120.00	-27.53	-5.69	-0.15	-150.93	0.00	150.93	1714.21	857.11	2195.89	1099.58	18.48	-1.569	-0.001	0.153
125.00	-26.47	-5.53	-0.15	-122.48	0.00	122.48	1670.50	835.25	2058.61	1030.84	20.16	-1.633	-0.001	0.135
130.00	-25.44	-5.37	-0.15	-94.80	0.00	94.80	1625.15	812.57	1923.65	963.25	21.90	-1.690	-0.001	0.114
133.00	-24.84	-5.28	-0.15	-78.68	0.00	78.68	1597.15	798.58	1843.89	923.31	22.97	-1.720	-0.001	0.101
135.00	-24.25	-5.21	-0.15	-68.13	0.00	68.13	1578.16	789.08	1791.25	896.95	23.69	-1.739	-0.001	0.091
136.75	-23.75	-5.15	-0.15	-59.01	0.00	59.01	1475.57	737.78	1680.22	841.36	24.33	-1.754	-0.001	0.086
137.00	-17.08	-3.83	-0.15	-57.72	0.00	57.72	1473.30	736.65	1674.05	838.27	24.43	-1.756	-0.001	0.080
140.00	-16.54	-3.74	-0.15	-46.22	0.00	46.22	1445.77	722.89	1600.57	801.47	25.54	-1.777	-0.001	0.069
145.00	-15.66	-3.58	-0.15	-27.52	0.00	27.52	1398.74	699.37	1480.44	741.32	27.41	-1.804	-0.001	0.048
146.00	-9.87	-2.23	-0.15	-23.95	0.00	23.95	1389.16	694.58	1456.78	729.47	27.79	-1.808	-0.001	0.040
150.00	-9.21	-2.10	-0.15	-15.02	0.00	15.02	1340.27	670.14	1353.35	677.68	29.31	-1.821	-0.001	0.029
151.00	-8.73	-1.90	0.00	-12.92	0.00	12.92	1327.48	663.74	1327.52	664.75	29.69	-1.824	-0.001	0.026
155.00	-8.10	-1.77	0.00	-5.32	0.00	5.32	1276.33	638.17	1226.69	614.25	31.22	-1.831	-0.001	0.015
158.00	0.00	-1.51	0.00	0.00	0.00	0.00	1237.97	618.99	1153.67	577.69	32.38	-1.833	-0.001	0.000

Copyright © 2019 by Tower Engineering Solutions, LLC. All rights reserved.

Seismic Segment Forces (Factored)

Structure:	CT01080-S-SBA		**Code:**	EIA/TIA-222-G	7/9/2019
Site Name:	Long Hill #1		**Exposure:**	C	
Height:	158.00 (ft)		**Crest Height:**	0.00	
Base Elev:	0.000 (ft)		**Site Class:**	D - Stiff Soil	
Gh:	1.1	**Topography:** 1	**Struct Class:**	II	Page: 27

Tower Engineering Solutions

Load Case:	1.2D + 1.0E					**Iterations**	22
Gust Response Factor	1.10			**Sds** 0.19		**Ss**	0.18
Dead Load Factor	1.20	**Seismic Load Factor**	1.00	**Sd1** 0.10		**S1**	0.06
Wind Load Factor	0.00	**Structure Frequency (f1)**	0.34	**SA** 0.03	**Seismic Importance Factor**		1.00

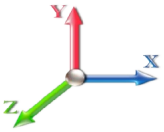

Top Elev (ft)	Description	Wz (lb)	a	b	c	Lateral Fs (lb)	R: 1.50
0.00		0.00	0.00	0.00	0.00	0.00	
5.00		1355.0	0.00	0.03	0.02	24.71	
10.00		1327.2	0.01	0.05	0.03	35.31	
15.00		1299.5	0.02	0.06	0.04	40.06	
20.00		1271.7	0.03	0.07	0.04	42.03	
25.00		1243.9	0.05	0.07	0.04	42.70	
30.00		1216.2	0.07	0.07	0.04	42.85	
35.00		1188.4	0.09	0.07	0.04	42.86	
40.00		1160.7	0.12	0.07	0.03	42.81	
45.00		1132.9	0.15	0.07	0.03	42.59	
45.25	Bot - Section 2	55.92	0.16	0.07	0.03	2.10	
50.00		1964.2	0.19	0.06	0.02	74.50	
51.25	Top - Section 1	509.18	0.20	0.06	0.02	19.30	
55.00		702.74	0.23	0.06	0.02	26.32	
60.00		916.16	0.27	0.05	0.01	32.62	
65.00		892.37	0.32	0.04	0.01	28.26	
70.00		868.58	0.37	0.03	0.01	21.71	
75.00		844.78	0.43	0.01	0.01	12.91	
80.00		820.99	0.48	-0.01	0.01	2.46	
85.00		797.19	0.55	-0.03	0.01	-8.29	
90.00		773.40	0.61	-0.06	0.02	-17.60	
91.75	Bot - Section 3	265.07	0.64	-0.07	0.02	-7.01	
95.00		813.05	0.68	-0.08	0.03	-26.13	
96.50	Top - Section 2	369.60	0.71	-0.09	0.03	-12.63	
100.00		342.95	0.76	-0.10	0.04	-12.80	
105.00		476.45	0.83	-0.12	0.06	-18.04	
107.00	Appurtenance(s)	2596.9	0.87	-0.12	0.08	-95.45	
110.00		274.45	0.92	-0.12	0.09	-9.24	
115.00		444.72	1.00	-0.11	0.13	-11.05	
116.00	Appurtenance(s)	1653.0	1.02	-0.10	0.14	-37.27	
120.00	Appurtenance(s)	1291.8	1.09	-0.08	0.18	-14.84	
125.00		413.00	1.18	-0.01	0.24	2.64	
130.00		397.14	1.28	0.09	0.32	11.43	
133.00	Bot - Section 4	230.67	1.34	0.18	0.37	10.24	
135.00		303.91	1.38	0.25	0.41	16.94	
136.75	Top - Section 3	261.76	1.42	0.31	0.45	17.35	
137.00	Appurtenance(s)	2632.4	1.42	0.32	0.45	178.55	
140.00		221.39	1.48	0.46	0.52	19.34	
145.00		356.30	1.59	0.75	0.66	44.08	
146.00	Appurtenance(s)	2462.1	1.61	0.82	0.69	323.90	
150.00		271.08	1.70	1.14	0.82	44.70	
151.00	Appurtenance(s)	166.98	1.73	1.22	0.86	29.01	
155.00		258.39	1.82	1.63	1.01	54.53	
158.00	Appurtenance(s)	2577.6	1.89	1.98	1.14	621.61	
	Totals:	**39,422.4**				**1,680.1**	**Total Wind:** **43,692.4**

Seismic Base Shear is Less Than 50% of Wind Force - An Analysis is NOT Required

Copyright © 2019 by Tower Engineering Solutions, LLC. All rights reserved.

Calculated Forces

Structure:	CT01080-S-SBA	**Code:**	EIA/TIA-222-G	7/9/2019	
Site Name:	Long Hill #1	**Exposure:**	C		
Height:	158.00 (ft)	**Crest Height:**	0.00		
Base Elev:	0.000 (ft)	**Site Class:**	D - Stiff Soil		
Gh:	1.1	**Topography:** 1	**Struct Class:**	II	Page: 28

Tower Engineering Solutions

Load Case:	1.2D + 1.0E							**Iterations**	22
Gust Response Factor	1.10			**Sds**	0.19			**Ss**	0.18
Dead Load Factor	1.20	**Seismic Load Factor**	1.00	**Sd1**	0.10			**S1**	0.06
Wind Load Factor	0.00	**Structure Frequency (f1)**	0.34	**SA**	0.03	**Seismic Importance Factor**			1.00

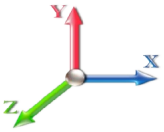

Seg Elev (ft)	Pu FY (-) (kips)	Vu FX (-) (kips)	Tu MY (-) (ft-kips)	Mu MZ (ft-kips)	Mu MX (ft-kips)	Resultant Moment (ft-kips)	phi Pn (kips)	phi Vn (kips)	phi Tn (ft-kips)	phi Mn (ft-kips)	Total Deflect (in)	Rotation Sway (deg)	Rotation Twist (deg)	Stress Ratio
0.00	-55.40	-1.95	0.00	-238.96	0.00	238.96	5458.79	2729.40	13000.6	6509.99		0.00	0.00	0.047
5.00	-53.64	-1.94	0.00	-229.19	0.00	229.19	5387.61	2693.80	12568.9	6293.83		0.01	-0.01	0.046
10.00	-51.73	-1.91	0.00	-219.49	0.00	219.49	5314.79	2657.39	12140.4	6079.27		0.02	-0.02	0.046
15.00	-49.86	-1.88	0.00	-209.93	0.00	209.93	5240.33	2620.17	11715.4	5866.42		0.05	-0.03	0.045
20.00	-48.01	-1.85	0.00	-200.53	0.00	200.53	5164.24	2582.12	11294.0	5655.41		0.08	-0.04	0.045
25.00	-46.20	-1.81	0.00	-191.31	0.00	191.31	5086.52	2543.26	10876.5	5446.36		0.13	-0.05	0.044
30.00	-44.43	-1.77	0.00	-182.26	0.00	182.26	5007.16	2503.58	10463.2	5239.39		0.19	-0.06	0.044
35.00	-42.68	-1.74	0.00	-173.39	0.00	173.39	4926.16	2463.08	10054.2	5034.61		0.26	-0.07	0.043
40.00	-40.97	-1.70	0.00	-164.70	0.00	164.70	4843.52	2421.76	9649.95	4832.15		0.34	-0.08	0.043
45.00	-39.30	-1.66	0.00	-156.20	0.00	156.20	4759.26	2379.63	9250.49	4632.12		0.44	-0.09	0.042
45.25	-39.22	-1.66	0.00	-155.79	0.00	155.79	4755.00	2377.50	9230.65	4622.19		0.44	-0.10	0.042
50.00	-36.56	-1.59	0.00	-147.90	0.00	147.90	4673.35	2336.67	8856.13	4434.65		0.54	-0.11	0.041
51.25	-35.87	-1.57	0.00	-145.91	0.00	145.91	3853.76	1926.88	7395.56	3703.28		0.57	-0.11	0.049
55.00	-34.79	-1.55	0.00	-140.03	0.00	140.03	3804.98	1902.49	7163.10	3586.87		0.66	-0.12	0.048
60.00	-33.37	-1.52	0.00	-132.29	0.00	132.29	3738.51	1869.25	6856.06	3433.13		0.79	-0.13	0.047
65.00	-31.98	-1.50	0.00	-124.69	0.00	124.69	3670.40	1835.20	6552.57	3281.16		0.94	-0.15	0.047
70.00	-30.62	-1.48	0.00	-117.22	0.00	117.22	3600.66	1800.33	6252.87	3131.08		1.10	-0.16	0.046
75.00	-29.29	-1.47	0.00	-109.83	0.00	109.83	3529.28	1764.64	5957.19	2983.02		1.27	-0.17	0.045
80.00	-27.99	-1.47	0.00	-102.48	0.00	102.48	3456.27	1728.13	5665.78	2837.10		1.46	-0.19	0.044
85.00	-26.72	-1.47	0.00	-95.14	0.00	95.14	3381.62	1690.81	5378.88	2693.44		1.67	-0.20	0.043
90.00	-25.47	-1.47	0.00	-87.78	0.00	87.78	3305.34	1652.67	5096.71	2552.14		1.89	-0.22	0.042
91.75	-25.04	-1.47	0.00	-85.20	0.00	85.20	3278.25	1639.13	4999.12	2503.28		1.97	-0.22	0.042
95.00	-23.86	-1.47	0.00	-80.42	0.00	80.42	3221.38	1610.69	4810.51	2408.83		2.12	-0.23	0.041
96.50	-23.32	-1.47	0.00	-78.21	0.00	78.21	1897.75	948.88	2865.01	1434.63		2.20	-0.24	0.067
100.00	-22.69	-1.48	0.00	-73.05	0.00	73.05	1872.71	936.35	2763.41	1383.76		2.37	-0.25	0.065
105.00	-21.80	-1.48	0.00	-65.67	0.00	65.67	1835.54	917.77	2619.24	1311.57		2.65	-0.27	0.062
107.00	-18.56	-1.47	0.00	-62.72	0.00	62.72	1820.21	910.11	2561.95	1282.88		2.76	-0.28	0.059
110.00	-18.09	-1.47	0.00	-58.32	0.00	58.32	1796.73	898.37	2476.44	1240.06		2.94	-0.29	0.057
115.00	-17.33	-1.47	0.00	-50.98	0.00	50.98	1756.29	878.14	2335.25	1169.36		3.25	-0.31	0.053
116.00	-15.31	-1.46	0.00	-49.51	0.00	49.51	1748.00	874.00	2307.22	1155.32		3.32	-0.32	0.052
120.00	-13.61	-1.45	0.00	-43.67	0.00	43.67	1714.21	857.11	2195.89	1099.58		3.59	-0.33	0.048
125.00	-12.94	-1.45	0.00	-36.39	0.00	36.39	1670.50	835.25	2058.61	1030.84		3.95	-0.35	0.043
130.00	-12.29	-1.44	0.00	-29.13	0.00	29.13	1625.15	812.57	1923.65	963.25		4.33	-0.37	0.038
133.00	-11.90	-1.43	0.00	-24.81	0.00	24.81	1597.15	798.58	1843.89	923.31		4.56	-0.38	0.034
135.00	-11.47	-1.41	0.00	-21.95	0.00	21.95	1578.16	789.08	1791.25	896.95		4.72	-0.38	0.032
136.75	-11.10	-1.39	0.00	-19.48	0.00	19.48	1475.57	737.78	1680.22	841.36		4.86	-0.39	0.031
137.00	-7.93	-1.19	0.00	-19.14	0.00	19.14	1473.30	736.65	1674.05	838.27		4.88	-0.39	0.028
140.00	-7.60	-1.17	0.00	-15.56	0.00	15.56	1445.77	722.89	1600.57	801.47		5.13	-0.40	0.025
145.00	-7.08	-1.12	0.00	-9.71	0.00	9.71	1398.74	699.37	1480.44	741.32		5.55	-0.40	0.018
146.00	-4.11	-0.78	0.00	-8.59	0.00	8.59	1389.16	694.58	1456.78	729.47		5.63	-0.41	0.015
150.00	-3.72	-0.73	0.00	-5.47	0.00	5.47	1340.27	670.14	1353.35	677.68		5.98	-0.41	0.011
151.00	-3.50	-0.70	0.00	-4.74	0.00	4.74	1327.48	663.74	1327.52	664.75		6.06	-0.41	0.010
155.00	-3.13	-0.64	0.00	-1.93	0.00	1.93	1276.33	638.17	1226.69	614.25		6.41	-0.41	0.006
158.00	0.00	-0.62	0.00	0.00	0.00	0.00	1237.97	618.99	1153.67	577.69		6.67	-0.42	0.000

Copyright © 2019 by Tower Engineering Solutions, LLC. All rights reserved.

Seismic Segment Forces (Factored)

Structure:	CT01080-S-SBA		**Code:**	EIA/TIA-222-G	7/9/2019
Site Name:	Long Hill #1		**Exposure:**	C	
Height:	158.00 (ft)		**Crest Height:**	0.00	
Base Elev:	0.000 (ft)		**Site Class:**	D - Stiff Soil	
Gh:	1.1	**Topography:** 1	**Struct Class:**	II	Page: 29

Tower Engineering Solutions

Load Case:	0.9D + 1.0E					**Iterations**	22
Gust Response Factor	1.10			**Sds** 0.19		**Ss**	0.18
Dead Load Factor	0.90	**Seismic Load Factor**	1.00	**Sd1** 0.10		**S1**	0.06
Wind Load Factor	0.00	**Structure Frequency (f1)**	0.34	**SA** 0.03	**Seismic Importance Factor**		1.00

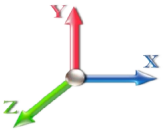

Top Elev (ft)	Description	Wz (lb)	a	b	c	Lateral Fs (lb)	R: 1.50
0.00		0.00	0.00	0.00	0.00	0.00	
5.00		1355.0	0.00	0.03	0.02	24.71	
10.00		1327.2	0.01	0.05	0.03	35.31	
15.00		1299.5	0.02	0.06	0.04	40.06	
20.00		1271.7	0.03	0.07	0.04	42.03	
25.00		1243.9	0.05	0.07	0.04	42.70	
30.00		1216.2	0.07	0.07	0.04	42.85	
35.00		1188.4	0.09	0.07	0.04	42.86	
40.00		1160.7	0.12	0.07	0.03	42.81	
45.00		1132.9	0.15	0.07	0.03	42.59	
45.25	Bot - Section 2	55.92	0.16	0.07	0.03	2.10	
50.00		1964.2	0.19	0.06	0.02	74.50	
51.25	Top - Section 1	509.18	0.20	0.06	0.02	19.30	
55.00		702.74	0.23	0.06	0.02	26.32	
60.00		916.16	0.27	0.05	0.01	32.62	
65.00		892.37	0.32	0.04	0.01	28.26	
70.00		868.58	0.37	0.03	0.01	21.71	
75.00		844.78	0.43	0.01	0.01	12.91	
80.00		820.99	0.48	-0.01	0.01	2.46	
85.00		797.19	0.55	-0.03	0.01	-8.29	
90.00		773.40	0.61	-0.06	0.02	-17.60	
91.75	Bot - Section 3	265.07	0.64	-0.07	0.02	-7.01	
95.00		813.05	0.68	-0.08	0.03	-26.13	
96.50	Top - Section 2	369.60	0.71	-0.09	0.03	-12.63	
100.00		342.95	0.76	-0.10	0.04	-12.80	
105.00		476.45	0.83	-0.12	0.06	-18.04	
107.00	Appurtenance(s)	2596.9	0.87	-0.12	0.08	-95.45	
110.00		274.45	0.92	-0.12	0.09	-9.24	
115.00		444.72	1.00	-0.11	0.13	-11.05	
116.00	Appurtenance(s)	1653.0	1.02	-0.10	0.14	-37.27	
120.00	Appurtenance(s)	1291.8	1.09	-0.08	0.18	-14.84	
125.00		413.00	1.18	-0.01	0.24	2.64	
130.00		397.14	1.28	0.09	0.32	11.43	
133.00	Bot - Section 4	230.67	1.34	0.18	0.37	10.24	
135.00		303.91	1.38	0.25	0.41	16.94	
136.75	Top - Section 3	261.76	1.42	0.31	0.45	17.35	
137.00	Appurtenance(s)	2632.4	1.42	0.32	0.45	178.55	
140.00		221.39	1.48	0.46	0.52	19.34	
145.00		356.30	1.59	0.75	0.66	44.08	
146.00	Appurtenance(s)	2462.1	1.61	0.82	0.69	323.90	
150.00		271.08	1.70	1.14	0.82	44.70	
151.00	Appurtenance(s)	166.98	1.73	1.22	0.86	29.01	
155.00		258.39	1.82	1.63	1.01	54.53	
158.00	Appurtenance(s)	2577.6	1.89	1.98	1.14	621.61	
	Totals:	**39,422.4**				**1,680.1**	**Total Wind:** **43,692.4**

Seismic Base Shear is Less Than 50% of Wind Force - An Analysis is NOT Required

Copyright © 2019 by Tower Engineering Solutions, LLC. All rights reserved.

Calculated Forces

Structure:	CT01080-S-SBA	**Code:**	EIA/TIA-222-G	7/9/2019	
Site Name:	Long Hill #1	**Exposure:**	C		
Height:	158.00 (ft)	**Crest Height:**	0.00		
Base Elev:	0.000 (ft)	**Site Class:**	D - Stiff Soil		
Gh:	1.1	**Topography:** 1	**Struct Class:**	II	Page: 30

Tower Engineering Solutions

Load Case:	0.9D + 1.0E							**Iterations**	22
Gust Response Factor	1.10			**Sds**	0.19			**Ss**	0.18
Dead Load Factor	0.90	**Seismic Load Factor**	1.00	**Sd1**	0.10			**S1**	0.06
Wind Load Factor	0.00	**Structure Frequency (f1)**	0.34	**SA**	0.03	**Seismic Importance Factor**			1.00

Seg Elev (ft)	Pu FY (-) (kips)	Vu FX (-) (kips)	Tu MY (-) (ft-kips)	Mu MZ (ft-kips)	Mu MX (ft-kips)	Resultant Moment (ft-kips)	phi Pn (kips)	phi Vn (kips)	phi Tn (ft-kips)	phi Mn (ft-kips)	Total Deflect (in)	Rotation Sway (deg)	Rotation Twist (deg)	Stress Ratio
0.00	-41.55	-1.95	0.00	-236.23	0.00	236.23	5458.79	2729.40	13000.6	6509.99		0.00	0.00	0.044
5.00	-40.23	-1.94	0.00	-226.47	0.00	226.47	5387.61	2693.80	12568.9	6293.83		0.01	-0.01	0.043
10.00	-38.80	-1.91	0.00	-216.79	0.00	216.79	5314.79	2657.39	12140.4	6079.27		0.02	-0.02	0.043
15.00	-37.39	-1.87	0.00	-207.26	0.00	207.26	5240.33	2620.17	11715.4	5866.42		0.05	-0.03	0.042
20.00	-36.01	-1.84	0.00	-197.90	0.00	197.90	5164.24	2582.12	11294.0	5655.41		0.08	-0.04	0.042
25.00	-34.65	-1.80	0.00	-188.72	0.00	188.72	5086.52	2543.26	10876.5	5446.36		0.13	-0.05	0.041
30.00	-33.32	-1.76	0.00	-179.73	0.00	179.73	5007.16	2503.58	10463.2	5239.39		0.19	-0.06	0.041
35.00	-32.01	-1.72	0.00	-170.93	0.00	170.93	4926.16	2463.08	10054.2	5034.61		0.26	-0.07	0.040
40.00	-30.73	-1.68	0.00	-162.32	0.00	162.32	4843.52	2421.76	9649.95	4832.15		0.34	-0.08	0.040
45.00	-29.47	-1.64	0.00	-153.90	0.00	153.90	4759.26	2379.63	9250.49	4632.12		0.43	-0.09	0.039
45.25	-29.41	-1.64	0.00	-153.49	0.00	153.49	4755.00	2377.50	9230.65	4622.19		0.44	-0.09	0.039
50.00	-27.42	-1.57	0.00	-145.69	0.00	145.69	4673.35	2336.67	8856.13	4434.65		0.53	-0.11	0.039
51.25	-26.90	-1.55	0.00	-143.73	0.00	143.73	3853.76	1926.88	7395.56	3703.28		0.56	-0.11	0.046
55.00	-26.09	-1.53	0.00	-137.91	0.00	137.91	3804.98	1902.49	7163.10	3586.87		0.65	-0.12	0.045
60.00	-25.03	-1.50	0.00	-130.27	0.00	130.27	3738.51	1869.25	6856.06	3433.13		0.78	-0.13	0.045
65.00	-23.99	-1.47	0.00	-122.78	0.00	122.78	3670.40	1835.20	6552.57	3281.16		0.92	-0.14	0.044
70.00	-22.97	-1.45	0.00	-115.41	0.00	115.41	3600.66	1800.33	6252.87	3131.08		1.08	-0.16	0.043
75.00	-21.97	-1.44	0.00	-108.14	0.00	108.14	3529.28	1764.64	5957.19	2983.02		1.25	-0.17	0.042
80.00	-20.99	-1.44	0.00	-100.91	0.00	100.91	3456.27	1728.13	5665.78	2837.10		1.44	-0.19	0.042
85.00	-20.04	-1.45	0.00	-93.69	0.00	93.69	3381.62	1690.81	5378.88	2693.44		1.64	-0.20	0.041
90.00	-19.10	-1.45	0.00	-86.46	0.00	86.46	3305.34	1652.67	5096.71	2552.14		1.86	-0.21	0.040
91.75	-18.78	-1.45	0.00	-83.93	0.00	83.93	3278.25	1639.13	4999.12	2503.28		1.94	-0.22	0.039
95.00	-17.89	-1.45	0.00	-79.23	0.00	79.23	3221.38	1610.69	4810.51	2408.83		2.09	-0.23	0.038
96.50	-17.49	-1.45	0.00	-77.06	0.00	77.06	1897.75	948.88	2865.01	1434.63		2.17	-0.23	0.063
100.00	-17.01	-1.45	0.00	-72.00	0.00	72.00	1872.71	936.35	2763.41	1383.76		2.34	-0.24	0.061
105.00	-16.35	-1.45	0.00	-64.75	0.00	64.75	1835.54	917.77	2619.24	1311.57		2.61	-0.27	0.058
107.00	-13.92	-1.44	0.00	-61.85	0.00	61.85	1820.21	910.11	2561.95	1282.88		2.72	-0.27	0.056
110.00	-13.57	-1.44	0.00	-57.52	0.00	57.52	1796.73	898.37	2476.44	1240.06		2.90	-0.29	0.054
115.00	-13.00	-1.44	0.00	-50.30	0.00	50.30	1756.29	878.14	2335.25	1169.36		3.21	-0.31	0.050
116.00	-11.48	-1.44	0.00	-48.86	0.00	48.86	1748.00	874.00	2307.22	1155.32		3.27	-0.31	0.049
120.00	-10.20	-1.43	0.00	-43.10	0.00	43.10	1714.21	857.11	2195.89	1099.58		3.54	-0.33	0.045
125.00	-9.70	-1.43	0.00	-35.94	0.00	35.94	1670.50	835.25	2058.61	1030.84		3.89	-0.35	0.041
130.00	-9.21	-1.42	0.00	-28.78	0.00	28.78	1625.15	812.57	1923.65	963.25		4.27	-0.36	0.036
133.00	-8.93	-1.41	0.00	-24.52	0.00	24.52	1597.15	798.58	1843.89	923.31		4.50	-0.37	0.032
135.00	-8.60	-1.39	0.00	-21.71	0.00	21.71	1578.16	789.08	1791.25	896.95		4.65	-0.38	0.030
136.75	-8.32	-1.37	0.00	-19.27	0.00	19.27	1475.57	737.78	1680.22	841.36		4.79	-0.38	0.029
137.00	-5.95	-1.18	0.00	-18.93	0.00	18.93	1473.30	736.65	1674.05	838.27		4.81	-0.38	0.027
140.00	-5.70	-1.16	0.00	-15.40	0.00	15.40	1445.77	722.89	1600.57	801.47		5.06	-0.39	0.023
145.00	-5.31	-1.11	0.00	-9.62	0.00	9.62	1398.74	699.37	1480.44	741.32		5.47	-0.40	0.017
146.00	-3.08	-0.77	0.00	-8.50	0.00	8.50	1389.16	694.58	1456.78	729.47		5.56	-0.40	0.014
150.00	-2.79	-0.72	0.00	-5.42	0.00	5.42	1340.27	670.14	1353.35	677.68		5.89	-0.41	0.010
151.00	-2.63	-0.69	0.00	-4.69	0.00	4.69	1327.48	663.74	1327.52	664.75		5.98	-0.41	0.009
155.00	-2.35	-0.64	0.00	-1.92	0.00	1.92	1276.33	638.17	1226.69	614.25		6.32	-0.41	0.005
158.00	0.00	-0.62	0.00	0.00	0.00	0.00	1237.97	618.99	1153.67	577.69		6.58	-0.41	0.000

Copyright © 2019 by Tower Engineering Solutions, LLC. All rights reserved.

Wind Loading - Shaft

Structure:	CT01080-S-SBA		**Code:**	EIA/TIA-222-G	7/9/2019
Site Name:	Long Hill #1		**Exposure:**	C	
Height:	158.00 (ft)		**Crest Height:**	0.00	
Base Elev:	0.000 (ft)		**Site Class:**	D - Stiff Soil	
Gh:	1.1	**Topography:** 1	**Struct Class:**	II	Page: 31

TES Tower Engineering Solutions

Load Case: 1.0D + 1.0W 60 mph Wind

Dead Load Factor 1.00

Wind Load Factor 1.00

Iterations 23

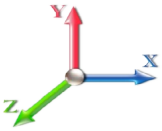

Elev (ft)	Description	Kzt	Kz	qz (psf)	qzGh (psf)	C (mph-ft)	Cf	Ice Thick (in)	Tributary (ft)	Aa (sf)	CfAa (sf)	Wind Force X (lb)	Dead Load Ice (lb)	Tot Dead Load (lb)
0.00		1.00	0.85	7.442	8.19	273.27	0.650	0.000	0.00	0.000	0.00	0.0	0.0	0.0
5.00		1.00	0.85	7.442	8.19	267.77	0.650	0.000	5.00	24.452	15.89	130.1	0.0	1355.0
10.00		1.00	0.85	7.442	8.19	262.27	0.650	0.000	5.00	23.955	15.57	127.5	0.0	1327.3
15.00		1.00	0.85	7.442	8.19	256.77	0.650	0.000	5.00	23.457	15.25	124.8	0.0	1299.5
20.00		1.00	0.90	7.896	8.69	258.83	0.650	0.000	5.00	22.960	14.92	129.6	0.0	1271.7
25.00		1.00	0.95	8.276	9.10	259.18	0.650	0.000	5.00	22.463	14.60	132.9	0.0	1244.0
30.00		1.00	0.98	8.600	9.46	258.29	0.650	0.000	5.00	21.966	14.28	135.1	0.0	1216.2
35.00		1.00	1.01	8.883	9.77	256.50	0.650	0.000	5.00	21.469	13.95	136.4	0.0	1188.5
40.00		1.00	1.04	9.137	10.05	254.04	0.650	0.000	5.00	20.972	13.63	137.0	0.0	1160.7
45.00		1.00	1.07	9.366	10.30	251.04	0.650	0.000	5.00	20.475	13.31	137.1	0.0	1132.9
45.25	Bot - Section 2	1.00	1.07	9.377	10.31	250.88	0.650	0.000	0.25	1.011	0.66	6.8	0.0	55.9
50.00		1.00	1.09	9.576	10.53	247.60	0.650	0.000	4.75	19.268	12.52	131.9	0.0	1964.3
51.25	Top - Section 1	1.00	1.10	9.626	10.59	246.68	0.650	0.000	1.25	4.996	3.25	34.4	0.0	509.2
55.00		1.00	1.12	9.770	10.75	247.82	0.650	0.000	3.75	14.802	9.62	103.4	0.0	702.7
60.00		1.00	1.14	9.951	10.95	243.74	0.650	0.000	5.00	19.301	12.55	137.3	0.0	916.2
65.00		1.00	1.16	10.120	11.13	239.38	0.650	0.000	5.00	18.803	12.22	136.1	0.0	892.4
70.00		1.00	1.17	10.279	11.31	234.80	0.650	0.000	5.00	18.306	11.90	134.5	0.0	868.6
75.00		1.00	1.19	10.430	11.47	230.00	0.650	0.000	5.00	17.809	11.58	132.8	0.0	844.8
80.00		1.00	1.21	10.572	11.63	225.01	0.650	0.000	5.00	17.312	11.25	130.9	0.0	821.0
85.00		1.00	1.22	10.708	11.78	219.85	0.650	0.000	5.00	16.815	10.93	128.7	0.0	797.2
90.00		1.00	1.24	10.838	11.92	214.54	0.650	0.000	5.00	16.318	10.61	126.4	0.0	773.4
91.75	Bot - Section 3	1.00	1.24	10.882	11.97	212.65	0.650	0.000	1.75	5.594	3.64	43.5	0.0	265.1
95.00		1.00	1.25	10.962	12.06	209.09	0.650	0.000	3.25	10.364	6.74	81.2	0.0	813.0
96.50	Top - Section 2	1.00	1.26	10.998	12.10	207.43	0.650	0.000	1.50	4.713	3.06	37.1	0.0	369.6
100.00		1.00	1.27	11.081	12.19	206.37	0.650	0.000	3.50	10.822	7.03	85.7	0.0	343.0
105.00		1.00	1.28	11.195	12.31	200.68	0.650	0.000	5.00	15.038	9.77	120.4	0.0	476.4
107.00	Appurtenance(s)	1.00	1.28	11.240	12.36	198.38	0.650	0.000	2.00	5.876	3.82	47.2	0.0	186.1
110.00		1.00	1.29	11.305	12.44	194.89	0.650	0.000	3.00	8.665	5.63	70.0	0.0	274.4
115.00		1.00	1.30	11.412	12.55	188.99	0.650	0.000	5.00	14.044	9.13	114.6	0.0	444.7
116.00	Appurtenance(s)	1.00	1.31	11.432	12.58	187.80	0.650	0.000	1.00	2.749	1.79	22.5	0.0	87.0
120.00	Appurtenance(s)	1.00	1.32	11.514	12.67	183.00	0.650	0.000	4.00	10.797	7.02	88.9	0.0	341.8
125.00		1.00	1.33	11.614	12.78	176.92	0.650	0.000	5.00	13.049	8.48	108.4	0.0	413.0
130.00		1.00	1.34	11.710	12.88	170.75	0.650	0.000	5.00	12.552	8.16	105.1	0.0	397.1
133.00	Bot - Section 4	1.00	1.34	11.766	12.94	167.01	0.650	0.000	3.00	7.293	4.74	61.4	0.0	230.7
135.00		1.00	1.35	11.803	12.98	164.50	0.650	0.000	2.00	4.847	3.15	40.9	0.0	303.9
136.75	Top - Section 3	1.00	1.35	11.835	13.02	162.30	0.650	0.000	1.75	4.176	2.71	35.3	0.0	261.8
137.00	Appurtenance(s)	1.00	1.35	11.840	13.02	164.93	0.650	0.000	0.25	0.592	0.38	5.0	0.0	18.7
140.00		1.00	1.36	11.894	13.08	161.14	0.650	0.000	3.00	7.002	4.55	59.5	0.0	221.4
145.00		1.00	1.37	11.982	13.18	154.76	0.650	0.000	5.00	11.272	7.33	96.6	0.0	356.3
146.00	Appurtenance(s)	1.00	1.37	12.000	13.20	153.47	0.650	0.000	1.00	2.195	1.43	18.8	0.0	69.4
150.00		1.00	1.38	12.068	13.27	148.31	0.650	0.000	4.00	8.580	5.58	74.0	0.0	271.1
151.00	Appurtenance(s)	1.00	1.38	12.085	13.29	147.01	0.650	0.000	1.00	2.095	1.36	18.1	0.0	66.2
155.00		1.00	1.39	12.152	13.37	141.79	0.650	0.000	4.00	8.183	5.32	71.1	0.0	258.4
158.00	Appurtenance(s)	1.00	1.39	12.201	13.42	137.85	0.650	0.000	3.00	5.928	3.85	51.7	0.0	187.1
								Totals:	**158.00**			**3,850.8**		**26,997.7**

Copyright © 2019 by Tower Engineering Solutions, LLC. All rights reserved.

Discrete Appurtenance Forces

Structure:	CT01080-S-SBA		**Code:**	EIA/TIA-222-G	7/9/2019
Site Name:	Long Hill #1		**Exposure:**	C	
Height:	158.00 (ft)		**Crest Height:**	0.00	
Base Elev:	0.000 (ft)		**Site Class:**	D - Stiff Soil	
Gh:	1.1	**Topography:** 1	**Struct Class:**	II	Page: 32

Tower Engineering Solutions

Load Case: 1.0D + 1.0W 60 mph Wind

Dead Load Factor 1.00

Wind Load Factor 1.00

Iterations 23

No.	Elev (ft)	Description	Qty	qz (psf)	qzGh (psf)	Orient Factor x Ka	Ka	Total CaAa (sf)	Dead Load (lb)	Horiz Ecc (ft)	Vert Ecc (ft)	Wind FX (lb)	Mom Y (lb-ft)	Mom Z (lb-ft)
1	158.00	Alcatel RRH2X60-700	3	12.201	13.421	0.54	0.80	5.63	180.00	0.000	0.000	75.53	0.00	0.00
2	158.00	Commscope	6	12.201	13.421	0.66	0.80	32.07	304.26	0.000	0.000	430.43	0.00	0.00
3	158.00	Amphenol	2	12.201	13.421	0.75	0.80	14.63	54.00	0.000	0.000	196.40	0.00	0.00
4	158.00	RFS APL866513-42T0 w/	4	12.201	13.421	0.76	0.80	17.18	194.80	0.000	0.000	230.52	0.00	0.00
5	158.00	Alcatel RRH2X60-AWS	3	12.201	13.421	0.54	0.80	5.63	180.00	0.000	0.000	75.53	0.00	0.00
6	158.00	6' Lightning rod	1	12.201	13.421	1.00	1.00	0.38	6.50	0.000	0.000	5.10	0.00	0.00
7	158.00	Alcatel RRH2X60-PCS	3	12.201	13.421	0.54	0.80	3.54	165.00	0.000	0.000	47.48	0.00	0.00
8	158.00	RFS FD9R6004/2CL-3CL	6	12.201	13.421	0.48	0.80	0.89	18.00	0.000	0.000	11.98	0.00	0.00
9	158.00	RFS DB-T1-6C-8AB-0Z	2	12.201	13.421	0.48	0.80	4.61	88.00	0.000	0.000	61.84	0.00	0.00
10	158.00	Low Profile Platform	1	12.201	13.421	1.00	1.00	25.00	1200.00	0.000	0.000	335.52	0.00	0.00
11	151.00	Pipe Mount	1	12.085	13.294	1.00	1.00	2.63	40.00	0.000	0.000	34.96	0.00	0.00
12	151.00	Andrew VHLP2.5	1	12.085	13.294	0.80	0.80	6.74	47.60	2.043	0.000	89.65	183.13	0.00
13	151.00	ODU	1	12.085	13.294	0.60	1.00	0.74	13.20	0.000	0.000	9.89	0.00	0.00
14	146.00	RFS APXVTM14-C-120 w/	3	12.000	13.200	0.62	0.80	14.86	267.00	0.000	0.000	196.20	0.00	0.00
15	146.00	Alcatel TD-RRH8x20-25	3	12.000	13.200	0.54	0.80	6.51	210.00	0.000	0.000	85.96	0.00	0.00
16	146.00	Alcatel 1900MHz RRH	3	12.000	13.200	0.54	0.80	3.83	132.00	0.000	0.000	50.52	0.00	0.00
17	146.00	Alcatel 800 MHz RRH	3	12.000	13.200	0.54	0.80	3.43	159.00	0.000	0.000	45.21	0.00	0.00
18	146.00	Alcatel 800MHz Filters	3	12.000	13.200	0.48	0.80	0.96	26.40	0.000	0.000	12.74	0.00	0.00
19	146.00	RFS ACU-A20-N RET	4	12.000	13.200	0.48	0.80	0.23	4.00	0.000	0.000	3.04	0.00	0.00
20	146.00	GPS	1	12.000	13.200	1.00	1.00	1.00	10.00	0.000	0.000	13.20	0.00	0.00
21	146.00	Kathrein Scala 840 10054	3	12.000	13.200	0.49	0.80	6.72	105.00	0.000	0.000	88.70	0.00	0.00
22	146.00	RRUs	3	12.000	13.200	0.54	0.80	4.70	9.39	0.000	0.000	61.98	0.00	0.00
23	146.00	Low Profile Platform	1	12.000	13.200	1.00	1.00	25.00	1200.00	0.000	0.000	329.99	0.00	0.00
24	146.00	RFS APXVSPP18-C-A20	3	12.000	13.200	0.66	0.80	19.16	270.00	0.000	0.000	252.95	0.00	0.00
25	137.00	KRD 9011461-B66A-B2A	3	11.840	13.024	0.65	0.75	12.74	396.60	0.000	0.000	165.97	0.00	0.00
26	137.00	HRK12 (Handrail Kit)	1	11.840	13.024	1.00	1.00	6.75	261.72	0.000	0.000	87.91	0.00	0.00
27	137.00	KRY 112 489/2	3	11.840	13.024	0.50	0.75	0.63	30.00	0.000	0.000	8.25	0.00	0.00
28	137.00	Low Profile Platform w/	1	11.840	13.024	1.00	1.00	25.00	1200.00	0.000	0.000	325.60	0.00	0.00
29	137.00	Allen Telecom	12	11.840	13.024	0.50	0.75	3.26	98.40	0.000	0.000	42.41	0.00	0.00
30	137.00	Kathrein 782 11056	3	11.840	13.024	0.50	0.75	0.23	33.00	0.000	0.000	2.95	0.00	0.00
31	137.00	APXVAARR24_43-U-NA2	3	11.840	13.024	0.52	0.75	31.88	384.00	0.000	0.000	415.18	0.00	0.00
32	137.00	4449	3	11.840	13.024	0.50	0.75	2.49	210.00	0.000	0.000	32.40	0.00	0.00
33	120.00	Cambium Network	1	11.514	12.666	1.00	1.00	8.92	50.00	0.000	0.000	112.98	0.00	0.00
34	120.00	SC479-HF1LDF(D00-E574	2	11.519	12.671	0.80	0.80	8.05	68.00	0.000	0.220	101.97	0.00	22.43
35	120.00	SC229-DFLN	1	11.605	12.766	0.80	0.80	5.38	32.00	0.000	4.580	68.63	0.00	314.33
36	120.00	DS428E83I01T - TTA	1	11.514	12.666	0.54	0.80	4.78	50.00	0.000	0.000	60.56	0.00	0.00
37	120.00	Flush Mount	1	11.514	12.666	1.00	1.00	5.00	350.00	0.000	0.000	63.33	0.00	0.00
38	120.00	Pipe Mount	1	11.514	12.666	1.00	1.00	10.00	400.00	0.000	0.000	126.66	0.00	0.00
39	116.00	Kathrein 742 213	3	11.432	12.576	0.62	0.80	9.62	66.00	0.000	0.000	121.00	0.00	0.00
40	116.00	Low Profile Platform	1	11.432	12.576	1.00	1.00	22.00	1500.00	0.000	0.000	276.67	0.00	0.00
41	107.00	Powerwave 7770.00	3	11.240	12.364	0.62	0.80	10.18	105.00	0.000	0.000	125.89	0.00	0.00
42	107.00	KMW	3	11.240	12.364	0.63	0.80	15.21	145.50	0.000	0.000	188.00	0.00	0.00
43	107.00	Powerwave 7020.00	6	11.240	12.364	0.48	0.80	0.98	13.20	0.000	0.000	12.11	0.00	0.00
44	107.00	Ericsson RRUS-32 B2	3	11.240	12.364	0.54	0.80	4.84	159.00	0.000	0.000	59.84	0.00	0.00
45	107.00	CCI HPA-65R-BUU-H6	3	11.240	12.364	0.62	0.80	21.88	153.00	0.000	0.000	270.52	0.00	0.00
46	107.00	Raycap DC6-48-60-18-8F	1	11.240	12.364	0.54	0.80	1.18	32.80	0.000	0.000	14.58	0.00	0.00
47	107.00	Powerwave	3	11.240	12.364	0.48	0.80	0.79	48.00	0.000	0.000	9.79	0.00	0.00

Copyright © 2019 by Tower Engineering Solutions, LLC. All rights reserved.

Discrete Appurtenance Forces

Structure:	CT01080-S-SBA		**Code:**	EIA/TIA-222-G	7/9/2019
Site Name:	Long Hill #1		**Exposure:**	C	
Height:	158.00 (ft)		**Crest Height:**	0.00	
Base Elev:	0.000 (ft)		**Site Class:**	D - Stiff Soil	
Gh:	1.1	**Topography:** 1	**Struct Class:**	II	Page: 33

Tower Engineering Solutions

48	107.00	Powerwave LGP21903	6	11.240	12.364	0.48	0.80	0.66	31.80	0.000	0.000	8.19	0.00	0.00
49	107.00	Ericsson RRUS 11	3	11.240	12.364	0.54	0.80	4.05	165.00	0.000	0.000	50.10	0.00	0.00
50	107.00	CCI DTMAP7819VG12A	3	11.240	12.364	0.48	0.80	1.41	57.54	0.000	0.000	17.45	0.00	0.00
51	107.00	Low Profile Platform	1	11.240	12.364	0.00	1.00	22.00	1500.00	0.000	0.000	272.00	0.00	0.00
							Totals:		**12,424.71**			**5,786.24**		

Copyright © 2019 by Tower Engineering Solutions, LLC. All rights reserved.

Total Applied Force Summary

Structure:	CT01080-S-SBA		**Code:**	EIA/TIA-222-G	7/9/2019
Site Name:	Long Hill #1		**Exposure:**	C	
Height:	158.00 (ft)		**Crest Height:**	0.00	
Base Elev:	0.000 (ft)		**Site Class:**	D - Stiff Soil	
Gh:	1.1	**Topography:** 1	**Struct Class:**	II	Page: 34

Tower Engineering Solutions

Load Case: 1.0D + 1.0W 60 mph Wind

Dead Load Factor 1.00

Wind Load Factor 1.00

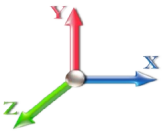

Iterations 23

Elev (ft)	Description	Lateral FX (-) (lb)	Axial FY (-) (lb)	Torsion MY (lb-ft)	Moment MZ (lb-ft)
0.00		0.00	0.00	0.00	0.00
5.00		130.11	1460.56	0.00	0.00
10.00		127.46	1591.13	0.00	0.00
15.00		124.82	1563.37	0.00	0.00
20.00		129.63	1535.61	0.00	0.00
25.00		132.92	1507.85	0.00	0.00
30.00		135.07	1480.09	0.00	0.00
35.00		136.36	1452.33	0.00	0.00
40.00		137.00	1424.57	0.00	0.00
45.00		137.11	1396.81	0.00	0.00
45.25		6.78	69.11	0.00	0.00
50.00		131.93	2214.94	0.00	0.00
51.25		34.39	575.15	0.00	0.00
55.00		103.40	900.64	0.00	0.00
60.00		137.32	1180.03	0.00	0.00
65.00		136.06	1156.24	0.00	0.00
70.00		134.54	1132.45	0.00	0.00
75.00		132.80	1108.65	0.00	0.00
80.00		130.86	1084.86	0.00	0.00
85.00		128.74	1061.06	0.00	0.00
90.00		126.44	1037.27	0.00	0.00
91.75		43.52	357.42	0.00	0.00
95.00		81.23	984.56	0.00	0.00
96.50		37.06	448.76	0.00	0.00
100.00		85.74	527.66	0.00	0.00
105.00		120.37	740.32	0.00	0.00
107.00	(35) attachments	1075.69	2702.53	0.00	0.00
110.00		70.04	386.21	0.00	0.00
115.00		114.59	630.99	0.00	0.00
116.00	(4) attachments	420.14	1690.30	0.00	0.00
120.00	(7) attachments	623.02	1415.88	0.00	336.76
125.00		108.36	557.87	0.00	0.00
130.00		105.09	542.01	0.00	0.00
133.00		61.35	317.59	0.00	0.00
135.00		40.91	361.86	0.00	0.00
136.75		35.34	312.46	0.00	0.00
137.00	(29) attachments	1085.67	2639.67	0.00	0.00
140.00		59.55	270.88	0.00	0.00
145.00		96.57	438.77	0.00	0.00
146.00	(30) attachments	1159.30	2478.64	0.00	0.00
150.00		74.04	322.12	0.00	0.00
151.00	(3) attachments	152.61	179.74	183.13	0.00
155.00		71.09	308.79	0.00	0.00
158.00	(31) attachments	1522.06	2615.49	0.00	0.00
	Totals:	**9,637.09**	**46,163.23**	**183.13**	**336.76**

Copyright © 2019 by Tower Engineering Solutions, LLC. All rights reserved.

Linear Appurtenance Segment Forces (Factored)

Structure:	CT01080-S-SBA	**Code:**	EIA/TIA-222-G	7/9/2019	
Site Name:	Long Hill #1	**Exposure:**	C		
Height:	158.00 (ft)	**Crest Height:**	0.00		
Base Elev:	0.000 (ft)	**Site Class:**	D - Stiff Soil		
Gh:	1.1 **Topography:** 1	**Struct Class:**	II	Page: 35	

Load Case: 1.0D + 1.0W 60 mph Wind

Dead Load Factor 1.00

Wind Load Factor 1.00

Iterations 23

Top Elev (ft)	Description	Wind Exposed	Length (ft)	Ca	Exposed Width (in)	Area (sqft)	CaAa (sqft)	Ra	Cf Adjust Factor	qz (psf)	F X (lb)	Dead Load (lb)
5.00	1 5/8" Hybrid	Yes	2.00	0.000	0.00	0.00	0.00	0.000	0.000	7.442	0.00	4.40
10.00	1 5/8" Hybrid	Yes	5.00	0.000	0.00	0.00	0.00	0.000	0.000	7.442	0.00	11.00
15.00	1 5/8" Hybrid	Yes	5.00	0.000	0.00	0.00	0.00	0.000	0.000	7.442	0.00	11.00
20.00	1 5/8" Hybrid	Yes	5.00	0.000	0.00	0.00	0.00	0.000	0.000	7.896	0.00	11.00
25.00	1 5/8" Hybrid	Yes	5.00	0.000	0.00	0.00	0.00	0.000	0.000	8.276	0.00	11.00
30.00	1 5/8" Hybrid	Yes	5.00	0.000	0.00	0.00	0.00	0.000	0.000	8.600	0.00	11.00
35.00	1 5/8" Hybrid	Yes	5.00	0.000	0.00	0.00	0.00	0.000	0.000	8.883	0.00	11.00
40.00	1 5/8" Hybrid	Yes	5.00	0.000	0.00	0.00	0.00	0.000	0.000	9.137	0.00	11.00
45.00	1 5/8" Hybrid	Yes	5.00	0.000	0.00	0.00	0.00	0.000	0.000	9.366	0.00	11.00
45.25	1 5/8" Hybrid	Yes	0.25	0.000	0.00	0.00	0.00	0.000	0.000	9.377	0.00	0.55
50.00	1 5/8" Hybrid	Yes	4.75	0.000	0.00	0.00	0.00	0.000	0.000	9.576	0.00	10.45
51.25	1 5/8" Hybrid	Yes	1.25	0.000	0.00	0.00	0.00	0.000	0.000	9.626	0.00	2.75
55.00	1 5/8" Hybrid	Yes	3.75	0.000	0.00	0.00	0.00	0.000	0.000	9.770	0.00	8.25
60.00	1 5/8" Hybrid	Yes	5.00	0.000	0.00	0.00	0.00	0.000	0.000	9.951	0.00	11.00
65.00	1 5/8" Hybrid	Yes	5.00	0.000	0.00	0.00	0.00	0.000	0.000	10.120	0.00	11.00
70.00	1 5/8" Hybrid	Yes	5.00	0.000	0.00	0.00	0.00	0.000	0.000	10.279	0.00	11.00
75.00	1 5/8" Hybrid	Yes	5.00	0.000	0.00	0.00	0.00	0.000	0.000	10.430	0.00	11.00
80.00	1 5/8" Hybrid	Yes	5.00	0.000	0.00	0.00	0.00	0.000	0.000	10.572	0.00	11.00
85.00	1 5/8" Hybrid	Yes	5.00	0.000	0.00	0.00	0.00	0.000	0.000	10.708	0.00	11.00
90.00	1 5/8" Hybrid	Yes	5.00	0.000	0.00	0.00	0.00	0.000	0.000	10.838	0.00	11.00
91.75	1 5/8" Hybrid	Yes	1.75	0.000	0.00	0.00	0.00	0.000	0.000	10.882	0.00	3.85
95.00	1 5/8" Hybrid	Yes	3.25	0.000	0.00	0.00	0.00	0.000	0.000	10.962	0.00	7.15
96.50	1 5/8" Hybrid	Yes	1.50	0.000	0.00	0.00	0.00	0.000	0.000	10.998	0.00	3.30
100.00	1 5/8" Hybrid	Yes	3.50	0.000	0.00	0.00	0.00	0.000	0.000	11.081	0.00	7.70
105.00	1 5/8" Hybrid	Yes	5.00	0.000	0.00	0.00	0.00	0.000	0.000	11.195	0.00	11.00
107.00	1 5/8" Hybrid	Yes	2.00	0.000	0.00	0.00	0.00	0.000	0.000	11.240	0.00	4.40
110.00	1 5/8" Hybrid	Yes	3.00	0.000	0.00	0.00	0.00	0.000	0.000	11.305	0.00	6.60
115.00	1 5/8" Hybrid	Yes	5.00	0.000	0.00	0.00	0.00	0.000	0.000	11.412	0.00	11.00
116.00	1 5/8" Hybrid	Yes	1.00	0.000	0.00	0.00	0.00	0.000	0.000	11.432	0.00	2.20
120.00	1 5/8" Hybrid	Yes	4.00	0.000	0.00	0.00	0.00	0.000	0.000	11.514	0.00	8.80
125.00	1 5/8" Hybrid	Yes	5.00	0.000	0.00	0.00	0.00	0.000	0.000	11.614	0.00	11.00
130.00	1 5/8" Hybrid	Yes	5.00	0.000	0.00	0.00	0.00	0.000	0.000	11.710	0.00	11.00
133.00	1 5/8" Hybrid	Yes	3.00	0.000	0.00	0.00	0.00	0.000	0.000	11.766	0.00	6.60
135.00	1 5/8" Hybrid	Yes	2.00	0.000	0.00	0.00	0.00	0.000	0.000	11.803	0.00	4.40
136.75	1 5/8" Hybrid	Yes	1.75	0.000	0.00	0.00	0.00	0.000	0.000	11.835	0.00	3.85
137.00	1 5/8" Hybrid	Yes	0.25	0.000	0.00	0.00	0.00	0.000	0.000	11.840	0.00	0.55
140.00	1 5/8" Hybrid	Yes	3.00	0.000	0.00	0.00	0.00	0.000	0.000	11.894	0.00	6.60
145.00	1 5/8" Hybrid	Yes	5.00	0.000	0.00	0.00	0.00	0.000	0.000	11.982	0.00	11.00
146.00	1 5/8" Hybrid	Yes	1.00	0.000	0.00	0.00	0.00	0.000	0.000	12.000	0.00	2.20
150.00	1 5/8" Hybrid	Yes	4.00	0.000	0.00	0.00	0.00	0.000	0.000	12.068	0.00	8.80
151.00	1 5/8" Hybrid	Yes	1.00	0.000	0.00	0.00	0.00	0.000	0.000	12.085	0.00	2.20
155.00	1 5/8" Hybrid	Yes	4.00	0.000	0.00	0.00	0.00	0.000	0.000	12.152	0.00	8.80
158.00	1 5/8" Hybrid	Yes	3.00	0.000	0.00	0.00	0.00	0.000	0.000	12.201	0.00	6.60
										Totals:	**0.0**	**341.0**

Copyright © 2019 by Tower Engineering Solutions, LLC. All rights reserved.

Calculated Forces

Structure:	CT01080-S-SBA	**Code:**	EIA/TIA-222-G	7/9/2019	
Site Name:	Long Hill #1	**Exposure:**	C		
Height:	158.00 (ft)	**Crest Height:**	0.00		
Base Elev:	0.000 (ft)	**Site Class:**	D - Stiff Soil		
Gh:	1.1 **Topography:** 1	**Struct Class:**	II	Page: 36	

Load Case: 1.0D + 1.0W 60 mph Wind

Dead Load Factor 1.00

Wind Load Factor 1.00

Iterations 23

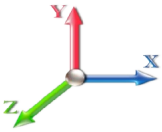

Seg Elev (ft)	Pu FY (-) (kips)	Vu FX (-) (kips)	Tu MY (-) (ft-kips)	Mu MZ (ft-kips)	Mu MX (ft-kips)	Resultant Moment (ft-kips)	phi Pn (kips)	phi Vn (kips)	phi Tn (ft-kips)	phi Mn (ft-kips)	Total Deflect (in)	Rotation Sway (deg)	Rotation Twist (deg)	Stress Ratio
0.00	-46.16	-9.65	-0.18	-1119.3	0.00	1119.35	5458.79	2729.40	13000.6	6509.99	0.00	0.000	0.000	0.180
5.00	-44.69	-9.56	-0.18	-1071.0	0.00	1071.07	5387.61	2693.80	12568.9	6293.83	0.02	-0.046	0.000	0.178
10.00	-43.09	-9.47	-0.18	-1023.2	0.00	1023.27	5314.79	2657.39	12140.4	6079.27	0.10	-0.092	0.000	0.176
15.00	-41.52	-9.37	-0.18	-975.94	0.00	975.94	5240.33	2620.17	11715.4	5866.42	0.22	-0.139	0.000	0.174
20.00	-39.98	-9.27	-0.18	-929.08	0.00	929.08	5164.24	2582.12	11294.0	5655.41	0.39	-0.187	0.000	0.172
25.00	-38.46	-9.17	-0.18	-882.72	0.00	882.72	5086.52	2543.26	10876.5	5446.36	0.61	-0.236	0.000	0.170
30.00	-36.98	-9.06	-0.18	-836.89	0.00	836.89	5007.16	2503.58	10463.2	5239.39	0.89	-0.285	0.000	0.167
35.00	-35.52	-8.94	-0.18	-791.61	0.00	791.61	4926.16	2463.08	10054.2	5034.61	1.21	-0.335	0.000	0.164
40.00	-34.09	-8.83	-0.18	-746.89	0.00	746.89	4843.52	2421.76	9649.95	4832.15	1.59	-0.386	0.000	0.162
45.00	-32.69	-8.70	-0.18	-702.75	0.00	702.75	4759.26	2379.63	9250.49	4632.12	2.02	-0.437	0.000	0.159
45.25	-32.61	-8.70	-0.18	-700.58	0.00	700.58	4755.00	2377.50	9230.65	4622.19	2.05	-0.440	0.000	0.158
50.00	-30.39	-8.57	-0.18	-659.23	0.00	659.23	4673.35	2336.67	8856.13	4434.65	2.51	-0.490	0.000	0.155
51.25	-29.81	-8.55	-0.18	-648.52	0.00	648.52	3853.76	1926.88	7395.56	3703.28	2.64	-0.503	0.000	0.183
55.00	-28.91	-8.46	-0.18	-616.48	0.00	616.48	3804.98	1902.49	7163.10	3586.87	3.05	-0.543	0.000	0.179
60.00	-27.72	-8.34	-0.18	-574.18	0.00	574.18	3738.51	1869.25	6856.06	3433.13	3.65	-0.601	0.000	0.175
65.00	-26.56	-8.22	-0.18	-532.49	0.00	532.49	3670.40	1835.20	6552.57	3281.16	4.31	-0.660	0.000	0.170
70.00	-25.42	-8.09	-0.18	-491.41	0.00	491.41	3600.66	1800.33	6252.87	3131.08	5.03	-0.719	0.000	0.164
75.00	-24.30	-7.97	-0.18	-450.94	0.00	450.94	3529.28	1764.64	5957.19	2983.02	5.82	-0.778	0.000	0.158
80.00	-23.21	-7.85	-0.18	-411.08	0.00	411.08	3456.27	1728.13	5665.78	2837.10	6.67	-0.836	0.000	0.152
85.00	-22.15	-7.73	-0.18	-371.84	0.00	371.84	3381.62	1690.81	5378.88	2693.44	7.57	-0.895	0.000	0.145
90.00	-21.11	-7.60	-0.18	-333.20	0.00	333.20	3305.34	1652.67	5096.71	2552.14	8.54	-0.952	0.000	0.137
91.75	-20.75	-7.56	-0.18	-319.91	0.00	319.91	3278.25	1639.13	4999.12	2503.28	8.89	-0.972	0.000	0.134
95.00	-19.76	-7.47	-0.18	-295.34	0.00	295.34	3221.38	1610.69	4810.51	2408.83	9.57	-1.009	0.000	0.129
96.50	-19.31	-7.43	-0.18	-284.13	0.00	284.13	1897.75	948.88	2865.01	1434.63	9.89	-1.026	0.000	0.208
100.00	-18.77	-7.36	-0.18	-258.11	0.00	258.11	1872.71	936.35	2763.41	1383.76	10.66	-1.064	0.000	0.197
105.00	-18.03	-7.24	-0.18	-221.33	0.00	221.33	1835.54	917.77	2619.24	1311.57	11.81	-1.138	0.000	0.179
107.00	-15.35	-6.12	-0.18	-206.85	0.00	206.85	1820.21	910.11	2561.95	1282.88	12.29	-1.167	0.000	0.170
110.00	-14.96	-6.05	-0.18	-188.49	0.00	188.49	1796.73	898.37	2476.44	1240.06	13.04	-1.209	0.000	0.160
115.00	-14.32	-5.94	-0.18	-158.22	0.00	158.22	1756.29	878.14	2335.25	1169.36	14.34	-1.274	-0.001	0.144
116.00	-12.64	-5.49	-0.18	-152.28	0.00	152.28	1748.00	874.00	2307.22	1155.32	14.61	-1.287	-0.001	0.139
120.00	-11.23	-4.84	-0.18	-130.01	0.00	130.01	1714.21	857.11	2195.89	1099.58	15.71	-1.335	-0.001	0.125
125.00	-10.67	-4.73	-0.18	-105.81	0.00	105.81	1670.50	835.25	2058.61	1030.84	17.14	-1.391	-0.001	0.109
130.00	-10.13	-4.62	-0.18	-82.17	0.00	82.17	1625.15	812.57	1923.65	963.25	18.62	-1.440	-0.001	0.092
133.00	-9.81	-4.55	-0.18	-68.32	0.00	68.32	1597.15	798.58	1843.89	923.31	19.54	-1.467	-0.001	0.080
135.00	-9.45	-4.50	-0.18	-59.21	0.00	59.21	1578.16	789.08	1791.25	896.95	20.15	-1.483	-0.001	0.072
136.75	-9.14	-4.46	-0.18	-51.33	0.00	51.33	1475.57	737.78	1680.22	841.36	20.70	-1.496	-0.001	0.067
137.00	-6.53	-3.31	-0.18	-50.22	0.00	50.22	1473.30	736.65	1674.05	838.27	20.78	-1.498	-0.001	0.064
140.00	-6.26	-3.24	-0.18	-40.30	0.00	40.30	1445.77	722.89	1600.57	801.47	21.73	-1.516	-0.001	0.055
145.00	-5.82	-3.14	-0.18	-24.08	0.00	24.08	1398.74	699.37	1480.44	741.32	23.33	-1.539	-0.001	0.037
146.00	-3.38	-1.91	-0.18	-20.94	0.00	20.94	1389.16	694.58	1456.78	729.47	23.65	-1.543	-0.001	0.031
150.00	-3.06	-1.83	-0.18	-13.30	0.00	13.30	1340.27	670.14	1353.35	677.68	24.95	-1.554	-0.001	0.022
151.00	-2.88	-1.67	0.00	-11.47	0.00	11.47	1327.48	663.74	1327.52	664.75	25.27	-1.557	-0.001	0.019
155.00	-2.57	-1.59	0.00	-4.78	0.00	4.78	1276.33	638.17	1226.69	614.25	26.58	-1.563	-0.001	0.010
158.00	0.00	-1.52	0.00	0.00	0.00	0.00	1237.97	618.99	1153.67	577.69	27.56	-1.565	-0.001	0.000

Copyright © 2019 by Tower Engineering Solutions, LLC. All rights reserved.

Reactions

Load Case	Shear FX (kips)	Shear FZ (kips)	Axial FY (kips)	Moment MX (ft-kips)	Moment MY (ft-kips)	Moment MZ (ft-kips)
1.2D + 1.6W 101 mph Wind	43.8	0.00	55.31	0.01	0.50	5100.99
0.9D + 1.6W 101 mph Wind	43.8	0.00	41.47	0.01	0.50	5047.57
1.2D + 1.0Di + 1.0Wi 50 mph Wind	11.3	0.00	86.83	0.00	0.15	1316.79
1.2D + 1.0E	2.0	0.00	55.40	0.00	0.00	238.96
0.9D + 1.0E	2.0	0.00	41.55	0.00	0.00	236.23
1.0D + 1.0W 60 mph Wind	9.7	0.00	46.16	0.00	0.18	1119.35

Max Stresses

Load Case	Pu FY (-) (kips)	Vu FX (-) (kips)	Tu MY (-) (ft-kips)	Mu MZ (ft-kips)	Mu MX (ft-kips)	Resultant Moment (ft-kips)	phi Pn (kips)	phi Vn (kips)	phi Tn (ft-kips)	phi Mn (ft-kips)	Elev (ft)	Stress Ratio
1.2D + 1.6W 101 mph Wind	-20.58	-33.93	-0.51	-1295.7	-0.03	-1295.7	1897.75	948.88	2865.01	1434.63	96.50	0.915
0.9D + 1.6W 101 mph Wind	-14.80	-33.43	-0.51	-1274.8	-0.03	-1274.8	1897.75	948.88	2865.01	1434.63	96.50	0.898
1.2D + 1.0Di + 1.0Wi 50 mph Wind	-44.90	-8.73	-0.15	-333.33	0.00	-333.33	1897.75	948.88	2865.01	1434.63	96.50	0.256
1.2D + 1.0E	-23.32	-1.47	0.00	-78.21	0.00	-78.21	1897.75	948.88	2865.01	1434.63	96.50	0.067
0.9D + 1.0E	-17.49	-1.45	0.00	-77.06	0.00	-77.06	1897.75	948.88	2865.01	1434.63	96.50	0.063
1.0D + 1.0W 60 mph Wind	-19.31	-7.43	-0.18	-284.13	0.00	-284.13	1897.75	948.88	2865.01	1434.63	96.50	0.208

Copyright © 2019 by Tower Engineering Solutions, LLC. All rights reserved.

Base Plate Summary

Structure:	CT01080-S-SB		**Code:**	EIA/TIA-222-G	7/9/2019
Site Name:	Long Hill #1		**Exposure:**	C	
Height:	158.00 (ft)		**Crest Height:**	0.00	
Base Elev:	0.000 (ft)		**Site Class:**	D - Stiff Soil	
Gh:	1.1	**Topography:** 1	**Struct Class:**	II	Page: 38

Tower Engineering Solutions

Reactions	
Original Design	
Moment (kip-ft):	4350.00
Axial (kip):	51.00
Shear (kip):	37.50
Analysis	
Moment (kip-ft):	5100.99
Axial (kip):	86.83
Shear (kip):	43.80
Moment Design %:	117.26

Base Plate	
Yield (ksi):	50.00
Width (in):	67.00
Style:	Clipped
Polygon Sides:	0.00
Clip Length (in):	13.00
Effective Len (in):	7.75
Moment (kip-in):	602.72
Allow Stress (ksi):	67.50
Applied Stress (ksi):	0.00
Stress Ratio:	0.91

Anchor Bolts	
Bolt Circle:	66.00
Number Bolts:	24.00
Bolt Type:	2.25" 18J
Bolt Diameter (in):	2.25
Yield (ksi):	75.00
Ultimate (ksi):	100.00
Arrangement:	Clustered
Cluster Dist (in):	6.00
Start Angle (deg):	45.00
Compression	
Force (kip):	158.19
Allowable (kip):	260.00
Ratio:	0.62
Tension	
Force (kip):	150.96
Allowable (kip):	260.00
Ratio:	0.59

Copyright © 2019 by Tower Engineering Solutions, LLC. All rights reserved.

Monopole Mat Foundation Design

			Date
			7/9/2019
Customer Name:	T-Mobile	**EIA/TIA Standard:**	EIA-222-G
Site Name:		**Structure Height (Ft.):**	158
Site Number:	CT01080-S-SBA	**Engineer Name:**	J. Chen
Engr. Number:	77159	**Engineer Login ID:**	

Foundation Info Obtained from:	Drawings/Calculations
Structure Type:	Monopole
Analysis or Design?	Analysis

Base Reactions (Factored):

Axial Load (Kips):	86.8	Shear Force (Kips):	43.8
Uplift Force (Kips):	0.0	Moment (Kips-ft):	5101.0
Allowable overstress %:	5.0%		

Foundation Geometries:

		Mods required -Yes/No ?:	No
Diameter of Pier (ft.):	8.0	Depth of Base BG (ft.):	10.0
Pier Height A. G. (ft.):	0.50	Thickness of Pad (ft):	3.50
Length of Pad (ft.):	23	Width of Pad (ft.):	23
Final Length of pad (ft)	23.0	Final width of pad (ft):	23.0

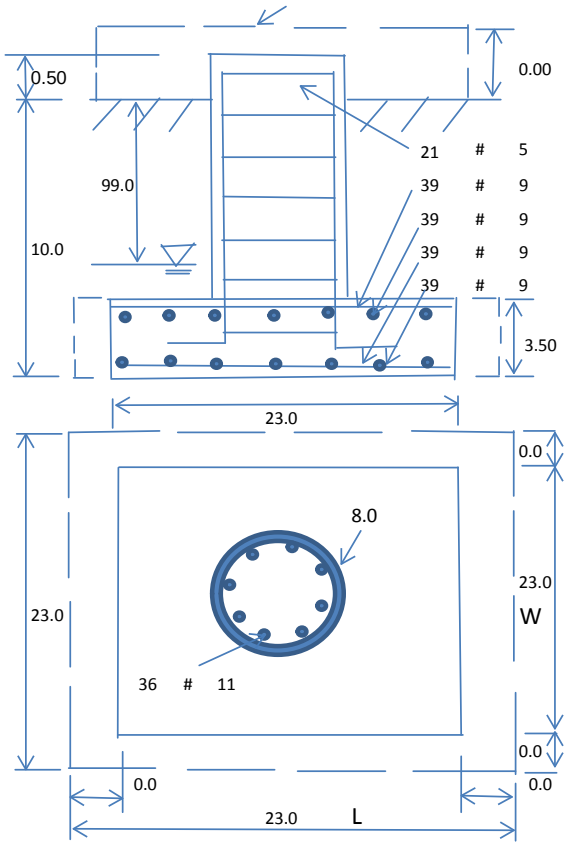

Material Properties and Reabr Info:

Concrete Strength (psi):	3000	Steel Elastic Modulus:	29000	ksi
Vertical bar yield (ksi)	60	Tie steel yield (ksi):	40	
Vertical Rebar Size #:	11	Tie / Stirrup Size #:	5	
Qty. of Vertical Rebars:	36	Tie Spacing (in):	6.0	
Pad Rebar Yield (Ksi):	60	Pad Steel Rebar Size (#):	9	
Concrete Cover (in.):	3	Unit Weight of Concrete:	150.0	pcf

Rebar at the bottom of the concrete pad:

Qty. of Rebar in Pad (L):	39	Qty. of Rebar in Pad (W):	39

Rebar at the top of the concrete pad:

Qty. of Rebar in Pad (L):	39	Qty. of Rebar in Pad (W):	39
Apply 1.35 factor for e/w Per G:	1.35		

Soil Design Parameters:

Soil Unit Weight (pcf):	125.0	Soil Buoyant Weight:	62.6	Pcf		
Water Table B.G.S. (ft):	99.0	Unit Weight of Water:	62.4	pcf	Angle from Top of Pad:	30
Ultimate Bearing Pressure (psf):	16000	Ultimate Skin Friction:	425	Psf	Angle from Bottm of Pad:	25
Consider Friction for O.T.M. (Y/N):	No	Consider Friction for bearing (Y/N):	Yes		Angle from Bottm of Pad:	25
Consider soil hor. resist. for OTM.:	Yes	Reduction factor on the maximum soil bearing pressure:			1.00	

Foundation Analysis and Design: Uplift Strength Reduction Factor: 0.75 Compression Strength Reduction Factor: 0.75

Total Dry Soil Volume (cu. Ft.):	3111.77	Total Dry Soil Weight (Kips):	388.97
Total Buoyant Soil Volume (cu. Ft.):	0.00	Total Buoyant Soil Weight (Kips):	0.00
Total Effective Soil Weight (Kips):	388.97	Weight from the Concrete Block at Top (K):	0.00
Total Dry Concrete Volume (cu. Ft.):	2203.36	Total Dry Concrete Weight (Kips):	330.50
Total Buoyant Concrete Volume (cu. Ft.):	0.00	Total Buoyant Concrete Weight (Kips):	0.00
Total Effective Concrete Weight (Kips):	330.50	Total Vertical Load on Base (Kips):	806.28

Check Soil Capacities:

					Load/ Capacity Ratio	
Calculated Maxium Net Soil Pressure under the base (psf):	3853	<	Allowable Factored Soil Bearing (psf):	12000	0.32	OK!
Allowable Foundation Overturning Resistance (kips-ft.):	8444.8	>	Design Factored Momont (kips-ft):	4996	0.59	OK!
Factor of Safety Against Overturning (O. R. Moment/Design Moment):	1.69	OK!				

EXHIBIT 8

Tower Engineering Solutions
Phone (972) 483-0607, Fax (972) 975-9615
1320 Greenway Drive, Suite 600, Irving, Texas 75038

Post-Mod Antenna Mount Analysis Report

Existing 158-Ft Monopole Tower

Customer Name: SBA Communications Corp

Customer Site Number: CT01080-S-SBA

Customer Site Name: Long Hill #1

Carrier Name: T-Mobile (App#: 115951, V1)

Carrier Site ID / Name: CT11247E / Middletown

Site Location: 1279 Long Hill Road

Middletown, Connecticut

Middlesex County

Latitude: 41.511231

Longitude: -72.670744

STATE OF CONNECTICUT
HANMING YOU
28931
LICENSED
PROFESSIONAL ENGINEER

7/25/19

Analysis Result:

Max Structural Usage: 81.6% [Pass]

Report Prepared By: Ishwor Dhakal

Introduction

The purpose of this report is to summarize the analysis results on the (1) Low profile platform at 137.00' elevation including the proposed modifications to support the proposed antenna configuration. Any existing modification listed under Sources of Information was assumed completed and was included in this analysis.

The proposed modification by **TES** listed under Sources of Information was considered completed and was included in this analysis.

Sources of Information

Mount Drawings	Mount Mapping by Full metal services, dated 04/26/2019.
Antenna Loading	SBA, Application #: 115951, v1.
Existing Modification	N/A.
Proposed Modification	TES Project No. 80044

Analysis Criteria

Basic Wind Speed Used in the Analysis: V_{ULT} = 130 mph (3-Sec. Gust) / Equivalent to
V_{ASD} = 101 mph (3-Sec. Gust)
Basic Wind Speed with Ice: 50 mph (3-Sec. Gust) with 0.75" radial ice concurrent
Operational Wind Speed: 60 mph +0" Radial ice
Standard/Codes: ANSI/TIA-222-G / 2015 IBC / 2018 CSBC
Exposure Category: C
Structure Class: II
Topographic Category: 1
Crest Height (Ft): 0

The site is a Risk Category II structure per table 1604.5 of the IBC. This site does not support emergency communication equipment for first responders such as fire departments, police, hospitals, ambulance services or any of the facilities listed for Risk Categories III and IV. The scope of work detailed in this structural analysis does not include items that are a part of emergency service as the 911 or essential facility service of an emergency response system.

Mount Information

(1) Low profile platform at 137.00' elevation.

Proposed Modifications

(1) Metrosite Support Rail w/ End Connection: MS-HRECP-35

Final Antenna Configuration

3	RFS APXVAARR24_43-U-NA20
3	Ericsson Air32 KRD901146-1_B66A_B2A
3	Allen Telecom FE15501P77/75
3	Ericsson KRY 112 489/2
3	Ericsson Radio 4449 B71+B12
3	Kathrein 782 11056

Any proposed antennas not currently installed should be mounted such that the centers of the antennas do not exceed 0.5 ft vertically from the center of the low-profile platform.

Analysis Results

Our calculations have determined that under design wind load the existing mounts will be structurally adequate to support the proposed antenna configuration after the proposed modification is successfully completed. The maximum structural usage is 81.6%, which occurs in the front face horizontal member. The proposed equipment must be installed as stipulated in the Final Antenna Configuration section of this report. The analysis results are void if the proposed equipment is not installed in accordance with this report.

Attachments

1. Mount Photos Before Modification
2. Antenna Placement Diagram
3. Mount Mapping Information
4. Analysis Calculations

Standard Conditions

1. The loading configuration as analyzed in this report is as provided from the customer. Any deviation from this design shall be communicated to TES to verify deviation will not adversely impact the analysis.

2. The analysis is based on the presumption that the antenna mount members and components along with any existing reinforcement items have been correctly and properly designed, manufactured, installed and maintained.

3. All the existing structural members were assumed to be in good condition with no physical damage or deterioration associated with corrosion. The mount analysis is not a condition assessment of the mount.

4. The mount analysis was performed in accordance with the loading provided, and if applicable the modification required to support the additional loading.

5. If the mount is modified, installation must adhere to the configuration communicated in the modification drawings.

6. The modification drawings are not intended to convey means or methods. These are the responsibility of the installing contractor.

7. Rigging plan review is available if the contractor requires for a construction class IV or other if required. Review fee would apply.

8. The mount modification package was created based upon information provided for the mount loading. The underlying tower is assumed to provide support and sufficient rigidity to support the mount loads as a tower analysis was not part of the mount analysis.

9. TES is not responsible for modifications to climbing facilities unless communicated to TES in writing.

04.26.2019 11:39

04.26.2019 11:59

Structure: CT01080-S-SBA - Long Hill #1

Sector: **A**

Structure Type: Monopole

Mount Elev: 137.00

6/28/2019

Page: 1

Tower Engineering Solutions

Plan View

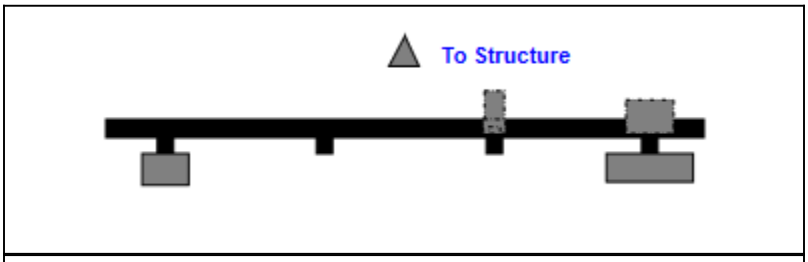

Front View

Looking Toward Structure

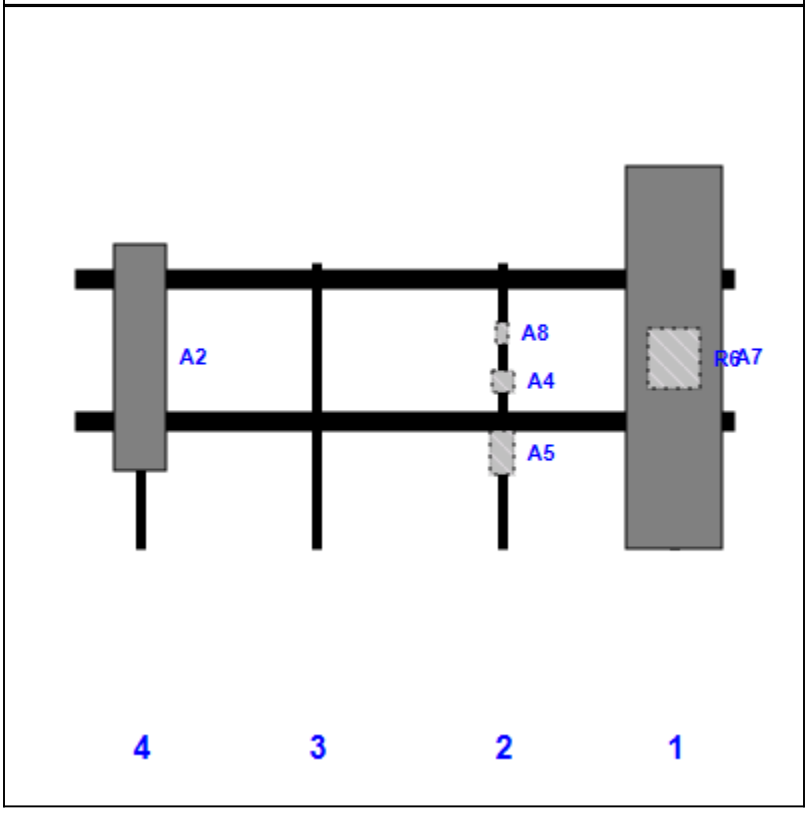

Ref #	Model	Height (in)	Width (in)	H Dist From Left	Pipe #	Pipe Pos V	Antenna Pos	Center Ant From Top	Antenna H Offset
A7	APXVAARR24_43-U-NA20	95.90	24.00	151.00	1	a	Front	24.00	0.00
R6	Radio 4449 B71+B12	15.00	13.20	151.00	1	a	Behind	24.00	0.00
A4	Allen Telecom FE15501P77/75	5.40	5.50	108.00	2	a	Behind	30.00	0.00
A5	KRY 112 489/2	11.00	6.10	108.00	2	a	Behind	48.00	0.00
A8	782 11056	5.50	3.20	108.00	2	a	Behind	18.00	0.00
A2	Air32	57.00	12.90	17.00	4	a	Front	24.00	0.00

Copyright © 2019 by Tower Engineering Solutions, LLC. All rights reserved.

Structure: CT01080-S-SBA - Long Hill #1

Sector: **B**

Structure Type: Monopole

Mount Elev: 137.00

6/28/2019

Page: 2

Plan View

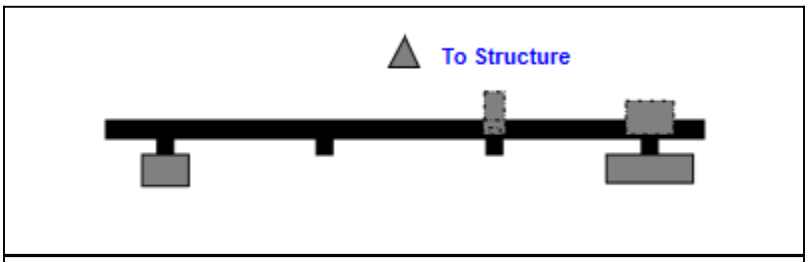

Front View

Looking Toward Structure

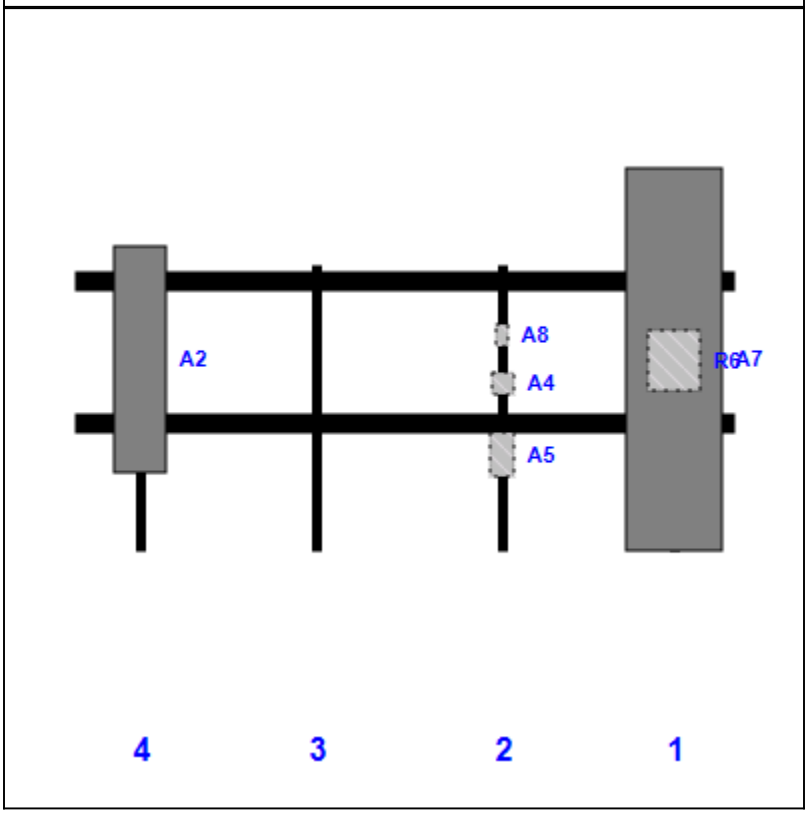

Ref #	Model	Height (in)	Width (in)	H Dist From Left	Pipe #	Pipe Pos V	Antenna Pos	Center Ant From Top	Antenna H Offset
A7	APXVAARR24_43-U-NA20	95.90	24.00	151.00	1	a	Front	24.00	0.00
R6	Radio 4449 B71+B12	15.00	13.20	151.00	1	a	Behind	24.00	0.00
A4	Allen Telecom FE15501P77/75	5.40	5.50	108.00	2	a	Behind	30.00	0.00
A5	KRY 112 489/2	11.00	6.10	108.00	2	a	Behind	48.00	0.00
A8	782 11056	5.50	3.20	108.00	2	a	Behind	18.00	0.00
A2	Air32	57.00	12.90	17.00	4	a	Front	24.00	0.00

Copyright © 2019 by Tower Engineering Solutions, LLC. All rights reserved.

Structure: CT01080-S-SBA - Long Hill #1

Sector: C

Structure Type: Monopole

Mount Elev: 137.00

6/28/2019

Page: 3

Plan View

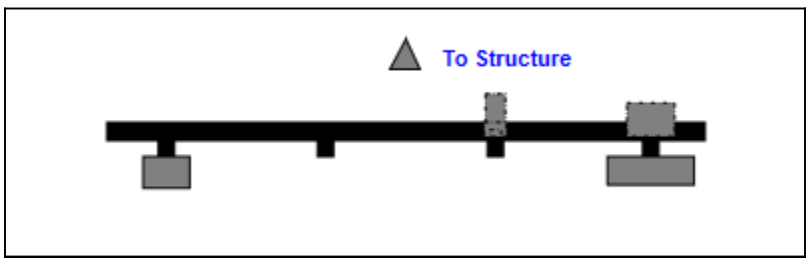

Front View

Looking Toward Structure

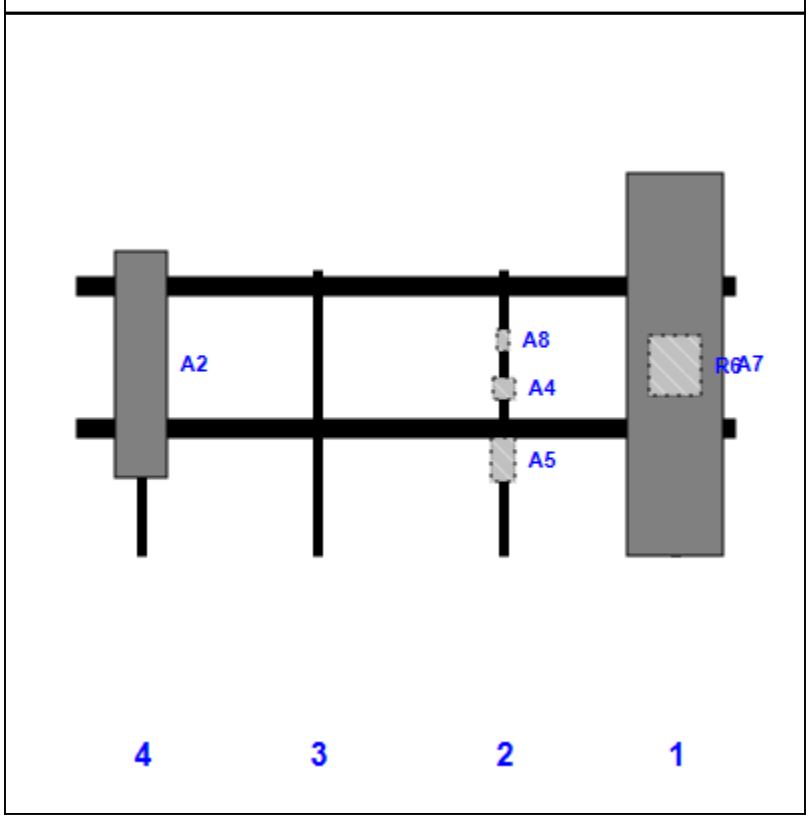

Ref #	Model	Height (in)	Width (in)	H Dist From Left	Pipe #	Pipe Pos V	Antenna Pos	Center Ant From Top	Antenna H Offset
A7	APXVAARR24_43-U-NA20	95.90	24.00	151.00	1	a	Front	24.00	0.00
R6	Radio 4449 B71+B12	15.00	13.20	151.00	1	a	Behind	24.00	0.00
A4	Allen Telecom FE15501P77/75	5.40	5.50	108.00	2	a	Behind	30.00	0.00
A5	KRY 112 489/2	11.00	6.10	108.00	2	a	Behind	48.00	0.00
A8	782 11056	5.50	3.20	108.00	2	a	Behind	18.00	0.00
A2	Air32	57.00	12.90	17.00	4	a	Front	24.00	0.00

Copyright © 2019 by Tower Engineering Solutions, LLC. All rights reserved.

Antenna Mount Type "MT-U" Mapping Form (PATENT PENDING)

FCC #	1218900		
Tower Owner:	SBA Communications	**Mapping Date:**	4/26/19
Site Name:	Long Hill #1	**Structure Type:**	Monopole
Site Number or ID:	CT01080-S-SBA	**Structure Height (Ft.):**	158
Mapping Contractor:	Full Metal Tower Services	**Mount Height (Ft.):**	138.6

This antenna mapping form is the property of TES and under PATENT PENDING. The formation contained herein is considered confidential in nature and is to be used only for the specific customer it was intended for. Reproduction, transmission, publication, modification or disclosure by any method is prohibited except by express written permission of TES. All means and methods are the responsibility of the contractor and the work shall be compliant with ANSI/ASSE A 10.48, OSHA, FCC, FAA and other safety requirements that may apply. TES is not warrantying the usability of the safety climb as it must be assessed prior to each use in compliance with OSHA requirements.

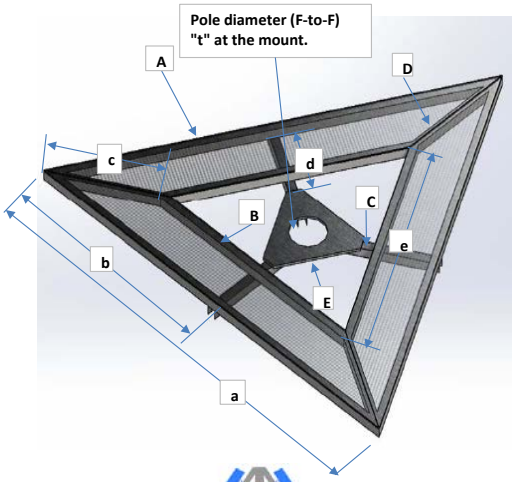

Geometries (Unit: inches)									
a	166	**e**	88	**j**	N/A	**o**	N/A	**s**	N/A
b	85	**f**	N/A	**k**	N/A	**p**	N/A	**t**	23
c	46	**g**	N/A	**m**	N/A	**q**	N/A	**u ***	46
d	34	**h**	N/A	**n**	N/A	**r**	N/A	**v ***	96

Members/Bolts (Unit: inches) *** - See Ant. Layout for "u", "v" and member "K" (pipe)**

Items	Member	Lx (O.D.)	Ly (I.D.)	T	Items	Member	Lx (O.D.)	Ly (I.D.)	T
A	L3x3x1/4	3	3	0.25	**F**				
B	L3x3x1/4	3	3	0.25	**G**				
C	Tubing 4x4x1/4	4	4	0.25	**H**				
D	L3x3x1/4	3	3	0.25	**J**				
E	1/2" Thick. Plate	0	0	0.5	**K* (pipe)**	2.375 OD x 0.154 Pipe	2.375	2.067	0.154

Distance from top of main platform member to lowest tip of ant./eqpt. of Carrier above. (N/A if > 10 ft.)	4.5'
Distance from top of main platform member to highest tip of ant./eqpt. of Carrier below. (N/A if > 10 ft.)	N/A

Please enter the infomation below if members can't be found from the drop down lists

Collar All-Thread: 3/4"x16"

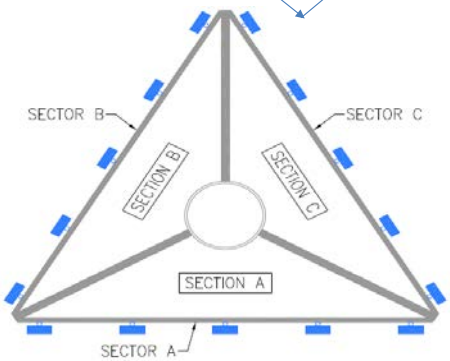

Climbing ladder is Located at Section C, at 310° Degree Azimuth

	Enter antenna model. If not labled, enter "Unknown". If no antenna at specified location, enter "N/A". If antennas and the locations are the same on all three sectors, only enter one sector.					Mounting Locations (Unit: inches)			Photos of antennas
Ants. Items	Antenna Models if Known	Width (in.)	Depth (in.)	Height (in.)	Coax Size and Qty	Vertical Distances"b_{1a}, b_{2a}, b_{3a}, b_{1b}...." (In.)	Horiz. offset (Use "-" if Ant. is inside)	Horiz. offset "C_1, C_2, C_3, C_4, C_5" (in.)	Photo Numbers
Sector A									
Ant_{1a}									
Ant_{1b}	Antenna A	12	7.5	96.5	1/2" (2)	+15"	7	17	
Ant_{1c}									
Ant_{2a}									
Ant_{2b}	Empty Mast	N/A	N/A	N/A	N/A	N/A	N/A	61	
Ant_{2c}									
Ant_{3a}									
Ant_{3b}	Empty Mast	N/A	N/A	N/A	N/A	N/A	N/A	108	
Ant_{3c}									
Ant_{4a}									
Ant_{4b}	Antenna B	7	3.5	73	1/2" (2)	+13"	6	151	
Ant_{4c}									
Ant_{5a}									
Ant_{5b}									
Ant_{5c}									
Are Ant same as sector A?		Yes	**Antennas on Sector B are the same as Sector A**						

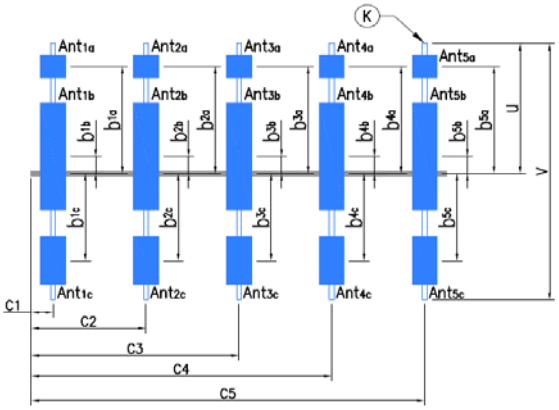

Antenna Layout

Azimuth (Degree) of Each Sector and Climbing Information

Sector A:	30°	N	Deg	
Sector B:	200°		Deg	
Sector C:	300°		Deg	
Climbing	310°		Deg	Located at Section C
Climbing Facility	Corrosion Type:			No corrosion observed
	Access:			Climbing path was unobstructed.
	Condition:			N/A

Are Ant same as sector A/B?	Same As A	**Antennas on Sector C are the same as Sector A**

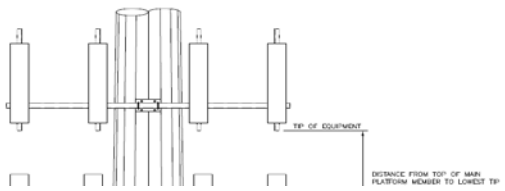

Tower Engineering Solutio...	CT01080-S-SBA_MT_LO_Loads Only_G	SK - 3
		June 28, 2019 at 8:06 AM
TES Project No. 80044		CT01080-S-SBA_80044_G_RISA_L...

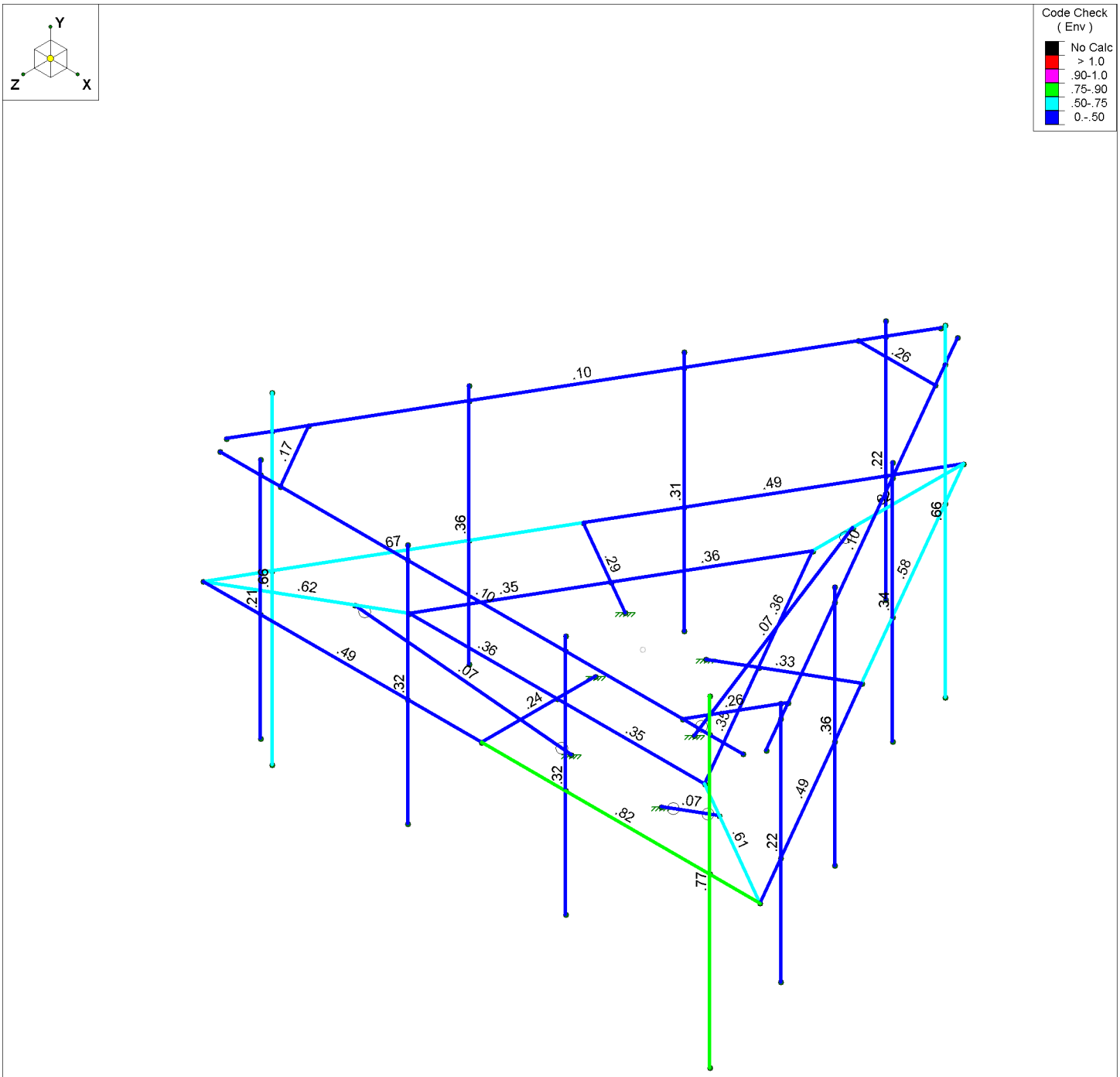

Member Code Checks Displayed (Enveloped)
Results for LC 1, 1.2D+1.6W (Front)

Tower Engineering Solutio...	CT01080-S-SBA_MT_LO_Loads Only_G	SK - 4
		June 28, 2019 at 8:07 AM
TES Project No. 80044		CT01080-S-SBA_80044_G_RISA_L...

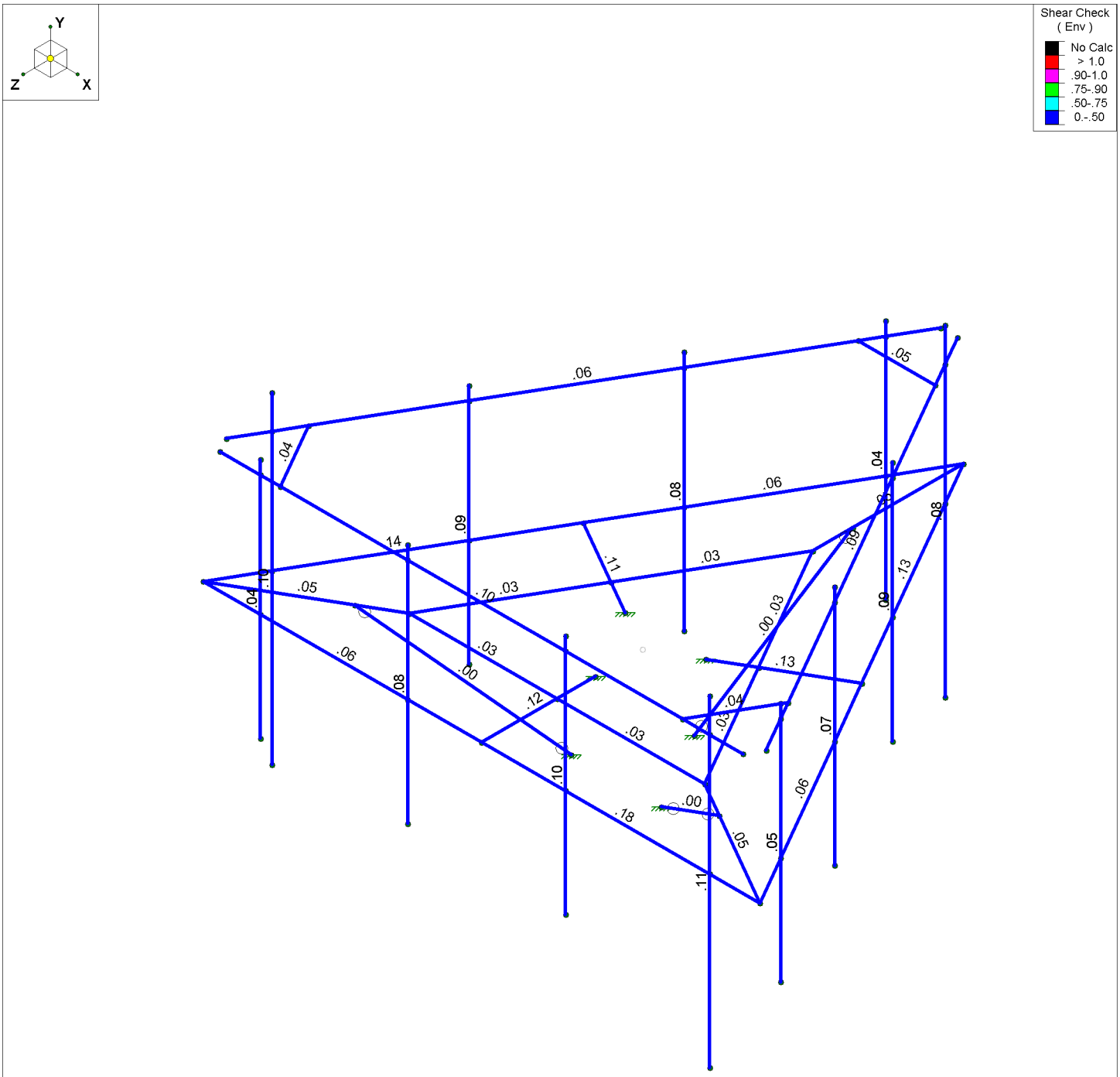

Member Shear Checks Displayed (Enveloped)
Results for LC 1, 1.2D+1.6W (Front)

Tower Engineering Solutio...	CT01080-S-SBA_MT_LO_Loads Only_G	SK - 5
		June 28, 2019 at 8:07 AM
TES Project No. 80044		CT01080-S-SBA_80044_G_RISA_L...

Basic Load Cases

	BLC Description	Category	X Gravity	Y Gravity	Z Gravity	Joint	Point	Distributed	Area(Me...	Surface(P...
1	Antenna D	None					24			
2	Antenna Di	None					24			
3	Antenna W Front	None					24			
4	Antenna Wi Front	None					24			
5	Antenna W Side	None					24			
6	Antenna Wi Side	None					24			
7	Service Lm1	None					1			
8	Service Lm2	None					1			
9	Structure D	None		-1					3	
10	Structure Di	None						39	3	
11	Structure W Front	None						39		
12	Structure Wi Front	None						39		
13	Structure W Side	None						39		
14	Structure Wi Side	None						39		
15	BLC 9 Transient Area...	None						33		
16	BLC 10 Transient Are...	None						33		

Load Combinations

	Description	So...	P...	S...	BLC	Fac...	BLC	Fac...	BLC	Fac...	BLC	Fac...	BLC	Fac...	BLC	Fac...	BLC	Fac...	BLC	Fac...	BLC	Fac...	BLC	Fac...
1	1.2D+1.6W (Front)	Yes	Y		1	1.2	9	1.2	3	1.6	11	1.6												
2	1.2D+1.6W (Back)	Yes	Y		1	1.2	9	1.2	3	-1.6	11	-1.6												
3	1.2D+1.6W (Left)	Yes	Y		1	1.2	9	1.2	5	1.6	13	1.6												
4	1.2D+1.6W (Right)	Yes	Y		1	1.2	9	1.2	5	-1.6	13	-1.6												
5	1.2D+1.0Di+1.0Wi (...	Yes	Y		1	1.2	9	1.2	2	1	10	1	4	1	12	1								
6	1.2D+1.0Di+1.0Wi (...	Yes	Y		1	1.2	9	1.2	2	1	10	1	4	-1	12	-1								
7	1.2D+1.0Di+1.0Wi (...	Yes	Y		1	1.2	9	1.2	2	1	10	1	6	1	14	1								
8	1.2D+1.0Di+1.0Wi (...	Yes	Y		1	1.2	9	1.2	2	1	10	1	6	-1	14	-1								
9	1.2D+1.5L1+.16W (...	Yes	Y		1	1.2	9	1.2	7	1.5	3	.16	11	.16										
10	1.2D+1.5L2+.16W (...	Yes	Y		1	1.2	9	1.2	8	1.5	3	.16	11	.16										
11	1.4D	Yes	Y		1	1.4	9	1.4																

Joint Coordinates and Temperatures

	Label	X [ft]	Y [ft]	Z [ft]	Temp [F]	Detach From Diap...
1	N1	0	0	1.160006	0	
2	N2	1.004595	0	-0.580003	0	
3	N3	-1.004595	0	-0.580003	0	
4	N4	-6.916667	0	3.993339	0	
5	N5	6.916667	0	3.993339	0	
6	N6	0	0	-7.986679	0	
7	N7	0	0	3.993339	0	
8	N8	3.458333	0	-1.99667	0	
9	N9	-3.458333	0	-1.99667	0	
10	N10	-3.666667	0	2.116951	0	
11	N11	3.666667	0	2.116951	0	
12	N12	0	0	-4.233902	0	

Joint Coordinates and Temperatures (Continued)

	Label	X [ft]	Y [ft]	Z [ft]	Temp [F]	Detach From Diap...
13	NP1	5.666667	3.833333	3.993339	0	
14	NP2	5.666667	-4.166667	3.993339	0	
15	NP3	2.083333	3.333333	3.993339	0	
16	NP4	2.083333	-2.666667	3.993339	0	
17	NP5	-1.833333	3.333333	3.993339	0	
18	NP6	-1.833333	-2.666667	3.993339	0	
19	NP7	-5.5	3.333333	3.993339	0	
20	NP8	-5.5	-2.666667	3.993339	0	
21	NP11	-6.291667	3.833333	2.910808	0	
22	NP12	-6.291667	-4.166667	2.910808	0	
23	NP13	-4.5	3.333333	-0.19245	0	
24	NP14	-4.5	-2.666667	-0.19245	0	
25	NP15	-2.541667	3.333333	-3.584383	0	
26	NP16	-2.541667	-2.666667	-3.584383	0	
27	NP17	-0.708333	3.333333	-6.759809	0	
28	NP18	-0.708333	-2.666667	-6.759809	0	
29	NP21	.625	3.833333	-6.904147	0	
30	NP22	.625	-4.166667	-6.904147	0	
31	NP23	2.416667	3.333333	-3.800889	0	
32	NP24	2.416667	-2.666667	-3.800889	0	
33	NP25	4.375	3.333333	-0.408956	0	
34	NP26	4.375	-2.666667	-0.408956	0	
35	NP27	6.208333	3.333333	2.76647	0	
36	NP28	6.208333	-2.666667	2.76647	0	
37	N37	5.666667	0	3.993339	0	
38	N38	2.083333	0	3.993339	0	
39	N39	-1.833333	0	3.993339	0	
40	N40	-5.5	0	3.993339	0	
41	N41	0.625	0	-6.904147	0	
42	N42	2.416667	0	-3.800889	0	
43	N43	4.375	0	-0.408956	0	
44	N44	6.208333	0	2.76647	0	
45	N45	-6.291667	0	2.910808	0	
46	N46	-4.5	0	-0.19245	0	
47	N47	-2.541667	0	-3.584383	0	
48	N48	-0.708333	0	-6.759809	0	
49	N49	0	0	2.116951	0	
50	N50	1.833333	0	-1.058475	0	
51	N51	-1.833333	0	-1.058475	0	
52	N52	0	0	-5.233902	0	
53	N53	0	0	0	0	
54	N55	0	-2.5	-1.290563	0	
55	N55A	-4.532692	0	2.616951	0	
56	N56	-1.11766	-2.5	0.645281	0	
57	N57	4.532692	0	2.616951	0	
58	N58	1.11766	-2.5	0.645281	0	
59	N59	-6.5	3	3.993339	0	
60	N60	6.5	3	3.993339	0	
61	N61	6.708333	3	3.632496	0	
62	N62	0.208333	3	-7.625835	0	
63	N63	-0.208333	3	-7.625835	0	
64	N64	-6.708333	3	3.632496	0	

Joint Coordinates and Temperatures (Continued)

	Label	X [ft]	Y [ft]	Z [ft]	Temp [F]	Detach From Diap...
65	N65	5.666667	3	3.993339	0	
66	N66	2.083333	3	3.993339	0	
67	N67	-1.833333	3	3.993339	0	
68	N68	-5.5	3	3.993339	0	
69	N69	-6.291667	3	2.910808	0	
70	N70	-4.5	3	-0.19245	0	
71	N71	-2.541667	3	-3.584383	0	
72	N72	-0.708333	3	-6.759809	0	
73	N73	.625	3	-6.904147	0	
74	N74	2.416667	3	-3.800889	0	
75	N75	4.375	3	-0.408956	0	
76	N76	6.208333	3	2.76647	0	
77	N77	-5	3	3.993339	0	
78	N78	5	3	3.993339	0	
79	N79	5.958333	3	2.333457	0	
80	N80	0.958333	3	-6.326797	0	
81	N81	-0.958333	3	-6.326797	0	
82	N82	-5.958333	3	2.333457	0	

Hot Rolled Steel Section Sets

	Label	Shape	Type	Design List	Material	Design R...	A [in2]	Iyy [in4]	Izz [in4]	J [in4]
1	HR	PIPE 3.0	Beam	Pipe	A53 Gr.B	Typical	2.07	2.85	2.85	5.69
2	End Conn	L3x3x4	Beam	Single Angle	A36 Gr.36	Typical	1.44	1.23	1.23	.031

Hot Rolled Steel Properties

	Label	E [ksi]	G [ksi]	Nu	Therm (\1E...	Density[k/ft...	Yield[ksi]	Ry	Fu[ksi]	Rt
1	A992	29000	11154	.3	.65	.49	50	1.1	65	1.1
2	A36 Gr.36	29000	11154	.3	.65	.49	36	1.5	58	1.2
3	A572 Gr.50	29000	11154	.3	.65	.49	50	1.1	65	1.1
4	A500 Gr.B RND	29000	11154	.3	.65	.527	42	1.4	58	1.3
5	A500 Gr.B Rect	29000	11154	.3	.65	.527	46	1.4	58	1.3
6	A53 Gr.B	29000	11154	.3	.65	.49	35	1.6	60	1.2
7	A1085	29000	11154	.3	.65	.49	50	1.4	65	1.3

Member Primary Data

	Label	I Joint	J Joint	K Joint	Rotate(deg)	Section/Shape	Type	Design List	Material	Design Rules
1	M1	N4	N7		270	L3x3x4	Beam	Single Angle	A36 Gr.36	DR1
2	M2	N5	N8		270	L3x3x4	Beam	Single Angle	A36 Gr.36	DR1
3	M3	N6	N9		270	L3x3x4	Beam	Single Angle	A36 Gr.36	DR1
4	M4	N1	N7			HSS4x4x4	Beam	None	A500 Gr.B...	DR1
5	M5	N2	N8			HSS4x4x4	Beam	None	A500 Gr.B...	DR1
6	M6	N3	N9			HSS4x4x4	Beam	None	A500 Gr.B...	DR1
7	M7	N4	N10			LL3x3x4x0	Beam	Double Angle (...	A36 Gr.36	DR1
8	M8	N5	N11			LL3x3x4x0	Beam	Double Angle (...	A36 Gr.36	DR1
9	M9	N6	N12			LL3x3x4x0	Beam	Double Angle (...	A36 Gr.36	DR1
10	M10	N10	N49			L3x3x4	Beam	Single Angle	A36 Gr.36	DR1
11	M11	N11	N50			L3x3x4	Beam	Single Angle	A36 Gr.36	DR1

Member Primary Data (Continued)

	Label	I Joint	J Joint	K Joint	Rotate(deg)	Section/Shape	Type	Design List	Material	Design Rules
12	M12	N12	N51			L3x3x4	Beam	Single Angle	A36 Gr.36	DR1
13	MP1A	NP1	NP2			PIPE_2.0	Beam	Pipe	A53 Gr.B	DR1
14	MP2A	NP3	NP4			PIPE_2.0	Beam	Pipe	A53 Gr.B	DR1
15	MP3A	NP5	NP6			PIPE_2.0	Beam	Pipe	A53 Gr.B	DR1
16	MP4A	NP7	NP8			PIPE_2.0	Beam	Pipe	A53 Gr.B	DR1
17	MP1B	NP11	NP12		300	PIPE_2.0	Beam	Pipe	A53 Gr.B	DR1
18	MP2B	NP13	NP14		300	PIPE_2.0	Beam	Pipe	A53 Gr.B	DR1
19	MP3B	NP15	NP16		300	PIPE_2.0	Beam	Pipe	A53 Gr.B	DR1
20	MP4B	NP17	NP18		300	PIPE_2.0	Beam	Pipe	A53 Gr.B	DR1
21	MP1C	NP21	NP22		60	PIPE_2.0	Beam	Pipe	A53 Gr.B	DR1
22	MP2C	NP23	NP24		60	PIPE_2.0	Beam	Pipe	A53 Gr.B	DR1
23	MP3C	NP25	NP26		60	PIPE_2.0	Beam	Pipe	A53 Gr.B	DR1
24	MP4C	NP27	NP28		60	PIPE_2.0	Beam	Pipe	A53 Gr.B	DR1
25	M25	N7	N5		270	L3x3x4	Beam	Single Angle	A36 Gr.36	DR1
26	M26	N8	N6		270	L3x3x4	Beam	Single Angle	A36 Gr.36	DR1
27	M27	N9	N4		270	L3x3x4	Beam	Single Angle	A36 Gr.36	DR1
28	M28	N49	N11			L3x3x4	Beam	Single Angle	A36 Gr.36	DR1
29	M29	N50	N12			L3x3x4	Beam	Single Angle	A36 Gr.36	DR1
30	M30	N51	N10			L3x3x4	Beam	Single Angle	A36 Gr.36	DR1
31	M31	N52	N55			LL2.5x2.5x4x0	Beam	Double Angle (...	A36 Gr.36	Typical
32	M32	N55A	N56			LL2.5x2.5x4x0	Beam	Double Angle (...	A36 Gr.36	Typical
33	M33	N57	N58			LL2.5x2.5x4x0	Beam	Double Angle (...	A36 Gr.36	Typical
34	M34	N59	N60			HR	Beam	Pipe	A53 Gr.B	Typical
35	M35	N61	N62			HR	Beam	Pipe	A53 Gr.B	Typical
36	M36	N63	N64			HR	Beam	Pipe	A53 Gr.B	Typical
37	M37	N77	N82			End Conn	Beam	Single Angle	A36 Gr.36	Typical
38	M38	N79	N78			End Conn	Beam	Single Angle	A36 Gr.36	Typical
39	M39	N81	N80			End Conn	Beam	Single Angle	A36 Gr.36	Typical

Member Advanced Data

	Label	I Release	J Release	I Offset[in]	J Offset[in]	T/C Only	Physical	Analysis ...	Inactive	Seismic Design ...
1	M1						Yes			None
2	M2						Yes			None
3	M3						Yes			None
4	M4						Yes			None
5	M5						Yes			None
6	M6						Yes			None
7	M7						Yes			None
8	M8						Yes			None
9	M9						Yes			None
10	M10						Yes			None
11	M11						Yes			None
12	M12						Yes			None
13	MP1A						Yes	-z		None
14	MP2A						Yes	-z		None
15	MP3A						Yes	-z		None
16	MP4A						Yes	-z		None
17	MP1B						Yes	+z		None
18	MP2B						Yes	+z		None
19	MP3B						Yes	+z		None

Member Advanced Data (Continued)

	Label	I Release	J Release	I Offset[in]	J Offset[in]	T/C Only	Physical	Analysis ...	Inactive	Seismic Design ...
20	MP4B						Yes	+z		None
21	MP1C						Yes	+z		None
22	MP2C						Yes	+z		None
23	MP3C						Yes	+z		None
24	MP4C						Yes	+z		None
25	M25						Yes			None
26	M26						Yes			None
27	M27						Yes			None
28	M28						Yes			None
29	M29						Yes			None
30	M30						Yes			None
31	M31	BenPIN	BenPIN				Yes			None
32	M32	BenPIN	BenPIN				Yes			None
33	M33	BenPIN	BenPIN				Yes			None
34	M34						Yes			None
35	M35						Yes			None
36	M36						Yes			None
37	M37						Yes			None
38	M38						Yes			None
39	M39						Yes			None

Hot Rolled Steel Design Parameters

	Label	Shape	Length[ft]	Lbyy[ft]	Lbzz[ft]	Lcomp top[ft]	Lcomp bot[ft]	L-torqu...	Kyy	Kzz	Cb	Function
1	M1	L3x3x4	6.917			Lbyy						Lateral
2	M2	L3x3x4	6.917			Lbyy						Lateral
3	M3	L3x3x4	6.917			Lbyy						Lateral
4	M4	HSS4x4x4	2.833			Lbyy						Gravity
5	M5	HSS4x4x4	2.833			Lbyy						Gravity
6	M6	HSS4x4x4	2.833			Lbyy						Gravity
7	M7	LL3x3x4x0	3.753			Lbyy						Gravity
8	M8	LL3x3x4x0	3.753			Lbyy						Gravity
9	M9	LL3x3x4x0	3.753			Lbyy						Gravity
10	M10	L3x3x4	3.667			Lbyy						Gravity
11	M11	L3x3x4	3.667			Lbyy						Gravity
12	M12	L3x3x4	3.667			Lbyy						Gravity
13	MP1A	PIPE_2.0	8			Lbyy						Gravity
14	MP2A	PIPE_2.0	6			Lbyy						Gravity
15	MP3A	PIPE_2.0	6			Lbyy						Gravity
16	MP4A	PIPE_2.0	6			Lbyy						Gravity
17	MP1B	PIPE_2.0	8			Lbyy						Gravity
18	MP2B	PIPE_2.0	6			Lbyy						Gravity
19	MP3B	PIPE_2.0	6			Lbyy						Gravity
20	MP4B	PIPE_2.0	6			Lbyy						Gravity
21	MP1C	PIPE_2.0	8			Lbyy						Gravity
22	MP2C	PIPE_2.0	6			Lbyy						Gravity
23	MP3C	PIPE_2.0	6			Lbyy						Gravity
24	MP4C	PIPE_2.0	6			Lbyy						Gravity
25	M25	L3x3x4	6.917			Lbyy						Lateral
26	M26	L3x3x4	6.917			Lbyy						Lateral
27	M27	L3x3x4	6.917			Lbyy						Lateral

Hot Rolled Steel Design Parameters (Continued)

	Label	Shape	Length[ft]	Lbyy[ft]	Lbzz[ft]	Lcomp top[ft]	Lcomp bot[ft]	L-torqu...	Kyy	Kzz	Cb	Function
28	M28	L3x3x4	3.667			Lbyy						Gravity
29	M29	L3x3x4	3.667			Lbyy						Gravity
30	M30	L3x3x4	3.667			Lbyy						Gravity
31	M31	LL2.5x2.5x4...	4.669			Lbyy						Lateral
32	M32	LL2.5x2.5x4...	4.669			Lbyy						Lateral
33	M33	LL2.5x2.5x4...	4.669			Lbyy						Lateral
34	M34	HR	13			Lbyy						Lateral
35	M35	HR	13			Lbyy						Lateral
36	M36	HR	13			Lbyy						Lateral
37	M37	End Conn	1.917			Lbyy						Lateral
38	M38	End Conn	1.917			Lbyy						Lateral
39	M39	End Conn	1.917			Lbyy						Lateral

Joint Loads and Enforced Displacements

Joint Label	L,D,M	Direction	Magnitude[(lb,k-ft), (in,rad), (lb*s^2...
No Data to Print ...			

Member Point Loads (BLC 1 : Antenna D)

	Member Label	Direction	Magnitude[lb,k-ft]	Location[ft,%]
1	MP1A	Y	-64	.5
2	MP1A	Y	-64	6
3	MP1B	Y	-64	.5
4	MP1B	Y	-64	6
5	MP1C	Y	-64	.5
6	MP1C	Y	-64	6
7	MP4A	Y	-66.1	0
8	MP4A	Y	-66.1	4
9	MP4B	Y	-66.1	0
10	MP4B	Y	-66.1	4
11	MP4C	Y	-66.1	0
12	MP4C	Y	-66.1	4
13	MP2A	Y	-17.5	2.5
14	MP2B	Y	-17.5	2.5
15	MP2C	Y	-17.5	2.5
16	MP2A	Y	-74	4
17	MP2B	Y	-74	4
18	MP2C	Y	-74	4
19	MP1A	Y	-70	2
20	MP1B	Y	-70	2
21	MP1C	Y	-70	2
22	MP2A	Y	-1.8	1.5
23	MP2B	Y	-1.8	1.5
24	MP2C	Y	-1.8	1.5

Member Point Loads (BLC 2 : Antenna Di)

	Member Label	Direction	Magnitude[lb,k-ft]	Location[ft,%]
1	MP1A	Y	-206.843	.5
2	MP1A	Y	-206.843	6

Member Point Loads (BLC 2 : Antenna Di) (Continued)

	Member Label	Direction	Magnitude[lb,k-ft]	Location[ft,%]
3	MP1B	Y	-206.843	.5
4	MP1B	Y	-206.843	6
5	MP1C	Y	-206.843	.5
6	MP1C	Y	-206.843	6
7	MP4A	Y	-91.204	0
8	MP4A	Y	-91.204	4
9	MP4B	Y	-91.204	0
10	MP4B	Y	-91.204	4
11	MP4C	Y	-91.204	0
12	MP4C	Y	-91.204	4
13	MP2A	Y	-27.809	2.5
14	MP2B	Y	-27.809	2.5
15	MP2C	Y	-27.809	2.5
16	MP2A	Y	-24.527	4
17	MP2B	Y	-24.527	4
18	MP2C	Y	-24.527	4
19	MP1A	Y	-67.474	2
20	MP1B	Y	-67.474	2
21	MP1C	Y	-67.474	2
22	MP2A	Y	-9.141	1.5
23	MP2B	Y	-9.141	1.5
24	MP2C	Y	-9.141	1.5

Member Point Loads (BLC 3 : Antenna W Front)

	Member Label	Direction	Magnitude[lb,k-ft]	Location[ft,%]
1	MP1A	Z	-373.479	.5
2	MP1A	Z	-373.479	6
3	MP1B	Z	-206.704	.5
4	MP1B	Z	-206.704	6
5	MP1C	Z	-206.704	.5
6	MP1C	Z	-206.704	6
7	MP4A	Z	-120.126	0
8	MP4A	Z	-120.126	4
9	MP4B	Z	-95.805	0
10	MP4B	Z	-95.805	4
11	MP4C	Z	-95.805	0
12	MP4C	Z	-95.805	4
13	MP2A	Z	-14.762	2.5
14	MP2B	Z	-18.326	2.5
15	MP2C	Z	-18.326	2.5
16	MP2A	Z	-37.274	4
17	MP2B	Z	-19.377	4
18	MP2C	Z	-19.377	4
19	MP1A	Z	-45.67	2
20	MP1B	Z	-35.55	2
21	MP1C	Z	-35.55	2
22	MP2A	Z	-10.333	1.5
23	MP2B	Z	-4.914	1.5
24	MP2C	Z	-4.914	1.5

Member Point Loads (BLC 4 : Antenna Wi Front)

	Member Label	Direction	Magnitude[lb,k-ft]	Location[ft,%]
1	MP1A	Z	-100.042	.5
2	MP1A	Z	-100.042	6
3	MP1B	Z	-58.086	.5
4	MP1B	Z	-58.086	6
5	MP1C	Z	-58.086	.5
6	MP1C	Z	-58.086	6
7	MP4A	Z	-34.727	0
8	MP4A	Z	-34.727	4
9	MP4B	Z	-28.235	0
10	MP4B	Z	-28.235	4
11	MP4C	Z	-28.235	0
12	MP4C	Z	-28.235	4
13	MP2A	Z	-4.422	2.5
14	MP2B	Z	-7.043	2.5
15	MP2C	Z	-7.043	2.5
16	MP2A	Z	-8.184	4
17	MP2B	Z	-6.58	4
18	MP2C	Z	-6.58	4
19	MP1A	Z	-14.803	2
20	MP1B	Z	-11.99	2
21	MP1C	Z	-11.99	2
22	MP2A	Z	-3.176	1.5
23	MP2B	Z	-2.581	1.5
24	MP2C	Z	-2.581	1.5

Member Point Loads (BLC 5 : Antenna W Side)

	Member Label	Direction	Magnitude[lb,k-ft]	Location[ft,%]
1	MP1A	X	151.112	.5
2	MP1A	X	151.112	6
3	MP1B	X	317.887	.5
4	MP1B	X	317.887	6
5	MP1C	X	317.887	.5
6	MP1C	X	317.887	6
7	MP4A	X	87.698	0
8	MP4A	X	87.698	4
9	MP4B	X	112.019	0
10	MP4B	X	112.019	4
11	MP4C	X	112.019	0
12	MP4C	X	112.019	4
13	MP2A	X	19.514	2.5
14	MP2B	X	15.95	2.5
15	MP2C	X	15.95	2.5
16	MP2A	X	13.412	4
17	MP2B	X	31.308	4
18	MP2C	X	31.308	4
19	MP1A	X	42.902	2
20	MP1B	X	56.395	2
21	MP1C	X	56.395	2
22	MP2A	X	3.107	1.5
23	MP2B	X	8.527	1.5
24	MP2C	X	8.527	1.5

Member Point Loads (BLC 6 : Antenna Wi Side)

	Member Label	Direction	Magnitude[lb,k-ft]	Location[ft,%]
1	MP1A	X	44.101	.5
2	MP1A	X	44.101	6
3	MP1B	X	86.057	.5
4	MP1B	X	86.057	6
5	MP1C	X	86.057	.5
6	MP1C	X	86.057	6
7	MP4A	X	26.071	0
8	MP4A	X	26.071	4
9	MP4B	X	32.563	0
10	MP4B	X	32.563	4
11	MP4C	X	32.563	0
12	MP4C	X	32.563	4
13	MP2A	X	7.916	2.5
14	MP2B	X	5.296	2.5
15	MP2C	X	5.296	2.5
16	MP2A	X	6.045	4
17	MP2B	X	7.649	4
18	MP2C	X	7.649	4
19	MP1A	X	14.736	2
20	MP1B	X	18.487	2
21	MP1C	X	18.487	2
22	MP2A	X	2.382	1.5
23	MP2B	X	2.977	1.5
24	MP2C	X	2.977	1.5

Member Point Loads (BLC 7 : Service Lm1)

	Member Label	Direction	Magnitude[lb,k-ft]	Location[ft,%]
1	M1	Y	-500	0

Member Point Loads (BLC 8 : Service Lm2)

	Member Label	Direction	Magnitude[lb,k-ft]	Location[ft,%]
1	M1	Y	-500	%50

Member Distributed Loads (BLC 10 : Structure Di)

	Member Label	Direction	Start Magnitude[lb/ft,...	End Magnitude[lb/ft,F...	Start Location[ft,%]	End Location[ft,%]
1	M1	Y	-10.397	-10.397	0	%100
2	M2	Y	-10.397	-10.397	0	%100
3	M3	Y	-10.397	-10.397	0	%100
4	M4	Y	-15.414	-15.414	0	%100
5	M5	Y	-15.414	-15.414	0	%100
6	M6	Y	-15.414	-15.414	0	%100
7	M7	Y	-16.759	-16.759	0	%100
8	M8	Y	-16.759	-16.759	0	%100
9	M9	Y	-16.759	-16.759	0	%100
10	M10	Y	-10.397	-10.397	0	%100
11	M11	Y	-10.397	-10.397	0	%100
12	M12	Y	-10.397	-10.397	0	%100
13	MP1A	Y	-8.672	-8.672	0	%100
14	MP2A	Y	-8.672	-8.672	0	%100

Member Distributed Loads (BLC 10 : Structure Di) (Continued)

	Member Label	Direction	Start Magnitude[lb/ft,...	End Magnitude[lb/ft,F...	Start Location[ft,%]	End Location[ft,%]
15	MP3A	Y	-8.672	-8.672	0	%100
16	MP4A	Y	-8.672	-8.672	0	%100
17	MP1B	Y	-8.672	-8.672	0	%100
18	MP2B	Y	-8.672	-8.672	0	%100
19	MP3B	Y	-8.672	-8.672	0	%100
20	MP4B	Y	-8.672	-8.672	0	%100
21	MP1C	Y	-8.672	-8.672	0	%100
22	MP2C	Y	-8.672	-8.672	0	%100
23	MP3C	Y	-8.672	-8.672	0	%100
24	MP4C	Y	-8.672	-8.672	0	%100
25	M25	Y	-10.397	-10.397	0	%100
26	M26	Y	-10.397	-10.397	0	%100
27	M27	Y	-10.397	-10.397	0	%100
28	M28	Y	-10.397	-10.397	0	%100
29	M29	Y	-10.397	-10.397	0	%100
30	M30	Y	-10.397	-10.397	0	%100
31	M31	Y	-14.741	-14.741	0	%100
32	M32	Y	-14.741	-14.741	0	%100
33	M33	Y	-14.741	-14.741	0	%100
34	M34	Y	-11.05	-11.05	0	%100
35	M35	Y	-11.05	-11.05	0	%100
36	M36	Y	-11.05	-11.05	0	%100
37	M37	Y	-10.397	-10.397	0	%100
38	M38	Y	-10.397	-10.397	0	%100
39	M39	Y	-10.397	-10.397	0	%100

Member Distributed Loads (BLC 11 : Structure W Front)

	Member Label	Direction	Start Magnitude[lb/ft,...	End Magnitude[lb/ft,F...	Start Location[ft,%]	End Location[ft,%]
1	M1	PZ	-18.452	-18.452	0	%100
2	M2	PZ	-18.452	-18.452	0	%100
3	M3	PZ	-18.452	-18.452	0	%100
4	M4	PZ	-24.603	-24.603	0	%100
5	M5	PZ	-24.603	-24.603	0	%100
6	M6	PZ	-24.603	-24.603	0	%100
7	M7	PZ	-18.452	-18.452	0	%100
8	M8	PZ	-18.452	-18.452	0	%100
9	M9	PZ	-18.452	-18.452	0	%100
10	M10	PZ	-18.452	-18.452	0	%100
11	M11	PZ	-18.452	-18.452	0	%100
12	M12	PZ	-18.452	-18.452	0	%100
13	MP1A	PZ	-8.765	-8.765	0	%100
14	MP2A	PZ	-8.765	-8.765	0	%100
15	MP3A	PZ	-8.765	-8.765	0	%100
16	MP4A	PZ	-8.765	-8.765	0	%100
17	MP1B	PZ	-8.765	-8.765	0	%100
18	MP2B	PZ	-8.765	-8.765	0	%100
19	MP3B	PZ	-8.765	-8.765	0	%100
20	MP4B	PZ	-8.765	-8.765	0	%100
21	MP1C	PZ	-8.765	-8.765	0	%100
22	MP2C	PZ	-8.765	-8.765	0	%100
23	MP3C	PZ	-8.765	-8.765	0	%100

Member Distributed Loads (BLC 11 : Structure W Front) (Continued)

	Member Label	Direction	Start Magnitude[lb/ft,...	End Magnitude[lb/ft,F...	Start Location[ft,%]	End Location[ft,%]
24	MP4C	PZ	-8.765	-8.765	0	%100
25	M25	PZ	-18.452	-18.452	0	%100
26	M26	PZ	-18.452	-18.452	0	%100
27	M27	PZ	-18.452	-18.452	0	%100
28	M28	PZ	-18.452	-18.452	0	%100
29	M29	PZ	-18.452	-18.452	0	%100
30	M30	PZ	-18.452	-18.452	0	%100
31	M31	PZ	-15.377	-15.377	0	%100
32	M32	PZ	-15.377	-15.377	0	%100
33	M33	PZ	-15.377	-15.377	0	%100
34	M34	PZ	-12.917	-12.917	0	%100
35	M35	PZ	-12.917	-12.917	0	%100
36	M36	PZ	-12.917	-12.917	0	%100
37	M37	PZ	-18.452	-18.452	0	%100
38	M38	PZ	-18.452	-18.452	0	%100
39	M39	PZ	-18.452	-18.452	0	%100

Member Distributed Loads (BLC 12 : Structure Wi Front)

	Member Label	Direction	Start Magnitude[lb/ft,...	End Magnitude[lb/ft,F...	Start Location[ft,%]	End Location[ft,%]
1	M1	PZ	-7.651	-7.651	0	%100
2	M2	PZ	-7.651	-7.651	0	%100
3	M3	PZ	-7.651	-7.651	0	%100
4	M4	PZ	-9.158	-9.158	0	%100
5	M5	PZ	-9.158	-9.158	0	%100
6	M6	PZ	-9.158	-9.158	0	%100
7	M7	PZ	-7.651	-7.651	0	%100
8	M8	PZ	-7.651	-7.651	0	%100
9	M9	PZ	-7.651	-7.651	0	%100
10	M10	PZ	-7.651	-7.651	0	%100
11	M11	PZ	-7.651	-7.651	0	%100
12	M12	PZ	-7.651	-7.651	0	%100
13	MP1A	PZ	-5.276	-5.276	0	%100
14	MP2A	PZ	-5.276	-5.276	0	%100
15	MP3A	PZ	-5.276	-5.276	0	%100
16	MP4A	PZ	-5.276	-5.276	0	%100
17	MP1B	PZ	-5.276	-5.276	0	%100
18	MP2B	PZ	-5.276	-5.276	0	%100
19	MP3B	PZ	-5.276	-5.276	0	%100
20	MP4B	PZ	-5.276	-5.276	0	%100
21	MP1C	PZ	-5.276	-5.276	0	%100
22	MP2C	PZ	-5.276	-5.276	0	%100
23	MP3C	PZ	-5.276	-5.276	0	%100
24	MP4C	PZ	-5.276	-5.276	0	%100
25	M25	PZ	-7.651	-7.651	0	%100
26	M26	PZ	-7.651	-7.651	0	%100
27	M27	PZ	-7.651	-7.651	0	%100
28	M28	PZ	-7.651	-7.651	0	%100
29	M29	PZ	-7.651	-7.651	0	%100
30	M30	PZ	-7.651	-7.651	0	%100
31	M31	PZ	-6.897	-6.897	0	%100
32	M32	PZ	-6.897	-6.897	0	%100

Member Distributed Loads (BLC 12 : Structure Wi Front) (Continued)

	Member Label	Direction	Start Magnitude[lb/ft,...	End Magnitude[lb/ft,F...	Start Location[ft,%]	End Location[ft,%]
33	M33	PZ	-6.897	-6.897	0	%100
34	M34	PZ	-6.294	-6.294	0	%100
35	M35	PZ	-6.294	-6.294	0	%100
36	M36	PZ	-6.294	-6.294	0	%100
37	M37	PZ	-7.651	-7.651	0	%100
38	M38	PZ	-7.651	-7.651	0	%100
39	M39	PZ	-7.651	-7.651	0	%100

Member Distributed Loads (BLC 13 : Structure W Side)

	Member Label	Direction	Start Magnitude[lb/ft,...	End Magnitude[lb/ft,F...	Start Location[ft,%]	End Location[ft,%]
1	M1	PX	18.452	18.452	0	%100
2	M2	PX	18.452	18.452	0	%100
3	M3	PX	18.452	18.452	0	%100
4	M4	PX	24.603	24.603	0	%100
5	M5	PX	24.603	24.603	0	%100
6	M6	PX	24.603	24.603	0	%100
7	M7	PX	18.452	18.452	0	%100
8	M8	PX	18.452	18.452	0	%100
9	M9	PX	18.452	18.452	0	%100
10	M10	PX	18.452	18.452	0	%100
11	M11	PX	18.452	18.452	0	%100
12	M12	PX	18.452	18.452	0	%100
13	MP1A	PX	8.765	8.765	0	%100
14	MP2A	PX	8.765	8.765	0	%100
15	MP3A	PX	8.765	8.765	0	%100
16	MP4A	PX	8.765	8.765	0	%100
17	MP1B	PX	8.765	8.765	0	%100
18	MP2B	PX	8.765	8.765	0	%100
19	MP3B	PX	8.765	8.765	0	%100
20	MP4B	PX	8.765	8.765	0	%100
21	MP1C	PX	8.765	8.765	0	%100
22	MP2C	PX	8.765	8.765	0	%100
23	MP3C	PX	8.765	8.765	0	%100
24	MP4C	PX	8.765	8.765	0	%100
25	M25	PX	18.452	18.452	0	%100
26	M26	PX	18.452	18.452	0	%100
27	M27	PX	18.452	18.452	0	%100
28	M28	PX	18.452	18.452	0	%100
29	M29	PX	18.452	18.452	0	%100
30	M30	PX	18.452	18.452	0	%100
31	M31	PX	15.377	15.377	0	%100
32	M32	PX	15.377	15.377	0	%100
33	M33	PX	15.377	15.377	0	%100
34	M34	PX	12.917	12.917	0	%100
35	M35	PX	12.917	12.917	0	%100
36	M36	PX	12.917	12.917	0	%100
37	M37	PX	18.452	18.452	0	%100
38	M38	PX	18.452	18.452	0	%100
39	M39	PX	18.452	18.452	0	%100

Member Distributed Loads (BLC 14 : Structure Wi Side)

	Member Label	Direction	Start Magnitude[lb/ft,...	End Magnitude[lb/ft,F...	Start Location[ft,%]	End Location[ft,%]
1	M1	PX	7.651	7.651	0	%100
2	M2	PX	7.651	7.651	0	%100
3	M3	PX	7.651	7.651	0	%100
4	M4	PX	9.158	9.158	0	%100
5	M5	PX	9.158	9.158	0	%100
6	M6	PX	9.158	9.158	0	%100
7	M7	PX	7.651	7.651	0	%100
8	M8	PX	7.651	7.651	0	%100
9	M9	PX	7.651	7.651	0	%100
10	M10	PX	7.651	7.651	0	%100
11	M11	PX	7.651	7.651	0	%100
12	M12	PX	7.651	7.651	0	%100
13	MP1A	PX	5.276	5.276	0	%100
14	MP2A	PX	5.276	5.276	0	%100
15	MP3A	PX	5.276	5.276	0	%100
16	MP4A	PX	5.276	5.276	0	%100
17	MP1B	PX	5.276	5.276	0	%100
18	MP2B	PX	5.276	5.276	0	%100
19	MP3B	PX	5.276	5.276	0	%100
20	MP4B	PX	5.276	5.276	0	%100
21	MP1C	PX	5.276	5.276	0	%100
22	MP2C	PX	5.276	5.276	0	%100
23	MP3C	PX	5.276	5.276	0	%100
24	MP4C	PX	5.276	5.276	0	%100
25	M25	PX	7.651	7.651	0	%100
26	M26	PX	7.651	7.651	0	%100
27	M27	PX	7.651	7.651	0	%100
28	M28	PX	7.651	7.651	0	%100
29	M29	PX	7.651	7.651	0	%100
30	M30	PX	7.651	7.651	0	%100
31	M31	PX	6.897	6.897	0	%100
32	M32	PX	6.897	6.897	0	%100
33	M33	PX	6.897	6.897	0	%100
34	M34	PX	6.294	6.294	0	%100
35	M35	PX	6.294	6.294	0	%100
36	M36	PX	6.294	6.294	0	%100
37	M37	PX	7.651	7.651	0	%100
38	M38	PX	7.651	7.651	0	%100
39	M39	PX	7.651	7.651	0	%100

Member Distributed Loads (BLC 15 : BLC 9 Transient Area Loads)

	Member Label	Direction	Start Magnitude[lb/ft,...	End Magnitude[lb/ft,F...	Start Location[ft,%]	End Location[ft,%]
1	M3	Y	-1.155	-3.146	.692	2.536
2	M3	Y	-3.146	-4.533	2.536	4.381
3	M3	Y	-4.533	-5.318	4.381	6.225
4	M6	Y	-9.533	-9.533	.957	2.833
5	M7	Y	-.962	-4.777	0	1.876
6	M7	Y	-4.777	-8.592	1.876	3.753
7	M9	Y	-.962	-4.777	0	1.876
8	M9	Y	-4.777	-8.592	1.876	3.753
9	M12	Y	-4.981	-4.981	.016	2.745

Member Distributed Loads (BLC 15 : BLC 9 Transient Area Loads) (Continued)

	Member Label	Direction	Start Magnitude[lb/ft,...	End Magnitude[lb/ft,F...	Start Location[ft,%]	End Location[ft,%]
10	M27	Y	-5.318	-4.533	.692	2.536
11	M27	Y	-4.533	-3.146	2.536	4.381
12	M27	Y	-3.146	-1.155	4.381	6.225
13	M30	Y	-4.981	-4.981	.922	3.65
14	M1	Y	-1.155	-3.146	.692	2.536
15	M1	Y	-3.146	-4.533	2.536	4.381
16	M1	Y	-4.533	-5.318	4.381	6.225
17	M4	Y	-9.533	-9.533	.957	2.833
18	M8	Y	-.962	-4.777	0	1.876
19	M8	Y	-4.777	-8.592	1.876	3.753
20	M10	Y	-4.981	-4.981	.016	2.745
21	M25	Y	-5.318	-4.533	.692	2.536
22	M25	Y	-4.533	-3.146	2.536	4.381
23	M25	Y	-3.146	-1.155	4.381	6.225
24	M28	Y	-4.981	-4.981	.922	3.65
25	M2	Y	-1.155	-3.146	.692	2.536
26	M2	Y	-3.146	-4.533	2.536	4.381
27	M2	Y	-4.533	-5.318	4.381	6.225
28	M5	Y	-9.533	-9.533	.957	2.833
29	M11	Y	-4.981	-4.981	.016	2.745
30	M26	Y	-5.318	-4.533	.692	2.536
31	M26	Y	-4.533	-3.146	2.536	4.381
32	M26	Y	-3.146	-1.155	4.381	6.225
33	M29	Y	-4.981	-4.981	.922	3.65

Member Distributed Loads (BLC 16 : BLC 10 Transient Area Loads)

	Member Label	Direction	Start Magnitude[lb/ft,...	End Magnitude[lb/ft,F...	Start Location[ft,%]	End Location[ft,%]
1	M3	Y	-2.829	-7.706	.692	2.536
2	M3	Y	-7.706	-11.105	2.536	4.381
3	M3	Y	-11.105	-13.027	4.381	6.225
4	M6	Y	-23.353	-23.353	.957	2.833
5	M7	Y	-2.358	-11.702	0	1.876
6	M7	Y	-11.702	-21.047	1.876	3.753
7	M9	Y	-2.358	-11.702	0	1.876
8	M9	Y	-11.702	-21.047	1.876	3.753
9	M12	Y	-12.201	-12.201	.016	2.745
10	M27	Y	-13.027	-11.105	.692	2.536
11	M27	Y	-11.105	-7.706	2.536	4.381
12	M27	Y	-7.706	-2.829	4.381	6.225
13	M30	Y	-12.201	-12.201	.922	3.65
14	M1	Y	-2.829	-7.706	.692	2.536
15	M1	Y	-7.706	-11.105	2.536	4.381
16	M1	Y	-11.105	-13.027	4.381	6.225
17	M4	Y	-23.353	-23.353	.957	2.833
18	M8	Y	-2.358	-11.702	0	1.876
19	M8	Y	-11.702	-21.047	1.876	3.753
20	M10	Y	-12.201	-12.201	.016	2.745
21	M25	Y	-13.027	-11.105	.692	2.536
22	M25	Y	-11.105	-7.706	2.536	4.381
23	M25	Y	-7.706	-2.829	4.381	6.225
24	M28	Y	-12.201	-12.201	.922	3.65

Member Distributed Loads (BLC 16 : BLC 10 Transient Area Loads) (Continued)

	Member Label	Direction	Start Magnitude[lb/ft,...	End Magnitude[lb/ft,F...	Start Location[ft,%]	End Location[ft,%]
25	M2	Y	-2.829	-7.706	.692	2.536
26	M2	Y	-7.706	-11.105	2.536	4.381
27	M2	Y	-11.105	-13.027	4.381	6.225
28	M5	Y	-23.353	-23.353	.957	2.833
29	M11	Y	-12.201	-12.201	.016	2.745
30	M26	Y	-13.027	-11.105	.692	2.536
31	M26	Y	-11.105	-7.706	2.536	4.381
32	M26	Y	-7.706	-2.829	4.381	6.225
33	M29	Y	-12.201	-12.201	.922	3.65

Member Area Loads (BLC 9 : Structure D)

	Joint A	Joint B	Joint C	Joint D	Direction	Distribution	Magnitude[ksf]
1	N4	N10	N12	N6	Y	Two Way	-.005
2	N4	N5	N11	N10	Y	Two Way	-.005
3	N5	N6	N12	N11	Y	Two Way	-.005

Member Area Loads (BLC 10 : Structure Di)

	Joint A	Joint B	Joint C	Joint D	Direction	Distribution	Magnitude[ksf]
1	N4	N10	N12	N6	Y	Two Way	-.013
2	N4	N5	N11	N10	Y	Two Way	-.013
3	N5	N6	N12	N11	Y	Two Way	-.013

Joint Boundary Conditions

	Joint Label	X [k/in]	Y [k/in]	Z [k/in]	X Rot.[k-ft/rad]	Y Rot.[k-ft/rad]	Z Rot.[k-ft/rad]
1	N1	Reaction	Reaction	Reaction	Reaction	Reaction	Reaction
2	N2	Reaction	Reaction	Reaction	Reaction	Reaction	Reaction
3	N3	Reaction	Reaction	Reaction	Reaction	Reaction	Reaction
4	N56	Reaction	Reaction	Reaction	Reaction	Reaction	Reaction
5	N58	Reaction	Reaction	Reaction	Reaction	Reaction	Reaction
6	N55	Reaction	Reaction	Reaction	Reaction	Reaction	Reaction

Envelope Joint Reactions

	Joint		X [lb]	LC	Y [lb]	LC	Z [lb]	LC	MX [k-ft]	LC	MY [k-ft]	LC	MZ [k-ft]	LC
1	N1	max	4303.945	4	876.747	6	842.79	1	-.647	1	2.624	4	.076	9
2		min	-4295.379	3	206.592	1	-570.617	2	-3.159	6	-2.636	3	-.067	10
3	N2	max	2278.416	1	871.326	5	4262.971	1	1.606	5	3.776	2	2.693	7
4		min	-2054.966	2	224.722	2	-4408.57	2	.397	2	-3.783	1	.641	4
5	N3	max	2030.918	4	878.629	8	3601.741	1	1.533	8	2.882	3	-.581	3
6		min	-2273.941	3	189.876	3	-3730.662	2	.316	3	-2.885	4	-2.753	8
7	N56	max	-443.691	3	2137.202	8	1641.492	8	0	4	0	3	0	3
8		min	-2832.134	8	319.071	3	233.545	3	0	3	0	4	0	4
9	N58	max	2825.793	7	2132.575	7	1637.838	7	0	1	0	1	0	1
10		min	471.962	4	339.763	4	249.827	4	0	2	0	2	0	2
11	N55	max	56.596	4	2155.191	5	-391.134	2	0	1	0	4	0	3
12		min	-56.481	3	251.392	2	-3302.86	5	0	1	0	3	0	4
13	Totals:	max	7456.696	4	8639.958	5	7587.662	1						
14		min	-7456.696	3	3352.381	2	-7587.662	2						

Envelope Member Section Forces

	Member	Sec		Axial[lb]	LC	y Shear[lb]	LC	z Shear[lb]	LC	Torque[k-...	LC	y-y Mome...	LC	z-z Mome...	LC
1	M1	1	max	1453.359	2	353.825	2	491.134	6	.006	10	.174	1	-.145	2
2			min	-1912.587	1	-376.854	1	-37.519	1	0	4	-.516	6	-.75	5
3		2	max	1479.245	2	-1.242	10	350.037	10	.003	1	.177	2	.104	3
4			min	-1841.759	1	-19.717	9	-79.218	3	-.003	2	-.127	1	-.148	9
5		3	max	1479.245	2	44.053	1	89.126	4	.003	1	.333	10	.342	10
6			min	-1841.759	1	-54.258	2	-95.875	3	-.003	2	-.06	1	-.105	2
7		4	max	1637.64	2	233.496	1	-72.486	1	.006	2	.249	6	.289	3
8			min	-1865.565	1	-228.789	2	-542.386	6	-.01	1	-.05	4	-.181	4
9		5	max	1637.64	2	284.548	1	-88.999	1	.006	2	.179	1	-.024	2
10			min	-1865.565	1	-279.841	2	-589.832	6	-.01	1	-.526	6	-.584	5
11	M2	1	max	1808.201	3	255.029	3	498.008	7	.003	6	.141	4	-.106	1
12			min	-2265.986	4	-277.763	4	-63.068	4	0	1	-.507	7	-.757	6
13		2	max	1563.519	3	11.143	4	131.45	2	.002	4	.197	1	.145	4
14			min	-1923.756	4	-21.315	3	-104.579	1	-.002	3	-.149	2	-.185	3
15		3	max	1541.413	3	49.432	4	114.793	2	.002	4	.097	3	.074	4
16			min	-1901.649	4	-59.604	3	-121.236	1	-.002	3	-.047	4	-.089	3
17		4	max	1440.428	3	204.558	4	-4.579	2	.005	3	.28	1	.262	1
18			min	-1665.934	4	-199.03	3	-555.916	5	-.008	4	-.113	2	-.155	2
19		5	max	1418.322	3	242.847	4	-21.092	2	.005	3	.116	4	-.057	3
20			min	-1643.828	4	-237.319	3	-603.362	5	-.008	4	-.51	7	-.575	8
21	M3	1	max	1751.179	1	319.308	4	492.998	5	.003	3	.101	3	-.077	4
22			min	-2209.105	2	-345.096	3	-45.238	2	-.001	4	-.498	8	-.765	7
23		2	max	1380.731	1	14.119	4	109.837	3	.002	3	.211	4	.136	2
24			min	-1742.025	2	-23.87	3	-83.122	4	-.002	4	-.162	3	-.174	1
25		3	max	1358.625	1	19.895	2	93.18	3	.002	3	.094	4	.072	3
26			min	-1719.919	2	-29.4	1	-99.779	4	-.002	4	-.044	3	-.088	4
27		4	max	1485.348	4	177.472	3	.945	3	.006	4	.286	4	.256	2
28			min	-1711.923	3	-172.767	4	-557.425	8	-.009	3	-.117	3	-.148	1
29		5	max	1507.454	4	215.76	3	-15.569	3	.006	4	.113	3	-.09	4
30			min	-1734.03	3	-211.056	4	-604.871	8	-.009	3	-.509	8	-.57	7
31	M4	1	max	842.79	1	876.901	6	4295.465	3	.076	9	2.624	4	3.159	6
32			min	-570.617	2	206.751	1	-4304.024	4	-.067	10	-2.636	3	.647	1
33		2	max	842.79	1	855.5	6	4267.581	3	.076	9	.396	3	2.545	6
34			min	-570.617	2	196.268	1	-4276.14	4	-.067	10	-.415	4	.504	1
35		3	max	684.719	1	1277.775	6	778.721	4	.14	3	.966	3	1.74	6
36			min	-647.701	2	265.225	1	-777.791	3	-.196	10	-.98	4	.333	1
37		4	max	684.719	1	1231.729	6	806.604	4	.14	3	.405	3	.851	6
38			min	-647.701	2	246.639	1	-805.675	3	-.196	10	-.419	4	.151	1
39		5	max	684.719	1	1185.682	6	834.488	4	.14	3	.162	4	.01	2
40			min	-647.701	2	228.052	1	-833.558	3	-.196	10	-.176	3	-.017	1
41	M5	1	max	739.08	4	871.575	5	4830.906	1	.097	4	3.776	2	3.126	7
42			min	-467.857	3	224.821	2	-4845.813	2	-.058	3	-3.783	1	.796	4
43		2	max	727.006	4	850.173	5	4809.993	1	.097	4	.543	3	2.52	7
44			min	-455.783	3	214.338	2	-4824.901	2	-.058	3	-.562	4	.617	4
45		3	max	574.363	4	1266.202	7	226.883	2	.069	5	.348	1	1.723	7
46			min	-538.823	3	317.104	4	-222.224	1	-.012	2	-.365	2	.408	4
47		4	max	562.289	4	1220.156	7	247.796	2	.069	5	.183	1	.843	7
48			min	-526.749	3	298.517	4	-243.136	1	-.012	2	-.197	2	.19	4
49		5	max	550.215	4	1174.109	7	268.709	2	.069	5	.095	3	.009	3
50			min	-514.675	3	279.931	4	-264.049	1	-.012	2	-.107	4	-.015	4
51	M6	1	max	748.257	3	878.806	8	4061.054	2	.069	2	2.882	3	3.151	8

Envelope Member Section Forces (Continued)

	Member	Sec		Axial[lb]	LC	y Shear[lb]	LC	z Shear[lb]	LC	Torque[k-...	LC	y-y Mome...	LC	z-z Mome...	LC
52			min	-477.595	4	190.019	3	-4065.355	1	-.035	9	-2.885	4	.661	3
53		2	max	736.183	3	857.405	8	4040.141	2	.069	2	.58	3	2.536	8
54			min	-465.521	4	179.536	3	-4044.442	1	-.035	9	-.597	4	.53	3
55		3	max	581.178	3	1273.004	8	585.918	1	.221	9	.693	2	1.733	8
56			min	-545.72	4	280.237	3	-587.664	2	-.056	1	-.706	1	.356	3
57		4	max	569.104	3	1226.957	8	606.831	1	.221	9	.269	2	.848	8
58			min	-533.646	4	261.65	3	-608.577	2	-.056	1	-.283	1	.164	3
59		5	max	557.03	3	1180.911	8	627.744	1	.221	9	.168	4	.008	4
60			min	-521.572	4	243.064	3	-629.49	2	-.056	1	-.177	3	-.015	3
61	M7	1	max	3799.441	3	-94.533	3	170.778	3	.003	3	.743	4	-.181	3
62			min	-2939.913	4	-1164.348	8	-181.093	4	-.004	4	-.707	3	-1.497	8
63		2	max	3811.435	3	-107.723	3	178.166	2	.003	3	.569	4	-.014	9
64			min	-2951.907	4	-1197.666	8	-188.018	4	-.004	4	-.543	3	-.397	6
65		3	max	3823.429	3	-123.061	3	198.94	2	.003	3	.39	4	.902	9
66			min	-2963.901	4	-1237.514	8	-200.739	1	-.004	4	-.373	3	.022	3
67		4	max	3402.244	3	750.092	8	263.667	2	.002	3	.202	4	1.809	8
68			min	-4918.284	4	133.518	3	-267.942	1	-.003	4	-.195	3	.129	3
69		5	max	3414.238	3	697.182	8	284.441	2	.002	3	.115	2	1.134	9
70			min	-4930.278	4	113.885	3	-288.717	1	-.003	4	-.112	1	.012	3
71	M8	1	max	3674.658	4	-104.765	4	363.325	1	.002	1	1.253	2	-.166	4
72			min	-2819.07	3	-1162.456	7	-372.597	2	-.003	2	-1.22	1	-1.502	7
73		2	max	3686.652	4	-117.956	4	384.099	1	.002	1	.894	2	-.062	4
74			min	-2831.064	3	-1195.774	7	-393.371	2	-.003	2	-.87	1	-.396	7
75		3	max	3698.647	4	-133.294	4	404.874	1	.002	1	.515	2	.744	7
76			min	-2843.058	3	-1235.622	7	-414.146	2	-.003	2	-.499	1	.056	4
77		4	max	3244.837	4	747.318	7	472.28	1	.002	1	.138	4	1.799	7
78			min	-4766.785	3	144.483	4	-477.699	2	-.003	2	-.131	3	.171	4
79		5	max	3256.831	4	694.408	7	493.055	1	.002	1	.346	1	1.122	7
80			min	-4778.779	3	124.85	4	-498.473	2	-.003	2	-.344	2	.044	4
81	M9	1	max	4325.725	2	-41.586	2	357.992	4	.001	4	1.2	3	-.099	2
82			min	-3469.47	1	-1177.428	5	-362.894	3	-.002	7	-1.179	4	-1.517	5
83		2	max	4325.725	2	-54.776	2	385.691	4	.001	4	.847	3	-.054	2
84			min	-3469.47	1	-1210.746	5	-390.593	3	-.002	7	-.83	4	-.397	5
85		3	max	4325.725	2	-70.114	2	413.39	4	.001	4	.467	3	.757	5
86			min	-3469.47	1	-1250.594	5	-418.292	3	-.002	7	-.455	4	.004	2
87		4	max	3996.1	2	754.766	5	498.022	4	0	4	.076	1	1.825	5
88			min	-5516.719	1	118.383	2	-502.886	3	-.002	7	-.069	2	.065	2
89		5	max	3996.1	2	701.856	5	525.721	4	0	4	.429	4	1.141	5
90			min	-5516.719	1	98.75	2	-530.585	3	-.002	7	-.427	3	-.037	2
91	M10	1	max	2167.21	3	343.339	8	-6.274	1	0	4	.046	3	.711	9
92			min	-3116.248	4	47.935	3	-170.191	6	0	7	-.22	8	.053	3
93		2	max	2167.21	3	312.054	8	-33.338	1	0	4	.032	3	.418	9
94			min	-3116.248	4	37.164	3	-163.178	6	0	7	-.115	9	-.016	3
95		3	max	2167.21	3	287.309	9	-51.29	4	0	4	.011	3	.138	4
96			min	-3116.248	4	26.295	3	-156.644	7	0	7	-.023	9	-.078	3
97		4	max	2167.21	3	276.469	9	-30.701	2	0	4	.06	9	-.003	4
98			min	-3116.248	4	15.455	3	-160.022	5	0	7	-.017	3	-.199	7
99		5	max	2167.21	3	271.079	9	-3.637	2	0	4	.136	9	-.111	2
100			min	-3116.248	4	10.065	3	-167.035	5	0	7	-.05	3	-.44	5
101	M11	1	max	1780.831	4	339.422	7	37.638	2	0	1	.123	1	.698	7
102			min	-2732.372	3	66.284	4	-174.948	5	0	6	-.269	2	.097	4
103		2	max	1792.55	4	308.137	7	30.872	2	0	1	.072	1	.389	7

Envelope Member Section Forces (Continued)

	Member	Sec		Axial[lb]	LC	y Shear[lb]	LC	z Shear[lb]	LC	Torque[k-...	LC	y-y Mome...	LC	z-z Mome...	LC
104			min	-2744.091	3	55.513	4	-173.195	5	0	6	-.143	2	.007	4
105		3	max	1804.269	4	276.553	7	24.106	2	0	1	.02	1	.149	3
106			min	-2755.81	3	44.644	4	-171.442	5	0	6	-.029	2	-.089	4
107		4	max	1815.988	4	245.057	7	17.341	2	0	1	.076	3	.054	3
108			min	-2767.529	3	33.804	4	-170.747	8	0	6	-.037	4	-.211	8
109		5	max	1827.707	4	230.136	7	32.62	3	0	1	.182	3	-.023	3
110			min	-2779.248	3	28.414	4	-176.007	8	0	6	-.107	4	-.462	8
111	M12	1	max	2254.385	2	344.621	5	72.918	3	0	4	.092	4	.713	5
112			min	-3202.759	1	42.031	2	-191.596	4	0	3	-.24	3	.014	2
113		2	max	2266.104	2	313.336	5	52.621	3	0	4	.048	4	.4	5
114			min	-3214.478	1	31.26	2	-180.002	8	0	3	-.12	3	-.045	2
115		3	max	2277.823	2	281.751	5	32.323	3	0	4	.011	4	.161	1
116			min	-3226.197	1	20.391	2	-174.742	8	0	3	-.02	3	-.102	2
117		4	max	2289.542	2	250.255	5	12.025	3	0	4	.064	1	.021	1
118			min	-3237.916	1	9.551	2	-169.482	8	0	3	-.026	2	-.206	6
119		5	max	2301.261	2	235.335	5	-8.273	3	0	4	.144	1	-.042	3
120			min	-3249.635	1	4.161	2	-164.222	8	0	3	-.07	2	-.456	8
121	MP1A	1	max	0	1	.085	4	.246	1	0	7	0	1	0	1
122			min	0	1	-.247	7	-.254	2	0	4	0	1	0	1
123		2	max	344.652	2	312.8	4	519.489	1	.067	2	.316	1	.104	8
124			min	-231.697	1	-242.593	3	-480.142	2	-.033	1	-.34	2	-.044	1
125		3	max	-93.46	1	297.696	3	652.863	2	0	3	1.304	1	.595	3
126			min	-334.993	6	-297.697	4	-652.867	1	0	4	-1.304	2	-.595	4
127		4	max	-14.474	1	47.211	3	75.054	2	0	3	.028	1	.028	3
128			min	-48.366	6	-47.212	4	-75.058	1	0	4	-.028	2	-.028	4
129		5	max	0	1	.178	4	.794	1	0	3	0	1	0	2
130			min	0	6	-.179	3	-.798	2	0	4	0	6	0	1
131	MP2A	1	max	0	1	0	4	.004	1	0	7	0	1	0	1
132			min	0	1	-.002	7	-.004	2	0	4	0	1	0	1
133		2	max	207.186	8	380.564	4	45.347	5	.109	1	.027	4	.16	4
134			min	5.564	3	-192.433	3	-16.506	2	-.124	2	-.037	3	-.141	3
135		3	max	282.785	8	436.136	4	100.284	1	.109	1	.087	1	.184	3
136			min	34.252	3	-248.005	3	-72.184	2	-.124	2	-.056	2	-.448	4
137		4	max	-6.247	1	21.172	3	21.27	2	0	4	.016	1	.016	3
138			min	-19.256	6	-21.09	4	-21.284	1	0	7	-.016	2	-.016	4
139		5	max	0	1	.188	7	.234	2	0	4	0	1	0	2
140			min	0	6	-.054	4	-.249	1	0	7	0	2	0	1
141	MP3A	1	max	0	1	.001	8	.004	5	0	3	0	1	0	1
142			min	0	1	0	3	-.003	2	0	8	0	1	0	1
143		2	max	414.337	6	251.192	4	76.612	1	.1	2	.101	2	.14	4
144			min	.815	10	-382.533	3	-59.529	2	-.075	1	-.094	1	-.131	3
145		3	max	433.594	6	272.228	4	97.647	1	.1	2	.051	5	.458	3
146			min	7.063	10	-403.569	3	-80.565	2	-.075	1	-.004	2	-.252	4
147		4	max	-6.247	1	21.04	3	21.071	2	0	8	.016	1	.016	3
148			min	-19.256	6	-21.049	4	-21.072	1	0	3	-.016	2	-.016	4
149		5	max	0	1	.005	3	.035	2	0	8	0	1	0	2
150			min	0	6	-.039	8	-.036	1	0	3	0	2	0	1
151	MP4A	1	max	170.524	6	140.524	4	192.53	1	.014	3	.017	7	0	1
152			min	79.32	4	-140.455	3	-192.494	2	-.014	4	.008	3	0	1
153		2	max	306.514	2	160.726	4	66.883	1	-.003	3	.021	1	.057	4
154			min	-196.478	1	-255.452	3	-47.603	2	-.043	5	-.057	10	-.113	3
155		3	max	312.761	2	181.762	4	87.919	1	-.003	3	.137	1	.286	3

Envelope Member Section Forces (Continued)

	Member	Sec		Axial[lb]	LC	y Shear[lb]	LC	z Shear[lb]	LC	Torque[k-...	LC	y-y Mome...	LC	z-z Mome...	LC
156			min	-190.23	1	-276.488	3	-68.639	2	-.043	5	-.111	2	-.2	4
157		4	max	-6.247	1	21.111	3	21.122	2	0	9	.016	1	.016	3
158			min	-19.256	6	-21.125	4	-21.137	1	0	3	-.016	2	-.016	4
159		5	max	0	1	.076	3	.087	2	0	9	0	8	0	2
160			min	0	6	-.114	9	-.101	1	0	3	0	1	0	1
161	MP1B	1	max	0	1	.238	8	.214	8	0	8	0	1	0	1
162			min	0	1	-.078	3	-.197	3	0	3	0	1	0	1
163		2	max	305.8	4	253.745	2	317.106	4	.064	4	.288	4	.051	2
164			min	-193.937	3	-324.845	1	-356.423	3	-.029	3	-.264	3	-.107	5
165		3	max	-93.46	3	334.786	1	488.447	3	0	4	.976	4	.669	1
166			min	-334.993	8	-334.786	2	-488.442	4	0	3	-.976	3	-.669	2
167		4	max	-14.474	3	46.992	1	58.917	3	0	4	.024	4	.025	1
168			min	-48.367	8	-46.992	2	-58.913	4	0	3	-.024	3	-.025	2
169		5	max	0	3	.263	4	.615	4	0	4	0	4	0	4
170			min	0	8	-.26	3	-.611	3	0	3	0	3	0	3
171	MP2B	1	max	0	1	.002	8	.003	4	0	8	0	1	0	1
172			min	0	1	0	3	-.003	3	0	3	0	1	0	1
173		2	max	237.671	9	235.975	2	18.942	1	.112	3	.062	2	.138	2
174			min	-38.702	2	-424.515	1	-46.864	2	-.127	4	-.052	1	-.156	1
175		3	max	291.241	5	284.125	2	59.625	4	.112	3	.047	4	.514	1
176			min	-10.014	2	-472.664	1	-87.743	3	-.127	4	-.078	3	-.249	2
177		4	max	-6.247	3	18.235	1	18.427	3	0	3	.014	4	.014	1
178			min	-19.257	8	-18.318	2	-18.412	4	0	8	-.014	3	-.014	2
179		5	max	0	3	.085	3	.21	3	0	3	0	3	0	1
180			min	0	8	-.2	8	-.194	4	0	8	0	4	0	2
181	MP3B	1	max	0	1	0	2	.003	4	0	2	0	1	0	1
182			min	0	1	-.001	5	-.004	7	0	5	0	1	0	1
183		2	max	415.115	8	343.263	4	54.36	4	.069	1	.091	3	.127	2
184			min	53.43	3	-209.977	3	-71.783	3	-.045	2	-.098	4	-.136	1
185		3	max	434.371	8	353.781	4	72.578	4	.069	1	0	1	.245	3
186			min	59.678	3	-220.494	3	-90	3	-.045	2	-.049	7	-.455	4
187		4	max	-6.248	2	18.233	1	18.25	3	0	5	.014	4	.014	1
188			min	-19.256	5	-18.225	2	-18.249	4	0	2	-.014	3	-.014	2
189		5	max	0	2	.041	5	.033	3	0	5	0	3	0	1
190			min	0	5	-.007	2	-.032	4	0	2	0	4	0	2
191	MP4B	1	max	170.524	6	132.906	2	155.468	4	.013	2	-.008	1	0	1
192			min	79.32	1	-132.976	1	-155.505	3	-.013	1	-.017	6	0	1
193		2	max	303.765	4	257.245	2	55.778	4	-.013	4	.019	3	.129	4
194			min	-192.124	3	-161.655	1	-74.994	3	-.042	7	-.017	4	-.072	3
195		3	max	310.013	4	275.463	2	73.996	4	-.013	4	.081	4	.233	1
196			min	-185.877	3	-179.873	1	-93.212	3	-.042	7	-.107	3	-.32	2
197		4	max	-6.247	2	18.282	1	18.342	3	0	7	.014	4	.014	1
198			min	-19.257	5	-18.27	2	-18.327	4	0	4	-.014	3	-.014	2
199		5	max	0	2	.096	7	.124	3	0	7	0	3	0	4
200			min	0	5	-.074	4	-.109	4	0	4	0	4	0	3
201	MP1C	1	max	0	1	.258	5	.215	7	0	5	0	1	0	1
202			min	0	1	-.099	2	-.194	4	0	2	0	1	0	1
203		2	max	271.321	3	274.543	1	375.661	3	.05	5	.191	3	.055	4
204			min	-156.003	4	-344.241	2	-414.57	4	-.014	2	-.167	4	-.109	3
205		3	max	-93.46	2	334.755	2	488.529	4	0	1	.976	3	.669	2
206			min	-334.993	5	-334.753	1	-488.525	3	0	2	-.976	4	-.669	1
207		4	max	-14.474	2	46.962	2	58.999	4	0	1	.025	3	.025	2

Envelope Member Section Forces (Continued)

	Member	Sec		Axial[lb]	LC	y Shear[lb]	LC	z Shear[lb]	LC	Torque[k-...	LC	y-y Mome...	LC	z-z Mome...	LC
208			min	-48.366	5	-46.959	1	-58.996	3	0	2	-.025	4	-.025	1
209		5	max	0	1	.244	1	.532	3	0	1	0	3	0	4
210			min	0	5	-.242	2	-.529	4	0	2	0	4	0	3
211	MP2C	1	max	0	1	.002	5	.003	3	0	5	0	1	0	1
212			min	0	1	0	2	-.003	4	0	2	0	1	0	1
213		2	max	216.345	7	196.072	4	21.586	3	.069	2	.05	4	.141	1
214			min	-41.803	4	-386.561	3	-49.609	4	-.084	1	-.04	3	-.159	2
215		3	max	291.944	7	223.897	4	69.781	3	.069	2	.029	3	.494	3
216			min	-13.116	4	-414.387	3	-97.804	4	-.084	1	-.061	4	-.226	4
217		4	max	-6.247	1	18.304	2	18.453	4	0	2	.014	3	.014	2
218			min	-19.256	6	-18.385	1	-18.438	3	0	5	-.014	4	-.014	1
219		5	max	0	5	.086	2	.236	4	0	2	0	4	0	4
220			min	0	2	-.199	5	-.221	3	0	5	0	3	0	3
221	MP3C	1	max	0	1	0	1	.003	3	0	1	0	1	0	1
222			min	0	1	-.001	6	-.004	8	0	6	0	1	0	1
223		2	max	408.886	5	420.543	1	45.94	3	.1	3	.07	4	.123	1
224			min	81.359	2	-288.882	2	-62.98	4	-.076	4	-.077	3	-.133	2
225		3	max	428.142	5	438.761	1	64.158	3	.1	3	.005	3	.314	2
226			min	87.606	2	-307.1	2	-81.197	4	-.076	4	-.051	8	-.521	1
227		4	max	-6.247	3	18.227	2	18.247	4	0	7	.014	3	.014	2
228			min	-19.256	8	-18.219	1	-18.245	3	0	4	-.014	4	-.014	1
229		5	max	0	7	.041	7	.029	4	0	7	0	4	0	2
230			min	0	4	-.007	4	-.028	3	0	4	0	3	0	1
231	MP4C	1	max	170.524	7	132.852	1	155.453	3	.013	1	-.008	4	0	1
232			min	79.32	1	-132.924	2	-155.49	4	-.013	2	-.017	8	0	1
233		2	max	266.857	3	240.628	1	31.909	1	-.003	3	.04	3	.138	1
234			min	-155.318	4	-145.641	2	-50.647	2	-.044	8	-.039	4	-.082	2
235		3	max	273.105	3	258.845	1	43.086	3	-.003	3	.091	3	.188	3
236			min	-149.071	4	-163.859	2	-62.022	4	-.044	8	-.118	4	-.276	4
237		4	max	-6.247	3	18.322	2	18.283	4	0	2	.014	3	.014	2
238			min	-19.256	8	-18.308	1	-18.268	3	0	1	-.014	4	-.014	1
239		5	max	0	7	.104	2	.094	6	0	2	0	4	0	2
240			min	0	4	-.09	1	-.077	1	0	1	0	3	0	1
241	M25	1	max	1698.264	2	376.523	2	596.836	6	.007	1	.263	1	.066	2
242			min	-1931.107	1	-393.744	1	139.307	3	-.004	2	-.64	2	-.665	5
243		2	max	1698.264	2	325.472	2	549.39	6	.007	1	.206	6	.263	4
244			min	-1931.107	1	-342.692	1	122.793	3	-.004	2	-.037	3	-.147	3
245		3	max	1459.175	2	95.961	2	68.149	2	.008	2	.146	2	.264	1
246			min	-1884.075	1	-93.285	1	-53.223	1	-.008	1	-.091	1	-.25	2
247		4	max	1459.175	2	44.909	2	51.492	2	.008	2	.305	2	.271	1
248			min	-1884.075	1	-42.233	1	-69.88	1	-.008	1	-.249	1	-.263	2
249		5	max	1459.578	2	1251.053	1	-13.181	1	.017	1	.655	1	.419	2
250			min	-1954.989	1	-1222.813	2	-696.377	6	-.023	2	-1.021	2	-.944	1
251	M26	1	max	1428.634	3	283.328	3	609.079	7	.007	4	.163	4	-.002	3
252			min	-1653.895	4	-303.378	4	83.205	4	-.004	3	-.541	7	-.652	8
253		2	max	1406.528	3	245.039	3	561.633	7	.007	4	.245	3	.234	2
254			min	-1631.788	4	-265.089	4	66.691	4	-.004	3	-.091	4	-.118	1
255		3	max	1306.357	1	54.045	3	61.18	7	.006	3	.112	1	.254	4
256			min	-1726.085	2	-51.584	4	-40.633	4	-.006	4	-.058	2	-.239	3
257		4	max	1328.463	1	40.319	1	37.6	3	.006	3	.184	3	.233	4
258			min	-1748.192	2	-36.955	2	-57.29	4	-.006	4	-.131	4	-.226	3
259		5	max	2016.506	1	1002.67	4	-72.609	4	.009	4	.404	4	.366	3

Envelope Member Section Forces (Continued)

	Member	Sec		Axial[lb]	LC	y Shear[lb]	LC	z Shear[lb]	LC	Torque[k-...	LC	y-y Mome...	LC	z-z Mome...	LC
260			min	-2506.922	2	-964.2	3	-683.369	5	-.015	3	-.764	3	-.899	4
261	M27	1	max	1356.264	4	316.981	4	607.991	5	.006	3	.202	3	.03	4
262			min	-1589.364	3	-336.739	3	88.164	2	-.003	4	-.576	4	-.657	7
263		2	max	1378.37	4	278.692	4	560.545	5	.006	3	.232	1	.237	1
264			min	-1611.47	3	-298.45	3	71.65	2	-.003	4	-.081	2	-.122	2
265		3	max	1444.969	4	98.151	4	61.15	5	.007	4	.154	4	.156	3
266			min	-1869.597	3	-94.648	3	-38.455	2	-.007	3	-.099	3	-.14	4
267		4	max	1467.075	4	59.862	4	35.486	4	.007	4	.304	4	.193	3
268			min	-1891.703	3	-56.359	3	-55.111	2	-.007	3	-.247	3	-.184	4
269		5	max	2032.471	4	894.964	3	-34.984	3	.015	3	.5	3	.108	4
270			min	-2528.025	3	-869.103	4	-694.76	8	-.02	4	-.866	4	-.773	6
271	M28	1	max	1910.645	4	-19.677	4	155.079	5	0	1	.121	7	-.112	1
272			min	-2850.19	3	-234.869	7	43.774	1	0	2	-.03	4	-.448	6
273		2	max	1910.645	4	-25.067	4	159.803	6	0	1	.064	7	-.009	3
274			min	-2850.19	3	-249.79	7	16.711	1	0	2	-.01	4	-.209	8
275		3	max	1910.645	4	-35.907	4	166.817	6	0	1	.004	4	.136	3
276			min	-2850.19	3	-281.285	7	-10.353	1	0	2	-.01	3	-.084	4
277		4	max	1910.645	4	-46.776	4	173.83	6	0	1	.011	4	.387	6
278			min	-2850.19	3	-312.87	7	-37.417	1	0	2	-.102	7	-.028	1
279		5	max	1910.645	4	-57.546	4	182.497	2	0	1	.011	4	.714	6
280			min	-2850.19	3	-344.155	7	-64.48	1	0	2	-.215	7	-.022	1
281	M29	1	max	2325.622	2	-16.151	2	166.729	7	0	4	.181	1	-.008	4
282			min	-3265.069	1	-236.189	5	-8.668	4	0	3	-.102	2	-.475	7
283		2	max	2313.903	2	-21.541	2	171.988	7	0	4	.083	1	.069	1
284			min	-3253.35	1	-251.11	5	-28.966	4	0	3	-.041	2	-.224	6
285		3	max	2302.184	2	-32.381	2	177.248	7	0	4	.011	2	.18	1
286			min	-3241.631	1	-282.606	5	-49.264	4	0	3	-.017	1	-.129	2
287		4	max	2290.465	2	-43.25	2	188.851	3	0	4	.051	2	.392	5
288			min	-3229.913	1	-314.19	5	-69.562	4	0	3	-.118	1	-.04	2
289		5	max	2278.746	2	-54.021	2	209.149	3	0	4	.079	2	.702	5
290			min	-3218.194	1	-345.476	5	-89.859	4	0	3	-.228	5	.051	2
291	M30	1	max	1754.735	3	-26.556	3	172.582	7	0	7	.174	4	-.03	4
292			min	-2689.277	4	-272.779	9	-17.928	4	0	9	-.094	3	-.472	7
293		2	max	1743.016	3	-31.946	3	167.322	7	0	7	.075	4	.059	4
294			min	-2677.559	4	-278.169	9	2.369	4	0	9	-.033	3	-.222	7
295		3	max	1731.297	3	-42.786	3	163.662	5	0	7	.01	3	.166	4
296			min	-2665.84	4	-289.009	9	22.667	4	0	9	-.022	9	-.114	3
297		4	max	1719.578	3	-53.655	3	165.416	5	0	7	.033	3	.417	9
298			min	-2654.121	4	-311.544	8	18.931	2	0	9	-.112	9	-.029	3
299		5	max	1707.86	3	-64.426	3	167.169	5	0	7	.036	3	.717	9
300			min	-2642.402	4	-342.829	8	12.165	2	0	9	-.22	6	.05	3
301	M31	1	max	3896.896	5	52.842	5	57.437	3	0	4	0	1	0	1
302			min	388.702	2	2.694	2	-57.437	4	0	3	0	1	0	1
303		2	max	3908.543	5	26.421	5	28.718	3	0	4	.05	3	-.002	2
304			min	407.763	2	1.347	2	-28.718	4	0	3	-.05	4	-.046	5
305		3	max	3920.19	5	0	1	0	1	0	4	.067	3	-.003	2
306			min	426.824	2	0	1	0	1	0	3	-.067	4	-.062	5
307		4	max	3931.836	5	-1.347	2	28.718	4	0	4	.05	3	-.002	2
308			min	445.885	2	-26.421	5	-28.718	3	0	3	-.05	4	-.046	5
309		5	max	3943.483	5	-2.694	2	57.437	4	0	4	0	1	0	1
310			min	464.946	2	-52.842	5	-57.437	3	0	3	0	1	0	1
311	M32	1	max	3863.921	8	53.318	8	45.089	1	0	3	0	1	0	1

Envelope Member Section Forces (Continued)

	Member	Sec		Axial[lb]	LC	y Shear[lb]	LC	z Shear[lb]	LC	Torque[k-...	LC	y-y Mome...	LC	z-z Mome...	LC
312			min	512.399	3	.999	3	-45.089	2	0	4	0	1	0	1
313		2	max	3875.193	8	26.659	8	22.545	1	0	3	.039	1	0	3
314			min	532.797	3	.499	3	-22.545	2	0	4	-.039	2	-.047	8
315		3	max	3886.465	8	0	1	0	1	0	3	.053	1	-.001	3
316			min	553.195	3	0	1	0	1	0	4	-.053	2	-.062	8
317		4	max	3897.736	8	-.499	3	22.545	2	0	3	.039	1	0	3
318			min	573.593	3	-26.659	8	-22.545	1	0	4	-.039	2	-.047	8
319		5	max	3909.008	8	-.999	3	45.089	2	0	3	0	1	0	1
320			min	593.992	3	-53.318	8	-45.089	1	0	4	0	1	0	1
321	M33	1	max	3855.262	7	53.318	7	45.089	2	0	1	0	1	0	1
322			min	551.032	4	.999	4	-45.089	1	0	2	0	1	0	1
323		2	max	3866.534	7	26.659	7	22.545	2	0	1	.039	2	0	4
324			min	571.43	4	.499	4	-22.545	1	0	2	-.039	1	-.047	7
325		3	max	3877.806	7	0	1	0	1	0	1	.053	2	-.001	4
326			min	591.828	4	0	1	0	1	0	2	-.053	1	-.062	7
327		4	max	3889.078	7	-.499	4	22.545	1	0	1	.039	2	0	4
328			min	612.226	4	-26.659	7	-22.545	2	0	2	-.039	1	-.047	7
329		5	max	3900.35	7	-.999	4	45.089	1	0	1	0	1	0	1
330			min	632.625	4	-53.318	7	-45.089	2	0	2	0	1	0	1
331	M34	1	max	0	1	0	1	0	1	0	1	0	1	0	1
332			min	0	1	0	1	0	1	0	1	0	1	0	1
333		2	max	192.016	3	85.228	4	51.894	3	.199	1	.186	1	.197	6
334			min	-334.553	4	-270.925	7	-75.397	4	-.184	2	-.174	2	-.045	1
335		3	max	-65.629	2	178.824	4	49.098	3	.024	10	.209	1	.16	6
336			min	-396.969	5	-105.758	3	-55.272	4	-.053	6	-.23	2	-.021	1
337		4	max	252.574	4	256.829	4	77.938	3	-.01	4	.289	1	.145	6
338			min	-338.494	3	-134.996	3	-56.117	4	-.134	5	-.293	2	-.073	1
339		5	max	0	1	0	1	0	1	0	1	0	1	0	1
340			min	0	1	0	1	0	1	0	1	0	1	0	1
341	M35	1	max	0	1	.01	3	.009	3	0	1	0	1	0	1
342			min	0	1	-.001	5	-.005	1	0	1	0	1	0	1
343		2	max	254	1	116.313	2	43.731	4	.159	4	.205	2	.196	7
344			min	-396.261	2	-293.519	1	-67.461	3	-.144	3	-.19	1	-.045	4
345		3	max	-4.654	3	163.56	2	37.547	4	.014	4	.157	4	.163	7
346			min	-409.371	8	-89.718	1	-43.773	3	-.053	7	-.178	3	-.037	4
347		4	max	339.689	3	264.447	3	66.165	1	-.004	3	.271	4	.138	5
348			min	-426.301	4	-140.546	4	-44.944	2	-.138	8	-.274	3	-.044	2
349		5	max	0	1	.001	7	.006	3	0	1	0	1	0	1
350			min	0	1	-.011	1	-.004	1	0	1	0	1	0	1
351	M36	1	max	0	1	.012	1	.002	1	0	1	0	1	0	1
352			min	0	1	-.001	8	-.006	4	0	1	0	1	0	1
353		2	max	203.41	4	78.749	3	40.833	2	.178	3	.219	3	.19	5
354			min	-345.24	3	-269.679	8	-63.922	1	-.162	4	-.205	4	-.016	2
355		3	max	-24.425	1	174.987	1	46.496	2	.022	10	.171	3	.159	5
356			min	-405.362	6	-102.308	2	-52.683	1	-.052	5	-.191	4	-.019	2
357		4	max	349.966	1	298.644	1	65.175	2	.022	1	.204	3	.144	8
358			min	-437.329	2	-175.696	2	-43.263	3	-.138	6	-.207	4	-.072	3
359		5	max	0	1	0	5	.005	1	0	1	0	1	0	1
360			min	0	1	-.009	4	-.01	4	0	1	0	1	0	1
361	M37	1	max	182.049	3	353.705	2	264.133	1	.003	1	.144	3	.296	2
362			min	-241.92	4	-289.387	1	-247.303	2	-.003	2	-.168	4	-.397	1
363		2	max	175.923	3	350.888	2	267.669	1	.003	1	.131	3	.092	2

Envelope Member Section Forces (Continued)

	Member	Sec		Axial[lb]	LC	y Shear[lb]	LC	z Shear[lb]	LC	Torque[k-...	LC	y-y Mome...	LC	z-z Mome...	LC
364			min	-235.794	4	-292.204	1	-250.84	2	-.003	2	-.125	4	-.209	1
365		3	max	169.798	3	348.07	2	271.206	1	.003	1	.12	3	-.013	4
366			min	-229.668	4	-295.022	1	-254.376	2	-.003	2	-.088	4	-.182	6
367		4	max	163.672	3	345.253	2	274.743	1	.003	1	.112	3	.175	1
368			min	-223.543	4	-297.839	1	-257.913	2	-.003	2	-.054	4	-.316	2
369		5	max	157.546	3	342.435	2	278.28	1	.003	1	.146	7	.37	1
370			min	-217.417	4	-300.657	1	-261.45	2	-.003	2	-.093	10	-.521	2
371	M38	1	max	163.655	4	381.052	1	308.64	2	.004	2	.066	4	.306	1
372			min	-223.576	3	-314.381	2	-289.146	1	-.004	1	-.085	3	-.408	2
373		2	max	169.781	4	378.235	1	305.103	2	.004	2	.079	1	.08	1
374			min	-229.702	3	-317.198	2	-285.609	1	-.004	1	-.073	2	-.197	2
375		3	max	175.907	4	375.417	1	301.566	2	.004	2	.11	1	.014	2
376			min	-235.828	3	-320.016	2	-282.073	1	-.004	1	-.078	2	-.179	5
377		4	max	182.033	4	372.6	1	298.03	2	.004	2	.142	1	.224	2
378			min	-241.953	3	-322.833	2	-278.536	1	-.004	1	-.086	2	-.366	1
379		5	max	188.158	4	369.782	1	294.493	2	.004	2	.174	1	.434	2
380			min	-248.079	3	-325.651	2	-274.999	1	-.004	1	-.095	2	-.585	1
381	M39	1	max	147.64	2	448.38	4	309.713	3	.004	3	.111	2	.358	4
382			min	-206.989	1	-383.76	3	-291.873	4	-.004	4	-.133	1	-.46	3
383		2	max	147.64	2	445.563	4	309.713	3	.004	3	.105	2	.107	4
384			min	-206.989	1	-386.578	3	-291.873	4	-.004	4	-.099	1	-.225	3
385		3	max	147.64	2	442.745	4	309.713	3	.004	3	.103	2	.012	3
386			min	-206.989	1	-389.395	3	-291.873	4	-.004	4	-.071	1	-.183	8
387		4	max	147.64	2	439.928	4	309.713	3	.004	3	.109	6	.249	3
388			min	-206.989	1	-392.213	3	-291.873	4	-.004	4	-.049	1	-.391	4
389		5	max	147.64	2	437.11	4	309.713	3	.004	3	.149	6	.487	3
390			min	-206.989	1	-395.03	3	-291.873	4	-.004	4	-.067	3	-.638	4

Envelope Joint Displacements

	Joint		X [in]	LC	Y [in]	LC	Z [in]	LC	X Rotation [...	LC	Y Rotation [...	LC	Z Rotation [...	LC
1	N1	max	0	3	0	1	0	2	0	6	0	3	0	10
2		min	0	4	0	6	0	1	0	1	0	4	0	9
3	N2	max	0	2	0	2	0	2	0	2	0	1	0	4
4		min	0	1	0	5	0	1	0	5	0	2	0	7
5	N3	max	0	3	0	3	0	2	0	3	0	4	0	8
6		min	0	4	0	8	0	1	0	8	0	3	0	3
7	N4	max	.004	1	.037	3	.027	4	2.911e-03	2	1.541e-03	4	6.433e-03	9
8		min	-.005	2	-.25	9	-.025	3	-1.836e-03	1	-1.472e-03	3	-1.776e-03	3
9	N5	max	.014	1	.028	4	.039	2	4.936e-03	2	1.021e-03	2	1.273e-03	4
10		min	-.012	2	-.235	7	-.04	1	-2.318e-03	1	-9.544e-04	1	-4.024e-03	7
11	N6	max	.06	3	.052	2	.016	2	1.083e-03	2	5.726e-04	3	2.086e-03	4
12		min	-.061	4	-.241	5	-.017	1	-5.527e-03	5	-5.211e-04	4	-2.975e-03	3
13	N7	max	.009	1	-.014	1	0	2	3.04e-03	6	4.43e-04	1	4.353e-04	10
14		min	-.008	2	-.071	6	0	1	5.893e-04	1	-4.18e-04	2	-3.144e-04	3
15	N8	max	.014	3	-.017	4	.023	3	-3.598e-04	2	9.269e-04	4	-5.431e-04	4
16		min	-.014	4	-.07	7	-.024	4	-1.656e-03	5	-9.008e-04	3	-2.539e-03	7
17	N9	max	.014	3	-.015	3	.024	4	-2.138e-04	3	7.909e-04	4	2.698e-03	8
18		min	-.014	4	-.07	8	-.023	3	-1.389e-03	5	-7.661e-04	3	5.945e-04	3
19	N10	max	.009	3	.025	9	.01	2	8.749e-04	2	3.528e-04	2	1.574e-03	4
20		min	-.01	4	.006	2	-.009	1	-4.028e-04	1	-3.481e-04	1	-7.02e-04	3

Envelope Joint Displacements (Continued)

	Joint		X [in]	LC	Y [in]	LC	Z [in]	LC	X Rotation [...	LC	Y Rotation [...	LC	Z Rotation [...	LC
21	N11	max	.01	3	.021	8	.016	2	1.676e-03	2	1.034e-03	1	5.142e-04	4
22		min	-.009	4	.006	3	-.015	1	-1.137e-03	1	-1.035e-03	2	-1.351e-03	3
23	N12	max	.018	3	.021	6	.013	2	9.854e-04	2	1.261e-03	4	1.354e-03	4
24		min	-.019	4	.006	1	-.015	1	-1.959e-03	1	-1.26e-03	3	-1.395e-03	3
25	NP1	max	.156	3	.015	1	.268	2	6.326e-03	2	2.318e-03	2	2.111e-03	4
26		min	-.15	4	-.215	6	-.26	1	-6.132e-03	1	-2.278e-03	1	-2.799e-03	3
27	NP2	max	.192	3	.045	1	.953	2	1.906e-02	1	4.399e-03	2	4.885e-03	3
28		min	-.19	4	-.221	6	-.937	1	-1.913e-02	2	-3.292e-03	1	-4.866e-03	4
29	NP3	max	.133	3	0	1	.299	2	5.253e-03	2	6.129e-04	2	8.924e-04	4
30		min	-.132	4	-.149	6	-.292	1	-5.507e-03	1	-5.951e-04	1	-1.481e-03	3
31	NP4	max	.035	1	0	1	.097	1	4.592e-03	2	2.769e-03	1	9.984e-04	4
32		min	-.088	2	-.149	6	-.065	2	-4.881e-03	1	-3.242e-03	2	-2.64e-03	3
33	NP5	max	.132	3	-.002	1	.279	2	4.837e-03	2	1.091e-03	1	1.413e-03	9
34		min	-.134	4	-.126	6	-.278	1	-5.334e-03	1	-1.264e-03	2	-1.134e-03	3
35	NP6	max	.094	10	-.004	1	.189	1	6.272e-03	2	1.838e-03	2	2.967e-03	10
36		min	-.023	3	-.125	6	-.165	2	-6.456e-03	1	-1.233e-03	1	-7.284e-04	3
37	NP7	max	.134	3	.004	1	.188	2	3.647e-03	2	2.185e-03	1	2.591e-03	4
38		min	-.139	4	-.191	6	-.193	1	-4.111e-03	1	-2.281e-03	2	-1.719e-03	3
39	NP8	max	.078	9	.006	1	.037	8	1.805e-03	2	1.413e-03	1	2.529e-03	9
40		min	-.052	3	-.191	6	-.009	2	-2.132e-03	1	-2.459e-03	2	-1.568e-03	3
41	NP11	max	.203	3	.043	3	.19	2	3.181e-03	2	2.586e-03	4	5.718e-03	4
42		min	-.212	4	-.221	8	-.187	1	-2.647e-03	1	-2.558e-03	3	-5.217e-03	3
43	NP12	max	.746	3	.066	3	.294	2	6.944e-03	1	4.56e-03	4	1.591e-02	3
44		min	-.763	4	-.226	8	-.301	1	-6.895e-03	2	-3.461e-03	3	-1.602e-02	4
45	NP13	max	.25	3	.004	3	.182	2	2.24e-03	2	1.428e-03	4	4.459e-03	4
46		min	-.254	4	-.15	8	-.182	1	-1.568e-03	1	-1.42e-03	3	-4.405e-03	3
47	NP14	max	.102	4	.005	3	.033	1	3.292e-03	2	2.048e-03	3	4.953e-03	4
48		min	-.104	3	-.15	8	-.095	2	-1.693e-03	1	-2.513e-03	4	-4.393e-03	3
49	NP15	max	.281	3	-.013	2	.172	2	2.226e-03	2	5.159e-04	2	3.81e-03	4
50		min	-.279	4	-.124	5	-.173	1	-2.157e-03	1	-6.747e-04	1	-4.393e-03	3
51	NP16	max	.084	4	-.013	2	.112	4	2.336e-03	2	1.959e-03	4	4.398e-03	4
52		min	-.131	3	-.123	5	-.082	3	-3.556e-03	4	-1.357e-03	3	-5.361e-03	3
53	NP17	max	.25	3	.032	2	.164	2	2.673e-03	2	1.396e-03	3	2.812e-03	4
54		min	-.241	4	-.197	5	-.164	1	-3.168e-03	1	-1.481e-03	4	-3.687e-03	3
55	NP18	max	.008	9	.033	2	.029	1	1.46e-03	2	8.115e-04	3	2.801e-03	4
56		min	-.041	7	-.197	5	-.034	2	-1.532e-03	1	-1.85e-03	4	-3.256e-03	3
57	NP21	max	.278	3	.042	2	.193	2	3.433e-03	2	1.546e-03	3	4.824e-03	4
58		min	-.275	4	-.221	5	-.2	1	-4.097e-03	1	-1.517e-03	4	-4.623e-03	3
59	NP22	max	.683	3	.051	2	.37	2	8.312e-03	1	2.744e-03	3	1.357e-02	3
60		min	-.67	4	-.224	5	-.381	1	-8.218e-03	2	-1.668e-03	4	-1.351e-02	4
61	NP23	max	.279	3	-.007	2	.192	2	2.227e-03	2	1.019e-03	1	4.191e-03	4
62		min	-.275	4	-.147	5	-.194	1	-2.573e-03	1	-1.02e-03	2	-3.654e-03	3
63	NP24	max	.082	8	-.007	2	.089	1	2.601e-03	2	1.971e-03	4	4.36e-03	4
64		min	-.026	3	-.147	5	-.061	2	-3.85e-03	1	-2.427e-03	3	-3.263e-03	3
65	NP25	max	.24	3	-.003	4	.213	2	2.484e-03	2	1.428e-03	4	4.185e-03	4
66		min	-.239	4	-.126	7	-.209	1	-1.982e-03	1	-1.594e-03	3	-3.863e-03	3
67	NP26	max	.145	4	-.004	4	.02	1	3.275e-03	2	1.519e-03	3	5.029e-03	4
68		min	-.148	3	-.125	7	-.083	6	-1.825e-03	1	-9.222e-04	4	-5.614e-03	3
69	NP27	max	.163	3	.031	4	.209	2	2.975e-03	2	1.952e-03	4	3.673e-03	4
70		min	-.166	4	-.197	7	-.2	1	-1.941e-03	1	-2.039e-03	3	-3.7e-03	3
71	NP28	max	.042	9	.033	4	.03	1	2.919e-03	2	1.12e-03	4	1.243e-03	4
72		min	-.005	2	-.197	7	-.051	2	-2.471e-03	1	-2.158e-03	3	-1.098e-03	3

Envelope Joint Displacements (Continued)

	Joint		X [in]	LC	Y [in]	LC	Z [in]	LC	X Rotation [...	LC	Y Rotation [...	LC	Z Rotation [...	LC
73	N37	max	.013	1	.03	1	.105	2	6.664e-03	1	4.398e-03	2	1.201e-03	2
74		min	-.012	2	-.218	6	-.093	1	-6.741e-03	2	-3.292e-03	1	-1.154e-03	1
75	N38	max	.01	1	0	1	.085	2	5.055e-03	2	2.769e-03	1	1.389e-03	4
76		min	-.01	2	-.149	6	-.062	1	-5.344e-03	1	-3.241e-03	2	-3.032e-03	3
77	N39	max	.008	1	-.004	1	.039	2	6.624e-03	2	1.838e-03	2	2.967e-03	10
78		min	-.007	2	-.125	6	-.02	1	-6.808e-03	1	-1.233e-03	1	-1.08e-03	3
79	N40	max	.005	1	.005	1	.052	2	2.496e-03	2	1.412e-03	1	2.533e-03	9
80		min	-.005	2	-.191	6	-.038	1	-2.824e-03	1	-2.459e-03	2	-2.168e-03	3
81	N41	max	.099	3	.047	2	.027	2	2.397e-03	3	2.744e-03	3	2.818e-03	3
82		min	-.09	4	-.223	5	-.034	1	-2.362e-03	4	-1.669e-03	4	-2.757e-03	4
83	N42	max	.081	3	-.007	2	.025	2	3.01e-03	2	1.971e-03	4	4.805e-03	4
84		min	-.061	4	-.147	5	-.037	1	-4.261e-03	1	-2.426e-03	3	-3.707e-03	3
85	N43	max	.035	3	-.004	4	.032	2	3.627e-03	2	1.519e-03	3	5.381e-03	4
86		min	-.019	4	-.125	7	-.041	1	-2.176e-03	1	-9.222e-04	4	-5.966e-03	3
87	N44	max	.036	1	.032	4	.046	2	3.543e-03	2	1.12e-03	4	1.911e-03	4
88		min	-.025	2	-.196	7	-.053	1	-3.095e-03	1	-2.158e-03	3	-1.766e-03	3
89	N45	max	.047	3	.055	3	.017	2	1.819e-03	9	4.559e-03	4	5.157e-03	3
90		min	-.058	4	-.224	8	-.022	1	-1.725e-03	3	-3.46e-03	3	-5.271e-03	4
91	N46	max	.039	3	.005	3	.013	2	3.703e-03	2	2.048e-03	3	5.399e-03	4
92		min	-.06	4	-.15	8	-.024	1	-2.101e-03	1	-2.513e-03	4	-4.838e-03	3
93	N47	max	.043	3	-.013	2	.011	2	2.687e-03	2	1.959e-03	4	4.75e-03	4
94		min	-.06	4	-.123	5	-.02	1	-3.862e-03	1	-1.357e-03	3	-5.713e-03	3
95	N48	max	.077	3	.032	2	.016	2	2.083e-03	2	8.113e-04	3	3.471e-03	4
96		min	-.089	4	-.197	5	-.023	1	-2.155e-03	1	-1.849e-03	4	-3.926e-03	3
97	N49	max	.007	3	-.002	1	0	2	1.672e-03	6	3.576e-04	3	6.473e-05	10
98		min	-.007	4	-.011	6	0	1	3.353e-04	1	-3.475e-04	4	-7.38e-05	9
99	N50	max	.005	2	-.003	4	.009	2	-2.056e-04	2	8.991e-04	1	-3.09e-04	4
100		min	-.005	1	-.011	7	-.01	1	-8.698e-04	5	-8.904e-04	2	-1.419e-03	7
101	N51	max	.004	3	-.002	3	.007	4	-1.604e-04	3	8.16e-04	4	1.467e-03	8
102		min	-.004	4	-.011	8	-.007	3	-7.923e-04	8	-8.084e-04	3	3.101e-04	3
103	N52	max	.036	3	.021	2	.014	2	9.524e-04	2	1.451e-03	4	1.495e-03	4
104		min	-.036	4	-.029	1	-.015	1	-4.688e-03	5	-1.443e-03	3	-1.739e-03	3
105	N53	max	0	1	0	1	0	1	0	1	0	1	0	1
106		min	0	1	0	1	0	1	0	1	0	1	0	1
107	N55	max	0	3	0	2	0	5	0	1	0	3	0	4
108		min	0	4	0	5	0	2	0	1	0	4	0	3
109	N55A	max	.01	3	.018	3	.014	2	2.165e-03	9	3.269e-04	2	4.269e-03	8
110		min	-.011	4	-.025	4	-.013	1	-5.303e-04	1	-3.159e-04	1	-8.271e-04	3
111	N56	max	0	8	0	3	0	3	0	3	0	4	0	4
112		min	0	3	0	8	0	8	0	4	0	3	0	3
113	N57	max	.009	3	.017	4	.028	2	2.987e-03	2	1.148e-03	1	5.503e-04	4
114		min	-.008	4	-.025	3	-.028	1	-1.205e-03	1	-1.143e-03	2	-3.779e-03	7
115	N58	max	0	4	0	4	0	4	0	2	0	2	0	2
116		min	0	7	0	7	0	7	0	1	0	1	0	1
117	N59	max	.127	3	.022	3	.146	2	3.583e-03	2	2.178e-03	1	2.531e-03	4
118		min	-.129	4	-.209	8	-.15	1	-4.005e-03	1	-2.274e-03	2	-1.653e-03	3
119	N60	max	.128	3	.028	4	.182	2	6.052e-03	2	2.314e-03	2	1.992e-03	4
120		min	-.129	4	-.23	7	-.176	1	-5.857e-03	1	-2.274e-03	1	-2.683e-03	3
121	N61	max	.127	3	.048	4	.191	2	2.899e-03	2	1.977e-03	4	3.574e-03	4
122		min	-.131	4	-.215	7	-.186	1	-1.88e-03	1	-2.064e-03	3	-3.64e-03	3
123	N62	max	.218	3	.065	2	.153	2	3.275e-03	2	1.543e-03	3	4.59e-03	4
124		min	-.213	4	-.238	5	-.154	1	-3.942e-03	1	-1.514e-03	4	-4.387e-03	3

Envelope Joint Displacements (Continued)

	Joint		X [in]	LC	Y [in]	LC	Z [in]	LC	X Rotation [...	LC	Y Rotation [...	LC	Z Rotation [...	LC
125	N63	max	.221	3	.054	2	.151	2	2.592e-03	2	1.359e-03	3	2.749e-03	4
126		min	-.215	4	-.217	5	-.149	1	-3.112e-03	1	-1.445e-03	4	-3.591e-03	3
127	N64	max	.129	3	.062	3	.152	2	3.026e-03	2	2.583e-03	4	5.483e-03	4
128		min	-.132	4	-.237	8	-.154	1	-2.488e-03	1	-2.554e-03	3	-4.981e-03	3
129	N65	max	.128	3	.016	1	.205	2	6.052e-03	2	2.318e-03	2	1.994e-03	4
130		min	-.129	4	-.215	6	-.199	1	-5.857e-03	1	-2.278e-03	1	-2.681e-03	3
131	N66	max	.128	3	0	1	.278	2	5.252e-03	2	6.129e-04	2	8.917e-04	4
132		min	-.129	4	-.149	6	-.27	1	-5.506e-03	1	-5.951e-04	1	-1.48e-03	3
133	N67	max	.127	3	-.002	1	.259	2	4.836e-03	2	1.091e-03	1	1.413e-03	9
134		min	-.129	4	-.126	6	-.256	1	-5.333e-03	1	-1.264e-03	2	-1.134e-03	3
135	N68	max	.127	3	.004	1	.173	2	3.583e-03	2	2.185e-03	1	2.528e-03	4
136		min	-.129	4	-.191	6	-.176	1	-4.005e-03	1	-2.281e-03	2	-1.656e-03	3
137	N69	max	.151	3	.044	3	.158	2	3.025e-03	2	2.586e-03	4	5.482e-03	4
138		min	-.155	4	-.221	8	-.16	1	-2.49e-03	1	-2.558e-03	3	-4.981e-03	3
139	N70	max	.232	3	.004	3	.173	2	2.24e-03	2	1.428e-03	4	4.459e-03	4
140		min	-.237	4	-.15	8	-.176	1	-1.567e-03	1	-1.42e-03	3	-4.404e-03	3
141	N71	max	.264	3	-.013	2	.163	2	2.225e-03	2	5.159e-04	2	3.809e-03	4
142		min	-.264	4	-.124	5	-.164	1	-2.157e-03	1	-6.747e-04	1	-4.393e-03	3
143	N72	max	.235	3	.032	2	.153	2	2.594e-03	2	1.365e-03	3	2.751e-03	4
144		min	-.23	4	-.197	5	-.151	1	-3.11e-03	1	-1.45e-03	4	-3.589e-03	3
145	N73	max	.231	3	.042	2	.159	2	3.276e-03	2	1.546e-03	3	4.589e-03	4
146		min	-.227	4	-.221	5	-.159	1	-3.941e-03	1	-1.517e-03	4	-4.388e-03	3
147	N74	max	.264	3	-.007	2	.183	2	2.226e-03	2	1.019e-03	1	4.19e-03	4
148		min	-.258	4	-.147	5	-.184	1	-2.573e-03	1	-1.02e-03	2	-3.653e-03	3
149	N75	max	.225	3	-.003	4	.203	2	2.484e-03	2	1.428e-03	4	4.185e-03	4
150		min	-.222	4	-.126	7	-.201	1	-1.981e-03	1	-1.594e-03	3	-3.863e-03	3
151	N76	max	.148	3	.031	4	.197	2	2.897e-03	2	1.983e-03	4	3.575e-03	4
152		min	-.151	4	-.196	7	-.192	1	-1.883e-03	1	-2.07e-03	3	-3.638e-03	3
153	N77	max	.128	3	.003	1	.187	2	3.518e-03	2	2.278e-03	1	2.213e-03	4
154		min	-.129	4	-.182	6	-.19	1	-3.901e-03	1	-2.336e-03	2	-1.189e-03	3
155	N78	max	.128	3	.012	1	.223	2	5.501e-03	2	2.324e-03	2	1.301e-03	4
156		min	-.129	4	-.204	6	-.217	1	-5.217e-03	1	-2.325e-03	1	-2.115e-03	3
157	N79	max	.159	3	.023	4	.2	2	2.523e-03	2	2.082e-03	4	3.415e-03	4
158		min	-.162	4	-.186	7	-.196	1	-1.396e-03	1	-2.131e-03	3	-3.589e-03	3
159	N80	max	.242	3	.026	2	.163	2	2.662e-03	2	1.569e-03	3	3.77e-03	4
160		min	-.237	4	-.207	5	-.164	1	-3.478e-03	1	-1.58e-03	4	-3.58e-03	3
161	N81	max	.242	3	.022	2	.154	2	2.231e-03	2	1.419e-03	3	2.444e-03	4
162		min	-.237	4	-.186	5	-.152	1	-2.898e-03	1	-1.466e-03	4	-3.326e-03	3
163	N82	max	.169	3	.031	3	.163	2	2.251e-03	2	2.584e-03	4	5.106e-03	4
164		min	-.172	4	-.208	8	-.166	1	-1.649e-03	1	-2.596e-03	3	-4.464e-03	3

Envelope AISC 14th(360-10): LRFD Steel Code Checks

	Member	Shape	Code Check	Loc[ft]	LC	Shear...	Loc[ft]	Dir	LC	phi*Pnc...	phi*Pnt ...	phi*Mn ...	phi*Mn ...	Cb	Eqn
1	M25	L3x3x4	.816	6.917	2	.177	6.917	y	2	16160....	46656	1.688	3.479	1...	H2-1
2	MP1A	PIPE_2.0	.771	3.833	2	.108	3.833		2	14916....	32130	1.872	1.872	2...	H1-1b
3	M27	L3x3x4	.670	6.917	4	.141	6.917	y	4	16160....	46656	1.688	3.423	1...	H2-1
4	MP1B	PIPE_2.0	.665	3.833	4	.097	3.833		4	14916....	32130	1.872	1.872	1...	H1-1b
5	MP1C	PIPE_2.0	.664	3.833	3	.082	3.833		3	14916....	32130	1.872	1.872	1...	H1-1b
6	M9	LL3x3x4x0	.625	2.775	5	.049	2.736	y	5	79166....	93312	6.48	3.069	1...	H1-1b
7	M7	LL3x3x4x0	.623	2.775	8	.050	2.736	y	8	79166....	93312	6.48	3.069	1...	H1-1b

Envelope AISC 14th(360-10): LRFD Steel Code Checks (Continued)

	Member	Shape	Code Check	Loc[ft]	LC	Shear...	Loc[ft]	Dir	LC	phi*Pnc...	phi*Pnt ...	phi*Mn ...	phi*Mn ...	Cb	Eqn
8	M8	LL3x3x4x0	.614	2.775	7	.048	2.736	y	6	79166....	93312	6.48	3.069	1...	H1-1b
9	M26	L3x3x4	.581	6.917	3	.126	6.917	y	3	16160....	46656	1.688	3.377	1...	H2-1
10	M2	L3x3x4	.491	0	7	.062	6.917	z	8	16160....	46656	1.688	3.756	3...	H2-1
11	M1	L3x3x4	.491	0	6	.062	6.917	z	5	16160....	46656	1.688	3.756	3...	H2-1
12	M3	L3x3x4	.488	0	5	.060	6.917	z	7	16160....	46656	1.688	3.756	3...	H2-1
13	M12	L3x3x4	.362	0	5	.026	0	y	5	34639.23	46656	1.688	3.756	2...	H2-1
14	M29	L3x3x4	.362	3.667	5	.026	3.667	y	5	34639.23	46656	1.688	3.756	2...	H2-1
15	MP2B	PIPE_2.0	.358	3.313	1	.089	3.313		3	20866....	32130	1.872	1.872	1...	H1-1b
16	MP3C	PIPE_2.0	.358	3.313	1	.070	3.313		3	20866....	32130	1.872	1.872	1...	H1-1b
17	M10	L3x3x4	.358	0	8	.026	0	y	8	34639.23	46656	1.688	3.756	2...	H2-1
18	M11	L3x3x4	.355	0	6	.026	0	y	6	34639.23	46656	1.688	3.756	2...	H2-1
19	M30	L3x3x4	.353	3.667	8	.026	3.667	y	8	34639.23	46656	1.688	3.756	2...	H2-1
20	M28	L3x3x4	.352	3.667	7	.026	3.667	y	7	34639.23	46656	1.688	3.756	2...	H2-1
21	MP2C	PIPE_2.0	.339	3.313	3	.089	3.313		3	20866....	32130	1.872	1.872	2...	H1-1b
22	M5	HSS4x4x4	.332	0	1	.131	0	z	1	134908...	139518	16.181	16.181	1...	H1-1b
23	MP3A	PIPE_2.0	.318	3.313	3	.079	3.313		2	20866....	32130	1.872	1.872	1...	H1-1b
24	MP2A	PIPE_2.0	.316	3.313	4	.100	3.313		2	20866....	32130	1.872	1.872	1...	H1-1b
25	MP3B	PIPE_2.0	.309	3.313	4	.078	3.313		4	20866....	32130	1.872	1.872	2...	H1-1b
26	M6	HSS4x4x4	.288	0	4	.111	0	z	2	134908...	139518	16.181	16.181	1...	H1-1b
27	M38	L3x3x4	.261	1.917	1	.043	0	y	1	43009....	46656	1.688	3.756	2...	H2-1
28	M39	L3x3x4	.256	1.917	4	.047	0	y	4	43009....	46656	1.688	3.756	2...	H2-1
29	M4	HSS4x4x4	.244	0	3	.116	0	z	3	134908...	139518	16.181	16.181	1...	H1-1b
30	MP4B	PIPE_2.0	.223	3.313	2	.045	3.313		6	20866....	32130	1.872	1.872	1...	H1-1b
31	MP4C	PIPE_2.0	.221	.375	1	.045	3.313		8	20866....	32130	1.872	1.872	2...	H1-1b
32	MP4A	PIPE_2.0	.210	.375	3	.043	3.313		7	20866....	32130	1.872	1.872	1...	H1-1b
33	M37	L3x3x4	.171	0	4	.037	0	y	2	43009....	46656	1.688	3.756	2...	H2-1
34	M36	PIPE_3.0	.101	4.604	8	.064	11.51		3	26386....	65205	5.749	5.749	2...	H1-1b
35	M35	PIPE_3.0	.101	4.604	5	.094	11.51		4	26386....	65205	5.749	5.749	2...	H1-1b
36	M34	PIPE_3.0	.098	4.604	6	.103	11.51		1	26386....	65205	5.749	5.749	2...	H1-1b
37	M31	LL2.5x2.5x...	.068	4.669	5	.004	0	z	3	57988....	77112	4.441	3.332	1	H1-1b*
38	M32	LL2.5x2.5x...	.067	4.669	8	.003	0	y	8	57988....	77112	4.441	3.332	1...	H1-1b*
39	M33	LL2.5x2.5x...	.067	4.669	7	.004	0	z	2	57988....	77112	4.441	3.332	1...	H1-1b*

EXHIBIT 9

MODIFICATION AND DESIGN DRAWINGS FOR EXISTING ANTENNA MOUNTS 158' MONOPOLE TOWER

PROPOSED CARRIER: T-MOBILE

TOWER OWNER: SBA / TOWER OWNER SITE #: CT01080-S

CARRIER SITE #/NAME: CT11247E / MIDDLETOWN

COORDINATES (LATITUDE: 41.511231°, LONGITUDE: -72.670744°)

PLEASE NOTE THIS SET OF DRAWINGS ARE FOR INSTALLATION AND ASSEMBLY ONLY. FABRICATION DETAIL DRAWINGS ARE NOT PROVIDED AND MUST BE COMPLETED BY THE STEEL FABRICATOR SELECTED. TES CAN PROVIDE THE FABRICATION DETAIL DRAWINGS FOR AN ADDITIONAL FEE.

NOTE:

1. THE MODIFICATION DRAWINGS ARE BASED ON THE **TES** PROJECT NO. 76824, DATED 06/07/2019.

SHEET	SHEET TITLE	REV
T-1	TITLE SHEET	0
BOM	BILL OF MATERIALS	0
GN-1	GENERAL NOTES	0
A-1	ANTENNA MOUNT MODIFICATION DETAILS	0
A-2	ANTENNA MOUNT PHOTOS	0
MS-HRECP-35	METROSITE SUPPORT RAIL WITH END CONNECTION KIT	

TES
Tower Engineering Solutions
1320 GREENWAY DRIVE, SUITE 600
IRVING, TX 75038
PH: (972) 483-0607

SBA
5900 BROKEN SOUND PARKWAY, NW
BOCA RATON, FL 33487
(800)-487-SITE

TES JOB NO: 80044

CUSTOMER SITE NO: CT01080-S-SBA

CUSTOMER SITE NAME: LONG HILL #1
1279 LONG HILL ROAD
MIDDLETOWN, CT 06457

STATE OF CONNECTICUT
HANNING YOU
28931
LICENSED
PROFESSIONAL ENGINEER

7/1/19

DRAWN BY: SP | CHECKED BY: ID/HMA

REV.	DESCRIPTION	BY	DATE
0	FIRST ISSUE	SP	07/01/19

SHEET TITLE: TITLE SHEET

This drawing/document is the property of **Tower Engineering Solutions, LLC.** Information contained herein is considered confidential in nature and is to be used only for the specific site that it was intended for. Reproduction, transmission, publication or disclosure by any method is prohibited except by express written permission from **Tower Engineering Solutions, LLC.** Without exception, the information on this drawing/document remains the property of **Tower Engineering Solutions, LLC.**

Copyright 2019 Tower Engineering Solutions, LLC

SHEET NUMBER: T-1

REV #: 0

BILL OF MATERIALS

QUANTITY COUNTED	QUANTITY PROVIDED	PART NUMBER	DESCRIPTIONS	SHEET LIST	PIECE WEIGHT (LBS)	WEIGHT (LB)	NOTES
			MATERIAL & HARDWARE				
1	1	MS-HRECP-35	METROSITE SUPPORT RAIL W/ END CONNECTION	A-1, MS-HRECP-35	514.0	514.0	Galvanized
			FOLLOWING ITEMS ARE "CUSTOM" PARTS				
			ALL METROSITE PARTS ARE AVAILABLE FROM METROSITE, LLC.				
			180 IND PARK BLVD COMMERCE, GA 30529				
			OFFICE: (706) 335-7045				
			FAX: (706) 335-7056				
			NOTE: ALL MATERIALS, WHICH WEREN'T LISTED IN THIS SHEET, ARE ASSUMED TO BE PROVIDED BY THE CONTRACTOR.				
				TOTAL WEIGHT (LBS) =		**514.0**	

Copyright 2019 Tower Engineering Solutions, LLC

TES
Tower Engineering Solutions
1320 GREENWAY DRIVE, SUITE 600
IRVING, TX 75038
PH: (972) 483-0607

SBA
5900 BROKEN SOUND PARKWAY, NW
BOCA RATON, FL 33487
(800)-487-SITE

TES JOB NO:
80044

CUSTOMER SITE NO:
CT01080-S-SBA
CUSTOMER SITE NAME:
LONG HILL #1
1279 LONG HILL ROAD
MIDDLETOWN, CT 06457

DRAWN BY: SP | CHECKED BY: ID/HMA

REV.	DESCRIPTION	BY	DATE
0	FIRST ISSUE	SP	07/01/19

SHEET TITLE:
BILL OF MATERIALS

This drawing/document is the property of **Tower Engineering Solutions, LLC.** Information contained herein is considered confidential in nature and is to be used only for the specific site that it was intended for. Reproduction, transmission, publication or disclosure by any method is prohibited except by express written permission from **Tower Engineering Solutions, LLC.** Without exception, the information on this drawing/document remains the property of **Tower Engineering Solutions, LLC.**

SHEET NUMBER: BOM
REV #: 0

GENERAL NOTES

1. ALL WORK SHALL COMPLY WITH THE ANSI/TIA-222-G, ANSI/ASSP A10.48, AND ANY OTHER GOVERNING BUILDING CODES AND OSHA SAFETY REGULATIONS.
2. ALL WORK INDICATED ON THE DRAWINGS SHALL BE PERFORMED BY QUALIFIED CONTRACTORS EXPERIENCED IN TELECOMMUNICATIONS TOWER, POLE AND FOUNDATION CONSTRUCTION.
3. THE CONTRACTOR SHALL BE RESPONSIBLE FOR THE DESIGN AND FABRICATION OF ALL MISCELLANEOUS PARTS (SUCH AS SHIMS), TEMPORARY SUPPORTS, AND GUYINGS, ETC., PER ANSI/ASSP A10.48, TO COMPLETE THE ASSEMBLY AS SHOWN IN THE DRAWINGS.
4. CONTRACTOR SHALL PROCEED WITH THE INSTALLATION WORK CAREFULLY SO THE WORK WILL NOT DAMAGE ANY EXISTING CABLE, EQUIPMENT OR THE STRUCTURE.
5. THE USE OF GAS TORCH OR WELDER, ARE NOT ALLOWED ON ANY TOWER STRUCTURE WITHOUT THE CONSENT OF THE TOWER OWNER.
6. GENERALLY THE CONTRACTOR IS RESPONSIBLE TO CONDUCT AN ONSITE VISIT SURVEY OF THE JOB SITE AFTER AWARD, AND REPORT ANY ISSUES WITH THE SITE TO **TES** BEFORE PROCEEDING CONSTRUCTION.
7. IT IS THE RESPONSIBILITY OF THE GC TO VERIFY THAT THERE IS NO INTERFERENCES (WITH SAFETY CLIMB BRACKETS, TRANSMISSION LINES, ETC.) PRIOR TO MOBILIZATION AND INSTALLATION OF THESE MODIFICATIONS.
8. PLEASE NOTIFY TES IMMEDIATELY IF ANY INSTALLATION ISSUES OCCUR RELATED TO THIS DRAWING @ 972-483-0607 OR EMAIL-TESCONSTRUCTION@TESTOWER.US

FABRICATION

1. ALL STEEL SHALL MEET OR EXCEED THE MINIMUM STRENGTH AS SPECIFIED IN THE DRAWINGS. IF YIELD STRENGTH WAS NOT NOTED IN THE DRAWINGS, CONTRACTORS SHALL CONTACT TES FOR DIRECTION.
2. ALL FIELD CUT EDGES SHALL BE GROUND SMOOTH. ALL FIELD CUT AND DRILLED SURFACES SHALL BE REPAIRED WITH A MINIMUM OF TWO COATS OF ZRC GALVILITE COLD GALVANIZING COMPOUND PER ASTM A780 AND MANUFACTURER'S RECOMMENDATIONS.

WELDING

1. ALL WELDING SHALL BE PERFORMED BY AWS CERTIFIED WELDERS AND IN ACCORDANCE WITH THE LATEST EDITION OF THE AWS WELDING CODE D1.1. ALL ELECTRODES TO BE LOW HYDROGEN, MATCHING FILLER METAL, PER AWS D1.1, UNO. (E70XX UNLESS NOTED OTHERWISE).
2. PRIOR TO FIELD WELDING GALVANIZED MATERIAL, CONTRACTOR SHALL GRIND OFF GALVANIZING APPROX. 0.5" BEYOND THE PROPOSED FIELD WELD SURFACES.
3. ALL WELDS SHALL BE INSPECTED VISUALLY. A MINIMUM OF 25% OF WELDS SHALL BE INSPECTED WITH DYE PENETRANT OR MAGNETIC PARTICLE TO MEET THE ACCEPTANCE CRITERIA OF AWS D1.1. 100% OF WELDS SHALL BE INSPECTED IF DEFECTS ARE FOUND.
4. WELD INSPECTIONS SHALL BE PERFORMED BY AN AWS CERTIFIED WELD INSPECTOR.
5. AFTER INSPECTION, ALL FIELD WELDED SURFACES SHALL BE REPAIRED WITH A MINIMUM OF TWO COATS OF ZRC GALVILITE COLD GALVANIZING COMPOUND PER ASTM A780 AND MANUFACTURER'S RECOMMENDATIONS.

BOLTED ASSEMBLIES AND TIGHTENING OF CONNECTIONS

1. ALL HIGH STRENGTH BOLTS SHALL CONFORM TO THE PROVISIONS OF THE SPECIFICATIONS FOR STRUCTURAL JOINTS USING A325 OR A490 BOLTS AS APPROVED BY THE RCSC.
2. FLANGE BOLTS SHALL BE TIGHTENED BY THE AISC "TURN-OF-THE-NUT" METHOD. THE FOLLOWING TABLE SHOULD BE USED FOR THE "TURN-OF-THE-NUT" TIGHTENING.
3. SPLICE BOLTS AND ALL OTHER BOLTS IN BEARING TYPE CONNECTIONS SHALL BE TIGHTENED TO A SNUG-TIGHT CONDITION.
4. THE SNUG-TIGHT CONDITION IS DEFINED AS THE TIGHTNESS ATTAINED BY EITHER A FEW IMPACTS OF AN IMPACT WRENCH OR THE FULL EFFORT OF AN IRONWORKER WITH AN ORDINARY SPUD WRENCH TO BRING THE CONNECTED PLIES INTO FIRM CONTACT.
5. HB HOLLO-BOLT SHALL BE INSTALLED PER ICC ESR-3330 INSTRUCTIONS.

VERIFICATION AND INSPECTION

1. IF APPLICABLE, VERIFICATION INSPECTION TO BE PERFORMED SHALL BE IN ACCORDANCE TO IBC-2015 SECTION 1705 FOR STEEL CONSTRUCTION AND TABLE 1705.3 FOR CONCRETE CONSTRUCTION.

TABLE 8.2 NUT ROTATION FROM SNUG-TIGHT CONDITION FOR TURN-OF-NUT PRETENSIONING[a,b]

BOLT LENGTH[c]	DISPOSITION OF OUTER FACE OF BOLTED PARTS		
	BOTH FACES NORMAL TO BOLT AXIS	ONE FACE NORMAL TO BOLT AXIS, OTHER SLOPED NOT MORE THAN 1:20[d]	BOTH FACES SLOPED NOT MORE THAN 1:20 FROM NORMAL TO BOLT AXIS[d]
NOT MORE THAN $4d_b$	1/3 TURN	1/2 TURN	2/3 TURN
MORE THAN $4d_b$ BUT NOT MORE THAN $8d_b$	1/2 TURN	2/3 TURN	5/6 TURN
MORE THAN $8d_b$ BUT NOT MORE THAN $12d_b$	2/3 TURN	5/6 TURN	1 TURN

[a] NUT ROTATION IS RELATIVE TO BOLT REGARDLESS OF THE ELEMENT (NUT OR BOLT) BEING TURNED. FOR REQUIRED NUT ROTATIONS OF 1/2 TURN AND LESS, THE TOLERANCE IS PLUS OR MINUS 30 DEGREES; FOR REQUIRED NUT ROTATIONS OF 2/3 TURN AND MORE, THE TOLERANCE IS PLUS OR MINUS 45 DEGREES.

[b] APPLICABLE ONLY TO JOINTS IN WHICH ALL MATERIAL WITHIN THE GRIP IS STEEL.

[c] WHEN THE BOLT LENGTH EXCEEDS $12d_b$, THE REQUIRED NUT ROTATION SHALL BE DETERMINED BY ACTUAL TESTING IN A SUITABLE TENSION CALIBRATOR THAT SIMULATES THE CONDITIONS OF SOLIDLY FITTING STEEL.

[d] BEVELED WASHER NOT USED.

SPECIFICATION FOR STRUCTURAL JOINTS USING ASTM A325 OR A490 BOLTS, JUNE 30, 2004
RESEARCH COUNCIL ON STRUCTURAL CONNECTIONS

INSTALLATION TORQUE REQUIRED FOR HOLLO BOLTS AND AJAX BOLTS:

1. HB12 HOLLO BOLT: 59 FT-LBS
2. HB16 HOLLO BOLT: 140 FT-LBS
3. HB20 HOLLO BOLT: 221 FT-LBS
4. M20 AJAX BOLT: 280 FT-LBS.

FIELD HOT WORK PLAN NOTES:

FOLLOWING GUIDELINES SHALL BE COMPLIED WITH:

1. CONTRACTOR'S RESPONSIBILITY TO COMPLETE A HOT WORK PLAN IF AWARDED PER CUSTOMER SPECIFICATIONS GUIDELINES FOR WELDING, CUTTING & SPARK PRODUCING WORK.
2. HAVE A FIRE PLAN APPROVED BY THE CUSTOMER AND THEIR SAFETY MANAGEMENT DEPT.
3. CONTRACTOR MUST OBTAIN THE CONTACT INFO OF THE LOCAL FIRE DEPARTMENT AND THE 911 ADDRESS OF THE TOWER SITE BEFORE CONSTRUCTION.
4. CONTRACTOR SHALL MAKE SURE THAT CELL PHONE COVERAGE IS AVAILABLE IN THE TOWER SITE. IF CELL COVERAGE IS NOT AVAILABLE, AN IMMEDIATE AVAILABLE MEANS OF DIRECT COMMUNICATION WITH THE FIRE DEPARTMENT SHALL BE DETERMINED PRIOR TO CONSTRUCTION START.
5. ALL CONSTRUCTION SHALL BE PERFORMED UNDER WIND SPEED LESS THAN 10 MPH ON THE GROUND LEVEL. IF WIND SPEED INCREASE, CONTRACTOR MUST DETERMINE IF CONSTRUCTION SHALL BE DISCONTINUED.
6. FIRE SUPPRESSION EQUIPMENT MUST BE MADE AVAILABLE ON SITE AND READY TO USE.
7. CONTRACTOR SHALL ASSIGN A FIRE WATCHER TO PERFORM FIRE-FIGHTING DUTIES.
8. ALL WELDERS SHALL BE AWS OR STATE CERTIFIED. THEY MUST ALSO BE EXPERIENCED IN WELDING ON GALVANIZED MATERIALS.
9. IF IT IS POSSIBLE, ALL EXISTING COAX NEAR WELDING AREA SHALL BE TEMPORARILY MOVED AWAY FROM THE WELDING AREA BEFORE WELDING THE PLATES.
10. PLEASE REPORT ANY FIELD ISSUE TO TES @ 972-483-0607.

TES
Tower Engineering Solutions
1320 GREENWAY DRIVE, SUITE 600
IRVING, TX 75038
PH: (972) 483-0607

SBA
5900 BROKEN SOUND PARKWAY, NW
BOCA RATON, FL 33487
(800)-487-SITE

TES JOB NO:
80044

CUSTOMER SITE NO:
CT01080-S-SBA
CUSTOMER SITE NAME:
LONG HILL #1
1279 LONG HILL ROAD
MIDDLETOWN, CT 06457

DRAWN BY: SP | CHECKED BY: ID/HMA

REV.	DESCRIPTION	BY	DATE
0	FIRST ISSUE	SP	07/01/19

SHEET TITLE:
GENERAL NOTES

This drawing/document is the property of **Tower Engineering Solutions, LLC.** Information contained herein is considered confidential in nature and is to be used only for the specific site that it was intended for. Reproduction, transmission, publication or disclosure by any method is prohibited except by express written permission from **Tower Engineering Solutions, LLC.** Without exception, the information on this drawing/document remains the property of **Tower Engineering Solutions, LLC.**

SHEET NUMBER: GN-1
REV #: 0

Copyright 2019 Tower Engineering Solutions, LLC

SCOPE OF WORK

1. INSTALL NEW SUPPORT RAIL WITH END CONNECTION KIT. SEE SHEET MS-HRECP-35 FOR DETAILS.
2. THE CONTRACTOR SHALL BE RESPONSIBLE FOR THE CLEAN-UP, REMOVAL AND DISPOSAL OF EXCESS MATERIALS USED AND REMOVED FROM THE STRUCTURE AT THE COMPLETION OF THE PROJECT.

EXISTING ANTENNA MOUNT
@ 137' ELEV

PHOTO 1

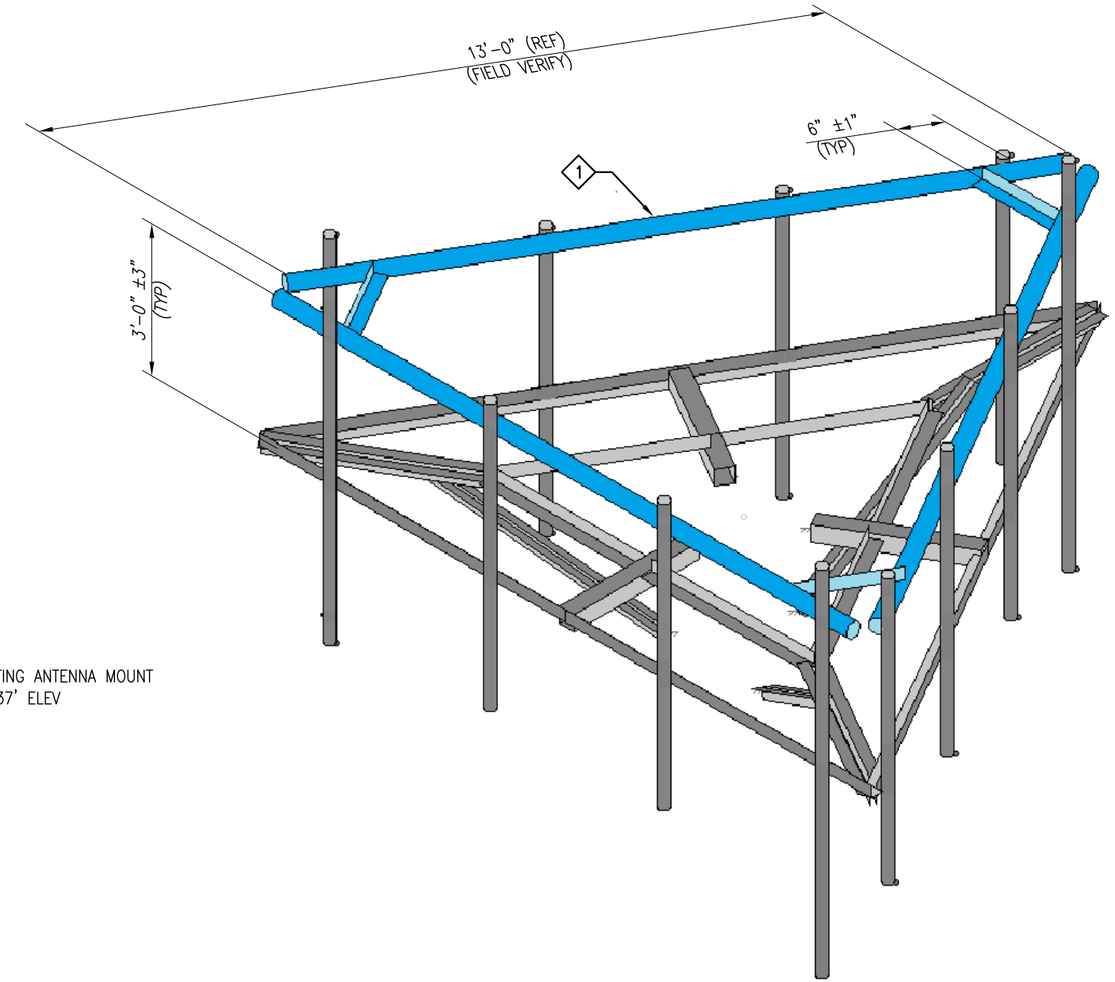

ISOMETRIC VIEW
EXISTING ANTENNA MOUNT @ 137' ELEV.

GC NOTE:
1. **IT IS THE RESPONSIBILITY OF THE GC TO VERIFY THAT THERE IS NO INTERFERENCES WITH (PORT HOLES, SAFETY CLIMB BRACKETS, TRANSMISSION LINES, ETC.) PRIOR TO MOBILIZATION AND INSTALLATION OF THESE MODIFICATIONS.**
2. **PLEASE NOTIFY TES IMMEDIATELY IF ANY INSTALLATION ISSUES OCCUR RELATED TO THIS DRAWING @ 972-483-0607 OR EMAIL-TESCONSTRUCTION@TESTOWER.US**

NOTES:
1. TEMPORARILY RELOCATE ANY EXISTING COAX ATTACHED TO THE LEGS AND/OR ANY OTHER MEMBERS WHERE OBSTRUCTION WITH THE PROPOSED MODIFICATION MAY OCCUR.
2. WHEN FIELD CUTTING AND DRILLING ANGLES, USE SAME GAGE LINES AND EDGE DISTANCES AS INDICATED ON SHOP CUT AND DRILLED ENDS.
3. APPLY (2) COATS OF ZINC RICH GALVANIZING COMPOUND AS PER THE MANUFACTURER'S SPECIFICATIONS TO ALL FIELD CUT AND DRILLED AREAS.
4. **MEMBERS IN BLUE COLOR ARE NEW REINFORCEMENTS.**

ITEM NO.	QTY.	PART NO.	DESCRIPTIONS
1	1	MS-HRECP-35	METROSITE SUPPORT RAIL W/ END CONNECTION

TES
Tower Engineering Solutions
1320 GREENWAY DRIVE, SUITE 600
IRVING, TX 75038
PH: (972) 483-0607

SBA
5900 BROKEN SOUND PARKWAY, NW
BOCA RATON, FL 33487
(800)-487-SITE

TES JOB NO: 80044

CUSTOMER SITE NO: CT01080-S-SBA

CUSTOMER SITE NAME: LONG HILL #1
1279 LONG HILL ROAD
MIDDLETOWN, CT 06457

DRAWN BY: SP | CHECKED BY: ID/HMA

REV.	DESCRIPTION	BY	DATE
0	FIRST ISSUE	SP	07/01/19

SHEET TITLE:
ANTENNA MOUNT MODIFICATION DETAILS

This drawing/document is the property of **Tower Engineering Solutions, LLC.** Information contained herein is considered confidential in nature and is to be used only for the specific site that it was intended for. Reproduction, transmission, publication or disclosure by any method is prohibited except by express written permission from **Tower Engineering Solutions, LLC.** Without exception, the information on this drawing/document remains the property of **Tower Engineering Solutions, LLC.**

Copyright 2019 Tower Engineering Solutions, LLC

SHEET NUMBER: A-1
REV #: 0

PHOTO 1

PHOTO 2

PHOTO 3

TES
Tower Engineering Solutions
1320 GREENWAY DRIVE, SUITE 600
IRVING, TX 75038
PH: (972) 483-0607

SBA
5900 BROKEN SOUND PARKWAY, NW
BOCA RATON, FL 33487
(800)-487-SITE

TES JOB NO:
80044

CUSTOMER SITE NO:
CT01080-S-SBA

CUSTOMER SITE NAME:
LONG HILL #1
1279 LONG HILL ROAD
MIDDLETOWN, CT 06457

DRAWN BY: SP | CHECKED BY: ID/HMA

REV.	DESCRIPTION	BY	DATE
0	FIRST ISSUE	SP	07/01/19

SHEET TITLE:

ANTENNA MOUNT PHOTOS

This drawing/document is the property of **Tower Engineering Solutions, LLC.** Information contained herein is considered confidential in nature and is to be used only for the specific site that it was intended for. Reproduction, transmission, publication or disclosure by any method is prohibited except by express written permission from **Tower Engineering Solutions, LLC.** Without exception, the information on this drawing/document remains the property of **Tower Engineering Solutions, LLC.**

SHEET NUMBER: A-2

REV #: 0

Copyright 2019 Tower Engineering Solutions, LLC

THE FOLLOWING DRAWINGS ARE INCLUDED FOR REFERENCE ONLY
PLEASE REFER TO THE INSTALLATION DRAWINGS FOR ACTUAL INSTALLATION DETAILS

NOTES:
1. ALL HOLES ARE 11/16" DIA. U.N.O
2. HOT-DIPPED GALVANIZED PER ASTM A123.

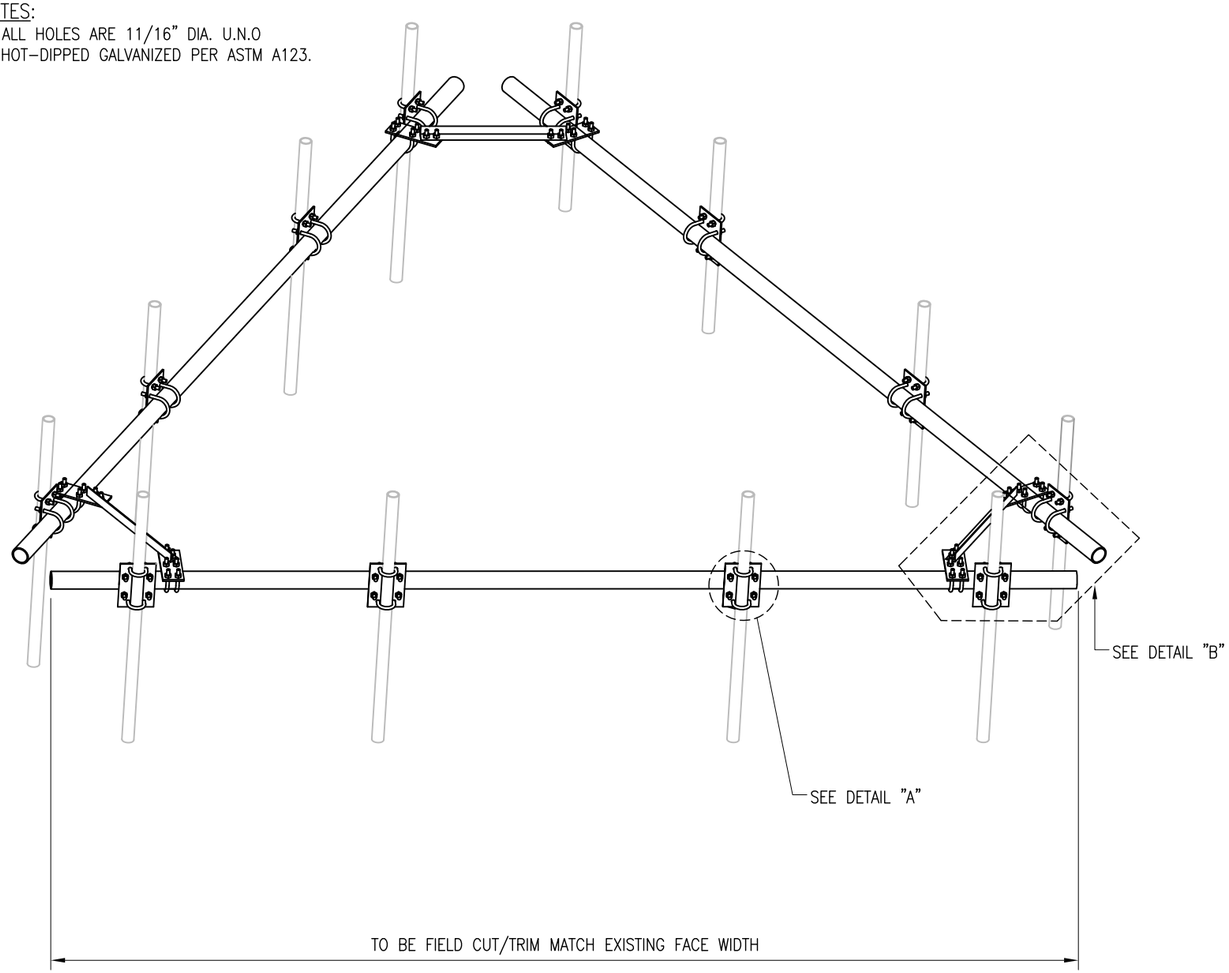

ELEVATION VIEW

MS-HRECP-35

ITEM NO.	QTY.	PART NO.	DESCRIPTION	GRADE	SHEET #	WT
1	3	3PST-140	3" PST (3.50" O.D X .216" THICK) X 14'-0"	A53 GR-B	TAF-1	337.2
2	12	PL375-10	PL 3/8" X 7 1/8" X 10"	A36	TAF-1	92.4
3	36	MS02-625-3625-600	RU-BOLT 5/8" X 3 5/8" I.W. X 6" I.L. A36 (OR EQUIV.)	A36	RBC-1	--
4	24	MS02-625-250-400	RU-BOLT 5/8" X 2 1/2" I.W. X 4" I.L. A36 (OR EQUIV.)	A36	RBC-1	--
5	6	PL375-11	PL 3/8" X 4 1/4" X 0'-11"	A36	TAF-1	30.2
6	3	AL-33C	L 3" X 3" X 1/4" X 3'-6"	A36	ECP-1	54.0
7	12	--	BOLT 5/8" X 2" A325 W/ HHN & LKW	A325	--	--
					GALVANIZED WT	514

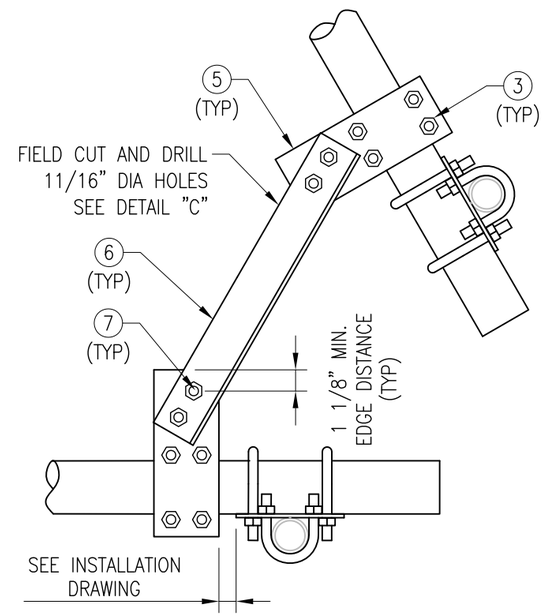

DETAIL "B"

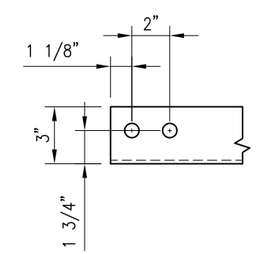

DETAIL "C"
11/16"ø HOLES FIELD DRILLED

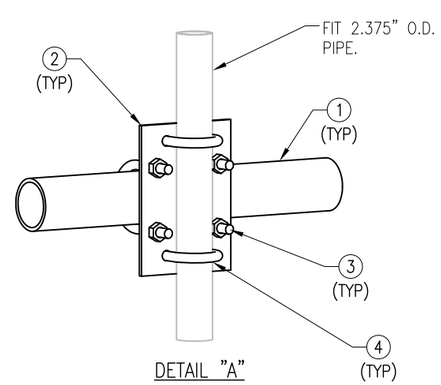

DETAIL "A"

THIRD ANGLE PROJECTION

METROSITE FABRICATORS LLC
180 INDUSTRIAL PARK BLVD.
COMMERCE GA 30529

UNLESS OTHERWISE SPECIFIED DIMENSIONS ARE IN INCHES AND INCLUDE FINISH

STANDARD SHEET TOLERANCES

DECIMALS	ANGLES
.X ± 0.1	± 1°
.XX ± 0.02	FRACTIONS
.XXX ± 0.005	± 1/32

CONFIDENTIAL
ALL INFORMATION ON THIS DOCUMENT IS PROPERTY OF METROSITE FABRICATORS LLC

APPROVAL / SIGNATURES		DATE
DRAWN BY	XXX	05/12/17
REVIEWED	XXX	-
APPROVED	XXX	-

TITLE
MS-HRECP-35
SUPPORT RAIL WITH END CONNECTION KIT

SIZE	DWG NO	REV
B	MS-HRECP-35	1

SCALE - SHEET 1 OF 1

EXHIBIT 10

Radio Frequency Emissions Analysis Report

T-MOBILE Existing Facility

Site ID: CT11247E

Middletown
1279 Long Hill Road
Middletown, CT 06457

May 15, 2019

Transcom Engineering Project Number: 737001-0004

Site Compliance Summary	
Compliance Status:	**COMPLIANT**
Site total MPE% of FCC general population allowable limit:	**14.82 %**

May 15, 2019

T-MOBILE
Attn: Jason Overbey, RF Manager
35 Griffin Road South
Bloomfield, CT 6009

Emissions Analysis for Site: **CT11247E – Middletown**

Transcom Engineering, Inc ("Transcom") was directed to analyze the proposed upgrades to the T-MOBILE facility located at **1279 Long Hill Road, Middletown, CT**, for the purpose of determining whether the emissions from the Proposed T-MOBILE Antenna Installation located on this property are within specified federal limits.

All information used in this report was analyzed as a percentage of current Maximum Permissible Exposure (% MPE) as listed in the FCC OET Bulletin 65 Edition 97-01and ANSI/IEEE Std C95.1. The FCC regulates Maximum Permissible Exposure in units of microwatts per square centimeter (μW/cm2). The number of $\mu W/cm^2$ calculated at each sample point is called the power density. The exposure limit for power density varies depending upon the frequencies being utilized. Wireless Carriers and Paging Services use different frequency bands each with different exposure limits, therefore it is necessary to report results and limits in terms of percent MPE rather than power density.

All results were compared to the FCC (Federal Communications Commission) radio frequency exposure rules, 47 CFR 1.1307(b)(1) – (b)(3), to determine compliance with the Maximum Permissible Exposure (MPE) limits for General Population/Uncontrolled environments as defined below.

General population/uncontrolled exposure limits apply to situations in which the general population may be exposed or in which persons who are exposed as a consequence of their employment may not be made fully aware of the potential for exposure or cannot exercise control over their exposure. Therefore, members of the general population would always be considered under this category when exposure is not employment related, for example, in the case of a telecommunications tower that exposes persons in a nearby residential area.

Population exposure to radio frequencies is regulated and enforced in units of microwatts per square centimeter ($\mu W/cm^2$). The general population exposure limits for the 600 & 700 MHz bands are approximately 400 $\mu W/cm^2$ and 467 $\mu W/cm^2$ respectively. The general population exposure limit for the 1900 MHz (PCS) and 2100 MHz (AWS) bands is 1000 $\mu W/cm^2$. Because each carrier will be using different frequency bands, and each frequency band has different exposure limits, it is necessary to report percent of MPE rather than power density.

Occupational/controlled exposure limits apply to situations in which persons are exposed as a consequence of their employment and in which those persons who are exposed have been made fully aware of the potential for exposure and can exercise control over their exposure. Occupational/controlled exposure limits also apply where exposure is of a transient nature as a result of incidental passage through a location where exposure levels may be above general population/uncontrolled limits (see below), as long as the exposed person has been made fully aware of the potential for exposure and can exercise control over his or her exposure by leaving the area or by some other appropriate means.

Additional details can be found in FCC OET 65.

CALCULATIONS

Calculations were performed for the proposed upgrades to the T-MOBILE antenna facility located at **1279 Long Hill Road, Middletown, CT**, using the equipment information listed below. All calculations were performed per the specifications under FCC OET 65. Since T-MOBILE is proposing highly focused directional panel antennas, which project most of the emitted energy out toward the horizon, all calculations were performed assuming a lobe representing the maximum gain of the antenna per the antenna manufactures supplied specifications, minus 10 dB for directional panel antennas, was focused at the base of the tower. For this report the sample point is the top of a 6-foot person standing at the base of the tower.

Per FCC OET Bulletin No. 65 - Edition 97-01 recommendations to achieve the maximum anticipated value at each sample point, all power levels emitting from the proposed antenna installation are increased by a factor of 2.56 to account for possible in-phase reflections from the surrounding environment. All power values expressed and analyzed are maximum power levels expected to be used on all radios.

All emissions values for additional carriers were taken from the Connecticut Siting Council (CSC) active MPE database. Values in this database are provided by the individual carriers themselves

For each sector the following channel counts, frequency bands and power levels were utilized as shown in *Table 1*:

Technology	Frequency Band	Channel Count	Transmit Power per Channel (W)
LTE	1900 MHz (PCS)	4	40
LTE	2100 MHz (AWS)	2	60
LTE / 5G NR	600 MHz	2	40
LTE	700 MHz	2	20
GSM	1900 MHz (PCS)	1	15

Table 1: Channel Data Table

The following antennas listed in *Table 2* were used in the modeling for transmission in the 600, 700 MHz, 1900 MHz (PCS) and 2100 MHz (AWS) frequency bands. This is based on feedback from the carrier with regards to anticipated antenna selection. Maximum gain values for all antennas are listed in the Inventory and Power Data table below. The maximum gain of the antenna per the antenna manufactures supplied specifications, minus 10 dB for directional panel antennas, was used for all calculations. This value is a very conservative estimate as gain reductions for these particular antennas are typically much higher in this direction.

Sector	Antenna Number	Antenna Make / Model	Antenna Centerline (ft)
A	1	Ericsson AIR32 B66A/B2A	137
A	2	RFS APXVAARR24_43-U-NA20	137
B	1	Ericsson AIR32 B66A/B2A	137
B	2	RFS APXVAARR24_43-U-NA20	137
C	1	Ericsson AIR32 B66A/B2A	137
C	2	RFS APXVAARR24_43-U-NA20	137

Table 2: Antenna Data

All calculations were done with respect to uncontrolled / general population threshold limits.

RESULTS

Per the calculations completed for the proposed T-MOBILE configurations *Table 3* shows resulting emissions power levels and percentages of the FCC's allowable general population limit.

Antenna ID	Antenna Make / Model	Frequency Bands	Antenna Gain (dBd)	Channel Count	Total TX Power (W)	ERP (W)	MPE %
Antenna A1	Ericsson AIR32 B66A/B2A	1900 MHz (PCS) / 2100 MHz (AWS)	15.9	6	280	10,893.26	2.28
Antenna A2	RFS APXVAARR24_43-U-NA20	600 MHz / 700 MHz / 1900 MHz (PCS)	12.95 / 13.35 / 15.65	7	215	4,571.89	2.16
						Sector A Composite MPE%	**4.44**
Antenna B1	Ericsson AIR32 B66A/B2A	1900 MHz (PCS) / 2100 MHz (AWS)	15.9	6	280	10,893.26	2.28
Antenna B2	RFS APXVAARR24_43-U-NA20	600 MHz / 700 MHz / 1900 MHz (PCS)	12.95 / 13.35 / 15.65	7	215	4,571.89	2.16
						Sector B Composite MPE%	**4.44**
Antenna C1	Ericsson AIR32 B66A/B2A	1900 MHz (PCS) / 2100 MHz (AWS)	15.9	6	280	10,893.26	2.28
Antenna C2	RFS APXVAARR24_43-U-NA20	600 MHz / 700 MHz / 1900 MHz (PCS)	12.95 / 13.35 / 15.65	7	215	4,571.89	2.16
						Sector C Composite MPE%	**4.44**

Table 3: T-MOBILE Emissions Levels

The Following table (*table 4*) shows all additional carriers on site and their MPE% as recorded in the CSC active MPE database for this facility along with the newly calculated maximum T-MOBILE MPE contributions per this report. FCC OET 65 specifies that for carriers utilizing directional antennas that the highest recorded sector value be used for composite site MPE values due to their greatly reduced emissions contributions in the directions of the adjacent sectors. For this site, all three sectors have the same configuration yielding the same results on all three sectors. *Table 5* below shows a summary for each T-MOBILE Sector as well as the composite MPE value for the site.

Site Composite MPE%	
Carrier	**MPE%**
T-MOBILE – Max Per Sector Value	**4.44 %**
Nextel	0.40 %
Sprint	0.32 %
Clearwire	0.09 %
Verizon Wireless	2.26 %
MetroPCS	0.56 %
AT&T	6.75 %
Site Total MPE %:	**14.82 %**

Table 4: All Carrier MPE Contributions

T-MOBILE Sector A Total:	4.44 %
T-MOBILE Sector B Total:	4.44 %
T-MOBILE Sector C Total:	4.44 %
Site Total:	14.82 %

Table 5: Site MPE Summary

FCC OET 65 specifies that for carriers utilizing directional antennas that the highest recorded sector value be used for composite site MPE values due to their greatly reduced emissions contributions in the directions of the adjacent sectors. *Table 6* below details a breakdown by frequency band and technology for the MPE power values for the maximum calculated T-MOBILE sector(s). For this site, all three sectors have the same configuration yielding the same results on all three sectors.

T-MOBILE _ Frequency Band / Technology Max Power Values (Per Sector)	**# Channels**	**Watts ERP (Per Channel)**	**Height (feet)**	**Total Power Density ($\mu W/cm^2$)**	**Frequency (MHz)**	**Allowable MPE ($\mu W/cm^2$)**	**Calculated % MPE**
T-Mobile 1900 MHz (PCS) LTE	4	1,556.18	137	13.04	1900 MHz (PCS)	1000	1.30%
T-Mobile 2100 MHz (AWS) LTE	2	2,334.27	137	9.78	2100 MHz (AWS)	1000	0.98%
T-Mobile 600 MHz LTE / 5G NR	4	788.97	137	6.61	600 MHz	400	1.65%
T-Mobile 700 MHz LTE	2	432.54	137	1.81	700 MHz	467	0.39%
T-Mobile 1900 MHz (PCS) GSM	1	550.92	137	1.15	1900 MHz (PCS)	1000	0.12%
						Total:	**4.44%**

Table 6: T-MOBILE Maximum Sector MPE Power Values

Summary

All calculations performed for this analysis yielded results that were **within** the allowable limits for general population exposure to RF Emissions.

The anticipated maximum composite contributions from the T-MOBILE facility as well as the site composite emissions value with regards to compliance with FCC's allowable limits for general population exposure to RF Emissions are shown here:

T-MOBILE Sector	Power Density Value (%)
Sector A:	4.44 %
Sector B:	4.44 %
Sector C:	4.44 %
T-MOBILE Maximum Total (per sector):	4.44 %
Site Total:	14.82 %
Site Compliance Status:	**COMPLIANT**

The anticipated composite MPE value for this site assuming all carriers present is **14.82 %** of the allowable FCC established general population limit sampled at the ground level. This is based upon values listed in the Connecticut Siting Council database for existing carrier emissions.

FCC guidelines state that if a site is found to be out of compliance (over allowable thresholds), that carriers over a 5% contribution to the composite value will require measures to bring the site into compliance. For this facility, the composite values calculated were well within the allowable 100% threshold standard per the federal government.

Scott Heffernan
RF Engineering Director
Transcom Engineering, Inc
PO Box 1048
Sterling, MA 01564