Sprint

AUGMENT ID:	CT- HFD0042F17.1
SPRINT SITE CASCADE:	CT52XC028
SPRINT SITE NAME:	SBA HILLIARD
SITE TYPE:	MONOPOLE
LANDLORD SITE ID:	CT13063-A

SPRINT CLEARWIRE MW-TO-LIT FIBER

SITE ADDRESS:	640 HILLIARD STREET MANCHESTER, CT 06042
COUNTY:	HARTFORD
JURISDICTION:	TOWN OF MANCHESTER

PROJECT INFORMATION

SPRINT SITE CASCADE	CT52XC028
SPRINT SITE NAME	SBA HILLIARD
LANDLORD SITE ID	CT13063-A
SITE ADDRESS:	640 HILLIARD STREET MANCHESTER, CT 06042
COUNTY:	HARTFORD
MAP/PARCEL #:	292000640
LATITUDE:	41.7845°
LONGITUDE:	-72.5508°
LAT/LONG TYPE:	NAD83
GROUND ELEV. (A.M.S.L.):	100'
CURRENT ZONING:	INDUSTRIAL
JURISDICTION:	TOWN OF MANCHESTER
OCCUPANCY CLASSIFICATION:	U
CONSTRUCTION TYPE:	II-B
A.D.A. COMPLIANCE	FACILITY IS UNMANNED AND NOT FOR HUMAN HABITATION
TOWER OWNER:	SBA INFRASTRUCTURE, LLC 8051 CONGRESS AVENUE BOCA RATON, FL 33487 PHONE: (561) 995-7670
CARRIER/APPLICANT:	SPRINT 6391 SPRINT PARKWAY OVERLAND PARK, KS 66251-2650
ELECTRIC PROVIDER:	NORTHEAST UTILITIES SERVICES COMPANY
FIBER PROVIDER:	COX
PROPOSED USE:	TELECOMMUNICATIONS FACILITY

PROJECT CONSULTANTS

SAC CONTACTS:	SAC WIRELESS 540 W. MADISON ST., 9TH FLOOR CHICAGO, IL 60661 ERIC LEE (815) 793-0730 eric.lee@sacw.com
SPRINT CONTACT:	ARRIN ARENSMAN (913) 481-7344 arrin.arensman@sprint.com
ENGINEER/ARCHITECT:	FULLERTON ENGINEERING
ADDRESS:	1100 E. WOODFIELD ROAD, SUITE 500 SCHAUMBURG, ILLINOIS 60173
CONTACT:	NATHAN WARKEL
PHONE:	(847) 908-8564
EMAIL:	nwarkel@fullertonengineering.com

DRAWING INDEX

T-1	TITLE SHEET
AAV-1	CLEARWIRE MW-TO-LIT FIBER SITE PLANS
AAV-2	CLEARWIRE MW-TO-LIT FIBER EQUIPMENT DETAILS
AAV-3	CLEARWIRE MW-TO-LIT FIBER EQUIPMENT DETAILS
AAV-4	SITE PHOTOS

SCOPE OF WORK

THE HEAVY SCOPE OF WORK CONSISTS OF:

SPRINT:
1. INSTALL A NEW H-FRAME ON THE CLEARWIRE CONCRETE PAD.
2. INSTALL A NEW PURCELL BOX ON THE NEW H-FRAME
3. INSTALL NEW ±6' OF NEW (2) 2" CONDUITS FROM THE NEW PURCELL BOX TO THE CLEARWIRE CABINET (1 FOR FIBER, 1 FOR POWER)
4. INSTALL NEW ±6' OF NEW FIBER AND POWER THROUGH NEW (2) 2" CONDUITS FROM THE NEW PURCELL BOX TO THE CLEARWIRE CABINET
5. INSTALL ±30' OF NEW 3" CONDUIT WITH (2) 1" INNER-DUCTS FROM NEW MMP TO NEW PURCELL BOX.

FIBER VENDOR:
1. INSTALL NEW NID IN THE NEW PURCELL BOX.
2. INSTALL ±30' OF NEW FIBER THROUGH NEW 3" CONDUIT WITH (2) 1" INNER-DUCTS FROM NEW MMP TO NEW PURCELL BOX.
3. PROPOSED MMP WILL BE OUTSIDE THE FENCED AREA APPROXIMATELY ±30' TO NID LOCATION

- CONTRACTOR SHALL FURNISH ALL MATERIAL WITH THE EXCEPTION OF SPRINT SUPPLIED MATERIAL.
- ALL MATERIAL SHALL BE INSTALLED BY THE CONTRACTOR, UNLESS STATED OTHERWISE.

NOTE: DRAWING SCALES ARE FOR 11"x17" SHEETS UNLESS OTHERWISE NOTED

SITE VICINITY MAP

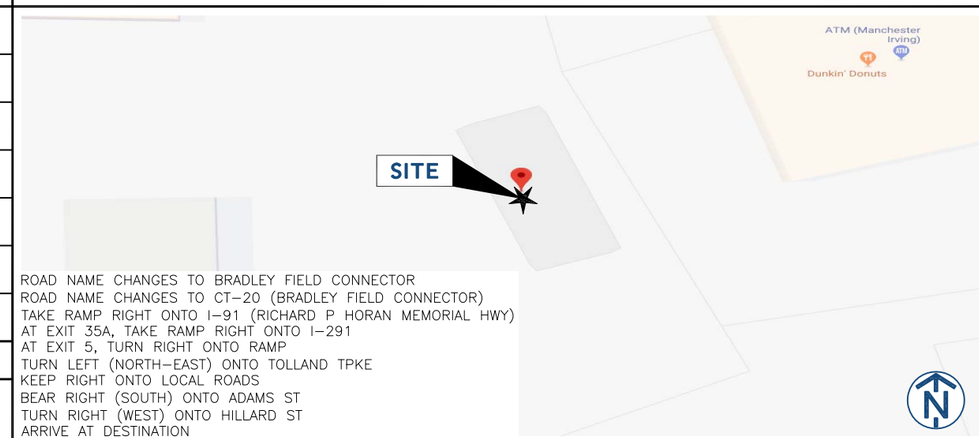

ROAD NAME CHANGES TO BRADLEY FIELD CONNECTOR
ROAD NAME CHANGES TO CT-20 (BRADLEY FIELD CONNECTOR)
TAKE RAMP RIGHT ONTO I-91 (RICHARD P HORAN MEMORIAL HWY)
AT EXIT 35A, TAKE RAMP RIGHT ONTO I-291
AT EXIT 5, TURN RIGHT ONTO RAMP
TURN LEFT (NORTH-EAST) ONTO TOLLAND TPKE
KEEP RIGHT ONTO LOCAL ROADS
BEAR RIGHT (SOUTH) ONTO ADAMS ST
TURN RIGHT (WEST) ONTO HILLARD ST
ARRIVE AT DESTINATION

N

NO SCALE

APPLICABLE BUILDING CODES AND STANDARDS

ALL WORK AND MATERIALS SHALL BE PERFORMED AND INSTALLED IN ACCORDANCE WITH THE CURRENT EDITIONS OF THE FOLLOWING CODES AS ADOPTED BY THE LOCAL GOVERNING AUTHORITIES. NOTHING IN THESE PLANS IS TO BE CONSTRUCTED TO PERMIT WORK NOT CONFORMING TO THESE CODES.

- 2018 CONNECTICUT STATE BUILDING CODE (2018 IBC)
- 2017 NFPA 70 NATIONAL ELECTRICAL CODE

- FACILITY IS UNMANNED AND NOT FOR HUMAN HABITATION.
- ADA ACCESS REQUIREMENTS ARE NOT REQUIRED.
- THIS FACILITY DOES NOT REQUIRE POTABLE WATER AND WILL NOT PRODUCE ANY SEWAGE

CALL 811 before you DIG
811 Know what's below. Call before you dig.
www.ctbyd.com

GENERAL ABBREVIATIONS

FV	FIBER VENDOR
DFV	DARK FIBER VENDOR
MMP	MEET ME POINT
NID	NETWORK INTERFACE DEVICE
MMBTS	MULTI MODAL BASE TRANSMISSION STATION
AGL	ABOVE GRADE LEVEL
APPROX	APPROXIMATE
BLDG	BUILDING
℄	CENTERLINE
CND	CONDUIT
FT	FOOT(FEET)
ELEV	ELEVATION
EQUIP	EQUIPMENT
(E)	EXISTING
N.T.S.	NOT TO SCALE
PPC	POWER PROTECTION CABINET
TELCO	TELCO
ROW	RIGHT OF WAY

Sprint

SAC WIRELESS
540 W. MADISON ST., 9TH FLOOR
CHICAGO, IL 60661

FULLERTON ENGINEERING · DESIGN
1100 E. WOODFIELD ROAD, SUITE 500
SCHAUMBURG, ILLINOIS 60173
TEL: 847-908-8400
COA# PEC.0001444
www.FullertonEngineering.com

REV	DATE	DESCRIPTION	BY
A	9/7/18	90% REVIEW	MI
B	10/01/18	100% REVIEW	BS
0	10/16/18	FINAL	TJ

I HEREBY CERTIFY THAT THESE DRAWINGS WERE PREPARED BY ME OR UNDER MY DIRECT SUPERVISION AND CONTROL, AND TO THE BEST OF MY KNOWLEDGE AND BELIEF COMPLY WITH THE REQUIREMENTS OF ALL APPLICABLE CODES.

STATE OF CONNECTICUT · HENRY M. BELLAGAMBA · 25358 · LICENSED PROFESSIONAL ENGINEER

SITE NAME
SBA HILLIARD

SITE NUMBER:
CT52XC028

SITE ADDRESS
640 HILLIARD STREET
MANCHESTER, CT 06042

SHEET TITLE
TITLE SHEET

SHEET NUMBER
T-1

PROJECT# 2018.0203.0316

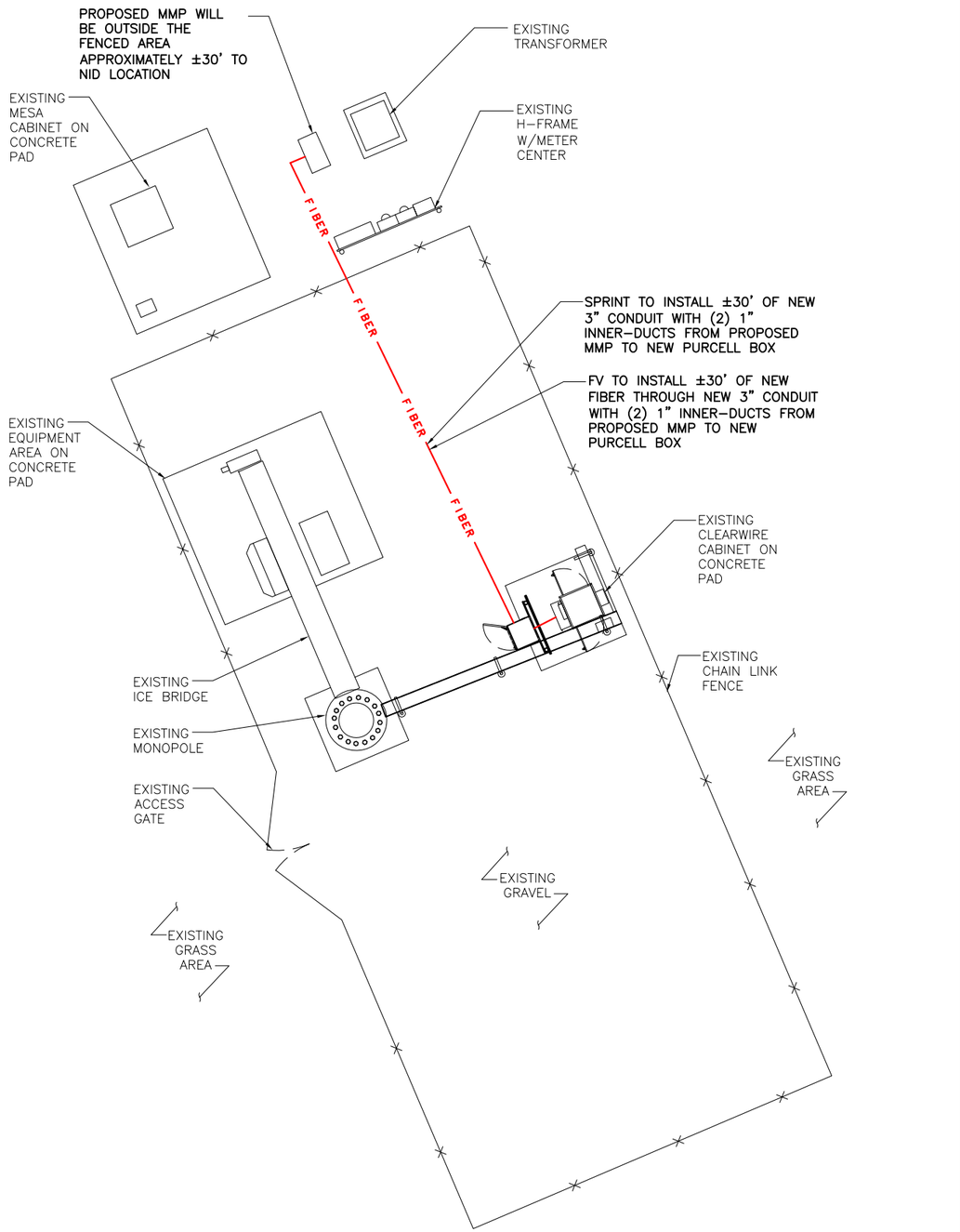

DETAILED SITE PLAN SCALE: 3/32" = 1'-0" 1

PROJECT SCOPE (HEAVY SCOPE):

SPRINT:
1. INSTALL A NEW H-FRAME ON THE CLEARWIRE CONCRETE PAD.
2. INSTALL A NEW PURCELL BOX ON THE NEW H-FRAME
3. INSTALL NEW ±6' OF NEW (2) 2" CONDUITS FROM THE NEW PURCELL BOX TO THE CLEARWIRE CABINET (1 FOR FIBER, 1 FOR POWER)
4. INSTALL NEW ±6' OF NEW FIBER AND POWER THROUGH NEW (2) 2" CONDUITS FROM THE NEW PURCELL BOX TO THE CLEARWIRE CABINET
5. INSTALL ±30' OF NEW 3" CONDUIT WITH (2) 1" INNER-DUCTS FROM PROPOSED MMP TO NEW PURCELL BOX.

FIBER VENDOR:
1. INSTALL NEW NID IN THE NEW PURCELL BOX.
2. INSTALL ±30' OF NEW FIBER THROUGH NEW 3" CONDUIT WITH (2) 1" INNER-DUCTS FROM PROPOSED MMP TO NEW PURCELL BOX.
3. PROPOSED MMP WILL BE OUTSIDE THE FENCED AREA APPROXIMATELY ±30' TO NID LOCATION

SITE NOTES:

1. SITE INFORMATION WAS PREPARED USING EXISTING DOCUMENTATION AND /OR SITE MEASUREMENTS AND SHOULD NOT BE INTERPRETED AS AN ACCURATE BOUNDARY SURVEY.
2. THIS SITE PLAN WAS PREPARED WITHOUT THE BENEFIT OF A TITLE REPORT AND IS SUBJECT TO ALL THE EASEMENTS AND RESTRICTIONS OF RECORD
3. CONTRACTOR SHALL MAKE A UTILITY "ONE CALL" TO LOCATE ALL UTILITIES PRIOR TO CONSTRUCTION. CONTRACTOR SHALL BE RESPONSIBLE FOR COORDINATING A PRIVATE UTILITY LOCATE IF NEEDED TO DETERMINE THE UNDERGROUND STRUCTURES ON PRIVATE PROPERTY. THESE DRAWINGS DO NOT DEPICT ALL UNDERGROUND UTILITIES IN THE PROJECT AREA.
4. LATITUDE AND LONGITUDE COORDINATES ASSOCIATED WITH PROPOSED EQUIPMENT/INFRASTRUCTURE WERE BASED UPON GOOGLE EARTH AND WERE NOT FIELD VERIFIED FOR PRECISION. THE EXACT LOCATION OF PROPOSED EQUIPMENT/INFRASTRUCTURE SHALL BE FIELD VERIFIED WITH SPRINT, SAC AND/OR FV.

ROLES AND RESPONSIBILITIES:

SPRINT R&R:
1. SPRINT TO PERFORM ALL NEW CONDUIT INSTALLATIONS FROM THE MMP TO THE PPC AND FROM PPC TO MMBTS.
2. SPRINT TO PROVIDE ITS TELCO CABINET TO FV FOR THE PROPOSED NID IF SPACE ALLOWS.
3. SPRINT TO PROVIDE POWER TO FV NID.

FIBER VENDOR R&R:
1. FIBER VENDOR RESPONSIBLE FOR ANY NEW CONDUIT INSTALLATION, FIBER WORK OR MMP CONSTRUCTION REQUIRED FROM THE ROW TO THE MMP.
2. FIBER VENDOR RESPONSIBLE FOR PULLING FIBER FROM MMP TO NID.
3. FIBER VENDOR RESPONSIBLE FOR INSTALL OF NID WHETHER IT BE IN THE TELCO CABINET OR ELSEWHERE. NID TO BE INSTALLED IN TELCO CABINET UNLESS SPACE IS UNAVAILABLE AND THEREFORE SPECIFIED OTHERWISE.

GENERAL NOTES SCALE: N.T.S. 2

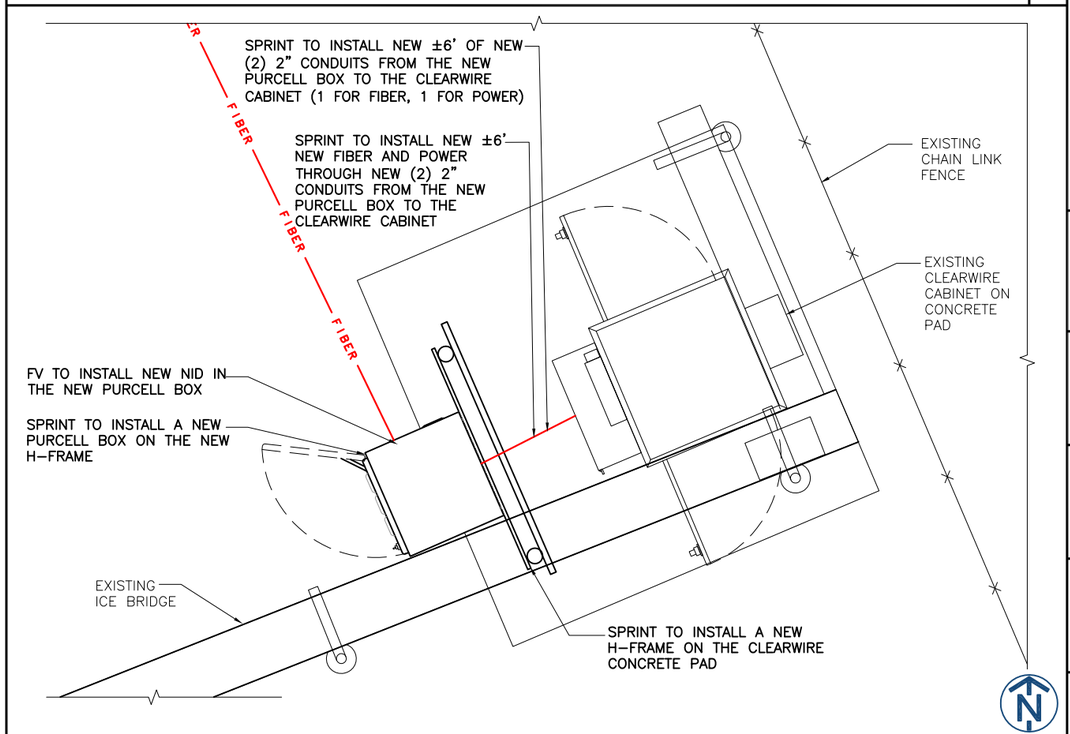

EQUIPMENT PLAN SCALE: 3/8" = 1'-0" 3

Sprint

SAC WIRELESS
540 W. MADISON ST., 9TH FLOOR
CHICAGO, IL 60661

FULLERTON ENGINEERING · DESIGN
1100 E. WOODFIELD ROAD, SUITE 500
SCHAUMBURG, ILLINOIS 60173
TEL: 847-908-8400
COA# PEC.0001444
www.FullertonEngineering.com

REV	DATE	DESCRIPTION	BY
A	9/7/18	90% REVIEW	MI
B	10/01/18	100% REVIEW	BS
0	10/16/18	FINAL	TJ

I HEREBY CERTIFY THAT THESE DRAWINGS WERE PREPARED BY ME OR UNDER MY DIRECT SUPERVISION AND CONTROL, AND TO THE BEST OF MY KNOWLEDGE AND BELIEF COMPLY WITH THE REQUIREMENTS OF ALL APPLICABLE CODES.

STATE OF CONNECTICUT · HENRY M. BELLAGAMBA · 25358 · LICENSED PROFESSIONAL ENGINEER

SITE NAME
SBA HILLIARD

SITE NUMBER:
CT52XC028

SITE ADDRESS
640 HILLIARD STREET
MANCHESTER, CT 06042

SHEET TITLE
CLEARWIRE MW-TO-LIT FIBER SITE PLANS

SHEET NUMBER
AAV-1

PROJECT# 2018.0203.0316

NOTES:
1. SPRINT TO INSTALL ALL NEW CONDUIT OR INNER–DUCT FOR PROJECT
2. FIBER VENDOR TO INSTALL ALL NEW FIBER THROUGH EXISTING AND PROPOSED CONDUIT

POWER — FIBER — GROUND

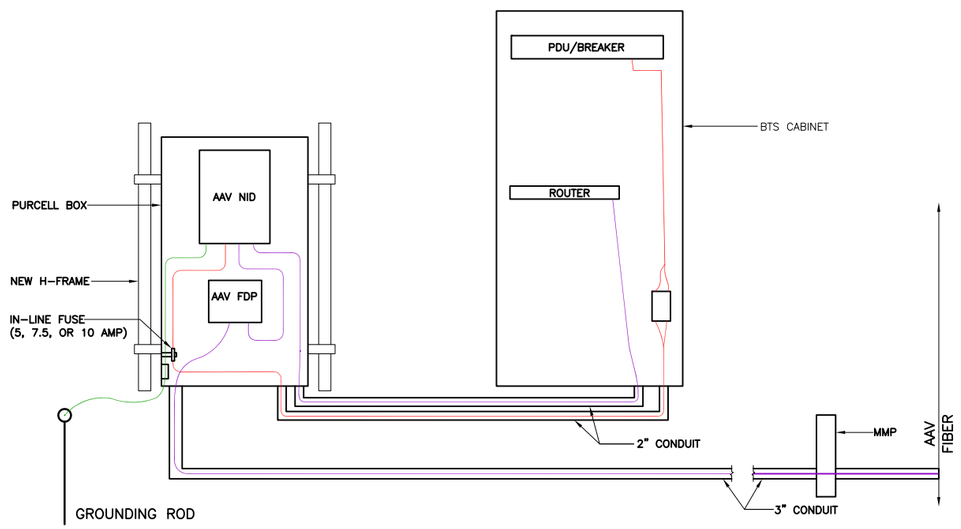

PLUMBING DIAGRAM — SCALE: N.T.S. — 1

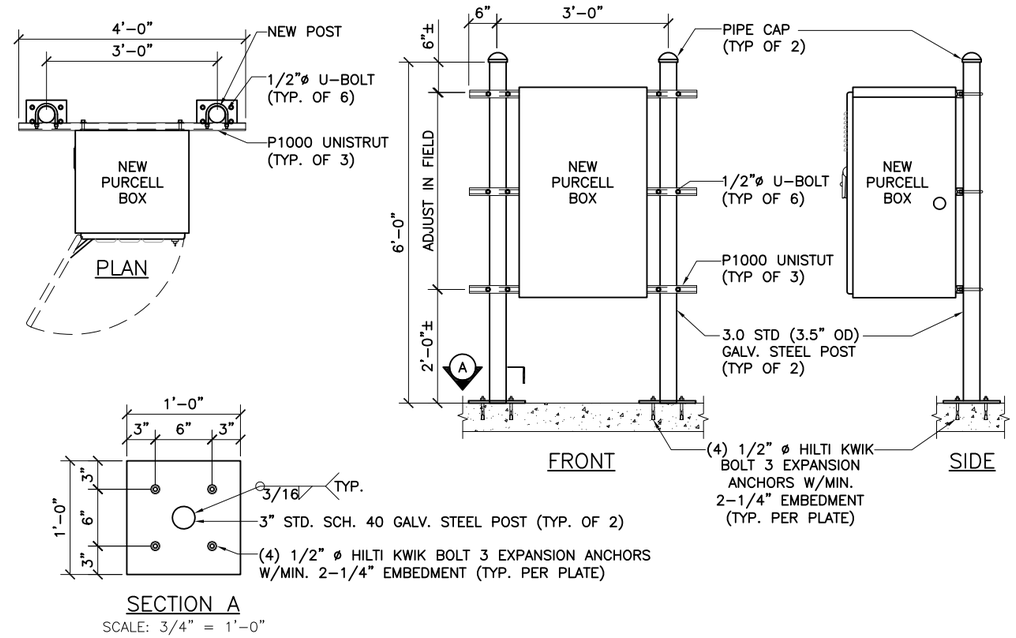

H-FRAME DETAIL — SCALE: N.T.S. — 2

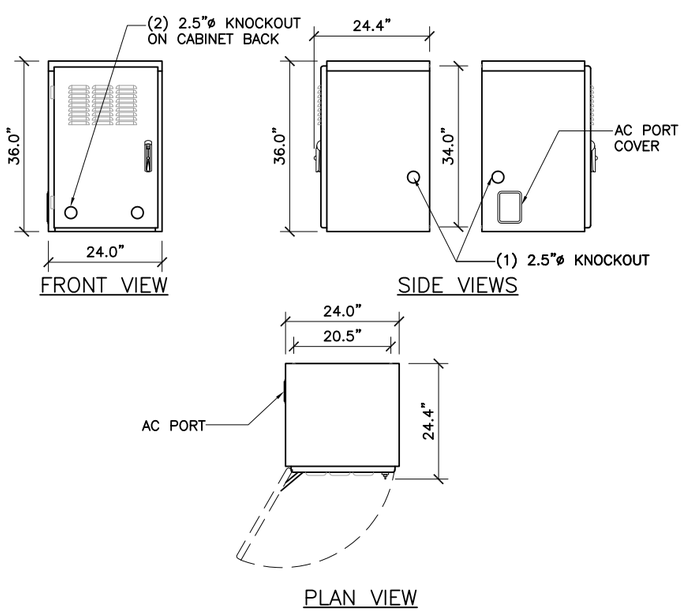

PURCELL TELCO BOX SPECS — SCALE: 3/8" = 1'–0" — 3

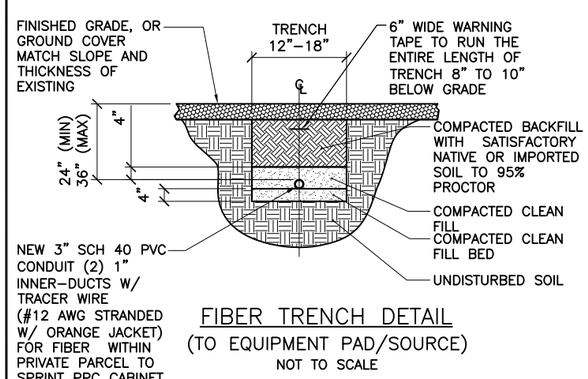

FIBER TRENCH DETAIL
(TO EQUIPMENT PAD/SOURCE)
NOT TO SCALE

UTILITY TRENCH NOTES:

1. CONDUIT SIZE, TYPE, QUANTITY, AND SEPARATION DIMENSION TO BE VERIFIED WITH LOCAL UTILITY.
2. ALL UTILITY TRENCHES WITHIN THE FENCED COMPOUND OR UNDER ANY PORTION OF A GRAVEL DRIVE AND/OR ROADWAY SHALL BE BACKFILLED WITH COMPACTED AGGREGATE.
3. ALL CONDUITS SHALL BE INSTALLED WITH 3/16" POLYPROPYLENE ROPE (PULL STRING) OR MULE TAPE SUITABLE FOR PULLING CABLE THROUGH DUCT.
4. ALL CONDUITS THAT ARE TO BE USED FOR FIBER/ALARM SHALL BE INSTALLED WITH A TRACER WIRE (#12 AWG STRANDED W/ ORANGE JACKET).
5. ALL CONDUITS SHALL BE CLEAN INSIDE WITH NO DIRT OR ANY OTHER OBSTRUCTIONS.
6. ALL BENDS MUST SWEEP 36" RADIUS AND MAXIMUM OF 3 SWEEPS. ANY ADDITIONAL SWEEPS MUST BE APPROVED BY THE UTILITY COMPANY.
7. THE CONTRACTOR SHALL VERIFY AND FOLLOW THE UTILITY COMPANY SPECIFICATIONS FOR INSTALLATIONS.
8. THE CONTRACTOR SHALL LOCATE ALL EXISTING UTILITIES WITHIN THE COMPOUND AND INSTALL PULL BOXES WHERE NEEDED TO AVOID ANY EXISTING UTILITIES. CONTRACTOR MUST EXERCISE EXTREME CAUTION WHEN TRENCHING AND HAND DIG AROUND EXISTING UTILITIES AS REQUIRED.
9. CONTRACTOR SHALL LOCATE ALL EXISTING UTILITIES WITHIN THE COMPOUND AND INSTALL PULLBOXES WHERE NEEDED TO AVOID ANY EXISTING UTILITIES. CONTRACTOR MUST EXERCISE EXTREME CAUTION WHEN TRENCHING AND HAND DIG AROUND EXISTING UTILITIES AS REQUIRED.

TRENCHING DETAIL — SCALE: N.T.S. — 4

Sprint

SAC WIRELESS
540 W. MADISON ST., 9TH FLOOR
CHICAGO, IL 60661

FULLERTON ENGINEERING · DESIGN
1100 E. WOODFIELD ROAD, SUITE 500
SCHAUMBURG, ILLINOIS 60173
TEL: 847-908-8400
COA# PEC.0001444
www.FullertonEngineering.com

REV	DATE	DESCRIPTION	BY
A	9/7/18	90% REVIEW	MI
B	10/01/18	100% REVIEW	BS
0	10/16/18	FINAL	TJ

I HEREBY CERTIFY THAT THESE DRAWINGS WERE PREPARED BY ME OR UNDER MY DIRECT SUPERVISION AND CONTROL, AND TO THE BEST OF MY KNOWLEDGE AND BELIEF COMPLY WITH THE REQUIREMENTS OF ALL APPLICABLE CODES.

STATE OF CONNECTICUT · HENRY M. BELLAGAMBA · 25358 · LICENSED PROFESSIONAL ENGINEER

SITE NAME
SBA HILLIARD

SITE NUMBER:
CT52XC028

SITE ADDRESS
640 HILLIARD STREET
MANCHESTER, CT 06042

SHEET TITLE
CLEARWIRE
MW-TO-LIT FIBER
EQUIPMENT DETAILS

SHEET NUMBER
AAV-2

PROJECT# 2018.0203.0316

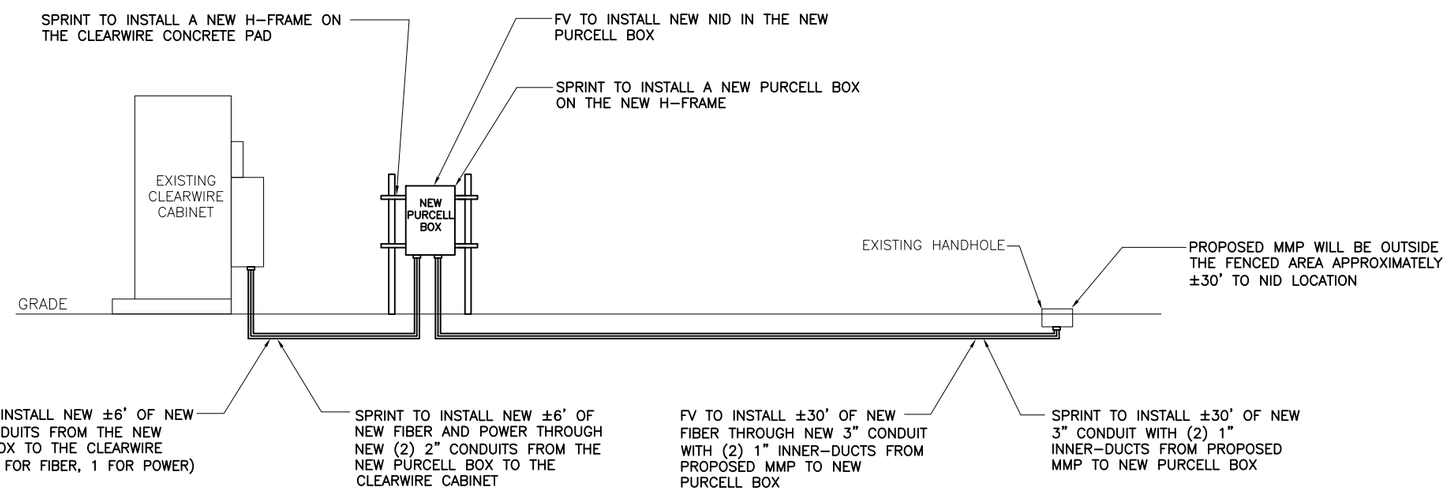

FIBER SCHEMATIC

SCALE: N.T.S.

1

Sprint

WIRELESS

540 W. MADISON ST., 9TH FLOOR
CHICAGO, IL 60661

FULLERTON
ENGINEERING · DESIGN

1100 E. WOODFIELD ROAD, SUITE 500
SCHAUMBURG, ILLINOIS 60173
TEL: 847-908-8400
COA# PEC.0001444
www.FullertonEngineering.com

REV	DATE	DESCRIPTION	BY
A	9/7/18	90% REVIEW	MI
B	10/01/18	100% REVIEW	BS
0	10/16/18	FINAL	TJ

I HEREBY CERTIFY THAT THESE DRAWINGS WERE PREPARED BY ME OR UNDER MY DIRECT SUPERVISION AND CONTROL, AND TO THE BEST OF MY KNOWLEDGE AND BELIEF COMPLY WITH THE REQUIREMENTS OF ALL APPLICABLE CODES.

STATE OF CONNECTICUT
HENRY M. BELLAGAMBA
25358
LICENSED
PROFESSIONAL ENGINEER

SITE NAME

SBA HILLIARD

SITE NUMBER:

CT52XC028

SITE ADDRESS

640 HILLIARD STREET
MANCHESTER, CT 06042

SHEET TITLE

CLEARWIRE
MW-TO-LIT FIBER
EQUIPMENT DETAILS

SHEET NUMBER

AAV-3

PROJECT# 2018.0203.0316

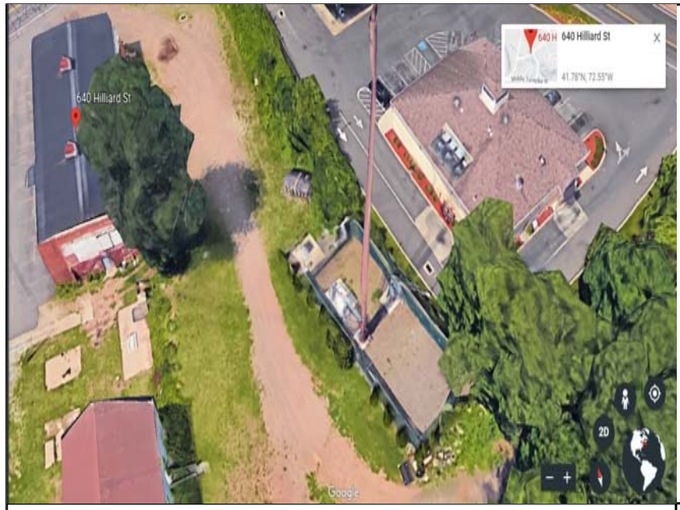

SITE OVERVIEW SCALE: N.T.S. 1

SITE OVERVIEW SCALE: N.T.S. 2

PROPOSED MMP & NID SCALE: N.T.S. 3

PROPOSED CONDUIT PATH SCALE: N.T.S. 4

PROPOSED CONDUIT PATH & H-FRAME SCALE: N.T.S. 5

CLEARWIRE CABINET SCALE: N.T.S. 6

CLEARWIRE CABINET SCALE: N.T.S. 7

CLEARWIRE CABINET SCALE: N.T.S. 8

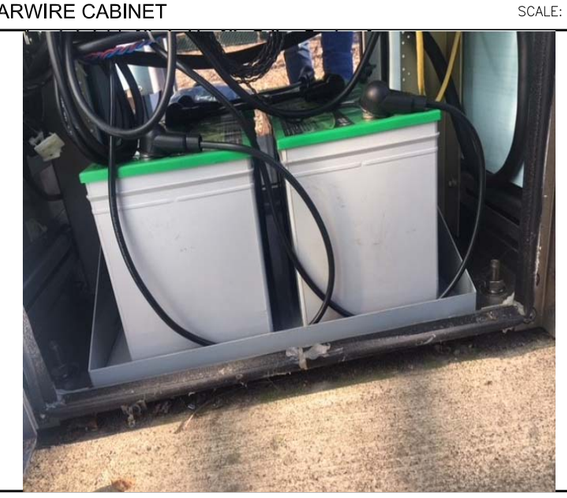

CLEARWIRE CABINET SCALE: N.T.S. 9

Sprint

SBC WIRELESS

540 W. MADISON ST., 9TH FLOOR
CHICAGO, IL 60661

FULLERTON ENGINEERING · DESIGN

1100 E. WOODFIELD ROAD, SUITE 500
SCHAUMBURG, ILLINOIS 60173
TEL: 847-908-8400
COA# PEC.0001444
www.FullertonEngineering.com

REV	DATE	DESCRIPTION	BY
A	9/7/18	90% REVIEW	MI
B	10/01/18	100% REVIEW	BS
0	10/16/18	FINAL	TJ

I HEREBY CERTIFY THAT THESE DRAWINGS WERE PREPARED BY ME OR UNDER MY DIRECT SUPERVISION AND CONTROL, AND TO THE BEST OF MY KNOWLEDGE AND BELIEF COMPLY WITH THE REQUIREMENTS OF ALL APPLICABLE CODES.

STATE OF CONNECTICUT · HENRY M. BELLAGAMBA · 25358 · LICENSED PROFESSIONAL ENGINEER

SITE NAME

SBA HILLIARD

SITE NUMBER:

CT52XC028

SITE ADDRESS

640 HILLIARD STREET
MANCHESTER, CT 06042

SHEET TITLE

SITE PHOTOS

SHEET NUMBER

AAV-4

PROJECT# 2018.0203.0316