VICINITY MAP

AMERICAN TOWER®

ATC SITE NAME: EAST KILLINGLY NORTH
ATC SITE NUMBER: 88011
T-MOBILE SITE ID: CTNL194
SITE ADDRESS: 1375 NORTH ROAD
DAYVILLE, CT 06241

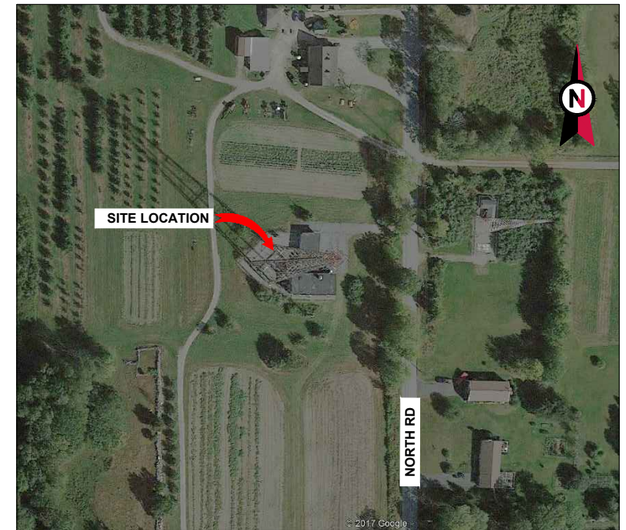

LOCATION MAP

T-MOBILE L700 NSD COLLOCATION PLAN
4 SEC-6797DB2 CONFIGURATION

COMPLIANCE CODE

ALL WORK SHALL BE PERFORMED AND MATERIALS INSTALLED IN ACCORDANCE WITH THE CURRENT EDITIONS OF THE FOLLOWING CODES AS ADOPTED BY THE LOCAL GOVERNMENT AUTHORITIES. NOTHING IN THESE PLANS IS TO BE CONSTRUED TO PERMIT WORK NOT CONFORMING TO THESE CODES.

1. INTERNATIONAL BUILDING CODE (IBC)
2. NATIONAL ELECTRIC CODE (NEC)
3. LOCAL BUILDING CODE
4. CITY/COUNTY ORDINANCES

PROJECT SUMMARY

SITE ADDRESS:

1375 NORTH ROAD
DAYVILLE, CT 06241
COUNTY: WINDHAM

GEOGRAPHIC COORDINATES:

LATITUDE: 41.87152
LONGITUDE: -71.82154
GROUND ELEVATION: 745' AMSL

UTILITY COMPANIES

POWER COMPANY: CT LIGHT & POWER
PHONE: (800) 286-2000

TELEPHONE COMPANY: FRONTIER COMMUNICATIONS
PHONE: (800) 921-8102

811 Know what's below. Call before you dig.

PROJECT TEAM

TOWER OWNER:

AMERICAN TOWER
10 PRESIDENTIAL WAY
WOBURN, MA 01801

ENGINEER:

ATC TOWER SERVICES, LLC
3500 REGENCY PKWY STE 100
CARY, NC 27518

PROPERTY OWNER:

SARGENT AND GREENLEAF INC
1 SECURITY DRIVE
NICHOLASVILLE, KY 40356

APPLICANT:

T-MOBILE NORTHEAST LLC
12050 BALTIMORE AVENUE
BELTSVILLE, MD 20705

CARRIER CONTACT:

PATRICK RIORDAN
(717) 645-9523

PROJECT DESCRIPTION

THE PROPOSED PROJECT INCLUDES PLACING A EQUIPMENT CABINET, GENERATOR ON A PROPOSED CONCRETE PAD COVERED BY A SAFETY CANOPY, INSIDE A 10' X 15' GROUND SPACE WITHIN THE EXISTING COMPOUND, AND PLACING NEW ANTENNAS AND A DISH ON A PROPOSED CUSTOM FRAME MOUNTED TO THE EXISTING TOWER CATWALK.

PROJECT NOTES

1. THE FACILITY IS UNMANNED.
2. A TECHNICIAN WILL VISIT THE SITE APPROXIMATELY ONCE A MONTH FOR ROUTINE INSPECTION AND MAINTENANCE.
3. THE PROJECT WILL NOT RESULT IN ANY SIGNIFICANT LAND DISTURBANCE OR EFFECT OF STORM WATER DRAINAGE.
4. NO SANITARY SEWER, POTABLE WATER OR TRASH DISPOSAL IS REQUIRED.
5. HANDICAP ACCESS IS NOT REQUIRED.

PROJECT LOCATION DIRECTIONS

FROM WORCESTER, MA:

TAKE ROUTE 395 TO EXIT 97. AT END OF THE RAMP, TAKE A LEFT ONTO 44 EAST. AFTER YOU CROSS FIVE MILE RIVER, GO ABOUT ANOTHER .5 MILES AND TAKE A RIGHT ONTO EAST PUTNUM ROAD. AT THE 3RD STOP SIGN, TAKE A LEFT. LOOK FOR NORTH ROAD ON YOUR RIGHT. TAKE NORTH ROAD. TOWER IS ON THE RIGHT.

SHEET INDEX

SHEET NO:	DESCRIPTION:	REV:	DATE:	BY:
G-001	TITLE SHEET	2	05/31/18	AMM
G-002	GENERAL NOTES	0	02/26/18	AMM
C-101	DETAILED SITE PLAN & TOWER ELEVATION	2	05/31/18	AMM
C-501	ANTENNA INFORMATION & SCHEDULE	1	03/07/18	AMM
C-502	ANTENNA MOUNTING DETAILS	1	03/07/18	AMM
C-503	ANTENNA MOUNTING DETAILS	0	02/26/18	AMM
C-504	CONSTRUCTION DETAILS	2	05/31/18	AMM
C-505	CONSTRUCTION DETAILS	1	03/07/18	AMM
C-506	CONSTRUCTION DETAILS	1	03/07/18	AMM
E-101	GROUNDING PLAN AND SCHEMATIC	2	05/31/18	AMM
E-501	GROUNDING DETAILS	0	02/26/18	AMM
R-601	SUPPLEMENTAL			
R-602	SUPPLEMENTAL			

AMERICAN TOWER®
A.T. ENGINEERING SERVICE, PLLC
3500 REGENCY PARKWAY
SUITE 100
CARY, NC 27518
PHONE: (919) 468-0112
COA: PEC.0001553

THESE DRAWINGS AND/OR THE ACCOMPANYING SPECIFICATION AS INSTRUMENTS OR SERVICE ARE THE EXCLUSIVE PROPERTY OF AMERICAN TOWER. THEIR USE AND PUBLICATION SHALL BE RESTRICTED TO THE ORIGINAL SITE FOR WHICH THEY ARE PREPARED. ANY USE OR DISCLOSURE OTHER THAN THAT WHICH RELATES TO AMERICAN TOWER OR THE SPECIFIED CARRIER IS STRICTLY PROHIBITED. TITLE TO THESE DOCUMENTS SHALL REMAIN THE PROPERTY OF AMERICAN TOWER WHETHER OR NOT THE PROJECT IS EXECUTED. NEITHER THE ARCHITECT NOR THE ENGINEER WILL BE PROVIDING ON-SITE CONSTRUCTION REVIEW OF THIS PROJECT. CONTRACTOR(S) MUST VERIFY ALL DIMENSIONS AND ADVISE AMERICAN TOWER OF ANY DISCREPANCIES. ANY PRIOR ISSUANCE OF THIS DRAWING IS SUPERSEDED BY THE LATEST VERSION ON FILE WITH AMERICAN TOWER.

REV.	DESCRIPTION	BY	DATE
0	FOR CONSTRUCTION	AMM	02/26/18
1	ADD SAFETY CANOPY	AMM	03/07/18
2	REV GEN MODEL/TYPE	AMM	05/31/18

ATC SITE NUMBER:
88011

ATC SITE NAME:
EAST KILLINGLY NORTH

SITE ADDRESS:
1375 NORTH ROAD
DAYVILLE, CT 06241

SEAL:

Authorized by "EOR"
May 31 2018 4:43 PM cosign

T-Mobile

DRAWN BY:	AMM
APPROVED BY:	PPB
DATE DRAWN:	02/26/18
ATC JOB NO:	12203191

TITLE SHEET

SHEET NUMBER: G-001
REVISION: 2

Copyright © 2018 ATC IP LLC. All Rights Reserved.

GENERAL CONSTRUCTION NOTES:

1. ALL WORK SHALL CONFORM TO ALL CURRENT APPLICABLE FEDERAL, STATE, AND LOCAL CODES, INCLUDING ANSI/EIA/TIA-222, AND COMPLY WITH ATC MASTER SPECIFICATIONS.
2. CONTRACTOR SHALL CONTACT LOCAL 811 FOR IDENTIFICATION OF UNDERGROUND UTILITIES PRIOR TO START OF CONSTRUCTION.
3. CONTRACTOR SHALL BE RESPONSIBLE FOR COORDINATING ALL REQUIRED INSPECTIONS.
4. ALL DIMENSIONS TO, OF, AND ON EXISTING BUILDINGS, DRAINAGE STRUCTURES, AND SITE IMPROVEMENTS SHALL BE VERIFIED IN FIELD BY CONTRACTOR WITH ALL DISCREPANCIES REPORTED TO THE ENGINEER.
5. DO NOT CHANGE SIZE OR SPACING OF STRUCTURAL ELEMENTS.
6. DETAILS SHOWN ARE TYPICAL; SIMILAR DETAILS APPLY TO SIMILAR CONDITIONS UNLESS OTHERWISE NOTED.
7. THESE DRAWINGS DO NOT INCLUDE NECESSARY COMPONENTS FOR CONSTRUCTION SAFETY WHICH SHALL BE THE SOLE RESPONSIBILITY OF THE CONTRACTOR.
8. CONTRACTOR SHALL BRACE STRUCTURES UNTIL ALL STRUCTURAL ELEMENTS NEEDED FOR STABILITY ARE INSTALLED. THESE ELEMENTS ARE AS FOLLOWS: LATERAL BRACING, ANCHOR BOLTS, ETC.
9. CONTRACTOR SHALL DETERMINE EXACT LOCATION OF EXISTING UTILITIES, GROUNDS DRAINS, DRAIN PIPES, VENTS, ETC. BEFORE COMMENCING WORK.
10. INCORRECTLY FABRICATED, DAMAGED, OR OTHERWISE MISFITTING OR NONCONFORMING MATERIALS OR CONDITIONS SHALL BE REPORTED TO THE T-MOBILE WIRELESS REP PRIOR TO REMEDIAL OR CORRECTIVE ACTION. ANY SUCH REMEDIAL ACTION SHALL REQUIRE WRITTEN APPROVAL BY THE T-MOBILE WIRELESS REP PRIOR TO PROCEEDING.
11. EACH CONTRACTOR SHALL COOPERATE WITH THE T-MOBILE WIRELESS REP, AND COORDINATE HIS WORK WITH THE WORK OF OTHERS.
12. CONTRACTOR SHALL REPAIR ANY DAMAGE CAUSED BY CONSTRUCTION OF THIS PROJECT TO MATCH EXISTING PRE-CONSTRUCTION CONDITIONS TO THE SATISFACTION OF THE T-MOBILE WIRELESS CONSTRUCTION MANAGER.
13. ALL CABLE/CONDUIT ENTRY/EXIT PORTS SHALL BE WEATHERPROOFED DURING INSTALLATION USING A SILICONE SEALANT.
14. WHERE EXISTING CONDITIONS DO NOT MATCH THOSE SHOWN IN THIS PLAN SET, CONTRACTOR SHALL NOTIFY THE T-MOBILE WIRELESS REP IMMEDIATELY.
15. CONTRACTOR SHALL ENSURE ALL SUBCONTRACTORS ARE PROVIDED WITH A COMPLETE AND CURRENT SET OF DRAWINGS AND SPECIFICATIONS FOR THIS PROJECT.
16. CONTRACTOR SHALL REMOVE ALL RUBBISH AND DEBRIS FROM THE SITE AT THE END OF EACH DAY.
17. CONTRACTOR SHALL COORDINATE WORK SCHEDULE WITH LANDLORD AND TAKE PRECAUTIONS TO MINIMIZE IMPACT AND DISRUPTION OF OTHER OCCUPANTS OF THE FACILITY.
18. CONTRACTOR SHALL FURNISH T-MOBILE WIRELESS WITH A PDF MARKED UP AS-BUILT SET OF DRAWINGS UPON COMPLETION OF WORK.
19. PRIOR TO SUBMISSION OF BID, CONTRACTOR SHALL COORDINATE WITH T-MOBILE WIRELESS REP TO DETERMINE WHAT, IF ANY, ITEMS WILL BE PROVIDED. ALL ITEMS NOT PROVIDED SHALL BE PROVIDED AND INSTALLED BY THE CONTRACTOR. CONTRACTOR WILL INSTALL ALL ITEMS PROVIDED.
20. PRIOR TO SUBMISSION OF BID, CONTRACTOR SHALL COORDINATE WITH T-MOBILE WIRELESS REP TO DETERMINE IF ANY PERMITS WILL BE OBTAINED BY CONTRACTOR. ALL REQUIRED PERMITS NOT OBTAINED BY T-MOBILE WIRELESS MUST BE OBTAINED, AND PAID FOR, BY THE CONTRACTOR.
21. CONTRACTOR SHALL INSTALL ALL SITE SIGNAGE IN ACCORDANCE WITH T-MOBILE WIRELESS SPECIFICATIONS AND REQUIREMENTS.
22. CONTRACTOR SHALL SUBMIT ALL SHOP DRAWINGS TO T-MOBILE WIRELESS FOR REVIEW AND APPROVAL PRIOR TO FABRICATION.
23. ALL EQUIPMENT SHALL BE INSTALLED ACCORDING TO MANUFACTURER'S SPECIFICATIONS AND LOCATED ACCORDING TO T-MOBILE WIRELESS SPECIFICATIONS, AND AS SHOWN IN THESE PLANS.
24. THE CONTRACTOR SHALL SUPERVISE AND DIRECT THE PROJECT DESCRIBED HEREIN. THE CONTRACTOR SHALL BE SOLELY RESPONSIBLE FOR ALL THE CONSTRUCTION MEANS, METHODS, TECHNIQUES, SEQUENCES AND PROCEDURES AND FOR COORDINATING ALL PORTIONS OF THE WORK UNDER THE CONTRACT.
25. CONTRACTOR SHALL NOTIFY T-MOBILE WIRELESS REP A MINIMUM OF 48 HOURS IN ADVANCE OF POURING CONCRETE OR BACKFILLING ANY UNDERGROUND UTILITIES, FOUNDATIONS OR SEALING ANY WALL, FLOOR OR ROOF PENETRATIONS FOR ENGINEERING REVIEW AND APPROVAL.
26. CONTRACTOR SHALL BE RESPONSIBLE FOR SITE SAFETY INCLUDING COMPLIANCE WITH ALL APPLICABLE OSHA STANDARDS AND RECOMMENDATIONS AND SHALL PROVIDE ALL NECESSARY SAFETY DEVICES INCLUDING PPE AND PPM AND CONSTRUCTION DEVICES SUCH AS WELDING AND FIRE PREVENTION, TEMPORARY SHORING, SCAFFOLDING, TRENCH BOXES/SLOPING, BARRIERS, ETC.
27. THE CONTRACTOR SHALL PROTECT AT HIS OWN EXPENSE, ALL EXISTING FACILITIES AND SUCH OF HIS NEW WORK LIABLE TO INJURY DURING THE CONSTRUCTION PERIOD. ANY DAMAGE CAUSED BY NEGLECT ON THE PART OF THIS CONTRACTOR OR HIS REPRESENTATIVES, OR BY THE ELEMENTS DUE TO NEGLECT ON THE PART OF THIS CONTRACTOR OR HIS REPRESENTATIVES, EITHER TO THE EXISTING WORK, OR TO HIS WORK OR THE WORK OF ANY OTHER CONTRACTOR, SHALL BE REPAIRED AT HIS EXPENSE TO THE OWNER'S SATISFACTION.
28. ALL WORK SHALL BE INSTALLED IN A FIRST CLASS, NEAT AND WORKMANLIKE MANNER BY MECHANICS SKILLED IN THE TRADE INVOLVED. THE QUALITY OF WORKMANSHIP SHALL BE SUBJECT TO THE APPROVAL OF THE T-MOBILE WIRELESS REP. ANY WORK FOUND BY THE T-MOBILE WIRELESS REP TO BE OF INFERIOR QUALITY AND/OR WORKMANSHIP SHALL BE REPLACED AND/OR REWORKED AT CONTRACTOR EXPENSE UNTIL APPROVAL IS OBTAINED.
29. IN ORDER TO ESTABLISH STANDARDS OF QUALITY AND PERFORMANCE, ALL TYPES OF MATERIALS LISTED HEREINAFTER BY MANUFACTURER'S NAMES AND/OR MANUFACTURER'S CATALOG NUMBER SHALL BE PROVIDED BY THESE MANUFACTURERS AS SPECIFIED.

CONCRETE AND REINFORCING STEEL NOTES:

1. DESIGN AND CONSTRUCTION OF ALL CONCRETE ELEMENTS SHALL CONFORM TO THE LATEST EDITIONS OF ALL APPLICABLE CODES INCLUDING: ACI 301 "SPECIFICATIONS FOR STRUCTURAL CONCRETE FOR BUILDINGS", ACI 117 "SPECIFICATIONS FOR TOLERANCES FOR CONCRETE CONSTRUCTION AND MATERIALS", AND ACI 318 "BUILDING CODE REQUIREMENTS FOR REINFORCED CONCRETE."
2. MIX DESIGN SHALL BE APPROVED BY T-MOBILE WIRELESS REP PRIOR TO PLACING CONCRETE.
3. CONCRETE SHALL BE NORMAL WEIGHT, 6 % AIR ENTRAINED (+/- 1.5%) WITH A SLUMP RANGE OF 3-6" AND HAVE A MINIMUM 28-DAY COMPRESSIVE STRENGTH OF 4000 PSI UNLESS OTHERWISE NOTED.
4. THE FOLLOWING MATERIALS SHALL BE USED:

PORTLAND CEMENT:	ASTM C150, TYPE 2
REINFORCEMENT:	ASTM A185, PLAIN STEEL WELDED WIRE FABRIC
REINFORCEMENT BARS:	ASTM A615, GRADE 60, DEFORMED
NORMAL WEIGHT AGGREGATE:	ASTM C33
WATER:	ASTM C 94/C 94M
ADMIXTURES:	
-WATER-REDUCING AGENT:	ASTM C 494/C 494M, TYPE A
-AIR-ENTERING AGENT:	ASTM C 260/C 260M
-SUPERPLASTICIZER:	ASTM C494, TYPE F OR TYPE G
-RETARDING:	ASTM C 494/C 494M, TYPE B

5. MINIMUM CONCRETE COVER FOR REINFORCING STEEL SHALL BE NO LESS THAN 3".
6. A 3/4" CHAMFER SHALL BE PROVIDED AT ALL EXPOSED EDGES OF CONCRETE IN ACCORDANCE WITH ACI 301 SECTION 4.2.4, UNLESS NOTED OTHERWISE.
7. INSTALLATION OF CONCRETE EXPANSION/WEDGE ANCHOR SHALL BE PER MANUFACTURER'S WRITTEN RECOMMENDED PROCEDURE. THE ANCHOR BOLT, DOWEL, OR ROD SHALL CONFORM TO MANUFACTURER'S RECOMMENDATION FOR EMBEDMENT DEPTH OR AS SHOWN ON THE DRAWINGS. NO REBAR SHALL BE CUT WITHOUT PRIOR T-MOBILE WIRELESS REP APPROVAL WHEN DRILLING HOLES IN CONCRETE.
8. ADMIXTURES SHALL CONFORM TO THE APPROPRIATE ASTM STANDARD AS REFERENCED IN "METHOD 1" OF ACI 301.
9. DO NOT WELD OR TACK WELD REINFORCING STEEL.
10. ALL DOWELS, ANCHOR BOLTS, EMBEDDED STEEL, ELECTRICAL CONDUITS, PIPE SLEEVES, GROUNDS AND ALL OTHER EMBEDDED ITEMS AND FORMED DETAILS SHALL BE IN PLACE BEFORE START OF CONCRETE PLACEMENT.
11. REINFORCEMENT SHALL BE COLD BENT WHENEVER BENDING IS REQUIRED.
12. DO NOT PLACE CONCRETE IN WATER, ICE, OR ON FROZEN GROUND.
13. DO NOT ALLOW REINFORCEMENT, CONCRETE OR SUBBASE TO FREEZE DURING CONCRETE CURING AND SETTING PERIOD, OR FOR A MINIMUM OF 3 DAYS AFTER PLACEMENT.
14. FOR COLD-WEATHER(ACI 306) AND HOT-WEATHER(ACI 301M) CONCRETE PLACEMENT, CONFORM TO APPLICABLE ACI CODES AND RECOMMENDATIONS. IN EITHER CASE, MATERIALS CONTAINING CHLORIDE, CALCIUM, SALTS, ETC. SHALL NOT BE USED. PROTECT FRESH CONCRETE FROM WEATHER FOR 7 DAYS, MINIMUM.
15. ALL CONCRETE SHALL HAVE A "SMOOTH FORM FINISH."
16. UNLESS OTHERWISE NOTED:
    A. ALL REINFORCING STEEL SHALL BE DEFORMED BARS CONFORMING TO ASTM A615/A 615M/A-996, GRADE 60.
    B. WELDED WIRE FABRIC SHALL CONFORM TO ASTM A185.
17. SPLICING OF REINFORCEMENT IS PERMITTED ONLY AT LOCATIONS SHOWN IN THE CONTRACT DRAWINGS OR AS ACCEPTED BY THE ENGINEER. UNLESS OTHERWISE SHOWN OR NOTED REINFORCING STEEL SHALL BE SPLICED TO DEVELOP ITS FULL TENSILE CAPACITY (CLASS A) IN ACCORDANCE WITH ACI 318.
18. REINFORCING BAR DEVELOPMENT LENGTHS, AS COMPUTED IN ACCORDANCE WITH ACI 318, FORM THE BASIS FOR BAR EMBEDMENT LENGTHS AND BAR SPLICED LENGTHS SHOWN IN THE DRAWINGS. APPLY APPROPRIATE MODIFICATION FACTORS FOR TOP STEEL, BAR SPACING, COVER AND THE LIKE.
19. DETAILING OF REINFORCING STEEL SHALL CONFORM TO "ACI MANUAL OF STANDARD PRACTICE FOR DETAILING REINFORCED CONCRETE STRUCTURES" (ACI 315).
20. ALL SLAB CONSTRUCTION SHALL BE CAST MONOLITHICALLY WITHOUT HORIZONTAL CONSTRUCTION JOINTS, UNLESS SHOWN IN THE CONTRACT DRAWINGS.
21. LOCATION OF ALL CONSTRUCTION JOINTS ARE SUBJECT TO THE REQUIREMENTS OF THE CONTRACT DOCUMENTS, CONFORMANCE WITH ACI 318, AND ACCEPTANCE OF THE ENGINEER. DRAWINGS SHOWING LOCATION OF DETAILS OF THE PROPOSED CONSTRUCTION JOINTS SHALL BE SUBMITTED WITH REINFORCING STEEL PLACEMENT DRAWINGS.
22. SPLICES OF WWF, AT ALL SPLICED EDGES, SHALL BE SUCH THAT THE OVERLAP MEASURED BETWEEN OUTERMOST CROSS WIRES OF EACH FABRIC SHEET IS NOT LESS THAN THE SPACING OF THE CROSS WIRE PLUS 2 INCHES, NOR LESS THAN 6".
23. BAR SUPPORTS SHALL BE ALL-GALVINIZED METAL WITH PLASTIC TIPS.
24. ALL REINFORCEMENT SHALL BE SECURELY TIED IN PLACE TO PREVENT DISPLACEMENT BY CONSTRUCTION TRAFFIC OR CONCRETE. TIE WIRE SHALL BE OF SUFFICIENT STRENGTH FOR INTENDED PURPOSE, BUT NOT LESS THAN NO. 18 GAUGE.
25. SLAB ON GROUND:
    A. COMPACT STRUCTURAL FILL TO 95% DENSITY AND THEN PLACE 6" GRAVEL BENEATH SLAB.
    B. PROVIDE VAPOR BARRIER BENEATH SLAB ON GROUND.

STRUCTURAL STEEL NOTES:

1. STRUCTURAL STEEL SHALL CONFORM TO THE LATEST EDITION OF THE AISC "SPECIFICATION FOR THE DESIGN, FABRICATION AND ERECTION OF STRUCTURAL STEEL FOR BUILDINGS."
2. STRUCTURAL STEEL ROLLED SHAPES, PLATES AND BARS SHALL CONFORM TO THE FOLLOWING ASTM DESIGNATIONS:
    A. ASTM A-572, GRADE 50 - ALL W SHAPES, UNLESS NOTED OR A992 OTHERWISE
    B. ASTM A-36 - ALL OTHER ROLLED SHAPES, PLATES AND BARS UNLESS NOTED OTHERWISE.
    C. ASTM A-500, GRADE B - HSS SECTION (SQUARE, RECTANGULAR, AND ROUND)
    D. ASTM A-325, TYPE SC OR N - ALL BOLTS FOR CONNECTING STRUCTURAL MEMBERS
    E. ASTM F-1554 07 - ALL ANCHOR BOLTS, UNLESS NOTED OTHERWISE
3. ALL EXPOSED STRUCTURAL STEEL MEMBERS SHALL BE HOT-DIPPED GALVANIZED AFTER FABRICATION PER ASTM A123. EXPOSED STEEL HARDWARE AND ANCHOR BOLTS SHALL BE GALVANIZED PER ASTM A153 OR B695.
4. ALL FIELD CUT SURFACES, FIELD DRILLED HOLES AND GROUND SURFACES WHERE EXISTING PAINT OR GALVANIZATION REMOVAL WAS REQUIRED SHALL BE REPAIRED WITH (2) BRUSHED COATS OF ZRC GALVILITE COLD GALVANIZING COMPOUND PER ASTM A780 AND MANUFACTURER'S RECOMMENDATIONS.
5. DO NOT DRILL HOLES THROUGH STRUCTURAL STEEL MEMBERS EXCEPT AS SHOWN AND DETAILED ON STRUCTURAL DRAWINGS.
6. CONNECTIONS:
    A. ALL WELDING TO BE PERFORMED BY AWS CERTIFIED WELDERS AND CONDUCTED IN ACCORDANCE WITH THE LATEST EDITION OF THE AWS WELDING CODE D1.1.
    B. ALL WELDS SHALL BE INSPECTED VISUALLY. 25% OF WELDS SHALL BE INSPECTED WITH DYE PENETRANT OR MAGNETIC PARTICLE TO MEET THE ACCEPTANCE CRITERIA OF AWS D1.1. REPAIR ALL WELDS AS NECESSARY.
    C. INSPECTION SHALL BE PERFORMED BY AN AWS CERTIFIED WELD INSPECTOR.
    D. IT IS THE CONTRACTORS RESPONSIBILITY TO PROVIDE BURNING/WELDING PERMITS AS REQUIRED BY LOCAL GOVERNING AUTHORITY AND IF REQUIRED SHALL HAVE FIRE DEPARTMENT DETAIL FOR ANY WELDING ACTIVITY.
    E. ALL ELECTRODES TO BE LOW HYDROGEN, MATCHING FILLER METAL, PER AWS D1.1, UNLESS NOTED OTHERWISE.
    F. MINIMUM WELD SIZE TO BE 0.1875 INCH FILLET WELDS, UNLESS NOTED OTHERWISE.
    G. PRIOR TO FIELD WELDING GALVANIZING MATERIAL, CONTRACTOR SHALL GRIND OFF GALVANIZING ½" BEYOND ALL FIELD WELD SURFACES. AFTER WELD AND WELD INSPECTION IS COMPLETE, REPAIR ALL GROUND AND WELDED SURFACES WITH ZRC GALVILITE COLD GALVANIZING COMPOUND PER ASTM A780 AND MANUFACTURERS RECOMMENDATIONS.

AMERICAN TOWER®
A.T. ENGINEERING SERVICE, PLLC
3500 REGENCY PARKWAY
SUITE 100
CARY, NC 27518
PHONE: (919) 468-0112
COA: PEC.0001553

THESE DRAWINGS AND/OR THE ACCOMPANYING SPECIFICATION AS INSTRUMENTS OR SERVICE ARE THE EXCLUSIVE PROPERTY OF AMERICAN TOWER. THEIR USE AND PUBLICATION SHALL BE RESTRICTED TO THE ORIGINAL SITE FOR WHICH THEY ARE PREPARED. ANY USE OR DISCLOSURE OTHER THAN THAT WHICH RELATES TO AMERICAN TOWER OR THE SPECIFIED CARRIER IS STRICTLY PROHIBITED. TITLE TO THESE DOCUMENTS SHALL REMAIN THE PROPERTY OF AMERICAN TOWER WHETHER OR NOT THE PROJECT IS EXECUTED. NEITHER THE ARCHITECT NOR THE ENGINEER WILL BE PROVIDING ON-SITE CONSTRUCTION REVIEW OF THIS PROJECT. CONTRACTOR(S) MUST VERIFY ALL DIMENSIONS AND ADVISE AMERICAN TOWER OF ANY DISCREPANCIES. ANY PRIOR ISSUANCE OF THIS DRAWING IS SUPERSEDED BY THE LATEST VERSION ON FILE WITH AMERICAN TOWER.

REV.	DESCRIPTION	BY	DATE
0	FOR CONSTRUCTION	AMM	02/26/18

ATC SITE NUMBER:
88011

ATC SITE NAME:
EAST KILLINGLY NORTH

SITE ADDRESS:
1375 NORTH ROAD
DAYVILLE, CT 06241

SEAL:

Authorized by "EOR"
May 31 2018 4:43 PM cosign

T-Mobile

DRAWN BY:	AMM
APPROVED BY:	PPB
DATE DRAWN:	02/26/18
ATC JOB NO:	12203191

GENERAL NOTES

SHEET NUMBER:	REVISION:
G-002	0

Copyright © 2018 ATC IP LLC. All Rights Reserved.

SITE PLAN NOTES:

1. THIS SITE PLAN REPRESENTS THE BEST PRESENT KNOWLEDGE AVAILABLE TO THE ENGINEER AT THE TIME OF THIS DESIGN. THE CONTRACTOR SHALL VISIT THE SITE PRIOR TO CONSTRUCTION AND VERIFY ALL EXISTING CONDITIONS RELATED TO THE SCOPE OF WORK FOR THIS PROJECT.

2. ICE BRIDGE, CABLE LADDER, COAX PORT, AND COAX CABLE ARE SHOWN FOR REFERENCE ONLY. CONTRACTOR SHALL CONFIRM THE EXACT LOCATION OF ALL PROPOSED AND EXISTING EQUIPMENT AND STRUCTURES DEPICTED ON THIS PLAN. BEFORE UTILIZING EXISTING CABLE SUPPORTS, COAX PORTS, INSTALLING NEW PORTS OR ANY OTHER EQUIPMENT, CONTRACTOR SHALL VERIFY ALL ASPECTS OF THE COMPONENTS MEET THE ATC SPECIFICATIONS.

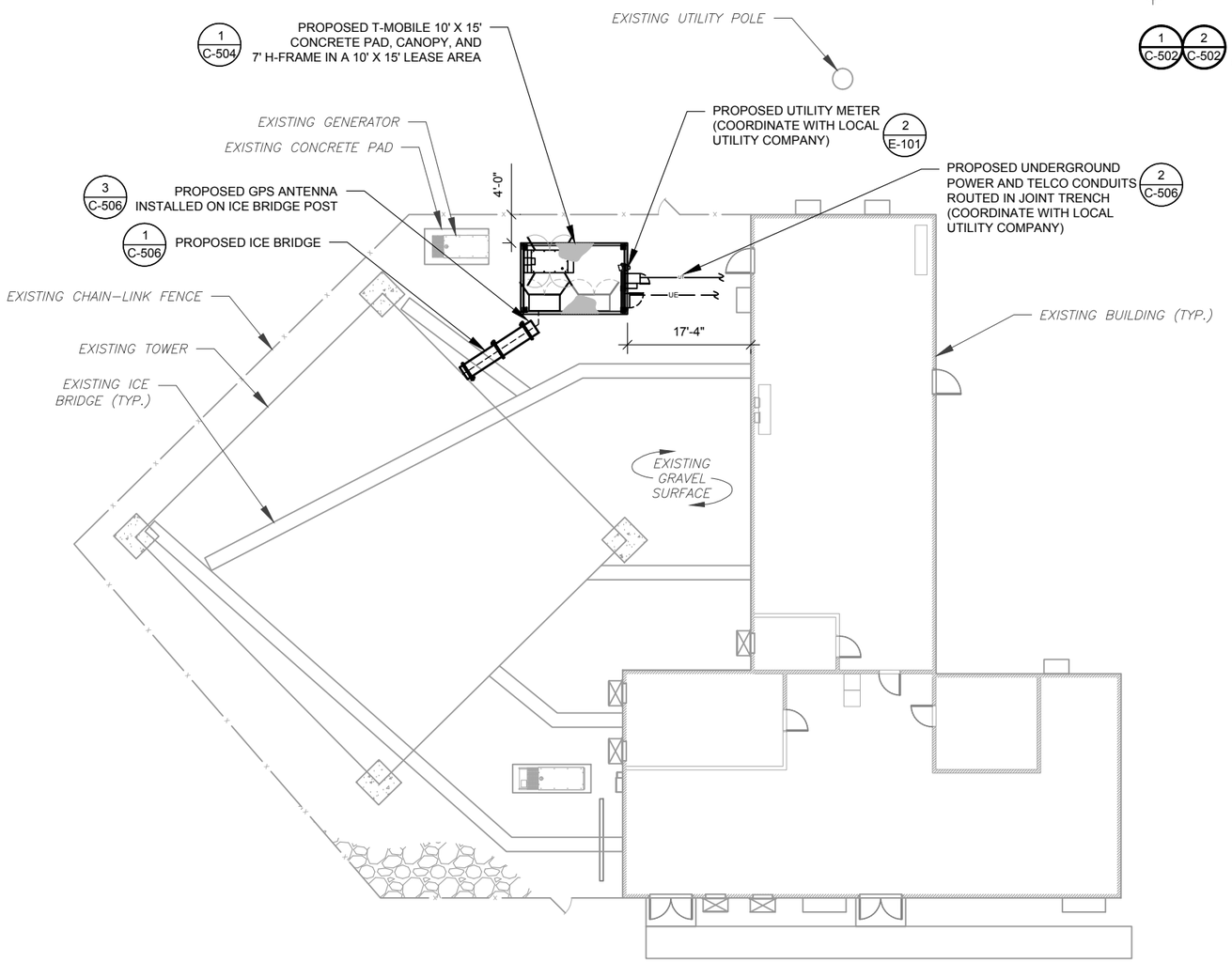

1 DETAILED SITE PLAN

0 20' 40'

SCALE: 1"=20' (11X17)
1"=10' (22X34)

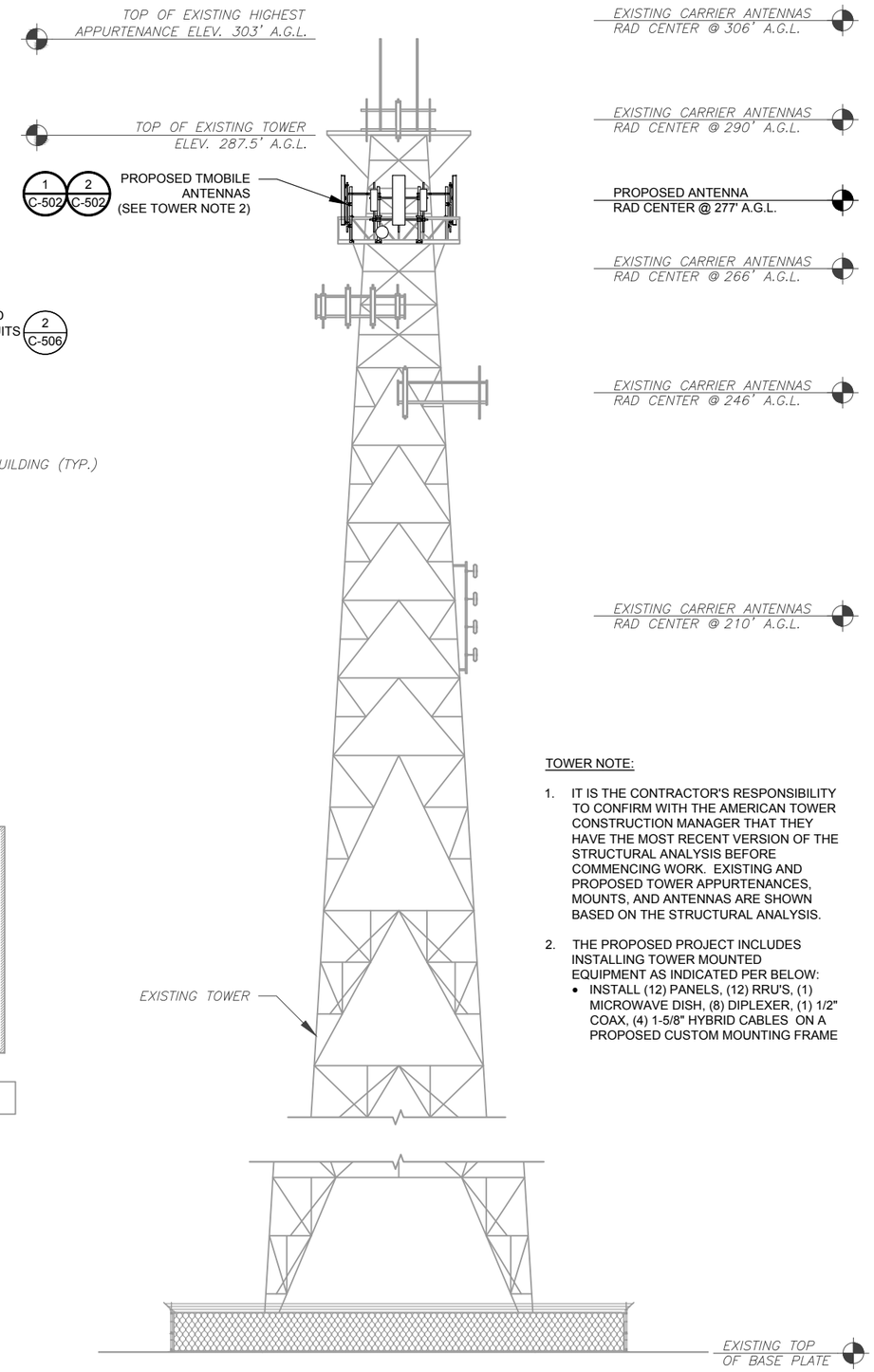

TOWER NOTE:

1. IT IS THE CONTRACTOR'S RESPONSIBILITY TO CONFIRM WITH THE AMERICAN TOWER CONSTRUCTION MANAGER THAT THEY HAVE THE MOST RECENT VERSION OF THE STRUCTURAL ANALYSIS BEFORE COMMENCING WORK. EXISTING AND PROPOSED TOWER APPURTENANCES, MOUNTS, AND ANTENNAS ARE SHOWN BASED ON THE STRUCTURAL ANALYSIS.

2. THE PROPOSED PROJECT INCLUDES INSTALLING TOWER MOUNTED EQUIPMENT AS INDICATED PER BELOW:
   - INSTALL (12) PANELS, (12) RRU'S, (1) MICROWAVE DISH, (8) DIPLEXER, (1) 1/2" COAX, (4) 1-5/8" HYBRID CABLES ON A PROPOSED CUSTOM MOUNTING FRAME

2 TOWER ELEVATION

SCALE: NOT TO SCALE

AMERICAN TOWER®
A.T. ENGINEERING SERVICE, PLLC
3500 REGENCY PARKWAY
SUITE 100
CARY, NC 27518
PHONE: (919) 468-0112
COA: PEC.0001553

THESE DRAWINGS AND/OR THE ACCOMPANYING SPECIFICATION AS INSTRUMENTS OR SERVICE ARE THE EXCLUSIVE PROPERTY OF AMERICAN TOWER. THEIR USE AND PUBLICATION SHALL BE RESTRICTED TO THE ORIGINAL SITE FOR WHICH THEY ARE PREPARED. ANY USE OR DISCLOSURE OTHER THAN THAT WHICH RELATES TO AMERICAN TOWER OR THE SPECIFIED CARRIER IS STRICTLY PROHIBITED. TITLE TO THESE DOCUMENTS SHALL REMAIN THE PROPERTY OF AMERICAN TOWER WHETHER OR NOT THE PROJECT IS EXECUTED. NEITHER THE ARCHITECT NOR THE ENGINEER WILL BE PROVIDING ON-SITE CONSTRUCTION REVIEW OF THIS PROJECT. CONTRACTOR(S) MUST VERIFY ALL DIMENSIONS AND ADVISE AMERICAN TOWER OF ANY DISCREPANCIES. ANY PRIOR ISSUANCE OF THIS DRAWING IS SUPERSEDED BY THE LATEST VERSION ON FILE WITH AMERICAN TOWER.

REV.	DESCRIPTION	BY	DATE
0	FOR CONSTRUCTION	AMM	02/26/18
1	ADD SAFETY CANOPY	AMM	03/07/18
2	REV GEN MODEL/TYPE	AMM	05/31/18

ATC SITE NUMBER:

88011

ATC SITE NAME:

EAST KILLINGLY NORTH

SITE ADDRESS:
1375 NORTH ROAD
DAYVILLE, CT 06241

SEAL:

STATE OF CONNECTICUT · PATRICK P. BARRY · 28959 · LICENSED · PROFESSIONAL ENGINEER

Authorized by "EOR"
May 31 2018 4:43 PM cosign

T-Mobile

DRAWN BY:	AMM
APPROVED BY:	PPB
DATE DRAWN:	02/26/18
ATC JOB NO:	12203191

DETAILED SITE PLAN & TOWER ELEVATION

SHEET NUMBER:	REVISION:
C-101	2

Copyright © 2018 ATC IP LLC. All Rights Reserved.

FINAL ANTENNA/ COAX SCHEDULE								
SECTOR	ANT.	PANEL MODEL #	RAD CENTER	AZIMUTH (TN)	MECH. D-TILT	ELEC. D-TILT	ADDITIONAL TOWER MOUNTED EQUIPMENT	ANTENNA COAX DESCRIPTION
ALPHA	A1	AIR 32 B66Aa/B2a	277'-0"	45°	0°	2°	(2) CBC6AE7LQ-DS-43	1-5/8" HYB
ALPHA	A2	APXVAA24_43-U-A20	277'-0"	45°	0°	2°	RRUS11 B12	-
ALPHA	A3	APX16DWV-16DWVS-E-A20	277'-0"	45°	0°	2°	RRUS11 B4, 4478 B71	-
ALPHA	A4	SHP2-13	277'-0"	45°	0°	2°	-	1/2"
BETA	B1	AIR 32 B66Aa/B2a	277'-0"	135°	0°	2°	(2) CBC6AE7LQ-DS-43	1-5/8" HYB
BETA	B2	APXVAA24_43-U-A20	277'-0"	135°	0°	2°	RRUS11 B12	-
BETA	B3	APX16DWV-16DWVS-E-A20	277'-0"	135°	0°	2°	RRUS11 B4, 4478 B71	-
GAMMA	C1	AIR 32 B66Aa/B2a	277'-0"	225°	0°	2°	(2) CBC6AE7LQ-DS-43	1-5/8" HYB
GAMMA	C2	APXVAA24_43-U-A20	277'-0"	225°	0°	2°	RRUS11 B12	-
GAMMA	C3	APX16DWV-16DWVS-E-A20	277'-0"	225°	0°	2°	RRUS11 B4, 4478 B71	-
DELTA	D1	AIR 32 B66Aa/B2a	277'-0"	315°	0°	2°	(2) CBC6AE7LQ-DS-43	1-5/8" HYB
DELTA	D2	APXVAA24_43-U-A20	277'-0"	315°	0°	2°	RRUS11 B12	-
DELTA	D3	APX16DWV-16DWVS-E-A20	277'-0"	315°	0°	2°	RRUS11 B4, 4478 B71	-

1. BASED ON APPROVED ATC APPLICATION OAA720744, DATED 01/22/18. CONFIRM WITH T-MOBILE REP FOR APPLICABLE UPDATES/REVISIONS AND MOST RECENT RFDS.
2. PROPOSED (4) 4478 B71 RADIOS AT PROPOSED RAD CENTER.
3. PER STRUCTURAL ANALYSIS COAX TO BE TRIPLE STACKED ON TOWER FACE WITH LEAST AMOUNT OF EXISTING COAX.

1 ANTENNA SCHEDULE

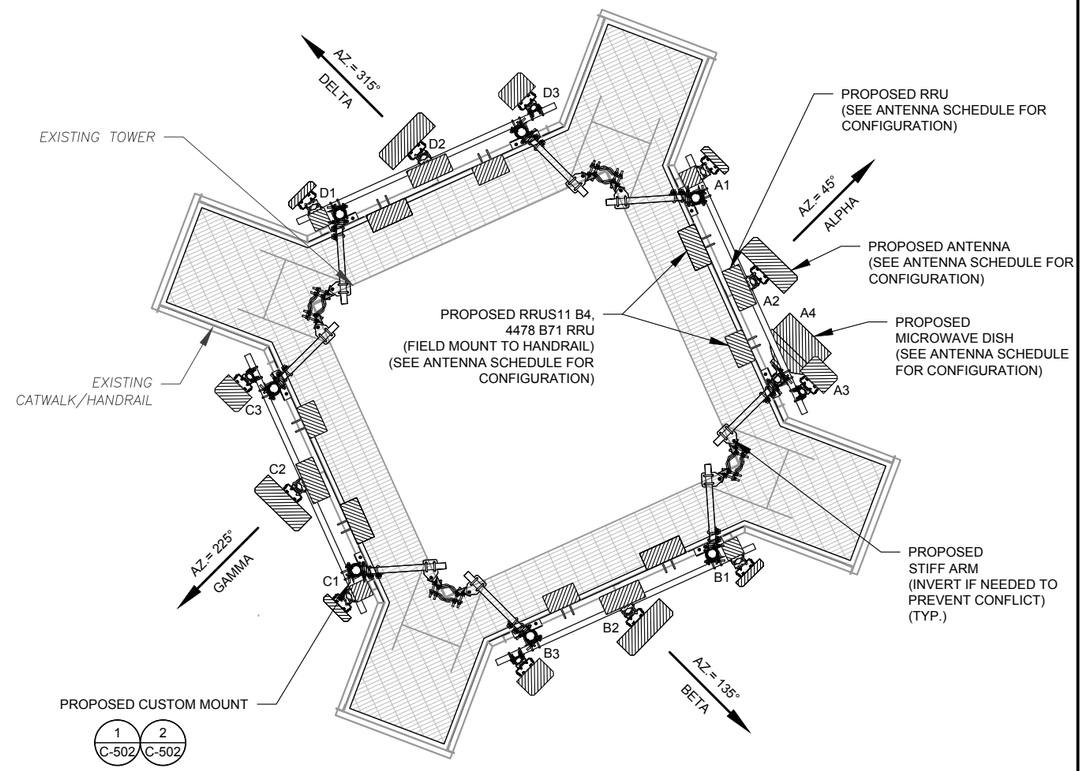

NOTES:

1. ALL PROPOSED EQUIPMENT INCLUDING ANTENNAS, COAX, ETC. SHALL BE MOUNTED IN ACCORDANCE WITH THE TOWER STRUCTURAL ANALYSIS ON FILE WITH THE ATC CM.
2. SPACING OF PROPOSED EQUIPMENT SHALL BE CONFIRMED FOR TOWER CONFLICTS AND PROPOSED MOUNTS SHALL NOT IMPEDE TOWER CLIMBING PEGS.

2 PROPOSED ANTENNA PLAN

N

AMERICAN TOWER®
A.T. ENGINEERING SERVICE, PLLC
3500 REGENCY PARKWAY
SUITE 100
CARY, NC 27518
PHONE: (919) 468-0112
COA: PEC.0001553

THESE DRAWINGS AND/OR THE ACCOMPANYING SPECIFICATION AS INSTRUMENTS OR SERVICE ARE THE EXCLUSIVE PROPERTY OF AMERICAN TOWER. THEIR USE AND PUBLICATION SHALL BE RESTRICTED TO THE ORIGINAL SITE FOR WHICH THEY ARE PREPARED. ANY USE OR DISCLOSURE OTHER THAN THAT WHICH RELATES TO AMERICAN TOWER OR THE SPECIFIED CARRIER IS STRICTLY PROHIBITED. TITLE TO THESE DOCUMENTS SHALL REMAIN THE PROPERTY OF AMERICAN TOWER WHETHER OR NOT THE PROJECT IS EXECUTED. NEITHER THE ARCHITECT NOR THE ENGINEER WILL BE PROVIDING ON-SITE CONSTRUCTION REVIEW OF THIS PROJECT. CONTRACTOR(S) MUST VERIFY ALL DIMENSIONS AND ADVISE AMERICAN TOWER OF ANY DISCREPANCIES. ANY PRIOR ISSUANCE OF THIS DRAWING IS SUPERSEDED BY THE LATEST VERSION ON FILE WITH AMERICAN TOWER.

REV.	DESCRIPTION	BY	DATE
0	FOR CONSTRUCTION	AMM	02/26/18
1	ADD SAFETY CANOPY	AMM	03/07/18

ATC SITE NUMBER:
88011

ATC SITE NAME:
EAST KILLINGLY NORTH

SITE ADDRESS:
1375 NORTH ROAD
DAYVILLE, CT 06241

SEAL:

STATE OF CONNECTICUT
PATRICK P. BARRY
28959
LICENSED
PROFESSIONAL ENGINEER

Authorized by "EOR"
May 31 2018 4:44 PM cosign

T-Mobile

DRAWN BY:	AMM
APPROVED BY:	PPB
DATE DRAWN:	02/26/18
ATC JOB NO:	12203191

ANTENNA INFORMATION & SCHEDULE

SHEET NUMBER: C-501

REVISION: 1

Copyright © 2018 ATC IP LLC. All Rights Reserved.

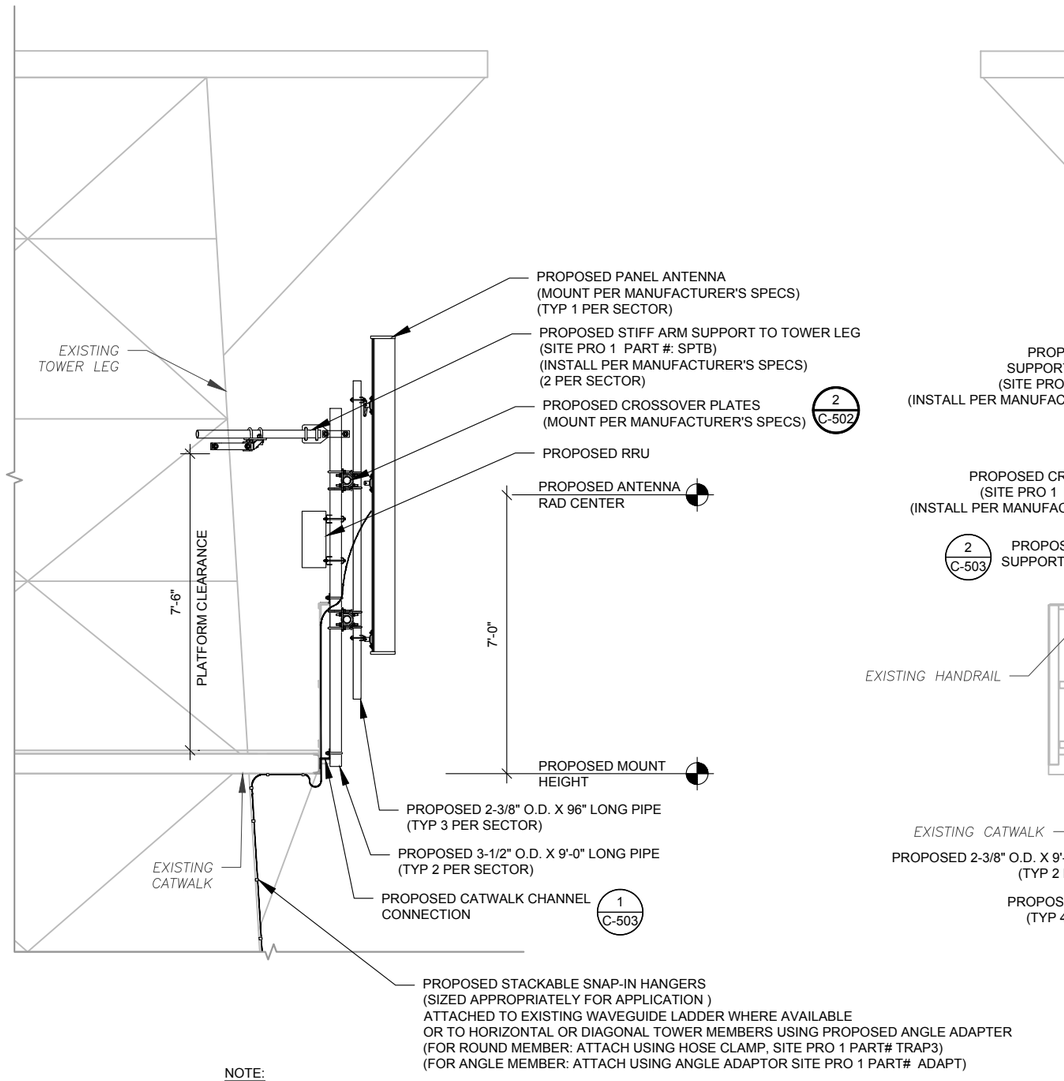

NOTE:

1. PORTION OF HANDRAIL REMOVED FOR CLARITY
2. PER STRUCTURAL ANALYSIS COAX TO BE TRIPLE STACKED ON TOWER FACE WITH LEAST AMOUNT OF EXISTING COAX.

1 PROPOSED ANTENNA MOUNTING DETAIL (SIDE ELEVATION)

SCALE: NOT TO SCALE

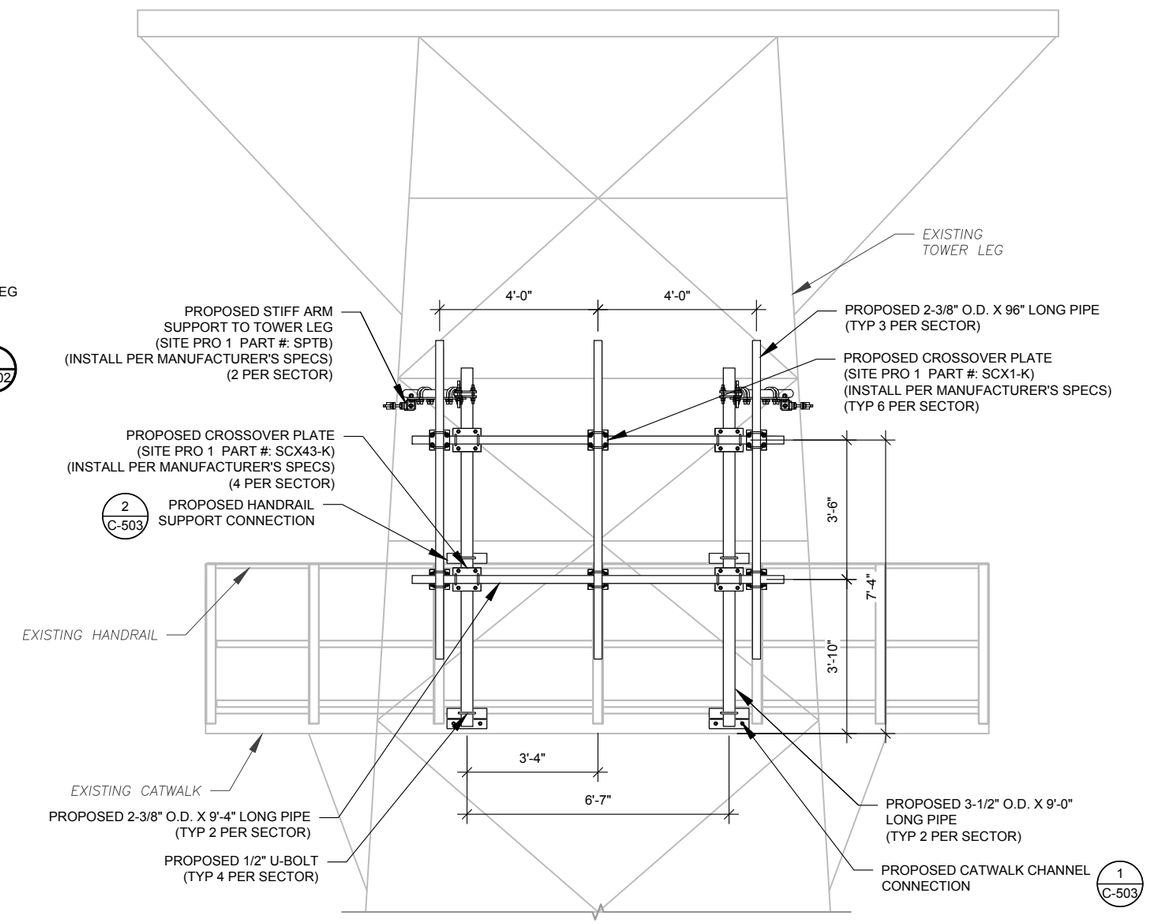

NOTE:

1. MICROWAVE DISH AND ANTENNAS NOT SHOWN FOR CLARITY

2 PROPOSED ANTENNA MOUNTING DETAIL (FRONT ELEVATION)

SCALE: NOT TO SCALE

AMERICAN TOWER®
A.T. ENGINEERING SERVICE, PLLC
3500 REGENCY PARKWAY
SUITE 100
CARY, NC 27518
PHONE: (919) 468-0112
COA: PEC.0001553

THESE DRAWINGS AND/OR THE ACCOMPANYING SPECIFICATION AS INSTRUMENTS OR SERVICE ARE THE EXCLUSIVE PROPERTY OF AMERICAN TOWER. THEIR USE AND PUBLICATION SHALL BE RESTRICTED TO THE ORIGINAL SITE FOR WHICH THEY ARE PREPARED. ANY USE OR DISCLOSURE OTHER THAN THAT WHICH RELATES TO AMERICAN TOWER OR THE SPECIFIED CARRIER IS STRICTLY PROHIBITED. TITLE TO THESE DOCUMENTS SHALL REMAIN THE PROPERTY OF AMERICAN TOWER WHETHER OR NOT THE PROJECT IS EXECUTED. NEITHER THE ARCHITECT NOR THE ENGINEER WILL BE PROVIDING ON-SITE CONSTRUCTION REVIEW OF THIS PROJECT. CONTRACTOR(S) MUST VERIFY ALL DIMENSIONS AND ADVISE AMERICAN TOWER OF ANY DISCREPANCIES. ANY PRIOR ISSUANCE OF THIS DRAWING IS SUPERSEDED BY THE LATEST VERSION ON FILE WITH AMERICAN TOWER.

REV.	DESCRIPTION	BY	DATE
0	FOR CONSTRUCTION	AMM	02/26/18
1	ADD SAFETY CANOPY	AMM	03/07/18

ATC SITE NUMBER:

88011

ATC SITE NAME:

EAST KILLINGLY NORTH

SITE ADDRESS:
1375 NORTH ROAD
DAYVILLE, CT 06241

SEAL:

Authorized by "EOR"
May 31 2018 4:44 PM cosign

T-Mobile

DRAWN BY:	AMM
APPROVED BY:	PPB
DATE DRAWN:	02/26/18
ATC JOB NO:	12203191

ANTENNA MOUNTING DETAILS

SHEET NUMBER:	REVISION:
C-502	1

Copyright © 2018 ATC IP LLC. All Rights Reserved.

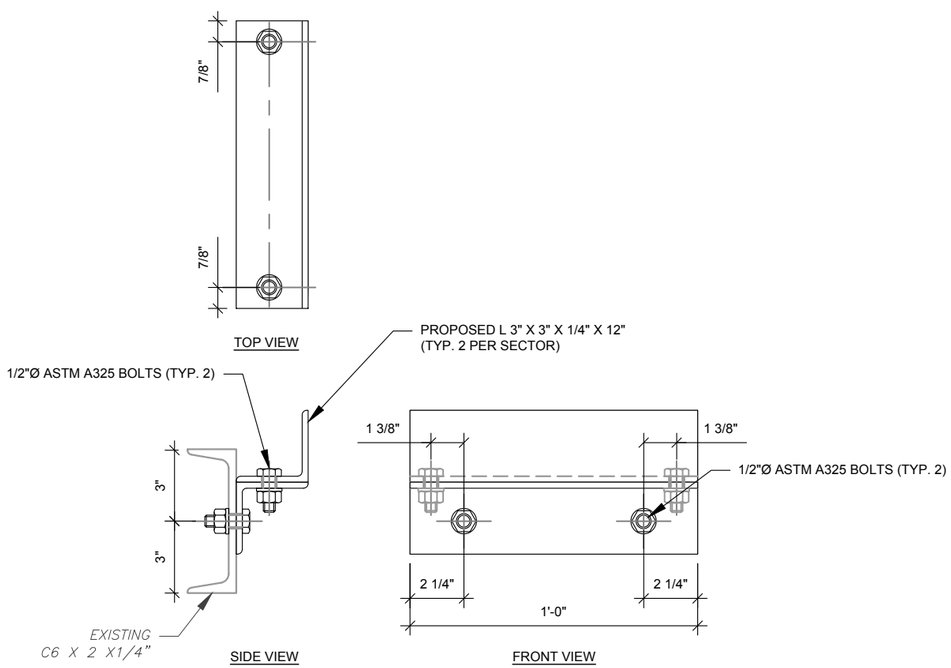

1 CHANNEL CONNECTION DETAIL

SCALE: NOT TO SCALE

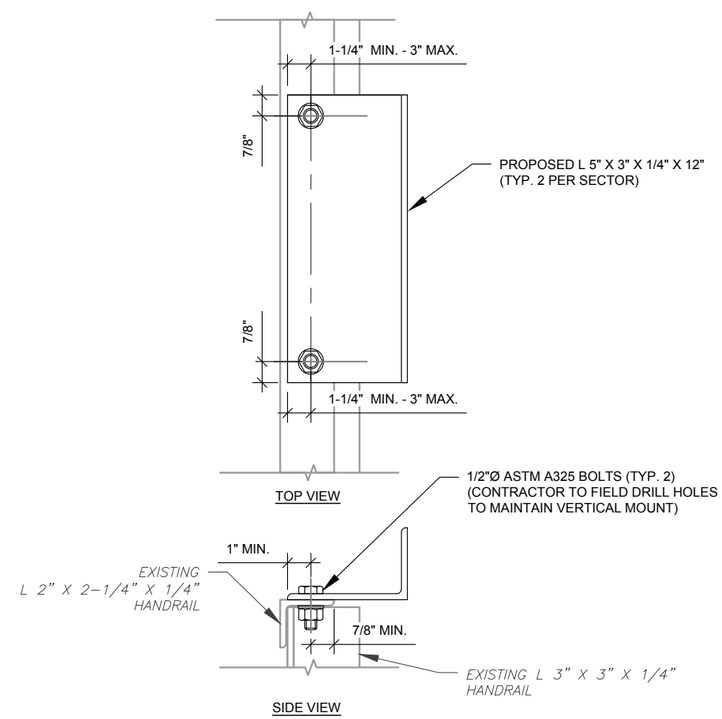

2 HANDRAIL CONNECTION DETAIL

SCALE: NOT TO SCALE

AMERICAN TOWER®

A.T. ENGINEERING SERVICE, PLLC

3500 REGENCY PARKWAY
SUITE 100
CARY, NC 27518
PHONE: (919) 468-0112
COA: PEC.0001553

THESE DRAWINGS AND/OR THE ACCOMPANYING SPECIFICATION AS INSTRUMENTS OR SERVICE ARE THE EXCLUSIVE PROPERTY OF AMERICAN TOWER. THEIR USE AND PUBLICATION SHALL BE RESTRICTED TO THE ORIGINAL SITE FOR WHICH THEY ARE PREPARED. ANY USE OR DISCLOSURE OTHER THAN THAT WHICH RELATES TO AMERICAN TOWER OR THE SPECIFIED CARRIER IS STRICTLY PROHIBITED. TITLE TO THESE DOCUMENTS SHALL REMAIN THE PROPERTY OF AMERICAN TOWER WHETHER OR NOT THE PROJECT IS EXECUTED. NEITHER THE ARCHITECT NOR THE ENGINEER WILL BE PROVIDING ON-SITE CONSTRUCTION REVIEW OF THIS PROJECT. CONTRACTOR(S) MUST VERIFY ALL DIMENSIONS AND ADVISE AMERICAN TOWER OF ANY DISCREPANCIES. ANY PRIOR ISSUANCE OF THIS DRAWING IS SUPERSEDED BY THE LATEST VERSION ON FILE WITH AMERICAN TOWER.

REV.	DESCRIPTION	BY	DATE
0	FOR CONSTRUCTION	AMM	02/26/18

ATC SITE NUMBER:

88011

ATC SITE NAME:

EAST KILLINGLY NORTH

SITE ADDRESS:
1375 NORTH ROAD
DAYVILLE, CT 06241

SEAL:

STATE OF CONNECTICUT · PATRICK P. BARRY · 28959 · LICENSED · PROFESSIONAL ENGINEER

Authorized by "EOR"
May 31 2018 4:44 PM cosign

T-Mobile

DRAWN BY:	AMM
APPROVED BY:	PPB
DATE DRAWN:	02/26/18
ATC JOB NO:	12203191

ANTENNA MOUNTING DETAILS

SHEET NUMBER:	REVISION:
C-503	0

Copyright © 2018 ATC IP LLC. All Rights Reserved.

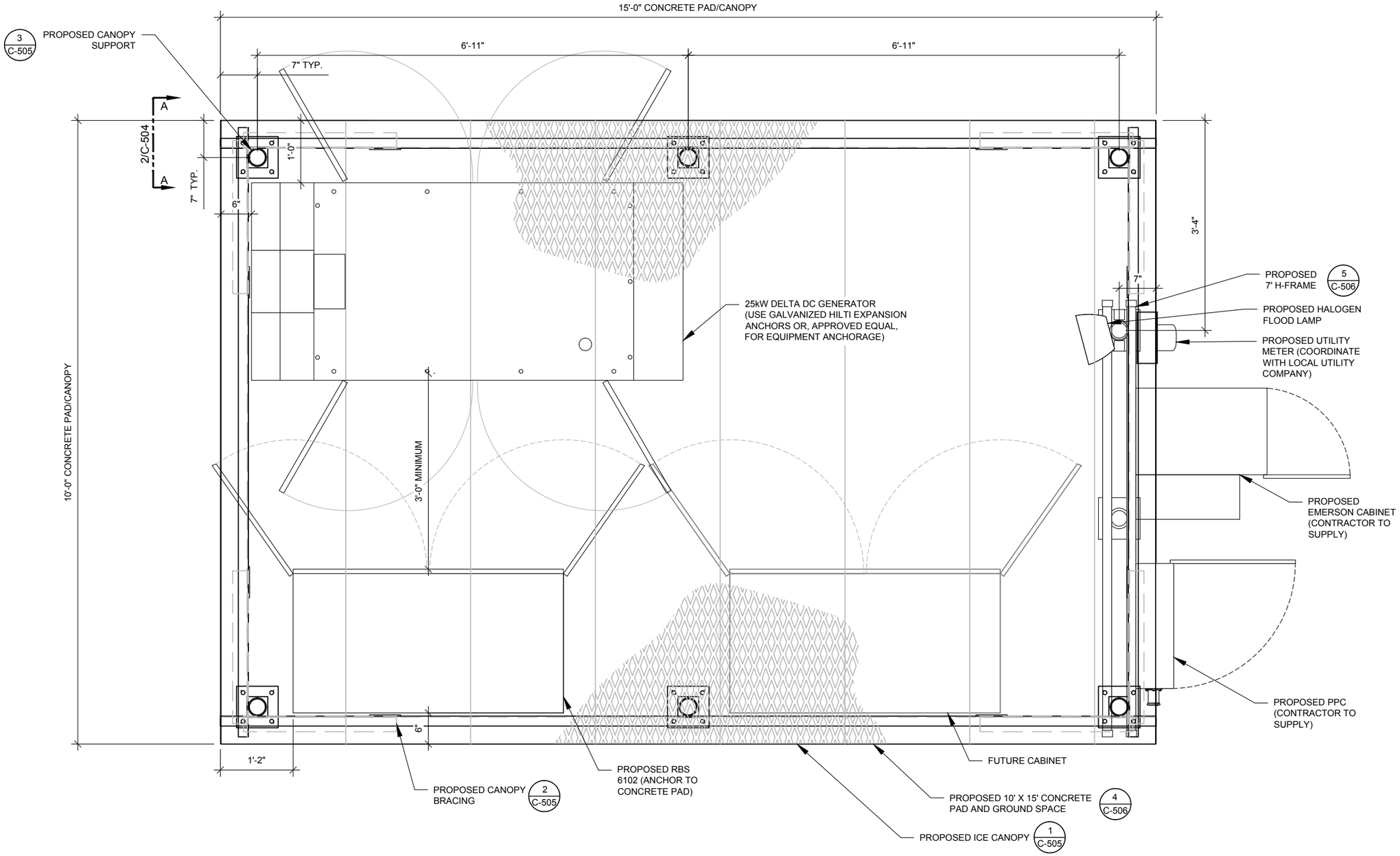

NOTE:
1. CABINETS SHALL BE ORIENTED AND INSTALLED EXACTLY AS SHOWN
2. WEIGHT OF BTS UNIT IS 859 LBS (390 KG) (WEIGHT IS WITHOUT BATTERIES)

1 DETAILED EQUIPMENT LAYOUT

SCALE: NOT TO SCALE

AMERICAN TOWER®
A.T. ENGINEERING SERVICE, PLLC
3500 REGENCY PARKWAY
SUITE 100
CARY, NC 27518
PHONE: (919) 468-0112
COA: PEC.0001553

THESE DRAWINGS AND/OR THE ACCOMPANYING SPECIFICATION AS INSTRUMENTS OR SERVICE ARE THE EXCLUSIVE PROPERTY OF AMERICAN TOWER. THEIR USE AND PUBLICATION SHALL BE RESTRICTED TO THE ORIGINAL SITE FOR WHICH THEY ARE PREPARED. ANY USE OR DISCLOSURE OTHER THAN THAT WHICH RELATES TO AMERICAN TOWER OR THE SPECIFIED CARRIER IS STRICTLY PROHIBITED. TITLE TO THESE DOCUMENTS SHALL REMAIN THE PROPERTY OF AMERICAN TOWER WHETHER OR NOT THE PROJECT IS EXECUTED. NEITHER THE ARCHITECT NOR THE ENGINEER WILL BE PROVIDING ON-SITE CONSTRUCTION REVIEW OF THIS PROJECT. CONTRACTOR(S) MUST VERIFY ALL DIMENSIONS AND ADVISE AMERICAN TOWER OF ANY DISCREPANCIES. ANY PRIOR ISSUANCE OF THIS DRAWING IS SUPERSEDED BY THE LATEST VERSION ON FILE WITH AMERICAN TOWER.

REV.	DESCRIPTION	BY	DATE
0	FOR CONSTRUCTION	AMM	02/26/18
1	ADD SAFETY CANOPY	AMM	03/07/18
2	REV GEN MODEL/TYPE	AMM	05/31/18

ATC SITE NUMBER:
88011

ATC SITE NAME:
EAST KILLINGLY NORTH

SITE ADDRESS:
1375 NORTH ROAD
DAYVILLE, CT 06241

SEAL:

STATE OF CONNECTICUT
PATRICK P. BARRY
28959
LICENSED
PROFESSIONAL ENGINEER

Authorized by "EOR"
May 31 2018 4:45 PM cosign

T-Mobile

DRAWN BY:	AMM
APPROVED BY:	PPB
DATE DRAWN:	02/26/18
ATC JOB NO:	12203191

CONSTRUCTION DETAILS

SHEET NUMBER:	REVISION:
C-504	2

Copyright © 2018 ATC IP LLC. All Rights Reserved.

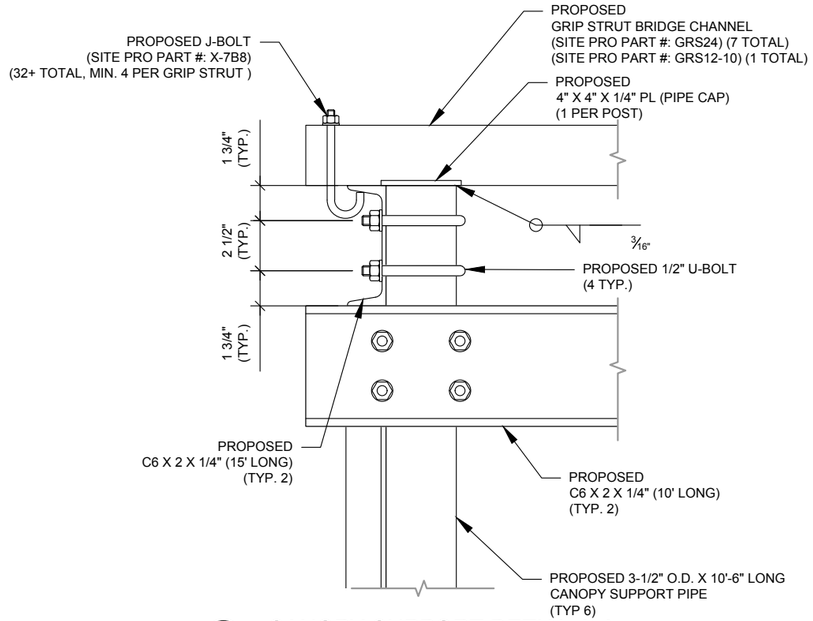

1 CANOPY SUPPORT DETIAL A-A

SCALE: NOT TO SCALE

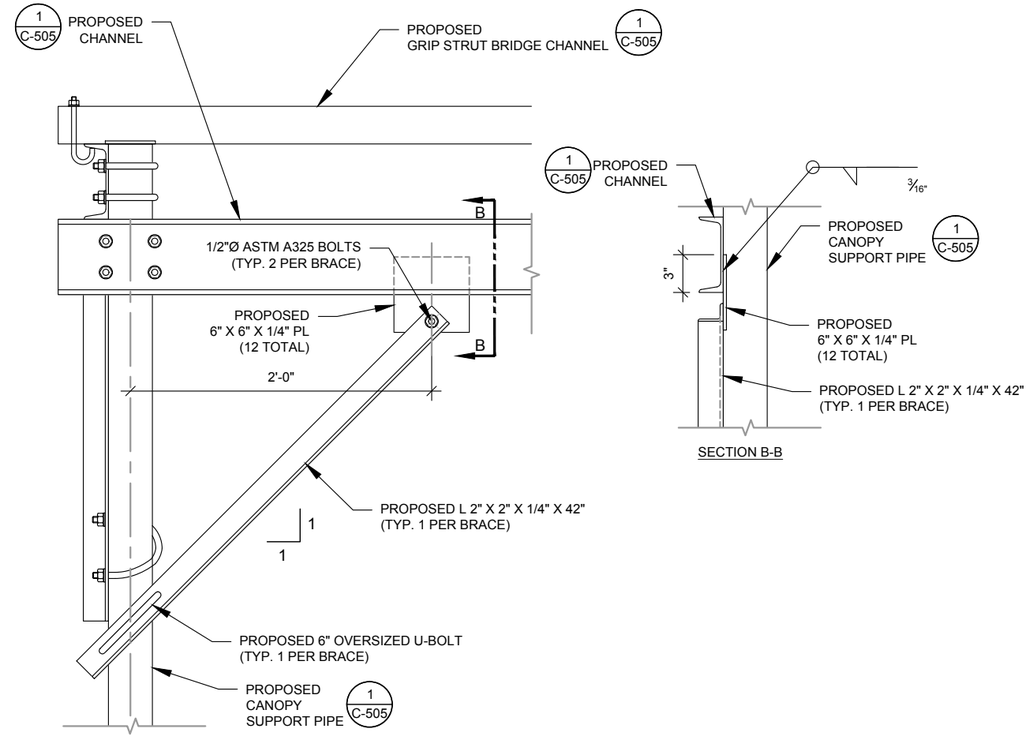

NOTE: EACH CANOPY POST SHALL HAVE (2) BRACES PER POST

2 CANOPY BRACING DETAIL

SCALE: NOT TO SCALE

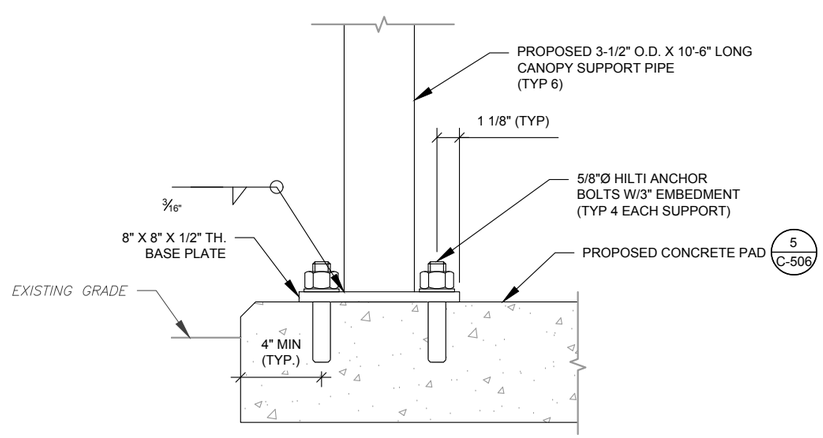

3 CANOPY SUPPORT/ANCHOR DETAIL

SCALE: NOT TO SCALE

AMERICAN TOWER®
A.T. ENGINEERING SERVICE, PLLC
3500 REGENCY PARKWAY
SUITE 100
CARY, NC 27518
PHONE: (919) 468-0112
COA: PEC.0001553

THESE DRAWINGS AND/OR THE ACCOMPANYING SPECIFICATION AS INSTRUMENTS OR SERVICE ARE THE EXCLUSIVE PROPERTY OF AMERICAN TOWER. THEIR USE AND PUBLICATION SHALL BE RESTRICTED TO THE ORIGINAL SITE FOR WHICH THEY ARE PREPARED. ANY USE OR DISCLOSURE OTHER THAN THAT WHICH RELATES TO AMERICAN TOWER OR THE SPECIFIED CARRIER IS STRICTLY PROHIBITED. TITLE TO THESE DOCUMENTS SHALL REMAIN THE PROPERTY OF AMERICAN TOWER WHETHER OR NOT THE PROJECT IS EXECUTED. NEITHER THE ARCHITECT NOR THE ENGINEER WILL BE PROVIDING ON-SITE CONSTRUCTION REVIEW OF THIS PROJECT. CONTRACTOR(S) MUST VERIFY ALL DIMENSIONS AND ADVISE AMERICAN TOWER OF ANY DISCREPANCIES. ANY PRIOR ISSUANCE OF THIS DRAWING IS SUPERSEDED BY THE LATEST VERSION ON FILE WITH AMERICAN TOWER.

REV.	DESCRIPTION	BY	DATE
0	FOR CONSTRUCTION	AMM	02/26/18
1	ADD SAFETY CANOPY	AMM	03/07/18

ATC SITE NUMBER:

88011

ATC SITE NAME:

EAST KILLINGLY NORTH

SITE ADDRESS:
1375 NORTH ROAD
DAYVILLE, CT 06241

SEAL:

Authorized by "EOR"
May 31 2018 4:48 PM cosign

T-Mobile

DRAWN BY:	AMM
APPROVED BY:	PPB
DATE DRAWN:	02/26/18
ATC JOB NO:	12203191

CONSTRUCTION DETAILS

SHEET NUMBER:	REVISION:
C-505	1

Copyright © 2018 ATC IP LLC. All Rights Reserved.

CONSTRUCTION NOTE:

1. INSTALL ICE BRIDGE TO ALLOW 7 FEET CLEARANCE ABOVE GRADE TO LOWEST APPURTENANCE.

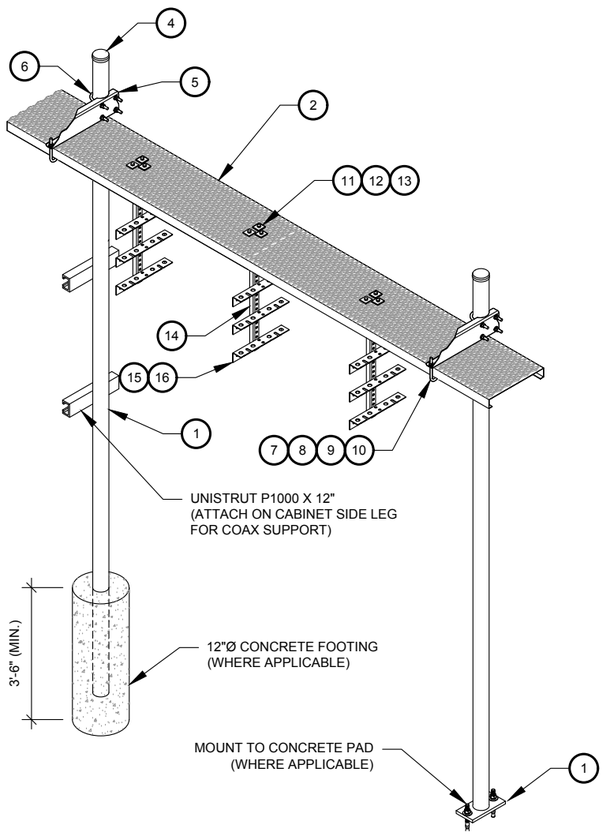

WB-K210-B WAVEGUIDE BRIDGE KIT - BILL OF MATERIALS (INCLUDED WITH KIT UNLESS NOTED OTHERWISE)					
ITEM	PART NUMBER	DESCRIPTION	ITEM	PART NUMBER	DESCRIPTION
1	MF126.01 MF-130	10'-4" COLUMN & BASE SHOE* 13'-4" PIPE COLUMN	9	GWL-04	1/2" GALV LOCK WASHER
2	WB-CY210	SAFETY GRATING 24" X 10'	10	GN-04	1/2" GALV HEX NUT
3	WBK110BHK	HARDWARE KIT (ITEMS 4-16)	11	GB-03205	3/8" X 2" GALV BOLT KIT
4	PC-034	PIPE CAP 3-1/2"	12	MT-387	SQUARE WASHER, 1-1/2" X 1-1/2" W/ 7/16" HOLE
5	WBLB243.08	24" WAVEGUIDE BRIDGE SUPPORT BRACKET	13	GWF-03	3/8" GALV FLAT WASHER
6	GUB-4356	1/2" X 3-5/8" X 6" GALV U-BOLT	14	WBT243.01	VERTICAL TRAPEZE SECTION
7	WB-JB-6	1/2" J-BOLT	15	GB-03105	3/8" X 1" GALV BOLT KIT
8	GWF-04	1/2" GALV FLAT WASHER	16	WBT243.02	HORIZONTAL TRAPEZE SECTION

CONTRACTOR SHALL USE PARTS MANUFACTURED BY COMMSCOPE OR APPROVED EQUIVALENT.
*BASE SHOE NOT INCLUDED IN WB-K210-B KIT, ORDER COLUMN SEPARATELY OR KIT WB-K210-S.

1 WAVEGUIDE BRIDGE KIT

SCALE: NOT TO SCALE

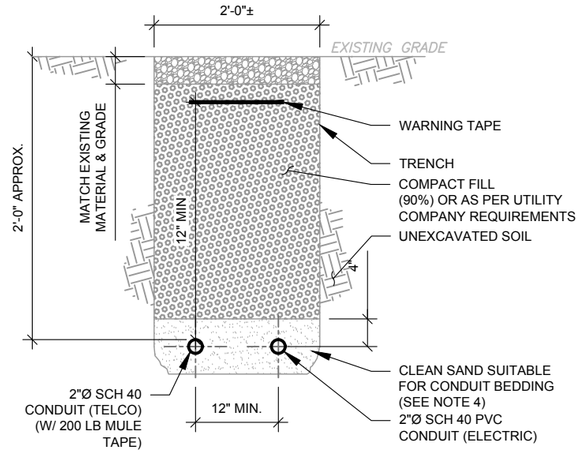

TRENCH NOTES:

1. IF FREE OF ORGANIC OR OTHER DELETERIOUS MATERIAL, EXCAVATED MATERIAL MAY BE USED FOR BACKFILL.
2. IF NOT, PROVIDE CLEAN, COMPACTIBLE MATERIAL. COMPACT IN 8" LIFTS. REMOVE ANY LARGE ROCKS PRIOR TO BACKFILLING. CONTRACTOR TO VERIFY LOCATION OF EXISTING U/G UTILITIES PRIOR TO DIGGING.
3. IF CURRENT AS-BUILT DRAWINGS ARE NOT AVAILABLE CONTRACTOR SHALL HAND DIG U/G TRENCHING.
4. CONCRETE ENCASE CONDUIT WHEN TRENCHING UNDER SITE ACCESS ROAD.

2 TELCO AND POWER CONDUIT JOINT TRENCH

SCALE: N.T.S.

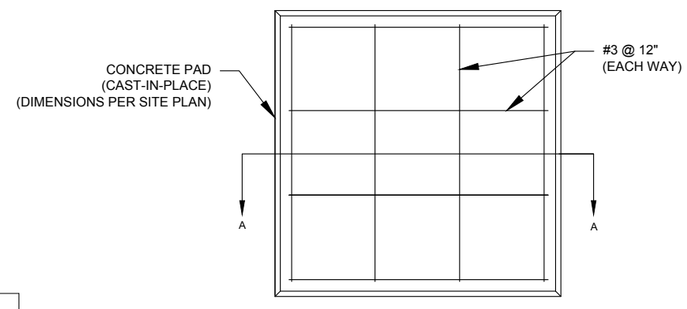

PLAN VIEW

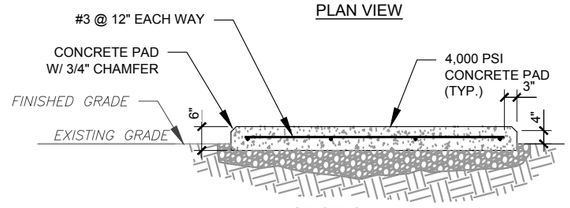

SECTION A-A

PAD NOTES:

1. SUBGRADE AND FILL SHALL CONSIST OF CLEAN SOIL. DELETRIOUS MATERIAL AND ORGANICS SHALL BE REMOVED.
2. COMPACT SUBGRADE TO 95% IN ACCORDANCE WITH ATC SOEC 312000, 3.20C.
3. USE GALVANIZED HILTI EXPANSION ANCHORS OR, APPROVED EQUAL, FOR EQUIPMENT ANCHORAGE.
4. FOR SIZE AND LOCATION OF ANCHORS AND OTHER REQUIREMENT, SEE EQUIPMENT VENDOR DRAWINGS.
5. DETAIL FOR ILLUSTRATIVE PURPOSES ONLY, MAINTAIN REBAR SPACING 12" O.C. FOR PROPOSED APPLICATION.

4 CONCRETE PAD FOR MINOR EQUIPMENT

SCALE: NOT TO SCALE

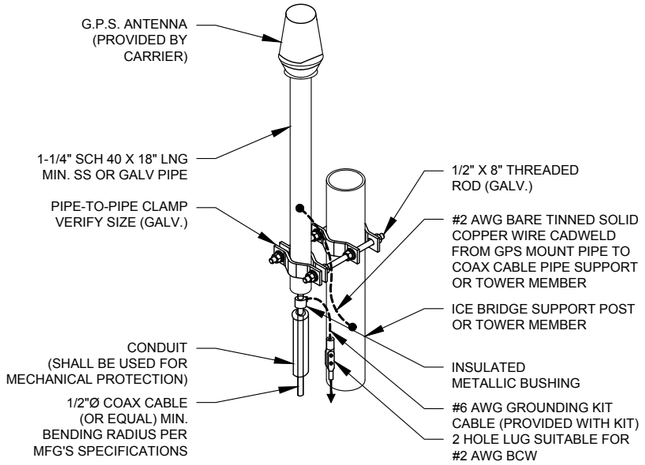

NOTE:
1. GPS SHALL BE PLACED WITH CLEAR SIGHT LINE TO THE SOUTHERN SKY.
2. CONTRACTOR TO SUPPLY COAX FOR GPS UNIT.

3 GPS ANTENNA ATTACHMENT DETAIL

SCALE: NOT TO SCALE

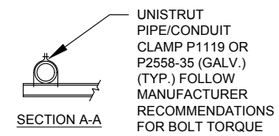

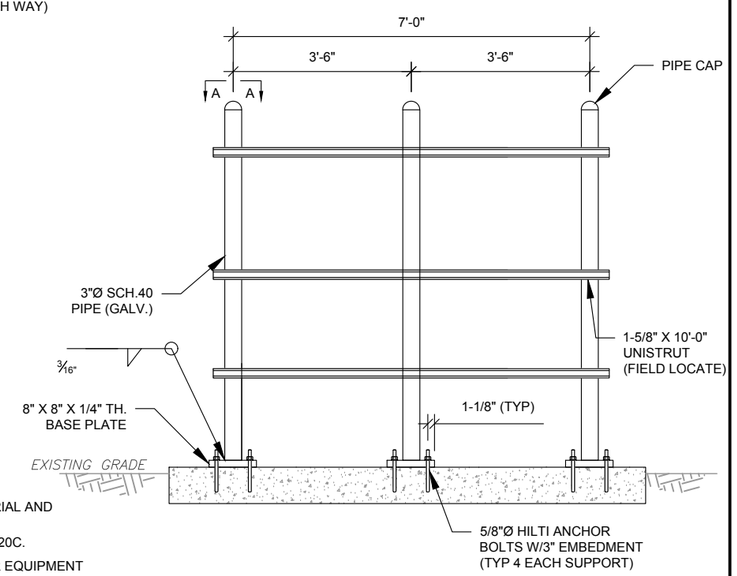

5 TYPICAL H-FRAME DETAIL

SCALE: NOT TO SCALE

AMERICAN TOWER®
A.T. ENGINEERING SERVICE, PLLC
3500 REGENCY PARKWAY
SUITE 100
CARY, NC 27518
PHONE: (919) 468-0112
COA: PEC.0001553

THESE DRAWINGS AND/OR THE ACCOMPANYING SPECIFICATION AS INSTRUMENTS OR SERVICE ARE THE EXCLUSIVE PROPERTY OF AMERICAN TOWER. THEIR USE AND PUBLICATION SHALL BE RESTRICTED TO THE ORIGINAL SITE FOR WHICH THEY ARE PREPARED. ANY USE OR DISCLOSURE OTHER THAN THAT WHICH RELATES TO AMERICAN TOWER OR THE SPECIFIED CARRIER IS STRICTLY PROHIBITED. TITLE TO THESE DOCUMENTS SHALL REMAIN THE PROPERTY OF AMERICAN TOWER WHETHER OR NOT THE PROJECT IS EXECUTED. NEITHER THE ARCHITECT NOR THE ENGINEER WILL BE PROVIDING ON-SITE CONSTRUCTION REVIEW OF THIS PROJECT. CONTRACTOR(S) MUST VERIFY ALL DIMENSIONS AND ADVISE AMERICAN TOWER OF ANY DISCREPANCIES. ANY PRIOR ISSUANCE OF THIS DRAWING IS SUPERSEDED BY THE LATEST VERSION ON FILE WITH AMERICAN TOWER.

Copyright © 2018 ATC IP LLC. All Rights Reserved.

REV.	DESCRIPTION	BY	DATE
0	FOR CONSTRUCTION	AMM	02/26/18
1	ADD SAFETY CANOPY	AMM	03/07/18

ATC SITE NUMBER:
88011

ATC SITE NAME:
EAST KILLINGLY NORTH

SITE ADDRESS:
1375 NORTH ROAD
DAYVILLE, CT 06241

SEAL:

Authorized by "EOR"
May 31 2018 4:48 PM cosign

T-Mobile

DRAWN BY:	AMM
APPROVED BY:	PPB
DATE DRAWN:	02/26/18
ATC JOB NO:	12203191

CONSTRUCTION DETAILS

SHEET NUMBER:	REVISION:
C-506	1

GROUNDING NOTES:

1. ALL EQUIPMENT ENCLOSURES, DEVICES AND CONDUITS SHALL BE GROUNDED TO CONFORM WITH THE LATEST REQUIREMENTS OF THE NEC BY THE INSTALLATION OF A SEPARATE, GREEN, INSULATED GROUND CONDUCTOR FOR ALL FEEDER AND BRANCH CIRCUITS. GROUND CONDUCTORS SHALL BE OF THE SIZE INDICATED ON THE DRAWINGS. GROUND CONDUCTORS SHALL BE CONTINUOUS IN LENGTH AND SHALL BE BONDED TO EACH ENCLOSURE THEY PASS THROUGH. CONDUIT SHALL NOT BE USED AS A GROUNDING CIRCUIT.

LIGHTNING AND SURGE PROTECTION:

1. GROUNDING CONDUCTORS SHALL:
   - A. BE #2 AWG SOLID BARE TINNED COPPER (SBTC) FOR ALL GROUNDING SYSTEM WIRE UNLESS OTHERWISE NOTED, OR OTHERWISE REQUIRED BY CODE.
   - B. BE MINIMUM 12" BEND RADIUS. KEEP NUMBER OF BENDS TO A MINIMUM.
   - C. AVOID LONG BONDING CONNECTION RUNS. MAKE DIRECT AS POSSIBLE.
   - D. NOT HAVE ANY U-SHAPED RUNS.
   - E. BE IN NON-METALLIC CONDUIT ONLY, IF IN CONDUIT.
   - F. BE PLACED THROUGH NON-METALLIC SLEEVES IN FLOORS, WALLS, CEILINGS, ETC.
   - G. PROTECTED IN NON-METALLIC CONDUIT WHERE EXPOSED ABOVE GRADE.
2. INSTALL ALL GROUNDING RINGS AND RADIALS WITH CONDUCTIVE CEMENT, SANKOSHA AS DISTRIBUTED BY ELECTRIC MOTION COMPANY, INC., WINSTED, CT 06098, OR AS SPECIFICALLY INDICATED. INSTALL PER MANUFACTURER'S SPECIFICATIONS.
3. GROUND RINGS SHALL BE:
   - A. MINIMUM 30" BELOW GRADE, OR BELOW FROST LINE WHICHEVER IS DEEPER.
   - B. MINIMUM 2' FROM FOUNDATIONS, FOOTINGS, OTHER GROUNDING SYSTEMS AND ALL CONDUCTIVE OBJECTS.
   - C. WITH MINIMUM 12" BEND RADII.
   - D. WITH ALL CONNECTIONS IN CONTACT WITH EARTH, BONDED BY EXOTHERMIC WELDING.
   - E. BONDED TO A SINGLE POINT GROUND (SPG) WITH A SINGLE WIRE AS INDICATED ON DRAWINGS.
4. GROUND RODS SHALL BE:
   - A. MINIMUM 5/8" DIAMETER.
   - B. MINIMUM 10' LONG.
   - C. COPPER-CLAD GALVANIZED STEEL OR STAINLESS STEEL.
   - D. PLACED IN UNDISTURBED SOIL AND BELOW THE FROST LINE.
   - E. INSTALLED WITH MINIMUM SEPARATION DISTANCE OF TWICE THE DEPTH OF THE ROD(S), OR AS INDICATED ON DRAWINGS.
   - F. MINIMUM TWO (2) RODS ON THE TOWER RING OR ONE (1) PER LEG WHICHEVER IS LARGER, MINIMUM FOUR (4) RODS ON EVERY EQUIPMENT BUILDING RING WITH ONE AT EACH CORNER OR AS INDICATED, MINIMUM ONE (1) ROD FOR POWER SERVICE GROUNDING ELECTRODE, AND MINIMUM ONE (1) ROD AT END OF EACH RADIAL.
5. CONDUCTIVE OBJECTS, SUCH AS FENCES, SHALL BE BONDED TO THE GROUNDING SYSTEM IF WITHIN 20' OF THE TOWER GROUNDING SYSTEM, OR 5' OF ANY OTHER GROUNDED COMPONENT.
6. INSTALL ADDITIONAL TOWER GROUND BAR SO AS NOT TO EXCEED 300' BETWEEN GROUND BARS.

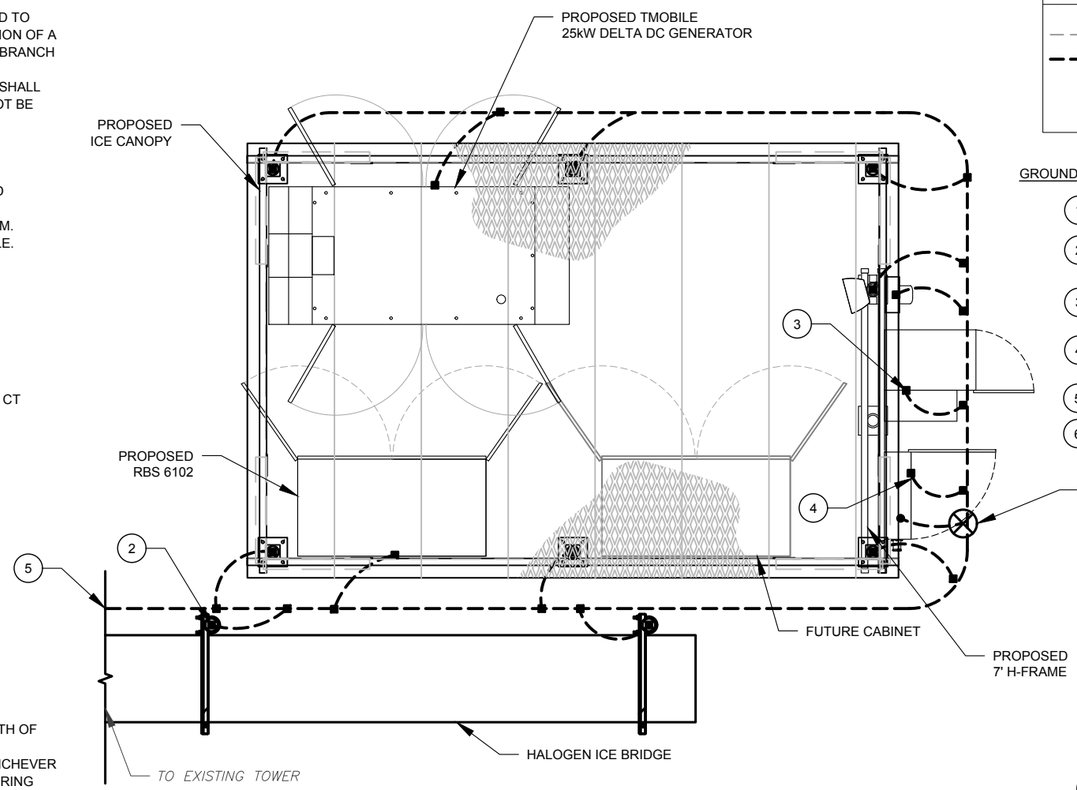

1 DETAILED GROUNDING PLAN

SCALE: NOT TO SCALE

GROUNDING PLAN LEGEND:

- EXISTING GROUND WIRE
- GROUND WIRE
- EXOTHERMIC WELD
- MECHANICAL WELD
- COPPER GROUND ROD
- TEST WELL

GROUNDING KEYED NOTES:

1. 5/8Ø" X 10 FT GROUND ROD.
2. #2 AWG BOND FROM VERTICAL ICEBRIDGE POST TO EXTERNAL GROUND RING (TYP. EVERY POST).
3. #2 AWG SBTC BOND FROM TOWER GROUND RING TO EQUIPMENT.
4. GROUNDING ELECTRODE CONDUCTOR (GEC) AND GROUNDING ELECTRODE SIZED PER NEC OR AS OTHERWISE INDICATED.
5. BOND TO TOWER GROUND RING.
6. #2 AWG BOND FROM MJB TO GROUND RING.

EQUIPMENT POWER NOTES:

1. 2" CONDUIT W/ 3-#3/0 CU, (1) #6 AWG G, PPC POWER
2. 2" CONDUIT FOR TELCO FEEDER SERVICE TO TELCO SOURCE PER UTILITY
3. 2-#12, 1 #12G IN 3/4" CONDUIT FROM WESTELL TO 6102
4. 3-#1, 1-#8 IN 2" CONDUIT
5. 2" CONDUIT, FOR CAT5
6. CONNECTION FROM DELTA DC GENERATOR TO RBS6102 PER MANUFACTURER SPECIFICATION

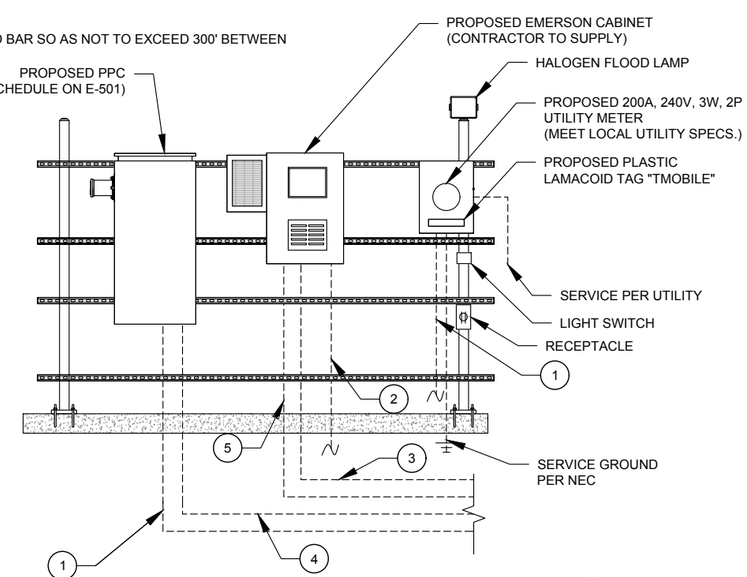

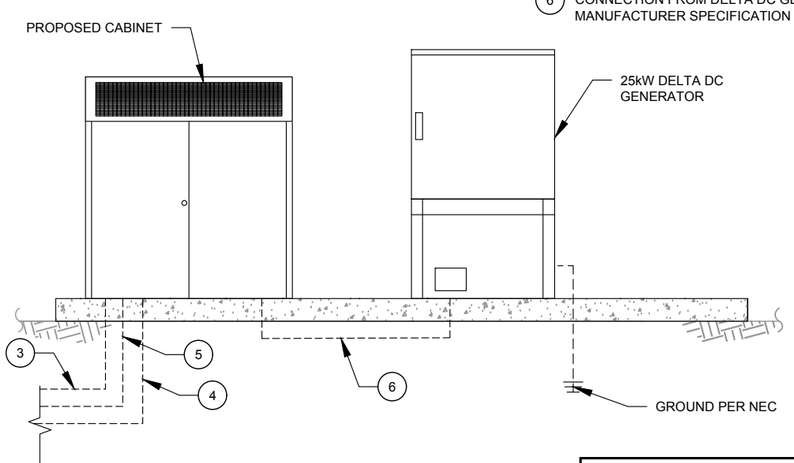

2 EQUIPMENT POWER AND TELCO SCHEMATIC

SCALE: N.T.S.

NOTE:
ALL EQUIPMENTS' SHORT-CIRCUIT CURRENT RATING SHALL EXCEED AVAILABLE FAULT CURRENT PER UTILITY

AMERICAN TOWER®
A.T. ENGINEERING SERVICE, PLLC
3500 REGENCY PARKWAY
SUITE 100
CARY, NC 27518
PHONE: (919) 468-0112
COA: PEC.0001553

THESE DRAWINGS AND/OR THE ACCOMPANYING SPECIFICATION AS INSTRUMENTS OR SERVICE ARE THE EXCLUSIVE PROPERTY OF AMERICAN TOWER. THEIR USE AND PUBLICATION SHALL BE RESTRICTED TO THE ORIGINAL SITE FOR WHICH THEY ARE PREPARED. ANY USE OR DISCLOSURE OTHER THAN THAT WHICH RELATES TO AMERICAN TOWER OR THE SPECIFIED CARRIER IS STRICTLY PROHIBITED. TITLE TO THESE DOCUMENTS SHALL REMAIN THE PROPERTY OF AMERICAN TOWER WHETHER OR NOT THE PROJECT IS EXECUTED. NEITHER THE ARCHITECT NOR THE ENGINEER WILL BE PROVIDING ON-SITE CONSTRUCTION REVIEW OF THIS PROJECT. CONTRACTOR(S) MUST VERIFY ALL DIMENSIONS AND ADVISE AMERICAN TOWER OF ANY DISCREPANCIES. ANY PRIOR ISSUANCE OF THIS DRAWING IS SUPERSEDED BY THE LATEST VERSION ON FILE WITH AMERICAN TOWER.

REV.	DESCRIPTION	BY	DATE
0	FOR CONSTRUCTION	AMM	02/26/18
1	ADD SAFETY CANOPY	AMM	03/07/18
2	REV GEN MODEL/TYPE	AMM	05/31/18

ATC SITE NUMBER:

88011

ATC SITE NAME:

EAST KILLINGLY NORTH

SITE ADDRESS:
1375 NORTH ROAD
DAYVILLE, CT 06241

SEAL:

STATE OF CONNECTICUT
PATRICK P. BARRY
28959
LICENSED
PROFESSIONAL ENGINEER

Authorized by "EOR"
May 31 2018 4:48 PM cosign

T-Mobile

DRAWN BY:	AMM
APPROVED BY:	PPB
DATE DRAWN:	02/26/18
ATC JOB NO:	12203191

GROUNDING PLAN AND SCHEMATIC

SHEET NUMBER:	REVISION:
E-101	2

Copyright © 2018 ATC IP LLC. All Rights Reserved.

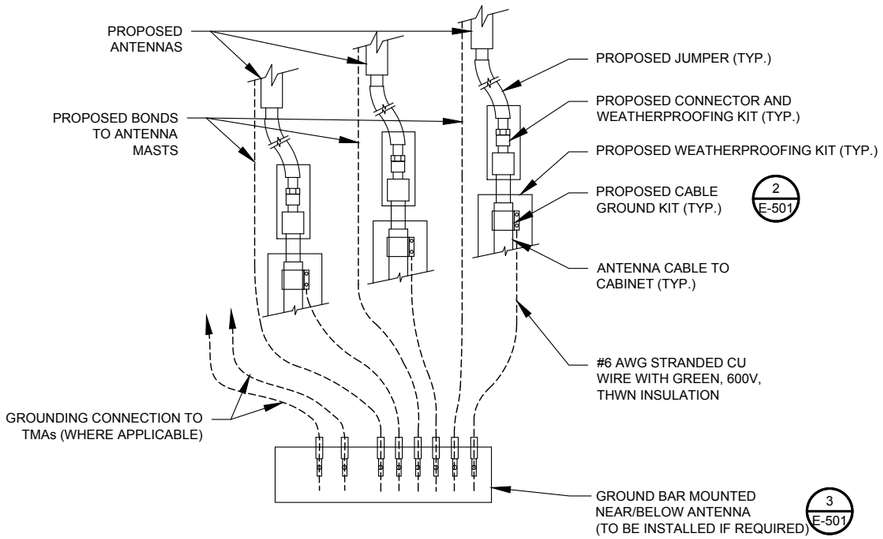

NOTES:

1. THIS DETAIL IS INTENDED TO SHOW THE GENERAL GROUNDING REQUIREMENTS. SLIGHT ADJUSTMENTS MAY BE REQUIRED BASED ON EXISTING SITE CONDITIONS. THE CONTRACTOR SHALL MAKE FIELD ADJUSTMENTS AS NEEDED AND INFORM THE CONSTRUCTION MANAGER OF ANY CONFLICTS.
2. SITE GROUNDING SHALL COMPLY WITH T-MOBILE GROUNDING STANDARDS, LATEST EDITION, AND COMPLY WITH T-MOBILE GROUNDING CHECKLIST, LATEST VERSION. WHEN NATIONAL AND LOCAL GROUNDING CODES ARE MORE STRINGENT THEY SHALL GOVERN.

1 TYPICAL ANTENNA GROUNDING DIAGRAM

SCALE: NOT TO SCALE

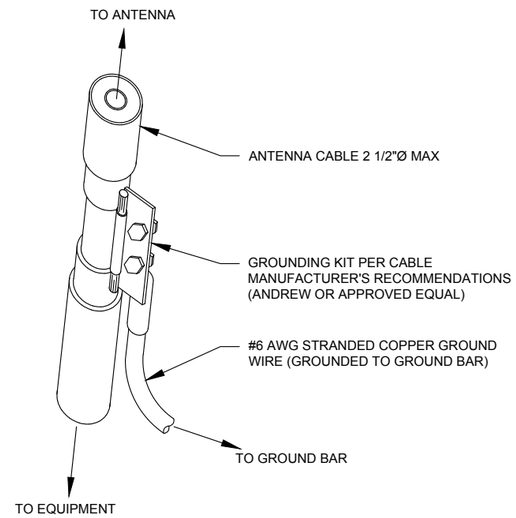

GROUND KIT NOTES:

1. DO NOT INSTALL CABLE GROUND KIT AT A BEND AND ALWAYS DIRECT GROUND WIRE DOWN TO GROUND BAR.
2. CONTRACTOR SHALL PROVIDE WEATHERPROOFING KIT (ANDREW PART NUMBER 221213) AND INSTALL/TAPE PER MANUFACTURER'S SPECIFICATIONS.

2 CABLE GROUND KIT CONNECTION DETAIL

SCALE: NOT TO SCALE

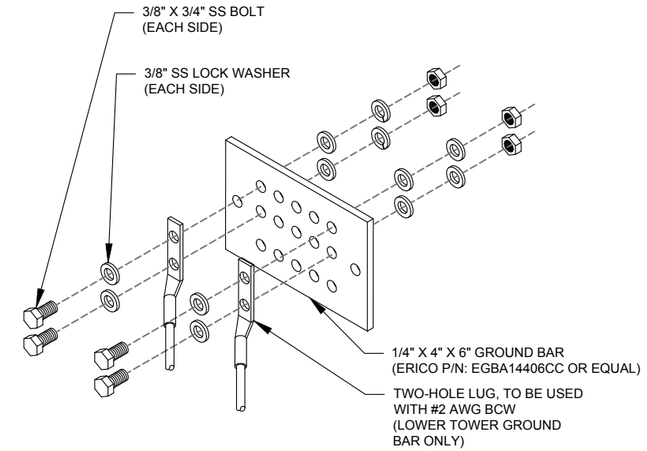

GROUND BAR NOTES:

1. GROUND BAR KITS COME WITH ALL HARDWARE, NUTS, BOLTS, WASHERS, ETC. EXCEPT THE STRUCTURAL MOUNTING MEMBER(S).
2. GROUND BAR TO BE BONDED DIRECTLY TO TOWER.

3 TOWER GROUND BAR DETAIL

SCALE: NOT TO SCALE

TO GROUND BAR

PANEL DESIGNATION:	PPC	TYPE:	LIGHTING & APPLIANCE	SYSTEM:	120/240V, 1Ø, 3W, 20 CKT	LOCATION:	T-MOBILE LEASE AREA
		MOUNTING:	SURFACE	MAIN BREAKER (MB):	200A MCB		
		ENCLOSURE:	NEMA 3R	MAIN BUS RATING:	200A	PANEL NOTES:	INTERGRATED COMMUNICATION
				MIN. A.I.C. RATING:	22KAIC		POWER PANEL (PPC)

CONNECTED LOAD (kVA)		BRIEF DESCRIPTION	FEEDER OR BRANCH CIRCUIT									FEEDER OR BRANCH CIRCUIT						BRIEF DESCRIPTION	CONNECTED LOAD (kVA)	
			BREAKER		CIRCUIT			POLE NO.	CIRC. NOTES		CIRC. NOTES	POLE NO.	CIRCUIT			BREAKER				
A	B		AMPS	POLES	WIRE	GND	COND.						COND.	GND	WIRE	POLES	AMPS		A	B
9.60		6102 Cabinet	100	2	3-#1	1-#8	2"	1				2	3/4"	1-#12	2-#12	1	15	RECEPTACLE	0.18	
	9.60							3				4	3/4"	1-#12	2-#12	1	15	LIGHT		0.50
0.00								5				6							0.00	
	0.00							7				8								0.00
0.00								9				10							0.00	
	0.00							11				12								0.00
0.00								13				14							0.00	
	0.00							15				16								0.00
0.00								17				18							0.00	
	0.00							19				20								0.00
9.6	9.6								A	B	TOTAL								0.2	0.5
									9.8	10.1	19.9	CONNECTED LOAD (kVA)								
									9.8	10.1	19.9	DEMAND LOAD (kVA)								

DERATING FACTOR (80%)
DEMANDLOAD SIZING: 105 AMPS

4 PANEL SCHEDULE

SCALE: NOT TO SCALE

AMERICAN TOWER®
A.T. ENGINEERING SERVICE, PLLC
3500 REGENCY PARKWAY
SUITE 100
CARY, NC 27518
PHONE: (919) 468-0112
COA: PEC.0001553

THESE DRAWINGS AND/OR THE ACCOMPANYING SPECIFICATION AS INSTRUMENTS OR SERVICE ARE THE EXCLUSIVE PROPERTY OF AMERICAN TOWER. THEIR USE AND PUBLICATION SHALL BE RESTRICTED TO THE ORIGINAL SITE FOR WHICH THEY ARE PREPARED. ANY USE OR DISCLOSURE OTHER THAN THAT WHICH RELATES TO AMERICAN TOWER OR THE SPECIFIED CARRIER IS STRICTLY PROHIBITED. TITLE TO THESE DOCUMENTS SHALL REMAIN THE PROPERTY OF AMERICAN TOWER WHETHER OR NOT THE PROJECT IS EXECUTED. NEITHER THE ARCHITECT NOR THE ENGINEER WILL BE PROVIDING ON-SITE CONSTRUCTION REVIEW OF THIS PROJECT. CONTRACTOR(S) MUST VERIFY ALL DIMENSIONS AND ADVISE AMERICAN TOWER OF ANY DISCREPANCIES. ANY PRIOR ISSUANCE OF THIS DRAWING IS SUPERSEDED BY THE LATEST VERSION ON FILE WITH AMERICAN TOWER.

REV.	DESCRIPTION	BY	DATE
0	FOR CONSTRUCTION	AMM	02/26/18

ATC SITE NUMBER:
88011

ATC SITE NAME:
EAST KILLINGLY NORTH

SITE ADDRESS:
1375 NORTH ROAD
DAYVILLE, CT 06241

SEAL:

Authorized by "EOR"
May 31 2018 4:48 PM cosign

T-Mobile

DRAWN BY:	AMM
APPROVED BY:	PPB
DATE DRAWN:	02/26/18
ATC JOB NO:	12203191

GROUNDING DETAILS

SHEET NUMBER: E-501
REVISION: 0

Copyright © 2018 ATC IP LLC. All Rights Reserved.

Table 1 Dimensions, Weight, and Color

Dimensions	
Height	1450 mm
Width	1300 mm
Depth	700 mm
Weight	
RBS (standard equipped) without backup batteries	390 kg
Color	
Gray	Reference number: RAL 7035, glossy

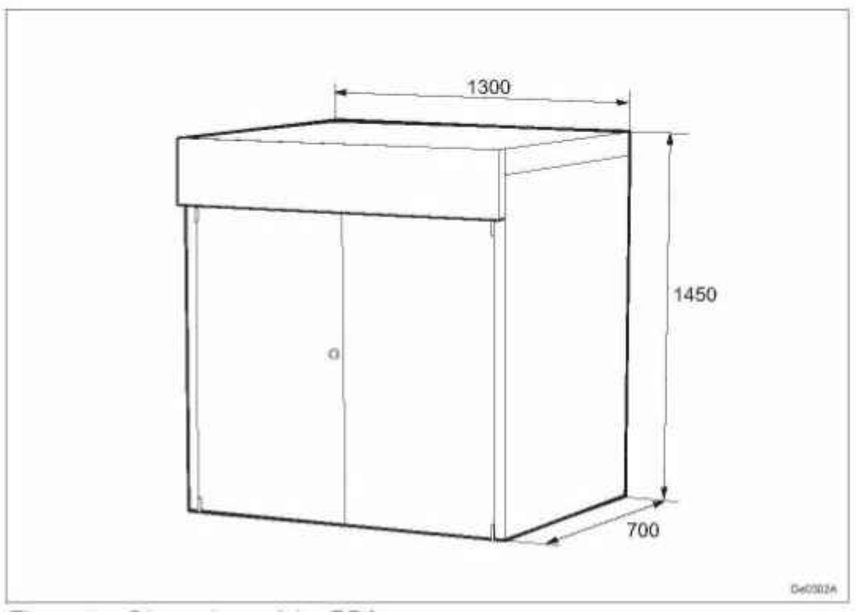

1 CABINET CONFIGURATION
SCALE: NOT TO SCALE

Indoor and Outdoor Cell Site Solutions for T-Mobile

T-Mobile · EMERSON Network Power

Technical Specifications

Electrical	Indoor Solution	Outdoor Solution
System Voltage, Nominal	120 VAC single phase	
Output Voltage	-42 VDC to -58 VDC	
System Capacity	19" 1 RU up to 10 A	19" 1 RU up to 8 A
Rectifier Capacity	0.5 kW @ 120 VAC	0.4 kW @ 120 VAC
DC Distribution	(1) wallmount 10 position GMT type fuse panel with (10) GMT fuses, up to 15 A	
Controller	SCU+ controller	

Physical Characteristics		
Framework Type	Relay rack	NetXtend™ Compact Enclosure
Available Space	1 RU 19" W	Up to 14 RU, 19" W
Dimensions (H x W x D)	DC power system: 1.7" x 19" x 12" Solution: 10.5" x 19" x 15.6"	Enclosure: 24" x 24" x 16" Battery tray: 22" W x 13" D
Mounting	Rack or wall mount	Wall or H-frame, pole mount (wall-mount kit included)
Weight, Equipped	System: 35.5 lb., w/out batteries Four (4) batteries: 36 lb. total	Enclosure: 64 lb., w/out batteries Four (4) batteries: 36 lb. total
Access	Front for batteries, control and distribution, rear for AC	Front

Environmental		
Climate System	Fan-cooled front to rear	Heat Exchanger
Operating Temp.	-40 °C to +75 °C *	-40 °C to +52 °C
Storage Temp.	-40 °C to +75 °C	-40 °C to +75 °C
Relative Humidity	0% to 95% non-condensing	100%
EMI/RFI	Conforms to FCC rules Part 15, Subpart B, Class B and EN55022 Class B, radiated and conducted	
Safety Compliance	cULus 60950 recognized NEBS Level 3 Compliance	cULus 60950 Recognized NEBS Level 3 Compliance Enclosure: cULus Listed GR-487

* See rectifier specification for any derating. Operating and storage temperatures for batteries installed in the battery cabinet are provided by the battery manufacturer.

Ordering Information

Indoor Solution		Outdoor Solution	
582136600SK010		F2013074	
Equipped with the following:		*Equipped with the following:*	
1 EA	NetSure™ 211 power system	1 EA	NetXtend™ Compact, NXC2416AAV1H05BB3
2 EA	500 W rectifiers	1 EA	NetSure™ 211 power system
1 EA	Wall mount bracket	2 EA	500 W rectifiers
1 EA	Battery cabinet	1 EA	19" rack-mount, slide-out tray
1 EA	19" rack-mount, slide-out tray	1 EA	AC outlet mounting bracket
		2 EA	20 A, 120 VAC outlets
		1 EA	Wall-mounting kit
Accessories			
547681	4 EA, Battery, EnerSys NP12-12, 12 AH bat mod	547681	4 EA, Battery, EnerSys NP12-12,12 AH bat mod

Diagrams

Indoor Solution

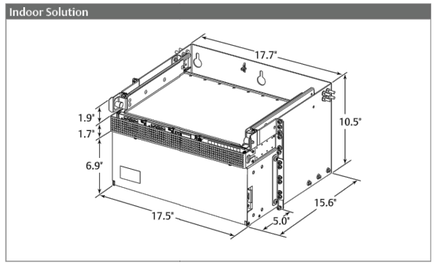

Outdoor Solution

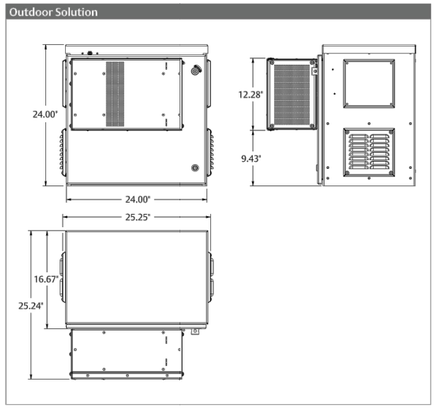

EmersonNetworkPower.com/EnergySystems (North America)
EmersonNetworkPower.eu/EnergySystems (EMEA)

© Emerson Network Power, Energy Systems, North America, Inc. 2013.

Business-Critical Continuity™, Emerson Network Power™, the Emerson Network Power logo, Emerson™ and Consider it Solved are service marks and trademarks of Emerson Electric Co. EnergyMaster™, eSure™, NetPerform™, NetReach™, NetSpan™, NetSure™ and NetXtend™ are trademarks of Emerson Network Power, Energy Systems, North America, Inc. Any other product, brand, or company names or logos are the property of the respective owner.

While every precaution has been taken to ensure accuracy and completeness herein, Emerson Electric Co. assumes no responsibility, and disclaims all liability, for damages resulting from use of this information or for any errors or omissions. Specifications subject to change without notice.

EMERSON. CONSIDER IT SOLVED.

2 CABINET CONFIGURATION
SCALE: NOT TO SCALE

NOTE: THIS SHEET CREATED BY OTHERS AND PROVIDED BY REQUEST OF CUSTOMER WITHOUT EDIT.

Copyright © 2018 ATC IP LLC. All Rights Reserved.

SUPPLEMENTAL

SHEET NUMBER:	REVISION:
R-601	0

RAN Template:	A&L Template:	Power System Template:
4Sec-6797DB2	4Sec-6797DB2_1xAIR+2QP	Custom

CTNL194A_Coverage Strategy_0.1_draft

Section 5 - RAN Equipment

Existing RAN Equipment
----- This section is intentionally blank. -----

Proposed RAN Equipment

Template: 4Sec-6797DB2

Enclosure	1	2
Enclosure Type	RBS 6102 MU AC	Ancillary Equipment
Baseband	DUW30 U2100 BB 5216 L2100 L1900 L700 L600	
Hybrid Cable System		Ericsson 6x12 HCS 'Select Length & AWG' (x4)
Multiplexer	XMU L2100 L1900 L700 L600	

RAN Scope of Work:

1 CABINET CONFIGURATION
SCALE: NOT TO SCALE

NOTE: THIS SHEET CREATED BY OTHERS AND PROVIDED BY REQUEST OF CUSTOMER WITHOUT EDIT.

SUPPLEMENTAL

SHEET NUMBER:	REVISION:
R-602	0

Copyright © 2018 ATC IP LLC. All Rights Reserved.