T-Mobile DC Diesel Generators
15kW and 25kW

Contents

1 Overview & General Specifications

2 Block Diagrams

3 Dimensions & Layouts

Features

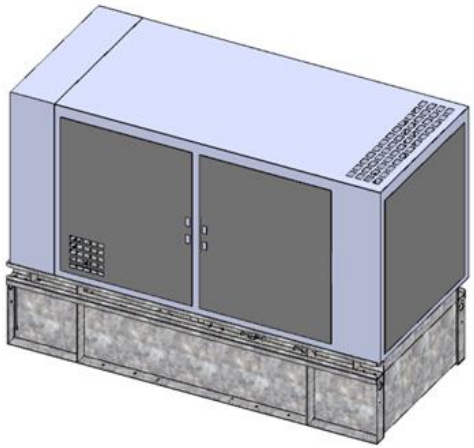

- Intelligent and Friendly Monitoring by Remote Control (via SNMP)
- Longer Service Interval: >500hrs
- Low Acoustic Noise: <75dBA @ 7 meters
  - Optional Upgrades: <65dBA @ 7 meters
- Longer Backup Time:

	Tank	15kW @ 75% Load	25kW @ 75% Load
Standard	130 gallon	94 hours	72 hours
Upgraded	220 gallon	155 hours	120 hours

- Output Ripple < 250mV
- Battery Management – Temperature compensation,
  Life management,
  Precise Battery Current Limitation
- Corrosion Resistant
- Rodent Resistant

General Specification

Model	15kW DC	25kW DC
DC Output	52Vdc at 100% load	
Engine Model	Perkins Tier 4 Interim	
Engine Speed	1800rpm	
Weight (estimated)	1120kg (2470lb)	1320kg (2910lb)
Operating Temperature	-25℃ to +45℃	
Safety	UL2200 / UL142	

Block Diagram

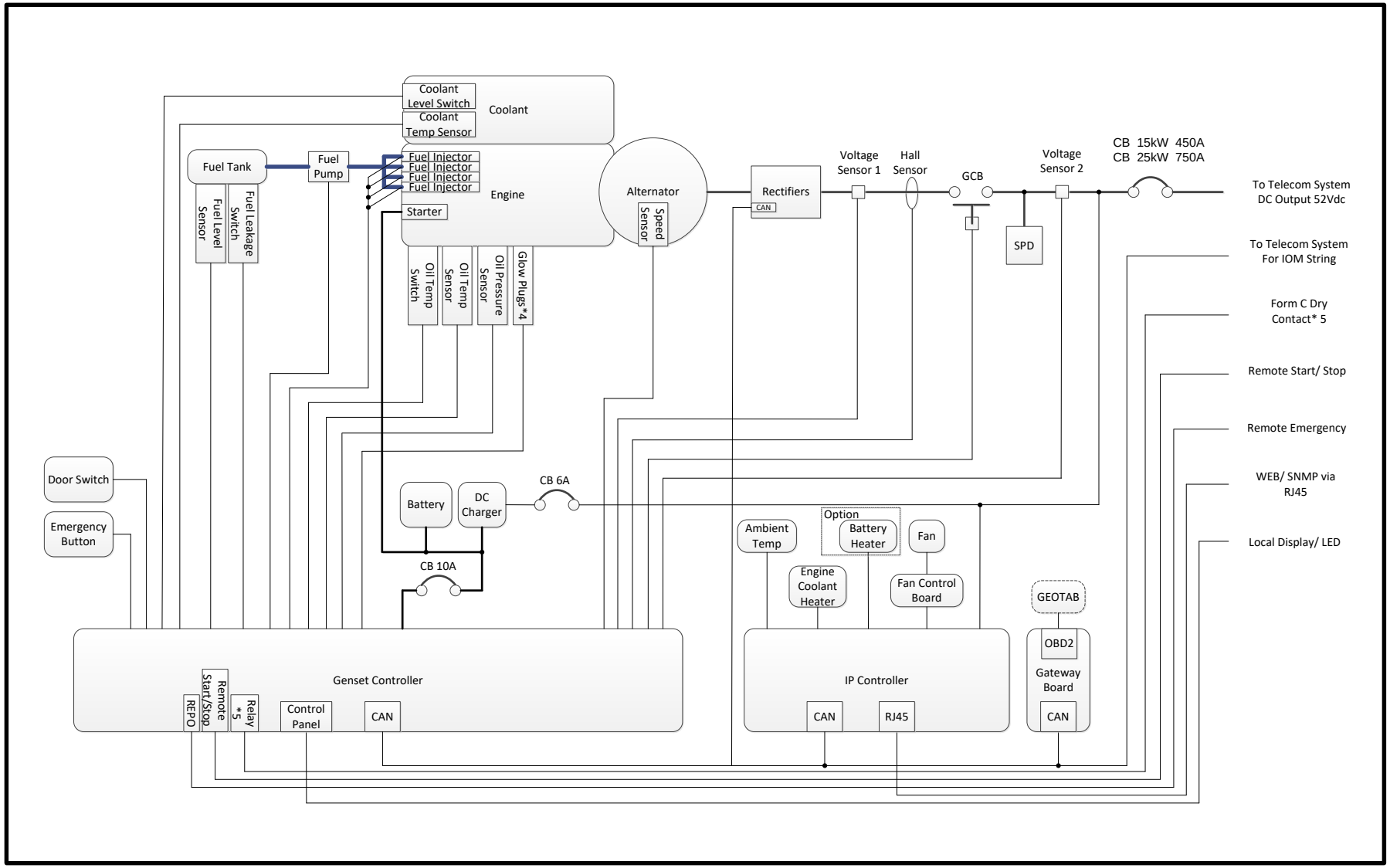

130 Gallon Tank Dimensions
15kW or 25kW DC Genset

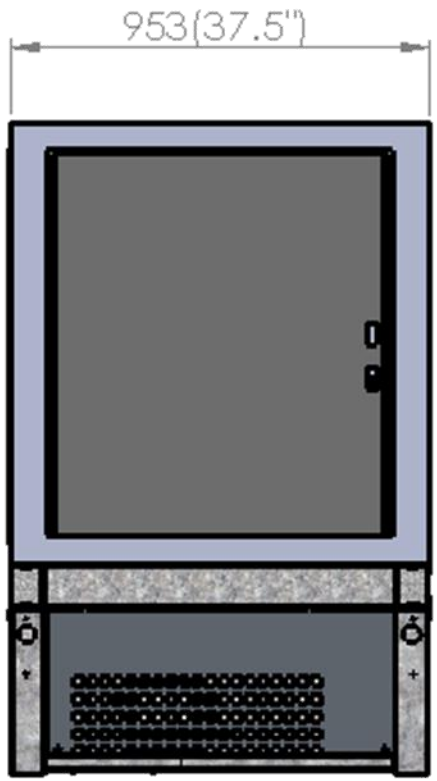

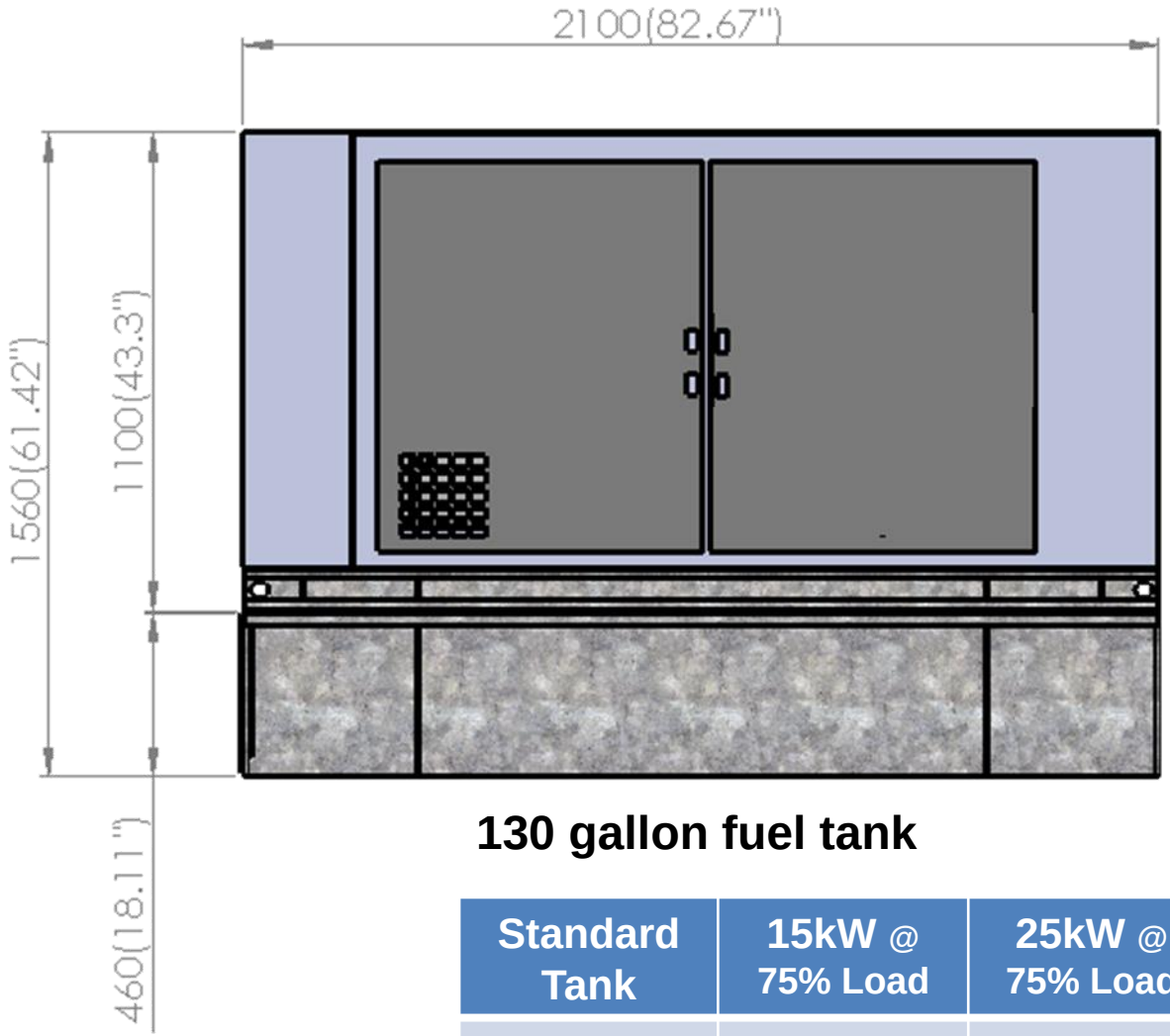

130 gallon fuel tank

Standard Tank	15kW @ 75% Load	25kW @ 75% Load
130 gallon	94 hours	72 hours

220 Gallon Tank Dimensions
15kW or 25kW DC Genset

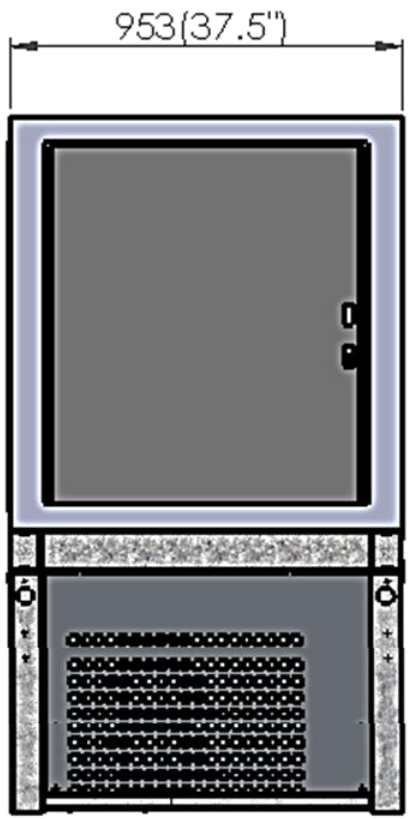

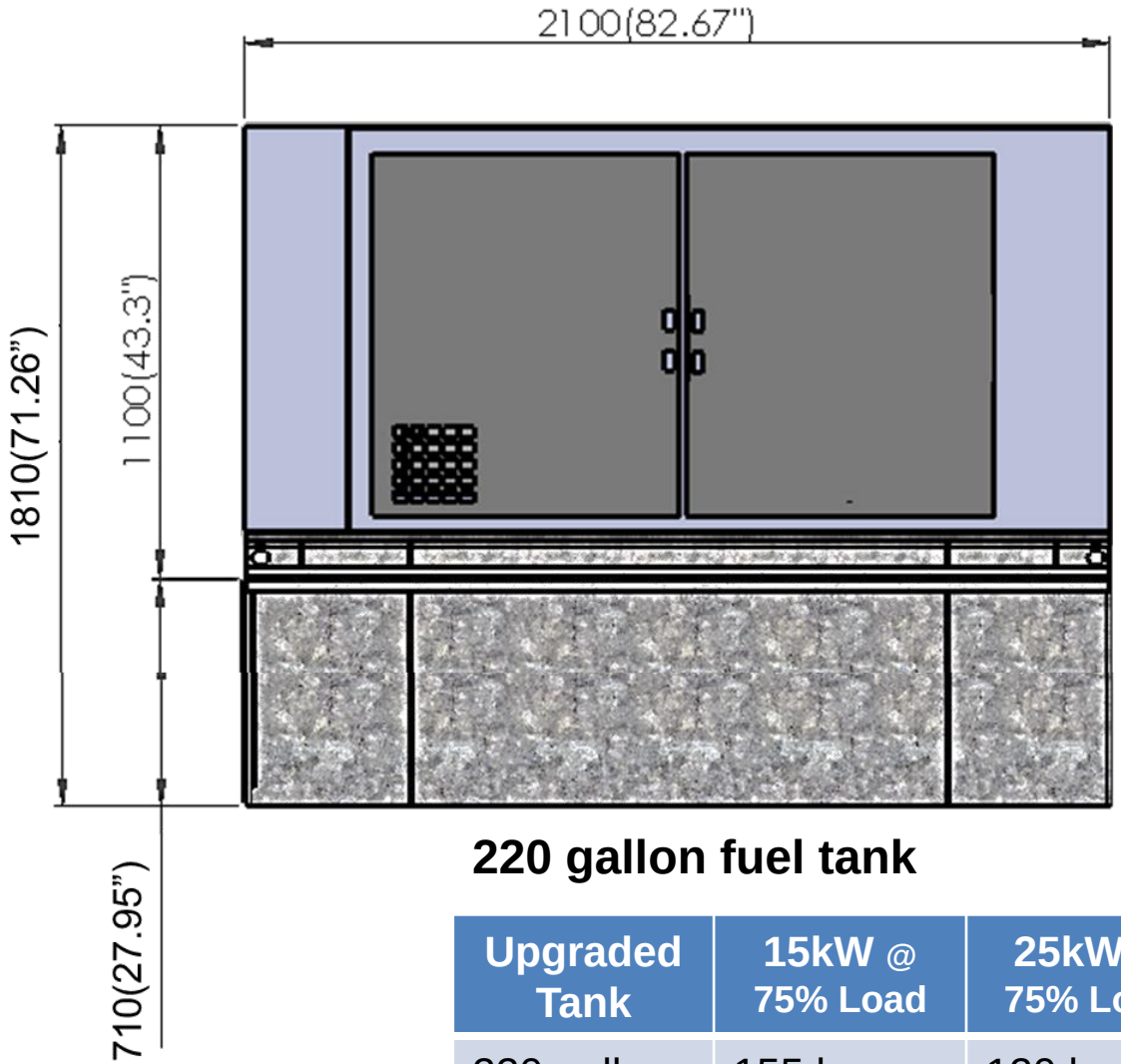

220 gallon fuel tank

Upgraded Tank	15kW @ 75% Load	25kW @ 75% Load
220 gallon	155 hours	120 hours

Generator Layout Front View

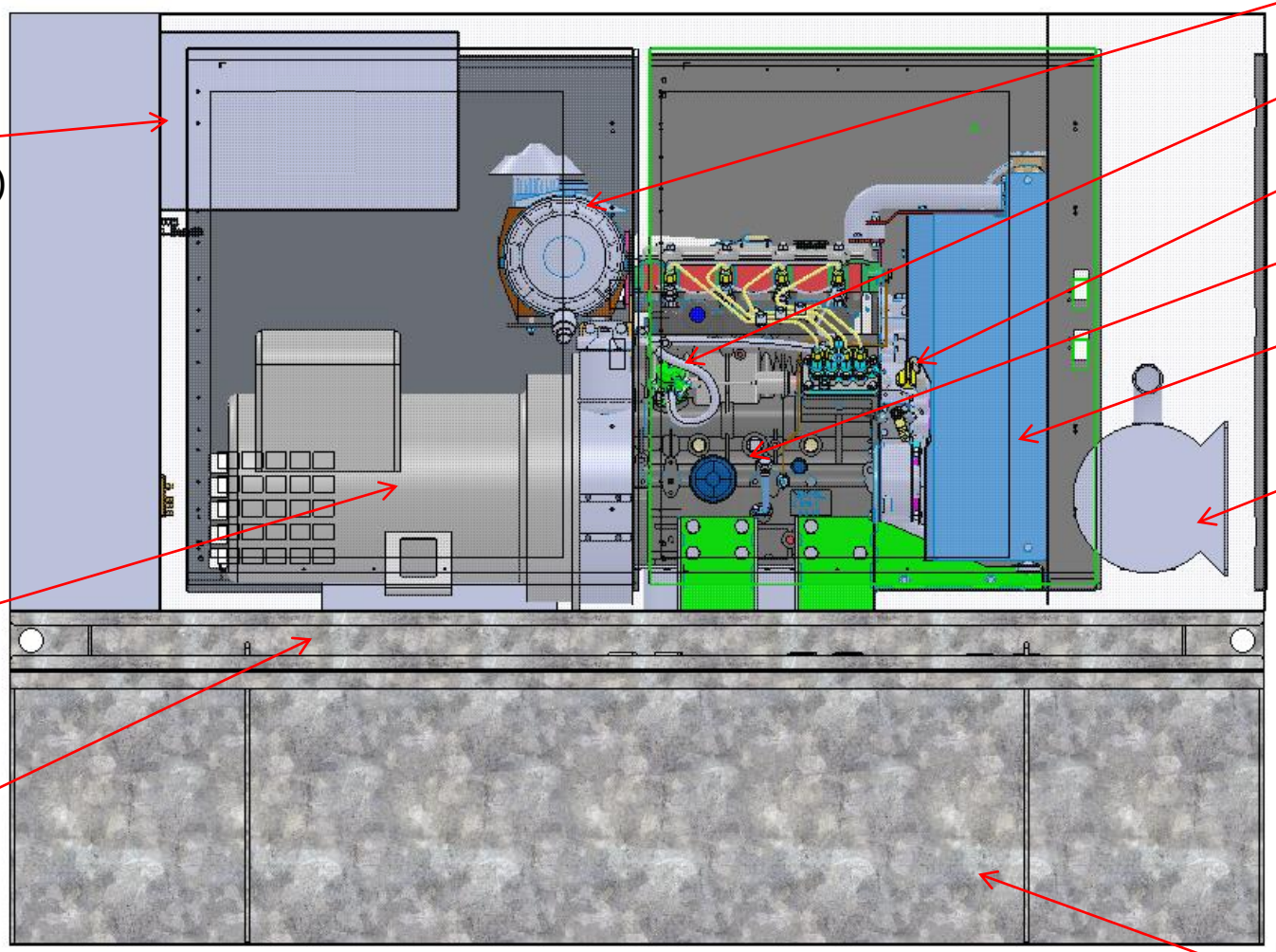

Left Side View

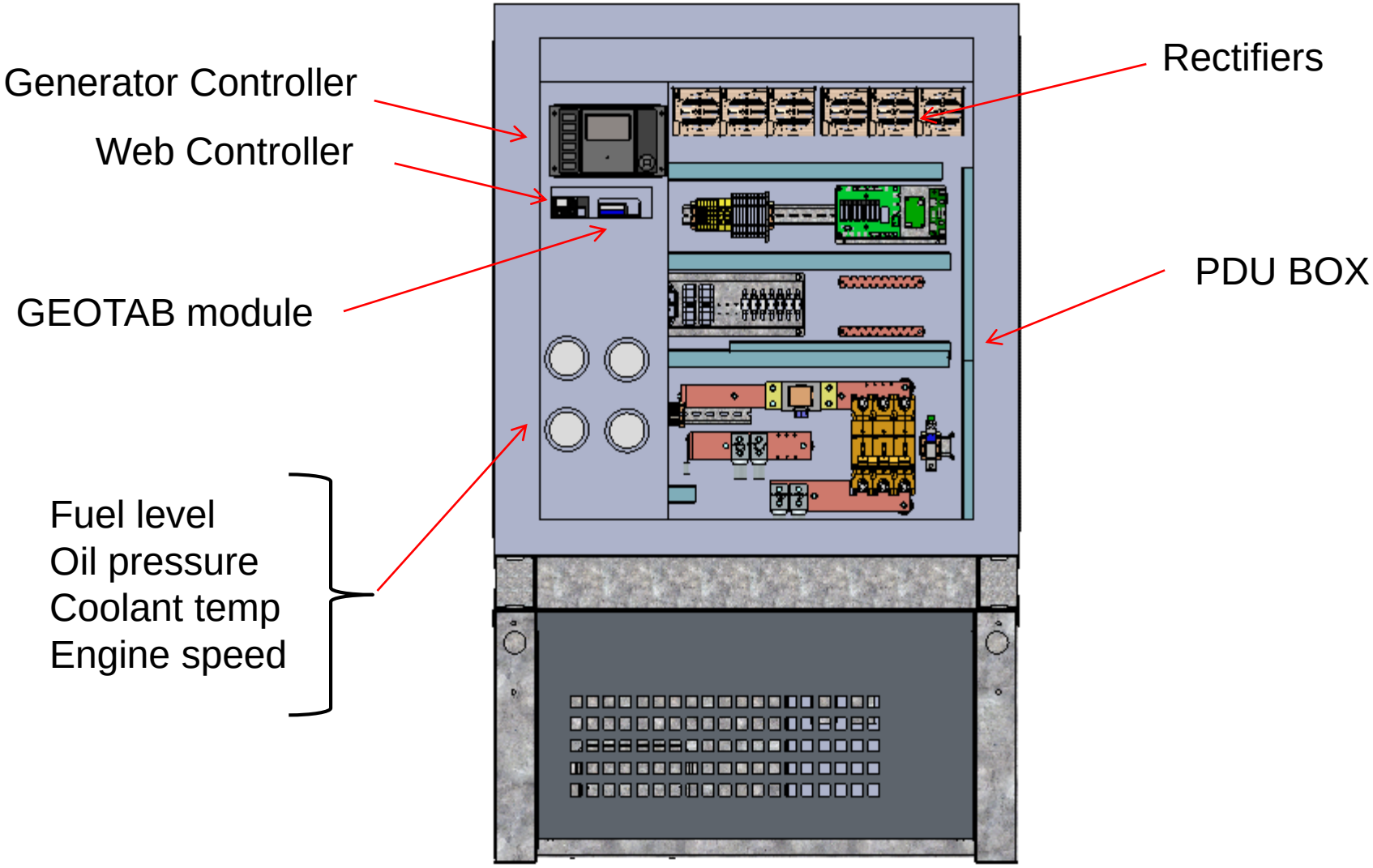

Cable Connections

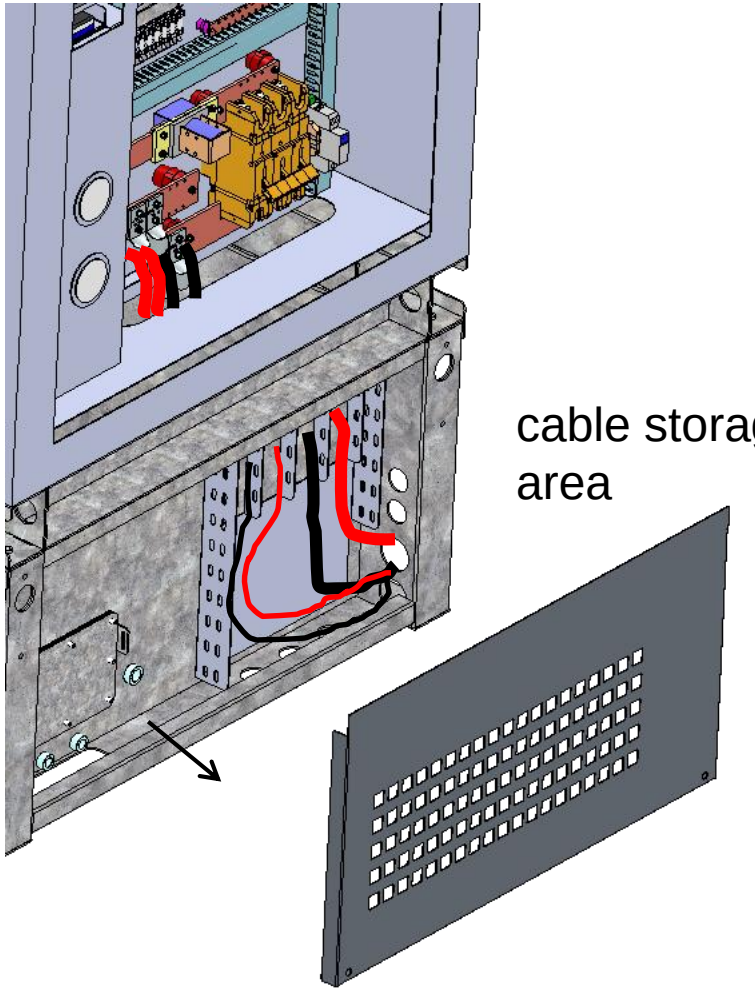

cable storage area

DC output busbar and breaker

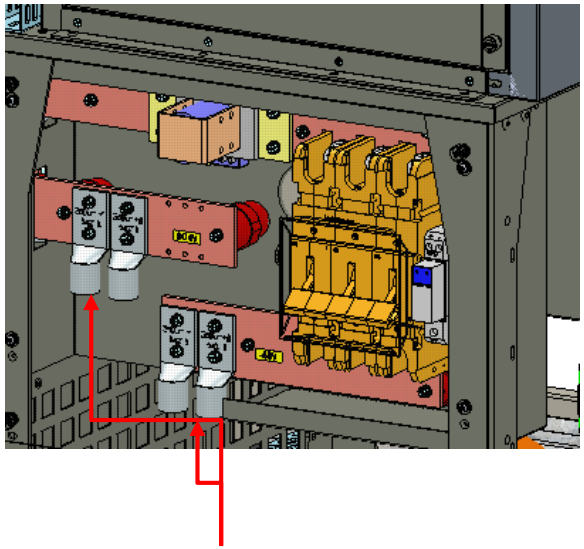

redundant landings for portable generator connection

External Detail

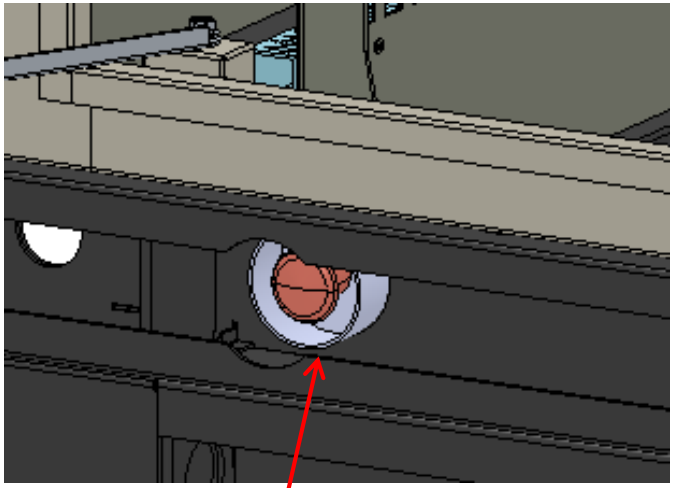

Front Bottom Left Side:
Emergency shutdown
switch externally mounted

Front Bottom Right Side:
External coolant, and
oil drains with plugs

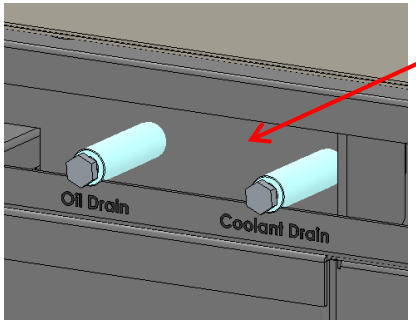

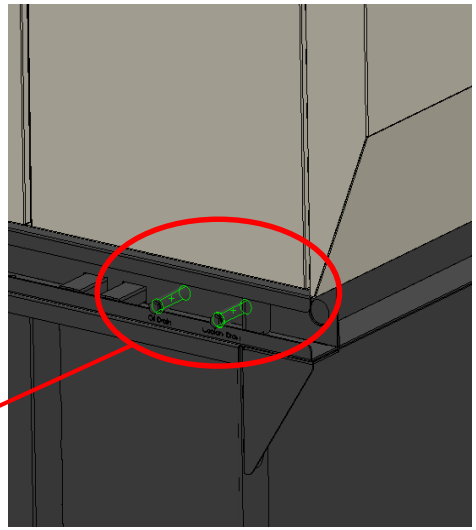

Right Side Panel:
Ball valve drain switch
inside with a padlock

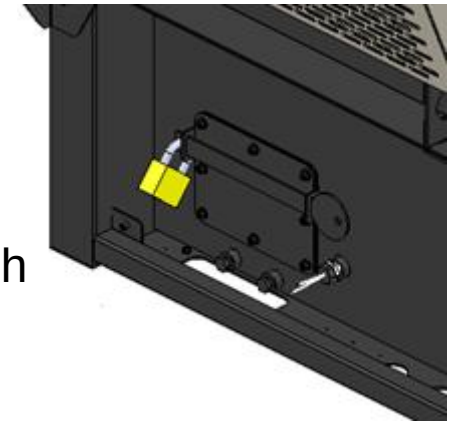

Higher Locking Method

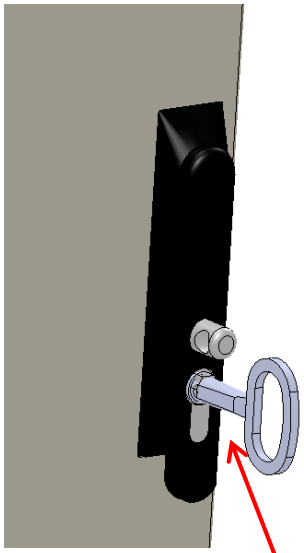

twist key to release handle

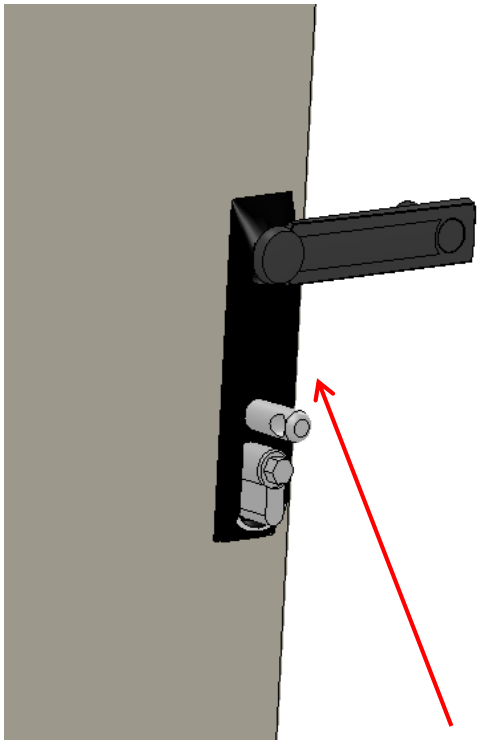

twist handle to release connecting bar

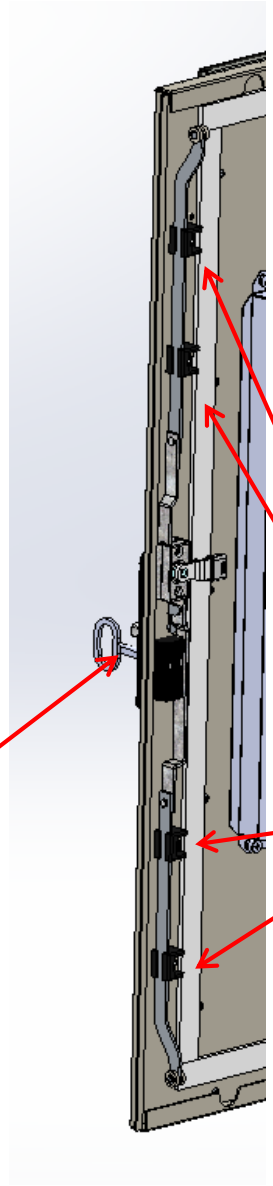

4 positions to lock the door

Fuel Tank Detail

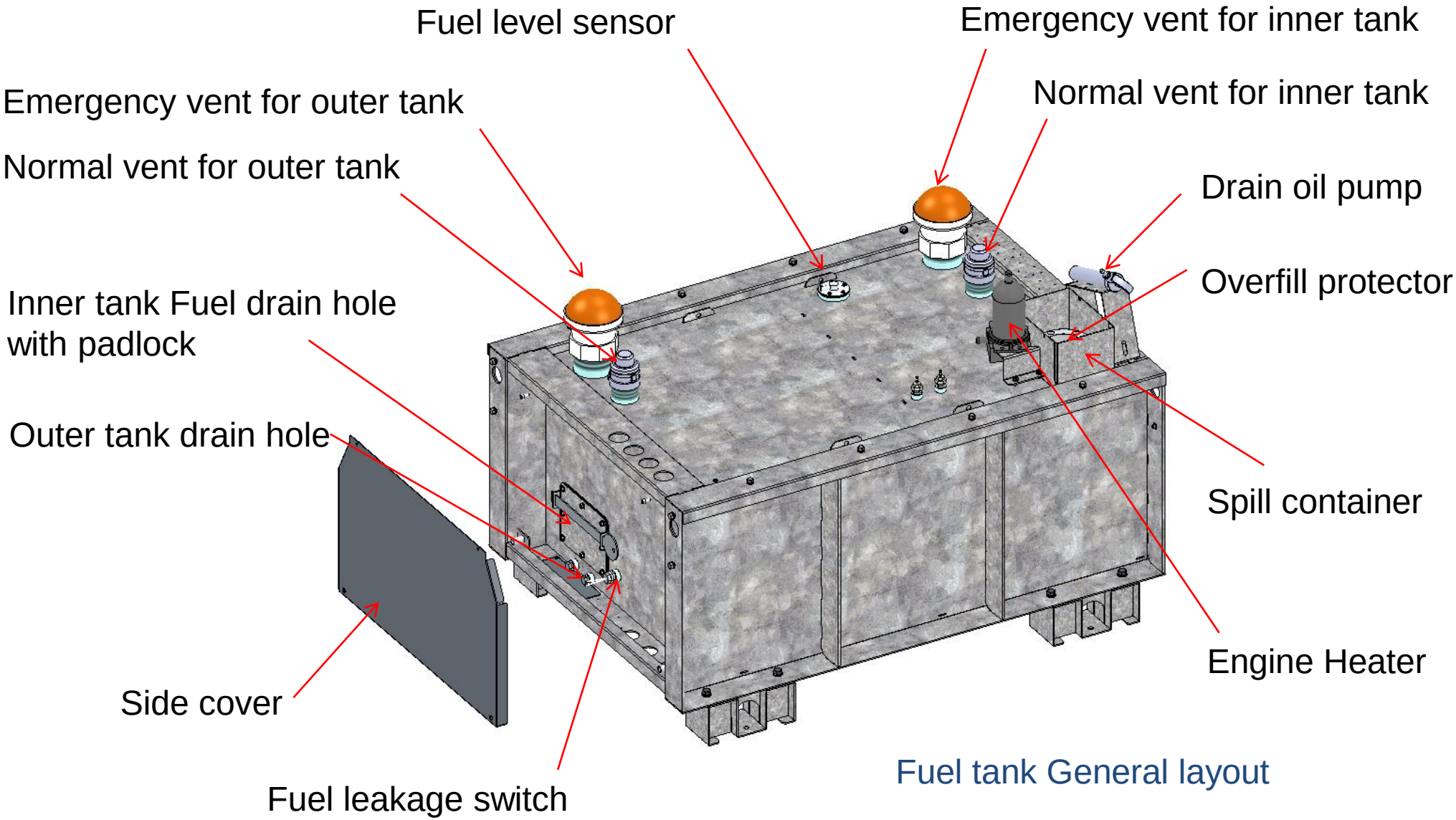

Fuel tank General layout

Air Flow

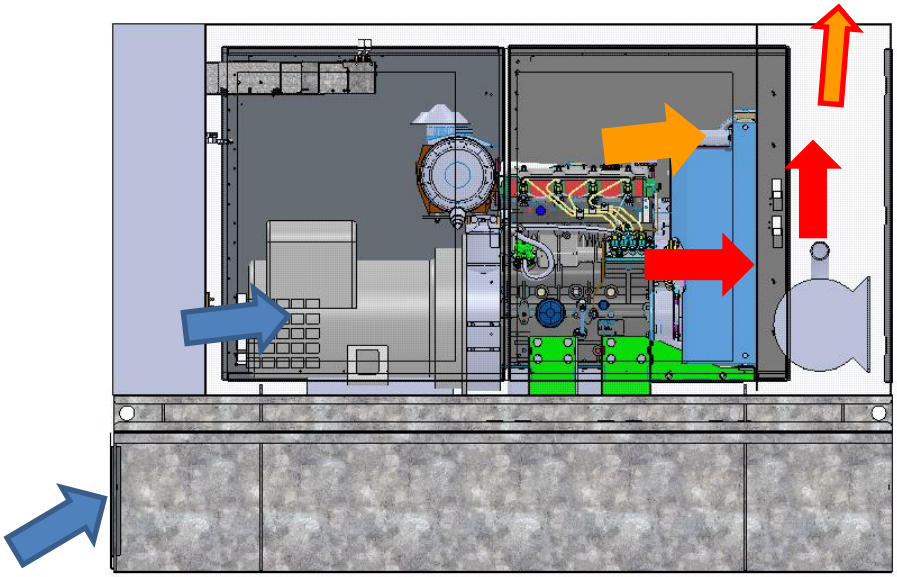

Front View
Air flow for engine

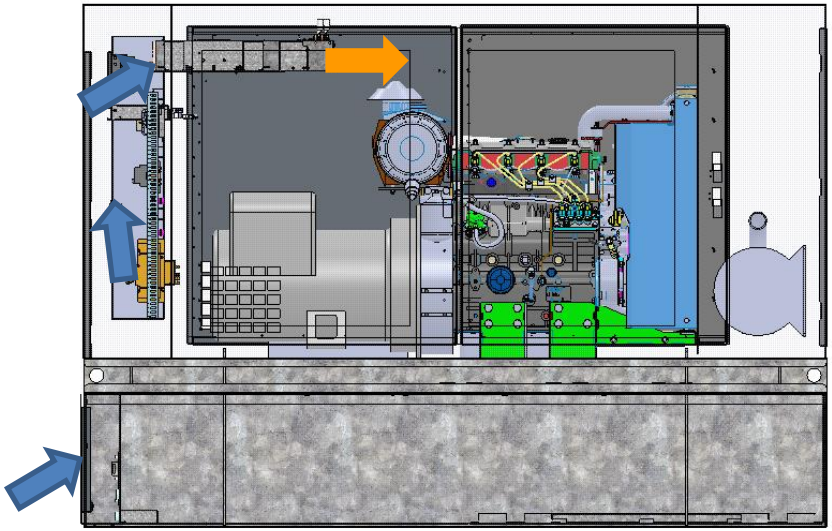

Front View
Air flow for Rectifier

- Cool air intake
- Warm air exhaust
- Hot air exhaust
- Mixed cooler exhaust air

Controllers

Generator controller provides local user interface

IP controller provides WEB and SNMP via RJ45

Local User Interface

1. Controller LCD Display
2. Stop Button
3. Start Button
4. Manual Button ON/OFF DC Output Contactor

   LED Indication – Run and Output connected.
5. Alarm reset
6. Skip Buzzer Button
7. Menu Button
8. Up/Down and Left/Right Direct Button
9. Enter Button

Local User Interface Screen

1. Generator output power
2. Generator output voltage
3. Generator output current
4. Alternator output voltage
5. Operative mode
6. Running status
7. Counter
8. Speed

WEB Interface

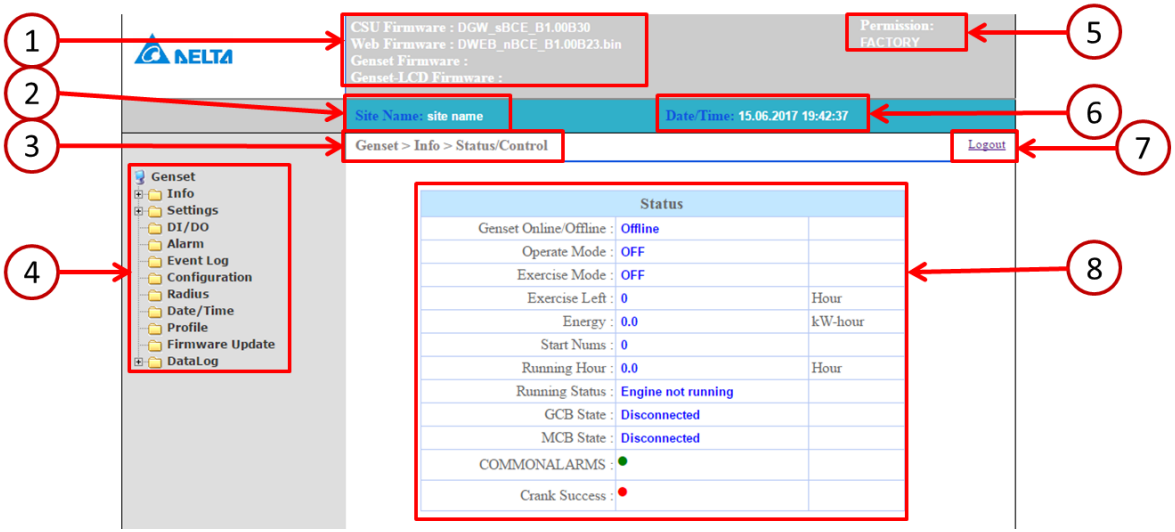

1. Software version
2. Site name
3. Path
4. Function list
5. Permission
6. Date/ Time
7. Logout
8. Operation page

Smarter. Greener. Together.

To learn more about Delta, please visit www.deltaww.com