Monday, June 17, 2019

ATTN: Melanie Bachman
Connecticut Siting Council
Executive Director / Staff Attorney
10 Franklin Square
New Britain, CT 06051

Notice of Exempt Modification —99 Meadow St., Hartford, CT 06114 — SITE ID: CT43XC806

To Whom It May Concern:

SAC Wireless, on behalf of Sprint, is requesting the necessary approvals from Connecticut Siting Council (CSC) our scope of work for an existing Sprint facility located at – **99 Meadow St.** Scope of work is as follows:

- Sprint is proposing to remove three (3) radios and swap three (3) existing antennas with three (3) new antennas and associated cabling. Install an equipment cabinet within Sprints existing leased space. Please see construction drawings for in-depth scope of work.
- Site is located at the coordinates (Lat/Long): 41.74319722, -72.66753888
- The underlying property owner of the site is Meadow Street Realty Inc.

RF Engineers have determined this minor modification is required to help increase the network for the residents and the workforce within the local jurisdiction by offering faster data transfer speeds, fewer dropped calls and higher capacity.

Connecticut Siting Council, please e-mail me any receipts for application fees and/or fees due after plan review, prior to permit issuance. If any questions or concerns arise, please contact me at 312-858-3641. We greatly appreciate your help with this proposed Sprint facility upgrade.

CC:

Luke Bronin Mayor of Hartford 550 Main Street, Room 200 Hartford, CT 06103	Sandra Fry Principal Planner 250 Constitution Plaza, 4th Floor, Hartford, CT 06103	John Collins Acting Building Official 260 Constitution Plaza, Ground Floor Hartford, CT 06103	Meadow Street Realty Inc. Underlying Property Owner 99 Meadow St, Hartford, CT 06114

Best Regards,

Luz Guzman
Luzmaria Guzman| Zoning and Permitting Specialist | (312) 858-3641
SAC Wireless, 540 W. Madison, 9th Floor, Chicago, IL 60661
luzmaria.guzman@sacw.com| www.sacw.com

PROJECT:	**SPRINT MASSIVE MIMO**
SITE CASCADE:	**CT43XC806**
SITE NAME:	**PETRO LOCK**
AUGMENT ID:	**CT43XC806S18.1**
SITE ADDRESS:	**99 MEADOW ST. HARTFORD, CT 06518**
SITE TYPE:	**126'-0" MONOPOLE**
DRAWING DESCRIPTION:	**FINAL CDs**

Sprint
201 STATE ROUTE 17 NORTH
RUTHERFORD, NJ 07070
TEL: (201) 684-4000
FAX: (201) 684-4223

SAC WIRELESS
A NOKIA COMPANY
540 W. MADISON ST.
9TH FLOOR
CHICAGO, IL 60661
www.sacw.com
312.895.4977

WESTCHESTER SERVICES LLC
604 FOX GLEN
BARRINGTON, IL 60010
TELEPHONE: 847-277-0070
FAX : 847-277-0080
AE@westchesterservices.com

JOHN M. BANKS
ARCHITECT
604 FOX GLEN
BARRINGTON, IL 60010
TELEPHONE: 847-277-0070
FAX : 847-277-0080
JBANKS@WESTCHESTERSERVICES.COM

SITE INFORMATION

TOWER OWNER:
AMERICAN TOWER CORPORATION
116 HUNTINGTON AVE, 11TH FLOOR
BOSTON, MA 02118

PROPERTY OWNER:
MEADOW STREET REALTY LLC

SITE ADDRESS:
99 MEADOW ST.
HARTFORD, CT 06518

COUNTY:
HARTFORD COUNTY

LATITUDE (NAD83):
41° 44' 35.5" N (41.74319722°)

LONGITUDE (NAD83):
72° 40' 03.1" W (-72.66753888°)

ZONING JURISDICTION:
CONNECTICUT SITTING COUNCIL AND CITY OF HARTFORD

CURRENT ZONING:
12

ELECTRIC PROVIDER:
CONNECTICUT LIGHT & POWER
(800) 266-2000

BACKHAUL PROVIDER:
AT&T
(800) 246-2020

SPRINT CM:
AHMED BASHIR

CONSTRUCTION TYPE:
2B

OCCUPANCY USE GROUP:
U

PIN/APN:
275690115

DIRECTIONS

FROM BRADLEY INTERNATIONAL AIRPORT CT:

1. HEAD NORTH TOWARD BRADLEY INTERNATIONAL AIRPORT, KEEP RIGHT TO CONTINUE ON BRADLEY INTERNATIONAL AIRPORT , SLIGHT LEFT TOWARD SCHOEPHOESTER RD , ONTO SCHOEPHOESTER RD, CONTINUE ONTO CT-20 E/BRADLEY INTERNATIONAL AIRPORT CON,
2. USE THE RIGHT 2 LANES TO MERGE ONTO I-91 S TOWARD HARTFORD.
3. TAKE EXIT 27 FOR AIRPORT RD TOWARD BRAINARD RD
4. TURN RIGHT ONTO AIRPORT RD
5. TURN RIGHT ONTO LOCUST ST
6. TURN LEFT ONTO MEADOW ST
7. DESTINATION WILL BE ON THE LEFT

AREA MAP

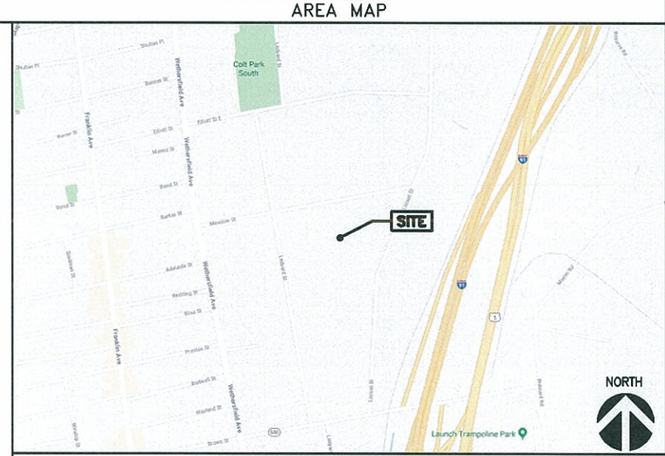

LOCATION MAP

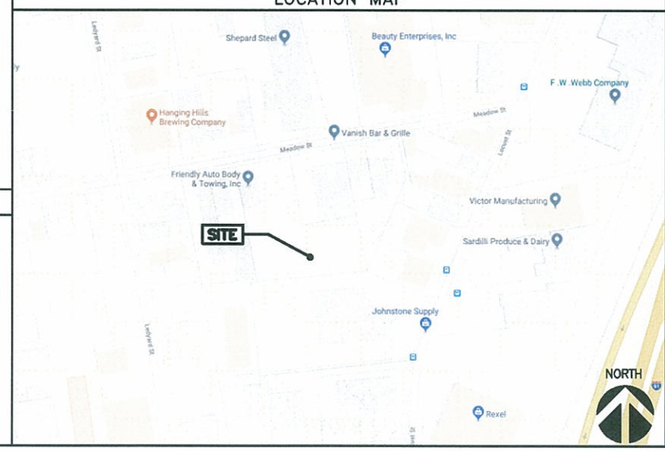

PROJECT DESCRIPTION

EXISTING SPRINT EQUIPMENT TO BE REMOVED:

- REMOVE (3) EXISTING SPRINT 2.5 GHz ANTENNAS
- REMOVE (3) EXISTING SPRINT 2.5 GHz RADIOS
- REMOVE 1" CONDUIT W/(3) ETHERNET & FIBER CABLES

NEW SPRINT EQUIPMENT TO BE INSTALLED:

- INSTALL (3) NEW mMIMO 2.5 GHz AIRSCALE MAA 64T64R 128AE B41 120W AAHC ANTENNAS
- INSTALL (1) NEW 1.3" HYBRID FIBER TRUNK CABLE, (9) NEW FIBER JUMPER CABLES AND (3) NEW 500W POWER JUMPER CABLES (PER SPRINT GUIDELINES)
- INSTALL (1) NEW mMIMO JUNCTION BOX
- INSTALL (1) NEW mMIMO AIRSCALE BBU IN EXISTING MMBTS CABINET
- INSTALL (1) NEW TOP HAT ON EXISTING MMBTS CABINET
- INSTALL (2) NEW AMOB UNITS STACKED ON EXISTING BBU CABINET

APPLICABLE CODES

SUBCONTRACTOR'S WORK SHALL COMPLY WITH ALL APPLICABLE NATIONAL, STATE, AND LOCAL CODES AS ADOPTED BY THE LOCAL AUTHORITY HAVING JURISDICTION FOR THE LOCATION. THE EDITION OF THE AHJ ADOPTED CODES AND STANDARDS IN EFFECT OF THE DATE OF CONTRACT AWARD SHALL GOVERN THE DESIGN.

- 2015 INTERNATIONAL BUILDING CODE
- 2015 MECHANICAL CODE
- NFPA 780-LIGHTNING PROTECTION CODE
- 2015 UNIFORM BUILDING CODE
- 2014 NATIONAL ELECTRICAL CODE
- 2018 CONNECTICUT STATE BUILDING CODE WITH 2018 LOCAL AMENDMENTS
- NFPA 70-2014 EDITION AS AMENDED BY THE STATE OF GONNECTICUT

SUBCONTRACTOR'S WORK SHALL COMPLY WITH LATEST EDITION OF THE FOLLOWING STANDARDS. AMERICAN CONCRETE INSTITUTE (ACI) 318, BUILDING CODE REQUIREMENTS FOR STRUCTURAL CONCRETE AMERICAN INSTITUTE OF STEEL CONSTRUCTION (AISC), MANUAL OF STEEL CONSTRUCTION, ASD, NINTH EDITION TELECOMMUNICATIONS INDUSTRY ASSOCIATION (TIA) 222-G, STRUCTURAL STANDARDS FOR STEEL ANTENNA TOWER AND ANTENNA SUPPORTING STRUCTURES:
TIA 607, COMMERCIAL BUILDING GROUNDING AND BONDING REQUIREMENTS FOR TELECOMMUNICATIONS

INSTITUTE FOR ELECTRICAL AND ELECTRONICS ENGINEERS (IEEE) 81 GUIDE FOR MEASURING EARTH RESISTIVELY, GROUND IMPEDANCE, AND EARTH SURFACE POTENTIALS OF A GROUND SYSTEM
IEEE 1100 (1999) RECOMMENDED PRACTICE FOR POWERING AND GROUNDING OF ELECTRONIC EQUIPMENT.

811
Know what's **below.**
Call before you dig.

TO OBTAIN LOCATION OF PARTICIPANTS UNDERGROUND FACILITIES BEFORE YOU DIG IN CONNECTICUT, CONTACT CALL BEFORE YOU DIG
TOLL FREE: 1-800-922-4455 OR
www.cbyd.com

CONNECTICUT STATUTE REQUIRES MIN OF 2 WORKING DAYS NOTICE BEFORE YOU EXCAVATE

DRAWING INDEX

SHEET NO:	SHEET TITLE	REV
T-1	TITLE SHEET	1
T-2	SPRINT CONSTRUCTION SPECIFICATIONS (REFERENCE)	1
T-3	SPRINT SPECIFICATIONS	1
C-1	SITE PLANS	1
C-2	TOWER ELEVATION - SOUTHWEST	1
C-3	ANTENNA LAYOUTS	1
C-4	EQUIPMENT DETAILS	1
C-5	EQUIPMENT DETAILS	1
C-6	IMPLEMENTATION DETAIL	1
C-7	ELECTRICAL DETAILS	1
C-8	GROUNDING DETAILS	1

ALL DRAWINGS CONTAINED HEREIN ARE FORMATTED FOR 11X17. CONTRACTOR SHALL VERIFY ALL PLANS AND EXISTING DIMENSIONS AND CONDITIONS ON THE JOB SITE AND SHALL IMMEDIATELY NOTIFY THE ENGINEER IN WRITING OF ANY DISCREPANCIES BEFORE PROCEEDING WITH THE WORK OR BE RESPONSIBLE FOR SAME.

APPROVALS

SIGNER	SIGNATURE	DATE
SPRINT CONSTRUCTION MANAGER		
SPRINT OPERATIONS MANAGER		
SPRINT RF ENGINEER		
LANDLORD		

THESE DOCUMENTS ARE CONFIDENTIAL AND ARE THE SOLE PROPERTY OF SPRINT AND MAY NOT BE REPRODUCED, DISSEMINATED OR REDISTRIBUTED WITHOUT THE EXPRESS WRITTEN CONSENT OF SPRINT.

NO.	DATE	DESCRIPTION
1	06.20.19	PERMIT/CONSTRUCTION
0	07.25.18	PERMIT/CONSTRUCTION

DRAWN BY: JM
CHECKED BY: JMB
JOB NUMBER: CT43XC806
ARCHITECT: JOHN BANKS

STATE OF CONNECTICUT JOHN M. BANKS LICENSE NO. 18137 LICENSED ARCHITECT
DATED: 06/20/19 EXP. DATE: 07/31/19

SITE NAME
PETRO LOCK

SITE NUMBER
CT43XC806

SITE LOCATION
99 MEADOW ST.
HARTFORD, CT 06114

AUGMENT ID
CT43XC806S18.1

SHEET TITLE
TITLE SHEET

SHEET NUMBER
T-1

SECTION 01 100 – SCOPE OF WORK

THE WORK:

THESE STANDARD CONSTRUCTION SPECIFICATIONS IN CONJUNCTION WITH THE CONSTRUCTION DRAWINGS AND ASSOCIATED OUTLINE SPECIFICATIONS AND THE SITE ACTION PLAN, DESCRIBE THE WORK TO BE PERFORMED BY THIS CONSTRUCTION CONTRACTOR (SUPPLIER).

PRECEDENCE:

SHOULD CONFLICTS OCCUR BETWEEN THE STANDARD CONSTRUCTION SPECIFICATIONS FOR WIRELESS SITES AND THE CONSTRUCTION DRAWINGS, INFORMATION ON THE CONSTRUCTION DRAWINGS SHALL TAKE PRECEDENCE. NOTIFY SPRINT CONSTRUCTION MANAGER IF THIS OCCURS.

SITE FAMILIARITY:

CONTRACTOR SHALL BE RESPONSIBLE FOR FAMILIARIZING HIMSELF WITH ALL CONTRACT DOCUMENTS, FIELD CONDITIONS AND DIMENSIONS PRIOR TO PROCEEDING WITH CONSTRUCTION. ANY DISCREPANCIES SHALL BE BROUGHT TO THE ATTENTION OF THE SPRINT CONSTRUCTION MANAGER PRIOR TO THE COMMENCEMENT OF WORK. NO COMPENSATION WILL BE AWARDED BASED ON CLAIM OF LACK OF KNOWLEDGE OR FIELD CONDITIONS.

ON–SITE SUPERVISION:

THE CONTRACTOR SHALL SUPERVISE AND DIRECT THE WORK AND SHALL BE RESPONSIBLE FOR CONSTRUCTION MEANS, METHODS, TECHNIQUES, SEQUENCES, AND PROCEDURES IN ACCORDANCE WITH THE CONTRACT DOCUMENTS. THE CONTRACTOR SHALL EMPLOY A COMPETENT SUPERINTENDENT WHO SHALL BE IN ATTENDANCE AT THE SITE AT ALL TIMES DURING PERFORMANCE OF THE WORK.

DRAWINGS REQUIRED AT JOBSITE:

THE CONSTRUCTION CONTRACTOR SHALL MAINTAIN A FULL SET OF THE CONSTRUCTION DRAWINGS FOR WIRELESS SITES AND THE STANDARD CONSTRUCTION SPECIFICATIONS FOR WIRELESS SITES AT THE JOBSITE FROM MOBILIZATION THROUGH CONSTRUCTION COMPLETION.

1. THE JOBSITE DRAWINGS SHALL BE CLEARLY MARKED DAILY IN RED PENCIL WITH ANY CHANGES IN CONSTRUCTION OVER WHAT IS DEPICTED IN THE DOCUMENTS. AT CONSTRUCTION COMPLETION, THIS JOBSITE MARKUP SET SHALL BE UPLOADED TO SPRINTVISION UNDER THE HEADING OF "AS–BUILT" DRAWINGS.
2. DIMENSIONS SHOWN ARE TO FINISH SURFACES UNLESS NOTED OTHERWISE. SPACING BETWEEN EQUIPMENT IS THE REQUIRED CLEARANCE. SHOULD THERE BE ANY QUESTIONS REGARDING THE CONTRACT DOCUMENTS, EXISTING CONDITIONS AND/OR DESIGN INTENT, THE CONTRACTOR SHALL BE RESPONSIBLE FOR OBTAINING A CLARIFICATION FROM THE SPRINT CONSTRUCTION MANAGER PRIOR TO PROCEEDING WITH THE WORK.

SECTION 01 200 – COMPANY FURNISHED MATERIAL AND EQUIPMENT

FURNISHED MATERIALS:

COMPANY FURNISHED MATERIALS AND EQUIPMENT TO BE INSTALLED BY THE CONTRACTOR IS IDENTIFIED ON THE RF DATA SHEET IN THE CONSTRUCTION DOCUMENTS.

RECEIPT OF MATERIAL AND EQUIPMENT:

1. THE CONTRACTOR IS RESPONSIBLE FOR SPRINT PROVIDED MATERIAL AND EQUIPMENT AND UPON RECEIPT SHALL:
   - A. ACCEPT DELIVERIES AS SHIPPED AND TAKE RECEIPT.
   - B. VERIFY COMPLETENESS AND CONDITION OF ALL DELIVERIES.
   - C. TAKE RESPONSIBILITY FOR EQUIPMENT AND PROVIDE INSURANCE PROTECTION AS REQUIRED IN AGREEMENT.
   - D. RECORD ANY DEFECTS OR DAMAGES AND WITHIN TWENTY–FOUR HOURS AFTER RECEIPT, REPORT TO SPRINT OR ITS DESIGNATED PROJECT REPRESENTATIVE OF SUCH.
   - E. PROVIDE SECURE AND NECESSARY WEATHER PROTECTED WAREHOUSING.
   - F. COORDINATE SAFE AND SECURE TRANSPORTATION OF MATERIAL AND EQUIPMENT, DELIVERING AND OFF–LOADING FROM CONTRACTOR'S WAREHOUSE TO SITE.

DELIVERABLES:

1. COMPLETE SHIPPING AND RECEIPT DOCUMENTATION IN ACCORDANCE WITH COMPANY PRACTICE.
2. IF APPLICABLE, COMPLETE LOST/STOLEN/DAMAGED DOCUMENTATION REPORT AS NECESSARY IN ACCORDANCE WITH COMPANY PRACTICE, AND AS DIRECTED BY COMPANY.

SECTION 01 300 – CELL SITE CONSTRUCTION

NOTICE TO PROCEED (NTP):

1. NO WORK SHALL COMMENCE PRIOR TO COMPANY'S ISSUANCE OF THE WORK ORDER/PO.
2. UPON RECEIVING NOTICE TO PROCEED, CONTRACTOR SHALL FULLY PERFORM ALL WORK NECESSARY TO PROVIDE SPRINT WITH AN OPERATIONAL WIRELESS FACILITY.

GENERAL REQUIREMENTS FOR CONSTRUCTION:

1. CONTRACTOR SHALL KEEP THE SITE FREE FROM ACCUMULATING WASTE MATERIAL, DEBRIS, AND TRASH. AT THE COMPLETION OF THE WORK, CONTRACTOR SHALL REMOVE FROM THE SITE ALL REMAINING RUBBISH, IMPLEMENTS, TEMPORARY FACILITIES, AND SURPLUS MATERIALS.
2. EQUIPMENT ROOMS SHALL AT ALL TIMES BE MAINTAINED AND "BROOM CLEANED" AND CLEAR OF DEBRIS.
3. CONTRACTOR SHALL TAKE ALL REASONABLE PRECAUTIONS TO DISCOVER AND LOCATE ANY HAZARDOUS CONDITION.
   - A. IN THE EVENT CONTRACTOR ENCOUNTERS ANY HAZARDOUS CONDITION WHICH HAS NOT BEEN ABATED OR OTHERWISE MITIGATED, CONTRACTOR AND ALL OTHER PERSONS SHALL IMMEDIATELY STOP WORK IN THE AFFECTED AREA AND NOTIFY COMPANY IN WRITING. THE WORK IN THE AFFECTED AREA SHALL NOT BE RESUMED EXCEPT BY WRITTEN NOTIFICATION BY COMPANY.
   - B. CONTRACTOR AGREES TO USE CARE WHILE ON THE SITE AND SHALL NOT TAKE ANY ACTION THAT WILL OR MAY RESULT IN OR CAUSE THE HAZARDOUS CONDITION TO BE FURTHER RELEASED IN THE ENVIRONMENT, OR TO FURTHER EXPOSE INDIVIDUALS TO THE HAZARD.
4. CONTRACTOR'S ACTIVITIES SHALL BE RESTRICTED TO THE PROJECT LIMITS. SHOULD AREAS OUTSIDE THE PROJECT LIMITS BE AFFECTED BY CONTRACTOR'S ACTIVITIES, CONTRACTOR SHALL IMMEDIATELY RETURN THEM TO ORIGINAL CONDITION.

SECTION 01 400 – TESTS, INSPECTIONS, SUBMITTALS, AND PROJECT CLOSEOUT

TESTS AND INSPECTIONS:

1. THE CONTRACTOR SHALL BE RESPONSIBLE FOR ALL CONSTRUCTION TESTS, INSPECTIONS AND PROJECT DOCUMENTATION.
2. CONTRACTOR SHALL ACCOMPLISH TESTING INCLUDING BUT NOT LIMITED TO THE FOLLOWING:
   - A. COAX SWEEPS AND FIBER TESTS.
   - B. POST CONSTRUCTION HEIGHT VERIFICATION, AZIMUTH AND DOWN TILT USING ELECTRONIC COMMERCIAL MADE–FOR–THE–PURPOSE ANTENNA ALIGNMENT TOOL SUCH AS SUNSIGHT INSTRUMENTS ANTENNA ALIGNMENT TOOL OR SPRINT APPROVED EQUAL.
   - C. CONCRETE BREAK TESTS.
   - D. SITE RESISTANCE TO EARTH TEST.
   - E. STRUCTURAL BACKFILL COMPACTION TESTS.
   - F. CONTRACTOR SHALL BE RESPONSIBLE FOR ANY AND ALL CORRECTIONS TO ANY WORK IDENTIFIED AS UNACCEPTABLE IN SITE INSPECTION ACTIVITIES AND/OR AS A RESULT OF TESTING.
   - G. ADDITIONAL TESTING AS REQUIRED ELSEWHERE IN THIS SPECIFICATION.

SUBMITTALS:

1. THE WORK IN ALL ASPECTS SHALL COMPLY WITH THE CONSTRUCTION DRAWINGS AND THESE SPECIFICATIONS.
2. UPLOAD THE FOLLOWING TO SPRINTVISION AS APPLICABLE INCLUDING BUT NOT LIMITED TO THE FOLLOWING:
   - A. CONCRETE MIX–DESIGNS FOR TOWER FOUNDATIONS, ANCHORS PIERS, AND CONCRETE PAVING.
   - B. CONCRETE BREAK TESTS AS SPECIFIED HEREIN.
   - C. CHEMICAL GROUNDING SYSTEM.
   - D. REINFORCEMENT CERTIFICATIONS.
   - E. STRUCTURAL BACKFILL TEST RESULTS.
   - F. SWEEP AND FIBER TESTS.
   - G. ANTENNA AZIMUTH AND DOWN–TILT VERIFICATION.
   - H. POST CONSTRUCTION HEIGHT VERIFICATION.
   - I. ADDITIONAL SUBMITTALS MAY BE REQUIRED FOR SPECIAL CONSTRUCTION OR MINOR MATERIALS.
3. ALTERNATES: AT THE COMPANY'S REQUEST, ANY ALTERNATIVES TO THE MATERIALS OR METHODS SPECIFIED SHALL BE SUBMITTED TO SPRINT'S CONSTRUCTION MANAGER FOR APPROVAL PRIOR TO BEING SHIPPED TO SITE. SPRINT WILL REVIEW AND APPROVE ONLY THOSE REQUESTS MADE IN WRITING. NO VERBAL APPROVALS WILL BE CONSIDERED. SUBMITTAL FOR APPROVAL SHALL INCLUDE A STATEMENT OF COST REDUCTION PROPOSED FOR USE OF ALTERNATE PRODUCT.

SECTION 11 700 – ANTENNA ASSEMBLY, REMOTE RADIO UNITS AND CABLE INSTALLATION

SUMMARY:

THIS SECTION SPECIFIES INSTALLATION OF ANTENNAS, RRU'S, AND CABLE EQUIPMENT, INSTALLATION, AND TESTING OF COAXIAL FIBER CABLE AND WAVEGUIDE. ALL COAXIAL CABLE AND ASSOCIATED HARDWARE SHALL BE INSTALLED BY OR UNDER THE DIRECT SUPERVISION OF MANUFACTURER TRAINED AND CERTIFIED PERSONNEL.

ANTENNAS AND REMOTE RADIO UNITS (RRU):

INSTALL EQUIPMENT FURNISHED BY COMPANY. REFER TO THE DRAWINGS FOR TYPES AND QUANTITIES OF PANEL AND MICROWAVE ANTENNAS AND RRUS TO BE INSTALLED.

MISCELLANEOUS RF EQUIPMENT:

INSTALL COMBINERS, FILTERS, COUPLERS, AND AMPLIFIERS, FURNISHED BY COMPANY, PER MANUFACTURERS' RECOMMENDATIONS.

JUMPERS AND CONNECTORS:

FURNISH AND INSTALL 1/2" COAX JUMPER CABLES BETWEEN THE RRU'S AND ANTENNAS. JUMPERS SHALL BE TYPE LDF 4, FLC 12–50, CR 540, OR FXL 540. JUMPERS BETWEEN THE RRU'S AND ANTENNAS OR TOWER TOP AMPLIFIERS SHALL CONSIST OF 1/2 INCH FOAM DIELECTRIC, OUTDOOR RATED COAXIAL CABLE. SUPER–FLEX CABLES AND JUMPERS MAY BE USED ON A LIMITED BASIS WHERE NEEDED AND ONLY IN ENCLOSED LOCATIONS. DO NOT USE SUPER–FLEX OUTDOORS.

HYBRID AND COAXIAL CABLE:

INSTALL HYBRID DC/FIBER CABLE AND COAXIAL CABLES, INCLUDING CONNECTORS, JUMPERS, AND CABLE TERMINATING DEVICES FURNISHED BY COMPANY. CABLE SHALL BE DELIVERED TO THE JOB SITE OR TO THE COMPANY'S DESIGNATED LOCATION. CABLE SHALL BE INSTALLED PER THE CONSTRUCTION DRAWINGS AND THE APPLICABLE MANUFACTURER'S REQUIREMENTS.

RF DATA SHEETS:

RF DATA INFORMATION ON THE DRAWINGS WILL PROVIDE A COMPLETE LIST OF EQUIPMENT FURNISHED BY COMPANY TO BE INSTALLED BY CONTRACTOR.

REMOTE ELECTRICAL TILT (RET) CABLES:

FURNISH INSTALL RET CABLE AND CONNECTORS BETWEEN RRU AND ANTENNAS. CABLE SHALL BE AS REQUIRED BY MANUFACTURER.

ANTENNA MOUNTS:

1. FURNISH AND INSTALL ANTENNA MOUNTING HARDWARE AS INDICATED ON THE DRAWINGS.
2. EXCEPT AS OTHERWISE REQUIRED, BALLAST MOUNTS FOR ROOFTOP APPLICATIONS SHALL BE VALMONT/MICROFLECT NO. 31–99540 (12 FOOT SEPARATION) OR SPRINT APPROVED EQUAL.
3. FACADE–MOUNTED ANTENNAS SHALL COMPLY WITH SITE–SPECIFIC MOUNTING REQUIREMENTS INDICATED ON THE DRAWINGS.

HYBRID AND COAXIAL CABLE INSTALLATION:

1. THE CONTRACTOR SHALL ROUTE, TEST, AND INSTALL ALL COAXIAL CABLES AS INDICATED ON THE CONSTRUCTION DRAWINGS AND IN ACCORDANCE WITH THE MANUFACTURER'S RECOMMENDATIONS.
2. THE ROUTING OF THE CABLES SHALL BE CHECKED FOR INTERFERENCE WITH OTHER TOWER APPURTENANCES BEFORE INSTALLATION AND VERTICAL WAVEGUIDE/COAX HANGERS SHALL BE INSTALLED ON THE TOWER WAVEGUIDE LADDER.
3. CABLES SHALL BE HOISTED, CONNECTED TO THE RRU/ANTENNA FEED, SECURED TO THE HANGERS, AND ORIENTED TO PROVIDE THE CORRECT ENTRANCE PLANE TO THE EQUIPMENT CABINET. THE FIELD TERMINATED CABLES SHALL THEN BE CUT TO THE APPROPRIATE LENGTH TO REACH THE EQUIPMENT. FOR FACTORY TERMINATED CABLES, COIL ANY EXCESS IN A HORIZONTAL PLANE UNDER THE ICE BRIDGE OR GROUND PLATFORM AND SECURE TO MINIMIZE VANDALISM RISK.
4. CABLES SHALL BE GROUNDED IN ACCORDANCE WITH THE CONSTRUCTION DRAWINGS AND MANUFACTURER'S REQUIREMENTS.
5. CABLES SHALL BE ROUTED IN ACCORDANCE WITH THE STRUCTURAL REQUIREMENTS. IF POSSIBLE, CABLES SHALL BE ROUTED ON THE INSIDE OF MONOPOLES OR DOWN THE WAVEGUIDE LADDER IN A MANNER THAT WILL PREVENT OBSTRUCTION OF THE CLIMBING LADDER. ADDITIONALLY, THE CABLES SHALL BE POSITIONED IN THE BEST POSSIBLE LOCATION TO PROTECT IT FROM DAMAGE. THE BENDING RADIUS OF THE CABLES HALL NOT BE LESS THAN THE MANUFACTURER'S SPECIFICATIONS.
6. EXTREME CARE SHALL BE TAKEN TO AVOID DAMAGE TO THE CABLES DURING HANDLING AND INSTALLATION. THE COMPANY WILL FURNISH TO THE CONTRACTOR PORT ASSIGNMENTS, IF APPLICABLE, PRIOR TO WAVEGUIDE INSTALLATION.
   - A. WAVEGUIDE LADDER (LATTICE TOWERS ONLY): WAVEGUIDE LADDERS SHALL BE USED TO SUPPORT ALL COAXIAL CABLE, MICROWAVE WAVEGUIDE CABLE AND ANY BASEBAND CABLE ON THE TOWER). ONE LADDER, 18 CABLES WIDE, SHALL BE MOUNTED ON THE TOWER PER THE TOWER STRUCTURAL REQUIREMENTS. THE RUNGS ON THE WAVEGUIDE LADDERS SHALL BE SPACED A MAXIMUM OF 4 FEET APART.
   - B. ICE BRIDGE: AS SHOWN ON THE DRAWINGS, PROVIDE AN ICE BRIDGE BETWEEN THE TOWER AND THE SHELTER OR GROUND CABINETS TO SUPPORT ALL CABLING. USE STAINLESS STEEL SNAP–IN TYPE HANGERS OR COAX BLOCKS WITH GROMMETS TO SUPPORT CABLES ON THE ICE BRIDGE. PROVIDE A DRIP LOOP IN ALL CABLING BETWEEN THE BASE OF THE TOWER AND THE ICE BRIDGE.
   - C. FASTENING CABLES: CABLES SHALL BE RAISED ON THE TOWER USING PROPERLY SIZED SPLIT TYPE, LACE–UP HOISTING SOCKS ATTACHED TO EACH CABLE EVERY 200FT EXCEPT AS OTHERWISE REQUIRED BY MANUFACTURER. INSIDE MONOPOLES, ALL CABLES SHALL BE PERMANENTLY FASTENED TO THE TOWER USING A HOISTING SOCK AT THE TOP OF THE TOWER. FOR MONOPOLE TOWERS WITH SUPPORTING MEANS AT MIDPOINT, PROVIDE ADDITIONAL HOISTING SOCK. ON LATTICE TOWERS OR FOR CABLES MOUNTED ON THE OUTSIDE OF MONOPOLES, USE STAINLESS STEEL (NON MAGNETIC) SNAP IN TYPE CABLE HANGERS OR COAX BLOCKS WITH GROMMETS AT EACH WAVE GUIDE LADDER RUNG. DO NOT DRILL HOLES IN TOWER MEMBERS, USE ANGLE MEMBER ADAPTERS AND STAINLESS STEEL BUTTERFLY CLIPS, TO ATTACH CABLING TO TOWER. MAKE SURE THAT THERE IS NO STRAIN ON ANY CABLE CONNECTOR DUE TO THE CABLE WEIGHT. CABLE INSTALLATION SHALL BE PLANNED TO ENSURE THAT THE LINES WILL BE PROPERLY ROUTED IN A NEAT AND ORDERLY MANNER. AVOID TWISTING AND CROSSOVERS IN THE BUILDING, ALONG THE TOWER FACE, AND WAVEGUIDE RACEWAYS. EXCEPT INSIDE MONOPOLES, SECURE CABLE AT MAXIMUM SPACING OF 36" ON CENTER HORIZONTALLY AND 48" ON CENTER VERTICALLY, EXCEPT AS OTHERWISE REQUIRED BY CABLE MANUFACTURER MAKING SURE THAT THE CABLE WEIGHT IS EQUALLY DISTRIBUTED AND NO STRAIN IS PLACED ON CONNECTORS OR ANTENNAS. HOIST CABLE USING PROPER HOISTING GRIPS. HOIST SLOWLY AND CAREFULLY. PREVENT KINKING AND SNAGS WHEN AROUND TOWER MEMBERS. BEND CABLE SLOWLY AT THE MAXIMUM PRACTICAL BEND RADIUS CONSISTENT WITH GOOD INSTALLATION PRACTICE. AVOID USING MINIMUM CABLE BENDS.

a. SUPPORT INDIVIDUAL FIBER AND DC POWER CABLES ABOVE BREAKOUT ENCLOSURE (MEDUSA) AT TOWER TOP, INSIDE MMBTS, AND AT ANY INTERMEDIATE FIBER/DC DISTRIBUTION BOXES.

b. SUPPORT FIBER BUNDLES USING 1/2" VELCRO STRAPS OF THE REQUIRED LENGTH ON 18" CENTERS. VELCRO STRAPS SHALL BE OIL, UV AND WATER RESISTANT AND SUITABLE FOR INDUSTRIAL INSTALLATIONS AS MANUFACTURED BY TEXTOL OR EQUAL.

c. SUPPORT DC BUNDLES ON 18" CENTERS WITH ZIP–TIES OF ADEQUATE LENGTH. ZIP–TIES SHALL BE UV STABILIZED, BLACK NYLON WITH A TENSILE STRENGTH OF 12,000 PSI AS MANUFACTURED BY NELCO PRODUCTS OR EQUAL.

- D. BENDING RADIUS: CABLES SHALL NOT EXCEED THE MINIMUM BENDING RADIUS AS DETERMINED BY THE CABLE MANUFACTURER.
- E. TERMINATION AT SHELTER AND ENTRY PLATE:

a. ALL CABLING SHALL ENTER THE BUILDING THROUGH THE WAVEGUIDE ENTRY PLATE AND BE PROPERLY WEATHER SEALED WITH A CABLE BOOT FABRICATED FOR THE SIZE OF THE CABLE OR WITH ROXTEC BLOCKS. CABLE BOOTS ARE NOT TO BE CUT TO FIT IN THE FIELD. COAXIAL CABLES SHALL BE TERMINATED WITHIN 18 INCHES INSIDE THE SHELTER AND FITTED WITH A SURGE SUPPRESSOR.

b. CABLE PORT ASSIGNMENTS FOR SHELTER SITES: CABLES SHALL BE INSTALLED AS SHOWN ON THE DRAWINGS AND CONSISTENT WITH TS–0200.

- F. GROUNDING OF CABLES: ALL CABLES SHALL BE GROUNDED AS SHOWN ON THE DRAWINGS AND IN ACCORDANCE WITH MANUFACTURER REQUIREMENTS.
- G. CABLE CONNECTIONS:

a. CLEAN FIBER CONNECTORS AS REQUIRED IN EL–0568.

b. FOR FIELD FABRICATIONS USE ONLY CABLE CONNECTORS RECOMMENDED BY THE CABLE MANUFACTURER AND REQUIRED BY THE EQUIPMENT BEING CONNECTED.

c. EXCEPT AS OTHERWISE REQUIRED, CONNECTORS FOR ALL MAIN STATION ANTENNA CABLES SHALL BE 7/16 DIN.

d. d.EXCEPT AS OTHERWISE REQUIRED, CONNECTORS FOR GPS ANTENNAS SHALL BE TYPE N.

e. CONNECTORS FOR MICROWAVE ANTENNAS, UNLESS OTHERWISE NOTED, SHALL BE TYPE N.

f. INSTALL AND TIGHTEN CONNECTORS PER MANUFACTURER'S INSTRUCTIONS.

- H. COLOR CODING OF CABLES: COMPLY WITH TS–0200 AND THE RF DATA SHEETS ON THE DRAWINGS.
- I. ALPHA–NUMERIC LABELING OF CABLES: COMPLY WITH EN–2012–001.

WEATHERPROOFING CONNECTORS AND GROUND KITS:

1. ALL COAX CONNECTORS, FIBER CONNECTORS AND INSTALLED CABLE GROUND KITS SHALL BE WEATHERPROOFED USING ONE OF THE FOLLOWING METHODS. SPRINTS PREFERENCE IS THE USE OF MATERIAL CALLED OUT IN ITEM 1 BELOW. ALL INSTALLATIONS MUST BE DONE IN ACCORDANCE WITH THE MANUFACTURER'S RECOMMENDATIONS AND INDUSTRY BEST PRACTICES.
   - A. WEATHER PROOFING BOOTS FROM APPROVED VENDORS SUCH AS 3M, AMPHENOL, RFS, FCT MOLEX, JMA AND COMMSCOPE. SUBSTITUTIONS WILL NOT BE ALLOWED.
   - B. COLD SHRINK: ENCOMPASS CONNECTOR IN COLD SHRINK TUBING AND PROVIDE A DOUBLE WRAP OF 2" ELECTRICAL TAPE EXTENDING 2" BEYOND TUBING. PROVIDE 3M COLD SHRINK CXS SERIES OR EQUAL.
   - C. SELF–AMALGAMATING TAPE: CLEAN SURFACES. APPLY A DOUBLE WRAP OF SELF–AMALGAMATING TAPE 2" BEYOND CONNECTOR. APPLY A SECOND WRAP OF SELF–AMALGAMATING TAPE IN OPPOSITE DIRECTION. APPLY DOUBLE WRAP OF 2" WIDE ELECTRICAL TAPE EXTENDING 2" BEYOND THE SELF–AMALGAMATING TAPE.
   - D. HEAT SHRINK TUBING REQUIRING OPEN FLAME ON THE SITE IS NOT ACCEPTABLE.

WEATHERPROOFING CONNECTORS AND GROUND KITS:

SUMMARY:

1. THIS SECTION SPECIFIES MMBS AND RELATED EQUIPMENT FURNISHED BY THE COMPANY FOR INSTALLATION BY THE CONTRACTOR.
2. CONTRACTOR SHALL PROVIDE AND INSTALL ALL MISCELLANEOUS MATERIALS AND LABOR REQUIRED FOR INSTALLATION OF THE MMBS CABINET AND RELATED EQUIPMENT.
3. ALL WORK PROVIDED BY CONTRACTOR SHALL BE IN COMPLIANCE WITH THE CONSTRUCTION DRAWINGS AND DETAILS, SITE SPECIFIC CONTRACT DOCUMENTS, AND THESE SPECIFICATIONS.

Sprint
201 STATE ROUTE 17 NORTH
RUTHERFORD, NJ 07070
TEL: (201) 684–4000
FAX: (201) 684–4223

SAC WIRELESS A NOKIA COMPANY
540 W. MADISON ST.
9TH FLOOR
CHICAGO, IL 60661
www.sacw.com
312.895.4977

WESTCHESTER SERVICES LLC
604 FOX GLEN
BARRINGTON, IL 60010
TELEPHONE: 847–277–0070
FAX : 847–277–0080
AE@westchesterservices.com

JOHN M. BANKS ARCHITECT
604 FOX GLEN
BARRINGTON, IL 60010
TELEPHONE: 847–277–0070
FAX : 847–277–0080
JBANKS@WESTCHESTERSERVICES.COM

THESE DOCUMENTS ARE CONFIDENTIAL AND ARE THE SOLE PROPERTY OF SPRINT AND MAY NOT BE REPRODUCED, DISSEMINATED OR REDISTRIBUTED WITHOUT THE EXPRESS WRITTEN CONSENT OF SPRINT.

NO.	DATE	DESCRIPTION
1	06.20.19	PERMIT/CONSTRUCTION
0	07.25.18	PERMIT/CONSTRUCTION

DRAWN BY: JM
CHECKED BY: JMB
JOB NUMBER: CT43XC806
ARCHITECT: JOHN BANKS

DATED: 06/20/19 EXP. DATE: 07/31/19

SITE NAME
PETRO LOCK

SITE NUMBER
CT43XC806

SITE LOCATION
99 MEADOW ST.
HARTFORD, CT 06114

AUGMENT ID
CT43XC806S18.1

SHEET TITLE
SPRINT CONSTRUCTION SPECIFICATIONS

SHEET NUMBER
T-2

SECTION 26 100 – BASIC ELECTRICAL REQUIREMENTS

SUMMARY:
THIS SECTION SPECIFIES BASIC ELECTRICAL REQUIREMENTS FOR SYSTEMS AND COMPONENTS.

QUALITY ASSURANCE:
1. ALL EQUIPMENT FURNISHED BY DIVISION 26 SHALL CARRY UL LABELS AND LISTINGS WHERE SUCH LABELS AND LISTINGS ARE AVAILABLE IN THE INDUSTRY.
2. MANUFACTURERS OF EQUIPMENT SHALL HAVE A MINIMUM OF THREE YEARS' EXPERIENCE WITH THEIR EQUIPMENT INSTALLED AND OPERATING IN THE FIELD IN A USE SIMILAR TO THE PROPOSED USE FOR THIS PROJECT.

SUPPORTING DEVICES:
1. FURNISH AND INSTALL STEEL SUPPORTS AND FRAMES CONNECTED WITH WELDS AND/OR MACHINE BOLTS WITH WOOD BACK PANELS FOR MOUNTING ALL ELECTRICAL EQUIPMENT INCLUDING PANEL BOARDS, SWITCHES, STARTERS, CONTACTORS, AND CONTROLS AS REQUIRED AND AS APPROVED BY THE ENGINEER.
2. FURNISH AND INSTALL ANGLE IRON FRAMES BOLTED TO FLOOR OR WALL FOR MOUNTING ELECTRICAL EQUIPMENT FURNISHED UNDER OTHER DIVISIONS TO BE INSTALLED BY DIVISION 26 WHERE NECESSARY.
3. MANUFACTURERS: SUBJECT TO COMPLIANCE WITH REQUIREMENTS, PROVIDE PRODUCTS BY THE FOLLOWING:
   a. ALLIED TUBE AND CONDUIT
   b. B–LINE SYSTEMS
   c. UNISTRUT DIVERSIFIED PRODUCTS
   d. THOMAS & BETTS
4. COATINGS: SUPPORTS, SUPPORT HARDWARE, AND FASTENERS SHALL BE PROTECTED WITH ZINC COATING OR WITH TREATMENT OF EQUIVALENT CORROSION RESISTANCE USING APPROVED ALTERNATIVE TREATMENT, FINISH, OR INHERENT MATERIAL CHARACTERISTICS. PRODUCTS FOR USE OUTDOORS SHALL BE HOT–DIP GALVANIZED.
5. RACEWAY SUPPORTS: CLEVIS HANGERS, RISER CLAMPS, CONDUIT STRAPS, THREADED C–CLAMPS WITH RETAINERS, CEILING TRAPEZE HANGERS, WALL BRACKETS, AND SPRING STEEL CLAMPS.
6. FASTENERS: TYPES, MATERIALS, AND CONSTRUCTION FEATURES AS FOLLOWS:
   a. EXPANSION ANCHORS: CARBON STEEL WEDGE OR SLEEVE TYPE.
   b. TOGGLE BOLTS: ALL STEEL SPRINGHEAD TYPE.
   c. POWER–DRIVEN THREADED STUDS: HEAT–TREATED STEEL, DESIGNED SPECIFICALLY FOR THE INTENDED SERVICE.
   d. FASTEN BY MEANS OF WOOD SCREWS ON WOOD,
   e. CONCRETE INSERTS OR EXPANSION BOLTS ON CONCRETE OR SOLID MASONRY.
   f. MACHINE SCREWS, WELDED THREADED STUDS, OR SPRING–TENSION CLAMPS ON STEEL.
   g. EXPLOSIVE DEVICES FOR ATTACHING HANGERS TO STRUCTURE SHALL NOT BE PERMITTED.
   h. DO NOT WELD CONDUIT, PIPE STRAPS, OR ITEMS OTHER THAN THREADED STUDS TO STEEL STRUCTURES.
   i. IN PARTITIONS OF LIGHT STEEL CONSTRUCTION, USE SHEET METAL SCREWS.

SUPPORTING DEVICES:

1. INSTALL SUPPORTING DEVICES TO FASTEN ELECTRICAL COMPONENTS SECURELY AND PERMANENTLY IN ACCORDANCE WITH NEC.
2. COORDINATE WITH THE BUILDING STRUCTURAL SYSTEM AND WITH OTHER TRADES.
3. RACEWAY SUPPORTS SHALL CONFORM TO THE MANUFACTURER'S RECOMMENDATIONS FOR SELECTION AND INSTALLATION OF SUPPORTS.
4. THE STRENGTH OF EACH SUPPORT SHALL BE ADEQUATE TO CARRY THE PRESENT AND FUTURE LOAD MULTIPLIED BY A SAFETY FACTOR OF AT LEAST FOUR. WHERE THIS DETERMINATION RESULTS IN A SAFETY ALLOWANCE OF LESS THAN 200 POUNDS, PROVIDE ADDITIONAL STRENGTH UNTIL THERE IS A MINIMUM OF 200 POUNDS SAFETY ALLOWANCE IN THE STRENGTH OF EACH SUPPORT.
5. INSTALL INDIVIDUAL AND MULTIPLE (TRAPEZE) RACEWAY HANGERS AND RISER CLAMPS AS NECESSARY TO SUPPORT THE RACEWAYS. PROVIDE U–BOLTS, CLAMPS, ATTACHMENTS, AND OTHER HARDWARE NECESSARY FOR HANGER ASSEMBLY AND FOR SECURING HANGER RODS AND CONDUITS.
6. SUPPORT PARALLEL RUNS OF HORIZONTAL RACEWAYS TOGETHER ON TRAPEZE–TYPE HANGERS.
7. SUPPORT MISCELLANEOUS ELECTRICAL COMPONENTS AS REQUIRED TO PRODUCE THE SAME STRUCTURAL SAFETY FACTORS AS SPECIFIED FOR RACEWAY SUPPORTS. INSTALL METAL CHANNEL RACKS FOR MOUNTING CABINETS, PANEL BOARDS, DISCONNECTS, CONTROL ENCLOSURES, PULL BOXES, JUNCTION BOXES, TRANSFORMERS AND OTHER DEVICES.
8. IN OPEN OVERHEAD SPACES, CAST BOXES THREADED TO RACEWAYS NEED NOT BE SUPPORTED SEPARATELY EXCEPT WHERE USED FOR FIXTURE SUPPORT. SUPPORT SHEET METAL BOXES DIRECTLY FROM THE BUILDING STRUCTURE OR BY BAR HANGERS. WHERE BAR HANGERS ARE USED, ATTACH THE BAR TO RACEWAYS ON OPPOSITE SIDES OF THE BOX AND SUPPORT THE RACEWAY WITH A LISTED TYPE OF FASTENER NOT MORE THAN 24" (600 MM) FROM THE BOX.
9. INSTALL CONDUIT SEALING FITTINGS FOR CONDUIT PENETRATIONS OF CONCRETE WALL EXTERIOR OR BELOW GRADE AS SPECIFIED OR REQUIRED BY CODE.
10. UNLESS OTHERWISE INDICATED ON THE DRAWINGS, FASTEN ELECTRICAL ITEMS AND THEIR SUPPORTING HARDWARE SECURELY TO THE STRUCTURE IN ACCORDANCE WITH THE FOLLOWING:
    a. FASTEN BY MEANS OF WOOD SCREWS ON WOOD,
    b. TOGGLE BOLTS ON HOLLOW MASONRY UNITS.
    c. CONCRETE INSERTS OR EXPANSION BOLTS ON CONCRETE OR SOLID MASONRY.
    d. MACHINE SCREWS, WELDED THREADED STUDS, OR SPRING–TENSION CLAMPS ON STEEL.
    e. EXPLOSIVE DEVICES FOR ATTACHING HANGERS TO STRUCTURE SHALL NOT BE PERMITTED.
    f. DO NOT WELD CONDUIT, PIPE STRAPS, OR ITEMS OTHER THAN THREADED STUDS TO STEEL STRUCTURES.
    g. IN PARTITIONS OF LIGHT STEEL CONSTRUCTION, USE SHEET METAL SCREWS.
11. ENSURE THAT THE LOAD APPLIED BY ANY FASTENER DOES NOT EXCEED 25 PERCENT OF THE PROOF TEST LOAD.
12. USE VIBRATION AND SHOCK–RESISTANT FASTENERS FOR ATTACHMENTS TO CONCRETE SLABS.

ELECTRICAL IDENTIFICATION:
1. DURING TRENCH BACKFILLING, FOR EXTERIOR UNDERGROUND POWER, CONTROLS, SIGNAL, AND COMMUNICATIONS LINES, INSTALL CONTINUOUS UNDERGROUND PLASTIC LINE MARKER, LOCATED DIRECTLY ABOVE THE LINE AT A BURIAL DEPTH OF 2 FEET BELOW FINISHED GRADE. INSTALL TWO LINE MARKERS 6" IN FROM THE EDGE OF EACH TRENCH WHERE THE TRENCH EXCEEDS 16" IN WIDTH. INSTALL LINE MARKERS FOR ALL UNDERGROUND ELECTRICAL TRENCHES REGARDLESS OF VOLTAGE OR MATERIAL.
2. PROVIDE TYPED CIRCUIT SCHEDULES IN THE MOUNTING BRACKET, INSIDE DOORS OF PANEL BOARDS.
3. BRANCH CIRCUITS FEEDING AVIATION OBSTRUCTION LIGHTING EQUIPMENT SHALL BE CLEARLY IDENTIFIED AS SUCH AT THE BRANCH CIRCUIT PANEL BOARD.

SECTION 26 200 – ELECTRICAL MATERIALS AND EQUIPMENT

CONDUIT:
1. RIGID GALVANIZED STEEL (RGS) CONDUIT SHALL BE USED FOR EXTERIOR LOCATIONS ABOVE GROUND AND IN UNFINISHED INTERIOR LOCATIONS, AND FOR ENCASED RUNS IN CONCRETE. RIGID CONDUIT SHALL BE STEEL, COATED WITH ZINC EXTERIOR AND INTERIOR BY THE HOT DIP GALVANIZING PROCESS. CONDUIT SHALL BE PRODUCED TO ANSI SPECIFICATIONS C80.1, FEDERAL SPECIFICATION WW–C–581 AND SHALL BE LISTED WITH THE UNDERWRITERS' LABORATORIES. RGS CONDUITS SHALL BE MANUFACTURED BY ALLIED, REPUBLIC OR WHEATLAND AND SHALL BE GROUNDED PER CURRENT NEC SPECIFICATIONS. CONDUIT AND FITTINGS SHALL BE PRODUCED BY THE SAME MANUFACTURER, WHO SHALL HAVE A MINIMUM OF FIVE YEARS' EXPERIENCE PRODUCING THE MATERIAL.
2. EXTERIOR UNDERGROUND CONDUIT SHALL BE POLYVINYLCHLORIDE (PVC) SCHEDULE 80 OR DIRECT BURIAL RATED. JOINTS SHALL BE BELLED, AND FLUSH SOLVENT WELDED IN ACCORDANCE WITH MANUFACTURER'S INSTRUCTIONS. CONDUIT SHALL BE CARLON ELECTRICAL PRODUCTS OR EQUAL. CONDUIT AND FITTINGS SHALL BE PRODUCED BY THE SAME MANUFACTURER, WHO SHALL HAVE A MINIMUM OF FIVE YEARS' EXPERIENCE PRODUCING THE MATERIAL.
3. ELECTRICAL METALLIC TUBING (EMT) MAY BE USED IN CONCEALED SPACES ABOVE CEILINGS OR WITHIN WALLS AND EXPOSED IN SPRINT SHELTERS. EMT SHALL BE MILD STEEL, ELECTRICALLY WELDED, ELECTRO–GALVANIZED OR HOT–DIPPED GALVANIZED AND PRODUCED TO ANSI SPECIFICATION C80.3, FEDERAL SPECIFICATION WW–C–563, AND SHALL BE UL LISTED. EMT SHALL BE MANUFACTURED BY ALLIED, REPUBLIC OR WHEATLAND, OR EQUAL.
4. FLEXIBLE CONDUIT IS NOT INTENDED TO FULLY REPLACE RIGID CONDUIT IN A CIRCUIT. LIQUIDTIGHT FLEXIBLE METALLIC CONDUIT (LFMC) IS ONLY PERMISSIBLE FOR MAKING FINAL CONNECTIONS TO CABINETS AND ENCLOSURES. MAXIMUM LENGTH OF FLEXIBLE CONDUIT SHALL NOT EXCEED 6 FEET IN LENGTH. THE LENGTH OF THE FLEXIBLE CONDUIT CAN BE BROKEN UP INTO TWO 3 FOOT LENGTHS WITH 3 FEET AT EITHER END. LIQUIDTIGHT FLEXIBLE NON–METALLIC CONDUIT (LFNC) IS PERMISSIBLE ONLY FOR DEDICATED GROUNDING CONDUITS SUCH AS GROUNDING CONNECTIONS TO TOWERS, STEEL STRUCTURES, GROUND BARS, CABINET GROUND POINTS, ETC. FLEXIBLE CONDUITS SHALL NOT BE USED WHERE SUBJECT TO MECHANICAL DAMAGE AND SHALL BE SUPPORTED AS REQUIRED BY NEC. MANUFACTURERS OF FLEXIBLE CONDUITS SHALL BE CAROL, ANACONDA METAL HOSE (HYSPAN) OR UNIVERSAL METAL HOSE, SOUTHWIRE, OR EQUAL. LIQUIDTIGHT FLEXIBLE CONDUIT (LMFC) SHALL BE UL LISTED, OIL RESISTANT, SUNLIGHT RESISTANT, WATERPROOF, AND TEMPERATURE RATED –30C TO +80C.
5. CONDUITS MUST BE SUPPORTED WITHIN 12" OF THE CONNECTION TO CABINETS AND ENCLOSURES TO REDUCE THE STRAIN ON FITTINGS. CONDUITS MUST BE ADEQUATELY SUPPORTED AT 24" CENTERS FOR HORIZONTAL RUNS AND 36" CENTERS FOR VERTICAL RUNS AND MUST BE PROTECTED FROM PHYSICAL DAMAGE. CONDUITS MUST NOT BE ROUTED OVER PLATFORMS AND SLABS AS THIS CREATES A WORKER TRIP HAZARD AND HAS RESULTED IN OSHA REPORTABLE ACCIDENTS, WORKER INJURIES, AND EXCESSIVE LIABILITY FOR SPRINT. CONDUITS MUST ALSO NOT BE IS INSTALLED WITHIN EQUIPMENT AND PERSONNEL INGRESS OR EGRESS PATHWAYS AND IS NOT PERMISSIBLE WITHIN THE OSHA REQUIRED WORKING SPACES IN FRONT OF OR BEHIND CABINETS AND ENCLOSURES.
6. ALL FITTINGS USED FOR CONNECTION TO CABINETS AND ENCLOSURES MUST BE METALLIC AND INCLUDE PLASTIC BUSHINGS TO PREVENT CABLE JACKET ABRASION.
7. MINIMUM SIZE CONDUIT SHALL BE 3/4 INCH.

BOXES AND COVERS:
1. PULL AND JUNCTION BOXES SHALL BE SIZED IN ACCORDANCE WITH NEC REQUIREMENTS AND SHALL BE INSTALLED SO THAT THE CONDUCTORS IN THEM ARE ACCESSIBLE WITHOUT REMOVING ANY PART OF THE STRUCTURE.
2. INTERIOR SWITCH AND OUTLET BOXES FLUSH MOUNTED IN FINISHED AREAS SHALL BE CODE GAUGE PRESSED PLATED STEEL, MIDLAND ROSS OR APPROVED EQUAL, SUITABLE FOR THE DEVICE TO BE INSTALLED. COVERS SHALL BE AS HEREINAFTER SPECIFIED IN PARAGRAPH "DEVICE PLATES IN FINISHED AREAS."
3. DEVICE AND PULL BOXES SURFACE–MOUNTED ABOVE ACCESSIBLE CEILINGS AND WITHIN UNFINISHED ENCLOSED MECHANICAL ROOMS SHALL BE AS SPECIFIED ABOVE SIZED FOR THE CONDUCTORS WITHIN AND SHALL HAVE PRESSED PLATED STEEL SCREW ATTACHED COVERS.
4. INTERIOR SWITCH, AND OUTLET BOXES SURFACE MOUNTED IN UNFINISHED INDUSTRIAL AREAS SHALL BE PLATED CAST ALLOY, THREADED, SUITABLE FOR THE DEVICE TO BE INSTALLED, CROUSE–HINDS FS/FD SERIES OR APPROVED EQUAL. COVERS SHALL BE SCREW ATTACHED PLATED IRON ALLOY SUITABLE FOR THE BOX AND DEVICE. SWITCH PLATE COVERS SHALL BE "GUARDED" STYLE.
5. PULL AND JUNCTION BOXES, ABOVE GRADE, EXTERIOR TO THE BUILDING AND IN INTERIOR INDUSTRIAL AREAS SHALL BE PLATED CAST ALLOY, THREADED, HEAVY DUTY, WEATHERPROOF, DUST PROOF, WITH GASKET, PLATED IRON ALLOY COVER AND STAINLESS STEEL COVER SCREWS, CROUSE–HINDS WAB SERIES OR EQUAL.
6. PULL BOXES IN EARTH SHALL BE FIBERGLASS OR COMPOSITE, OPEN BOTTOM COFFINS, INSTALLED IN EARTH ON GRAVEL BEDS AS INDICATED ON THE DRAWINGS AND RATED FOR PEDESTRIAN OR VEHICULAR TRAFFIC AS REQUIRED.
7. CONDUIT OUTLET BODIES AND CONDULETS SHALL BE PLATED, THREADED, CAST ALLOY WITH SIMILAR GASKETED COVERS. OUTLET BODIES SHALL BE OF THE CONFIGURATION AND SIZE SUITABLE FOR THE APPLICATION. PROVIDE CROUSE–HINDS FORM 8 OR EQUAL.
8. EXTERIOR SWITCH AND OUTLET BOXES SHALL BE RECESSED MOUNTED EXCEPT AS NOTED, CAST ALUMINUM OR PLATED CAST ALLOY WITH WET LOCATION, CROUSE–HINDS SERIES WLRD COVERS, OR EQUAL. MASONRY BOXES MOUNTED RECESSED IN EXTERIOR WALL SHALL BE FURNISHED WITH WEATHERPROOF COVERS.
9. MANUFACTURER FOR BOXES AND COVERS SHALL BE HOFFMAN, SQUARE "D", CROUSE–HINDS, COOPER, ADALET, APPLETON, O–Z GEDNEY, OR RACO.

GROUNDING:
1. ELECTRICAL SERVICES, CIRCUITS AND SYSTEMS, ENCLOSURES AND EQUIPMENT SHALL BE GROUNDED IN ACCORDANCE WITH ARTICLE 250 OF THE NATIONAL ELECTRICAL CODE.
2. GROUNDING SHALL BE PROVIDED AS INDICATED FOR FEEDER, BRANCH CIRCUIT, CONTROL, AND INSTRUMENT CIRCUITS.
3. EQUIPMENT GROUNDING CONDUCTOR: FURNISH AND INSTALL A SEPARATE INSULATED GREEN WIRE GROUNDING CONDUCTOR IN CONDUIT WITH CIRCUIT CONDUCTORS FOR ALL FEEDERS AND BRANCH CIRCUITS.
4. SEPARATELY DERIVED AC SYSTEMS THAT ARE REQUIRED TO BE GROUNDED BY THE NEC SHALL BE GROUNDED IN ACCORDANCE WITH PARAGRAPH 250–26 OF THE NEC.
5. FURNISH AND INSTALL INSULATED COPPER GROUND CONDUCTORS IN CONDUIT FROM MAIN ELECTRICAL SERVICE EQUIPMENT OR ELECTRICAL ROOM GROUND BUS AND CONNECT TO MAIN METALLIC WATER SERVICE ENTRANCE (IF AVAILABLE) WITH GROUND CLAMPS. CONNECT GROUND CONDUCTOR TO THE STREET SIDE OF WATER MAIN WHERE A DIELECTRIC MAIN WATER FITTING IS INSTALLED.
6. FURNISH AND INSTALL GROUND FAULT PROTECTION WHERE REQUIRED BY CODE AND AS REQUIRED BY THE SPECIFICATIONS AND DRAWINGS. INSTALLATION OF GROUND FAULT PROTECTION SHALL BE IN ACCORDANCE WITH NEC.
7. FURNISH AND INSTALL SUPPLEMENTAL CELL SITE GROUNDING SYSTEMS AS INDICATED ON THE DRAWINGS.

EXISTING STRUCTURE:
1. EXISTING EXPOSED WIRING AND ALL EXPOSED OUTLETS, RECEPTACLES, SWITCHES, DEVICES, BOXES, AND OTHER EQUIPMENT THAT ARE NOT TO BE UTILIZED IN THE COMPLETED PROJECT SHALL BE REMOVED OR DE–ENERGIZED AND CAPPED IN THE WALL, CEILING, OR FLOOR SO THAT THEY ARE CONCEALED AND SAFE. WALL, CEILING, OR FLOOR SHALL BE PATCHED TO MATCH THE ADJACENT CONSTRUCTION.
2. EXISTING EQUIPMENT THAT IS NOT TO BE REUSED SHALL BE REMOVED AND SHALL REMAIN THE PROPERTY OF THE COMPANY IF COMPANY WISHES TO RETAIN OWNERSHIP OF SAME. IF NOT, EQUIPMENT SHALL BECOME THE PROPERTY OF THIS CONTRACTOR AND SHALL BE REMOVED FROM THE SITE.
3. WHEN EXISTING CONDUIT, WIRING OR ANY OUTLET, RECEPTACLE, SWITCH, ETC., THAT IS TO BE UTILIZED IN THE COMPLETED PROJECT CONFLICTS WITH CONSTRUCTION, IT SHALL BE RELOCATED AND RECONNECTED TO MAINTAIN THE DESIRED SERVICE.
4. THIS CONTRACTOR SHALL GIVE FULL COOPERATION IN THE SCHEDULING AND PROCEDURE OF WORK. SERVICE SHALL NOT BE INTERRUPTED WITHOUT APPROVAL OF THE COMPANY.

CONDUIT AND CONDUCTOR INSTALLATION:
1. CONDUIT SHALL BE SIZED AS REQUIRED BY NEC AND SHALL BE INSTALLED CONTINUOUS AND COMPLETE FROM OUTLET TO OUTLET, PANELS AND JUNCTION BOXES.
   a. IN ORDER TO CLOSELY FOLLOW THE LINES OF THE STRUCTURE, MAINTAIN CLOSE PROXIMITY TO THE STRUCTURE AND KEEP CONDUITS IN TIGHT ENVELOPES. CHANGES IN DIRECTION TO ROUTE AROUND OBSTACLES SHALL BE MADE WITH CONDUIT OUTLET BODIES IN EXPOSED LOCATIONS EXCEPT AS OTHERWISE INDICATED, AND IN ACCORDANCE WITH GOOD CONSTRUCTION PRACTICE.
   b. OTHER CHANGES IN DIRECTION SHALL BE MADE WITH TRADE ELBOWS, KEEPING CONDUITS GROUPED IN TIGHT ENVELOPES FOLLOWING THE LINES OF THE STRUCTURE AND MAINTAINING CLOSE PROXIMITY TO THE STRUCTURE EXCEPT AS OTHERWISE INDICATED, AND IN ACCORDANCE WITH GOOD CONSTRUCTION PRACTICE.
   c. ROUTE CONDUITS ACCORDING TO THE ENVELOPES, AREAS, DETAILS AND SECTIONS, IF ANY, IDENTIFIED ON THE DRAWINGS.
2. CONDUITS SHALL BE FASTENED SECURELY IN PLACE WITH APPROVED NON–PERFORATED STRAPS AND HANGERS. EXPLOSIVE DEVICES FOR ATTACHING HANGERS TO STRUCTURE WILL NOT BE PERMITTED. CONDUITS SHALL BE CONCEALED IN FINISHED AREAS. CONDUIT SHALL BE EXPOSED IN UNFINISHED AREAS.
3. CONDUIT SHALL BE INSTALLED IN A NEAT AND WORKMANLIKE MANNER, PARALLEL AND PERPENDICULAR TO STRUCTURE WALL AND CEILING LINES. CONDUIT SHALL BE INSTALLED AS REQUIRED BY THE DESIGN OF THE STRUCTURE AND PLACED IN CONCRETE FORMS SO AS NOT TO INTERFERE WITH REINFORCING OR STRENGTH OF SLABS, JOISTS OR BEAMS. CONDUIT SHALL CLEAR ALL PIPES AND DUCTS AND DEPRESSIONS IN FLOORS. PERMISSION OF ENGINEER SHALL BE OBTAINED AS TO LOCATION OF CONDUIT IN REINFORCED CONCRETE SLABS, JOISTS AND BEAMS.
4. ALL CONDUIT SHALL BE FISHED TO CLEAR OBSTRUCTIONS. ENDS OF CONDUITS SHALL BE TEMPORARILY CAPPED TO PREVENT CONCRETE, PLASTER OR DIRT FROM ENTERING.
5. CONDUITS SHALL BE RIGIDLY CLAMPED TO BOXES BY GALVANIZED MALLEABLE IRON BUSHING ON INSIDE AND GALVANIZED MALLEABLE IRON LOCKNUT ON OUTSIDE AND INSIDE.
6. EMT CONDUITS (IF ALLOWED) SHALL HAVE APPROVED EMT THREADED TYPE BOX CONNECTORS AND COUPLINGS. SET SCREW CONNECTORS AND COUPLINGS SHALL NOT BE ACCEPTABLE.
7. CONDUCTORS SHALL BE PULLED IN ACCORDANCE WITH ACCEPTED GOOD PRACTICE. WHERE MORE THAN ONE CONDUCTOR IS INSTALLED IN THE SAME CONDUIT ALL CONDUCTORS WITHIN THE CONDUIT SHALL BE PULLED SIMULTANEOUSLY. PULL SHALL NOT DEFORM CONDUCTORS. APPROVED TYPE LUBRICANT MAY BE USED IN PULLING CONDUCTORS WHERE REQUIRED.
8. SPLICES AND TAPS SHALL BE KEPT TO A MINIMUM AND MADE IN ACCORDANCE WITH THE NEC.
9. WHERE CONDUIT CROSSES AN EXPANSION JOINT, AN EXPANSION AND DEFLECTION FITTING SHALL BE INSTALLED IN THE CONDUIT.
10. PROVIDE "MULE TAPE" PULL STRING IN ALL EMPTY CONDUITS.
11. PVC CONDUITS SHALL BE INSTALLED USING FITTINGS, SOLVENTS, GLUES, AND METHODOLOGY AS RECOMMENDED BY THE MANUFACTURER.
12. PROVIDE ADEQUATE LENGTH OF CONDUCTORS WITHIN ELECTRICAL ENCLOSURES AND TRAIN THE CONDUCTORS TO TERMINAL POINTS WITH NO EXCESS. DO NOT BEND CONDUCTORS SHARPER THAN EIGHT TIMES THE CABLE OUTSIDE DIAMETER. MAKE TERMINATIONS SO THERE IS NO BARE CONDUCTOR AT THE TERMINAL. BUNDLE MULTIPLE CONDUCTORS, WITH CONDUCTORS LARGER THAN NO. 10 AWG IN INDIVIDUAL CIRCUIT BUNDLES.
13. TIGHTEN ELECTRICAL CONNECTORS AND TERMINALS, INCLUDING SCREWS AND BOLTS, IN ACCORDANCE WITH THE MANUFACTURER'S PUBLISHED TORQUE TIGHTENING VALUES. WHERE MANUFACTURER'S TORQUING REQUIREMENTS ARE NOT INDICATED, TIGHTEN CONNECTORS AND TERMINALS TO COMPLY WITH TIGHTENING TORQUES SPECIFIED IN UL 486A AND 486B.

Sprint
201 STATE ROUTE 17 NORTH
RUTHERFORD, NJ 07070
TEL: (201) 684–4000
FAX: (201) 684–4223

SAC WIRELESS A NOKIA COMPANY
540 W. MADISON ST.
5TH FLOOR
CHICAGO, IL 60661
www.sacw.com
312.895.4977

WESTCHESTER SERVICES LLC
604 FOX GLEN
BARRINGTON, IL 60010
TELEPHONE: 847–277–0070
FAX : 847–277–0080
AE@westchesterservices.com

JOHN M. BANKS ARCHITECT
604 FOX GLEN
BARRINGTON, IL 60010
TELEPHONE: 847–277–0070
FAX : 847–277–0080
JBANKS@WESTCHESTERSERVICES.COM

THESE DOCUMENTS ARE CONFIDENTIAL AND ARE THE SOLE PROPERTY OF SPRINT AND MAY NOT BE REPRODUCED, DISSEMINATED OR REDISTRIBUTED WITHOUT THE EXPRESS WRITTEN CONSENT OF SPRINT.

NO.	DATE	DESCRIPTION
1	06.20.19	PERMIT/CONSTRUCTION
0	07.25.18	PERMIT/CONSTRUCTION

DRAWN BY: JM
CHECKED BY: JMB
JOB NUMBER: CT43XC806
ARCHITECT: JOHN BANKS

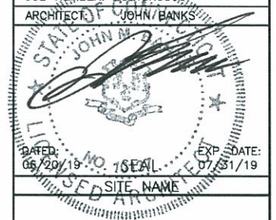

SITE NAME
PETRO LOCK

SITE NUMBER
CT43XC806

SITE LOCATION
99 MEADOW ST.
HARTFORD, CT 06114

AUGMENT ID
CT43XC806S18.1

SHEET TITLE
SPRINT CONSTRUCTION SPECIFICATIONS

SHEET NUMBER
T-3

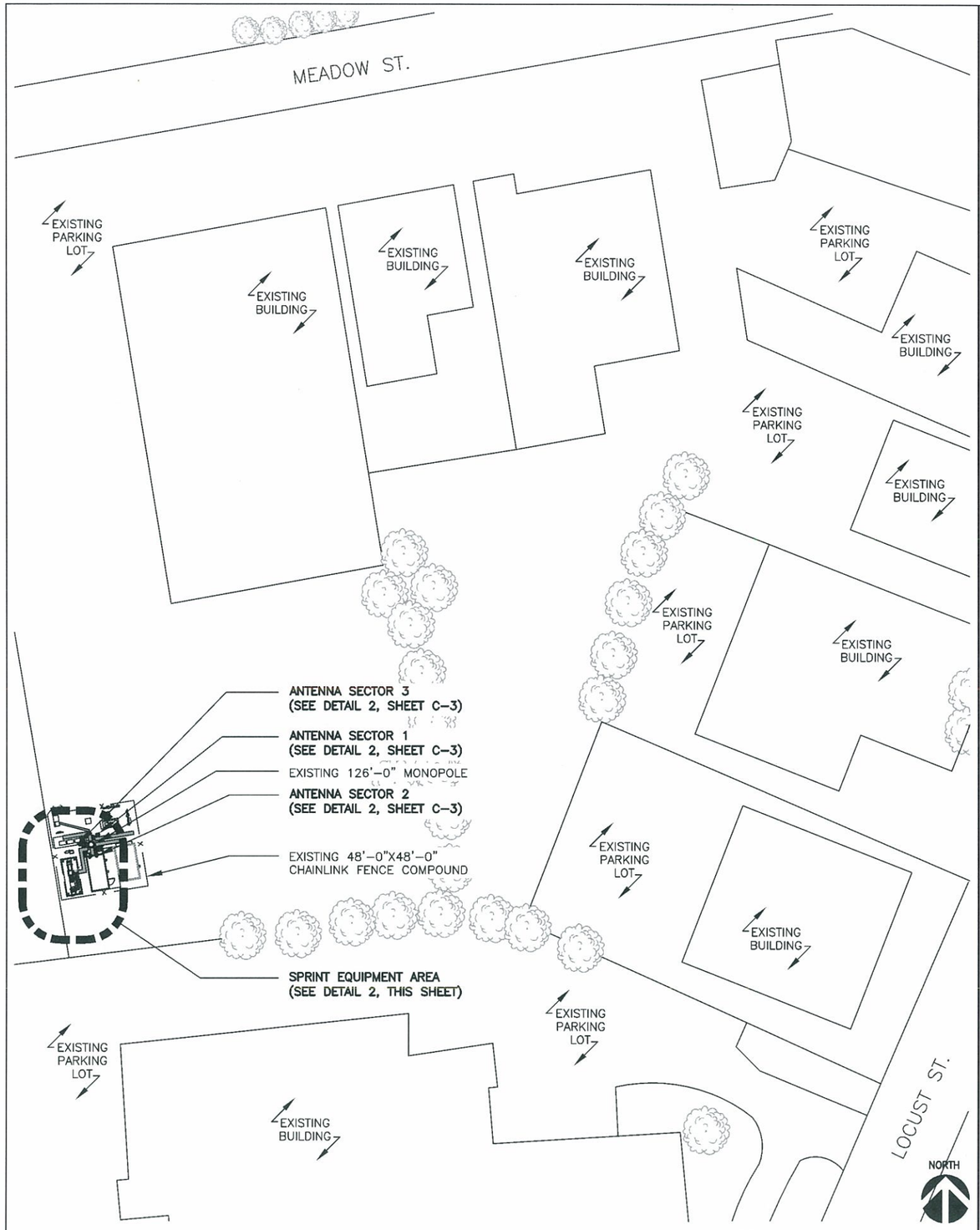

OVERALL SITE PLAN | 0 35' 70' | SCALE: 1"=70'-0" (11x17) (OR) 2"=70'-0" (22x34) | 1

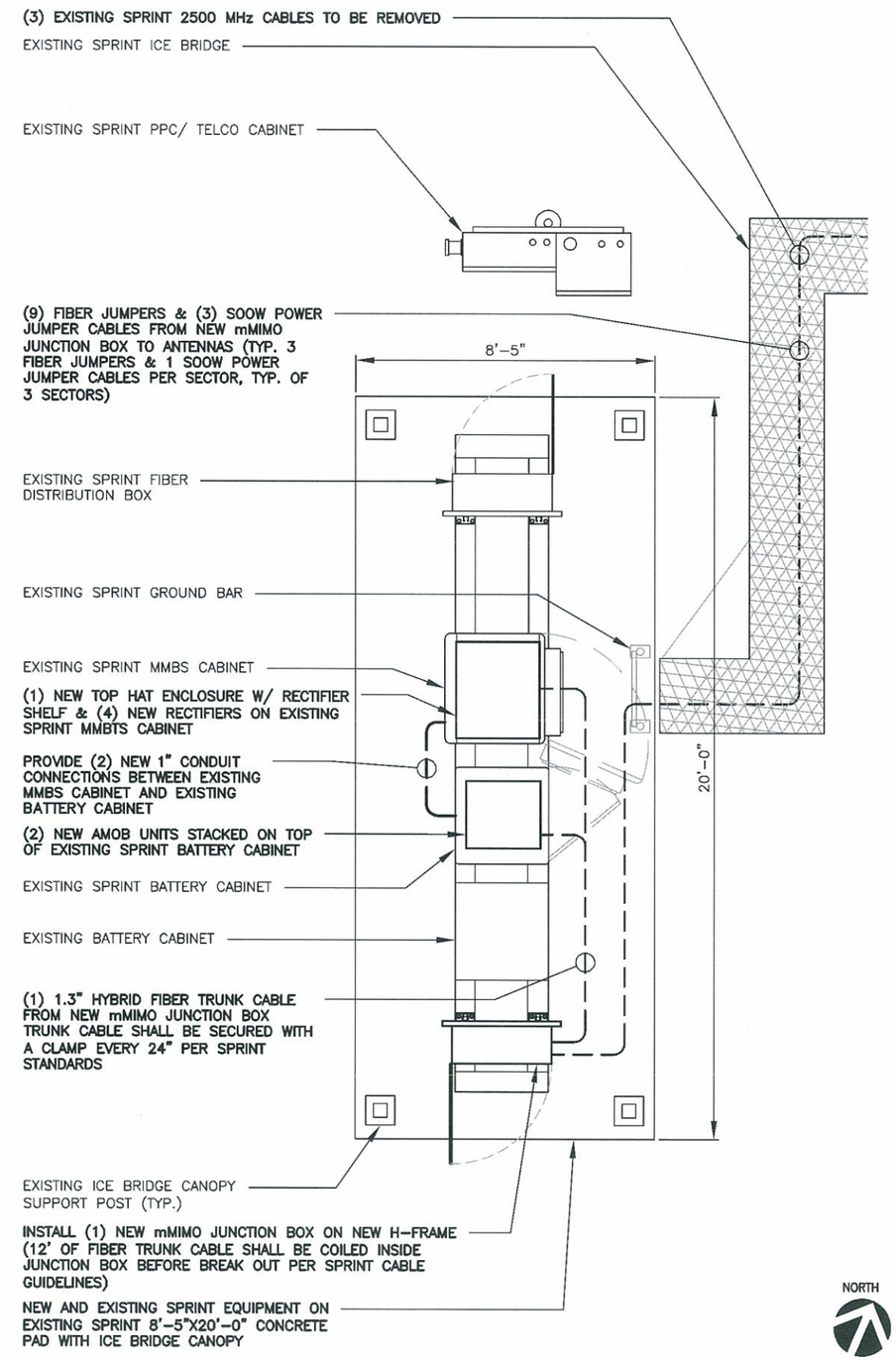

NEW EQUIPMENT PLAN | 0 2' 4' | SCALE: 1/4"=1'-0" (11x17) (OR) 1/2"=1'-0" (22x34) | 2

Sprint
201 STATE ROUTE 17 NORTH
RUTHERFORD, NJ 07070
TEL: (201) 684-4000
FAX: (201) 684-4223

SAC WIRELESS A NOKIA™ COMPANY
540 W. MADISON ST. 9TH FLOOR
CHICAGO, IL 60661
www.sacw.com
312.895.4977

WESTCHESTER SERVICES LLC
604 FOX GLEN
BARRINGTON, IL 60010
TELEPHONE: 847-277-0070
FAX : 847-277-0080
AE@westchesterservices.com

JOHN M. BANKS ARCHITECT
604 FOX GLEN
BARRINGTON, IL 60010
TELEPHONE: 847-277-0070
FAX : 847-277-0080
JBANKS@WESTCHESTERSERVICES.COM

THESE DOCUMENTS ARE CONFIDENTIAL AND ARE THE SOLE PROPERTY OF SPRINT AND MAY NOT BE REPRODUCED, DISSEMINATED OR REDISTRIBUTED WITHOUT THE EXPRESS WRITTEN CONSENT OF SPRINT.

NO.	DATE	DESCRIPTION
1	06.20.19	PERMIT/CONSTRUCTION
0	07.25.18	PERMIT/CONSTRUCTION

DRAWN BY: JM
CHECKED BY: UMB
JOB NUMBER: CT43XC806
ARCHITECT: JOHN BANKS

STATE OF ILLINOIS JOHN M. BANKS LICENSED ARCHITECT NO. 70137 SEAL

DATED: 06/20/19 EXP. DATE: 07/31/19

SITE NAME
PETRO LOCK

SITE NUMBER
CT43XC806

SITE LOCATION
99 MEADOW ST.
HARTFORD, CT 06114

AUGMENT ID
CT43XC806S18.1

SHEET TITLE
SITE PLANS

SHEET NUMBER
C-1

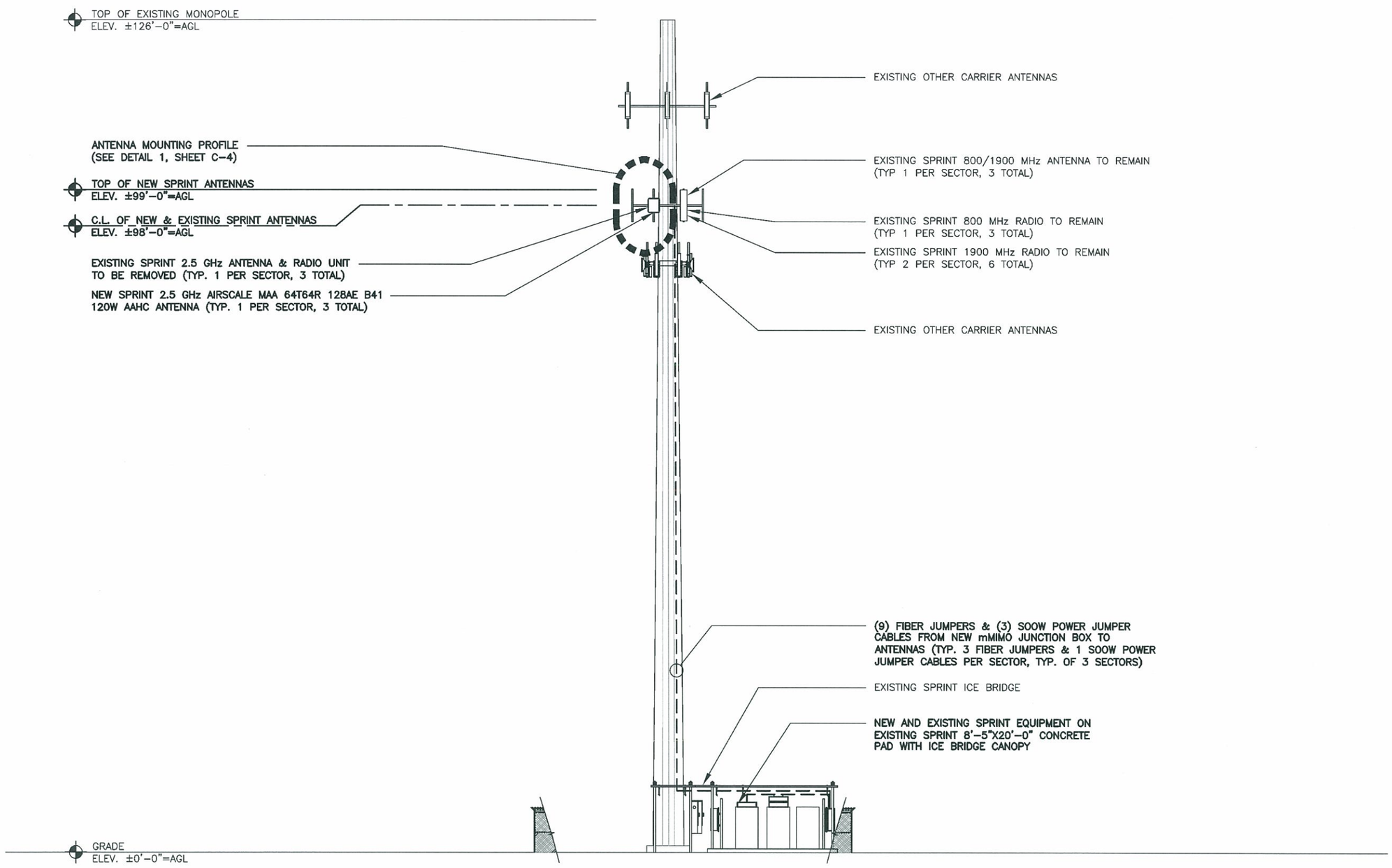

TOWER ELEVATION – SOUTHWEST

0 5' 15' 25'

SCALE: 1"=25'-0" (11x17)
(OR) 2"=25'-0" (22x34)

1

Sprint
201 STATE ROUTE 17 NORTH
RUTHERFORD, NJ 07070
TEL: (201) 684-4000
FAX: (201) 684-4223

SAC WIRELESS
A NOKIA™ COMPANY
540 W. MADISON ST.
9TH FLOOR
CHICAGO, IL 60661
www.sacw.com
312.895.4977

WESTCHESTER SERVICES LLC
604 FOX GLEN
BARRINGTON, IL 60010
TELEPHONE: 847-277-0070
FAX : 847-277-0080
AE@westchesterservices.com

JOHN M. BANKS
ARCHITECT
604 FOX GLEN
BARRINGTON, IL 60010
TELEPHONE: 847-277-0070
FAX : 847-277-0080
JBANKS@WESTCHESTERSERVICES.COM

THESE DOCUMENTS ARE CONFIDENTIAL AND ARE THE SOLE PROPERTY OF SPRINT AND MAY NOT BE REPRODUCED, DISSEMINATED OR REDISTRIBUTED WITHOUT THE EXPRESS WRITTEN CONSENT OF SPRINT.

NO.	DATE	DESCRIPTION
1	06.20.19	PERMIT/CONSTRUCTION
0	07.25.18	PERMIT/CONSTRUCTION

DRAWN BY: JM
CHECKED BY: JMB
JOB NUMBER: CT43XC806
ARCHITECT: JOHN BANKS

STATE OF CONNECTICUT JOHN M. BANKS LICENSED ARCHITECT SEAL

DATED: 06/20/19 EXP. DATE: 07/31/19

SITE NAME
PETRO LOCK

SITE NUMBER
CT43XC806

SITE LOCATION
99 MEADOW ST.
HARTFORD, CT 06114

AUGMENT ID
CT43XC806S18.1

SHEET TITLE
TOWER ELEVATION - SOUTHWEST

SHEET NUMBER
C-2

EXISTING ANTENNA AND CABLE SCHEDULE

LOCATION		AZIMUTH	RAD CENTER	STATUS	TECHNOLOGY	ANTENNA MODEL #	# OF RRH	CABLE SIZE	CABLE LENGTH
SECTOR 1	1A	20°	98'–0"	EXISTING	800/1900 MHz	RFS APXVSPP18–C–A20	800 MHz–1 1900 MHz–2	1–1/4" HYBRIFLEX	±124'
	1B	**350°**	**98'–0"**	**EXISTING–TO BE REMOVED**	**2500 MHz**	**RFS APZXVTM14–C–I20**	**2500 MHz–1**	**1" CONDUIT W/(3) ETHERNET & FIBER CABLES TO BE REMOVED**	**±124'**
SECTOR 2	2A	140°	98'–0"	EXISTING	800/1900 MHz	RFS APXVSPP18–C–A20	800 MHz–1 1900 MHz–2	1–1/4" HYBRIFLEX	±124'
	2B	**115°**	**98'–0"**	**EXISTING–TO BE REMOVED**	**2500 MHz**	**RFS APZXVTM14–C–I20**	**2500 MHz–1**	**1" CONDUIT W/(3) ETHERNET & FIBER CABLES TO BE REMOVED**	**±124'**
SECTOR 3	3A	270°	98'–0"	EXISTING	800/1900 MHz	RFS APXVSPP18–C–A20	800 MHz–1 1900 MHz–2	1–1/4" HYBRIFLEX	±124'
	3B	**220°**	**98'–0"**	**EXISTING–TO BE REMOVED**	**2500 MHz**	**RFS APZXVTM14–C–I20**	**2500 MHz–1**	**1" CONDUIT W/(3) ETHERNET & FIBER CABLES TO BE REMOVED**	**±124'**

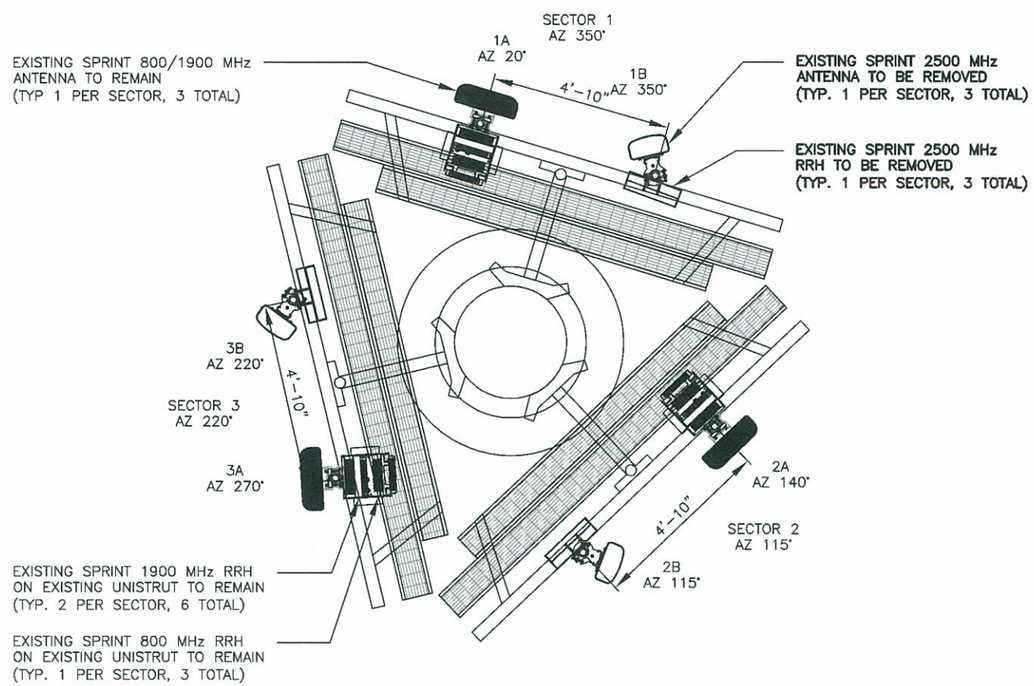

NORTH

NOTE:
ALL ANTENNA AZIMUTHS BASED ON TRUE NORTH AS SPECIFIED BY RFDS, LATEST REVISION

EXISTING ANTENNA PLAN | 0 2' 4' | SCALE: 1/4"=1'–0" (11x17) (OR) 1/2"=1'–0" (22x34) | 1

NEW ANTENNA AND CABLE SCHEDULE

LOCATION		AZIMUTH	RAD CENTER	STATUS	TECHNOLOGY	ANTENNA MODEL #	# OF RRH	CABLE SIZE	CABLE LENGTH
SECTOR 1	1A	20°	98'–0"	EXISTING	800/1900 MHz	RFS APXVSPP18–C–A20	800 MHz–1 1900 MHz–2	1–1/4" HYBRIFLEX	±124'
	1B	**350°**	**98'–0"**	**NEW**	**2500 MHz**	**AIRSCALE MAA 64T64R 128AE B41 120 W AAHC**	**INTEGRATED**	**1.3" HYBRID**	**±15'**
SECTOR 2	2A	140°	98'–0"	EXISTING	800/1900 MHz	RFS APXVSPP18–C–A20	800 MHz–1 1900 MHz–2	1–1/4" HYBRIFLEX	±124'
	2B	**115°**	**98'–0"**	**NEW**	**2500 MHz**	**AIRSCALE MAA 64T64R 128AE B41 120 W AAHC**	**INTEGRATED**	**SHARED**	**SHARED**
SECTOR 3	3A	270°	98'–0"	EXISTING	800/1900 MHz	RFS APXVSPP18–C–A20	800 MHz–1 1900 MHz–2	1–1/4" HYBRIFLEX	±124'
	3B	**220°**	**98'–0"**	**NEW**	**2500 MHz**	**AIRSCALE MAA 64T64R 128AE B41 120 W AAHC**	**INTEGRATED**	**SHARED**	**SHARED**
									±15'

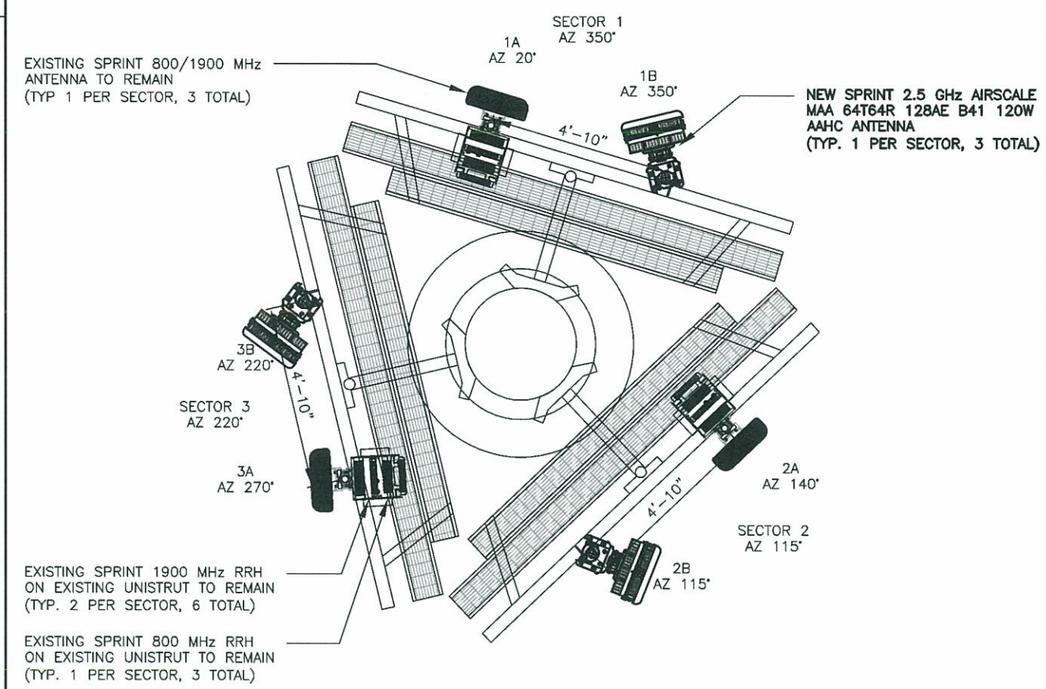

NORTH

NOTE:
1. ANTENNA AZIMUTHS BASED ON TRUE NORTH AS SPECIFIED BY RFDS, LATEST REVISION
2. ALL SPRINT ANTENNAS TO BE 4'–0" CL PIPE TO PIPE.

NOTE:
1. THE AAHC WILL REQUIRE A 40A CIRCUIT BREAKER.

PROPOSED ANTENNA PLAN | 0 2' 4' | SCALE: 1/4"=1'–0" (11x17) (OR) 1/2"=1'–0" (22x34) | 2

Sprint
201 STATE ROUTE 17 NORTH
RUTHERFORD, NJ 07070
TEL: (201) 684–4000
FAX: (201) 684–4223

SAC WIRELESS A NOKIA COMPANY
540 W. MADISON ST. 9TH FLOOR
CHICAGO, IL 60661
www.sacw.com
312.895.4977

WESTCHESTER SERVICES LLC
604 FOX GLEN
BARRINGTON, IL 60010
TELEPHONE: 847–277–0070
FAX : 847–277–0080
AE@westchesterservices.com

JOHN M. BANKS ARCHITECT
604 FOX GLEN
BARRINGTON, IL 60010
TELEPHONE: 847–277–0070
FAX : 847–277–0080
JBANKS@WESTCHESTERSERVICES.COM

THESE DOCUMENTS ARE CONFIDENTIAL AND ARE THE SOLE PROPERTY OF SPRINT AND MAY NOT BE REPRODUCED, DISSEMINATED OR REDISTRIBUTED WITHOUT THE EXPRESS WRITTEN CONSENT OF SPRINT.

NO.	DATE	DESCRIPTION
1	06.20.19	PERMIT/CONSTRUCTION
0	07.25.18	PERMIT/CONSTRUCTION

DRAWN BY: JM
CHECKED BY: JMB
JOB NUMBER: CT43XC806
ARCHITECT: JOHN BANKS

STATE OF CONNECTICUT · JOHN M. BANKS · NO. SEA.1 · LICENSED ARCHITECT
DATED: 06/20/19 EXP. DATE: 07/33/19

SITE NAME
PETRO LOCK

SITE NUMBER
CT43XC806

SITE LOCATION
99 MEADOW ST.
HARTFORD, CT 06114

AUGMENT ID
CT43XC806S18.1

SHEET TITLE
ANTENNA LAYOUTS

SHEET NUMBER
C-3

SPRINT CABLE GUIDELINES FOR CELL SITES			
CABLE LENGTH (FT)	MAX WEIGHT (LBS/FT)	CABLE DESCRIPTION	MAX DIAMETER (IN.)
60–120	1.1	3 PAIRS OF 6AWG DC CONDUCTORS WITH 48 MULTI–MODE FIBER PAIRS	1.144
121–200	1.47	3 PAIRS OF 4AWG DC CONDUCTORS WITH 48 MULTI–MODE FIBER PAIRS	1.3
201–375	2.39	6 PAIRS OF 4AWG DC CONDUCTORS WITH 48 MULTI–MODE FIBER PAIRS	1.66

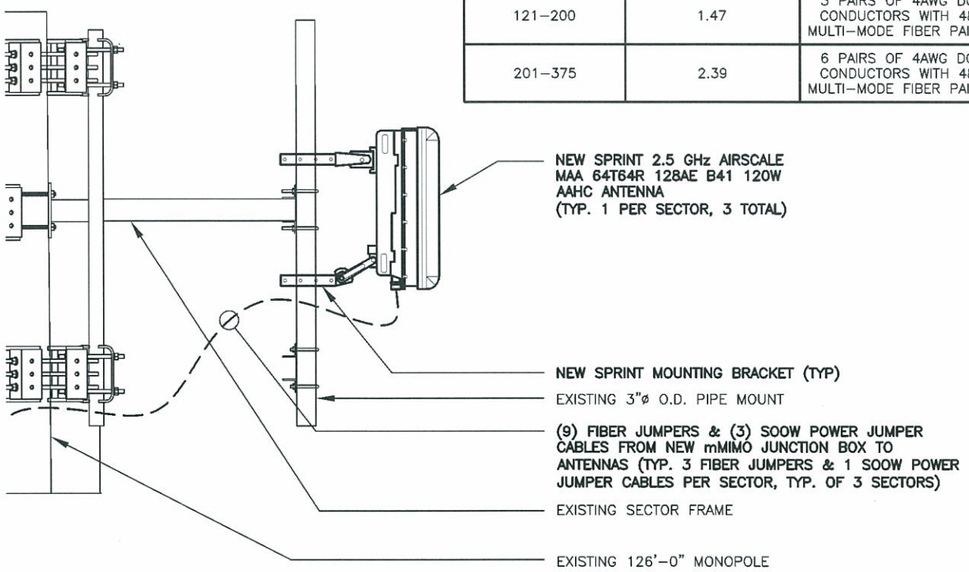

ANTENNA MOUNTING PROFILE VIEW — SCALE N.T.S. — 1

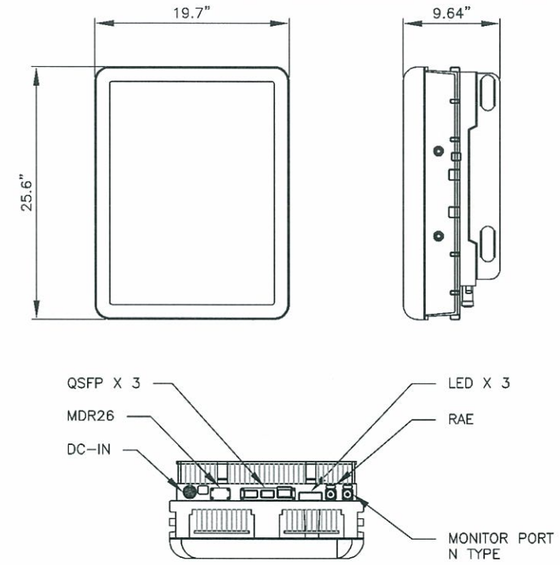

NOKIA – AIRSCALE MAA 64T64R 128AE B41 120W AAHC
WEIGHT (FULLY EQUIPPED): 103.6 LBS
SIZE (HXWXD): 25.6X19.7X9.64 IN.

ANTENNA DETAIL — SCALE N.T.S. — 2

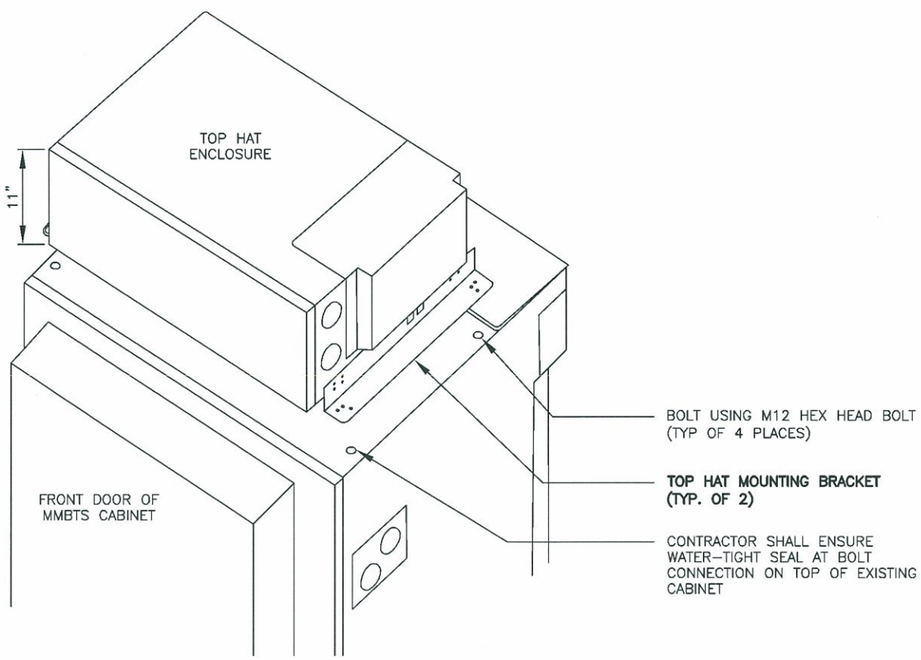

TOP HAT INSTALLATION DETAIL — SCALE N.T.S. — 3

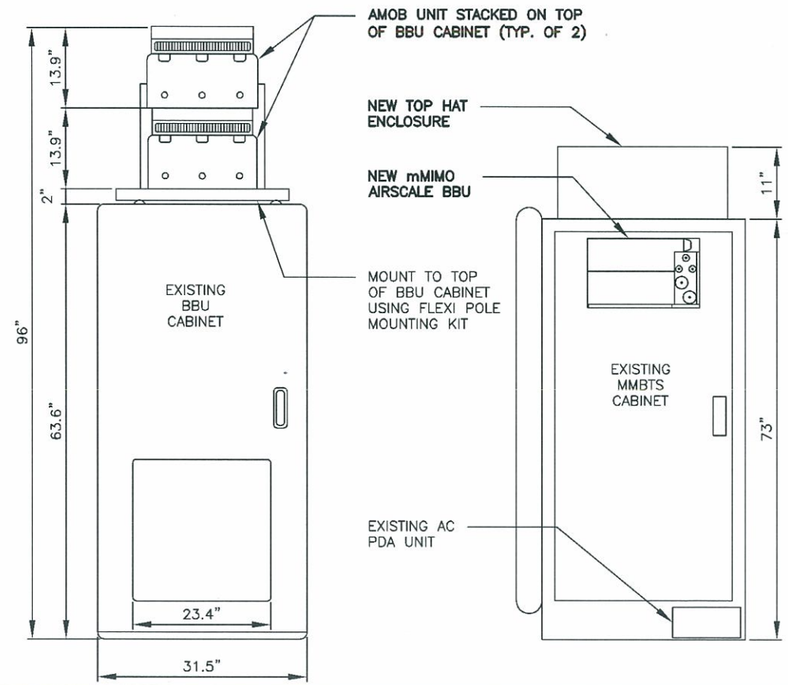

EQUIPMENT LOCATION DETAIL — SCALE N.T.S. — 4

Sprint
201 STATE ROUTE 17 NORTH
RUTHERFORD, NJ 07070
TEL: (201) 684–4000
FAX: (201) 684–4223

SAC WIRELESS A NOKIA™ COMPANY
540 W. MADISON ST. 9TH FLOOR CHICAGO, IL 60661
www.sacw.com
312.895.4977

WESTCHESTER SERVICES LLC
604 FOX GLEN
BARRINGTON, IL 60010
TELEPHONE: 847–277–0070
FAX : 847–277–0080
AE@westchesterservices.com

JOHN M. BANKS ARCHITECT
604 FOX GLEN
BARRINGTON, IL 60010
TELEPHONE: 847–277–0070
FAX : 847–277–0080
JBANKS@WESTCHESTERSERVICES.COM

THESE DOCUMENTS ARE CONFIDENTIAL AND ARE THE SOLE PROPERTY OF SPRINT AND MAY NOT BE REPRODUCED, DISSEMINATED OR REDISTRIBUTED WITHOUT THE EXPRESS WRITTEN CONSENT OF SPRINT.

NO.	DATE	DESCRIPTION
1	06.20.19	PERMIT/CONSTRUCTION
0	07.25.18	PERMIT/CONSTRUCTION

DRAWN BY: JM
CHECKED BY: JMB
JOB NUMBER: CT43XC806
ARCHITECT: JOHN M. BANKS

STATE OF CONNECTICUT — JOHN M. BANKS — LICENSED ARCHITECT — SEAL

DATED: 06/20/19 EXP. DATE: 07/31/19

NO. SITE NAME:
PETRO LOCK

SITE NUMBER
CT43XC806

SITE LOCATION
99 MEADOW ST.
HARTFORD, CT 06114

AUGMENT ID
CT43XC806S18.1

SHEET TITLE
EQUIPMENT DETAILS

SHEET NUMBER
C-4

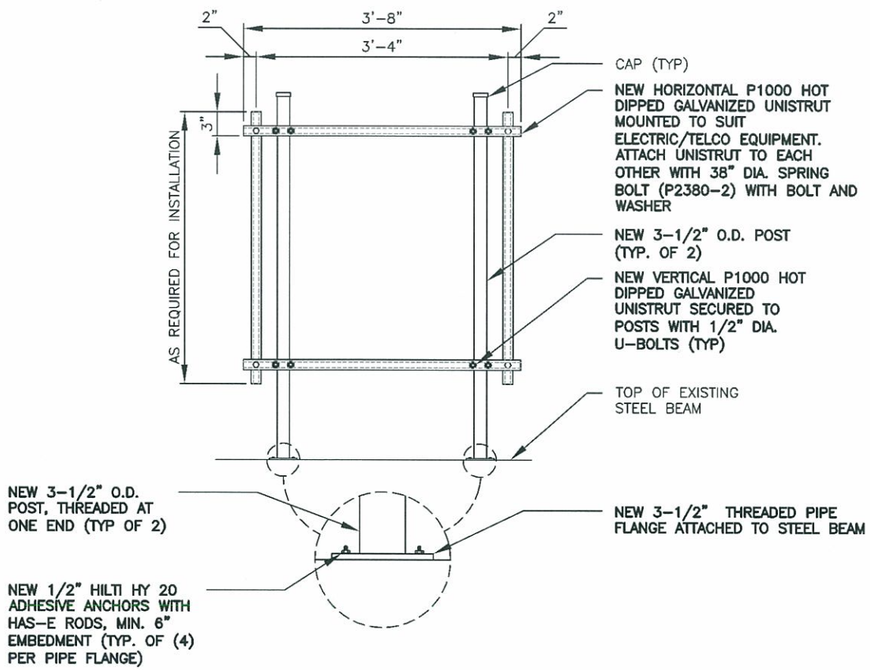

DC DISTRIBUTION & FIBER MGMT ENCLOSURE MOUNTING DETAIL — SCALE N.T.S. — 1

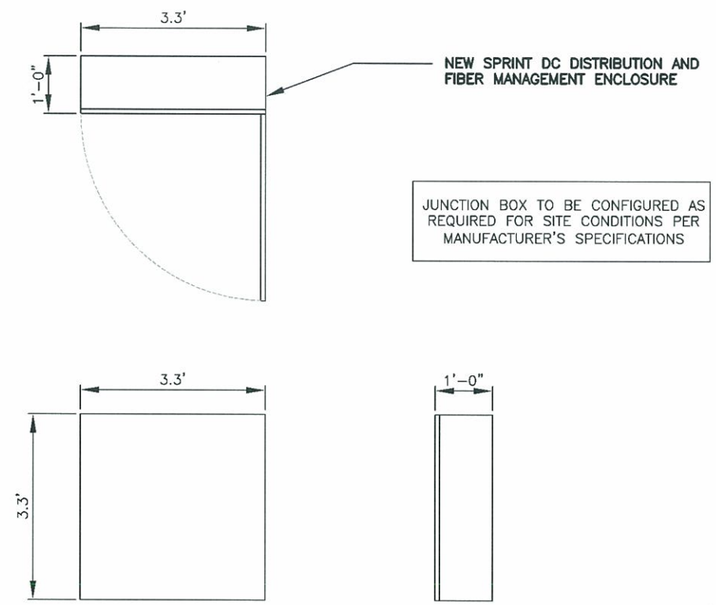

DC DISTRIBUTION & FIBER MGMT ENCLOSURE DETAIL — SCALE N.T.S. — 2

NOT USED — SCALE N.T.S. — 3

NOT USED — SCALE N.T.S. — 4

Sprint
201 STATE ROUTE 17 NORTH
RUTHERFORD, NJ 07070
TEL: (201) 684-4000
FAX: (201) 684-4223

SAC WIRELESS A NOKIA™ COMPANY
540 W. MADISON ST. 9TH FLOOR
CHICAGO, IL 60661
www.sacw.com
312.895.4977

WESTCHESTER SERVICES LLC
604 FOX GLEN
BARRINGTON, IL 60010
TELEPHONE: 847-277-0070
FAX : 847-277-0080
AE@westchesterservices.com

JOHN M. BANKS ARCHITECT
604 FOX GLEN
BARRINGTON, IL 60010
TELEPHONE: 847-277-0070
FAX : 847-277-0080
JBANKS@WESTCHESTERSERVICES.COM

THESE DOCUMENTS ARE CONFIDENTIAL AND ARE THE SOLE PROPERTY OF SPRINT AND MAY NOT BE REPRODUCED, DISSEMINATED OR REDISTRIBUTED WITHOUT THE EXPRESS WRITTEN CONSENT OF SPRINT.

NO.	DATE	DESCRIPTION
1	06.20.19	PERMIT/CONSTRUCTION
0	07.25.18	PERMIT/CONSTRUCTION

DRAWN BY: JM
CHECKED BY: JMB
JOB NUMBER: CT43XC806
ARCHITECT: JOHN BANKS

JOHN M. BANKS ARCHITECT — LICENSED — NO. 10137 — STATE OF CONNECTICUT

DATE: 06/20/19 — SEAL — EXP. DATE: 07/31/19

SITE NAME
PETRO LOCK

SITE NUMBER
CT43XC806

SITE LOCATION
99 MEADOW ST.
HARTFORD, CT 06114

AUGMENT ID
CT43XC806S18.1

SHEET TITLE
EQUIPMENT DETAILS

SHEET NUMBER
C-5

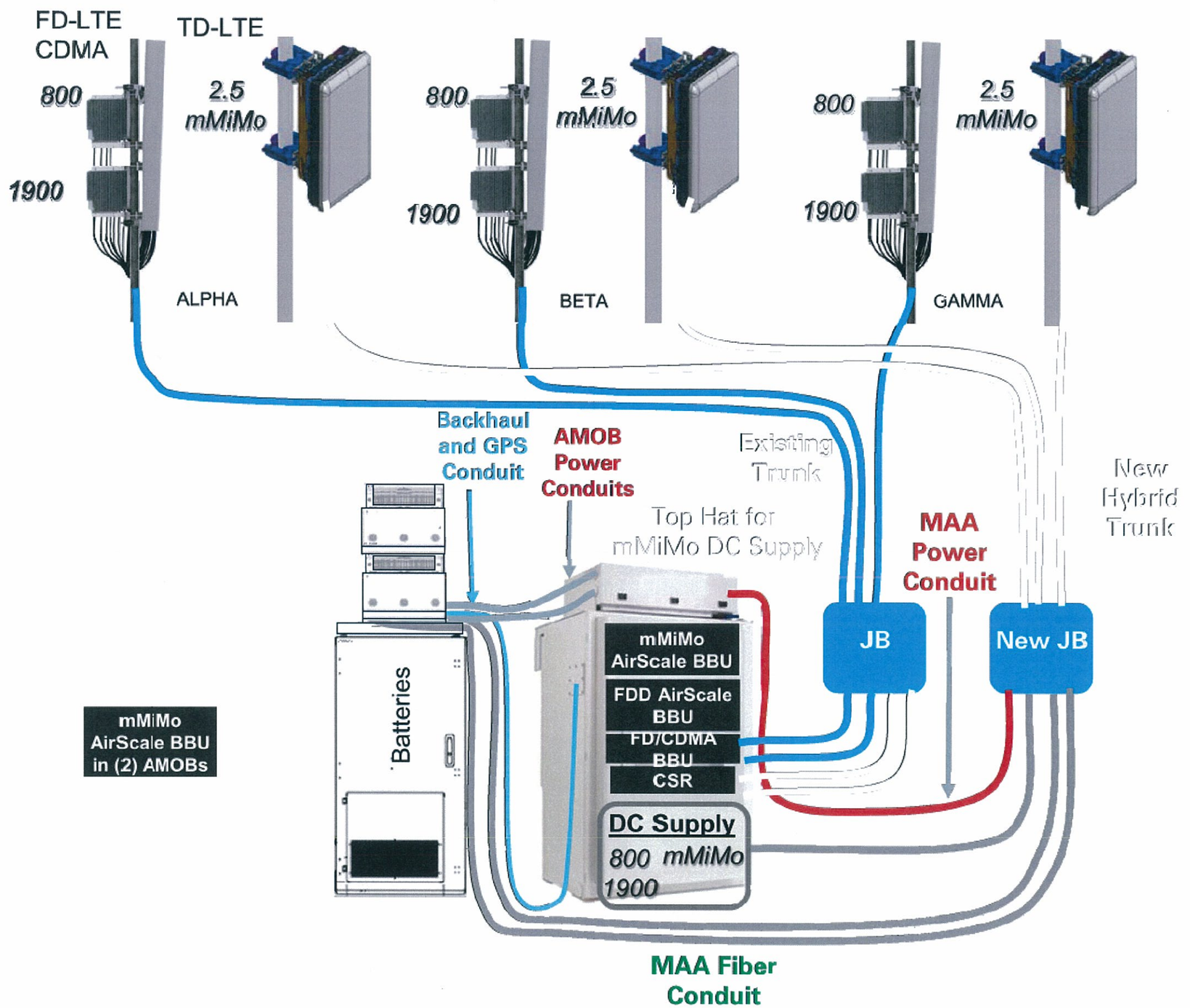

IMPLEMENTATION DETAIL

SCALE N.T.S.

1

Sprint
201 STATE ROUTE 17 NORTH
RUTHERFORD, NJ 07070
TEL: (201) 684-4000
FAX: (201) 684-4223

SAC WIRELESS
A NOKIA™ COMPANY
540 W. MADISON ST.
9TH FLOOR
CHICAGO, IL 60661
www.sacw.com
312.895.4977

WESTCHESTER SERVICES LLC
604 FOX GLEN
BARRINGTON, IL 60010
TELEPHONE: 847-277-0070
FAX : 847-277-0080
AE@westchesterservices.com

JOHN M. BANKS
ARCHITECT
604 FOX GLEN
BARRINGTON, IL 60010
TELEPHONE: 847-277-0070
FAX : 847-277-0080
JBANKS@WESTCHESTERSERVICES.COM

THESE DOCUMENTS ARE CONFIDENTIAL AND ARE THE SOLE PROPERTY OF SPRINT AND MAY NOT BE REPRODUCED, DISSEMINATED OR REDISTRIBUTED WITHOUT THE EXPRESS WRITTEN CONSENT OF SPRINT.

NO.	DATE	DESCRIPTION
1	06.20.19	PERMIT/CONSTRUCTION
0	07.25.18	PERMIT/CONSTRUCTION

DRAWN BY: JM
CHECKED BY: JMB
JOB NUMBER: CT43XC806
ARCHITECT: JOHN M. BANKS

STATE OF CONNECTICUT
JOHN M. BANKS
NO. 18[illegible]
LICENSED ARCHITECT

DATED: 06/20/19 SEAL EXP. DATE: 07/31/19

SITE NAME
PETRO LOCK

SITE NUMBER
CT43XC806

SITE LOCATION
99 MEADOW ST.
HARTFORD, CT 06114

AUGMENT ID
CT43XC806S18.1

SHEET TITLE
IMPLEMENTATION DETAIL

SHEET NUMBER
C-6

ELECTRICAL NOTES:

1. CONTRACTOR SHALL INSPECT THE EXISTING CONDITIONS PRIOR TO SUBMITTING BID. ANY QUESTIONS ARISING DURING THE BID PERIOD IN REGARDS TO THE CONTRACTORS FUNCTIONS, THE SCOPE OF WORK, OR ANY OTHER ISSUE RELATED TO THIS PROJECT SHALL BE BROUGHT UP DURING THE BID PERIOD WITH THE PROJECT MANAGER FOR CLARIFICATION, NOT AFTER THE CONTRACT HAS BEEN AWARDED.
2. LOCATION OF EQUIPMENT, CONDUIT AND DEVICES SHOWN ON THE DRAWINGS ARE APPROXIMATE AND SHALL BE COORDINATED WITH FIELD CONDITIONS PRIOR TO ROUGH-IN.
3. THE CONDUIT RUNS AS SHOWN ON THE PLANS ARE APPROXIMATE. EXACT LOCATION AND ROUTING SHALL BE PER EXISTING FIELD CONDITIONS.
4. PROVIDE PULL BOXES AND JUNCTION BOXES WHERE SHOWN OR REQUIRED BY NEC.
5. ALL CONDUITS SHALL BE MET WITH BENDS MADE IN ACCORDANCE WITH NEC TABLE 346-10. NO RIGHT ANGLE DEVICE OTHER THAN STANDARD CONDUIT ELBOWS WITH 12" MINIMUM INSIDE SWEEPS OR LB'S FOR ALL CONDUITS 2" OR LARGER.
6. ALL CONDUIT TERMINATION'S SHALL BE PROVIDED WITH PLASTIC THROAT INSULATING GROUNDING BUSHINGS.
7. ALL WIRE SHALL BE TYPE THHN/THWN, SOLID, ANNEALED COPPER UP TO SIZE #10 AWG (#8 AND LARGER SHALL BE CONCENTRIC) 75 DEGREE C, (167 DEGREES F), 98% CONDUCTIVITY, MINIMUM #12.
8. ALL WIRES SHALL BE TAGGED AT ALL PULL BOXES, J-BOXES, EQUIPMENT BOXES AND CABINETS WITH APPROVED PLASTIC TAGS, ACTION CRAFT, BRADY, OR APPROVED EQUAL.
9. ALL NEW MATERIAL SHALL HAVE A U.L. LABEL.
10. CONDUIT ROUGH-IN SHALL BE COORDINATED WITH THE MECHANICAL EQUIPMENT TO AVOID LOCATION TO CONFLICTS. VERIFY WITH MECHANICAL CONTRACTOR AND COMPLY AS REQUIRED.
11. ALL PANEL DIRECTORIES SHALL BE TYPEWRITTEN NOT HAND WRITTEN.
12. INSTALL AN EQUIPMENT GROUNDING CONDUCTOR IN ALL CONDUITS PER THE SPECIFICATIONS AND NEC. THE EQUIPMENT GROUNDING CONDUCTORS SHALL BE BONDED AT ALL JUNCTION BOXES, PULL BOXES, AND ALL DISCONNECT SWITCHES, STARTERS, AND EQUIPMENT CABINETS.
13. THE CONTRACTOR SHALL PREPARE AS-BUILT DRAWINGS, DOCUMENT ANY AND ALL WIRING AND EQUIPMENT CONDITIONS AND CHANGES WHILE COMPLETING THIS CONTRACT. SUBMIT AT SUBSTANTIAL COMPLETION.
14. ALL DISCONNECT SWITCHES AND OTHER CONTROLLING DEVICES SHALL BE PROVIDED WITH ENGRAVED LAMICOID NAMEPLATES INDICATING EQUIPMENT CONTROLLED, BRANCH CIRCUITS INSTALLED ON, AND PANEL FIELD LOCATIONS FED FROM (NO EXCEPTIONS.)
15. ALL ELECTRICAL DEVICES AND INSTALLATIONS OF THE DEVICES SHALL COMPLY WITH (ADA) AMERICANS WITH DISABILITIES ACT AS ADOPTED BY THE APPLICABLE STATE.
16. PROVIDE CORE DRILLING AS NECESSARY FOR PENETRATIONS OR RISERS THROUGH BUILDING. DO NOT PENETRATE STRUCTURAL MEMBERS WITHOUT CONSTRUCTION MANAGERS APPROVAL. SLEEVES AND/OR PENETRATIONS IN FIRE RATED CONSTRUCTION SHALL BE PACKED WITH FIRE RATED MATERIAL WHICH SHALL MAINTAIN THE FIRE RATING OF THE WALL OR STRUCTURE. FILL FOR FLOOR PENETRATIONS SHALL PREVENT PASSAGE OF WATER, SMOKE, FIRE AND FUMES. ALL MATERIAL SHALL BE UL APPROVED FOR THIS PURPOSE.
17. ELECTRICAL CHARACTERISTICS OF ALL EQUIPMENT (NEW AND EXISTING) SHALL BE FIELD VERIFIED WITH THE OWNER'S REPRESENTATIVE AND EQUIPMENT SUPPLIER PRIOR TO ROUGH-IN OF CONDUIT AND WIRE. ALL EQUIPMENT SHALL BE PROPERLY CONNECTED ACCORDING TO THE NAMEPLATE DATA FURNISHED ON THE EQUIPMENT (THE DESIGN OF THESE PLANS ARE BASED UPON BEST AVAILABLE INFORMATION AT THE TIME OF DESIGN AND SOME EQUIPMENT CHARACTERISTICS MAY VARY FROM DESIGN AS SHOWN ON THESE DRAWINGS). LOCATION OF ALL OUTLET, BOXES, ETC., AND THE TYPE OF CONNECTION (PLUG OR DIRECT) SHALL BE CONFIRMED WITH THE OWNER'S REPRESENTATIVE PRIOR TO ROUGH-IN.

ELECTRICAL NOTES — SCALE N.T.S. — 1

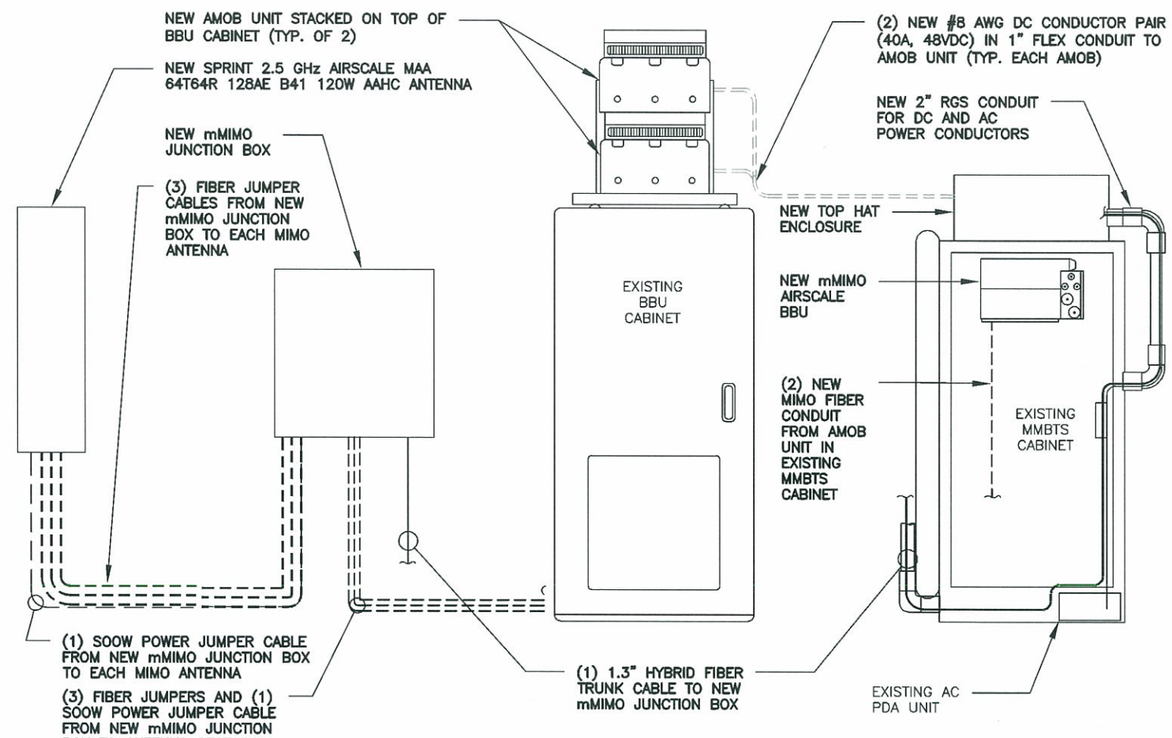

EQUIPMENT UTILITY ELEVATION VIEW — SCALE N.T.S. — 2

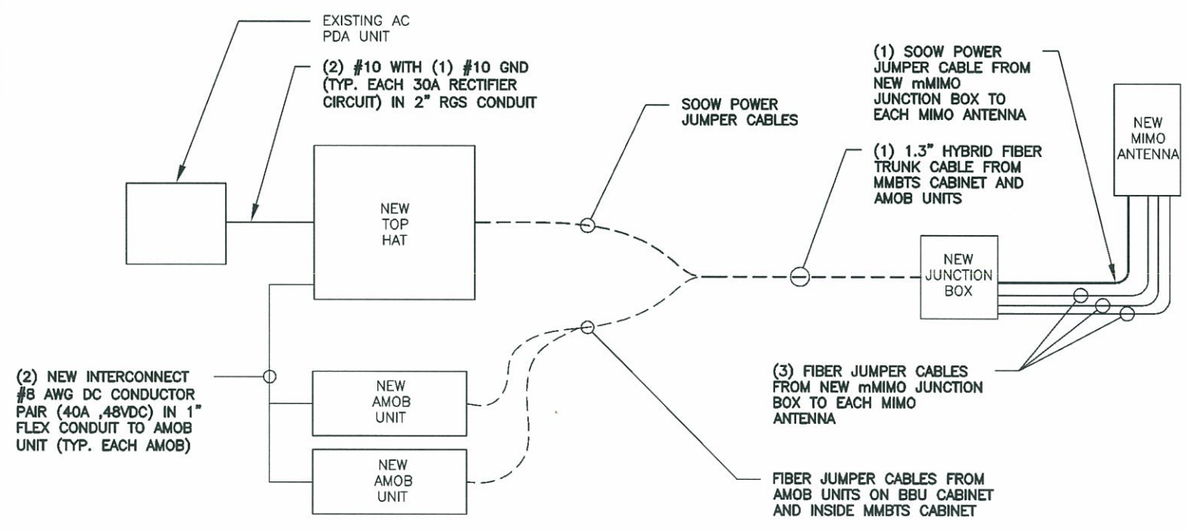

ONE-LINE DIAGRAM — SCALE N.T.S. — 3

Sprint
201 STATE ROUTE 17 NORTH
RUTHERFORD, NJ 07070
TEL: (201) 684-4000
FAX: (201) 684-4223

SAC WIRELESS A NOKIA COMPANY
540 W. MADISON ST. 9TH FLOOR CHICAGO, IL 60661
www.sacw.com
312.895.4977

WESTCHESTER SERVICES LLC
604 FOX GLEN
BARRINGTON, IL 60010
TELEPHONE: 847-277-0070
FAX : 847-277-0080
AE@westchesterservices.com

JOHN M. BANKS ARCHITECT
604 FOX GLEN
BARRINGTON, IL 60010
TELEPHONE: 847-277-0070
FAX : 847-277-0080
JBANKS@WESTCHESTERSERVICES.COM

THESE DOCUMENTS ARE CONFIDENTIAL AND ARE THE SOLE PROPERTY OF SPRINT AND MAY NOT BE REPRODUCED, DISSEMINATED OR REDISTRIBUTED WITHOUT THE EXPRESS WRITTEN CONSENT OF SPRINT.

NO.	DATE	DESCRIPTION
1	06.20.19	PERMIT/CONSTRUCTION
0	07.25.18	PERMIT/CONSTRUCTION

DRAWN BY: JM
CHECKED BY: JMB
JOB NUMBER: CT43XC806
ARCHITECT: JOHN BANKS

DATED: 06/20/19 SEAL EXP. DATE: 07/31/19

SITE NAME
PETRO LOCK

SITE NUMBER
CT43XC806

SITE LOCATION
99 MEADOW ST.
HARTFORD, CT 06114

AUGMENT ID
CT43XC806S18.1

SHEET TITLE
ELECTRICAL DETAILS

SHEET NUMBER
C-7

GROUNDING NOTES:

1. ALL GROUNDING SYSTEM CONDUCTORS AND CONNECTIONS BELOW GRADE SHALL BE THERMAL WELDS AT GROUND RODS AND AT A MINIMUM OF 36" BELOW GRADE.
2. ALL INSTALLATIONS SHALL BE FIELD VERIFIED.
3. ALL GROUND WIRE SHALL BE #2 AWG BARE COPPER TINNED UNLESS NOTED OTHERWISE.
4. ALL GROUND WIRES SHALL PROVIDE A STRAIGHT DOWNWARD PATH TO GROUND WITH GRADUAL BEND AS REQUIRED. GROUND WIRES SHALL NOT BE LOOPED OR SHARPLY BENT.
5. THE CONTRACTOR SHALL COORDINATE INSTALLATION OF GROUND RODS AND GROUND RING WITH FOUNDATION AND UNDERGROUND CONDUIT.
6. EACH EQUIPMENT CABINET SHALL BE CONNECTED WITH (2) #2 AWG INSULATED SOLID TINNED COPPER WIRE TO GROUND BAR. EQUIPMENT CABINETS SHALL EACH HAVE (2) CONNECTIONS.
7. ANTENNA GROUND KITS SHALL BE FURNISHED BY SPRINT AND INSTALLED BY CONTRACTOR.
8. KOPR-SHIELD ANTI-OXIDATION COMPOUND SHALL BE USED ON ALL GROUNDING CONNECTIONS.
9. ALL EXOTHERMIC CONNECTS SHALL BE INSTALLED UTILIZING THE PROPER CONNECTION/MOLD AND MATERIALS FOR THE PARTICULAR APPLICATION.
10. ALL BOLTED GROUNDING CONNECTIONS SHALL BE INSTALLED WITH A LOCK WASHER UNDER THE NUT. HARDWARE FOR BOLTED CONNECTIONS SHALL BE A MINIMUM OF 3/8" DIAMETER AND SHALL BE STAINLESS STEEL.
11. GROUNDING WIRE SHALL NOT BE INSTALLED OR ROUTED THROUGH HOLES IN ANY METAL OBJECTS OR SUPPORTS TO PRECLUDE ESTABLISHING A "CHOKE" POINT.
12. PLASTIC CLIPS OR METAL CLIPS WHICH DO NOT COMPLETELY SURROUND THE GROUNDING CONDUCTORS SHALL BE USED TO FASTEN AND SUPPORT GROUNDING CONDUCTORS. FERROUS METAL CLIPS WHICH COMPLETELY SURROUND THE GROUNDING CONDUCTOR SHALL NOT BE USED.
13. STANDARD BUS BARS (CIGBE AND MIGB) SHALL BE FURNISHED AND INSTALLED. THEY SHALL NOT BE FABRICATED OR MODIFIED IN THE FIELD.
14. THE GROUNDING CONNECTION TO THE POWER AND TELCO SECTIONS OF THE PPC CABINET SHALL BE MADE BY CONNECTING A CONDUCTOR FROM THE GROUND RING TO THE FACTORY FURNISHED BUS BAR IN EACH COMPARTMENT.
15. THE CONTRACTOR SHALL SUPPLY SPRINT AND NIH/ORF WITH RESULTS FROM PRE-CONSTRUCTION (CO-LO ONLY) AND POST-CONSTRUCTION OHM TESTING (GROUND) RESULTS.
16. THE CONTRACTOR SHALL BE RESPONSIBLE TO PROVIDE A "FALL OF POTENTIAL" TEST ON THE NEW SUPPLEMENTAL GROUND FIELD PRIOR TO FINAL CONNECTION OF THE GROUNDING SYSTEM TO EQUIPMENT. THE TEST SHALL BE PERFORMED BY A QUALIFIED AND CERTIFIED TESTING AGENT. PROVIDE INDEPENDENT TEST RESULTS TO THE PROJECT MANAGER AND NIH/ORF FOR REVIEW. THE GROUND SYSTEM RESISTANCE TO EARTH GROUND SHALL NOT EXCEED FIVE (5) OHMS. IF THE GROUND TEST EXCEEDS THE MAXIMUM OF 5 OHMS, THE CONTRACTOR SHALL BE RESPONSIBLE TO PROVIDE ADDITIONAL GROUND CONNECTIONS AS REQUIRED TO MEET THE 5 OHMS MAXIMUM.

ELECTRICAL NOTES — SCALE N.T.S. — 1

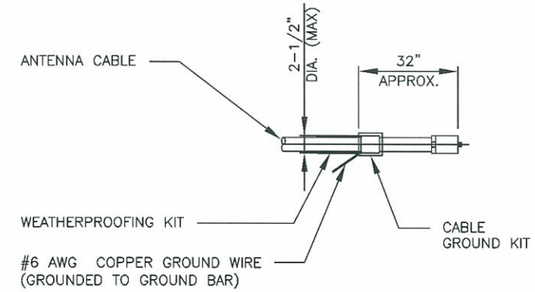

NOTE:
DO NOT INSTALL CABLE GROUND KIT AT A BEND AND ALWAYS DIRECT GROUND WIRE DOWN TO GROUND BAR.

CABLE GROUNDING DETAIL — SCALE N.T.S. — 2

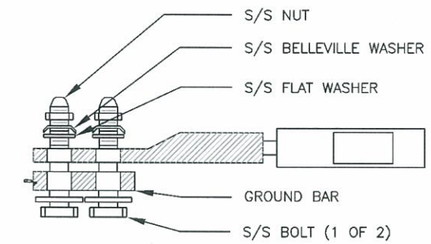

NOTES:
1. PROVIDE 2-HOLE, LONG BARREL,TINNED SOLID COPPER LUGS WHEREVER LUGS ARE SHOWN. ERICO B-122-CE PREFERRED WITH CADWELD TYPE GL CONNECTION. THOMAS AND BETTS 54800BE SERIES WHERE CRIMP CONNECTOR IS REQUIRED.
2. ALL CRIMP CONNECTIONS MUST BE MADE USING HYDRAULIC TOOLS AND THREE POINT HEXAGONAL COMPRESSION MOLDS ON LONG BARREL LUGS.
3. ALL MECHANICAL CONNECTIONS MUST BE MADE USING THOMAS AND BETTS "KOPR-SHIELD". COAT ALL WIRES BEFORE LUGGING. COAT ALL SURFACES BEFORE CONNECTING.
4. ALL HARDWARE 18/8 STAINLESS STEEL INCLUDING BELLEVILLE, COAT ALL SURFACES WITH "KOPR-SHIELD" BEFORE MATING.
5. FOR GROUNDING BOND TO STEEL ONLY: INSERT A DRAGON TOOTH WASHER BETWEEN LUG AND STEEL, COAT ALL SURFACES WITH "KOPR-SHIELD".
6. NO SLOTTED HOLES ON BUS BAR OR LUGS ARE PERMITTED.
7. ALL LUG SHANKS AND LEAD JOINTS SHALL HAVE HEAT SHRINK MATERIAL

TWO-HOLE LUG — SCALE N.T.S. — 3

NOTES:
CONTRACTOR TO USE MECHANICAL CONNECTION FOR GROUNDING OF NEW EQUIPMENT AND CADWELD CONNECTION FOR GROUNDING OF ALL MOUNT PIPES.

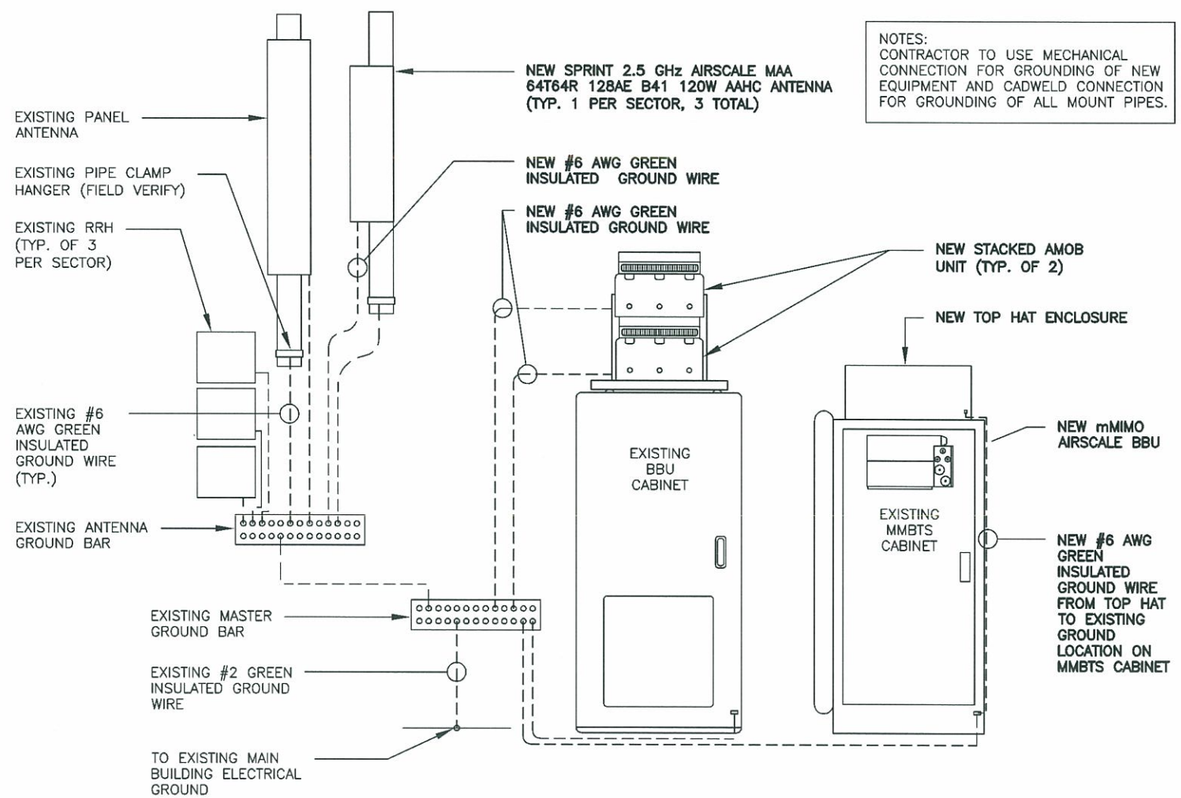

GROUNDING RISER DIAGRAM — SCALE N.T.S. — 4

Sprint
201 STATE ROUTE 17 NORTH
RUTHERFORD, NJ 07070
TEL: (201) 684-4000
FAX: (201) 684-4223

SAC WIRELESS A NOKIA COMPANY
540 W. MADISON ST. 9TH FLOOR CHICAGO, IL 60661
www.sacw.com
312.895.4977

WESTCHESTER SERVICES LLC
604 FOX GLEN
BARRINGTON, IL 60010
TELEPHONE: 847-277-0070
FAX : 847-277-0080
AE@westchesterservices.com

JOHN M. BANKS ARCHITECT
604 FOX GLEN
BARRINGTON, IL 60010
TELEPHONE: 847-277-0070
FAX : 847-277-0080
JBANKS@WESTCHESTERSERVICES.COM

THESE DOCUMENTS ARE CONFIDENTIAL AND ARE THE SOLE PROPERTY OF SPRINT AND MAY NOT BE REPRODUCED, DISSEMINATED OR REDISTRIBUTED WITHOUT THE EXPRESS WRITTEN CONSENT OF SPRINT.

NO.	DATE	DESCRIPTION
1	06.20.19	PERMIT/CONSTRUCTION
0	07.25.18	PERMIT/CONSTRUCTION

DRAWN BY: JM
CHECKED BY: JMB
JOB NUMBER: CT43XC806
ARCHITECT: JOHN BANKS

STATE OF CONNECTICUT JOHN M. BANKS LICENSED ARCHITECT NO. 10131 SEAL
DATED: 06/20/19 EXP. DATE: 03/31/19

SITE NAME
PETRO LOCK

SITE NUMBER
CT43XC806

SITE LOCATION
99 MEADOW ST.
HARTFORD, CT 06114

AUGMENT ID
CT43XC806S18.1

SHEET TITLE
GROUNDING DETAILS

SHEET NUMBER
C-8

AMERICAN TOWER®
CORPORATION

Structural Analysis Report

Structure	:	**147.9 ft Monopole**
ATC Site Name	:	**Petro Lock, CT**
ATC Site Number	:	**302468**
Engineering Number	:	**OAA729245_C3_02**
Proposed Carrier	:	**SPRINT NEXTEL**
Carrier Site Name	:	**Petro Lock**
Carrier Site Number	:	**CT43XC806**
Site Location	:	**99 Meadow St** **Hartford, CT 06114-1598** **41.743200,-72.667500**
County	:	**Hartford**
Date	:	**May 28, 2019**
Max Usage	:	**66%**
Result	:	**Pass**

Prepared By:
Hussam Al Tahan, E.I.
Structural Engineer I

Hussam Al Tahan

Reviewed By:

COA: PEC.0001553

Table of Contents

Introduction 1

Supporting Documents 1

Analysis 1

Conclusion 1

Existing and Reserved Equipment 2

Equipment to be Removed 3

Proposed Equipment 3

Structure Usages 4

Foundations 4

Deflection and Sway 4

Standard Conditions 5

Calculations ..... Attached

Introduction

The purpose of this report is to summarize results of a structural analysis performed on the 147.9 ft monopole to reflect the change in loading by SPRINT NEXTEL.

Supporting Documents

Tower Drawings	FWT Job #21719000 Rev. 1, dated July 18, 2000
Foundation Drawing	FWT Job #21719000 Rev. 1, dated July 18, 2000
Geotechnical Report	Osprey Environmental Engineering Job #98083-01, dated August 28, 1998

Analysis

The tower was analyzed using American Tower Corporation's tower analysis software. This program considers an elastic three-dimensional model and second-order effects per ANSI/TIA-222.

Basic Wind Speed:	97 mph (3-Second Gust, V_{asd}) / 125 mph (3-Second Gust, V_{ult})
Basic Wind Speed w/ Ice:	50 mph (3-Second Gust) w/ 1" radial ice concurrent
Code:	ANSI/TIA-222-G / 2015 IBC / 2018 Connecticut State Building Code
Structure Class:	II
Exposure Category:	B
Topographic Category:	1
Crest Height:	0 ft
Spectral Response:	Ss = 0.18, S_1 = 0.06
Site Class:	D - Stiff Soil

Conclusion

Based on the analysis results, the structure meets the requirements per the applicable codes listed above. The tower and foundation can support the equipment as described in this report.

If you have any questions or require additional information, please contact American Tower via email at Engineering@americantower.com. Please include the American Tower site name, site number, and engineering number in the subject line for any questions.

Existing and Reserved Equipment

Elev.[1] (ft)	Qty	Antenna	Mount Type	Lines	Carrier
152.0	4	Decibel DB844H90E-XY	Platform with Handrails	-	SPRINT NEXTEL
	8	Andrew 844G65VTZASX			
138.0	3	Ericsson RRUS-32 (77 lbs)	Platform with Handrails	(3) 3" conduit (3) 0.39" (10mm) Fiber Trunk (6) 0.78" (19.7mm) 8 AWG 6 (12) 1 5/8" Coax	AT&T MOBILITY
137.0	2	Raycap DC6-48-60-18-8F (23.5" Height)			
	3	Ericsson RRUS 4478 B14 (15")			
	1	Raycap DC6-48-60-18-8C			
	3	Kathrein Scala 80010965			
	3	Ericsson RRUS 32 B66A			
	3	Ericsson RRUS 32 B2			
	3	Ericsson RRUS-32 (77 lbs)			
	3	Powerwave Allgon 7750.00			
	2	KMW AM-X-CD-16-65-00T-RET			
	2	Quintel QS66512-3 (112 lbs.)			
	1	Andrew SBNH-1D6565C			
	1	CCI TPA-65R-LCUUUU-H8			
	6	Powerwave Allgon LGP21401			
	6	Powerwave Allgon 7020.00 Dual Band RET			
	6	Powerwave Allgon LGP21901			
	3	Ericsson RRUS 11 (Band 12) (55 lb)			
123.0	3	Ericsson KRY 112 144/1	T-Arm	(1) 1 5/8" (1.63"-41.3mm) Fiber (12) 1 5/8" Coax	T-MOBILE
	3	Kathrein Scala Smart Bias Tee			
	3	Ericsson KRY 112 489/1			
	3	Andrew LNX-6515DS-VTM			
	3	RFS APX16DWV-16DWVS-E-A20			
	3	Ericsson AIR 32 B4A-B2P			
113.0	3	RFS APXV18-206517	Flush	(6) 1 5/8" Coax	METRO PCS INC
98.0	1	Alcatel-Lucent 800 MHz 2X50W RRH w/ Filter	Low Profile Platform	(3) 1 1/4" Hybriflex Cable	SPRINT NEXTEL
	3	RFS IBC1900HG-2A			
	3	RFS IBC1900BB-1			
	1	Alcatel-Lucent 4x40W RRH (88 lb)			
	3	RFS APXVSPP18-C-A20			
89.0	1	DragonWave A-ANT-11G-2.5-C	Flush	(1) 2" conduit (3) 1/2" Coax (6) 5/16" (0.31"-7.9mm) Coax	CLEARWIRE CORPORATION
	2	DragonWave A-ANT-18G-2-C			
	3	NextNet BTS-2500			
	3	DragonWave Horizon Compact			
	3	Argus LLPX310R			
79.0	3	Alcatel-Lucent RRH2x60 700	Low Profile Platform	(2) 1 5/8" Hybriflex	VERIZON WIRELESS
	3	Alcatel-Lucent RRH2x60			
	12	Commscope SBNHH-1D65B			
	2	RFS DB-T1-6Z-8AB-0Z			
	3	Alcatel-Lucent RRH2X60-AWS			
20.0	1	Lucent KS-24019	Stand-Off	(1) 1/2" Coax	SPRINT NEXTEL

Equipment to be Removed

Elev.[1] (ft)	Qty	Antenna	Mount Type	Lines	Carrier
98.0	3	RFS APXVTM14-C-I20	-	-	SPRINT NEXTEL
	1	Alcatel-Lucent TD-RRH8x20-25 w/ Solar Shield			

Proposed Equipment

Elev.[1] (ft)	Qty	Antenna	Mount Type	Lines	Carrier
98.0	2	Alcatel-Lucent 800 MHz 2X50W RRH w/ Filter	Low Profile Platform	(1) 1.7" (43.2mm) Hybrid	SPRINT NEXTEL
	2	Alcatel-Lucent 4x40W RRH (88 lb)			
	3	Nokia 2.5G MAA - AAHC(64T64R)			

[1] Contracted elevations are shown for appurtenances within contracted installation tolerances. Appurtenances outside of contract limits are shown at installed elevations.

Install proposed coax inside the pole shaft.

Structure Usages

Structural Component	Controlling Usage	Pass/Fail
Anchor Bolts	62%	Pass
Shaft	66%	Pass
Base Plate	20%	Pass

Foundations

Reaction Component	Analysis Reactions	% of Design
Moment (Kips-Ft)	3,273.6	66%
Axial (Kips)	57.9	4%
Shear (Kips)	31.0	45%

The structure base reactions resulting from this analysis were found to be acceptable through analysis based on geotechnical and foundation information, therefore no modification or reinforcement of the foundation will be required.

Deflection and Sway*

Antenna Elevation (ft)	Antenna	Carrier	Deflection (ft)	Sway (Rotation) (°)
98.0	Alcatel-Lucent 800 MHz 2X50W RRH w/ Filter	SPRINT NEXTEL	0.604	0.669
	Alcatel-Lucent 4x40W RRH (88 lb)			
	Nokia 2.5G MAA - AAHC(64T64R)			
89.0	DragonWave A-ANT-18G-2-C	CLEARWIRE CORPORATION	0.503	0.622
	DragonWave A-ANT-11G-2.5-C			

***Deflection and Sway was evaluated considering a design wind speed of 60 mph (3-Second Gust) per ANSI/TIA-222-G**

AMERICAN TOWER®
CORPORATION

Standard Conditions

All engineering services performed by A.T. Engineering Service, PLLC are prepared on the basis that the information used is current and correct. This information may consist of, but is not limited to the following:

- Information supplied by the client regarding antenna, mounts and feed line loading
- Information from drawings, design and analysis documents, and field notes in the possession of A.T. Engineering Service, PLLC

It is the responsibility of the client to ensure that the information provided to A.T. Engineering Service, PLLC and used in the performance of our engineering services is correct and complete.

All assets of American Tower Corporation, its affiliates and subsidiaries (collectively "American Tower") are inspected at regular intervals. Based upon these inspections and in the absence of information to the contrary, American Tower assumes that all structures were constructed in accordance with the drawings and specifications.

Unless explicitly agreed by both the client and A.T. Engineering Service, PLLC, all services will be performed in accordance with the current revision of ANSI/TIA-222.

All services are performed, results obtained, and recommendations made in accordance with generally accepted engineering principles and practices. A.T. Engineering Service, PLLC is not responsible for the conclusions, opinions and recommendations made by others based on the information supplied herein.

© 2007 - 2019 by ATC IP LLC. All rights reserved.

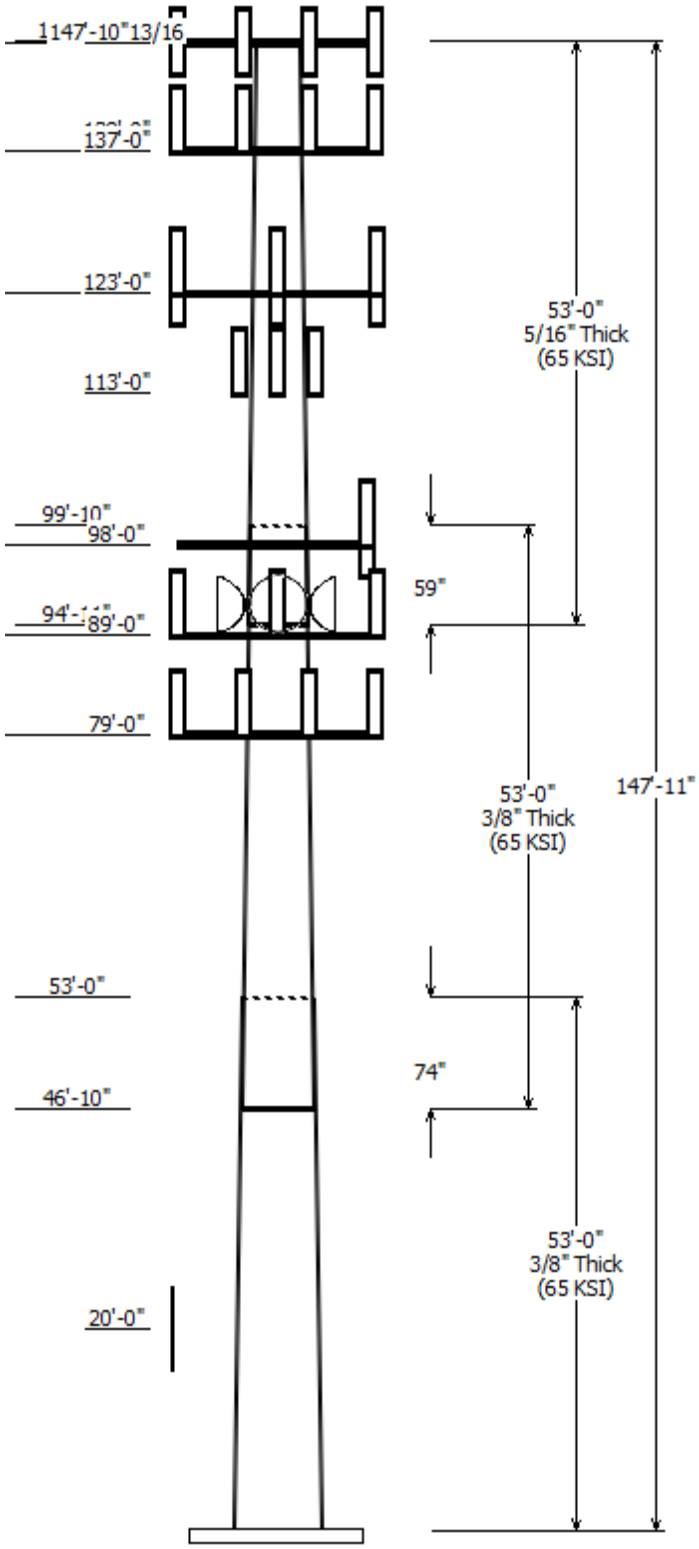

Job Information

Client : SPRINT NEXTEL
Pole : 302468
Location : Petro Lock, CT
Description : 148' FWT Monopole
Shape : 18 Sides
Height : 147.92 (ft)
Base Elev (ft): 0.00
Taper: 0.214568 (in/ft)

Code: ANSI/TIA-222-G
Struct Class : II
Exposure : B
Topo : 1

Sections Properties

Shaft Section	Length (ft)	Diameter (in) Accross Flats Top	Bottom	Thick (in)	Joint Type	Overlap Length (in)	Shape	Steel Grade (ksi)
1	53.000	45.20	56.58	0.375		0.000	18 Sides	65
2	53.000	35.90	47.28	0.375	Slip Joint	74.000	18 Sides	65
3	53.000	26.21	37.58	0.313	Slip Joint	59.000	18 Sides	65

Discrete Appurtenance

Attach Elev (ft)	Force Elev (ft)	Qty	Description
147.900	147.900	1	Flat Platform w/ Handrails
147.900	147.900	8	Andrew 844G65VTZASX
147.900	147.900	4	Decibel DB844H90E-XY
138.000	139.000	3	Ericsson RRUS-32 (77 lbs)
137.000	137.000	1	Flat Platform w/ Handrails
137.000	138.000	3	Kathrein Scala 80010965
137.000	138.000	1	CCI TPA-65R-LCUUUU-H8
137.000	138.000	1	Andrew SBNH-1D6565C
137.000	138.000	2	Quintel QS66512-3 (112 lbs.)
137.000	138.000	2	KMW AM-X-CD-16-65-00T-RET
137.000	138.000	3	Powerwave Allgon 7750.00
137.000	138.000	3	Ericsson RRUS-32 (77 lbs)
137.000	138.000	3	Ericsson RRUS 32 B2
137.000	137.000	3	Ericsson RRUS 32 B66A
137.000	138.000	3	Ericsson RRUS 11 (Band 12) (55
137.000	138.000	1	Raycap DC6-48-60-18-8C
137.000	138.000	3	Ericsson RRUS 4478 B14 (15")
137.000	138.000	2	Raycap DC6-48-60-18-8F (23.5"
137.000	138.000	6	Powerwave Allgon LGP21401
137.000	137.000	6	Powerwave Allgon 7020.00
137.000	138.000	6	Powerwave Allgon LGP21901
123.000	123.000	3	Round T-Arms
123.000	124.000	3	Andrew LNX-6515DS-VTM
123.000	124.000	3	RFS APX16DWV-16DWVS-E-A20
123.000	123.000	3	Ericsson AIR 32 B4A-B2P
123.000	124.000	3	Ericsson KRY 112 489/1
123.000	123.000	3	Ericsson KRY 112 144/1
123.000	123.000	3	Kathrein Scala Smart Bias Tee
113.000	114.000	3	RFS APXV18-206517
98.000	98.000	1	Round Low Profile Platform
98.000	99.000	3	RFS APXVSPP18-C-A20
98.000	98.000	3	Nokia 2.5G MAA -
98.000	99.000	2	Alcatel-Lucent 4x40W RRH (88 l
98.000	99.000	1	Alcatel-Lucent 4x40W RRH (88 l
98.000	99.000	2	Alcatel-Lucent 800 MHz 2X50W
98.000	99.000	1	Alcatel-Lucent 800 MHz 2X50W
98.000	99.000	3	RFS IBC1900HG-2A
98.000	99.000	3	RFS IBC1900BB-1
93.000	93.000	3	Side Arms
89.000	90.000	1	DragonWave A-ANT-11G-2.5-C
89.000	90.000	2	DragonWave A-ANT-18G-2-C
89.000	90.000	3	Argus LLPX310R
89.000	90.000	3	NextNet BTS-2500
89.000	90.000	3	DragonWave Horizon Compact
79.000	80.000	12	Commscope SBNHH-1D65B

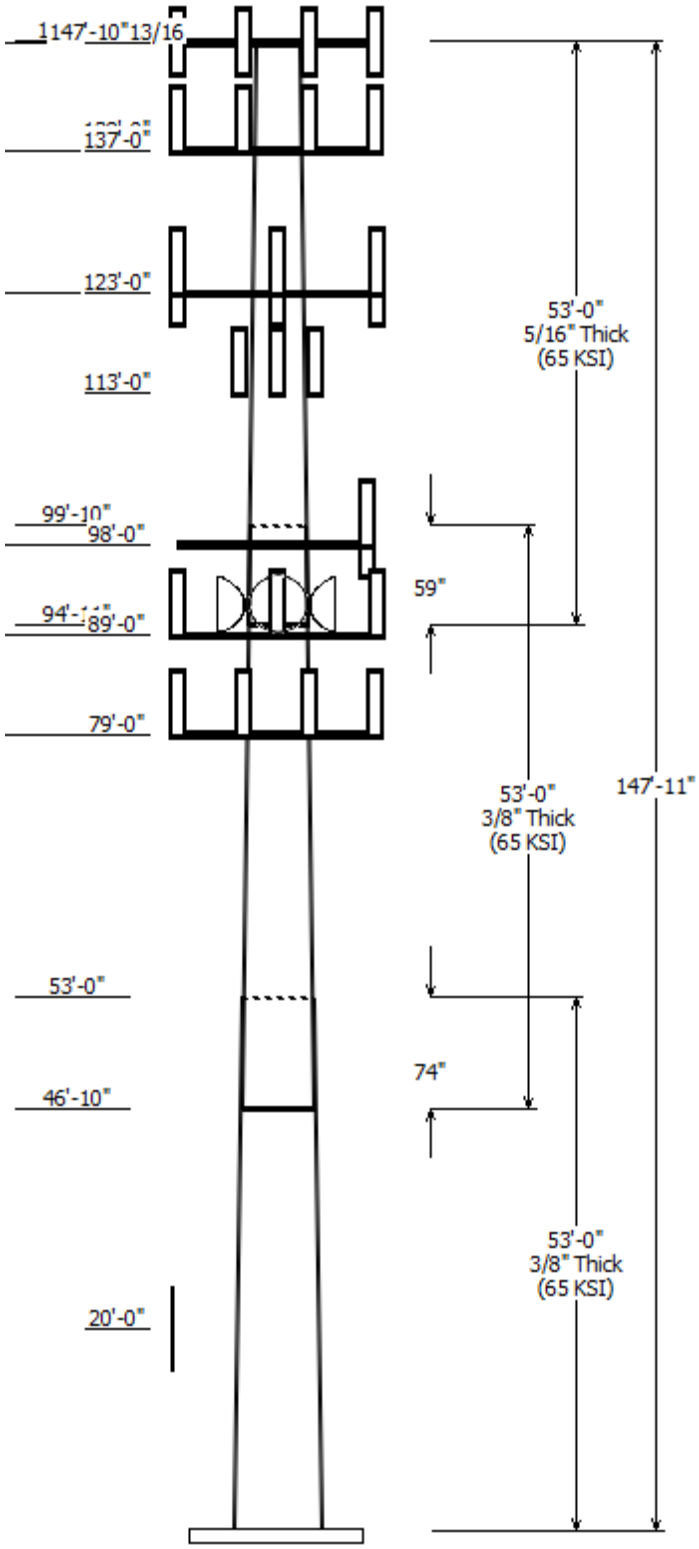

79.000	80.000	2	RFS DB-T1-6Z-8AB-0Z
79.000	80.000	3	Alcatel-Lucent RRH2x60
79.000	80.000	3	Alcatel-Lucent RRH2x60 700
79.000	80.000	3	Alcatel-Lucent RRH2X60-AWS
79.000	79.000	1	Round Low Profile Platform
20.000	20.000	1	Lucent KS-24019

Linear Appurtenance

Elev (ft) From	To	Description	Exposed To Wind
5.000	20.000	1/2" Coax	Yes
5.000	79.000	1 5/8" Hybriflex	Yes
5.000	89.000	1/2" Coax	Yes
5.000	89.000	5/16" (0.31"-	No
5.000	90.000	2" conduit	Yes
5.000	98.000	1 1/4" Hybriflex	No
5.000	113.0	1 5/8" Coax	No
5.000	123.0	1 5/8" (1.63"-	No
5.000	137.0	0.39" (10mm)	No
5.000	137.0	0.78" (19.7mm) 8	No
5.000	137.0	1 5/8" Coax	No
5.000	137.0	3" conduit	No
0.000	138.0	3" conduit	No
0.000	123.0	1 5/8" Coax	No
0.000	123.0	1 5/8" Coax	Yes
0.000	98.000	1.7" (43.2mm)	No

Load Cases

1.2D + 1.6W	97 mph with No Ice
0.9D + 1.6W	97 mph with No Ice (Reduced DL)
1.2D + 1.0Di + 1.0Wi	50 mph with 1.00 in Radial Ice
(1.2 + 0.2Sds) * DL + E	Seismic Equivalent Lateral Forces Method
(1.2 + 0.2Sds) * DL + E	Seismic Equivalent Modal Analysis Method
(0.9 - 0.2Sds) * DL + E	Seismic (Reduced DL) Equivalent Lateral
(0.9 - 0.2Sds) * DL + E	Seismic (Reduced DL) Equivalent Modal
1.0D + 1.0W	Serviceability 60 mph

Reactions

Load Case	Moment (kip-ft)	Shear (kip)	Axial (kip)
1.2D + 1.6W	3273.58	31.03	57.88
0.9D + 1.6W	3236.23	30.99	43.40
1.2D + 1.0Di + 1.0Wi	1183.53	13.31	98.52
(1.2 + 0.2Sds) * DL + E ELFM	172.90	1.49	58.23
(1.2 + 0.2Sds) * DL + E EMAM	225.20	1.87	58.23
(0.9 - 0.2Sds) * DL + E ELFM	170.57	1.49	40.50
(0.9 - 0.2Sds) * DL + E EMAM	221.90	1.87	40.50
1.0D + 1.0W	695.36	6.63	48.27

Dish Deflections

Load Case	Attach Elev (ft)	Deflection (in)	Rotation (deg)
1.0D + 1.0W	89.00	6.033	0.622
1.0D + 1.0W	89.00	6.033	0.622

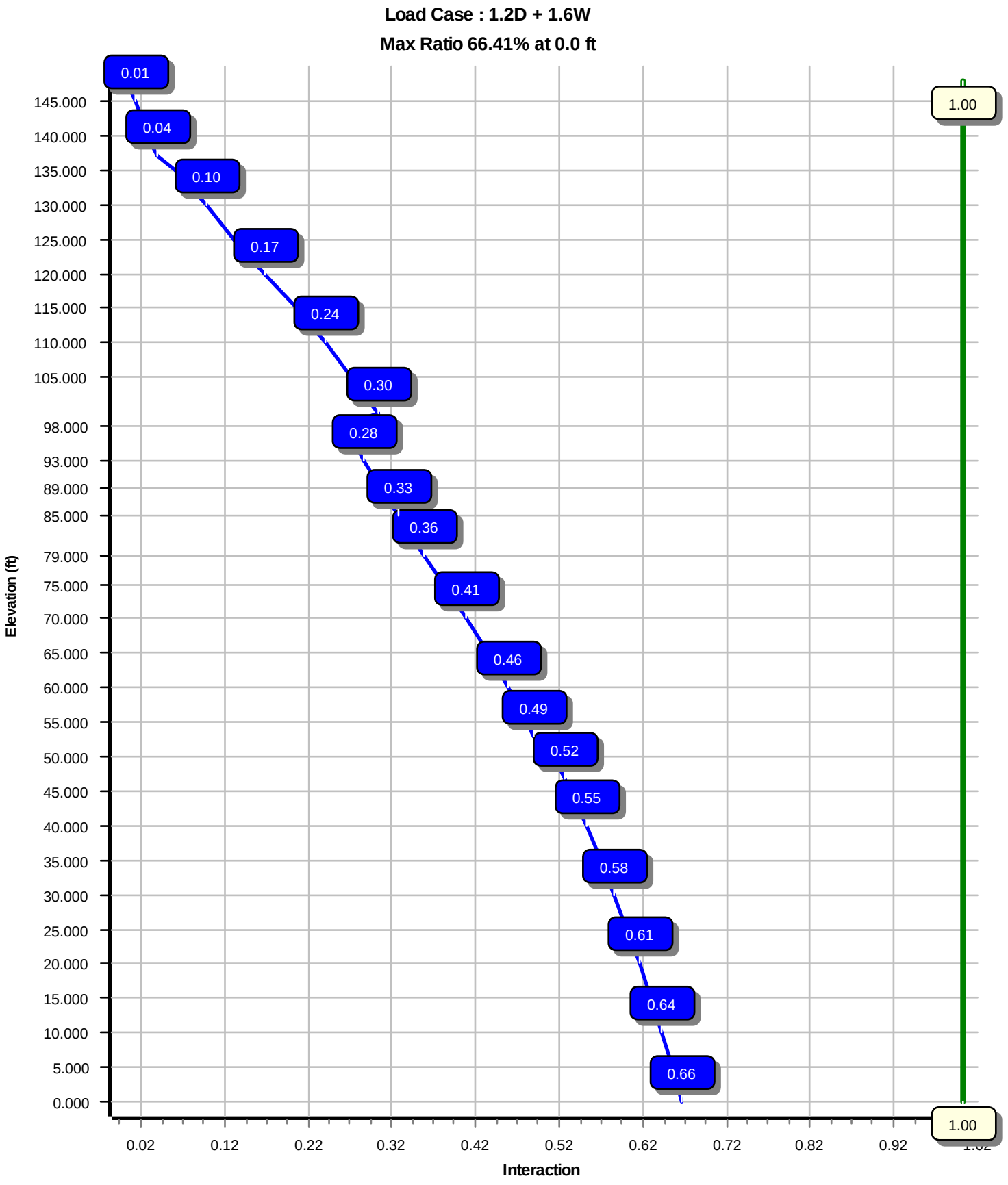
Load Case : 1.2D + 1.6W
Max Ratio 66.41% at 0.0 ft
0.01
0.04
0.10
0.17
0.24
0.30
0.28
0.33
0.36
0.41
0.46
0.49
0.52
0.55
0.58
0.61
0.64
0.66
1.00
1.00
145.000
140.000
135.000
130.000
125.000
120.000
115.000
110.000
105.000
98.000
93.000
89.000
85.000
79.000
75.000
70.000
65.000
60.000
55.000
50.000
45.000
40.000
35.000
30.000
25.000
20.000
15.000
10.000
5.000
0.000
Elevation (ft)
0.02
0.12
0.22
0.32
0.42
0.52
0.62
0.72
0.82
0.92
Interaction

Site Number: 302468	Code: ANSI/TIA-222-G	© 2007 - 2019 by ATC IP LLC. All rights reserved.	
Site Name: Petro Lock, CT	Engineering Number:OAA729245_C3_02	5/28/2019 4:22:55 PM	
Customer: SPRINT NEXTEL			

Analysis Parameters

Location :	Hartford County, CT	Height (ft) :	147.917
Code :	ANSI/TIA-222-G	Base Diameter (in) :	56.58
Shape :	18 Sides	Top Diameter (in) :	26.22
Pole Type :	Taper	Taper (in/ft) :	0.215
Pole Manfacturer :	FWT Inc	Rotation (deg) :	0.00

Ice & Wind Parameters

Structure Class:	II	Design Wind Speed Without Ice:	97 mph
Exposure Category:	B	Design Wind Speed With Ice:	50 mph
Topographic Category:	1	Operational Wind Speed:	60 mph
Crest Height:	0 ft	Design Ice Thickness:	1.00 in

Seismic Parameters

Analysis Method:	Equivalent Modal Analysis & Equivalent Lateral Force Methods				
Site Class:	D - Stiff Soil				
Period Based on Rayleigh Method (sec):	2.22				
T_L (sec):	6	p:	1	C_s:	0.031
S_s:	0.181	S_1:	0.064	C_s Max:	0.031
F_a:	1.600	F_v:	2.400	C_s Min:	0.030
S_{ds}:	0.193	S_{d1}:	0.102		

Load Cases

1.2D + 1.6W	97 mph with No Ice
0.9D + 1.6W	97 mph with No Ice (Reduced DL)
1.2D + 1.0Di + 1.0Wi	50 mph with 1.00 in Radial Ice
(1.2 + 0.2Sds) * DL + E ELFM	Seismic Equivalent Lateral Forces Method
(1.2 + 0.2Sds) * DL + E EMAM	Seismic Equivalent Modal Analysis Method
(0.9 - 0.2Sds) * DL + E ELFM	Seismic (Reduced DL) Equivalent Lateral Forces Method
(0.9 - 0.2Sds) * DL + E EMAM	Seismic (Reduced DL) Equivalent Modal Analysis Method
1.0D + 1.0W	Serviceability 60 mph

Site Number: 302468 Code: ANSI/TIA-222-G © 2007 - 2019 by ATC IP LLC. All rights reserved.

Site Name: Petro Lock, CT Engineering Number:OAA729245_C3_02 5/28/2019 4:22:55 PM

Customer: SPRINT NEXTEL

Shaft Section Properties

Sect Info	Length (ft)	Thick (in)	Fy (ksi)	Joint Type	Slip Joint Len (in)	Weight (lb)	Bottom Dia (in)	Bottom Elev (ft)	Bottom Area (in 2)	Bottom Ix (in4)	Bottom W/t Ratio	Bottom D/t Ratio	Top Dia (in)	Top Elev (ft)	Top Area (in2)	Top Ix (in4)	Top W/t Ratio	Top D/t Ratio	Taper (in/ft)
1-18	53.000	0.3750	65		0.00	10,844	56.58	0.00	66.90	26698.9	24.84	150.88	45.20	53.00	53.36	13550.6	19.49	120.55	0.214568
2-18	53.000	0.3750	65	Slip	74.00	8,848	47.28	46.83	55.83	15518.7	20.47	126.08	35.90	99.83	42.29	6746.8	15.12	95.76	0.214568
3-18	53.000	0.3125	65	Slip	59.00	5,651	37.58	94.92	36.97	6490.6	19.45	120.28	26.21	147.92	25.69	2178.2	13.03	83.89	0.214568
				Shaft Weight		25,342													

Discrete Appurtenance Properties

Attach Elev (ft)	Description	Qty	Ka	Vert Ecc (ft)	No Ice Weight (lb)	No Ice EPAa (sf)	No Ice Orientation Factor	Ice Weight (lb)	Ice EPAa (sf)	Ice Orientation Factor
147.90	Decibel DB844H90E-XY	4	0.75	0.000	14.00	3.610	0.73	173.45	4.243	0.73
147.90	Andrew 844G65VTZASX	8	0.75	0.000	16.00	5.310	0.71	237.02	6.674	0.71
147.90	Flat Platform w/ Handrails	1	1.00	0.000	2,000.00	42.400	1.00	3,894.25	70.353	1.00
138.00	Ericsson RRUS-32 (77 lbs)	3	0.75	1.000	77.00	3.310	0.71	205.81	5.008	0.71
137.00	Powerwave Allgon LGP21901	6	0.75	1.000	5.50	0.200	0.50	15.65	0.623	0.50
137.00	Powerwave Allgon 7020.00 Dual	6	0.75	0.000	2.20	0.340	0.50	15.71	0.883	0.50
137.00	Powerwave Allgon LGP21401	6	0.75	1.000	14.10	1.100	0.50	47.11	2.041	0.50
137.00	Raycap DC6-48-60-18-8F (23.5"	2	0.75	1.000	20.00	1.260	1.00	89.66	2.131	1.00
137.00	Ericsson RRUS 4478 B14 (15")	3	0.75	1.000	59.40	1.650	0.50	125.15	2.771	0.50
137.00	Raycap DC6-48-60-18-8C	1	0.75	1.000	16.00	2.030	1.00	93.03	3.035	1.00
137.00	Ericsson RRUS 11 (Band 12) (55	3	0.75	1.000	55.00	2.520	0.67	144.02	3.895	0.67
137.00	Ericsson RRUS 32 B66A	3	0.75	0.000	50.70	2.720	0.67	147.67	4.259	0.67
137.00	Ericsson RRUS 32 B2	3	0.75	1.000	53.00	2.740	0.67	150.31	4.286	0.67
137.00	Ericsson RRUS-32 (77 lbs)	3	0.75	1.000	77.00	3.310	0.71	205.67	5.006	0.71
137.00	Powerwave Allgon 7750.00	3	0.75	1.000	27.00	5.560	0.65	177.41	8.394	0.65
137.00	KMW AM-X-CD-16-65-00T-RET	2	0.75	1.000	48.50	8.020	0.75	262.76	11.709	0.75
137.00	Quintel QS66512-3 (112 lbs.)	2	0.75	1.000	112.00	8.130	0.80	375.65	11.817	0.80
137.00	Andrew SBNH-1D6565C	1	0.75	1.000	66.10	11.440	1.00	369.63	15.721	1.00
137.00	CCI TPA-65R-LCUUUU-H8	1	0.75	1.000	81.60	13.300	1.00	447.80	18.240	1.00
137.00	Kathrein Scala 80010965	3	0.75	1.000	97.60	13.810	0.62	450.33	17.845	0.62
137.00	Flat Platform w/ Handrails	1	1.00	0.000	2,000.00	42.400	1.00	3,880.28	70.147	1.00
123.00	Kathrein Scala Smart Bias Tee	3	0.80	0.000	3.30	0.080	0.50	7.60	0.352	0.50
123.00	Ericsson KRY 112 144/1	3	0.80	0.000	11.00	0.350	0.50	25.08	0.880	0.50
123.00	Ericsson KRY 112 489/1	3	0.80	1.000	15.40	0.560	0.50	38.40	1.248	0.50
123.00	Ericsson AIR 32 B4A-B2P	3	0.80	0.000	105.80	6.520	0.71	314.94	9.390	0.71
123.00	RFS APX16DWV-16DWVS-E-A20	3	0.80	1.000	40.70	6.590	0.60	193.52	9.425	0.60
123.00	Round T-Arms	3	0.75	0.000	250.00	9.700	0.67	523.41	20.485	0.67
123.00	Andrew LNX-6515DS-VTM	3	0.80	1.000	51.30	11.430	0.70	351.18	15.670	0.70
113.00	RFS APXV18-206517	3	1.00	1.000	26.40	5.050	0.68	144.93	8.116	0.68
98.00	RFS IBC1900BB-1	3	0.80	1.000	22.00	0.970	0.50	56.50	1.819	0.50
98.00	RFS IBC1900HG-2A	3	0.80	1.000	22.00	0.970	0.50	56.50	1.819	0.50
98.00	Alcatel-Lucent 800 MHz 2X50W	1	0.80	1.000	64.00	2.060	1.00	162.50	3.286	1.00
98.00	Alcatel-Lucent 800 MHz 2X50W	2	0.80	1.000	64.00	2.060	0.67	162.50	3.286	0.67
98.00	Alcatel-Lucent 4x40W RRH (88	1	0.80	1.000	88.00	3.260	1.00	227.27	4.781	1.00
98.00	Alcatel-Lucent 4x40W RRH (88	2	0.80	1.000	88.00	3.260	0.79	227.27	4.781	0.79
98.00	Nokia 2.5G MAA - AAHC(64T64R)	3	0.80	0.000	103.60	4.200	0.64	247.72	5.913	0.64
98.00	RFS APXVSPP18-C-A20	3	0.80	1.000	57.00	8.020	0.69	277.52	11.584	0.69
98.00	Round Low Profile Platform	1	1.00	0.000	1,500.00	21.700	1.00	2,328.27	46.245	1.00
93.00	Side Arms	3	1.00	0.000	560.00	8.500	0.67	1,155.32	17.536	0.67
89.00	DragonWave Horizon Compact	3	0.80	1.000	10.60	0.720	0.50	39.05	1.439	0.50
89.00	NextNet BTS-2500	3	0.80	1.000	35.00	1.820	0.50	93.68	2.981	0.50
89.00	Argus LLPX310R	3	0.80	1.000	28.60	4.290	0.63	142.62	6.381	0.63
89.00	DragonWave A-ANT-18G-2-C	2	1.00	1.000	27.10	4.690	1.00	150.57	6.302	1.00
89.00	DragonWave A-ANT-11G-2.5-C	1	1.00	1.000	47.60	8.670	1.00	271.77	10.856	1.00
79.00	Alcatel-Lucent RRH2X60-AWS	3	0.80	1.000	44.00	1.880	0.50	114.95	3.054	0.50
79.00	Alcatel-Lucent RRH2x60 700	3	0.80	1.000	56.70	2.150	0.67	141.77	3.402	0.67
79.00	Alcatel-Lucent RRH2x60	3	0.80	1.000	60.00	3.500	0.65	158.90	5.335	0.65
79.00	RFS DB-T1-6Z-8AB-0Z	2	0.80	1.000	44.00	4.800	0.72	201.31	6.576	0.72

© 2007 - 2019 by ATC IP LLC. All rights reserved.

79.00	Commscope SBNHH-1D65B	12	0.80	1.000	50.70	8.170	0.69	270.06	11.706	0.69
79.00	Round Low Profile Platform	1	1.00	0.000	1,500.00	21.700	1.00	2,309.79	45.696	1.00
20.00	Lucent KS-24019	1	1.00	0.000	4.00	0.910	1.00	31.13	1.991	1.00
Totals	Num Loadings:51	148			15,098.00			40,326.69		

Linear Appurtenance Properties

Load Case Azimuth (deg) : 90

Elev From (ft)	Elev To (ft)	Qty	Description	Coax Dia (in)	Coax Wt (lb/ft)	Flat	Max Coax / Row	Dist Between Rows (in)	Dist Between Cols (in)	Azimuth (deg)	Dist From Face (in)	Exposed To Wind	Carrier
0.00	138.00	2	3" conduit	3.50	7.58	N	0	0.00	0.00	0	0.00	N	AT&T MOBILITY
5.00	137.00	3	0.39" (10mm) Fiber	0.39	0.06	N	0	0.00	0.00	0	0.00	N	AT&T MOBILITY
5.00	137.00	6	0.78" (19.7mm) 8 AWG	0.78	0.59	N	0	0.00	0.00	0	0.00	N	AT&T MOBILITY
5.00	137.00	12	1 5/8" Coax	1.98	0.82	N	0	0.00	0.00	0	0.00	N	AT&T MOBILITY
5.00	137.00	1	3" conduit	3.50	7.58	N	0	0.00	0.00	0	0.00	N	AT&T MOBILITY
0.00	123.00	6	1 5/8" Coax	1.98	0.82	N	0	0.00	0.00	0	0.00	N	T-MOBILE
0.00	123.00	6	1 5/8" Coax	1.98	0.82	N	6	0.00	0.00	0	1.00	Y	T-MOBILE
5.00	123.00	1	1 5/8" (1.63"-41.3mm)	1.63	1.61	N	0	0.00	0.00	0	0.00	N	T-MOBILE
5.00	113.00	6	1 5/8" Coax	1.98	0.82	N	0	0.00	0.00	0	0.00	N	METRO PCS INC
0.00	98.00	1	1.7" (43.2mm) Hybrid	1.70	1.78	N	0	0.00	0.00	0	0.00	N	SPRINT NEXTEL
5.00	98.00	3	1 1/4" Hybriflex Cable	1.54	1.00	N	0	0.00	0.00	0	0.00	N	SPRINT NEXTEL
5.00	90.00	1	2" conduit	2.38	3.65	N	1	0.00	0.00	315	1.00	Y	CLEARWIRE
5.00	89.00	3	1/2" Coax	0.63	0.15	N	3	0.00	0.00	318	1.00	Y	CLEARWIRE
5.00	89.00	6	5/16" (0.31"-7.9mm)	0.31	0.05	N	0	0.00	0.00	0	0.00	N	CLEARWIRE
5.00	79.00	2	1 5/8" Hybriflex	1.98	1.30	N	2	0.00	0.00	180	1.00	Y	VERIZON WIRELESS
5.00	20.00	1	1/2" Coax	0.63	0.15	N	1	0.00	0.00	270	1.00	Y	SPRINT NEXTEL

 © 2007 - 2019 by ATC IP LLC. All rights reserved.

Segment Properties (Max Len : 5. ft)

Seg Top Elev (ft)	Description	Thick (in)	Flat Dia (in)	Area (in^2)	Ix (in^4)	W/t Ratio	D/t Ratio	F'y (ksi)	S (in^3)	Z (in^3)	Weight (lb)
0.00		0.3750	56.580	66.895	26,698.9	24.84	150.88	72.2	929.4	0.0	0.0
5.00		0.3750	55.507	65.618	25,199.0	24.34	148.02	72.8	894.2	0.0	1,127.3
10.00		0.3750	54.434	64.341	23,756.4	23.83	145.16	73.4	859.6	0.0	1,105.6
15.00		0.3750	53.361	63.065	22,369.9	23.33	142.30	74.0	825.7	0.0	1,083.8
20.00		0.3750	52.288	61.788	21,038.4	22.82	139.44	74.6	792.5	0.0	1,062.1
25.00		0.3750	51.216	60.511	19,760.8	22.32	136.57	75.2	760.0	0.0	1,040.4
30.00		0.3750	50.143	59.234	18,536.1	21.81	133.71	75.7	728.1	0.0	1,018.7
35.00		0.3750	49.070	57.957	17,363.0	21.31	130.85	76.3	696.9	0.0	996.9
40.00		0.3750	47.997	56.680	16,240.5	20.81	127.99	76.9	666.4	0.0	975.2
45.00		0.3750	46.924	55.403	15,167.4	20.30	125.13	77.5	636.6	0.0	953.5
46.83	Bot - Section 2	0.3750	46.531	54.935	14,786.1	20.12	124.08	77.7	625.9	0.0	344.2
50.00		0.3750	45.851	54.126	14,142.7	19.80	122.27	78.1	607.5	0.0	1,184.8
53.00	Top - Section 1	0.3750	45.958	54.253	14,242.1	19.85	122.55	78.1	610.4	0.0	1,106.4
55.00		0.3750	45.528	53.742	13,843.6	19.64	121.41	78.3	598.9	0.0	367.5
60.00		0.3750	44.456	52.465	12,880.1	19.14	118.55	78.9	570.7	0.0	903.5
65.00		0.3750	43.383	51.188	11,962.4	18.64	115.69	79.5	543.1	0.0	881.8
70.00		0.3750	42.310	49.911	11,089.3	18.13	112.83	80.1	516.2	0.0	860.0
75.00		0.3750	41.237	48.634	10,259.8	17.63	109.97	80.7	490.0	0.0	838.3
79.00		0.3750	40.379	47.613	9,626.8	17.22	107.68	81.1	469.6	0.0	655.0
80.00		0.3750	40.164	47.357	9,472.7	17.12	107.10	81.3	464.5	0.0	161.6
85.00		0.3750	39.091	46.081	8,726.9	16.62	104.24	81.9	439.7	0.0	794.9
89.00		0.3750	38.233	45.059	8,159.3	16.21	101.96	82.3	420.3	0.0	620.3
90.00		0.3750	38.019	44.804	8,021.4	16.11	101.38	82.4	415.6	0.0	152.9
93.00		0.3750	37.375	44.038	7,616.9	15.81	99.67	82.6	401.4	0.0	453.5
94.92	Bot - Section 3	0.3750	36.964	43.548	7,365.7	15.62	98.57	82.6	392.5	0.0	285.6
95.00		0.3750	36.946	43.527	7,354.9	15.61	98.52	82.6	392.1	0.0	22.8
98.00		0.3750	36.302	42.761	6,973.3	15.31	96.81	82.6	378.3	0.0	814.4
99.83	Top - Section 2	0.3125	36.534	35.926	5,955.0	18.85	116.91	79.2	321.0	0.0	490.6
100.0		0.3125	36.498	35.890	5,937.4	18.83	116.79	79.3	320.4	0.0	20.4
105.0		0.3125	35.425	34.826	5,424.8	18.23	113.36	80.0	301.6	0.0	601.6
110.0		0.3125	34.352	33.762	4,942.6	17.62	109.93	80.7	283.4	0.0	583.5
113.0		0.3125	33.709	33.124	4,667.5	17.26	107.87	81.1	272.7	0.0	341.4
115.0		0.3125	33.279	32.698	4,489.8	17.01	106.49	81.4	265.7	0.0	224.0
120.0		0.3125	32.207	31.634	4,065.6	16.41	103.06	82.1	248.6	0.0	547.3
123.0		0.3125	31.563	30.995	3,824.4	16.05	101.00	82.5	238.7	0.0	319.7
125.0		0.3125	31.134	30.570	3,669.0	15.80	99.63	82.6	232.1	0.0	209.5
130.0		0.3125	30.061	29.506	3,299.0	15.20	96.19	82.6	216.2	0.0	511.1
135.0		0.3125	28.988	28.442	2,954.8	14.59	92.76	82.6	200.8	0.0	493.0
137.0		0.3125	28.559	28.016	2,824.1	14.35	91.39	82.6	194.8	0.0	192.1
138.0		0.3125	28.344	27.803	2,760.3	14.23	90.70	82.6	191.8	0.0	95.0
140.0		0.3125	27.915	27.377	2,635.4	13.99	89.33	82.6	185.9	0.0	187.8
145.0		0.3125	26.842	26.313	2,339.9	13.38	85.90	82.6	171.7	0.0	456.7
147.9		0.3125	26.220	25.696	2,179.1	13.03	83.90	82.6	163.7	0.0	256.6
147.9		0.3125	26.216	25.693	2,178.2	13.03	83.89	82.6	163.6	0.0	1.5
											25,342.4

 © 2007 - 2019 by ATC IP LLC. All rights reserved.

Load Case: 1.2D + 1.6W — 97 mph with No Ice — 24 Iterations

Gust Response Factor :1.10
Dead Load Factor :1.20
Wind Load Factor :1.60

Wind Importance Factor 1.00

Applied Segment Forces Summary

Seg Elev (ft)	Description	Shaft Forces Wind FX (lb)	Shaft Forces Dead Load (lb)	Discrete Forces Wind FX (lb)	Discrete Forces Torsion MY (lb-ft)	Discrete Forces Moment MZ (lb-ft)	Discrete Forces Dead Load (lb)	Linear Forces Wind FX (lb)	Linear Forces Dead Load (lb)	Sum of Forces Wind FX (lb)	Sum of Forces Dead Load (lb)	Sum of Forces Torsion MY (lb-ft)	Sum of Forces Moment MZ (lb)
0.00		217.3	0.0					0.0	0.0	217.3	0.0	0.0	0.0
5.00		430.3	1,352.7					0.0	160.7	430.3	1,513.4	0.0	0.0
10.00		422.0	1,326.7					0.0	387.6	422.0	1,714.3	0.0	0.0
15.00		413.7	1,300.6					0.0	387.6	413.7	1,688.2	0.0	0.0
20.00	Appurtenance(s)	405.4	1,274.5	25.7	0.0	0.0	4.8	0.0	387.6	431.0	1,666.9	0.0	0.0
25.00		397.1	1,248.5					0.0	386.7	397.1	1,635.2	0.0	0.0
30.00		393.4	1,222.4					0.0	386.7	393.4	1,609.1	0.0	0.0
35.00		397.6	1,196.3					0.0	386.7	397.6	1,583.0	0.0	0.0
40.00		404.1	1,170.3					0.0	386.7	404.1	1,557.0	0.0	0.0
45.00		278.5	1,144.2					0.0	386.7	278.5	1,530.9	0.0	0.0
46.83	Bot - Section 2	207.3	413.0					0.0	141.8	207.3	554.8	0.0	0.0
50.00		258.0	1,421.8					0.0	244.9	258.0	1,666.7	0.0	0.0
53.00	Top - Section 1	209.7	1,327.6					0.0	232.0	209.7	1,559.7	0.0	0.0
55.00		294.2	441.0					0.0	154.7	294.2	595.7	0.0	0.0
60.00		420.4	1,084.2					0.0	386.7	420.4	1,470.9	0.0	0.0
65.00		421.2	1,058.1					0.0	386.7	421.2	1,444.8	0.0	0.0
70.00		422.9	1,032.1					0.0	386.7	422.9	1,418.8	0.0	0.0
75.00		381.6	1,006.0					0.0	386.7	381.6	1,392.7	0.0	0.0
79.00	Appurtenance(s)	211.1	786.0	3,451.9	0.0	2,644.5	3,214.2	0.0	309.4	3,663.0	4,309.6	0.0	0.0
80.00		246.6	193.9					0.0	74.2	246.6	268.1	0.0	0.0
85.00		367.9	953.8					0.0	371.1	367.9	1,324.9	0.0	0.0
89.00	Appurtenance(s)	203.1	744.3	1,065.3	0.0	1,065.3	389.3	0.0	296.9	1,268.4	1,430.5	0.0	0.0
90.00		161.1	183.5					0.0	73.3	161.1	256.8	0.0	0.0
93.00	Appurtenance(s)	197.3	544.2	666.0	0.0	0.0	2,016.0	0.0	206.8	863.3	2,767.0	0.0	0.0
94.92	Bot - Section 3	80.0	342.7					0.0	132.1	80.0	474.9	0.0	0.0
95.00		124.4	27.4					0.0	5.7	124.4	33.1	0.0	0.0
98.00	Appurtenance(s)	194.5	977.3	2,153.5	0.0	1,039.5	3,083.8	0.0	206.8	2,348.0	4,267.9	0.0	0.0
99.83	Top - Section 2	80.1	588.8					0.0	115.9	80.1	704.6	0.0	0.0
100.00		204.9	24.4					0.0	10.5	204.9	35.0	0.0	0.0
105.00		393.1	721.9					0.0	316.0	393.1	1,037.9	0.0	0.0
110.00		310.2	700.2					0.0	316.0	310.2	1,016.2	0.0	0.0
113.00	Appurtenance(s)	191.4	409.7	425.7	0.0	425.7	95.0	0.0	189.6	617.0	694.3	0.0	0.0
115.00		263.8	268.8					0.0	114.6	263.8	383.4	0.0	0.0
120.00		298.3	656.7					0.0	286.5	298.3	943.2	0.0	0.0
123.00	Appurtenance(s)	183.7	383.6	2,351.1	0.0	1,242.8	1,719.0	0.0	171.9	2,534.8	2,274.5	0.0	0.0
125.00		252.5	251.4					0.0	87.1	252.5	338.5	0.0	0.0
130.00		354.6	613.3					0.0	217.8	354.6	831.1	0.0	0.0
135.00		243.9	591.5					0.0	217.8	243.9	809.3	0.0	0.0
137.00	Appurtenance(s)	102.9	230.5	5,817.0	0.0	3,758.8	4,697.5	0.0	87.1	5,919.9	5,015.2	0.0	0.0
138.00	Appurtenance(s)	101.8	114.0	231.2	0.0	231.2	277.2	0.0	18.2	333.0	409.4	0.0	0.0
140.00		233.4	225.3					0.0	0.0	233.4	225.3	0.0	0.0
145.00		259.7	548.1					0.0	0.0	259.7	548.1	0.0	0.0
147.90		94.5	307.9					0.0	0.0	94.5	307.9	0.0	0.0
147.92		0.5	1.8					0.0	0.0	0.5	1.8	0.0	0.0
								Totals:		27,917.1	55,310.3	0.00	0.00

© 2007 - 2019 by ATC IP LLC. All rights reserved.

Load Case: 1.2D + 1.6W 97 mph with No Ice 24 Iterations

Gust Response Factor :1.10 Wind Importance Factor 1.00
Dead Load Factor :1.20
Wind Load Factor :1.60

Calculated Forces1

Seg Elev (ft)	Pu FY (-) (kips)	Vu FX (-) (kips)	Tu MY (ft-kips)	Mu MZ (ft-kips)	Mu MX (ft-kips)	Resultant Moment (ft-kips)	phi Pn (kips)	phi Vn (kips)	phi Tn (ft-kips)	phi Mn (ft-kips)	Total Deflect (in)	Rotation (deg)	Ratio
0.00	-57.88	-31.03	0.00	-3,273.58	0.00	3,273.58	4,345.86	2,172.93	10,048.4	5,031.69	0.00	0.00	0.664
5.00	-56.28	-30.77	0.00	-3,118.42	0.00	3,118.42	4,297.95	2,148.97	9,746.71	4,880.60	0.09	-0.17	0.652
10.00	-54.48	-30.50	0.00	-2,964.58	0.00	2,964.58	4,248.67	2,124.33	9,446.20	4,730.12	0.36	-0.34	0.640
15.00	-52.70	-30.24	0.00	-2,812.06	0.00	2,812.06	4,198.03	2,099.01	9,147.09	4,580.35	0.81	-0.51	0.627
20.00	-50.95	-29.94	0.00	-2,660.88	0.00	2,660.88	4,146.02	2,073.01	8,849.58	4,431.37	1.45	-0.69	0.613
25.00	-49.23	-29.68	0.00	-2,511.17	0.00	2,511.17	4,092.65	2,046.33	8,553.84	4,283.28	2.26	-0.86	0.599
30.00	-47.53	-29.40	0.00	-2,362.80	0.00	2,362.80	4,037.92	2,018.96	8,260.05	4,136.16	3.26	-1.04	0.583
35.00	-45.87	-29.11	0.00	-2,215.80	0.00	2,215.80	3,981.82	1,990.91	7,968.40	3,990.12	4.45	-1.21	0.567
40.00	-44.23	-28.81	0.00	-2,070.23	0.00	2,070.23	3,924.36	1,962.18	7,679.06	3,845.24	5.81	-1.39	0.550
45.00	-42.65	-28.58	0.00	-1,926.19	0.00	1,926.19	3,865.53	1,932.77	7,392.22	3,701.60	7.36	-1.57	0.532
46.83	-42.06	-28.42	0.00	-1,873.80	0.00	1,873.80	3,843.62	1,921.81	7,287.71	3,649.27	7.98	-1.63	0.525
50.00	-40.35	-28.19	0.00	-1,783.80	0.00	1,783.80	3,805.35	1,902.67	7,108.06	3,559.31	9.10	-1.74	0.512
53.00	-38.75	-27.99	0.00	-1,699.22	0.00	1,699.22	3,811.37	1,905.68	7,136.09	3,573.35	10.23	-1.85	0.486
55.00	-38.11	-27.76	0.00	-1,643.24	0.00	1,643.24	3,786.97	1,893.48	7,023.10	3,516.77	11.02	-1.92	0.478
60.00	-36.58	-27.39	0.00	-1,504.46	0.00	1,504.46	3,725.00	1,862.50	6,742.70	3,376.36	13.11	-2.08	0.456
65.00	-35.08	-27.01	0.00	-1,367.53	0.00	1,367.53	3,661.68	1,830.84	6,465.40	3,237.50	15.38	-2.24	0.432
70.00	-33.61	-26.62	0.00	-1,232.49	0.00	1,232.49	3,596.99	1,798.49	6,191.38	3,100.29	17.80	-2.39	0.407
75.00	-32.17	-26.25	0.00	-1,099.41	0.00	1,099.41	3,530.94	1,765.47	5,920.82	2,964.81	20.39	-2.54	0.380
79.00	-28.00	-22.43	0.00	-991.76	0.00	991.76	3,477.11	1,738.56	5,706.98	2,857.73	22.57	-2.66	0.355
80.00	-27.71	-22.21	0.00	-969.33	0.00	969.33	3,463.52	1,731.76	5,653.90	2,831.15	23.13	-2.69	0.351
85.00	-26.36	-21.84	0.00	-858.27	0.00	858.27	3,394.74	1,697.37	5,390.81	2,699.41	26.02	-2.82	0.326
89.00	-24.97	-20.53	0.00	-769.86	0.00	769.86	3,338.73	1,669.37	5,183.21	2,595.46	28.43	-2.93	0.304
90.00	-24.71	-20.38	0.00	-749.33	0.00	749.33	3,324.59	1,662.30	5,131.72	2,569.68	29.05	-2.96	0.299
93.00	-21.97	-19.39	0.00	-688.21	0.00	688.21	3,271.77	1,635.89	4,962.98	2,485.18	30.93	-3.03	0.284
94.92	-21.49	-19.30	0.00	-651.04	0.00	651.04	3,235.40	1,617.70	4,852.71	2,429.96	32.16	-3.08	0.275
95.00	-21.45	-19.18	0.00	-649.43	0.00	649.43	3,233.82	1,616.91	4,847.95	2,427.58	32.21	-3.08	0.274
98.00	-17.30	-16.62	0.00	-590.84	0.00	590.84	3,176.90	1,588.45	4,677.94	2,342.45	34.17	-3.16	0.258
99.83	-16.60	-16.51	0.00	-560.36	0.00	560.36	2,561.71	1,280.85	3,809.78	1,907.72	35.39	-3.20	0.300
100.00	-16.55	-16.32	0.00	-557.61	0.00	557.61	2,559.94	1,279.97	3,803.37	1,904.51	35.50	-3.20	0.299
105.00	-15.51	-15.91	0.00	-475.99	0.00	475.99	2,506.36	1,253.18	3,612.41	1,808.89	38.92	-3.33	0.269
110.00	-14.49	-15.56	0.00	-396.46	0.00	396.46	2,451.42	1,225.71	3,424.31	1,714.70	42.47	-3.44	0.237
113.00	-13.82	-14.91	0.00	-349.36	0.00	349.36	2,417.79	1,208.90	3,312.90	1,658.91	44.65	-3.51	0.216
115.00	-13.43	-14.64	0.00	-319.54	0.00	319.54	2,395.11	1,197.55	3,239.25	1,622.03	46.13	-3.55	0.203
120.00	-12.49	-14.30	0.00	-246.33	0.00	246.33	2,337.43	1,168.72	3,057.41	1,530.98	49.89	-3.64	0.166
123.00	-10.38	-11.63	0.00	-202.19	0.00	202.19	2,302.17	1,151.09	2,949.92	1,477.15	52.19	-3.68	0.141
125.00	-10.05	-11.37	0.00	-178.93	0.00	178.93	2,271.18	1,135.59	2,869.84	1,437.05	53.74	-3.71	0.129
130.00	-9.23	-10.97	0.00	-122.10	0.00	122.10	2,192.12	1,096.06	2,672.56	1,338.27	57.65	-3.77	0.096
135.00	-8.44	-10.67	0.00	-67.27	0.00	67.27	2,113.07	1,056.53	2,482.31	1,243.00	61.62	-3.81	0.058
137.00	-3.83	-4.43	0.00	-42.17	0.00	42.17	2,081.44	1,040.72	2,408.17	1,205.88	63.22	-3.82	0.037
138.00	-3.44	-4.07	0.00	-37.51	0.00	37.51	2,065.63	1,032.82	2,371.53	1,187.53	64.02	-3.83	0.033
140.00	-3.23	-3.83	0.00	-29.36	0.00	29.36	2,034.01	1,017.00	2,299.08	1,151.25	65.62	-3.83	0.027
145.00	-2.70	-3.53	0.00	-10.24	0.00	10.24	1,954.95	977.48	2,122.87	1,063.02	69.64	-3.84	0.011
147.90	0.00	0.00	0.00	0.00	0.00	0.00	1,909.10	954.55	2,023.89	1,013.45	71.97	-3.84	0.000

© 2007 - 2019 by ATC IP LLC. All rights reserved.

Load Case: 1.2D + 1.6W 97 mph with No Ice 24 Iterations

Gust Response Factor :1.10 Wind Importance Factor 1.00
Dead Load Factor :1.20
Wind Load Factor :1.60

147.92	0.00	0.00	0.00	0.00	0.00	0.00	1,908.83	954.42	2,023.32	1,013.16	71.99	-3.84	0.000

 © 2007 - 2019 by ATC IP LLC. All rights reserved.

Load Case: 0.9D + 1.6W — 97 mph with No Ice (Reduced DL) — 23 Iterations

Gust Response Factor :1.10
Dead Load Factor :0.90
Wind Load Factor :1.60

Wind Importance Factor 1.00

Applied Segment Forces Summary

Seg Elev (ft)	Description	Shaft Forces Wind FX (lb)	Shaft Forces Dead Load (lb)	Discrete Forces Wind FX (lb)	Discrete Forces Torsion MY (lb-ft)	Discrete Forces Moment MZ (lb-ft)	Discrete Forces Dead Load (lb)	Linear Forces Wind FX (lb)	Linear Forces Dead Load (lb)	Sum of Forces Wind FX (lb)	Sum of Forces Dead Load (lb)	Sum of Forces Torsion MY (lb-ft)	Sum of Forces Moment MZ (lb)
0.00		217.3	0.0					0.0	0.0	217.3	0.0	0.0	0.0
5.00		430.3	1,014.6					0.0	120.5	430.3	1,135.1	0.0	0.0
10.00		422.0	995.0					0.0	290.7	422.0	1,285.7	0.0	0.0
15.00		413.7	975.5					0.0	290.7	413.7	1,266.2	0.0	0.0
20.00	Appurtenance(s)	405.4	955.9	25.7	0.0	0.0	3.6	0.0	290.7	431.0	1,250.2	0.0	0.0
25.00		397.1	936.3					0.0	290.0	397.1	1,226.4	0.0	0.0
30.00		393.4	916.8					0.0	290.0	393.4	1,206.8	0.0	0.0
35.00		397.6	897.2					0.0	290.0	397.6	1,187.3	0.0	0.0
40.00		404.1	877.7					0.0	290.0	404.1	1,167.7	0.0	0.0
45.00		278.5	858.1					0.0	290.0	278.5	1,148.2	0.0	0.0
46.83	Bot - Section 2	207.3	309.8					0.0	106.3	207.3	416.1	0.0	0.0
50.00		258.0	1,066.3					0.0	183.7	258.0	1,250.0	0.0	0.0
53.00	Top - Section 1	209.7	995.7					0.0	174.0	209.7	1,169.7	0.0	0.0
55.00		294.2	330.7					0.0	116.0	294.2	446.7	0.0	0.0
60.00		420.4	813.1					0.0	290.0	420.4	1,103.2	0.0	0.0
65.00		419.7	793.6					0.0	290.0	419.7	1,083.6	0.0	0.0
70.00		418.1	774.0					0.0	290.0	418.1	1,064.1	0.0	0.0
75.00		374.4	754.5					0.0	290.0	374.4	1,044.5	0.0	0.0
79.00	Appurtenance(s)	207.1	589.5	3,451.9	0.0	2,644.5	2,410.6	0.0	232.0	3,659.0	3,232.2	0.0	0.0
80.00		246.6	145.4					0.0	55.7	246.6	201.1	0.0	0.0
85.00		367.9	715.4					0.0	278.3	367.9	993.7	0.0	0.0
89.00	Appurtenance(s)	203.1	558.2	1,065.3	0.0	1,065.3	292.0	0.0	222.7	1,268.4	1,072.9	0.0	0.0
90.00		161.1	137.6					0.0	55.0	161.1	192.6	0.0	0.0
93.00	Appurtenance(s)	197.3	408.1	666.0	0.0	0.0	1,512.0	0.0	155.1	863.3	2,075.2	0.0	0.0
94.92	Bot - Section 3	80.0	257.1					0.0	99.1	80.0	356.2	0.0	0.0
95.00		124.4	20.5					0.0	4.3	124.4	24.9	0.0	0.0
98.00	Appurtenance(s)	194.5	733.0	2,153.5	0.0	1,039.5	2,312.8	0.0	155.1	2,348.0	3,200.9	0.0	0.0
99.83	Top - Section 2	80.1	441.6					0.0	86.9	80.1	528.5	0.0	0.0
100.00		204.9	18.3					0.0	7.9	204.9	26.2	0.0	0.0
105.00		393.1	541.4					0.0	237.0	393.1	778.4	0.0	0.0
110.00		310.2	525.1					0.0	237.0	310.2	762.1	0.0	0.0
113.00	Appurtenance(s)	191.4	307.3	425.7	0.0	425.7	71.3	0.0	142.2	617.0	520.7	0.0	0.0
115.00		263.8	201.6					0.0	85.9	263.8	287.5	0.0	0.0
120.00		298.3	492.5					0.0	214.9	298.3	707.4	0.0	0.0
123.00	Appurtenance(s)	183.7	287.7	2,351.1	0.0	1,242.8	1,289.2	0.0	128.9	2,534.8	1,705.9	0.0	0.0
125.00		252.5	188.5					0.0	65.3	252.5	253.9	0.0	0.0
130.00		354.6	460.0					0.0	163.3	354.6	623.3	0.0	0.0
135.00		243.9	443.7					0.0	163.3	243.9	607.0	0.0	0.0
137.00	Appurtenance(s)	102.9	172.9	5,817.0	0.0	3,758.8	3,523.1	0.0	65.3	5,919.9	3,761.4	0.0	0.0
138.00	Appurtenance(s)	101.8	85.5	231.2	0.0	231.2	207.9	0.0	13.6	333.0	307.0	0.0	0.0
140.00		233.4	169.0					0.0	0.0	233.4	169.0	0.0	0.0
145.00		259.7	411.1					0.0	0.0	259.7	411.1	0.0	0.0
147.90		94.5	231.0					0.0	0.0	94.5	231.0	0.0	0.0
147.92		0.5	1.3					0.0	0.0	0.5	1.3	0.0	0.0
								Totals:		27,899.6	41,482.7	0.00	0.00

 © 2007 - 2019 by ATC IP LLC. All rights reserved.

Load Case: 0.9D + 1.6W 97 mph with No Ice (Reduced DL) 23 Iterations

Gust Response Factor :1.10 Wind Importance Factor 1.00
Dead Load Factor :0.90
Wind Load Factor :1.60

Calculated Forces1

Seg Elev (ft)	Pu FY (-) (kips)	Vu FX (-) (kips)	Tu MY (ft-kips)	Mu MZ (ft-kips)	Mu MX (ft-kips)	Resultant Moment (ft-kips)	phi Pn (kips)	phi Vn (kips)	phi Tn (ft-kips)	phi Mn (ft-kips)	Total Deflect (in)	Rotation (deg)	Ratio
0.00	-43.40	-30.99	0.00	-3,236.23	0.00	3,236.23	4,345.86	2,172.93	10,048.4	5,031.69	0.00	0.00	0.653
5.00	-42.18	-30.68	0.00	-3,081.27	0.00	3,081.27	4,297.95	2,148.97	9,746.71	4,880.60	0.09	-0.17	0.641
10.00	-40.80	-30.38	0.00	-2,927.85	0.00	2,927.85	4,248.67	2,124.33	9,446.20	4,730.12	0.36	-0.34	0.629
15.00	-39.45	-30.07	0.00	-2,775.97	0.00	2,775.97	4,198.03	2,099.01	9,147.09	4,580.35	0.80	-0.51	0.616
20.00	-38.12	-29.74	0.00	-2,625.60	0.00	2,625.60	4,146.02	2,073.01	8,849.58	4,431.37	1.43	-0.68	0.602
25.00	-36.81	-29.44	0.00	-2,476.89	0.00	2,476.89	4,092.65	2,046.33	8,553.84	4,283.28	2.24	-0.85	0.587
30.00	-35.52	-29.14	0.00	-2,329.68	0.00	2,329.68	4,037.92	2,018.96	8,260.05	4,136.16	3.22	-1.03	0.572
35.00	-34.25	-28.82	0.00	-2,184.00	0.00	2,184.00	3,981.82	1,990.91	7,968.40	3,990.12	4.39	-1.20	0.556
40.00	-33.01	-28.49	0.00	-2,039.91	0.00	2,039.91	3,924.36	1,962.18	7,679.06	3,845.24	5.74	-1.37	0.539
45.00	-31.81	-28.25	0.00	-1,897.47	0.00	1,897.47	3,865.53	1,932.77	7,392.22	3,701.60	7.27	-1.54	0.521
46.83	-31.36	-28.08	0.00	-1,845.69	0.00	1,845.69	3,843.62	1,921.81	7,287.71	3,649.27	7.88	-1.61	0.514
50.00	-30.06	-27.84	0.00	-1,756.79	0.00	1,756.79	3,805.35	1,902.67	7,108.06	3,559.31	8.98	-1.72	0.502
53.00	-28.86	-27.63	0.00	-1,673.28	0.00	1,673.28	3,811.37	1,905.68	7,136.09	3,573.35	10.09	-1.82	0.476
55.00	-28.37	-27.38	0.00	-1,618.01	0.00	1,618.01	3,786.97	1,893.48	7,023.10	3,516.77	10.87	-1.89	0.468
60.00	-27.20	-27.00	0.00	-1,481.10	0.00	1,481.10	3,725.00	1,862.50	6,742.70	3,376.36	12.94	-2.05	0.446
65.00	-26.06	-26.61	0.00	-1,346.10	0.00	1,346.10	3,661.68	1,830.84	6,465.40	3,237.50	15.17	-2.21	0.423
70.00	-24.95	-26.22	0.00	-1,213.05	0.00	1,213.05	3,596.99	1,798.49	6,191.38	3,100.29	17.57	-2.36	0.398
75.00	-23.86	-25.85	0.00	-1,081.97	0.00	1,081.97	3,530.94	1,765.47	5,920.82	2,964.81	20.12	-2.51	0.372
79.00	-20.77	-22.08	0.00	-975.92	0.00	975.92	3,477.11	1,738.56	5,706.98	2,857.73	22.26	-2.62	0.348
80.00	-20.55	-21.85	0.00	-953.84	0.00	953.84	3,463.52	1,731.76	5,653.90	2,831.15	22.82	-2.65	0.343
85.00	-19.53	-21.48	0.00	-844.59	0.00	844.59	3,394.74	1,697.37	5,390.81	2,699.41	25.66	-2.78	0.319
89.00	-18.50	-20.18	0.00	-757.62	0.00	757.62	3,338.73	1,669.37	5,183.21	2,595.46	28.04	-2.89	0.298
90.00	-18.30	-20.02	0.00	-737.44	0.00	737.44	3,324.59	1,662.30	5,131.72	2,569.68	28.65	-2.91	0.293
93.00	-16.25	-19.07	0.00	-677.37	0.00	677.37	3,271.77	1,635.89	4,962.98	2,485.18	30.50	-2.99	0.278
94.92	-15.89	-18.98	0.00	-640.81	0.00	640.81	3,235.40	1,617.70	4,852.71	2,429.96	31.71	-3.04	0.269
95.00	-15.86	-18.87	0.00	-639.23	0.00	639.23	3,233.82	1,616.91	4,847.95	2,427.58	31.77	-3.04	0.268
98.00	-12.77	-16.36	0.00	-581.60	0.00	581.60	3,176.90	1,588.45	4,677.94	2,342.45	33.70	-3.11	0.252
99.83	-12.24	-16.26	0.00	-551.60	0.00	551.60	2,561.71	1,280.85	3,809.78	1,907.72	34.90	-3.15	0.294
100.00	-12.21	-16.07	0.00	-548.89	0.00	548.89	2,559.94	1,279.97	3,803.37	1,904.51	35.01	-3.16	0.293
105.00	-11.42	-15.65	0.00	-468.57	0.00	468.57	2,506.36	1,253.18	3,612.41	1,808.89	38.38	-3.28	0.264
110.00	-10.66	-15.31	0.00	-390.30	0.00	390.30	2,451.42	1,225.71	3,424.31	1,714.70	41.87	-3.39	0.232
113.00	-10.16	-14.68	0.00	-343.94	0.00	343.94	2,417.79	1,208.90	3,312.90	1,658.91	44.03	-3.45	0.212
115.00	-9.87	-14.41	0.00	-314.58	0.00	314.58	2,395.11	1,197.55	3,239.25	1,622.03	45.48	-3.49	0.198
120.00	-9.17	-14.08	0.00	-242.55	0.00	242.55	2,337.43	1,168.72	3,057.41	1,530.98	49.19	-3.58	0.162
123.00	-7.62	-11.44	0.00	-199.07	0.00	199.07	2,302.17	1,151.09	2,949.92	1,477.15	51.45	-3.63	0.138
125.00	-7.37	-11.18	0.00	-176.18	0.00	176.18	2,271.18	1,135.59	2,869.84	1,437.05	52.98	-3.66	0.126
130.00	-6.76	-10.79	0.00	-120.27	0.00	120.27	2,192.12	1,096.06	2,672.56	1,338.27	56.84	-3.71	0.093
135.00	-6.17	-10.51	0.00	-66.30	0.00	66.30	2,113.07	1,056.53	2,482.31	1,243.00	60.75	-3.75	0.056
137.00	-2.80	-4.36	0.00	-41.52	0.00	41.52	2,081.44	1,040.72	2,408.17	1,205.88	62.32	-3.77	0.036
138.00	-2.52	-4.01	0.00	-36.93	0.00	36.93	2,065.63	1,032.82	2,371.53	1,187.53	63.11	-3.77	0.032
140.00	-2.37	-3.76	0.00	-28.91	0.00	28.91	2,034.01	1,017.00	2,299.08	1,151.25	64.69	-3.78	0.026
145.00	-1.97	-3.48	0.00	-10.09	0.00	10.09	1,954.95	977.48	2,122.87	1,063.02	68.65	-3.79	0.011
147.90	0.00	0.00	0.00	0.00	0.00	0.00	1,909.10	954.55	2,023.89	1,013.45	70.95	-3.79	0.000

© 2007 - 2019 by ATC IP LLC. All rights reserved.

Load Case: 0.9D + 1.6W 97 mph with No Ice (Reduced DL) 23 Iterations

Gust Response Factor :1.10 Wind Importance Factor 1.00
Dead Load Factor :0.90
Wind Load Factor :1.60

147.92	0.00	0.00	0.00	0.00	0.00	0.00	1,908.83	954.42	2,023.32	1,013.16	70.96	-3.79	0.000

© 2007 - 2019 by ATC IP LLC. All rights reserved.

Load Case: 1.2D + 1.0Di + 1.0Wi 50 mph with 1.00 in Radial Ice 23 Iterations

Gust Response Factor :1.10 Ice Dead Load Factor 1.00 Wind Importance Factor 1.00
Dead Load Factor :1.20 Ice Importance Factor :1.00
Wind Load Factor :1.00

Applied Segment Forces Summary

		Shaft Forces		Discrete Forces				Linear Forces		Sum of Forces			
Seg Elev (ft)	Description	Wind FX (lb)	Dead Load (lb)	Wind FX (lb)	Torsion MY (lb-ft)	Moment MZ (lb-ft)	Dead Load (lb)	Wind FX (lb)	Dead Load (lb)	Wind FX (lb)	Dead Load (lb)	Torsion MY (lb-ft)	Moment MZ (lb)
0.00		70.2	0.0					0.0	0.0	70.2	0.0	0.0	0.0
5.00		139.6	1,904.9					14.8	227.4	154.4	2,132.3	0.0	0.0
10.00		137.7	1,933.3					259.8	551.1	397.4	2,484.4	0.0	0.0
15.00		135.5	1,927.9					256.8	561.3	392.3	2,489.2	0.0	0.0
20.00	Appurtenance(s)	133.2	1,911.3	9.3	0.0	0.0	24.7	253.4	568.5	395.9	2,504.6	0.0	0.0
25.00		130.8	1,889.1					249.8	563.9	380.7	2,453.0	0.0	0.0
30.00		130.0	1,863.3					246.1	568.2	376.1	2,431.5	0.0	0.0
35.00		131.7	1,835.0					248.1	571.9	379.9	2,406.9	0.0	0.0
40.00		134.3	1,804.9					254.4	575.1	388.6	2,380.0	0.0	0.0
45.00		92.7	1,773.3					259.3	578.0	352.0	2,351.4	0.0	0.0
46.83	Bot - Section 2	69.1	643.7					96.1	212.6	165.2	856.3	0.0	0.0
50.00		86.1	1,823.0					167.1	368.0	253.1	2,191.0	0.0	0.0
53.00	Top - Section 1	70.0	1,705.2					159.4	349.6	229.4	2,054.7	0.0	0.0
55.00		98.5	691.6					108.2	233.5	206.6	925.1	0.0	0.0
60.00		141.0	1,700.8					271.9	585.3	412.9	2,286.0	0.0	0.0
65.00		141.2	1,665.8					273.5	587.3	414.7	2,253.1	0.0	0.0
70.00		141.1	1,630.2					274.5	589.2	415.6	2,219.4	0.0	0.0
75.00		126.6	1,594.0					275.0	591.0	401.6	2,185.0	0.0	0.0
79.00	Appurtenance(s)	70.2	1,250.1	918.4	0.0	636.1	6,681.7	220.0	474.0	1,208.5	8,405.8	0.0	0.0
80.00		83.8	309.7					18.4	104.5	102.2	414.2	0.0	0.0
85.00		125.3	1,520.5					92.2	523.0	217.5	2,043.4	0.0	0.0
89.00	Appurtenance(s)	69.3	1,190.7	246.4	0.0	246.4	1,220.2	74.0	419.2	389.6	2,830.0	0.0	0.0
90.00		55.1	294.8					5.1	97.4	60.2	392.2	0.0	0.0
93.00	Appurtenance(s)	67.5	873.5	228.2	0.0	0.0	3,466.0	15.5	265.1	311.2	4,604.6	0.0	0.0
94.92	Bot - Section 3	27.4	551.6					10.0	169.5	37.4	721.1	0.0	0.0
95.00		42.6	36.6					0.4	7.4	43.1	44.0	0.0	0.0
98.00	Appurtenance(s)	66.7	1,304.8	624.3	0.0	260.8	5,174.3	15.8	265.4	706.8	6,744.6	0.0	0.0
99.83	Top - Section 2	27.5	787.4					9.7	151.8	37.2	939.2	0.0	0.0
100.00		70.5	42.5					0.9	13.8	71.4	56.3	0.0	0.0
105.00		135.6	1,250.1					26.9	414.3	162.4	1,664.5	0.0	0.0
110.00		107.3	1,216.0					27.3	414.9	134.6	1,630.8	0.0	0.0
113.00	Appurtenance(s)	66.4	714.9	113.6	0.0	113.6	371.9	16.6	249.2	196.6	1,336.0	0.0	0.0
115.00		91.8	470.3					11.2	154.4	103.0	624.7	0.0	0.0
120.00		104.1	1,146.9					28.2	386.3	132.3	1,533.2	0.0	0.0
123.00	Appurtenance(s)	64.3	673.2	630.0	0.0	290.9	4,036.4	17.1	232.0	711.5	4,941.7	0.0	0.0
125.00		88.7	442.4					0.0	87.1	88.7	529.6	0.0	0.0
130.00		125.1	1,076.9					0.0	217.8	125.1	1,294.7	0.0	0.0
135.00		86.3	1,041.6					0.0	217.8	86.3	1,259.4	0.0	0.0
137.00	Appurtenance(s)	36.5	408.6	1,473.2	0.0	905.1	10,178.0	0.0	87.1	1,509.7	10,673.7	0.0	0.0
138.00	Appurtenance(s)	36.2	202.5	58.1	0.0	58.1	579.9	0.0	18.2	94.3	800.5	0.0	0.0
140.00		83.4	400.1					0.0	0.0	83.4	400.1	0.0	0.0
145.00		93.0	970.6					0.0	0.0	93.0	970.6	0.0	0.0
147.90		34.0	548.5					0.0	0.0	34.0	548.5	0.0	0.0
147.92		0.2	3.2					0.0	0.0	0.2	3.2	0.0	0.0
									Totals:	12,526.9	92,010.2	0.00	0.00

 © 2007 - 2019 by ATC IP LLC. All rights reserved.

Load Case: 1.2D + 1.0Di + 1.0Wi 50 mph with 1.00 in Radial Ice 23 Iterations

Gust Response Factor :1.10 Ice Dead Load Factor 1.00 Wind Importance Factor 1.00
Dead Load Factor :1.20 Ice Importance Factor :1.00
Wind Load Factor :1.00

Calculated Forces1

Seg Elev (ft)	Pu FY (-) (kips)	Vu FX (-) (kips)	Tu MY (ft-kips)	Mu MZ (ft-kips)	Mu MX (ft-kips)	Resultant Moment (ft-kips)	phi Pn (kips)	phi Vn (kips)	phi Tn (ft-kips)	phi Mn (ft-kips)	Total Deflect (in)	Rotation (deg)	Ratio
0.00	-98.52	-13.31	0.00	-1,183.53	0.00	1,183.53	4,345.86	2,172.93	10,048.4	5,031.69	0.00	0.00	0.258
5.00	-96.38	-13.26	0.00	-1,116.99	0.00	1,116.99	4,297.95	2,148.97	9,746.71	4,880.60	0.03	-0.06	0.251
10.00	-93.88	-12.96	0.00	-1,050.71	0.00	1,050.71	4,248.67	2,124.33	9,446.20	4,730.12	0.13	-0.12	0.244
15.00	-91.38	-12.65	0.00	-985.93	0.00	985.93	4,198.03	2,099.01	9,147.09	4,580.35	0.29	-0.18	0.237
20.00	-88.86	-12.34	0.00	-922.67	0.00	922.67	4,146.02	2,073.01	8,849.58	4,431.37	0.52	-0.24	0.230
25.00	-86.40	-12.04	0.00	-860.96	0.00	860.96	4,092.65	2,046.33	8,553.84	4,283.28	0.81	-0.30	0.222
30.00	-83.96	-11.74	0.00	-800.76	0.00	800.76	4,037.92	2,018.96	8,260.05	4,136.16	1.16	-0.36	0.214
35.00	-81.54	-11.42	0.00	-742.08	0.00	742.08	3,981.82	1,990.91	7,968.40	3,990.12	1.57	-0.42	0.206
40.00	-79.15	-11.10	0.00	-684.96	0.00	684.96	3,924.36	1,962.18	7,679.06	3,845.24	2.05	-0.48	0.198
45.00	-76.80	-10.78	0.00	-629.48	0.00	629.48	3,865.53	1,932.77	7,392.22	3,701.60	2.58	-0.54	0.190
46.83	-75.94	-10.64	0.00	-609.72	0.00	609.72	3,843.62	1,921.81	7,287.71	3,649.27	2.79	-0.56	0.187
50.00	-73.74	-10.41	0.00	-576.03	0.00	576.03	3,805.35	1,902.67	7,108.06	3,559.31	3.18	-0.60	0.181
53.00	-71.69	-10.19	0.00	-544.80	0.00	544.80	3,811.37	1,905.68	7,136.09	3,573.35	3.56	-0.63	0.171
55.00	-70.76	-10.02	0.00	-524.41	0.00	524.41	3,786.97	1,893.48	7,023.10	3,516.77	3.83	-0.65	0.168
60.00	-68.47	-9.64	0.00	-474.29	0.00	474.29	3,725.00	1,862.50	6,742.70	3,376.36	4.55	-0.70	0.159
65.00	-66.21	-9.26	0.00	-426.07	0.00	426.07	3,661.68	1,830.84	6,465.40	3,237.50	5.31	-0.75	0.150
70.00	-63.99	-8.86	0.00	-379.79	0.00	379.79	3,596.99	1,798.49	6,191.38	3,100.29	6.13	-0.80	0.140
75.00	-61.81	-8.47	0.00	-335.47	0.00	335.47	3,530.94	1,765.47	5,920.82	2,964.81	6.99	-0.85	0.131
79.00	-53.42	-7.16	0.00	-300.94	0.00	300.94	3,477.11	1,738.56	5,706.98	2,857.73	7.72	-0.88	0.121
80.00	-53.00	-7.07	0.00	-293.78	0.00	293.78	3,463.52	1,731.76	5,653.90	2,831.15	7.90	-0.89	0.119
85.00	-50.96	-6.86	0.00	-258.41	0.00	258.41	3,394.74	1,697.37	5,390.81	2,699.41	8.86	-0.93	0.111
89.00	-48.13	-6.44	0.00	-230.74	0.00	230.74	3,338.73	1,669.37	5,183.21	2,595.46	9.66	-0.97	0.103
90.00	-47.74	-6.38	0.00	-224.31	0.00	224.31	3,324.59	1,662.30	5,131.72	2,569.68	9.86	-0.97	0.102
93.00	-43.14	-6.01	0.00	-205.16	0.00	205.16	3,271.77	1,635.89	4,962.98	2,485.18	10.48	-1.00	0.096
94.92	-42.42	-5.96	0.00	-193.65	0.00	193.65	3,235.40	1,617.70	4,852.71	2,429.96	10.88	-1.01	0.093
95.00	-42.37	-5.93	0.00	-193.15	0.00	193.15	3,233.82	1,616.91	4,847.95	2,427.58	10.90	-1.01	0.093
98.00	-35.64	-5.11	0.00	-175.11	0.00	175.11	3,176.90	1,588.45	4,677.94	2,342.45	11.54	-1.03	0.086
99.83	-34.70	-5.06	0.00	-165.75	0.00	165.75	2,561.71	1,280.85	3,809.78	1,907.72	11.94	-1.05	0.100
100.00	-34.65	-5.00	0.00	-164.90	0.00	164.90	2,559.94	1,279.97	3,803.37	1,904.51	11.98	-1.05	0.100
105.00	-32.98	-4.83	0.00	-139.91	0.00	139.91	2,506.36	1,253.18	3,612.41	1,808.89	13.09	-1.08	0.091
110.00	-31.35	-4.67	0.00	-115.78	0.00	115.78	2,451.42	1,225.71	3,424.31	1,714.70	14.25	-1.12	0.080
113.00	-30.02	-4.46	0.00	-101.65	0.00	101.65	2,417.79	1,208.90	3,312.90	1,658.91	14.95	-1.14	0.074
115.00	-29.39	-4.35	0.00	-92.73	0.00	92.73	2,395.11	1,197.55	3,239.25	1,622.03	15.43	-1.15	0.069
120.00	-27.86	-4.20	0.00	-70.97	0.00	70.97	2,337.43	1,168.72	3,057.41	1,530.98	16.65	-1.17	0.058
123.00	-22.94	-3.39	0.00	-58.08	0.00	58.08	2,302.17	1,151.09	2,949.92	1,477.15	17.39	-1.19	0.049
125.00	-22.41	-3.30	0.00	-51.29	0.00	51.29	2,271.18	1,135.59	2,869.84	1,437.05	17.89	-1.19	0.046
130.00	-21.11	-3.15	0.00	-34.81	0.00	34.81	2,192.12	1,096.06	2,672.56	1,338.27	19.15	-1.21	0.036
135.00	-19.86	-3.04	0.00	-19.07	0.00	19.07	2,113.07	1,056.53	2,482.31	1,243.00	20.42	-1.22	0.025
137.00	-9.22	-1.30	0.00	-12.09	0.00	12.09	2,081.44	1,040.72	2,408.17	1,205.88	20.94	-1.23	0.014
138.00	-8.42	-1.19	0.00	-10.73	0.00	10.73	2,065.63	1,032.82	2,371.53	1,187.53	21.19	-1.23	0.013
140.00	-8.02	-1.10	0.00	-8.35	0.00	8.35	2,034.01	1,017.00	2,299.08	1,151.25	21.71	-1.23	0.011
145.00	-7.05	-0.98	0.00	-2.86	0.00	2.86	1,954.95	977.48	2,122.87	1,063.02	23.00	-1.23	0.006
147.90	0.00	0.00	0.00	0.00	0.00	0.00	1,909.10	954.55	2,023.89	1,013.45	23.75	-1.23	0.000

© 2007 - 2019 by ATC IP LLC. All rights reserved.

Load Case: 1.2D + 1.0Di + 1.0Wi 50 mph with 1.00 in Radial Ice 23 Iterations

Gust Response Factor :1.10 Ice Dead Load Factor 1.00 Wind Importance Factor 1.00
Dead Load Factor :1.20 Ice Importance Factor :1.00
Wind Load Factor :1.00

147.92	0.00	0.00	0.00	0.00	0.00	0.00	1,908.83	954.42	2,023.32	1,013.16	23.75	-1.23	0.000

Site Number: 302468 Code: ANSI/TIA-222-G © 2007 - 2019 by ATC IP LLC. All rights reserved.

Site Name: Petro Lock, CT Engineering Number:OAA729245_C3_02 5/28/2019 4:23:08 PM

Customer: SPRINT NEXTEL

Load Case: 1.0D + 1.0W Serviceability 60 mph 22 Iterations

Gust Response Factor :1.10 Wind Importance Factor 1.00

Dead Load Factor :1.00

Wind Load Factor :1.00

Applied Segment Forces Summary

		Shaft Forces		Discrete Forces				Linear Forces		Sum of Forces			
Seg Elev (ft)	Description	Wind FX (lb)	Dead Load (lb)	Wind FX (lb)	Torsion MY (lb-ft)	Moment MZ (lb-ft)	Dead Load (lb)	Wind FX (lb)	Dead Load (lb)	Wind FX (lb)	Dead Load (lb)	Torsion MY (lb-ft)	Moment MZ (lb)
0.00		46.5	0.0					0.0	0.0	46.5	0.0	0.0	0.0
5.00		92.1	1,127.3					0.0	133.9	92.1	1,261.2	0.0	0.0
10.00		90.3	1,105.6					0.0	323.0	90.3	1,428.6	0.0	0.0
15.00		88.5	1,083.8					0.0	323.0	88.5	1,406.8	0.0	0.0
20.00	Appurtenance(s)	86.7	1,062.1	5.5	0.0	0.0	4.0	0.0	323.0	92.2	1,389.1	0.0	0.0
25.00		85.0	1,040.4					0.0	322.3	85.0	1,362.6	0.0	0.0
30.00		84.2	1,018.7					0.0	322.3	84.2	1,340.9	0.0	0.0
35.00		85.1	996.9					0.0	322.3	85.1	1,319.2	0.0	0.0
40.00		86.5	975.2					0.0	322.3	86.5	1,297.5	0.0	0.0
45.00		59.6	953.5					0.0	322.3	59.6	1,275.7	0.0	0.0
46.83	Bot - Section 2	44.4	344.2					0.0	118.2	44.4	462.3	0.0	0.0
50.00		55.2	1,184.8					0.0	204.1	55.2	1,388.9	0.0	0.0
53.00	Top - Section 1	44.9	1,106.4					0.0	193.4	44.9	1,299.7	0.0	0.0
55.00		62.9	367.5					0.0	128.9	62.9	496.4	0.0	0.0
60.00		89.9	903.5					0.0	322.3	89.9	1,225.7	0.0	0.0
65.00		89.8	881.8					0.0	322.3	89.8	1,204.0	0.0	0.0
70.00		89.5	860.0					0.0	322.3	89.5	1,182.3	0.0	0.0
75.00		80.1	838.3					0.0	322.3	80.1	1,160.6	0.0	0.0
79.00	Appurtenance(s)	44.3	655.0	738.6	0.0	565.8	2,678.5	0.0	257.8	782.9	3,591.3	0.0	0.0
80.00		52.8	161.6					0.0	61.9	52.8	223.4	0.0	0.0
85.00		78.7	794.9					0.0	309.3	78.7	1,104.1	0.0	0.0
89.00	Appurtenance(s)	43.5	620.3	227.9	0.0	227.9	324.4	0.0	247.4	271.4	1,192.1	0.0	0.0
90.00		34.5	152.9					0.0	61.1	34.5	214.0	0.0	0.0
93.00	Appurtenance(s)	42.2	453.5	142.5	0.0	0.0	1,680.0	0.0	172.4	184.7	2,305.8	0.0	0.0
94.92	Bot - Section 3	17.1	285.6					0.0	110.1	17.1	395.7	0.0	0.0
95.00		26.6	22.8					0.0	4.8	26.6	27.6	0.0	0.0
98.00	Appurtenance(s)	41.6	814.4	460.8	0.0	222.4	2,569.8	0.0	172.4	502.4	3,556.6	0.0	0.0
99.83	Top - Section 2	17.1	490.6					0.0	96.6	17.1	587.2	0.0	0.0
100.00		43.8	20.4					0.0	8.8	43.8	29.1	0.0	0.0
105.00		84.1	601.6					0.0	263.4	84.1	864.9	0.0	0.0
110.00		66.4	583.5					0.0	263.4	66.4	846.8	0.0	0.0
113.00	Appurtenance(s)	40.9	341.4	91.1	0.0	91.1	79.2	0.0	158.0	132.0	578.6	0.0	0.0
115.00		56.4	224.0					0.0	95.5	56.4	319.5	0.0	0.0
120.00		63.8	547.3					0.0	238.8	63.8	786.0	0.0	0.0
123.00	Appurtenance(s)	39.3	319.7	503.0	0.0	265.9	1,432.5	0.0	143.3	542.3	1,895.4	0.0	0.0
125.00		54.0	209.5					0.0	72.6	54.0	282.1	0.0	0.0
130.00		75.9	511.1					0.0	181.5	75.9	692.6	0.0	0.0
135.00		52.2	493.0					0.0	181.5	52.2	674.5	0.0	0.0
137.00	Appurtenance(s)	22.0	192.1	1,244.6	0.0	804.2	3,914.6	0.0	72.6	1,266.6	4,179.3	0.0	0.0
138.00	Appurtenance(s)	21.8	95.0	49.5	0.0	49.5	231.0	0.0	15.2	71.2	341.1	0.0	0.0
140.00		49.9	187.8					0.0	0.0	49.9	187.8	0.0	0.0
145.00		55.6	456.7					0.0	0.0	55.6	456.7	0.0	0.0
147.90		20.2	256.6					0.0	0.0	20.2	256.6	0.0	0.0
147.92		0.1	1.5					0.0	0.0	0.1	1.5	0.0	0.0
									Totals:	5,969.43	46,091.9	0.00	0.00

 © 2007 - 2019 by ATC IP LLC. All rights reserved.

Load Case: 1.0D + 1.0W Serviceability 60 mph 22 Iterations

Gust Response Factor :1.10 Wind Importance Factor 1.00
Dead Load Factor :1.00
Wind Load Factor :1.00

Calculated Forces1

Seg Elev (ft)	Pu FY (-) (kips)	Vu FX (-) (kips)	Tu MY (ft-kips)	Mu MZ (ft-kips)	Mu MX (ft-kips)	Resultant Moment (ft-kips)	phi Pn (kips)	phi Vn (kips)	phi Tn (ft-kips)	phi Mn (ft-kips)	Total Deflect (in)	Rotation (deg)	Ratio
0.00	-48.27	-6.63	0.00	-695.36	0.00	695.36	4,345.86	2,172.93	10,048.4	5,031.69	0.00	0.00	0.149
5.00	-47.01	-6.57	0.00	-662.20	0.00	662.20	4,297.95	2,148.97	9,746.71	4,880.60	0.02	-0.04	0.147
10.00	-45.58	-6.51	0.00	-629.35	0.00	629.35	4,248.67	2,124.33	9,446.20	4,730.12	0.08	-0.07	0.144
15.00	-44.17	-6.44	0.00	-596.82	0.00	596.82	4,198.03	2,099.01	9,147.09	4,580.35	0.17	-0.11	0.141
20.00	-42.77	-6.38	0.00	-564.60	0.00	564.60	4,146.02	2,073.01	8,849.58	4,431.37	0.31	-0.15	0.138
25.00	-41.41	-6.31	0.00	-532.72	0.00	532.72	4,092.65	2,046.33	8,553.84	4,283.28	0.48	-0.18	0.134
30.00	-40.06	-6.25	0.00	-501.15	0.00	501.15	4,037.92	2,018.96	8,260.05	4,136.16	0.69	-0.22	0.131
35.00	-38.74	-6.19	0.00	-469.89	0.00	469.89	3,981.82	1,990.91	7,968.40	3,990.12	0.94	-0.26	0.128
40.00	-37.44	-6.12	0.00	-438.96	0.00	438.96	3,924.36	1,962.18	7,679.06	3,845.24	1.23	-0.30	0.124
45.00	-36.16	-6.07	0.00	-408.37	0.00	408.37	3,865.53	1,932.77	7,392.22	3,701.60	1.56	-0.33	0.120
46.83	-35.70	-6.03	0.00	-397.25	0.00	397.25	3,843.62	1,921.81	7,287.71	3,649.27	1.69	-0.35	0.118
50.00	-34.30	-5.98	0.00	-378.14	0.00	378.14	3,805.35	1,902.67	7,108.06	3,559.31	1.93	-0.37	0.115
53.00	-33.00	-5.94	0.00	-360.20	0.00	360.20	3,811.37	1,905.68	7,136.09	3,573.35	2.17	-0.39	0.109
55.00	-32.50	-5.89	0.00	-348.32	0.00	348.32	3,786.97	1,893.48	7,023.10	3,516.77	2.34	-0.41	0.108
60.00	-31.28	-5.81	0.00	-318.89	0.00	318.89	3,725.00	1,862.50	6,742.70	3,376.36	2.78	-0.44	0.103
65.00	-30.07	-5.72	0.00	-289.86	0.00	289.86	3,661.68	1,830.84	6,465.40	3,237.50	3.26	-0.47	0.098
70.00	-28.88	-5.64	0.00	-261.24	0.00	261.24	3,596.99	1,798.49	6,191.38	3,100.29	3.78	-0.51	0.092
75.00	-27.72	-5.56	0.00	-233.04	0.00	233.04	3,530.94	1,765.47	5,920.82	2,964.81	4.33	-0.54	0.086
79.00	-24.14	-4.75	0.00	-210.22	0.00	210.22	3,477.11	1,738.56	5,706.98	2,857.73	4.79	-0.56	0.081
80.00	-23.91	-4.71	0.00	-205.46	0.00	205.46	3,463.52	1,731.76	5,653.90	2,831.15	4.91	-0.57	0.079
85.00	-22.81	-4.63	0.00	-181.94	0.00	181.94	3,394.74	1,697.37	5,390.81	2,699.41	5.52	-0.60	0.074
89.00	-21.62	-4.35	0.00	-163.21	0.00	163.21	3,338.73	1,669.37	5,183.21	2,595.46	6.03	-0.62	0.069
90.00	-21.40	-4.31	0.00	-158.86	0.00	158.86	3,324.59	1,662.30	5,131.72	2,569.68	6.16	-0.63	0.068
93.00	-19.10	-4.11	0.00	-145.92	0.00	145.92	3,271.77	1,635.89	4,962.98	2,485.18	6.56	-0.64	0.065
94.92	-18.70	-4.09	0.00	-138.05	0.00	138.05	3,235.40	1,617.70	4,852.71	2,429.96	6.82	-0.65	0.063
95.00	-18.67	-4.06	0.00	-137.71	0.00	137.71	3,233.82	1,616.91	4,847.95	2,427.58	6.83	-0.65	0.063
98.00	-15.12	-3.52	0.00	-125.29	0.00	125.29	3,176.90	1,588.45	4,677.94	2,342.45	7.25	-0.67	0.058
99.83	-14.54	-3.50	0.00	-118.83	0.00	118.83	2,561.71	1,280.85	3,809.78	1,907.72	7.51	-0.68	0.068
100.00	-14.51	-3.46	0.00	-118.25	0.00	118.25	2,559.94	1,279.97	3,803.37	1,904.51	7.53	-0.68	0.068
105.00	-13.64	-3.37	0.00	-100.95	0.00	100.95	2,506.36	1,253.18	3,612.41	1,808.89	8.26	-0.71	0.061
110.00	-12.79	-3.30	0.00	-84.09	0.00	84.09	2,451.42	1,225.71	3,424.31	1,714.70	9.01	-0.73	0.054
113.00	-12.22	-3.16	0.00	-74.10	0.00	74.10	2,417.79	1,208.90	3,312.90	1,658.91	9.47	-0.74	0.050
115.00	-11.90	-3.10	0.00	-67.78	0.00	67.78	2,395.11	1,197.55	3,239.25	1,622.03	9.79	-0.75	0.047
120.00	-11.11	-3.03	0.00	-52.26	0.00	52.26	2,337.43	1,168.72	3,057.41	1,530.98	10.59	-0.77	0.039
123.00	-9.22	-2.47	0.00	-42.89	0.00	42.89	2,302.17	1,151.09	2,949.92	1,477.15	11.07	-0.78	0.033
125.00	-8.94	-2.41	0.00	-37.96	0.00	37.96	2,271.18	1,135.59	2,869.84	1,437.05	11.40	-0.79	0.030
130.00	-8.25	-2.33	0.00	-25.91	0.00	25.91	2,192.12	1,096.06	2,672.56	1,338.27	12.23	-0.80	0.023
135.00	-7.58	-2.27	0.00	-14.28	0.00	14.28	2,113.07	1,056.53	2,482.31	1,243.00	13.08	-0.81	0.015
137.00	-3.41	-0.94	0.00	-8.95	0.00	8.95	2,081.44	1,040.72	2,408.17	1,205.88	13.42	-0.81	0.009
138.00	-3.07	-0.86	0.00	-7.96	0.00	7.96	2,065.63	1,032.82	2,371.53	1,187.53	13.59	-0.81	0.008
140.00	-2.89	-0.81	0.00	-6.23	0.00	6.23	2,034.01	1,017.00	2,299.08	1,151.25	13.93	-0.81	0.007
145.00	-2.43	-0.75	0.00	-2.17	0.00	2.17	1,954.95	977.48	2,122.87	1,063.02	14.78	-0.82	0.003
147.90	0.00	0.00	0.00	0.00	0.00	0.00	1,909.10	954.55	2,023.89	1,013.45	15.27	-0.82	0.000

© 2007 - 2019 by ATC IP LLC. All rights reserved.

Load Case: 1.0D + 1.0W Serviceability 60 mph 22 Iterations

Gust Response Factor :1.10 Wind Importance Factor 1.00
Dead Load Factor :1.00
Wind Load Factor :1.00

147.92	0.00	0.00	0.00	0.00	0.00	0.00	1,908.83	954.42	2,023.32	1,013.16	15.28	-0.82	0.000

 © 2007 - 2019 by ATC IP LLC. All rights reserved.

Equivalent Lateral Forces Method Analysis

(Based on ASCE7-10 Chapters 11, 12, 15)

Spectral Response Acceleration for Short Period (S_s):	0.18	
Spectral Response Acceleration at 1.0 Second Period (S_1):	0.06	
Long-Period Transition Period (T_L):	6	
Importance Factor (I_E):	1.00	
Site Coefficient F_a:	1.60	
Site Coeffiecient F_v:	2.40	
Response Modification Coefficient (R):	1.50	
Design Spectral Response Acceleration at Short Period (S_{ds}):	0.19	
Design Spectral Response Acceleration at 1.0 Second Period (S_{d1}):	0.10	
Seismic Response Coefficient (C_s):	0.03	
Upper Limit C_s	0.03	
Lower Limit C_s	0.03	
Period based on Rayleigh Method (sec):	2.22	
Redundancy Factor (p):	1.00	
Seismic Force Distribution Exponent (k):	1.86	
Total Unfactored Dead Load:	48.28	k
Seismic Base Shear (E):	1.48	k

Load Case (1.2 + 0.2Sds) * DL + E ELFM Seismic Equivalent Lateral Forces Method

Segment	Height Above Base (ft)	Weight (lb)	W_z (lb-ft)	C_{vx}	Horizontal Force (lb)	Vertical Force (lb)
43	147.91	1	16	0.000	0	2
42	146.45	257	2,739	0.014	20	318
41	142.50	457	4,633	0.023	34	566
40	139.00	188	1,819	0.009	13	233
39	137.50	110	1,045	0.005	8	136
38	136.00	265	2,462	0.012	18	328
37	132.50	674	5,975	0.029	44	835
36	127.50	693	5,712	0.028	42	858
35	124.00	282	2,209	0.011	16	349
34	121.50	463	3,491	0.017	26	573
33	117.50	786	5,569	0.027	41	974
32	114.00	319	2,140	0.011	16	396
31	111.50	499	3,210	0.016	23	619
30	107.50	847	5,085	0.025	37	1,049
29	102.50	865	4,753	0.023	35	1,071
28	99.92	29	153	0.001	1	36
27	98.92	587	3,020	0.015	22	727
26	96.50	987	4,847	0.024	35	1,222
25	94.96	28	132	0.001	1	34
24	93.96	396	1,850	0.009	14	490
23	91.50	626	2,785	0.014	20	775
22	89.50	214	914	0.005	7	265
21	87.00	868	3,515	0.017	26	1,075

© 2007 - 2019 by ATC IP LLC. All rights reserved.

20	82.50	1,104	4,052	0.020	30	1,368
19	79.50	223	765	0.004	6	277
18	77.00	913	2,947	0.015	22	1,131
17	72.50	1,161	3,349	0.017	25	1,438
16	67.50	1,182	2,988	0.015	22	1,464
15	62.50	1,204	2,637	0.013	19	1,491
14	57.50	1,226	2,299	0.011	17	1,518
13	54.00	496	828	0.004	6	615
12	51.50	1,300	1,986	0.010	15	1,610
11	48.42	1,389	1,892	0.009	14	1,720
10	45.92	462	571	0.003	4	573
9	42.50	1,276	1,363	0.007	10	1,580
8	37.50	1,297	1,099	0.005	8	1,607
7	32.50	1,319	856	0.004	6	1,634
6	27.50	1,341	638	0.003	5	1,661
5	22.50	1,363	446	0.002	3	1,688
4	17.50	1,385	284	0.001	2	1,716
3	12.50	1,407	154	0.001	1	1,743
2	7.50	1,429	61	0.000	0	1,769
1	2.50	1,261	7	0.000	0	1,562
Decibel DB844H90E-XY	147.90	56	609	0.003	4	69
Andrew 844G65VTZASX	147.90	128	1,391	0.007	10	159
Flat Platform w/ Han	147.90	2,000	21,740	0.107	159	2,477
Ericsson RRUS-32 (77	138.00	231	2,207	0.011	16	286
Powerwave Allgon LGP	137.00	33	311	0.002	2	41
Powerwave Allgon 702	137.00	13	124	0.001	1	16
Powerwave Allgon LGP	137.00	85	798	0.004	6	105
Raycap DC6-48-60-18-	137.00	40	377	0.002	3	50
Ericsson RRUS 4478 B	137.00	178	1,680	0.008	12	221
Raycap DC6-48-60-18-	137.00	16	151	0.001	1	20
Ericsson RRUS 11 (Ba	137.00	165	1,556	0.008	11	204
Ericsson RRUS 32 B66	137.00	152	1,434	0.007	10	188
Ericsson RRUS 32 B2	137.00	159	1,499	0.007	11	197
Ericsson RRUS-32 (77	137.00	231	2,178	0.011	16	286
Powerwave Allgon 775	137.00	81	764	0.004	6	100
KMW AM-X-CD-16-65-00	137.00	97	914	0.005	7	120
Quintel QS66512-3 (1	137.00	224	2,112	0.010	15	277
Andrew SBNH-1D6565C	137.00	66	623	0.003	5	82
CCI TPA-65R-LCUUUU-H	137.00	82	769	0.004	6	101
Kathrein Scala 80010	137.00	293	2,760	0.014	20	363
Flat Platform w/ Han	137.00	2,000	18,855	0.093	138	2,477
Kathrein Scala Smart	123.00	10	76	0.000	1	12
Ericsson KRY 112 144	123.00	33	255	0.001	2	41
Ericsson KRY 112 489	123.00	46	356	0.002	3	57
Ericsson AIR 32 B4A-	123.00	317	2,449	0.012	18	393
RFS APX16DWV-16DWVS-	123.00	122	942	0.005	7	151
Round T-Arms	123.00	750	5,786	0.029	42	929
Andrew LNX-6515DS-VT	123.00	154	1,187	0.006	9	191
RFS APXV18-206517	113.00	79	522	0.003	4	98
RFS IBC1900BB-1	98.00	66	334	0.002	2	82
RFS IBC1900HG-2A	98.00	66	334	0.002	2	82
Alcatel-Lucent 800 M	98.00	64	324	0.002	2	79
Alcatel-Lucent 800 M	98.00	128	647	0.003	5	159
Alcatel-Lucent 4x40W	98.00	88	445	0.002	3	109
Alcatel-Lucent 4x40W	98.00	176	890	0.004	7	218
Nokia 2.5G MAA - AAH	98.00	311	1,571	0.008	11	385
RFS APXVSPP18-C-A20	98.00	171	864	0.004	6	212
Round Low Profile Pl	98.00	1,500	7,583	0.037	55	1,858
Side Arms	93.00	1,680	7,705	0.038	56	2,081
DragonWave Horizon C	89.00	32	134	0.001	1	39
NextNet BTS-2500	89.00	105	444	0.002	3	130
Argus LLPX310R	89.00	86	363	0.002	3	106
DragonWave A-ANT-18G	89.00	54	229	0.001	2	67
DragonWave A-ANT-11G	89.00	48	201	0.001	1	59

 © 2007 - 2019 by ATC IP LLC. All rights reserved.

Alcatel-Lucent RRH2X	79.00	132	447	0.002	3	163
Alcatel-Lucent RRH2x	79.00	170	576	0.003	4	211
Alcatel-Lucent RRH2x	79.00	180	609	0.003	4	223
RFS DB-T1-6Z-8AB-0Z	79.00	88	298	0.001	2	109
Commscope SBNHH-1D65	79.00	608	2,060	0.010	15	754
Round Low Profile Pl	79.00	1,500	5,079	0.025	37	1,858
Lucent KS-24019	20.00	4	1	0.000	0	5
		48,276	202,856	1.000	1,484	59,795

Load Case (0.9 - 0.2Sds) * DL + E ELFM Seismic (Reduced DL) Equivalent Lateral Forces Method

Segment	Height Above Base (ft)	Weight (lb)	W_z (lb-ft)	C_{vx}	Horizontal Force (lb)	Vertical Force (lb)
43	147.91	1	16	0.000	0	1
42	146.45	257	2,739	0.014	20	221
41	142.50	457	4,633	0.023	34	393
40	139.00	188	1,819	0.009	13	162
39	137.50	110	1,045	0.005	8	95
38	136.00	265	2,462	0.012	18	228
37	132.50	674	5,975	0.029	44	581
36	127.50	693	5,712	0.028	42	597
35	124.00	282	2,209	0.011	16	243
34	121.50	463	3,491	0.017	26	399
33	117.50	786	5,569	0.027	41	677
32	114.00	319	2,140	0.011	16	275
31	111.50	499	3,210	0.016	23	430
30	107.50	847	5,085	0.025	37	729
29	102.50	865	4,753	0.023	35	745
28	99.92	29	153	0.001	1	25
27	98.92	587	3,020	0.015	22	506
26	96.50	987	4,847	0.024	35	850
25	94.96	28	132	0.001	1	24
24	93.96	396	1,850	0.009	14	341
23	91.50	626	2,785	0.014	20	539
22	89.50	214	914	0.005	7	184
21	87.00	868	3,515	0.017	26	747
20	82.50	1,104	4,052	0.020	30	951
19	79.50	223	765	0.004	6	192
18	77.00	913	2,947	0.015	22	786
17	72.50	1,161	3,349	0.017	25	1,000
16	67.50	1,182	2,988	0.015	22	1,018
15	62.50	1,204	2,637	0.013	19	1,037
14	57.50	1,226	2,299	0.011	17	1,056
13	54.00	496	828	0.004	6	428
12	51.50	1,300	1,986	0.010	15	1,120
11	48.42	1,389	1,892	0.009	14	1,196
10	45.92	462	571	0.003	4	398
9	42.50	1,276	1,363	0.007	10	1,099
8	37.50	1,297	1,099	0.005	8	1,118
7	32.50	1,319	856	0.004	6	1,136
6	27.50	1,341	638	0.003	5	1,155
5	22.50	1,363	446	0.002	3	1,174
4	17.50	1,385	284	0.001	2	1,193
3	12.50	1,407	154	0.001	1	1,212
2	7.50	1,429	61	0.000	0	1,231
1	2.50	1,261	7	0.000	0	1,086
Decibel DB844H90E-XY	147.90	56	609	0.003	4	48
Andrew 844G65VTZASX	147.90	128	1,391	0.007	10	110
Flat Platform w/ Han	147.90	2,000	21,740	0.107	159	1,723
Ericsson RRUS-32 (77	138.00	231	2,207	0.011	16	199

© 2007 - 2019 by ATC IP LLC. All rights reserved.

Powerwave Allgon LGP	137.00	33	311	0.002	2	28
Powerwave Allgon 702	137.00	13	124	0.001	1	11
Powerwave Allgon LGP	137.00	85	798	0.004	6	73
Raycap DC6-48-60-18-	137.00	40	377	0.002	3	34
Ericsson RRUS 4478 B	137.00	178	1,680	0.008	12	153
Raycap DC6-48-60-18-	137.00	16	151	0.001	1	14
Ericsson RRUS 11 (Ba	137.00	165	1,556	0.008	11	142
Ericsson RRUS 32 B66	137.00	152	1,434	0.007	10	131
Ericsson RRUS 32 B2	137.00	159	1,499	0.007	11	137
Ericsson RRUS-32 (77	137.00	231	2,178	0.011	16	199
Powerwave Allgon 775	137.00	81	764	0.004	6	70
KMW AM-X-CD-16-65-00	137.00	97	914	0.005	7	84
Quintel QS66512-3 (1	137.00	224	2,112	0.010	15	193
Andrew SBNH-1D6565C	137.00	66	623	0.003	5	57
CCI TPA-65R-LCUUUU-H	137.00	82	769	0.004	6	70
Kathrein Scala 80010	137.00	293	2,760	0.014	20	252
Flat Platform w/ Han	137.00	2,000	18,855	0.093	138	1,723
Kathrein Scala Smart	123.00	10	76	0.000	1	9
Ericsson KRY 112 144	123.00	33	255	0.001	2	28
Ericsson KRY 112 489	123.00	46	356	0.002	3	40
Ericsson AIR 32 B4A-	123.00	317	2,449	0.012	18	273
RFS APX16DWV-16DWVS-	123.00	122	942	0.005	7	105
Round T-Arms	123.00	750	5,786	0.029	42	646
Andrew LNX-6515DS-VT	123.00	154	1,187	0.006	9	133
RFS APXV18-206517	113.00	79	522	0.003	4	68
RFS IBC1900BB-1	98.00	66	334	0.002	2	57
RFS IBC1900HG-2A	98.00	66	334	0.002	2	57
Alcatel-Lucent 800 M	98.00	64	324	0.002	2	55
Alcatel-Lucent 800 M	98.00	128	647	0.003	5	110
Alcatel-Lucent 4x40W	98.00	88	445	0.002	3	76
Alcatel-Lucent 4x40W	98.00	176	890	0.004	7	152
Nokia 2.5G MAA - AAH	98.00	311	1,571	0.008	11	268
RFS APXVSPP18-C-A20	98.00	171	864	0.004	6	147
Round Low Profile Pl	98.00	1,500	7,583	0.037	55	1,292
Side Arms	93.00	1,680	7,705	0.038	56	1,447
DragonWave Horizon C	89.00	32	134	0.001	1	27
NextNet BTS-2500	89.00	105	444	0.002	3	90
Argus LLPX310R	89.00	86	363	0.002	3	74
DragonWave A-ANT-18G	89.00	54	229	0.001	2	47
DragonWave A-ANT-11G	89.00	48	201	0.001	1	41
Alcatel-Lucent RRH2X	79.00	132	447	0.002	3	114
Alcatel-Lucent RRH2x	79.00	170	576	0.003	4	147
Alcatel-Lucent RRH2x	79.00	180	609	0.003	4	155
RFS DB-T1-6Z-8AB-0Z	79.00	88	298	0.001	2	76
Commscope SBNHH-1D65	79.00	608	2,060	0.010	15	524
Round Low Profile Pl	79.00	1,500	5,079	0.025	37	1,292
Lucent KS-24019	20.00	4	1	0.000	0	3
		48,276	202,856	1.000	1,484	41,584

 © 2007 - 2019 by ATC IP LLC. All rights reserved.

Load Case (1.2 + 0.2Sds) * DL + E ELFM Seismic Equivalent Lateral Forces Method

Calculated Forces

Seg Elev (ft)	Pu FY (-) (kips)	Vu FX (-) (kips)	Tu MY (ft-kips)	Mu MZ (ft-kips)	Mu MX (ft-kips)	Resultant Moment (ft-kips)	phi Pn (kips)	phi Vn (kips)	phi Tn (ft-kips)	phi Mn (ft-kips)	Total Deflect (in)	Rotation (deg)	Ratio
0.00	-58.23	-1.49	0.00	-172.90	0.00	172.90	4,345.86	2,172.93	10,048.4	5,031.69	0.00	0.00	0.048
5.00	-56.46	-1.50	0.00	-165.46	0.00	165.46	4,297.95	2,148.97	9,746.71	4,880.60	0.00	-0.01	0.047
10.00	-54.72	-1.50	0.00	-157.97	0.00	157.97	4,248.67	2,124.33	9,446.20	4,730.12	0.02	-0.02	0.046
15.00	-53.00	-1.51	0.00	-150.46	0.00	150.46	4,198.03	2,099.01	9,147.09	4,580.35	0.04	-0.03	0.045
20.00	-51.31	-1.51	0.00	-142.91	0.00	142.91	4,146.02	2,073.01	8,849.58	4,431.37	0.08	-0.04	0.045
25.00	-49.65	-1.52	0.00	-135.34	0.00	135.34	4,092.65	2,046.33	8,553.84	4,283.28	0.12	-0.05	0.044
30.00	-48.02	-1.52	0.00	-127.76	0.00	127.76	4,037.92	2,018.96	8,260.05	4,136.16	0.17	-0.06	0.043
35.00	-46.41	-1.51	0.00	-120.18	0.00	120.18	3,981.82	1,990.91	7,968.40	3,990.12	0.24	-0.07	0.042
40.00	-44.83	-1.51	0.00	-112.61	0.00	112.61	3,924.36	1,962.18	7,679.06	3,845.24	0.31	-0.07	0.041
45.00	-44.26	-1.51	0.00	-105.06	0.00	105.06	3,865.53	1,932.77	7,392.22	3,701.60	0.39	-0.08	0.040
46.83	-42.54	-1.50	0.00	-102.29	0.00	102.29	3,843.62	1,921.81	7,287.71	3,649.27	0.43	-0.09	0.039
50.00	-40.93	-1.48	0.00	-97.55	0.00	97.55	3,805.35	1,902.67	7,108.06	3,559.31	0.49	-0.09	0.038
53.00	-40.31	-1.48	0.00	-93.10	0.00	93.10	3,811.37	1,905.68	7,136.09	3,573.35	0.55	-0.10	0.037
55.00	-38.79	-1.47	0.00	-90.14	0.00	90.14	3,786.97	1,893.48	7,023.10	3,516.77	0.59	-0.10	0.036
60.00	-37.30	-1.45	0.00	-82.82	0.00	82.82	3,725.00	1,862.50	6,742.70	3,376.36	0.70	-0.11	0.035
65.00	-35.84	-1.43	0.00	-75.57	0.00	75.57	3,661.68	1,830.84	6,465.40	3,237.50	0.83	-0.12	0.033
70.00	-34.40	-1.41	0.00	-68.42	0.00	68.42	3,596.99	1,798.49	6,191.38	3,100.29	0.96	-0.13	0.032
75.00	-33.27	-1.39	0.00	-61.39	0.00	61.39	3,530.94	1,765.47	5,920.82	2,964.81	1.10	-0.14	0.030
79.00	-29.67	-1.31	0.00	-55.84	0.00	55.84	3,477.11	1,738.56	5,706.98	2,857.73	1.22	-0.14	0.028
80.00	-28.31	-1.28	0.00	-54.53	0.00	54.53	3,463.52	1,731.76	5,653.90	2,831.15	1.25	-0.15	0.027
85.00	-27.23	-1.25	0.00	-48.15	0.00	48.15	3,394.74	1,697.37	5,390.81	2,699.41	1.40	-0.15	0.026
89.00	-26.56	-1.24	0.00	-43.14	0.00	43.14	3,338.73	1,669.37	5,183.21	2,595.46	1.54	-0.16	0.025
90.00	-25.79	-1.21	0.00	-41.90	0.00	41.90	3,324.59	1,662.30	5,131.72	2,569.68	1.57	-0.16	0.024
93.00	-23.22	-1.14	0.00	-38.26	0.00	38.26	3,271.77	1,635.89	4,962.98	2,485.18	1.67	-0.17	0.022
94.92	-23.18	-1.14	0.00	-36.08	0.00	36.08	3,235.40	1,617.70	4,852.71	2,429.96	1.74	-0.17	0.022
95.00	-21.96	-1.10	0.00	-35.98	0.00	35.98	3,233.82	1,616.91	4,847.95	2,427.58	1.74	-0.17	0.022
98.00	-18.05	-0.97	0.00	-32.69	0.00	32.69	3,176.90	1,588.45	4,677.94	2,342.45	1.85	-0.17	0.020
99.83	-18.02	-0.97	0.00	-30.90	0.00	30.90	2,561.71	1,280.85	3,809.78	1,907.72	1.92	-0.17	0.023
100.00	-16.94	-0.93	0.00	-30.74	0.00	30.74	2,559.94	1,279.97	3,803.37	1,904.51	1.92	-0.17	0.023
105.00	-15.90	-0.90	0.00	-26.07	0.00	26.07	2,506.36	1,253.18	3,612.41	1,808.89	2.11	-0.18	0.021
110.00	-15.28	-0.87	0.00	-21.59	0.00	21.59	2,451.42	1,225.71	3,424.31	1,714.70	2.30	-0.19	0.019
113.00	-14.78	-0.85	0.00	-18.98	0.00	18.98	2,417.79	1,208.90	3,312.90	1,658.91	2.42	-0.19	0.018
115.00	-13.81	-0.81	0.00	-17.28	0.00	17.28	2,395.11	1,197.55	3,239.25	1,622.03	2.50	-0.19	0.016
120.00	-13.24	-0.78	0.00	-13.24	0.00	13.24	2,337.43	1,168.72	3,057.41	1,530.98	2.71	-0.20	0.014
123.00	-11.11	-0.68	0.00	-10.90	0.00	10.90	2,302.17	1,151.09	2,949.92	1,477.15	2.83	-0.20	0.012
125.00	-10.26	-0.63	0.00	-9.54	0.00	9.54	2,271.18	1,135.59	2,869.84	1,437.05	2.92	-0.20	0.011
130.00	-9.42	-0.59	0.00	-6.38	0.00	6.38	2,192.12	1,096.06	2,672.56	1,338.27	3.13	-0.21	0.009
135.00	-9.09	-0.57	0.00	-3.44	0.00	3.44	2,113.07	1,056.53	2,482.31	1,243.00	3.35	-0.21	0.007
137.00	-4.11	-0.27	0.00	-2.31	0.00	2.31	2,081.44	1,040.72	2,408.17	1,205.88	3.43	-0.21	0.004
138.00	-3.59	-0.24	0.00	-2.04	0.00	2.04	2,065.63	1,032.82	2,371.53	1,187.53	3.48	-0.21	0.003
140.00	-3.02	-0.20	0.00	-1.56	0.00	1.56	2,034.01	1,017.00	2,299.08	1,151.25	3.57	-0.21	0.003
145.00	-2.71	-0.18	0.00	-0.53	0.00	0.53	1,954.95	977.48	2,122.87	1,063.02	3.79	-0.21	0.002
147.90	0.00	0.00	0.00	0.00	0.00	0.00	1,909.10	954.55	2,023.89	1,013.45	3.91	-0.21	0.000
147.92	0.00	0.00	0.00	0.00	0.00	0.00	1,908.83	954.42	2,023.32	1,013.16	3.91	-0.21	0.000

 © 2007 - 2019 by ATC IP LLC. All rights reserved.

Load Case (0.9 - 0.2Sds) * DL + E ELFM Seismic (Reduced DL) Equivalent Lateral Forces Method

Calculated Forces

Seg Elev (ft)	Pu FY (-) (kips)	Vu FX (-) (kips)	Tu MY (ft-kips)	Mu MZ (ft-kips)	Mu MX (ft-kips)	Resultant Moment (ft-kips)	phi Pn (kips)	phi Vn (kips)	phi Tn (ft-kips)	phi Mn (ft-kips)	Total Deflect (in)	Rotation (deg)	Ratio
0.00	-40.50	-1.49	0.00	-170.57	0.00	170.57	4,345.86	2,172.93	10,048.4	5,031.69	0.00	0.00	0.043
5.00	-39.27	-1.49	0.00	-163.13	0.00	163.13	4,297.95	2,148.97	9,746.71	4,880.60	0.00	-0.01	0.043
10.00	-38.05	-1.50	0.00	-155.67	0.00	155.67	4,248.67	2,124.33	9,446.20	4,730.12	0.02	-0.02	0.042
15.00	-36.86	-1.50	0.00	-148.19	0.00	148.19	4,198.03	2,099.01	9,147.09	4,580.35	0.04	-0.03	0.041
20.00	-35.68	-1.50	0.00	-140.69	0.00	140.69	4,146.02	2,073.01	8,849.58	4,431.37	0.08	-0.04	0.040
25.00	-34.53	-1.50	0.00	-133.18	0.00	133.18	4,092.65	2,046.33	8,553.84	4,283.28	0.12	-0.05	0.040
30.00	-33.39	-1.50	0.00	-125.67	0.00	125.67	4,037.92	2,018.96	8,260.05	4,136.16	0.17	-0.05	0.039
35.00	-32.27	-1.50	0.00	-118.17	0.00	118.17	3,981.82	1,990.91	7,968.40	3,990.12	0.23	-0.06	0.038
40.00	-31.18	-1.49	0.00	-110.69	0.00	110.69	3,924.36	1,962.18	7,679.06	3,845.24	0.31	-0.07	0.037
45.00	-30.78	-1.49	0.00	-103.23	0.00	103.23	3,865.53	1,932.77	7,392.22	3,701.60	0.39	-0.08	0.036
46.83	-29.58	-1.48	0.00	-100.51	0.00	100.51	3,843.62	1,921.81	7,287.71	3,649.27	0.42	-0.09	0.035
50.00	-28.46	-1.46	0.00	-95.83	0.00	95.83	3,805.35	1,902.67	7,108.06	3,559.31	0.48	-0.09	0.034
53.00	-28.03	-1.46	0.00	-91.44	0.00	91.44	3,811.37	1,905.68	7,136.09	3,573.35	0.54	-0.10	0.033
55.00	-26.98	-1.44	0.00	-88.53	0.00	88.53	3,786.97	1,893.48	7,023.10	3,516.77	0.58	-0.10	0.032
60.00	-25.94	-1.42	0.00	-81.32	0.00	81.32	3,725.00	1,862.50	6,742.70	3,376.36	0.69	-0.11	0.031
65.00	-24.92	-1.40	0.00	-74.19	0.00	74.19	3,661.68	1,830.84	6,465.40	3,237.50	0.81	-0.12	0.030
70.00	-23.92	-1.38	0.00	-67.17	0.00	67.17	3,596.99	1,798.49	6,191.38	3,100.29	0.94	-0.13	0.028
75.00	-23.13	-1.36	0.00	-60.26	0.00	60.26	3,530.94	1,765.47	5,920.82	2,964.81	1.08	-0.14	0.027
79.00	-20.64	-1.28	0.00	-54.82	0.00	54.82	3,477.11	1,738.56	5,706.98	2,857.73	1.20	-0.14	0.025
80.00	-19.68	-1.25	0.00	-53.53	0.00	53.53	3,463.52	1,731.76	5,653.90	2,831.15	1.23	-0.14	0.025
85.00	-18.94	-1.23	0.00	-47.26	0.00	47.26	3,394.74	1,697.37	5,390.81	2,699.41	1.38	-0.15	0.023
89.00	-18.47	-1.21	0.00	-42.35	0.00	42.35	3,338.73	1,669.37	5,183.21	2,595.46	1.51	-0.16	0.022
90.00	-17.93	-1.19	0.00	-41.14	0.00	41.14	3,324.59	1,662.30	5,131.72	2,569.68	1.54	-0.16	0.021
93.00	-16.15	-1.12	0.00	-37.56	0.00	37.56	3,271.77	1,635.89	4,962.98	2,485.18	1.64	-0.16	0.020
94.92	-16.12	-1.12	0.00	-35.42	0.00	35.42	3,235.40	1,617.70	4,852.71	2,429.96	1.71	-0.17	0.020
95.00	-15.27	-1.08	0.00	-35.33	0.00	35.33	3,233.82	1,616.91	4,847.95	2,427.58	1.71	-0.17	0.019
98.00	-12.55	-0.95	0.00	-32.09	0.00	32.09	3,176.90	1,588.45	4,677.94	2,342.45	1.82	-0.17	0.018
99.83	-12.53	-0.95	0.00	-30.34	0.00	30.34	2,561.71	1,280.85	3,809.78	1,907.72	1.88	-0.17	0.021
100.00	-11.78	-0.92	0.00	-30.18	0.00	30.18	2,559.94	1,279.97	3,803.37	1,904.51	1.89	-0.17	0.020
105.00	-11.05	-0.88	0.00	-25.60	0.00	25.60	2,506.36	1,253.18	3,612.41	1,808.89	2.07	-0.18	0.019
110.00	-10.62	-0.86	0.00	-21.20	0.00	21.20	2,451.42	1,225.71	3,424.31	1,714.70	2.26	-0.18	0.017
113.00	-10.28	-0.84	0.00	-18.63	0.00	18.63	2,417.79	1,208.90	3,312.90	1,658.91	2.38	-0.19	0.015
115.00	-9.60	-0.79	0.00	-16.96	0.00	16.96	2,395.11	1,197.55	3,239.25	1,622.03	2.46	-0.19	0.014
120.00	-9.20	-0.77	0.00	-13.00	0.00	13.00	2,337.43	1,168.72	3,057.41	1,530.98	2.66	-0.20	0.012
123.00	-7.73	-0.66	0.00	-10.70	0.00	10.70	2,302.17	1,151.09	2,949.92	1,477.15	2.79	-0.20	0.011
125.00	-7.13	-0.62	0.00	-9.37	0.00	9.37	2,271.18	1,135.59	2,869.84	1,437.05	2.87	-0.20	0.010
130.00	-6.55	-0.58	0.00	-6.26	0.00	6.26	2,192.12	1,096.06	2,672.56	1,338.27	3.08	-0.20	0.008
135.00	-6.32	-0.56	0.00	-3.38	0.00	3.38	2,113.07	1,056.53	2,482.31	1,243.00	3.29	-0.20	0.006
137.00	-2.86	-0.27	0.00	-2.27	0.00	2.27	2,081.44	1,040.72	2,408.17	1,205.88	3.38	-0.20	0.003
138.00	-2.50	-0.24	0.00	-2.00	0.00	2.00	2,065.63	1,032.82	2,371.53	1,187.53	3.42	-0.20	0.003
140.00	-2.10	-0.20	0.00	-1.53	0.00	1.53	2,034.01	1,017.00	2,299.08	1,151.25	3.51	-0.21	0.002
145.00	-1.88	-0.18	0.00	-0.52	0.00	0.52	1,954.95	977.48	2,122.87	1,063.02	3.72	-0.21	0.001
147.90	0.00	0.00	0.00	0.00	0.00	0.00	1,909.10	954.55	2,023.89	1,013.45	3.85	-0.21	0.000
147.92	0.00	0.00	0.00	0.00	0.00	0.00	1,908.83	954.42	2,023.32	1,013.16	3.85	-0.21	0.000

 © 2007 - 2019 by ATC IP LLC. All rights reserved.

Equivalent Modal Analysis Method

(Based on ASCE7-10 Chapters 11, 12 & 15 and ANSI/TIA-G, section 2.7)

Spectral Response Acceleration for Short Period (S_s):	0.18
Spectral Response Acceleration at 1.0 Second Period (S_1):	0.06
Importance Factor (I_E):	1.00
Site Coefficient F_a:	1.60
Site Coefficient F_v	2.40
Response Modification Coefficient (R):	1.50
Design Spectral Response Acceleration at Short Period (S_{ds}):	0.19
Desing Spectral Response Acceleration at 1.0 Second Period (S_{d1}):	0.10
Period Based on Rayleigh Method (sec):	2.22
Redundancy Factor (p):	1.00

Load Case (1.2 + 0.2Sds) * DL + E EMAM Seismic Equivalent Modal Analysis Method

Segment	Height Above Base (ft)	Weight (lb)	a	b	c	Saz	Horizontal Force (lb)	Vertical Force (lb)
43	147.91	1	1.890	1.979	1.140	0.368	0	2
42	146.45	257	1.853	1.789	1.071	0.344	59	318
41	142.50	457	1.754	1.338	0.900	0.284	86	566
40	139.00	188	1.669	1.008	0.768	0.235	29	233
39	137.50	110	1.633	0.885	0.716	0.215	16	136
38	136.00	265	1.598	0.771	0.667	0.196	35	328
37	132.50	674	1.517	0.543	0.563	0.154	69	835
36	127.50	693	1.404	0.292	0.436	0.102	47	858
35	124.00	282	1.328	0.162	0.362	0.071	13	349
34	121.50	463	1.275	0.088	0.315	0.051	16	573
33	117.50	786	1.193	-0.002	0.249	0.023	12	974
32	114.00	319	1.123	-0.056	0.201	0.003	1	396
31	111.50	499	1.074	-0.083	0.171	-0.009	-3	619
30	107.50	847	0.998	-0.110	0.130	-0.024	-13	1,049
29	102.50	865	0.908	-0.122	0.090	-0.035	-20	1,071
28	99.92	29	0.862	-0.120	0.074	-0.038	-1	36
27	98.92	587	0.845	-0.119	0.068	-0.038	-15	727
26	96.50	987	0.804	-0.113	0.055	-0.039	-25	1,222
25	94.96	28	0.779	-0.108	0.048	-0.038	-1	34
24	93.96	396	0.763	-0.104	0.044	-0.037	-10	490
23	91.50	626	0.723	-0.094	0.035	-0.033	-14	775
22	89.50	214	0.692	-0.084	0.028	-0.030	-4	265
21	87.00	868	0.654	-0.072	0.022	-0.024	-14	1,075
20	82.50	1,104	0.588	-0.049	0.013	-0.011	-8	1,368
19	79.50	223	0.546	-0.033	0.010	-0.001	0	277
18	77.00	913	0.512	-0.021	0.008	0.007	4	1,131
17	72.50	1,161	0.454	0.000	0.006	0.020	16	1,438
16	67.50	1,182	0.394	0.020	0.007	0.033	26	1,464
15	62.50	1,204	0.337	0.036	0.009	0.041	33	1,491
14	57.50	1,226	0.286	0.048	0.014	0.047	38	1,518
13	54.00	496	0.252	0.055	0.017	0.049	16	615
12	51.50	1,300	0.229	0.059	0.020	0.050	43	1,610
11	48.42	1,389	0.202	0.062	0.023	0.051	47	1,720
10	45.92	462	0.182	0.065	0.026	0.051	16	573

© 2007 - 2019 by ATC IP LLC. All rights reserved.

9	42.50	1,276	0.156	0.067	0.029	0.050	43	1,580
8	37.50	1,297	0.121	0.070	0.034	0.049	42	1,607
7	32.50	1,319	0.091	0.071	0.038	0.048	42	1,634
6	27.50	1,341	0.065	0.072	0.041	0.046	42	1,661
5	22.50	1,363	0.044	0.071	0.042	0.045	41	1,688
4	17.50	1,385	0.026	0.067	0.040	0.042	39	1,716
3	12.50	1,407	0.013	0.059	0.035	0.038	36	1,743
2	7.50	1,429	0.005	0.044	0.025	0.030	29	1,769
1	2.50	1,261	0.001	0.018	0.010	0.014	12	1,562
Decibel DB844H90E-XY	147.90	56	1.890	1.978	1.139	0.368	14	69
Andrew 844G65VTZASX	147.90	128	1.890	1.978	1.139	0.368	31	159
Flat Platform w/ Han	147.90	2,000	1.890	1.978	1.139	0.368	491	2,477
Ericsson RRUS-32 (77	138.00	231	1.645	0.925	0.733	0.221	34	286
Powerwave Allgon LGP	137.00	33	1.621	0.846	0.699	0.208	5	41
Powerwave Allgon 702	137.00	13	1.621	0.846	0.699	0.208	2	16
Powerwave Allgon LGP	137.00	85	1.621	0.846	0.699	0.208	12	105
Raycap DC6-48-60-18-	137.00	40	1.621	0.846	0.699	0.208	6	50
Ericsson RRUS 4478 B	137.00	178	1.621	0.846	0.699	0.208	25	221
Raycap DC6-48-60-18-	137.00	16	1.621	0.846	0.699	0.208	2	20
Ericsson RRUS 11 (Ba	137.00	165	1.621	0.846	0.699	0.208	23	204
Ericsson RRUS 32 B66	137.00	152	1.621	0.846	0.699	0.208	21	188
Ericsson RRUS 32 B2	137.00	159	1.621	0.846	0.699	0.208	22	197
Ericsson RRUS-32 (77	137.00	231	1.621	0.846	0.699	0.208	32	286
Powerwave Allgon 775	137.00	81	1.621	0.846	0.699	0.208	11	100
KMW AM-X-CD-16-65-00	137.00	97	1.621	0.846	0.699	0.208	13	120
Quintel QS66512-3 (1	137.00	224	1.621	0.846	0.699	0.208	31	277
Andrew SBNH-1D6565C	137.00	66	1.621	0.846	0.699	0.208	9	82
CCI TPA-65R-LCUUUU-H	137.00	82	1.621	0.846	0.699	0.208	11	101
Kathrein Scala 80010	137.00	293	1.621	0.846	0.699	0.208	41	363
Flat Platform w/ Han	137.00	2,000	1.621	0.846	0.699	0.208	278	2,477
Kathrein Scala Smart	123.00	10	1.307	0.130	0.342	0.063	0	12
Ericsson KRY 112 144	123.00	33	1.307	0.130	0.342	0.063	1	41
Ericsson KRY 112 489	123.00	46	1.307	0.130	0.342	0.063	2	57
Ericsson AIR 32 B4A-	123.00	317	1.307	0.130	0.342	0.063	13	393
RFS APX16DWV-	123.00	122	1.307	0.130	0.342	0.063	5	151
Round T-Arms	123.00	750	1.307	0.130	0.342	0.063	31	929
Andrew LNX-6515DS-VT	123.00	154	1.307	0.130	0.342	0.063	6	191
RFS APXV18-206517	113.00	79	1.103	-0.068	0.189	-0.002	0	98
RFS IBC1900BB-1	98.00	66	0.830	-0.117	0.063	-0.039	-2	82
RFS IBC1900HG-2A	98.00	66	0.830	-0.117	0.063	-0.039	-2	82
Alcatel-Lucent 800 M	98.00	64	0.830	-0.117	0.063	-0.039	-2	79
Alcatel-Lucent 800 M	98.00	128	0.830	-0.117	0.063	-0.039	-3	159
Alcatel-Lucent 4x40W	98.00	88	0.830	-0.117	0.063	-0.039	-2	109
Alcatel-Lucent 4x40W	98.00	176	0.830	-0.117	0.063	-0.039	-5	218
Nokia 2.5G MAA - AAH	98.00	311	0.830	-0.117	0.063	-0.039	-8	385
RFS APXVSPP18-C-A20	98.00	171	0.830	-0.117	0.063	-0.039	-4	212
Round Low Profile Pl	98.00	1,500	0.830	-0.117	0.063	-0.039	-39	1,858
Side Arms	93.00	1,680	0.747	-0.100	0.040	-0.036	-40	2,081
DragonWave Horizon C	89.00	32	0.684	-0.082	0.027	-0.029	-1	39
NextNet BTS-2500	89.00	105	0.684	-0.082	0.027	-0.029	-2	130
Argus LLPX310R	89.00	86	0.684	-0.082	0.027	-0.029	-2	106
DragonWave A-ANT-18G	89.00	54	0.684	-0.082	0.027	-0.029	-1	67
DragonWave A-ANT-11G	89.00	48	0.684	-0.082	0.027	-0.029	-1	59
Alcatel-Lucent RRH2X	79.00	132	0.539	-0.031	0.009	0.000	0	163
Alcatel-Lucent RRH2x	79.00	170	0.539	-0.031	0.009	0.000	0	211
Alcatel-Lucent RRH2x	79.00	180	0.539	-0.031	0.009	0.000	0	223
RFS DB-T1-6Z-8AB-0Z	79.00	88	0.539	-0.031	0.009	0.000	0	109
Commscope SBNHH-	79.00	608	0.539	-0.031	0.009	0.000	0	754
Round Low Profile Pl	79.00	1,500	0.539	-0.031	0.009	0.000	0	1,858
Lucent KS-24019	20.00	4	0.035	0.069	0.041	0.044	0	5
		48,276	91.875	28.859	28.054	7.222	1,880	59,795

 © 2007 - 2019 by ATC IP LLC. All rights reserved.

Load Case (0.9 - 0.2Sds) * DL + E EMAM Seismic (Reduced DL) Equivalent Modal Analysis Method

Segment	Height Above Base (ft)	Weight (lb)	a	b	c	Saz	Horizontal Force (lb)	Vertical Force (lb)
43	147.91	1	1.890	1.979	1.140	0.368	0	1
42	146.45	257	1.853	1.789	1.071	0.344	59	221
41	142.50	457	1.754	1.338	0.900	0.284	86	393
40	139.00	188	1.669	1.008	0.768	0.235	29	162
39	137.50	110	1.633	0.885	0.716	0.215	16	95
38	136.00	265	1.598	0.771	0.667	0.196	35	228
37	132.50	674	1.517	0.543	0.563	0.154	69	581
36	127.50	693	1.404	0.292	0.436	0.102	47	597
35	124.00	282	1.328	0.162	0.362	0.071	13	243
34	121.50	463	1.275	0.088	0.315	0.051	16	399
33	117.50	786	1.193	-0.002	0.249	0.023	12	677
32	114.00	319	1.123	-0.056	0.201	0.003	1	275
31	111.50	499	1.074	-0.083	0.171	-0.009	-3	430
30	107.50	847	0.998	-0.110	0.130	-0.024	-13	729
29	102.50	865	0.908	-0.122	0.090	-0.035	-20	745
28	99.92	29	0.862	-0.120	0.074	-0.038	-1	25
27	98.92	587	0.845	-0.119	0.068	-0.038	-15	506
26	96.50	987	0.804	-0.113	0.055	-0.039	-25	850
25	94.96	28	0.779	-0.108	0.048	-0.038	-1	24
24	93.96	396	0.763	-0.104	0.044	-0.037	-10	341
23	91.50	626	0.723	-0.094	0.035	-0.033	-14	539
22	89.50	214	0.692	-0.084	0.028	-0.030	-4	184
21	87.00	868	0.654	-0.072	0.022	-0.024	-14	747
20	82.50	1,104	0.588	-0.049	0.013	-0.011	-8	951
19	79.50	223	0.546	-0.033	0.010	-0.001	0	192
18	77.00	913	0.512	-0.021	0.008	0.007	4	786
17	72.50	1,161	0.454	0.000	0.006	0.020	16	1,000
16	67.50	1,182	0.394	0.020	0.007	0.033	26	1,018
15	62.50	1,204	0.337	0.036	0.009	0.041	33	1,037
14	57.50	1,226	0.286	0.048	0.014	0.047	38	1,056
13	54.00	496	0.252	0.055	0.017	0.049	16	428
12	51.50	1,300	0.229	0.059	0.020	0.050	43	1,120
11	48.42	1,389	0.202	0.062	0.023	0.051	47	1,196
10	45.92	462	0.182	0.065	0.026	0.051	16	398
9	42.50	1,276	0.156	0.067	0.029	0.050	43	1,099
8	37.50	1,297	0.121	0.070	0.034	0.049	42	1,118
7	32.50	1,319	0.091	0.071	0.038	0.048	42	1,136
6	27.50	1,341	0.065	0.072	0.041	0.046	42	1,155
5	22.50	1,363	0.044	0.071	0.042	0.045	41	1,174
4	17.50	1,385	0.026	0.067	0.040	0.042	39	1,193
3	12.50	1,407	0.013	0.059	0.035	0.038	36	1,212
2	7.50	1,429	0.005	0.044	0.025	0.030	29	1,231
1	2.50	1,261	0.001	0.018	0.010	0.014	12	1,086
Decibel DB844H90E-XY	147.90	56	1.890	1.978	1.139	0.368	14	48
Andrew 844G65VTZASX	147.90	128	1.890	1.978	1.139	0.368	31	110
Flat Platform w/ Han	147.90	2,000	1.890	1.978	1.139	0.368	491	1,723
Ericsson RRUS-32 (77	138.00	231	1.645	0.925	0.733	0.221	34	199
Powerwave Allgon LGP	137.00	33	1.621	0.846	0.699	0.208	5	28
Powerwave Allgon 702	137.00	13	1.621	0.846	0.699	0.208	2	11
Powerwave Allgon LGP	137.00	85	1.621	0.846	0.699	0.208	12	73
Raycap DC6-48-60-18-	137.00	40	1.621	0.846	0.699	0.208	6	34
Ericsson RRUS 4478 B	137.00	178	1.621	0.846	0.699	0.208	25	153
Raycap DC6-48-60-18-	137.00	16	1.621	0.846	0.699	0.208	2	14
Ericsson RRUS 11 (Ba	137.00	165	1.621	0.846	0.699	0.208	23	142
Ericsson RRUS 32 B66	137.00	152	1.621	0.846	0.699	0.208	21	131
Ericsson RRUS 32 B2	137.00	159	1.621	0.846	0.699	0.208	22	137

© 2007 - 2019 by ATC IP LLC. All rights reserved.

Ericsson RRUS-32 (77	137.00	231	1.621	0.846	0.699	0.208	32	199
Powerwave Allgon 775	137.00	81	1.621	0.846	0.699	0.208	11	70
KMW AM-X-CD-16-65-00	137.00	97	1.621	0.846	0.699	0.208	13	84
Quintel QS66512-3 (1	137.00	224	1.621	0.846	0.699	0.208	31	193
Andrew SBNH-1D6565C	137.00	66	1.621	0.846	0.699	0.208	9	57
CCI TPA-65R-LCUUUU-H	137.00	82	1.621	0.846	0.699	0.208	11	70
Kathrein Scala 80010	137.00	293	1.621	0.846	0.699	0.208	41	252
Flat Platform w/ Han	137.00	2,000	1.621	0.846	0.699	0.208	278	1,723
Kathrein Scala Smart	123.00	10	1.307	0.130	0.342	0.063	0	9
Ericsson KRY 112 144	123.00	33	1.307	0.130	0.342	0.063	1	28
Ericsson KRY 112 489	123.00	46	1.307	0.130	0.342	0.063	2	40
Ericsson AIR 32 B4A-	123.00	317	1.307	0.130	0.342	0.063	13	273
RFS APX16DWV-	123.00	122	1.307	0.130	0.342	0.063	5	105
Round T-Arms	123.00	750	1.307	0.130	0.342	0.063	31	646
Andrew LNX-6515DS-VT	123.00	154	1.307	0.130	0.342	0.063	6	133
RFS APXV18-206517	113.00	79	1.103	-0.068	0.189	-0.002	0	68
RFS IBC1900BB-1	98.00	66	0.830	-0.117	0.063	-0.039	-2	57
RFS IBC1900HG-2A	98.00	66	0.830	-0.117	0.063	-0.039	-2	57
Alcatel-Lucent 800 M	98.00	64	0.830	-0.117	0.063	-0.039	-2	55
Alcatel-Lucent 800 M	98.00	128	0.830	-0.117	0.063	-0.039	-3	110
Alcatel-Lucent 4x40W	98.00	88	0.830	-0.117	0.063	-0.039	-2	76
Alcatel-Lucent 4x40W	98.00	176	0.830	-0.117	0.063	-0.039	-5	152
Nokia 2.5G MAA - AAH	98.00	311	0.830	-0.117	0.063	-0.039	-8	268
RFS APXVSPP18-C-A20	98.00	171	0.830	-0.117	0.063	-0.039	-4	147
Round Low Profile Pl	98.00	1,500	0.830	-0.117	0.063	-0.039	-39	1,292
Side Arms	93.00	1,680	0.747	-0.100	0.040	-0.036	-40	1,447
DragonWave Horizon C	89.00	32	0.684	-0.082	0.027	-0.029	-1	27
NextNet BTS-2500	89.00	105	0.684	-0.082	0.027	-0.029	-2	90
Argus LLPX310R	89.00	86	0.684	-0.082	0.027	-0.029	-2	74
DragonWave A-ANT-18G	89.00	54	0.684	-0.082	0.027	-0.029	-1	47
DragonWave A-ANT-11G	89.00	48	0.684	-0.082	0.027	-0.029	-1	41
Alcatel-Lucent RRH2X	79.00	132	0.539	-0.031	0.009	0.000	0	114
Alcatel-Lucent RRH2x	79.00	170	0.539	-0.031	0.009	0.000	0	147
Alcatel-Lucent RRH2x	79.00	180	0.539	-0.031	0.009	0.000	0	155
RFS DB-T1-6Z-8AB-0Z	79.00	88	0.539	-0.031	0.009	0.000	0	76
Commscope SBNHH-	79.00	608	0.539	-0.031	0.009	0.000	0	524
Round Low Profile Pl	79.00	1,500	0.539	-0.031	0.009	0.000	0	1,292
Lucent KS-24019	20.00	4	0.035	0.069	0.041	0.044	0	3
		48,276	91.875	28.859	28.054	7.222	1,880	41,584

 © 2007 - 2019 by ATC IP LLC. All rights reserved.

Load Case (1.2 + 0.2Sds) * DL + E EMAM Seismic Equivalent Modal Analysis Method

Calculated Forces

Seg Elev (ft)	Pu FY (-) (kips)	Vu FX (-) (kips)	Tu MY (ft-kips)	Mu MZ (ft-kips)	Mu MX (ft-kips)	Resultant Moment (ft-kips)	phi Pn (kips)	phi Vn (kips)	phi Tn (ft-kips)	phi Mn (ft-kips)	Total Deflect (in)	Rotation (deg)	Ratio
0.00	-58.23	-1.87	0.00	-225.20	0.00	225.20	4,345.86	2,172.93	10,048.44	5,031.69	0.00	0.00	0.058
5.00	-56.46	-1.86	0.00	-215.83	0.00	215.83	4,297.95	2,148.97	9,746.71	4,880.60	0.01	-0.01	0.057
10.00	-54.72	-1.83	0.00	-206.55	0.00	206.55	4,248.67	2,124.33	9,446.20	4,730.12	0.03	-0.02	0.057
15.00	-53.00	-1.80	0.00	-197.39	0.00	197.39	4,198.03	2,099.01	9,147.09	4,580.35	0.06	-0.04	0.056
20.00	-51.31	-1.77	0.00	-188.38	0.00	188.38	4,146.02	2,073.01	8,849.58	4,431.37	0.10	-0.05	0.055
25.00	-49.65	-1.74	0.00	-179.52	0.00	179.52	4,092.65	2,046.33	8,553.84	4,283.28	0.16	-0.06	0.054
30.00	-48.02	-1.71	0.00	-170.82	0.00	170.82	4,037.92	2,018.96	8,260.05	4,136.16	0.23	-0.07	0.053
35.00	-46.41	-1.67	0.00	-162.29	0.00	162.29	3,981.82	1,990.91	7,968.40	3,990.12	0.31	-0.09	0.052
40.00	-44.83	-1.64	0.00	-153.94	0.00	153.94	3,924.36	1,962.18	7,679.06	3,845.24	0.41	-0.10	0.051
45.00	-44.26	-1.63	0.00	-145.75	0.00	145.75	3,865.53	1,932.77	7,392.22	3,701.60	0.52	-0.11	0.051
46.83	-42.53	-1.58	0.00	-142.77	0.00	142.77	3,843.62	1,921.81	7,287.71	3,649.27	0.56	-0.12	0.050
50.00	-40.92	-1.54	0.00	-137.76	0.00	137.76	3,805.35	1,902.67	7,108.06	3,559.31	0.64	-0.13	0.049
53.00	-40.31	-1.53	0.00	-133.14	0.00	133.14	3,811.37	1,905.68	7,136.09	3,573.35	0.72	-0.13	0.048
55.00	-38.79	-1.49	0.00	-130.08	0.00	130.08	3,786.97	1,893.48	7,023.10	3,516.77	0.78	-0.14	0.047
60.00	-37.30	-1.46	0.00	-122.62	0.00	122.62	3,725.00	1,862.50	6,742.70	3,376.36	0.93	-0.15	0.046
65.00	-35.84	-1.44	0.00	-115.30	0.00	115.30	3,661.68	1,830.84	6,465.40	3,237.50	1.10	-0.17	0.045
70.00	-34.40	-1.43	0.00	-108.09	0.00	108.09	3,596.99	1,798.49	6,191.38	3,100.29	1.28	-0.18	0.044
75.00	-33.27	-1.43	0.00	-100.94	0.00	100.94	3,530.94	1,765.47	5,920.82	2,964.81	1.47	-0.19	0.043
79.00	-29.67	-1.42	0.00	-95.22	0.00	95.22	3,477.11	1,738.56	5,706.98	2,857.73	1.64	-0.20	0.042
80.00	-28.30	-1.43	0.00	-93.79	0.00	93.79	3,463.52	1,731.76	5,653.90	2,831.15	1.68	-0.21	0.041
85.00	-27.23	-1.44	0.00	-86.65	0.00	86.65	3,394.74	1,697.37	5,390.81	2,699.41	1.91	-0.22	0.040
89.00	-26.56	-1.45	0.00	-80.88	0.00	80.88	3,338.73	1,669.37	5,183.21	2,595.46	2.09	-0.23	0.039
90.00	-25.79	-1.47	0.00	-79.42	0.00	79.42	3,324.59	1,662.30	5,131.72	2,569.68	2.14	-0.23	0.039
93.00	-23.22	-1.51	0.00	-75.02	0.00	75.02	3,271.77	1,635.89	4,962.98	2,485.18	2.29	-0.24	0.037
94.92	-23.18	-1.51	0.00	-72.12	0.00	72.12	3,235.40	1,617.70	4,852.71	2,429.96	2.39	-0.25	0.037
95.00	-21.96	-1.53	0.00	-72.00	0.00	72.00	3,233.82	1,616.91	4,847.95	2,427.58	2.39	-0.25	0.036
98.00	-18.05	-1.60	0.00	-67.40	0.00	67.40	3,176.90	1,588.45	4,677.94	2,342.45	2.55	-0.25	0.034
99.83	-18.01	-1.60	0.00	-64.47	0.00	64.47	2,561.71	1,280.85	3,809.78	1,907.72	2.65	-0.26	0.041
100.00	-16.94	-1.62	0.00	-64.20	0.00	64.20	2,559.94	1,279.97	3,803.37	1,904.51	2.66	-0.26	0.040
105.00	-15.89	-1.63	0.00	-56.11	0.00	56.11	2,506.36	1,253.18	3,612.41	1,808.89	2.94	-0.27	0.037
110.00	-15.27	-1.63	0.00	-47.95	0.00	47.95	2,451.42	1,225.71	3,424.31	1,714.70	3.23	-0.29	0.034
113.00	-14.78	-1.63	0.00	-43.05	0.00	43.05	2,417.79	1,208.90	3,312.90	1,658.91	3.42	-0.30	0.032
115.00	-13.80	-1.62	0.00	-39.78	0.00	39.78	2,395.11	1,197.55	3,239.25	1,622.03	3.54	-0.30	0.030
120.00	-13.23	-1.60	0.00	-31.69	0.00	31.69	2,337.43	1,168.72	3,057.41	1,530.98	3.86	-0.31	0.026
123.00	-11.11	-1.52	0.00	-26.89	0.00	26.89	2,302.17	1,151.09	2,949.92	1,477.15	4.06	-0.32	0.023
125.00	-10.25	-1.47	0.00	-23.85	0.00	23.85	2,271.18	1,135.59	2,869.84	1,437.05	4.20	-0.32	0.021
130.00	-9.41	-1.39	0.00	-16.52	0.00	16.52	2,192.12	1,096.06	2,672.56	1,338.27	4.54	-0.33	0.017
135.00	-9.09	-1.36	0.00	-9.56	0.00	9.56	2,113.07	1,056.53	2,482.31	1,243.00	4.89	-0.34	0.012
137.00	-4.10	-0.77	0.00	-6.84	0.00	6.84	2,081.44	1,040.72	2,408.17	1,205.88	5.03	-0.34	0.008
138.00	-3.59	-0.70	0.00	-6.07	0.00	6.07	2,065.63	1,032.82	2,371.53	1,187.53	5.10	-0.34	0.007
140.00	-3.02	-0.61	0.00	-4.67	0.00	4.67	2,034.01	1,017.00	2,299.08	1,151.25	5.24	-0.34	0.006
145.00	-2.70	-0.55	0.00	-1.60	0.00	1.60	1,954.95	977.48	2,122.87	1,063.02	5.60	-0.34	0.003
147.90	0.00	0.00	0.00	0.00	0.00	0.00	1,909.10	954.55	2,023.89	1,013.45	5.81	-0.34	0.000
147.92	0.00	0.00	0.00	0.00	0.00	0.00	1,908.83	954.42	2,023.32	1,013.16	5.81	-0.34	0.000

 © 2007 - 2019 by ATC IP LLC. All rights reserved.

Load Case (0.9 - 0.2Sds) * DL + E EMAM Seismic (Reduced DL) Equivalent Modal Analysis Method

Calculated Forces

Seg Elev (ft)	Pu FY (-) (kips)	Vu FX (-) (kips)	Tu MY (ft-kips)	Mu MZ (ft-kips)	Mu MX (ft-kips)	Resultant Moment (ft-kips)	phi Pn (kips)	phi Vn (kips)	phi Tn (ft-kips)	phi Mn (ft-kips)	Total Deflect (in)	Rotation (deg)	Ratio
0.00	-40.50	-1.87	0.00	-221.90	0.00	221.90	4,345.86	2,172.93	10,048.44	5,031.69	0.00	0.00	0.053
5.00	-39.27	-1.85	0.00	-212.54	0.00	212.54	4,297.95	2,148.97	9,746.71	4,880.60	0.01	-0.01	0.053
10.00	-38.05	-1.82	0.00	-203.28	0.00	203.28	4,248.67	2,124.33	9,446.20	4,730.12	0.02	-0.02	0.052
15.00	-36.86	-1.79	0.00	-194.17	0.00	194.17	4,198.03	2,099.01	9,147.09	4,580.35	0.06	-0.04	0.051
20.00	-35.68	-1.76	0.00	-185.22	0.00	185.22	4,146.02	2,073.01	8,849.58	4,431.37	0.10	-0.05	0.050
25.00	-34.53	-1.72	0.00	-176.44	0.00	176.44	4,092.65	2,046.33	8,553.84	4,283.28	0.15	-0.06	0.050
30.00	-33.39	-1.69	0.00	-167.83	0.00	167.83	4,037.92	2,018.96	8,260.05	4,136.16	0.22	-0.07	0.049
35.00	-32.27	-1.65	0.00	-159.41	0.00	159.41	3,981.82	1,990.91	7,968.40	3,990.12	0.31	-0.08	0.048
40.00	-31.17	-1.61	0.00	-151.17	0.00	151.17	3,924.36	1,962.18	7,679.06	3,845.24	0.40	-0.10	0.047
45.00	-30.78	-1.60	0.00	-143.11	0.00	143.11	3,865.53	1,932.77	7,392.22	3,701.60	0.51	-0.11	0.047
46.83	-29.58	-1.55	0.00	-140.18	0.00	140.18	3,843.62	1,921.81	7,287.71	3,649.27	0.55	-0.11	0.046
50.00	-28.46	-1.51	0.00	-135.26	0.00	135.26	3,805.35	1,902.67	7,108.06	3,559.31	0.63	-0.12	0.045
53.00	-28.03	-1.50	0.00	-130.73	0.00	130.73	3,811.37	1,905.68	7,136.09	3,573.35	0.71	-0.13	0.044
55.00	-26.98	-1.46	0.00	-127.73	0.00	127.73	3,786.97	1,893.48	7,023.10	3,516.77	0.77	-0.14	0.043
60.00	-25.94	-1.43	0.00	-120.42	0.00	120.42	3,725.00	1,862.50	6,742.70	3,376.36	0.92	-0.15	0.043
65.00	-24.92	-1.41	0.00	-113.27	0.00	113.27	3,661.68	1,830.84	6,465.40	3,237.50	1.08	-0.16	0.042
70.00	-23.92	-1.40	0.00	-106.23	0.00	106.23	3,596.99	1,798.49	6,191.38	3,100.29	1.26	-0.18	0.041
75.00	-23.13	-1.39	0.00	-99.25	0.00	99.25	3,530.94	1,765.47	5,920.82	2,964.81	1.45	-0.19	0.040
79.00	-20.63	-1.39	0.00	-93.67	0.00	93.67	3,477.11	1,738.56	5,706.98	2,857.73	1.61	-0.20	0.039
80.00	-19.68	-1.40	0.00	-92.29	0.00	92.29	3,463.52	1,731.76	5,653.90	2,831.15	1.65	-0.20	0.038
85.00	-18.93	-1.41	0.00	-85.31	0.00	85.31	3,394.74	1,697.37	5,390.81	2,699.41	1.87	-0.22	0.037
89.00	-18.47	-1.42	0.00	-79.67	0.00	79.67	3,338.73	1,669.37	5,183.21	2,595.46	2.06	-0.23	0.036
90.00	-17.93	-1.43	0.00	-78.25	0.00	78.25	3,324.59	1,662.30	5,131.72	2,569.68	2.11	-0.23	0.036
93.00	-16.14	-1.48	0.00	-73.94	0.00	73.94	3,271.77	1,635.89	4,962.98	2,485.18	2.25	-0.24	0.035
94.92	-16.12	-1.48	0.00	-71.11	0.00	71.11	3,235.40	1,617.70	4,852.71	2,429.96	2.35	-0.24	0.034
95.00	-15.27	-1.50	0.00	-70.99	0.00	70.99	3,233.82	1,616.91	4,847.95	2,427.58	2.35	-0.24	0.034
98.00	-12.55	-1.57	0.00	-66.48	0.00	66.48	3,176.90	1,588.45	4,677.94	2,342.45	2.51	-0.25	0.032
99.83	-12.52	-1.58	0.00	-63.59	0.00	63.59	2,561.71	1,280.85	3,809.78	1,907.72	2.61	-0.26	0.038
100.00	-11.78	-1.59	0.00	-63.33	0.00	63.33	2,559.94	1,279.97	3,803.37	1,904.51	2.61	-0.26	0.038
105.00	-11.05	-1.61	0.00	-55.36	0.00	55.36	2,506.36	1,253.18	3,612.41	1,808.89	2.89	-0.27	0.035
110.00	-10.62	-1.61	0.00	-47.33	0.00	47.33	2,451.42	1,225.71	3,424.31	1,714.70	3.18	-0.28	0.032
113.00	-10.27	-1.61	0.00	-42.50	0.00	42.50	2,417.79	1,208.90	3,312.90	1,658.91	3.36	-0.29	0.030
115.00	-9.60	-1.59	0.00	-39.28	0.00	39.28	2,395.11	1,197.55	3,239.25	1,622.03	3.48	-0.30	0.028
120.00	-9.20	-1.58	0.00	-31.31	0.00	31.31	2,337.43	1,168.72	3,057.41	1,530.98	3.80	-0.31	0.024
123.00	-7.72	-1.50	0.00	-26.57	0.00	26.57	2,302.17	1,151.09	2,949.92	1,477.15	4.00	-0.31	0.021
125.00	-7.13	-1.45	0.00	-23.58	0.00	23.58	2,271.18	1,135.59	2,869.84	1,437.05	4.13	-0.32	0.020
130.00	-6.54	-1.38	0.00	-16.34	0.00	16.34	2,192.12	1,096.06	2,672.56	1,338.27	4.46	-0.32	0.015
135.00	-6.32	-1.34	0.00	-9.46	0.00	9.46	2,113.07	1,056.53	2,482.31	1,243.00	4.81	-0.33	0.011
137.00	-2.85	-0.76	0.00	-6.78	0.00	6.78	2,081.44	1,040.72	2,408.17	1,205.88	4.95	-0.33	0.007
138.00	-2.49	-0.70	0.00	-6.02	0.00	6.02	2,065.63	1,032.82	2,371.53	1,187.53	5.02	-0.33	0.006
140.00	-2.10	-0.61	0.00	-4.62	0.00	4.62	2,034.01	1,017.00	2,299.08	1,151.25	5.16	-0.33	0.005
145.00	-1.88	-0.55	0.00	-1.59	0.00	1.59	1,954.95	977.48	2,122.87	1,063.02	5.51	-0.34	0.002
147.90	0.00	0.00	0.00	0.00	0.00	0.00	1,909.10	954.55	2,023.89	1,013.45	5.71	-0.34	0.000
147.92	0.00	0.00	0.00	0.00	0.00	0.00	1,908.83	954.42	2,023.32	1,013.16	5.71	-0.34	0.000

© 2007 - 2019 by ATC IP LLC. All rights reserved.

Analysis Summary

Load Case	Reactions Shear FX (kips)	Shear FZ (kips)	Axial FY (kips)	Moment MX (ft-kips)	Moment MY (ft-kips)	Moment MZ (ft-kips)	Max Usage Elev (ft)	Interaction Ratio
1.2D + 1.6W	31.03	0.00	57.88	0.00	0.00	3273.58	0.00	0.66
0.9D + 1.6W	30.99	0.00	43.40	0.00	0.00	3236.23	0.00	0.65
1.2D + 1.0Di + 1.0Wi	13.31	0.00	98.52	0.00	0.00	1183.53	0.00	0.26
(1.2 + 0.2Sds) * DL + E ELFM	1.49	0.00	58.23	0.00	0.00	172.90	0.00	0.05
(1.2 + 0.2Sds) * DL + E EMAM	1.87	0.00	58.23	0.00	0.00	225.20	0.00	0.06
(0.9 - 0.2Sds) * DL + E ELFM	1.49	0.00	40.50	0.00	0.00	170.57	0.00	0.04
(0.9 - 0.2Sds) * DL + E EMAM	1.87	0.00	40.50	0.00	0.00	221.90	0.00	0.05
1.0D + 1.0W	6.63	0.00	48.27	0.00	0.00	695.36	0.00	0.15

Site Name:	Petro Lock, CT	*Program Last Updated:*	*5/13/2014*
Site Number:	302468	*American Tower Corporation*	
Engineer:	Hussam.Altahan		
Engineering Number:	OAA729245		
Date:	05/28/19		

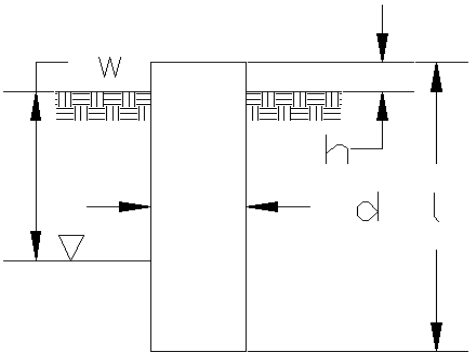

Design Base Loads (Factored) - Analysis per TIA-222-G Standards

Analyze or Design a Foundation?	Analyze	
Foundation Mapped:	N	
Moment (M):	3274	k-ft
Shear/Leg (V):	31.0	k
Axial Load (P):	57.9	k
Uplift/Leg (U):	0.0	k
Tower Type (GT / SST / MP):	MP	
Diameter of Caisson (d):	7.0	ft
Caisson Embedment (L-h):	33.5	ft
Caisson Height Above Ground (h):	0.5	ft
Depth Below Ground Surface to Water Table (w):	6.5	ft
Unit Weight of Concrete:	150.0	pcf
Unit Weight of Water:	62.4	pcf
Tension Skin Friction/Compression Skin Friction:	0.80	
Pullout Angle:	30.0	degrees

Engineer Notes

Soil Mechanical Properties

Depth (ft) Top	Depth (ft) Bottom	γ_{Soil} (pcf)	Cohesion (psf)	ϕ (degree)	Ultimate Skin Friction (psf)	Ultimate Bearing Pressure (psf)
0.0	3.0	105	0	0	0	0
3.0	6.5	102	303	0	162	0
6.5	10.0	104	439	0	232	0
10.0	17.0	111	1033	0	515	0
17.0	20.0	110	0	30	651	0
20.0	26.0	122	0	34	1354	0
26.0	30.0	131	0	40	1461	0
30.0	35.0	140	0	40	1601	92871

Required Embedment:	24.5	ft - OK, Caisson Embedment Satisfactory
Volume of Concrete:	1308.5	ft^3 = 48.5 yd^3
Weight of Concrete (Buoyancy Effect Considered):	131.4	k
Average Soil Unit Weight:	65.8	pcf
Skin Friction Resistance:	583.0	k
Compressive Bearing Resistance:	3574.1	k
Pullout Weight (Minus Concrete Weight):	1332.2	k
Nominal Uplift Capacity per Leg ($\phi_s T_n$):	351.9	k
Nominal Compressive Capacity per Leg ($\phi_s P_n$):	3117.8	k
T_u:	0.0	k
$T_u/\phi_s T_n$:	0.00	Result: OK
P_u:	110.3	k
$P_u/\phi_s P_n$:	0.04	Result: OK
Total Lateral Resistance:	2508.4	k
Inflection Point (Below Ground Surface):	24.6	ft
Design Overturning Moment At Inflection Point (M_D):	4053.5	k-ft
Nominal Moment Capacity ($\phi_s M_n$):	12129.4	k-ft
$M_D/\phi_s M_n$:	0.33	Result: OK
ϕ_s:	0.75	

Caisson Strength Capacity

Concrete Compressive Strength (f'_c):	3000	psi
Vertical Steel Rebar Size #:	11	
Vertical Steel Rebar Area:	1.56	in^2
# of Vertical Steel Rebars:	21	
Vertical Steel Rebar Yield Strength (F_y):	60	ksi
Horizontal Tie / Stirrup Size #:	5	
Horizontal Tie / Stirrup Area:	0.31	in^2
Design Horizontal Tie / Stirrup Spacing:	18.0	in
Horizontal Tie / Stirrup Steel Yield Strength (F_y):	40	ksi
Rebar Cage Diameter:	76.0	in
Strength Bending/Tension Reduction Factor (ϕ_B):	0.90	ACI318-05 - 9.3.2.1
Strength Shear Reduction Factor (ϕ_V):	0.85	ACI318-05 - 9.3.2.3
Strength Compression Reduction Factor (ϕ_V):	0.65	ACI318-05 - 9.3.2.2
Steel Elastic Modulus:	29000	ksi
Design Moment (M_u):	3294.8	k-ft
Nominal Moment Capacity ($\phi_B M_n$):	4963.4	k-ft - ACI318-005 - 10.2
$M_u/\phi_B M_n$:	0.66	Result: OK
Design Shear (V_u):	234.2	k
Nominal Shear Capacity ($\phi_V V_n$):	518.7	k - ACI318-05 - 11.3.1.1 or 11.5.7.2
$V_u/\phi_V V_n$:	0.45	Result: OK
Design Tension (T_u):	0.0	k
Nominal Tension Capacity ($\phi_T T_n$):	1769.0	k - ACI318-05 - 10.2
$T_u/\phi_T T_n$:	0.00	Result: OK
Design Compression (P_u):	110.3	k
Nominal Compression Capacity ($\phi_P P_n$):	8327.1	k - ACI318-05 - 10.3.6.2
$P_u/\phi_P P_n$:	0.01	Result: OK
Bending Reinforcement Ratio:	0.006	ACI318-05 - 10.8.4 & 10.9.1
$M_u/\phi_B M_n + T_u/\phi_T T_n$:	0.66	Result: OK

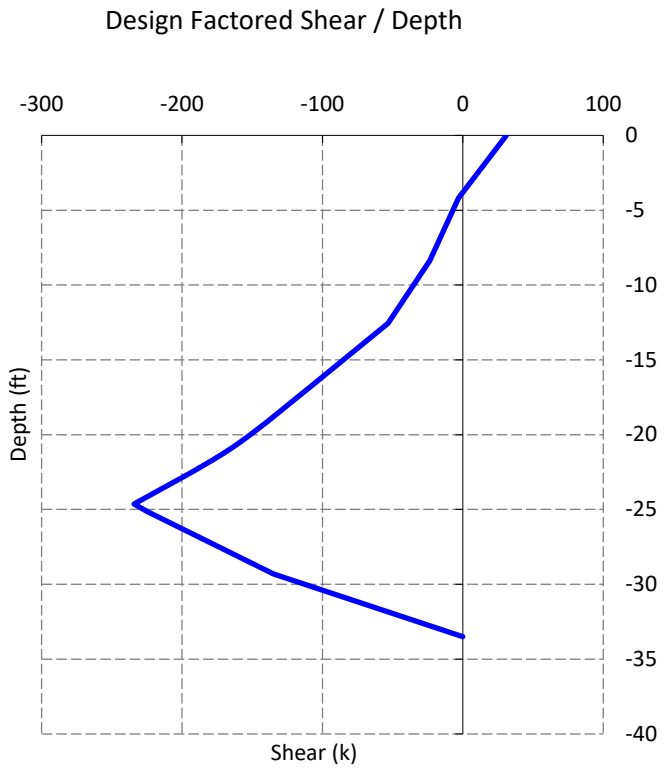
Design Factored Shear / Depth
-300
-200
-100
0
100
0
-5
-10
-15
-20
-25
-30
-35
-40
Depth (ft)
Shear (k)

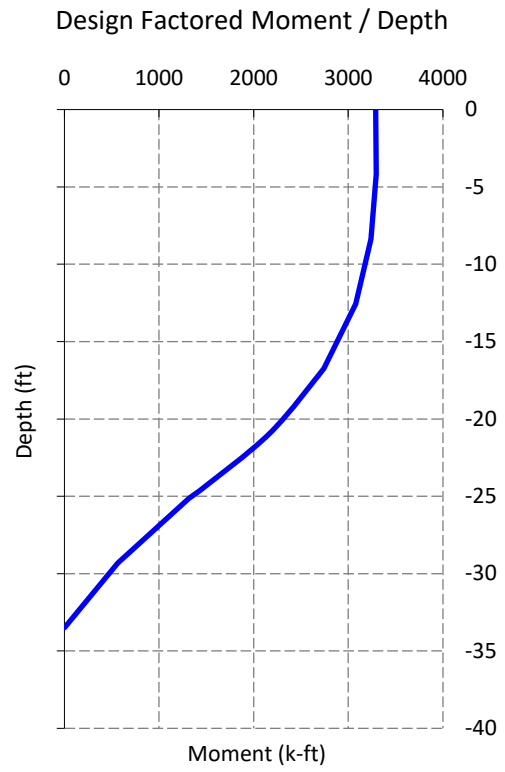
Design Factored Moment / Depth
0
1000
2000
3000
4000
0
-5
-10
-15
-20
-25
-30
-35
-40
Depth (ft)
Moment (k-ft)

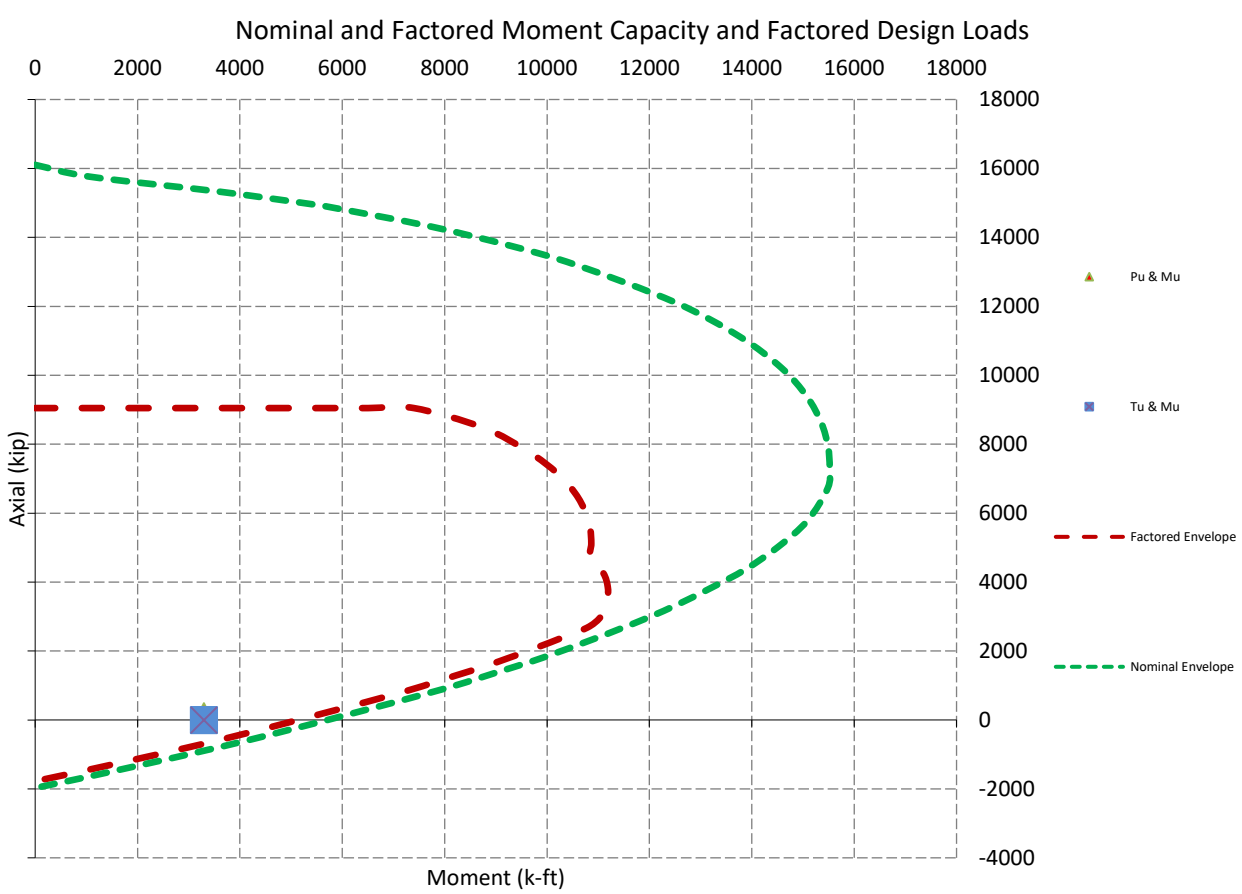
Nominal and Factored Moment Capacity and Factored Design Loads
0
2000
4000
6000
8000
10000
12000
14000
16000
18000
18000
16000
14000
12000
10000
8000
6000
4000
2000
0
-2000
-4000
Axial (kip)
Moment (k-ft)
Pu & Mu
Tu & Mu
Factored Envelope
Nominal Envelope

AMERICAN TOWER CORPORATION

Base Plate & Anchor Rod Analysis

Pole Dimensions		
Number of Sides	18	-
Diameter	56.58	in
Thickness	0.375	in
Orientation Offset		°

Base Reactions		
Moment, Mu	3273.6	k-ft
Axial, Pu	57.9	k
Shear, Vu	31.0	k
Neutral Axis	225	°

Report Capacities		
Component	Capacity	Result
Base Plate	20%	Pass
Anchor Rods	62%	Pass
Dwyidag	-	-

Base Plate		
Shape	Round	-
Diameter, ø	69	in
Thickness	2 1/2	in
Grade	Other	-
Yield Strength, Fy	60	ksi
Tensile Strength, Fu	80	ksi
Clip	N/A	in
Orientation Offset	0	°
Anchor Rod Detail	c	η=0.55
Clear Distance	N/A	in
Applied Moment, Mu	637.8	k
Bending Stress, ϕMn	3132.6	k

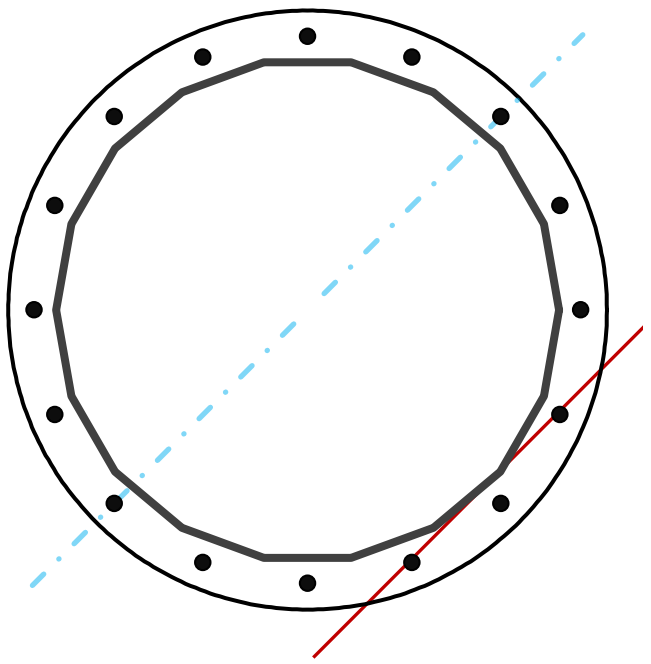

Original Anchor Rods		
Arrangement	Radial	-
Quantity	16	-
Diameter, ø	2 1/4	in
Bolt Circle	63	in
Grade	A615-75	
Yield Strength, Fy	75	ksi
Tensile Strength, Fu	100	ksi
Spacing	12.4	in
Orientation Offset	0	°
Applied Force, Pu	159.4	k
Anchor Rods, ϕPn	259.8	k

Calculations for Monopole Base Plate & Anchor Rod Analysis

Reaction Distribution

Reaction	Shear Vu	Moment Mu	Factor
-	k	k-ft	-
Base Forces	31.0	3273.6	1.00
Anchor Rod Forces	31.0	3273.6	1.00
Additional Bolt (Grp1) Forces	0.0	0.0	0.00
Additional Bolt (Grp2) Forces	0.0	0.0	0.00
Dywidag Forces	0.0	0.0	0.00
Stiffener Forces	0.0	0.0	0.00

Geometric Properties

Section	Gross Area	Net Area	Individual Inertia	Threads per Inch	Moment of Inertia
-	in^2	in^2	in^4	#	in^4
Pole	65.8793	3.6600	0.1721		26017.20
Bolt	3.9761	3.2477	0.8393	4.5	25793.59
Bolt1	0.0000	0.0000	0.0000	0	0.00
Bolt2	0.0000	0.0000	0.0000	0	0.00
Dywidag	0.0000	0.0000	0.0000		0.00
Stiffener	0.0000	0.0000	0.0000		0.00

Base Plate		
Shape	Round	-
Diameter, D	69	in
Thickness, t	2.5	in
Yield Strength, Fy	60	ksi
Tensile Strength, Fu	80	ksi
Base Plate Chord	39.493	in
Detail Type	c	-
Detail Factor	0.55	-
Clear Distance	N/A	-

Anchor Rods		
Anchor Rod Quantity, N	16	-
Rod Diameter, d	2.25	in
Bolt Circle, BC	63	in
Yield Strength, Fy	75	ksi
Tensile Strength, Fu	100	ksi
Applied Axial, Pu	159.4	k
Applied Shear, Vu	1.2	k
Compressive Capacity, ϕPn	259.8	k
Tensile Capacity, ϕRnt	0.614	OK
Interaction Capacity	0.622	OK

External Base Plate		
Chord Length AA	32.127	in
Additional AA	5.000	in
Section Modulus, Z	58.010	in^3
Applied Moment, Mu	637.8	k-ft
Bending Capacity, ϕMn	3132.6	k-ft
Capacity, Mu/ϕMn	0.204	OK
Chord Length AB	30.509	in
Additional AB	5.000	in
Section Modulus, Z	55.483	in^3
Applied Moment, Mu	437.7	k-ft
Bending Capacity, ϕMn	2996.1	k-ft
Capacity, Mu/ϕMn	0.146	OK
Bend Line Length	43.260	in
Additional Bend Line	0.000	in
Section Modulus, Z	67.594	in^3
Applied Moment, Mu	637.8	k-ft
Bending Capacity, ϕMn	3650.1	k-ft
Capacity, Mu/ϕMn	0.175	OK

Internal Base Plate		
Arc Length	0.000	in
Section Modulus, Z	0.000	in^3
Moment Arm	0.000	in
Applied Moment, Mu	0.0	k-ft
Bending Capacity, ϕMn	0.0	k-ft
Capacity, Mu/ϕMn		