MJ Umali, Site Acquisition Consultant
c/o Cellco Partnership d/b/a Verizon Wireless
Centerline Communications, LLC
750 West Center Street, Floor 3
West Bridgewater, MA 02379
Mobile: (978) 568-7906
MUmali@centerlinecommunications.com

September 17, 2021

Melanie A. Bachman
Acting Executive Director
Connecticut Siting Council
10 Franklin Square
New Britain, CT 06051

RE: Notice of Exempt Modification // Site: FRANKLIN CT (ATC: 6310)
89 Dr. Knott Rd., Franklin CT, 06254
N 41.5976 // W 72.1449

Dear Ms. Bachman,

Cellco Partnership d/b/a Verizon Wireless currently maintains 12 antennas at the 170-ft level on the existing 300-ft Guyed Tower, located at 89 Dr. Knott Rd., Franklin CT. The tower is owned by American Tower. The property is also owned by Penske Aitchison Victoria L ETAL. The Council approved Verizon Wireless use of the existing tower in 2006. Verizon Wireless now intends to remove 9 antennas and replace with 9 new antennas for the LTE (3700 MHz) replacements for its 5G upgrade. Additionally, Verizon Wireless intends to remove 3 Remote Radio heads (RRHs) and install 9 new RRHs, remove 1 OVP and replace with 1 new one, remove 1-5/8" hybrid cable and replace with 2 1-5/8" hybrid cable, and remove 1-5/8" Coax Cable; Altogether updating leased equipment rights, as reflected by the final configuration outlined in the structural analysis and proposed hereby.

Please accept this letter as notification pursuant to Regulations of Connecticut State Agencies §16-50j-73, for construction that constitutes an exempt modification pursuant to R.C.S.A. § 16-50j-72(b)(2). In accordance with R.C.S.A. § 16-50j-73, a copy of this letter is being sent to Charles Grant, First Selectman, its Zoning Enforcement Officer, Ronald Chalecki, and American Tower, the tower owner, and Penske Aitchison Victoria L ETAL, the property owner.

The planned modifications to the facility fall squarely within those activities explicitly provided for in R.C.S.A. § 16-50j-72(b)(2). Enclosed to accommodate this filing are construction drawings dated August 26, 2021, by Dewberry Engineers, Inc., a structural analysis dated July 6, 2021, by A.T. Engineering, PLLC., and a structural mount analysis by Maser Consulting Connecticut date July 27, 2021, and radio frequency (RF) analysis table showing worst-case RF emission calculation by Verizon Wireless RF Design Engineering.

1. The proposed modifications will not result in an increase in the height of the existing structure.

2. The proposed modifications will not require the extension of the site boundary.

3. The proposed modifications will not increase noise levels at the facility by six decibels or more, or to levels that exceed state and local criteria.

4. The operation of the new antennas will not increase radio frequency emissions at the facility to a level at or above the Federal Communications Commission safety standard.

5. The proposed modifications will not cause a change or alteration in the physical or environmental characteristics of the site.

6. The existing structure and its foundation can support the proposed loading, as shown in the attached structural analysis by A.T. Engineering, PLLC, dated July 6, 2021, and a structural mount analysis by Maser Consulting Connecticut, dated July 27, 2021, pursuant to certain conditions defined therein. Design and engineering is fully illustrated within final construction drawings, signed and stamped dated August 26, 2021.

For the foregoing reasons, Verizon Wireless respectfully submits that the proposed modifications to the above referenced telecommunications facility constitute an exempt modification under R.C.S.A. § 16-50j-72(b)(2).

Sincerely,

MJ Umali

_____

MJ Umali, Site Acquisition Consultant
c/o Cellco Partnership d/b/a Verizon Wireless
Centerline Communications, LLC
750 West Center Street, Floor 3
West Bridgewater, MA 02379
Mobile: (978) 568-7906
MUmali@centerlinecommunications.com

Attachments
cc: Charles Grant, First Selectman – Chief Elected Official
Ronald Chalecki – Zoning Enforcement Officer- as P&Z official
American Tower Corporation - as tower owner
Penske Aitchison Victoria L ETAL- as property owner

UPS CampusShip: View/Print Label

1. **Ensure there are no other shipping or tracking labels attached to your package.** Select the Print button on the print dialog box that appears. Note: If your browser does not support this function select Print from the File menu to print the label.

2. **Fold the printed label at the solid line below.** Place the label in a UPS Shipping Pouch. If you do not have a pouch, affix the folded label using clear plastic shipping tape over the entire label.

3. **GETTING YOUR SHIPMENT TO UPS**
   Customers with a Daily Pickup
   Your driver will pickup your shipment(s) as usual.

   Customers without a Daily Pickup
   Take your package to any location of The UPS Store®, UPS Access Point(TM) location, UPS Drop Box, UPS Customer Center, Staples® or Authorized Shipping Outlet near you. Items sent via UPS Return Services(SM) (including via Ground) are also accepted at Drop Boxes. To find the location nearest you, please visit the Resources area of CampusShip and select UPS Locations.
   Schedule a same day or future day Pickup to have a UPS driver pickup all your CampusShip packages.
   Hand the package to any UPS driver in your area.

UPS Access Point™
CVS STORE # 972
555 WASHINGTON ST
SOUTH EASTON ,MA 02375

UPS Access Point™
CVS STORE # 7232
689 DEPOT ST
NORTH EASTON ,MA 02356

UPS Access Point™
TOWN LINE GENERAL STORE
450 E CENTER ST
WEST BRIDGEWATER ,MA 02379

FOLD HERE

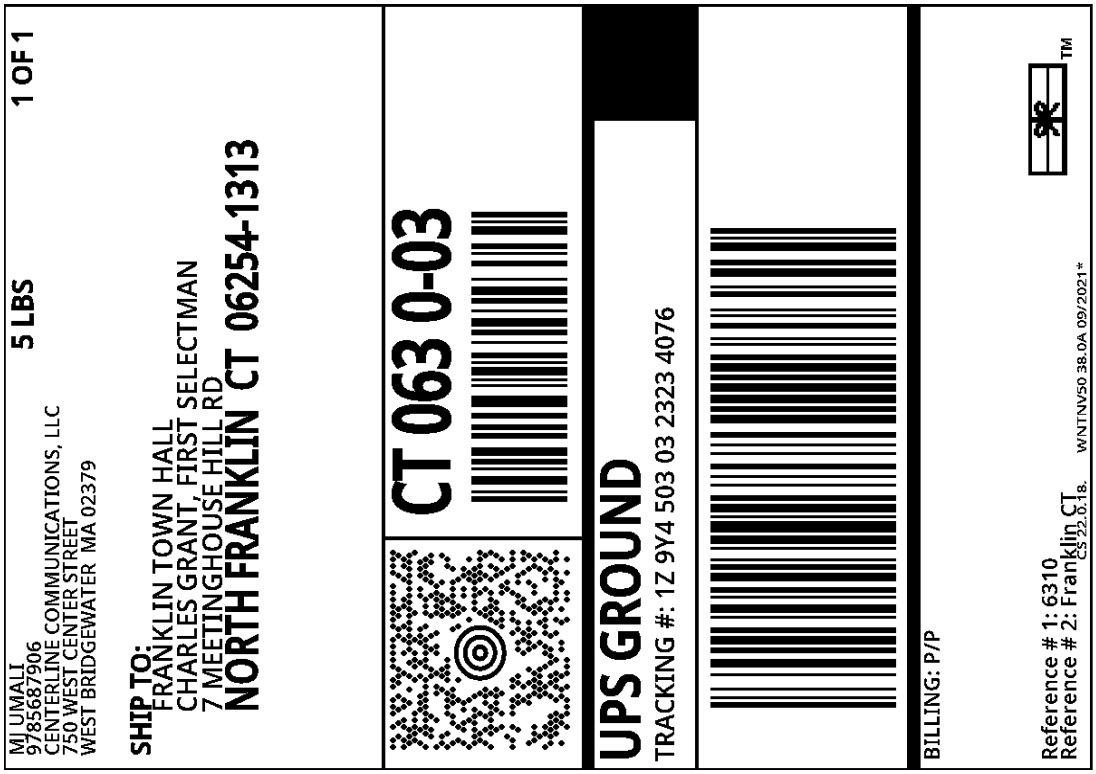

Proof of Delivery

Dear Customer,

This notice serves as proof of delivery for the shipment listed below.

Tracking Number
1Z9Y45030323234076

Weight
5.00 LBS

Service

UPS Ground

Shipped / Billed On
09/20/2021

Delivered On

09/27/2021 10:43 A.M.

Delivered To
7 MEETING HOUSE HILL RD
NORTH FRANKLIN, CT, 06254, US

Received By

CRANEY

Left At
Office

Reference Number(s)
FRANKLIN CT, 6310

Thank you for giving us this opportunity to serve you. Details are only available for shipments delivered within the last 120 days. Please print for your records if you require this information after 120 days.

Sincerely,

UPS

Tracking results provided by UPS: 09/27/2021 12:42 P.M. EST

UPS CampusShip: View/Print Label

1. **Ensure there are no other shipping or tracking labels attached to your package.** Select the Print button on the print dialog box that appears. Note: If your browser does not support this function select Print from the File menu to print the label.

2. **Fold the printed label at the solid line below.** Place the label in a UPS Shipping Pouch. If you do not have a pouch, affix the folded label using clear plastic shipping tape over the entire label.

3. **GETTING YOUR SHIPMENT TO UPS**
   Customers with a Daily Pickup
   Your driver will pickup your shipment(s) as usual.

   Customers without a Daily Pickup
   Take your package to any location of The UPS Store®, UPS Access Point(TM) location, UPS Drop Box, UPS Customer Center, Staples® or Authorized Shipping Outlet near you. Items sent via UPS Return Services(SM) (including via Ground) are also accepted at Drop Boxes. To find the location nearest you, please visit the Resources area of CampusShip and select UPS Locations.
   Schedule a same day or future day Pickup to have a UPS driver pickup all your CampusShip packages.
   Hand the package to any UPS driver in your area.

UPS Access Point™
CVS STORE # 972
555 WASHINGTON ST
SOUTH EASTON ,MA 02375

UPS Access Point™
CVS STORE # 7232
689 DEPOT ST
NORTH EASTON ,MA 02356

UPS Access Point™
TOWN LINE GENERAL STORE
450 E CENTER ST
WEST BRIDGEWATER ,MA 02379

FOLD HERE

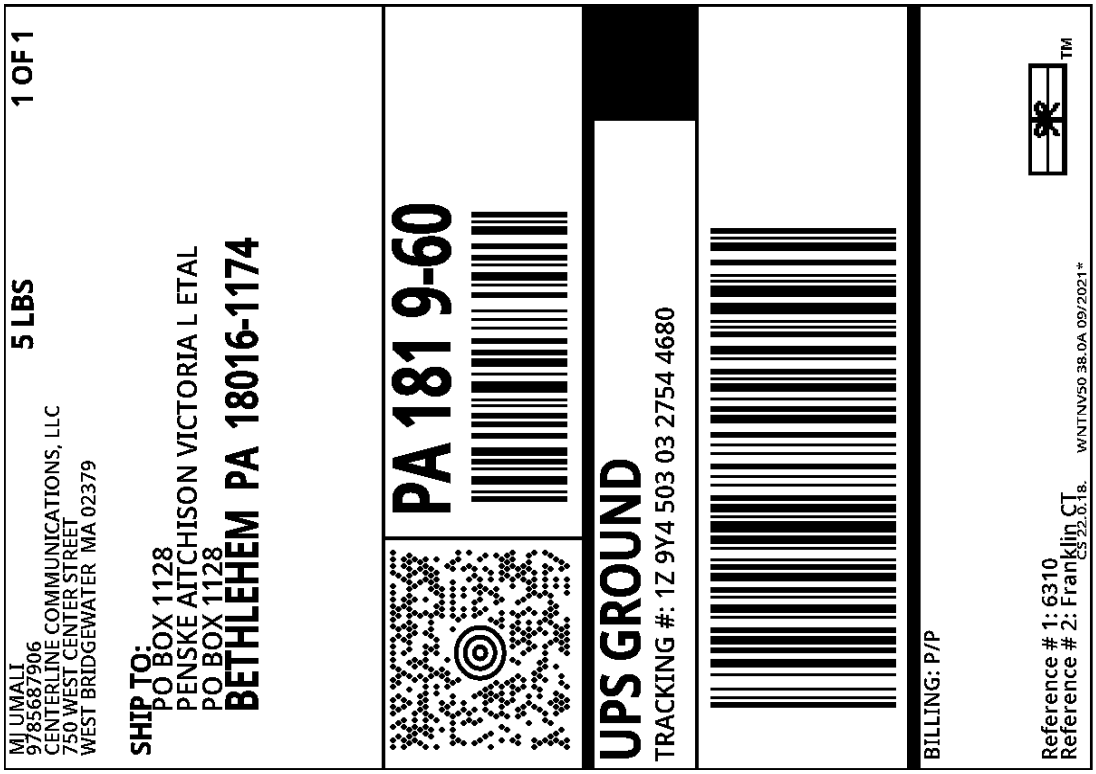

Proof of Delivery

Dear Customer,

This notice serves as proof of delivery for the shipment listed below.

Tracking Number
1Z9Y45030327544680

Weight
5.00 LBS

Service

UPS Ground

Shipped / Billed On
09/20/2021

Delivered On

09/28/2021 9:38 A.M.

Delivered To
2752 WALKER PL
BETHLEHEM, PA, 18017, US

Left At
Front Door

Reference Number(s)
FRANKLIN CT, 6310

Thank you for giving us this opportunity to serve you. Details are only available for shipments delivered within the last 120 days. Please print for your records if you require this information after 120 days.

Sincerely,

UPS

Tracking results provided by UPS: 09/28/2021 10:45 A.M. EST

Petition No. 781
Cellco Partnership d/b/a Verizon Wireless
36 Ayer Road, Franklin, Connecticut
Staff Report
August 31, 2006

On July 24, 2006, Cellco Partnership d/b/a Verizon Wireless (Cellco) submitted a petition to the Connecticut Siting Council (Council) for a declaratory ruling that no Certificate of Environmental Compatibility and Public Need is required for the extension of an existing wireless telecommunications tower located at 36 Ayer Road in Franklin, Connecticut. On August 23, 2006, Council member Philip Ashton and Council staff member Robert Mercier met with Cellco representative Kenneth Baldwin at the site to review this petition.

Cellco proposes to place a 30-foot extension on a 150-foot monopole owned by SBA, Inc. The existing monopole was constructed in 2001 as a "spec" tower and has not accommodated any wireless provider to date. The monopole and foundation were originally deigned and constructed to accommodate a 30-foot extension. A fenced compound is located at the base of the tower. Utilities are installed to the compound.

Cellco proposes to install a 30-foot extension on the monopole. Cellco would install 12 panel antennas at a centerline height of 177 feet above ground level. The overall height of the facility would not exceed 180 feet with antennas. The tower is structurally capable of supporting the extension. No aircraft hazard lighting and/or marking of the tower would be required.

Cellco would install a 12-foot by 30-foot equipment shelter at the base of the tower. The shelter would contain a back-up generator. No expansion of the existing fenced compound would be required.

The tower would provide continuous coverage to Route 32 in Franklin. Any reduction in antenna height would result in a coverage gap on Route 32 between the existing site and an adjacent facility to the south.

The site is located in a rural area. Although the area immediately north of the tower site is residentially developed, heavy tree cover would obscure the facility. The existing tower is visible from open areas approximately 0.75 to 1.9 miles southeast of the site. The visibility impact of the extended tower to these areas would be minimal.

AMERICAN TOWER®
CORPORATION

Structural Analysis Report

Structure	:	**300 ft Guyed Tower**
ATC Site Name	:	**FRANKLIN CT, CT**
ATC Asset Number	:	**6310**
Engineering Number	:	**13668773_C3_04**
Proposed Carrier	:	**VERIZON WIRELESS**
Carrier Site Name	:	**FRANKLIN CT**
Carrier Site Number	:	**469215**
Site Location	:	**89 Dr. Nott Road** **North Franklin, CT 06254-1316** **41.597700,-72.145000**
County	:	**New London**
Date	:	**July 6, 2021**
Max Usage	:	**76%**
Result	:	**Pass**

STATE OF CONNECTICUT
ESHA KAUSHAL MODI
32593
LICENSED
PROFESSIONAL ENGINEER

Prepared By:
Jennifer Yu
Structural Engineer I

Reviewed By:

Authorized by "EOR"
06 Jul 2021 04:51:08
cosign

COA: PEC.0001553

Table of Contents

Introduction 1

Supporting Documents 1

Analysis 1

Conclusion 1

Existing and Reserved Equipment 2

Equipment to be Removed 2

Proposed Equipment 2

Structure Usages 3

Foundations 3

Deflection, Twist, and Sway 3

Standard Conditions 4

Calculations ..... Attached

Introduction

The purpose of this report is to summarize results of a structural analysis performed on the 300 ft guyed tower to reflect the change in loading by VERIZON WIRELESS.

Supporting Documents

Tower Drawings	FWT Job #18504, dated January, 20, 1999
Foundation Drawing	FWT Job #18504, dated January, 20, 1999
Geotechnical Report	Tectonic Engineering Consultants P.C. dated October 26, 1998
Modifications	ATC Project #430070H1, dated March 5, 1999

Analysis

The tower was analyzed using American Tower Corporation's tower analysis software. This program considers an elastic three-dimensional model and second-order effects per ANSI/TIA-222.

Basic Wind Speed:	123 mph (3-Second Gust)
Basic Wind Speed w/ Ice:	50 mph (3-Second Gust) w/ 1" radial ice concurrent
Code:	ANSI/TIA-222-H / 2015 IBC / 2018 Connecticut State Building Code
Exposure Category:	B
Risk Category:	II
Topographic Factor Procedure:	Method 2
Feature:	Hill
Crest Height (H):	344 ft
Crest Length (L):	1850 ft
Spectral Response:	$Ss = 0.19$, $S_1 = 0.05$
Site Class:	D - Stiff Soil

Conclusion

Based on the analysis results, the structure meets the requirements per the applicable codes listed above. The tower and foundation can support the equipment as described in this report.

If you have any questions or require additional information, please contact American Tower via email at Engineering@americantower.com. Please include the American Tower site name, site number, and engineering number in the subject line for any questions.

Existing and Reserved Equipment

Elev.[1] (ft)	Qty	Equipment	Mount Type	Lines	Carrier
307.0	1	Generic 10' Omni	Rigid Side Arm	(3) 7/8" Coax	OTHER
306.0	1	Generic 20' Dipole			
303.0	1	Generic 13' Omni			
302.0	1	Generic 6' Yagi			
288.0	1	Generic 18' Dipole		(2) 1 1/4" Coax	
277.0	1	Generic 10' Dipole	Rigid Side Arm	(2) 7/8" Coax	
276.0	1	Generic 8' Omni			
	1	Generic 24" x 24" Junction Box			
274.0	1	Generic 6' Omni			
241.0	1	Generic 13' Omni	Rigid Side Arm	-	
230.0	1	Generic 11' Omni			
228.0	1	Generic 14' Omni			
215.0	1	Decibel DB224	Side Arm	(1) 7/8" Coax	NEW ENGLAND CENTRAL RAILROAD
213.0	1	Generic 22' Dipole	Side Arm	-	OTHER
	1	Andrew DB224	Leg	(1) 1/2" Coax	PROV & WORCESTER RR
196.0	3	CCI DMP65R-BU8D	Sector Frame	(2) 0.39" (10mm) Fiber Trunk (4) 0.92" (23.4mm) Cable	AT&T MOBILITY
	2	Raycap DC9-48-60-24-8C-EV			
	3	Ericsson AIR 6449 B77D/ C-Band			
	3	Ericsson RRUS 4449 B5, B12			
	3	Ericsson RRUS 4478 B14			
	3	Ericsson RRUS 8843 B2, B66A			
	3	CCI TPA65R-BU8D			
180.0	3	Ericsson Air6449 B41	Sector Frame	(3) 1 5/8" Hybriflex	SPRINT NEXTEL
	3	Ericsson 4424 B25			
	3	Ericsson RRUS 4415 B66			
	3	Ericsson Radio 4449 B71 B85A			
	3	RFS APX16DWV-16DWVS-E-A20			
	3	RFS APXVAALL24 43-U-NA20			
170.0	3	Commscope LNX-8513DS-A1M	Sector Frame	(6) 1 5/8" Coax (1) 1 5/8" Hybriflex	VERIZON WIRELESS
	3	Samsung B2/B66A RRH-BR049			
	3	Samsung B5/B13 RRH-BR04C			
	3	Commscope CBC78T-DS-43-2X			
	6	Commscope JAHH-65B-R3B			
160.0	1	Procom CXL 900-3LW	Side Arm	(1) 1/2" Coax	SIGFOX S.A.
	1	Generic 5" x 3" x 2" Cavity Filter			
	1	Generic Low Noise Amplifier			
130.0	2	Scala AP7-850/065	Side Arm	(4) 0.41" (10.3mm) LMR-400 (2) 1 5/8" Coax	AT&T MOBILITY
	1	Generic 24" x 24" Junction Box			
115.0	1	Generic 20' Dipole	Side Arm	(1) 1/2" Coax	NEW ENGLAND CENTRAL RAILROAD
105.0	1	Generic 5' Yagi	Leg	-	OTHER
	1	Generic 2' x 4' Rectangular Grid Dish			
82.0	1	Generic 6' Ice Shield	Leg	(1) EW52	AT&T MOBILITY
80.0	1	RFS PA6-65AC w/ Radome			

Equipment to be Removed

Elev.[1] (ft)	Qty	Equipment	Mount Type	Lines	Carrier
170.0	1	RFS DB-T1-6Z-8AB-0Z	-	-	VERIZON WIRELESS

Proposed Equipment

Elev.[1] (ft)	Qty	Equipment	Mount Type	Lines	Carrier
170.0	1	Raycap RCMDC-6627-PF-48	Sector Frame	(5) 1 5/8" Coax (1) 1 5/8" Hybriflex	VERIZON WIRELESS
	3	Samsung MT6407-77A			

[1] Contracted elevations are shown for appurtenances within contracted installation tolerances. Appurtenances outside of contract limits are shown at installed elevations.

Install proposed lines alongside existing VERIZON WIRELESS lines.

Structure Usages

Structural Component	Controlling Usage	Pass/Fail
Legs	66%	Pass
Diagonals	59%	Pass
Horizontals	41%	Pass
Guys	76%	Pass

Foundations

Reaction Component	Original Design Reactions	Factored Design Reactions*	Analysis Reactions	% of Design
Base Axial (kips)	208.2	281.1	191.4	68%
A1 Uplift (kips)	73.5	99.2	62.8	63%
A1 Shear (kips)	85.9	116.0	77.2	67%
* The design reactions are factored by 1.35 per ANSI/TIA-222-H, Sec. 15.6.2				

The structure base reactions resulting from this analysis are acceptable when compared to those shown on the original structure drawings, therefore no modification or reinforcement of the foundation will be required.

Deflection, Twist and Sway*

Antenna Elevation (ft)	Antenna	Carrier	Deflection (ft)	Twist (°)	Sway (Rotation) (°)
170.0	Raycap RCMDC-6627-PF-48	VERIZON WIRELESS	0.171	0.054	0.034
	Samsung MT6407-77A				
105.0	Generic 2' x 4' Rectangular Grid Dish	Other	0.117	0.050	0.047
80.0	RFS PA6-65AC w/ Radome	AT&T MOBILITY	0.093	0.049	0.084

***Deflection, Twist and Sway was evaluated considering a design wind speed of 60 mph (3-Second Gust) per ANSI/TIA-222-H**

AMERICAN TOWER®
CORPORATION

Standard Conditions

All engineering services performed by A.T. Engineering Service, PLLC are prepared on the basis that the information used is current and correct. This information may consist of, but is not limited to the following:

- Information supplied by the client regarding antenna, mounts and feed line loading
- Information from drawings, design and analysis documents, and field notes in the possession of A.T. Engineering Service, PLLC

It is the responsibility of the client to ensure that the information provided to A.T. Engineering Service, PLLC and used in the performance of our engineering services is correct and complete.

All assets of American Tower Corporation, its affiliates and subsidiaries (collectively "American Tower") are inspected at regular intervals. Based upon these inspections and in the absence of information to the contrary, American Tower assumes that all structures were constructed in accordance with the drawings and specifications.

Unless explicitly agreed by both the client and A.T. Engineering Service, PLLC, all services will be performed in accordance with the current revision of ANSI/TIA-222.

All services are performed, results obtained, and recommendations made in accordance with generally accepted engineering principles and practices. A.T. Engineering Service, PLLC is not responsible for the conclusions, opinions and recommendations made by others based on the information supplied herein.

Quadrant 1

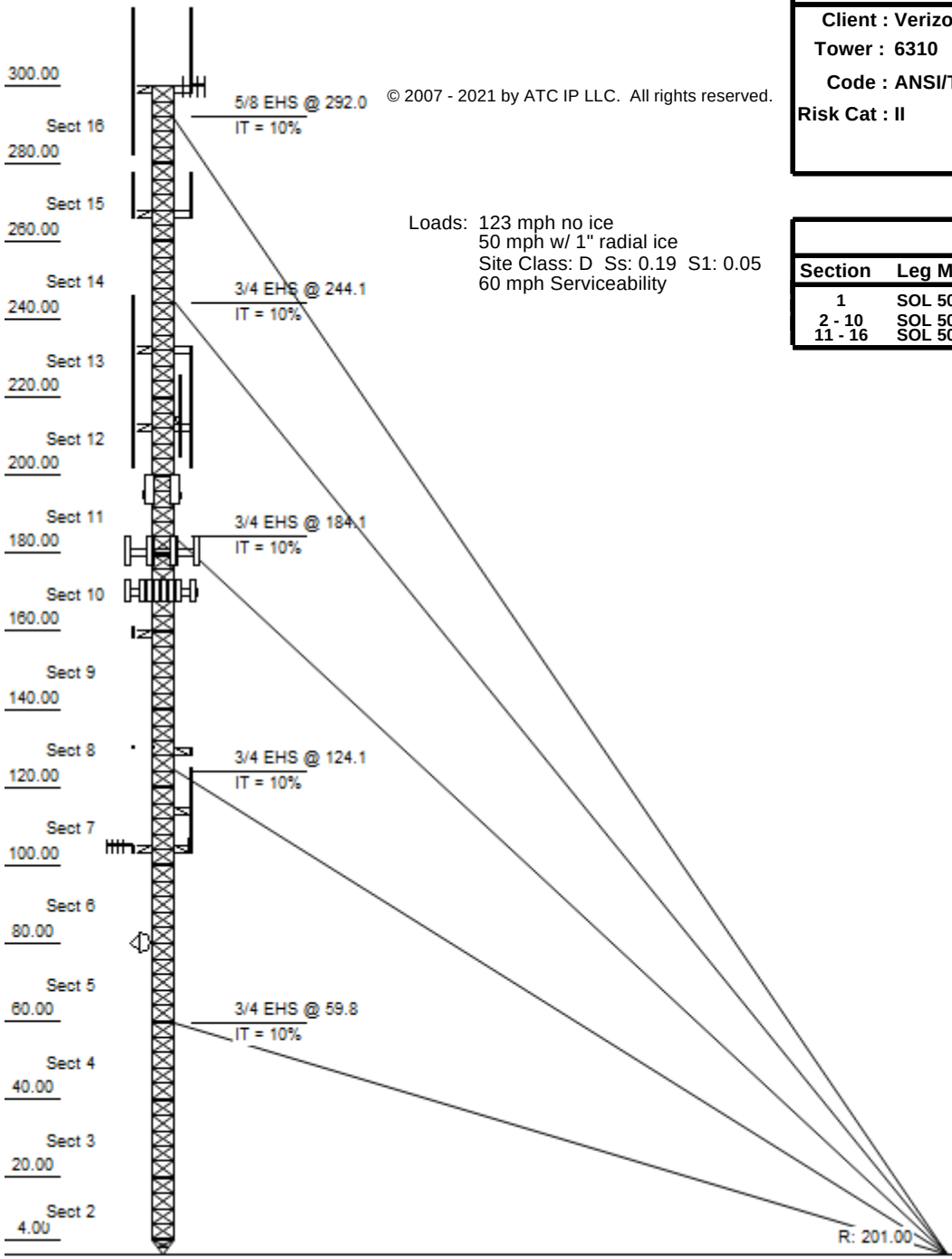

© 2007 - 2021 by ATC IP LLC. All rights reserved.

Loads: 123 mph no ice
50 mph w/ 1" radial ice
Site Class: D Ss: 0.19 S1: 0.05
60 mph Serviceability

Job Information

Client : Verizon Wireless			
Tower : 6310	Location :	FRANKLIN CT, CT	Base Width : 4.00 ft
Code : ANSI/TIA-222-H	Topo Method:	Method 2	
Risk Cat : II	Topo Feature:	Hill	Tower Ht : 300.00 ft
	Exposure :	B	Shape : Triangle

Sections Properties

Section	Leg Members		Diagonal Members	Horizontal Members
1	SOL 50 ksi	2 1/4" SOLID	PL 36 ksi PL 2 x 0.5"	SAE 36 ksi 3X3X0.3125
2 - 10	SOL 50 ksi	2 1/4" SOLID	SOL 50 ksi 5/8" SOLID	SAE 36 ksi 2X2X0.1875
11 - 16	SOL 50 ksi	2" SOLID	SOL 50 ksi 5/8" SOLID	SAE 36 ksi 2X2X0.1875

Discrete Appurtenance

Elev (ft)	Type	Qty	Description
300.00	Whip	1	Generic 18' Dipole
300.00	Straight Arm	3	Round Side Arm
300.00	Yagi	1	Generic 6' Yagi
300.00	Whip	1	Generic 13' Omni
300.00	Whip	1	Generic 20' Dipole
300.00	Whip	1	Generic 10' Omni
268.00	Whip	1	Generic 6' Omni
268.00		1	Generic 24" x 24" Junction Box
268.00	Whip	1	Generic 8' Omni
268.00	Whip	1	Generic 10' Dipole
268.00	Straight Arm	3	Round Side Arm
233.00	Whip	1	Generic 14' Omni
233.00	Whip	1	Generic 11' Omni
233.00	Whip	1	Generic 13' Omni
233.00	Straight Arm	3	Round Side Arm
215.00	Whip	1	Decibel DB224
213.00	Straight Arm	2	Side Arm
213.00	Whip	1	Andrew DB224
213.00	Whip	1	Generic 22' Dipole
196.00	Other	3	Sabre C10857001
196.00	Panel	3	CCI TPA65R-BU8D
196.00	Panel	3	CCI DMP65R-BU8D
196.00		2	Raycap DC9-48-60-24-8C-EV
196.00	Panel	3	Ericsson AIR 6449 B77D/ C-Band
196.00		3	Ericsson RRUS 4449 B5, B12
196.00		3	Ericsson RRUS 4478 B14
196.00		3	Ericsson RRUS 8843 B2, B66A
180.00	Mounting Frame	3	Round Sector Frame
180.00	Panel	3	RFS APXVAALL24 43-U-NA20
180.00	Panel	3	RFS APX16DWV-16DWVS-E-A20
180.00	Panel	3	Ericsson Air6449 B41
180.00		3	Ericsson 4424 B25
180.00		3	Ericsson Radio 4449 B71 B85A
180.00		3	Ericsson RRUS 4415 B66
170.00	Mounting Frame	3	Flat Light Sector Frame
170.00	Panel	6	Commscope JAHH-65B-R3B
170.00	Panel	3	Commscope LNX-8513DS-A1M
170.00	Panel	3	Samsung MT6407-77A
170.00		1	Raycap RCMDC-6627-PF-48
170.00		3	Samsung B2/B66A RRH-BR049
170.00		3	Samsung B5/B13 RRH-BR04C
170.00		3	Commscope CBC78T-DS-43-2X
160.00	Straight Arm	1	Flat Side Arm
160.00		1	Generic Low Noise Amplifier
160.00		1	Generic 5" x 3" x 2" Cavity Fi
160.00	Whip	1	Procom CXL 900-3LW
130.00	Straight Arm	1	Round Side Arm
130.00		1	Generic 24" x 24" Junction Box
130.00	Panel	2	Scala AP7-850/065
125.00	Straight Arm	3	Flat Side Arm

© 2007 - 2021 by ATC IP LLC. All rights reserved.

Job Information

Client :	Verizon Wireless				
Tower :	6310	Location :	FRANKLIN CT, CT	Base Width :	4.00 ft
Code :	ANSI/TIA-222-H	Topo Method:	Method 2		
Risk Cat :	II	Topo Feature:	Hill	Tower Ht :	300.00 ft
		Exposure :	B	Shape :	Triangle

115.00	Straight Arm	1	Round Side Arm
115.00	Whip	1	Generic 20' Dipole
105.00	Straight Arm	1	Round Side Arm
105.00	Dish	1	Generic 2' x 4' Rectangular Gr
105.00	Yagi	1	Generic 5' Yagi
82.00	Other	1	Generic 6' Ice Shield
80.00	Dish	1	RFS PA6-65AC w/ Radome

Linear Appurtenance

Elev (ft) From	To	Qty	Description
5.00	300.00	1	7/8" Coax
5.00	300.00	1	7/8" Coax
5.00	300.00	1	7/8" Coax
5.00	300.00	2	1 1/4" Coax
0.00	268.00	1	7/8" Coax
0.00	268.00	1	7/8" Coax
0.00	215.00	1	7/8" Coax
5.00	213.00	1	1/2" Coax
0.00	196.00	4	0.92" (23.4mm) Cable
0.00	196.00	2	0.39" (10mm) Fiber T
0.00	180.00	3	1 5/8" Hybriflex
0.00	170.00	1	1 5/8" Hybriflex
0.00	170.00	1	1 5/8" Hybriflex
0.00	170.00	5	1 5/8" Coax
0.00	170.00	6	1 5/8" Coax
0.00	160.00	1	1/2" Coax
5.00	130.00	4	0.41" (10.3mm) LMR-4
0.00	130.00	2	1 5/8" Coax
5.00	115.00	1	1/2" Coax
0.00	80.00	1	EW52

© 2007 - 2021 by ATC IP LLC. All rights reserved.

Job Information

Client :	Verizon Wireless				
Tower :	6310	Location :	FRANKLIN CT, CT	Base Width :	4.00 ft
Code :	ANSI/TIA-222-H	Topo Method:	Method 2		
Risk Cat :	II	Topo Feature:	Hill	Tower Ht :	300.00 ft
		Exposure :	B	Shape :	Triangle

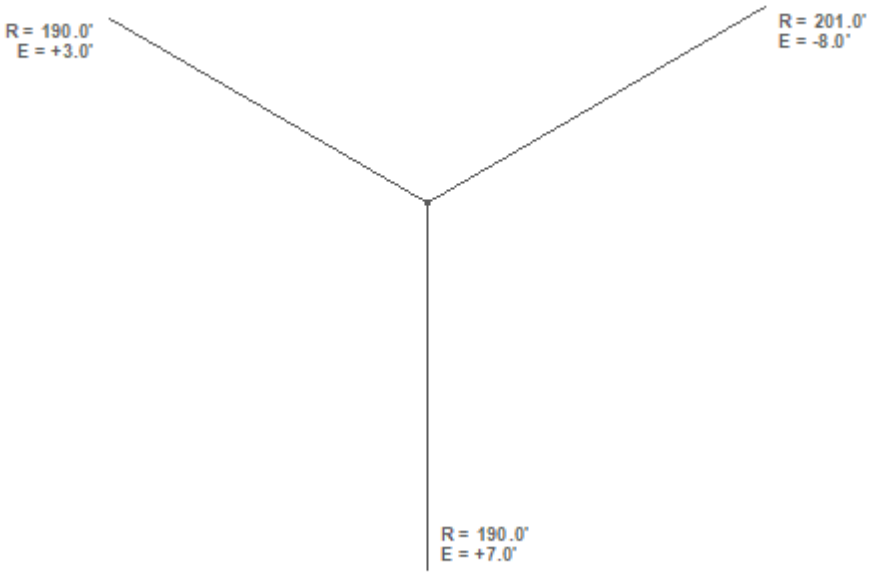

Guy Anchor Design Loads

Radius (ft)	Drop (ft)	Azimuth (°)	Uplift (kip)	Shear (kip)
190.00	7.00	0	60.87	76.92
190.00	3.00	240	62.62	77.21
201.00	-8.00	120	62.83	76.77

Global Base Foundation Design Loads

Vertical (kip)	Horizontal (kip)
191.44	2.56

Site Number:	**6310**	**Code:**	**ANSI/TIA-222-H**	© 2007 - 2021 by ATC IP LLC. All rights reserved.
Site Name:	**FRANKLIN CT, CT**	**Engineering Number:**	**13668773_C3_04**	7/6/2021 1:13:04 PM
Customer:	**Verizon Wireless**			

Analysis Parameters

Location:	**New London County, CT**	**Height (ft):**	**300**
Code:	**ANSI/TIA-222-H**	**Base Elevation (ft):**	**0.00**
Shape:	**Triangle**	**Bottom Face Width (ft):**	**4.00**
Tower Manufacturer:	**FWT Inc**	**Top Face Width (ft):**	**4.00**
Tower Type:	**Guyed**		
Kd:	**0.85**		
Ke:	**0.98**		

Ice & Wind Parameters

Exposure Category:	**B**	**Design Windspeed Without Ice:**	**123 mph**
Risk Category:	**II**	**Design Windspeed With Ice:**	**50 mph**
Topographic Factor Procedure:	**Method 2**	**Operational Windspeed:**	**60 mph**
Feature:	**Hill**	**Design Ice Thickness:**	**1.00 in**
Crest Height (H):	**344 ft**	**HMSL:**	**499.00 ft**
Crest Length (L):	**1850 ft**		
Distance from Apex (x):	**0 ft**		
Upwind / Downwind	**Upwind**		

Seismic Parameters

Analysis Method:	**Equivalent Lateral Force Method**
Site Class:	**D - Stiff Soil**
Period Based on Rayleigh Method (sec):	**0.84**

T_L (sec):	**6**	**p:**	**1.3**	**C_S:**	**0.034**
S_S :	**0.195**	**S_1 :**	**0.054**	**C_S, Max:**	**0.034**
F_a :	**1.600**	**F_V :**	**2.400**	**C_S, Min:**	**0.030**
S_{ds} :	**0.208**	**S_{d1} :**	**0.086**		

Load Cases

1.2D + 1.0W Normal	**123 mph Normal with No Ice**
1.2D + 1.0W 60 deg	**123 mph 60 degree with No Ice**
1.2D + 1.0W 90 deg	**123 mph 90 degree with No Ice**
1.2D + 1.0W 120 deg	**123 mph 120 degree with No Ice**
1.2D + 1.0W 180 deg	**123 mph 180 degree with No Ice**
1.2D + 1.0W 210 deg	**123 mph 210 degree with No Ice**
1.2D + 1.0W 240 deg	**123 mph 240 degree with No Ice**
1.2D + 1.0W 300 deg	**123 mph 300 degree with No Ice**
1.2D + 1.0W 330 deg	**123 mph 330 degree with No Ice**
1.2D + 1.0Di + 1.0Wi Normal	**50 mph Normal with 1.00 in Radial Ice**
1.2D + 1.0Di + 1.0Wi 60 deg	**50 mph 60 deg with 1.00 in Radial Ice**
1.2D + 1.0Di + 1.0Wi 90 deg	**50 mph 90 deg with 1.00 in Radial Ice**
1.2D + 1.0Di + 1.0Wi 120 deg	**50 mph 120 deg with 1.00 in Radial Ice**
1.2D + 1.0Di + 1.0Wi 180 deg	**50 mph 180 deg with 1.00 in Radial Ice**

© 2007 - 2021 by ATC IP LLC. All rights reserved.

Analysis Parameters

1.2D + 1.0Di + 1.0Wi 210 deg	50 mph 210 deg with 1.00 in Radial Ice
1.2D + 1.0Di + 1.0Wi 240 deg	50 mph 240 deg with 1.00 in Radial Ice
1.2D + 1.0Di + 1.0Wi 300 deg	50 mph 300 deg with 1.00 in Radial Ice
1.2D + 1.0Di + 1.0Wi 330 deg	50 mph 330 deg with 1.00 in Radial Ice
1.2D + 1.0Ev + 1.0Eh Normal	Seismic Normal
1.2D + 1.0Ev + 1.0Eh 60 deg	Seismic 60 deg
1.2D + 1.0Ev + 1.0Eh 90 deg	Seismic 90 deg
1.2D + 1.0Ev + 1.0Eh 120 deg	Seismic 120 deg
1.2D + 1.0Ev + 1.0Eh 180 deg	Seismic 180 deg
1.2D + 1.0Ev + 1.0Eh 210 deg	Seismic 210 deg
1.2D + 1.0Ev + 1.0Eh 240 deg	Seismic 240 deg
1.2D + 1.0Ev + 1.0Eh 300 deg	Seismic 300 deg
1.2D + 1.0Ev + 1.0Eh 330 deg	Seismic 330 deg
0.9D - 1.0Ev + 1.0Eh Normal	Seismic (Reduced DL) Normal
0.9D - 1.0Ev + 1.0Eh 60 deg	Seismic (Reduced DL) 60 deg
0.9D - 1.0Ev + 1.0Eh 90 deg	Seismic (Reduced DL) 90 deg
0.9D - 1.0Ev + 1.0Eh 120 deg	Seismic (Reduced DL) 120 deg
0.9D - 1.0Ev + 1.0Eh 180 deg	Seismic (Reduced DL) 180 deg
0.9D - 1.0Ev + 1.0Eh 210 deg	Seismic (Reduced DL) 210 deg
0.9D - 1.0Ev + 1.0Eh 240 deg	Seismic (Reduced DL) 240 deg
0.9D - 1.0Ev + 1.0Eh 300 deg	Seismic (Reduced DL) 300 deg
0.9D - 1.0Ev + 1.0Eh 330 deg	Seismic (Reduced DL) 330 deg
1.0D + 1.0W Service Normal	Serviceability - 60 mph Wind Normal
1.0D + 1.0W Service 60 deg	Serviceability - 60 mph Wind 60 deg
1.0D + 1.0W Service 90 deg	Serviceability - 60 mph Wind 90 deg
1.0D + 1.0W Service 120 deg	Serviceability - 60 mph Wind 120 deg
1.0D + 1.0W Service 180 deg	Serviceability - 60 mph Wind 180 deg
1.0D + 1.0W Service 210 deg	Serviceability - 60 mph Wind 210 deg
1.0D + 1.0W Service 240 deg	Serviceability - 60 mph Wind 240 deg
1.0D + 1.0W Service 300 deg	Serviceability - 60 mph Wind 300 deg
1.0D + 1.0W Service 330 deg	Serviceability - 60 mph Wind 330 deg

© 2007 - 2021 by ATC IP LLC. All rights reserved.

Tower Loading

Discrete Appurtenance Properties 1.2D + 1.0W

Elevation (ft)	Description	Qty	Wt. (lb)	EPA (sf)	Length (ft)	Width (in)	Depth (in)	K_a	Orient. Factor	Vert. Ecc.(ft)	M_u (lb-ft)	Q_z (psf)	F_a (WL) (lb)	P_a (DL) (lb)
300.0	Generic 10' Omni	1	25	3.0	10.0	3.0	3.0	1.00	1.00	5.0	672.3	52.73	134	30
300.0	Generic 13' Omni	1	40	3.9	13.0	3.0	3.0	1.00	1.00	6.5	1136.5	52.74	175	48
300.0	Round Side Arm	3	150	5.2	0.0	0.0	0.0	1.00	0.67	0.0	0.0	52.68	468	540
300.0	Generic 18' Dipole	1	55	6.8	18.0	3.0	3.0	1.00	1.00	-9.0	2723.9	52.59	303	66
300.0	Generic 20' Dipole	1	60	7.5	20.0	3.0	3.0	1.00	1.00	10.0	3373.6	52.78	337	72
300.0	Generic 6' Yagi	1	25	8.9	6.0	60.0	3.0	1.00	1.00	3.0	1203.0	52.71	401	30
268.0	Generic 6' Omni	1	25	1.8	6.0	3.0	3.0	1.00	1.00	3.0	235.2	52.40	78	30
268.0	Generic 8' Omni	1	25	2.4	8.0	3.0	3.0	1.00	1.00	4.0	427.6	52.41	107	30
268.0	Generic 10' Dipole	1	30	3.8	10.0	3.0	3.0	1.00	1.00	5.0	837.6	52.42	168	36
268.0	Generic 24" x 24"	1	20	4.8	2.0	24.0	8.0	1.00	1.00	0.0	0.0	52.37	214	24
268.0	Round Side Arm	3	150	5.2	0.0	0.0	0.0	1.00	0.67	0.0	0.0	52.37	465	540
233.0	Generic 11' Omni	1	40	3.3	11.0	3.0	3.0	1.00	1.00	-5.5	800.9	51.92	146	48
233.0	Generic 13' Omni	1	40	3.9	13.0	3.0	3.0	1.00	1.00	6.5	1121.8	52.06	173	48
233.0	Generic 14' Omni	1	40	4.2	14.0	3.0	3.0	1.00	1.00	-7.0	1296.9	51.90	185	48
233.0	Round Side Arm	3	150	5.2	0.0	0.0	0.0	1.00	0.67	0.0	0.0	51.98	462	540
215.0	Decibel DB224	1	32	5.4	21.3	2.0	2.0	1.00	1.00	0.0	0.0	51.76	240	38
213.0	Andrew DB224	1	38	6.1	23.0	0.0	0.0	1.00	1.00	0.0	0.0	51.73	266	46
213.0	Side Arm	2	150	6.3	0.0	0.0	0.0	0.90	0.90	0.0	0.0	51.73	449	360
213.0	Generic 22' Dipole	1	66	8.3	22.0	3.0	3.0	1.00	1.00	0.0	0.0	51.73	364	79
196.0	Ericsson RRUS 8843	3	72	1.6	1.2	13.2	10.9	0.80	0.50	0.0	0.0	51.48	86	259
196.0	Ericsson RRUS 4478	3	60	1.8	1.4	13.4	7.7	0.80	0.50	0.0	0.0	51.48	97	216
196.0	Ericsson RRUS 4449	3	71	2.0	1.5	13.2	9.4	0.80	0.50	0.0	0.0	51.48	103	256
196.0	Ericsson AIR 6449	3	82	4.0	2.5	15.9	10.6	0.80	0.70	0.0	0.0	51.48	296	294
196.0	Raycap DC9-48-60-	2	16	4.8	2.6	18.3	10.2	0.80	0.75	0.0	0.0	51.48	251	38
196.0	Sabre C10857001	3	462	14.4	0.0	0.0	0.0	0.75	0.67	0.0	0.0	51.48	950	1663
196.0	CCI DMP65R-BU8D	3	96	17.9	8.0	20.7	7.7	0.80	0.63	0.0	0.0	51.48	1182	345
196.0	CCI TPA65R-BU8D	3	83	18.1	8.0	21.0	7.8	0.80	0.63	0.0	0.0	51.48	1197	297
180.0	Ericsson RRUS 4415	3	46	1.6	1.3	13.2	5.4	0.80	0.50	0.0	0.0	51.20	86	166
180.0	Ericsson Radio 4449	3	75	1.6	1.3	13.2	10.5	0.80	0.50	0.0	0.0	51.20	86	270
180.0	Ericsson 4424 B25	3	86	2.1	1.4	14.4	11.3	0.80	0.67	0.0	0.0	51.20	144	310
180.0	Ericsson Air6449	3	104	5.7	2.8	20.6	8.6	0.80	0.63	0.0	0.0	51.20	374	374
180.0	RFS APX16DWV-	3	41	6.6	4.7	13.3	3.1	0.80	0.60	0.0	0.0	51.20	413	147
180.0	Round Sector Frame	3	300	14.4	0.0	0.0	0.0	0.75	0.75	0.0	0.0	51.20	1058	1080
180.0	RFS APXVAALL24	3	123	20.2	8.0	24.0	8.5	0.80	0.63	0.0	0.0	51.20	1332	442
170.0	Commscope	3	21	0.6	0.8	6.9	6.4	0.80	0.50	0.0	0.0	51.00	29	75
170.0	Samsung B5/B13	3	70	1.9	1.3	15.0	8.1	0.80	0.50	0.0	0.0	51.00	98	253
170.0	Samsung B2/B66A	3	84	1.9	1.3	15.0	10.0	0.80	0.50	0.0	0.0	51.00	98	304
170.0	Raycap RCMDC-	1	32	4.1	2.5	16.5	12.6	0.80	1.00	0.0	0.0	51.00	141	38
170.0	Samsung MT6407-	3	82	4.7	2.9	16.1	5.5	0.80	0.61	0.0	0.0	51.00	299	294
170.0	Commscope LNX-	3	39	8.2	6.1	11.9	7.1	0.80	0.69	0.0	0.0	51.00	587	141
170.0	Commscope JAHH-	6	61	9.1	6.0	13.8	8.2	0.80	0.69	0.0	0.0	51.00	1308	436
170.0	Flat Light Sector	3	400	17.9	0.0	0.0	0.0	0.75	0.75	0.0	0.0	51.00	1309	1440
160.0	Procom CXL 900-	1	2	0.1	2.3	0.6	0.6	1.00	1.00	0.0	0.0	50.77	6	2
160.0	Generic 5" x 3" x 2"	1	2	0.1	0.4	3.2	1.9	1.00	0.50	0.0	0.0	50.77	3	2
160.0	Generic Low Noise	1	2	0.2	0.4	4.0	2.0	1.00	0.50	0.0	0.0	50.77	4	2
160.0	Flat Side Arm	1	150	6.3	0.0	0.0	0.0	1.00	0.67	0.0	0.0	50.77	182	180
130.0	Scala AP7-850/065	2	3	1.1	1.1	10.0	4.0	0.90	0.62	0.0	0.0	49.88	52	7
130.0	Generic 24" x 24"	1	20	4.8	2.0	24.0	8.0	0.90	0.67	0.0	0.0	49.88	123	24
130.0	Round Side Arm	1	150	5.2	0.0	0.0	0.0	1.00	0.67	0.0	0.0	49.88	148	180
125.0	Flat Side Arm	3	150	6.3	0.0	0.0	0.0	1.00	0.67	0.0	0.0	49.69	535	540
115.0	Round Side Arm	1	150	5.2	0.0	0.0	0.0	1.00	1.00	0.0	0.0	49.26	218	180
115.0	Generic 20' Dipole	1	60	7.5	20.0	3.0	3.0	1.00	1.00	0.0	0.0	49.26	315	72
105.0	Round Side Arm	1	150	5.2	0.0	0.0	0.0	1.00	1.00	0.0	0.0	48.76	216	180
105.0	Generic 5' Yagi	1	20	7.3	5.0	60.0	3.0	1.00	1.00	0.0	0.0	48.76	302	24

© 2007 - 2021 by ATC IP LLC. All rights reserved.

Tower Loading

105.0	Generic 2' x 4'	1	40	7.5	4.0	48.0	24.0	1.00	1.00	0.0	0.0	48.76	309	48
82.00	Generic 6' Ice Shield	1	450	3.9	1.2	100.0	48.0	1.00	1.00	0.0	0.0	47.20	156	540
80.00	RFS PA6-65AC w/	1	308	24.4	6.0	72.0	0.0	1.00	1.00	0.0	0.0	47.04	976	370
	Totals	113	11784	742.1									20199	14141

Discrete Appurtenance Properties 1.2D + 1.0Di + 1.0Wi

Elevation (ft)	Description	Qty	Ice Wt (lb)	Ice EPA (sf)	Length (ft)	Width (in)	Depth (in)	K_a	Orient. Factor	Vert. Ecc.(ft)	M_u (lb-ft)	Q_z (psf)	F_a (WL) (lb)	P_a (DL) (lb)
300.0	Generic 10' Omni	1	83	5.8	10.0	3.0	3.0	1.00	1.00	5.0	213.5	8.71	43	88
300.0	Generic 13' Omni	1	115	7.5	13.0	3.0	3.0	1.00	1.00	6.5	359.6	8.72	55	123
300.0	Round Side Arm	3	206	7.3	0.0	0.0	0.0	1.00	0.67	0.0	0.0	8.71	108	709
300.0	Generic 18' Dipole	1	208	15.0	18.0	3.0	3.0	1.00	1.00	-9.0	995.9	8.69	111	219
300.0	Generic 20' Dipole	1	230	16.6	20.0	3.0	3.0	1.00	1.00	10.0	1232.9	8.72	123	242
300.0	Generic 6' Yagi	1	220	27.3	6.0	60.0	3.0	1.00	1.00	3.0	605.8	8.71	202	225
268.0	Generic 6' Omni	1	60	2.7	6.0	3.0	3.0	1.00	1.00	3.0	60.2	8.66	20	65
268.0	Generic 8' Omni	1	72	4.5	8.0	3.0	3.0	1.00	1.00	4.0	132.7	8.66	33	77
268.0	Generic 10' Dipole	1	115	8.4	10.0	3.0	3.0	1.00	1.00	5.0	307.6	8.66	62	121
268.0	Generic 24" x 24"	1	108	5.9	2.0	24.0	8.0	1.00	1.00	0.0	0.0	8.65	43	112
268.0	Round Side Arm	3	206	7.3	0.0	0.0	0.0	1.00	0.67	0.0	0.0	8.65	108	708
233.0	Generic 11' Omni	1	104	6.3	11.0	3.0	3.0	1.00	1.00	-5.5	253.6	8.58	46	112
233.0	Generic 13' Omni	1	115	7.5	13.0	3.0	3.0	1.00	1.00	6.5	354.4	8.60	55	123
233.0	Generic 14' Omni	1	121	8.0	14.0	3.0	3.0	1.00	1.00	-7.0	409.4	8.58	58	129
233.0	Round Side Arm	3	206	7.3	0.0	0.0	0.0	1.00	0.67	0.0	0.0	8.59	107	708
215.0	Decibel DB224	1	159	17.8	21.3	2.0	2.0	1.00	1.00	0.0	0.0	8.55	129	166
213.0	Andrew DB224	1	180	20.0	23.0	0.0	0.0	1.00	1.00	0.0	0.0	8.55	146	188
213.0	Side Arm	2	206	8.2	0.0	0.0	0.0	0.90	0.90	0.0	0.0	8.55	96	472
213.0	Generic 22' Dipole	1	252	18.2	22.0	3.0	3.0	1.00	1.00	0.0	0.0	8.55	133	265
196.0	Ericsson RRUS 8843	3	119	2.3	1.2	13.2	10.9	0.80	0.50	0.0	0.0	8.51	20	400
196.0	Ericsson RRUS 4478	3	102	2.5	1.4	13.4	7.7	0.80	0.50	0.0	0.0	8.51	22	342
196.0	Ericsson RRUS 4449	3	120	2.7	1.5	13.2	9.4	0.80	0.50	0.0	0.0	8.51	23	403
196.0	Ericsson AIR 6449	3	171	5.1	2.5	15.9	10.6	0.80	0.70	0.0	0.0	8.51	62	561
196.0	Raycap DC9-48-60-	2	115	5.9	2.6	18.3	10.2	0.80	0.75	0.0	0.0	8.51	51	236
196.0	Sabre C10857001	3	708	22.1	0.0	0.0	0.0	0.75	0.67	0.0	0.0	8.51	241	2401
196.0	CCI DMP65R-BU8D	3	355	20.7	8.0	20.7	7.7	0.80	0.63	0.0	0.0	8.51	226	1124
196.0	CCI TPA65R-BU8D	3	346	20.9	8.0	21.0	7.8	0.80	0.63	0.0	0.0	8.51	229	1087
180.0	Ericsson RRUS 4415	3	79	2.3	1.3	13.2	5.4	0.80	0.50	0.0	0.0	8.46	20	265
180.0	Ericsson Radio 4449	3	121	2.3	1.3	13.2	10.5	0.80	0.50	0.0	0.0	8.46	20	408
180.0	Ericsson 4424 B25	3	142	2.8	1.4	14.4	11.3	0.80	0.67	0.0	0.0	8.46	32	476
180.0	Ericsson Air6449	3	208	6.9	2.8	20.6	8.6	0.80	0.63	0.0	0.0	8.46	75	686
180.0	RFS APX16DWV-	3	130	8.2	4.7	13.3	3.1	0.80	0.60	0.0	0.0	8.46	85	414
180.0	Round Sector Frame	3	580	27.0	0.0	0.0	0.0	0.75	0.75	0.0	0.0	8.46	328	1921
180.0	RFS APXVAALL24	3	420	23.1	8.0	24.0	8.5	0.80	0.63	0.0	0.0	8.46	251	1333
170.0	Commscope	3	38	0.9	0.8	6.9	6.4	0.80	0.50	0.0	0.0	8.43	8	125
170.0	Samsung B5/B13	3	114	2.6	1.3	15.0	8.1	0.80	0.50	0.0	0.0	8.43	22	384
170.0	Samsung B2/B66A	3	133	2.6	1.3	15.0	10.0	0.80	0.50	0.0	0.0	8.43	22	450
170.0	Raycap RCMDC-	1	129	5.1	2.5	16.5	12.6	0.80	1.00	0.0	0.0	8.43	29	135
170.0	Samsung MT6407-	3	159	5.9	2.9	16.1	5.5	0.80	0.61	0.0	0.0	8.43	62	527
170.0	Commscope LNX-	3	173	10.3	6.1	11.9	7.1	0.80	0.69	0.0	0.0	8.43	122	544
170.0	Commscope JAHH-	6	215	11.2	6.0	13.8	8.2	0.80	0.69	0.0	0.0	8.43	266	1362
170.0	Flat Light Sector	3	629	29.4	0.0	0.0	0.0	0.75	0.75	0.0	0.0	8.43	355	2128
160.0	Procom CXL 900-	1	6	0.7	2.3	0.6	0.6	1.00	1.00	0.0	0.0	8.39	5	6
160.0	Generic 5" x 3" x 2"	1	5	0.3	0.4	3.2	1.9	1.00	0.50	0.0	0.0	8.39	1	6
160.0	Generic Low Noise	1	6	0.4	0.4	4.0	2.0	1.00	0.50	0.0	0.0	8.39	1	7
160.0	Flat Side Arm	1	206	8.2	0.0	0.0	0.0	1.00	0.67	0.0	0.0	8.39	39	236
130.0	Scala AP7-850/065	2	29	1.4	1.1	10.0	4.0	0.90	0.62	0.0	0.0	8.24	11	59

© 2007 - 2021 by ATC IP LLC. All rights reserved.

Tower Loading

130.0	Generic 24" x 24"	1	107	5.9	2.0	24.0	8.0	0.90	0.67	0.0	0.0	8.24	25	111
130.0	Round Side Arm	1	205	7.3	0.0	0.0	0.0	1.00	0.67	0.0	0.0	8.24	34	235
125.0	Flat Side Arm	3	205	8.2	0.0	0.0	0.0	1.00	0.67	0.0	0.0	8.21	115	706
115.0	Round Side Arm	1	205	7.2	0.0	0.0	0.0	1.00	1.00	0.0	0.0	8.14	50	235
115.0	Generic 20' Dipole	1	227	16.5	20.0	3.0	3.0	1.00	1.00	0.0	0.0	8.14	114	239
105.0	Round Side Arm	1	205	7.2	0.0	0.0	0.0	1.00	1.00	0.0	0.0	8.06	50	235
105.0	Generic 5' Yagi	1	180	22.3	5.0	60.0	3.0	1.00	1.00	0.0	0.0	8.06	153	184
105.0	Generic 2' x 4'	1	209	45.1	4.0	48.0	24.0	1.00	1.00	0.0	0.0	8.06	309	217
82.00	Generic 6' Ice Shield	1	918	6.6	1.2	100.0	48.0	1.00	1.00	0.0	0.0	7.80	43	1008
80.00	RFS PA6-65AC w/	1	832	26.2	6.0	72.0	0.0	1.00	1.00	0.0	0.0	7.77	173	893
	Totals	113	24586	1120.2									5371	26943

Discrete Appurtenance Properties 1.0D + 1.0W Service

Elevation (ft)	Description	Qty	Wt. (lb)	EPA (sf)	Length (ft)	Width (in)	Depth (in)	K_a	Orient. Factor	Vert. Ecc.(ft)	M_u (lb-ft)	Q_z (psf)	F_a (WL) (lb)	P_a (DL) (lb)
300.0	Generic 10' Omni	1	25	3.0	10.0	3.0	3.0	1.00	1.00	5.0	160.0	12.55	32	25
300.0	Generic 13' Omni	1	40	3.9	13.0	3.0	3.0	1.00	1.00	6.5	270.4	12.55	42	40
300.0	Round Side Arm	3	150	5.2	0.0	0.0	0.0	1.00	0.67	0.0	0.0	12.54	111	450
300.0	Generic 18' Dipole	1	55	6.8	18.0	3.0	3.0	1.00	1.00	-9.0	648.2	12.52	72	55
300.0	Generic 20' Dipole	1	60	7.5	20.0	3.0	3.0	1.00	1.00	10.0	802.8	12.56	80	60
300.0	Generic 6' Yagi	1	25	8.9	6.0	60.0	3.0	1.00	1.00	3.0	286.3	12.54	95	25
268.0	Generic 6' Omni	1	25	1.8	6.0	3.0	3.0	1.00	1.00	3.0	56.0	12.47	19	25
268.0	Generic 8' Omni	1	25	2.4	8.0	3.0	3.0	1.00	1.00	4.0	101.8	12.47	25	25
268.0	Generic 10' Dipole	1	30	3.8	10.0	3.0	3.0	1.00	1.00	5.0	199.3	12.47	40	30
268.0	Generic 24" x 24"	1	20	4.8	2.0	24.0	8.0	1.00	1.00	0.0	0.0	12.46	51	20
268.0	Round Side Arm	3	150	5.2	0.0	0.0	0.0	1.00	0.67	0.0	0.0	12.46	111	450
233.0	Generic 11' Omni	1	40	3.3	11.0	3.0	3.0	1.00	1.00	-5.5	190.6	12.35	35	40
233.0	Generic 13' Omni	1	40	3.9	13.0	3.0	3.0	1.00	1.00	6.5	266.9	12.39	41	40
233.0	Generic 14' Omni	1	40	4.2	14.0	3.0	3.0	1.00	1.00	-7.0	308.6	12.35	44	40
233.0	Round Side Arm	3	150	5.2	0.0	0.0	0.0	1.00	0.67	0.0	0.0	12.37	110	450
215.0	Decibel DB224	1	32	5.4	21.3	2.0	2.0	1.00	1.00	0.0	0.0	12.32	57	32
213.0	Andrew DB224	1	38	6.1	23.0	0.0	0.0	1.00	1.00	0.0	0.0	12.31	63	38
213.0	Side Arm	2	150	6.3	0.0	0.0	0.0	0.90	0.90	0.0	0.0	12.31	107	300
213.0	Generic 22' Dipole	1	66	8.3	22.0	3.0	3.0	1.00	1.00	0.0	0.0	12.31	87	66
196.0	Ericsson RRUS 8843	3	72	1.6	1.2	13.2	10.9	0.80	0.50	0.0	0.0	12.25	20	216
196.0	Ericsson RRUS 4478	3	60	1.8	1.4	13.4	7.7	0.80	0.50	0.0	0.0	12.25	23	180
196.0	Ericsson RRUS 4449	3	71	2.0	1.5	13.2	9.4	0.80	0.50	0.0	0.0	12.25	25	213
196.0	Ericsson AIR 6449	3	82	4.0	2.5	15.9	10.6	0.80	0.70	0.0	0.0	12.25	70	245
196.0	Raycap DC9-48-60-	2	16	4.8	2.6	18.3	10.2	0.80	0.75	0.0	0.0	12.25	60	32
196.0	Sabre C10857001	3	462	14.4	0.0	0.0	0.0	0.75	0.67	0.0	0.0	12.25	226	1386
196.0	CCI DMP65R-BU8D	3	96	17.9	8.0	20.7	7.7	0.80	0.63	0.0	0.0	12.25	281	287
196.0	CCI TPA65R-BU8D	3	83	18.1	8.0	21.0	7.8	0.80	0.63	0.0	0.0	12.25	285	248
180.0	Ericsson RRUS 4415	3	46	1.6	1.3	13.2	5.4	0.80	0.50	0.0	0.0	12.18	21	138
180.0	Ericsson Radio 4449	3	75	1.6	1.3	13.2	10.5	0.80	0.50	0.0	0.0	12.18	21	225
180.0	Ericsson 4424 B25	3	86	2.1	1.4	14.4	11.3	0.80	0.67	0.0	0.0	12.18	34	258
180.0	Ericsson Air6449	3	104	5.7	2.8	20.6	8.6	0.80	0.63	0.0	0.0	12.18	89	312
180.0	RFS APX16DWV-	3	41	6.6	4.7	13.3	3.1	0.80	0.60	0.0	0.0	12.18	98	122
180.0	Round Sector Frame	3	300	14.4	0.0	0.0	0.0	0.75	0.75	0.0	0.0	12.18	252	900
180.0	RFS APXVAALL24	3	123	20.2	8.0	24.0	8.5	0.80	0.63	0.0	0.0	12.18	317	368
170.0	Commscope	3	21	0.6	0.8	6.9	6.4	0.80	0.50	0.0	0.0	12.14	7	62
170.0	Samsung B5/B13	3	70	1.9	1.3	15.0	8.1	0.80	0.50	0.0	0.0	12.14	23	211
170.0	Samsung B2/B66A	3	84	1.9	1.3	15.0	10.0	0.80	0.50	0.0	0.0	12.14	23	253
170.0	Raycap RCMDC-	1	32	4.1	2.5	16.5	12.6	0.80	1.00	0.0	0.0	12.14	33	32
170.0	Samsung MT6407-	3	82	4.7	2.9	16.1	5.5	0.80	0.61	0.0	0.0	12.14	71	245
170.0	Commscope LNX-	3	39	8.2	6.1	11.9	7.1	0.80	0.69	0.0	0.0	12.14	140	118

© 2007 - 2021 by ATC IP LLC. All rights reserved.

Tower Loading

170.0	Commscope JAHH-	6	61	9.1	6.0	13.8	8.2	0.80	0.69	0.0	0.0	12.14	311	364
170.0	Flat Light Sector	3	400	17.9	0.0	0.0	0.0	0.75	0.75	0.0	0.0	12.14	312	1200
160.0	Procom CXL 900-	1	2	0.1	2.3	0.6	0.6	1.00	1.00	0.0	0.0	12.08	1	2
160.0	Generic 5" x 3" x 2"	1	2	0.1	0.4	3.2	1.9	1.00	0.50	0.0	0.0	12.08	1	2
160.0	Generic Low Noise	1	2	0.2	0.4	4.0	2.0	1.00	0.50	0.0	0.0	12.08	1	2
160.0	Flat Side Arm	1	150	6.3	0.0	0.0	0.0	1.00	0.67	0.0	0.0	12.08	43	150
130.0	Scala AP7-850/065	2	3	1.1	1.1	10.0	4.0	0.90	0.62	0.0	0.0	11.87	12	6
130.0	Generic 24" x 24"	1	20	4.8	2.0	24.0	8.0	0.90	0.67	0.0	0.0	11.87	29	20
130.0	Round Side Arm	1	150	5.2	0.0	0.0	0.0	1.00	0.67	0.0	0.0	11.87	35	150
125.0	Flat Side Arm	3	150	6.3	0.0	0.0	0.0	1.00	0.67	0.0	0.0	11.82	127	450
115.0	Round Side Arm	1	150	5.2	0.0	0.0	0.0	1.00	1.00	0.0	0.0	11.72	52	150
115.0	Generic 20' Dipole	1	60	7.5	20.0	3.0	3.0	1.00	1.00	0.0	0.0	11.72	75	60
105.0	Round Side Arm	1	150	5.2	0.0	0.0	0.0	1.00	1.00	0.0	0.0	11.60	51	150
105.0	Generic 5' Yagi	1	20	7.3	5.0	60.0	3.0	1.00	1.00	0.0	0.0	11.60	72	20
105.0	Generic 2' x 4'	1	40	7.5	4.0	48.0	24.0	1.00	1.00	0.0	0.0	11.60	74	40
82.00	Generic 6' Ice Shield	1	450	3.9	1.2	100.0	48.0	1.00	1.00	0.0	0.0	11.23	37	450
80.00	RFS PA6-65AC w/	1	308	24.4	6.0	72.0	0.0	1.00	1.00	0.0	0.0	11.19	232	308
	Totals	113	11784	742.1									4806	11784

© 2007 - 2021 by ATC IP LLC. All rights reserved.

Tower Loading

Linear Appurtenance Properties

Elev From (ft)	Elev To (ft)	Description	Qty	Width (in)	Weight (lb/ft)	Pct In Block	Spread On Faces	Bundling Arrangement	Cluster Dia (in)	Out Of Zone	Spacing (in)	Orientation Factor	Ka Override
5.00	300.0	1 1/4" Coax	2	1.55	0.63	100	1	Individual	0.00	N	1.00	1.00	0.00
5.00	300.0	7/8" Coax	1	1.09	0.33	100	1	Individual	0.00	N	1.00	1.00	0.00
5.00	300.0	7/8" Coax	1	1.09	0.33	100	2	Individual	0.00	N	1.00	1.00	0.00
5.00	300.0	7/8" Coax	1	1.09	0.33	100	2	Individual	0.00	N	1.00	1.00	0.00
0.00	268.0	7/8" Coax	1	1.09	0.33	100	1	Individual	0.00	N	1.00	1.00	0.00
0.00	268.0	7/8" Coax	1	1.09	0.33	100	1	Individual	0.00	N	1.00	1.00	0.00
0.00	215.0	7/8" Coax	1	1.09	0.33	100	1	Individual	0.00	N	1.00	1.00	0.00
5.00	213.0	1/2" Coax	1	0.63	0.15	100	1	Individual	0.00	N	1.00	1.00	0.00
0.00	196.0	0.39" (10mm) Fiber	2	0.39	0.06	100	2	Individual	0.00	N	1.00	1.00	0.00
0.00	196.0	0.92" (23.4mm)	4	0.92	0.89	100	2	Individual	0.00	N	1.00	1.00	0.00
0.00	180.0	1 5/8" Hybriflex	3	1.98	1.30	100	None	Individual	0.00	N	1.00	1.00	0.00
0.00	170.0	1 5/8" Coax	6	1.98	0.82	100	1	Individual	0.00	N	1.00	1.00	0.00
0.00	170.0	1 5/8" Coax	5	1.98	0.82	100	1	Individual	0.00	N	1.00	1.00	0.00
0.00	170.0	1 5/8" Hybriflex	1	1.98	1.30	100	1	Individual	0.00	N	1.00	1.00	0.00
0.00	170.0	1 5/8" Hybriflex	1	1.98	1.30	100	1	Individual	0.00	N	1.00	1.00	0.00
0.00	160.0	1/2" Coax	1	0.63	0.15	100	1	Individual	0.00	N	1.00	1.00	0.00
0.00	130.0	1 5/8" Coax	2	1.98	0.82	100	3	Individual	0.00	N	1.00	1.00	0.00
5.00	130.0	0.41" (10.3mm)	4	0.41	0.07	100	3	Individual	0.00	N	1.00	1.00	0.00
5.00	115.0	1/2" Coax	1	0.63	0.15	100	3	Individual	0.00	N	1.00	1.00	0.00
0.00	80.00	EW52	1	2.25	0.59	100	3	Individual	0.00	N	1.00	1.00	0.00

© 2007 - 2021 by ATC IP LLC. All rights reserved.

Equivalent Lateral Force Method

Spectral Response Acceleration for Short Period (S_s):	0.19
Spectral Response Acceleration at 1.0 Second Period (S_1):	0.05
Long-Period Transition Period (T_L - Seconds):	6
Importance Factor (I_e):	1.00
Site Coefficient F_a:	1.60
Site Coefficient F_v:	2.40
Response Modification Coefficient (R):	3.00
Design Spectral Response Acceleration at Short Period (S_{ds}):	0.21
Design Spectral Response Acceleration at 1.0 Second Period (S_{d1}):	0.09
Seismic Response Coefficient (C_s):	0.03
Upper Limit C_s:	0.03
Lower Limit C_s:	0.03
Period based on Rayleigh Method (sec):	0.84
Redundancy Factor (p):	1.30
Seismic Force Distribution Exponent (k):	1.17
Total Unfactored Dead Load:	33.22 k
Seismic Base Shear (E):	1.48 k

LoadCase 1.2D + 1.0Ev + 1.0Eh **Seismic**

Section	Height Above Base (ft)	Weight (lb)	W_z (lb-ft)	C_{vx}	Horizontal Force (lb)	Vertical Force (lb)
16	290.00	1,077	821,169	0.067	99	1,337
15	270.00	1,043	731,213	0.060	89	1,295
14	250.00	1,090	698,676	0.057	85	1,354
13	230.00	1,051	610,693	0.050	74	1,305
12	210.00	1,058	552,614	0.045	67	1,313
11	190.00	1,159	538,550	0.044	65	1,439
10	170.00	1,498	611,425	0.050	74	1,861
9	150.00	1,618	570,112	0.047	69	2,009
8	130.00	1,676	499,716	0.041	61	2,082
7	110.00	1,658	406,516	0.033	49	2,059
6	90.00	1,659	321,563	0.026	39	2,060
5	70.00	1,671	241,320	0.020	29	2,075
4	50.00	1,710	166,620	0.014	20	2,124
3	30.00	1,671	89,513	0.007	11	2,075
2	12.00	1,339	24,551	0.002	3	1,663
1	2.00	462	1,040	0.000	0	574
Generic 10' Omni	300.00	25	19,831	0.002	2	31
Generic 13' Omni	300.00	40	31,730	0.003	4	50
Round Side Arm	300.00	450	356,966	0.029	43	559
Generic 18' Dipole	300.00	55	43,629	0.004	5	68
Generic 20' Dipole	300.00	60	47,595	0.004	6	74
Generic 6' Yagi	300.00	25	19,831	0.002	2	31
Generic 6' Omni	268.00	25	17,379	0.001	2	31
Generic 8' Omni	268.00	25	17,379	0.001	2	31

© 2007 - 2021 by ATC IP LLC. All rights reserved.

Equivalent Lateral Force Method

Generic 10' Dipole	268.00	30	20,854	0.002	3	37
Generic 24" x 24" Junction Box	268.00	20	13,903	0.001	2	25
Round Side Arm	268.00	450	312,816	0.026	38	559
Generic 11' Omni	233.00	40	23,605	0.002	3	50
Generic 13' Omni	233.00	40	23,605	0.002	3	50
Generic 14' Omni	233.00	40	23,605	0.002	3	50
Round Side Arm	233.00	450	265,551	0.022	32	559
Decibel DB224	215.00	32	17,188	0.001	2	40
Andrew DB224	213.00	38	20,188	0.002	2	47
Side Arm	213.00	300	159,381	0.013	19	372
Generic 22' Dipole	213.00	66	35,064	0.003	4	82
Ericsson RRUS 8843 B2, B66A	196.00	216	104,109	0.009	13	268
Ericsson RRUS 4478 B14	196.00	180	86,613	0.007	10	223
Ericsson RRUS 4449 B5, B12	196.00	213	102,663	0.008	12	264
Ericsson AIR 6449 B77D/ C-Band	196.00	245	117,990	0.010	14	304
Raycap DC9-48-60-24-8C-EV	196.00	32	15,424	0.001	2	40
Sabre C10857001	196.00	1,386	668,031	0.055	81	1,721
CCI DMP65R-BU8D	196.00	287	138,378	0.011	17	356
CCI TPA65R-BU8D	196.00	248	119,291	0.010	14	307
Ericsson RRUS 4415 B66	180.00	138	60,204	0.005	7	171
Ericsson Radio 4449 B71 B85A	180.00	225	98,158	0.008	12	279
Ericsson 4424 B25	180.00	258	112,555	0.009	14	320
Ericsson Air6449 B41	180.00	312	136,113	0.011	16	387
RFS APX16DWV-16DWVS-E-A20	180.00	122	53,267	0.004	6	152
Round Sector Frame	180.00	900	392,634	0.032	48	1,117
RFS APXVAALL24 43-U-NA20	180.00	368	160,718	0.013	19	457
Commscope CBC78T-DS-43-2X	170.00	62	25,339	0.002	3	77
Samsung B5/B13 RRH-BR04C	170.00	211	86,053	0.007	10	262
Samsung B2/B66A RRH-BR049	170.00	253	103,313	0.008	13	314
Raycap RCMDC-6627-PF-48	170.00	32	13,057	0.001	2	40
Samsung MT6407-77A	170.00	245	99,885	0.008	12	304
Commscope LNX-8513DS-A1M	170.00	118	47,984	0.004	6	146
Commscope JAHH-65B-R3B	170.00	364	148,359	0.012	18	451
Flat Light Sector Frame	170.00	1,200	489,633	0.040	59	1,490
Procom CXL 900-3LW	160.00	2	570	0.000	0	2
Generic 5" x 3" x 2" Cavity Filter	160.00	2	570	0.000	0	2
Generic Low Noise Amplifier	160.00	2	760	0.000	0	2
Flat Side Arm	160.00	150	57,012	0.005	7	186
Scala AP7-850/065	130.00	6	1,788	0.000	0	7
Generic 24" x 24" Junction Box	130.00	20	5,961	0.000	1	25
Round Side Arm	130.00	150	44,711	0.004	5	186
Flat Side Arm	125.00	450	128,114	0.010	16	559
Round Side Arm	115.00	150	38,734	0.003	5	186
Generic 20' Dipole	115.00	60	15,494	0.001	2	74
Round Side Arm	105.00	150	34,821	0.003	4	186
Generic 5' Yagi	105.00	20	4,643	0.000	1	25
Generic 2' x 4' Rectangular Grid Dish	105.00	40	9,286	0.001	1	50
Generic 6' Ice Shield	82.00	450	78,215	0.006	9	559
RFS PA6-65AC w/ Radome	80.00	308	52,008	0.004	6	382
		33,225	12,207,847	1.000	1,479	41,252

© 2007 - 2021 by ATC IP LLC. All rights reserved.

Equivalent Lateral Force Method

LoadCase 0.9D - 1.0Ev + 1.0Eh **Seismic (Reduced DL)**

Section	Height Above Base (ft)	Weight (lb)	W_z (lb-ft)	C_{vx}	Horizontal Force (lb)	Vertical Force (lb)
16	290.00	1,077	821,169	0.067	99	925
15	270.00	1,043	731,213	0.060	89	895
14	250.00	1,090	698,676	0.057	85	936
13	230.00	1,051	610,693	0.050	74	902
12	210.00	1,058	552,614	0.045	67	908
11	190.00	1,159	538,550	0.044	65	995
10	170.00	1,498	611,425	0.050	74	1,286
9	150.00	1,618	570,112	0.047	69	1,389
8	130.00	1,676	499,716	0.041	61	1,439
7	110.00	1,658	406,516	0.033	49	1,424
6	90.00	1,659	321,563	0.026	39	1,424
5	70.00	1,671	241,320	0.020	29	1,434
4	50.00	1,710	166,620	0.014	20	1,468
3	30.00	1,671	89,513	0.007	11	1,434
2	12.00	1,339	24,551	0.002	3	1,150
1	2.00	462	1,040	0.000	0	397
Generic 10' Omni	300.00	25	19,831	0.002	2	21
Generic 13' Omni	300.00	40	31,730	0.003	4	34
Round Side Arm	300.00	450	356,966	0.029	43	386
Generic 18' Dipole	300.00	55	43,629	0.004	5	47
Generic 20' Dipole	300.00	60	47,595	0.004	6	52
Generic 6' Yagi	300.00	25	19,831	0.002	2	21
Generic 6' Omni	268.00	25	17,379	0.001	2	21
Generic 8' Omni	268.00	25	17,379	0.001	2	21
Generic 10' Dipole	268.00	30	20,854	0.002	3	26
Generic 24" x 24" Junction Box	268.00	20	13,903	0.001	2	17
Round Side Arm	268.00	450	312,816	0.026	38	386
Generic 11' Omni	233.00	40	23,605	0.002	3	34
Generic 13' Omni	233.00	40	23,605	0.002	3	34
Generic 14' Omni	233.00	40	23,605	0.002	3	34
Round Side Arm	233.00	450	265,551	0.022	32	386
Decibel DB224	215.00	32	17,188	0.001	2	27
Andrew DB224	213.00	38	20,188	0.002	2	33
Side Arm	213.00	300	159,381	0.013	19	258
Generic 22' Dipole	213.00	66	35,064	0.003	4	57
Ericsson RRUS 8843 B2, B66A	196.00	216	104,109	0.009	13	185
Ericsson RRUS 4478 B14	196.00	180	86,613	0.007	10	154
Ericsson RRUS 4449 B5, B12	196.00	213	102,663	0.008	12	183
Ericsson AIR 6449 B77D/ C-Band	196.00	245	117,990	0.010	14	210
Raycap DC9-48-60-24-8C-EV	196.00	32	15,424	0.001	2	27
Sabre C10857001	196.00	1,386	668,031	0.055	81	1,190
CCI DMP65R-BU8D	196.00	287	138,378	0.011	17	246
CCI TPA65R-BU8D	196.00	248	119,291	0.010	14	212
Ericsson RRUS 4415 B66	180.00	138	60,204	0.005	7	118
Ericsson Radio 4449 B71 B85A	180.00	225	98,158	0.008	12	193
Ericsson 4424 B25	180.00	258	112,555	0.009	14	221
Ericsson Air6449 B41	180.00	312	136,113	0.011	16	268
RFS APX16DWV-16DWVS-E-A20	180.00	122	53,267	0.004	6	105
Round Sector Frame	180.00	900	392,634	0.032	48	773
RFS APXVAALL24 43-U-NA20	180.00	368	160,718	0.013	19	316

© 2007 - 2021 by ATC IP LLC. All rights reserved.

Equivalent Lateral Force Method

Commscope CBC78T-DS-43-2X	170.00	62	25,339	0.002	3	53
Samsung B5/B13 RRH-BR04C	170.00	211	86,053	0.007	10	181
Samsung B2/B66A RRH-BR049	170.00	253	103,313	0.008	13	217
Raycap RCMDC-6627-PF-48	170.00	32	13,057	0.001	2	27
Samsung MT6407-77A	170.00	245	99,885	0.008	12	210
Commscope LNX-8513DS-A1M	170.00	118	47,984	0.004	6	101
Commscope JAHH-65B-R3B	170.00	364	148,359	0.012	18	312
Flat Light Sector Frame	170.00	1,200	489,633	0.040	59	1,030
Procom CXL 900-3LW	160.00	2	570	0.000	0	1
Generic 5" x 3" x 2" Cavity Filter	160.00	2	570	0.000	0	1
Generic Low Noise Amplifier	160.00	2	760	0.000	0	2
Flat Side Arm	160.00	150	57,012	0.005	7	129
Scala AP7-850/065	130.00	6	1,788	0.000	0	5
Generic 24" x 24" Junction Box	130.00	20	5,961	0.000	1	17
Round Side Arm	130.00	150	44,711	0.004	5	129
Flat Side Arm	125.00	450	128,114	0.010	16	386
Round Side Arm	115.00	150	38,734	0.003	5	129
Generic 20' Dipole	115.00	60	15,494	0.001	2	52
Round Side Arm	105.00	150	34,821	0.003	4	129
Generic 5' Yagi	105.00	20	4,643	0.000	1	17
Generic 2' x 4' Rectangular Grid Dish	105.00	40	9,286	0.001	1	34
Generic 6' Ice Shield	82.00	450	78,215	0.006	9	386
RFS PA6-65AC w/ Radome	80.00	308	52,008	0.004	6	264
		33,225	12,207,847	1.000	1,479	28,520

© 2007 - 2021 by ATC IP LLC. All rights reserved.

Force/Stress Summary

Section: 1 Base Bot Elev (ft): 0.00 Height (ft): 4.000

Max Compression Member		Pu (kip)	Load Case	Len (ft)	Bracing % X	Y	Z	KL/R	F'y (ksi)	Phic Pn (kip)	Num Bolts	Num Holes	Shear phiRnv (kip)	Bear phiRn (kip)	Use %	Controls
LEG	SOL - 2 1/4" SOLID	-75.18	1.2D + 1.0Di + 1.0Wi	2.31	100	100	100	49.3	50.0	149.83	0	0	0.00	0.00	50	Member X
HORIZ		0.00		0.000	0	0	0	0.0	0.0	0.00	0	0	0.00	0.00	0	
DIAG	PL - PL 2 x 0.5"	-2.63	1.2D + 1.0W Normal	3.651	50	50	50	136.6	36.0	15.33	0	0	0.00	0.00		Member Y

Max Tension Member		Pu (kip)	Load Case	Fy (ksi)	Fu (ksi)	Phit Pn (kip)	Num Bolts	Num Holes	Shear phiRnv (kip)	Bear phiRn (kip)	Blk Shear phit Pn (kip)	Use %	Controls
LEG		0.00		0	0	0.00	0	0	0.00	0.00		0	
HORIZ	SAE - 3X3X0.3125	19.32	1.2D + 1.0Di + 1.0Wi	36	58	57.67	0	0	0.00	0.00	0.00	33	Member
DIAG		0.00		0	0	0.00	0	0	0.00	0.00	0.00	0	

Max Splice Forces	Pu (kip)	Load Case	phiRnt (kip)	Use %	Num Bolts	Bolt Type
Top Tension	0.00		0.00	0	0	
Top Compression	60.22	1.2D + 1.0Di + 1.0Wi	0.00	0		
Bot Tension	0.00		0.00	0		
Bot Compression	0.00		0.00	0		

Section: 2 16'-4 Bays Bot Elev (ft): 4.00 Height (ft): 16.000

Max Compression Member		Pu (kip)	Load Case	Len (ft)	Bracing % X	Y	Z	KL/R	F'y (ksi)	Phic Pn (kip)	Num Bolts	Num Holes	Shear phiRnv (kip)	Bear phiRn (kip)	Use %	Controls
LEG	SOL - 2 1/4" SOLID	-66.97	1.2D + 1.0Di + 1.0Wi	3.90	100	100	100	83.2	50.0	107.86	0	0	0.00	0.00	62	Member X
HORIZ	SAE - 2X2X0.1875	-1.52	1.2D + 1.0W 90 deg	4.000	100	100	100	121.8	36.0	13.73	0	0	0.00	0.00	11	Member Z
DIAG	SOL - 5/8" SOLID	-1.35	1.2D + 1.0W Normal	5.587	50	50	50	193.4	50.0	1.85	0	0	0.00	0.00		Member X

Max Tension Member		Pu (kip)	Load Case	Fy (ksi)	Fu (ksi)	Phit Pn (kip)	Num Bolts	Num Holes	Shear phiRnv (kip)	Bear phiRn (kip)	Blk Shear phit Pn (kip)	Use %	Controls
LEG		0.00		0	0	0.00	0	0	0.00	0.00		0	
HORIZ	SAE - 2X2X0.1875	4.79	1.2D + 1.0Di + 1.0Wi	36	58	23.17	0	0	0.00	0.00	0.00	20	Member
DIAG	SOL - 5/8" SOLID	2.24	1.2D + 1.0W 330 deg	50	65	13.81	0	0	0.00	0.00	0.00	16	Member

Max Splice Forces	Pu (kip)	Load Case	phiRnt (kip)	Use %	Num Bolts	Bolt Type
Top Tension	0.00		0.00	0	0	
Top Compression	67.21	1.2D + 1.0Di + 1.0Wi	0.00	0		
Bot Tension	0.00		0.00	0		
Bot Compression	0.00		0.00	0		

© 2007 - 2021 by ATC IP LLC. All rights reserved.

Force/Stress Summary

Section: 3 20'-5 Bays Bot Elev (ft): 20.00 Height (ft): 20.000

Max Compression Member		Pu (kip)	Load Case	Len (ft)	Bracing % X	Y	Z	KL/R	F'y (ksi)	Phic Pn (kip)	Num Bolts	Num Holes	Shear phiRnv (kip)	Bear phiRn (kip)	Use %	Controls
LEG	SOL - 2 1/4" SOLID	-66.63	1.2D + 1.0Di + 1.0Wi	3.92	100	100	100	83.6	50.0	107.30	0	0	0.00	0.00	62	Member X
HORIZ	SAE - 2X2X0.1875	-1.40	1.2D + 1.0W 90 deg	4.000	100	100	100	121.8	36.0	13.73	0	0	0.00	0.00	10	Member Z
DIAG	SOL - 5/8" SOLID	-1.39	1.2D + 1.0W Normal	5.601	50	50	50	193.9	50.0	1.84	0	0	0.00	0.00		Member X

Max Tension Member		Pu (kip)	Load Case	Fy (ksi)	Fu (ksi)	Phit Pn (kip)	Num Bolts	Num Holes	Shear phiRnv (kip)	Bear phiRn (kip)	Blk Shear phit Pn (kip)	Use %	Controls
LEG		0.00		0	0	0.00	0	0	0.00	0.00		0	
HORIZ	SAE - 2X2X0.1875	2.42	1.2D + 1.0W Normal	36	58	23.17	0	0	0.00	0.00	0.00	10	Member
DIAG	SOL - 5/8" SOLID	2.27	1.2D + 1.0W 90 deg	50	65	13.81	0	0	0.00	0.00	0.00	16	Member

Max Splice Forces	Pu (kip)	Load Case	phiRnt (kip)	Use %	Num Bolts	Bolt Type
Top Tension	0.00		0.00	0	0	
Top Compression	62.91	1.2D + 1.0Di + 1.0Wi	0.00	0		
Bot Tension	0.00		0.00	0		
Bot Compression	0.00		0.00	0		

Section: 4 20'-5 Bays Bot Elev (ft): 40.00 Height (ft): 20.000

Max Compression Member		Pu (kip)	Load Case	Len (ft)	Bracing % X	Y	Z	KL/R	F'y (ksi)	Phic Pn (kip)	Num Bolts	Num Holes	Shear phiRnv (kip)	Bear phiRn (kip)	Use %	Controls
LEG	SOL - 2 1/4" SOLID	-70.90	1.2D + 1.0W 120 deg	3.92	100	100	100	83.6	50.0	107.30	0	0	0.00	0.00	66	Member X
HORIZ	SAE - 2X2X0.1875	-3.34	1.2D + 1.0W 90 deg	4.000	100	100	100	121.8	36.0	13.73	0	0	0.00	0.00	24	Member Z
DIAG	SOL - 5/8" SOLID	-1.55	1.2D + 1.0W Normal	5.601	50	50	50	193.9	50.0	1.84	0	0	0.00	0.00		Member X

Max Tension Member		Pu (kip)	Load Case	Fy (ksi)	Fu (ksi)	Phit Pn (kip)	Num Bolts	Num Holes	Shear phiRnv (kip)	Bear phiRn (kip)	Blk Shear phit Pn (kip)	Use %	Controls
LEG		0.00		0	0	0.00	0	0	0.00	0.00		0	
HORIZ	SAE - 2X2X0.1875	2.47	1.2D + 1.0Di + 1.0Wi	36	58	23.17	0	0	0.00	0.00	0.00	10	Member
DIAG	SOL - 5/8" SOLID	4.96	1.2D + 1.0W 90 deg	50	65	13.81	0	0	0.00	0.00	0.00	35	Member

Max Splice Forces	Pu (kip)	Load Case	phiRnt (kip)	Use %	Num Bolts	Bolt Type
Top Tension	0.00		0.00	0	0	
Top Compression	70.40	1.2D + 1.0W 120 deg	0.00	0		
Bot Tension	0.00		0.00	0		
Bot Compression	0.00		0.00	0		

© 2007 - 2021 by ATC IP LLC. All rights reserved.

Force/Stress Summary

Section: 5 20'-5 Bays Bot Elev (ft): 60.00 Height (ft): 20.000

Max Compression Member		Pu (kip)	Load Case	Len (ft)	Bracing % X	Y	Z	KL/R	F'y (ksi)	Phic Pn (kip)	Num Bolts	Num Holes	Shear phiRnv (kip)	Bear phiRn (kip)	Use %	Controls
LEG	SOL - 2 1/4" SOLID	-69.98	1.2D + 1.0W Normal	3.92	100	100	100	83.6	50.0	107.30	0	0	0.00	0.00	65	Member X
HORIZ	SAE - 2X2X0.1875	-4.29	1.2D + 1.0W 90 deg	4.000	100	100	100	121.8	36.0	13.73	0	0	0.00	0.00	31	Member Z
DIAG	SOL - 5/8" SOLID	-1.15	1.2D + 1.0W Normal	5.601	50	50	50	193.9	50.0	1.84	0	0	0.00	0.00		Member X

Max Tension Member		Pu (kip)	Load Case	Fy (ksi)	Fu (ksi)	Phit Pn (kip)	Num Bolts	Num Holes	Shear phiRnv (kip)	Bear phiRn (kip)	Blk Shear phit Pn (kip)	Use %	Controls
LEG		0.00		0	0	0.00	0	0	0.00	0.00		0	
HORIZ	SAE - 2X2X0.1875	2.32	1.2D + 1.0Di + 1.0Wi	36	58	23.17	0	0	0.00	0.00	0.00	10	Member
DIAG	SOL - 5/8" SOLID	6.39	1.2D + 1.0W 330 deg	50	65	13.81	0	0	0.00	0.00	0.00	46	Member

Max Splice Forces	Pu (kip)	Load Case	phiRnt (kip)	Use %	Num Bolts	Bolt Type
Top Tension	0.00		0.00	0	0	
Top Compression	56.70	1.2D + 1.0Di + 1.0Wi	0.00	0		
Bot Tension	0.00		0.00	0		
Bot Compression	0.00		0.00	0		

Section: 6 20'-5 Bays Bot Elev (ft): 80.00 Height (ft): 20.000

Max Compression Member		Pu (kip)	Load Case	Len (ft)	Bracing % X	Y	Z	KL/R	F'y (ksi)	Phic Pn (kip)	Num Bolts	Num Holes	Shear phiRnv (kip)	Bear phiRn (kip)	Use %	Controls
LEG	SOL - 2 1/4" SOLID	-55.92	1.2D + 1.0Di + 1.0Wi	3.92	100	100	100	83.6	50.0	107.30	0	0	0.00	0.00	52	Member X
HORIZ	SAE - 2X2X0.1875	-1.10	1.2D + 1.0W Normal	4.000	100	100	100	121.8	36.0	13.73	0	0	0.00	0.00	7	Member Z
DIAG	SOL - 5/8" SOLID	-1.51	1.2D + 1.0W Normal	5.601	50	50	50	193.9	50.0	1.84	0	0	0.00	0.00		Member X

Max Tension Member		Pu (kip)	Load Case	Fy (ksi)	Fu (ksi)	Phit Pn (kip)	Num Bolts	Num Holes	Shear phiRnv (kip)	Bear phiRn (kip)	Blk Shear phit Pn (kip)	Use %	Controls
LEG		0.00		0	0	0.00	0	0	0.00	0.00		0	
HORIZ	SAE - 2X2X0.1875	2.29	1.2D + 1.0W Normal	36	58	23.17	0	0	0.00	0.00	0.00	9	Member
DIAG	SOL - 5/8" SOLID	1.81	1.2D + 1.0W Normal	50	65	13.81	0	0	0.00	0.00	0.00	13	Member

Max Splice Forces	Pu (kip)	Load Case	phiRnt (kip)	Use %	Num Bolts	Bolt Type
Top Tension	0.00		0.00	0	0	
Top Compression	55.82	1.2D + 1.0Di + 1.0Wi	0.00	0		
Bot Tension	0.00		0.00	0		
Bot Compression	0.00		0.00	0		

© 2007 - 2021 by ATC IP LLC. All rights reserved.

Force/Stress Summary

Section: 7 20'-5 Bays Bot Elev (ft): 100.0 Height (ft): 20.000

Max Compression Member		Pu (kip)	Load Case	Len (ft)	Bracing % X	Y	Z	KL/R	F'y (ksi)	Phic Pn (kip)	Num Bolts	Num Holes	Shear phiRnv (kip)	Bear phiRn (kip)	Use %	Controls
LEG	SOL - 2 1/4" SOLID	-54.78	1.2D + 1.0W 120 deg	3.92	100	100	100	83.6	50.0	107.30	0	0	0.00	0.00	51	Member X
HORIZ	SAE - 2X2X0.1875	-3.57	1.2D + 1.0W 90 deg	4.000	100	100	100	121.8	36.0	13.73	0	0	0.00	0.00	26	Member Z
DIAG	SOL - 5/8" SOLID	-1.50	1.2D + 1.0W Normal	5.601	50	50	50	193.9	50.0	1.84	0	0	0.00	0.00		Member X

Max Tension Member		Pu (kip)	Load Case	Fy (ksi)	Fu (ksi)	Phit Pn (kip)	Num Bolts	Num Holes	Shear phiRnv (kip)	Bear phiRn (kip)	Blk Shear phit Pn (kip)	Use %	Controls
LEG		0.00		0	0	0.00	0	0	0.00	0.00		0	
HORIZ	SAE - 2X2X0.1875	2.36	1.2D + 1.0W Normal	36	58	23.17	0	0	0.00	0.00	0.00	10	Member
DIAG	SOL - 5/8" SOLID	5.76	1.2D + 1.0W 90 deg	50	65	13.81	0	0	0.00	0.00	0.00	41	Member

Max Splice Forces	Pu (kip)	Load Case	phiRnt (kip)	Use %	Num Bolts	Bolt Type
Top Tension	0.00		0.00	0	0	
Top Compression	54.80	1.2D + 1.0W 120 deg	0.00	0		
Bot Tension	0.00		0.00	0		
Bot Compression	0.00		0.00	0		

Section: 8 20'-5 Bays Bot Elev (ft): 120.0 Height (ft): 20.000

Max Compression Member		Pu (kip)	Load Case	Len (ft)	Bracing % X	Y	Z	KL/R	F'y (ksi)	Phic Pn (kip)	Num Bolts	Num Holes	Shear phiRnv (kip)	Bear phiRn (kip)	Use %	Controls
LEG	SOL - 2 1/4" SOLID	-62.98	1.2D + 1.0W 120 deg	3.92	100	100	100	83.6	50.0	107.30	0	0	0.00	0.00	58	Member X
HORIZ	SAE - 2X2X0.1875	-5.65	1.2D + 1.0W 90 deg	4.000	100	100	100	121.8	36.0	13.73	0	0	0.00	0.00	41	Member Z
DIAG	SOL - 5/8" SOLID	-0.78	1.2D + 1.0W Normal	5.601	50	50	50	193.9	50.0	1.84	0	0	0.00	0.00		Member X

Max Tension Member		Pu (kip)	Load Case	Fy (ksi)	Fu (ksi)	Phit Pn (kip)	Num Bolts	Num Holes	Shear phiRnv (kip)	Bear phiRn (kip)	Blk Shear phit Pn (kip)	Use %	Controls
LEG		0.00		0	0	0.00	0	0	0.00	0.00		0	
HORIZ	SAE - 2X2X0.1875	1.64	1.2D + 1.0W Normal	36	58	23.17	0	0	0.00	0.00	0.00	7	Member
DIAG	SOL - 5/8" SOLID	8.13	1.2D + 1.0W 90 deg	50	65	13.81	0	0	0.00	0.00	0.00	58	Member

Max Splice Forces	Pu (kip)	Load Case	phiRnt (kip)	Use %	Num Bolts	Bolt Type
Top Tension	0.00		0.00	0	0	
Top Compression	43.79	1.2D + 1.0Di + 1.0Wi	0.00	0		
Bot Tension	0.00		0.00	0		
Bot Compression	0.00		0.00	0		

© 2007 - 2021 by ATC IP LLC. All rights reserved.

Force/Stress Summary

Section: 9 20'-5 Bays Bot Elev (ft): 140.0 Height (ft): 20.000

Max Compression Member		Pu (kip)	Load Case	Len (ft)	Bracing % X	Y	Z	KL/R	F'y (ksi)	Phic Pn (kip)	Num Bolts	Num Holes	Shear phiRnv (kip)	Bear phiRn (kip)	Use %	Controls
LEG	SOL - 2 1/4" SOLID	-60.33	1.2D + 1.0W 330 deg	3.92	100	100	100	83.6	50.0	107.30	0	0	0.00	0.00	56	Member X
HORIZ	SAE - 2X2X0.1875	-3.63	1.2D + 1.0W 90 deg	4.000	100	100	100	121.8	36.0	13.73	0	0	0.00	0.00	26	Member Z
DIAG	SOL - 5/8" SOLID	-1.38	1.2D + 1.0W Normal	5.601	50	50	50	193.9	50.0	1.84	0	0	0.00	0.00		Member X

Max Tension Member		Pu (kip)	Load Case	Fy (ksi)	Fu (ksi)	Phit Pn (kip)	Num Bolts	Num Holes	Shear phiRnv (kip)	Bear phiRn (kip)	Blk Shear phit Pn (kip)	Use %	Controls
LEG	SOL - 2 1/4" SOLID	5.38	1.2D + 1.0W Normal	50	65	178.92	0	0	0.00	0.00		3	Member
HORIZ	SAE - 2X2X0.1875	2.17	1.2D + 1.0W Normal	36	58	23.17	0	0	0.00	0.00	0.00	9	Member
DIAG	SOL - 5/8" SOLID	5.55	1.2D + 1.0W 90 deg	50	65	13.81	0	0	0.00	0.00	0.00	40	Member

Max Splice Forces	Pu (kip)	Load Case	phiRnt (kip)	Use %	Num Bolts	Bolt Type
Top Tension	5.38	1.2D + 1.0W Normal	0.00	0	0	
Top Compression	60.27	1.2D + 1.0W 330 deg	0.00	0		
Bot Tension	0.00		0.00	0		
Bot Compression	0.00		0.00	0		

Section: 10 20'-5 Bays Bot Elev (ft): 160.0 Height (ft): 20.000

Max Compression Member		Pu (kip)	Load Case	Len (ft)	Bracing % X	Y	Z	KL/R	F'y (ksi)	Phic Pn (kip)	Num Bolts	Num Holes	Shear phiRnv (kip)	Bear phiRn (kip)	Use %	Controls
LEG	SOL - 2 1/4" SOLID	-61.70	1.2D + 1.0W 330 deg	3.92	100	100	100	83.6	50.0	107.30	0	0	0.00	0.00	57	Member X
HORIZ	SAE - 2X2X0.1875	-2.69	1.2D + 1.0W 90 deg	4.000	100	100	100	121.8	36.0	13.73	0	0	0.00	0.00	19	Member Z
DIAG	SOL - 5/8" SOLID	-1.53	1.2D + 1.0W Normal	5.601	50	50	50	193.9	50.0	1.84	0	0	0.00	0.00		Member X

Max Tension Member		Pu (kip)	Load Case	Fy (ksi)	Fu (ksi)	Phit Pn (kip)	Num Bolts	Num Holes	Shear phiRnv (kip)	Bear phiRn (kip)	Blk Shear phit Pn (kip)	Use %	Controls
LEG	SOL - 2 1/4" SOLID	9.74	1.2D + 1.0W Normal	50	65	178.92	0	0	0.00	0.00		5	Member
HORIZ	SAE - 2X2X0.1875	2.93	1.2D + 1.0W Normal	36	58	23.17	0	0	0.00	0.00	0.00	12	Member
DIAG	SOL - 5/8" SOLID	4.30	1.2D + 1.0W 210 deg	50	65	13.81	0	0	0.00	0.00	0.00	31	Member

Max Splice Forces	Pu (kip)	Load Case	phiRnt (kip)	Use %	Num Bolts	Bolt Type
Top Tension	0.00		0.00	0	0	
Top Compression	49.28	1.2D + 1.0W 330 deg	0.00	0		
Bot Tension	5.38	1.2D + 1.0W Normal	0.00	0		
Bot Compression	0.00		0.00	0		

© 2007 - 2021 by ATC IP LLC. All rights reserved.

Force/Stress Summary

Section: 11 20'-5 Bays Bot Elev (ft): 180.0 Height (ft): 20.000

Max Compression Member		Pu (kip)	Load Case	Len (ft)	Bracing % X	Y	Z	KL/R	F'y (ksi)	Phic Pn (kip)	Num Bolts	Num Holes	Shear phiRnv (kip)	Bear phiRn (kip)	Use %	Controls
LEG	SOL - 2" SOLID	-48.09	1.2D + 1.0W 330 deg	3.92	100	100	100	94.1	50.0	74.01	0	0	0.00	0.00	64	Member X
HORIZ	SAE - 2X2X0.1875	-3.92	1.2D + 1.0W 90 deg	4.000	100	100	100	121.8	36.0	13.73	0	0	0.00	0.00	28	Member Z
DIAG	SOL - 5/8" SOLID	-1.48	1.2D + 1.0W Normal	5.601	50	50	50	193.9	50.0	1.84	0	0	0.00	0.00		Member X

Max Tension Member		Pu (kip)	Load Case	Fy (ksi)	Fu (ksi)	Phit Pn (kip)	Num Bolts	Num Holes	Shear phiRnv (kip)	Bear phiRn (kip)	Blk Shear phit Pn (kip)	Use %	Controls
LEG	SOL - 2" SOLID	10.70	1.2D + 1.0W Normal	50	65	141.37	0	0	0.00	0.00		7	Member
HORIZ	SAE - 2X2X0.1875	2.56	1.2D + 1.0W Normal	36	58	23.17	0	0	0.00	0.00	0.00	11	Member
DIAG	SOL - 5/8" SOLID	8.15	1.2D + 1.0W 90 deg	50	65	13.81	0	0	0.00	0.00	0.00	59	Member

Max Splice Forces	Pu (kip)	Load Case	phiRnt (kip)	Use %	Num Bolts	Bolt Type
Top Tension	10.60	1.2D + 1.0W 240 deg	0.00	0	0	
Top Compression	37.53	1.2D + 1.0W 330 deg	0.00	0		
Bot Tension	0.00		0.00	0		
Bot Compression	0.00		0.00	0		

Section: 12 20'-5 Bays Bot Elev (ft): 200.0 Height (ft): 20.000

Max Compression Member		Pu (kip)	Load Case	Len (ft)	Bracing % X	Y	Z	KL/R	F'y (ksi)	Phic Pn (kip)	Num Bolts	Num Holes	Shear phiRnv (kip)	Bear phiRn (kip)	Use %	Controls
LEG	SOL - 2" SOLID	-36.32	1.2D + 1.0W 330 deg	3.92	100	100	100	94.1	50.0	74.01	0	0	0.00	0.00	49	Member X
HORIZ		0.00		0.000	0	0	0	0.0	0.0	0.00	0	0	0.00	0.00	0	
DIAG	SOL - 5/8" SOLID	-0.44	1.2D + 1.0W Normal	5.601	50	50	50	193.9	50.0	1.84	0	0	0.00	0.00		Member X

Max Tension Member		Pu (kip)	Load Case	Fy (ksi)	Fu (ksi)	Phit Pn (kip)	Num Bolts	Num Holes	Shear phiRnv (kip)	Bear phiRn (kip)	Blk Shear phit Pn (kip)	Use %	Controls
LEG	SOL - 2" SOLID	11.36	1.2D + 1.0W 240 deg	50	65	141.37	0	0	0.00	0.00		8	Member
HORIZ	SAE - 2X2X0.1875	1.92	1.2D + 1.0W Normal	36	58	23.17	0	0	0.00	0.00	0.00	8	Member
DIAG	SOL - 5/8" SOLID	0.56	1.2D + 1.0W Normal	50	65	13.81	0	0	0.00	0.00	0.00	4	Member

Max Splice Forces	Pu (kip)	Load Case	phiRnt (kip)	Use %	Num Bolts	Bolt Type
Top Tension	5.48	1.2D + 1.0W 240 deg	0.00	0	0	
Top Compression	33.23	1.2D + 1.0W 330 deg	0.00	0		
Bot Tension	10.60	1.2D + 1.0W 240 deg	0.00	0		
Bot Compression	0.00		0.00	0		

© 2007 - 2021 by ATC IP LLC. All rights reserved.

Force/Stress Summary

Section: 13 20'-5 Bays Bot Elev (ft): 220.0 Height (ft): 20.000

Max Compression Member		Pu (kip)	Load Case	Len (ft)	Bracing % X	Y	Z	KL/R	F'y (ksi)	Phic Pn (kip)	Num Bolts	Num Holes	Shear phiRnv (kip)	Bear phiRn (kip)	Use %	Controls
LEG	SOL - 2" SOLID	-31.92	1.2D + 1.0W 330 deg	3.92	100	100	100	94.1	50.0	74.01	0	0	0.00	0.00	43	Member X
HORIZ	SAE - 2X2X0.1875	-3.20	1.2D + 1.0W 210 deg	4.000	100	100	100	121.8	36.0	13.73	0	0	0.00	0.00	23	Member Z
DIAG	SOL - 5/8" SOLID	-1.18	1.2D + 1.0W Normal	5.601	50	50	50	193.9	50.0	1.84	0	0	0.00	0.00		Member X

Max Tension Member		Pu (kip)	Load Case	Fy (ksi)	Fu (ksi)	Phit Pn (kip)	Num Bolts	Num Holes	Shear phiRnv (kip)	Bear phiRn (kip)	Blk Shear phit Pn (kip)	Use %	Controls
LEG	SOL - 2" SOLID	4.95	1.2D + 1.0W Normal	50	65	141.37	0	0	0.00	0.00		3	Member
HORIZ	SAE - 2X2X0.1875	1.59	1.2D + 1.0W Normal	36	58	23.17	0	0	0.00	0.00	0.00	6	Member
DIAG	SOL - 5/8" SOLID	4.72	1.2D + 1.0W 330 deg	50	65	13.81	0	0	0.00	0.00	0.00	34	Member

Max Splice Forces	Pu (kip)	Load Case	phiRnt (kip)	Use %	Num Bolts	Bolt Type
Top Tension	0.00		0.00	0	0	
Top Compression	23.25	1.2D + 1.0W 210 deg	0.00	0		
Bot Tension	5.48	1.2D + 1.0W 240 deg	0.00	0		
Bot Compression	0.00		0.00	0		

Section: 14 20'-5 Bays Bot Elev (ft): 240.0 Height (ft): 20.000

Max Compression Member		Pu (kip)	Load Case	Len (ft)	Bracing % X	Y	Z	KL/R	F'y (ksi)	Phic Pn (kip)	Num Bolts	Num Holes	Shear phiRnv (kip)	Bear phiRn (kip)	Use %	Controls
LEG	SOL - 2" SOLID	-24.80	1.2D + 1.0W Normal	3.92	100	100	100	94.1	50.0	74.01	0	0	0.00	0.00	33	Member X
HORIZ	SAE - 2X2X0.1875	-1.94	1.2D + 1.0W Normal	4.000	100	100	100	121.8	36.0	13.73	0	0	0.00	0.00	14	Member Z
DIAG	SOL - 5/8" SOLID	-0.49	1.2D + 1.0W Normal	5.601	50	50	50	193.9	50.0	1.84	0	0	0.00	0.00		Member X

Max Tension Member		Pu (kip)	Load Case	Fy (ksi)	Fu (ksi)	Phit Pn (kip)	Num Bolts	Num Holes	Shear phiRnv (kip)	Bear phiRn (kip)	Blk Shear phit Pn (kip)	Use %	Controls
LEG	SOL - 2" SOLID	11.04	1.2D + 1.0W 180 deg	50	65	141.37	0	0	0.00	0.00		7	Member
HORIZ	SAE - 2X2X0.1875	0.93	1.2D + 1.0W 120 deg	36	58	23.17	0	0	0.00	0.00	0.00	4	Member
DIAG	SOL - 5/8" SOLID	5.14	1.2D + 1.0W 210 deg	50	65	13.81	0	0	0.00	0.00	0.00	37	Member

Max Splice Forces	Pu (kip)	Load Case	phiRnt (kip)	Use %	Num Bolts	Bolt Type
Top Tension	0.00		0.00	0	0	
Top Compression	12.08	1.2D + 1.0W 210 deg	0.00	0		
Bot Tension	0.00		0.00	0		
Bot Compression	0.00		0.00	0		

© 2007 - 2021 by ATC IP LLC. All rights reserved.

Force/Stress Summary

Section: 15 20'-5 Bays Bot Elev (ft): 260.0 Height (ft): 20.000

Max Compression Member		Pu (kip)	Load Case	Len (ft)	Bracing % X	Y	Z	KL/R	F'y (ksi)	Phic Pn (kip)	Num Bolts	Num Holes	Shear phiRnv (kip)	Bear phiRn (kip)	Use %	Controls
LEG	SOL - 2" SOLID	-11.36	1.2D + 1.0W 210 deg	3.92	100	100	100	94.1	50.0	74.01	0	0	0.00	0.00	15	Member X
HORIZ		0.00		0.000	0	0	0	0.0	0.0	0.00	0	0	0.00	0.00	0	
DIAG	SOL - 5/8" SOLID	-1.04	1.2D + 1.0W Normal	5.601	50	50	50	193.9	50.0	1.84	0	0	0.00	0.00		Member X

Max Tension Member		Pu (kip)	Load Case	Fy (ksi)	Fu (ksi)	Phit Pn (kip)	Num Bolts	Num Holes	Shear phiRnv (kip)	Bear phiRn (kip)	Blk Shear phit Pn (kip)	Use %	Controls
LEG		0.00		0	0	0.00	0	0	0.00	0.00		0	
HORIZ	SAE - 2X2X0.1875	0.64	1.2D + 1.0W Normal	36	58	23.17	0	0	0.00	0.00	0.00	2	Member
DIAG	SOL - 5/8" SOLID	0.73	1.2D + 1.0W 60 deg	50	65	13.81	0	0	0.00	0.00	0.00	5	Member

Max Splice Forces	Pu (kip)	Load Case	phiRnt (kip)	Use %	Num Bolts	Bolt Type
Top Tension	0.00		0.00	0	0	
Top Compression	10.27	1.2D + 1.0W 120 deg	0.00	0		
Bot Tension	0.00		0.00	0		
Bot Compression	0.00		0.00	0		

Section: 16 20'-5 Bays Bot Elev (ft): 280.0 Height (ft): 20.000

Max Compression Member		Pu (kip)	Load Case	Len (ft)	Bracing % X	Y	Z	KL/R	F'y (ksi)	Phic Pn (kip)	Num Bolts	Num Holes	Shear phiRnv (kip)	Bear phiRn (kip)	Use %	Controls
LEG	SOL - 2" SOLID	-8.98	1.2D + 1.0W 90 deg	3.92	100	100	100	94.1	50.0	74.01	0	0	0.00	0.00	12	Member X
HORIZ	SAE - 2X2X0.1875	-0.61	1.2D + 1.0W 180 deg	4.000	100	100	100	121.8	36.0	13.73	0	0	0.00	0.00	4	Member Z
DIAG	SOL - 5/8" SOLID	-0.32	1.2D + 1.0W Normal	5.601	50	50	50	193.9	50.0	1.84	0	0	0.00	0.00		Member X

Max Tension Member		Pu (kip)	Load Case	Fy (ksi)	Fu (ksi)	Phit Pn (kip)	Num Bolts	Num Holes	Shear phiRnv (kip)	Bear phiRn (kip)	Blk Shear phit Pn (kip)	Use %	Controls
LEG	SOL - 2" SOLID	4.50	1.2D + 1.0W 180 deg	50	65	141.37	0	0	0.00	0.00		3	Member
HORIZ	SAE - 2X2X0.1875	0.64	1.2D + 1.0W Normal	36	58	23.17	0	0	0.00	0.00	0.00	2	Member
DIAG	SOL - 5/8" SOLID	1.30	1.2D + 1.0W Normal	50	65	13.81	0	0	0.00	0.00	0.00	9	Member

Max Splice Forces	Pu (kip)	Load Case	phiRnt (kip)	Use %	Num Bolts	Bolt Type
Top Tension	0.00		0.00	0	0	
Top Compression	0.68	1.2D + 1.0Di + 1.0Wi	0.00	0		
Bot Tension	0.00		0.00	0		
Bot Compression	0.00		0.00	0		

© 2007 - 2021 by ATC IP LLC. All rights reserved.

Detailed Reactions

Load Case	Radius (ft)	Elevation (ft)	Azimuth (deg)	Node	FX (kip)	FY (kip)	FZ (kip)	(-) = Uplift (+) = Down
1.2D + 1.0W Normal	0.00	00.00		1	-0.01	155.77	-1.92	
	190.00	07.00	0	A1	0.00	-3.49	2.72	
	190.00	03.00	240	A1a	-56.29	-53.60	-34.62	
	201.00	-08.00	120	A1b	56.28	-54.11	-34.65	
1.2D + 1.0W 60 deg	0.00	00.00		1	-2.17	132.04	-1.30	
	190.00	07.00	0	A1	-1.53	-12.96	14.09	
	190.00	03.00	240	A1a	-65.80	-62.06	-37.98	
	201.00	-08.00	120	A1b	11.37	-13.32	-8.40	
1.2D + 1.0W 90 deg	0.00	00.00		1	-2.10	146.09	-0.39	
	190.00	07.00	0	A1	-2.04	-33.45	41.32	
	190.00	03.00	240	A1a	-67.35	-62.62	-37.74	
	201.00	-08.00	120	A1b	4.08	-5.96	-3.22	
1.2D + 1.0W 120 deg	0.00	00.00		1	-1.70	154.41	1.00	
	190.00	07.00	0	A1	-1.82	-52.41	66.20	
	190.00	03.00	240	A1a	-58.27	-53.76	-31.54	
	201.00	-08.00	120	A1b	2.53	-3.80	-1.46	
1.2D + 1.0W 180 deg	0.00	00.00		1	0.03	131.20	2.56	
	190.00	07.00	0	A1	-0.01	-60.65	76.06	
	190.00	03.00	240	A1a	-13.08	-13.41	-5.78	
	201.00	-08.00	120	A1b	13.10	-13.46	-5.73	
1.2D + 1.0W 210 deg	0.00	00.00		1	0.71	145.13	2.05	
	190.00	07.00	0	A1	0.98	-60.87	76.91	
	190.00	03.00	240	A1a	-4.59	-5.74	-1.82	
	201.00	-08.00	120	A1b	36.63	-34.41	-18.72	
1.2D + 1.0W 240 deg	0.00	00.00		1	1.67	154.71	1.00	
	190.00	07.00	0	A1	1.83	-52.32	66.10	
	190.00	03.00	240	A1a	-2.40	-3.67	-1.38	
	201.00	-08.00	120	A1b	58.21	-54.18	-31.45	
1.2D + 1.0W 300 deg	0.00	00.00		1	2.17	131.12	-1.27	
	190.00	07.00	0	A1	1.53	-12.47	13.40	
	190.00	03.00	240	A1a	-10.81	-12.77	-8.01	
	201.00	-08.00	120	A1b	65.20	-62.08	-37.64	
1.2D + 1.0W 330 deg	0.00	00.00		1	1.38	146.38	-1.59	
	190.00	07.00	0	A1	0.71	-5.41	4.71	
	190.00	03.00	240	A1a	-34.38	-33.94	-22.22	
	201.00	-08.00	120	A1b	65.97	-62.83	-39.25	
1.2D + 1.0Di + 1.0Wi Normal	0.00	00.00		1	0.03	190.60	-0.68	
	190.00	07.00	0	A1	0.00	-11.64	17.22	
	190.00	03.00	240	A1a	-34.18	-29.96	-21.07	
	201.00	-08.00	120	A1b	34.13	-30.14	-21.10	
1.2D + 1.0Di + 1.0Wi 60 deg	0.00	00.00		1	-0.54	191.44	-0.38	
	190.00	07.00	0	A1	-1.15	-18.06	24.96	
	190.00	03.00	240	A1a	-41.39	-36.47	-23.89	
	201.00	-08.00	120	A1b	20.96	-18.68	-13.48	
1.2D + 1.0Di + 1.0Wi 90 deg	0.00	00.00		1	-0.67	190.93	-0.02	
	190.00	07.00	0	A1	-1.43	-23.66	32.69	
	190.00	03.00	240	A1a	-40.02	-34.67	-22.45	
	201.00	-08.00	120	A1b	16.58	-14.11	-10.24	

© 2007 - 2021 by ATC IP LLC. All rights reserved.

1.2D + 1.0Di + 1.0Wi 120 deg	0.00	00.00		1	-0.58	190.54	0.32
	190.00	07.00	0	A1	-1.16	-29.32	40.51
	190.00	03.00	240	A1a	-35.66	-30.14	-19.24
	201.00	-08.00	120	A1b	15.27	-12.31	-8.81
1.2D + 1.0Di + 1.0Wi 180 deg	0.00	00.00		1	0.03	191.16	0.67
	190.00	07.00	0	A1	0.00	-35.54	47.81
	190.00	03.00	240	A1a	-22.24	-18.65	-11.51
	201.00	-08.00	120	A1b	22.25	-18.77	-11.47
1.2D + 1.0Di + 1.0Wi 210 deg	0.00	00.00		1	0.37	190.67	0.60
	190.00	07.00	0	A1	0.56	-33.73	45.71
	190.00	03.00	240	A1a	-17.03	-13.99	-9.19
	201.00	-08.00	120	A1b	28.89	-24.43	-14.97
1.2D + 1.0Di + 1.0Wi 240 deg	0.00	00.00		1	0.59	190.22	0.33
	190.00	07.00	0	A1	1.16	-29.18	40.15
	190.00	03.00	240	A1a	-14.93	-12.04	-8.62
	201.00	-08.00	120	A1b	35.37	-30.16	-19.03
1.2D + 1.0Di + 1.0Wi 300 deg	0.00	00.00		1	0.59	190.70	-0.34
	190.00	07.00	0	A1	1.14	-17.79	24.51
	190.00	03.00	240	A1a	-20.64	-18.30	-13.24
	201.00	-08.00	120	A1b	40.96	-36.31	-23.65
1.2D + 1.0Di + 1.0Wi 330 deg	0.00	00.00		1	0.36	190.52	-0.59
	190.00	07.00	0	A1	0.55	-13.33	19.02
	190.00	03.00	240	A1a	-27.17	-24.03	-17.33
	201.00	-08.00	120	A1b	39.01	-34.57	-23.20
1.2D + 1.0Ev + 1.0Eh Normal M1	0.00	00.00		1	0.01	88.78	0.02
	190.00	07.00	0	A1	0.00	-13.22	17.80
	190.00	03.00	240	A1a	-16.61	-14.95	-9.59
	201.00	-08.00	120	A1b	16.61	-15.12	-9.59
1.2D + 1.0Ev + 1.0Eh 60 deg M1	0.00	00.00		1	0.03	88.84	0.00
	190.00	07.00	0	A1	0.00	-13.67	18.28
	190.00	03.00	240	A1a	-17.07	-15.46	-9.85
	201.00	-08.00	120	A1b	15.82	-14.22	-9.14
1.2D + 1.0Ev + 1.0Eh 90 deg M1	0.00	00.00		1	0.04	88.87	-0.01
	190.00	07.00	0	A1	0.00	-14.14	18.77
	190.00	03.00	240	A1a	-16.96	-15.34	-9.79
	201.00	-08.00	120	A1b	15.53	-13.89	-8.97
1.2D + 1.0Ev + 1.0Eh 120 deg M1	0.00	00.00		1	0.03	88.88	-0.02
	190.00	07.00	0	A1	0.00	-14.61	19.25
	190.00	03.00	240	A1a	-16.67	-15.00	-9.62
	201.00	-08.00	120	A1b	15.43	-13.77	-8.91
1.2D + 1.0Ev + 1.0Eh 180 deg M1	0.00	00.00		1	0.01	88.84	-0.03
	190.00	07.00	0	A1	0.00	-15.04	19.70
	190.00	03.00	240	A1a	-15.84	-14.06	-9.14
	201.00	-08.00	120	A1b	15.85	-14.24	-9.15
1.2D + 1.0Ev + 1.0Eh 210 deg M1	0.00	00.00		1	0.00	88.81	-0.03
	190.00	07.00	0	A1	0.00	-14.91	19.56
	190.00	03.00	240	A1a	-15.53	-13.72	-8.97
	201.00	-08.00	120	A1b	16.23	-14.68	-9.37
1.2D + 1.0Ev + 1.0Eh 240 deg M1	0.00	00.00		1	-0.01	88.78	-0.02
	190.00	07.00	0	A1	0.00	-14.55	19.19
	190.00	03.00	240	A1a	-15.44	-13.63	-8.92
	201.00	-08.00	120	A1b	16.61	-15.11	-9.59

© 2007 - 2021 by ATC IP LLC. All rights reserved.

1.2D + 1.0Ev + 1.0Eh 300 deg M1	0.00	00.00		1	-0.01	88.75	0.00
	190.00	07.00	0	A1	0.00	-13.68	18.28
	190.00	03.00	240	A1a	-15.82	-14.05	-9.13
	201.00	-08.00	120	A1b	16.98	-15.53	-9.81
1.2D + 1.0Ev + 1.0Eh 330 deg M1	0.00	00.00		1	0.00	88.75	0.01
	190.00	07.00	0	A1	0.00	-13.34	17.92
	190.00	03.00	240	A1a	-16.21	-14.49	-9.36
	201.00	-08.00	120	A1b	16.90	-15.44	-9.76
0.9D - 1.0Ev + 1.0Eh Normal M1	0.00	00.00		1	0.01	76.72	0.02
	190.00	07.00	0	A1	0.00	-13.43	18.02
	190.00	03.00	240	A1a	-16.80	-15.17	-9.70
	201.00	-08.00	120	A1b	16.80	-15.33	-9.70
0.9D - 1.0Ev + 1.0Eh 60 deg M1	0.00	00.00		1	0.03	76.78	0.00
	190.00	07.00	0	A1	0.00	-13.90	18.51
	190.00	03.00	240	A1a	-17.23	-15.65	-9.95
	201.00	-08.00	120	A1b	16.02	-14.45	-9.25
0.9D - 1.0Ev + 1.0Eh 90 deg M1	0.00	00.00		1	0.04	76.81	-0.01
	190.00	07.00	0	A1	0.00	-14.36	18.98
	190.00	03.00	240	A1a	-17.15	-15.56	-9.90
	201.00	-08.00	120	A1b	15.72	-14.10	-9.08
0.9D - 1.0Ev + 1.0Eh 120 deg M1	0.00	00.00		1	0.03	76.82	-0.02
	190.00	07.00	0	A1	0.00	-14.83	19.47
	190.00	03.00	240	A1a	-16.86	-15.22	-9.73
	201.00	-08.00	120	A1b	15.62	-13.99	-9.02
0.9D - 1.0Ev + 1.0Eh 180 deg M1	0.00	00.00		1	0.01	76.78	-0.03
	190.00	07.00	0	A1	0.00	-15.26	19.92
	190.00	03.00	240	A1a	-16.03	-14.28	-9.25
	201.00	-08.00	120	A1b	16.03	-14.46	-9.26
0.9D - 1.0Ev + 1.0Eh 210 deg M1	0.00	00.00		1	0.00	76.75	-0.03
	190.00	07.00	0	A1	0.00	-15.13	19.78
	190.00	03.00	240	A1a	-15.72	-13.94	-9.08
	201.00	-08.00	120	A1b	16.42	-14.90	-9.48
0.9D - 1.0Ev + 1.0Eh 240 deg M1	0.00	00.00		1	-0.01	76.72	-0.02
	190.00	07.00	0	A1	0.00	-14.77	19.41
	190.00	03.00	240	A1a	-15.63	-13.84	-9.02
	201.00	-08.00	120	A1b	16.80	-15.32	-9.70
0.9D - 1.0Ev + 1.0Eh 300 deg M1	0.00	00.00		1	-0.01	76.69	0.00
	190.00	07.00	0	A1	0.00	-13.89	18.49
	190.00	03.00	240	A1a	-16.00	-14.26	-9.24
	201.00	-08.00	120	A1b	17.17	-15.75	-9.91
0.9D - 1.0Ev + 1.0Eh 330 deg M1	0.00	00.00		1	0.00	76.70	0.01
	190.00	07.00	0	A1	0.00	-13.55	18.14
	190.00	03.00	240	A1a	-16.39	-14.70	-9.47
	201.00	-08.00	120	A1b	17.09	-15.66	-9.87
1.0D + 1.0W Service Normal	0.00	00.00		1	0.01	83.58	-0.72
	190.00	07.00	0	A1	0.00	-7.33	9.82
	190.00	03.00	240	A1a	-21.12	-19.24	-12.62
	201.00	-08.00	120	A1b	21.10	-19.43	-12.62
1.0D + 1.0W Service 60 deg	0.00	00.00		1	-0.60	84.00	-0.36
	190.00	07.00	0	A1	-0.36	-11.44	14.94
	190.00	03.00	240	A1a	-25.56	-23.29	-14.76
	201.00	-08.00	120	A1b	12.74	-11.88	-7.79
1.0D + 1.0W Service 90 deg	0.00	00.00		1	-0.70	83.84	-0.01

© 2007 - 2021 by ATC IP LLC. All rights reserved.

	190.00	07.00	0	A1	-0.45	-15.15	19.89
	190.00	03.00	240	A1a	-24.64	-22.26	-14.02
	201.00	-08.00	120	A1b	9.80	-8.96	-5.86
1.0D + 1.0W Service 120 deg	0.00	00.00		1	-0.61	83.74	0.35
	190.00	07.00	0	A1	-0.36	-18.92	24.92
	190.00	03.00	240	A1a	-21.77	-19.43	-12.14
	201.00	-08.00	120	A1b	8.79	-7.84	-5.07
1.0D + 1.0W Service 180 deg	0.00	00.00		1	0.01	83.92	0.70
	190.00	07.00	0	A1	0.00	-22.76	29.60
	190.00	03.00	240	A1a	-13.18	-11.83	-7.20
	201.00	-08.00	120	A1b	13.19	-11.95	-7.18
1.0D + 1.0W Service 210 deg	0.00	00.00		1	0.36	83.66	0.61
	190.00	07.00	0	A1	0.18	-21.66	28.25
	190.00	03.00	240	A1a	-9.89	-8.83	-5.51
	201.00	-08.00	120	A1b	17.36	-15.69	-9.49
1.0D + 1.0W Service 240 deg	0.00	00.00		1	0.63	83.46	0.35
	190.00	07.00	0	A1	0.36	-18.79	24.67
	190.00	03.00	240	A1a	-8.55	-7.60	-4.94
	201.00	-08.00	120	A1b	21.54	-19.49	-12.00
1.0D + 1.0W Service 300 deg	0.00	00.00		1	0.62	83.54	-0.36
	190.00	07.00	0	A1	0.36	-11.28	14.66
	190.00	03.00	240	A1a	-12.51	-11.59	-7.64
	201.00	-08.00	120	A1b	25.26	-23.28	-14.59
1.0D + 1.0W Service 330 deg	0.00	00.00		1	0.37	83.48	-0.62
	190.00	07.00	0	A1	0.17	-8.40	11.07
	190.00	03.00	240	A1a	-16.69	-15.34	-10.15
	201.00	-08.00	120	A1b	24.13	-22.24	-14.15

© 2007 - 2021 by ATC IP LLC. All rights reserved.

Guy Anchor Design Loads

Radius (ft)	Drop (ft)	Azimuth (°)	Uplift (kip)	Shear (kip)
190.00	7.00	0	60.87	76.92
190.00	3.00	240	62.62	77.21
201.00	-8.00	120	62.83	76.77

Maximum Cable Forces Summary

Load Case	Elevation (ft)	Cable	Anchor Node	Tower Node	Allow Tension (kip)	Applied Tension (kip)	Use %
1.2D + 1.0W 330 deg	59.79	3/4 EHS	A1b	22a	34.98	17.70	51
1.2D + 1.0W 90 deg	124.12	3/4 EHS	A1a	46b	34.98	25.01	72
1.2D + 1.0W 90 deg	184.11	3/4 EHS	A1a	67b	34.98	26.45	76
1.2D + 1.0W 60 deg	244.11	3/4 EHS	A1a	88b	34.98	20.98	60
1.2D + 1.0W 180 deg	291.95	5/8 EHS	A1	104	25.44	13.36	53

Maximum Torque Arm Stress Summary

Load Case	Elevation (ft)	Member	Type	Compression %	Tension %
1.2D + 1.0W Normal	59.75	PL 4.5 x 0.375"	Horiz		18
1.2D + 1.0W Normal	124.00	PL 4.5 x 0.375"	Horiz		21
1.2D + 1.0W Normal	184.00	PL 4.5 x 0.375"	Horiz		20
1.2D + 1.0W Normal	244.00	PL 4.5 x 0.375"	Horiz		12
1.2D + 1.0W Normal	292.00	PL 4.5 x 0.375"	Horiz		7

© 2007 - 2021 by ATC IP LLC. All rights reserved.

Deflections and Rotations

Load Case	Elevation (ft)	Deflection (ft)	Twist (deg)	Sway (deg)	Resultant (deg)
123 mph Normal with No Ice	80.00	0.721	-0.0362	0.6812	0.6821
123 mph Normal with No Ice	80.20	0.723	-0.0363	0.6689	0.6699
123 mph Normal with No Ice	104.12	0.937	-0.0381	0.4151	0.4168
123 mph Normal with No Ice	115.88	1.015	-0.0381	0.4003	0.4021
123 mph Normal with No Ice	124.12	1.065	-0.0378	0.5172	0.5186
123 mph Normal with No Ice	128.04	1.108	-0.0385	0.6623	0.6640
123 mph Normal with No Ice	160.00	1.429	-0.0449	0.4899	0.4920
123 mph Normal with No Ice	168.04	1.480	-0.0453	0.3008	0.3050
123 mph Normal with No Ice	180.00	1.521	-0.0447	0.0446	0.0632
123 mph Normal with No Ice	195.88	1.580	-0.0461	0.1799	0.1858
123 mph Normal with No Ice	211.96	1.600	-0.0470	0.0139	0.0511
123 mph Normal with No Ice	215.88	1.599	-0.0472	0.0266	0.0549
123 mph Normal with No Ice	231.96	1.566	-0.0468	0.2425	0.2478
123 mph Normal with No Ice	268.04	1.493	-0.0472	0.0346	0.0589
123 mph Normal with No Ice	300.00	1.450	-0.0479	0.5128	0.5153
123 mph 60 degree with No Ice	80.00	0.417	-0.0287	0.4003	0.4011
123 mph 60 degree with No Ice	80.20	0.418	-0.0286	0.3888	0.3897
123 mph 60 degree with No Ice	104.12	0.530	-0.0317	0.1943	0.1963
123 mph 60 degree with No Ice	115.88	0.565	-0.0344	0.1971	0.1991
123 mph 60 degree with No Ice	124.12	0.588	-0.0295	0.3220	0.3233
123 mph 60 degree with No Ice	128.04	0.616	-0.0357	0.4472	0.4481
123 mph 60 degree with No Ice	160.00	0.843	-0.0328	0.3462	0.3474
123 mph 60 degree with No Ice	168.04	0.882	-0.0334	0.2046	0.2070
123 mph 60 degree with No Ice	180.00	0.904	-0.0360	0.0919	0.0980
123 mph 60 degree with No Ice	195.88	0.952	-0.0346	0.1688	0.1723
123 mph 60 degree with No Ice	211.96	0.977	-0.0322	0.0438	0.0552
123 mph 60 degree with No Ice	215.88	0.980	-0.0327	0.0380	0.0513
123 mph 60 degree with No Ice	231.96	0.969	-0.0407	0.0768	0.0850
123 mph 60 degree with No Ice	268.04	0.970	-0.0397	0.0933	0.1014
123 mph 60 degree with No Ice	300.00	0.997	-0.0395	0.5000	0.5015
123 mph 90 degree with No Ice	80.00	0.598	0.2888	0.5841	0.6516
123 mph 90 degree with No Ice	80.20	0.600	0.2885	0.5722	0.6408
123 mph 90 degree with No Ice	104.12	0.777	0.2255	0.3552	0.4197
123 mph 90 degree with No Ice	115.88	0.839	0.1577	0.3443	0.3770
123 mph 90 degree with No Ice	124.12	0.879	0.1116	0.4555	0.4674
123 mph 90 degree with No Ice	128.04	0.918	0.1272	0.6068	0.6198
123 mph 90 degree with No Ice	160.00	1.211	0.2341	0.4362	0.4950
123 mph 90 degree with No Ice	168.04	1.258	0.1843	0.2828	0.3349
123 mph 90 degree with No Ice	180.00	1.296	0.1820	0.1040	0.2053
123 mph 90 degree with No Ice	195.88	1.352	0.2091	0.1788	0.2751
123 mph 90 degree with No Ice	211.96	1.372	0.2079	0.0223	0.2091
123 mph 90 degree with No Ice	215.88	1.372	0.2069	0.0246	0.2081
123 mph 90 degree with No Ice	231.96	1.352	0.3127	0.1097	0.3268
123 mph 90 degree with No Ice	268.04	1.295	0.3228	0.1544	0.3578
123 mph 90 degree with No Ice	300.00	1.257	0.3218	0.5374	0.6257
123 mph 120 degree with No Ice	80.00	0.678	-0.0002	0.6560	0.6560
123 mph 120 degree with No Ice	80.20	0.680	-0.0004	0.6447	0.6447
123 mph 120 degree with No Ice	104.12	0.882	0.0007	0.3960	0.3960
123 mph 120 degree with No Ice	115.88	0.956	0.0019	0.3863	0.3863
123 mph 120 degree with No Ice	124.12	1.004	0.0016	0.5079	0.5079
123 mph 120 degree with No Ice	128.04	1.047	0.0029	0.6548	0.6550
123 mph 120 degree with No Ice	160.00	1.367	-0.0051	0.4970	0.4971
123 mph 120 degree with No Ice	168.04	1.419	-0.0029	0.3099	0.3102
123 mph 120 degree with No Ice	180.00	1.463	-0.0016	0.0303	0.0313
123 mph 120 degree with No Ice	195.88	1.527	-0.0038	0.1995	0.1997

© 2007 - 2021 by ATC IP LLC. All rights reserved.

123 mph 120 degree with No Ice	211.96	1.554	-0.0074	0.0228	0.0256
123 mph 120 degree with No Ice	215.88	1.554	-0.0076	0.0115	0.0150
123 mph 120 degree with No Ice	231.96	1.528	-0.0044	0.1348	0.1352
123 mph 120 degree with No Ice	268.04	1.469	-0.0104	0.1395	0.1399
123 mph 120 degree with No Ice	300.00	1.427	-0.0124	0.5475	0.5476
123 mph 180 degree with No Ice	80.00	0.407	0.0252	0.3896	0.3903
123 mph 180 degree with No Ice	80.20	0.408	0.0251	0.3783	0.3790
123 mph 180 degree with No Ice	104.12	0.516	0.0279	0.1834	0.1850
123 mph 180 degree with No Ice	115.88	0.549	0.0303	0.1861	0.1876
123 mph 180 degree with No Ice	124.12	0.570	0.0252	0.3110	0.3119
123 mph 180 degree with No Ice	128.04	0.598	0.0311	0.4357	0.4364
123 mph 180 degree with No Ice	160.00	0.818	0.0262	0.3345	0.3352
123 mph 180 degree with No Ice	168.04	0.856	0.0264	0.1947	0.1962
123 mph 180 degree with No Ice	180.00	0.876	0.0279	0.1006	0.1036
123 mph 180 degree with No Ice	195.88	0.922	0.0310	0.1747	0.1768
123 mph 180 degree with No Ice	211.96	0.947	0.0535	0.0410	0.0665
123 mph 180 degree with No Ice	215.88	0.949	0.0531	0.0364	0.0644
123 mph 180 degree with No Ice	231.96	0.938	0.0563	0.1431	0.1532
123 mph 180 degree with No Ice	268.04	0.945	0.0518	0.1724	0.1799
123 mph 180 degree with No Ice	300.00	0.989	0.0531	0.6649	0.6668
123 mph 210 degree with No Ice	80.00	0.600	0.3420	0.5780	0.6712
123 mph 210 degree with No Ice	80.20	0.602	0.3423	0.5674	0.6622
123 mph 210 degree with No Ice	104.12	0.779	0.3060	0.3496	0.4631
123 mph 210 degree with No Ice	115.88	0.839	0.2369	0.3361	0.4089
123 mph 210 degree with No Ice	124.12	0.878	0.1895	0.4437	0.4798
123 mph 210 degree with No Ice	128.04	0.916	0.2062	0.5943	0.6288
123 mph 210 degree with No Ice	160.00	1.201	0.3233	0.4175	0.5280
123 mph 210 degree with No Ice	168.04	1.244	0.2761	0.2644	0.3802
123 mph 210 degree with No Ice	180.00	1.279	0.2739	0.1024	0.2877
123 mph 210 degree with No Ice	195.88	1.329	0.3063	0.1634	0.3471
123 mph 210 degree with No Ice	211.96	1.345	0.3076	0.0390	0.3100
123 mph 210 degree with No Ice	215.88	1.343	0.3071	0.0488	0.3108
123 mph 210 degree with No Ice	231.96	1.318	0.4134	0.1848	0.4528
123 mph 210 degree with No Ice	268.04	1.252	0.3966	0.2020	0.4447
123 mph 210 degree with No Ice	300.00	1.217	0.3980	0.6707	0.7784
123 mph 240 degree with No Ice	80.00	0.711	0.0227	0.6748	0.6750
123 mph 240 degree with No Ice	80.20	0.713	0.0227	0.6630	0.6632
123 mph 240 degree with No Ice	104.12	0.924	0.0562	0.4092	0.4124
123 mph 240 degree with No Ice	115.88	1.001	0.0577	0.3955	0.3988
123 mph 240 degree with No Ice	124.12	1.050	0.0572	0.5135	0.5159
123 mph 240 degree with No Ice	128.04	1.093	0.0595	0.6590	0.6617
123 mph 240 degree with No Ice	160.00	1.412	0.0610	0.4892	0.4927
123 mph 240 degree with No Ice	168.04	1.463	0.0634	0.3002	0.3069
123 mph 240 degree with No Ice	180.00	1.505	0.0643	0.0436	0.0723
123 mph 240 degree with No Ice	195.88	1.564	0.0655	0.1801	0.1898
123 mph 240 degree with No Ice	211.96	1.584	0.0630	0.0124	0.0642
123 mph 240 degree with No Ice	215.88	1.583	0.0631	0.0270	0.0678
123 mph 240 degree with No Ice	231.96	1.549	0.0671	0.1570	0.1694
123 mph 240 degree with No Ice	268.04	1.470	0.0618	0.1767	0.1869
123 mph 240 degree with No Ice	300.00	1.410	0.0636	0.5792	0.5824
123 mph 300 degree with No Ice	80.00	0.447	0.0002	0.4290	0.4290
123 mph 300 degree with No Ice	80.20	0.449	0.0002	0.4210	0.4210
123 mph 300 degree with No Ice	104.12	0.570	0.0020	0.2074	0.2074
123 mph 300 degree with No Ice	115.88	0.608	0.0044	0.2067	0.2067
123 mph 300 degree with No Ice	124.12	0.631	-0.0005	0.3287	0.3287
123 mph 300 degree with No Ice	128.04	0.660	0.0054	0.4527	0.4527
123 mph 300 degree with No Ice	160.00	0.887	0.0008	0.3413	0.3413
123 mph 300 degree with No Ice	168.04	0.925	0.0010	0.1973	0.1973
123 mph 300 degree with No Ice	180.00	0.945	0.0028	0.1017	0.1017
123 mph 300 degree with No Ice	195.88	0.989	0.0008	0.1511	0.1511
123 mph 300 degree with No Ice	211.96	1.008	-0.0022	0.0209	0.0209
123 mph 300 degree with No Ice	215.88	1.009	-0.0018	0.0149	0.0150

© 2007 - 2021 by ATC IP LLC. All rights reserved.

123 mph 300 degree with No Ice	231.96	0.991	0.0054	0.0912	0.0912
123 mph 300 degree with No Ice	268.04	0.974	0.0038	0.1001	0.1002
123 mph 300 degree with No Ice	300.00	0.985	0.0040	0.5148	0.5148
123 mph 330 degree with No Ice	80.00	0.643	0.2878	0.6116	0.6760
123 mph 330 degree with No Ice	80.20	0.645	0.2875	0.5995	0.6649
123 mph 330 degree with No Ice	104.12	0.831	0.2226	0.3721	0.4323
123 mph 330 degree with No Ice	115.88	0.896	0.1552	0.3561	0.3869
123 mph 330 degree with No Ice	124.12	0.937	0.1093	0.4625	0.4737
123 mph 330 degree with No Ice	128.04	0.976	0.1250	0.6114	0.6238
123 mph 330 degree with No Ice	160.00	1.269	0.2389	0.4284	0.4905
123 mph 330 degree with No Ice	168.04	1.315	0.2169	0.2716	0.3441
123 mph 330 degree with No Ice	180.00	1.350	0.2150	0.1111	0.2375
123 mph 330 degree with No Ice	195.88	1.397	0.2148	0.1456	0.2595
123 mph 330 degree with No Ice	211.96	1.411	0.2116	0.0243	0.2130
123 mph 330 degree with No Ice	215.88	1.408	0.2109	0.0403	0.2147
123 mph 330 degree with No Ice	231.96	1.380	0.3188	0.2332	0.3890
123 mph 330 degree with No Ice	268.04	1.306	0.3039	0.0181	0.3040
123 mph 330 degree with No Ice	300.00	1.265	0.3047	0.4877	0.5725
50 mph Normal with 1.00 in Radial Ice	80.00	0.197	-0.0308	0.2052	0.2075
50 mph Normal with 1.00 in Radial Ice	80.20	0.198	-0.0308	0.2011	0.2034
50 mph Normal with 1.00 in Radial Ice	104.12	0.246	-0.0320	0.0651	0.0736
50 mph Normal with 1.00 in Radial Ice	115.88	0.252	-0.0318	0.0307	0.0445
50 mph Normal with 1.00 in Radial Ice	124.12	0.253	-0.0315	0.0771	0.0837
50 mph Normal with 1.00 in Radial Ice	128.04	0.261	-0.0322	0.1406	0.1453
50 mph Normal with 1.00 in Radial Ice	160.00	0.302	-0.0354	0.0212	0.0412
50 mph Normal with 1.00 in Radial Ice	168.04	0.301	-0.0357	0.0269	0.0451
50 mph Normal with 1.00 in Radial Ice	180.00	0.291	-0.0361	0.1545	0.1587
50 mph Normal with 1.00 in Radial Ice	195.88	0.268	-0.0366	0.0927	0.0996
50 mph Normal with 1.00 in Radial Ice	211.96	0.236	-0.0374	0.1488	0.1535
50 mph Normal with 1.00 in Radial Ice	215.88	0.225	-0.0375	0.1588	0.1630
50 mph Normal with 1.00 in Radial Ice	231.96	0.174	-0.0382	0.2297	0.2328
50 mph Normal with 1.00 in Radial Ice	268.04	0.053	-0.0394	0.1887	0.1927
50 mph Normal with 1.00 in Radial Ice	300.00	0.103	-0.0401	0.0417	0.0586
50 mph 60 deg with 1.00 in Radial Ice	80.00	0.166	-0.0226	0.1734	0.1743
50 mph 60 deg with 1.00 in Radial Ice	80.20	0.166	-0.0226	0.1708	0.1718
50 mph 60 deg with 1.00 in Radial Ice	104.12	0.206	-0.0250	0.0402	0.0466
50 mph 60 deg with 1.00 in Radial Ice	115.88	0.212	-0.0264	0.0364	0.0428
50 mph 60 deg with 1.00 in Radial Ice	124.12	0.215	-0.0239	0.0922	0.0949
50 mph 60 deg with 1.00 in Radial Ice	128.04	0.224	-0.0271	0.1546	0.1563
50 mph 60 deg with 1.00 in Radial Ice	160.00	0.290	-0.0261	0.0812	0.0854
50 mph 60 deg with 1.00 in Radial Ice	168.04	0.298	-0.0263	0.0536	0.0600
50 mph 60 deg with 1.00 in Radial Ice	180.00	0.306	-0.0284	0.0459	0.0540
50 mph 60 deg with 1.00 in Radial Ice	195.88	0.314	-0.0282	0.0389	0.0483
50 mph 60 deg with 1.00 in Radial Ice	211.96	0.322	-0.0290	0.0150	0.0334
50 mph 60 deg with 1.00 in Radial Ice	215.88	0.323	-0.0292	0.0126	0.0322
50 mph 60 deg with 1.00 in Radial Ice	231.96	0.320	-0.0303	0.0288	0.0420
50 mph 60 deg with 1.00 in Radial Ice	268.04	0.319	-0.0319	0.0222	0.0389
50 mph 60 deg with 1.00 in Radial Ice	300.00	0.320	-0.0331	0.1909	0.1936
50 mph 90 deg with 1.00 in Radial Ice	80.00	0.194	0.2747	0.1940	0.3363
50 mph 90 deg with 1.00 in Radial Ice	80.20	0.195	0.2754	0.1898	0.3345
50 mph 90 deg with 1.00 in Radial Ice	104.12	0.239	0.2790	0.0545	0.2842
50 mph 90 deg with 1.00 in Radial Ice	115.88	0.245	0.2557	0.0410	0.2590
50 mph 90 deg with 1.00 in Radial Ice	124.12	0.244	0.2051	0.0865	0.2201
50 mph 90 deg with 1.00 in Radial Ice	128.04	0.253	0.1985	0.1487	0.2447
50 mph 90 deg with 1.00 in Radial Ice	160.00	0.306	0.1395	0.0648	0.1530
50 mph 90 deg with 1.00 in Radial Ice	168.04	0.312	0.1410	0.0407	0.1466
50 mph 90 deg with 1.00 in Radial Ice	180.00	0.312	0.1438	0.0895	0.1694
50 mph 90 deg with 1.00 in Radial Ice	195.88	0.309	0.1530	0.0551	0.1619
50 mph 90 deg with 1.00 in Radial Ice	211.96	0.301	0.1547	0.0852	0.1765
50 mph 90 deg with 1.00 in Radial Ice	215.88	0.297	0.1550	0.0915	0.1798
50 mph 90 deg with 1.00 in Radial Ice	231.96	0.277	0.1564	0.1126	0.1923
50 mph 90 deg with 1.00 in Radial Ice	268.04	0.237	0.1590	0.1547	0.2219

© 2007 - 2021 by ATC IP LLC. All rights reserved.

50 mph 90 deg with 1.00 in Radial Ice	300.00	0.220	0.1608	0.3070	0.3461
50 mph 120 deg with 1.00 in Radial Ice	80.00	0.199	-0.0007	0.2107	0.2108
50 mph 120 deg with 1.00 in Radial Ice	80.20	0.199	-0.0008	0.2067	0.2067
50 mph 120 deg with 1.00 in Radial Ice	104.12	0.250	-0.0013	0.0728	0.0730
50 mph 120 deg with 1.00 in Radial Ice	115.88	0.258	0.0007	0.0391	0.0393
50 mph 120 deg with 1.00 in Radial Ice	124.12	0.260	-0.0002	0.0869	0.0870
50 mph 120 deg with 1.00 in Radial Ice	128.04	0.269	0.0008	0.1507	0.1509
50 mph 120 deg with 1.00 in Radial Ice	160.00	0.316	-0.0038	0.0310	0.0313
50 mph 120 deg with 1.00 in Radial Ice	168.04	0.317	-0.0034	0.0117	0.0129
50 mph 120 deg with 1.00 in Radial Ice	180.00	0.309	-0.0024	0.1409	0.1410
50 mph 120 deg with 1.00 in Radial Ice	195.88	0.290	-0.0037	0.0793	0.0794
50 mph 120 deg with 1.00 in Radial Ice	211.96	0.260	-0.0039	0.1366	0.1367
50 mph 120 deg with 1.00 in Radial Ice	215.88	0.250	-0.0040	0.1469	0.1470
50 mph 120 deg with 1.00 in Radial Ice	231.96	0.201	-0.0043	0.1916	0.1917
50 mph 120 deg with 1.00 in Radial Ice	268.04	0.071	-0.0046	0.2335	0.2335
50 mph 120 deg with 1.00 in Radial Ice	300.00	0.057	-0.0054	0.3641	0.3641
50 mph 180 deg with 1.00 in Radial Ice	80.00	0.161	0.0214	0.1687	0.1696
50 mph 180 deg with 1.00 in Radial Ice	80.20	0.161	0.0214	0.1662	0.1671
50 mph 180 deg with 1.00 in Radial Ice	104.12	0.200	0.0231	0.0362	0.0421
50 mph 180 deg with 1.00 in Radial Ice	115.88	0.204	0.0244	0.0323	0.0382
50 mph 180 deg with 1.00 in Radial Ice	124.12	0.206	0.0216	0.0879	0.0902
50 mph 180 deg with 1.00 in Radial Ice	128.04	0.216	0.0245	0.1500	0.1514
50 mph 180 deg with 1.00 in Radial Ice	160.00	0.278	0.0230	0.0762	0.0795
50 mph 180 deg with 1.00 in Radial Ice	168.04	0.286	0.0236	0.0491	0.0542
50 mph 180 deg with 1.00 in Radial Ice	180.00	0.293	0.0243	0.0497	0.0553
50 mph 180 deg with 1.00 in Radial Ice	195.88	0.300	0.0247	0.0352	0.0427
50 mph 180 deg with 1.00 in Radial Ice	211.96	0.307	0.0253	0.0128	0.0284
50 mph 180 deg with 1.00 in Radial Ice	215.88	0.307	0.0254	0.0112	0.0275
50 mph 180 deg with 1.00 in Radial Ice	231.96	0.305	0.0259	0.0414	0.0488
50 mph 180 deg with 1.00 in Radial Ice	268.04	0.304	0.0270	0.0463	0.0534
50 mph 180 deg with 1.00 in Radial Ice	300.00	0.311	0.0286	0.2354	0.2369
50 mph 210 deg with 1.00 in Radial Ice	80.00	0.185	0.3398	0.1803	0.3847
50 mph 210 deg with 1.00 in Radial Ice	80.20	0.186	0.3399	0.1763	0.3829
50 mph 210 deg with 1.00 in Radial Ice	104.12	0.224	0.3196	0.0420	0.3224
50 mph 210 deg with 1.00 in Radial Ice	115.88	0.228	0.2975	0.0372	0.2998
50 mph 210 deg with 1.00 in Radial Ice	124.12	0.226	0.2479	0.0762	0.2571
50 mph 210 deg with 1.00 in Radial Ice	128.04	0.234	0.2424	0.1364	0.2761
50 mph 210 deg with 1.00 in Radial Ice	160.00	0.281	0.1897	0.0638	0.1995
50 mph 210 deg with 1.00 in Radial Ice	168.04	0.285	0.1921	0.0500	0.1982
50 mph 210 deg with 1.00 in Radial Ice	180.00	0.285	0.1962	0.1048	0.2224
50 mph 210 deg with 1.00 in Radial Ice	195.88	0.281	0.2070	0.0742	0.2193
50 mph 210 deg with 1.00 in Radial Ice	211.96	0.274	0.2102	0.1038	0.2342
50 mph 210 deg with 1.00 in Radial Ice	215.88	0.271	0.2109	0.1098	0.2374
50 mph 210 deg with 1.00 in Radial Ice	231.96	0.255	0.2138	0.1400	0.2556
50 mph 210 deg with 1.00 in Radial Ice	268.04	0.240	0.2189	0.1623	0.2723
50 mph 210 deg with 1.00 in Radial Ice	300.00	0.261	0.2223	0.3075	0.3784
50 mph 240 deg with 1.00 in Radial Ice	80.00	0.193	0.0337	0.2014	0.2037
50 mph 240 deg with 1.00 in Radial Ice	80.20	0.194	0.0336	0.1973	0.1996
50 mph 240 deg with 1.00 in Radial Ice	104.12	0.240	0.0343	0.0622	0.0711
50 mph 240 deg with 1.00 in Radial Ice	115.88	0.246	0.0365	0.0281	0.0434
50 mph 240 deg with 1.00 in Radial Ice	124.12	0.246	0.0356	0.0750	0.0821
50 mph 240 deg with 1.00 in Radial Ice	128.04	0.255	0.0374	0.1385	0.1435
50 mph 240 deg with 1.00 in Radial Ice	160.00	0.295	0.0367	0.0191	0.0409
50 mph 240 deg with 1.00 in Radial Ice	168.04	0.294	0.0375	0.0269	0.0458
50 mph 240 deg with 1.00 in Radial Ice	180.00	0.283	0.0390	0.1551	0.1594
50 mph 240 deg with 1.00 in Radial Ice	195.88	0.260	0.0382	0.0930	0.1003
50 mph 240 deg with 1.00 in Radial Ice	211.96	0.227	0.0389	0.1495	0.1543
50 mph 240 deg with 1.00 in Radial Ice	215.88	0.217	0.0389	0.1596	0.1640
50 mph 240 deg with 1.00 in Radial Ice	231.96	0.165	0.0394	0.2016	0.2054
50 mph 240 deg with 1.00 in Radial Ice	268.04	0.042	0.0402	0.2456	0.2489
50 mph 240 deg with 1.00 in Radial Ice	300.00	0.117	0.0415	0.3823	0.3846
50 mph 300 deg with 1.00 in Radial Ice	80.00	0.173	0.0041	0.1757	0.1757

© 2007 - 2021 by ATC IP LLC. All rights reserved.

50 mph 300 deg with 1.00 in Radial Ice	80.20	0.174	0.0040	0.1731	0.1731
50 mph 300 deg with 1.00 in Radial Ice	104.12	0.214	0.0051	0.0375	0.0379
50 mph 300 deg with 1.00 in Radial Ice	115.88	0.219	0.0062	0.0313	0.0313
50 mph 300 deg with 1.00 in Radial Ice	124.12	0.221	0.0033	0.0853	0.0853
50 mph 300 deg with 1.00 in Radial Ice	128.04	0.230	0.0060	0.1470	0.1470
50 mph 300 deg with 1.00 in Radial Ice	160.00	0.289	0.0031	0.0664	0.0664
50 mph 300 deg with 1.00 in Radial Ice	168.04	0.295	0.0035	0.0365	0.0366
50 mph 300 deg with 1.00 in Radial Ice	180.00	0.299	0.0037	0.0619	0.0620
50 mph 300 deg with 1.00 in Radial Ice	195.88	0.301	0.0037	0.0141	0.0145
50 mph 300 deg with 1.00 in Radial Ice	211.96	0.302	0.0038	0.0167	0.0170
50 mph 300 deg with 1.00 in Radial Ice	215.88	0.300	0.0038	0.0219	0.0222
50 mph 300 deg with 1.00 in Radial Ice	231.96	0.289	0.0038	0.0442	0.0444
50 mph 300 deg with 1.00 in Radial Ice	268.04	0.266	0.0040	0.0549	0.0551
50 mph 300 deg with 1.00 in Radial Ice	300.00	0.247	0.0044	0.2170	0.2170
50 mph 330 deg with 1.00 in Radial Ice	80.00	0.195	0.2592	0.1909	0.3219
50 mph 330 deg with 1.00 in Radial Ice	80.20	0.196	0.2599	0.1867	0.3200
50 mph 330 deg with 1.00 in Radial Ice	104.12	0.238	0.2624	0.0473	0.2667
50 mph 330 deg with 1.00 in Radial Ice	115.88	0.244	0.2658	0.0305	0.2674
50 mph 330 deg with 1.00 in Radial Ice	124.12	0.243	0.2205	0.0757	0.2307
50 mph 330 deg with 1.00 in Radial Ice	128.04	0.251	0.2134	0.1370	0.2504
50 mph 330 deg with 1.00 in Radial Ice	160.00	0.296	0.1524	0.0501	0.1597
50 mph 330 deg with 1.00 in Radial Ice	168.04	0.299	0.1538	0.0315	0.1568
50 mph 330 deg with 1.00 in Radial Ice	180.00	0.296	0.1564	0.1068	0.1894
50 mph 330 deg with 1.00 in Radial Ice	195.88	0.288	0.1655	0.0596	0.1752
50 mph 330 deg with 1.00 in Radial Ice	211.96	0.274	0.1671	0.0961	0.1926
50 mph 330 deg with 1.00 in Radial Ice	215.88	0.268	0.1674	0.1026	0.1964
50 mph 330 deg with 1.00 in Radial Ice	231.96	0.242	0.1687	0.1573	0.2303
50 mph 330 deg with 1.00 in Radial Ice	268.04	0.189	0.1713	0.1097	0.2033
50 mph 330 deg with 1.00 in Radial Ice	300.00	0.168	0.1736	0.1119	0.2048
Seismic Normal M1	80.00	0.006	0.0000	0.0071	0.0071
Seismic Normal M1	80.20	0.006	0.0000	0.0072	0.0072
Seismic Normal M1	104.12	0.009	0.0000	0.0088	0.0088
Seismic Normal M1	115.88	0.010	0.0000	0.0098	0.0098
Seismic Normal M1	124.12	0.012	0.0000	0.0122	0.0122
Seismic Normal M1	128.04	0.013	0.0000	0.0135	0.0135
Seismic Normal M1	160.00	0.020	0.0000	0.0131	0.0131
Seismic Normal M1	168.04	0.021	0.0000	0.0093	0.0093
Seismic Normal M1	180.00	0.023	0.0000	0.0033	0.0033
Seismic Normal M1	195.88	0.024	0.0000	0.0062	0.0062
Seismic Normal M1	211.96	0.026	0.0000	0.0031	0.0031
Seismic Normal M1	215.88	0.026	0.0000	0.0031	0.0031
Seismic Normal M1	231.96	0.026	0.0000	0.0026	0.0026
Seismic Normal M1	268.04	0.026	0.0000	0.0024	0.0024
Seismic Normal M1	300.00	0.026	0.0000	0.0026	0.0026
Seismic 60 deg M1	80.00	0.004	-0.0001	0.0072	0.0072
Seismic 60 deg M1	80.20	0.004	-0.0001	0.0071	0.0071
Seismic 60 deg M1	104.12	0.007	-0.0001	0.0093	0.0093
Seismic 60 deg M1	115.88	0.009	-0.0001	0.0112	0.0112
Seismic 60 deg M1	124.12	0.011	0.0000	0.0133	0.0133
Seismic 60 deg M1	128.04	0.012	-0.0001	0.0155	0.0155
Seismic 60 deg M1	160.00	0.020	0.0000	0.0154	0.0154
Seismic 60 deg M1	168.04	0.022	0.0000	0.0116	0.0116
Seismic 60 deg M1	180.00	0.023	0.0000	0.0051	0.0051
Seismic 60 deg M1	195.88	0.026	0.0000	0.0088	0.0088
Seismic 60 deg M1	211.96	0.028	0.0000	0.0055	0.0055
Seismic 60 deg M1	215.88	0.028	0.0000	0.0054	0.0054
Seismic 60 deg M1	231.96	0.029	0.0000	0.0028	0.0028
Seismic 60 deg M1	268.04	0.031	0.0000	0.0042	0.0042
Seismic 60 deg M1	300.00	0.032	0.0000	0.0034	0.0034
Seismic 90 deg M1	80.00	0.003	0.0000	0.0073	0.0073
Seismic 90 deg M1	80.20	0.003	0.0000	0.0072	0.0072
Seismic 90 deg M1	104.12	0.007	-0.0001	0.0099	0.0099

© 2007 - 2021 by ATC IP LLC. All rights reserved.

Seismic 90 deg M1	115.88	0.009	-0.0001	0.0117	0.0117
Seismic 90 deg M1	124.12	0.010	0.0000	0.0142	0.0142
Seismic 90 deg M1	128.04	0.011	0.0000	0.0160	0.0160
Seismic 90 deg M1	160.00	0.020	0.0000	0.0161	0.0161
Seismic 90 deg M1	168.04	0.022	0.0000	0.0123	0.0123
Seismic 90 deg M1	180.00	0.024	0.0000	0.0057	0.0057
Seismic 90 deg M1	195.88	0.027	0.0000	0.0094	0.0094
Seismic 90 deg M1	211.96	0.029	0.0000	0.0060	0.0060
Seismic 90 deg M1	215.88	0.029	0.0000	0.0058	0.0058
Seismic 90 deg M1	231.96	0.030	0.0000	0.0028	0.0028
Seismic 90 deg M1	268.04	0.033	0.0000	0.0045	0.0045
Seismic 90 deg M1	300.00	0.034	0.0000	0.0036	0.0036
Seismic 120 deg M1	80.00	0.003	0.0000	0.0071	0.0071
Seismic 120 deg M1	80.20	0.003	0.0000	0.0071	0.0071
Seismic 120 deg M1	104.12	0.006	0.0000	0.0100	0.0100
Seismic 120 deg M1	115.88	0.008	0.0000	0.0116	0.0116
Seismic 120 deg M1	124.12	0.010	0.0000	0.0145	0.0145
Seismic 120 deg M1	128.04	0.011	0.0000	0.0159	0.0159
Seismic 120 deg M1	160.00	0.020	0.0000	0.0161	0.0161
Seismic 120 deg M1	168.04	0.021	0.0000	0.0124	0.0124
Seismic 120 deg M1	180.00	0.024	0.0000	0.0056	0.0056
Seismic 120 deg M1	195.88	0.026	0.0000	0.0096	0.0096
Seismic 120 deg M1	211.96	0.029	0.0000	0.0061	0.0061
Seismic 120 deg M1	215.88	0.029	0.0000	0.0058	0.0058
Seismic 120 deg M1	231.96	0.030	0.0000	0.0028	0.0028
Seismic 120 deg M1	268.04	0.033	0.0000	0.0046	0.0046
Seismic 120 deg M1	300.00	0.034	0.0000	0.0036	0.0036
Seismic 180 deg M1	80.00	0.002	0.0000	0.0061	0.0061
Seismic 180 deg M1	80.20	0.002	0.0000	0.0060	0.0060
Seismic 180 deg M1	104.12	0.005	0.0000	0.0083	0.0083
Seismic 180 deg M1	115.88	0.007	0.0000	0.0103	0.0103
Seismic 180 deg M1	124.12	0.008	0.0001	0.0124	0.0124
Seismic 180 deg M1	128.04	0.009	0.0000	0.0145	0.0145
Seismic 180 deg M1	160.00	0.017	0.0001	0.0142	0.0142
Seismic 180 deg M1	168.04	0.018	0.0001	0.0105	0.0105
Seismic 180 deg M1	180.00	0.020	0.0001	0.0042	0.0042
Seismic 180 deg M1	195.88	0.022	0.0001	0.0078	0.0078
Seismic 180 deg M1	211.96	0.024	0.0001	0.0046	0.0046
Seismic 180 deg M1	215.88	0.024	0.0001	0.0045	0.0045
Seismic 180 deg M1	231.96	0.025	0.0000	0.0024	0.0024
Seismic 180 deg M1	268.04	0.027	0.0000	0.0037	0.0037
Seismic 180 deg M1	300.00	0.028	0.0000	0.0031	0.0031
Seismic 210 deg M1	80.00	0.003	0.0000	0.0059	0.0059
Seismic 210 deg M1	80.20	0.003	0.0000	0.0059	0.0059
Seismic 210 deg M1	104.12	0.006	0.0000	0.0080	0.0080
Seismic 210 deg M1	115.88	0.008	0.0000	0.0097	0.0097
Seismic 210 deg M1	124.12	0.009	0.0001	0.0119	0.0119
Seismic 210 deg M1	128.04	0.010	0.0000	0.0137	0.0137
Seismic 210 deg M1	160.00	0.017	0.0001	0.0133	0.0133
Seismic 210 deg M1	168.04	0.018	0.0001	0.0096	0.0096
Seismic 210 deg M1	180.00	0.020	0.0001	0.0036	0.0036
Seismic 210 deg M1	195.88	0.022	0.0001	0.0069	0.0069
Seismic 210 deg M1	211.96	0.023	0.0001	0.0038	0.0038
Seismic 210 deg M1	215.88	0.023	0.0001	0.0038	0.0038
Seismic 210 deg M1	231.96	0.023	0.0001	0.0025	0.0025
Seismic 210 deg M1	268.04	0.024	0.0000	0.0031	0.0031
Seismic 210 deg M1	300.00	0.025	0.0000	0.0029	0.0029
Seismic 240 deg M1	80.00	0.004	0.0000	0.0061	0.0061
Seismic 240 deg M1	80.20	0.004	0.0000	0.0062	0.0062
Seismic 240 deg M1	104.12	0.007	0.0000	0.0079	0.0079
Seismic 240 deg M1	115.88	0.009	0.0000	0.0089	0.0089
Seismic 240 deg M1	124.12	0.010	0.0001	0.0113	0.0113

© 2007 - 2021 by ATC IP LLC. All rights reserved.

Seismic 240 deg M1	128.04	0.011	0.0000	0.0126	0.0126
Seismic 240 deg M1	160.00	0.017	0.0001	0.0120	0.0120
Seismic 240 deg M1	168.04	0.018	0.0001	0.0083	0.0083
Seismic 240 deg M1	180.00	0.020	0.0001	0.0025	0.0025
Seismic 240 deg M1	195.88	0.021	0.0001	0.0052	0.0052
Seismic 240 deg M1	211.96	0.022	0.0001	0.0023	0.0023
Seismic 240 deg M1	215.88	0.022	0.0001	0.0024	0.0024
Seismic 240 deg M1	231.96	0.022	0.0000	0.0028	0.0028
Seismic 240 deg M1	268.04	0.022	0.0000	0.0022	0.0022
Seismic 240 deg M1	300.00	0.021	0.0000	0.0026	0.0026
Seismic 300 deg M1	80.00	0.006	0.0000	0.0069	0.0069
Seismic 300 deg M1	80.20	0.006	0.0000	0.0067	0.0067
Seismic 300 deg M1	104.12	0.009	0.0000	0.0078	0.0078
Seismic 300 deg M1	115.88	0.010	0.0000	0.0091	0.0091
Seismic 300 deg M1	124.12	0.011	0.0000	0.0107	0.0107
Seismic 300 deg M1	128.04	0.012	0.0000	0.0127	0.0127
Seismic 300 deg M1	160.00	0.019	0.0000	0.0117	0.0117
Seismic 300 deg M1	168.04	0.020	0.0001	0.0076	0.0076
Seismic 300 deg M1	180.00	0.021	0.0001	0.0008	0.0008
Seismic 300 deg M1	195.88	0.022	0.0000	0.0040	0.0040
Seismic 300 deg M1	211.96	0.023	0.0000	0.0004	0.0004
Seismic 300 deg M1	215.88	0.023	0.0000	0.0005	0.0005
Seismic 300 deg M1	231.96	0.022	0.0000	0.0030	0.0030
Seismic 300 deg M1	268.04	0.021	0.0000	0.0011	0.0011
Seismic 300 deg M1	300.00	0.020	0.0000	0.0024	0.0024
Seismic 330 deg M1	80.00	0.006	0.0000	0.0071	0.0071
Seismic 330 deg M1	80.20	0.006	0.0000	0.0071	0.0071
Seismic 330 deg M1	104.12	0.009	0.0000	0.0085	0.0085
Seismic 330 deg M1	115.88	0.011	0.0000	0.0096	0.0096
Seismic 330 deg M1	124.12	0.012	0.0000	0.0116	0.0116
Seismic 330 deg M1	128.04	0.013	0.0000	0.0132	0.0132
Seismic 330 deg M1	160.00	0.020	0.0000	0.0124	0.0124
Seismic 330 deg M1	168.04	0.021	0.0001	0.0085	0.0085
Seismic 330 deg M1	180.00	0.022	0.0000	0.0020	0.0020
Seismic 330 deg M1	195.88	0.024	0.0000	0.0051	0.0051
Seismic 330 deg M1	211.96	0.025	0.0000	0.0019	0.0019
Seismic 330 deg M1	215.88	0.025	0.0000	0.0018	0.0018
Seismic 330 deg M1	231.96	0.025	0.0000	0.0027	0.0027
Seismic 330 deg M1	268.04	0.024	0.0000	0.0015	0.0015
Seismic 330 deg M1	300.00	0.023	0.0000	0.0023	0.0023
Seismic (Reduced DL) Normal M1	80.00	0.006	0.0000	0.0071	0.0071
Seismic (Reduced DL) Normal M1	80.20	0.006	0.0000	0.0071	0.0071
Seismic (Reduced DL) Normal M1	104.12	0.009	0.0000	0.0087	0.0087
Seismic (Reduced DL) Normal M1	115.88	0.010	0.0000	0.0097	0.0097
Seismic (Reduced DL) Normal M1	124.12	0.012	0.0000	0.0121	0.0121
Seismic (Reduced DL) Normal M1	128.04	0.013	0.0000	0.0135	0.0135
Seismic (Reduced DL) Normal M1	160.00	0.020	0.0000	0.0131	0.0131
Seismic (Reduced DL) Normal M1	168.04	0.021	0.0000	0.0092	0.0092
Seismic (Reduced DL) Normal M1	180.00	0.023	0.0000	0.0032	0.0032
Seismic (Reduced DL) Normal M1	195.88	0.024	0.0000	0.0061	0.0061
Seismic (Reduced DL) Normal M1	211.96	0.025	0.0000	0.0031	0.0031
Seismic (Reduced DL) Normal M1	215.88	0.026	0.0000	0.0031	0.0031
Seismic (Reduced DL) Normal M1	231.96	0.026	0.0000	0.0025	0.0025
Seismic (Reduced DL) Normal M1	268.04	0.026	0.0000	0.0024	0.0024
Seismic (Reduced DL) Normal M1	300.00	0.026	0.0000	0.0026	0.0026
Seismic (Reduced DL) 60 deg M1	80.00	0.004	0.0000	0.0070	0.0070
Seismic (Reduced DL) 60 deg M1	80.20	0.004	0.0000	0.0069	0.0069
Seismic (Reduced DL) 60 deg M1	104.12	0.007	-0.0001	0.0090	0.0090
Seismic (Reduced DL) 60 deg M1	115.88	0.009	-0.0001	0.0108	0.0108
Seismic (Reduced DL) 60 deg M1	124.12	0.010	0.0000	0.0128	0.0129
Seismic (Reduced DL) 60 deg M1	128.04	0.011	0.0000	0.0150	0.0150
Seismic (Reduced DL) 60 deg M1	160.00	0.019	0.0000	0.0148	0.0148

© 2007 - 2021 by ATC IP LLC. All rights reserved.

Seismic (Reduced DL) 60 deg M1	168.04	0.021	0.0000	0.0110	0.0110
Seismic (Reduced DL) 60 deg M1	180.00	0.023	0.0000	0.0045	0.0045
Seismic (Reduced DL) 60 deg M1	195.88	0.025	0.0000	0.0081	0.0081
Seismic (Reduced DL) 60 deg M1	211.96	0.027	0.0000	0.0049	0.0049
Seismic (Reduced DL) 60 deg M1	215.88	0.027	0.0000	0.0047	0.0047
Seismic (Reduced DL) 60 deg M1	231.96	0.028	0.0000	0.0023	0.0023
Seismic (Reduced DL) 60 deg M1	268.04	0.029	0.0000	0.0038	0.0038
Seismic (Reduced DL) 60 deg M1	300.00	0.031	0.0000	0.0031	0.0031
Seismic (Reduced DL) 90 deg M1	80.00	0.003	0.0000	0.0071	0.0071
Seismic (Reduced DL) 90 deg M1	80.20	0.003	0.0000	0.0071	0.0071
Seismic (Reduced DL) 90 deg M1	104.12	0.007	-0.0001	0.0096	0.0096
Seismic (Reduced DL) 90 deg M1	115.88	0.009	-0.0001	0.0114	0.0114
Seismic (Reduced DL) 90 deg M1	124.12	0.010	0.0000	0.0140	0.0140
Seismic (Reduced DL) 90 deg M1	128.04	0.011	0.0000	0.0158	0.0158
Seismic (Reduced DL) 90 deg M1	160.00	0.020	0.0000	0.0158	0.0158
Seismic (Reduced DL) 90 deg M1	168.04	0.021	0.0000	0.0121	0.0121
Seismic (Reduced DL) 90 deg M1	180.00	0.024	0.0000	0.0055	0.0055
Seismic (Reduced DL) 90 deg M1	195.88	0.026	0.0000	0.0093	0.0093
Seismic (Reduced DL) 90 deg M1	211.96	0.028	0.0000	0.0059	0.0059
Seismic (Reduced DL) 90 deg M1	215.88	0.029	0.0000	0.0057	0.0057
Seismic (Reduced DL) 90 deg M1	231.96	0.030	0.0000	0.0027	0.0027
Seismic (Reduced DL) 90 deg M1	268.04	0.032	0.0000	0.0045	0.0045
Seismic (Reduced DL) 90 deg M1	300.00	0.034	0.0000	0.0035	0.0035
Seismic (Reduced DL) 120 deg M1	80.00	0.003	0.0000	0.0069	0.0069
Seismic (Reduced DL) 120 deg M1	80.20	0.003	0.0000	0.0070	0.0070
Seismic (Reduced DL) 120 deg M1	104.12	0.006	0.0000	0.0097	0.0097
Seismic (Reduced DL) 120 deg M1	115.88	0.008	0.0000	0.0113	0.0113
Seismic (Reduced DL) 120 deg M1	124.12	0.010	0.0000	0.0142	0.0142
Seismic (Reduced DL) 120 deg M1	128.04	0.011	0.0000	0.0157	0.0157
Seismic (Reduced DL) 120 deg M1	160.00	0.019	0.0000	0.0159	0.0159
Seismic (Reduced DL) 120 deg M1	168.04	0.021	0.0000	0.0122	0.0122
Seismic (Reduced DL) 120 deg M1	180.00	0.023	0.0000	0.0054	0.0054
Seismic (Reduced DL) 120 deg M1	195.88	0.026	0.0000	0.0094	0.0094
Seismic (Reduced DL) 120 deg M1	211.96	0.028	0.0000	0.0060	0.0060
Seismic (Reduced DL) 120 deg M1	215.88	0.028	0.0000	0.0057	0.0057
Seismic (Reduced DL) 120 deg M1	231.96	0.029	0.0000	0.0027	0.0027
Seismic (Reduced DL) 120 deg M1	268.04	0.032	0.0000	0.0045	0.0045
Seismic (Reduced DL) 120 deg M1	300.00	0.034	0.0000	0.0036	0.0036
Seismic (Reduced DL) 180 deg M1	80.00	0.002	0.0000	0.0060	0.0060
Seismic (Reduced DL) 180 deg M1	80.20	0.002	0.0000	0.0059	0.0059
Seismic (Reduced DL) 180 deg M1	104.12	0.005	0.0000	0.0081	0.0081
Seismic (Reduced DL) 180 deg M1	115.88	0.007	0.0000	0.0101	0.0101
Seismic (Reduced DL) 180 deg M1	124.12	0.008	0.0001	0.0122	0.0122
Seismic (Reduced DL) 180 deg M1	128.04	0.009	0.0000	0.0144	0.0144
Seismic (Reduced DL) 180 deg M1	160.00	0.017	0.0001	0.0140	0.0140
Seismic (Reduced DL) 180 deg M1	168.04	0.018	0.0001	0.0103	0.0103
Seismic (Reduced DL) 180 deg M1	180.00	0.020	0.0001	0.0040	0.0040
Seismic (Reduced DL) 180 deg M1	195.88	0.022	0.0001	0.0077	0.0077
Seismic (Reduced DL) 180 deg M1	211.96	0.024	0.0001	0.0045	0.0045
Seismic (Reduced DL) 180 deg M1	215.88	0.024	0.0001	0.0044	0.0044
Seismic (Reduced DL) 180 deg M1	231.96	0.025	0.0000	0.0023	0.0023
Seismic (Reduced DL) 180 deg M1	268.04	0.026	0.0000	0.0037	0.0037
Seismic (Reduced DL) 180 deg M1	300.00	0.027	0.0000	0.0031	0.0031
Seismic (Reduced DL) 210 deg M1	80.00	0.003	0.0000	0.0059	0.0059
Seismic (Reduced DL) 210 deg M1	80.20	0.003	0.0000	0.0059	0.0059
Seismic (Reduced DL) 210 deg M1	104.12	0.006	0.0000	0.0079	0.0079
Seismic (Reduced DL) 210 deg M1	115.88	0.007	0.0000	0.0095	0.0095
Seismic (Reduced DL) 210 deg M1	124.12	0.009	0.0001	0.0118	0.0118
Seismic (Reduced DL) 210 deg M1	128.04	0.010	0.0000	0.0136	0.0136
Seismic (Reduced DL) 210 deg M1	160.00	0.017	0.0001	0.0130	0.0130
Seismic (Reduced DL) 210 deg M1	168.04	0.018	0.0001	0.0094	0.0094
Seismic (Reduced DL) 210 deg M1	180.00	0.020	0.0001	0.0035	0.0035

© 2007 - 2021 by ATC IP LLC. All rights reserved.

Seismic (Reduced DL) 210 deg M1	195.88	0.021	0.0001	0.0067	0.0067
Seismic (Reduced DL) 210 deg M1	211.96	0.023	0.0001	0.0037	0.0037
Seismic (Reduced DL) 210 deg M1	215.88	0.023	0.0001	0.0037	0.0037
Seismic (Reduced DL) 210 deg M1	231.96	0.023	0.0001	0.0024	0.0024
Seismic (Reduced DL) 210 deg M1	268.04	0.024	0.0000	0.0031	0.0031
Seismic (Reduced DL) 210 deg M1	300.00	0.025	0.0000	0.0029	0.0029
Seismic (Reduced DL) 240 deg M1	80.00	0.004	0.0000	0.0061	0.0061
Seismic (Reduced DL) 240 deg M1	80.20	0.004	0.0000	0.0062	0.0062
Seismic (Reduced DL) 240 deg M1	104.12	0.007	0.0000	0.0078	0.0078
Seismic (Reduced DL) 240 deg M1	115.88	0.009	0.0000	0.0088	0.0088
Seismic (Reduced DL) 240 deg M1	124.12	0.010	0.0001	0.0112	0.0112
Seismic (Reduced DL) 240 deg M1	128.04	0.010	0.0000	0.0126	0.0126
Seismic (Reduced DL) 240 deg M1	160.00	0.017	0.0001	0.0120	0.0120
Seismic (Reduced DL) 240 deg M1	168.04	0.018	0.0001	0.0082	0.0082
Seismic (Reduced DL) 240 deg M1	180.00	0.020	0.0001	0.0024	0.0024
Seismic (Reduced DL) 240 deg M1	195.88	0.021	0.0001	0.0051	0.0051
Seismic (Reduced DL) 240 deg M1	211.96	0.022	0.0001	0.0022	0.0022
Seismic (Reduced DL) 240 deg M1	215.88	0.022	0.0001	0.0023	0.0023
Seismic (Reduced DL) 240 deg M1	231.96	0.022	0.0000	0.0027	0.0027
Seismic (Reduced DL) 240 deg M1	268.04	0.021	0.0000	0.0021	0.0021
Seismic (Reduced DL) 240 deg M1	300.00	0.021	0.0000	0.0025	0.0025
Seismic (Reduced DL) 300 deg M1	80.00	0.006	0.0000	0.0069	0.0069
Seismic (Reduced DL) 300 deg M1	80.20	0.006	0.0000	0.0068	0.0068
Seismic (Reduced DL) 300 deg M1	104.12	0.009	0.0000	0.0078	0.0078
Seismic (Reduced DL) 300 deg M1	115.88	0.010	0.0000	0.0091	0.0091
Seismic (Reduced DL) 300 deg M1	124.12	0.012	0.0000	0.0107	0.0107
Seismic (Reduced DL) 300 deg M1	128.04	0.012	0.0000	0.0128	0.0128
Seismic (Reduced DL) 300 deg M1	160.00	0.019	0.0000	0.0117	0.0117
Seismic (Reduced DL) 300 deg M1	168.04	0.020	0.0001	0.0076	0.0076
Seismic (Reduced DL) 300 deg M1	180.00	0.021	0.0001	0.0008	0.0008
Seismic (Reduced DL) 300 deg M1	195.88	0.022	0.0000	0.0040	0.0040
Seismic (Reduced DL) 300 deg M1	211.96	0.023	0.0000	0.0004	0.0004
Seismic (Reduced DL) 300 deg M1	215.88	0.023	0.0000	0.0004	0.0004
Seismic (Reduced DL) 300 deg M1	231.96	0.022	0.0000	0.0030	0.0030
Seismic (Reduced DL) 300 deg M1	268.04	0.021	0.0000	0.0010	0.0010
Seismic (Reduced DL) 300 deg M1	300.00	0.020	0.0000	0.0023	0.0023
Seismic (Reduced DL) 330 deg M1	80.00	0.006	0.0000	0.0071	0.0071
Seismic (Reduced DL) 330 deg M1	80.20	0.006	0.0000	0.0071	0.0071
Seismic (Reduced DL) 330 deg M1	104.12	0.009	0.0000	0.0084	0.0084
Seismic (Reduced DL) 330 deg M1	115.88	0.011	0.0000	0.0095	0.0095
Seismic (Reduced DL) 330 deg M1	124.12	0.012	0.0000	0.0116	0.0116
Seismic (Reduced DL) 330 deg M1	128.04	0.013	0.0000	0.0133	0.0133
Seismic (Reduced DL) 330 deg M1	160.00	0.020	0.0000	0.0124	0.0124
Seismic (Reduced DL) 330 deg M1	168.04	0.021	0.0001	0.0085	0.0085
Seismic (Reduced DL) 330 deg M1	180.00	0.022	0.0000	0.0019	0.0019
Seismic (Reduced DL) 330 deg M1	195.88	0.024	0.0000	0.0051	0.0051
Seismic (Reduced DL) 330 deg M1	211.96	0.025	0.0000	0.0020	0.0020
Seismic (Reduced DL) 330 deg M1	215.88	0.025	0.0000	0.0018	0.0018
Seismic (Reduced DL) 330 deg M1	231.96	0.025	0.0000	0.0026	0.0026
Seismic (Reduced DL) 330 deg M1	268.04	0.024	0.0000	0.0015	0.0015
Seismic (Reduced DL) 330 deg M1	300.00	0.023	0.0000	0.0023	0.0023
Serviceability - 60 mph Wind Normal	80.00	0.093	-0.0048	0.0838	0.0840
Serviceability - 60 mph Wind Normal	80.20	0.093	-0.0048	0.0820	0.0821
Serviceability - 60 mph Wind Normal	104.12	0.117	-0.0050	0.0457	0.0460
Serviceability - 60 mph Wind Normal	115.88	0.125	-0.0052	0.0437	0.0440
Serviceability - 60 mph Wind Normal	124.12	0.130	-0.0053	0.0559	0.0562
Serviceability - 60 mph Wind Normal	128.04	0.134	-0.0053	0.0638	0.0640
Serviceability - 60 mph Wind Normal	160.00	0.165	-0.0057	0.0406	0.0410
Serviceability - 60 mph Wind Normal	168.04	0.168	-0.0058	0.0122	0.0137
Serviceability - 60 mph Wind Normal	180.00	0.167	-0.0060	0.0506	0.0509
Serviceability - 60 mph Wind Normal	195.88	0.163	-0.0061	0.0200	0.0209
Serviceability - 60 mph Wind Normal	211.96	0.154	-0.0063	0.0496	0.0500

 © 2007 - 2021 by ATC IP LLC. All rights reserved.

Serviceability - 60 mph Wind Normal	215.88	0.150	-0.0063	0.0532	0.0535
Serviceability - 60 mph Wind Normal	231.96	0.131	-0.0065	0.0902	0.0904
Serviceability - 60 mph Wind Normal	268.04	0.092	-0.0068	0.0341	0.0348
Serviceability - 60 mph Wind Normal	300.00	0.062	-0.0070	0.0858	0.0861
Serviceability - 60 mph Wind 60 deg	80.00	0.081	-0.0062	0.0747	0.0750
Serviceability - 60 mph Wind 60 deg	80.20	0.082	-0.0062	0.0728	0.0730
Serviceability - 60 mph Wind 60 deg	104.12	0.103	-0.0065	0.0433	0.0438
Serviceability - 60 mph Wind 60 deg	115.88	0.111	-0.0068	0.0464	0.0469
Serviceability - 60 mph Wind 60 deg	124.12	0.117	-0.0063	0.0596	0.0601
Serviceability - 60 mph Wind 60 deg	128.04	0.121	-0.0069	0.0702	0.0705
Serviceability - 60 mph Wind 60 deg	160.00	0.158	-0.0072	0.0593	0.0597
Serviceability - 60 mph Wind 60 deg	168.04	0.164	-0.0070	0.0337	0.0345
Serviceability - 60 mph Wind 60 deg	180.00	0.168	-0.0074	0.0255	0.0267
Serviceability - 60 mph Wind 60 deg	195.88	0.173	-0.0076	0.0138	0.0160
Serviceability - 60 mph Wind 60 deg	211.96	0.173	-0.0079	0.0113	0.0140
Serviceability - 60 mph Wind 60 deg	215.88	0.172	-0.0080	0.0144	0.0167
Serviceability - 60 mph Wind 60 deg	231.96	0.165	-0.0084	0.0298	0.0310
Serviceability - 60 mph Wind 60 deg	268.04	0.152	-0.0089	0.0325	0.0337
Serviceability - 60 mph Wind 60 deg	300.00	0.142	-0.0091	0.1284	0.1288
Serviceability - 60 mph Wind 90 deg	80.00	0.088	0.0378	0.0785	0.0870
Serviceability - 60 mph Wind 90 deg	80.20	0.088	0.0378	0.0768	0.0855
Serviceability - 60 mph Wind 90 deg	104.12	0.111	0.0384	0.0456	0.0594
Serviceability - 60 mph Wind 90 deg	115.88	0.119	0.0387	0.0463	0.0603
Serviceability - 60 mph Wind 90 deg	124.12	0.125	0.0398	0.0596	0.0710
Serviceability - 60 mph Wind 90 deg	128.04	0.129	0.0391	0.0691	0.0793
Serviceability - 60 mph Wind 90 deg	160.00	0.164	0.0395	0.0525	0.0654
Serviceability - 60 mph Wind 90 deg	168.04	0.169	0.0401	0.0266	0.0479
Serviceability - 60 mph Wind 90 deg	180.00	0.171	0.0403	0.0346	0.0525
Serviceability - 60 mph Wind 90 deg	195.88	0.173	0.0405	0.0127	0.0422
Serviceability - 60 mph Wind 90 deg	211.96	0.169	0.0404	0.0315	0.0512
Serviceability - 60 mph Wind 90 deg	215.88	0.167	0.0404	0.0348	0.0533
Serviceability - 60 mph Wind 90 deg	231.96	0.155	0.0406	0.0423	0.0584
Serviceability - 60 mph Wind 90 deg	268.04	0.130	0.0408	0.0616	0.0739
Serviceability - 60 mph Wind 90 deg	300.00	0.112	0.0411	0.1543	0.1597
Serviceability - 60 mph Wind 120 deg	80.00	0.093	-0.0002	0.0844	0.0844
Serviceability - 60 mph Wind 120 deg	80.20	0.093	-0.0002	0.0826	0.0826
Serviceability - 60 mph Wind 120 deg	104.12	0.117	-0.0002	0.0473	0.0473
Serviceability - 60 mph Wind 120 deg	115.88	0.126	-0.0004	0.0458	0.0458
Serviceability - 60 mph Wind 120 deg	124.12	0.131	0.0001	0.0585	0.0585
Serviceability - 60 mph Wind 120 deg	128.04	0.135	-0.0004	0.0665	0.0665
Serviceability - 60 mph Wind 120 deg	160.00	0.167	-0.0003	0.0438	0.0438
Serviceability - 60 mph Wind 120 deg	168.04	0.171	0.0000	0.0151	0.0151
Serviceability - 60 mph Wind 120 deg	180.00	0.170	-0.0002	0.0471	0.0471
Serviceability - 60 mph Wind 120 deg	195.88	0.168	-0.0002	0.0167	0.0167
Serviceability - 60 mph Wind 120 deg	211.96	0.159	-0.0004	0.0471	0.0471
Serviceability - 60 mph Wind 120 deg	215.88	0.155	-0.0005	0.0508	0.0508
Serviceability - 60 mph Wind 120 deg	231.96	0.137	-0.0007	0.0682	0.0682
Serviceability - 60 mph Wind 120 deg	268.04	0.097	-0.0008	0.0724	0.0724
Serviceability - 60 mph Wind 120 deg	300.00	0.063	-0.0010	0.1561	0.1561
Serviceability - 60 mph Wind 180 deg	80.00	0.079	0.0061	0.0725	0.0727
Serviceability - 60 mph Wind 180 deg	80.20	0.079	0.0061	0.0705	0.0708
Serviceability - 60 mph Wind 180 deg	104.12	0.100	0.0063	0.0411	0.0416
Serviceability - 60 mph Wind 180 deg	115.88	0.107	0.0063	0.0443	0.0447
Serviceability - 60 mph Wind 180 deg	124.12	0.113	0.0070	0.0577	0.0580
Serviceability - 60 mph Wind 180 deg	128.04	0.117	0.0064	0.0681	0.0684
Serviceability - 60 mph Wind 180 deg	160.00	0.153	0.0070	0.0571	0.0575
Serviceability - 60 mph Wind 180 deg	168.04	0.158	0.0074	0.0318	0.0325
Serviceability - 60 mph Wind 180 deg	180.00	0.162	0.0074	0.0273	0.0281
Serviceability - 60 mph Wind 180 deg	195.88	0.167	0.0076	0.0127	0.0146
Serviceability - 60 mph Wind 180 deg	211.96	0.167	0.0076	0.0120	0.0140
Serviceability - 60 mph Wind 180 deg	215.88	0.166	0.0076	0.0149	0.0167
Serviceability - 60 mph Wind 180 deg	231.96	0.158	0.0077	0.0474	0.0480

© 2007 - 2021 by ATC IP LLC. All rights reserved.

Serviceability - 60 mph Wind 180 deg	268.04	0.146	0.0079	0.0135	0.0156
Serviceability - 60 mph Wind 180 deg	300.00	0.141	0.0084	0.1302	0.1305
Serviceability - 60 mph Wind 210 deg	80.00	0.084	0.0491	0.0743	0.0889
Serviceability - 60 mph Wind 210 deg	80.20	0.084	0.0492	0.0726	0.0876
Serviceability - 60 mph Wind 210 deg	104.12	0.105	0.0503	0.0415	0.0650
Serviceability - 60 mph Wind 210 deg	115.88	0.113	0.0508	0.0424	0.0661
Serviceability - 60 mph Wind 210 deg	124.12	0.118	0.0522	0.0557	0.0756
Serviceability - 60 mph Wind 210 deg	128.04	0.122	0.0516	0.0652	0.0831
Serviceability - 60 mph Wind 210 deg	160.00	0.155	0.0528	0.0495	0.0720
Serviceability - 60 mph Wind 210 deg	168.04	0.159	0.0536	0.0249	0.0589
Serviceability - 60 mph Wind 210 deg	180.00	0.161	0.0541	0.0380	0.0655
Serviceability - 60 mph Wind 210 deg	195.88	0.162	0.0547	0.0158	0.0567
Serviceability - 60 mph Wind 210 deg	211.96	0.158	0.0550	0.0334	0.0642
Serviceability - 60 mph Wind 210 deg	215.88	0.156	0.0550	0.0363	0.0659
Serviceability - 60 mph Wind 210 deg	231.96	0.145	0.0556	0.0592	0.0812
Serviceability - 60 mph Wind 210 deg	268.04	0.124	0.0565	0.0490	0.0747
Serviceability - 60 mph Wind 210 deg	300.00	0.113	0.0575	0.1479	0.1585
Serviceability - 60 mph Wind 240 deg	80.00	0.092	0.0053	0.0827	0.0829
Serviceability - 60 mph Wind 240 deg	80.20	0.092	0.0053	0.0809	0.0810
Serviceability - 60 mph Wind 240 deg	104.12	0.115	0.0057	0.0450	0.0453
Serviceability - 60 mph Wind 240 deg	115.88	0.123	0.0057	0.0431	0.0435
Serviceability - 60 mph Wind 240 deg	124.12	0.128	0.0065	0.0556	0.0559
Serviceability - 60 mph Wind 240 deg	128.04	0.132	0.0059	0.0635	0.0638
Serviceability - 60 mph Wind 240 deg	160.00	0.162	0.0066	0.0406	0.0411
Serviceability - 60 mph Wind 240 deg	168.04	0.166	0.0071	0.0122	0.0141
Serviceability - 60 mph Wind 240 deg	180.00	0.165	0.0071	0.0502	0.0506
Serviceability - 60 mph Wind 240 deg	195.88	0.162	0.0074	0.0193	0.0205
Serviceability - 60 mph Wind 240 deg	211.96	0.152	0.0075	0.0490	0.0495
Serviceability - 60 mph Wind 240 deg	215.88	0.148	0.0074	0.0526	0.0531
Serviceability - 60 mph Wind 240 deg	231.96	0.130	0.0076	0.0686	0.0690
Serviceability - 60 mph Wind 240 deg	268.04	0.089	0.0078	0.0744	0.0748
Serviceability - 60 mph Wind 240 deg	300.00	0.056	0.0082	0.1598	0.1600
Serviceability - 60 mph Wind 300 deg	80.00	0.087	0.0005	0.0773	0.0773
Serviceability - 60 mph Wind 300 deg	80.20	0.087	0.0005	0.0753	0.0753
Serviceability - 60 mph Wind 300 deg	104.12	0.110	0.0006	0.0438	0.0438
Serviceability - 60 mph Wind 300 deg	115.88	0.118	0.0006	0.0459	0.0459
Serviceability - 60 mph Wind 300 deg	124.12	0.123	0.0012	0.0583	0.0583
Serviceability - 60 mph Wind 300 deg	128.04	0.128	0.0006	0.0685	0.0685
Serviceability - 60 mph Wind 300 deg	160.00	0.163	0.0009	0.0552	0.0552
Serviceability - 60 mph Wind 300 deg	168.04	0.168	0.0013	0.0289	0.0289
Serviceability - 60 mph Wind 300 deg	180.00	0.171	0.0011	0.0309	0.0309
Serviceability - 60 mph Wind 300 deg	195.88	0.174	0.0013	0.0066	0.0067
Serviceability - 60 mph Wind 300 deg	211.96	0.172	0.0012	0.0194	0.0194
Serviceability - 60 mph Wind 300 deg	215.88	0.171	0.0012	0.0227	0.0227
Serviceability - 60 mph Wind 300 deg	231.96	0.161	0.0011	0.0374	0.0374
Serviceability - 60 mph Wind 300 deg	268.04	0.142	0.0011	0.0414	0.0414
Serviceability - 60 mph Wind 300 deg	300.00	0.127	0.0012	0.1342	0.1342
Serviceability - 60 mph Wind 330 deg	80.00	0.091	0.0386	0.0790	0.0878
Serviceability - 60 mph Wind 330 deg	80.20	0.091	0.0386	0.0773	0.0863
Serviceability - 60 mph Wind 330 deg	104.12	0.114	0.0394	0.0445	0.0592
Serviceability - 60 mph Wind 330 deg	115.88	0.122	0.0397	0.0444	0.0595
Serviceability - 60 mph Wind 330 deg	124.12	0.127	0.0409	0.0570	0.0695
Serviceability - 60 mph Wind 330 deg	128.04	0.132	0.0402	0.0662	0.0774
Serviceability - 60 mph Wind 330 deg	160.00	0.164	0.0408	0.0480	0.0626
Serviceability - 60 mph Wind 330 deg	168.04	0.169	0.0414	0.0220	0.0467
Serviceability - 60 mph Wind 330 deg	180.00	0.170	0.0416	0.0392	0.0566
Serviceability - 60 mph Wind 330 deg	195.88	0.170	0.0419	0.0120	0.0434
Serviceability - 60 mph Wind 330 deg	211.96	0.165	0.0419	0.0354	0.0548
Serviceability - 60 mph Wind 330 deg	215.88	0.162	0.0419	0.0388	0.0571
Serviceability - 60 mph Wind 330 deg	231.96	0.149	0.0421	0.0703	0.0818
Serviceability - 60 mph Wind 330 deg	268.04	0.121	0.0425	0.0286	0.0511
Serviceability - 60 mph Wind 330 deg	300.00	0.102	0.0432	0.1095	0.1174

© 2007 - 2021 by ATC IP LLC. All rights reserved.

Maximum Reactions Summary

Anchor Group	UpLift	Shear
Base	191.44	2.56
A1	62.83	77.21

Maser Consulting Connecticut
2000 Midlantic Drive, Suite 100
Mt. Laurel, NJ 08054
856.797.0412
peter.albano@colliersengineering.com

Post-Mod Antenna Mount Analysis Report and PMI Requirements

Mount Fix

SMART Tool Project #: 10088926
Maser Consulting Connecticut Project #: 21777635A

July 27, 2021

Site Information	*Site ID:*	*469215-VZW / FRANKLIN CT*
	Site Name:	*FRANKLIN CT*
	Carrier Name:	*Verizon Wireless*
	Address:	*89 Dr. Nott Road*
		Franklin, Connecticut 06254
		New London County
	Latitude:	*41.597675°*
	Longitude:	*-72.144978°*
Structure Information	*Tower Type:*	*Guyed*
	Mount Type:	*12.50-Ft T-Frame*

FUZE ID # 16271936

Analysis Results

T-Frame: **71.6% Pass**

******Contractor PMI Requirements*:**
Included at the end of this MA report
Available & Submitted via portal at https://pmi.vzwsmart.com
Contractor - Please Review Specific Site PMI Requirements Upon Award
Requirements also Noted on Mount Modification Drawings
Requirements may also be Noted on A & E drawings

Report Prepared By: Selene Chen

STATE OF CONNECTICUT
JUSTIN PETER LINETTE
No. 31965
LICENSED
PROFESSIONAL ENGINEER

Digitally signed by Justin Linette
Date: 2021.07.28 10:14:32-04'00'

Executive Summary:

The objective of this report is to summarize the analysis results of the antenna support mount including the proposed modifications at the subject facility for the final wireless telecommunications configuration, per the applicable codes and standards.

This analysis is inclusive of the mount structure only and does not address the structural capacity of the supporting structure. This mounting frame was not analyzed as an anchor attachment point for fall protection. All climbing activities are required to have a fall protection plan completed by a competent person.

Sources of Information:

Document Type	Remarks
Radio Frequency Data Sheet (RFDS)	*Verizon RFDS, Site ID: 323922, dated June 18, 2021*
Mount Mapping Report	*HighTower Solutions Inc., Site ID: VZW:469215, dated April 28, 2020*
Mount Analysis Report	*Maser Consulting Connecticut, Project #: 21777635A, dated July 16, 2021*
Mount Modification Drawings	*Maser Consulting Connecticut, Project #: 21777635A, dated July 27, 2021*

Analysis Criteria:

Codes and Standards:	ANSI/TIA-222-H	
Wind Parameters:	Basic Wind Speed (Ultimate 3-sec. Gust), V_{ULT}:	123 mph
	Ice Wind Speed (3-sec. Gust):	50 mph
	Design Ice Thickness:	1.00 in
	Risk Category:	II
	Exposure Category:	C
	Topographic Category:	1
	Topographic Feature Considered:	N/A
	Topographic Method:	N/A
	Ground Elevation Factor, K_e:	0.982
Seismic Parameters:	S_S:	0.195
	S_1:	0.054
Maintenance Parameters:	Wind Speed (3-sec. Gust):	30 mph
	Maintenance Live Load, Lv:	250 lbs.
	Maintenance Live Load, Lm:	500 lbs.
Analysis Software:	RISA-3D (V17)	

Final Loading Configuration:

The following equipment has been considered for the analysis of the mounts:

Mount Elevation (ft)	Equipment Elevation (ft)	Quantity	Manufacturer	Model	Status
167.5	170.0	6	Commscope	JAHH-65B-R3B	Added
		3	Samsung	MT6407-77A	
		3	Commscope	CBC78T-DS-43-2X	
		1	Raycap	RVZDC-6627-PF-48	
		3	Samsung	B2/B66A RRH-BR049	
		3	Samsung	B5/B13 RRH-BR04C	
		3	Andrew	LNX-8513DS-A1M	Retained

The recent mount mapping did not report existing OVP units. However, it is acceptable to install up to any three (3) of the OVP model numbers listed below as required at any location other than the mount face without affecting the structural capacity of the mount. If OVP units are installed on the mount face, a mount re-analysis may be required.

Model Number	Ports	AKA
DB-B1-6C-12AB-0Z	6	OVP-6
RVZDC-6627-PF-48	12	OVP-12

Standard Conditions:

1. All engineering services are performed on the basis that the information provided to Maser Consulting Connecticut and used in this analysis is current and correct. The existing equipment loading has been applied at locations determined from the supplied documentation. Any deviation from the loading locations specified in this report shall be communicated to Maser Consulting Connecticut to verify deviation will not adversely impact the analysis.

2. Mounts are assumed to have been properly fabricated, installed and maintained in good condition, twist free and plumb in accordance with its original design and manufacturer's specifications.

   Obvious safety and structural issues/deficiencies noticed at the time of the mount mapping and reported in the Mount Mapping Report are assumed to be corrected and documented as part of the PMI process and are not considered in the mount analysis.

   The mount analysis and the mount mapping are not a condition assessment of the mount. Proper maintenance and condition assessments are still required post analysis.

3. For mount analyses completed from other data sources (including new replacement mounts) and not specifically mapped by Maser Consulting Connecticut, the mounts are assumed to have been properly fabricated, installed and maintained in good condition, twist free and plumb in accordance with its original design and manufacturer's specifications.

4. All member connections are assumed to have been designed to meet or exceed the load carrying capacity of the connected member unless otherwise specified in this report.

5. The mount was checked up to, and including, the bolts that fasten it to the mount collar/attachment and threaded rod connections in collar members if applicable. Local deformation and interaction between the mount collar/attachment and the supporting tower structure are outside the scope of this analysis.

6. All services are performed, results obtained, and recommendations made in accordance with generally accepted engineering principles and practices. Maser Consulting Connecticut is not responsible for the conclusion, opinions, and recommendations made by others based on the information supplied.

7. Structural Steel Grades have been assumed as follows, if applicable, unless otherwise noted in this analysis:
   - Channel, Solid Round, Angle, Plate — ASTM A36 (Gr. 36)
   - HSS (Rectangular) — ASTM 500 (Gr. B-46)
   - Pipe — ASTM A53 (Gr. B-35)
   - Threaded Rod — F1554 (Gr. 36)
   - Bolts — ASTM A325

8. Any mount modifications listed under Sources of Information are assumed to have been installed per the design specifications.

Discrepancies between in-field conditions and the assumptions listed above may render this analysis invalid unless explicitly approved by Maser Consulting Connecticut.

Analysis Results:

Component	Utilization %	Pass/Fail
Face Horizontal	*67.2%*	*Pass*
Face Vertical	*71.6%*	*Pass*
Mast Pipe	*50.7%*	*Pass*
Standoff Horizontal	*62.8%*	*Pass*
Standoff Vertical	*68.4%*	*Pass*
Antenna Pipe	*33.9%*	*Pass*
Tieback	*36.4%*	*Pass*
V-Bracing	*14.5%*	*Pass*
Mount Connection	*51.3%*	*Pass*

Structure Rating – *(Controlling Utilization of all Components)*	**71.6%**

Recommendation:

The existing mounts will be **SUFFICIENT** for the final loading after the proposed modifications are successfully completed.

ANSI/ASSP rigging plan review services compliant with the requirements of ANSI/TIA 322 are available for a Construction Class IV site or other, if required. Separate review fees will apply.

Attachments:

1. Mount Photos
2. Mount Mapping Report (for reference only)
3. Analysis Calculations
4. **Contractor Required PMI Report Deliverables**
5. Antenna Placement Diagrams
6. TIA Adoption and Wind Speed Usage Letter

Updated on 3-03-2020

Antenna Mount Mapping Form (PATENT PENDING)

			FCC #
			1059887
Tower Owner:	American Tower	**Mapping Date:**	4/28/2020
Site Name:	FRANKLIN CT	**Tower Type:**	Guyed Tower
Site Number or ID:	469215	**Tower Height (Ft.):**	
Mapping Contractor:	HighTower Solutions Inc.	**Mount Elevation (Ft.):**	166'4"

This antenna mapping form is the property of TES and under **PATENT PENDING**. The formation contained herein is considered confidential in nature and is to be used only for the specific customer it was intended for. Reproduction, transmission, publication, modification or disclosure by any method is prohibited except by express written permission of TES. All means and methods are the responsibility of the contractor and the work shall be compliant with ANSI/ASSE A 10.48, OSHA, FCC, FAA and other safety requirements that may apply. TES is not warrantying the usability of the safety climb as it must be assessed prior to each use in compliance with OSHA requirements.

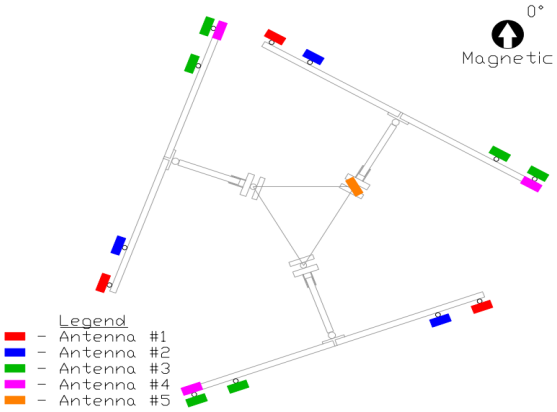

Mount Pipe Configuration and Geometries [Unit = Inches]

Sector / Position	Mount Pipe Size & Length	Vertical Offset Dimension "u"	Horizontal Offset "C1, C2, C3, etc."	Sector / Position	Mount Pipe Size & Length	Vertical Offset Dimension "u"	Horizontal Offset "C1, C2, C3, etc."
A1	9'Tx2.38"Dia.Pipe x.15"	87.00	3.00	C1	6'Tx2.38"Dia.Pipe x.15"	69.50	3.00
A2	7'Tx2.38"Dia.Pipe x.15"	83.50	24.00	C2	7'Tx2.38"Dia.Pipe x.15"	83.50	24.00
A3	7'Tx2.38"Dia.Pipe x.15"	83.50	126.00	C3	7'Tx2.38"Dia.Pipe x.15"	83.50	126.00
A4	9'Tx2.38"Dia.Pipe x.15"	87.00	147.00	C4	6'Tx2.38"Dia.Pipe x.15"	69.50	147.00
A5				C5			
A6				C6			
B1	6'Tx2.38"Dia.Pipe x.15"	69.50	3.00	D1			
B2	7'Tx2.38"Dia.Pipe x.15"	83.50	24.00	D2			
B3	7'Tx2.38"Dia.Pipe x.15"	83.50	126.00	D3			
B4	6'Tx2.38"Dia.Pipe x.15"	69.50	147.00	D4			
B5				D5			
B6				D6			

Distance from top of bottom support rail to lowest tip of ant./eqpt. of Carrier above. (N/A if > 10 ft.)	
Distance from top of bottom support rail to highest tip of ant./eqpt. of Carrier below. (N/A if > 10 ft.)	

Please enter additional infomation or comments below.

RRFDC-3315-PF-48 = 15x10x19, (1)1.5"O.D., Pic.526

Tower Face Width at Mount Elev. (ft.):	4	Tower Leg Size or Pole Shaft Diameter at Mount Elev. (in.):	2.3

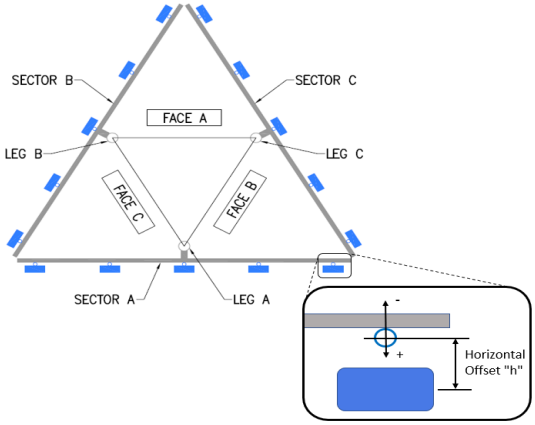

Ants. Items	Enter antenna model. If not labled, enter "Unknown". Antenna Models if Known	Width (in.)	Depth (in.)	Height (in.)	Coax Size and Qty	Mounting Locations [Units are inches and degrees] Vertical Distances"b_{1a}, b_{2a}, b_{3a}, b_{1b}...." (In.)	Horiz. Offset "h" (Use "-" if Ant. is behind)	Antenna Azimuth (Degrees)	Photos of antennas Photo Numbers
Sector A									
Ant_{1a}	B4 RRH2x60-4R	12.00	6.00	36.00	1)1.5"O.D	60.00	-7.50		523
Ant_{1b}	1270-09-5344	12.00	6.00	75.00	(1)1.5"O.D.	33.00	9.00	40.00	521
Ant_{1c}									
Ant_{2a}									
Ant_{2b}	1270-09-5344	12.00	6.00	75.00	(1)1.5"O.D.	33.00	13.00	40.00	521
Ant_{2c}									
Ant_{3a}									
Ant_{3b}	BXA-70063-6CF-EDIN-	11.25	4.00	72.00	(2)1 5/8"	33.00	8.50	40.00	519
Ant_{3c}									
Ant_{4a}									
Ant_{4b}	LNX-8513DS-A1M	12.00	6.00	73.00	(2)1 5/8"	33.00	7.00	40.00	516
Ant_{4c}									
Ant_{5a}									
Ant_{5b}									
Ant_{5c}									
Sector B									
Ant_{1a}	B4 RRH2x60-4R	12.00	6.00	36.00	1)1.5"O.D	60.00	-7.50		523
Ant_{1b}	1270-09-5344	12.00	6.00	75.00	(1)1.5"O.D.	33.00	9.00	160.00	521
Ant_{1c}									
Ant_{2a}									
Ant_{2b}	1270-09-5344	12.00	6.00	75.00	(1)1.5"O.D.	33.00	9.00	160.00	521
Ant_{2c}									
Ant_{3a}									
Ant_{3b}	BXA-70063-6CF-EDIN-	11.25	4.00	72.00	(2)1 5/8"	33.00	8.50	160.00	519
Ant_{3c}									
Ant_{4a}									

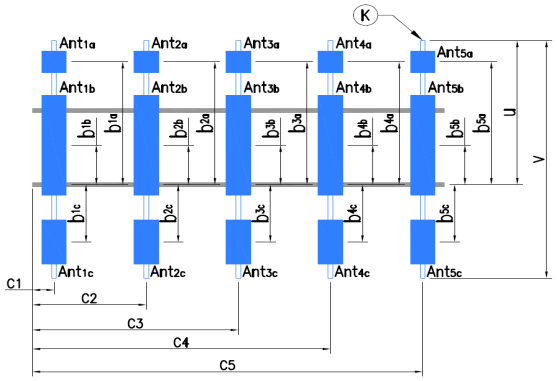

Antenna Layout

Mount Azimuth (Degree) for Each Sector and Climbing Information

Sector A:	30.00	Deg	
Sector B:	160.00	Deg	
Sector C:	290.00	Deg	

Sector D:		Deg	
Climbing		Deg	
Climbing Facility	Corrosion Type:		Good condition.
	Access:		N/A
	Condition:		N/A

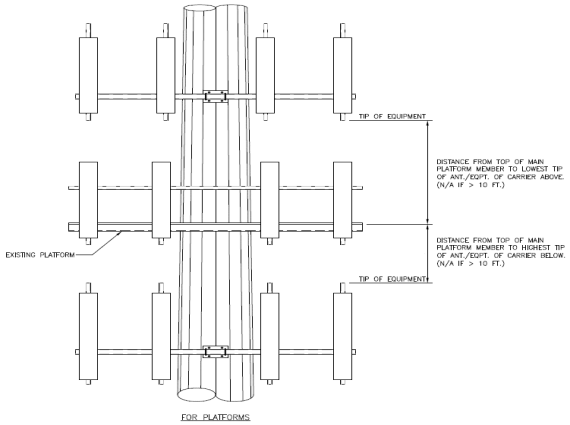

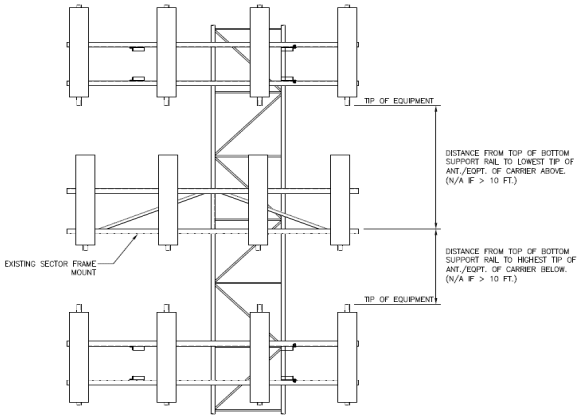

Ant_{4b}	LNX-8513DS-A1M	12.00	6.00	73.00	(2)1 5/8"	33.00	7.00	160.00	516
Ant_{4c}									
Ant_{5a}									
Ant_{5b}									
Ant_{5c}									
Sector C									
Ant_{1a}	B4 RRH2x60-4R	12.00	6.00	36.00	1)1.5"O.D	60.00	-7.50		523
Ant_{1b}	1270-09-5344	12.00	6.00	75.00	(1)1.5"O.D.	33.00	9.00	290.00	521
Ant_{1c}									
Ant_{2a}									
Ant_{2b}	1270-09-5344	12.00	6.00	75.00	(1)1.5"O.D.	33.00	9.00	290.00	521
Ant_{2c}									
Ant_{3a}									
Ant_{3b}	BXA-70063-6CF-EDIN-	11.25	4.00	72.00	(2)1 5/8"	33.00	8.50	290.00	519
Ant_{3c}									
Ant_{4a}									
Ant_{4b}	LNX-8513DS-A1M	12.00	6.00	73.00	(2)1 5/8"	33.00	7.00	290.00	516
Ant_{4c}									
Ant_{5a}									
Ant_{5b}									
Ant_{5c}									
Sector D									
Ant_{1a}									
Ant_{1b}									
Ant_{1c}									
Ant_{2a}									
Ant_{2b}									
Ant_{2c}									
Ant_{3a}									
Ant_{3b}									
Ant_{3c}									
Ant_{4a}									
Ant_{4b}									
Ant_{4c}									
Ant_{5a}									
Ant_{5b}									
Ant_{5c}									

Observed Safety and Structural Issues During the Mount Mapping

Issue #	Description of Issue	Photo #
1		
2		
3		
4		
5		
6		
7		
8		

Mapping Notes

1. Please report any visible structural or safety issues observed on the antenna mounts (Damaged members, loose connections, tilting mounts, safety climb issues, etc.)
2. If the thickness of the existing pipes or tubing can't be obtained from a general tool (such as Caliper), please use an ultrasonic measurement tool (thickness gauge) to measure the thickness.
3. Please create all required detail sketches of the mounts and insert them into the "Sketches" tab.
4. Please measure and enter the bolt sizes and types under the Members Box in the spreadsheet of the mount type.
5. Take and label the photos of the tower, mounts, connections, antennas and all measurements. Minimum 50 photos are required.
6. Please measure and report the size and length of all existing antenna mounting pipes.
7. Please measure and report the antenna information for all sectors.
8. Don't delete or rearrange any sheet or contents of any sheet from this mapping form.

Standard Conditions

1. Obvious safety and structural issues/deficiencies noticed at the time of the mount mapping are to be reported in this mapping. However, this mount mapping is not a condition assessment of the mount.

Updated on 3-03-2020

Antenna Mount Mapping Form (PATENT PENDING)

			FCC #
			1059887
Tower Owner:	American Tower	**Mapping Date:**	4/28/2020
Site Name:	FRANKLIN CT	**Tower Type:**	Guyed Tower
Site Number or ID:	469215	**Tower Height (Ft.):**	
Mapping Contractor:	HighTower Solutions Inc.	**Mount Elevation (Ft.):**	166'4"

This antenna mapping form is the property of TES and under **PATENT PENDING**. The formation contained herein is considered confidential in nature and is to be used only for the specific customer it was intended for. Reproduction, transmission, publication, modification or disclosure by any method is prohibited except by express written permission of TES. All means and methods are the responsibility of the contractor and the work shall be compliant with ANSI/ASSE A 10.48, OSHA, FCC, FAA and other safety requirements that may apply. TES is not warrantying the usability of the safety climb as it must be assessed prior to each use in compliance with OSHA requirements.

Please Insert Sketches of the Antenna Mount

Side Elevation

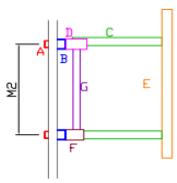

Plan View

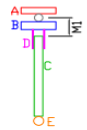

Front Elevation

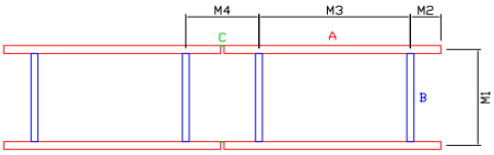

Label	Member Size	Bolt Size
A	11.5"L/1.75"x3.25"x.25"Channel	4-.50"All-Threads
B	12"L/3"x4.5"x.40"Channel	Shared with A
C	2'6.5"L/3"Sq.Tube x.19"	1-.50"Bolt
D	4"Tx7.25"Wx.40"Flat	Welded
E	3'T/3.5"Dia.Pipe x.20"	Welded
F	4"Tx5"Wx.40"Flat	Welded
G	2'.25"T/1.92"Dia.Pipe x.148"	Welded
M1	5"	
M2	2'1.5"	

Label	Member Size	Bolt Size
A	6'2.5"L/3"x3"x.20"Angle	2-.62"Bolts
B	3'.25"T/2.38"Dia.Pipe x.15"	Welded
C	5.75"Lx11"Wx.30"Flat	1-.75"Bolt
M1	3'.50"	
M2	11"	
M3	4'4"	
M4	2'	

Front Elevation
Alpha Pipe Mount

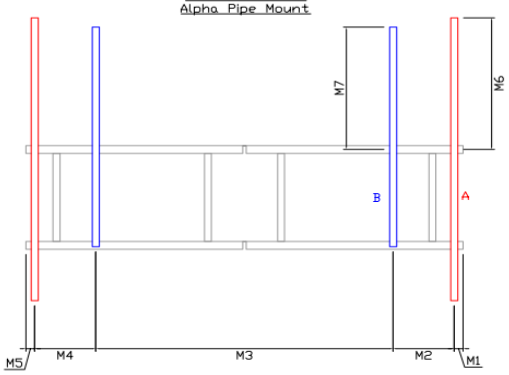

Front Elevation
Beta & Gamma Pipe Mount

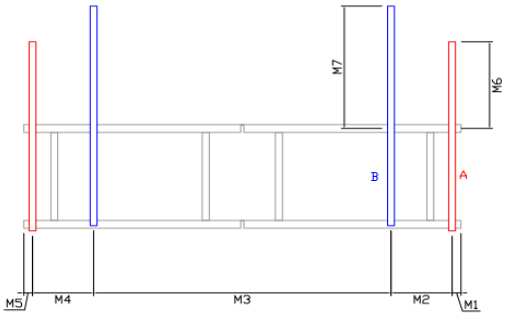

Label	Member Size	Bolt Size
A	9'T/2.38"Dia.Pipe x.15"	1-.50"U-Bolt
B	7'T/2.38"Dia.Pipe x.15"	1-.50"U-Bolt
M1	3"	
M2	1'9"	
M3	8'6"	
M4	1'9"	
M5	3"	
M6	4'2.5"	
M7	3'11"	

Label	Member Size	Bolt Size
A	6'T/2.38"Dia.Pipe x.15"	1-.50"U-Bolt
B	7'T/2.38"Dia.Pipe x.15"	1-.50"U-Bolt
M1	3"	
M2	1'9"	
M3	8'6"	
M4	1'9"	
M5	3"	
M6	2'9"	
M7	3'11"	

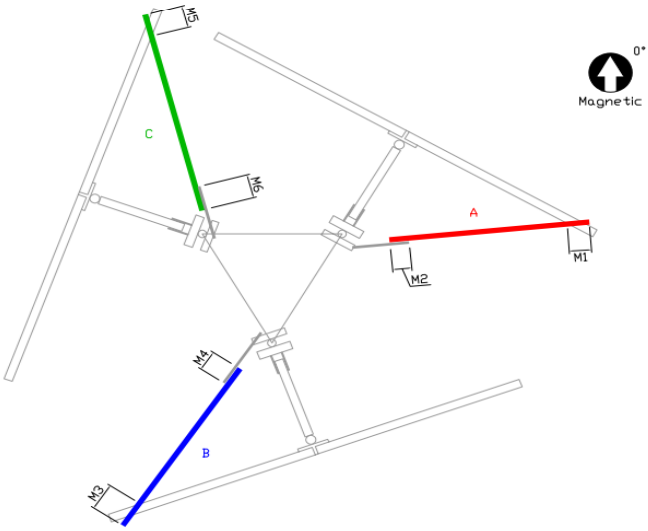

Label	Member Size
A	6'L/2.38"Dia.Pipe x.15"
B	6'L/2.38"Dia.Pipe x.15"
C	6'L/2.38"Dia.Pipe x.15"
M1	8"
M2	10"
M3	6"
M4	6.5"
M5	8"
M6	6.5"

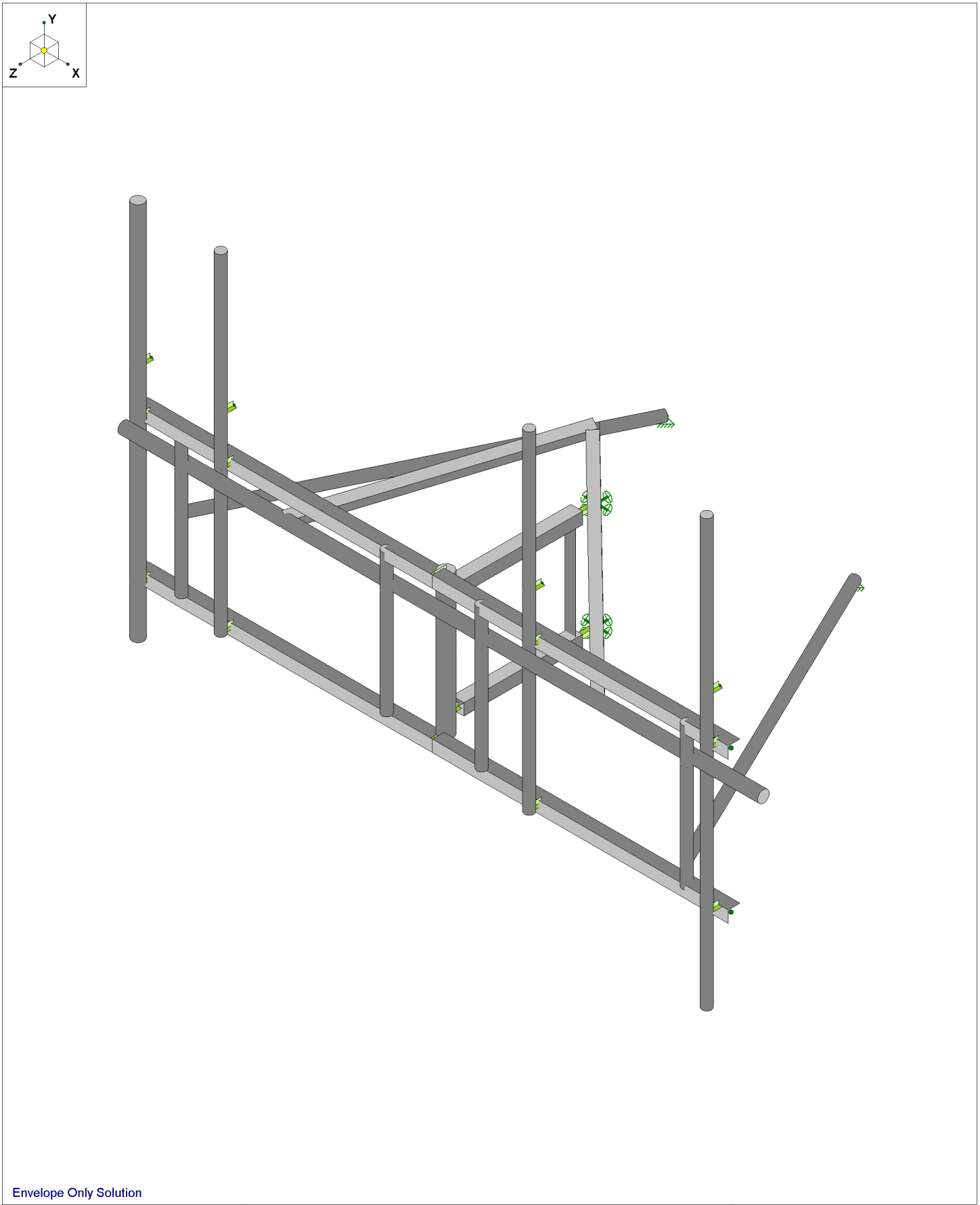

Envelope Only Solution

Maser Consulting		SK - 1
		July 27, 2021 at 10:19 AM
		MOD_469215-VZW_MT_LOT_A_H....

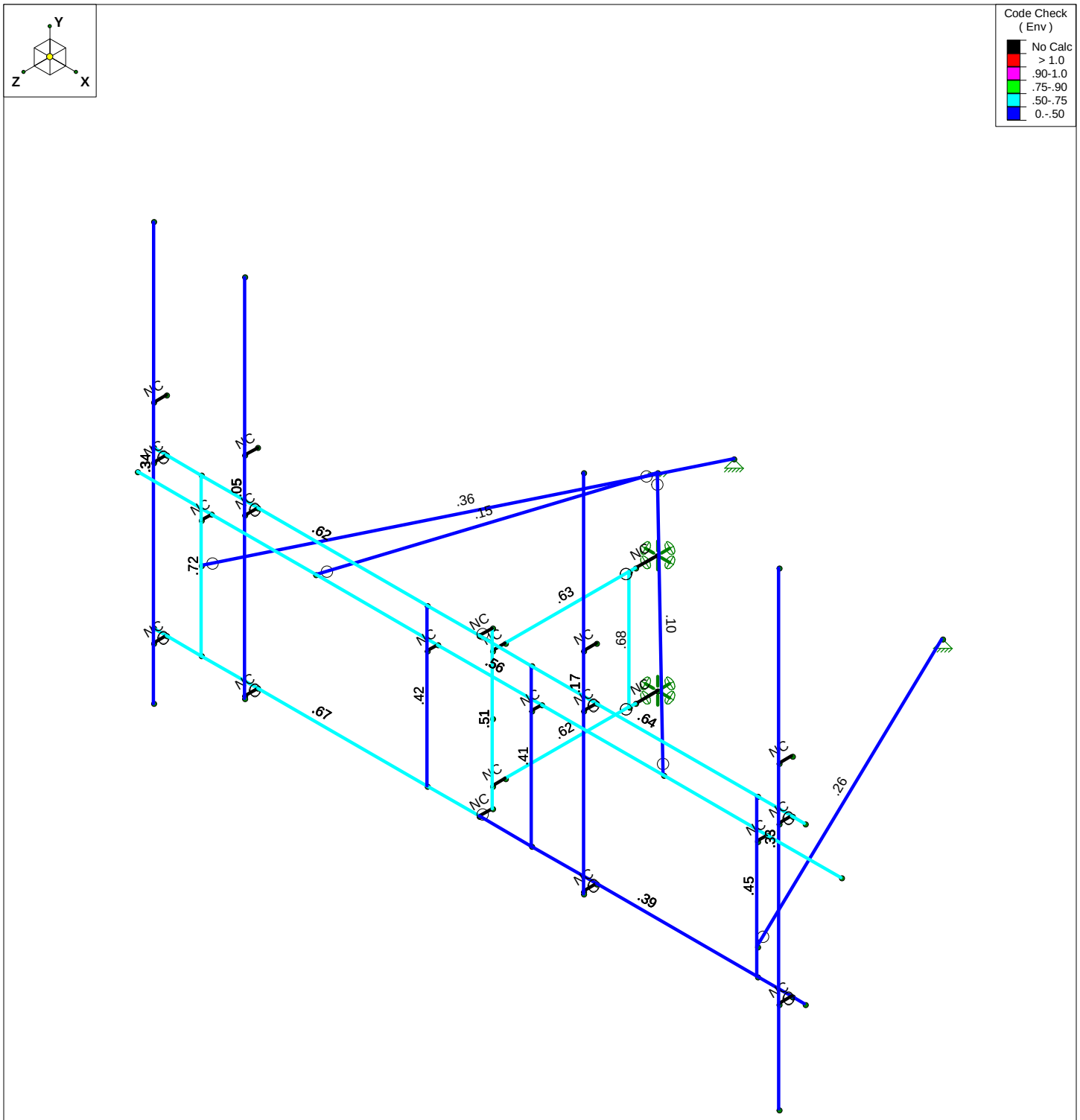

Member Code Checks Displayed (Enveloped)
Envelope Only Solution

Maser Consulting		SK - 2
		July 27, 2021 at 10:19 AM
		MOD_469215-VZW_MT_LOT_A_H....

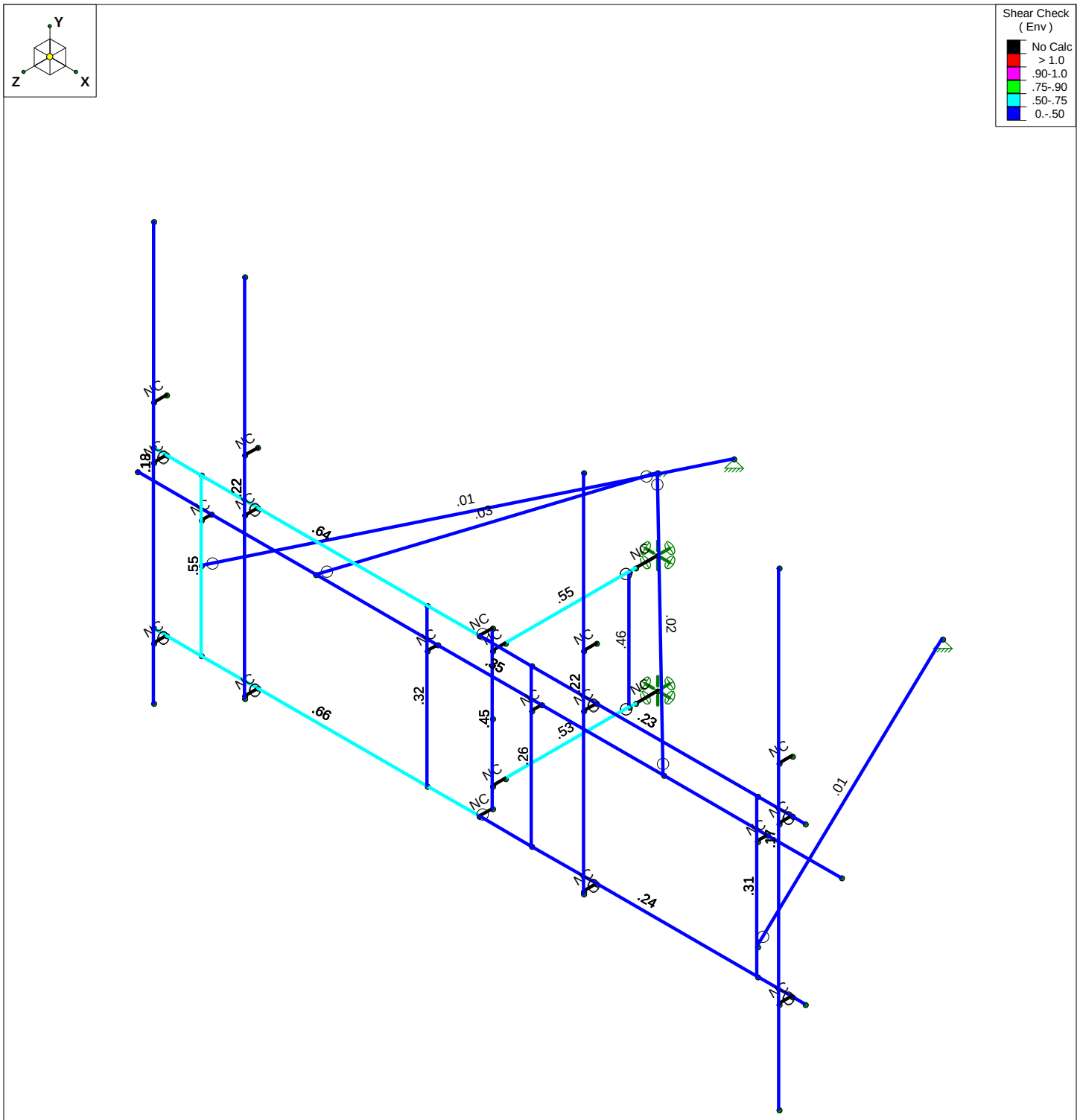

Member Shear Checks Displayed (Enveloped)
Envelope Only Solution

Maser Consulting		SK - 3
		July 27, 2021 at 10:19 AM
		MOD_469215-VZW_MT_LOT_A_H...

Basic Load Cases

	BLC Description	Category	X Gravity	Y Gravity	Z Gravity	Joint	Point	Distributed	Area(Me...	Surface(P...
1	Antenna D	None					36			
2	Antenna Di	None					36			
3	Antenna Wo (0 Deg)	None					36			
4	Antenna Wo (30 Deg)	None					36			
5	Antenna Wo (60 Deg)	None					36			
6	Antenna Wo (90 Deg)	None					36			
7	Antenna Wo (120 Deg)	None					36			
8	Antenna Wo (150 Deg)	None					36			
9	Antenna Wo (180 Deg)	None					36			
10	Antenna Wo (210 Deg)	None					36			
11	Antenna Wo (240 Deg)	None					36			
12	Antenna Wo (270 Deg)	None					36			
13	Antenna Wo (300 Deg)	None					36			
14	Antenna Wo (330 Deg)	None					36			
15	Antenna Wi (0 Deg)	None					36			
16	Antenna Wi (30 Deg)	None					36			
17	Antenna Wi (60 Deg)	None					36			
18	Antenna Wi (90 Deg)	None					36			
19	Antenna Wi (120 Deg)	None					36			
20	Antenna Wi (150 Deg)	None					36			
21	Antenna Wi (180 Deg)	None					36			
22	Antenna Wi (210 Deg)	None					36			
23	Antenna Wi (240 Deg)	None					36			
24	Antenna Wi (270 Deg)	None					36			
25	Antenna Wi (300 Deg)	None					36			
26	Antenna Wi (330 Deg)	None					36			
27	Antenna Wm (0 Deg)	None					36			
28	Antenna Wm (30 Deg)	None					36			
29	Antenna Wm (60 Deg)	None					36			
30	Antenna Wm (90 Deg)	None					36			
31	Antenna Wm (120 De...	None					36			
32	Antenna Wm (150 De...	None					36			
33	Antenna Wm (180 De...	None					36			
34	Antenna Wm (210 De...	None					36			
35	Antenna Wm (240 De...	None					36			
36	Antenna Wm (270 De...	None					36			
37	Antenna Wm (300 De...	None					36			
38	Antenna Wm (330 De...	None					36			
39	Structure D	None		-1						
40	Structure Di	None						21		
41	Structure Wo (0 Deg)	None						42		
42	Structure Wo (30 Deg)	None						42		
43	Structure Wo (60 Deg)	None						42		
44	Structure Wo (90 Deg)	None						42		
45	Structure Wo (120 D...	None						42		
46	Structure Wo (150 D...	None						42		
47	Structure Wo (180 D...	None						42		
48	Structure Wo (210 D...	None						42		
49	Structure Wo (240 D...	None						42		
50	Structure Wo (270 D...	None						42		
51	Structure Wo (300 D...	None						42		

Basic Load Cases (Continued)

	BLC Description	Category	X Gravity	Y Gravity	Z Gravity	Joint	Point	Distributed	Area(Me...	Surface(P...
52	Structure Wo (330 D...	None						42		
53	Structure Wi (0 Deg)	None						42		
54	Structure Wi (30 Deg)	None						42		
55	Structure Wi (60 Deg)	None						42		
56	Structure Wi (90 Deg)	None						42		
57	Structure Wi (120 De...	None						42		
58	Structure Wi (150 De...	None						42		
59	Structure Wi (180 De...	None						42		
60	Structure Wi (210 De...	None						42		
61	Structure Wi (240 De...	None						42		
62	Structure Wi (270 De...	None						42		
63	Structure Wi (300 De...	None						42		
64	Structure Wi (330 De...	None						42		
65	Structure Wm (0 Deg)	None						42		
66	Structure Wm (30 D...	None						42		
67	Structure Wm (60 D...	None						42		
68	Structure Wm (90 D...	None						42		
69	Structure Wm (120 ...	None						42		
70	Structure Wm (150 ...	None						42		
71	Structure Wm (180 ...	None						42		
72	Structure Wm (210 ...	None						42		
73	Structure Wm (240 ...	None						42		
74	Structure Wm (270 ...	None						42		
75	Structure Wm (300 ...	None						42		
76	Structure Wm (330 ...	None						42		
77	Lm1	None					1			
78	Lm2	None					1			
79	Lv1	None					1			
80	Lv2	None					1			

Load Combinations

	Description	Solve	PDelta	S...	BLC	Fac...	BLC	Fac...	BLC	Fac...	BLC	Fac...	BLC	Fac...	BLC	Fac...	BLC	Fac...	BLC	Fac...	BLC	Fac...	BLC	Fac...
1	1.2D+1.0Wo (0...	Yes	Y		1	1.2	39	1.2	3	1	41	1												
2	1.2D+1.0Wo (3...	Yes	Y		1	1.2	39	1.2	4	1	42	1												
3	1.2D+1.0Wo (6...	Yes	Y		1	1.2	39	1.2	5	1	43	1												
4	1.2D+1.0Wo (9...	Yes	Y		1	1.2	39	1.2	6	1	44	1												
5	1.2D+1.0Wo (1...	Yes	Y		1	1.2	39	1.2	7	1	45	1												
6	1.2D+1.0Wo (1...	Yes	Y		1	1.2	39	1.2	8	1	46	1												
7	1.2D+1.0Wo (1...	Yes	Y		1	1.2	39	1.2	9	1	47	1												
8	1.2D+1.0Wo (2...	Yes	Y		1	1.2	39	1.2	10	1	48	1												
9	1.2D+1.0Wo (2...	Yes	Y		1	1.2	39	1.2	11	1	49	1												
10	1.2D+1.0Wo (2...	Yes	Y		1	1.2	39	1.2	12	1	50	1												
11	1.2D+1.0Wo (3...	Yes	Y		1	1.2	39	1.2	13	1	51	1												
12	1.2D+1.0Wo (3...	Yes	Y		1	1.2	39	1.2	14	1	52	1												
13	1.2D + 1.0Di + ...	Yes	Y		1	1.2	39	1.2	2	1	40	1	15	1	53	1								
14	1.2D + 1.0Di + ...	Yes	Y		1	1.2	39	1.2	2	1	40	1	16	1	54	1								
15	1.2D + 1.0Di + ...	Yes	Y		1	1.2	39	1.2	2	1	40	1	17	1	55	1								
16	1.2D + 1.0Di + ...	Yes	Y		1	1.2	39	1.2	2	1	40	1	18	1	56	1								
17	1.2D + 1.0Di + ...	Yes	Y		1	1.2	39	1.2	2	1	40	1	19	1	57	1								
18	1.2D + 1.0Di + ...	Yes	Y		1	1.2	39	1.2	2	1	40	1	20	1	58	1								

Load Combinations (Continued)

	Description	Solve	PDelta	S...	BLC	Fac...	BLC	Fac...	BLC	Fac...	BLC	Fac...	BLC	Fac...	BLC	Fac...	BLC	Fac...	BLC	Fac...	BLC	Fac...	BLC	Fac...
19	1.2D + 1.0Di + ...	Yes	Y		1	1.2	39	1.2	2	1	40	1	21	1	59	1								
20	1.2D + 1.0Di + ...	Yes	Y		1	1.2	39	1.2	2	1	40	1	22	1	60	1								
21	1.2D + 1.0Di + ...	Yes	Y		1	1.2	39	1.2	2	1	40	1	23	1	61	1								
22	1.2D + 1.0Di + ...	Yes	Y		1	1.2	39	1.2	2	1	40	1	24	1	62	1								
23	1.2D + 1.0Di + ...	Yes	Y		1	1.2	39	1.2	2	1	40	1	25	1	63	1								
24	1.2D + 1.0Di + ...	Yes	Y		1	1.2	39	1.2	2	1	40	1	26	1	64	1								
25	1.2D + 1.5Lm1 ...	Yes	Y		1	1.2	39	1.2	77	1.5	27	1	65	1										
26	1.2D + 1.5Lm1 ...	Yes	Y		1	1.2	39	1.2	77	1.5	28	1	66	1										
27	1.2D + 1.5Lm1 ...	Yes	Y		1	1.2	39	1.2	77	1.5	29	1	67	1										
28	1.2D + 1.5Lm1 ...	Yes	Y		1	1.2	39	1.2	77	1.5	30	1	68	1										
29	1.2D + 1.5Lm1 ...	Yes	Y		1	1.2	39	1.2	77	1.5	31	1	69	1										
30	1.2D + 1.5Lm1 ...	Yes	Y		1	1.2	39	1.2	77	1.5	32	1	70	1										
31	1.2D + 1.5Lm1 ...	Yes	Y		1	1.2	39	1.2	77	1.5	33	1	71	1										
32	1.2D + 1.5Lm1 ...	Yes	Y		1	1.2	39	1.2	77	1.5	34	1	72	1										
33	1.2D + 1.5Lm1 ...	Yes	Y		1	1.2	39	1.2	77	1.5	35	1	73	1										
34	1.2D + 1.5Lm1 ...	Yes	Y		1	1.2	39	1.2	77	1.5	36	1	74	1										
35	1.2D + 1.5Lm1 ...	Yes	Y		1	1.2	39	1.2	77	1.5	37	1	75	1										
36	1.2D + 1.5Lm1 ...	Yes	Y		1	1.2	39	1.2	77	1.5	38	1	76	1										
37	1.2D + 1.5Lm2 ...	Yes	Y		1	1.2	39	1.2	78	1.5	27	1	65	1										
38	1.2D + 1.5Lm2 ...	Yes	Y		1	1.2	39	1.2	78	1.5	28	1	66	1										
39	1.2D + 1.5Lm2 ...	Yes	Y		1	1.2	39	1.2	78	1.5	29	1	67	1										
40	1.2D + 1.5Lm2 ...	Yes	Y		1	1.2	39	1.2	78	1.5	30	1	68	1										
41	1.2D + 1.5Lm2 ...	Yes	Y		1	1.2	39	1.2	78	1.5	31	1	69	1										
42	1.2D + 1.5Lm2 ...	Yes	Y		1	1.2	39	1.2	78	1.5	32	1	70	1										
43	1.2D + 1.5Lm2 ...	Yes	Y		1	1.2	39	1.2	78	1.5	33	1	71	1										
44	1.2D + 1.5Lm2 ...	Yes	Y		1	1.2	39	1.2	78	1.5	34	1	72	1										
45	1.2D + 1.5Lm2 ...	Yes	Y		1	1.2	39	1.2	78	1.5	35	1	73	1										
46	1.2D + 1.5Lm2 ...	Yes	Y		1	1.2	39	1.2	78	1.5	36	1	74	1										
47	1.2D + 1.5Lm2 ...	Yes	Y		1	1.2	39	1.2	78	1.5	37	1	75	1										
48	1.2D + 1.5Lm2 ...	Yes	Y		1	1.2	39	1.2	78	1.5	38	1	76	1										
49	1.2D + 1.5Lv1	Yes	Y		1	1.2	39	1.2	79	1.5														
50	1.2D + 1.5Lv2	Yes	Y		1	1.2	39	1.2	80	1.5														
51	1.4D	Yes	Y		1	1.4	39	1.4																
52	Seismic Mass		Y		1	1	39	1																
53	1.2D + 1.0Ev + ...		Y		1	1.2	39	1.2	SX		SY	1	SZ	-1										
54	1.2D + 1.0Ev + ...		Y		1	1.2	39	1.2	SX	.5	SY	1	SZ	-.866										
55	1.2D + 1.0Ev + ...		Y		1	1.2	39	1.2	SX	.866	SY	1	SZ	-.5										
56	1.2D + 1.0Ev + ...		Y		1	1.2	39	1.2	SX	1	SY	1	SZ											
57	1.2D + 1.0Ev + ...		Y		1	1.2	39	1.2	SX	.866	SY	1	SZ	.5										
58	1.2D + 1.0Ev + ...		Y		1	1.2	39	1.2	SX	.5	SY	1	SZ	.866										
59	1.2D + 1.0Ev + ...		Y		1	1.2	39	1.2	SX		SY	1	SZ	1										
60	1.2D + 1.0Ev + ...		Y		1	1.2	39	1.2	SX	-.5	SY	1	SZ	.866										
61	1.2D + 1.0Ev + ...		Y		1	1.2	39	1.2	SX	-.866	SY	1	SZ	.5										
62	1.2D + 1.0Ev + ...		Y		1	1.2	39	1.2	SX	-1	SY	1	SZ											
63	1.2D + 1.0Ev + ...		Y		1	1.2	39	1.2	SX	-.866	SY	1	SZ	-.5										
64	1.2D + 1.0Ev + ...		Y		1	1.2	39	1.2	SX	-.5	SY	1	SZ	-.866										

Joint Coordinates and Temperatures

	Label	X [ft]	Y [ft]	Z [ft]	Temp [F]	Detach From Diap...
1	N1	0	0	4	0	
2	N2	-6.25	0	4	0	
3	N3	6.25	0	4	0	
4	N4	5.333333	0	4	0	
5	N5	1	0	4	0	
6	N6	-1	0	4	0	
7	N7	-5.333333	0	4	0	
8	N16	0	3	4	0	
9	N17	-6.25	3	4	0	
10	N18	6.25	3	4	0	
11	N19	5.333333	3	4	0	
12	N20	1	3	4	0	
13	N21	-1	3	4	0	
14	N22	-5.333333	3	4	0	
15	N31	0.000001	0	3.75	0	
16	N32	0.000001	3	3.75	0	
17	N49	0.000009	2.625	1.	0	
18	N50	0.000009	.375	1.	0	
19	N51	0.000002	1.5	3.75	0	
20	N52A	0.000002	2.625	3.5	0	
21	N53	0.000002	.375	3.5	0	
22	N53B	0.000014	2.625	0.583333	0	
23	N52B	0.000014	.375	0.583333	0	
24	N58	0.000001	2.625	3.75	0	
25	N59	0.000001	.375	3.75	0	
26	N60	0.000002	2.625	1.125	0	
27	N61	0.000002	.375	1.125	0	
28	N28	6	0	4	0	
29	N29	6	3	4	0	
30	N30	2.25	0	4	0	
31	N31A	2.25	3	4	0	
32	N32A	-4.25	0	4	0	
33	N33	-4.25	3	4	0	
34	N34	-6	0	4	0	
35	N35	-6	3	4	0	
36	N36	6	0	4.25	0	
37	N37	6	3	4.25	0	
38	N38	2.25	0	4.25	0	
39	N39	2.25	3	4.25	0	
40	N40	-4.25	0	4.25	0	
41	N41	-4.25	3	4.25	0	
42	N42	-6	0	4.25	0	
43	N43	-6	3	4.25	0	
44	N44	6	7.25	4.25	0	
45	N45	-6	7	4.25	0	
46	N46	6	-1.75	4.25	0	
47	N47	-6	-1	4.25	0	
48	N48	2.25	6.958333	4.25	0	
49	N49A	-4.25	6.958333	4.25	0	
50	N50A	2.25	-0.041667	4.25	0	
51	N51A	-4.25	-0.041667	4.25	0	
52	N52	-5.333333	1.5	4	0	

Joint Coordinates and Temperatures (Continued)

	Label	X [ft]	Y [ft]	Z [ft]	Temp [F]	Detach From Diap...
53	N54	-6.75	2.25	3.802083	0	
54	N55	6.75	2.25	3.802083	0	
55	N56	6	4	4	0	
56	N57	2.25	4	4	0	
57	N58A	-4.25	4	4	0	
58	N59A	-6	4	4	0	
59	N60A	6	4	4.25	0	
60	N61A	2.25	4	4.25	0	
61	N62	-4.25	4	4.25	0	
62	N63	-6	4	4.25	0	
63	N64	-3.333333	2.25	3.802083	0	
64	N65	3.333333	2.25	3.802083	0	
65	N66	1.375e-5	4	0.583333	0	
66	N68	-1.999987	1.5	-2.880768	0	
67	N68A	-5.333333	2.25	4	0	
68	N69	-1	2.25	4	0	
69	N70	1	2.25	4	0	
70	N71	5.333333	2.25	4	0	
71	N72	-5.333333	2.25	3.802083	0	
72	N73	-1	2.25	3.802083	0	
73	N74	1	2.25	3.802083	0	
74	N75	5.333333	2.25	3.802083	0	
75	N76	5.333333	.5	4	0	
76	N77	1.999987	.5	-2.880768	0	

Hot Rolled Steel Section Sets

	Label	Shape	Type	Design List	Material	Design Ru...	A [in2]	Iyy [in4]	Izz [in4]	J [in4]
1	Antenna Pipe	PIPE_2.0	None	None	A53 Gr. B	Typical	1.02	.627	.627	1.25
2	Face Horizontal	L3X3X3	None	None	A36 Gr.36	Typical	1.09	.948	.948	.014
3	Face Vertical	PIPE_2.0	None	None	A53 Gr. B	Typical	1.02	.627	.627	1.25
4	Standoff Horizontal	HSS3X3X3	None	None	A500 Gr. B...	Typical	1.89	2.46	2.46	4.03
5	Standoff Vertical	PIPE_1.5	None	None	A53 Gr. B	Typical	.749	.293	.293	.586
6	Standoff Diagonal	SR_0.75	None	None	A36 Gr.36	Typical	.442	.016	.016	.031
7	Stabilizer	PIPE_2.0	None	None	A53 Gr. B	Typical	1.02	.627	.627	1.25
8	End Plate	PL3/8x4_HRA	None	None	A36 Gr.36	Typical	3	.035	16	.136
9	Mast Pipe	PIPE_3.0	Column	Pipe	A53 Gr. B	Typical	2.07	2.85	2.85	5.69
10	Secondary Horizon...	PIPE_2.5	None	None	A53 Gr. B	Typical	1.61	1.45	1.45	2.89
11	V-Brace	L2.5x2.5x4	None	None	A36 Gr.36	Typical	1.19	.692	.692	.026
12	Replacement Pipe	PIPE_2.5	Column	Pipe	A53 Gr. B	Typical	1.61	1.45	1.45	2.89

Hot Rolled Steel Properties

	Label	E [ksi]	G [ksi]	Nu	Therm (/1E...	Density[k/ft...	Yield[ksi]	Ry	Fu[ksi]	Rt
1	A36 Gr.36	29000	11154	.3	.65	.49	36	1.5	58	1.2
2	A53 Gr. B	29000	11154	.3	.65	.49	35	1.5	60	1.2
3	A572 Gr.50	29000	11154	.3	.65	.49	50	1.1	65	1.1
4	A992	29000	11154	.3	.65	.49	50	1.1	65	1.1
5	A500 Gr. B 42	29000	11154	.3	.65	.49	42	1.4	58	1.3
6	A500 Gr. B 46	29000	11154	.3	.65	.49	46	1.4	58	1.3

Member Primary Data

	Label	I Joint	J Joint	K Joint	Rotate(deg)	Section/Shape	Type	Design List	Material	Design Rules
1	M1	N2	N1		180	Face Horizontal	None	None	A36 Gr.36	Typical
2	M2	N1	N3		180	Face Horizontal	None	None	A36 Gr.36	Typical
3	M7A	N17	N16		180	Face Horizontal	None	None	A36 Gr.36	Typical
4	M8	N16	N18		180	Face Horizontal	None	None	A36 Gr.36	Typical
5	M13	N7	N22			Face Vertical	None	None	A53 Gr. B	Typical
6	M14	N6	N21			Face Vertical	None	None	A53 Gr. B	Typical
7	M15	N5	N20			Face Vertical	None	None	A53 Gr. B	Typical
8	M16	N4	N19			Face Vertical	None	None	A53 Gr. B	Typical
9	M17	N16	N32			RIGID	None	None	RIGID	Typical
10	M18	N1	N31			RIGID	None	None	RIGID	Typical
11	M28	N31	N32			Mast Pipe	Column	Pipe	A53 Gr. B	Typical
12	OVP1	N52A	N49		90	Standoff Horiz...	None	None	A500 Gr. ...	Typical
13	M31	N49	N53B		90	RIGID	None	None	RIGID	Typical
14	M28B	N53	N50		90	Standoff Horiz...	None	None	A500 Gr. ...	Typical
15	M29A	N50	N52B		90	RIGID	None	None	RIGID	Typical
16	M30	N58	N52A			RIGID	None	None	RIGID	Typical
17	M31A	N59	N53			RIGID	None	None	RIGID	Typical
18	OVP	N61	N60			Standoff Vertical	None	None	A53 Gr. B	Typical
19	M19	N42	N34			RIGID	None	None	RIGID	Typical
20	M20	N43	N35			RIGID	None	None	RIGID	Typical
21	M21	N41	N33			RIGID	None	None	RIGID	Typical
22	M22	N40	N32A			RIGID	None	None	RIGID	Typical
23	M23	N38	N30			RIGID	None	None	RIGID	Typical
24	M24	N39	N31A			RIGID	None	None	RIGID	Typical
25	M25	N36	N28			RIGID	None	None	RIGID	Typical
26	M26	N37	N29			RIGID	None	None	RIGID	Typical
27	MP4A	N45	N47			Replacement ...	Column	Pipe	A53 Gr. B	Typical
28	MP1A	N44	N46			Antenna Pipe	None	None	A53 Gr. B	Typical
29	MP3A	N49A	N51A			Antenna Pipe	None	None	A53 Gr. B	Typical
30	MP2A	N48	N50A			Antenna Pipe	None	None	A53 Gr. B	Typical
31	M31B	N52	N68			Stabilizer	None	None	A53 Gr. B	Typical
32	M32A	N63	N59A			RIGID	None	None	RIGID	Typical
33	M33	N62	N58A			RIGID	None	None	RIGID	Typical
34	M34	N61A	N57			RIGID	None	None	RIGID	Typical
35	M35	N60A	N56			RIGID	None	None	RIGID	Typical
36	M36	N54	N55			Secondary Hor...	None	None	A53 Gr. B	Typical
37	M37	N64	N66			V-Brace	None	None	A36 Gr.36	Typical
38	M38	N65	N66		270	V-Brace	None	None	A36 Gr.36	Typical
39	M39	N68A	N72			RIGID	None	None	RIGID	Typical
40	M40	N69	N73			RIGID	None	None	RIGID	Typical
41	M41	N70	N74			RIGID	None	None	RIGID	Typical
42	M42	N71	N75			RIGID	None	None	RIGID	Typical
43	M43	N76	N77			Stabilizer	None	None	A53 Gr. B	Typical

Member Advanced Data

	Label	I Release	J Release	I Offset[in]	J Offset[in]	T/C Only	Physical	Defl Rat...	Analysis ...	Inactive	Seismic...
1	M1						Yes	** NA **			None
2	M2						Yes	** NA **			None
3	M7A						Yes	** NA **			None

Member Advanced Data (Continued)

	Label	I Release	J Release	I Offset[in]	J Offset[in]	T/C Only	Physical	Defl Rat...	Analysis ...	Inactive	Seismic...
4	M8						Yes	** NA **			None
5	M13						Yes	** NA **			None
6	M14						Yes	** NA **			None
7	M15						Yes	** NA **			None
8	M16						Yes	** NA **			None
9	M17		OOOOOO				Yes	** NA **			None
10	M18		OOOOOO				Yes	** NA **			None
11	M28						Yes	** NA **			None
12	OVP1		OOOOOO				Yes	** NA **			None
13	M31						Yes	** NA **			None
14	M28B		OOOOOO				Yes	** NA **			None
15	M29A						Yes	** NA **			None
16	M30						Yes	** NA **			None
17	M31A						Yes	** NA **			None
18	OVP						Yes	** NA **			None
19	M19	OOOXOX					Yes	** NA **			None
20	M20	OOOXOX					Yes	** NA **			None
21	M21	OOOXOX					Yes	** NA **			None
22	M22	OOOXOX					Yes	** NA **			None
23	M23	OOOXOX					Yes	** NA **			None
24	M24	OOOXOX					Yes	** NA **			None
25	M25	OOOXOX					Yes	** NA **			None
26	M26	OOOXOX					Yes	** NA **			None
27	MP4A						Yes	** NA **			None
28	MP1A						Yes	** NA **			None
29	MP3A						Yes	** NA **			None
30	MP2A						Yes	** NA **			None
31	M31B	OOOOXO					Yes	** NA **			None
32	M32A						Yes	** NA **			None
33	M33						Yes	** NA **			None
34	M34						Yes	** NA **			None
35	M35						Yes	** NA **			None
36	M36						Yes	** NA **			None
37	M37	BenPIN	BenPIN				Yes	** NA **			None
38	M38	BenPIN	BenPIN				Yes	** NA **			None
39	M39						Yes	** NA **			None
40	M40						Yes	** NA **			None
41	M41						Yes	** NA **			None
42	M42						Yes	** NA **			None
43	M43	OOOOXO					Yes	** NA **			None

Member Point Loads (BLC 1 : Antenna D)

	Member Label	Direction	Magnitude[lb,k-ft]	Location[ft,%]
1	MP4A	Y	-31.65	1.5
2	MP4A	My	-.024	1.5
3	MP4A	Mz	.018	1.5
4	MP4A	Y	-31.65	5.5
5	MP4A	My	-.024	5.5
6	MP4A	Mz	.018	5.5
7	MP4A	Y	-31.65	1.5

Member Point Loads (BLC 1 : Antenna D) (Continued)

	Member Label	Direction	Magnitude[lb,k-ft]	Location[ft,%]
8	MP4A	My	-.024	1.5
9	MP4A	Mz	-.018	1.5
10	MP4A	Y	-31.65	5.5
11	MP4A	My	-.024	5.5
12	MP4A	Mz	-.018	5.5
13	MP2A	Y	-43.55	2.21
14	MP2A	My	-.033	2.21
15	MP2A	Mz	0	2.21
16	MP2A	Y	-43.55	4.21
17	MP2A	My	-.033	4.21
18	MP2A	Mz	0	4.21
19	MP4A	Y	-10.4	4.3
20	MP4A	My	.005	4.3
21	MP4A	Mz	0	4.3
22	OVP	Y	-32	1.5
23	OVP	My	0	1.5
24	OVP	Mz	0	1.5
25	MP3A	Y	-84.4	5.8
26	MP3A	My	.042	5.8
27	MP3A	Mz	0	5.8
28	MP4A	Y	-70.3	5.8
29	MP4A	My	.035	5.8
30	MP4A	Mz	0	5.8
31	MP1A	Y	-13.15	1.5
32	MP1A	My	-.01	1.5
33	MP1A	Mz	0	1.5
34	MP1A	Y	-13.15	5.5
35	MP1A	My	-.01	5.5
36	MP1A	Mz	0	5.5

Member Point Loads (BLC 2 : Antenna Di)

	Member Label	Direction	Magnitude[lb,k-ft]	Location[ft,%]
1	MP4A	Y	-71.434	1.5
2	MP4A	My	-.054	1.5
3	MP4A	Mz	.042	1.5
4	MP4A	Y	-71.434	5.5
5	MP4A	My	-.054	5.5
6	MP4A	Mz	.042	5.5
7	MP4A	Y	-71.434	1.5
8	MP4A	My	-.054	1.5
9	MP4A	Mz	-.042	1.5
10	MP4A	Y	-71.434	5.5
11	MP4A	My	-.054	5.5
12	MP4A	Mz	-.042	5.5
13	MP2A	Y	-36.385	2.21
14	MP2A	My	-.027	2.21
15	MP2A	Mz	0	2.21
16	MP2A	Y	-36.385	4.21
17	MP2A	My	-.027	4.21
18	MP2A	Mz	0	4.21
19	MP4A	Y	-11.006	4.3

Member Point Loads (BLC 2 : Antenna Di) (Continued)

	Member Label	Direction	Magnitude[lb,k-ft]	Location[ft,%]
20	MP4A	My	.006	4.3
21	MP4A	Mz	0	4.3
22	OVP	Y	-89.784	1.5
23	OVP	My	0	1.5
24	OVP	Mz	0	1.5
25	MP3A	Y	-45.887	5.8
26	MP3A	My	.023	5.8
27	MP3A	Mz	0	5.8
28	MP4A	Y	-41.273	5.8
29	MP4A	My	.021	5.8
30	MP4A	Mz	0	5.8
31	MP1A	Y	-62.452	1.5
32	MP1A	My	-.047	1.5
33	MP1A	Mz	0	1.5
34	MP1A	Y	-62.452	5.5
35	MP1A	My	-.047	5.5
36	MP1A	Mz	0	5.5

Member Point Loads (BLC 3 : Antenna Wo (0 Deg))

	Member Label	Direction	Magnitude[lb,k-ft]	Location[ft,%]
1	MP4A	X	0	1.5
2	MP4A	Z	-208.943	1.5
3	MP4A	Mx	-.122	1.5
4	MP4A	X	0	5.5
5	MP4A	Z	-208.943	5.5
6	MP4A	Mx	-.122	5.5
7	MP4A	X	0	1.5
8	MP4A	Z	-208.943	1.5
9	MP4A	Mx	.122	1.5
10	MP4A	X	0	5.5
11	MP4A	Z	-208.943	5.5
12	MP4A	Mx	.122	5.5
13	MP2A	X	0	2.21
14	MP2A	Z	-107.797	2.21
15	MP2A	Mx	0	2.21
16	MP2A	X	0	4.21
17	MP2A	Z	-107.797	4.21
18	MP2A	Mx	0	4.21
19	MP4A	X	0	4.3
20	MP4A	Z	-16.972	4.3
21	MP4A	Mx	0	4.3
22	OVP	X	0	1.5
23	OVP	Z	-175.199	1.5
24	OVP	Mx	0	1.5
25	MP3A	X	0	5.8
26	MP3A	Z	-85.779	5.8
27	MP3A	Mx	0	5.8
28	MP4A	X	0	5.8
29	MP4A	Z	-85.779	5.8
30	MP4A	Mx	0	5.8
31	MP1A	X	0	1.5

Member Point Loads (BLC 3 : Antenna Wo (0 Deg)) (Continued)

	Member Label	Direction	Magnitude[lb,k-ft]	Location[ft,%]
32	MP1A	Z	-187.384	1.5
33	MP1A	Mx	0	1.5
34	MP1A	X	0	5.5
35	MP1A	Z	-187.384	5.5
36	MP1A	Mx	0	5.5

Member Point Loads (BLC 4 : Antenna Wo (30 Deg))

	Member Label	Direction	Magnitude[lb,k-ft]	Location[ft,%]
1	MP4A	X	95.508	1.5
2	MP4A	Z	-165.424	1.5
3	MP4A	Mx	-.168	1.5
4	MP4A	X	95.508	5.5
5	MP4A	Z	-165.424	5.5
6	MP4A	Mx	-.168	5.5
7	MP4A	X	95.508	1.5
8	MP4A	Z	-165.424	1.5
9	MP4A	Mx	.025	1.5
10	MP4A	X	95.508	5.5
11	MP4A	Z	-165.424	5.5
12	MP4A	Mx	.025	5.5
13	MP2A	X	45.699	2.21
14	MP2A	Z	-79.154	2.21
15	MP2A	Mx	-.034	2.21
16	MP2A	X	45.699	4.21
17	MP2A	Z	-79.154	4.21
18	MP2A	Mx	-.034	4.21
19	MP4A	X	7.833	4.3
20	MP4A	Z	-13.566	4.3
21	MP4A	Mx	.004	4.3
22	OVP	X	76.562	1.5
23	OVP	Z	-132.609	1.5
24	OVP	Mx	0	1.5
25	MP3A	X	39.335	5.8
26	MP3A	Z	-68.129	5.8
27	MP3A	Mx	.02	5.8
28	MP4A	X	37.973	5.8
29	MP4A	Z	-65.771	5.8
30	MP4A	Mx	.019	5.8
31	MP1A	X	85.766	1.5
32	MP1A	Z	-148.551	1.5
33	MP1A	Mx	-.064	1.5
34	MP1A	X	85.766	5.5
35	MP1A	Z	-148.551	5.5
36	MP1A	Mx	-.064	5.5

Member Point Loads (BLC 5 : Antenna Wo (60 Deg))

	Member Label	Direction	Magnitude[lb,k-ft]	Location[ft,%]
1	MP4A	X	134.372	1.5
2	MP4A	Z	-77.58	1.5
3	MP4A	Mx	-.146	1.5
4	MP4A	X	134.372	5.5

Member Point Loads (BLC 5 : Antenna Wo (60 Deg)) (Continued)

	Member Label	Direction	Magnitude[lb,k-ft]	Location[ft,%]
5	MP4A	Z	-77.58	5.5
6	MP4A	Mx	-.146	5.5
7	MP4A	X	134.372	1.5
8	MP4A	Z	-77.58	1.5
9	MP4A	Mx	-.056	1.5
10	MP4A	X	134.372	5.5
11	MP4A	Z	-77.58	5.5
12	MP4A	Mx	-.056	5.5
13	MP2A	X	50.75	2.21
14	MP2A	Z	-29.301	2.21
15	MP2A	Mx	-.038	2.21
16	MP2A	X	50.75	4.21
17	MP2A	Z	-29.301	4.21
18	MP2A	Mx	-.038	4.21
19	MP4A	X	11.302	4.3
20	MP4A	Z	-6.525	4.3
21	MP4A	Mx	.006	4.3
22	OVP	X	123.05	1.5
23	OVP	Z	-71.043	1.5
24	OVP	Mx	0	1.5
25	MP3A	X	55.815	5.8
26	MP3A	Z	-32.225	5.8
27	MP3A	Mx	.028	5.8
28	MP4A	X	48.738	5.8
29	MP4A	Z	-28.139	5.8
30	MP4A	Mx	.024	5.8
31	MP1A	X	121.094	1.5
32	MP1A	Z	-69.914	1.5
33	MP1A	Mx	-.091	1.5
34	MP1A	X	121.094	5.5
35	MP1A	Z	-69.914	5.5
36	MP1A	Mx	-.091	5.5

Member Point Loads (BLC 6 : Antenna Wo (90 Deg))

	Member Label	Direction	Magnitude[lb,k-ft]	Location[ft,%]
1	MP4A	X	137.231	1.5
2	MP4A	Z	0	1.5
3	MP4A	Mx	-.103	1.5
4	MP4A	X	137.231	5.5
5	MP4A	Z	0	5.5
6	MP4A	Mx	-.103	5.5
7	MP4A	X	137.231	1.5
8	MP4A	Z	0	1.5
9	MP4A	Mx	-.103	1.5
10	MP4A	X	137.231	5.5
11	MP4A	Z	0	5.5
12	MP4A	Mx	-.103	5.5
13	MP2A	X	42.202	2.21
14	MP2A	Z	0	2.21
15	MP2A	Mx	-.032	2.21
16	MP2A	X	42.202	4.21

Member Point Loads (BLC 6 : Antenna Wo (90 Deg)) (Continued)

	Member Label	Direction	Magnitude[lb,k-ft]	Location[ft,%]
17	MP2A	Z	0	4.21
18	MP2A	Mx	-.032	4.21
19	MP4A	X	11.743	4.3
20	MP4A	Z	0	4.3
21	MP4A	Mx	.006	4.3
22	OVP	X	153.124	1.5
23	OVP	Z	0	1.5
24	OVP	Mx	0	1.5
25	MP3A	X	57.339	5.8
26	MP3A	Z	0	5.8
27	MP3A	Mx	.029	5.8
28	MP4A	X	46.445	5.8
29	MP4A	Z	0	5.8
30	MP4A	Mx	.023	5.8
31	MP1A	X	123.976	1.5
32	MP1A	Z	0	1.5
33	MP1A	Mx	-.093	1.5
34	MP1A	X	123.976	5.5
35	MP1A	Z	0	5.5
36	MP1A	Mx	-.093	5.5

Member Point Loads (BLC 7 : Antenna Wo (120 Deg))

	Member Label	Direction	Magnitude[lb,k-ft]	Location[ft,%]
1	MP4A	X	134.372	1.5
2	MP4A	Z	77.58	1.5
3	MP4A	Mx	-.056	1.5
4	MP4A	X	134.372	5.5
5	MP4A	Z	77.58	5.5
6	MP4A	Mx	-.056	5.5
7	MP4A	X	134.372	1.5
8	MP4A	Z	77.58	1.5
9	MP4A	Mx	-.146	1.5
10	MP4A	X	134.372	5.5
11	MP4A	Z	77.58	5.5
12	MP4A	Mx	-.146	5.5
13	MP2A	X	50.75	2.21
14	MP2A	Z	29.301	2.21
15	MP2A	Mx	-.038	2.21
16	MP2A	X	50.75	4.21
17	MP2A	Z	29.301	4.21
18	MP2A	Mx	-.038	4.21
19	MP4A	X	11.302	4.3
20	MP4A	Z	6.525	4.3
21	MP4A	Mx	.006	4.3
22	OVP	X	151.727	1.5
23	OVP	Z	87.6	1.5
24	OVP	Mx	0	1.5
25	MP3A	X	55.815	5.8
26	MP3A	Z	32.225	5.8
27	MP3A	Mx	.028	5.8
28	MP4A	X	48.738	5.8

Member Point Loads (BLC 7 : Antenna Wo (120 Deg)) (Continued)

	Member Label	Direction	Magnitude[lb,k-ft]	Location[ft,%]
29	MP4A	Z	28.139	5.8
30	MP4A	Mx	.024	5.8
31	MP1A	X	121.094	1.5
32	MP1A	Z	69.914	1.5
33	MP1A	Mx	-.091	1.5
34	MP1A	X	121.094	5.5
35	MP1A	Z	69.914	5.5
36	MP1A	Mx	-.091	5.5

Member Point Loads (BLC 8 : Antenna Wo (150 Deg))

	Member Label	Direction	Magnitude[lb,k-ft]	Location[ft,%]
1	MP4A	X	95.508	1.5
2	MP4A	Z	165.424	1.5
3	MP4A	Mx	.025	1.5
4	MP4A	X	95.508	5.5
5	MP4A	Z	165.424	5.5
6	MP4A	Mx	.025	5.5
7	MP4A	X	95.508	1.5
8	MP4A	Z	165.424	1.5
9	MP4A	Mx	-.168	1.5
10	MP4A	X	95.508	5.5
11	MP4A	Z	165.424	5.5
12	MP4A	Mx	-.168	5.5
13	MP2A	X	45.699	2.21
14	MP2A	Z	79.154	2.21
15	MP2A	Mx	-.034	2.21
16	MP2A	X	45.699	4.21
17	MP2A	Z	79.154	4.21
18	MP2A	Mx	-.034	4.21
19	MP4A	X	7.833	4.3
20	MP4A	Z	13.566	4.3
21	MP4A	Mx	.004	4.3
22	OVP	X	93.119	1.5
23	OVP	Z	161.286	1.5
24	OVP	Mx	0	1.5
25	MP3A	X	39.335	5.8
26	MP3A	Z	68.129	5.8
27	MP3A	Mx	.02	5.8
28	MP4A	X	37.973	5.8
29	MP4A	Z	65.771	5.8
30	MP4A	Mx	.019	5.8
31	MP1A	X	85.766	1.5
32	MP1A	Z	148.551	1.5
33	MP1A	Mx	-.064	1.5
34	MP1A	X	85.766	5.5
35	MP1A	Z	148.551	5.5
36	MP1A	Mx	-.064	5.5

Member Point Loads (BLC 9 : Antenna Wo (180 Deg))

	Member Label	Direction	Magnitude[lb,k-ft]	Location[ft,%]
1	MP4A	X	0	1.5

Member Point Loads (BLC 9 : Antenna Wo (180 Deg)) (Continued)

	Member Label	Direction	Magnitude[lb,k-ft]	Location[ft,%]
2	MP4A	Z	208.943	1.5
3	MP4A	Mx	.122	1.5
4	MP4A	X	0	5.5
5	MP4A	Z	208.943	5.5
6	MP4A	Mx	.122	5.5
7	MP4A	X	0	1.5
8	MP4A	Z	208.943	1.5
9	MP4A	Mx	-.122	1.5
10	MP4A	X	0	5.5
11	MP4A	Z	208.943	5.5
12	MP4A	Mx	-.122	5.5
13	MP2A	X	0	2.21
14	MP2A	Z	107.797	2.21
15	MP2A	Mx	0	2.21
16	MP2A	X	0	4.21
17	MP2A	Z	107.797	4.21
18	MP2A	Mx	0	4.21
19	MP4A	X	0	4.3
20	MP4A	Z	16.972	4.3
21	MP4A	Mx	0	4.3
22	OVP	X	0	1.5
23	OVP	Z	175.199	1.5
24	OVP	Mx	0	1.5
25	MP3A	X	0	5.8
26	MP3A	Z	85.779	5.8
27	MP3A	Mx	0	5.8
28	MP4A	X	0	5.8
29	MP4A	Z	85.779	5.8
30	MP4A	Mx	0	5.8
31	MP1A	X	0	1.5
32	MP1A	Z	187.384	1.5
33	MP1A	Mx	0	1.5
34	MP1A	X	0	5.5
35	MP1A	Z	187.384	5.5
36	MP1A	Mx	0	5.5

Member Point Loads (BLC 10 : Antenna Wo (210 Deg))

	Member Label	Direction	Magnitude[lb,k-ft]	Location[ft,%]
1	MP4A	X	-95.508	1.5
2	MP4A	Z	165.424	1.5
3	MP4A	Mx	.168	1.5
4	MP4A	X	-95.508	5.5
5	MP4A	Z	165.424	5.5
6	MP4A	Mx	.168	5.5
7	MP4A	X	-95.508	1.5
8	MP4A	Z	165.424	1.5
9	MP4A	Mx	-.025	1.5
10	MP4A	X	-95.508	5.5
11	MP4A	Z	165.424	5.5
12	MP4A	Mx	-.025	5.5
13	MP2A	X	-45.699	2.21

Member Point Loads (BLC 10 : Antenna Wo (210 Deg)) (Continued)

	Member Label	Direction	Magnitude[lb,k-ft]	Location[ft,%]
14	MP2A	Z	79.154	2.21
15	MP2A	Mx	.034	2.21
16	MP2A	X	-45.699	4.21
17	MP2A	Z	79.154	4.21
18	MP2A	Mx	.034	4.21
19	MP4A	X	-7.833	4.3
20	MP4A	Z	13.566	4.3
21	MP4A	Mx	-.004	4.3
22	OVP	X	-76.562	1.5
23	OVP	Z	132.609	1.5
24	OVP	Mx	0	1.5
25	MP3A	X	-39.335	5.8
26	MP3A	Z	68.129	5.8
27	MP3A	Mx	-.02	5.8
28	MP4A	X	-37.973	5.8
29	MP4A	Z	65.771	5.8
30	MP4A	Mx	-.019	5.8
31	MP1A	X	-85.766	1.5
32	MP1A	Z	148.551	1.5
33	MP1A	Mx	.064	1.5
34	MP1A	X	-85.766	5.5
35	MP1A	Z	148.551	5.5
36	MP1A	Mx	.064	5.5

Member Point Loads (BLC 11 : Antenna Wo (240 Deg))

	Member Label	Direction	Magnitude[lb,k-ft]	Location[ft,%]
1	MP4A	X	-134.372	1.5
2	MP4A	Z	77.58	1.5
3	MP4A	Mx	.146	1.5
4	MP4A	X	-134.372	5.5
5	MP4A	Z	77.58	5.5
6	MP4A	Mx	.146	5.5
7	MP4A	X	-134.372	1.5
8	MP4A	Z	77.58	1.5
9	MP4A	Mx	.056	1.5
10	MP4A	X	-134.372	5.5
11	MP4A	Z	77.58	5.5
12	MP4A	Mx	.056	5.5
13	MP2A	X	-50.75	2.21
14	MP2A	Z	29.301	2.21
15	MP2A	Mx	.038	2.21
16	MP2A	X	-50.75	4.21
17	MP2A	Z	29.301	4.21
18	MP2A	Mx	.038	4.21
19	MP4A	X	-11.302	4.3
20	MP4A	Z	6.525	4.3
21	MP4A	Mx	-.006	4.3
22	OVP	X	-123.05	1.5
23	OVP	Z	71.043	1.5
24	OVP	Mx	0	1.5
25	MP3A	X	-55.815	5.8

Member Point Loads (BLC 11 : Antenna Wo (240 Deg)) (Continued)

	Member Label	Direction	Magnitude[lb,k-ft]	Location[ft,%]
26	MP3A	Z	32.225	5.8
27	MP3A	Mx	-.028	5.8
28	MP4A	X	-48.738	5.8
29	MP4A	Z	28.139	5.8
30	MP4A	Mx	-.024	5.8
31	MP1A	X	-121.094	1.5
32	MP1A	Z	69.914	1.5
33	MP1A	Mx	.091	1.5
34	MP1A	X	-121.094	5.5
35	MP1A	Z	69.914	5.5
36	MP1A	Mx	.091	5.5

Member Point Loads (BLC 12 : Antenna Wo (270 Deg))

	Member Label	Direction	Magnitude[lb,k-ft]	Location[ft,%]
1	MP4A	X	-137.231	1.5
2	MP4A	Z	0	1.5
3	MP4A	Mx	.103	1.5
4	MP4A	X	-137.231	5.5
5	MP4A	Z	0	5.5
6	MP4A	Mx	.103	5.5
7	MP4A	X	-137.231	1.5
8	MP4A	Z	0	1.5
9	MP4A	Mx	.103	1.5
10	MP4A	X	-137.231	5.5
11	MP4A	Z	0	5.5
12	MP4A	Mx	.103	5.5
13	MP2A	X	-42.202	2.21
14	MP2A	Z	0	2.21
15	MP2A	Mx	.032	2.21
16	MP2A	X	-42.202	4.21
17	MP2A	Z	0	4.21
18	MP2A	Mx	.032	4.21
19	MP4A	X	-11.743	4.3
20	MP4A	Z	0	4.3
21	MP4A	Mx	-.006	4.3
22	OVP	X	-153.124	1.5
23	OVP	Z	0	1.5
24	OVP	Mx	0	1.5
25	MP3A	X	-57.339	5.8
26	MP3A	Z	0	5.8
27	MP3A	Mx	-.029	5.8
28	MP4A	X	-46.445	5.8
29	MP4A	Z	0	5.8
30	MP4A	Mx	-.023	5.8
31	MP1A	X	-123.976	1.5
32	MP1A	Z	0	1.5
33	MP1A	Mx	.093	1.5
34	MP1A	X	-123.976	5.5
35	MP1A	Z	0	5.5
36	MP1A	Mx	.093	5.5

Member Point Loads (BLC 13 : Antenna Wo (300 Deg))

	Member Label	Direction	Magnitude[lb,k-ft]	Location[ft,%]
1	MP4A	X	-134.372	1.5
2	MP4A	Z	-77.58	1.5
3	MP4A	Mx	.056	1.5
4	MP4A	X	-134.372	5.5
5	MP4A	Z	-77.58	5.5
6	MP4A	Mx	.056	5.5
7	MP4A	X	-134.372	1.5
8	MP4A	Z	-77.58	1.5
9	MP4A	Mx	.146	1.5
10	MP4A	X	-134.372	5.5
11	MP4A	Z	-77.58	5.5
12	MP4A	Mx	.146	5.5
13	MP2A	X	-50.75	2.21
14	MP2A	Z	-29.301	2.21
15	MP2A	Mx	.038	2.21
16	MP2A	X	-50.75	4.21
17	MP2A	Z	-29.301	4.21
18	MP2A	Mx	.038	4.21
19	MP4A	X	-11.302	4.3
20	MP4A	Z	-6.525	4.3
21	MP4A	Mx	-.006	4.3
22	OVP	X	-151.727	1.5
23	OVP	Z	-87.6	1.5
24	OVP	Mx	0	1.5
25	MP3A	X	-55.815	5.8
26	MP3A	Z	-32.225	5.8
27	MP3A	Mx	-.028	5.8
28	MP4A	X	-48.738	5.8
29	MP4A	Z	-28.139	5.8
30	MP4A	Mx	-.024	5.8
31	MP1A	X	-121.094	1.5
32	MP1A	Z	-69.914	1.5
33	MP1A	Mx	.091	1.5
34	MP1A	X	-121.094	5.5
35	MP1A	Z	-69.914	5.5
36	MP1A	Mx	.091	5.5

Member Point Loads (BLC 14 : Antenna Wo (330 Deg))

	Member Label	Direction	Magnitude[lb,k-ft]	Location[ft,%]
1	MP4A	X	-95.508	1.5
2	MP4A	Z	-165.424	1.5
3	MP4A	Mx	-.025	1.5
4	MP4A	X	-95.508	5.5
5	MP4A	Z	-165.424	5.5
6	MP4A	Mx	-.025	5.5
7	MP4A	X	-95.508	1.5
8	MP4A	Z	-165.424	1.5
9	MP4A	Mx	.168	1.5
10	MP4A	X	-95.508	5.5
11	MP4A	Z	-165.424	5.5
12	MP4A	Mx	.168	5.5

Member Point Loads (BLC 14 : Antenna Wo (330 Deg)) (Continued)

	Member Label	Direction	Magnitude[lb,k-ft]	Location[ft,%]
13	MP2A	X	-45.699	2.21
14	MP2A	Z	-79.154	2.21
15	MP2A	Mx	.034	2.21
16	MP2A	X	-45.699	4.21
17	MP2A	Z	-79.154	4.21
18	MP2A	Mx	.034	4.21
19	MP4A	X	-7.833	4.3
20	MP4A	Z	-13.566	4.3
21	MP4A	Mx	-.004	4.3
22	OVP	X	-93.119	1.5
23	OVP	Z	-161.286	1.5
24	OVP	Mx	0	1.5
25	MP3A	X	-39.335	5.8
26	MP3A	Z	-68.129	5.8
27	MP3A	Mx	-.02	5.8
28	MP4A	X	-37.973	5.8
29	MP4A	Z	-65.771	5.8
30	MP4A	Mx	-.019	5.8
31	MP1A	X	-85.766	1.5
32	MP1A	Z	-148.551	1.5
33	MP1A	Mx	.064	1.5
34	MP1A	X	-85.766	5.5
35	MP1A	Z	-148.551	5.5
36	MP1A	Mx	.064	5.5

Member Point Loads (BLC 15 : Antenna Wi (0 Deg))

	Member Label	Direction	Magnitude[lb,k-ft]	Location[ft,%]
1	MP4A	X	0	1.5
2	MP4A	Z	-37.902	1.5
3	MP4A	Mx	-.022	1.5
4	MP4A	X	0	5.5
5	MP4A	Z	-37.902	5.5
6	MP4A	Mx	-.022	5.5
7	MP4A	X	0	1.5
8	MP4A	Z	-37.902	1.5
9	MP4A	Mx	.022	1.5
10	MP4A	X	0	5.5
11	MP4A	Z	-37.902	5.5
12	MP4A	Mx	.022	5.5
13	MP2A	X	0	2.21
14	MP2A	Z	-20.169	2.21
15	MP2A	Mx	0	2.21
16	MP2A	X	0	4.21
17	MP2A	Z	-20.169	4.21
18	MP2A	Mx	0	4.21
19	MP4A	X	0	4.3
20	MP4A	Z	-4.146	4.3
21	MP4A	Mx	0	4.3
22	OVP	X	0	1.5
23	OVP	Z	-33.037	1.5
24	OVP	Mx	0	1.5

Member Point Loads (BLC 15 : Antenna Wi (0 Deg)) (Continued)

	Member Label	Direction	Magnitude[lb,k-ft]	Location[ft,%]
25	MP3A	X	0	5.8
26	MP3A	Z	-17.017	5.8
27	MP3A	Mx	0	5.8
28	MP4A	X	0	5.8
29	MP4A	Z	-17.017	5.8
30	MP4A	Mx	0	5.8
31	MP1A	X	0	1.5
32	MP1A	Z	-34.223	1.5
33	MP1A	Mx	0	1.5
34	MP1A	X	0	5.5
35	MP1A	Z	-34.223	5.5
36	MP1A	Mx	0	5.5

Member Point Loads (BLC 16 : Antenna Wi (30 Deg))

	Member Label	Direction	Magnitude[lb,k-ft]	Location[ft,%]
1	MP4A	X	17.447	1.5
2	MP4A	Z	-30.22	1.5
3	MP4A	Mx	-.031	1.5
4	MP4A	X	17.447	5.5
5	MP4A	Z	-30.22	5.5
6	MP4A	Mx	-.031	5.5
7	MP4A	X	17.447	1.5
8	MP4A	Z	-30.22	1.5
9	MP4A	Mx	.005	1.5
10	MP4A	X	17.447	5.5
11	MP4A	Z	-30.22	5.5
12	MP4A	Mx	.005	5.5
13	MP2A	X	8.639	2.21
14	MP2A	Z	-14.964	2.21
15	MP2A	Mx	-.006	2.21
16	MP2A	X	8.639	4.21
17	MP2A	Z	-14.964	4.21
18	MP2A	Mx	-.006	4.21
19	MP4A	X	1.944	4.3
20	MP4A	Z	-3.368	4.3
21	MP4A	Mx	.000972	4.3
22	OVP	X	14.617	1.5
23	OVP	Z	-25.318	1.5
24	OVP	Mx	0	1.5
25	MP3A	X	7.862	5.8
26	MP3A	Z	-13.618	5.8
27	MP3A	Mx	.004	5.8
28	MP4A	X	7.617	5.8
29	MP4A	Z	-13.192	5.8
30	MP4A	Mx	.004	5.8
31	MP1A	X	15.786	1.5
32	MP1A	Z	-27.342	1.5
33	MP1A	Mx	-.012	1.5
34	MP1A	X	15.786	5.5
35	MP1A	Z	-27.342	5.5
36	MP1A	Mx	-.012	5.5

Member Point Loads (BLC 17 : Antenna Wi (60 Deg))

	Member Label	Direction	Magnitude[lb,k-ft]	Location[ft,%]
1	MP4A	X	25.011	1.5
2	MP4A	Z	-14.44	1.5
3	MP4A	Mx	-.027	1.5
4	MP4A	X	25.011	5.5
5	MP4A	Z	-14.44	5.5
6	MP4A	Mx	-.027	5.5
7	MP4A	X	25.011	1.5
8	MP4A	Z	-14.44	1.5
9	MP4A	Mx	-.01	1.5
10	MP4A	X	25.011	5.5
11	MP4A	Z	-14.44	5.5
12	MP4A	Mx	-.01	5.5
13	MP2A	X	9.956	2.21
14	MP2A	Z	-5.748	2.21
15	MP2A	Mx	-.007	2.21
16	MP2A	X	9.956	4.21
17	MP2A	Z	-5.748	4.21
18	MP2A	Mx	-.007	4.21
19	MP4A	X	2.921	4.3
20	MP4A	Z	-1.687	4.3
21	MP4A	Mx	.001	4.3
22	OVP	X	23.671	1.5
23	OVP	Z	-13.666	1.5
24	OVP	Mx	0	1.5
25	MP3A	X	11.379	5.8
26	MP3A	Z	-6.57	5.8
27	MP3A	Mx	.006	5.8
28	MP4A	X	10.102	5.8
29	MP4A	Z	-5.833	5.8
30	MP4A	Mx	.005	5.8
31	MP1A	X	22.752	1.5
32	MP1A	Z	-13.136	1.5
33	MP1A	Mx	-.017	1.5
34	MP1A	X	22.752	5.5
35	MP1A	Z	-13.136	5.5
36	MP1A	Mx	-.017	5.5

Member Point Loads (BLC 18 : Antenna Wi (90 Deg))

	Member Label	Direction	Magnitude[lb,k-ft]	Location[ft,%]
1	MP4A	X	25.873	1.5
2	MP4A	Z	0	1.5
3	MP4A	Mx	-.019	1.5
4	MP4A	X	25.873	5.5
5	MP4A	Z	0	5.5
6	MP4A	Mx	-.019	5.5
7	MP4A	X	25.873	1.5
8	MP4A	Z	0	1.5
9	MP4A	Mx	-.019	1.5
10	MP4A	X	25.873	5.5
11	MP4A	Z	0	5.5
12	MP4A	Mx	-.019	5.5

Member Point Loads (BLC 18 : Antenna Wi (90 Deg)) (Continued)

	Member Label	Direction	Magnitude[lb,k-ft]	Location[ft,%]
13	MP2A	X	8.606	2.21
14	MP2A	Z	0	2.21
15	MP2A	Mx	-.006	2.21
16	MP2A	X	8.606	4.21
17	MP2A	Z	0	4.21
18	MP2A	Mx	-.006	4.21
19	MP4A	X	3.115	4.3
20	MP4A	Z	0	4.3
21	MP4A	Mx	.002	4.3
22	OVP	X	29.234	1.5
23	OVP	Z	0	1.5
24	OVP	Mx	0	1.5
25	MP3A	X	11.846	5.8
26	MP3A	Z	0	5.8
27	MP3A	Mx	.006	5.8
28	MP4A	X	9.881	5.8
29	MP4A	Z	0	5.8
30	MP4A	Mx	.005	5.8
31	MP1A	X	23.621	1.5
32	MP1A	Z	0	1.5
33	MP1A	Mx	-.018	1.5
34	MP1A	X	23.621	5.5
35	MP1A	Z	0	5.5
36	MP1A	Mx	-.018	5.5

Member Point Loads (BLC 19 : Antenna Wi (120 Deg))

	Member Label	Direction	Magnitude[lb,k-ft]	Location[ft,%]
1	MP4A	X	25.011	1.5
2	MP4A	Z	14.44	1.5
3	MP4A	Mx	-.01	1.5
4	MP4A	X	25.011	5.5
5	MP4A	Z	14.44	5.5
6	MP4A	Mx	-.01	5.5
7	MP4A	X	25.011	1.5
8	MP4A	Z	14.44	1.5
9	MP4A	Mx	-.027	1.5
10	MP4A	X	25.011	5.5
11	MP4A	Z	14.44	5.5
12	MP4A	Mx	-.027	5.5
13	MP2A	X	9.956	2.21
14	MP2A	Z	5.748	2.21
15	MP2A	Mx	-.007	2.21
16	MP2A	X	9.956	4.21
17	MP2A	Z	5.748	4.21
18	MP2A	Mx	-.007	4.21
19	MP4A	X	2.921	4.3
20	MP4A	Z	1.687	4.3
21	MP4A	Mx	.001	4.3
22	OVP	X	28.611	1.5
23	OVP	Z	16.518	1.5
24	OVP	Mx	0	1.5

Member Point Loads (BLC 19 : Antenna Wi (120 Deg)) (Continued)

	Member Label	Direction	Magnitude[lb,k-ft]	Location[ft,%]
25	MP3A	X	11.379	5.8
26	MP3A	Z	6.57	5.8
27	MP3A	Mx	.006	5.8
28	MP4A	X	10.102	5.8
29	MP4A	Z	5.833	5.8
30	MP4A	Mx	.005	5.8
31	MP1A	X	22.752	1.5
32	MP1A	Z	13.136	1.5
33	MP1A	Mx	-.017	1.5
34	MP1A	X	22.752	5.5
35	MP1A	Z	13.136	5.5
36	MP1A	Mx	-.017	5.5

Member Point Loads (BLC 20 : Antenna Wi (150 Deg))

	Member Label	Direction	Magnitude[lb,k-ft]	Location[ft,%]
1	MP4A	X	17.447	1.5
2	MP4A	Z	30.22	1.5
3	MP4A	Mx	.005	1.5
4	MP4A	X	17.447	5.5
5	MP4A	Z	30.22	5.5
6	MP4A	Mx	.005	5.5
7	MP4A	X	17.447	1.5
8	MP4A	Z	30.22	1.5
9	MP4A	Mx	-.031	1.5
10	MP4A	X	17.447	5.5
11	MP4A	Z	30.22	5.5
12	MP4A	Mx	-.031	5.5
13	MP2A	X	8.639	2.21
14	MP2A	Z	14.964	2.21
15	MP2A	Mx	-.006	2.21
16	MP2A	X	8.639	4.21
17	MP2A	Z	14.964	4.21
18	MP2A	Mx	-.006	4.21
19	MP4A	X	1.944	4.3
20	MP4A	Z	3.368	4.3
21	MP4A	Mx	.000972	4.3
22	OVP	X	17.469	1.5
23	OVP	Z	30.257	1.5
24	OVP	Mx	0	1.5
25	MP3A	X	7.862	5.8
26	MP3A	Z	13.618	5.8
27	MP3A	Mx	.004	5.8
28	MP4A	X	7.617	5.8
29	MP4A	Z	13.192	5.8
30	MP4A	Mx	.004	5.8
31	MP1A	X	15.786	1.5
32	MP1A	Z	27.342	1.5
33	MP1A	Mx	-.012	1.5
34	MP1A	X	15.786	5.5
35	MP1A	Z	27.342	5.5
36	MP1A	Mx	-.012	5.5

Member Point Loads (BLC 21 : Antenna Wi (180 Deg))

	Member Label	Direction	Magnitude[lb,k-ft]	Location[ft,%]
1	MP4A	X	0	1.5
2	MP4A	Z	37.902	1.5
3	MP4A	Mx	.022	1.5
4	MP4A	X	0	5.5
5	MP4A	Z	37.902	5.5
6	MP4A	Mx	.022	5.5
7	MP4A	X	0	1.5
8	MP4A	Z	37.902	1.5
9	MP4A	Mx	-.022	1.5
10	MP4A	X	0	5.5
11	MP4A	Z	37.902	5.5
12	MP4A	Mx	-.022	5.5
13	MP2A	X	0	2.21
14	MP2A	Z	20.169	2.21
15	MP2A	Mx	0	2.21
16	MP2A	X	0	4.21
17	MP2A	Z	20.169	4.21
18	MP2A	Mx	0	4.21
19	MP4A	X	0	4.3
20	MP4A	Z	4.146	4.3
21	MP4A	Mx	0	4.3
22	OVP	X	0	1.5
23	OVP	Z	33.037	1.5
24	OVP	Mx	0	1.5
25	MP3A	X	0	5.8
26	MP3A	Z	17.017	5.8
27	MP3A	Mx	0	5.8
28	MP4A	X	0	5.8
29	MP4A	Z	17.017	5.8
30	MP4A	Mx	0	5.8
31	MP1A	X	0	1.5
32	MP1A	Z	34.223	1.5
33	MP1A	Mx	0	1.5
34	MP1A	X	0	5.5
35	MP1A	Z	34.223	5.5
36	MP1A	Mx	0	5.5

Member Point Loads (BLC 22 : Antenna Wi (210 Deg))

	Member Label	Direction	Magnitude[lb,k-ft]	Location[ft,%]
1	MP4A	X	-17.447	1.5
2	MP4A	Z	30.22	1.5
3	MP4A	Mx	.031	1.5
4	MP4A	X	-17.447	5.5
5	MP4A	Z	30.22	5.5
6	MP4A	Mx	.031	5.5
7	MP4A	X	-17.447	1.5
8	MP4A	Z	30.22	1.5
9	MP4A	Mx	-.005	1.5
10	MP4A	X	-17.447	5.5
11	MP4A	Z	30.22	5.5
12	MP4A	Mx	-.005	5.5

Member Point Loads (BLC 22 : Antenna Wi (210 Deg)) (Continued)

	Member Label	Direction	Magnitude[lb,k-ft]	Location[ft,%]
13	MP2A	X	-8.639	2.21
14	MP2A	Z	14.964	2.21
15	MP2A	Mx	.006	2.21
16	MP2A	X	-8.639	4.21
17	MP2A	Z	14.964	4.21
18	MP2A	Mx	.006	4.21
19	MP4A	X	-1.944	4.3
20	MP4A	Z	3.368	4.3
21	MP4A	Mx	-.000972	4.3
22	OVP	X	-14.617	1.5
23	OVP	Z	25.318	1.5
24	OVP	Mx	0	1.5
25	MP3A	X	-7.862	5.8
26	MP3A	Z	13.618	5.8
27	MP3A	Mx	-.004	5.8
28	MP4A	X	-7.617	5.8
29	MP4A	Z	13.192	5.8
30	MP4A	Mx	-.004	5.8
31	MP1A	X	-15.786	1.5
32	MP1A	Z	27.342	1.5
33	MP1A	Mx	.012	1.5
34	MP1A	X	-15.786	5.5
35	MP1A	Z	27.342	5.5
36	MP1A	Mx	.012	5.5

Member Point Loads (BLC 23 : Antenna Wi (240 Deg))

	Member Label	Direction	Magnitude[lb,k-ft]	Location[ft,%]
1	MP4A	X	-25.011	1.5
2	MP4A	Z	14.44	1.5
3	MP4A	Mx	.027	1.5
4	MP4A	X	-25.011	5.5
5	MP4A	Z	14.44	5.5
6	MP4A	Mx	.027	5.5
7	MP4A	X	-25.011	1.5
8	MP4A	Z	14.44	1.5
9	MP4A	Mx	.01	1.5
10	MP4A	X	-25.011	5.5
11	MP4A	Z	14.44	5.5
12	MP4A	Mx	.01	5.5
13	MP2A	X	-9.956	2.21
14	MP2A	Z	5.748	2.21
15	MP2A	Mx	.007	2.21
16	MP2A	X	-9.956	4.21
17	MP2A	Z	5.748	4.21
18	MP2A	Mx	.007	4.21
19	MP4A	X	-2.921	4.3
20	MP4A	Z	1.687	4.3
21	MP4A	Mx	-.001	4.3
22	OVP	X	-23.671	1.5
23	OVP	Z	13.666	1.5
24	OVP	Mx	0	1.5

Member Point Loads (BLC 23 : Antenna Wi (240 Deg)) (Continued)

	Member Label	Direction	Magnitude[lb,k-ft]	Location[ft,%]
25	MP3A	X	-11.379	5.8
26	MP3A	Z	6.57	5.8
27	MP3A	Mx	-.006	5.8
28	MP4A	X	-10.102	5.8
29	MP4A	Z	5.833	5.8
30	MP4A	Mx	-.005	5.8
31	MP1A	X	-22.752	1.5
32	MP1A	Z	13.136	1.5
33	MP1A	Mx	.017	1.5
34	MP1A	X	-22.752	5.5
35	MP1A	Z	13.136	5.5
36	MP1A	Mx	.017	5.5

Member Point Loads (BLC 24 : Antenna Wi (270 Deg))

	Member Label	Direction	Magnitude[lb,k-ft]	Location[ft,%]
1	MP4A	X	-25.873	1.5
2	MP4A	Z	0	1.5
3	MP4A	Mx	.019	1.5
4	MP4A	X	-25.873	5.5
5	MP4A	Z	0	5.5
6	MP4A	Mx	.019	5.5
7	MP4A	X	-25.873	1.5
8	MP4A	Z	0	1.5
9	MP4A	Mx	.019	1.5
10	MP4A	X	-25.873	5.5
11	MP4A	Z	0	5.5
12	MP4A	Mx	.019	5.5
13	MP2A	X	-8.606	2.21
14	MP2A	Z	0	2.21
15	MP2A	Mx	.006	2.21
16	MP2A	X	-8.606	4.21
17	MP2A	Z	0	4.21
18	MP2A	Mx	.006	4.21
19	MP4A	X	-3.115	4.3
20	MP4A	Z	0	4.3
21	MP4A	Mx	-.002	4.3
22	OVP	X	-29.234	1.5
23	OVP	Z	0	1.5
24	OVP	Mx	0	1.5
25	MP3A	X	-11.846	5.8
26	MP3A	Z	0	5.8
27	MP3A	Mx	-.006	5.8
28	MP4A	X	-9.881	5.8
29	MP4A	Z	0	5.8
30	MP4A	Mx	-.005	5.8
31	MP1A	X	-23.621	1.5
32	MP1A	Z	0	1.5
33	MP1A	Mx	.018	1.5
34	MP1A	X	-23.621	5.5
35	MP1A	Z	0	5.5
36	MP1A	Mx	.018	5.5

Member Point Loads (BLC 25 : Antenna Wi (300 Deg))

	Member Label	Direction	Magnitude[lb,k-ft]	Location[ft,%]
1	MP4A	X	-25.011	1.5
2	MP4A	Z	-14.44	1.5
3	MP4A	Mx	.01	1.5
4	MP4A	X	-25.011	5.5
5	MP4A	Z	-14.44	5.5
6	MP4A	Mx	.01	5.5
7	MP4A	X	-25.011	1.5
8	MP4A	Z	-14.44	1.5
9	MP4A	Mx	.027	1.5
10	MP4A	X	-25.011	5.5
11	MP4A	Z	-14.44	5.5
12	MP4A	Mx	.027	5.5
13	MP2A	X	-9.956	2.21
14	MP2A	Z	-5.748	2.21
15	MP2A	Mx	.007	2.21
16	MP2A	X	-9.956	4.21
17	MP2A	Z	-5.748	4.21
18	MP2A	Mx	.007	4.21
19	MP4A	X	-2.921	4.3
20	MP4A	Z	-1.687	4.3
21	MP4A	Mx	-.001	4.3
22	OVP	X	-28.611	1.5
23	OVP	Z	-16.518	1.5
24	OVP	Mx	0	1.5
25	MP3A	X	-11.379	5.8
26	MP3A	Z	-6.57	5.8
27	MP3A	Mx	-.006	5.8
28	MP4A	X	-10.102	5.8
29	MP4A	Z	-5.833	5.8
30	MP4A	Mx	-.005	5.8
31	MP1A	X	-22.752	1.5
32	MP1A	Z	-13.136	1.5
33	MP1A	Mx	.017	1.5
34	MP1A	X	-22.752	5.5
35	MP1A	Z	-13.136	5.5
36	MP1A	Mx	.017	5.5

Member Point Loads (BLC 26 : Antenna Wi (330 Deg))

	Member Label	Direction	Magnitude[lb,k-ft]	Location[ft,%]
1	MP4A	X	-17.447	1.5
2	MP4A	Z	-30.22	1.5
3	MP4A	Mx	-.005	1.5
4	MP4A	X	-17.447	5.5
5	MP4A	Z	-30.22	5.5
6	MP4A	Mx	-.005	5.5
7	MP4A	X	-17.447	1.5
8	MP4A	Z	-30.22	1.5
9	MP4A	Mx	.031	1.5
10	MP4A	X	-17.447	5.5
11	MP4A	Z	-30.22	5.5
12	MP4A	Mx	.031	5.5

Member Point Loads (BLC 26 : Antenna Wi (330 Deg)) (Continued)

	Member Label	Direction	Magnitude[lb,k-ft]	Location[ft,%]
13	MP2A	X	-8.639	2.21
14	MP2A	Z	-14.964	2.21
15	MP2A	Mx	.006	2.21
16	MP2A	X	-8.639	4.21
17	MP2A	Z	-14.964	4.21
18	MP2A	Mx	.006	4.21
19	MP4A	X	-1.944	4.3
20	MP4A	Z	-3.368	4.3
21	MP4A	Mx	-.000972	4.3
22	OVP	X	-17.469	1.5
23	OVP	Z	-30.257	1.5
24	OVP	Mx	0	1.5
25	MP3A	X	-7.862	5.8
26	MP3A	Z	-13.618	5.8
27	MP3A	Mx	-.004	5.8
28	MP4A	X	-7.617	5.8
29	MP4A	Z	-13.192	5.8
30	MP4A	Mx	-.004	5.8
31	MP1A	X	-15.786	1.5
32	MP1A	Z	-27.342	1.5
33	MP1A	Mx	.012	1.5
34	MP1A	X	-15.786	5.5
35	MP1A	Z	-27.342	5.5
36	MP1A	Mx	.012	5.5

Member Point Loads (BLC 27 : Antenna Wm (0 Deg))

	Member Label	Direction	Magnitude[lb,k-ft]	Location[ft,%]
1	MP4A	X	0	1.5
2	MP4A	Z	-12.43	1.5
3	MP4A	Mx	-.007	1.5
4	MP4A	X	0	5.5
5	MP4A	Z	-12.43	5.5
6	MP4A	Mx	-.007	5.5
7	MP4A	X	0	1.5
8	MP4A	Z	-12.43	1.5
9	MP4A	Mx	.007	1.5
10	MP4A	X	0	5.5
11	MP4A	Z	-12.43	5.5
12	MP4A	Mx	.007	5.5
13	MP2A	X	0	2.21
14	MP2A	Z	-6.413	2.21
15	MP2A	Mx	0	2.21
16	MP2A	X	0	4.21
17	MP2A	Z	-6.413	4.21
18	MP2A	Mx	0	4.21
19	MP4A	X	0	4.3
20	MP4A	Z	-1.01	4.3
21	MP4A	Mx	0	4.3
22	OVP	X	0	1.5
23	OVP	Z	-10.422	1.5
24	OVP	Mx	0	1.5

Member Point Loads (BLC 27 : Antenna Wm (0 Deg)) (Continued)

	Member Label	Direction	Magnitude[lb,k-ft]	Location[ft,%]
25	MP3A	X	0	5.8
26	MP3A	Z	-5.103	5.8
27	MP3A	Mx	0	5.8
28	MP4A	X	0	5.8
29	MP4A	Z	-5.103	5.8
30	MP4A	Mx	0	5.8
31	MP1A	X	0	1.5
32	MP1A	Z	-11.147	1.5
33	MP1A	Mx	0	1.5
34	MP1A	X	0	5.5
35	MP1A	Z	-11.147	5.5
36	MP1A	Mx	0	5.5

Member Point Loads (BLC 28 : Antenna Wm (30 Deg))

	Member Label	Direction	Magnitude[lb,k-ft]	Location[ft,%]
1	MP4A	X	5.682	1.5
2	MP4A	Z	-9.841	1.5
3	MP4A	Mx	-.01	1.5
4	MP4A	X	5.682	5.5
5	MP4A	Z	-9.841	5.5
6	MP4A	Mx	-.01	5.5
7	MP4A	X	5.682	1.5
8	MP4A	Z	-9.841	1.5
9	MP4A	Mx	.001	1.5
10	MP4A	X	5.682	5.5
11	MP4A	Z	-9.841	5.5
12	MP4A	Mx	.001	5.5
13	MP2A	X	2.719	2.21
14	MP2A	Z	-4.709	2.21
15	MP2A	Mx	-.002	2.21
16	MP2A	X	2.719	4.21
17	MP2A	Z	-4.709	4.21
18	MP2A	Mx	-.002	4.21
19	MP4A	X	.466	4.3
20	MP4A	Z	-.807	4.3
21	MP4A	Mx	.000233	4.3
22	OVP	X	4.555	1.5
23	OVP	Z	-7.889	1.5
24	OVP	Mx	0	1.5
25	MP3A	X	2.34	5.8
26	MP3A	Z	-4.053	5.8
27	MP3A	Mx	.001	5.8
28	MP4A	X	2.259	5.8
29	MP4A	Z	-3.913	5.8
30	MP4A	Mx	.001	5.8
31	MP1A	X	5.102	1.5
32	MP1A	Z	-8.837	1.5
33	MP1A	Mx	-.004	1.5
34	MP1A	X	5.102	5.5
35	MP1A	Z	-8.837	5.5
36	MP1A	Mx	-.004	5.5

Member Point Loads (BLC 29 : Antenna Wm (60 Deg))

	Member Label	Direction	Magnitude[lb,k-ft]	Location[ft,%]
1	MP4A	X	7.994	1.5
2	MP4A	Z	-4.615	1.5
3	MP4A	Mx	-.009	1.5
4	MP4A	X	7.994	5.5
5	MP4A	Z	-4.615	5.5
6	MP4A	Mx	-.009	5.5
7	MP4A	X	7.994	1.5
8	MP4A	Z	-4.615	1.5
9	MP4A	Mx	-.003	1.5
10	MP4A	X	7.994	5.5
11	MP4A	Z	-4.615	5.5
12	MP4A	Mx	-.003	5.5
13	MP2A	X	3.019	2.21
14	MP2A	Z	-1.743	2.21
15	MP2A	Mx	-.002	2.21
16	MP2A	X	3.019	4.21
17	MP2A	Z	-1.743	4.21
18	MP2A	Mx	-.002	4.21
19	MP4A	X	.672	4.3
20	MP4A	Z	-.388	4.3
21	MP4A	Mx	.000336	4.3
22	OVP	X	7.32	1.5
23	OVP	Z	-4.226	1.5
24	OVP	Mx	0	1.5
25	MP3A	X	3.32	5.8
26	MP3A	Z	-1.917	5.8
27	MP3A	Mx	.002	5.8
28	MP4A	X	2.899	5.8
29	MP4A	Z	-1.674	5.8
30	MP4A	Mx	.001	5.8
31	MP1A	X	7.204	1.5
32	MP1A	Z	-4.159	1.5
33	MP1A	Mx	-.005	1.5
34	MP1A	X	7.204	5.5
35	MP1A	Z	-4.159	5.5
36	MP1A	Mx	-.005	5.5

Member Point Loads (BLC 30 : Antenna Wm (90 Deg))

	Member Label	Direction	Magnitude[lb,k-ft]	Location[ft,%]
1	MP4A	X	8.164	1.5
2	MP4A	Z	0	1.5
3	MP4A	Mx	-.006	1.5
4	MP4A	X	8.164	5.5
5	MP4A	Z	0	5.5
6	MP4A	Mx	-.006	5.5
7	MP4A	X	8.164	1.5
8	MP4A	Z	0	1.5
9	MP4A	Mx	-.006	1.5
10	MP4A	X	8.164	5.5
11	MP4A	Z	0	5.5
12	MP4A	Mx	-.006	5.5

Member Point Loads (BLC 30 : Antenna Wm (90 Deg)) (Continued)

	Member Label	Direction	Magnitude[lb,k-ft]	Location[ft,%]
13	MP2A	X	2.511	2.21
14	MP2A	Z	0	2.21
15	MP2A	Mx	-.002	2.21
16	MP2A	X	2.511	4.21
17	MP2A	Z	0	4.21
18	MP2A	Mx	-.002	4.21
19	MP4A	X	.699	4.3
20	MP4A	Z	0	4.3
21	MP4A	Mx	.00035	4.3
22	OVP	X	9.109	1.5
23	OVP	Z	0	1.5
24	OVP	Mx	0	1.5
25	MP3A	X	3.411	5.8
26	MP3A	Z	0	5.8
27	MP3A	Mx	.002	5.8
28	MP4A	X	2.763	5.8
29	MP4A	Z	0	5.8
30	MP4A	Mx	.001	5.8
31	MP1A	X	7.375	1.5
32	MP1A	Z	0	1.5
33	MP1A	Mx	-.006	1.5
34	MP1A	X	7.375	5.5
35	MP1A	Z	0	5.5
36	MP1A	Mx	-.006	5.5

Member Point Loads (BLC 31 : Antenna Wm (120 Deg))

	Member Label	Direction	Magnitude[lb,k-ft]	Location[ft,%]
1	MP4A	X	7.994	1.5
2	MP4A	Z	4.615	1.5
3	MP4A	Mx	-.003	1.5
4	MP4A	X	7.994	5.5
5	MP4A	Z	4.615	5.5
6	MP4A	Mx	-.003	5.5
7	MP4A	X	7.994	1.5
8	MP4A	Z	4.615	1.5
9	MP4A	Mx	-.009	1.5
10	MP4A	X	7.994	5.5
11	MP4A	Z	4.615	5.5
12	MP4A	Mx	-.009	5.5
13	MP2A	X	3.019	2.21
14	MP2A	Z	1.743	2.21
15	MP2A	Mx	-.002	2.21
16	MP2A	X	3.019	4.21
17	MP2A	Z	1.743	4.21
18	MP2A	Mx	-.002	4.21
19	MP4A	X	.672	4.3
20	MP4A	Z	.388	4.3
21	MP4A	Mx	.000336	4.3
22	OVP	X	9.026	1.5
23	OVP	Z	5.211	1.5
24	OVP	Mx	0	1.5

Member Point Loads (BLC 31 : Antenna Wm (120 Deg)) (Continued)

	Member Label	Direction	Magnitude[lb,k-ft]	Location[ft,%]
25	MP3A	X	3.32	5.8
26	MP3A	Z	1.917	5.8
27	MP3A	Mx	.002	5.8
28	MP4A	X	2.899	5.8
29	MP4A	Z	1.674	5.8
30	MP4A	Mx	.001	5.8
31	MP1A	X	7.204	1.5
32	MP1A	Z	4.159	1.5
33	MP1A	Mx	-.005	1.5
34	MP1A	X	7.204	5.5
35	MP1A	Z	4.159	5.5
36	MP1A	Mx	-.005	5.5

Member Point Loads (BLC 32 : Antenna Wm (150 Deg))

	Member Label	Direction	Magnitude[lb,k-ft]	Location[ft,%]
1	MP4A	X	5.682	1.5
2	MP4A	Z	9.841	1.5
3	MP4A	Mx	.001	1.5
4	MP4A	X	5.682	5.5
5	MP4A	Z	9.841	5.5
6	MP4A	Mx	.001	5.5
7	MP4A	X	5.682	1.5
8	MP4A	Z	9.841	1.5
9	MP4A	Mx	-.01	1.5
10	MP4A	X	5.682	5.5
11	MP4A	Z	9.841	5.5
12	MP4A	Mx	-.01	5.5
13	MP2A	X	2.719	2.21
14	MP2A	Z	4.709	2.21
15	MP2A	Mx	-.002	2.21
16	MP2A	X	2.719	4.21
17	MP2A	Z	4.709	4.21
18	MP2A	Mx	-.002	4.21
19	MP4A	X	.466	4.3
20	MP4A	Z	.807	4.3
21	MP4A	Mx	.000233	4.3
22	OVP	X	5.539	1.5
23	OVP	Z	9.595	1.5
24	OVP	Mx	0	1.5
25	MP3A	X	2.34	5.8
26	MP3A	Z	4.053	5.8
27	MP3A	Mx	.001	5.8
28	MP4A	X	2.259	5.8
29	MP4A	Z	3.913	5.8
30	MP4A	Mx	.001	5.8
31	MP1A	X	5.102	1.5
32	MP1A	Z	8.837	1.5
33	MP1A	Mx	-.004	1.5
34	MP1A	X	5.102	5.5
35	MP1A	Z	8.837	5.5
36	MP1A	Mx	-.004	5.5

Member Point Loads (BLC 33 : Antenna Wm (180 Deg))

	Member Label	Direction	Magnitude[lb,k-ft]	Location[ft,%]
1	MP4A	X	0	1.5
2	MP4A	Z	12.43	1.5
3	MP4A	Mx	.007	1.5
4	MP4A	X	0	5.5
5	MP4A	Z	12.43	5.5
6	MP4A	Mx	.007	5.5
7	MP4A	X	0	1.5
8	MP4A	Z	12.43	1.5
9	MP4A	Mx	-.007	1.5
10	MP4A	X	0	5.5
11	MP4A	Z	12.43	5.5
12	MP4A	Mx	-.007	5.5
13	MP2A	X	0	2.21
14	MP2A	Z	6.413	2.21
15	MP2A	Mx	0	2.21
16	MP2A	X	0	4.21
17	MP2A	Z	6.413	4.21
18	MP2A	Mx	0	4.21
19	MP4A	X	0	4.3
20	MP4A	Z	1.01	4.3
21	MP4A	Mx	0	4.3
22	OVP	X	0	1.5
23	OVP	Z	10.422	1.5
24	OVP	Mx	0	1.5
25	MP3A	X	0	5.8
26	MP3A	Z	5.103	5.8
27	MP3A	Mx	0	5.8
28	MP4A	X	0	5.8
29	MP4A	Z	5.103	5.8
30	MP4A	Mx	0	5.8
31	MP1A	X	0	1.5
32	MP1A	Z	11.147	1.5
33	MP1A	Mx	0	1.5
34	MP1A	X	0	5.5
35	MP1A	Z	11.147	5.5
36	MP1A	Mx	0	5.5

Member Point Loads (BLC 34 : Antenna Wm (210 Deg))

	Member Label	Direction	Magnitude[lb,k-ft]	Location[ft,%]
1	MP4A	X	-5.682	1.5
2	MP4A	Z	9.841	1.5
3	MP4A	Mx	.01	1.5
4	MP4A	X	-5.682	5.5
5	MP4A	Z	9.841	5.5
6	MP4A	Mx	.01	5.5
7	MP4A	X	-5.682	1.5
8	MP4A	Z	9.841	1.5
9	MP4A	Mx	-.001	1.5
10	MP4A	X	-5.682	5.5
11	MP4A	Z	9.841	5.5
12	MP4A	Mx	-.001	5.5

Member Point Loads (BLC 34 : Antenna Wm (210 Deg)) (Continued)

	Member Label	Direction	Magnitude[lb,k-ft]	Location[ft,%]
13	MP2A	X	-2.719	2.21
14	MP2A	Z	4.709	2.21
15	MP2A	Mx	.002	2.21
16	MP2A	X	-2.719	4.21
17	MP2A	Z	4.709	4.21
18	MP2A	Mx	.002	4.21
19	MP4A	X	-.466	4.3
20	MP4A	Z	.807	4.3
21	MP4A	Mx	-.000233	4.3
22	OVP	X	-4.555	1.5
23	OVP	Z	7.889	1.5
24	OVP	Mx	0	1.5
25	MP3A	X	-2.34	5.8
26	MP3A	Z	4.053	5.8
27	MP3A	Mx	-.001	5.8
28	MP4A	X	-2.259	5.8
29	MP4A	Z	3.913	5.8
30	MP4A	Mx	-.001	5.8
31	MP1A	X	-5.102	1.5
32	MP1A	Z	8.837	1.5
33	MP1A	Mx	.004	1.5
34	MP1A	X	-5.102	5.5
35	MP1A	Z	8.837	5.5
36	MP1A	Mx	.004	5.5

Member Point Loads (BLC 35 : Antenna Wm (240 Deg))

	Member Label	Direction	Magnitude[lb,k-ft]	Location[ft,%]
1	MP4A	X	-7.994	1.5
2	MP4A	Z	4.615	1.5
3	MP4A	Mx	.009	1.5
4	MP4A	X	-7.994	5.5
5	MP4A	Z	4.615	5.5
6	MP4A	Mx	.009	5.5
7	MP4A	X	-7.994	1.5
8	MP4A	Z	4.615	1.5
9	MP4A	Mx	.003	1.5
10	MP4A	X	-7.994	5.5
11	MP4A	Z	4.615	5.5
12	MP4A	Mx	.003	5.5
13	MP2A	X	-3.019	2.21
14	MP2A	Z	1.743	2.21
15	MP2A	Mx	.002	2.21
16	MP2A	X	-3.019	4.21
17	MP2A	Z	1.743	4.21
18	MP2A	Mx	.002	4.21
19	MP4A	X	-.672	4.3
20	MP4A	Z	.388	4.3
21	MP4A	Mx	-.000336	4.3
22	OVP	X	-7.32	1.5
23	OVP	Z	4.226	1.5
24	OVP	Mx	0	1.5

Member Point Loads (BLC 35 : Antenna Wm (240 Deg)) (Continued)

	Member Label	Direction	Magnitude[lb,k-ft]	Location[ft,%]
25	MP3A	X	-3.32	5.8
26	MP3A	Z	1.917	5.8
27	MP3A	Mx	-.002	5.8
28	MP4A	X	-2.899	5.8
29	MP4A	Z	1.674	5.8
30	MP4A	Mx	-.001	5.8
31	MP1A	X	-7.204	1.5
32	MP1A	Z	4.159	1.5
33	MP1A	Mx	.005	1.5
34	MP1A	X	-7.204	5.5
35	MP1A	Z	4.159	5.5
36	MP1A	Mx	.005	5.5

Member Point Loads (BLC 36 : Antenna Wm (270 Deg))

	Member Label	Direction	Magnitude[lb,k-ft]	Location[ft,%]
1	MP4A	X	-8.164	1.5
2	MP4A	Z	0	1.5
3	MP4A	Mx	.006	1.5
4	MP4A	X	-8.164	5.5
5	MP4A	Z	0	5.5
6	MP4A	Mx	.006	5.5
7	MP4A	X	-8.164	1.5
8	MP4A	Z	0	1.5
9	MP4A	Mx	.006	1.5
10	MP4A	X	-8.164	5.5
11	MP4A	Z	0	5.5
12	MP4A	Mx	.006	5.5
13	MP2A	X	-2.511	2.21
14	MP2A	Z	0	2.21
15	MP2A	Mx	.002	2.21
16	MP2A	X	-2.511	4.21
17	MP2A	Z	0	4.21
18	MP2A	Mx	.002	4.21
19	MP4A	X	-.699	4.3
20	MP4A	Z	0	4.3
21	MP4A	Mx	-.00035	4.3
22	OVP	X	-9.109	1.5
23	OVP	Z	0	1.5
24	OVP	Mx	0	1.5
25	MP3A	X	-3.411	5.8
26	MP3A	Z	0	5.8
27	MP3A	Mx	-.002	5.8
28	MP4A	X	-2.763	5.8
29	MP4A	Z	0	5.8
30	MP4A	Mx	-.001	5.8
31	MP1A	X	-7.375	1.5
32	MP1A	Z	0	1.5
33	MP1A	Mx	.006	1.5
34	MP1A	X	-7.375	5.5
35	MP1A	Z	0	5.5
36	MP1A	Mx	.006	5.5

Member Point Loads (BLC 37 : Antenna Wm (300 Deg))

	Member Label	Direction	Magnitude[lb,k-ft]	Location[ft,%]
1	MP4A	X	-7.994	1.5
2	MP4A	Z	-4.615	1.5
3	MP4A	Mx	.003	1.5
4	MP4A	X	-7.994	5.5
5	MP4A	Z	-4.615	5.5
6	MP4A	Mx	.003	5.5
7	MP4A	X	-7.994	1.5
8	MP4A	Z	-4.615	1.5
9	MP4A	Mx	.009	1.5
10	MP4A	X	-7.994	5.5
11	MP4A	Z	-4.615	5.5
12	MP4A	Mx	.009	5.5
13	MP2A	X	-3.019	2.21
14	MP2A	Z	-1.743	2.21
15	MP2A	Mx	.002	2.21
16	MP2A	X	-3.019	4.21
17	MP2A	Z	-1.743	4.21
18	MP2A	Mx	.002	4.21
19	MP4A	X	-.672	4.3
20	MP4A	Z	-.388	4.3
21	MP4A	Mx	-.000336	4.3
22	OVP	X	-9.026	1.5
23	OVP	Z	-5.211	1.5
24	OVP	Mx	0	1.5
25	MP3A	X	-3.32	5.8
26	MP3A	Z	-1.917	5.8
27	MP3A	Mx	-.002	5.8
28	MP4A	X	-2.899	5.8
29	MP4A	Z	-1.674	5.8
30	MP4A	Mx	-.001	5.8
31	MP1A	X	-7.204	1.5
32	MP1A	Z	-4.159	1.5
33	MP1A	Mx	.005	1.5
34	MP1A	X	-7.204	5.5
35	MP1A	Z	-4.159	5.5
36	MP1A	Mx	.005	5.5

Member Point Loads (BLC 38 : Antenna Wm (330 Deg))

	Member Label	Direction	Magnitude[lb,k-ft]	Location[ft,%]
1	MP4A	X	-5.682	1.5
2	MP4A	Z	-9.841	1.5
3	MP4A	Mx	-.001	1.5
4	MP4A	X	-5.682	5.5
5	MP4A	Z	-9.841	5.5
6	MP4A	Mx	-.001	5.5
7	MP4A	X	-5.682	1.5
8	MP4A	Z	-9.841	1.5
9	MP4A	Mx	.01	1.5
10	MP4A	X	-5.682	5.5
11	MP4A	Z	-9.841	5.5
12	MP4A	Mx	.01	5.5

Member Point Loads (BLC 38 : Antenna Wm (330 Deg)) (Continued)

	Member Label	Direction	Magnitude[lb,k-ft]	Location[ft,%]
13	MP2A	X	-2.719	2.21
14	MP2A	Z	-4.709	2.21
15	MP2A	Mx	.002	2.21
16	MP2A	X	-2.719	4.21
17	MP2A	Z	-4.709	4.21
18	MP2A	Mx	.002	4.21
19	MP4A	X	-.466	4.3
20	MP4A	Z	-.807	4.3
21	MP4A	Mx	-.000233	4.3
22	OVP	X	-5.539	1.5
23	OVP	Z	-9.595	1.5
24	OVP	Mx	0	1.5
25	MP3A	X	-2.34	5.8
26	MP3A	Z	-4.053	5.8
27	MP3A	Mx	-.001	5.8
28	MP4A	X	-2.259	5.8
29	MP4A	Z	-3.913	5.8
30	MP4A	Mx	-.001	5.8
31	MP1A	X	-5.102	1.5
32	MP1A	Z	-8.837	1.5
33	MP1A	Mx	.004	1.5
34	MP1A	X	-5.102	5.5
35	MP1A	Z	-8.837	5.5
36	MP1A	Mx	.004	5.5

Member Point Loads (BLC 77 : Lm1)

	Member Label	Direction	Magnitude[lb,k-ft]	Location[ft,%]
1	M1	Y	-500	%4

Member Point Loads (BLC 78 : Lm2)

	Member Label	Direction	Magnitude[lb,k-ft]	Location[ft,%]
1	M2	Y	-500	%36

Member Point Loads (BLC 79 : Lv1)

	Member Label	Direction	Magnitude[lb,k-ft]	Location[ft,%]
1	M1	Y	-250	0

Member Point Loads (BLC 80 : Lv2)

	Member Label	Direction	Magnitude[lb,k-ft]	Location[ft,%]
1	M1	Y	-250	%100

Member Distributed Loads (BLC 40 : Structure Di)

	Member Label	Direction	Start Magnitude[lb/ft,...	End Magnitude[lb/ft,F...	Start Location[ft,%]	End Location[ft,%]
1	M1	Y	-7.788	-7.788	0	%100
2	M2	Y	-7.788	-7.788	0	%100
3	M7A	Y	-7.788	-7.788	0	%100
4	M8	Y	-7.788	-7.788	0	%100
5	M13	Y	-5.104	-5.104	0	%100

Member Distributed Loads (BLC 40 : Structure Di) (Continued)

	Member Label	Direction	Start Magnitude[lb/ft,...	End Magnitude[lb/ft,F...	Start Location[ft,%]	End Location[ft,%]
6	M14	Y	-5.104	-5.104	0	%100
7	M15	Y	-5.104	-5.104	0	%100
8	M16	Y	-5.104	-5.104	0	%100
9	M28	Y	-6.721	-6.721	0	%100
10	OVP1	Y	-7.788	-7.788	0	%100
11	M28B	Y	-7.788	-7.788	0	%100
12	OVP	Y	-4.421	-4.421	0	%100
13	MP4A	Y	-5.823	-5.823	0	%100
14	MP1A	Y	-5.104	-5.104	0	%100
15	MP3A	Y	-5.104	-5.104	0	%100
16	MP2A	Y	-5.104	-5.104	0	%100
17	M31B	Y	-5.104	-5.104	0	%100
18	M36	Y	-5.823	-5.823	0	%100
19	M37	Y	-6.772	-6.772	0	%100
20	M38	Y	-6.772	-6.772	0	%100
21	M43	Y	-5.104	-5.104	0	%100

Member Distributed Loads (BLC 41 : Structure Wo (0 Deg))

	Member Label	Direction	Start Magnitude[lb/ft,...	End Magnitude[lb/ft,F...	Start Location[ft,%]	End Location[ft,%]
1	M1	X	0	0	0	%100
2	M1	Z	-22.936	-22.936	0	%100
3	M2	X	0	0	0	%100
4	M2	Z	-22.936	-22.936	0	%100
5	M7A	X	0	0	0	%100
6	M7A	Z	-22.936	-22.936	0	%100
7	M8	X	0	0	0	%100
8	M8	Z	-22.936	-22.936	0	%100
9	M13	X	0	0	0	%100
10	M13	Z	-8.909	-8.909	0	%100
11	M14	X	0	0	0	%100
12	M14	Z	-8.909	-8.909	0	%100
13	M15	X	0	0	0	%100
14	M15	Z	-8.909	-8.909	0	%100
15	M16	X	0	0	0	%100
16	M16	Z	-8.909	-8.909	0	%100
17	M28	X	0	0	0	%100
18	M28	Z	-11.175	-11.175	0	%100
19	OVP1	X	0	0	0	%100
20	OVP1	Z	0	0	0	%100
21	M28B	X	0	0	0	%100
22	M28B	Z	0	0	0	%100
23	OVP	X	0	0	0	%100
24	OVP	Z	-6.974	-6.974	0	%100
25	MP4A	X	0	0	0	%100
26	MP4A	Z	-13.188	-13.188	0	%100
27	MP1A	X	0	0	0	%100
28	MP1A	Z	-10.894	-10.894	0	%100
29	MP3A	X	0	0	0	%100
30	MP3A	Z	-10.894	-10.894	0	%100
31	MP2A	X	0	0	0	%100
32	MP2A	Z	-10.894	-10.894	0	%100

Member Distributed Loads (BLC 41 : Structure Wo (0 Deg)) (Continued)

	Member Label	Direction	Start Magnitude[lb/ft,...	End Magnitude[lb/ft,F...	Start Location[ft,%]	End Location[ft,%]
33	M31B	X	0	0	0	%100
34	M31B	Z	-2.071	-2.071	0	%100
35	M36	X	0	0	0	%100
36	M36	Z	-13.188	-13.188	0	%100
37	M37	X	0	0	0	%100
38	M37	Z	-10.816	-10.816	0	%100
39	M38	X	0	0	0	%100
40	M38	Z	-10.816	-10.816	0	%100
41	M43	X	0	0	0	%100
42	M43	Z	-2.071	-2.071	0	%100

Member Distributed Loads (BLC 42 : Structure Wo (30 Deg))

	Member Label	Direction	Start Magnitude[lb/ft,...	End Magnitude[lb/ft,F...	Start Location[ft,%]	End Location[ft,%]
1	M1	X	8.601	8.601	0	%100
2	M1	Z	-14.897	-14.897	0	%100
3	M2	X	8.601	8.601	0	%100
4	M2	Z	-14.897	-14.897	0	%100
5	M7A	X	8.601	8.601	0	%100
6	M7A	Z	-14.897	-14.897	0	%100
7	M8	X	8.601	8.601	0	%100
8	M8	Z	-14.897	-14.897	0	%100
9	M13	X	4.454	4.454	0	%100
10	M13	Z	-7.715	-7.715	0	%100
11	M14	X	4.454	4.454	0	%100
12	M14	Z	-7.715	-7.715	0	%100
13	M15	X	4.454	4.454	0	%100
14	M15	Z	-7.715	-7.715	0	%100
15	M16	X	4.454	4.454	0	%100
16	M16	Z	-7.715	-7.715	0	%100
17	M28	X	5.587	5.587	0	%100
18	M28	Z	-9.678	-9.678	0	%100
19	OVP1	X	1.374	1.374	0	%100
20	OVP1	Z	-2.379	-2.379	0	%100
21	M28B	X	1.374	1.374	0	%100
22	M28B	Z	-2.379	-2.379	0	%100
23	OVP	X	3.487	3.487	0	%100
24	OVP	Z	-6.04	-6.04	0	%100
25	MP4A	X	6.594	6.594	0	%100
26	MP4A	Z	-11.421	-11.421	0	%100
27	MP1A	X	5.447	5.447	0	%100
28	MP1A	Z	-9.435	-9.435	0	%100
29	MP3A	X	5.447	5.447	0	%100
30	MP3A	Z	-9.435	-9.435	0	%100
31	MP2A	X	5.447	5.447	0	%100
32	MP2A	Z	-9.435	-9.435	0	%100
33	M31B	X	.029	.029	0	%100
34	M31B	Z	-.049	-.049	0	%100
35	M36	X	4.945	4.945	0	%100
36	M36	Z	-8.566	-8.566	0	%100
37	M37	X	1.791	1.791	0	%100
38	M37	Z	-3.102	-3.102	0	%100

Member Distributed Loads (BLC 42 : Structure Wo (30 Deg)) (Continued)

	Member Label	Direction	Start Magnitude[lb/ft,...	End Magnitude[lb/ft,F...	Start Location[ft,%]	End Location[ft,%]
39	M38	X	8.882	8.882	0	%100
40	M38	Z	-15.384	-15.384	0	%100
41	M43	X	3.73	3.73	0	%100
42	M43	Z	-6.461	-6.461	0	%100

Member Distributed Loads (BLC 43 : Structure Wo (60 Deg))

	Member Label	Direction	Start Magnitude[lb/ft,...	End Magnitude[lb/ft,F...	Start Location[ft,%]	End Location[ft,%]
1	M1	X	4.966	4.966	0	%100
2	M1	Z	-2.867	-2.867	0	%100
3	M2	X	4.966	4.966	0	%100
4	M2	Z	-2.867	-2.867	0	%100
5	M7A	X	4.966	4.966	0	%100
6	M7A	Z	-2.867	-2.867	0	%100
7	M8	X	4.966	4.966	0	%100
8	M8	Z	-2.867	-2.867	0	%100
9	M13	X	7.715	7.715	0	%100
10	M13	Z	-4.454	-4.454	0	%100
11	M14	X	7.715	7.715	0	%100
12	M14	Z	-4.454	-4.454	0	%100
13	M15	X	7.715	7.715	0	%100
14	M15	Z	-4.454	-4.454	0	%100
15	M16	X	7.715	7.715	0	%100
16	M16	Z	-4.454	-4.454	0	%100
17	M28	X	9.678	9.678	0	%100
18	M28	Z	-5.587	-5.587	0	%100
19	OVP1	X	7.138	7.138	0	%100
20	OVP1	Z	-4.121	-4.121	0	%100
21	M28B	X	7.138	7.138	0	%100
22	M28B	Z	-4.121	-4.121	0	%100
23	OVP	X	6.04	6.04	0	%100
24	OVP	Z	-3.487	-3.487	0	%100
25	MP4A	X	11.421	11.421	0	%100
26	MP4A	Z	-6.594	-6.594	0	%100
27	MP1A	X	9.435	9.435	0	%100
28	MP1A	Z	-5.447	-5.447	0	%100
29	MP3A	X	9.435	9.435	0	%100
30	MP3A	Z	-5.447	-5.447	0	%100
31	MP2A	X	9.435	9.435	0	%100
32	MP2A	Z	-5.447	-5.447	0	%100
33	M31B	X	2.974	2.974	0	%100
34	M31B	Z	-1.717	-1.717	0	%100
35	M36	X	2.855	2.855	0	%100
36	M36	Z	-1.648	-1.648	0	%100
37	M37	X	2.854	2.854	0	%100
38	M37	Z	-1.648	-1.648	0	%100
39	M38	X	15.136	15.136	0	%100
40	M38	Z	-8.739	-8.739	0	%100
41	M43	X	9.385	9.385	0	%100
42	M43	Z	-5.419	-5.419	0	%100

Member Distributed Loads (BLC 44 : Structure Wo (90 Deg))

	Member Label	Direction	Start Magnitude[lb/ft,...	End Magnitude[lb/ft,F...	Start Location[ft,%]	End Location[ft,%]
1	M1	X	0	0	0	%100
2	M1	Z	0	0	0	%100
3	M2	X	0	0	0	%100
4	M2	Z	0	0	0	%100
5	M7A	X	0	0	0	%100
6	M7A	Z	0	0	0	%100
7	M8	X	0	0	0	%100
8	M8	Z	0	0	0	%100
9	M13	X	8.909	8.909	0	%100
10	M13	Z	0	0	0	%100
11	M14	X	8.909	8.909	0	%100
12	M14	Z	0	0	0	%100
13	M15	X	8.909	8.909	0	%100
14	M15	Z	0	0	0	%100
15	M16	X	8.909	8.909	0	%100
16	M16	Z	0	0	0	%100
17	M28	X	11.175	11.175	0	%100
18	M28	Z	0	0	0	%100
19	OVP1	X	10.99	10.99	0	%100
20	OVP1	Z	0	0	0	%100
21	M28B	X	10.99	10.99	0	%100
22	M28B	Z	0	0	0	%100
23	OVP	X	6.974	6.974	0	%100
24	OVP	Z	0	0	0	%100
25	MP4A	X	13.188	13.188	0	%100
26	MP4A	Z	0	0	0	%100
27	MP1A	X	10.894	10.894	0	%100
28	MP1A	Z	0	0	0	%100
29	MP3A	X	10.894	10.894	0	%100
30	MP3A	Z	0	0	0	%100
31	MP2A	X	10.894	10.894	0	%100
32	MP2A	Z	0	0	0	%100
33	M31B	X	8.824	8.824	0	%100
34	M31B	Z	0	0	0	%100
35	M36	X	0	0	0	%100
36	M36	Z	0	0	0	%100
37	M37	X	10.243	10.243	0	%100
38	M37	Z	0	0	0	%100
39	M38	X	10.244	10.244	0	%100
40	M38	Z	0	0	0	%100
41	M43	X	8.824	8.824	0	%100
42	M43	Z	0	0	0	%100

Member Distributed Loads (BLC 45 : Structure Wo (120 Deg))

	Member Label	Direction	Start Magnitude[lb/ft,...	End Magnitude[lb/ft,F...	Start Location[ft,%]	End Location[ft,%]
1	M1	X	4.966	4.966	0	%100
2	M1	Z	2.867	2.867	0	%100
3	M2	X	4.966	4.966	0	%100
4	M2	Z	2.867	2.867	0	%100
5	M7A	X	4.966	4.966	0	%100
6	M7A	Z	2.867	2.867	0	%100

Member Distributed Loads (BLC 45 : Structure Wo (120 Deg)) (Continued)

	Member Label	Direction	Start Magnitude[lb/ft,...	End Magnitude[lb/ft,F...	Start Location[ft,%]	End Location[ft,%]
7	M8	X	4.966	4.966	0	%100
8	M8	Z	2.867	2.867	0	%100
9	M13	X	7.715	7.715	0	%100
10	M13	Z	4.454	4.454	0	%100
11	M14	X	7.715	7.715	0	%100
12	M14	Z	4.454	4.454	0	%100
13	M15	X	7.715	7.715	0	%100
14	M15	Z	4.454	4.454	0	%100
15	M16	X	7.715	7.715	0	%100
16	M16	Z	4.454	4.454	0	%100
17	M28	X	9.678	9.678	0	%100
18	M28	Z	5.587	5.587	0	%100
19	OVP1	X	7.138	7.138	0	%100
20	OVP1	Z	4.121	4.121	0	%100
21	M28B	X	7.138	7.138	0	%100
22	M28B	Z	4.121	4.121	0	%100
23	OVP	X	6.04	6.04	0	%100
24	OVP	Z	3.487	3.487	0	%100
25	MP4A	X	11.421	11.421	0	%100
26	MP4A	Z	6.594	6.594	0	%100
27	MP1A	X	9.435	9.435	0	%100
28	MP1A	Z	5.447	5.447	0	%100
29	MP3A	X	9.435	9.435	0	%100
30	MP3A	Z	5.447	5.447	0	%100
31	MP2A	X	9.435	9.435	0	%100
32	MP2A	Z	5.447	5.447	0	%100
33	M31B	X	9.385	9.385	0	%100
34	M31B	Z	5.419	5.419	0	%100
35	M36	X	2.855	2.855	0	%100
36	M36	Z	1.648	1.648	0	%100
37	M37	X	15.136	15.136	0	%100
38	M37	Z	8.739	8.739	0	%100
39	M38	X	2.854	2.854	0	%100
40	M38	Z	1.648	1.648	0	%100
41	M43	X	2.974	2.974	0	%100
42	M43	Z	1.717	1.717	0	%100

Member Distributed Loads (BLC 46 : Structure Wo (150 Deg))

	Member Label	Direction	Start Magnitude[lb/ft,...	End Magnitude[lb/ft,F...	Start Location[ft,%]	End Location[ft,%]
1	M1	X	8.601	8.601	0	%100
2	M1	Z	14.897	14.897	0	%100
3	M2	X	8.601	8.601	0	%100
4	M2	Z	14.897	14.897	0	%100
5	M7A	X	8.601	8.601	0	%100
6	M7A	Z	14.897	14.897	0	%100
7	M8	X	8.601	8.601	0	%100
8	M8	Z	14.897	14.897	0	%100
9	M13	X	4.454	4.454	0	%100
10	M13	Z	7.715	7.715	0	%100
11	M14	X	4.454	4.454	0	%100
12	M14	Z	7.715	7.715	0	%100

Member Distributed Loads (BLC 46 : Structure Wo (150 Deg)) (Continued)

	Member Label	Direction	Start Magnitude[lb/ft,...	End Magnitude[lb/ft,F...	Start Location[ft,%]	End Location[ft,%]
13	M15	X	4.454	4.454	0	%100
14	M15	Z	7.715	7.715	0	%100
15	M16	X	4.454	4.454	0	%100
16	M16	Z	7.715	7.715	0	%100
17	M28	X	5.587	5.587	0	%100
18	M28	Z	9.678	9.678	0	%100
19	OVP1	X	1.374	1.374	0	%100
20	OVP1	Z	2.379	2.379	0	%100
21	M28B	X	1.374	1.374	0	%100
22	M28B	Z	2.379	2.379	0	%100
23	OVP	X	3.487	3.487	0	%100
24	OVP	Z	6.04	6.04	0	%100
25	MP4A	X	6.594	6.594	0	%100
26	MP4A	Z	11.421	11.421	0	%100
27	MP1A	X	5.447	5.447	0	%100
28	MP1A	Z	9.435	9.435	0	%100
29	MP3A	X	5.447	5.447	0	%100
30	MP3A	Z	9.435	9.435	0	%100
31	MP2A	X	5.447	5.447	0	%100
32	MP2A	Z	9.435	9.435	0	%100
33	M31B	X	3.73	3.73	0	%100
34	M31B	Z	6.461	6.461	0	%100
35	M36	X	4.945	4.945	0	%100
36	M36	Z	8.566	8.566	0	%100
37	M37	X	8.882	8.882	0	%100
38	M37	Z	15.384	15.384	0	%100
39	M38	X	1.791	1.791	0	%100
40	M38	Z	3.102	3.102	0	%100
41	M43	X	.029	.029	0	%100
42	M43	Z	.049	.049	0	%100

Member Distributed Loads (BLC 47 : Structure Wo (180 Deg))

	Member Label	Direction	Start Magnitude[lb/ft,...	End Magnitude[lb/ft,F...	Start Location[ft,%]	End Location[ft,%]
1	M1	X	0	0	0	%100
2	M1	Z	22.936	22.936	0	%100
3	M2	X	0	0	0	%100
4	M2	Z	22.936	22.936	0	%100
5	M7A	X	0	0	0	%100
6	M7A	Z	22.936	22.936	0	%100
7	M8	X	0	0	0	%100
8	M8	Z	22.936	22.936	0	%100
9	M13	X	0	0	0	%100
10	M13	Z	8.909	8.909	0	%100
11	M14	X	0	0	0	%100
12	M14	Z	8.909	8.909	0	%100
13	M15	X	0	0	0	%100
14	M15	Z	8.909	8.909	0	%100
15	M16	X	0	0	0	%100
16	M16	Z	8.909	8.909	0	%100
17	M28	X	0	0	0	%100
18	M28	Z	11.175	11.175	0	%100

Member Distributed Loads (BLC 47 : Structure Wo (180 Deg)) (Continued)

	Member Label	Direction	Start Magnitude[lb/ft,...	End Magnitude[lb/ft,F...	Start Location[ft,%]	End Location[ft,%]
19	OVP1	X	0	0	0	%100
20	OVP1	Z	0	0	0	%100
21	M28B	X	0	0	0	%100
22	M28B	Z	0	0	0	%100
23	OVP	X	0	0	0	%100
24	OVP	Z	6.974	6.974	0	%100
25	MP4A	X	0	0	0	%100
26	MP4A	Z	13.188	13.188	0	%100
27	MP1A	X	0	0	0	%100
28	MP1A	Z	10.894	10.894	0	%100
29	MP3A	X	0	0	0	%100
30	MP3A	Z	10.894	10.894	0	%100
31	MP2A	X	0	0	0	%100
32	MP2A	Z	10.894	10.894	0	%100
33	M31B	X	0	0	0	%100
34	M31B	Z	2.071	2.071	0	%100
35	M36	X	0	0	0	%100
36	M36	Z	13.188	13.188	0	%100
37	M37	X	0	0	0	%100
38	M37	Z	10.816	10.816	0	%100
39	M38	X	0	0	0	%100
40	M38	Z	10.816	10.816	0	%100
41	M43	X	0	0	0	%100
42	M43	Z	2.071	2.071	0	%100

Member Distributed Loads (BLC 48 : Structure Wo (210 Deg))

	Member Label	Direction	Start Magnitude[lb/ft,...	End Magnitude[lb/ft,F...	Start Location[ft,%]	End Location[ft,%]
1	M1	X	-8.601	-8.601	0	%100
2	M1	Z	14.897	14.897	0	%100
3	M2	X	-8.601	-8.601	0	%100
4	M2	Z	14.897	14.897	0	%100
5	M7A	X	-8.601	-8.601	0	%100
6	M7A	Z	14.897	14.897	0	%100
7	M8	X	-8.601	-8.601	0	%100
8	M8	Z	14.897	14.897	0	%100
9	M13	X	-4.454	-4.454	0	%100
10	M13	Z	7.715	7.715	0	%100
11	M14	X	-4.454	-4.454	0	%100
12	M14	Z	7.715	7.715	0	%100
13	M15	X	-4.454	-4.454	0	%100
14	M15	Z	7.715	7.715	0	%100
15	M16	X	-4.454	-4.454	0	%100
16	M16	Z	7.715	7.715	0	%100
17	M28	X	-5.587	-5.587	0	%100
18	M28	Z	9.678	9.678	0	%100
19	OVP1	X	-1.374	-1.374	0	%100
20	OVP1	Z	2.379	2.379	0	%100
21	M28B	X	-1.374	-1.374	0	%100
22	M28B	Z	2.379	2.379	0	%100
23	OVP	X	-3.487	-3.487	0	%100
24	OVP	Z	6.04	6.04	0	%100

Member Distributed Loads (BLC 48 : Structure Wo (210 Deg)) (Continued)

	Member Label	Direction	Start Magnitude[lb/ft,...	End Magnitude[lb/ft,F...	Start Location[ft,%]	End Location[ft,%]
25	MP4A	X	-6.594	-6.594	0	%100
26	MP4A	Z	11.421	11.421	0	%100
27	MP1A	X	-5.447	-5.447	0	%100
28	MP1A	Z	9.435	9.435	0	%100
29	MP3A	X	-5.447	-5.447	0	%100
30	MP3A	Z	9.435	9.435	0	%100
31	MP2A	X	-5.447	-5.447	0	%100
32	MP2A	Z	9.435	9.435	0	%100
33	M31B	X	-.029	-.029	0	%100
34	M31B	Z	.049	.049	0	%100
35	M36	X	-4.945	-4.945	0	%100
36	M36	Z	8.566	8.566	0	%100
37	M37	X	-1.791	-1.791	0	%100
38	M37	Z	3.102	3.102	0	%100
39	M38	X	-8.882	-8.882	0	%100
40	M38	Z	15.384	15.384	0	%100
41	M43	X	-3.73	-3.73	0	%100
42	M43	Z	6.461	6.461	0	%100

Member Distributed Loads (BLC 49 : Structure Wo (240 Deg))

	Member Label	Direction	Start Magnitude[lb/ft,...	End Magnitude[lb/ft,F...	Start Location[ft,%]	End Location[ft,%]
1	M1	X	-4.966	-4.966	0	%100
2	M1	Z	2.867	2.867	0	%100
3	M2	X	-4.966	-4.966	0	%100
4	M2	Z	2.867	2.867	0	%100
5	M7A	X	-4.966	-4.966	0	%100
6	M7A	Z	2.867	2.867	0	%100
7	M8	X	-4.966	-4.966	0	%100
8	M8	Z	2.867	2.867	0	%100
9	M13	X	-7.715	-7.715	0	%100
10	M13	Z	4.454	4.454	0	%100
11	M14	X	-7.715	-7.715	0	%100
12	M14	Z	4.454	4.454	0	%100
13	M15	X	-7.715	-7.715	0	%100
14	M15	Z	4.454	4.454	0	%100
15	M16	X	-7.715	-7.715	0	%100
16	M16	Z	4.454	4.454	0	%100
17	M28	X	-9.678	-9.678	0	%100
18	M28	Z	5.587	5.587	0	%100
19	OVP1	X	-7.138	-7.138	0	%100
20	OVP1	Z	4.121	4.121	0	%100
21	M28B	X	-7.138	-7.138	0	%100
22	M28B	Z	4.121	4.121	0	%100
23	OVP	X	-6.04	-6.04	0	%100
24	OVP	Z	3.487	3.487	0	%100
25	MP4A	X	-11.421	-11.421	0	%100
26	MP4A	Z	6.594	6.594	0	%100
27	MP1A	X	-9.435	-9.435	0	%100
28	MP1A	Z	5.447	5.447	0	%100
29	MP3A	X	-9.435	-9.435	0	%100
30	MP3A	Z	5.447	5.447	0	%100

Member Distributed Loads (BLC 49 : Structure Wo (240 Deg)) (Continued)

	Member Label	Direction	Start Magnitude[lb/ft,...	End Magnitude[lb/ft,F...	Start Location[ft,%]	End Location[ft,%]
31	MP2A	X	-9.435	-9.435	0	%100
32	MP2A	Z	5.447	5.447	0	%100
33	M31B	X	-2.974	-2.974	0	%100
34	M31B	Z	1.717	1.717	0	%100
35	M36	X	-2.855	-2.855	0	%100
36	M36	Z	1.648	1.648	0	%100
37	M37	X	-2.854	-2.854	0	%100
38	M37	Z	1.648	1.648	0	%100
39	M38	X	-15.136	-15.136	0	%100
40	M38	Z	8.739	8.739	0	%100
41	M43	X	-9.385	-9.385	0	%100
42	M43	Z	5.419	5.419	0	%100

Member Distributed Loads (BLC 50 : Structure Wo (270 Deg))

	Member Label	Direction	Start Magnitude[lb/ft,...	End Magnitude[lb/ft,F...	Start Location[ft,%]	End Location[ft,%]
1	M1	X	0	0	0	%100
2	M1	Z	0	0	0	%100
3	M2	X	0	0	0	%100
4	M2	Z	0	0	0	%100
5	M7A	X	0	0	0	%100
6	M7A	Z	0	0	0	%100
7	M8	X	0	0	0	%100
8	M8	Z	0	0	0	%100
9	M13	X	-8.909	-8.909	0	%100
10	M13	Z	0	0	0	%100
11	M14	X	-8.909	-8.909	0	%100
12	M14	Z	0	0	0	%100
13	M15	X	-8.909	-8.909	0	%100
14	M15	Z	0	0	0	%100
15	M16	X	-8.909	-8.909	0	%100
16	M16	Z	0	0	0	%100
17	M28	X	-11.175	-11.175	0	%100
18	M28	Z	0	0	0	%100
19	OVP1	X	-10.99	-10.99	0	%100
20	OVP1	Z	0	0	0	%100
21	M28B	X	-10.99	-10.99	0	%100
22	M28B	Z	0	0	0	%100
23	OVP	X	-6.974	-6.974	0	%100
24	OVP	Z	0	0	0	%100
25	MP4A	X	-13.188	-13.188	0	%100
26	MP4A	Z	0	0	0	%100
27	MP1A	X	-10.894	-10.894	0	%100
28	MP1A	Z	0	0	0	%100
29	MP3A	X	-10.894	-10.894	0	%100
30	MP3A	Z	0	0	0	%100
31	MP2A	X	-10.894	-10.894	0	%100
32	MP2A	Z	0	0	0	%100
33	M31B	X	-8.824	-8.824	0	%100
34	M31B	Z	0	0	0	%100
35	M36	X	0	0	0	%100
36	M36	Z	0	0	0	%100

Member Distributed Loads (BLC 50 : Structure Wo (270 Deg)) (Continued)

	Member Label	Direction	Start Magnitude[lb/ft,...	End Magnitude[lb/ft,F...	Start Location[ft,%]	End Location[ft,%]
37	M37	X	-10.243	-10.243	0	%100
38	M37	Z	0	0	0	%100
39	M38	X	-10.244	-10.244	0	%100
40	M38	Z	0	0	0	%100
41	M43	X	-8.824	-8.824	0	%100
42	M43	Z	0	0	0	%100

Member Distributed Loads (BLC 51 : Structure Wo (300 Deg))

	Member Label	Direction	Start Magnitude[lb/ft,...	End Magnitude[lb/ft,F...	Start Location[ft,%]	End Location[ft,%]
1	M1	X	-4.966	-4.966	0	%100
2	M1	Z	-2.867	-2.867	0	%100
3	M2	X	-4.966	-4.966	0	%100
4	M2	Z	-2.867	-2.867	0	%100
5	M7A	X	-4.966	-4.966	0	%100
6	M7A	Z	-2.867	-2.867	0	%100
7	M8	X	-4.966	-4.966	0	%100
8	M8	Z	-2.867	-2.867	0	%100
9	M13	X	-7.715	-7.715	0	%100
10	M13	Z	-4.454	-4.454	0	%100
11	M14	X	-7.715	-7.715	0	%100
12	M14	Z	-4.454	-4.454	0	%100
13	M15	X	-7.715	-7.715	0	%100
14	M15	Z	-4.454	-4.454	0	%100
15	M16	X	-7.715	-7.715	0	%100
16	M16	Z	-4.454	-4.454	0	%100
17	M28	X	-9.678	-9.678	0	%100
18	M28	Z	-5.587	-5.587	0	%100
19	OVP1	X	-7.138	-7.138	0	%100
20	OVP1	Z	-4.121	-4.121	0	%100
21	M28B	X	-7.138	-7.138	0	%100
22	M28B	Z	-4.121	-4.121	0	%100
23	OVP	X	-6.04	-6.04	0	%100
24	OVP	Z	-3.487	-3.487	0	%100
25	MP4A	X	-11.421	-11.421	0	%100
26	MP4A	Z	-6.594	-6.594	0	%100
27	MP1A	X	-9.435	-9.435	0	%100
28	MP1A	Z	-5.447	-5.447	0	%100
29	MP3A	X	-9.435	-9.435	0	%100
30	MP3A	Z	-5.447	-5.447	0	%100
31	MP2A	X	-9.435	-9.435	0	%100
32	MP2A	Z	-5.447	-5.447	0	%100
33	M31B	X	-9.385	-9.385	0	%100
34	M31B	Z	-5.419	-5.419	0	%100
35	M36	X	-2.855	-2.855	0	%100
36	M36	Z	-1.648	-1.648	0	%100
37	M37	X	-15.136	-15.136	0	%100
38	M37	Z	-8.739	-8.739	0	%100
39	M38	X	-2.854	-2.854	0	%100
40	M38	Z	-1.648	-1.648	0	%100
41	M43	X	-2.974	-2.974	0	%100
42	M43	Z	-1.717	-1.717	0	%100

Member Distributed Loads (BLC 52 : Structure Wo (330 Deg))

	Member Label	Direction	Start Magnitude[lb/ft,...	End Magnitude[lb/ft,F...	Start Location[ft,%]	End Location[ft,%]
1	M1	X	-8.601	-8.601	0	%100
2	M1	Z	-14.897	-14.897	0	%100
3	M2	X	-8.601	-8.601	0	%100
4	M2	Z	-14.897	-14.897	0	%100
5	M7A	X	-8.601	-8.601	0	%100
6	M7A	Z	-14.897	-14.897	0	%100
7	M8	X	-8.601	-8.601	0	%100
8	M8	Z	-14.897	-14.897	0	%100
9	M13	X	-4.454	-4.454	0	%100
10	M13	Z	-7.715	-7.715	0	%100
11	M14	X	-4.454	-4.454	0	%100
12	M14	Z	-7.715	-7.715	0	%100
13	M15	X	-4.454	-4.454	0	%100
14	M15	Z	-7.715	-7.715	0	%100
15	M16	X	-4.454	-4.454	0	%100
16	M16	Z	-7.715	-7.715	0	%100
17	M28	X	-5.587	-5.587	0	%100
18	M28	Z	-9.678	-9.678	0	%100
19	OVP1	X	-1.374	-1.374	0	%100
20	OVP1	Z	-2.379	-2.379	0	%100
21	M28B	X	-1.374	-1.374	0	%100
22	M28B	Z	-2.379	-2.379	0	%100
23	OVP	X	-3.487	-3.487	0	%100
24	OVP	Z	-6.04	-6.04	0	%100
25	MP4A	X	-6.594	-6.594	0	%100
26	MP4A	Z	-11.421	-11.421	0	%100
27	MP1A	X	-5.447	-5.447	0	%100
28	MP1A	Z	-9.435	-9.435	0	%100
29	MP3A	X	-5.447	-5.447	0	%100
30	MP3A	Z	-9.435	-9.435	0	%100
31	MP2A	X	-5.447	-5.447	0	%100
32	MP2A	Z	-9.435	-9.435	0	%100
33	M31B	X	-3.73	-3.73	0	%100
34	M31B	Z	-6.461	-6.461	0	%100
35	M36	X	-4.945	-4.945	0	%100
36	M36	Z	-8.566	-8.566	0	%100
37	M37	X	-8.882	-8.882	0	%100
38	M37	Z	-15.384	-15.384	0	%100
39	M38	X	-1.791	-1.791	0	%100
40	M38	Z	-3.102	-3.102	0	%100
41	M43	X	-.029	-.029	0	%100
42	M43	Z	-.049	-.049	0	%100

Member Distributed Loads (BLC 53 : Structure Wi (0 Deg))

	Member Label	Direction	Start Magnitude[lb/ft,...	End Magnitude[lb/ft,F...	Start Location[ft,%]	End Location[ft,%]
1	M1	X	0	0	0	%100
2	M1	Z	-5.573	-5.573	0	%100
3	M2	X	0	0	0	%100
4	M2	Z	-5.573	-5.573	0	%100
5	M7A	X	0	0	0	%100
6	M7A	Z	-5.573	-5.573	0	%100

Member Distributed Loads (BLC 53 : Structure Wi (0 Deg)) (Continued)

	Member Label	Direction	Start Magnitude[lb/ft,...	End Magnitude[lb/ft,F...	Start Location[ft,%]	End Location[ft,%]
7	M8	X	0	0	0	%100
8	M8	Z	-5.573	-5.573	0	%100
9	M13	X	0	0	0	%100
10	M13	Z	-2.935	-2.935	0	%100
11	M14	X	0	0	0	%100
12	M14	Z	-2.935	-2.935	0	%100
13	M15	X	0	0	0	%100
14	M15	Z	-2.935	-2.935	0	%100
15	M16	X	0	0	0	%100
16	M16	Z	-2.935	-2.935	0	%100
17	M28	X	0	0	0	%100
18	M28	Z	-3.393	-3.393	0	%100
19	OVP1	X	0	0	0	%100
20	OVP1	Z	0	0	0	%100
21	M28B	X	0	0	0	%100
22	M28B	Z	0	0	0	%100
23	OVP	X	0	0	0	%100
24	OVP	Z	-2.489	-2.489	0	%100
25	MP4A	X	0	0	0	%100
26	MP4A	Z	-3.963	-3.963	0	%100
27	MP1A	X	0	0	0	%100
28	MP1A	Z	-3.584	-3.584	0	%100
29	MP3A	X	0	0	0	%100
30	MP3A	Z	-3.584	-3.584	0	%100
31	MP2A	X	0	0	0	%100
32	MP2A	Z	-3.584	-3.584	0	%100
33	M31B	X	0	0	0	%100
34	M31B	Z	-.681	-.681	0	%100
35	M36	X	0	0	0	%100
36	M36	Z	-3.963	-3.963	0	%100
37	M37	X	0	0	0	%100
38	M37	Z	-2.818	-2.818	0	%100
39	M38	X	0	0	0	%100
40	M38	Z	-2.818	-2.818	0	%100
41	M43	X	0	0	0	%100
42	M43	Z	-.681	-.681	0	%100

Member Distributed Loads (BLC 54 : Structure Wi (30 Deg))

	Member Label	Direction	Start Magnitude[lb/ft,...	End Magnitude[lb/ft,F...	Start Location[ft,%]	End Location[ft,%]
1	M1	X	2.09	2.09	0	%100
2	M1	Z	-3.62	-3.62	0	%100
3	M2	X	2.09	2.09	0	%100
4	M2	Z	-3.62	-3.62	0	%100
5	M7A	X	2.09	2.09	0	%100
6	M7A	Z	-3.62	-3.62	0	%100
7	M8	X	2.09	2.09	0	%100
8	M8	Z	-3.62	-3.62	0	%100
9	M13	X	1.468	1.468	0	%100
10	M13	Z	-2.542	-2.542	0	%100
11	M14	X	1.468	1.468	0	%100
12	M14	Z	-2.542	-2.542	0	%100

Member Distributed Loads (BLC 54 : Structure Wi (30 Deg)) (Continued)

	Member Label	Direction	Start Magnitude[lb/ft,...	End Magnitude[lb/ft,F...	Start Location[ft,%]	End Location[ft,%]
13	M15	X	1.468	1.468	0	%100
14	M15	Z	-2.542	-2.542	0	%100
15	M16	X	1.468	1.468	0	%100
16	M16	Z	-2.542	-2.542	0	%100
17	M28	X	1.697	1.697	0	%100
18	M28	Z	-2.939	-2.939	0	%100
19	OVP1	X	.399	.399	0	%100
20	OVP1	Z	-.692	-.692	0	%100
21	M28B	X	.399	.399	0	%100
22	M28B	Z	-.692	-.692	0	%100
23	OVP	X	1.245	1.245	0	%100
24	OVP	Z	-2.156	-2.156	0	%100
25	MP4A	X	1.981	1.981	0	%100
26	MP4A	Z	-3.432	-3.432	0	%100
27	MP1A	X	1.792	1.792	0	%100
28	MP1A	Z	-3.104	-3.104	0	%100
29	MP3A	X	1.792	1.792	0	%100
30	MP3A	Z	-3.104	-3.104	0	%100
31	MP2A	X	1.792	1.792	0	%100
32	MP2A	Z	-3.104	-3.104	0	%100
33	M31B	X	.009	.009	0	%100
34	M31B	Z	-.016	-.016	0	%100
35	M36	X	1.486	1.486	0	%100
36	M36	Z	-2.574	-2.574	0	%100
37	M37	X	.467	.467	0	%100
38	M37	Z	-.808	-.808	0	%100
39	M38	X	2.314	2.314	0	%100
40	M38	Z	-4.008	-4.008	0	%100
41	M43	X	1.227	1.227	0	%100
42	M43	Z	-2.125	-2.125	0	%100

Member Distributed Loads (BLC 55 : Structure Wi (60 Deg))

	Member Label	Direction	Start Magnitude[lb/ft,...	End Magnitude[lb/ft,F...	Start Location[ft,%]	End Location[ft,%]
1	M1	X	1.207	1.207	0	%100
2	M1	Z	-.697	-.697	0	%100
3	M2	X	1.207	1.207	0	%100
4	M2	Z	-.697	-.697	0	%100
5	M7A	X	1.207	1.207	0	%100
6	M7A	Z	-.697	-.697	0	%100
7	M8	X	1.207	1.207	0	%100
8	M8	Z	-.697	-.697	0	%100
9	M13	X	2.542	2.542	0	%100
10	M13	Z	-1.468	-1.468	0	%100
11	M14	X	2.542	2.542	0	%100
12	M14	Z	-1.468	-1.468	0	%100
13	M15	X	2.542	2.542	0	%100
14	M15	Z	-1.468	-1.468	0	%100
15	M16	X	2.542	2.542	0	%100
16	M16	Z	-1.468	-1.468	0	%100
17	M28	X	2.939	2.939	0	%100
18	M28	Z	-1.697	-1.697	0	%100

Member Distributed Loads (BLC 55 : Structure Wi (60 Deg)) (Continued)

	Member Label	Direction	Start Magnitude[lb/ft,...	End Magnitude[lb/ft,F...	Start Location[ft,%]	End Location[ft,%]
19	OVP1	X	2.075	2.075	0	%100
20	OVP1	Z	-1.198	-1.198	0	%100
21	M28B	X	2.075	2.075	0	%100
22	M28B	Z	-1.198	-1.198	0	%100
23	OVP	X	2.156	2.156	0	%100
24	OVP	Z	-1.245	-1.245	0	%100
25	MP4A	X	3.432	3.432	0	%100
26	MP4A	Z	-1.981	-1.981	0	%100
27	MP1A	X	3.104	3.104	0	%100
28	MP1A	Z	-1.792	-1.792	0	%100
29	MP3A	X	3.104	3.104	0	%100
30	MP3A	Z	-1.792	-1.792	0	%100
31	MP2A	X	3.104	3.104	0	%100
32	MP2A	Z	-1.792	-1.792	0	%100
33	M31B	X	.978	.978	0	%100
34	M31B	Z	-.565	-.565	0	%100
35	M36	X	.858	.858	0	%100
36	M36	Z	-.495	-.495	0	%100
37	M37	X	.744	.744	0	%100
38	M37	Z	-.429	-.429	0	%100
39	M38	X	3.943	3.943	0	%100
40	M38	Z	-2.276	-2.276	0	%100
41	M43	X	3.087	3.087	0	%100
42	M43	Z	-1.782	-1.782	0	%100

Member Distributed Loads (BLC 56 : Structure Wi (90 Deg))

	Member Label	Direction	Start Magnitude[lb/ft,...	End Magnitude[lb/ft,F...	Start Location[ft,%]	End Location[ft,%]
1	M1	X	0	0	0	%100
2	M1	Z	0	0	0	%100
3	M2	X	0	0	0	%100
4	M2	Z	0	0	0	%100
5	M7A	X	0	0	0	%100
6	M7A	Z	0	0	0	%100
7	M8	X	0	0	0	%100
8	M8	Z	0	0	0	%100
9	M13	X	2.935	2.935	0	%100
10	M13	Z	0	0	0	%100
11	M14	X	2.935	2.935	0	%100
12	M14	Z	0	0	0	%100
13	M15	X	2.935	2.935	0	%100
14	M15	Z	0	0	0	%100
15	M16	X	2.935	2.935	0	%100
16	M16	Z	0	0	0	%100
17	M28	X	3.393	3.393	0	%100
18	M28	Z	0	0	0	%100
19	OVP1	X	3.195	3.195	0	%100
20	OVP1	Z	0	0	0	%100
21	M28B	X	3.195	3.195	0	%100
22	M28B	Z	0	0	0	%100
23	OVP	X	2.489	2.489	0	%100
24	OVP	Z	0	0	0	%100

Member Distributed Loads (BLC 56 : Structure Wi (90 Deg)) (Continued)

	Member Label	Direction	Start Magnitude[lb/ft,...	End Magnitude[lb/ft,F...	Start Location[ft,%]	End Location[ft,%]
25	MP4A	X	3.963	3.963	0	%100
26	MP4A	Z	0	0	0	%100
27	MP1A	X	3.584	3.584	0	%100
28	MP1A	Z	0	0	0	%100
29	MP3A	X	3.584	3.584	0	%100
30	MP3A	Z	0	0	0	%100
31	MP2A	X	3.584	3.584	0	%100
32	MP2A	Z	0	0	0	%100
33	M31B	X	2.902	2.902	0	%100
34	M31B	Z	0	0	0	%100
35	M36	X	0	0	0	%100
36	M36	Z	0	0	0	%100
37	M37	X	2.668	2.668	0	%100
38	M37	Z	0	0	0	%100
39	M38	X	2.668	2.668	0	%100
40	M38	Z	0	0	0	%100
41	M43	X	2.902	2.902	0	%100
42	M43	Z	0	0	0	%100

Member Distributed Loads (BLC 57 : Structure Wi (120 Deg))

	Member Label	Direction	Start Magnitude[lb/ft,...	End Magnitude[lb/ft,F...	Start Location[ft,%]	End Location[ft,%]
1	M1	X	1.207	1.207	0	%100
2	M1	Z	.697	.697	0	%100
3	M2	X	1.207	1.207	0	%100
4	M2	Z	.697	.697	0	%100
5	M7A	X	1.207	1.207	0	%100
6	M7A	Z	.697	.697	0	%100
7	M8	X	1.207	1.207	0	%100
8	M8	Z	.697	.697	0	%100
9	M13	X	2.542	2.542	0	%100
10	M13	Z	1.468	1.468	0	%100
11	M14	X	2.542	2.542	0	%100
12	M14	Z	1.468	1.468	0	%100
13	M15	X	2.542	2.542	0	%100
14	M15	Z	1.468	1.468	0	%100
15	M16	X	2.542	2.542	0	%100
16	M16	Z	1.468	1.468	0	%100
17	M28	X	2.939	2.939	0	%100
18	M28	Z	1.697	1.697	0	%100
19	OVP1	X	2.075	2.075	0	%100
20	OVP1	Z	1.198	1.198	0	%100
21	M28B	X	2.075	2.075	0	%100
22	M28B	Z	1.198	1.198	0	%100
23	OVP	X	2.156	2.156	0	%100
24	OVP	Z	1.245	1.245	0	%100
25	MP4A	X	3.432	3.432	0	%100
26	MP4A	Z	1.981	1.981	0	%100
27	MP1A	X	3.104	3.104	0	%100
28	MP1A	Z	1.792	1.792	0	%100
29	MP3A	X	3.104	3.104	0	%100
30	MP3A	Z	1.792	1.792	0	%100

Member Distributed Loads (BLC 57 : Structure Wi (120 Deg)) (Continued)

	Member Label	Direction	Start Magnitude[lb/ft,...	End Magnitude[lb/ft,F...	Start Location[ft,%]	End Location[ft,%]
31	MP2A	X	3.104	3.104	0	%100
32	MP2A	Z	1.792	1.792	0	%100
33	M31B	X	3.087	3.087	0	%100
34	M31B	Z	1.782	1.782	0	%100
35	M36	X	.858	.858	0	%100
36	M36	Z	.495	.495	0	%100
37	M37	X	3.943	3.943	0	%100
38	M37	Z	2.276	2.276	0	%100
39	M38	X	.744	.744	0	%100
40	M38	Z	.429	.429	0	%100
41	M43	X	.978	.978	0	%100
42	M43	Z	.565	.565	0	%100

Member Distributed Loads (BLC 58 : Structure Wi (150 Deg))

	Member Label	Direction	Start Magnitude[lb/ft,...	End Magnitude[lb/ft,F...	Start Location[ft,%]	End Location[ft,%]
1	M1	X	2.09	2.09	0	%100
2	M1	Z	3.62	3.62	0	%100
3	M2	X	2.09	2.09	0	%100
4	M2	Z	3.62	3.62	0	%100
5	M7A	X	2.09	2.09	0	%100
6	M7A	Z	3.62	3.62	0	%100
7	M8	X	2.09	2.09	0	%100
8	M8	Z	3.62	3.62	0	%100
9	M13	X	1.468	1.468	0	%100
10	M13	Z	2.542	2.542	0	%100
11	M14	X	1.468	1.468	0	%100
12	M14	Z	2.542	2.542	0	%100
13	M15	X	1.468	1.468	0	%100
14	M15	Z	2.542	2.542	0	%100
15	M16	X	1.468	1.468	0	%100
16	M16	Z	2.542	2.542	0	%100
17	M28	X	1.697	1.697	0	%100
18	M28	Z	2.939	2.939	0	%100
19	OVP1	X	.399	.399	0	%100
20	OVP1	Z	.692	.692	0	%100
21	M28B	X	.399	.399	0	%100
22	M28B	Z	.692	.692	0	%100
23	OVP	X	1.245	1.245	0	%100
24	OVP	Z	2.156	2.156	0	%100
25	MP4A	X	1.981	1.981	0	%100
26	MP4A	Z	3.432	3.432	0	%100
27	MP1A	X	1.792	1.792	0	%100
28	MP1A	Z	3.104	3.104	0	%100
29	MP3A	X	1.792	1.792	0	%100
30	MP3A	Z	3.104	3.104	0	%100
31	MP2A	X	1.792	1.792	0	%100
32	MP2A	Z	3.104	3.104	0	%100
33	M31B	X	1.227	1.227	0	%100
34	M31B	Z	2.125	2.125	0	%100
35	M36	X	1.486	1.486	0	%100
36	M36	Z	2.574	2.574	0	%100

Member Distributed Loads (BLC 58 : Structure Wi (150 Deg)) (Continued)

	Member Label	Direction	Start Magnitude[lb/ft,...	End Magnitude[lb/ft,F...	Start Location[ft,%]	End Location[ft,%]
37	M37	X	2.314	2.314	0	%100
38	M37	Z	4.008	4.008	0	%100
39	M38	X	.467	.467	0	%100
40	M38	Z	.808	.808	0	%100
41	M43	X	.009	.009	0	%100
42	M43	Z	.016	.016	0	%100

Member Distributed Loads (BLC 59 : Structure Wi (180 Deg))

	Member Label	Direction	Start Magnitude[lb/ft,...	End Magnitude[lb/ft,F...	Start Location[ft,%]	End Location[ft,%]
1	M1	X	0	0	0	%100
2	M1	Z	5.573	5.573	0	%100
3	M2	X	0	0	0	%100
4	M2	Z	5.573	5.573	0	%100
5	M7A	X	0	0	0	%100
6	M7A	Z	5.573	5.573	0	%100
7	M8	X	0	0	0	%100
8	M8	Z	5.573	5.573	0	%100
9	M13	X	0	0	0	%100
10	M13	Z	2.935	2.935	0	%100
11	M14	X	0	0	0	%100
12	M14	Z	2.935	2.935	0	%100
13	M15	X	0	0	0	%100
14	M15	Z	2.935	2.935	0	%100
15	M16	X	0	0	0	%100
16	M16	Z	2.935	2.935	0	%100
17	M28	X	0	0	0	%100
18	M28	Z	3.393	3.393	0	%100
19	OVP1	X	0	0	0	%100
20	OVP1	Z	0	0	0	%100
21	M28B	X	0	0	0	%100
22	M28B	Z	0	0	0	%100
23	OVP	X	0	0	0	%100
24	OVP	Z	2.489	2.489	0	%100
25	MP4A	X	0	0	0	%100
26	MP4A	Z	3.963	3.963	0	%100
27	MP1A	X	0	0	0	%100
28	MP1A	Z	3.584	3.584	0	%100
29	MP3A	X	0	0	0	%100
30	MP3A	Z	3.584	3.584	0	%100
31	MP2A	X	0	0	0	%100
32	MP2A	Z	3.584	3.584	0	%100
33	M31B	X	0	0	0	%100
34	M31B	Z	.681	.681	0	%100
35	M36	X	0	0	0	%100
36	M36	Z	3.963	3.963	0	%100
37	M37	X	0	0	0	%100
38	M37	Z	2.818	2.818	0	%100
39	M38	X	0	0	0	%100
40	M38	Z	2.818	2.818	0	%100
41	M43	X	0	0	0	%100
42	M43	Z	.681	.681	0	%100

Member Distributed Loads (BLC 60 : Structure Wi (210 Deg))

	Member Label	Direction	Start Magnitude[lb/ft,...	End Magnitude[lb/ft,F...	Start Location[ft,%]	End Location[ft,%]
1	M1	X	-2.09	-2.09	0	%100
2	M1	Z	3.62	3.62	0	%100
3	M2	X	-2.09	-2.09	0	%100
4	M2	Z	3.62	3.62	0	%100
5	M7A	X	-2.09	-2.09	0	%100
6	M7A	Z	3.62	3.62	0	%100
7	M8	X	-2.09	-2.09	0	%100
8	M8	Z	3.62	3.62	0	%100
9	M13	X	-1.468	-1.468	0	%100
10	M13	Z	2.542	2.542	0	%100
11	M14	X	-1.468	-1.468	0	%100
12	M14	Z	2.542	2.542	0	%100
13	M15	X	-1.468	-1.468	0	%100
14	M15	Z	2.542	2.542	0	%100
15	M16	X	-1.468	-1.468	0	%100
16	M16	Z	2.542	2.542	0	%100
17	M28	X	-1.697	-1.697	0	%100
18	M28	Z	2.939	2.939	0	%100
19	OVP1	X	-.399	-.399	0	%100
20	OVP1	Z	.692	.692	0	%100
21	M28B	X	-.399	-.399	0	%100
22	M28B	Z	.692	.692	0	%100
23	OVP	X	-1.245	-1.245	0	%100
24	OVP	Z	2.156	2.156	0	%100
25	MP4A	X	-1.981	-1.981	0	%100
26	MP4A	Z	3.432	3.432	0	%100
27	MP1A	X	-1.792	-1.792	0	%100
28	MP1A	Z	3.104	3.104	0	%100
29	MP3A	X	-1.792	-1.792	0	%100
30	MP3A	Z	3.104	3.104	0	%100
31	MP2A	X	-1.792	-1.792	0	%100
32	MP2A	Z	3.104	3.104	0	%100
33	M31B	X	-.009	-.009	0	%100
34	M31B	Z	.016	.016	0	%100
35	M36	X	-1.486	-1.486	0	%100
36	M36	Z	2.574	2.574	0	%100
37	M37	X	-.467	-.467	0	%100
38	M37	Z	.808	.808	0	%100
39	M38	X	-2.314	-2.314	0	%100
40	M38	Z	4.008	4.008	0	%100
41	M43	X	-1.227	-1.227	0	%100
42	M43	Z	2.125	2.125	0	%100

Member Distributed Loads (BLC 61 : Structure Wi (240 Deg))

	Member Label	Direction	Start Magnitude[lb/ft,...	End Magnitude[lb/ft,F...	Start Location[ft,%]	End Location[ft,%]
1	M1	X	-1.207	-1.207	0	%100
2	M1	Z	.697	.697	0	%100
3	M2	X	-1.207	-1.207	0	%100
4	M2	Z	.697	.697	0	%100
5	M7A	X	-1.207	-1.207	0	%100
6	M7A	Z	.697	.697	0	%100

Member Distributed Loads (BLC 61 : Structure Wi (240 Deg)) (Continued)

	Member Label	Direction	Start Magnitude[lb/ft,...	End Magnitude[lb/ft,F...	Start Location[ft,%]	End Location[ft,%]
7	M8	X	-1.207	-1.207	0	%100
8	M8	Z	.697	.697	0	%100
9	M13	X	-2.542	-2.542	0	%100
10	M13	Z	1.468	1.468	0	%100
11	M14	X	-2.542	-2.542	0	%100
12	M14	Z	1.468	1.468	0	%100
13	M15	X	-2.542	-2.542	0	%100
14	M15	Z	1.468	1.468	0	%100
15	M16	X	-2.542	-2.542	0	%100
16	M16	Z	1.468	1.468	0	%100
17	M28	X	-2.939	-2.939	0	%100
18	M28	Z	1.697	1.697	0	%100
19	OVP1	X	-2.075	-2.075	0	%100
20	OVP1	Z	1.198	1.198	0	%100
21	M28B	X	-2.075	-2.075	0	%100
22	M28B	Z	1.198	1.198	0	%100
23	OVP	X	-2.156	-2.156	0	%100
24	OVP	Z	1.245	1.245	0	%100
25	MP4A	X	-3.432	-3.432	0	%100
26	MP4A	Z	1.981	1.981	0	%100
27	MP1A	X	-3.104	-3.104	0	%100
28	MP1A	Z	1.792	1.792	0	%100
29	MP3A	X	-3.104	-3.104	0	%100
30	MP3A	Z	1.792	1.792	0	%100
31	MP2A	X	-3.104	-3.104	0	%100
32	MP2A	Z	1.792	1.792	0	%100
33	M31B	X	-.978	-.978	0	%100
34	M31B	Z	.565	.565	0	%100
35	M36	X	-.858	-.858	0	%100
36	M36	Z	.495	.495	0	%100
37	M37	X	-.744	-.744	0	%100
38	M37	Z	.429	.429	0	%100
39	M38	X	-3.943	-3.943	0	%100
40	M38	Z	2.276	2.276	0	%100
41	M43	X	-3.087	-3.087	0	%100
42	M43	Z	1.782	1.782	0	%100

Member Distributed Loads (BLC 62 : Structure Wi (270 Deg))

	Member Label	Direction	Start Magnitude[lb/ft,...	End Magnitude[lb/ft,F...	Start Location[ft,%]	End Location[ft,%]
1	M1	X	0	0	0	%100
2	M1	Z	0	0	0	%100
3	M2	X	0	0	0	%100
4	M2	Z	0	0	0	%100
5	M7A	X	0	0	0	%100
6	M7A	Z	0	0	0	%100
7	M8	X	0	0	0	%100
8	M8	Z	0	0	0	%100
9	M13	X	-2.935	-2.935	0	%100
10	M13	Z	0	0	0	%100
11	M14	X	-2.935	-2.935	0	%100
12	M14	Z	0	0	0	%100

Member Distributed Loads (BLC 62 : Structure Wi (270 Deg)) (Continued)

	Member Label	Direction	Start Magnitude[lb/ft,...	End Magnitude[lb/ft,F...	Start Location[ft,%]	End Location[ft,%]
13	M15	X	-2.935	-2.935	0	%100
14	M15	Z	0	0	0	%100
15	M16	X	-2.935	-2.935	0	%100
16	M16	Z	0	0	0	%100
17	M28	X	-3.393	-3.393	0	%100
18	M28	Z	0	0	0	%100
19	OVP1	X	-3.195	-3.195	0	%100
20	OVP1	Z	0	0	0	%100
21	M28B	X	-3.195	-3.195	0	%100
22	M28B	Z	0	0	0	%100
23	OVP	X	-2.489	-2.489	0	%100
24	OVP	Z	0	0	0	%100
25	MP4A	X	-3.963	-3.963	0	%100
26	MP4A	Z	0	0	0	%100
27	MP1A	X	-3.584	-3.584	0	%100
28	MP1A	Z	0	0	0	%100
29	MP3A	X	-3.584	-3.584	0	%100
30	MP3A	Z	0	0	0	%100
31	MP2A	X	-3.584	-3.584	0	%100
32	MP2A	Z	0	0	0	%100
33	M31B	X	-2.902	-2.902	0	%100
34	M31B	Z	0	0	0	%100
35	M36	X	0	0	0	%100
36	M36	Z	0	0	0	%100
37	M37	X	-2.668	-2.668	0	%100
38	M37	Z	0	0	0	%100
39	M38	X	-2.668	-2.668	0	%100
40	M38	Z	0	0	0	%100
41	M43	X	-2.902	-2.902	0	%100
42	M43	Z	0	0	0	%100

Member Distributed Loads (BLC 63 : Structure Wi (300 Deg))

	Member Label	Direction	Start Magnitude[lb/ft,...	End Magnitude[lb/ft,F...	Start Location[ft,%]	End Location[ft,%]
1	M1	X	-1.207	-1.207	0	%100
2	M1	Z	-.697	-.697	0	%100
3	M2	X	-1.207	-1.207	0	%100
4	M2	Z	-.697	-.697	0	%100
5	M7A	X	-1.207	-1.207	0	%100
6	M7A	Z	-.697	-.697	0	%100
7	M8	X	-1.207	-1.207	0	%100
8	M8	Z	-.697	-.697	0	%100
9	M13	X	-2.542	-2.542	0	%100
10	M13	Z	-1.468	-1.468	0	%100
11	M14	X	-2.542	-2.542	0	%100
12	M14	Z	-1.468	-1.468	0	%100
13	M15	X	-2.542	-2.542	0	%100
14	M15	Z	-1.468	-1.468	0	%100
15	M16	X	-2.542	-2.542	0	%100
16	M16	Z	-1.468	-1.468	0	%100
17	M28	X	-2.939	-2.939	0	%100
18	M28	Z	-1.697	-1.697	0	%100

Member Distributed Loads (BLC 63 : Structure Wi (300 Deg)) (Continued)

	Member Label	Direction	Start Magnitude[lb/ft,...	End Magnitude[lb/ft,F...	Start Location[ft,%]	End Location[ft,%]
19	OVP1	X	-2.075	-2.075	0	%100
20	OVP1	Z	-1.198	-1.198	0	%100
21	M28B	X	-2.075	-2.075	0	%100
22	M28B	Z	-1.198	-1.198	0	%100
23	OVP	X	-2.156	-2.156	0	%100
24	OVP	Z	-1.245	-1.245	0	%100
25	MP4A	X	-3.432	-3.432	0	%100
26	MP4A	Z	-1.981	-1.981	0	%100
27	MP1A	X	-3.104	-3.104	0	%100
28	MP1A	Z	-1.792	-1.792	0	%100
29	MP3A	X	-3.104	-3.104	0	%100
30	MP3A	Z	-1.792	-1.792	0	%100
31	MP2A	X	-3.104	-3.104	0	%100
32	MP2A	Z	-1.792	-1.792	0	%100
33	M31B	X	-3.087	-3.087	0	%100
34	M31B	Z	-1.782	-1.782	0	%100
35	M36	X	-.858	-.858	0	%100
36	M36	Z	-.495	-.495	0	%100
37	M37	X	-3.943	-3.943	0	%100
38	M37	Z	-2.276	-2.276	0	%100
39	M38	X	-.744	-.744	0	%100
40	M38	Z	-.429	-.429	0	%100
41	M43	X	-.978	-.978	0	%100
42	M43	Z	-.565	-.565	0	%100

Member Distributed Loads (BLC 64 : Structure Wi (330 Deg))

	Member Label	Direction	Start Magnitude[lb/ft,...	End Magnitude[lb/ft,F...	Start Location[ft,%]	End Location[ft,%]
1	M1	X	-2.09	-2.09	0	%100
2	M1	Z	-3.62	-3.62	0	%100
3	M2	X	-2.09	-2.09	0	%100
4	M2	Z	-3.62	-3.62	0	%100
5	M7A	X	-2.09	-2.09	0	%100
6	M7A	Z	-3.62	-3.62	0	%100
7	M8	X	-2.09	-2.09	0	%100
8	M8	Z	-3.62	-3.62	0	%100
9	M13	X	-1.468	-1.468	0	%100
10	M13	Z	-2.542	-2.542	0	%100
11	M14	X	-1.468	-1.468	0	%100
12	M14	Z	-2.542	-2.542	0	%100
13	M15	X	-1.468	-1.468	0	%100
14	M15	Z	-2.542	-2.542	0	%100
15	M16	X	-1.468	-1.468	0	%100
16	M16	Z	-2.542	-2.542	0	%100
17	M28	X	-1.697	-1.697	0	%100
18	M28	Z	-2.939	-2.939	0	%100
19	OVP1	X	-.399	-.399	0	%100
20	OVP1	Z	-.692	-.692	0	%100
21	M28B	X	-.399	-.399	0	%100
22	M28B	Z	-.692	-.692	0	%100
23	OVP	X	-1.245	-1.245	0	%100
24	OVP	Z	-2.156	-2.156	0	%100

Member Distributed Loads (BLC 64 : Structure Wi (330 Deg)) (Continued)

	Member Label	Direction	Start Magnitude[lb/ft,...	End Magnitude[lb/ft,F...	Start Location[ft,%]	End Location[ft,%]
25	MP4A	X	-1.981	-1.981	0	%100
26	MP4A	Z	-3.432	-3.432	0	%100
27	MP1A	X	-1.792	-1.792	0	%100
28	MP1A	Z	-3.104	-3.104	0	%100
29	MP3A	X	-1.792	-1.792	0	%100
30	MP3A	Z	-3.104	-3.104	0	%100
31	MP2A	X	-1.792	-1.792	0	%100
32	MP2A	Z	-3.104	-3.104	0	%100
33	M31B	X	-1.227	-1.227	0	%100
34	M31B	Z	-2.125	-2.125	0	%100
35	M36	X	-1.486	-1.486	0	%100
36	M36	Z	-2.574	-2.574	0	%100
37	M37	X	-2.314	-2.314	0	%100
38	M37	Z	-4.008	-4.008	0	%100
39	M38	X	-.467	-.467	0	%100
40	M38	Z	-.808	-.808	0	%100
41	M43	X	-.009	-.009	0	%100
42	M43	Z	-.016	-.016	0	%100

Member Distributed Loads (BLC 65 : Structure Wm (0 Deg))

	Member Label	Direction	Start Magnitude[lb/ft,...	End Magnitude[lb/ft,F...	Start Location[ft,%]	End Location[ft,%]
1	M1	X	0	0	0	%100
2	M1	Z	-1.364	-1.364	0	%100
3	M2	X	0	0	0	%100
4	M2	Z	-1.364	-1.364	0	%100
5	M7A	X	0	0	0	%100
6	M7A	Z	-1.364	-1.364	0	%100
7	M8	X	0	0	0	%100
8	M8	Z	-1.364	-1.364	0	%100
9	M13	X	0	0	0	%100
10	M13	Z	-.53	-.53	0	%100
11	M14	X	0	0	0	%100
12	M14	Z	-.53	-.53	0	%100
13	M15	X	0	0	0	%100
14	M15	Z	-.53	-.53	0	%100
15	M16	X	0	0	0	%100
16	M16	Z	-.53	-.53	0	%100
17	M28	X	0	0	0	%100
18	M28	Z	-.665	-.665	0	%100
19	OVP1	X	0	0	0	%100
20	OVP1	Z	0	0	0	%100
21	M28B	X	0	0	0	%100
22	M28B	Z	0	0	0	%100
23	OVP	X	0	0	0	%100
24	OVP	Z	-.415	-.415	0	%100
25	MP4A	X	0	0	0	%100
26	MP4A	Z	-.785	-.785	0	%100
27	MP1A	X	0	0	0	%100
28	MP1A	Z	-.648	-.648	0	%100
29	MP3A	X	0	0	0	%100
30	MP3A	Z	-.648	-.648	0	%100

Member Distributed Loads (BLC 65 : Structure Wm (0 Deg)) (Continued)

	Member Label	Direction	Start Magnitude[lb/ft,...	End Magnitude[lb/ft,F...	Start Location[ft,%]	End Location[ft,%]
31	MP2A	X	0	0	0	%100
32	MP2A	Z	-.648	-.648	0	%100
33	M31B	X	0	0	0	%100
34	M31B	Z	-.123	-.123	0	%100
35	M36	X	0	0	0	%100
36	M36	Z	-.785	-.785	0	%100
37	M37	X	0	0	0	%100
38	M37	Z	-.643	-.643	0	%100
39	M38	X	0	0	0	%100
40	M38	Z	-.643	-.643	0	%100
41	M43	X	0	0	0	%100
42	M43	Z	-.123	-.123	0	%100

Member Distributed Loads (BLC 66 : Structure Wm (30 Deg))

	Member Label	Direction	Start Magnitude[lb/ft,...	End Magnitude[lb/ft,F...	Start Location[ft,%]	End Location[ft,%]
1	M1	X	.512	.512	0	%100
2	M1	Z	-.886	-.886	0	%100
3	M2	X	.512	.512	0	%100
4	M2	Z	-.886	-.886	0	%100
5	M7A	X	.512	.512	0	%100
6	M7A	Z	-.886	-.886	0	%100
7	M8	X	.512	.512	0	%100
8	M8	Z	-.886	-.886	0	%100
9	M13	X	.265	.265	0	%100
10	M13	Z	-.459	-.459	0	%100
11	M14	X	.265	.265	0	%100
12	M14	Z	-.459	-.459	0	%100
13	M15	X	.265	.265	0	%100
14	M15	Z	-.459	-.459	0	%100
15	M16	X	.265	.265	0	%100
16	M16	Z	-.459	-.459	0	%100
17	M28	X	.332	.332	0	%100
18	M28	Z	-.576	-.576	0	%100
19	OVP1	X	.082	.082	0	%100
20	OVP1	Z	-.142	-.142	0	%100
21	M28B	X	.082	.082	0	%100
22	M28B	Z	-.142	-.142	0	%100
23	OVP	X	.207	.207	0	%100
24	OVP	Z	-.359	-.359	0	%100
25	MP4A	X	.392	.392	0	%100
26	MP4A	Z	-.679	-.679	0	%100
27	MP1A	X	.324	.324	0	%100
28	MP1A	Z	-.561	-.561	0	%100
29	MP3A	X	.324	.324	0	%100
30	MP3A	Z	-.561	-.561	0	%100
31	MP2A	X	.324	.324	0	%100
32	MP2A	Z	-.561	-.561	0	%100
33	M31B	X	.002	.002	0	%100
34	M31B	Z	-.003	-.003	0	%100
35	M36	X	.294	.294	0	%100
36	M36	Z	-.51	-.51	0	%100

Member Distributed Loads (BLC 66 : Structure Wm (30 Deg)) (Continued)

	Member Label	Direction	Start Magnitude[lb/ft,...	End Magnitude[lb/ft,F...	Start Location[ft,%]	End Location[ft,%]
37	M37	X	.107	.107	0	%100
38	M37	Z	-.185	-.185	0	%100
39	M38	X	.528	.528	0	%100
40	M38	Z	-.915	-.915	0	%100
41	M43	X	.222	.222	0	%100
42	M43	Z	-.384	-.384	0	%100

Member Distributed Loads (BLC 67 : Structure Wm (60 Deg))

	Member Label	Direction	Start Magnitude[lb/ft,...	End Magnitude[lb/ft,F...	Start Location[ft,%]	End Location[ft,%]
1	M1	X	.295	.295	0	%100
2	M1	Z	-.171	-.171	0	%100
3	M2	X	.295	.295	0	%100
4	M2	Z	-.171	-.171	0	%100
5	M7A	X	.295	.295	0	%100
6	M7A	Z	-.171	-.171	0	%100
7	M8	X	.295	.295	0	%100
8	M8	Z	-.171	-.171	0	%100
9	M13	X	.459	.459	0	%100
10	M13	Z	-.265	-.265	0	%100
11	M14	X	.459	.459	0	%100
12	M14	Z	-.265	-.265	0	%100
13	M15	X	.459	.459	0	%100
14	M15	Z	-.265	-.265	0	%100
15	M16	X	.459	.459	0	%100
16	M16	Z	-.265	-.265	0	%100
17	M28	X	.576	.576	0	%100
18	M28	Z	-.332	-.332	0	%100
19	OVP1	X	.425	.425	0	%100
20	OVP1	Z	-.245	-.245	0	%100
21	M28B	X	.425	.425	0	%100
22	M28B	Z	-.245	-.245	0	%100
23	OVP	X	.359	.359	0	%100
24	OVP	Z	-.207	-.207	0	%100
25	MP4A	X	.679	.679	0	%100
26	MP4A	Z	-.392	-.392	0	%100
27	MP1A	X	.561	.561	0	%100
28	MP1A	Z	-.324	-.324	0	%100
29	MP3A	X	.561	.561	0	%100
30	MP3A	Z	-.324	-.324	0	%100
31	MP2A	X	.561	.561	0	%100
32	MP2A	Z	-.324	-.324	0	%100
33	M31B	X	.177	.177	0	%100
34	M31B	Z	-.102	-.102	0	%100
35	M36	X	.17	.17	0	%100
36	M36	Z	-.098	-.098	0	%100
37	M37	X	.17	.17	0	%100
38	M37	Z	-.098	-.098	0	%100
39	M38	X	.9	.9	0	%100
40	M38	Z	-.52	-.52	0	%100
41	M43	X	.558	.558	0	%100
42	M43	Z	-.322	-.322	0	%100

Member Distributed Loads (BLC 68 : Structure Wm (90 Deg))

	Member Label	Direction	Start Magnitude[lb/ft,...	End Magnitude[lb/ft,F...	Start Location[ft,%]	End Location[ft,%]
1	M1	X	0	0	0	%100
2	M1	Z	0	0	0	%100
3	M2	X	0	0	0	%100
4	M2	Z	0	0	0	%100
5	M7A	X	0	0	0	%100
6	M7A	Z	0	0	0	%100
7	M8	X	0	0	0	%100
8	M8	Z	0	0	0	%100
9	M13	X	.53	.53	0	%100
10	M13	Z	0	0	0	%100
11	M14	X	.53	.53	0	%100
12	M14	Z	0	0	0	%100
13	M15	X	.53	.53	0	%100
14	M15	Z	0	0	0	%100
15	M16	X	.53	.53	0	%100
16	M16	Z	0	0	0	%100
17	M28	X	.665	.665	0	%100
18	M28	Z	0	0	0	%100
19	OVP1	X	.654	.654	0	%100
20	OVP1	Z	0	0	0	%100
21	M28B	X	.654	.654	0	%100
22	M28B	Z	0	0	0	%100
23	OVP	X	.415	.415	0	%100
24	OVP	Z	0	0	0	%100
25	MP4A	X	.785	.785	0	%100
26	MP4A	Z	0	0	0	%100
27	MP1A	X	.648	.648	0	%100
28	MP1A	Z	0	0	0	%100
29	MP3A	X	.648	.648	0	%100
30	MP3A	Z	0	0	0	%100
31	MP2A	X	.648	.648	0	%100
32	MP2A	Z	0	0	0	%100
33	M31B	X	.525	.525	0	%100
34	M31B	Z	0	0	0	%100
35	M36	X	0	0	0	%100
36	M36	Z	0	0	0	%100
37	M37	X	.609	.609	0	%100
38	M37	Z	0	0	0	%100
39	M38	X	.609	.609	0	%100
40	M38	Z	0	0	0	%100
41	M43	X	.525	.525	0	%100
42	M43	Z	0	0	0	%100

Member Distributed Loads (BLC 69 : Structure Wm (120 Deg))

	Member Label	Direction	Start Magnitude[lb/ft,...	End Magnitude[lb/ft,F...	Start Location[ft,%]	End Location[ft,%]
1	M1	X	.295	.295	0	%100
2	M1	Z	.171	.171	0	%100
3	M2	X	.295	.295	0	%100
4	M2	Z	.171	.171	0	%100
5	M7A	X	.295	.295	0	%100
6	M7A	Z	.171	.171	0	%100

Member Distributed Loads (BLC 69 : Structure Wm (120 Deg)) (Continued)

	Member Label	Direction	Start Magnitude[lb/ft,...	End Magnitude[lb/ft,F...	Start Location[ft,%]	End Location[ft,%]
7	M8	X	.295	.295	0	%100
8	M8	Z	.171	.171	0	%100
9	M13	X	.459	.459	0	%100
10	M13	Z	.265	.265	0	%100
11	M14	X	.459	.459	0	%100
12	M14	Z	.265	.265	0	%100
13	M15	X	.459	.459	0	%100
14	M15	Z	.265	.265	0	%100
15	M16	X	.459	.459	0	%100
16	M16	Z	.265	.265	0	%100
17	M28	X	.576	.576	0	%100
18	M28	Z	.332	.332	0	%100
19	OVP1	X	.425	.425	0	%100
20	OVP1	Z	.245	.245	0	%100
21	M28B	X	.425	.425	0	%100
22	M28B	Z	.245	.245	0	%100
23	OVP	X	.359	.359	0	%100
24	OVP	Z	.207	.207	0	%100
25	MP4A	X	.679	.679	0	%100
26	MP4A	Z	.392	.392	0	%100
27	MP1A	X	.561	.561	0	%100
28	MP1A	Z	.324	.324	0	%100
29	MP3A	X	.561	.561	0	%100
30	MP3A	Z	.324	.324	0	%100
31	MP2A	X	.561	.561	0	%100
32	MP2A	Z	.324	.324	0	%100
33	M31B	X	.558	.558	0	%100
34	M31B	Z	.322	.322	0	%100
35	M36	X	.17	.17	0	%100
36	M36	Z	.098	.098	0	%100
37	M37	X	.9	.9	0	%100
38	M37	Z	.52	.52	0	%100
39	M38	X	.17	.17	0	%100
40	M38	Z	.098	.098	0	%100
41	M43	X	.177	.177	0	%100
42	M43	Z	.102	.102	0	%100

Member Distributed Loads (BLC 70 : Structure Wm (150 Deg))

	Member Label	Direction	Start Magnitude[lb/ft,...	End Magnitude[lb/ft,F...	Start Location[ft,%]	End Location[ft,%]
1	M1	X	.512	.512	0	%100
2	M1	Z	.886	.886	0	%100
3	M2	X	.512	.512	0	%100
4	M2	Z	.886	.886	0	%100
5	M7A	X	.512	.512	0	%100
6	M7A	Z	.886	.886	0	%100
7	M8	X	.512	.512	0	%100
8	M8	Z	.886	.886	0	%100
9	M13	X	.265	.265	0	%100
10	M13	Z	.459	.459	0	%100
11	M14	X	.265	.265	0	%100
12	M14	Z	.459	.459	0	%100

Member Distributed Loads (BLC 70 : Structure Wm (150 Deg)) (Continued)

	Member Label	Direction	Start Magnitude[lb/ft,...	End Magnitude[lb/ft,F...	Start Location[ft,%]	End Location[ft,%]
13	M15	X	.265	.265	0	%100
14	M15	Z	.459	.459	0	%100
15	M16	X	.265	.265	0	%100
16	M16	Z	.459	.459	0	%100
17	M28	X	.332	.332	0	%100
18	M28	Z	.576	.576	0	%100
19	OVP1	X	.082	.082	0	%100
20	OVP1	Z	.142	.142	0	%100
21	M28B	X	.082	.082	0	%100
22	M28B	Z	.142	.142	0	%100
23	OVP	X	.207	.207	0	%100
24	OVP	Z	.359	.359	0	%100
25	MP4A	X	.392	.392	0	%100
26	MP4A	Z	.679	.679	0	%100
27	MP1A	X	.324	.324	0	%100
28	MP1A	Z	.561	.561	0	%100
29	MP3A	X	.324	.324	0	%100
30	MP3A	Z	.561	.561	0	%100
31	MP2A	X	.324	.324	0	%100
32	MP2A	Z	.561	.561	0	%100
33	M31B	X	.222	.222	0	%100
34	M31B	Z	.384	.384	0	%100
35	M36	X	.294	.294	0	%100
36	M36	Z	.51	.51	0	%100
37	M37	X	.528	.528	0	%100
38	M37	Z	.915	.915	0	%100
39	M38	X	.107	.107	0	%100
40	M38	Z	.185	.185	0	%100
41	M43	X	.002	.002	0	%100
42	M43	Z	.003	.003	0	%100

Member Distributed Loads (BLC 71 : Structure Wm (180 Deg))

	Member Label	Direction	Start Magnitude[lb/ft,...	End Magnitude[lb/ft,F...	Start Location[ft,%]	End Location[ft,%]
1	M1	X	0	0	0	%100
2	M1	Z	1.364	1.364	0	%100
3	M2	X	0	0	0	%100
4	M2	Z	1.364	1.364	0	%100
5	M7A	X	0	0	0	%100
6	M7A	Z	1.364	1.364	0	%100
7	M8	X	0	0	0	%100
8	M8	Z	1.364	1.364	0	%100
9	M13	X	0	0	0	%100
10	M13	Z	.53	.53	0	%100
11	M14	X	0	0	0	%100
12	M14	Z	.53	.53	0	%100
13	M15	X	0	0	0	%100
14	M15	Z	.53	.53	0	%100
15	M16	X	0	0	0	%100
16	M16	Z	.53	.53	0	%100
17	M28	X	0	0	0	%100
18	M28	Z	.665	.665	0	%100

Member Distributed Loads (BLC 71 : Structure Wm (180 Deg)) (Continued)

	Member Label	Direction	Start Magnitude[lb/ft,...	End Magnitude[lb/ft,F...	Start Location[ft,%]	End Location[ft,%]
19	OVP1	X	0	0	0	%100
20	OVP1	Z	0	0	0	%100
21	M28B	X	0	0	0	%100
22	M28B	Z	0	0	0	%100
23	OVP	X	0	0	0	%100
24	OVP	Z	.415	.415	0	%100
25	MP4A	X	0	0	0	%100
26	MP4A	Z	.785	.785	0	%100
27	MP1A	X	0	0	0	%100
28	MP1A	Z	.648	.648	0	%100
29	MP3A	X	0	0	0	%100
30	MP3A	Z	.648	.648	0	%100
31	MP2A	X	0	0	0	%100
32	MP2A	Z	.648	.648	0	%100
33	M31B	X	0	0	0	%100
34	M31B	Z	.123	.123	0	%100
35	M36	X	0	0	0	%100
36	M36	Z	.785	.785	0	%100
37	M37	X	0	0	0	%100
38	M37	Z	.643	.643	0	%100
39	M38	X	0	0	0	%100
40	M38	Z	.643	.643	0	%100
41	M43	X	0	0	0	%100
42	M43	Z	.123	.123	0	%100

Member Distributed Loads (BLC 72 : Structure Wm (210 Deg))

	Member Label	Direction	Start Magnitude[lb/ft,...	End Magnitude[lb/ft,F...	Start Location[ft,%]	End Location[ft,%]
1	M1	X	-.512	-.512	0	%100
2	M1	Z	.886	.886	0	%100
3	M2	X	-.512	-.512	0	%100
4	M2	Z	.886	.886	0	%100
5	M7A	X	-.512	-.512	0	%100
6	M7A	Z	.886	.886	0	%100
7	M8	X	-.512	-.512	0	%100
8	M8	Z	.886	.886	0	%100
9	M13	X	-.265	-.265	0	%100
10	M13	Z	.459	.459	0	%100
11	M14	X	-.265	-.265	0	%100
12	M14	Z	.459	.459	0	%100
13	M15	X	-.265	-.265	0	%100
14	M15	Z	.459	.459	0	%100
15	M16	X	-.265	-.265	0	%100
16	M16	Z	.459	.459	0	%100
17	M28	X	-.332	-.332	0	%100
18	M28	Z	.576	.576	0	%100
19	OVP1	X	-.082	-.082	0	%100
20	OVP1	Z	.142	.142	0	%100
21	M28B	X	-.082	-.082	0	%100
22	M28B	Z	.142	.142	0	%100
23	OVP	X	-.207	-.207	0	%100
24	OVP	Z	.359	.359	0	%100

Member Distributed Loads (BLC 72 : Structure Wm (210 Deg)) (Continued)

	Member Label	Direction	Start Magnitude[lb/ft,...	End Magnitude[lb/ft,F...	Start Location[ft,%]	End Location[ft,%]
25	MP4A	X	-.392	-.392	0	%100
26	MP4A	Z	.679	.679	0	%100
27	MP1A	X	-.324	-.324	0	%100
28	MP1A	Z	.561	.561	0	%100
29	MP3A	X	-.324	-.324	0	%100
30	MP3A	Z	.561	.561	0	%100
31	MP2A	X	-.324	-.324	0	%100
32	MP2A	Z	.561	.561	0	%100
33	M31B	X	-.002	-.002	0	%100
34	M31B	Z	.003	.003	0	%100
35	M36	X	-.294	-.294	0	%100
36	M36	Z	.51	.51	0	%100
37	M37	X	-.107	-.107	0	%100
38	M37	Z	.185	.185	0	%100
39	M38	X	-.528	-.528	0	%100
40	M38	Z	.915	.915	0	%100
41	M43	X	-.222	-.222	0	%100
42	M43	Z	.384	.384	0	%100

Member Distributed Loads (BLC 73 : Structure Wm (240 Deg))

	Member Label	Direction	Start Magnitude[lb/ft,...	End Magnitude[lb/ft,F...	Start Location[ft,%]	End Location[ft,%]
1	M1	X	-.295	-.295	0	%100
2	M1	Z	.171	.171	0	%100
3	M2	X	-.295	-.295	0	%100
4	M2	Z	.171	.171	0	%100
5	M7A	X	-.295	-.295	0	%100
6	M7A	Z	.171	.171	0	%100
7	M8	X	-.295	-.295	0	%100
8	M8	Z	.171	.171	0	%100
9	M13	X	-.459	-.459	0	%100
10	M13	Z	.265	.265	0	%100
11	M14	X	-.459	-.459	0	%100
12	M14	Z	.265	.265	0	%100
13	M15	X	-.459	-.459	0	%100
14	M15	Z	.265	.265	0	%100
15	M16	X	-.459	-.459	0	%100
16	M16	Z	.265	.265	0	%100
17	M28	X	-.576	-.576	0	%100
18	M28	Z	.332	.332	0	%100
19	OVP1	X	-.425	-.425	0	%100
20	OVP1	Z	.245	.245	0	%100
21	M28B	X	-.425	-.425	0	%100
22	M28B	Z	.245	.245	0	%100
23	OVP	X	-.359	-.359	0	%100
24	OVP	Z	.207	.207	0	%100
25	MP4A	X	-.679	-.679	0	%100
26	MP4A	Z	.392	.392	0	%100
27	MP1A	X	-.561	-.561	0	%100
28	MP1A	Z	.324	.324	0	%100
29	MP3A	X	-.561	-.561	0	%100
30	MP3A	Z	.324	.324	0	%100

Member Distributed Loads (BLC 73 : Structure Wm (240 Deg)) (Continued)

	Member Label	Direction	Start Magnitude[lb/ft,...	End Magnitude[lb/ft,F...	Start Location[ft,%]	End Location[ft,%]
31	MP2A	X	-.561	-.561	0	%100
32	MP2A	Z	.324	.324	0	%100
33	M31B	X	-.177	-.177	0	%100
34	M31B	Z	.102	.102	0	%100
35	M36	X	-.17	-.17	0	%100
36	M36	Z	.098	.098	0	%100
37	M37	X	-.17	-.17	0	%100
38	M37	Z	.098	.098	0	%100
39	M38	X	-.9	-.9	0	%100
40	M38	Z	.52	.52	0	%100
41	M43	X	-.558	-.558	0	%100
42	M43	Z	.322	.322	0	%100

Member Distributed Loads (BLC 74 : Structure Wm (270 Deg))

	Member Label	Direction	Start Magnitude[lb/ft,...	End Magnitude[lb/ft,F...	Start Location[ft,%]	End Location[ft,%]
1	M1	X	0	0	0	%100
2	M1	Z	0	0	0	%100
3	M2	X	0	0	0	%100
4	M2	Z	0	0	0	%100
5	M7A	X	0	0	0	%100
6	M7A	Z	0	0	0	%100
7	M8	X	0	0	0	%100
8	M8	Z	0	0	0	%100
9	M13	X	-.53	-.53	0	%100
10	M13	Z	0	0	0	%100
11	M14	X	-.53	-.53	0	%100
12	M14	Z	0	0	0	%100
13	M15	X	-.53	-.53	0	%100
14	M15	Z	0	0	0	%100
15	M16	X	-.53	-.53	0	%100
16	M16	Z	0	0	0	%100
17	M28	X	-.665	-.665	0	%100
18	M28	Z	0	0	0	%100
19	OVP1	X	-.654	-.654	0	%100
20	OVP1	Z	0	0	0	%100
21	M28B	X	-.654	-.654	0	%100
22	M28B	Z	0	0	0	%100
23	OVP	X	-.415	-.415	0	%100
24	OVP	Z	0	0	0	%100
25	MP4A	X	-.785	-.785	0	%100
26	MP4A	Z	0	0	0	%100
27	MP1A	X	-.648	-.648	0	%100
28	MP1A	Z	0	0	0	%100
29	MP3A	X	-.648	-.648	0	%100
30	MP3A	Z	0	0	0	%100
31	MP2A	X	-.648	-.648	0	%100
32	MP2A	Z	0	0	0	%100
33	M31B	X	-.525	-.525	0	%100
34	M31B	Z	0	0	0	%100
35	M36	X	0	0	0	%100
36	M36	Z	0	0	0	%100

Member Distributed Loads (BLC 74 : Structure Wm (270 Deg)) (Continued)

	Member Label	Direction	Start Magnitude[lb/ft,...	End Magnitude[lb/ft,F...	Start Location[ft,%]	End Location[ft,%]
37	M37	X	-.609	-.609	0	%100
38	M37	Z	0	0	0	%100
39	M38	X	-.609	-.609	0	%100
40	M38	Z	0	0	0	%100
41	M43	X	-.525	-.525	0	%100
42	M43	Z	0	0	0	%100

Member Distributed Loads (BLC 75 : Structure Wm (300 Deg))

	Member Label	Direction	Start Magnitude[lb/ft,...	End Magnitude[lb/ft,F...	Start Location[ft,%]	End Location[ft,%]
1	M1	X	-.295	-.295	0	%100
2	M1	Z	-.171	-.171	0	%100
3	M2	X	-.295	-.295	0	%100
4	M2	Z	-.171	-.171	0	%100
5	M7A	X	-.295	-.295	0	%100
6	M7A	Z	-.171	-.171	0	%100
7	M8	X	-.295	-.295	0	%100
8	M8	Z	-.171	-.171	0	%100
9	M13	X	-.459	-.459	0	%100
10	M13	Z	-.265	-.265	0	%100
11	M14	X	-.459	-.459	0	%100
12	M14	Z	-.265	-.265	0	%100
13	M15	X	-.459	-.459	0	%100
14	M15	Z	-.265	-.265	0	%100
15	M16	X	-.459	-.459	0	%100
16	M16	Z	-.265	-.265	0	%100
17	M28	X	-.576	-.576	0	%100
18	M28	Z	-.332	-.332	0	%100
19	OVP1	X	-.425	-.425	0	%100
20	OVP1	Z	-.245	-.245	0	%100
21	M28B	X	-.425	-.425	0	%100
22	M28B	Z	-.245	-.245	0	%100
23	OVP	X	-.359	-.359	0	%100
24	OVP	Z	-.207	-.207	0	%100
25	MP4A	X	-.679	-.679	0	%100
26	MP4A	Z	-.392	-.392	0	%100
27	MP1A	X	-.561	-.561	0	%100
28	MP1A	Z	-.324	-.324	0	%100
29	MP3A	X	-.561	-.561	0	%100
30	MP3A	Z	-.324	-.324	0	%100
31	MP2A	X	-.561	-.561	0	%100
32	MP2A	Z	-.324	-.324	0	%100
33	M31B	X	-.558	-.558	0	%100
34	M31B	Z	-.322	-.322	0	%100
35	M36	X	-.17	-.17	0	%100
36	M36	Z	-.098	-.098	0	%100
37	M37	X	-.9	-.9	0	%100
38	M37	Z	-.52	-.52	0	%100
39	M38	X	-.17	-.17	0	%100
40	M38	Z	-.098	-.098	0	%100
41	M43	X	-.177	-.177	0	%100
42	M43	Z	-.102	-.102	0	%100

Member Distributed Loads (BLC 76 : Structure Wm (330 Deg))

	Member Label	Direction	Start Magnitude[lb/ft,...	End Magnitude[lb/ft,F...	Start Location[ft,%]	End Location[ft,%]
1	M1	X	-.512	-.512	0	%100
2	M1	Z	-.886	-.886	0	%100
3	M2	X	-.512	-.512	0	%100
4	M2	Z	-.886	-.886	0	%100
5	M7A	X	-.512	-.512	0	%100
6	M7A	Z	-.886	-.886	0	%100
7	M8	X	-.512	-.512	0	%100
8	M8	Z	-.886	-.886	0	%100
9	M13	X	-.265	-.265	0	%100
10	M13	Z	-.459	-.459	0	%100
11	M14	X	-.265	-.265	0	%100
12	M14	Z	-.459	-.459	0	%100
13	M15	X	-.265	-.265	0	%100
14	M15	Z	-.459	-.459	0	%100
15	M16	X	-.265	-.265	0	%100
16	M16	Z	-.459	-.459	0	%100
17	M28	X	-.332	-.332	0	%100
18	M28	Z	-.576	-.576	0	%100
19	OVP1	X	-.082	-.082	0	%100
20	OVP1	Z	-.142	-.142	0	%100
21	M28B	X	-.082	-.082	0	%100
22	M28B	Z	-.142	-.142	0	%100
23	OVP	X	-.207	-.207	0	%100
24	OVP	Z	-.359	-.359	0	%100
25	MP4A	X	-.392	-.392	0	%100
26	MP4A	Z	-.679	-.679	0	%100
27	MP1A	X	-.324	-.324	0	%100
28	MP1A	Z	-.561	-.561	0	%100
29	MP3A	X	-.324	-.324	0	%100
30	MP3A	Z	-.561	-.561	0	%100
31	MP2A	X	-.324	-.324	0	%100
32	MP2A	Z	-.561	-.561	0	%100
33	M31B	X	-.222	-.222	0	%100
34	M31B	Z	-.384	-.384	0	%100
35	M36	X	-.294	-.294	0	%100
36	M36	Z	-.51	-.51	0	%100
37	M37	X	-.528	-.528	0	%100
38	M37	Z	-.915	-.915	0	%100
39	M38	X	-.107	-.107	0	%100
40	M38	Z	-.185	-.185	0	%100
41	M43	X	-.002	-.002	0	%100
42	M43	Z	-.003	-.003	0	%100

Member Area Loads

Joint A	Joint B	Joint C	Joint D	Direction	Distribution	Magnitude[ksf]
No Data to Print ...						

Envelope Joint Reactions

	Joint		X [lb]	LC	Y [lb]	LC	Z [lb]	LC	MX [k-ft]	LC	MY [k-ft]	LC	MZ [k-ft]	LC
1	N53B	max	368.714	30	705.25	14	574.225	12	.002	8	0	51	1.488	11
2		min	-114.401	12	-5.774	8	-1309.824	6	-.294	14	0	1	-3.05	5
3	N52B	max	239.567	11	837.705	14	1905.341	17	.062	8	0	51	1.403	11
4		min	-391.884	5	-149.389	8	168.555	11	-.349	14	0	1	-2.947	5
5	N66	max	2885.987	11	1314.211	8	902.812	2	.005	1	.003	29	0	11
6		min	-2877.307	5	-465.603	2	-2425.423	8	-.004	7	0	11	-.006	29
7	N68	max	837.013	6	101.694	12	2182.709	12	0	51	0	51	0	51
8		min	-1052.739	12	-32.291	7	-1851.874	6	0	1	0	1	0	1
9	N77	max	423.88	2	82.791	2	895.665	2	0	51	0	51	0	51
10		min	-240.68	8	-36.39	8	-558.053	8	0	1	0	1	0	1
11	Totals:	max	1974.395	11	2489.662	23	3192.248	1						
12		min	-1974.461	5	1105.546	6	-3192.266	7						

Envelope AISC 15th(360-16): LRFD Steel Code Checks

	Member	Shape	Code C...	Loc[ft]	LC	Shear ...	Loc[ft]	Dir	LC	phi*Pnc [lb]	phi*Pnt [lb]	phi*Mn y-...	phi*Mn z-...	Cb	Eqn
1	M1	L3X3X3	.672	6.25	6	.657	.911	y	19	14909.427	35316	1.32	2.753	2....	H2-1
2	M2	L3X3X3	.393	5.273	2	.237	5.339	y	19	14909.427	35316	1.32	2.613	2....	H2-1
3	M7A	L3X3X3	.625	6.25	1	.640	.911	y	13	14909.427	35316	1.32	2.642	2....	H2-1
4	M8	L3X3X3	.642	0	1	.232	5.339	y	13	14909.427	35316	1.32	2.695	2....	H2-1
5	M13	PIPE_2.0	.716	2.25	12	.554	2.25		12	28843.414	32130	1.872	1.872	1....	H3-6
6	M14	PIPE_2.0	.420	2.25	8	.319	2.25		5	28843.414	32130	1.872	1.872	1....	H1-1b
7	M15	PIPE_2.0	.413	2.25	6	.265	3		1	28843.414	32130	1.872	1.872	1....	H1-1b
8	M16	PIPE_2.0	.445	2.25	5	.314	2.25		3	28843.414	32130	1.872	1.872	3....	H3-6
9	M28	PIPE_3.0	.507	2.625	5	.448	2.625		5	62138.029	65205	5.749	5.749	2....	H3-6
10	OVP1	HSS3X3X3	.628	0	29	.553	2.5	z	5	74689.866	78246	6.796	6.796	1....	H3-6
11	M28B	HSS3X3X3	.617	0	5	.534	2.5	y	5	74689.866	78246	6.796	6.796	1....	H3-6
12	OVP	PIPE_1.5	.684	2.25	5	.457	2.25		5	22661.625	23593.5	1.105	1.105	2....	H3-6
13	MP4A	PIPE_2.5	.339	4	7	.178	5.5		6	30038.461	50715	3.596	3.596	1....	H1-1b
14	MP1A	PIPE_2.0	.333	4.219	7	.171	5.531		2	12143.947	32130	1.872	1.872	1....	H1-1b
15	MP3A	PIPE_2.0	.046	3.937	7	.216	4.01		6	17855.085	32130	1.872	1.872	1....	H1-1b
16	MP2A	PIPE_2.0	.168	3.937	7	.217	4.302		2	17855.085	32130	1.872	1.872	1....	H1-1b
17	M31B	PIPE_2.0	.364	0	12	.009	7.646		12	15941.256	32130	1.872	1.872	1....	H1-1b
18	M36	PIPE_2.5	.559	3.375	11	.347	1.547		12	12481.817	50715	3.596	3.596	1....	H3-6
19	M37	L2.5x2.5x4	.145	2.477	5	.032	4.953	y	2	17314.745	38556	1.114	2.254	1....	H2-1
20	M38	L2.5x2.5x4	.101	2.477	12	.024	4.953	y	7	17314.849	38556	1.114	2.254	1....	H2-1
21	M43	PIPE_2.0	.263	0	2	.008	7.646		2	15941.256	32130	1.872	1.872	1....	H1-1b

Client:	Verizon	Date:	7/27/2021
Site Name:	Franklin CT		
Project No.	21777635A		
Title:	Mount Fix	Page:	1

Version 3.1

I. Mount-to-Tower Connection Check

RISA Model Data

Nodes *(labeled per RISA)*	Orientation *(per graphic of typical platform)*
N53B	90
N52B	90

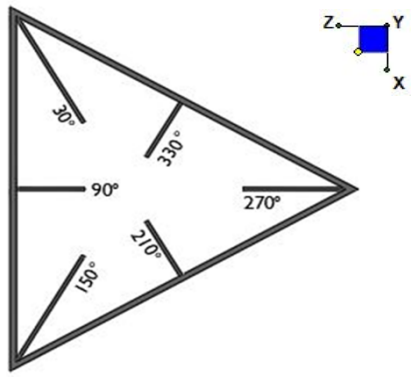

TYPICAL PLATFORM

Tower Connection Bolt Checks

Any moment resistance?:	yes
Bolt Quantity per Reaction:	4
d_x (in) *(Delta X of typ. bolt config. sketch)* :	10
d_y (in) *(Delta Y of typ. bolt config. sketch)* :	2
Bolt Type:	A307
Bolt Diameter (in):	0.5
Required Tensile Strength (kips):	6.0
Required Shear Strength (kips):	7.9
Tensile Strength / bolt (kips):	6.4
Shear Strength / bolt (kips):	3.8
Tensile Capacity Overall:	**23.5%***
Shear Capacity Overall:	**51.3%**

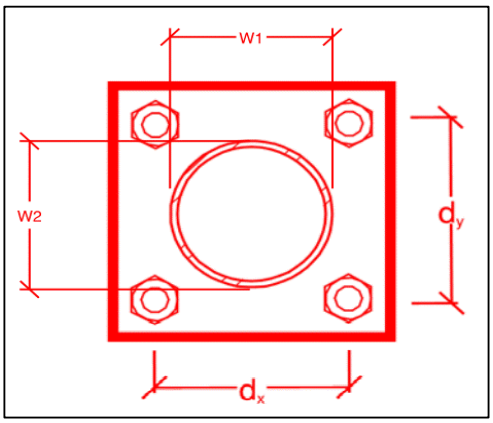

**Note: Tension reduction not required if tension or shear capacity < 30%*

Mount Desktop – Post Modification Inspection (PMI) Report Requirements

Documents & Photos Required from Contractor – Mount Modification

Purpose – to provide Maser Consulting Connecticut the proper documentation in order to complete the required Mount Desktop review of the Post Modification Inspection Report.

- Contractor is responsible for making certain the photos provided as noted below provide confirmation that the modification was completed in accordance with the modification drawings.
- Contractor shall relay any data that can impact the performance of the mount or the mount modification, this includes safety issues.

Base Requirements:

- Any special photos outside of the standard requirements will be indicated on the drawings
- Provide "as built drawings" showing contractor's name, preparer's signature, and date. Any deviations from the drawings (proposed modification) must be shown.
- Notation that all hardware was properly installed, and the existing hardware was inspected for any issues.
- Verification that loading is as communicated in the modification drawings. NOTE If loading is different than what is conveyed in the modification drawing contact Maser Consulting Connecticut immediately.
- Each photo should be time and date stamped
- Photos should be high resolution and submitted in a Zip File and should be organized in the file structure as depicted in Schedule A attached.
- Contractor shall ensure that the safety climb wire rope is supported and not adversely impacted by the install of the modification components. This may involve the install of wire rope guides, or other items to protect the wire rope.
- The photos in the file structure should be uploaded **to** **https://pmi.vzwsmart.com** as depicted on the drawings

Photo Requirements:

- *Base and "During Installation Photos"*
  - Base pictures include
    - Photo of Gate Signs showing the tower owner, site name, and number
    - Photo of carrier shelter showing the carrier site name and number if available
    - Photos of the galvanizing compound and/or paint used (if applicable), clearly showing the label and name
  - "During Installation Photos if provided - must be placed only in this folder
- *Photos taken at ground level*
  - Overall tower structure before and after installation of the modifications
  - Photos of the appropriate mount before and after installation of the modifications; if the mounts are at different rad elevations, pictures must be provided for all elevations that the modifications were installed

- *Photos taken at Mount Elevation*
    - Photos showing each individual sector before and also after installation of modifications. Each entire sector must be in one photo to show in the inter-connection of members.
        - These photos should also certify that the placement and geometry of the equipment on the mount is as depicted on the sketch and table in the mount analysis
    - Close-up photos of each installed modification per the modification drawings; pictures should also include connection hardware (U-bolts, bolts, nuts, all-threaded rods, etc.)
    - Photos showing the measurements of the installed modification member sizes (i.e. lengths, widths, depths, diameters, thicknesses)
    - Photos showing the elevation or distances of the installed modifications from the appropriate reference locations shown in the modification drawings
    - Photos showing the installed modifications onto the tower with tape drop measurements (if applicable) (i.e. ring/collar mounts, tie-backs, V-bracing kits, etc.); if the existing mount elevation needs to be changed according to the modification drawings, a tape drop measurement shall be provided before the elevation change
    - Photos showing the safety climb wire rope above and below the mount prior to modification.
    - Photos showing the climbing facility and safety climb if present.

Material Certification:

- Materials utilized must be as per specification on the drawings or the equivalent as validated by Maser Consulting Connecticut.
    - If the drawings are as specified on the drawings
        - The contractor should provide the packing list or the materials utilized to perform the mount modification
    - If an equivalent is utilized
        - It is required that the Maser Consulting Connecticut certification of such is included in the contractor submission package. There may be an additional charge for this certification if the equivalent submission doesn't meet specifications as prescribed in the drawings.
- The contractor must certify that the materials meet these specifications by one of these methods.

☐ The Material utilized was as specified on the Maser Consulting Connecticut Mount Modification Drawings and included in the Material certification folder is a packing list or invoice for these materials

☐ The material utilized was an "equivalent" and included as part of the contractor submission is the Maser Consulting Connecticut certification, invoices, or specifications validating accepted status

Certifying Individual: Company _____

Name _____

Signature _____

Antenna & equipment placement and Geometry Confirmation:

- The contractor must certify that the antenna & equipment placement and geometry is in accordance with the antenna placement diagrams as included in this mount analysis.

- ☐ The contractor certifies that the photos support and the equipment on the mount is as depicted on the antenna placement diagrams as included in this mount analysis.

- ☐ The contractor notes that the equipment on the mount is not in accordance with the antenna placement diagrams and has accordingly marked up the diagrams or provided a diagram outlining the differences.

Certifying Individual: Company _____

Name _____

Signature _____

Special Instructions / Validation as required from the MA or Mod Drawings:

Issue:

Install proposed OVP on existing standoff vertical pipe in Alpha sector. Contractor to inspect climbing facilities at site and ensure that the safety climb is in good condition and that the wire rope does not or will not interfere with the existing or proposed mount connections. Contractor shall install safety climb wire rope guides around mount connections as needed.

Response:

Schedule A – Photo & Document File Structure

- VzW Site Number / Name
  - Base & “During Installation” Photos
  - Pre-Installation Photos
    - Alpha
    - Beta
    - Gamma
    - Ground Level
    - Tape Drop
  - Post-Installation Photos
    - Alpha
    - Beta
    - Gamma
    - Ground Level
    - Tape Drop
    - Photos of climbing facility and safety climb – If Present
  - Certifications – Submission of this document including certifications
  - Specific Required Additional Photos

Structure: 469215-VZW - NE FRANKLIN

Sector: **A**

Structure Type: Guyed

Mount Elev: 167.50

10009001

7/27/2021

Page: 1

MASER CONSULTING — CONNECTICUT —

Plan View

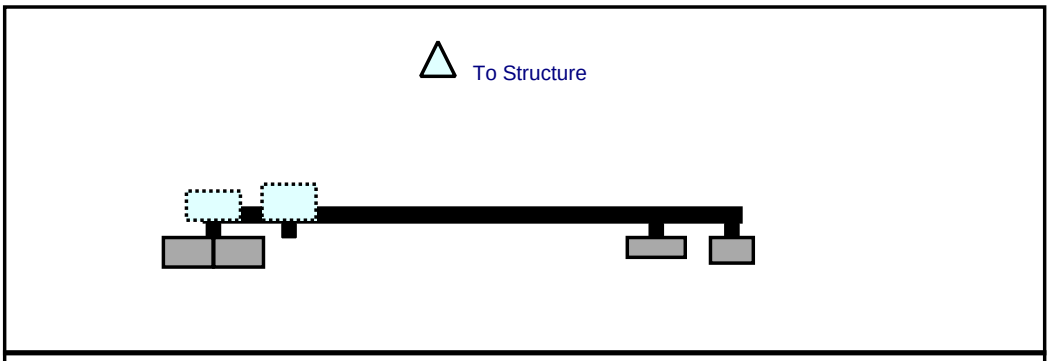

Front View
Looking at Structure

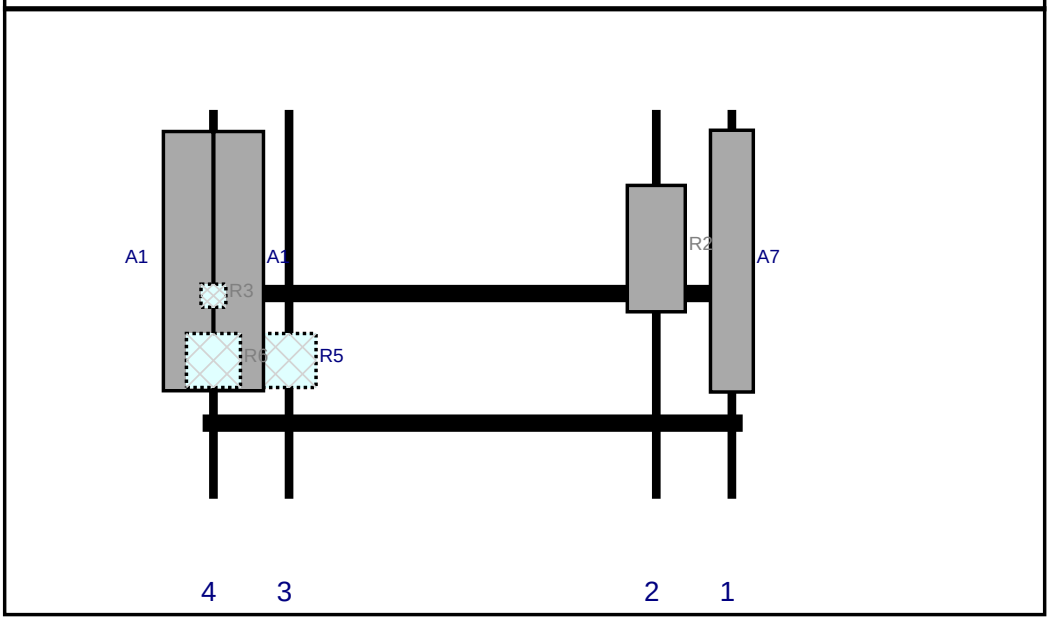

Ref#	Model	Height (in)	Width (in)	H Dist Frm L.	Pipe #	Pipe Pos V	Ant Pos	C. Ant Frm T.	Ant H Off	Status	Validation
A7	LNX-8513DS-A1M	72.7	11.9	147	1	a	Front	42	0	Retained	04/28/2020
R2	MT6407-77A	35.1	16.1	126	2	a	Front	38.52	0	Added	
R5	B2/B66A RRH-BR049	15	15	24	3	a	Behind	69.6	0	Added	
A1	JAHH-65B-R3B	72	13.8	3	4	a	Front	42	7	Added	
A1	JAHH-65B-R3B	72	13.8	3	4	b	Front	42	-7	Added	
R3	CBC78T-DS-43-2X	6.4	6.9	3	4	a	Behind	51.6	0	Added	
R6	B5/B13 RRH-BR04C	15	15	3	4	a	Behind	69.6	0	Added	

Copyright 2019 by Tower Engineering Solutions, LLC. All Rights Reserved

Plan View

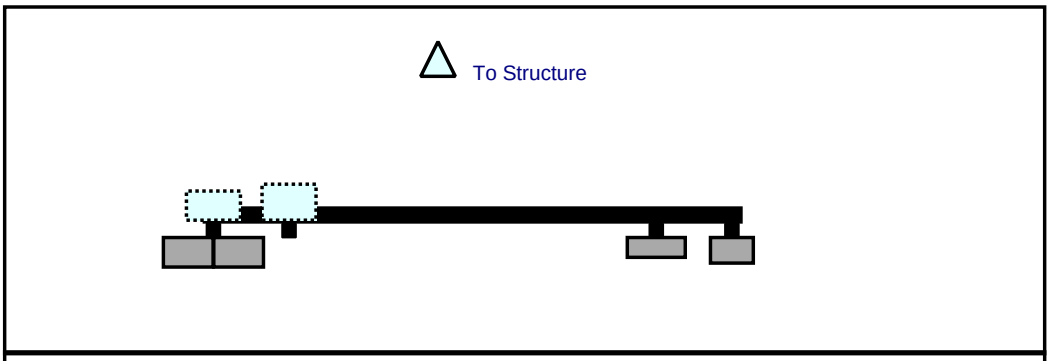

Front View
Looking at Structure

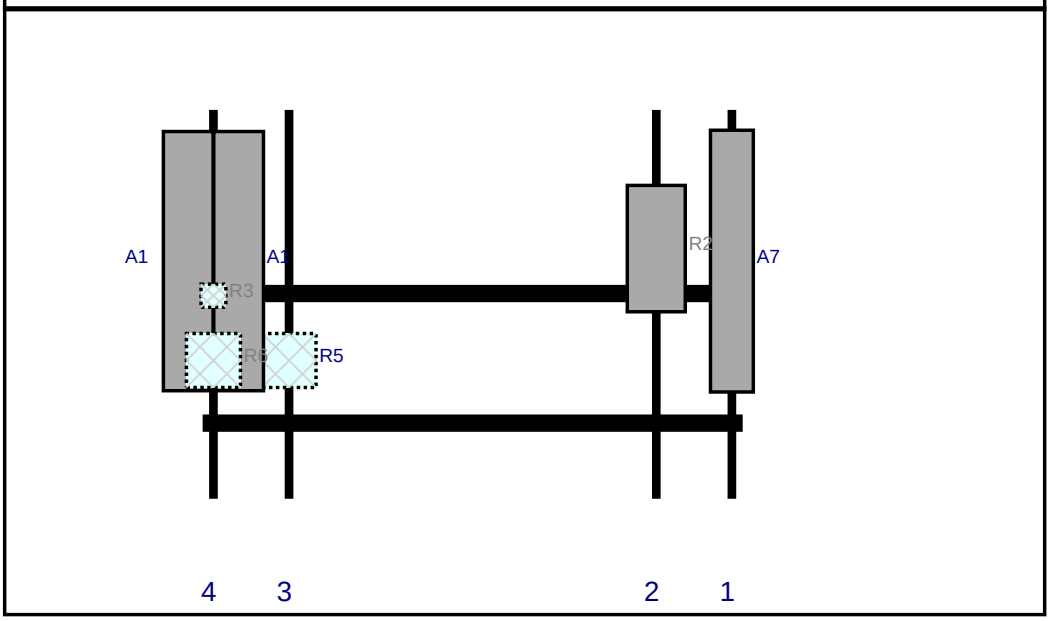

Ref#	Model	Height (in)	Width (in)	H Dist Frm L.	Pipe #	Pipe Pos V	Ant Pos	C. Ant Frm T.	Ant H Off	Status	Validation
A7	LNX-8513DS-A1M	72.7	11.9	147	1	a	Front	42	0	Retained	04/28/2020
R2	MT6407-77A	35.1	16.1	126	2	a	Front	38.52	0	Added	
R5	B2/B66A RRH-BR049	15	15	24	3	a	Behind	69.6	0	Added	
A1	JAHH-65B-R3B	72	13.8	3	4	a	Front	42	7	Added	
A1	JAHH-65B-R3B	72	13.8	3	4	b	Front	42	-7	Added	
R3	CBC78T-DS-43-2X	6.4	6.9	3	4	a	Behind	51.6	0	Added	
R6	B5/B13 RRH-BR04C	15	15	3	4	a	Behind	69.6	0	Added	

Copyright 2019 by Tower Engineering Solutions, LLC. All Rights Reserved

Plan View

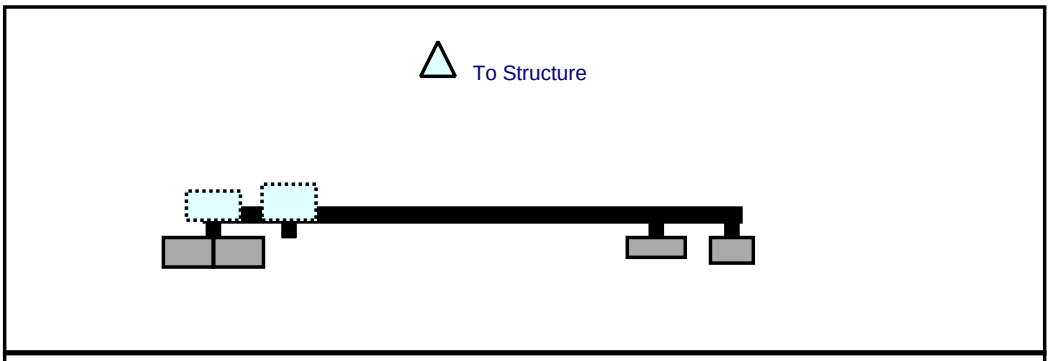

Front View
Looking at Structure

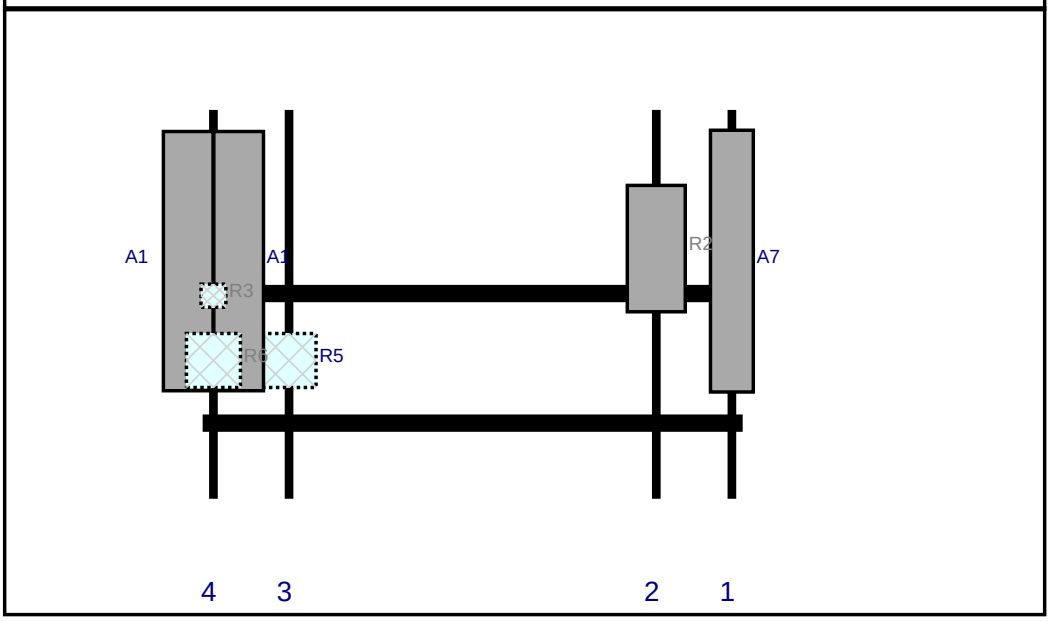

Ref#	Model	Height (in)	Width (in)	H Dist Frm L.	Pipe #	Pipe Pos V	Ant Pos	C. Ant Frm T.	Ant H Off	Status	Validation
A7	LNX-8513DS-A1M	72.7	11.9	147	1	a	Front	42	0	Retained	04/28/2020
R2	MT6407-77A	35.1	16.1	126	2	a	Front	38.52	0	Added	
R5	B2/B66A RRH-BR049	15	15	24	3	a	Behind	69.6	0	Added	
A1	JAHH-65B-R3B	72	13.8	3	4	a	Front	42	7	Added	
A1	JAHH-65B-R3B	72	13.8	3	4	b	Front	42	-7	Added	
R3	CBC78T-DS-43-2X	6.4	6.9	3	4	a	Behind	51.6	0	Added	
R6	B5/B13 RRH-BR04C	15	15	3	4	a	Behind	69.6	0	Added	

Copyright 2019 by Tower Engineering Solutions, LLC. All Rights Reserved

Maser Consulting Connecticut

MASER CONSULTING
CONNECTICUT

Subject: TIA-222-H Usage

Site Information

Site ID:	469215-VZW / FRANKLIN CT
Site Name:	FRANKLIN CT
Carrier Name:	Verizon Wireless
Address:	89 Dr. Nott Road Franklin, Connecticut 06254 New London County
Latitude:	41.597675°
Longitude:	-72.144978°

Structure Information

Tower Type:	Guyed
Mount Type:	12.50-Ft T-Frame

To Whom It May Concern,

We respectfully submit the above referenced Antenna Mount Structural Analysis report in conformance with ANSI/TIA-222-H, Structural Standard for Antenna Supporting Structures and Antennas and Small Wind Turbine Support Structures.

The 2015 International Building Code states that, in Section 3108, telecommunication towers shall be designed and constructed in accordance with the provisions of TIA-222. The TIA-222-H is the latest revision of the TIA-222 Standard, effective as of January 01, 2018.

As with all ANSI standards and engineering best practice is to apply the most current revision of the standard. This ensures the engineer is applying all updates. As an example, the TIA-222-H standard includes updates to bring it in line with the latest AISC and ACI standards and it also incorporates the latest wind speed map by ASCE 7 based on updated studies of the wind data.

The TIA-222-H standard clarifies these specific requirements for the antenna mount analysis such as modeling method, seismic analysis, 30-degree increment wind direction and maintenance loading. Therefore, it is our opinion that TIA-222-H is the most appropriate standard for antenna mount structural analysis and is acceptable for use at this site to ensure the engineer is taking into account the most current engineering standard available.

Sincerely,

Digitally signed by Justin Linette
Date: 2021.07.28 10:14:52-04'00'

Justin Linette, PE
Sr. Technical Manager

verizon

MOUNT MODIFICATION DRAWINGS
EXISTING 12.50' T-FRAME

TOWER OWNER: AMERICAN TOWER CORPORATION
TOWER OWNER SITE NUMBER: 6310

CARRIER SITE NAME: FRANKLIN CT
CARRIER SITE NUMBER: 469215
FUZE ID: 16271936

83 DR. NOTT ROAD
FRANKLIN, CT 06254
NEW LONDON COUNTY

LATITUDE: 41.597675° N
LONGITUDE: 72.144978° W

DESIGN CRITERIA

WIND LOADS

BASIC WIND SPEED (3 SECOND GUST), V = 123 MPH
EXPOSURE CATEGORY C
TOPOGRAPHIC CATEGORY 1
MEAN BASE ELEVATION (AMSL) = 505.05'

ICE LOADS

ICE WIND SPEED (3 SECOND GUST), V = 50 MPH
ICE THICKNESS = 1.00 IN

SEISMIC LOADS

SEISMIC DESIGN CATEGORY B
SHORT TERM MCER GROUND MOTION, S_S = .195
LONG TERM MCER GROUND MOTION, S_1 = .054

PROJECT INFORMATION

APPLICANT/LESSEE

COMPANY: VERIZON WIRELESS

CLIENT REPRESENTATIVE

COMPANY: VERIZON WIRELESS
ADDRESS: 118 FLANDERS ROAD, THIRD FLOOR
CITY, STATE, ZIP: WESTBOROUGH, MA 01581
CONTACT: ANDREW CANDIELLO
EMAIL: ANDREW.CANDIELLO@VERIZONWIRELESS.COM

PROJECT MANAGER

COMPANY: MASER CONSULTING CONNECTICUT
CONTACT: PETER ALBANO
PHONE: 856-797-0412
E-MAIL: PETER.ALBANO@COLLIERSENGINEERING.COM

CONTRACTOR PMI REQUIREMENTS

PMI LOCATION: HTTPS://PMI.VZWSMART.COM
SMART TOOL PROJECT #: 10088926
VZW LOCATION CODE (PSLC): 469215
ANALYSIS DATE: 7/27/2021

PMI REQUIREMENTS EMBEDDED WITHIN MOUNT MODIFICATION REPORT

SHEET INDEX

SHEET	DESCRIPTION
ST-1	TITLE SHEET
SBOM-1	BILL OF MATERIALS
SGN-1	GENERAL NOTES
SCF-1	CLIMBING FACILITY DETAIL
SS-1	MODIFICATION DETAILS
SS-2	MOUNT PHOTOS
	SPECIFICATION SHEETS

COPYRIGHT ©2021
MASER CONSULTING CONNECTICUT
ALL RIGHTS RESERVED
THIS DRAWING AND ALL THE INFORMATION CONTAINED HEREIN IS AUTHORIZED FOR USE ONLY BY THE PARTY FOR WHOM THE WORK WAS CONTRACTED OR TO WHOM IT IS CERTIFIED. THIS DRAWING MAY NOT BE COPIED, REUSED, DISCLOSED, DISTRIBUTED OR RELIED UPON FOR ANY OTHER PURPOSE WITHOUT THE EXPRESS WRITTEN CONSENT OF MASER CONSULTING CONNECTICUT.

MASER CONSULTING CONNECTICUT
WILL BE KNOWN AS COLLIERS ENGINEERING & DESIGN IN 2021
Customer Loyalty *through* Client Satisfaction
www.maserconsulting.com
Office Locations:
- NEW JERSEY
- NEW YORK
- PENNSYLVANIA
- VIRGINIA
- FLORIDA
- NORTH CAROLINA
- SOUTH CAROLINA
- NEW MEXICO
- MARYLAND
- GEORGIA
- TEXAS
- TENNESSEE
- COLORADO

Copyright © 2021. Maser Consulting All Rights Reserved. This drawing and all the information contained herein is authorized for use only by the party for whom the services were contracted or to whom it is certified. This drawing may not be copied, reused, disclosed, distributed or relied upon for any other purpose without the express written consent of Maser Consulting.

verizon

PROTECT YOURSELF
ALL STATES REQUIRE NOTIFICATION OF EXCAVATORS, DESIGNERS, OR ANY PERSON PREPARING TO DISTURB THE EARTH'S SURFACE ANYWHERE IN ANY STATE
811 Know what's below. Call before you dig.
FOR STATE SPECIFIC DIRECT PHONE NUMBERS VISIT: WWW.CALL811.COM

SCALE: AS SHOWN
JOB NUMBER: 21777635A

REV	DATE	DESCRIPTION	DRAWN BY	CHECKED BY
0	7/27/2021	ISSUED FOR CONSTRUCTION	MSG	JPL

STATE OF CONNECTICUT 31965 LICENSED PROFESSIONAL ENGINEER

Digitally signed by Justin Peter Linette
Date: 2021.07.28 10:16:35-04'00'
C.O.A. #: PEC.0000131

IT IS A VIOLATION OF LAW FOR ANY PERSON, UNLESS THEY ARE ACTING UNDER THE DIRECTION OF THE RESPONSIBLE LICENSED PROFESSIONAL ENGINEER, TO ALTER THIS DOCUMENT.

SITE NAME:
FRANKLIN CT
469215
83 DR. NOTT ROAD
FRANKLIN, CT 06254
NEW LONDON COUNTY

MT. LAUREL OFFICE
2000 Midlantic Drive
Suite 100
Mount Laurel, NJ 08054
Phone: 856.797.0412
Fax: 856.722.1120

SHEET TITLE: TITLE SHEET

SHEET NUMBER: ST-1

NOTE: DO NOT SCALE DRAWINGS FOR CONSTRUCTION.

BILL OF MATERIALS

SECTION 1 - VZWSMART KITS

QUANTITY	MANUFACTURER	PART NUMBER	DESCRIPTION	NOTES	UNIT WEIGHT (LBS.)	WEIGHT (LBS.)
6	VZWSMART	VZWSMART-SFK1	TIE BACK ASSEMBLY	CONNECT OTHER END TO ADJACENT TOWER LEG. PROPOSED TIE-BACK SHALL EXTEND NO MORE THAN 12" BEYOND THE TOWER LEG. CONTRACTOR SHALL TRIM AS REQUIRED AND PROTECT CUT END WITH TWO COATS OF ZINGA OR ZINC COTE.	72	432
3		VZWSMART-SFK3	V-BRACING KIT	CONTRACTOR TO VERIFY THE LENGTH REQUIRED AND TRIM AS NECESSARY IN ACCORDANCE WITH THE 'STRUCTURAL STEEL' NOTES ON SHEET SGN-1	122	366
18		VZWSMART-MSK1	CROSSOVER PLATE			

SECTION 2 - OTHER REQUIRED PARTS

QUANTITY	MANUFACTURER	PART NUMBER	DESCRIPTION	NOTES	UNIT WEIGHT (LBS.)	WEIGHT (LBS.)
3	-	-	162" LONG, P2 1/2 STD	GALVANIZED	74	222
3	-	-	96" LONG, P2 1/2 STD	GALVANIZED	44	132
-	-	-	1/2" DIA. U-BOLT			
					TOTAL:	1152

VZWSMART KITS - APPROVED VENDORS

COMMSCOPE	
CONTACT	SALVADOR ANGUIANO
PHONE	(817) 304-7492
EMAIL	SALVADOR.ANGUIANO@COMMSCOPE.COM
WEBSITE	WWW.COMMSCOPE.COM
METROSITE FABRICATORS, LLC	
CONTACT	KENT RAMEY
PHONE	(706) 335-7045 (O), (706) 982-9788 (M)
EMAIL	KENT@METROSITELLC.COM
WEBSITE	METROSITEFABRICATORS.COM
PERFECTVISION	
CONTACT	WIRELESS SALES
PHONE	(844) 887-6723
EMAIL	WWW.PERFECT-VISION.COM
WEBSITE	WIRELESSSALES@PERFECT-VISION.COM
SABRE INDUSTRIES, INC.	
CONTACT	ANGIE WELCH
PHONE	(866) 428-6937
EMAIL	AKWELCH@SABREINDUSTRIES.COM
WEBSITE	WWW.SABRESITESOLUTIONS.COM
SITE PRO 1	
CONTACT	PAULA BOSWELL
PHONE	(972) 236-9843
EMAIL	PAULA.BOSWELL@VALMONT.COM
WEBSITE	WWW.SITEPRO1.COM

NOTES:

1. THE MANUFACTURERS LISTED ARE THE APPROVED VENDORS FOR THE VZW MOUNT KITS. EACH MANUFACTURER WILL BE AWARE OF WHICH KITS HAVE BEEN THROUGH THE VZW APPROVAL PROCESS AND THEY ARE IN TURN APPROVED TO SELL. PLEASE NOTE THAT THE MATERIAL UTILIZED ON THE MOUNT MODIFICATIONS WILL BE REVIEWED AS A PART OF THE DESKTOP PMI COMPLETED BY THE SMART TOOL VENDOR. IT WILL BE REQUIRED THAT THE VZW KITS SPECIFIED ARE UTILIZED IN THE MODIFICATIONS.

2. ALL MATERIALS REQUIRED FOR THE DESIGNED MODIFICATIONS BUT NOT LISTED IN THIS SHEET ARE ASSUMED TO BE PROVIDED BY THE CONTRACTOR.

MASER CONSULTING
CONNECTICUT
WILL BE KNOWN AS COLLIERS ENGINEERING & DESIGN IN 2021
Customer Loyalty *through* Client Satisfaction
www.maserconsulting.com
Office Locations:
NEW JERSEY · NEW YORK · PENNSYLVANIA · VIRGINIA · FLORIDA · NORTH CAROLINA · SOUTH CAROLINA · NEW MEXICO · MARYLAND · GEORGIA · TEXAS · TENNESSEE · COLORADO

Copyright © 2021. Maser Consulting All Rights Reserved. This drawing and all the information contained herein is authorized for use only by the party for whom the services were contracted or to whom it is certified. This drawing may not be copied, reused, disclosed, distributed or relied upon for any other purpose without the express written consent of Maser Consulting.

verizon

811 Know what's below. Call before you dig.

PROTECT YOURSELF
ALL STATES REQUIRE NOTIFICATION OF EXCAVATORS, DESIGNERS, OR ANY PERSON PREPARING TO DISTURB THE EARTH'S SURFACE ANYWHERE IN ANY STATE

FOR STATE SPECIFIC DIRECT PHONE NUMBERS VISIT: WWW.CALL811.COM

SCALE : AS SHOWN
JOB NUMBER : 21777635A

REV	DATE	DESCRIPTION	DRAWN BY	CHECKED BY
.	.	.	.	.
.	.	.	.	.
.	.	.	.	.
0	7/27/2021	ISSUED FOR CONSTRUCTION	MSG	JPL

STATE OF CONNECTICUT · JUSTIN PETER LINETTE · 31965 · LICENSED PROFESSIONAL ENGINEER

Digitally signed by Justin Peter Linette
Date: 2021.07.28 10:17:00-04'00'
C.O.A. #: PC.0000131

IT IS A VIOLATION OF LAW FOR ANY PERSON, UNLESS THEY ARE ACTING UNDER THE DIRECTION OF THE RESPONSIBLE LICENSED PROFESSIONAL ENGINEER, TO ALTER THIS DOCUMENT.

SITE NAME:

FRANKLIN CT
469215

83 DR. NOTT ROAD
FRANKLIN, CT 06254
NEW LONDON COUNTY

MT. LAUREL OFFICE
2000 Midlantic Drive
Suite 100
Mount Laurel, NJ 08054
Phone: 856.797.0412
Fax: 856.722.1120

SHEET TITLE : BILL OF MATERIALS

SHEET NUMBER : SBOM-1

NOTE: DO NOT SCALE DRAWINGS FOR CONSTRUCTION.

PROJECT NOTES

1. SEE MODIFICATION NOTES
2. THE CONTRACTOR SHALL COMPLY WITH ALL APPLICABLE CODES, ORDINANCES, LAWS AND REGULATIONS OF ALL MUNICIPALITIES, UTILITY COMPANIES OR OTHER PUBLIC/GOVERNING AUTHORITIES.
3. THE CONTRACTOR SHALL BE RESPONSIBLE FOR OBTAINING ALL PERMITS AND INSPECTIONS THAT MAY BE REQUIRED BY ANY FEDERAL, STATE, COUNTY OR MUNICIPAL AUTHORITIES.
4. THE CONTRACTOR SHALL NOTIFY THE CONSTRUCTION MANAGER, IN WRITING, OF ANY CONFLICTS, ERRORS OR OMISSIONS PRIOR TO THE SUBMISSION OF BIDS OR PERFORMANCE OF WORK.
5. THE CONTRACTOR SHALL BE RESPONSIBLE FOR PROTECTING ALL EXISTING SITE IMPROVEMENTS PRIOR TO COMMENCING CONSTRUCTION. THE CONTRACTOR SHALL REPAIR ANY DAMAGE AS A RESULT OF CONSTRUCTION OF THIS FACILITY AT THE CONTRACTOR'S EXPENSE TO THE SATISFACTION OF THE OWNER.
6. THE SCOPE OF WORK FOR THIS PROJECT SHALL INCLUDE PROVIDING ALL MATERIALS, EQUIPMENT AND LABOR REQUIRED TO COMPLETE THIS PROJECT. ALL EQUIPMENT SHALL BE INSTALLED IN ACCORDANCE WITH MANUFACTURER'S RECOMMENDATIONS.
7. THE CONTRACTOR SHALL VISIT THE PROJECT SITE PRIOR TO SUBMITTING THE BID TO VERIFY THAT THE PROJECT CAN BE CONSTRUCTED IN ACCORDANCE WITH THE CONTRACT DOCUMENTS AND CONSTRUCTION DRAWINGS.
8. THE CONTRACTOR SHALL VERIFY ALL EXISTING DIMENSIONS AND CONDITIONS PRIOR TO COMMENCING ANY WORK. ALL DIMENSIONS OF EXISTING CONSTRUCTION SHOWN ON THESE DRAWINGS MUST BE VERIFIED. THE CONTRACTOR SHALL NOTIFY THE CONSTRUCTION MANAGER OF ANY DISCREPANCIES PRIOR TO ORDERING MATERIAL OR PROCEEDING WITH CONSTRUCTION.
9. SINCE THE CELL SITE MAY BE ACTIVE, ALL SAFETY PRECAUTIONS MUST BE TAKEN WHEN WORKING AROUND HIGH LEVELS OF ELECTROMAGNETIC RADIATION. EQUIPMENT SHOULD BE SHUTDOWN PRIOR TO PERFORMING ANY WORK THAT COULD EXPOSE THE WORKERS TO DANGER. PERSONAL RF EXPOSURE MONITORS ARE REQUIRED TO BE WORN TO ALERT OF ANY POTENTIALLY DANGEROUS EXPOSURE LEVELS.
10. NO NOISE, SMOKE, DUST OR ODOR WILL RESULT FROM THIS FACILITY AS TO CAUSE A NUISANCE.
11. THE FACILITY IS UNMANNED AND NOT FOR HUMAN HABITATION (NO HANDICAP ACCESS IS REQUIRED).

GENERAL NOTES

1. THESE MODIFICATIONS HAVE BEEN DESIGNED IN ACCORDANCE WITH THE GOVERNING PROVISIONS OF THE TELECOMMUNICATIONS INDUSTRY STANDARD TIA-222-H. MATERIALS AND SERVICES PROVIDED BY THE CONTRACTOR SHALL CONFORM TO THE ABOVE MENTIONED CODES.
2. CONTRACTOR SHALL TAKE ALL PRECAUTIONS NECESSARY TO PREVENT DAMAGE TO EXISTING STRUCTURES. ANY DAMAGE TO EXISTING STRUCTURES AS A RESULT OF THE CONTRACTOR'S WORK OR FROM DAMAGE DUE TO OTHER CAUSES SHALL BE REPAIRED AT THE CONTRACTOR'S EXPENSE TO THE SATISFACTION OF THE OWNER.
3. CONTRACTOR SHALL VERIFY ALL DIMENSIONS AND EXISTING CONDITIONS BEFORE BEGINNING WORK, ORDERING MATERIAL, AND PREPARING OF SHOP DRAWINGS. ANY DISCREPANCIES BETWEEN FIELD CONDITIONS AND THE CONTRACT DOCUMENTS SHALL BE BROUGHT TO THE IMMEDIATE ATTENTION OF THE ENGINEER. IF THE CONTRACTOR DISCOVERS ANY EXISTING CONDITIONS THAT ARE NOT REPRESENTED ON THESE DRAWINGS, OR ANY CONDITIONS THAT WOULD INTERFERE WITH THE INSTALLATION OF THE MODIFICATIONS, NOTIFY THE ENGINEER IMMEDIATELY.
4. IT IS ASSUMED THAT ANY STRUCTURAL MODIFICATION WORK SPECIFIED ON THESE PLANS WILL BE ACCOMPLISHED BY KNOWLEDGEABLE WORKMEN WITH TOWER CONSTRUCTION EXPERIENCE.
5. THE CONTRACTOR SHALL SUPERVISE AND DIRECT THE WORK AND SHALL BE SOLELY RESPONSIBLE FOR ALL CONSTRUCTION METHODS, MEANS, TECHNIQUES, SEQUENCES, AND PROCEDURES.
6. ALL CONSTRUCTION MEANS AND METHODS; INCLUDING BUT NOT LIMITED TO, ERECTION PLANS, RIGGING PLANS, CLIMBING PLANS, AND RESCUE PLANS SHALL BE THE RESPONSIBILITY OF THE GENERAL CONTRACTOR RESPONSIBLE FOR THE EXECUTION OF THE WORK CONTAINED HEREIN AND SHALL MEET ANSI/TIA-322 (LATEST EDITION), OSHA, AND GENERAL INDUSTRY STANDARDS. ALL RIGGING PLANS SHALL ADHERE TO ANSI/TIA-322 (LATEST EDITION) INCLUDING THE REQUIRED INVOLVEMENT OF A QUALIFIED ENGINEER FOR CLASS IV CONSTRUCTION.
7. THE CONTRACTOR IS SOLELY RESPONSIBLE FOR INITIATING, MAINTAINING, AND SUPERVISING ALL SAFETY PROGRAMS IN ACCORDANCE WITH APPLICABLE SAFETY CODES.
8. WORK SHALL ONLY BE PERFORMED DURING CALM DRY DAYS (WINDS LESS THAN 30-MPH). THE STRUCTURE SHOWN ON THE DRAWINGS IS STRUCTURALLY SOUND ONLY IN THE COMPLETED FORM. THE CONTRACTOR SHALL BE RESPONSIBLE FOR THE STRENGTH AND STABILITY OF THE STRUCTURE DURING ERECTION. CONTRACTOR SHALL PROVIDE TEMPORARY SUPPORT, SHORING, BRACING AND ANY OTHER STRUCTURAL SYSTEMS AS REQUIRED TO RESIST ALL FORCES THAT MAY OCCUR DURING HANDLING AND ERECTION UNTIL THE STRUCTURE IS FULLY COMPLETED. TEMPORARY SUPPORTS, BRACING AND OTHER STRUCTURAL SYSTEMS REQUIRED DURING CONSTRUCTION SHALL REMAIN THE CONTRACTOR'S PROPERTY AFTER THEIR USE.
9. ALL INSTALLATIONS PERFORMED ON THIS STRUCTURE SHALL BE COMPLETED IN ACCORDANCE WITH THE GOVERNING PROVISIONS OF THE STANDARD FOR INSTALLATION, ALTERATION AND MAINTENANCE OF ANTENNA SUPPORTING STRUCTURES AND ANTENNAS, ANSI/TIA-322.
10. CONTRACTOR SHALL SECURE SITE BACK TO EXISTING CONDITION UNDER SUPERVISION OF OWNER. ALL FENCE, STONE, GEOFABRIC, GROUNDING, AND SURROUNDING GRADE SHALL BE REPLACED AND REPAIRED AS REQUIRED TO ACHIEVE OWNER APPROVAL. POSITIVE DRAINAGE AWAY FROM TOWER SITE SHALL BE MAINTAINED.
11. CONNECTIONS BETWEEN ITEMS SUPPORTED BY THE STRUCTURE AND THE STRUCTURE NOT SPECIFICALLY DETAILED IN THE CONTRACT DOCUMENTS ARE THE RESPONSIBILITY OF THE CONTRACTOR. SUCH CONNECTIONS SHALL BE DESIGNED, COORDINATED AND INSPECTED BY A PROFESSIONAL STRUCTURAL ENGINEER LICENSED IN THE STATE OF THE PROJECT. SUBMIT SIGNED AND SEALED CALCULATIONS DURING SHOP DRAWING REVIEW.
12. DO NOT SCALE DRAWINGS.
13. DO NOT USE THESE DRAWINGS FOR ANY OTHER SITE.
14. ALL MATERIAL UTILIZED FOR THIS PROJECT MUST BE NEW AND FREE OF ANY DEFECTS. ANY MATERIAL SUBSTITUTIONS, INCLUDING BUT NOT LIMITED TO ALTERED SIZE AND/OR STRENGTHS, MUST BE APPROVED BY THE OWNER AND ENGINEER IN WRITING.
15. THE MOUNT UNDER NO CIRCUMSTANCES SHOULD BE USED AS A TIE OFF POINT.

STRUCTURAL STEEL

1. DESIGN, DETAILING, FABRICATION AND ERECTION OF STRUCTURAL STEEL SHALL CONFORM TO THE FOLLOWING PUBLICATIONS EXCEPT AS SPECIFICALLY INDICATED IN THE CONTRACT DOCUMENTS.
   a. AMERICAN INSTITUTE OF STEEL CONSTRUCTION (AISC) MANUAL OF STEEL CONSTRUCTION (15TH EDITION)
   b. SPECIFICATION FOR STRUCTURAL JOINTS USING ASTM A325 OR A490 BOLTS
   c. AISC CODE OF STANDARD PRACTICE
2. STRUCTURAL STEEL SHALL CONFORM TO THE FOLLOWING UNLESS OTHERWISE SHOWN:

CHANNELS, ANGLES, PLATES, ETC.	ASTM A36 (GR 36)
STEEL PIPE	ASTM A53 (GR 35)
BOLTS	ASTM A325
NUTS	ASTM A563
LOCK WASHERS	LOCKING STRUCTURAL GRADE

3. ALL SUBSTITUTIONS PROPOSED BY THE CONTRACTOR SHALL BE APPROVED IN WRITING BY THE ENGINEER. CONTRACTOR SHALL PROVIDE DOCUMENTATION TO ENGINEER FOR VERIFYING THE SUBSTITUTE IS SUITABLE FOR USE AND MEETS ORIGINAL DESIGN CRITERIA. DIFFERENCES FROM THE ORIGINAL DESIGN, INCLUDING MAINTENANCE, REPAIR AND REPLACEMENT, SHALL BE NOTED. ESTIMATES OF COSTS/CREDITS ASSOCIATED WITH THE SUBSTITUTION (INCLUDING RE-DESIGN COSTS AND COSTS TO SUB-CONTRACTORS) SHALL BE PROVIDED TO THE ENGINEER. CONTRACTOR SHALL PROVIDE ADDITIONAL DOCUMENTATION AND/OR SPECIFICATIONS TO THE ENGINEER AS REQUESTED.
4. PROVIDE STRUCTURAL STEEL SHOP DRAWINGS TO ENGINEER FOR APPROVAL PRIOR TO FABRICATION.
   a. SUBMIT SHOP DRAWINGS TO

      PETER.ALBANO@COLLIERSENGINEERING.COM

   b. PROVIDE MASER CONSULTING CONNECTICUT PROJECT # AND MASER CONSULTING CONNECTICUT PROJECT ENGINEER CONTACT IN THE BODY OF THE EMAIL.
5. DRILL NO HOLES IN ANY NEW OR EXISTING STRUCTURAL STEEL MEMBERS OTHER THAN THOSE SHOWN ON STRUCTURAL DRAWINGS WITHOUT THE APPROVAL OF THE ENGINEER OF RECORD.
6. GALVANIZED ASTM A325 BOLTS SHALL NOT BE REUSED.
7. ALL NEW STEEL SHALL BE HOT BE DIPPED GALVANIZED FOR FULL WEATHER PROTECTION. IN ADDITION ALL NEW STEEL SHALL BE PAINTED TO MATCH EXISTING STEEL. CONTRACTOR SHALL OBTAIN WRITTEN PERMISSION TO PROTECT STEEL BY ANY OTHER MEANS.
8. ALL BOLT ASSEMBLIES FOR STRUCTURAL MEMBERS REPRESENTED IN THIS DRAWING REQUIRE LOCKING DEVICES TO BE INSTALLED IN ACCORDANCE WITH TIA-222-H SECTION 4.9.2 REQUIREMENTS.
9. WHERE CONNECTIONS ARE NOT FULLY DETAILED ON THESE DRAWINGS, FABRICATOR SHALL DESIGN CONNECTIONS TO RESIST LOADS AND FORCES WHERE SHOWN ON DRAWINGS AND AS OUTLINED IN SPECIFICATIONS.
10. FOR MEMBERS BEING REPLACED, PROVIDE NEW BOLTS AND MATCH EXISTING SIZE AND GRADE. MAINTAIN AISC REQUIREMENTS FOR MINIMUM BOLT DISTANCE AND SPACING.
11. ALL PROPOSED AND/OR REPLACED BOLTS SHALL BE OF SUFFICIENT LENGTH SUCH THAT THE END OF THE BOLT IS AT LEAST FLUSH WITH THE FACE OF THE NUT. IT IS NOT PERMITTED FOR THE BOLT END TO BE BELOW THE FACE OF THE NUT AFTER TIGHTENING IS COMPLETED.
12. GALVANIZED ASTM A325 BOLTS SHALL NOT BE REUSED.
13. ALL NEW STEEL SHALL BE HOT BE DIPPED GALVANIZED FOR FULL WEATHER PROTECTION. CONTRACTOR SHALL OBTAIN WRITTEN PERMISSION TO PROTECT STEEL BY ANY OTHER MEANS.
14. ALL EXISTING PAINTED/GALVANIZED SURFACES DAMAGED DURING REHAB INCLUDING AREAS UNDER STIFFENER PLATES SHALL BE WIRE BRUSHED CLEAN, REPAIRED BY COLD GALVANIZING (ZINGA OR ZINC COTE), AND REPAINTED TO MATCH THE EXISTING FINISH (IF APPLICABLE).
15. ALL HOLES IN STEEL MEMBERS SHALL BE SIZED 1/16" LARGER THAN THE BOLT DIAMETER. STANDARD HOLES SHALL BE USED UNLESS NOTED OTHERWISE.

WELDING NOTES

1. ALL WELDING SHALL BE DONE IN ACCORDANCE WITH AWS D1.0 (LATEST EDITION). THIS SHALL INCLUDE A CERTIFIED WELD INSPECTION (CWI) FOR ACCEPTANCE OR REJECTION OF ALL WELDING OPERATIONS, PRE, DURING, AND POST INSTALLATION, USING THE ACCEPTANCE CRITERIA OF AWS D1.1.
2. CONTRACTOR IS RESPONSIBLE FOR COMMISSIONING A THIRD PARTY CERTIFIED WELD INSPECTOR (CWI) THROUGHOUT THE ENTIRETY OF THE PROJECT. A PASSING CWI REPORT SHALL BE PROVIDED TO THE ENGINEER UPON COMPLETION OF THE PROJECT.
3. THE CERTIFIED WELD INSPECTOR SHALL INDICATE, IN A WRITTEN CWI REPORT, THAT ALL WELDING OPERATIONS PRE, DURING, AND POST INSTALLATION WERE CONDUCTED IN ACCORDANCE WITH AWS D1.1 WITH PHOTOGRAPHS AND DOCUMENTATION SUPPORTING THE ACCEPTANCE OR REJECTION OF ALL WELDING. ALL CWI WELD INSPECTION DOCUMENTATION AND PHOTOS SHALL BE SUBMITTED DURING THE PMI.
4. IN CASES WHERE A WELD IS SPECIFIED BETWEEN TWO MEMBERS IN WHICH THERE IS A GAP IN BETWEEN, THE WELD IS TO BE BUILT-UP SUCH THAT THE SIZE OF WELD ON THE MEMBER IS EQUAL TO THAT SHOWN IN THE DRAWINGS.
5. OXY FUEL GAS WELDING OR BRAZING IS STRICTLY PROHIBITED. SPECIFICALLY, NO TORCH CUTTING IS PERMITTED ON SITE. ALL HOLES SHALL BE CUT WITH A GRINDER.
6. CONTRACTOR SHALL EXERCISE CAUTION WHEN WELDING A GALVANIZED SURFACE.

BOLT SCHEDULE (IN.)

BOLT DIAMETER	STANDARD HOLE	SHORT SLOT	MIN. EDGE DISTANCE	SPACING
1/2	9/16	9/16 x 11/16	7/8	1 1/2
5/8	11/16	11/16 x 7/8	1 1/8	1 7/8
3/4	13/16	13/16 x 1	1 1/4	2 1/4
7/8	15/16	15/16 x 1 1/8	1 1/2	2 5/8
1	1 1/16	1 1/16 x 1 5/16	1 3/4	3

WORKABLE GAGES (IN.)

LEG	GAGE
4	2 1/2
3 1/2	2
3	1 3/4
2 1/2	1 3/8
2	1 1/8

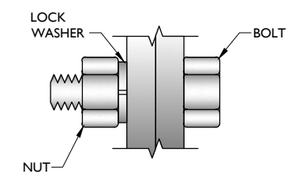

TYP. BOLT ASSEMBLY

NOTES:

1. ALL DIMENSIONS REPRESENTED IN THE ABOVE TABLES ARE AISC MINIMUM REQUIREMENTS. CONTRACTOR SHALL VERIFY EXISTING CONDITIONS IN FIELD AND NOTIFY ENGINEER IF DISTANCES ARE LESS THAN THOSE PROVIDED.
2. THE DIMENSIONS PROVIDED ARE MINIMUM REQUIREMENTS. ACTUAL DIMENSIONS OF PROPOSED MEMBERS WITHIN THESE DRAWINGS MAY VARY FROM THE AISC MINIMUM REQUIREMENTS.
3. SHORT SLOT HOLES SHALL ONLY BE USED WHEN DEPICTED IN THE DRAWINGS
4. MATCH EXISTING GAGES WHEN APPLICABLE, UNLESS MINIMUM EDGE DISTANCES ARE COMPROMISED.

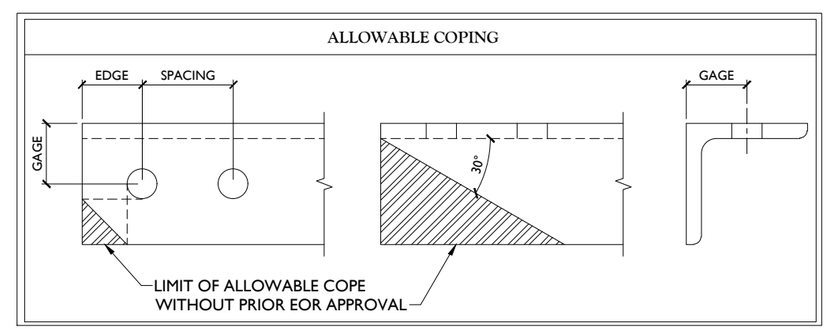

MASER CONSULTING CONNECTICUT
WILL BE KNOWN AS COLLIERS ENGINEERING & DESIGN IN 2021
Customer Loyalty *through* Client Satisfaction
www.maserconsulting.com
Office Locations:
■ NEW JERSEY ■ NEW MEXICO
■ NEW YORK ■ MARYLAND
■ PENNSYLVANIA ■ GEORGIA
■ VIRGINIA ■ TEXAS
■ FLORIDA ■ TENNESSEE
■ NORTH CAROLINA ■ COLORADO
■ SOUTH CAROLINA

Copyright © 2021. Maser Consulting All Rights Reserved. This drawing and all the information contained herein is authorized for use only by the party for whom the services were contracted or to whom it is certified. This drawing may not be copied, reused, disclosed, distributed or relied upon for any other purpose without the express written consent of Maser Consulting.

verizon

811 PROTECT YOURSELF
ALL STATES REQUIRE NOTIFICATION OF EXCAVATORS, DESIGNERS, OR ANY PERSON PREPARING TO DISTURB THE EARTH'S SURFACE ANYWHERE IN ANY STATE
Know what's below. Call before you dig.
FOR STATE SPECIFIC DIRECT PHONE NUMBERS VISIT: WWW.CALL811.COM

SCALE: AS SHOWN
JOB NUMBER: 21777635A

REV	DATE	DESCRIPTION	DRAWN BY	CHECKED BY
0	7/27/2021	ISSUED FOR CONSTRUCTION	MSG	JPL

STATE OF CONNECTICUT 31965 LICENSED PROFESSIONAL ENGINEER
Digitally signed by Justin Peter Linette
Date: 2021.07.28 10:17:00-04'00'
C.O.A. #: PC.0000131

IT IS A VIOLATION OF LAW FOR ANY PERSON, UNLESS THEY ARE ACTING UNDER THE DIRECTION OF THE RESPONSIBLE LICENSED PROFESSIONAL ENGINEER, TO ALTER THIS DOCUMENT.

SITE NAME:
FRANKLIN CT
469215
83 DR. NOTT ROAD
FRANKLIN, CT 06254
NEW LONDON COUNTY

MT. LAUREL OFFICE
2000 Midlantic Drive
Suite 100
Mount Laurel, NJ 08054
Phone: 856.797.0412
Fax: 856.722.1120

SHEET TITLE: MODIFICATION NOTES

SHEET NUMBER: SGN-1

NOTE: DO NOT SCALE DRAWINGS FOR CONSTRUCTION.

A:\Arbin 14894931 FRANKLIN CT Mount\Drawings PA35 20210713.dwg\SGN-1 By: MGRAHAM

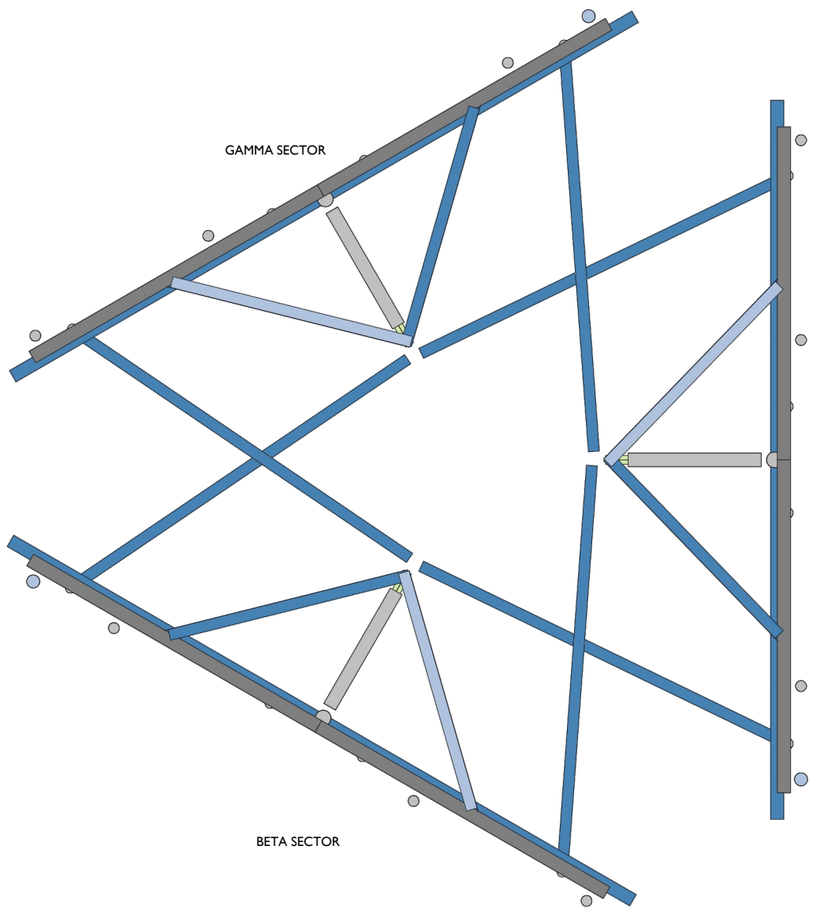

1 CLIMBING FACILITY LOCATION

SCALE : N.T.S.

STRUCTURAL NOTES:

1. PER THE MOUNT MAPPING COMPLETED BY HIGHTOWER SOLUTIONS INC. ON 4/28/2020, THE SAFETY CLIMB AND CLIMBING FACILITIES UP TO THE VERIZON MOUNT ELEVATION (167'-6") ARE IN GOOD CONDITION. MASER DOES NOT WARRANT THIS INFORMATION.

2. INSTALL SHALL NOT CAUSE HARM TO THE STRUCTURE, CLIMBING FACILITY, SAFETY CLIMB, OR ANY SYSTEM INSTALLED ON THE STRUCTURE. TIMELY NOTICE AND DOCUMENTATION SHALL BE PROVIDED BY CONTRACTORS TO THE EOR (OF STRUCTURAL DESIGN) IF AN OBSTRUCTION WAS REQUIRED TO MEET THE RF SYSTEM DESIGN REQUIREMENTS AND PERFORMANCES.

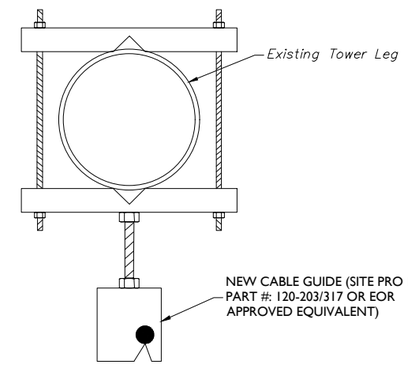

2 CABLE GUIDE TOWER LEG ATTACHMENT - PLAN VIEW

SCALE : N.T.S.

NOTES:

NO EXISTING CLIMBING FACILITY PHOTO.

CLIMBING FACILITY PHOTO

MASER CONSULTING
CONNECTICUT
WILL BE KNOWN AS COLLIERS ENGINEERING & DESIGN IN 2021
Customer Loyalty *through* Client Satisfaction
www.maserconsulting.com
Office Locations:
- NEW JERSEY
- NEW YORK
- PENNSYLVANIA
- VIRGINIA
- FLORIDA
- NORTH CAROLINA
- SOUTH CAROLINA
- NEW MEXICO
- MARYLAND
- GEORGIA
- TEXAS
- TENNESSEE
- COLORADO

Copyright © 2021. Maser Consulting All Rights Reserved. This drawing and all the information contained herein is authorized for use only by the party for whom the services were contracted or to whom it is certified. This drawing may not be copied, reused, disclosed, distributed or relied upon for any other purpose without the express written consent of Maser Consulting.

verizon

PROTECT YOURSELF
ALL STATES REQUIRE NOTIFICATION OF EXCAVATORS, DESIGNERS, OR ANY PERSON PREPARING TO DISTURB THE EARTH'S SURFACE ANYWHERE IN ANY STATE

811 Know what's below. Call before you dig.

FOR STATE SPECIFIC DIRECT PHONE NUMBERS VISIT: WWW.CALL811.COM

SCALE :	JOB NUMBER :
AS SHOWN	21777635A

REV	DATE	DESCRIPTION	DRAWN BY	CHECKED BY
.	.	.	.	.
.	.	.	.	.
.	.	.	.	.
0	7/27/2021	ISSUED FOR CONSTRUCTION	MSG	JPL

STATE OF CONNECTICUT
JUSTIN PETER LINETTE
31965
LICENSED PROFESSIONAL ENGINEER

Digitally Signed by Justin Peter Linette
Date: 2021.07.28 10:17:36-04'00'
C.O.A. #: PEC.0000131

IT IS A VIOLATION OF LAW FOR ANY PERSON, UNLESS THEY ARE ACTING UNDER THE DIRECTION OF THE RESPONSIBLE LICENSED PROFESSIONAL ENGINEER, TO ALTER THIS DOCUMENT.

SITE NAME:

FRANKLIN CT
469215

83 DR. NOTT ROAD
FRANKLIN, CT 06254
NEW LONDON COUNTY

MT. LAUREL OFFICE
2000 Midlantic Drive
Suite 100
Mount Laurel, NJ 08054

Phone: 856.797.0412
Fax: 856.722.1120

SHEET TITLE :
CLIMBING FACILITY DETAIL

SHEET NUMBER :
SCF-1

NOTE: DO NOT SCALE DRAWINGS FOR CONSTRUCTION.

AcAdmin, HARNAN19, FRANKLIN CT Plans+Elevations, PASS 2010/12 Aug/SCF-1 By: MORANAM

LEGEND:

- PROPOSED
- RELOCATED
- EXISTING

MOUNT MODIFICATION SCHEDULE

NO.	ELEVATION	QUANTITY	DESCRIPTION	NOTES
1	167'-6"	6	PROPOSED TIE BACK ASSEMBLY (PART #: VZWSMART-SFK1)	CONNECT NEW TIE BACK TO FACE VERTICAL PIPE WITH CROSSOVER PLATES (PART#: VZWSMART-MSK1). CONNECT OTHER END TO ADJACENT TOWER LEG. PROPOSED TIE-BACK SHALL EXTEND NO MORE THAN 12" BEYOND THE TOWER LEG. CONTRACTOR SHALL TRIM AS REQUIRED AND PROTECT CUT END WITH TWO COATS OF ZINGA OR ZINC COTE.
2		3	PROPOSED V-BRACING KIT (PART #: VZWSMART-SFK3)	CONTRACTOR TO VERIFY THE LENGTH REQUIRED AND TRIM AS NECESSARY IN ACCORDANCE WITH THE 'STRUCTURAL STEEL' NOTES ON SHEET SGN-1
3		3	162" LONG, P2 1/2 STD FACE HORIZONTAL	RADIO AND/OR TME POSITIONS SHALL BE ADJUSTED VERTICALLY AS NEEDED IN ORDER TO ACHIEVE INSTALLATION OF HORIZONTAL AS SHOWN. EOR SHALL BE NOTIFIED IF EQUIPMENT NEEDS TO BE RELOCATED TO ANOTHER MOUNT PIPE. CONNECT NEW HORIZONTAL TO ALL EXISTING VERTICAL FACE BRACKIG PIPES WITH CROSSOVER PLATES (PART #: VZWSMART-MSK1).
4		3	96" LONG, P2 1/2 STD MOUNT PIPE	CONNECT NEW MOUNT PIPE TO EXISTING HORIZONTAL WITH (1) 1/2" DIA. U-BOLT AT EACH CONNECTION.
5		3	84" LONG, P2 STD MOUNT PIPE	TO BE RELOCATED AND CONNECT TO EXISTING FACE HORIZONTALS WITH (1) 1/2" DIA. U-BOLT AT EACH CONNECTION.
6				
7				
8				
9				
10				

NOTES.

MOUNT MEMBERS NOT SHOWN FOR CLARITY.
ALL NEW BOLT HOLES SHALL BE PREPARED PER THE BOLT SCHEDULE ON SHEET SGN-1 UNLESS NOTED OTHERWISE.

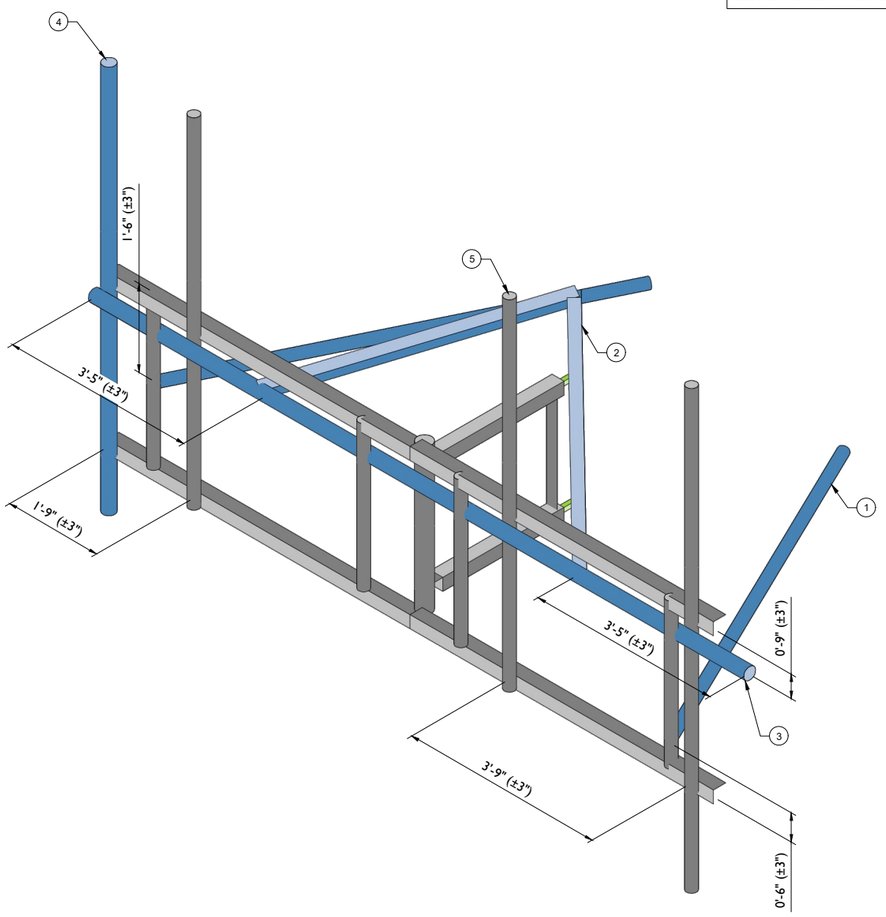

1 PROPOSED ISOMETRIC VIEW (TYP. ALL SECTORS)

SCALE : N.T.S.

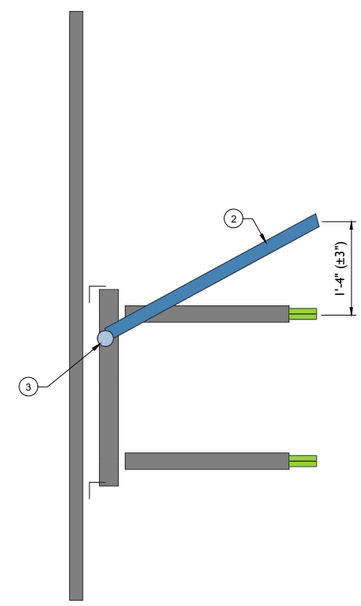

2 PROPOSED SIDE ELEVATION VIEW (TYP. ALL SECTORS)

SCALE : N.T.S.

MASER CONSULTING CONNECTICUT
WILL BE KNOWN AS COLLIERS ENGINEERING & DESIGN IN 2021
Customer Loyalty *through* Client Satisfaction
www.maserconsulting.com
Office Locations:
- NEW JERSEY
- NEW YORK
- PENNSYLVANIA
- VIRGINIA
- FLORIDA
- NORTH CAROLINA
- SOUTH CAROLINA
- NEW MEXICO
- MARYLAND
- GEORGIA
- TEXAS
- TENNESSEE
- COLORADO

Copyright © 2021 | Maser Consulting All Rights Reserved. This drawing and all the information contained herein is authorized for use only by the party for whom the services were contracted or to whom it is certified. This drawing may not be copied, reused, disclosed, distributed or relied upon for any other purpose without the express written consent of Maser Consulting.

verizon

PROTECT YOURSELF

ALL STATES REQUIRE NOTIFICATION OF EXCAVATORS, DESIGNERS, OR ANY PERSON PREPARING TO DISTURB THE EARTH'S SURFACE ANYWHERE IN ANY STATE

811 Know what's below. Call before you dig.

FOR STATE SPECIFIC DIRECT PHONE NUMBERS VISIT: WWW.CALL811.COM

SCALE : AS SHOWN

JOB NUMBER : 21777635A

REV	DATE	DESCRIPTION	DRAWN BY	CHECKED BY
0	7/27/2021	ISSUED FOR CONSTRUCTION	MSG	JPL

STATE OF CONNECTICUT 31965 LICENSED PROFESSIONAL ENGINEER

Digitally signed by Justin Peter Linette
Date: 2021.07.28 10:17:32-04'00'
C.O.A. #: PC.0000131

IT IS A VIOLATION OF LAW FOR ANY PERSON, UNLESS THEY ARE ACTING UNDER THE DIRECTION OF THE RESPONSIBLE LICENSED PROFESSIONAL ENGINEER, TO ALTER THIS DOCUMENT.

SITE NAME:

FRANKLIN CT
469215

83 DR. NOTT ROAD
FRANKLIN, CT 06254
NEW LONDON COUNTY

MT. LAUREL OFFICE
2000 Midlantic Drive
Suite 100
Mount Laurel, NJ 08054

Phone: 856.797.0412
Fax: 856.722.1120

SHEET TITLE : MODIFICATION DETAILS

SHEET NUMBER : SS-1

NOTE: DO NOT SCALE DRAWINGS FOR CONSTRUCTION.

ACAD:ch 1400x1955 FRANKLIN CT Mount-Details.dwg PAGE 2021/07/27 Aug05:51 By:MGRAHAM

MOUNT PHOTO 1

MOUNT PHOTO 2

MOUNT PHOTO 3

MOUNT PHOTO 4

MASER CONSULTING
CONNECTICUT
WILL BE KNOWN AS COLLIERS ENGINEERING & DESIGN IN 2021
Customer Loyalty *through* Client Satisfaction
www.maserconsulting.com
Office Locations:
- NEW JERSEY
- NEW YORK
- PENNSYLVANIA
- VIRGINIA
- FLORIDA
- NORTH CAROLINA
- SOUTH CAROLINA
- NEW MEXICO
- MARYLAND
- GEORGIA
- TEXAS
- TENNESSEE
- COLORADO

Copyright © 2021. Maser Consulting All Rights Reserved. This drawing and all the information contained herein is authorized for use only by the party for whom the services were contracted or to whom it is certified. This drawing may not be copied, reused, disclosed, distributed or relied upon for any other purpose without the express written consent of Maser Consulting.

verizon

PROTECT YOURSELF
ALL STATES REQUIRE NOTIFICATION OF EXCAVATORS, DESIGNERS, OR ANY PERSON PREPARING TO DISTURB THE EARTH'S SURFACE ANYWHERE IN ANY STATE

811 Know what's below. Call before you dig.

FOR STATE SPECIFIC DIRECT PHONE NUMBERS VISIT: WWW.CALL811.COM

SCALE : AS SHOWN

JOB NUMBER : 21777635A

REV	DATE	DESCRIPTION	DRAWN BY	CHECKED BY
0	7/27/2021	ISSUED FOR CONSTRUCTION	MSG	JPL

STATE OF CONNECTICUT
JUSTIN PETER LINETTE
31965
LICENSED PROFESSIONAL ENGINEER

Digitally signed by Justin Peter Linette
Date: 2021.07.28 10:17:32-04'00'
C.O.A. #: PC.0000131

IT IS A VIOLATION OF LAW FOR ANY PERSON, UNLESS THEY ARE ACTING UNDER THE DIRECTION OF THE RESPONSIBLE LICENSED PROFESSIONAL ENGINEER, TO ALTER THIS DOCUMENT.

SITE NAME:

FRANKLIN CT
469215

83 DR. NOTT ROAD
FRANKLIN, CT 06254
NEW LONDON COUNTY

MT. LAUREL OFFICE
2000 Midlantic Drive
Suite 100
Mount Laurel, NJ 08054

Phone: 856.797.0412
Fax: 856.722.1120

SHEET TITLE : MOUNT PHOTOS

SHEET NUMBER : SS-2

NOTE: DO NOT SCALE DRAWINGS FOR CONSTRUCTION.

AcAuth 140046.9515 FRANKLIN CT Pkg.wrk-Drawing PAGE 20210727Aug0512 By:MGRAHAM

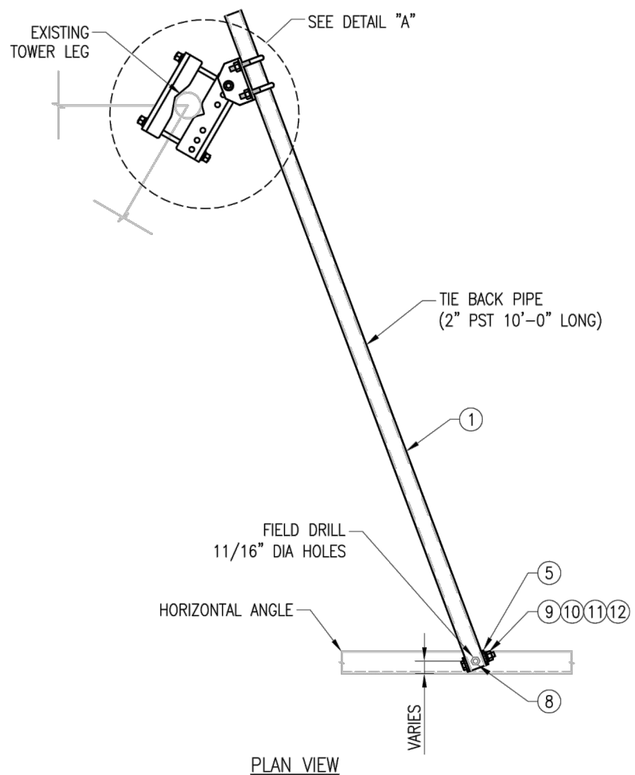

PLAN VIEW
TIE BACK ASSEMBLY

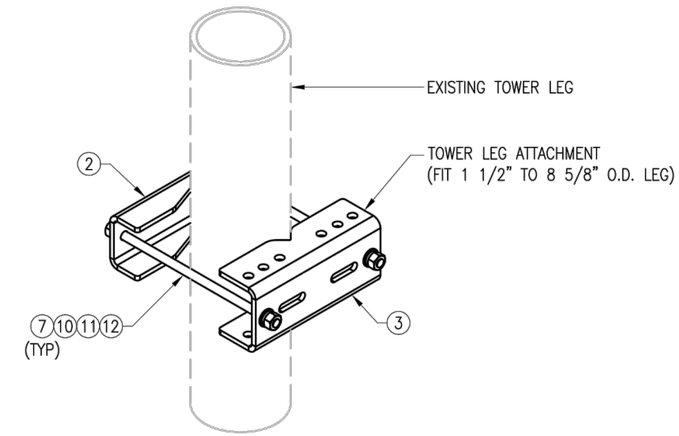

ROUND TOWER LEG ATTACHMENT DETAIL

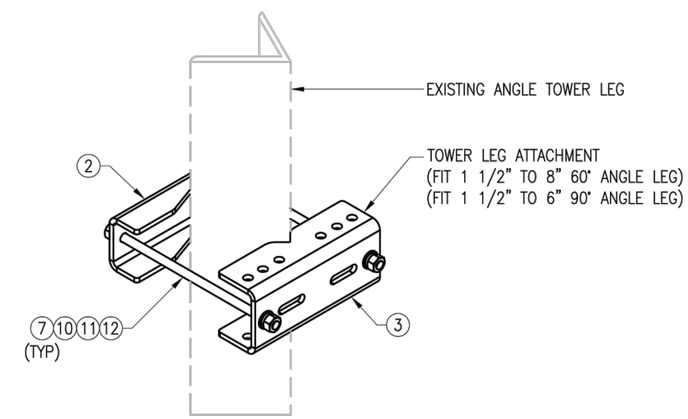

ANGLE TOWER LEG ATTACHMENT DETAIL

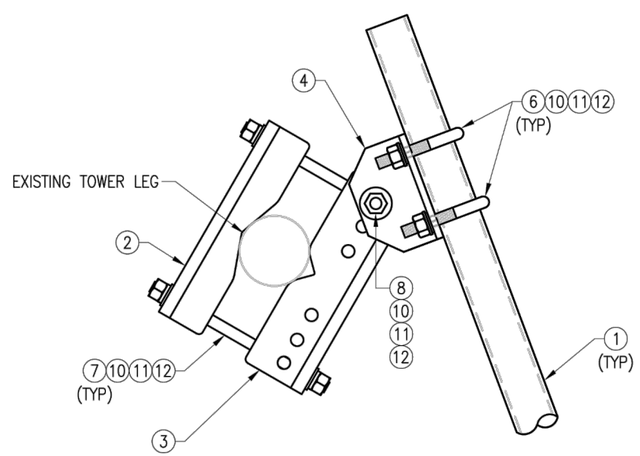

DETAIL "A"

NOTES:
1. HOT-DIPPED GALVANIZED PER ASTM A123.

VZWSMART-SFK1 (TIE BACK ASSEMBLY)

ITEM NO.	QTY.	PART NO.	DESCRIPTION	SHEET #	WT
1	1	PST2375-10	2" PST (2.375" O.D. X 0.154" THK) X 10'-0" A53 GR-B 35KSI	SFK1-F1	38
2	1	BP825-12	PL 3/8" X 8 1/4" X 1'-0" A36 BENT PLATE	SFK1-F2	11
3	1	BP11125-12	PL 3/8" X 11 1/8" X 1'-0" A36 BENT PLATE	SFK1-F3	14
4	1	BP6-9375	PL 3/8" X 6" X 9 3/8" A36 BENT PLATE	SFK1-F4	6
5	1	BP2-875	PL 1/4" X 2" X 8 3/4" A36 BENT PLATE	SFK1-F4	1
6	2	MS02-625-300-500	RU-BOLT 5/8" X 3" I.W. X 5" I.L. A36 (OR EQUIV.)	RBC-1	2
7	2	---	THREADED ROD 5/8" DIA. X 1'-6" F1554-36 HDG	---	0
8	2	---	BOLT 5/8" X 2" A325	---	0
9	1	---	BOLT 5/8" X 4 1/4" A325	---	0
10	11	FW-625	5/8" HDG USS FLAT WASHER	---	1
11	11	LW-625	5/8" HDG LOCK WASHER	---	0
12	11	NUT-625	5/8" HDG HEX NUT	---	1
				GALVANIZED WT	72

VzW
SMART Tool©
Vendor

verizon

DRAWN BY: BT | CHECKED BY: HMA/KW

REV.	DESCRIPTION	BY	DATE
0	FIRST ISSUE	BT	05/08/20

SHEET TITLE:
VZWSMART-SFK1
TIE BACK ASSEMBLY

SHEET NUMBER: VZWSMART-SFK1
REV #: 0

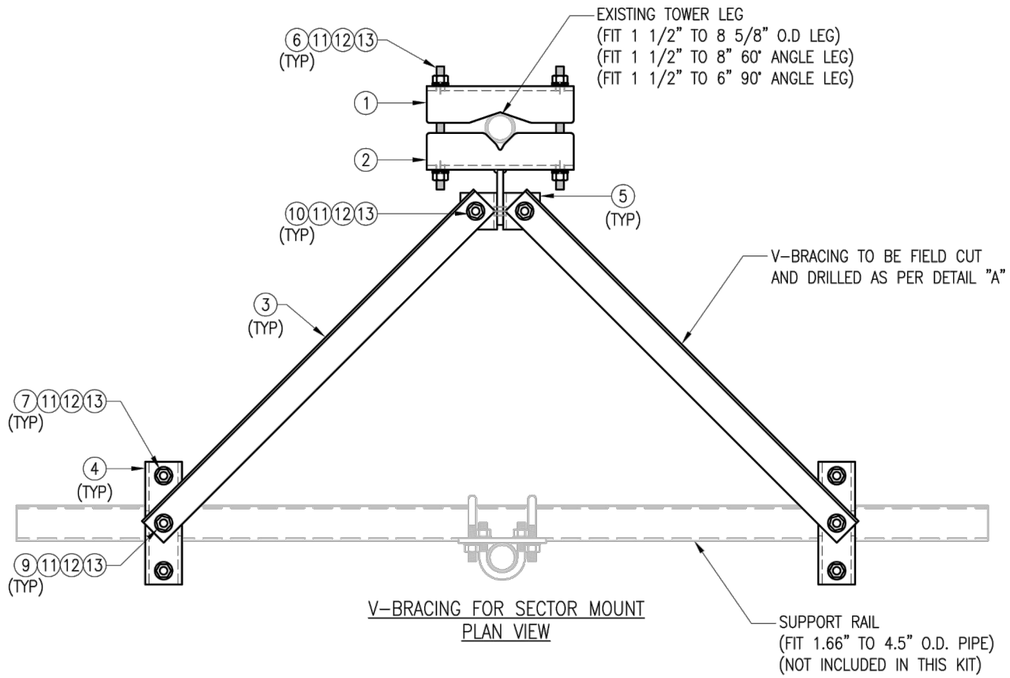

V-BRACING FOR SECTOR MOUNT
PLAN VIEW

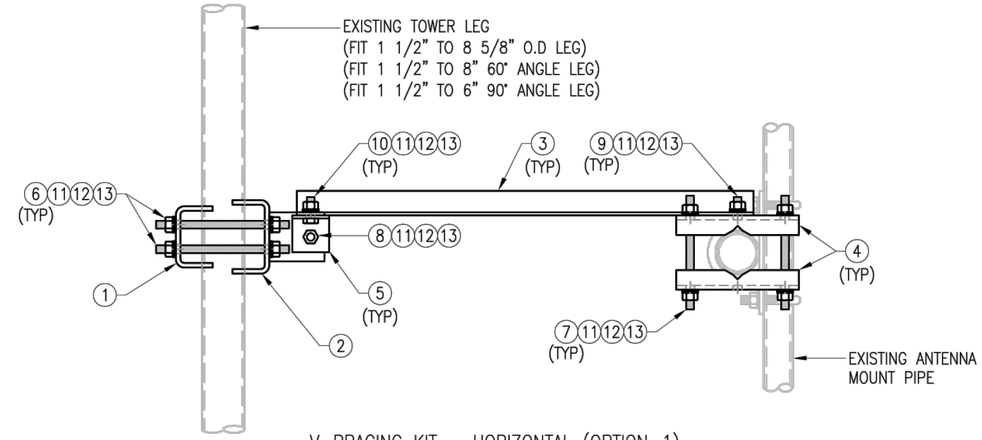

V-BRACING KIT – HORIZONTAL (OPTION-1)
SIDE VIEW

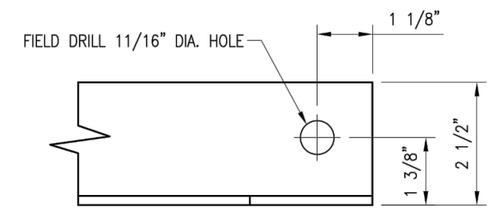

PLAN VIEW

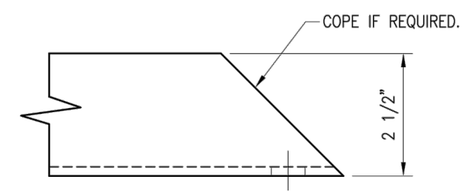

FRONT VIEW
DETAIL "A"

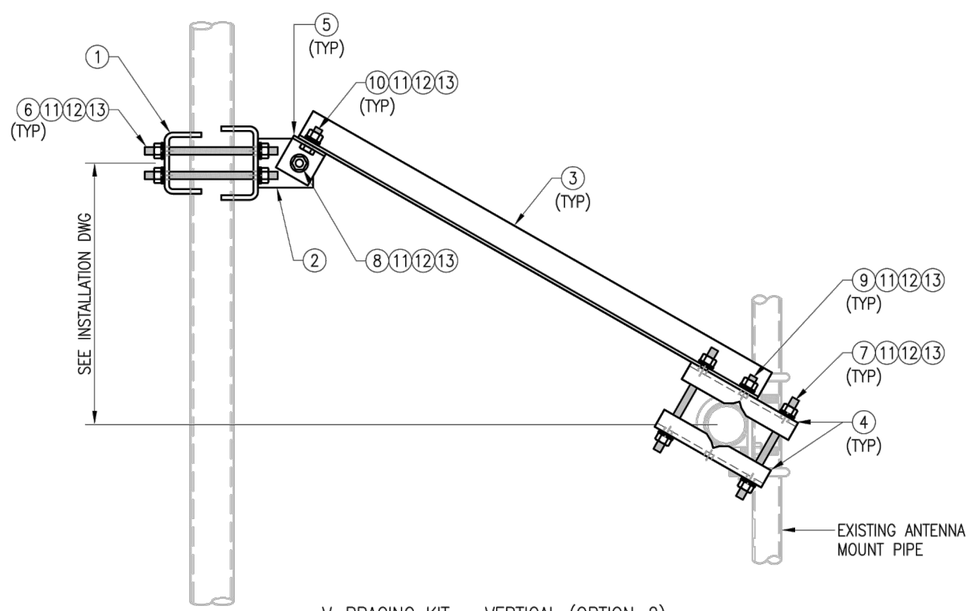

V-BRACING KIT – VERTICAL (OPTION-2)
SIDE VIEW

VZWSMART-SFK3 (V-BRACING KIT)

ITEM NO.	QTY.	PART NO.	DESCRIPTION	SHEET #	WT
1	1	BP9625-12	PL 3/8" X 9 5/8" X 1'-0" A36 BENT PLATE	VBSM-F1	12
2	1	BRKW-VBSM	WELDMENT BRACKET	VBSM-F3	16
3	2	L252525-8	L 2 1/2" X 2 1/2" X 1/4" X 8'-0" A36	VBSM-F5	67
4	4	BP6875-10	PL 3/8" X 6 7/8" X 10" A36 BENT PLATE	VBSM-F2	20
5	2	AL-333	L 3" X 3" X 1/4" X 3" A36	VBSM-F2	3
6	4	---	THREADED ROD 5/8" DIA. X 1'-6" F1554-36 HDG	---	--
7	4	---	THREADED ROD 5/8" DIA. X 10" F1554-36 HDG	---	--
8	1	---	BOLT 5/8" X 2 1/4" A325	---	--
9	2	---	BOLT 5/8" X 2" A325	---	--
10	2	---	BOLT 5/8" X 1 3/4" A325	---	--
11	21	FW-625	5/8" HDG USS FLAT WASHER	---	2
12	21	LW-625	5/8" HDG LOCK WASHER	---	0
13	21	NUT-625	5/8" HDG HEX NUT	---	2
				GALVANIZED WT	122

NOTES:
1. HOT-DIPPED GALVANIZED PER ASTM A123.

VzW
SMART Tool©
Vendor

verizon

DRAWN BY: H.R. | CHECKED BY: HMA

REV.	DESCRIPTION	BY	DATE
0	FIRST ISSUE	H.R.	05/08/20

SHEET TITLE:
VZWSMART-SFK3
V-BRACING KIT

SHEET NUMBER: VZWSMART-SFK3
REV #: 0

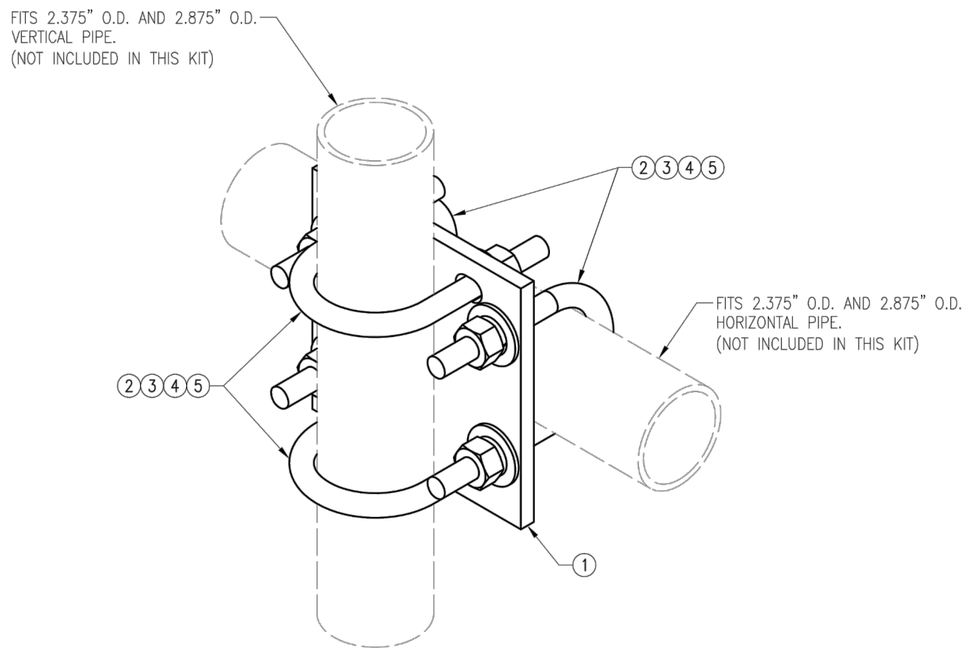

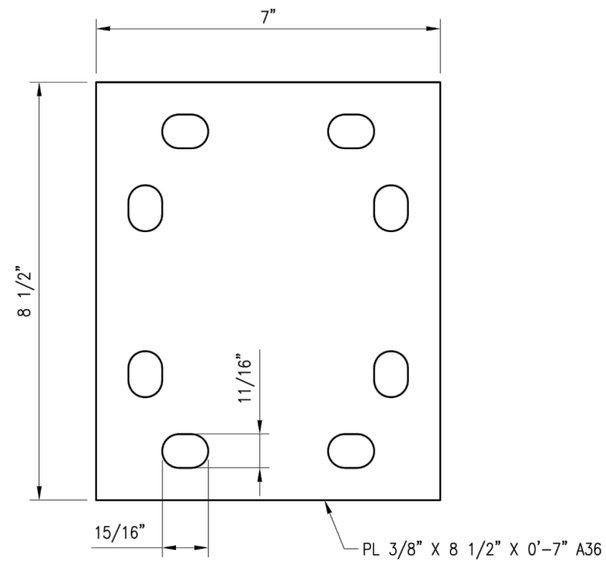

PL375-857

NOTES:
1. HOT-DIPPED GALVANIZED PER ASTM A123.

VZWSMART-MSK1 (CROSSOVER PLATE)

ITEM NO.	QTY.	PART NO.	DESCRIPTION	SHEET #	WT
1	1	PL375-857	PL 3/8" X 8 1/2" X 0'-7" A36	MSK1-F1	6
2	4	MS02-625-300-500	RU-BOLT 5/8" X 3" I.W. X 5" I.L. A36 (OR EQUIV.)	RBC-1	5
3	8	FW-625	5/8" HDG USS FLAT WASHER	---	1
4	8	LW-625	5/8" HDG LOCK WASHER	---	0
5	8	NUT-625	5/8" HDG HEX NUT	---	1
				GALVANIZED WT	14

VzW
SMART Tool©
Vendor

verizon

DRAWN BY: H.R | CHECKED BY: HMA

REV.	DESCRIPTION	BY	DATE
0	FIRST ISSUE	H.R	05/08/20

SHEET TITLE:
VZWSMART-MSK1
CROSSOVER PLATE

SHEET NUMBER: VZWSMART-MSK1

REV #: 0

Site Name: ***FRANKLIN CT***
Cumulative Power Density

Operator	Operating Frequency	Number of Trans.	ERP Per Trans.	Total ERP	Distance to Target	Calculated Power Density	Maximum Permissible Exposure*	Fraction of MPE
	(MHz)		(watts)	(watts)	(feet)	(mW/cm^2)	(mW/cm^2)	(%)
VZW 700	751	4	628	2511	170	0.0031	0.5007	0.62%
VZW CDMA	877.26	2	350	701	170	0.0009	0.5848	0.15%
VZW Cellular	874	4	725	2902	170	0.0036	0.5827	0.62%
VZW PCS	1977.5	4	1525	6100	170	0.0076	1.0000	0.76%
VZW AWS	2120	4	1493	5973	170	0.0074	1.0000	0.74%
VZW CBAND	3730.08	4	6531	26125	170	0.0325	1.0000	3.25%
Total Percentage of Maximum Permissible Exposure								6.15%

*Guidelines adopted by the FCC on August 1, 1996, 47 CFR Part 1 based on NCRP Report 86, 1986 and generally on ANSI/IEEE C95.1-1992
**Calculation includes a -10 dB Off Beam Antenna Pattern Adjustment pursuant to Attachments B and C of the Siting Council's November 10, 2015 Memorandum for Exempt Modification filings

MHz = Megahertz
mW/cm^2 = milliwatts per square centimeter
ERP = Effective Radiated Power

Absolute worst case maximum values used.

6310-Franklin CT GIS Map

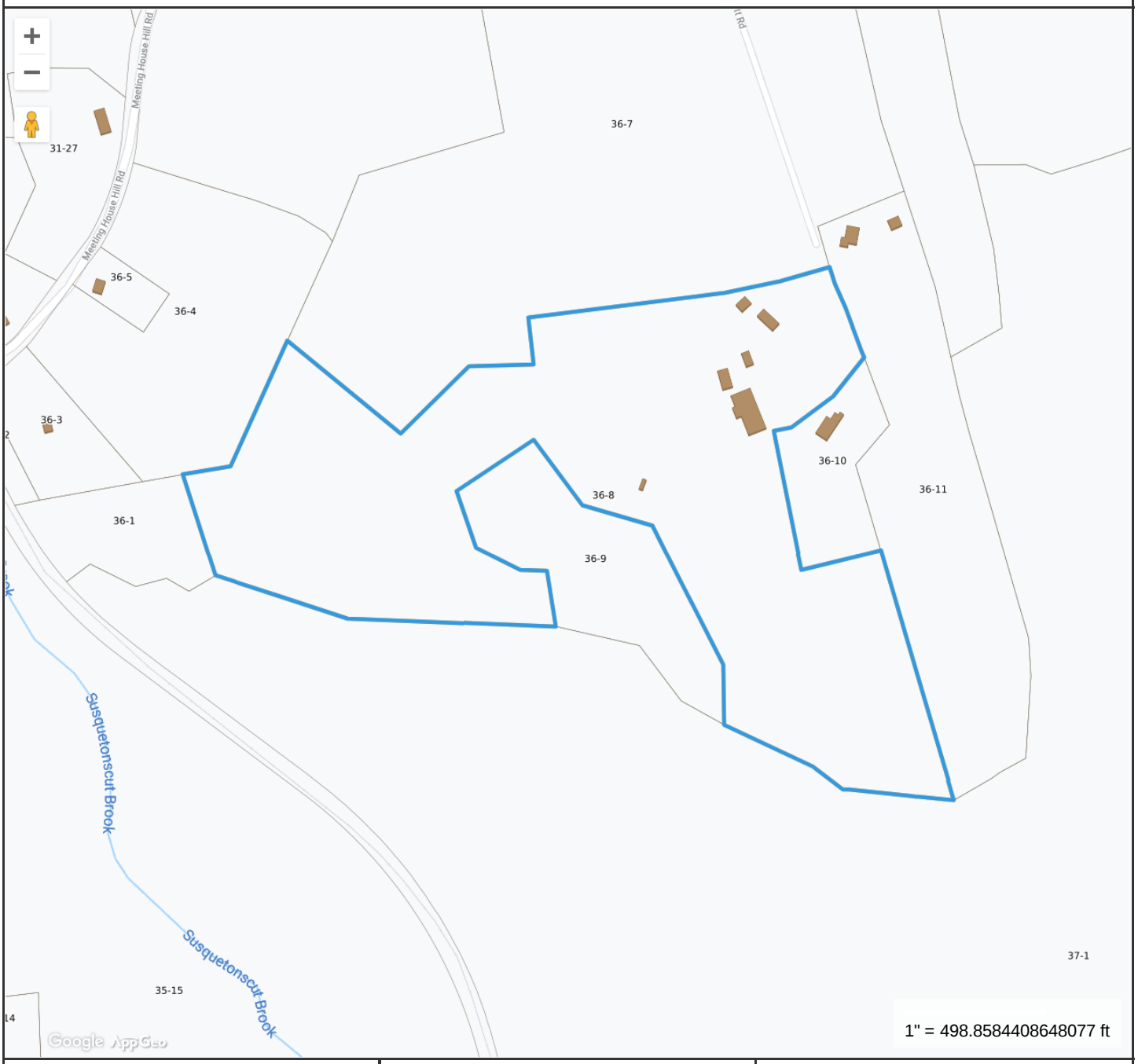

SCCOG

MAP FOR REFERENCE ONLY
NOT A LEGAL DOCUMENT

SCCOG makes no claims and no warranties, expressed or implied, concerning the validity or accuracy of the GIS data presented on this map.

Geometry updated 05/31/2017
Data updated 10/1/2013

Print map scale is approximate. Critical layout or measurement activities should not be done using this resource.

The Assessor's office is responsible for the maintenance of records on the ownership of properties. Assessments are computed at 70% of the estimated market value of real property at the time of the last revaluation which was 2018.

Information on the Property Records for the Municipality of Franklin was last updated on 9/13/2021.

Parcel Information

Location:	89 DR NOTT RD	Property Use:	Residential	Primary Use:	Residential
Unique ID:	S1080900	Map Block Lot:	36 8	Acres:	44.16
490 Acres:	0.00	Zone:	R080	Volume / Page:	103/ 226
Developers Map / Lot:		Census:			

Value Information

	Appraised Value	Assessed Value
Land	138,500	96,940
Buildings	221,367	154,960
Detached Outbuildings	293,995	205,800

	Appraised Value	Assessed Value
Total	653,862	457,700

Owner's Information

Owner's Data
PENSKE AITCHISON VICTORIA L ETAL PO BOX 1128 BETHLEHEM PA 18016

Building 1

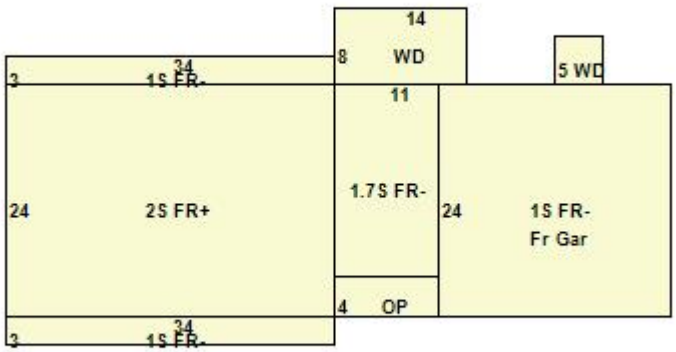

Building Use:	Single Family	Style:	Colonial	Living Area:	2,786

Stories:	2.00	Construction:	Wood Frame	Year Built:	1986
Total Rooms:	8	Bedrooms:	3	Full Baths:	2
Half Baths:	1	Fireplaces:	0	Heating:	Hot Water
Fuel:	Oil	Cooling Percent:	0	Basement Area:	816
Basement Finished Area:	0	Basement Garages:	0	Roof Material:	Asphalt
Siding:	Clapboards	Units:			

Special Features

Attached Components

Type:	Year Built:	Area:
Wood Deck	1986	112
Wood Deck	1986	25
Attatched Frame Garage	1986	576
Open Porch	1986	44

Detached Outbuildings

Type:	Year Built:	Length:	Width:	Area:
Barn w/Loft	1986	0.00	0.00	768
Barn w/Loft	2007	30.00	60.00	1,800
Pole Barn	2000	0.00	0.00	7,200
Canopy	1986	0.00	0.00	345
Farm Utility Storage Shed	1999	0.00	0.00	200
Farm Utility Storage Shed	1999	0.00	0.00	480

Type:	Year Built:	Length:	Width:	Area:
Farm Utility Storage Shed	2000	0.00	0.00	408
6 Ft Chain Fence	0000	1,000.00	0.00	1,000
Detached 1 Story Garage	1986	0.00	0.00	925
Site Value	1986	0.00	0.00	1
Lean To Shed	1986	0.00	0.00	288
Cell Tower	1999	0.00	0.00	1

Owner History - Sales

Owner Name	Volume	Page	Sale Date	Deed Type	Sale Price
PENSKE AITCHISON VICTORIA L ETAL	103	226	05/27/2020	Warranty Deed	$653,862
HIDDEN BROOK FARMS LLC	0091	0719	08/29/2013		$650,000
SHAKUN THOMAS J	0091	0030	05/14/2013		$0
SHAKUN THOMAS J AND	0084	0530	01/14/2010		$0
SHAKUN THOMAS J	0066	0180	01/16/2003		$0
SHAKUN THOMAS J AND DOROTHY M	0032	0115			$0

Building Permits

Permit Number	Permit Type	Date Opened	Reason
810-21	Other	08/10/2021	INSTALLATION OF WALK-IN CABINET AND GENERATOR ON PLATFORM PLUS NEW ANTENNA AND MOUNTS ON TOWER
708-21	Roof	07/20/2021	METAL ROOF OVER EXIST SHED REPLACE 6 WINDOWS
806-16	Residential	08/09/2016	SEE PERMIT
1013-13	Electrical	10/08/2013	CHANGING SERVICE TO 200 HSE 100 AMP APT
1105-07	Residential	10/01/2007	TANK RM GAS HEATER.
111106		11/21/2006	30 X 60

Permit Number	Permit Type	Date Opened	Reason
2009	Residential	07/31/2000	BARN
2100		01/18/2000	ST POL ANT + 12x34 SHED
6799		06/09/1999	EQP SHEDS
1759	Residential	01/11/1999	AMERICAN TOWER

Information Published With Permission From The Assessor

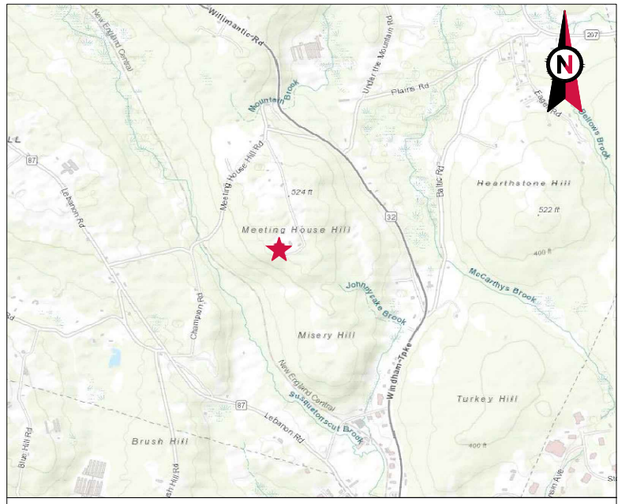

VICINITY MAP

AMERICAN TOWER®

ATC SITE NAME: FRANKLIN CT
ATC SITE NUMBER: 6310
VERIZON SITE NAME: FRANKLIN CT
VERIZON SITE NUMBER:469215
SITE ADDRESS: 89 DR. NOTT RD.
FRANKLIN, CT 06254

LOCATION MAP

VERIZON
5G L-SUB6 - CARRIER ADD ANTENNA AMENDMENT DRAWINGS

COMPLIANCE CODE

ALL WORK SHALL BE PERFORMED AND MATERIALS INSTALLED IN ACCORDANCE WITH THE CURRENT EDITIONS OF THE FOLLOWING CODES AS ADOPTED BY THE LOCAL GOVERNMENT AUTHORITIES. NOTHING IN THESE PLANS IS TO BE CONSTRUED TO PERMIT WORK NOT CONFORMING TO THESE CODES.

1. 2018 CONNECTICUT STATE BUILDING CODE-AMENDMENTS TO IBC 2015
2. INTERNATIONAL BUILDING CODE 2015, INTERNATIONAL CODE COUNCIL
3. TIA-222-G-4, STRUCTURAL STANDARD FOR ANTENNA SUPPORTING STRUCTURES AND ANTENNAS
4. ASCE 7-10 MINIMUM DESIGN LOADS FOR BUILDINGS AND OTHER STRUCTURES, AMERICAN SOCIETY OF CIVIL ENGINEERS
5. STEEL CONSTRUCTION MANUAL 14TH EDITION, AMERICAN INSTITUTE OF STEEL CONSTRUCTION
6. CITY/COUNTY ORDINANCES

UTILITY COMPANIES

POWER COMPANY: N/A
PHONE: N/A

TELEPHONE COMPANY: N/A
PHONE: N/A

811 Know what's below. Call before you dig.

PROJECT SUMMARY

SITE ADDRESS:

89 DR. NOTT RD.

FRANKLIN, CT 06254

COUNTY: NEW LONDON

GEOGRAPHIC COORDINATES:

LATITUDE: 41.597675

LONGITUDE: -72.144978

GROUND ELEVATION: 499' AMSL

PROJECT TEAM

TOWER OWNER:

AMERICAN TOWER
10 PRESIDENTIAL WAY
WOBURN, MA 01801

ENGINEER:

DEWBERRY ENGINEERS, INC.
99 SUMMER STREET
SUITE 700
BOSTON, MA 02110

PROPERTY OWNER:

HIDDEN BROOK FARMS LLC.
248 ROUTE 32
FRANKLIN, CT 06254

APPLICANT:

VERIZON WIRELESS
118 FLANDERS ROAD
WESTBOROUGH, MA 01581

PROJECT DESCRIPTION

THE PROPOSED PROJECT INCLUDES MODIFYING GROUND BASED AND TOWER MOUNTED EQUIPMENT AS INDICATED PER BELOW:

TOWER WORK:

REMOVE (9) ANTENNA(s), (3) RRH(s), (1) OVP, (1) 1-5/8" HYBRID CABLE AND (1) 1-5/8" COAX CABLE

INSTALL (9) ANTENNA(s), (9) RRH(s), (3) DIPLEXERS, (1) OVP AND (2) 1-5/8" 6X12 HYBRID CABLE(s)

EXISTING (3) ANTENNA(s) AND (11) 1-5/8" COAX CABLES TO REMAIN

GROUND WORK:

REMOVE (1) RRU

PROJECT NOTES

1. THE FACILITY IS UNMANNED.
2. A TECHNICIAN WILL VISIT THE SITE APPROXIMATELY ONCE A MONTH FOR ROUTINE INSPECTION AND MAINTENANCE.
3. THE PROJECT WILL NOT RESULT IN ANY SIGNIFICANT LAND DISTURBANCE OR EFFECT OF STORM WATER DRAINAGE.
4. NO SANITARY SEWER, POTABLE WATER OR TRASH DISPOSAL IS REQUIRED.
5. HANDICAP ACCESS IS NOT REQUIRED.
6. THE PROJECT DEPICTED IN THESE PLANS QUALIFIES AS AN ELIGIBLE FACILITIES REQUEST ENTITLED TO EXPEDITED REVIEW UNDER 47 U.S.C. 1455(A) AS A MODIFICATION OF AN EXISTING WIRELESS TOWER THAT INVOLVES THE COLLOCATION REMOVAL AND/OR REPLACEMENT OF TRANSMISSION EQUIPMENT THAT IS NOT A SUBSTANTIAL CHANGE UNDER CFR 1.61000 (B)(7).

PROJECT LOCATION DIRECTIONS

395 SOUTH TO 608 WEST. FOLLOW TO 32 NORTH TO LEFT ON POUND HILL RD. LEFT ON DR. SITE IS BEHIND FARM

SHEET INDEX

SHEET NO:	DESCRIPTION:	REV:	DATE:	BY:
G-001	TITLE SHEET	0	08/26/21	FG
G-002	GENERAL NOTES	0	08/26/21	FG
C-101	DETAILED SITE PLAN	0	08/26/21	FG
C-201	TOWER ELEVATION	0	08/26/21	FG
C-401	ANTENNA INFORMATION & SCHEDULE	0	08/26/21	FG
C-501	CONSTRUCTION DETAILS	0	08/26/21	FG
E-501	GROUNDING DETAILS	0	08/26/21	FG
R-601	SUPPLEMENTAL			
R-602	SUPPLEMENTAL			
	MOUNT MODIFICATION DRAWING (9 PAGES)			

AMERICAN TOWER®

Dewberry®
Dewberry Engineers Inc.
99 SUMMER STREET
SUITE 700
BOSTON, MA 02110
PHONE: 617.695.3400
FAX: 617.695.3310

REV.	DESCRIPTION	BY	DATE
A	PRELIM	PP	05/14/21
0	FINAL	FG	08/26/21

ATC SITE NUMBER:
6310

ATC SITE NAME:
FRANKLIN CT

VERIZON SITE NAME:
FRANKLIN CT

SITE ADDRESS:
89 DR. NOTT RD.
FRANKLIN, CT 06254

SEAL:

verizon

DATE DRAWN:	05/14/21
ATC JOB NO:	13668773
CUSTOMER ID:	FRANKLIN CT
CUSTOMER #:	469215

TITLE SHEET

SHEET NUMBER: G-001

REVISION: 0

Copyright © 2021 ATC IP LLC, All Rights Reserved.

GENERAL CONSTRUCTION NOTES:

1. OWNER FURNISHED MATERIALS, VERIZON "THE COMPANY" WILL PROVIDE AND THE CONTRACTOR WILL INSTALL
   - A. BTS EQUIPMENT FRAME (PLATFORM) AND ICEBRIDGE SHELTER (GROUND BUILD/CO-LOCATE ONLY)
   - B. AC/TELCO INTERFACE BOX (PPC)
   - C. ICE BRIDGE (CABLE TRAY WITH COVER) (GROUND BUILD/CO-LOCATE ONLY, GC TO FURNISH AND INSTALL FOR ROOFTOP INSTALLATION)
   - D. TOWERS, MONOPOLES
   - E. TOWER LIGHTING
   - F. GENERATORS & LIQUID PROPANE TANK
   - G. ANTENNA STANDARD BRACKETS, FRAMES AND PIPES FOR MOUNTING
   - H. ANTENNAS (INSTALLED BY OTHERS)
   - I. TRANSMISSION LINE
   - J. TRANSMISSION LINE JUMPERS
   - K. TRANSMISSION LINE CONNECTORS WITH WEATHERPROOFING KITS
   - L. TRANSMISSION LINE GROUND KITS
   - M. HANGERS
   - N. HOISTING GRIPS
   - O. BTS EQUIPMENT
2. THE CONTRACTOR IS RESPONSIBLE TO PROVIDE ALL OTHER MATERIALS FOR THE COMPLETE INSTALLATION OF THE SITE INCLUDING, BUT NOT LIMITED TO, SUCH MATERIALS AS FENCING, STRUCTURAL STEEL SUPPORTING SUB-FRAME FOR PLATFORM, ROOFING LABOR AND MATERIALS, GROUNDING RINGS, GROUNDING WIRES, COPPER-CLAD OR XIT CHEMICAL GROUND ROD(S), BUSS BARS, TRANSFORMERS AND DISCONNECT SWITCHES WHERE APPLICABLE, TEMPORARY ELECTRICAL POWER, CONDUIT, LANDSCAPING COMPOUND STONE, CRANES, CORE DRILLING, SLEEPERS AND RUBBER MATTING, REBAR, CONCRETE CAISSONS, PADS AND/OR AUGER MOUNTS, MISCELLANEOUS FASTENERS, CABLE TRAYS, NON-STANDARD ANTENNA FRAMES AND ALL OTHER MATERIAL AND LABOR REQUIRED TO COMPLETE THE JOB ACCORDING TO THE DRAWINGS AND SPECIFICATIONS. IT IS THE POSITION OF VERIZON TO APPLY FOR PERMITTING AND CONTRACTOR RESPONSIBLE FOR PICKUP AND PAYMENT OF REQUIRED PERMITS.
3. ALL WORK SHALL CONFORM TO ALL CURRENT APPLICABLE FEDERAL, STATE, AND LOCAL CODES, INCLUDING ANSI/EIA/TIA-222, AND COMPLY WITH ATC CONSTRUCTION SPECIFICATIONS.
4. CONTRACTOR SHALL CONTACT LOCAL 811 FOR IDENTIFICATION OF UNDERGROUND UTILITIES PRIOR TO START OF CONSTRUCTION.
5. CONTRACTOR SHALL BE RESPONSIBLE FOR COORDINATING ALL REQUIRED INSPECTIONS.
6. ALL DIMENSIONS TO, OF, AND ON EXISTING BUILDINGS, DRAINAGE STRUCTURES, AND SITE IMPROVEMENTS SHALL BE VERIFIED IN FIELD BY CONTRACTOR WITH ALL DISCREPANCIES REPORTED TO THE ENGINEER.
7. DO NOT CHANGE SIZE OR SPACING OF STRUCTURAL ELEMENTS.
8. DETAILS SHOWN ARE TYPICAL; SIMILAR DETAILS APPLY TO SIMILAR CONDITIONS UNLESS OTHERWISE NOTED.
9. THESE DRAWINGS DO NOT INCLUDE NECESSARY COMPONENTS FOR CONSTRUCTION SAFETY WHICH SHALL BE THE SOLE RESPONSIBILITY OF THE CONTRACTOR.
10. CONTRACTOR SHALL BRACE STRUCTURES UNTIL ALL STRUCTURAL ELEMENTS NEEDED FOR STABILITY ARE INSTALLED. THESE ELEMENTS ARE AS FOLLOWS: LATERAL BRACING, ANCHOR BOLTS, ETC.
11. CONTRACTOR SHALL DETERMINE EXACT LOCATION OF EXISTING UTILITIES, GROUNDS DRAINS, DRAIN PIPES, VENTS, ETC. BEFORE COMMENCING WORK.
12. INCORRECTLY FABRICATED, DAMAGED, OR OTHERWISE MISFITTING OR NONCONFORMING MATERIALS OR CONDITIONS SHALL BE REPORTED TO THE VERIZON REP PRIOR TO REMEDIAL OR CORRECTIVE ACTION. ANY SUCH REMEDIAL ACTION SHALL REQUIRE WRITTEN APPROVAL BY THE VERIZON REP PRIOR TO PROCEEDING.
13. EACH CONTRACTOR SHALL COOPERATE WITH THE VERIZON REP, AND COORDINATE HIS WORK WITH THE WORK OF OTHERS.
14. CONTRACTOR SHALL REPAIR ANY DAMAGE CAUSED BY CONSTRUCTION OF THIS PROJECT TO MATCH EXISTING PRE-CONSTRUCTION CONDITIONS TO THE SATISFACTION OF THE VERIZON CONSTRUCTION MANAGER.
15. ALL CABLE/CONDUIT ENTRY/EXIT PORTS SHALL BE WEATHERPROOFED DURING INSTALLATION USING A SILICONE SEALANT.
16. WHERE EXISTING CONDITIONS DO NOT MATCH THOSE SHOWN IN THIS PLAN SET, CONTRACTOR SHALL NOTIFY THE VERIZON REP AND ENGINEER OF RECORD IMMEDIATELY.
17. CONTRACTOR SHALL ENSURE ALL SUBCONTRACTORS ARE PROVIDED WITH A COMPLETE AND CURRENT SET OF DRAWINGS AND SPECIFICATIONS FOR THIS PROJECT.
18. CONTRACTOR SHALL REMOVE ALL RUBBISH AND DEBRIS FROM THE SITE AT THE END OF EACH DAY.
19. CONTRACTOR SHALL COORDINATE WORK SCHEDULE WITH AMERICAN TOWER CORPORATION (ATC) AND TAKE PRECAUTIONS TO MINIMIZE IMPACT AND DISRUPTION OF OTHER OCCUPANTS OF THE FACILITY.
20. CONTRACTOR SHALL FURNISH VERIZON AND AMERICAN TOWER CORPORATION (ATC) WITH A PDF MARKED UP AS-BUILT SET OF DRAWINGS UPON COMPLETION OF WORK.
21. PRIOR TO SUBMISSION OF BID, CONTRACTOR SHALL COORDINATE WITH VERIZON REP TO DETERMINE WHAT, IF ANY, ITEMS WILL BE PROVIDED. ALL ITEMS NOT PROVIDED SHALL BE PROVIDED AND INSTALLED BY THE CONTRACTOR. CONTRACTOR WILL INSTALL ALL ITEMS PROVIDED.
22. PRIOR TO SUBMISSION OF BID, CONTRACTOR SHALL COORDINATE WITH VERIZON REP TO DETERMINE IF ANY PERMITS WILL BE OBTAINED BY CONTRACTOR. ALL REQUIRED PERMITS NOT OBTAINED BY VERIZON MUST BE OBTAINED, AND PAID FOR, BY THE CONTRACTOR.
23. CONTRACTOR SHALL INSTALL ALL SITE SIGNAGE IN ACCORDANCE WITH VERIZON SPECIFICATIONS AND REQUIREMENTS.
24. CONTRACTOR SHALL SUBMIT ALL SHOP DRAWINGS TO VERIZON FOR REVIEW AND APPROVAL PRIOR TO FABRICATION.
25. ALL EQUIPMENT SHALL BE INSTALLED ACCORDING TO MANUFACTURER'S SPECIFICATIONS AND LOCATED ACCORDING TO VERIZON SPECIFICATIONS, AND AS SHOWN IN THESE PLANS.
26. THE CONTRACTOR SHALL SUPERVISE AND DIRECT THE PROJECT DESCRIBED HEREIN. THE CONTRACTOR SHALL BE SOLELY RESPONSIBLE FOR ALL THE CONSTRUCTION MEANS, METHODS, TECHNIQUES, SEQUENCES AND PROCEDURES AND FOR COORDINATING ALL PORTIONS OF THE WORK UNDER THE CONTRACT.
27. CONTRACTOR SHALL NOTIFY VERIZON REP A MINIMUM OF 48 HOURS IN ADVANCE OF POURING CONCRETE OR BACKFILLING ANY UNDERGROUND UTILITIES, FOUNDATIONS OR SEALING ANY WALL, FLOOR OR ROOF PENETRATIONS FOR ENGINEERING REVIEW AND APPROVAL.
28. CONTRACTOR SHALL BE RESPONSIBLE FOR SITE SAFETY INCLUDING COMPLIANCE WITH ALL APPLICABLE OSHA STANDARDS AND RECOMMENDATIONS AND SHALL PROVIDE ALL NECESSARY SAFETY DEVICES INCLUDING PPE AND PPM AND CONSTRUCTION DEVICES SUCH AS WELDING AND FIRE PREVENTION, TEMPORARY SHORING, SCAFFOLDING, TRENCH BOXES/SLOPING, BARRIERS, ETC.
29. THE CONTRACTOR SHALL PROTECT AT HIS OWN EXPENSE, ALL EXISTING FACILITIES AND SUCH OF HIS NEW WORK LIABLE TO INJURY DURING THE CONSTRUCTION PERIOD. ANY DAMAGE CAUSED BY NEGLECT ON THE PART OF THIS CONTRACTOR OR HIS REPRESENTATIVES, OR BY THE ELEMENTS DUE TO NEGLECT ON THE PART OF THIS CONTRACTOR OR HIS REPRESENTATIVES, EITHER TO THE EXISTING WORK, OR TO HIS WORK OR THE WORK OF ANY OTHER CONTRACTOR, SHALL BE REPAIRED AT HIS EXPENSE TO THE OWNER'S SATISFACTION.
30. ALL WORK SHALL BE INSTALLED IN A FIRST CLASS, NEAT AND WORKMANLIKE MANNER BY MECHANICS SKILLED IN THE TRADE INVOLVED. THE QUALITY OF WORKMANSHIP SHALL BE SUBJECT TO THE APPROVAL OF THE VERIZON REP. ANY WORK FOUND BY THE VERIZON REP TO BE OF INFERIOR QUALITY AND/OR WORKMANSHIP SHALL BE REPLACED AND/OR REWORKED AT CONTRACTOR EXPENSE UNTIL APPROVAL IS OBTAINED.
31. IN ORDER TO ESTABLISH STANDARDS OF QUALITY AND PERFORMANCE, ALL TYPES OF MATERIALS LISTED HEREINAFTER BY MANUFACTURER'S NAMES AND/OR MANUFACTURER'S CATALOG NUMBER SHALL BE PROVIDED BY THESE MANUFACTURERS AS SPECIFIED.
32. VERIZON FURNISHED EQUIPMENT SHALL BE PICKED-UP AT THE VERIZON WAREHOUSE, NO LATER THAN 48HR AFTER BEING NOTIFIED INSURED, STORED, UNCRATE, PROTECTED AND INSTALLED BY THE CONTRACTOR WITH ALL APPURTENANCES REQUIRED TO PLACE THE EQUIPMENT IN OPERATION, READY FOR USE. THE CONTRACTOR SHALL BE RESPONSIBLE FOR THE EQUIPMENT AFTER PICKING IT UP.
33. VERIZON OR HIS ARCHITECT/ENGINEER RESERVES THE RIGHT TO REJECT ANY EQUIPMENT OR MATERIALS WHICH, IN HIS OWN OPINION ARE NOT IN COMPLIANCE WITH THE CONTRACT DOCUMENTS, EITHER BEFORE OR AFTER INSTALLATION AND THE EQUIPMENT SHALL BE REPLACED WITH EQUIPMENT CONFORMING TO THE REQUIREMENTS OF THE CONTRACT DOCUMENTS BY THE CONTRACTOR AT NO COST TO VERIZON OR THEIR ARCHITECT/ENGINEER.

STRUCTURAL STEEL NOTES:

1. STRUCTURAL STEEL SHALL CONFORM TO THE LATEST EDITION OF THE AISC "SPECIFICATION FOR THE DESIGN, FABRICATION AND ERECTION OF STRUCTURAL STEEL FOR BUILDINGS."
2. STRUCTURAL STEEL ROLLED SHAPES, PLATES AND BARS SHALL CONFORM TO THE FOLLOWING ASTM DESIGNATIONS:
   - A. ASTM A-572, GRADE 50 - ALL W SHAPES, UNLESS NOTED OR A992 OTHERWISE
   - B. ASTM A-36 - ALL OTHER ROLLED SHAPES, PLATES AND BARS UNLESS NOTED OTHERWISE.
   - C. ASTM A-500, GRADE B - HSS SECTION (SQUARE, RECTANGULAR, AND ROUND)
   - D. ASTM A-325, TYPE SC OR N - ALL BOLTS FOR CONNECTING STRUCTURAL MEMBERS
   - E. ASTM F-1554 07 - ALL ANCHOR BOLTS, UNLESS NOTED OTHERWISE
3. ALL EXPOSED STRUCTURAL STEEL MEMBERS SHALL BE HOT-DIPPED GALVANIZED AFTER FABRICATION PER ASTM A123. EXPOSED STEEL HARDWARE AND ANCHOR BOLTS SHALL BE GALVANIZED PER ASTM A153 OR B695.
4. ALL FIELD CUT SURFACES, FIELD DRILLED HOLES AND GROUND SURFACES WHERE EXISTING PAINT OR GALVANIZATION REMOVAL WAS REQUIRED SHALL BE REPAIRED WITH (2) BRUSHED COATS OF ZRC GALVILITE COLD GALVANIZING COMPOUND PER ASTM A780 AND MANUFACTURER'S RECOMMENDATIONS.
5. DO NOT DRILL HOLES THROUGH STRUCTURAL STEEL MEMBERS EXCEPT AS SHOWN AND DETAILED ON STRUCTURAL DRAWINGS.
6. CONNECTIONS:
   - A. ALL WELDING TO BE PERFORMED BY AWS CERTIFIED WELDERS AND CONDUCTED IN ACCORDANCE WITH THE LATEST EDITION OF THE AWS WELDING CODE D1.1.
   - B. ALL WELDS SHALL BE INSPECTED VISUALLY. 25% OF WELDS SHALL BE INSPECTED WITH DYE PENETRANT OR MAGNETIC PARTICLE TO MEET THE ACCEPTANCE CRITERIA OF AWS D1.1. REPAIR ALL WELDS AS NECESSARY.
   - C. INSPECTION SHALL BE PERFORMED BY AN AWS CERTIFIED WELD INSPECTOR.
   - D. IT IS THE CONTRACTORS RESPONSIBILITY TO PROVIDE BURNING/WELDING PERMITS AS REQUIRED BY LOCAL GOVERNING AUTHORITY AND IF REQUIRED SHALL HAVE FIRE DEPARTMENT DETAIL FOR ANY WELDING ACTIVITY.
   - E. ALL ELECTRODES TO BE LOW HYDROGEN, MATCHING FILLER METAL, PER AWS D1.1, UNLESS NOTED OTHERWISE.
   - F. MINIMUM WELD SIZE TO BE 0.1875 INCH FILLET WELDS, UNLESS NOTED OTHERWISE.
   - G. PRIOR TO FIELD WELDING GALVANIZING MATERIAL, CONTRACTOR SHALL GRIND OFF GALVANIZING ½" BEYOND ALL FIELD WELD SURFACES. AFTER WELD AND WELD INSPECTION IS COMPLETE, REPAIR ALL GROUND AND WELDED SURFACES WITH ZRC GALVILITE COLD GALVANIZING COMPOUND PER ASTM A780 AND MANUFACTURERS RECOMMENDATIONS.
   - H. THE CONTRACTOR SHALL PROVIDE ADEQUATE SHORING AND/OR BRACING WHERE REQUIRED DURING CONSTRUCTION UNTIL ALL CONNECTIONS ARE COMPLETE.
   - I. ANY FIELD CHANGES OR SUBSTITUTIONS SHALL HAVE PRIOR APPROVAL FROM THE ENGINEER, AND VERIZON PROJECT MANAGER IN WRITING

SPECIAL CONSTRUCTION ANTENNA INSTALLATION NOTES:

1. WORK INCLUDED:
   - A. ANTENNA AND COAXIAL CABLES ARE FURNISHED BY VERIZON UNDER A SEPARATE CONTRACT. THE CONTRACTOR SHALL ASSIST ANTENNA INSTALLATION CONTRACTOR IN TERMS OD COORDINATION AND SITE ACCESS. ERECTION SUBCONTRACTOR SHALL BE RESPONSIBLE FOR THE PROTECTION OF PERSONNEL AND
   - B. INSTALL ANTENNA AS INDICATE ON DRAWINGS AND VERIZON SPECIFICATIONS.
   - C. INSTALL GALVANIZED STEEL ANTENNA MOUNTS AS INDICATED ON DRAWINGS
   - D. INSTALL FURNISHED GALVANIZED STEEL OR ALUMINUM WAVEGUIDE AND PROVIDE PRINTOUT OF THAT TEST.
   - E. CONTRACTOR SHALL PROVIDE FOUR (4) SETS OF SWEEP TESTS USING ANRITZU-PACKARD 8713B RF SCALAR NETWORK ANALYZER. SUBMIT FREQUENCY DOMAIN REFLECTOMETER(FDR) TESTS RESULTS TO THE PROJECT MANAGER. SWEEP TESTS SHALL BE AS PER ATTACHED RFS "MINIMUM FIELD TESTING RECOMMENDED FOR ANTENNA AND HELIAX COAXIAL CABLE SYSTEMS" DATED 10/5/93. TESTING SHALL BE PERFORMED BY AN INDEPENDENT TESTING SERVICE AND BE BOUND AND SUBMITTED WITHIN ONE WEEK OF WORK COMPLETION.
   - F. INSTALL COAXIAL CABLES AND TERMINATING BETWEEN ANTENNAS AND EQUIPMENT PER MANUFACTURER'S RECOMMENDATIONS. WEATHERPROOF ALL CONNECTIONS BETWEEN THE ANTENNA AND EQUIPMENT PER MANUFACTURER'S REQUIREMENTS. TERMINATE ALL COAXIAL CABLE THREE (3) FEET IN EXCESS OF ENTRY PORT LOCATION UNLESS OTHERWISE STATED.
   - G. ANTENNA AND COAXIAL CABLE GROUNDING:
2. ALL EXTERIOR #6 GREED GROUND WIRE "DAISY CHAIN" CONNECTIONS ARE TO BE WEATHER SEALED WITH RFS CONNECTORS/SPLICE WEATHERPROOFING KIT #221213 OR EQUAL.
3. ALL COAXIAL CABLE GROUNDING KITS ARE TO BE INSTALLED ON STRAIGHT RUNS OF COAXIAL CABLE (NOT WITHIN BENDS)

CONCRETE AND REINFORCING STEEL NOTES:

1. DESIGN AND CONSTRUCTION OF ALL CONCRETE ELEMENTS SHALL CONFORM TO THE LATEST EDITIONS OF ALL APPLICABLE CODES INCLUDING: ACI 301 "SPECIFICATIONS FOR STRUCTURAL CONCRETE FOR BUILDINGS", ACI 117 "SPECIFICATIONS FOR TOLERANCES FOR CONCRETE CONSTRUCTION AND MATERIALS", AND ACI 318 "BUILDING CODE REQUIREMENTS FOR REINFORCED CONCRETE."
2. MIX DESIGN SHALL BE APPROVED BY VERIZON REP PRIOR TO PLACING CONCRETE.
3. CONCRETE SHALL BE NORMAL WEIGHT, 6 % AIR ENTRAINED (+/- 1.5%) WITH A SLUMP RANGE OF 3-6" AND HAVE A MINIMUM 28-DAY COMPRESSIVE STRENGTH OF 4000 PSI UNLESS OTHERWISE NOTED.
4. THE FOLLOWING MATERIALS SHALL BE USED:

PORTLAND CEMENT:	ASTM C150, TYPE 2
REINFORCEMENT:	ASTM A185, PLAIN STEEL WELDED WIRE FABRIC
REINFORCEMENT BARS:	ASTM A615, GRADE 60, DEFORMED
NORMAL WEIGHT AGGREGATE:	ASTM C33
WATER:	ASTM C 94/C 94M
WELDED WIRE FABRIC:	ASTM A185
ADMIXTURES:	
-WATER-REDUCING AGENT:	ASTM C 494/C 494M, TYPE A
-AIR-ENTERING AGENT:	ASTM C 260/C 260M
-SUPERPLASTICIZER:	ASTM C494, TYPE F OR TYPE G
-RETARDING:	ASTM C 494/C 494M, TYPE B

5. MINIMUM CONCRETE COVER FOR REINFORCING STEEL SHALL BE NO LESS THAN 3".
6. A 3/4" CHAMFER SHALL BE PROVIDED AT ALL EXPOSED EDGES OF CONCRETE IN ACCORDANCE WITH ACI 301 SECTION 4.2.4, UNLESS NOTED OTHERWISE.
7. INSTALLATION OF CONCRETE EXPANSION/WEDGE ANCHOR SHALL BE PER MANUFACTURER'S WRITTEN RECOMMENDED PROCEDURE. THE ANCHOR BOLT, DOWEL, OR ROD SHALL CONFORM TO MANUFACTURER'S RECOMMENDATION FOR EMBEDMENT DEPTH OR AS SHOWN ON THE DRAWINGS. NO REBAR SHALL BE CUT WITHOUT PRIOR APPROVAL FROM AN ATC ENGINEER WHEN DRILLING HOLES IN CONCRETE.
8. ADMIXTURES SHALL CONFORM TO THE APPROPRIATE ASTM STANDARD AS REFERENCED IN "METHOD 1" OF ACI 301.
9. DO NOT WELD OR TACK WELD REINFORCING STEEL.
10. ALL DOWELS, ANCHOR BOLTS, EMBEDDED STEEL, ELECTRICAL CONDUITS, PIPE SLEEVES, GROUNDS AND ALL OTHER EMBEDDED ITEMS AND FORMED DETAILS SHALL BE IN PLACE BEFORE START OF CONCRETE PLACEMENT.
11. REINFORCEMENT SHALL BE COLD BENT WHENEVER BENDING IS REQUIRED.
12. DO NOT PLACE CONCRETE IN WATER, ICE, OR ON FROZEN GROUND.
13. FOR COLD-WEATHER (ACI 306) AND HOT-WEATHER (ACI 301M) CONCRETE PLACEMENT, CONFORM TO APPLICABLE ACI CODES AND RECOMMENDATIONS. IN EITHER CASE, MATERIALS CONTAINING CHLORIDE, CALCIUM, SALTS, ETC. SHALL NOT BE USED. PROTECT FRESH CONCRETE FROM WEATHER FOR 7 DAYS, MINIMUM.
14. ALL CONCRETE SHALL HAVE A "SMOOTH FORM FINISH."
15. SPLICING OF REINFORCEMENT IS PERMITTED ONLY AT LOCATIONS SHOWN IN THE CONTRACT DRAWINGS OR AS ACCEPTED BY THE ENGINEER. UNLESS OTHERWISE SHOWN OR NOTED REINFORCING STEEL SHALL BE SPLICED TO DEVELOP ITS FULL TENSILE CAPACITY (CLASS A) IN ACCORDANCE WITH ACI 318.
16. DETAILING OF REINFORCING STEEL SHALL CONFORM TO "ACI MANUAL OF STANDARD PRACTICE FOR DETAILING REINFORCED CONCRETE STRUCTURES" (ACI 315).
17. ALL SLAB CONSTRUCTION SHALL BE CAST MONOLITHICALLY WITHOUT HORIZONTAL CONSTRUCTION JOINTS, UNLESS SHOWN IN THE CONTRACT DRAWINGS.
18. LOCATION OF ALL CONSTRUCTION JOINTS ARE SUBJECT TO THE REQUIREMENTS OF THE CONTRACT DOCUMENTS, CONFORMANCE WITH ACI 318, AND ACCEPTANCE OF THE ENGINEER. DRAWINGS SHOWING LOCATION OF DETAILS OF THE PROPOSED CONSTRUCTION JOINTS SHALL BE SUBMITTED WITH REINFORCING STEEL PLACEMENT DRAWINGS.
19. SPLICES OF WWF, AT ALL SPLICED EDGES, SHALL BE SUCH THAT THE OVERLAP MEASURED BETWEEN OUTERMOST CROSS WIRES OF EACH FABRIC SHEET IS NOT LESS THAN THE SPACING OF THE CROSS WIRE PLUS 2 INCHES, NOR LESS THAN 6".
20. BAR SUPPORTS SHALL BE ALL-GALVANIZED METAL WITH PLASTIC TIPS.
21. ALL REINFORCEMENT SHALL BE SECURELY TIED IN PLACE TO PREVENT DISPLACEMENT BY CONSTRUCTION TRAFFIC OR CONCRETE. TIE WIRE SHALL BE OF SUFFICIENT STRENGTH FOR INTENDED PURPOSE, BUT NOT LESS THAN NO. 18 GAUGE.
22. SLAB ON GROUND: COMPACT STRUCTURAL FILL TO 95% DENSITY AND THEN PLACE 6" GRAVEL BENEATH SLAB.

ELECTRICAL NOTES:

1. ELECTRICAL WORK SHALL BE PERFORMED BY ELECTRICAL CONTRACTOR. ELECTRICAL CONTRACTOR SHALL ENSURE THAT ALL WORK COMPLIES WITH ALL APPLICABLE LOCAL AND STATE CODES AND NATIONAL ELECTRICAL CODE.
2. ALL SUGGESTED ELECTRICAL ELEMENTS (SUCH AS BREAKER SIZES, WIRE SIZES, CONDUITS SIZES) ARE FOR ZONING PURPOSES ONLY. IT IS THE RESPONSIBILITY TO OF THE ELECTRICAL CONTRACTOR TO CONFIRM COMPLIANCE WITH LOCAL ELECTRICAL CODES AND PASS ALL APPLICABLE AND NECESSARY INSPECTIONS. IN SOME EVENTS, IT MAY BE NECESSARY TO PERFORM AN ELECTRICAL LOAD STUDY TO VERIFY THE CAPACITY OF THE EXISTING SERVICE. THIS IS NOT THE RESPONSIBILITY OF ATC. IT IS THE RESPONSIBILITY OF THE ELECTRICAL CONTRACTOR.
3. CONTRACTOR SHALL FIELD LOCATE ALL BELOW GRADE GROUNDING CABLES AND UTILITY LINES PRIOR TO CONSTRUCTION. CONTRACTOR IS RESPONSIBLE FOR RELOCATION OF ALL UTILITIES AND GROUNDING LINES THAT MAY BECOME DISTURBED OR CONFLICTING IN THE COURSE OF CONSTRUCTION.

ALL DISCREPANCIES FROM WHAT IS SHOWN ON THESE CONSTRUCTION DRAWINGS SHALL BE COMMUNICATED TO ATC ENGINEERING IMMEDIATELY FOR CORRECTION OR RE-DESIGN. FAILURE TO COMMUNICATE DIRECTLY WITH ATC ENGINEERING OR ANY CHANGES FROM THE DESIGN CONDUCTED WITHOUT PRIOR APPROVAL FROM ATC ENGINEERING SHALL BE THE SOLE RESPONSIBILITY OF THE GENERAL CONTRACTOR.

AMERICAN TOWER®

Dewberry®
Dewberry Engineers Inc.
99 SUMMER STREET
SUITE 700
BOSTON, MA 02110
PHONE: 617.695.3400
FAX: 617.695.3310

Copyright © 2021 ATC IP LLC, All Rights Reserved.

REV.	DESCRIPTION	BY	DATE
A	PRELIM	PP	05/05/21
0	FINAL	FG	08/26/21

ATC SITE NUMBER:
6310

ATC SITE NAME:
FRANKLIN CT

VERIZON SITE NAME:
FRANKLIN CT

SITE ADDRESS:
89 DR. NOTT RD.
FRANKLIN, CT 06254

SEAL:

verizon

DATE DRAWN:	05/14/21
ATC JOB NO:	13668773
CUSTOMER ID:	FRANKLIN CT
CUSTOMER #:	469215

GENERAL NOTES

SHEET NUMBER:	REVISION:
G-002	0

SITE PLAN NOTES:

1. THIS SITE PLAN REPRESENTS THE BEST PRESENT KNOWLEDGE AVAILABLE TO THE ENGINEER AT THE TIME OF THIS DESIGN. THE CONTRACTOR SHALL VISIT THE SITE PRIOR TO CONSTRUCTION AND VERIFY ALL EXISTING CONDITIONS RELATED TO THE SCOPE OF WORK FOR THIS PROJECT.

2. ICE BRIDGE, CABLE LADDER, COAX PORT, AND COAX CABLE ARE SHOWN FOR REFERENCE ONLY. CONTRACTOR SHALL CONFIRM THE EXACT LOCATION OF ALL PROPOSED AND EXISTING EQUIPMENT AND STRUCTURES DEPICTED ON THIS PLAN. BEFORE UTILIZING EXISTING CABLE SUPPORTS, COAX PORTS, INSTALLING NEW PORTS OR ANY OTHER EQUIPMENT, CONTRACTOR SHALL VERIFY ALL ASPECTS OF THE COMPONENTS MEET THE ATC SPECIFICATIONS.

3. NO ELECTRICAL SCOPE IS INCLUDED IN THIS PROJECT.

LEGEND

⊗	GROUNDING TEST WELL
ATS	AUTOMATIC TRANSFER SWITCH
B	BOLLARD
CSC	CELL SITE CABINET
D	DISCONNECT
E	ELECTRICAL
F	FIBER
GEN	GENERATOR
G	GENERATOR RECEPTACAL
HH, V	HAND HOLE, VAULT
IB	ICE BRIDGE
K	KENTROX BOX
LC	LIGHTING CONTROL
M	METER
PB	PULL BOX
PP	POWER POLE
T	TELCO
TRN	TRANSFORMER
—— x ——	CHAINLINK FENCE

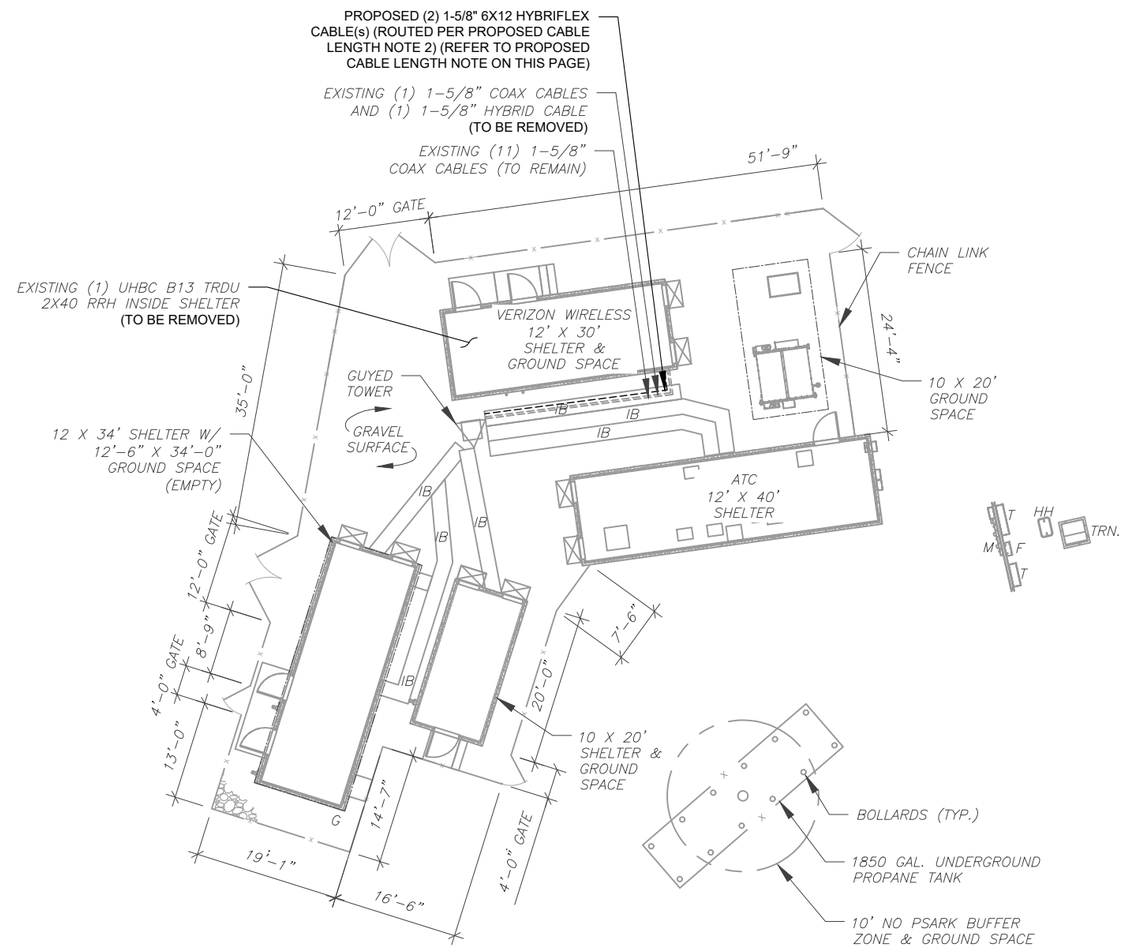

PROPOSED CABLE LENGTH:

1. ESTIMATED LENGTH OF PROPOSED CABLE IS **226'**. ESTIMATED LENGTH OF CABLE WAS PROVIDED BY CUSTOMER OR CALCULATED BY ADDING THE RAD CENTER AND THE DISTANCE FROM THE SHELTER ENTRY PLATE TO THE TOWER (ALONG THE ICE BRIDGE) AND A SAFETY FACTOR MEASUREMENT OF 15% (OF THE TWO PREVIOUS VALUES), CDS DEFER TO GREATEST CABLE LENGTH.
2. ROUTE PROPOSED CABLES ALONG SAME PATH AS EXISTING CABLES AND IN ACCORDANCE WITH STRUCTURAL ANALYSIS. WHERE POSSIBLE UTILIZE EXISTING CABLE SUPPORT STRUCTURES AS PROVIDED FOR CARRIER TO ADEQUATELY SECURE CABLES, USING EITHER APPROPRIATELY SIZED STAINLESS STEEL SNAP-INS OR MOUNTING HARDWARE AND BRACKETS AS SPECIFIED BY CABLE MANUFACTURER. OTHERWISE, ATTACH CABLES TO HORIZONTAL OR DIAGONAL TOWER MEMBERS USING PROPOSED STAINLESS STEEL ADAPTERS (DO NOT ATTACH TO TOWER LEG).

1 DETAILED SITE PLAN

GRAPHIC SCALE

20 0 10 20

(IN FEET)
1 UNIT = 20 FEET

N

AMERICAN TOWER®

Dewberry®

Dewberry Engineers Inc.
99 SUMMER STREET
SUITE 700
BOSTON, MA 02110
PHONE: 617.695.3400
FAX: 617.695.3310

Copyright © 2021 ATC IP LLC, All Rights Reserved.

REV.	DESCRIPTION	BY	DATE
A	PRELIM	PP	05/05/21
0	FINAL	FG	08/26/21

ATC SITE NUMBER:
6310

ATC SITE NAME:
FRANKLIN CT

VERIZON SITE NAME:
FRANKLIN CT

SITE ADDRESS:
89 DR. NOTT RD.
FRANKLIN, CT 06254

SEAL:

verizon

DATE DRAWN:	05/14/21
ATC JOB NO:	13668773
CUSTOMER ID:	FRANKLIN CT
CUSTOMER #:	469215

DETAILED SITE PLAN

SHEET NUMBER:	REVISION:
C-101	0

PER MOUNT ANALYSIS COMPLETED BY MASER CONSULTING CONNECTICUT, DATED 07/27/21, THE EXISTING MOUNT MUST BE MODIFIED TO ADEQUATELY SUPPORT THE PROPOSED LOADING. THE MOUNT MODIFICATION DETAILED AT THE END OF THIS PLAN SET, MUST BE INSTALLED PRIOR TO THE INSTALLATION OF THE PROPOSED ANTENNAS AND OTHER EQUIPMENT.

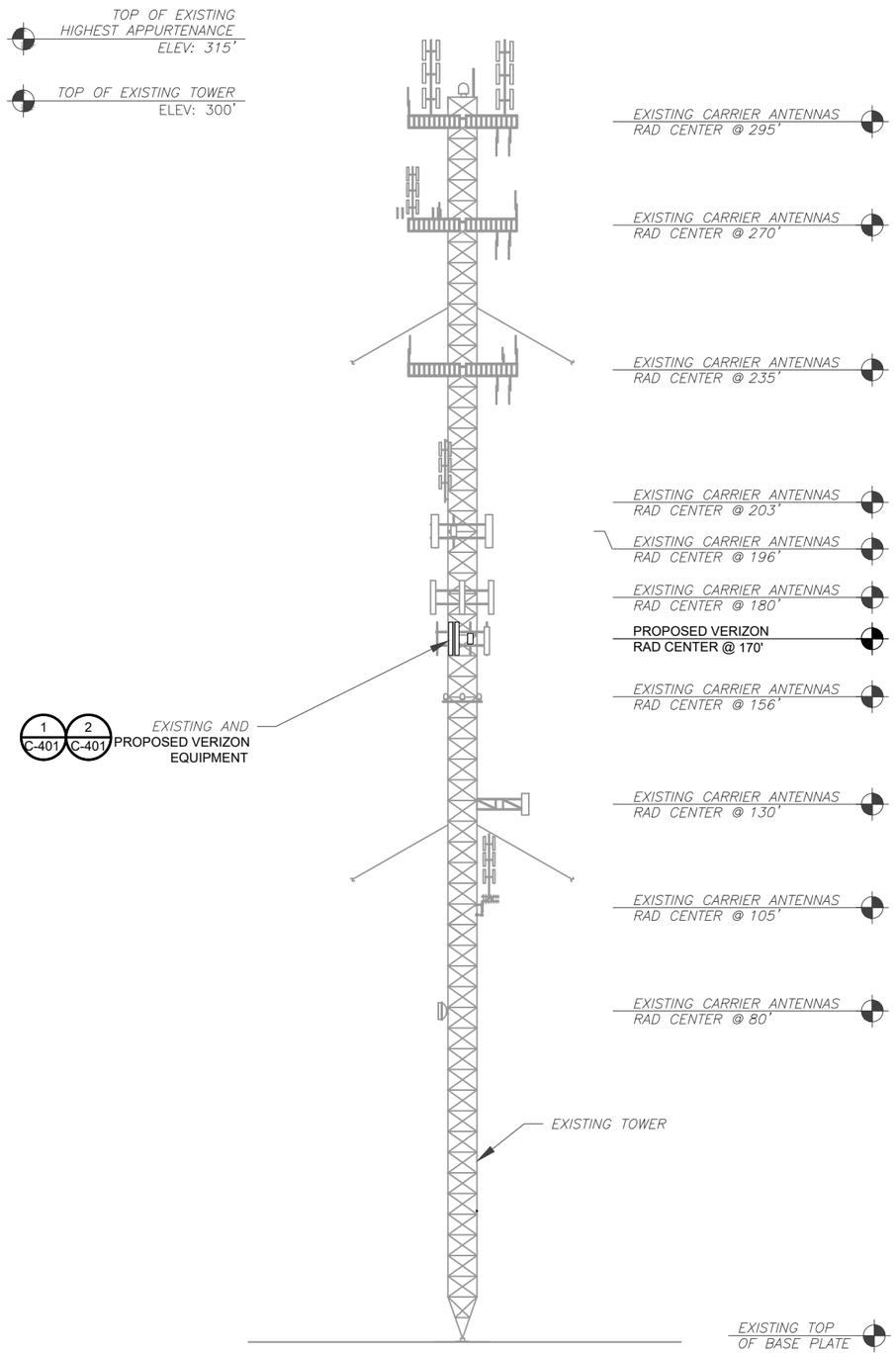

1 TOWER ELEVATION
SCALE: N.T.S.

TOWER NOTE:

1. IT IS THE CONTRACTOR'S RESPONSIBILITY TO CONFIRM WITH THE PROJECT MANAGER THAT THEY HAVE THE MOST RECENT VERSION OF THE STRUCTURAL ANALYSIS BEFORE COMMENCING WORK. EXISTING AND PROPOSED TOWER APPURTENANCES, MOUNTS, AND ANTENNAS ARE SHOWN BASED ON THE STRUCTURAL ANALYSIS.
2. WHERE APPLICABLE, ALL NEW ANTENNAS, EQUIPMENT, MOUNTS, CABLING, ETC. SHALL BE PAINTED/SOCKED TO MATCH EXISTING EQUIPMENT IN ACCORDANCE WITH FAA, JURISDICTION, AND/OR OTHER LOCAL REQUIREMENTS.
3. ROUTE PROPOSED CABLES ALONG SAME PATH AS EXISTING CABLES AND IN ACCORDANCE WITH STRUCTURAL ANALYSIS. WHERE POSSIBLE UTILIZE EXISTING CABLE SUPPORT STRUCTURES AS PROVIDED FOR CARRIER TO ADEQUATELY SECURE CABLES, USING EITHER APPROPRIATELY SIZED STAINLESS STEEL SNAP-INS OR MOUNTING HARDWARE AND BRACKETS AS SPECIFIED BY CABLE MANUFACTURER. OTHERWISE, ATTACH CABLES TO HORIZONTAL OR DIAGONAL TOWER MEMBERS USING PROPOSED STAINLESS STEEL ADAPTERS (DO NOT ATTACH TO TOWER LEG).
4. TOWER ELEVATIONS ARE MEASURED FROM TOP OF BASE PLATE TO MATCH STRUCTURAL ANALYSIS. ELEVATIONS DO NOT REFLECT TRUE ABOVE GROUND LEVEL (A.G.L.)

AMERICAN TOWER®

Dewberry®

Dewberry Engineers Inc.
99 SUMMER STREET
SUITE 700
BOSTON, MA 02110
PHONE: 617.695.3400
FAX: 617.695.3310

Copyright © 2021 ATC IP LLC, All Rights Reserved.

REV.	DESCRIPTION	BY	DATE
A	PRELIM	PP	05/14/21
0	FINAL	FG	08/26/21

ATC SITE NUMBER:
6310

ATC SITE NAME:
FRANKLIN CT

VERIZON SITE NAME:
FRANKLIN CT

SITE ADDRESS:
89 DR. NOTT RD.
FRANKLIN, CT 06254

SEAL:

verizon

DATE DRAWN:	05/14/21
ATC JOB NO:	13668773
CUSTOMER ID:	FRANKLIN CT
CUSTOMER #:	469215

TOWER ELEVATION

SHEET NUMBER:	REVISION:
C-201	0

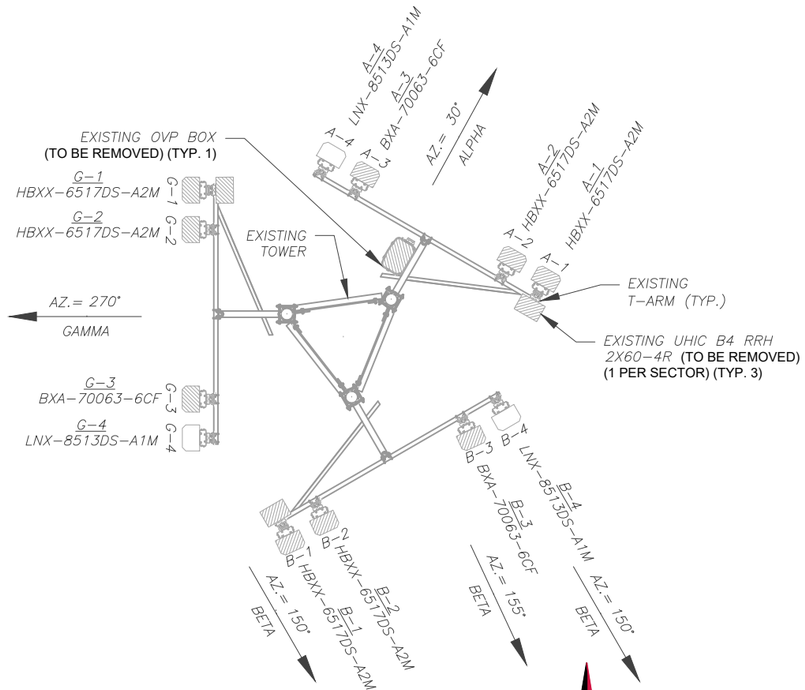

1 EXISTING ANTENNA PLAN

SCALE: N.T.S.

PER MOUNT ANALYSIS COMPLETED BY MASER CONSULTING CONNECTICUT, DATED 07/27/21, THE EXISTING MOUNT MUST BE MODIFIED TO ADEQUATELY SUPPORT THE PROPOSED LOADING. THE MOUNT MODIFICATION DETAILED AT THE END OF THIS PLAN SET, MUST BE INSTALLED PRIOR TO THE INSTALLATION OF THE PROPOSED ANTENNAS AND OTHER EQUIPMENT.

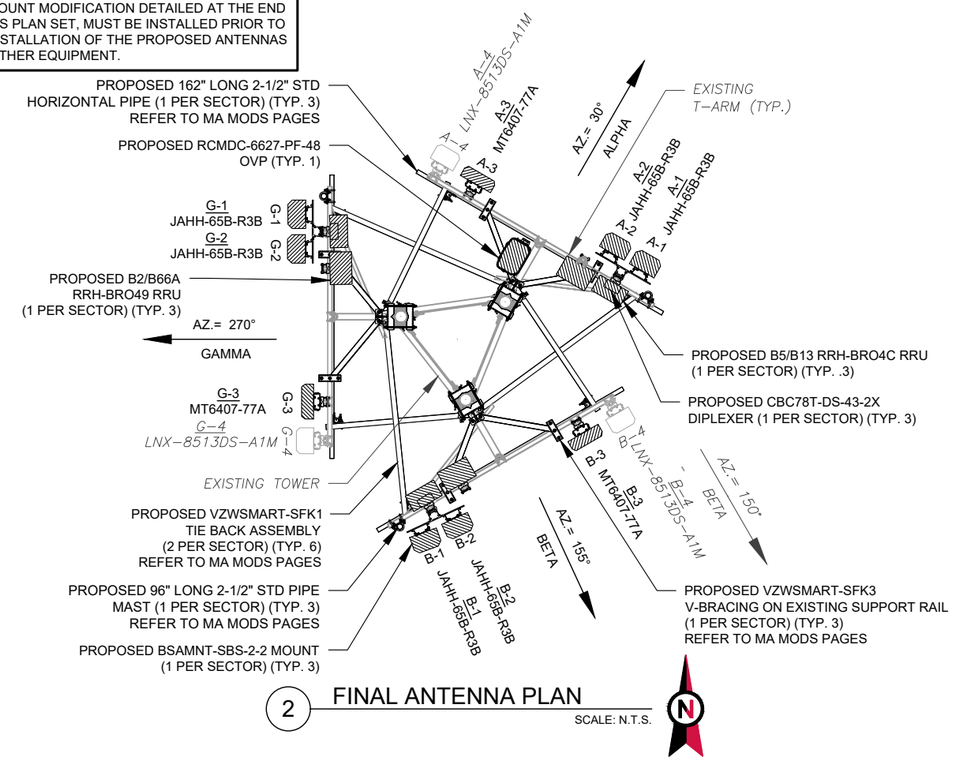

2 FINAL ANTENNA PLAN

SCALE: N.T.S.

EXISTING ANTENNA SCHEDULE

LOCATION			ANTENNA SUMMARY					NON ANTENNA SUMMARY	
SECTOR	RAD	AZ	POS	ANTENNA	BAND	MECH/ELEC D-TILT	STATUS	ADDITIONAL TOWER MOUNTED EQUIPMENT	STATUS
ALPHA	170'	30°	A1	HBXX-6517DS-A2M	AWS	0/4	RMV	UHIC B4 RRH 2X60-4R	RMV
			A2	HBXX-6517DS-A2M	AWS	0/4	RMV	–	–
			A3	BXA-70063-6CF	700	0/2	RMV	–	–
			A4	LNX-8513DS-A1M	CDMA/850	0/4	RMN	–	–
BETA	170'	150°	B1	HBXX-6517DS-A2M	AWS	0/4	RMV	UHIC B4 RRH 2X60-4R	RMV
			B2	HBXX-6517DS-A2M	AWS	0/4	RMV	–	–
		155°	B3	BXA-70063-6CF	700	4/2	RMV	–	–
		150°	B4	LNX-8513DS-A1M	CDMA/850	0/6	RMN	–	–
GAMMA	170'	270°	G1	HBXX-6517DS-A2M	AWS	0/4	RMV	UHIC B4 RRH 2X60-4R	RMV
			G2	HBXX-6517DS-A2M	AWS	0/4	RMV	–	–
			G3	BXA-70063-6CF	700	0/2	RMV	–	–
			G4	LNX-8513DS-A1M	CDMA/850	0/0	RMN	–	–

NOTES

1. CONFIRM WITH VERIZON REP FOR APPLICABLE UPDATES/REVISIONS AND MOST RECENT RFDS FOR NSN CONFIGURATION (CONFIG). GC TO CAP ALL UNUSED PORTS.
2. CONFIRM SPACING OF PROPOSED EQUIP DOES NOT CAUSE TOWER CONFLICTS NOR IMPEDE TOWER CLIMBING PEGS.

STATUS ABBREVIATIONS

RMV: TO BE REMOVED
RMN: TO REMAIN
REL: TO BE RELOCATED
ADD: TO BE ADDED

CABLE LENGTHS FOR JUMPERS

JUNCTION BOX TO RRU: 15'
RRU TO COMBINER: 10'
COMBINER TO ANTENNA: 10'

FINAL ANTENNA SCHEDULE

LOCATION			ANTENNA SUMMARY					NON ANTENNA SUMMARY	
SECTOR	RAD	AZ	POS	ANTENNA	BAND	MECH/ELEC D-TILT	STATUS	ADDITIONAL TOWER MOUNTED EQUIPMENT	STATUS
ALPHA	170'	30°	A1	JAHH-65B-R3B	700/850/1900/ AWS	0/2,2,2,2	ADD	B5/B13 RRH-BR04C	ADD
			A2	JAHH-65B-R3B	700/850/1900/ AWS	0/2,2,2,2	ADD	B2/B66A RRH-BR049 CBC78T-DS-43-2X	ADD ADD
			A3	MT6407-77A	L-SUB6	0/6	ADD	-	-
			A4	LNX-8513DS-A1M	CDMA/850	0/4	RMN	-	-
BETA	170'	155°	B1	JAHH-65B-R3B	700/850/1900/ AWS	0/6,2,2,2	ADD	B5/B13 RRH-BR04C	ADD
			B2	JAHH-65B-R3B	700/850/1900/ AWS	0/6,2,2,2	ADD	B2/B66A RRH-BR049 CBC78T-DS-43-2X	ADD ADD
			B3	MT6407-77A	L-SUB6	0/6	ADD	-	-
		150°	B4	LNX-8513DS-A1M	CDMA/850	0/6	RMN	-	-
GAMMA	170'	270°	G1	JAHH-65B-R3B	700/850/1900/ AWS	0/2,2,2,2	ADD	B5/B13 RRH-BR04C	ADD
			G2	JAHH-65B-R3B	700/850/1900/ AWS	0/2,2,2,2	ADD	B2/B66A RRH-BR049 CBC78T-DS-43-2X	ADD ADD
			G3	MT6407-77A	L-SUB6	0/6	ADD	-	-
			G4	LNX-8513DS-A1M	CDMA/850	0/0	RMN	-	-

EXISTING FIBER DISTRIBUTION/OVP BOX		EXISTING CABLING SUMMARY		
MODEL NUMBER	STATUS	COAX	HYBRID	STATUS
(1) RRFDC-3315-PF-48	RMV	(1) 1-1/4"	(1) 1-5/8"	RMV
–	–	(11) 1-5/8"	–	RMN

3 EQUIPMENT SCHEDULES

FINAL FIBER DISTRIBUTION / OVP BOX		FINAL CABLING SUMMARY		
MODEL NUMBER	STATUS	COAX	HYBRID	STATUS
(1) RCMDC-6627-PF-48	ADD	-	(2) 1-5/8"	ADD
-	-	(11) 1-5/8"	-	RMN

AMERICAN TOWER®

Dewberry®

Dewberry Engineers Inc.
99 SUMMER STREET
SUITE 700
BOSTON, MA 02110
PHONE: 617.695.3400
FAX: 617.695.3310

Copyright © 2021 ATC IP LLC. All Rights Reserved.

REV.	DESCRIPTION	BY	DATE
A	PRELIM	PP	05/14/21
0	FINAL	FG	08/26/21

ATC SITE NUMBER:
6310

ATC SITE NAME:
FRANKLIN CT

VERIZON SITE NAME:
FRANKLIN CT

SITE ADDRESS:
89 DR. NOTT RD.
FRANKLIN, CT 06254

SEAL:

verizon

DATE DRAWN:	05/14/21
ATC JOB NO:	13668773
CUSTOMER ID:	FRANKLIN CT
CUSTOMER #:	469215

ANTENNA INFORMATION & SCHEDULE

SHEET NUMBER:	REVISION:
C-401	0

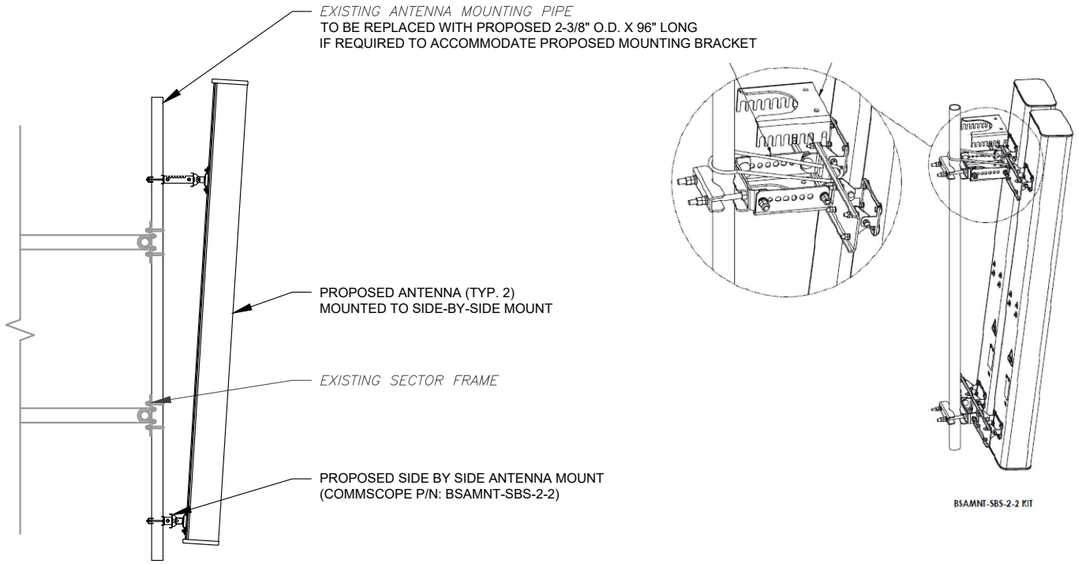

PROFILE VIEW

ISOMETRIC VIEW (BY MANUFACTURER)

1 PROPOSED SIDE-BY-SIDE MOUNT

SCALE: NOT TO SCALE

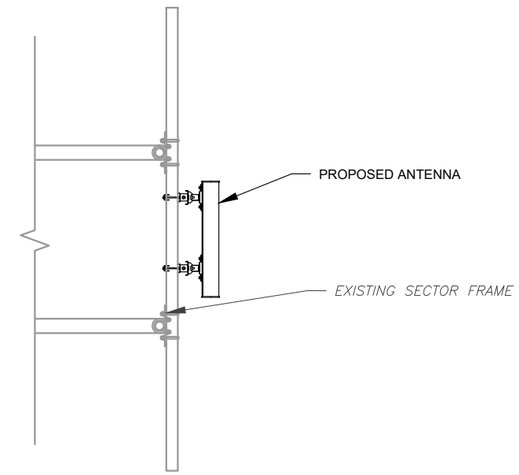

2 PROPOSED 5G ANTENNA MOUNTING DETAIL - TYPICAL

SCALE: N.T.S.

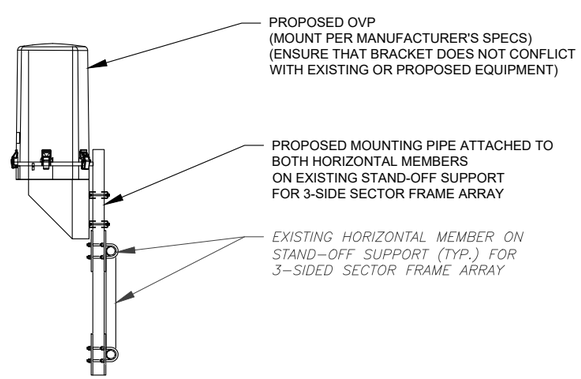

3 PROPOSED OVP MOUNTING

SCALE: N.T.S.

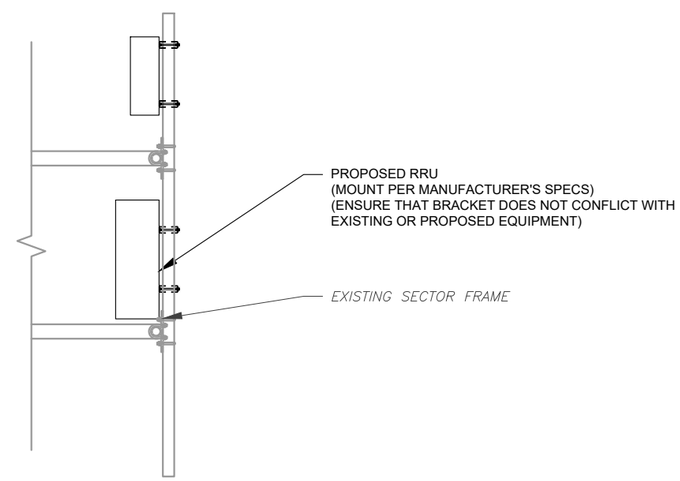

4 PROPOSED RRU MOUNTING DETAIL - TYPICAL

SCALE: N.T.S.

AMERICAN TOWER®

Dewberry®

Dewberry Engineers Inc.
99 SUMMER STREET
SUITE 700
BOSTON, MA 02110
PHONE: 617.695.3400
FAX: 617.695.3310

Copyright © 2021 ATC IP LLC, All Rights Reserved.

REV.	DESCRIPTION	BY	DATE
A	PRELIM	PP	05/14/21
0	FINAL	FG	08/26/21

ATC SITE NUMBER:
6310

ATC SITE NAME:
FRANKLIN CT

VERIZON SITE NAME:
FRANKLIN CT

SITE ADDRESS:
89 DR. NOTT RD.
FRANKLIN, CT 06254

SEAL:

verizon

DATE DRAWN:	05/14/21
ATC JOB NO:	13668773
CUSTOMER ID:	FRANKLIN CT
CUSTOMER #:	469215

CONSTRUCTION DETAILS

SHEET NUMBER:	REVISION:
C-501	0

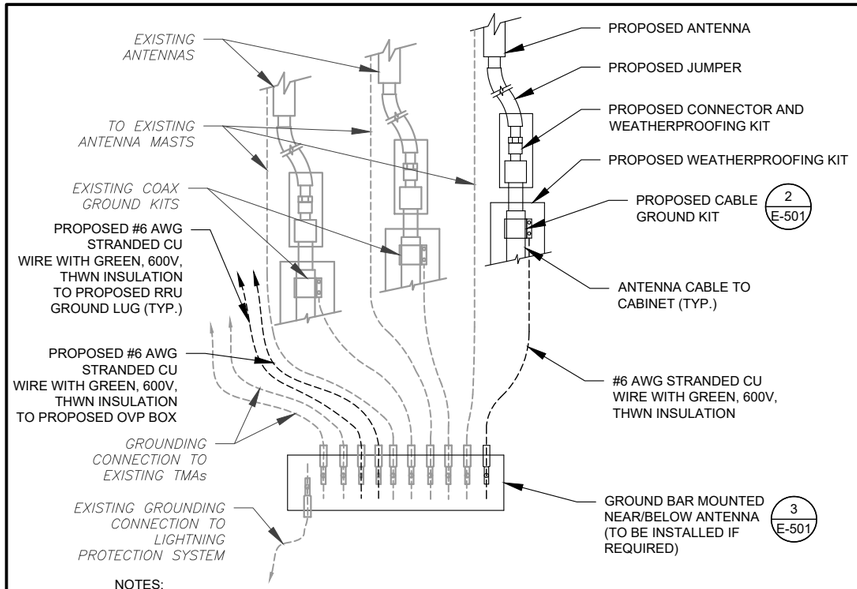

NOTES:

1. THIS DETAIL IS INTENDED TO SHOW THE GENERAL GROUNDING REQUIREMENTS. SLIGHT ADJUSTMENTS MAY BE REQUIRED BASED ON EXISTING SITE CONDITIONS. THE CONTRACTOR SHALL MAKE FIELD ADJUSTMENTS AS NEEDED AND INFORM THE CONSTRUCTION MANAGER OF ANY CONFLICTS.
2. SITE GROUNDING SHALL COMPLY WITH VERIZON GROUNDING STANDARDS, LATEST EDITION, AND COMPLY WITH VERIZON GROUNDING CHECKLIST, LATEST VERSION. WHEN NATIONAL AND LOCAL GROUNDING CODES ARE MORE STRINGENT THEY SHALL GOVERN.

1 TYPICAL ANTENNA GROUNDING DIAGRAM

SCALE: N.T.S.

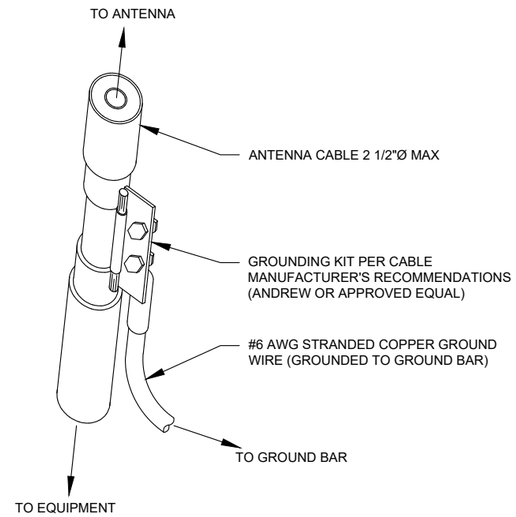

GROUND KIT NOTES:

1. DO NOT INSTALL CABLE GROUND KIT AT A BEND AND ALWAYS DIRECT GROUND WIRE DOWN TO GROUND BAR.
2. CONTRACTOR SHALL PROVIDE WEATHERPROOFING KIT (ANDREW PART NUMBER 221213) AND INSTALL/TAPE PER MANUFACTURER'S SPECIFICATIONS.

2 CABLE GROUND KIT CONNECTION DETAIL

SCALE: N.T.S.

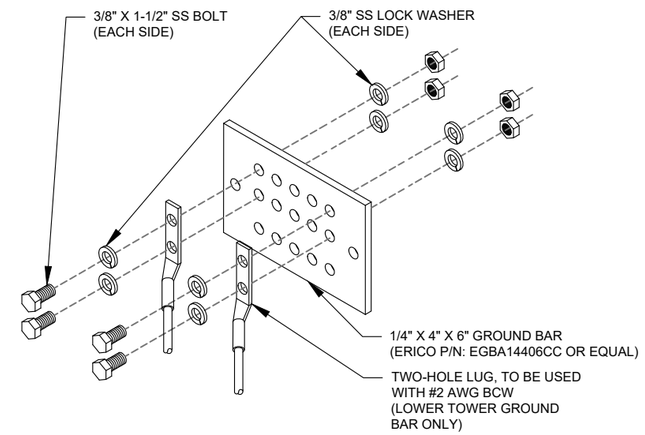

GROUND BAR NOTES:

1. GROUND BAR KITS COME WITH ALL HARDWARE, NUTS, BOLTS, WASHERS, ETC. EXCEPT THE STRUCTURAL MOUNTING MEMBER(S).
2. GROUND BAR TO BE BONDED DIRECTLY TO TOWER.

3 TOWER GROUND BAR DETAIL

SCALE: N.T.S.

AMERICAN TOWER®

Dewberry®

Dewberry Engineers Inc.
99 SUMMER STREET
SUITE 700
BOSTON, MA 02110
PHONE: 617.695.3400
FAX: 617.695.3310

Copyright © 2021 ATC IP LLC, All Rights Reserved.

REV.	DESCRIPTION	BY	DATE
A	PRELIM	PP	05/14/21
0	FINAL	FG	08/26/21

ATC SITE NUMBER:
6310

ATC SITE NAME:
FRANKLIN CT

VERIZON SITE NAME:
FRANKLIN CT

SITE ADDRESS:
89 DR. NOTT RD.
FRANKLIN, CT 06254

SEAL:

verizon

DATE DRAWN:	05/14/21
ATC JOB NO:	13668773
CUSTOMER ID:	FRANKLIN CT
CUSTOMER #:	469215

GROUNDING DETAILS

SHEET NUMBER:	REVISION:
E-501	0

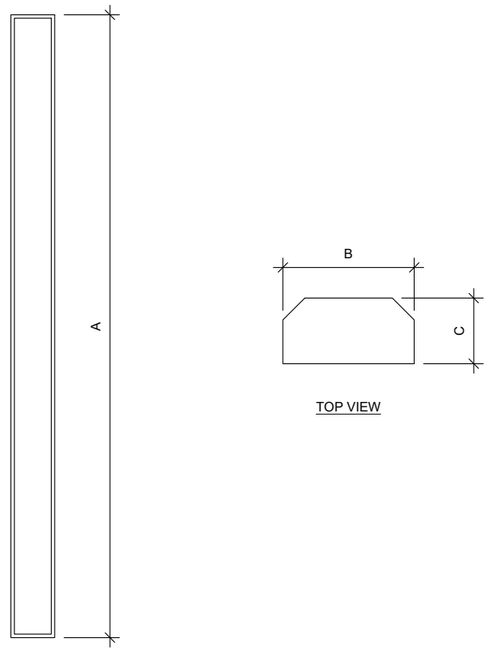

TOP VIEW

FRONT VIEW

1 ANTENNA SPECIFICATIONS

FOR ILLUSTRATIVE PURPOSES ONLY - NOT TO SCALE

ANTENNA SPECIFICATIONS				
ANTENNA MODEL	A	B	C	WEIGHT (LBS)
MT6407-77A	35.1"	16.1"	5.5"	81.6
JAHH-65B-R3B	72.0"	13.8"	8.2"	60.6

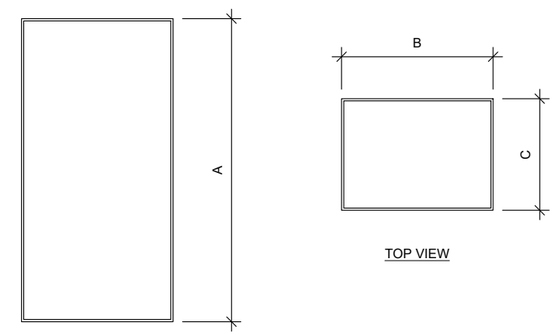

TOP VIEW

FRONT VIEW

2 RRU SPECIFICATIONS

FOR ILLUSTRATIVE PURPOSES ONLY - NOT TO SCALE

RRU SPECIFICATIONS				
RRU MODEL	A	B	C	WEIGHT (LBS)
B2/B66A RRH-BR049	15.0"	15.0"	10.0"	84.4
B5/B13 RRH-BR04C	15.0"	15.0"	8.1"	70.3

AMERICAN TOWER®

Dewberry®

Dewberry Engineers Inc.
99 SUMMER STREET
SUITE 700
BOSTON, MA 02110
PHONE: 617.695.3400
FAX: 617.695.3310

Copyright © 2021 ATC IP LLC. All Rights Reserved.

ATC SITE NUMBER:
6310

ATC SITE NAME:
FRANKLIN CT

VERIZON SITE NAME:
FRANKLIN CT

SITE ADDRESS:
89 DR. NOTT RD.
FRANKLIN, CT 06254

SEAL:

verizon

DATE DRAWN:	05/14/21
ATC JOB NO:	13668773
CUSTOMER ID:	FRANKLIN CT
CUSTOMER #:	469215

SUPPLEMENTAL

SHEET NUMBER:
R-601

verizon

MASER CONSULTING CONNECTICUT

Maser Consulting Connecticut
2000 Midlantic Drive, Suite 100
Mt. Laurel, NJ 08054
856.797.0412
peter.albano@colliersengineering.com

Post-Mod Antenna Mount Analysis Report and PMI Requirements

Mount Fix

SMART Tool Project #: 10088926
Maser Consulting Connecticut Project #: 21777635A

July 27, 2021

Site Information

Site ID:	*469215-VZW / FRANKLIN CT*
Site Name:	*FRANKLIN CT*
Carrier Name:	*Verizon Wireless*
Address:	*89 Dr. Nott Road* *Franklin, Connecticut 06254* *New London County*
Latitude:	*41.597675°*
Longitude:	*-72.144978°*

Structure Information

Tower Type:	*Guyed*
Mount Type:	*12.50-Ft T-Frame*

FUZE ID # 16271936

Analysis Results

T-Frame: **71.6% Pass**

******Contractor PMI Requirements:***
Included at the end of this MA report
Available & Submitted via portal at https://pmi.vzwsmart.com
Contractor - Please Review Specific Site PMI Requirements Upon Award
Requirements also Noted on Mount Modification Drawings
Requirements may also be Noted on A & E drawings

Report Prepared By: Selene Chen

STATE OF CONNECTICUT · JUSTIN PETER LINETTE · No. 31265 · LICENSED PROFESSIONAL ENGINEER

Digitally signed by Justin Linette
Date: 2021.07.28 10:14:32-04'00'

6. All services are performed, results obtained, and recommendations made in accordance with generally accepted engineering principles and practices. Maser Consulting Connecticut is not responsible for the conclusion, opinions, and recommendations made by others based on the information supplied.

7. Structural Steel Grades have been assumed as follows, if applicable, unless otherwise noted in this analysis:
   - Channel, Solid Round, Angle, Plate — ASTM A36 (Gr. 36)
   - HSS (Rectangular) — ASTM 500 (Gr. B-46)
   - Pipe — ASTM A53 (Gr. B-35)
   - Threaded Rod — F1554 (Gr. 36)
   - Bolts — ASTM A325

8. Any mount modifications listed under Sources of Information are assumed to have been installed per the design specifications.

Discrepancies between in-field conditions and the assumptions listed above may render this analysis invalid unless explicitly approved by Maser Consulting Connecticut.

Analysis Results:

Component	Utilization %	Pass/Fail
Face Horizontal	*67.2%*	*Pass*
Face Vertical	*71.6%*	*Pass*
Mast Pipe	*50.7%*	*Pass*
Standoff Horizontal	*62.8%*	*Pass*
Standoff Vertical	*68.4%*	*Pass*
Antenna Pipe	*33.9%*	*Pass*
Tieback	*36.4%*	*Pass*
V-Bracing	*14.5%*	*Pass*
Mount Connection	*51.3%*	*Pass*

Structure Rating – *(Controlling Utilization of all Components)*	**71.6%**

Recommendation:

The existing mounts will be **SUFFICIENT** for the final loading after the proposed modifications are successfully completed.

ANSI/ASSP rigging plan review services compliant with the requirements of ANSI/TIA 322 are available for a Construction Class IV site or other, if required. Separate review fees will apply.

Attachments:

1. Mount Photos
2. Mount Mapping Report (for reference only)
3. Analysis Calculations
4. **Contractor Required PMI Report Deliverables**
5. Antenna Placement Diagrams
6. TIA Adoption and Wind Speed Usage Letter

NOTE: THIS SHEET WAS CREATED BY OTHERS AND PROVIDED AT THE REQUEST OF THE CUSTOMER WITHOUT EDIT. PLEASE REFERENCE THE MOUNT ANALYSIS REPORT FOR COMPLETE MOUNT ANALYSIS CALCULATIONS AND DETAILS. SUPPLEMENTAL PAGES INCLUDED IN THE CONSTRUCTION DRAWINGS ARE FOR REFERENCE ONLY. GENERAL CONTRACTOR IS TO VERYIFY THEY HAVE THE MOST RECENT MOUNT ANALYSIS PRIOR TO CONTRUCTION.

1 MOUNT ANALYSIS

AMERICAN TOWER®

Dewberry®
Dewberry Engineers Inc.
99 SUMMER STREET
SUITE 700
BOSTON, MA 02110
PHONE: 617.695.3400
FAX: 617.695.3310

Copyright © 2021 ATC IP LLC, All Rights Reserved.

ATC SITE NUMBER:
6310

ATC SITE NAME:
FRANKLIN CT

VERIZON SITE NAME:
FRANKLIN CT

SITE ADDRESS:
89 DR. NOTT RD.
FRANKLIN, CT 06254

SEAL:

verizon

DATE DRAWN:	05/14/21
ATC JOB NO:	13668773
CUSTOMER ID:	FRANKLIN CT
CUSTOMER #:	469215

SUPPLEMENTAL

SHEET NUMBER:
R-602

verizon

MOUNT MODIFICATION DRAWINGS
EXISTING 12.50' T-FRAME

TOWER OWNER: AMERICAN TOWER CORPORATION
TOWER OWNER SITE NUMBER: 6310

CARRIER SITE NAME: FRANKLIN CT
CARRIER SITE NUMBER: 469215
FUZE ID: 16271936

83 DR. NOTT ROAD
FRANKLIN, CT 06254
NEW LONDON COUNTY

LATITUDE: 41.597675° N
LONGITUDE: 72.144978° W

DESIGN CRITERIA

WIND LOADS

BASIC WIND SPEED (3 SECOND GUST), V = 123 MPH
EXPOSURE CATEGORY C
TOPOGRAPHIC CATEGORY 1
MEAN BASE ELEVATION (AMSL) = 505.05'

ICE LOADS

ICE WIND SPEED (3 SECOND GUST), V = 50 MPH
ICE THICKNESS = 1.00 IN

SEISMIC LOADS

SEISMIC DESIGN CATEGORY B
SHORT TERM MCER GROUND MOTION, S_S = .195
LONG TERM MCER GROUND MOTION, S_1 = .054

PROJECT INFORMATION

APPLICANT/LESSEE

COMPANY: VERIZON WIRELESS

CLIENT REPRESENTATIVE

COMPANY: VERIZON WIRELESS
ADDRESS: 118 FLANDERS ROAD, THIRD FLOOR
CITY, STATE, ZIP: WESTBOROUGH, MA 01581
CONTACT: ANDREW CANDIELLO
EMAIL: ANDREW.CANDIELLO@VERIZONWIRELESS.COM

PROJECT MANAGER

COMPANY: MASER CONSULTING CONNECTICUT
CONTACT: PETER ALBANO
PHONE: 856-797-0412
E-MAIL: PETER.ALBANO@COLLIERSENGINEERING.COM

CONTRACTOR PMI REQUIREMENTS

PMI LOCATION: HTTPS://PMI.VZWSMART.COM
SMART TOOL PROJECT #: 10088926
VZW LOCATION CODE (PSLC): 469215
ANALYSIS DATE: 7/27/2021

PMI REQUIREMENTS EMBEDDED WITHIN MOUNT MODIFICATION REPORT

SHEET INDEX

SHEET	DESCRIPTION
ST-1	TITLE SHEET
SBOM-1	BILL OF MATERIALS
SGN-1	GENERAL NOTES
SCF-1	CLIMBING FACILITY DETAIL
SS-1	MODIFICATION DETAILS
SS-2	MOUNT PHOTOS
	SPECIFICATION SHEETS

COPYRIGHT ©2021
MASER CONSULTING CONNECTICUT
ALL RIGHTS RESERVED
THIS DRAWING AND ALL THE INFORMATION CONTAINED HEREIN IS AUTHORIZED FOR USE ONLY BY THE PARTY FOR WHOM THE WORK WAS CONTRACTED OR TO WHOM IT IS CERTIFIED. THIS DRAWING MAY NOT BE COPIED, REUSED, DISCLOSED, DISTRIBUTED OR RELIED UPON FOR ANY OTHER PURPOSE WITHOUT THE EXPRESS WRITTEN CONSENT OF MASER CONSULTING CONNECTICUT.

MASER CONSULTING CONNECTICUT
WILL BE KNOWN AS COLLIERS ENGINEERING & DESIGN IN 2021
Customer Loyalty *through* Client Satisfaction
www.maserconsulting.com
Office Locations:
- NEW JERSEY
- NEW YORK
- PENNSYLVANIA
- VIRGINIA
- FLORIDA
- NORTH CAROLINA
- SOUTH CAROLINA
- NEW MEXICO
- MARYLAND
- GEORGIA
- TEXAS
- TENNESSEE
- COLORADO

Copyright © 2021, Maser Consulting All Rights Reserved. This drawing and all the information contained herein is authorized for use only by the party for whom the services were contracted or to whom it is certified. This drawing may not be copied, reused, disclosed, distributed or relied upon for any other purpose without the express written consent of Maser Consulting.

verizon

PROTECT YOURSELF
ALL STATES REQUIRE NOTIFICATION OF EXCAVATORS, DESIGNERS, OR ANY PERSON PREPARING TO DISTURB THE EARTH'S SURFACE ANYWHERE IN ANY STATE
Know what's below. Call before you dig.
FOR STATE SPECIFIC DIRECT PHONE NUMBERS VISIT: WWW.CALL811.COM

SCALE: AS SHOWN
JOB NUMBER: 21777635A

REV	DATE	DESCRIPTION	DRAWN BY	CHECKED BY
0	7/27/2021	ISSUED FOR CONSTRUCTION	MSG	JPL

STATE OF CONNECTICUT
JUSTIN PETER LINETTE
31965
LICENSED PROFESSIONAL ENGINEER
Digitally signed by Justin Peter Linette
Date: 2021.07.28 10:16:37-04'00'
C.O.A. #: PEC.0000131

IT IS A VIOLATION OF LAW FOR ANY PERSON, UNLESS THEY ARE ACTING UNDER THE DIRECTION OF THE RESPONSIBLE LICENSED PROFESSIONAL ENGINEER, TO ALTER THIS DOCUMENT.

SITE NAME:
FRANKLIN CT
469215
83 DR. NOTT ROAD
FRANKLIN, CT 06254
NEW LONDON COUNTY

MT. LAUREL OFFICE
2000 Midlantic Drive
Suite 100
Mount Laurel, NJ 08054
Phone: 856.797.0412
Fax: 856.722.1120

SHEET TITLE: TITLE SHEET

SHEET NUMBER: ST-1

NOTE: DO NOT SCALE DRAWINGS FOR CONSTRUCTION.

MASerlab_1400469215_FRANKLIN CT_PhotoPlusDrawings_PAAS_20210727.dwg\GT14 By: MGRAHAM

BILL OF MATERIALS

SECTION 1 - VZWSMART KITS

QUANTITY	MANUFACTURER	PART NUMBER	DESCRIPTION	NOTES	UNIT WEIGHT (LBS.)	WEIGHT (LBS.)
6	VZWSMART	VZWSMART-SFK1	TIE BACK ASSEMBLY	CONNECT OTHER END TO ADJACENT TOWER LEG. PROPOSED TIE-BACK SHALL EXTEND NO MORE THAN 12" BEYOND THE TOWER LEG. CONTRACTOR SHALL TRIM AS REQUIRED AND PROTECT CUT END WITH TWO COATS OF ZINGA OR ZINC COTE.	72	432
3		VZWSMART-SFK3	V-BRACING KIT	CONTRACTOR TO VERIFY THE LENGTH REQUIRED AND TRIM AS NECESSARY IN ACCORDANCE WITH THE 'STRUCTURAL STEEL' NOTES ON SHEET SGN-1	122	366
18		VZWSMART-MSK1	CROSSOVER PLATE			

SECTION 2 - OTHER REQUIRED PARTS

QUANTITY	MANUFACTURER	PART NUMBER	DESCRIPTION	NOTES	UNIT WEIGHT (LBS.)	WEIGHT (LBS.)
3	-	-	162" LONG, P2 1/2 STD	GALVANIZED	74	222
3	-	-	96" LONG, P2 1/2 STD	GALVANIZED	44	132
-	-	-	1/2" DIA. U-BOLT			
					TOTAL:	1152

VZWSMART KITS - APPROVED VENDORS

COMMSCOPE	
CONTACT	SALVADOR ANGUIANO
PHONE	(817) 304-7492
EMAIL	SALVADOR.ANGUIANO@COMMSCOPE.COM
WEBSITE	WWW.COMMSCOPE.COM
METROSITE FABRICATORS, LLC	
CONTACT	KENT RAMEY
PHONE	(706) 335-7045 (O), (706) 982-9788 (M)
EMAIL	KENT@METROSITELLC.COM
WEBSITE	METROSITEFABRICATORS.COM
PERFECTVISION	
CONTACT	WIRELESS SALES
PHONE	(844) 887-6723
EMAIL	WWW.PERFECT-VISION.COM
WEBSITE	WIRELESSSALES@PERFECT-VISION.COM
SABRE INDUSTRIES, INC.	
CONTACT	ANGIE WELCH
PHONE	(866) 428-6937
EMAIL	AKWELCH@SABREINDUSTRIES.COM
WEBSITE	WWW.SABRESITESOLUTIONS.COM
SITE PRO 1	
CONTACT	PAULA BOSWELL
PHONE	(972) 236-9843
EMAIL	PAULA.BOSWELL@VALMONT.COM
WEBSITE	WWW.SITEPRO1.COM

NOTES:

1. THE MANUFACTURERS LISTED ARE THE APPROVED VENDORS FOR THE VZW MOUNT KITS. EACH MANUFACTURER WILL BE AWARE OF WHICH KITS HAVE BEEN THROUGH THE VZW APPROVAL PROCESS AND THEY ARE IN TURN APPROVED TO SELL. PLEASE NOTE THAT THE MATERIAL UTILIZED ON THE MOUNT MODIFICATIONS WILL BE REVIEWED AS A PART OF THE DESKTOP PMI COMPLETED BY THE SMART TOOL VENDOR. IT WILL BE REQUIRED THAT THE VZW KITS SPECIFIED ARE UTILIZED IN THE MODIFICATIONS.

2. ALL MATERIALS REQUIRED FOR THE DESIGNED MODIFICATIONS BUT NOT LISTED IN THIS SHEET ARE ASSUMED TO BE PROVIDED BY THE CONTRACTOR.

MASER CONSULTING CONNECTICUT
WILL BE KNOWN AS COLLIERS ENGINEERING & DESIGN IN 2021
Customer Loyalty *through* Client Satisfaction
www.maserconsulting.com
Office Locations:
NEW JERSEY, NEW YORK, PENNSYLVANIA, VIRGINIA, FLORIDA, NORTH CAROLINA, SOUTH CAROLINA, NEW MEXICO, MARYLAND, GEORGIA, TEXAS, TENNESSEE, COLORADO

Copyright © 2021, Maser Consulting All Rights Reserved. This drawing and all the information contained herein is authorized for use only by the party for whom the services were contracted or to whom it is certified. This drawing may not be copied, reused, disclosed, distributed or relied upon for any other purpose without the express written consent of Maser Consulting.

verizon

811 Know what's below. Call before you dig.

PROTECT YOURSELF
ALL STATES REQUIRE NOTIFICATION OF EXCAVATORS, DESIGNERS, OR ANY PERSON PREPARING TO DISTURB THE EARTH'S SURFACE ANYWHERE IN ANY STATE

FOR STATE SPECIFIC DIRECT PHONE NUMBERS VISIT: WWW.CALL811.COM

SCALE :	JOB NUMBER :
AS SHOWN	21777635A

REV	DATE	DESCRIPTION	DRAWN BY	CHECKED BY
.	.	.	.	.
.	.	.	.	.
.	.	.	.	.
0	7/27/2021	ISSUED FOR CONSTRUCTION	MSG	JPL

STATE OF CONNECTICUT LICENSED PROFESSIONAL ENGINEER 31965

Digitally signed by Justin Peter Linette
Date: 2021.07.28 10:17:31 -04'00'
C.O.A. #: PC.0000131

IT IS A VIOLATION OF LAW FOR ANY PERSON, UNLESS THEY ARE ACTING UNDER THE DIRECTION OF THE RESPONSIBLE LICENSED PROFESSIONAL ENGINEER, TO ALTER THIS DOCUMENT.

SITE NAME:

FRANKLIN CT
469215

83 DR. NOTT ROAD
FRANKLIN, CT 06254
NEW LONDON COUNTY

MT. LAUREL OFFICE
2000 Midlantic Drive
Suite 100
Mount Laurel, NJ 08054
Phone: 856.797.0412
Fax: 856.722.1120

SHEET TITLE :
BILL OF MATERIALS

SHEET NUMBER :
SBOM-1

NOTE: DO NOT SCALE DRAWINGS FOR CONSTRUCTION.

ALAN.BAN, 14854691B, FRANKLIN CT, MountPro\Drawings, PAGE, 20110177.dwg\SBOM1 By: MOGANAM

PROJECT NOTES

1. SEE MODIFICATION NOTES
2. THE CONTRACTOR SHALL COMPLY WITH ALL APPLICABLE CODES, ORDINANCES, LAWS AND REGULATIONS OF ALL MUNICIPALITIES, UTILITY COMPANIES OR OTHER PUBLIC/GOVERNING AUTHORITIES.
3. THE CONTRACTOR SHALL BE RESPONSIBLE FOR OBTAINING ALL PERMITS AND INSPECTIONS THAT MAY BE REQUIRED BY ANY FEDERAL, STATE, COUNTY OR MUNICIPAL AUTHORITIES.
4. THE CONTRACTOR SHALL NOTIFY THE CONSTRUCTION MANAGER, IN WRITING, OF ANY CONFLICTS, ERRORS OR OMISSIONS PRIOR TO THE SUBMISSION OF BIDS OR PERFORMANCE OF WORK.
5. THE CONTRACTOR SHALL BE RESPONSIBLE FOR PROTECTING ALL EXISTING SITE IMPROVEMENTS PRIOR TO COMMENCING CONSTRUCTION. THE CONTRACTOR SHALL REPAIR ANY DAMAGE AS A RESULT OF CONSTRUCTION OF THIS FACILITY AT THE CONTRACTOR'S EXPENSE TO THE SATISFACTION OF THE OWNER.
6. THE SCOPE OF WORK FOR THIS PROJECT SHALL INCLUDE PROVIDING ALL MATERIALS, EQUIPMENT AND LABOR REQUIRED TO COMPLETE THIS PROJECT. ALL EQUIPMENT SHALL BE INSTALLED IN ACCORDANCE WITH MANUFACTURER'S RECOMMENDATIONS.
7. THE CONTRACTOR SHALL VISIT THE PROJECT SITE PRIOR TO SUBMITTING THE BID TO VERIFY THAT THE PROJECT CAN BE CONSTRUCTED IN ACCORDANCE WITH THE CONTRACT DOCUMENTS AND CONSTRUCTION DRAWINGS.
8. THE CONTRACTOR SHALL VERIFY ALL EXISTING DIMENSIONS AND CONDITIONS PRIOR TO COMMENCING ANY WORK. ALL DIMENSIONS OF EXISTING CONSTRUCTION SHOWN ON THESE DRAWINGS MUST BE VERIFIED. THE CONTRACTOR SHALL NOTIFY THE CONSTRUCTION MANAGER OF ANY DISCREPANCIES PRIOR TO ORDERING MATERIAL OR PROCEEDING WITH CONSTRUCTION.
9. SINCE THE CELL SITE MAY BE ACTIVE, ALL SAFETY PRECAUTIONS MUST BE TAKEN WHEN WORKING AROUND HIGH LEVELS OF ELECTROMAGNETIC RADIATION. EQUIPMENT SHOULD BE SHUTDOWN PRIOR TO PERFORMING ANY WORK THAT COULD EXPOSE THE WORKERS TO DANGER. PERSONAL RF EXPOSURE MONITORS ARE REQUIRED TO BE WORN TO ALERT OF ANY POTENTIALLY DANGEROUS EXPOSURE LEVELS.
10. NO NOISE, SMOKE, DUST OR ODOR WILL RESULT FROM THIS FACILITY AS TO CAUSE A NUISANCE.
11. THE FACILITY IS UNMANNED AND NOT FOR HUMAN HABITATION (NO HANDICAP ACCESS IS REQUIRED).

GENERAL NOTES

1. THESE MODIFICATIONS HAVE BEEN DESIGNED IN ACCORDANCE WITH THE GOVERNING PROVISIONS OF THE TELECOMMUNICATIONS INDUSTRY STANDARD TIA-222-H. MATERIALS AND SERVICES PROVIDED BY THE CONTRACTOR SHALL CONFORM TO THE ABOVE MENTIONED CODES.
2. CONTRACTOR SHALL TAKE ALL PRECAUTIONS NECESSARY TO PREVENT DAMAGE TO EXISTING STRUCTURES. ANY DAMAGE TO EXISTING STRUCTURES AS A RESULT OF THE CONTRACTOR'S WORK OR FROM DAMAGE DUE TO OTHER CAUSES SHALL BE REPAIRED AT THE CONTRACTOR'S EXPENSE TO THE SATISFACTION OF THE OWNER.
3. CONTRACTOR SHALL VERIFY ALL DIMENSIONS AND EXISTING CONDITIONS BEFORE BEGINNING WORK, ORDERING MATERIAL, AND PREPARING OF SHOP DRAWINGS. ANY DISCREPANCIES BETWEEN FIELD CONDITIONS AND THE CONTRACT DOCUMENTS SHALL BE BROUGHT TO THE IMMEDIATE ATTENTION OF THE ENGINEER. IF THE CONTRACTOR DISCOVERS ANY EXISTING CONDITIONS THAT ARE NOT REPRESENTED ON THESE DRAWINGS, OR ANY CONDITIONS THAT WOULD INTERFERE WITH THE INSTALLATION OF THE MODIFICATIONS, NOTIFY THE ENGINEER IMMEDIATELY.
4. IT IS ASSUMED THAT ANY STRUCTURAL MODIFICATION WORK SPECIFIED ON THESE PLANS WILL BE ACCOMPLISHED BY KNOWLEDGEABLE WORKMEN WITH TOWER CONSTRUCTION EXPERIENCE.
5. THE CONTRACTOR SHALL SUPERVISE AND DIRECT THE WORK AND SHALL BE SOLELY RESPONSIBLE FOR ALL CONSTRUCTION METHODS, MEANS, TECHNIQUES, SEQUENCES, AND PROCEDURES.
6. ALL CONSTRUCTION MEANS AND METHODS; INCLUDING BUT NOT LIMITED TO, ERECTION PLANS, RIGGING PLANS, CLIMBING PLANS, AND RESCUE PLANS SHALL BE THE RESPONSIBILITY OF THE GENERAL CONTRACTOR RESPONSIBLE FOR THE EXECUTION OF THE WORK CONTAINED HEREIN AND SHALL MEET ANSI/TIA-322 (LATEST EDITION), OSHA, AND GENERAL INDUSTRY STANDARDS. ALL RIGGING PLANS SHALL ADHERE TO ANSI/TIA-322 (LATEST EDITION) INCLUDING THE REQUIRED INVOLVEMENT OF A QUALIFIED ENGINEER FOR CLASS IV CONSTRUCTION.
7. THE CONTRACTOR IS SOLELY RESPONSIBLE FOR INITIATING, MAINTAINING, AND SUPERVISING ALL SAFETY PROGRAMS IN ACCORDANCE WITH APPLICABLE SAFETY CODES.
8. WORK SHALL ONLY BE PERFORMED DURING CALM DRY DAYS (WINDS LESS THAN 30-MPH). THE STRUCTURE SHOWN ON THE DRAWINGS IS STRUCTURALLY SOUND ONLY IN THE COMPLETED FORM. THE CONTRACTOR SHALL BE RESPONSIBLE FOR THE STRENGTH AND STABILITY OF THE STRUCTURE DURING ERECTION. CONTRACTOR SHALL PROVIDE TEMPORARY SUPPORT, SHORING, BRACING AND ANY OTHER STRUCTURAL SYSTEMS AS REQUIRED TO RESIST ALL FORCES THAT MAY OCCUR DURING HANDLING AND ERECTION UNTIL THE STRUCTURE IS FULLY COMPLETED. TEMPORARY SUPPORTS, BRACING AND OTHER STRUCTURAL SYSTEMS REQUIRED DURING CONSTRUCTION SHALL REMAIN THE CONTRACTOR'S PROPERTY AFTER THEIR USE.
9. ALL INSTALLATIONS PERFORMED ON THIS STRUCTURE SHALL BE COMPLETED IN ACCORDANCE WITH THE GOVERNING PROVISIONS OF THE STANDARD FOR INSTALLATION, ALTERATION AND MAINTENANCE OF ANTENNA SUPPORTING STRUCTURES AND ANTENNAS, ANSI/TIA-322.
10. CONTRACTOR SHALL SECURE SITE BACK TO EXISTING CONDITION UNDER SUPERVISION OF OWNER. ALL FENCE, STONE, GEOFABRIC, GROUNDING, AND SURROUNDING GRADE SHALL BE REPLACED AND REPAIRED AS REQUIRED TO ACHIEVE OWNER APPROVAL. POSITIVE DRAINAGE AWAY FROM TOWER SITE SHALL BE MAINTAINED.
11. CONNECTIONS BETWEEN ITEMS SUPPORTED BY THE STRUCTURE AND THE STRUCTURE NOT SPECIFICALLY DETAILED IN THE CONTRACT DOCUMENTS ARE THE RESPONSIBILITY OF THE CONTRACTOR. SUCH CONNECTIONS SHALL BE DESIGNED, COORDINATED AND INSPECTED BY A PROFESSIONAL STRUCTURAL ENGINEER LICENSED IN THE STATE OF THE PROJECT. SUBMIT SIGNED AND SEALED CALCULATIONS DURING SHOP DRAWING REVIEW.
12. DO NOT SCALE DRAWINGS.
13. DO NOT USE THESE DRAWINGS FOR ANY OTHER SITE.
14. ALL MATERIAL UTILIZED FOR THIS PROJECT MUST BE NEW AND FREE OF ANY DEFECTS. ANY MATERIAL SUBSTITUTIONS, INCLUDING BUT NOT LIMITED TO ALTERED SIZE AND/OR STRENGTHS, MUST BE APPROVED BY THE OWNER AND ENGINEER IN WRITING.
15. THE MOUNT UNDER NO CIRCUMSTANCES SHOULD BE USED AS A TIE OFF POINT.

STRUCTURAL STEEL

1. DESIGN, DETAILING, FABRICATION AND ERECTION OF STRUCTURAL STEEL SHALL CONFORM TO THE FOLLOWING PUBLICATIONS EXCEPT AS SPECIFICALLY INDICATED IN THE CONTRACT DOCUMENTS.
   a. AMERICAN INSTITUTE OF STEEL CONSTRUCTION (AISC) MANUAL OF STEEL CONSTRUCTION (15TH EDITION)
   b. SPECIFICATION FOR STRUCTURAL JOINTS USING ASTM A325 OR A490 BOLTS
   c. AISC CODE OF STANDARD PRACTICE
2. STRUCTURAL STEEL SHALL CONFORM TO THE FOLLOWING UNLESS OTHERWISE SHOWN:

CHANNELS, ANGLES, PLATES, ETC.	ASTM A36 (GR 36)
STEEL PIPE	ASTM A53 (GR 35)
BOLTS	ASTM A325
NUTS	ASTM A563
LOCK WASHERS	LOCKING STRUCTURAL GRADE

3. ALL SUBSTITUTIONS PROPOSED BY THE CONTRACTOR SHALL BE APPROVED IN WRITING BY THE ENGINEER. CONTRACTOR SHALL PROVIDE DOCUMENTATION TO ENGINEER FOR VERIFYING THE SUBSTITUTE IS SUITABLE FOR USE AND MEETS ORIGINAL DESIGN CRITERIA. DIFFERENCES FROM THE ORIGINAL DESIGN, INCLUDING MAINTENANCE, REPAIR AND REPLACEMENT, SHALL BE NOTED. ESTIMATES OF COSTS/CREDITS ASSOCIATED WITH THE SUBSTITUTION (INCLUDING RE-DESIGN COSTS AND COSTS TO SUB-CONTRACTORS) SHALL BE PROVIDED TO THE ENGINEER. CONTRACTOR SHALL PROVIDE ADDITIONAL DOCUMENTATION AND/OR SPECIFICATIONS TO THE ENGINEER AS REQUESTED.
4. PROVIDE STRUCTURAL STEEL SHOP DRAWINGS TO ENGINEER FOR APPROVAL PRIOR TO FABRICATION.
   a. SUBMIT SHOP DRAWINGS TO

      PETER.ALBANO@COLLIERSENGINEERING.COM

   b. PROVIDE MASER CONSULTING CONNECTICUT PROJECT # AND MASER CONSULTING CONNECTICUT PROJECT ENGINEER CONTACT IN THE BODY OF THE EMAIL.
5. DRILL NO HOLES IN ANY NEW OR EXISTING STRUCTURAL STEEL MEMBERS OTHER THAN THOSE SHOWN ON STRUCTURAL DRAWINGS WITHOUT THE APPROVAL OF THE ENGINEER OF RECORD.
6. GALVANIZED ASTM A325 BOLTS SHALL NOT BE REUSED.
7. ALL NEW STEEL SHALL BE HOT BE DIPPED GALVANIZED FOR FULL WEATHER PROTECTION. IN ADDITION ALL NEW STEEL SHALL BE PAINTED TO MATCH EXISTING STEEL. CONTRACTOR SHALL OBTAIN WRITTEN PERMISSION TO PROTECT STEEL BY ANY OTHER MEANS.
8. ALL BOLT ASSEMBLIES FOR STRUCTURAL MEMBERS REPRESENTED IN THIS DRAWING REQUIRE LOCKING DEVICES TO BE INSTALLED IN ACCORDANCE WITH TIA-222-H SECTION 4.9.2 REQUIREMENTS.
9. WHERE CONNECTIONS ARE NOT FULLY DETAILED ON THESE DRAWINGS, FABRICATOR SHALL DESIGN CONNECTIONS TO RESIST LOADS AND FORCES WHERE SHOWN ON DRAWINGS AND AS OUTLINED IN SPECIFICATIONS.
10. FOR MEMBERS BEING REPLACED, PROVIDE NEW BOLTS AND MATCH EXISTING SIZE AND GRADE. MAINTAIN AISC REQUIREMENTS FOR MINIMUM BOLT DISTANCE AND SPACING.
11. ALL PROPOSED AND/OR REPLACED BOLTS SHALL BE OF SUFFICIENT LENGTH SUCH THAT THE END OF THE BOLT IS AT LEAST FLUSH WITH THE FACE OF THE NUT. IT IS NOT PERMITTED FOR THE BOLT END TO BE BELOW THE FACE OF THE NUT AFTER TIGHTENING IS COMPLETED.
12. GALVANIZED ASTM A325 BOLTS SHALL NOT BE REUSED.
13. ALL NEW STEEL SHALL BE HOT BE DIPPED GALVANIZED FOR FULL WEATHER PROTECTION. CONTRACTOR SHALL OBTAIN WRITTEN PERMISSION TO PROTECT STEEL BY ANY OTHER MEANS.
14. ALL EXISTING PAINTED/GALVANIZED SURFACES DAMAGED DURING REHAB INCLUDING AREAS UNDER STIFFENER PLATES SHALL BE WIRE BRUSHED CLEAN, REPAIRED BY COLD GALVANIZING (ZINGA OR ZINC COTE), AND REPAINTED TO MATCH THE EXISTING FINISH (IF APPLICABLE).
15. ALL HOLES IN STEEL MEMBERS SHALL BE SIZED 1/16" LARGER THAN THE BOLT DIAMETER. STANDARD HOLES SHALL BE USED UNLESS NOTED OTHERWISE.

WELDING NOTES

1. ALL WELDING SHALL BE DONE IN ACCORDANCE WITH AWS D1.0 (LATEST EDITION). THIS SHALL INCLUDE A CERTIFIED WELD INSPECTION (CWI) FOR ACCEPTANCE OR REJECTION OF ALL WELDING OPERATIONS, PRE, DURING, AND POST INSTALLATION, USING THE ACCEPTANCE CRITERIA OF AWS D1.1.
2. CONTRACTOR IS RESPONSIBLE FOR COMMISSIONING A THIRD PARTY CERTIFIED WELD INSPECTOR (CWI) THROUGHOUT THE ENTIRETY OF THE PROJECT. A PASSING CWI REPORT SHALL BE PROVIDED TO THE ENGINEER UPON COMPLETION OF THE PROJECT.
3. THE CERTIFIED WELD INSPECTOR SHALL INDICATE, IN A WRITTEN CWI REPORT, THAT ALL WELDING OPERATIONS PRE, DURING, AND POST INSTALLATION WERE CONDUCTED IN ACCORDANCE WITH AWS D1.1 WITH PHOTOGRAPHS AND DOCUMENTATION SUPPORTING THE ACCEPTANCE OR REJECTION OF ALL WELDING. ALL CWI WELD INSPECTION DOCUMENTATION AND PHOTOS SHALL BE SUBMITTED DURING THE PMI.
4. IN CASES WHERE A WELD IS SPECIFIED BETWEEN TWO MEMBERS IN WHICH THERE IS A GAP IN BETWEEN, THE WELD IS TO BE BUILT-UP SUCH THAT THE SIZE OF WELD ON THE MEMBER IS EQUAL TO THAT SHOWN IN THE DRAWINGS.
5. OXY FUEL GAS WELDING OR BRAZING IS STRICTLY PROHIBITED. SPECIFICALLY, NO TORCH CUTTING IS PERMITTED ON SITE. ALL HOLES SHALL BE CUT WITH A GRINDER.
6. CONTRACTOR SHALL EXERCISE CAUTION WHEN WELDING A GALVANIZED SURFACE.

BOLT SCHEDULE (IN.)

BOLT DIAMETER	STANDARD HOLE	SHORT SLOT	MIN. EDGE DISTANCE	SPACING
1/2	9/16	9/16 x 11/16	7/8	1 1/2
5/8	11/16	11/16 x 7/8	1 1/8	1 7/8
3/4	13/16	13/16 x 1	1 1/4	2 1/4
7/8	15/16	15/16 x 1 1/8	1 1/2	2 5/8
1	1 1/16	1 1/16 x 1 5/16	1 3/4	3

WORKABLE GAGES (IN.)

LEG	GAGE
4	2 1/2
3 1/2	2
3	1 3/4
2 1/2	1 3/8
2	1 1/8

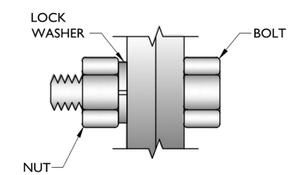

TYP. BOLT ASSEMBLY

NOTES:

1. ALL DIMENSIONS REPRESENTED IN THE ABOVE TABLES ARE AISC MINIMUM REQUIREMENTS. CONTRACTOR SHALL VERIFY EXISTING CONDITIONS IN FIELD AND NOTIFY ENGINEER IF DISTANCES ARE LESS THAN THOSE PROVIDED.
2. THE DIMENSIONS PROVIDED ARE MINIMUM REQUIREMENTS. ACTUAL DIMENSIONS OF PROPOSED MEMBERS WITHIN THESE DRAWINGS MAY VARY FROM THE AISC MINIMUM REQUIREMENTS.
3. SHORT SLOT HOLES SHALL ONLY BE USED WHEN DEPICTED IN THE DRAWINGS
4. MATCH EXISTING GAGES WHEN APPLICABLE, UNLESS MINIMUM EDGE DISTANCES ARE COMPROMISED.

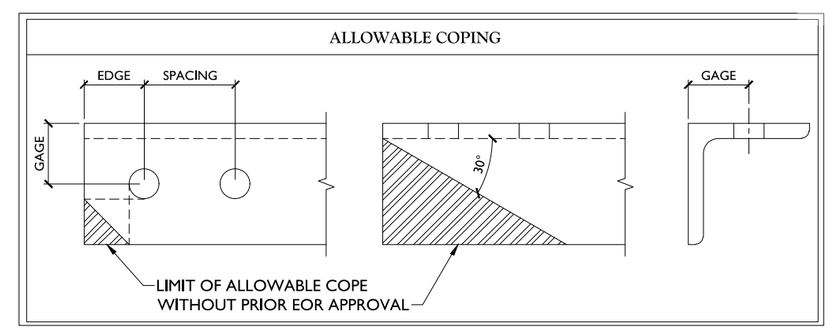

MASER CONSULTING CONNECTICUT
WILL BE KNOWN AS COLLIERS ENGINEERING & DESIGN IN 2021
Customer Loyalty *through* Client Satisfaction
www.maserconsulting.com
Office Locations:
NEW JERSEY · NEW YORK · PENNSYLVANIA · VIRGINIA · FLORIDA · NORTH CAROLINA · SOUTH CAROLINA · NEW MEXICO · MARYLAND · GEORGIA · TEXAS · TENNESSEE · COLORADO

Copyright © 2021, Maser Consulting All Rights Reserved. This drawing and all the information contained herein is authorized for use only by the party for whom the services were contracted or to whom it is certified. This drawing may not be copied, reused, disclosed, distributed or relied upon for any other purpose without the express written consent of Maser Consulting.

verizon

PROTECT YOURSELF
ALL STATES REQUIRE NOTIFICATION OF EXCAVATORS, DESIGNERS, OR ANY PERSON PREPARING TO DISTURB THE EARTH'S SURFACE ANYWHERE IN ANY STATE
811 Know what's below. Call before you dig.
FOR STATE SPECIFIC DIRECT PHONE NUMBERS VISIT: WWW.CALL811.COM

SCALE: AS SHOWN
JOB NUMBER: 21777635A

REV	DATE	DESCRIPTION	DRAWN BY	CHECKED BY
0	7/27/2021	ISSUED FOR CONSTRUCTION	MSG	JPL

STATE OF CONNECTICUT · 31965 · LICENSED PROFESSIONAL ENGINEER
Digitally signed by Justin Peter Linette
Date: 2021.07.28 10:17:07 -04'00'
C.O.A. #: PEC.0000131

IT IS A VIOLATION OF LAW FOR ANY PERSON, UNLESS THEY ARE ACTING UNDER THE DIRECTION OF THE RESPONSIBLE LICENSED PROFESSIONAL ENGINEER, TO ALTER THIS DOCUMENT.

SITE NAME:
FRANKLIN CT
469215
83 DR. NOTT ROAD
FRANKLIN, CT 06254
NEW LONDON COUNTY

MT. LAUREL OFFICE
2000 Midlantic Drive
Suite 100
Mount Laurel, NJ 08054
Phone: 856.797.0412
Fax: 856.722.1120

SHEET TITLE: MODIFICATION NOTES

SHEET NUMBER: SGN-1

NOTE: DO NOT SCALE DRAWINGS FOR CONSTRUCTION.

AA-RAN_148046915_FRANKLIN_CT_MasterPlan-Drawings_PA25_20210727.dwg\SGN-1 By: MCGRAW

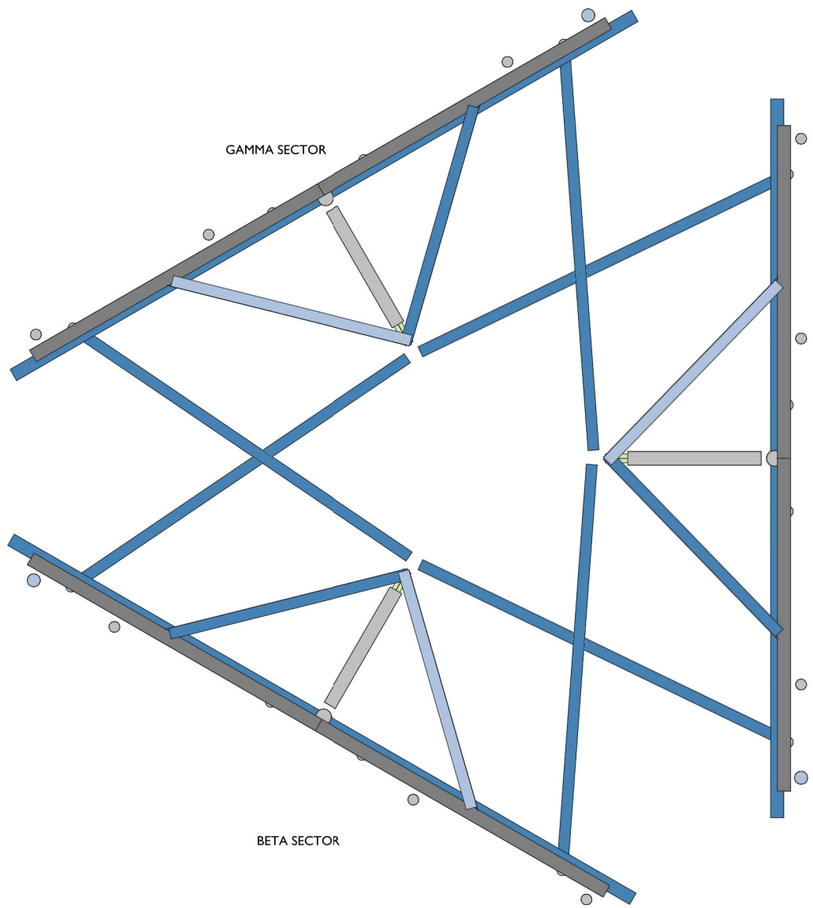

1 CLIMBING FACILITY LOCATION

SCALE : N.T.S.

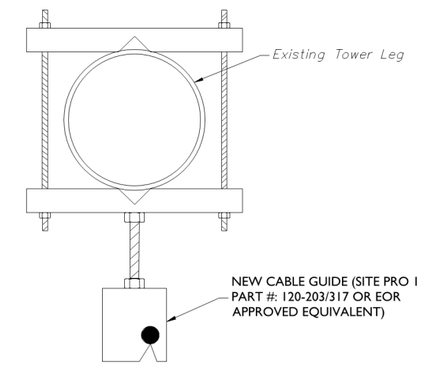

2 CABLE GUIDE TOWER LEG ATTACHMENT - PLAN VIEW

SCALE : N.T.S.

STRUCTURAL NOTES:

1. PER THE MOUNT MAPPING COMPLETED BY HIGHTOWER SOLUTIONS INC. ON 4/28/2020, THE SAFETY CLIMB AND CLIMBING FACILITIES UP TO THE VERIZON MOUNT ELEVATION (167'-6") ARE IN GOOD CONDITION. MASER DOES NOT WARRANT THIS INFORMATION.

2. INSTALL SHALL NOT CAUSE HARM TO THE STRUCTURE, CLIMBING FACILITY, SAFETY CLIMB, OR ANY SYSTEM INSTALLED ON THE STRUCTURE. TIMELY NOTICE AND DOCUMENTATION SHALL BE PROVIDED BY CONTRACTORS TO THE EOR (OF STRUCTURAL DESIGN) IF AN OBSTRUCTION WAS REQUIRED TO MEET THE RF SYSTEM DESIGN REQUIREMENTS AND PERFORMANCES.

NOTES:

NO EXISTING CLIMBING FACILITY PHOTO.

CLIMBING FACILITY PHOTO

MASER CONSULTING
—CONNECTICUT—
WILL BE KNOWN AS COLLIERS ENGINEERING & DESIGN IN 2021
Customer Loyalty *through* Client Satisfaction
www.maserconsulting.com
Office Locations:
- NEW JERSEY
- NEW YORK
- PENNSYLVANIA
- VIRGINIA
- FLORIDA
- NORTH CAROLINA
- SOUTH CAROLINA
- NEW MEXICO
- MARYLAND
- GEORGIA
- TEXAS
- TENNESSEE
- COLORADO

Copyright © 2021. Maser Consulting All Rights Reserved. This drawing and all the information contained herein is authorized for use only by the party for whom the services were contracted or to whom it is certified. This drawing may not be copied, reused, disclosed, distributed or relied upon for any other purpose without the express written consent of Maser Consulting.

verizon

811 Know what's below. Call before you dig.

PROTECT YOURSELF
ALL STATES REQUIRE NOTIFICATION OF EXCAVATORS, DESIGNERS, OR ANY PERSON PREPARING TO DISTURB THE EARTH'S SURFACE ANYWHERE IN ANY STATE

FOR STATE SPECIFIC DIRECT PHONE NUMBERS VISIT: WWW.CALL811.COM

SCALE : AS SHOWN
JOB NUMBER : 21777635A

REV	DATE	DESCRIPTION	DRAWN BY	CHECKED BY
.	.	.	.	.
.	.	.	.	.
.	.	.	.	.
0	7/27/2021	ISSUED FOR CONSTRUCTION	MSG	JPL

STATE OF CONNECTICUT
JUSTIN PETER LINETTE
31965
LICENSED PROFESSIONAL ENGINEER

Digitally signed by Justin Peter Linette
Date: 2021.07.28 10:17:32 -04'00'
C.O.A. #: PEC.0000131

IT IS A VIOLATION OF LAW FOR ANY PERSON, UNLESS THEY ARE ACTING UNDER THE DIRECTION OF THE RESPONSIBLE LICENSED PROFESSIONAL ENGINEER, TO ALTER THIS DOCUMENT.

SITE NAME:

FRANKLIN CT
469215

83 DR. NOTT ROAD
FRANKLIN, CT 06254
NEW LONDON COUNTY

MT. LAUREL OFFICE
2000 Midlantic Drive
Suite 100
Mount Laurel, NJ 08054

Phone: 856.797.0412
Fax: 856.722.1120

SHEET TITLE :
CLIMBING FACILITY DETAIL

SHEET NUMBER :
SCF-1

NOTE: DO NOT SCALE DRAWINGS FOR CONSTRUCTION.

AcAdmin, 1469469215_FRANKLIN CT_PlansHudDrawings_PASS_20210722.dwg(SCF-1 By: MGRAHAM

LEGEND:

- PROPOSED
- RELOCATED
- EXISTING

MOUNT MODIFICATION SCHEDULE

NO.	ELEVATION	QUANTITY	DESCRIPTION	NOTES
1	167'-6"	6	PROPOSED TIE BACK ASSEMBLY (PART #: VZWSMART-SFK1)	CONNECT NEW TIE BACK TO FACE VERTICAL PIPE WITH CROSSOVER PLATES (PART#: VZWSMART-MSK1). CONNECT OTHER END TO ADJACENT TOWER LEG. PROPOSED TIE-BACK SHALL EXTEND NO MORE THAN 12" BEYOND THE TOWER LEG. CONTRACTOR SHALL TRIM AS REQUIRED AND PROTECT CUT END WITH TWO COATS OF ZINGA OR ZINC COTE.
2		3	PROPOSED V-BRACING KIT (PART #: VZWSMART-SFK3)	CONTRACTOR TO VERIFY THE LENGTH REQUIRED AND TRIM AS NECESSARY IN ACCORDANCE WITH THE 'STRUCTURAL STEEL' NOTES ON SHEET SGN-1
3		3	162" LONG, P2 1/2 STD FACE HORIZONTAL	RADIO AND/OR TME POSITIONS SHALL BE ADJUSTED VERTICALLY AS NEEDED IN ORDER TO ACHIEVE INSTALLATION OF HORIZONTAL AS SHOWN. EOR SHALL BE NOTIFIED IF EQUIPMENT NEEDS TO BE RELOCATED TO ANOTHER MOUNT PIPE. CONNECT NEW HORIZONTAL TO ALL EXISTING VERTICAL FACE BRACKIG PIPES WITH CROSSOVER PLATES (PART #: VZWSMART-MSK1).
4		3	96" LONG, P2 1/2 STD MOUNT PIPE	CONNECT NEW MOUNT PIPE TO EXISTING HORIZONTAL WITH (1) 1/2" DIA. U-BOLT AT EACH CONNECTION.
5		3	84" LONG, P2 STD MOUNT PIPE	TO BE RELOCATED AND CONNECT TO EXISTING FACE HORIZONTALS WITH (1) 1/2" DIA. U-BOLT AT EACH CONNECTION.
6				
7				
8				
9				
10				

NOTES.

MOUNT MEMBERS NOT SHOWN FOR CLARITY.
ALL NEW BOLT HOLES SHALL BE PREPARED PER THE BOLT SCHEDULE ON SHEET SGN-1 UNLESS NOTED OTHERWISE.

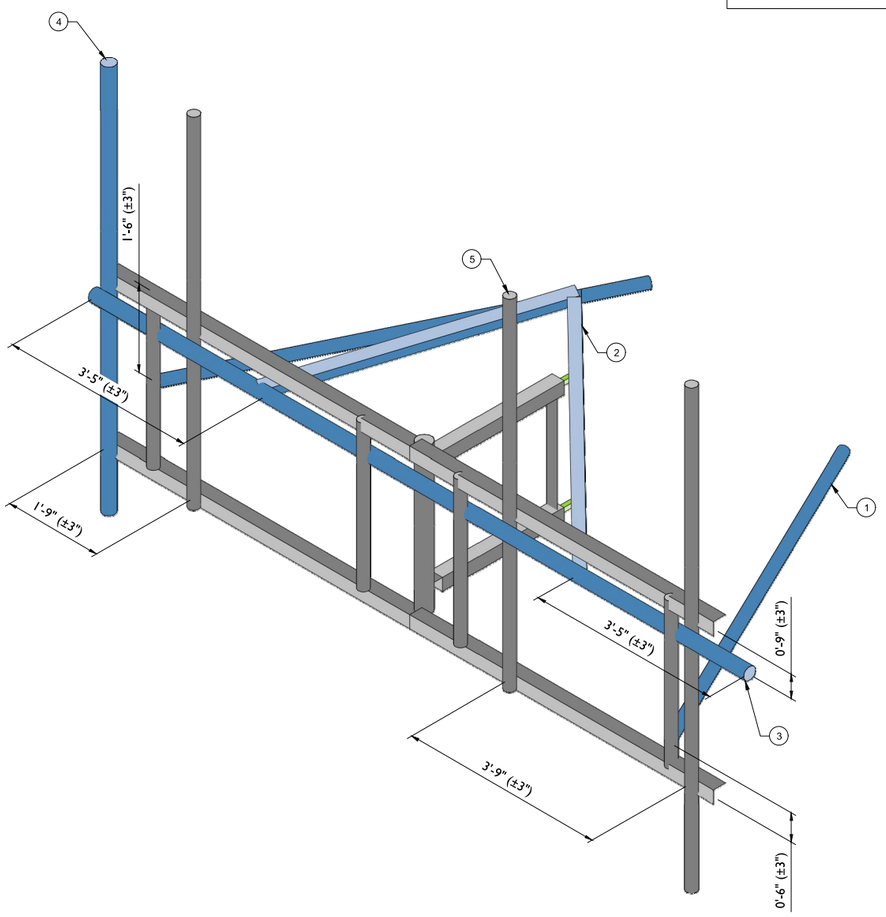

1 PROPOSED ISOMETRIC VIEW (TYP. ALL SECTORS)

SCALE : N.T.S.

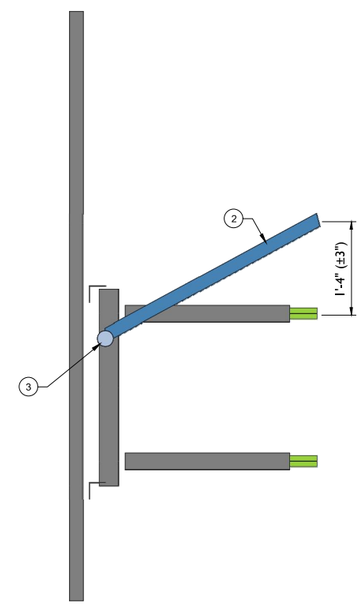

2 PROPOSED SIDE ELEVATION VIEW (TYP. ALL SECTORS)

SCALE : N.T.S.

MASER CONSULTING CONNECTICUT
WILL BE KNOWN AS COLLIERS ENGINEERING & DESIGN IN 2021
Customer Loyalty *through* Client Satisfaction
www.maserconsulting.com
Office Locations:
NEW JERSEY · NEW YORK · PENNSYLVANIA · VIRGINIA · FLORIDA · NORTH CAROLINA · SOUTH CAROLINA · NEW MEXICO · MARYLAND · GEORGIA · TEXAS · TENNESSEE · COLORADO

Copyright © 2021, Maser Consulting All Rights Reserved. This drawing and all the information contained herein is authorized for use only by the party for whom the services were contracted or to whom it is certified. This drawing may not be copied, reused, disclosed, distributed or relied upon for any other purpose without the express written consent of Maser Consulting.

verizon

PROTECT YOURSELF
ALL STATES REQUIRE NOTIFICATION OF EXCAVATORS, DESIGNERS, OR ANY PERSON PREPARING TO DISTURB THE EARTH'S SURFACE ANYWHERE IN ANY STATE

811 Know what's below. Call before you dig.

FOR STATE SPECIFIC DIRECT PHONE NUMBERS VISIT: WWW.CALL811.COM

SCALE : AS SHOWN
JOB NUMBER : 21777635A

REV	DATE	DESCRIPTION	DRAWN BY	CHECKED BY
0	7/27/2021	ISSUED FOR CONSTRUCTION	MSG	JPL

STATE OF CONNECTICUT · JUSTIN PETER LINETTE · 31965 · LICENSED PROFESSIONAL ENGINEER

Digitally signed by Justin Peter Linette
Date: 2021.07.28 10:17:22-04'00'
C.O.A. #: PEC.0000131

IT IS A VIOLATION OF LAW FOR ANY PERSON, UNLESS THEY ARE ACTING UNDER THE DIRECTION OF THE RESPONSIBLE LICENSED PROFESSIONAL ENGINEER, TO ALTER THIS DOCUMENT.

SITE NAME:

FRANKLIN CT
469215

83 DR. NOTT ROAD
FRANKLIN, CT 06254
NEW LONDON COUNTY

MT. LAUREL OFFICE
2000 Midlantic Drive
Suite 100
Mount Laurel, NJ 08054

Phone: 856.797.0412
Fax: 856.722.1120

SHEET TITLE : MODIFICATION DETAILS

SHEET NUMBER : SS-1

NOTE: DO NOT SCALE DRAWINGS FOR CONSTRUCTION.

MOUNT PHOTO 1

MOUNT PHOTO 2

MOUNT PHOTO 3

MOUNT PHOTO 4

MASER CONSULTING
CONNECTICUT
WILL BE KNOWN AS COLLIERS ENGINEERING & DESIGN IN 2021
Customer Loyalty *through* Client Satisfaction
www.maserconsulting.com
Office Locations:

- NEW JERSEY
- NEW YORK
- PENNSYLVANIA
- VIRGINIA
- FLORIDA
- NORTH CAROLINA
- SOUTH CAROLINA
- NEW MEXICO
- MARYLAND
- GEORGIA
- TEXAS
- TENNESSEE
- COLORADO

Copyright © 2021, Maser Consulting All Rights Reserved. This drawing and all the information contained herein is authorized for use only by the party for whom the services were contracted or to whom it is certified. This drawing may not be copied, reused, disclosed, distributed or relied upon for any other purpose without the express written consent of Maser Consulting.

verizon

PROTECT YOURSELF
ALL STATES REQUIRE NOTIFICATION OF EXCAVATORS, DESIGNERS, OR ANY PERSON PREPARING TO DISTURB THE EARTH'S SURFACE ANYWHERE IN ANY STATE

811 Know what's below. Call before you dig.

FOR STATE SPECIFIC DIRECT PHONE NUMBERS VISIT:
WWW.CALL811.COM

SCALE : AS SHOWN
JOB NUMBER : 21777635A

REV	DATE	DESCRIPTION	DRAWN BY	CHECKED BY
0	7/27/2021	ISSUED FOR CONSTRUCTION	MSG	JPL

STATE OF CONNECTICUT
JUSTIN PETER LINETTE
31965
LICENSED PROFESSIONAL ENGINEER

Digitally signed by Justin Peter Linette
Date: 2021.07.28 10:17:32-04'00'
C.O.A. #: PEC.0000131

IT IS A VIOLATION OF LAW FOR ANY PERSON, UNLESS THEY ARE ACTING UNDER THE DIRECTION OF THE RESPONSIBLE LICENSED PROFESSIONAL ENGINEER, TO ALTER THIS DOCUMENT.

SITE NAME:

FRANKLIN CT
469215

83 DR. NOTT ROAD
FRANKLIN, CT 06254
NEW LONDON COUNTY

MT. LAUREL OFFICE
2000 Midlantic Drive
Suite 100
Mount Laurel, NJ 08054

Phone: 856.797.0412
Fax: 856.722.1120

SHEET TITLE :
MOUNT PHOTOS

SHEET NUMBER :
SS-2

NOTE: DO NOT SCALE DRAWINGS FOR CONSTRUCTION.

AS-Built_14BN-68915_FRANKLIN CT_PlansPlusDrawings_PASS_20110272.dwg@SS-2 By: MCRAMAM

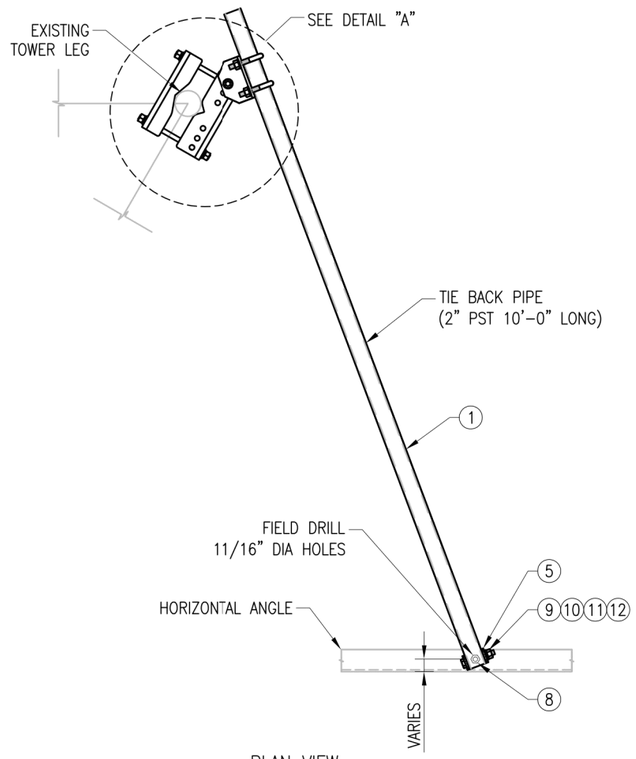

PLAN VIEW
TIE BACK ASSEMBLY

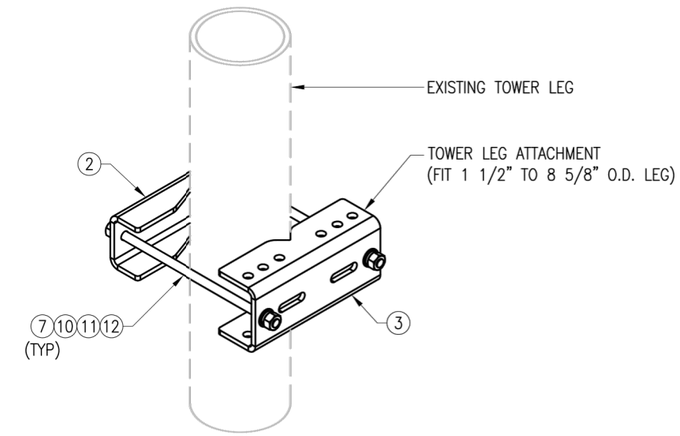

ROUND TOWER LEG ATTACHMENT DETAIL

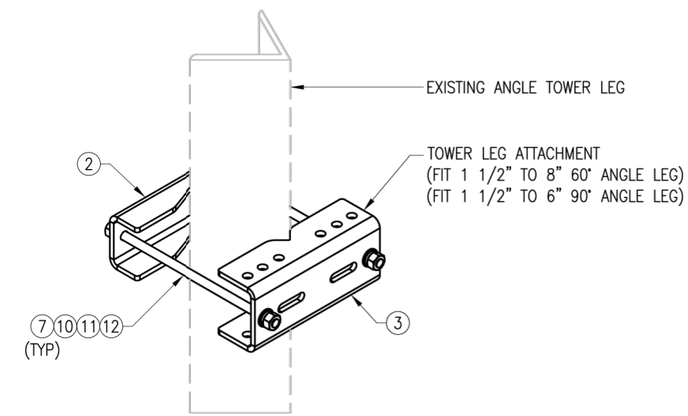

ANGLE TOWER LEG ATTACHMENT DETAIL

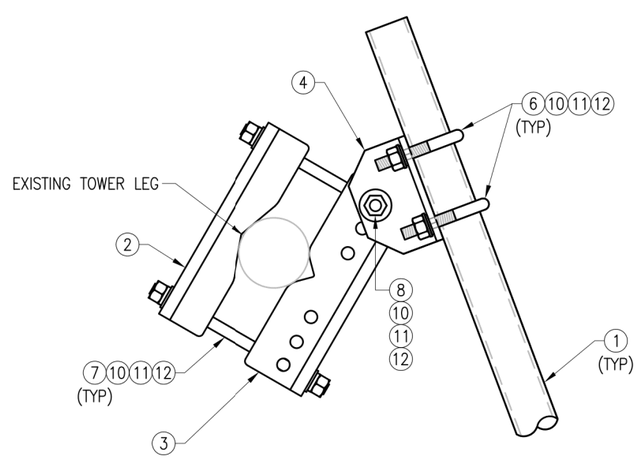

DETAIL "A"

VZWSMART-SFK1 (TIE BACK ASSEMBLY)

ITEM NO.	QTY.	PART NO.	DESCRIPTION	SHEET #	WT
1	1	PST2375-10	2" PST (2.375" O.D. X 0.154" THK) X 10'-0" A53 GR-B 35KSI	SFK1-F1	38
2	1	BP825-12	PL 3/8" X 8 1/4" X 1'-0" A36 BENT PLATE	SFK1-F2	11
3	1	BP11125-12	PL 3/8" X 11 1/8" X 1'-0" A36 BENT PLATE	SFK1-F3	14
4	1	BP6-9375	PL 3/8" X 6" X 9 3/8" A36 BENT PLATE	SFK1-F4	6
5	1	BP2-875	PL 1/4" X 2" X 8 3/4" A36 BENT PLATE	SFK1-F4	1
6	2	MS02-625-300-500	RU-BOLT 5/8" X 3" I.W. X 5" I.L. A36 (OR EQUIV.)	RBC-1	2
7	2	---	THREADED ROD 5/8" DIA. X 1'-6" F1554-36 HDG	---	0
8	2	---	BOLT 5/8" X 2" A325	---	0
9	1	---	BOLT 5/8" X 4 1/4" A325	---	0
10	11	FW-625	5/8" HDG USS FLAT WASHER	---	1
11	11	LW-625	5/8" HDG LOCK WASHER	---	0
12	11	NUT-625	5/8" HDG HEX NUT	---	1
				GALVANIZED WT	72

NOTES:
1. HOT-DIPPED GALVANIZED PER ASTM A123.

VzW SMART Tool© Vendor

verizon

DRAWN BY: BT | CHECKED BY: HMA/KW

REV.	DESCRIPTION	BY	DATE
0	FIRST ISSUE	BT	05/08/20

SHEET TITLE:
VZWSMART-SFK1
TIE BACK ASSEMBLY

SHEET NUMBER: VZWSMART-SFK1

REV #: 0

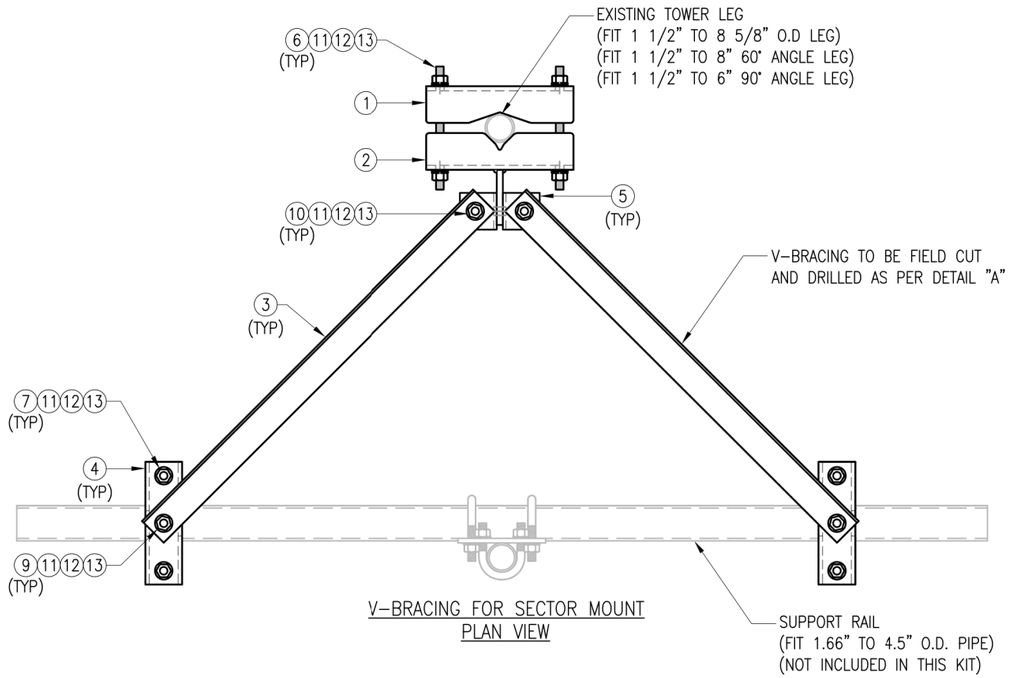

V-BRACING FOR SECTOR MOUNT
PLAN VIEW

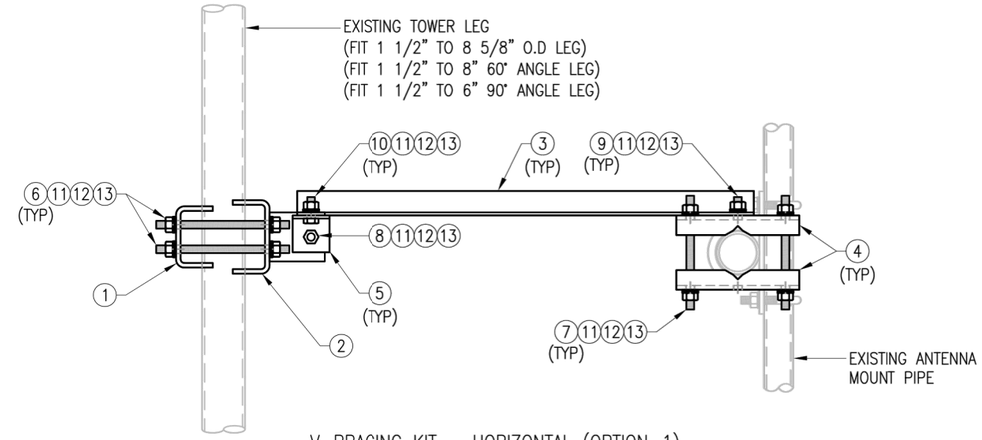

V-BRACING KIT – HORIZONTAL (OPTION-1)
SIDE VIEW

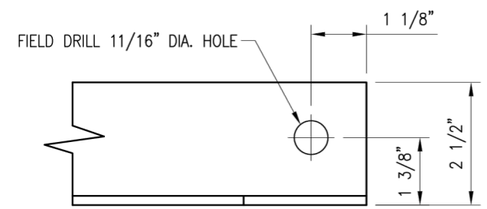

PLAN VIEW

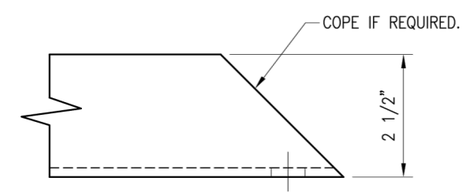

FRONT VIEW
DETAIL "A"

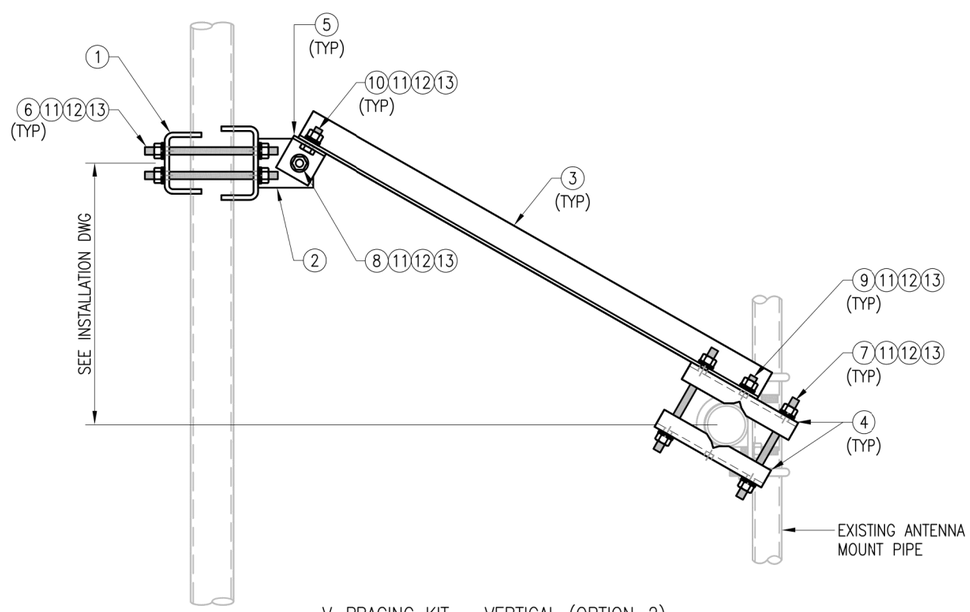

V-BRACING KIT – VERTICAL (OPTION-2)
SIDE VIEW

VZWSMART-SFK3 (V-BRACING KIT)

ITEM NO.	QTY.	PART NO.	DESCRIPTION	SHEET #	WT
1	1	BP9625-12	PL 3/8" X 9 5/8" X 1'-0" A36 BENT PLATE	VBSM-F1	12
2	1	BRKW-VBSM	WELDMENT BRACKET	VBSM-F3	16
3	2	L252525-8	L 2 1/2" X 2 1/2" X 1/4" X 8'-0" A36	VBSM-F5	67
4	4	BP6875-10	PL 3/8" X 6 7/8" X 10" A36 BENT PLATE	VBSM-F2	20
5	2	AL-333	L 3" X 3" X 1/4" X 3" A36	VBSM-F2	3
6	4	---	THREADED ROD 5/8" DIA. X 1'-6" F1554-36 HDG	---	--
7	4	---	THREADED ROD 5/8" DIA. X 10" F1554-36 HDG	---	--
8	1	---	BOLT 5/8" X 2 1/4" A325	---	--
9	2	---	BOLT 5/8" X 2" A325	---	--
10	2	---	BOLT 5/8" X 1 3/4" A325	---	--
11	21	FW-625	5/8" HDG USS FLAT WASHER	---	2
12	21	LW-625	5/8" HDG LOCK WASHER	---	0
13	21	NUT-625	5/8" HDG HEX NUT	---	2
				GALVANIZED WT	122

NOTES:
1. HOT-DIPPED GALVANIZED PER ASTM A123.

VzW SMART Tool© Vendor

verizon

DRAWN BY: H.R. | CHECKED BY: HMA

REV.	DESCRIPTION	BY	DATE
0	FIRST ISSUE	H.R.	05/08/20

SHEET TITLE:
VZWSMART-SFK3
V-BRACING KIT

SHEET NUMBER: VZWSMART-SFK3
REV #: 0

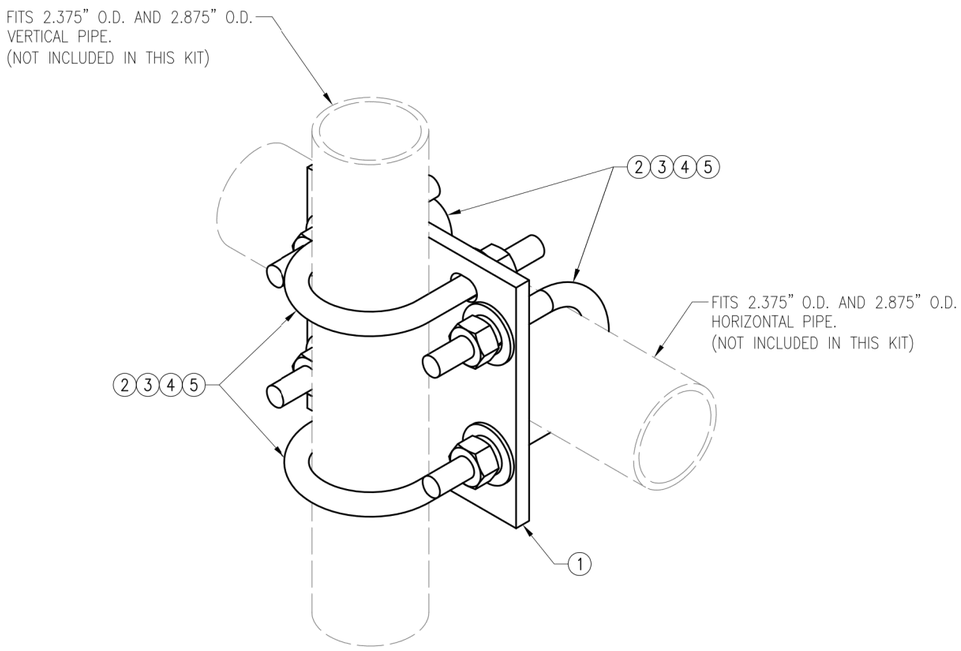

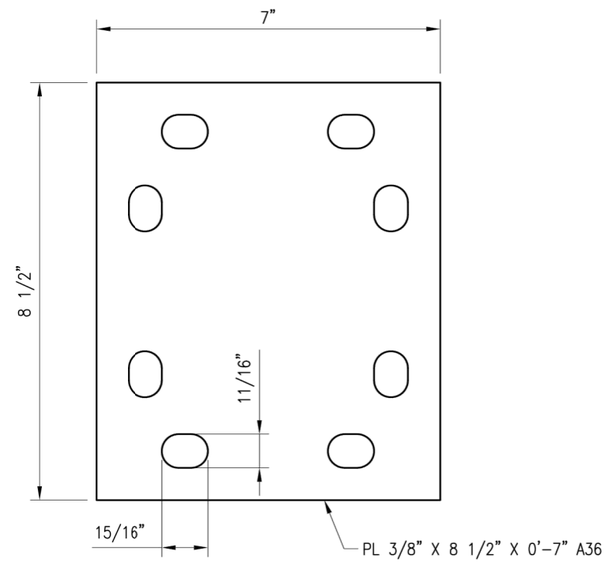

PL375-857

NOTES:
1. HOT-DIPPED GALVANIZED PER ASTM A123.

VZWSMART-MSK1 (CROSSOVER PLATE)

ITEM NO.	QTY.	PART NO.	DESCRIPTION	SHEET #	WT
1	1	PL375-857	PL 3/8" X 8 1/2" X 0'-7" A36	MSK1-F1	6
2	4	MS02-625-300-500	RU-BOLT 5/8" X 3" I.W. X 5" I.L. A36 (OR EQUIV.)	RBC-1	5
3	8	FW-625	5/8" HDG USS FLAT WASHER	---	1
4	8	LW-625	5/8" HDG LOCK WASHER	---	0
5	8	NUT-625	5/8" HDG HEX NUT	---	1
				GALVANIZED WT	14

VzW SMART Tool© Vendor

verizon

DRAWN BY: H.R | CHECKED BY: HMA

REV.	DESCRIPTION	BY	DATE
0	FIRST ISSUE	H.R	05/08/20

SHEET TITLE:

VZWSMART-MSK1 CROSSOVER PLATE

SHEET NUMBER: VZWSMART-MSK1

REV #: 0