CUDDY +FEDER LLP

445 Hamilton Avenue, 14th Floor
White Plains, New York 10601
T 914 761 1300
F 914 761 5372
cuddyfeder.com

Lucia Chiocchio
lchiocchio@cuddyfeder.com

12/18/18

VIA ELECTRONIC MAIL & OVERNIGHT MAIL
Melanie Bachman, Esq.
Executive Director
Connecticut Siting Council
10 Franklin Square
New Britain, CT 06051

Re: Request for Modification
TS-CING-046-181001
New Cingular Wireless PCS LLC Tower Share
515 Morehouse Road, Easton, Connecticut

Dear Executive Director Bachman:

This letter is respectfully submitted on behalf of New Cingular Wireless PCS, LLC ("AT&T") in connection with the Connecticut Siting Council's October 26, 2018 order approving AT&T's tower share at the existing telecommunications facility located at 515 Morehouse Road in Easton, Connecticut.

AT&T hereby respectfully requests a minor modification of the approved tower share plan for changes to AT&T's antenna mounts. The antenna mounts are detailed in the enclosed drawings and mount analysis prepared by Hudson Design Group LLC[1]. As noted in the enclosed mount analysis, the antenna mount changes are required to structurally accommodate AT&T's antennas. The updates to the antenna mounts are the only changes proposed.

The minor nature of these proposed changes poses no potential impact to the environment and as such, AT&T respectfully requests approval of this modification.

Thank you for your consideration of this request.

[1]Due to the size of the mount analysis report, only first two pages of the report are included as Attachment 2. Four (4) copies of the complete mount analysis report are being bulk filed with this submission for the Council's records.

CUDDY
+FEDER
LLP

Very truly yours,

Lucia Chiocchio

Lucia Chiocchio

Enclosures

cc: Hon. Adam W. Dunsby, First Selectman, Town of Easton
Phillip Doremus, Zoning Enforcement Officer, Town of Easton
Homeland Towers
AT&T
QC Development

PROJECT INFORMATION

SCOPE OF WORK:	TELECOMMUNICATIONS FACILITY (NSB):
SITE ADDRESS:	515 MOREHOUSE ROAD EASTON, CT 06612
LATITUDE:	41.23558 N, 41° 14' 08.10" N
LONGITUDE:	73.28537 W, 73° 17' 07.34" W
TYPE OF SITE:	MONOPOLE / OUTDOOR EQUIPMENT
STRUCTURE HEIGHT:	150'±
RAD CENTER:	135'±
CURRENT USE:	TELECOMMUNICATIONS FACILITY
PROPOSED USE:	TELECOMMUNICATIONS FACILITY

at&t

SITE NUMBER: CT1323

SITE NAME: MOREHOUSE ROAD

FA CODE: 10128143

PACE ID: MRCTB028433

PROJECT: NSB

DRAWING INDEX

SHEET NO.	DESCRIPTION	REV.
T-1	TITLE SHEET	2
GN-1	GENERAL NOTES	2
C-1	ABUTTERS PLAN	2
A-1	COMPOUND & EQUIPMENT PLANS	2
A-2	ANTENNA LAYOUTS & ELEVATION	2
A-3	DETAILS	2
A-4	SHELTER & GENERATOR DETAIL	2
SN-1	STRUCTURAL NOTES	2
S-1	STRUCTURAL DETAILS	2
E-1	ELECTRICAL NOTES & ONE-LINE DIAGRAM	2
RF-1	RF-PLUMBING DIAGRAM	2
G-1	GROUNDING DETAILS	2

VICINITY MAP

DIRECTIONS TO SITE:

DEPART ENTERPRISE DR TOWARD CAPITOL BLVD. 0.3 MI. TURN LEFT ONTO CAPITOL BLVD. 0.3 MI. TURN LEFT ONTO WEST ST. 0.3 MI. TAKE RAMP LEFT FOR I-91 S. 9.6 MI. AT EXIT 17, TAKE RAMP RIGHT FOR CT-15 SOUTH TOWARD E. MAIN ST / W. CROSS PKWY. 36.3 MI. AT EXIT 46, TAKE RAMP RIGHT TOWARD EASTON / FAIRFIELD. 246 FT. TURN RIGHT ONTO CONGRESS ST. 486 FT. TURN LEFT ONTO CT-59 / EASTON TPKE. 1.6 MI. TURN LEFT ONTO BEERS RD. 0.8 MI. TURN RIGHT ONTO MOREHOUSE RD. 0.7 MI. ARRIVE AT ENTRANCE TO SITE ON THE LEFT

GENERAL NOTES

1. THIS DOCUMENT IS THE CREATION, DESIGN, PROPERTY AND COPYRIGHTED WORK OF AT&T. ANY DUPLICATION OR USE WITHOUT EXPRESS WRITTEN CONSENT IS STRICTLY PROHIBITED. DUPLICATION AND USE BY GOVERNMENT AGENCIES FOR THE PURPOSES OF CONDUCTING THEIR LAWFULLY AUTHORIZED REGULATORY AND ADMINISTRATIVE FUNCTIONS IS SPECIFICALLY ALLOWED.
2. THE FACILITY IS AN UNMANNED PRIVATE AND SECURED EQUIPMENT INSTALLATION. IT IS ONLY ACCESSED BY TRAINED TECHNICIANS FOR PERIODIC ROUTINE MAINTENANCE AND THEREFORE DOES NOT REQUIRE ANY WATER OR SANITARY SEWER SERVICE. THE FACILITY IS NOT GOVERNED BY REGULATIONS REQUIRING PUBLIC ACCESS PER ADA REQUIREMENTS.
3. CONTRACTOR SHALL VERIFY ALL PLANS AND EXISTING DIMENSIONS AND CONDITIONS ON THE JOB SITE AND SHALL IMMEDIATELY NOTIFY THE AT&T MOBILITY REPRESENTATIVE IN WRITING OF DISCREPANCIES BEFORE PROCEEDING WITH THE WORK OR BE RESPONSIBLE FOR SAME.
4. CONSTRUCTION DRAWINGS ARE VALID FOR SIX MONTHS AFTER ENGINEER OF RECORD'S STAMPED AND SIGNED SUBMITTAL DATE LISTED HEREIN.

72 HOURS

CALL
BEFORE YOU DIG

CALL TOLL FREE 1-800-922-4455

OR CALL 811

UNDERGROUND SERVICE ALERT

STATE OF CONNECTICUT
DEREK J. CREASER
16,255
LICENSED PROFESSIONAL ENGINEER

HDG HUDSON Design Group LLC
45 BEECHWOOD DRIVE
NORTH ANDOVER, MA 01845
TEL: (978) 557-5553
FAX: (978) 336-5586

SAI
12 INDUSTRIAL WAY
SALEM, NH 03079

SITE NUMBER: CT1323
SITE NAME: MOREHOUSE ROAD

515 MOREHOUSE ROAD
EASTON, CT 06612
FAIRFIELD COUNTY

at&t
500 ENTERPRISE DRIVE, SUITE 3A
ROCKY HILL, CT 06067

NO.	DATE	REVISIONS	BY	CHK	APP'D
2	12/06/18	ISSUED FOR CONSTRUCTION	SF	AT	DJC
1	10/18/18	ISSUED FOR CONSTRUCTION	SB	AT	DJC
A	10/09/18	ISSUED FOR REVIEW	EB	AT	DJC

SCALE: AS SHOWN | DESIGNED BY: AT | DRAWN BY: SF

AT&T

TITLE SHEET
(NSB)

SITE NUMBER	DRAWING NUMBER	REV
CT1323	T-1	2

GROUNDING NOTES

1. THE SUBCONTRACTOR SHALL REVIEW AND INSPECT THE EXISTING FACILITY GROUNDING SYSTEM AND LIGHTNING PROTECTION SYSTEM (AS DESIGNED AND INSTALLED) FOR STRICT COMPLIANCE WITH THE NEC (AS ADOPTED BY THE AHJ), THE SITE-SPECIFIC (UL, LPI, OR NFPA) LIGHTING PROTECTION CODE, AND GENERAL COMPLIANCE WITH TELCORDIA AND TIA GROUNDING STANDARDS. THE SUBCONTRACTOR SHALL REPORT ANY VIOLATIONS OR ADVERSE FINDINGS TO THE CONTRACTOR FOR RESOLUTION.
2. ALL GROUND ELECTRODE SYSTEMS (INCLUDING TELECOMMUNICATION, RADIO, LIGHTNING PROTECTION, AND AC POWER GES'S) SHALL BE BONDED TOGETHER, AT OR BELOW GRADE, BY TWO OR MORE COPPER BONDING CONDUCTORS IN ACCORDANCE WITH THE NEC.
3. THE SUBCONTRACTOR SHALL PERFORM IEEE FALL-OF-POTENTIAL RESISTANCE TO EARTH TESTING (PER IEEE 1100 AND 81) FOR NEW GROUND ELECTRODE SYSTEMS. THE SUBCONTRACTOR SHALL FURNISH AND INSTALL SUPPLEMENTAL GROUND ELECTRODES AS NEEDED TO ACHIEVE A TEST RESULT OF 5 OHMS OR LESS.
4. METAL RACEWAY SHALL NOT BE USED AS THE NEC REQUIRED EQUIPMENT GROUND CONDUCTOR. STRANDED COPPER CONDUCTORS WITH GREEN INSULATION, SIZED IN ACCORDANCE WITH THE NEC, SHALL BE FURNISHED AND INSTALLED WITH THE POWER CIRCUITS TO BTS EQUIPMENT.
5. EACH BTS CABINET FRAME SHALL BE DIRECTLY CONNECTED TO THE MASTER GROUND BAR WITH GREEN INSULATED SUPPLEMENTAL EQUIPMENT GROUND WIRES, 6 AWG STRANDED COPPER OR LARGER FOR INDOOR BTS 2 AWG STRANDED COPPER FOR OUTDOOR BTS.
6. EXOTHERMIC WELDS SHALL BE USED FOR ALL GROUNDING CONNECTIONS BELOW GRADE.
7. APPROVED ANTIOXIDANT COATINGS (I.E., CONDUCTIVE GEL OR PASTE) SHALL BE USED ON ALL COMPRESSION AND BOLTED GROUND CONNECTIONS.
8. ICE BRIDGE BONDING CONDUCTORS SHALL BE EXOTHERMICALLY BONDED OR BOLTED TO GROUND BAR.
9. ALUMINUM CONDUCTOR OR COPPER CLAD STEEL CONDUCTOR SHALL NOT BE USED FOR GROUNDING CONNECTIONS.
10. MISCELLANEOUS ELECTRICAL AND NON-ELECTRICAL METAL BOXES, FRAMES AND SUPPORTS SHALL BE BONDED TO THE GROUND RING, IN ACCORDANCE WITH THE NEC.
11. METAL CONDUIT SHALL BE MADE ELECTRICALLY CONTINUOUS WITH LISTED BONDING FITTINGS OR BY BONDING ACROSS THE DISCONTINUITY WITH 6 AWS COPPER WIRE UL APPROVED GROUNDING TYPE CONDUIT CLAMPS.
12. ALL NEW STRUCTURES WITH A FOUNDATION AND/OR FOOTING HAVING 20 FT. OR MORE OF 1/2 IN. OR GREATER ELECTRICALLY CONDUCTIVE REINFORCING STEEL MUST HAVE IT BONDED TO THE GROUND RING USING AN EXOTHERMIC WELD CONNECTION USING #2 AWG SOLID BARE TINNED COPPER GROUND WIRE, PER NEC 250.50

GENERAL NOTES

1. FOR THE PURPOSE OF CONSTRUCTION DRAWING, THE FOLLOWING DEFINITIONS SHALL APPLY:

   CONTRACTOR – SAI
   SUBCONTRACTOR – GENERAL CONTRACTOR (CONSTRUCTION)
   OWNER – AT&T MOBILITY

2. PRIOR TO THE SUBMISSION OF BIDS, THE BIDDING SUBCONTRACTOR SHALL VISIT THE CELL SITE TO FAMILIARIZE WITH THE EXISTING CONDITIONS AND TO CONFIRM THAT THE WORK CAN BE ACCOMPLISHED AS SHOWN ON THE CONSTRUCTION DRAWINGS. ANY DISCREPANCY FOUND SHALL BE BROUGHT TO THE ATTENTION OF CONTRACTOR.
3. ALL MATERIALS FURNISHED AND INSTALLED SHALL BE IN STRICT ACCORDANCE WITH ALL APPLICABLE CODES, REGULATIONS, AND ORDINANCES. SUBCONTRACTOR SHALL ISSUE ALL APPROPRIATE NOTICES AND COMPLY WITH ALL LAWS, ORDINANCES, RULES, REGULATIONS, AND LAWFUL ORDERS OF ANY PUBLIC AUTHORITY REGARDING THE PERFORMANCE OF THE WORK. ALL WORK CARRIED OUT SHALL COMPLY WITH ALL APPLICABLE MUNICIPAL AND UTILITY COMPANY SPECIFICATIONS AND LOCAL JURISDICTIONAL CODES, ORDINANCES AND APPLICABLE REGULATIONS.
4. DRAWINGS PROVIDED HERE ARE NOT TO BE SCALED AND ARE INTENDED TO SHOW OUTLINE ONLY.
5. UNLESS NOTED OTHERWISE, THE WORK SHALL INCLUDE FURNISHING MATERIALS, EQUIPMENT, APPURTENANCES, AND LABOR NECESSARY TO COMPLETE ALL INSTALLATIONS AS INDICATED ON THE DRAWINGS.
6. "KITTING LIST" SUPPLIED WITH THE BID PACKAGE IDENTIFIES ITEMS THAT WILL BE SUPPLIED BY CONTRACTOR. ITEMS NOT INCLUDED IN THE BILL OF MATERIALS AND KITTING LIST SHALL BE SUPPLIED BY THE SUBCONTRACTOR.
7. THE SUBCONTRACTOR SHALL INSTALL ALL EQUIPMENT AND MATERIALS IN ACCORDANCE WITH MANUFACTURER'S RECOMMENDATIONS UNLESS SPECIFICALLY STATED OTHERWISE.
8. IF THE SPECIFIED EQUIPMENT CANNOT BE INSTALLED AS SHOWN ON THESE DRAWINGS, THE SUBCONTRACTOR SHALL PROPOSE AN ALTERNATIVE INSTALLATION SPACE FOR APPROVAL BY THE CONTRACTOR.
9. SUBCONTRACTOR SHALL DETERMINE ACTUAL ROUTING OF CONDUIT, POWER AND T1 CABLES, GROUNDING CABLES AS SHOWN ON THE POWER, GROUNDING AND TELCO PLAN DRAWING. SUBCONTRACTOR SHALL UTILIZE EXISTING TRAYS AND/OR SHALL ADD NEW TRAYS AS NECESSARY. SUBCONTRACTOR SHALL CONFIRM THE ACTUAL ROUTING WITH THE CONTRACTOR.
10. THE SUBCONTRACTOR SHALL PROTECT EXISTING IMPROVEMENTS, PAVEMENTS, CURBS, LANDSCAPING AND STRUCTURES. ANY DAMAGED PART SHALL BE REPAIRED AT SUBCONTRACTOR'S EXPENSE TO THE SATISFACTION OF OWNER.
11. SUBCONTRACTOR SHALL LEGALLY AND PROPERLY DISPOSE OF ALL SCRAP MATERIALS SUCH AS COAXIAL CABLES AND OTHER ITEMS REMOVED FROM THE EXISTING FACILITY. ANTENNAS REMOVED SHALL BE RETURNED TO THE OWNER'S DESIGNATED LOCATION.
12. SUBCONTRACTOR SHALL LEAVE PREMISES IN CLEAN CONDITION.
13. ALL CONCRETE REPAIR WORK SHALL BE DONE IN ACCORDANCE WITH AMERICAN CONCRETE INSTITUTE (ACI) 301.
14. ANY NEW CONCRETE NEEDED FOR THE CONSTRUCTION SHALL BE AIR-ENTRAINED AND SHALL HAVE 4000 PSI STRENGTH AT 28 DAYS. ALL CONCRETE WORK SHALL BE DONE IN ACCORDANCE WITH ACI 318 CODE REQUIREMENTS.
15. ALL STRUCTURAL STEEL WORK SHALL BE DETAILED, FABRICATED AND ERECTED IN ACCORDANCE WITH AISC SPECIFICATIONS. ALL STRUCTURAL STEEL SHALL BE ASTM A36 (Fy = 36 ksi) UNLESS OTHERWISE NOTED. PIPES SHALL BE ASTM A53 TYPE E (Fy = 36 ksi). ALL STEEL EXPOSED TO WEATHER SHALL BE HOT DIPPED GALVANIZED. TOUCHUP ALL SCRATCHES AND OTHER MARKS IN THE FIELD AFTER STEEL IS ERECTED USING A COMPATIBLE ZINC RICH PAINT.
16. CONSTRUCTION SHALL COMPLY WITH SPECIFICATIONS AND "GENERAL CONSTRUCTION SERVICES FOR CONSTRUCTION OF AT&T SITES."
17. SUBCONTRACTOR SHALL VERIFY ALL EXISTING DIMENSIONS AND CONDITIONS PRIOR TO COMMENCING ANY WORK. ALL DIMENSIONS OF EXISTING CONSTRUCTION SHOWN ON THE DRAWINGS MUST BE VERIFIED. SUBCONTRACTOR SHALL NOTIFY THE CONTRACTOR OF ANY DISCREPANCIES PRIOR TO ORDERING MATERIAL OR PROCEEDING WITH CONSTRUCTION.
18. THE EXISTING CELL SITE IS IN FULL COMMERCIAL OPERATION. ANY CONSTRUCTION WORK BY SUBCONTRACTOR SHALL NOT DISRUPT THE EXISTING NORMAL OPERATION. ANY WORK ON EXISTING EQUIPMENT MUST BE COORDINATED WITH CONTRACTOR. ALSO, WORK SHOULD BE SCHEDULED FOR AN APPROPRIATE MAINTENANCE WINDOW USUALLY IN LOW TRAFFIC PERIODS AFTER MIDNIGHT.
19. SINCE THE CELL SITE IS ACTIVE, ALL SAFETY PRECAUTIONS MUST BE TAKEN WHEN WORKING AROUND HIGH LEVELS OF ELECTROMAGNETIC RADIATION. EQUIPMENT SHOULD BE SHUTDOWN PRIOR TO PERFORMING ANY WORK THAT COULD EXPOSE THE WORKERS TO DANGER. PERSONAL RF EXPOSURE MONITORS ARE ADVISED TO BE WORN TO ALERT OF ANY DANGEROUS EXPOSURE LEVELS.
20. APPLICABLE BUILDING CODES:
    SUBCONTRACTOR'S WORK SHALL COMPLY WITH ALL APPLICABLE NATIONAL, STATE, AND LOCAL CODES AS ADOPTED BY THE LOCAL AUTHORITY HAVING JURISDICTION (AHJ) FOR THE LOCATION. THE EDITION OF THE AHJ ADOPTED CODES AND STANDARDS IN EFFECT ON THE DATE OF CONTRACT AWARD SHALL GOVERN THE DESIGN.

    BUILDING CODE: IBC 2012 WITH 2016 CT STATE BUILDING CODE AMENDMENTS
    ELECTRICAL CODE: REFER TO ELECTRICAL DRAWINGS

    SUBCONTRACTOR'S WORK SHALL COMPLY WITH THE LATEST EDITION OF THE FOLLOWING STANDARDS:

    AMERICAN CONCRETE INSTITUTE (ACI) 318; BUILDING CODE REQUIREMENTS FOR STRUCTURAL CONCRETE;

    AMERICAN INSTITUTE OF STEEL CONSTRUCTION (AISC) MANUAL OF STEEL CONSTRUCTION, ASD, FOURTEENTH EDITION;

    TELECOMMUNICATIONS INDUSTRY ASSOCIATION (TIA) 222-G, STRUCTURAL STANDARDS FOR STEEL

    FOR ANY CONFLICTS BETWEEN SECTIONS OF LISTED CODES AND STANDARDS REGARDING MATERIAL, METHODS OF CONSTRUCTION, OR OTHER REQUIREMENTS, THE MOST RESTRICTIVE REQUIREMENT SHALL GOVERN. WHERE THERE IS CONFLICT BETWEEN A GENERAL REQUIREMENT AND A SPECIFIC REQUIREMENT, THE SPECIFIC REQUIREMENT SHALL GOVERN.

ABBREVIATIONS

AGL	ABOVE GRADE LEVEL	EQ	EQUAL	REQ	REQUIRED
AWG	AMERICAN WIRE GAUGE	GC	GENERAL CONTRACTOR	RF	RADIO FREQUENCY
BBU	BATTERY BACKUP UNIT	GRC	GALVANIZED RIGID CONDUIT	TBD	TO BE DETERMINED
BTCW	BARE TINNED SOLID COPPER WIRE	MGB	MASTER GROUND BAR	TBR	TO BE REMOVED
BGR	BURIED GROUND RING	MIN	MINIMUM	TBRR	TO BE REMOVED AND REPLACED
BTS	BASE TRANSCEIVER STATION	P	PROPOSED	TYP	TYPICAL
E	EXISTING	NTS	NOT TO SCALE	UG	UNDER GROUND
EGB	EQUIPMENT GROUND BAR	RAD	RADIATION CENTER LINE (ANTENNA)	VIF	VERIFY IN FIELD
EGR	EQUIPMENT GROUND RING	REF	REFERENCE		

HDG HUDSON Design Group LLC
45 BEECHWOOD DRIVE
NORTH ANDOVER, MA 01845
TEL: (978) 557-5553
FAX: (978) 336-5586

SAI
12 INDUSTRIAL WAY
SALEM, NH 03079

SITE NUMBER: CT1323
SITE NAME: MOREHOUSE ROAD

515 MOREHOUSE ROAD
EASTON, CT 06612
FAIRFIELD COUNTY

at&t
500 ENTERPRISE DRIVE, SUITE 3A
ROCKY HILL, CT 06067

NO.	DATE	REVISIONS	BY	CHK	APP'D
2	12/06/18	ISSUED FOR CONSTRUCTION	SF	AT	DJC
1	10/18/18	ISSUED FOR CONSTRUCTION	SB	AT	DJC
A	10/09/18	ISSUED FOR REVIEW	EB	AT	DJC

SCALE: AS SHOWN | DESIGNED BY: AT | DRAWN BY: SF

STATE OF CONNECTICUT
DEREK J. CREASER
16,235
LICENSED PROFESSIONAL ENGINEER

AT&T

GENERAL NOTES
(NSB)

SITE NUMBER	DRAWING NUMBER	REV
CT1323	GN-1	2

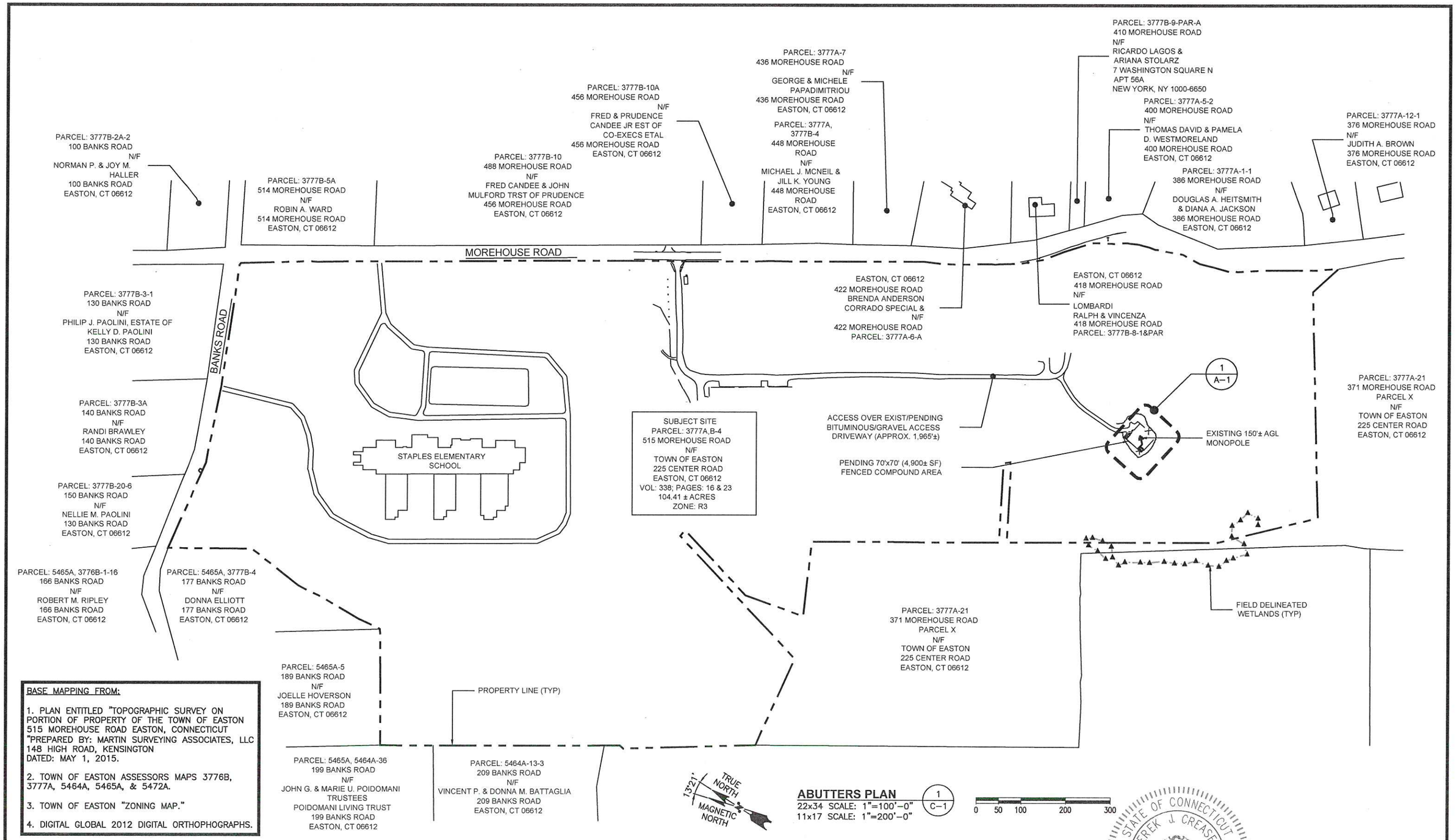

BASE MAPPING FROM:

1. PLAN ENTITLED "TOPOGRAPHIC SURVEY ON PORTION OF PROPERTY OF THE TOWN OF EASTON 515 MOREHOUSE ROAD EASTON, CONNECTICUT "PREPARED BY: MARTIN SURVEYING ASSOCIATES, LLC 148 HIGH ROAD, KENSINGTON DATED: MAY 1, 2015.

2. TOWN OF EASTON ASSESSORS MAPS 3776B, 3777A, 5464A, 5465A, & 5472A.

3. TOWN OF EASTON "ZONING MAP."

4. DIGITAL GLOBAL 2012 DIGITAL ORTHOPHOGRAPHS.

ABUTTERS PLAN

1 / C-1

22x34 SCALE: 1"=100'-0"
11x17 SCALE: 1"=200'-0"

HUDSON Design Group LLC
45 BEECHWOOD DRIVE
NORTH ANDOVER, MA 01845
TEL: (978) 557-5553
FAX: (978) 336-5586

SAI
12 INDUSTRIAL WAY
SALEM, NH 03079

SITE NUMBER: CT1323
SITE NAME: MOREHOUSE ROAD

515 MOREHOUSE ROAD
EASTON, CT 06612
FAIRFIELD COUNTY

at&t
500 ENTERPRISE DRIVE, SUITE 3A
ROCKY HILL, CT 06067

NO.	DATE	REVISIONS	BY	CHK	APP'D
2	12/06/18	ISSUED FOR CONSTRUCTION	SF	AT	DJC
1	10/18/18	ISSUED FOR CONSTRUCTION	SB	AT	DJC
A	10/09/18	ISSUED FOR REVIEW	EB	AT	DJC

SCALE: AS SHOWN | DESIGNED BY: AT | DRAWN BY: SF

STATE OF CONNECTICUT
DEREK J. CREASER
No. 28355
LICENSED
PROFESSIONAL ENGINEER

AT&T

ABUTTERS PLAN
(NSB)

SITE NUMBER	DRAWING NUMBER	REV
CT1323	C-1	2

NOTE:
REFER TO THE FINAL RF DATA SHEET FOR FINAL ANTENNA SETTINGS.

NOTE:
PROPOSED POWER, TELCO, & GROUNDING TO COME FROM EXISTING SOURCES (ROUTING TO BE DETERMINED)

NOTE:
REFER TO STRUCTURAL ANALYSIS BY: HUDSON DESIGN GROUP, LLC, DATED: AUGUST 15, 2018, FOR THE CAPACITY OF THE EXISTING STRUCTURES TO SUPPORT THE PROPOSED EQUIPMENT.

NOTE:
AN ANALYSIS FOR THE CAPACITY OF THE EXISTING **ANTENNA MOUNT** TO SUPPORT THE PROPOSED LOADING HAS BEEN COMPLETED BY: HUDSON DESIGN GROUP, LLC. DATED: DECEMBER 03, 2018

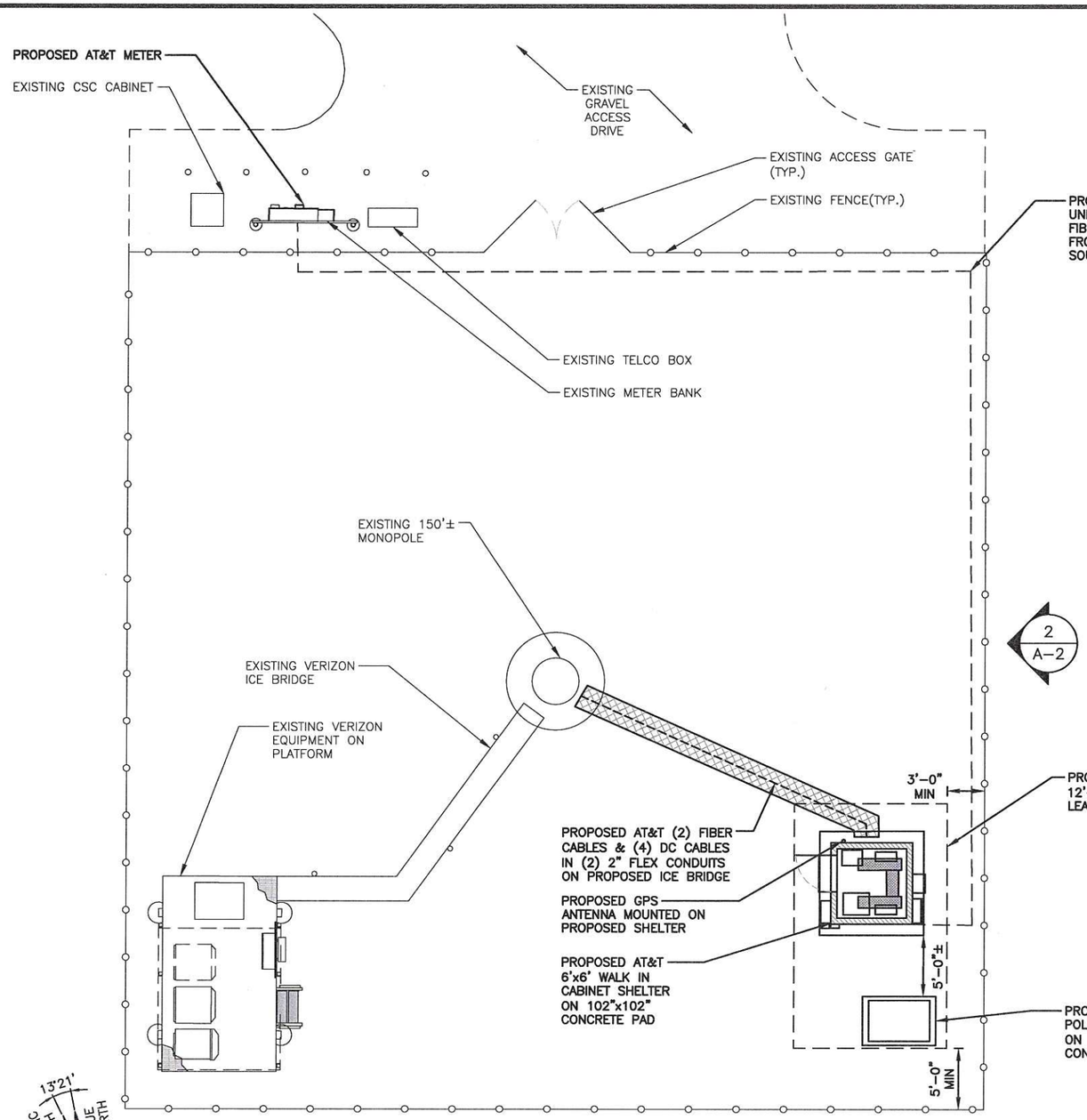

COMPOUND PLAN (1 / A-1)
22x34 SCALE: 3/16"=1'-0"
11x17 SCALE: 3/32"=1'-0"
0 2'-8" 5'-4" 10'-8" 16'-0"

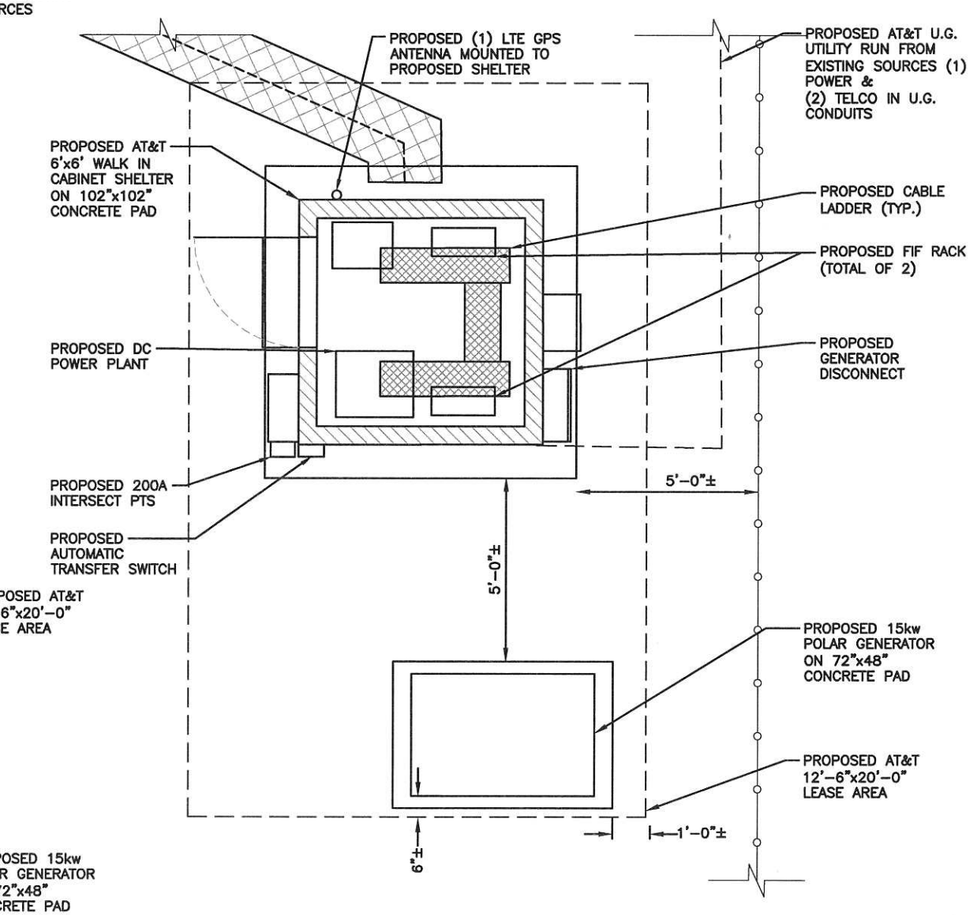

EQUIPMENT PLAN (2 / A-1)
22x34 SCALE: 1/2"=1'-0"
11x17 SCALE: 1/4"=1'-0"
0 1'-0" 2'-0" 4'-0" 6'-0"

HDG HUDSON Design Group LLC
45 BEECHWOOD DRIVE
NORTH ANDOVER, MA 01845
TEL: (978) 557-5553
FAX: (978) 336-5586

SAI
12 INDUSTRIAL WAY
SALEM, NH 03079

SITE NUMBER: CT1323
SITE NAME: MOREHOUSE ROAD

515 MOREHOUSE ROAD
EASTON, CT 06612
FAIRFIELD COUNTY

at&t
500 ENTERPRISE DRIVE, SUITE 3A
ROCKY HILL, CT 06067

NO.	DATE	REVISIONS	BY	CHK	APP'D
2	12/06/18	ISSUED FOR CONSTRUCTION	SF	AT	DJC
1	10/18/18	ISSUED FOR CONSTRUCTION	SB	AT	DJC
A	10/09/18	ISSUED FOR REVIEW	EB	AT	DJC

SCALE: AS SHOWN | DESIGNED BY: AT | DRAWN BY: SF

STATE OF CONNECTICUT
DEREK J. CREASER
LICENSED PROFESSIONAL ENGINEER

AT&T

COMPOUND & EQUIPMENT PLAN (NSB)

SITE NUMBER	DRAWING NUMBER	REV
CT1323	A-1	2

NOTE:

REFER TO THE FINAL RF DATA SHEET FOR FINAL ANTENNA SETTINGS.

NOTE:

PROPOSED POWER, TELCO, & GROUNDING TO COME FROM EXISTING SOURCES (ROUTING TO BE DETERMINED)

NOTE:

REFER TO STRUCTURAL ANALYSIS BY: HUDSON DESIGN GROUP, LLC, DATED: AUGUST 15, 2018, FOR THE CAPACITY OF THE EXISTING STRUCTURES TO SUPPORT THE PROPOSED EQUIPMENT.

NOTE:

AN ANALYSIS FOR THE CAPACITY OF THE EXISTING **ANTENNA MOUNT** TO SUPPORT THE PROPOSED LOADING HAS BEEN COMPLETED BY: HUDSON DESIGN GROUP, LLC. DATED: DECEMBER 03, 2018

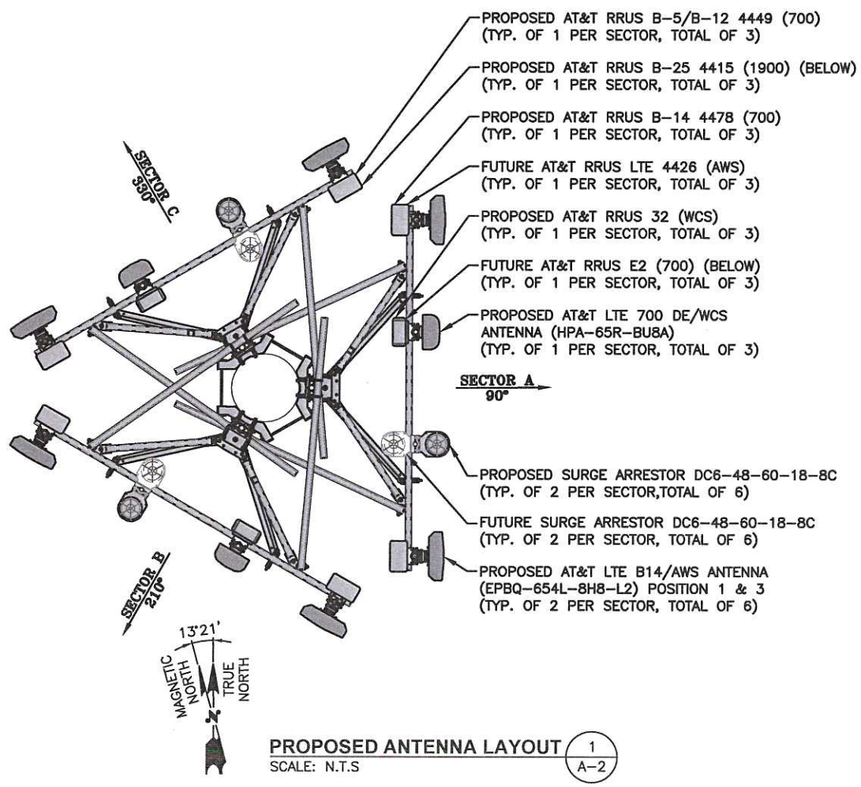

PROPOSED ANTENNA LAYOUT (1 / A-2)

SCALE: N.T.S

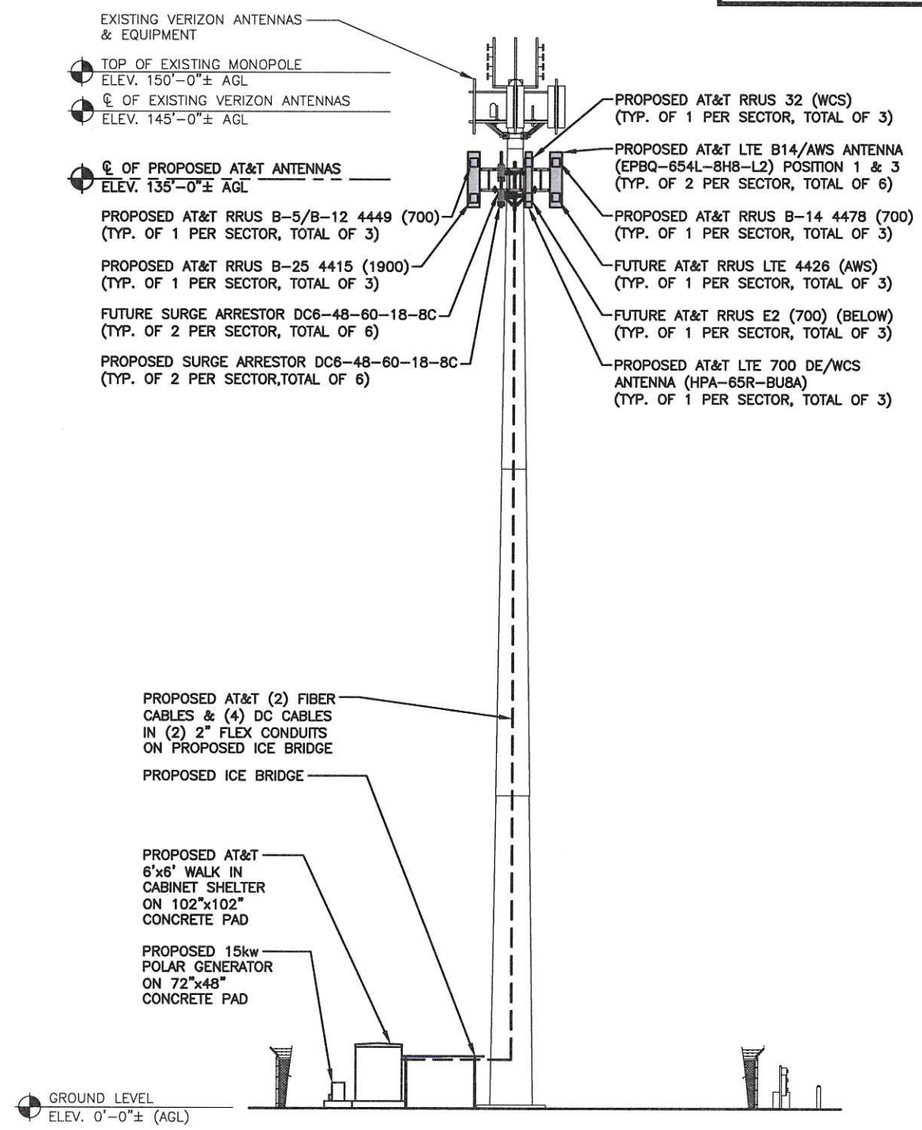

ELEVATION (2 / A-2)

22x34 SCALE: 1/8"=1'-0"
11x17 SCALE: 1/16"=1'-0"

0 4'-0" 8'-0" 16'-0" 24'-0"

STATE OF CONNECTICUT
DEREK J. CREASER
No. 23355
LICENSED
PROFESSIONAL ENGINEER

HUDSON Design Group LLC
45 BEECHWOOD DRIVE
NORTH ANDOVER, MA 01845
TEL: (978) 557-5553
FAX: (978) 336-5586

SAI
12 INDUSTRIAL WAY
SALEM, NH 03079

SITE NUMBER: CT1323
SITE NAME: MOREHOUSE ROAD

515 MOREHOUSE ROAD
EASTON, CT 06612
FAIRFIELD COUNTY

at&t
500 ENTERPRISE DRIVE, SUITE 3A
ROCKY HILL, CT 06067

NO.	DATE	REVISIONS	BY	CHK	APP'D
2	12/06/18	ISSUED FOR CONSTRUCTION	SF	AT	DJC
1	10/18/18	ISSUED FOR CONSTRUCTION	SB	AT	DJC
A	10/09/18	ISSUED FOR REVIEW	EB	AT	DJC

SCALE: AS SHOWN | DESIGNED BY: AT | DRAWN BY: SF

AT&T

ANTENNA LAYOUT & ELEVATION
(NSB)

SITE NUMBER	DRAWING NUMBER	REV
CT1323	A-2	2

NOTE:

REFER TO THE FINAL RF DATA SHEET FOR FINAL ANTENNA SETTINGS.

NOTE:

AN ANALYSIS FOR THE CAPACITY OF THE EXISTING **ANTENNA MOUNT** TO SUPPORT THE PROPOSED LOADING HAS BEEN COMPLETED BY: HUDSON DESIGN GROUP, LLC. DATED: DECEMBER 03, 2018

NOTE:

REFER TO STRUCTURAL ANALYSIS BY: HUDSON DESIGN GROUP, LLC, DATED: AUGUST 15, 2018, FOR THE CAPACITY OF THE EXISTING STRUCTURES TO SUPPORT THE PROPOSED EQUIPMENT.

NOTE:

PROPOSED POWER, TELCO, & GROUNDING TO COME FROM EXISTING SOURCES (ROUTING TO BE DETERMINED)

ANTENNA SCHEDULE

SECTOR	EXISTING/PROPOSED	BAND	ANTENNA	SIZE (INCHES) (LxWxD)	ANTENNA ℄ HEIGHT	AZIMUTH	TMA/DIPLEXER	RRU	SIZE (INCHES) (LxWxD)	FEEDER	RAYCAP
A1	PROPOSED	LTE 700 B14/AWS	EPBQ-654L8H8-L2	96x21x6.3	135±	90°	–	(P)(1) 4478 B14 (700) (F)(1) 4426 (AWS)	15x13.2x7.4 15X13.2X7.4	–	(F)(2) RAYCAP DC6-48-60-18-8C (P)(2) RAYCAP DC6-48-60-0-8C
A2	PROPOSED	LTE 700 DE/WCS	HPA65R-BU8A	96X11.7X7.6	135±	90°	–	(F)(1) RRUS-E2 (700) (P)(1) RRUS-32 (WCS)	20x20.4x9.5 27.2x12.1x7.0	–	
A3	PROPOSED	LTE 700 BC/850/PCS	EPBQ-654L8H8-L2	96x21x6.3	135±	90°	–	(P)(1) 4449 (850) (P)(1) 4415 (PCS)	15x13.2x7.4 15X13.2X5.4	–	
A4	–	–	–	–	–	–	–	–	–	–	
B1	PROPOSED	LTE 700 B14/AWS	EPBQ-654L8H8-L2	96x21x6.3	135±	210°	–	(P)(1) 4478 B14 (700) (F)(1) 4426 (AWS)	15x13.2x7.4 15X13.2X7.4	–	(F)(2) RAYCAP DC6-48-60-18-8C (P)(2) RAYCAP DC6-48-60-0-8C
B2	PROPOSED	LTE 700 DE/WCS	HPA65R-BU8A	96X11.7X7.6	135±	210°	–	(F)(1) RRUS-E2 (700) (P)(1) RRUS-32 (WCS)	20x20.4x9.5 27.2x12.1x7.0	–	
B3	PROPOSED	LTE 700 BC/850/PCS	EPBQ-654L8H8-L2	96x21x6.3	135±	210°	–	(P)(1) 4449 (850) (P)(1) 4415 (PCS)	15x13.2x7.4 15X13.2X5.4	–	
B4	–	–	–	–	–	–	–	–	–	–	
C1	PROPOSED	LTE 700 B14/AWS	EPBQ-654L8H8-L2	96x21x6.3	135±	330°	–	(P)(1) 4478 B14 (700) (F)(1) 4426 (AWS)	15x13.2x7.4 15X13.2X7.4	–	(F)(2) RAYCAP DC6-48-60-18-8C (P)(2) RAYCAP DC6-48-60-0-8C
C2	PROPOSED	LTE 700 DE/WCS	HPA65R-BU8A	96X11.7X7.6	135±	330°	–	(F)(1) RRUS-E2 (700) (P)(1) RRUS-32 (WCS)	20x20.4x9.5 27.2x12.1x7.0	–	
C3	PROPOSED	LTE 700 BC/850/PCS	EPBQ-654L8H8-L2	96x21x6.3	135±	330°	–	(P)(1) 4449 (850) (P)(1) 4415 (PCS)	15x13.2x7.4 15X13.2X5.4	–	
C4	–	–	–	–	–	–	–	–	–	–	

FINAL ANTENNA SCHEDULE (1 / A-3)
SCALE: N.T.S

RRU CHART

QUANTITY	MODEL	L	W	D
3(P)	RRUS-32	27.2"	12.1"	7.0"
3(F)	RRUS-E2	20.4"	18.5"	7.5"
3(P)	4415	15.0"	13.2"	5.4"
3(P)	4426	15.0"	13.2"	5.8"
3(P)	4449	17.9"	13.2"	9.5"
3(P)	4478	18.1"	13.4"	8.3"

NOTE:
MOUNT PER MANUFACTURER'S SPECIFICATIONS

NOTE:

SEE RFDS FOR RRH FREQUENCY AND MODEL NUMBER

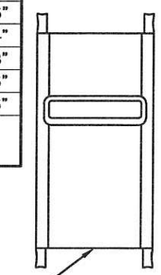

PROPOSED RRU REFER TO THE FINAL RFDS AND CHART FOR QUANTITY, MODEL AND DIMENSIONS

NOTE:
MOUNT PER MANUFACTURER'S SPECIFICATIONS.

PROPOSED RRUS DETAIL (3 / A-3)
SCALE: N.T.S

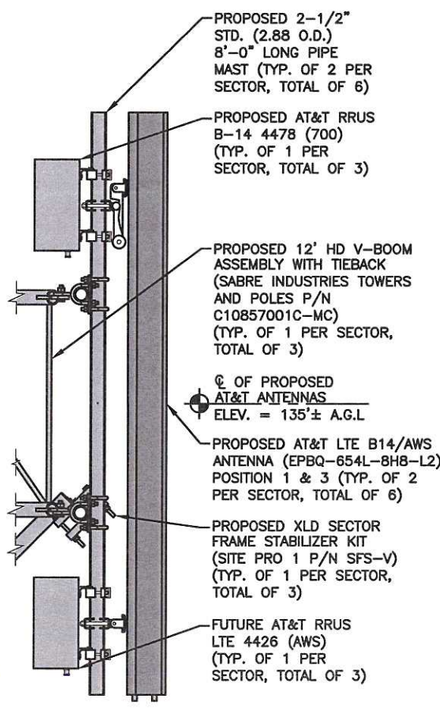

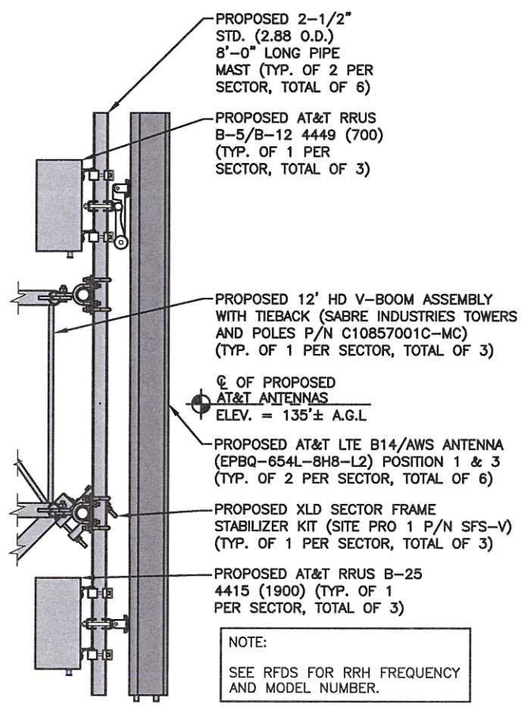

NOTE:

SEE RFDS FOR RRH FREQUENCY AND MODEL NUMBER.

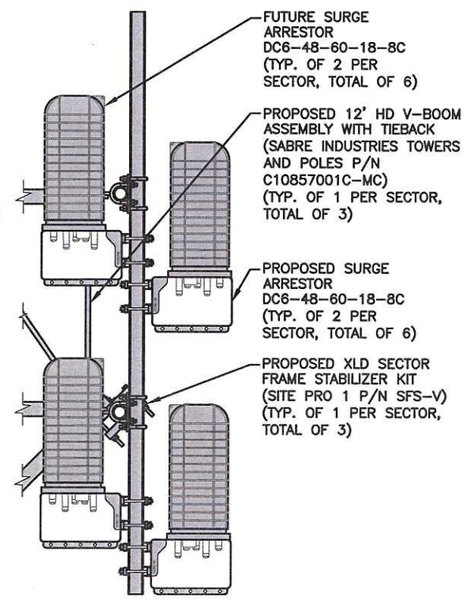

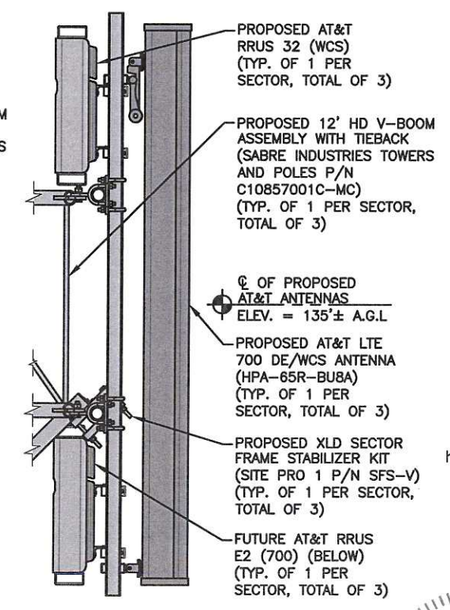

PROPOSED SECTOR FRAME, ANTENNA,SURGE SUPPRESSOR & RRH'S MOUNTING DETAIL (2 / A-3)
SCALE: N.T.S

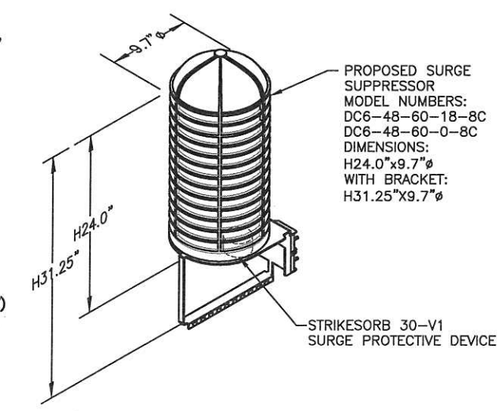

NOTE:
MOUNT PER MANUFACTURER'S SPECIFICATIONS.

DC SURGE SUPPRESSOR DETAIL (4 / A-3)
SCALE: N.T.S

HUDSON Design Group LLC
45 BEECHWOOD DRIVE
NORTH ANDOVER, MA 01845
TEL: (978) 557-5553
FAX: (978) 336-5586

SAI
12 INDUSTRIAL WAY
SALEM, NH 03079

SITE NUMBER: CT1323
SITE NAME: MOREHOUSE ROAD

515 MOREHOUSE ROAD
EASTON, CT 06612
FAIRFIELD COUNTY

at&t
500 ENTERPRISE DRIVE, SUITE 3A
ROCKY HILL, CT 06067

NO.	DATE	REVISIONS	BY	CHK	APP'D
2	12/06/18	ISSUED FOR CONSTRUCTION	SF	AT	DJG
1	10/18/18	ISSUED FOR CONSTRUCTION	SB	AT	DJG
A	10/09/18	ISSUED FOR REVIEW	EB	AT	DJG

SCALE: AS SHOWN | DESIGNED BY: AT | DRAWN BY: SF

STATE OF CONNECTICUT DEREK J. GRAY LICENSED PROFESSIONAL ENGINEER

AT&T

DETAILS (NSB)

SITE NUMBER	DRAWING NUMBER	REV
CT1323	A-3	2

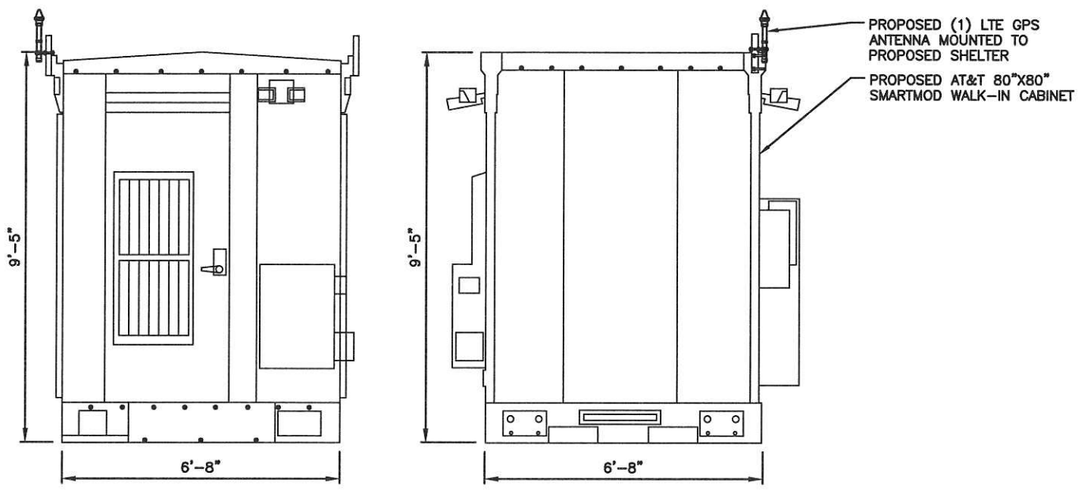

TYPICAL SHELTER DETAIL (1 / A-4)
SCALE: N.T.S

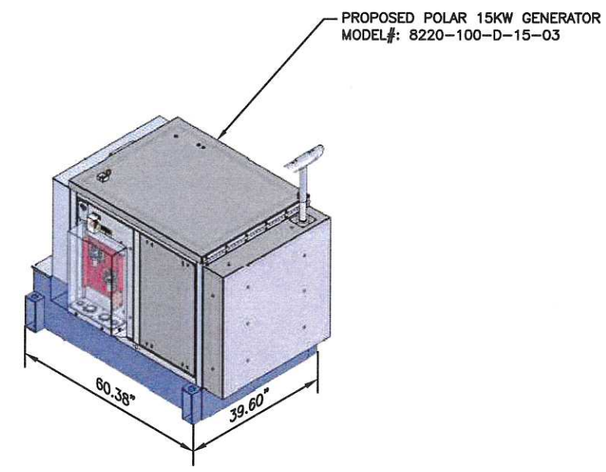

GENERATOR DETAIL (2 / A-4)
SCALE: N.T.S

HUDSON Design Group LLC
45 BEECHWOOD DRIVE
NORTH ANDOVER, MA 01845
TEL: (978) 557-5553
FAX: (978) 336-5586

SAI
12 INDUSTRIAL WAY
SALEM, NH 03079

SITE NUMBER: CT1323
SITE NAME: MOREHOUSE ROAD

515 MOREHOUSE ROAD
EASTON, CT 06612
FAIRFIELD COUNTY

at&t
500 ENTERPRISE DRIVE, SUITE 3A
ROCKY HILL, CT 06067

NO.	DATE	REVISIONS	BY	CHK	APP'D
2	12/06/18	ISSUED FOR CONSTRUCTION	SF	AT	DJC
1	10/18/18	ISSUED FOR CONSTRUCTION	SB	AT	DJC
A	10/09/18	ISSUED FOR REVIEW	EB	AT	DJC

SCALE: AS SHOWN | DESIGNED BY: AT | DRAWN BY: SF

STATE OF CONNECTICUT
DEREK J. CREASER
16,255
LICENSED PROFESSIONAL ENGINEER

AT&T

SHELTER & GENERATOR DETAIL (NSB)

SITE NUMBER	DRAWING NUMBER	REV
CT1323	A-4	2

STRUCTURAL NOTES:

1. DESIGN REQUIREMENTS ARE PER STATE BUILDING CODE AND APPLICABLE SUPPLEMENTS, INTERNATIONAL BUILDING CODE, EIA/TIA-222-G STRUCTURAL STANDARDS FOR STEEL ANTENNA, TOWERS AND ANTENNA SUPPORTING STRUCTURES.
2. CONTRACTOR SHALL VERIFY ALL DIMENSIONS AND CONDITIONS IN THE FIELD PRIOR TO FABRICATION AND ERECTION OF ANY MATERIAL. ANY UNUSUAL CONDITIONS SHALL BE REPORTED TO THE ATTENTION OF THE CONSTRUCTION MANAGER AND ENGINEER OF RECORD.
3. DESIGN AND CONSTRUCTION OF STRUCTURAL STEEL SHALL CONFORM TO THE AMERICAN INSTITUTE OF STEEL CONSTRUCTION "SPECIFICATION FOR THE DESIGN, FABRICATION AND ERECTION OF STRUCTURAL STEEL FOR BUILDINGS".
4. STRUCTURAL STEEL SHALL CONFORM TO ASTM A992 (Fy=50 ksi), MISCELLANEOUS STEEL SHALL CONFORM TO ASTM A36 UNLESS OTHERWISE INDICATED.
5. STEEL PIPE SHALL CONFORM TO ASTM A500 "COLD-FORMED WELDED & SEAMLESS CARBON STEEL STRUCTURAL TUBING", GRADE B, OR ASTM A53 PIPE STEEL BLACK AND HOT-DIPPED ZINC-COATED WELDED AND SEAMLESS TYPE E OR S, GRADE B. PIPE SIZES INDICATED ARE NOMINAL. ACTUAL OUTSIDE DIAMETER IS LARGER.
6. STRUCTURAL CONNECTION BOLTS SHALL BE HIGH STRENGTH BOLTS (BEARING TYPE) AND CONFORM TO ASTM A325 TYPE-X "HIGH STRENGTH BOLTS FOR STRUCTURAL JOINTS, INCLUDING SUITABLE NUTS AND PLAIN HARDENED WASHERS". ALL BOLTS SHALL BE 3/4" DIA UON.
7. ALL STEEL MATERIALS SHALL BE GALVANIZED AFTER FABRICATION IN ACCORDANCE WITH ASTM A123 "ZINC (HOT-DIP GALVANIZED) COATINGS ON IRON AND STEEL PRODUCTS", UNLESS OTHERWISE NOTED.
8. ALL BOLTS, ANCHORS AND MISCELLANEOUS HARDWARE SHALL BE GALVANIZED IN ACCORDANCE WITH ASTM A153 "ZINC-COATING (HOT-DIP) ON IRON AND STEEL HARDWARE", UNLESS OTHERWISE NOTED.
9. FIELD WELDS, DRILL HOLES, SAW CUTS AND ALL DAMAGED GALVANIZED SURFACES SHALL BE REPAIRED WITH AN ORGANIC ZINC REPAIR PAINT COMPLYING WITH REQUIREMENTS OF ASTM A780. GALVANIZING REPAIR PAINT SHALL HAVE 65 PERCENT ZINC BY WEIGHT, ZIRP BY DUNCAN GALVANIZING, GALVA BRIGHT PREMIUM BY CROWN OR EQUAL. THICKNESS OF APPLIED GALVANIZING REPAIR PAINT SHALL BE NOT NOT LESS THAN 4 COATS (ALLOW TIME TO DRY BETWEEN COATS) WITH A RESULTING COATING THICKNESS REQUIRED BY ASTM A123 OR A153 AS APPLICABLE.
10. CONTRACTOR SHALL COMPLY WITH AWS CODE FOR PROCEDURES, APPEARANCE AND QUALITY OF WELDS, AND FOR METHODS USED IN CORRECTING WELDING. ALL WELDERS AND WELDING PROCESSES SHALL BE QUALIFIED IN ACCORDANCE WITH AWS "STANDARD QUALIFICATION PROCEDURES". ALL WELDING SHALL BE DONE USING E70XX ELECTRODES AND WELDING SHALL CONFORM TO AISC AND DI.I. WHERE FILLET WELD SIZES ARE NOT SHOWN, PROVIDE THE MINIMUM SIZE PER TABLE J2.4 IN THE AISC "STEEL CONSTRUCTION MANUAL". 14TH EDITION.
11. INCORRECTLY FABRICATED, DAMAGED OR OTHERWISE MISFITTING OR NON-CONFORMING MATERIALS OR CONDITIONS SHALL BE REPORTED TO THE CONSTRUCTION MANAGER PRIOR TO REMEDIAL OR CORRECTIVE ACTION. ANY SUCH ACTION SHALL REQUIRE CONSTRUCTION MANAGER APPROVAL.
12. UNISTRUT SHALL BE FORMED STEEL CHANNEL STRUT FRAMING AS MANUFACTURED BY UNISTRUT CORP., WAYNE, MI OR EQUAL. STRUT MEMBERS SHALL BE 1 5/8"x1 5/8"x12GA, UNLESS OTHERWISE NOTED, AND SHALL BE HOT-DIP GALVANIZED AFTER FABRICATION.
13. EPOXY ANCHOR ASSEMBLY SHALL CONSIST OF STAINLESS STEEL ANCHOR ROD WITH NUTS & WASHERS. AN INTERNALLY THREADED INSERT, A SCREEN TUBE AND A EPOXY ADHESIVE. THE ANCHORING SYSTEM SHALL BE THE HILTI-HIT HY-70 AND OR HY-200 SYSTEMS (AS SPECIFIED IN DWG.) OR ENGINEERS APPROVED EQUAL.
14. EXPANSION BOLTS SHALL CONFORM TO FEDERAL SPECIFICATION FF-S-325, GROUP II, TYPE 4, CLASS I, HILTI KWIK BOLT III OR APPROVED EQUAL. INSTALLATION SHALL BE IN ACCORDANCE WITH THE MANUFACTURER'S RECOMMENDATIONS.
15. LUMBER SHALL COMPLY WITH THE REQUIREMENTS OF THE AMERICAN INSTITUTE OF TIMBER CONSTRUCTION AND THE NATIONAL FOREST PRODUCTS ASSOCIATION'S NATIONAL DESIGN SPECIFICATION FOR WOOD CONSTRUCTION. ALL LUMBER SHALL BE PRESSURE TREATED AND SHALL BE STRUCTURAL GRADE NO. 2 OR BETTER.
16. WHERE ROOF PENETRATIONS ARE REQUIRED, THE CONTRACTOR SHALL CONTACT AND COORDINATE RELATED WORK WITH THE BUILDING OWNER AND THE EXISTING ROOF INSTALLER. WORK SHALL BE PERFORMED IN SUCH A MANNER AS TO NOT VOID THE EXISTING ROOF WARRANTY. ROOF SHALL BE WATERTIGHT.
17. ALL FIBERGLASS MEMBERS USED ARE AS MANUFACTURED BY STRONGWELL COMPANY OF BRISTOL, VA 24203. ALL DESIGN CRITERIA FOR THESE MEMBERS IS BASED ON INFORMATION PROVIDED IN THE DESIGN MANUAL. ALL REQUIREMENTS PUBLISHED IN SAID MANUAL MUST BE STRICTLY ADHERED TO.
18. NO MATERIALS TO BE ORDERED AND NO WORK TO BE COMPLETED UNTIL SHOP DRAWINGS HAVE BEEN REVIEWED AND APPROVED IN WRITING.
19. SUBCONTRACTOR SHALL FIREPROOF ALL STEEL TO PRE-EXISTING CONDITIONS.

SPECIAL INSPECTION CHECKLIST

BEFORE CONSTRUCTION	
CONSTRUCTION/INSTALLATION INSPECTIONS AND TESTING REQUIRED (COMPLETED BY ENGINEER OF RECORD)	REPORT ITEM
N/A	ENGINEER OF RECORD APPROVED SHOP DRAWINGS [1]
N/A	MATERIAL SPECIFICATIONS REPORT [2]
N/A	FABRICATOR NDE INSPECTION
N/A	PACKING SLIPS [3]
ADDITIONAL TESTING AND INSPECTIONS:	
DURING CONSTRUCTION	
CONSTRUCTION/INSTALLATION INSPECTIONS AND TESTING REQUIRED (COMPLETED BY ENGINEER OF RECORD)	REPORT ITEM
REQUIRED	STEEL INSPECTIONS
N/A	HIGH STRENGTH BOLT INSPECTIONS
N/A	HIGH WIND ZONE INSPECTIONS [4]
N/A	FOUNDATION INSPECTIONS
N/A	CONCRETE COMP. STRENGTH, SLUMP TESTS AND PLACEMENT
N/A	POST INSTALLED ANCHOR VERIFICATION [5]
N/A	GROUT VERIFICATION
N/A	CERTIFIED WELD INSPECTION
N/A	EARTHWORK: LIFT AND DENSITY
N/A	ON SITE COLD GALVANIZING VERIFICATION
N/A	GUY WIRE TENSION REPORT
ADDITIONAL TESTING AND INSPECTIONS:	
AFTER CONSTRUCTION	
CONSTRUCTION/INSTALLATION INSPECTIONS AND TESTING REQUIRED (COMPLETED BY ENGINEER OF RECORD)	REPORT ITEM
REQUIRED	MODIFICATION INSPECTOR REDLINE OR RECORD DRAWINGS [6]
N/A	POST INSTALLED ANCHOR PULL-OUT TESTING
REQUIRED	PHOTOGRAPHS
ADDITIONAL TESTING AND INSPECTIONS:	

NOTES:

1. REQUIRED FOR ANY NEW SHOP FABRICATED FRP OR STEEL.
2. PROVIDED BY MANUFACTURER, REQUIRED IF HIGH STRENGTH BOLTS OR STEEL.
3. PROVIDED BY GENERAL CONTRACTOR; PROOF OF MATERIALS.
4. HIGH WIND ZONE INSPECTION CATB 120MPH OR CAT C,D 110MPH INSPECT FRAMING OF WALLS, ANCHORING, FASTENING SCHEDULE.
5. ADHESIVE FOR REBAR AND ANCHORS SHALL HAVE BEEN TESTED IN ACCORDANCE WITH ACI 355.4 AND ICC-ES AC308 FOR CRACKED CONCRETE AND SEISMIC APPLICATIONS. DESIGN ADHESIVE BOND STRENGTH HAS BEEN BASED ON ACI 355.4 TEMPERATURE CATEGORY B WITH INSTALLATIONS INTO DRY HOLES DRILLED USING A CARBIDE BIT INTO CRACKED CONCRETE THAT HAS CURED FOR AT LEAST 21 DAYS. ADHESIVE ANCHORS REQUIRING CERTIFIED INSTALLATIONS SHALL BE INSTALLED BY A CERTIFIED ADHESIVE ANCHOR INSTALLER PER ACI 318-11 D.9.2.2. INSTALLATIONS REQUIRING CERTIFIED INSTALLERS SHALL BE INSPECTED PER ACI 318-11 D.8.2.4.
6. AS REQUIRED; FOR ANY FIELD CHANGES TO THE ITEMS IN THIS TABLE.

SPECIAL INSPECTIONS (REFERENCE IBC CHAPTER 17):

GENERAL: WHERE APPLICATION IS MADE FOR CONSTRUCTION, THE OWNER OR THE REGISTERED DESIGN PROFESSIONAL IN RESPONSIBLE CHARGE ACTING AS THE OWNER'S AGENT SHALL EMPLOY ONE OR MORE APPROVED AGENCIES TO PERFORM INSPECTIONS DURING CONSTRUCTION ON THE TYPES OF WORK LISTED IN THE INSPECTION CHECKLIST ABOVE.

THE REGISTERED DESIGN PROFESSIONAL IN RESPONSIBLE CHARGE AND ENGINEERS OF RECORD INVOLVED IN THE DESIGN OF THE PROJECT ARE PERMITTED TO ACT AS THE APPROVED AGENCY AND THEIR PERSONNEL ARE PERMITTED TO ACT AS THE SPECIAL INSPECTOR FOR THE WORK DESIGNED BY THEM, PROVIDED THOSE PERSONNEL MEET THE QUALIFICATION REQUIREMENTS.

STATEMENT OF SPECIAL INSPECTIONS: THE APPLICANT SHALL SUBMIT A STATEMENT OF SPECIAL INSPECTIONS PREPARED BY THE REGISTERED DESIGN PROFESSIONAL IN RESPONSIBLE CHARGE IN ACCORDANCE WITH SECTION 107.1 AS A CONDITION FOR ISSUANCE. THIS STATEMENT SHALL BE IN ACCORDANCE WITH SECTION 1705.

REPORT REQUIREMENT: SPECIAL INSPECTORS SHALL KEEP RECORDS OF INSPECTIONS. THE SPECIAL INSPECTOR SHALL FURNISH INSPECTION REPORTS TO THE BUILDING OFFICIAL, AND TO THE REGISTERED DESIGN PROFESSIONAL IN RESPONSIBLE CHARGE. REPORTS SHALL INDICATE THAT WORK INSPECTED WAS OR WAS NOT COMPLETED IN CONFORMANCE TO APPROVED CONSTRUCTION DOCUMENTS. DISCREPANCIES SHALL BE BROUGHT TO THE IMMEDIATE ATTENTION OF THE CONTRACTOR FOR CORRECTION. IF THEY ARE NOT CORRECTED, THE DISCREPANCIES SHALL BE BROUGHT TO THE ATTENTION OF THE BUILDING OFFICIAL AND TO THE REGISTERED DESIGN PROFESSIONAL IN RESPONSIBLE CHARGE. A FINAL REPORT DOCUMENTING REQUIRED SPECIAL INSPECTIONS SHALL BE SUBMITTED.

NOTES:

1. ALL CONNECTIONS TO BE SHOP WELDED & FIELD BOLTED USING 3/4"ø A325-X BOLTS, UNLESS OTHERWISE NOTIFIED.
2. SHOP DRAWING ENGINEER REVIEW & APPROVAL REQUIRED BEFORE ORDERING MATERIAL.
3. SHOP DRAWING ENGINEER REVIEW & APPROVAL REQUIRED PRIOR TO STEEL FABRICATION.
4. VERIFICATION OF EXISTING ROOF CONSTRUCTION IS REQUIRED PRIOR TO THE INSTALLATION OF THE ROOF PLATFORM. ENGINEER OF RECORD IS TO APPROVE EXISTING CONDITIONS IN ORDER TO MOVE FORWARD.
5. CENTERLINE OF PROPOSED STEEL PLATFORM SUPPORT COLUMNS TO BE CENTRALLY LOCATED OVER THE EXISTING BUILDING COLUMNS.
6. EXISTING BRICK MASONRY COLUMNS/BEARING TO BE REPAIRED/REPLACED AT ALL PROPOSED PLATFORM SUPPORT POINTS. ENGINEER OF RECORD TO REVIEW AND APPROVE.

STATE OF CONNECTICUT
DEREK J. CREASER
No. 28155
LICENSED PROFESSIONAL ENGINEER

HUDSON Design Group LLC
45 BEECHWOOD DRIVE
NORTH ANDOVER, MA 01845
TEL: (978) 557-5553
FAX: (978) 336-5586

SAI
12 INDUSTRIAL WAY
SALEM, NH 03079

SITE NUMBER: CT1323
SITE NAME: MOREHOUSE ROAD

515 MOREHOUSE ROAD
EASTON, CT 06612
FAIRFIELD COUNTY

at&t
500 ENTERPRISE DRIVE, SUITE 3A
ROCKY HILL, CT 06067

NO.	DATE	REVISIONS	BY	CHK	APP'D
2	12/06/18	ISSUED FOR CONSTRUCTION	SF	AT	DJC
1	10/18/18	ISSUED FOR CONSTRUCTION	SB	AT	DJC
A	10/09/18	ISSUED FOR REVIEW	EB	AT	DJC

SCALE: AS SHOWN | DESIGNED BY: AT | DRAWN BY: SF

AT&T

STRUCTURAL NOTES
(NSB)

SITE NUMBER	DRAWING NUMBER	REV
CT1323	SN-1	2

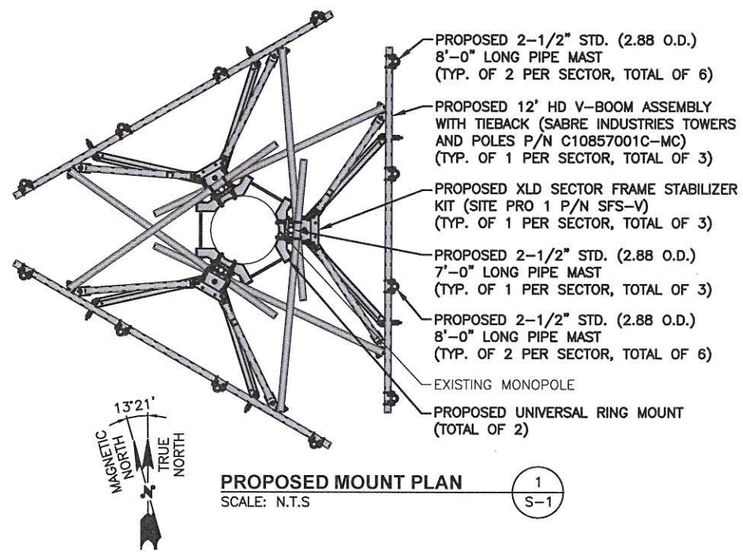

PROPOSED MOUNT PLAN (1 / S-1)
SCALE: N.T.S

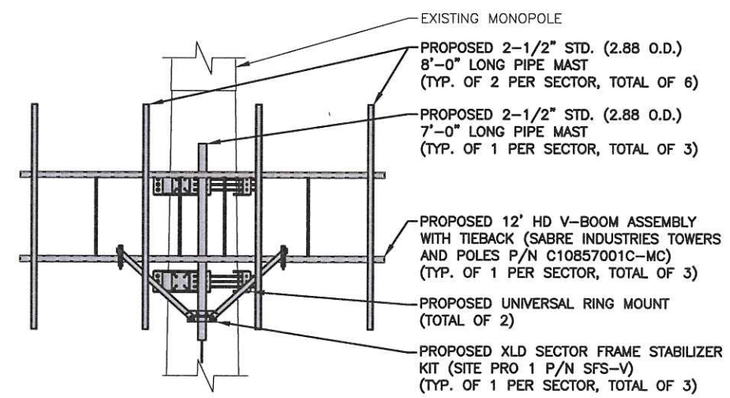

PROPOSED MOUNT ELEVATION (2 / S-1)
SCALE: N.T.S

HUDSON Design Group LLC
45 BEECHWOOD DRIVE
NORTH ANDOVER, MA 01845
TEL: (978) 557-5553
FAX: (978) 336-5586

SAI
12 INDUSTRIAL WAY
SALEM, NH 03079

SITE NUMBER: CT1323
SITE NAME: MOREHOUSE ROAD

515 MOREHOUSE ROAD
EASTON, CT 06612
FAIRFIELD COUNTY

at&t
500 ENTERPRISE DRIVE, SUITE 3A
ROCKY HILL, CT 06067

NO.	DATE	REVISIONS	BY	CHK	APP'D
2	12/06/18	ISSUED FOR CONSTRUCTION	SF	AT	DJC
1	10/18/18	ISSUED FOR CONSTRUCTION	SB	AT	DJC
A	10/09/18	ISSUED FOR REVIEW	EB	AT	DJC

SCALE: AS SHOWN | DESIGNED BY: AT | DRAWN BY: SF

STATE OF CONNECTICUT
DEREK J. CREASER
No. 28354
LICENSED PROFESSIONAL ENGINEER

AT&T

STRUCTURAL DETAILS
(NSB)

SITE NUMBER	DRAWING NUMBER	REV
CT1323	S-1	2

NOTES:

1. GROUND [ATS] TO NEW GROUND BAR
2. GROUND GENERATOR TO NEW GROUND RING WITH 2 #2 AWG GROUND WIRES.

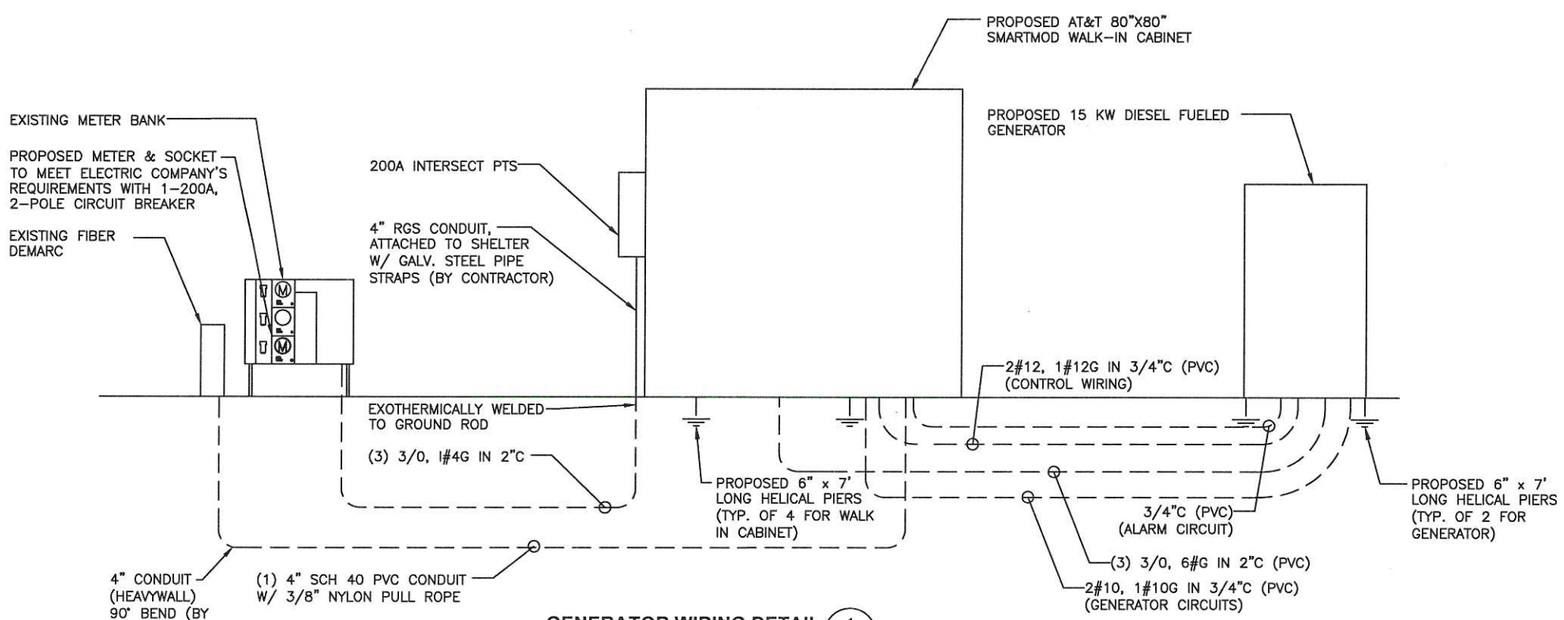

GENERATOR WIRING DETAIL (1 / E-1)
SCALE: N.T.S

ELECTRICAL LEGEND

	NEW PANEL BOARD, SURFACE MOUNTED
	EXISTING PANEL BOARD, SURFACE MOUNTED
T	DRY TYPE TRANSFORMER
M	METER
	CIRCUIT BREAKER
	NON-FUSIBLE DISCONNECT SWITCH, MOUNTED 54" A.F.F.
	FUSIBLE DISCONNECT SWITCH, MOUNTED 54"A.F.F.
TVSS	TRANSIENT VOLTAGE SURGE SUPPRESSOR WITH BUILT-IN FUSES, SURFACE MOUNTED
	DUPLEX OUTLET, SURFACE MOUNTED, 20 AMPS, 125 VOLTS, SINGLE PHASE
J	JUNCTION BOX, SURFACE MOUNTED 18" A.F.F.
	EXPOSED WIRING
	HOME RUNS, MINIMUM 2#10 + 1#10G IN 3/4" CONDUIT U.O.N.
A.F.F.	ABOVE FINISHED FLOOR
U.O.N.	UNLESS OTHERWISE NOTED
WP	WEATHERPROOF
GFI	GROUND FAULT INTERRUPTER
A	AMPERE
V	VOLT
KWH	KILOWATT – HOUR
C	CONDUIT
GRC	GALVANIZED RIGID CONDUIT
G	GROUND
	GROUND
MGB	MASTER GROUND BAR ○ MECHANICAL CONNECTION ● CADWELD CONNECTION
EGB	EQUIPMENT GROUND BAR
—G—	GROUND COPPER WIRE, SIZE AS NOTED
	EXPOSED WIRING
	COAXIAL CABLE
	5/8"x8' COPPER CLAD STAINLESS STEEL GROUND ROD
	● EXOTHERMIC (CAD WELD) OR ○ MECHANICAL (COMPRESSION TYPE) CONNECTION
PPC	POWER PROTECTION CABINET

ELECTRICAL AND GROUNDING NOTES

1. ALL ELECTRICAL WORK SHALL CONFORM TO THE REQUIREMENTS OF THE NATIONAL ELECTRICAL CODE (NEC) AS WELL AS APPLICABLE STATE AND LOCAL CODES.
2. ALL ELECTRICAL ITEMS SHALL BE U.L. APPROVED OR LISTED AND PROCURED PER SPECIFICATION REQUIREMENTS.
3. THE ELECTRICAL WORK INCLUDES ALL LABOR AND MATERIAL DESCRIBED BY DRAWINGS AND SPECIFICATION INCLUDING INCIDENTAL WORK TO PROVIDE COMPLETE OPERATING AND APPROVED ELECTRICAL SYSTEM.
4. GENERAL CONTRACTOR SHALL PAY FEES FOR PERMITS, AND IS RESPONSIBLE FOR OBTAINING SAID PERMITS AND COORDINATION OF INSPECTIONS.
5. ELECTRICAL AND TELCO WIRING OUTSIDE A BUILDING AND EXPOSED TO WEATHER SHALL BE IN WATER TIGHT GALVANIZED RIGID STEEL CONDUITS OR SCHEDULE 80 PVC (AS PERMITTED BY CODE) AND WHERE REQUIRED IN LIQUID TIGHT FLEXIBLE METAL OR NONMETALLIC CONDUITS.
6. BURIED CONDUIT SHALL BE SCHEDULE 40 PVC.
7. ELECTRICAL WIRING SHALL BE COPPER WITH TYPE XHHW, THWN, OR THHNINSULATION.
8. RUN ELECTRICAL CONDUIT OR CABLE BETWEEN ELECTRICAL UTILITY DEMARCATION POINT AND PROJECT OWNER CELL SITE PPC AS INDICATED ON THIS DRAWING. PROVIDE FULL LENGTH PULL ROPE. COORDINATE INSTALLATION WITH UTILITY COMPANY.
9. RUN TELCO CONDUIT OR CABLE BETWEEN TELEPHONE UTILITY DEMARCATION POINT AND PROJECT OWNER CELL SITE TELCO CABINET AND BTS CABINET AS INDICATED ON THIS DRAWING PROVIDE FULL LENGTH PULL ROPE IN INSTALLED TELCO CONDUIT. PROVIDE GREENLEE CONDUIT MEASURING TAPE AT EACH END.
10. WHERE CONDUIT BETWEEN BTS AND PROJECT OWNER CELL SITE PPC AND BETWEEN BTS AND PROJECT OWNER CELL SITE TELCO SERVICE CABINET ARE UNDERGROUND USE PVC, SCHEDULE 40 CONDUIT. ABOVE THE GROUND PORTION OF THESE CONDUITS SHALL BE PVC CONDUIT.
11. ALL EQUIPMENT LOCATED OUTSIDE SHALL HAVE NEMA 3R ENCLOSURE.
12. PPC SUPPLIED BY PROJECT OWNER.
13. GROUNDING SHALL COMPLY WITH NEC ART. 250.
14. GROUND COAXIAL CABLE SHIELDS MINIMUM AT BOTH ENDS USING MANUFACTURERS COAX CABLE GROUNDING KITS SUPPLIED BY PROJECT OWNER.
15. USE #6 COPPER STRANDED WIRE WITH GREEN COLOR INSULATION FOR ABOVE GRADE GROUNDING (UNLESS OTHERWISE SPECIFIED) AND #2 SOLID TINNED BARE COPPER WIRE FOR BELOW GRADE GROUNDING AS INDICATED ON THE DRAWING.
16. ALL GROUND CONNECTIONS TO BE BURNDY HYGROUND COMPRESSION TYPE CONNECTORS OR CADWELD EXOTHERMIC WELD. DO NOT ALLOW BARE COPPER WIRE TO BE IN CONTACT WITH GALVANIZED STEEL.
17. ROUTE GROUNDING CONDUCTORS ALONG THE SHORTEST AND STRAIGHTEST PATH POSSIBLE, EXCEPT AS OTHERWISE INDICATED. GROUNDING LEADS SHOULD NEVER BE BENT AT RIGHT ANGLE. ALWAYS MAKE AT LEAST 12" RADIUS BENDS. #6 WIRE CAN BE BENT AT 6" RADIUS WHEN NECESSARY. BOND ANY METAL OBJECTS WITHIN 6 FEET OF PROJECT OWNER EQUIPMENT OR CABINET TO MASTER GROUND BAR OR GROUNDING RING.
18. CONNECTIONS TO GROUND BARS SHALL BE MADE WITH TWO HOLE COMPRESSION TYPE COPPER LUGS. APPLY OXIDE INHIBITING COMPOUND TO ALL LOCATIONS.
19. APPLY OXIDE INHIBITING COMPOUND TO ALL COMPRESSION TYPE GROUND CONNECTIONS.
20. BOND ANTENNA MOUNTING BRACKETS, COAXIAL CABLE GROUND KITS, AND ALNA TO EGB PLACED NEAR THE ANTENNA LOCATION.
21. BOND ANTENNA EGB'S AND MGB TO GROUND RING.
22. CONTRACTOR SHALL TEST COMPLETED GROUND SYSTEM AND RECORD RESULTS FOR PROJECT CLOSE-OUT DOCUMENTATION. 5 OHMS MINIMUM RESISTANCE REQUIRED.
23. CONTRACTOR SHALL CONDUCT ANTENNA, COAX, AND LNA RETURN-LOSS AND DISTANCE-TO-FAULT MEASUREMENTS (SWEEP TESTS) AND RECORD RESULTS FOR PROJECT CLOSE OUT.
24. ALL NEW STRUCTURES WITH A FOUNDATION AND/OR FOOTING HAVING 20 FT. OR MORE OF 1/2" OR GREATER ELECTRICALLY CONDUCTIVE REINFORCING STEEL, MUST HAVE IT BONDED TO THE GROUND RING USING AN EXOTHERMIC WELD CONNECTION USING #2 AWG SOLID BARE TINNED COPPER GROUND WIRE, PER NEC 250.50.

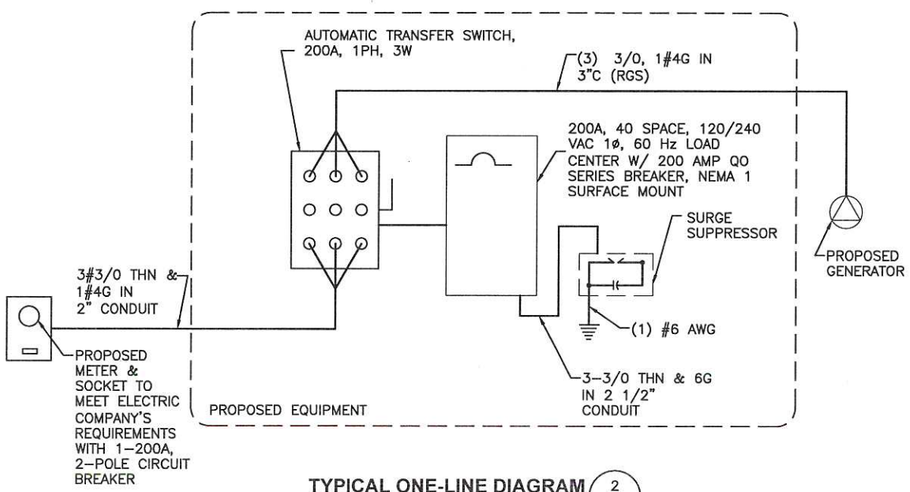

TYPICAL ONE-LINE DIAGRAM (2 / E-1)
SCALE: N.T.S

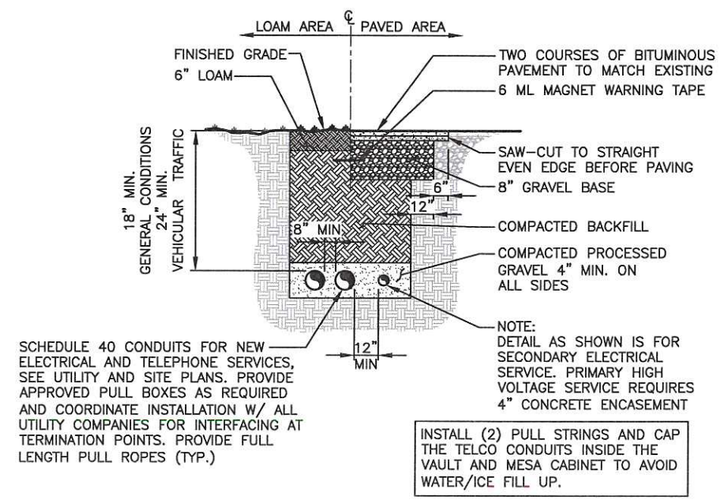

INSTALL (2) PULL STRINGS AND CAP THE TELCO CONDUITS INSIDE THE VAULT AND MESA CABINET TO AVOID WATER/ICE FILL UP.

BURIED CONDUIT DETAIL (3 / E-1)
SCALE: N.T.S

STATE OF CONNECTICUT · DEREK J. CREASEY · LICENSED PROFESSIONAL ENGINEER · 16.2.35

HUDSON Design Group LLC
45 BEECHWOOD DRIVE
NORTH ANDOVER, MA 01845
TEL: (978) 557-5553
FAX: (978) 336-5586

SAI
12 INDUSTRIAL WAY
SALEM, NH 03079

SITE NUMBER: CT1323
SITE NAME: MOREHOUSE ROAD

515 MOREHOUSE ROAD
EASTON, CT 06612
FAIRFIELD COUNTY

at&t
500 ENTERPRISE DRIVE, SUITE 3A
ROCKY HILL, CT 06067

NO.	DATE	REVISIONS	BY	CHK	APP'D
2	12/06/18	ISSUED FOR CONSTRUCTION	SF	AT	DJC
1	10/18/18	ISSUED FOR CONSTRUCTION	SB	AT	DJC
A	10/09/18	ISSUED FOR REVIEW	EB	AT	DJC

SCALE: AS SHOWN | DESIGNED BY: AT | DRAWN BY: SF

AT&T

ELECTRICAL NOTES & ONE-LINE DIAGRAM (NSB)

SITE NUMBER	DRAWING NUMBER	REV
CT1323	E-1	2

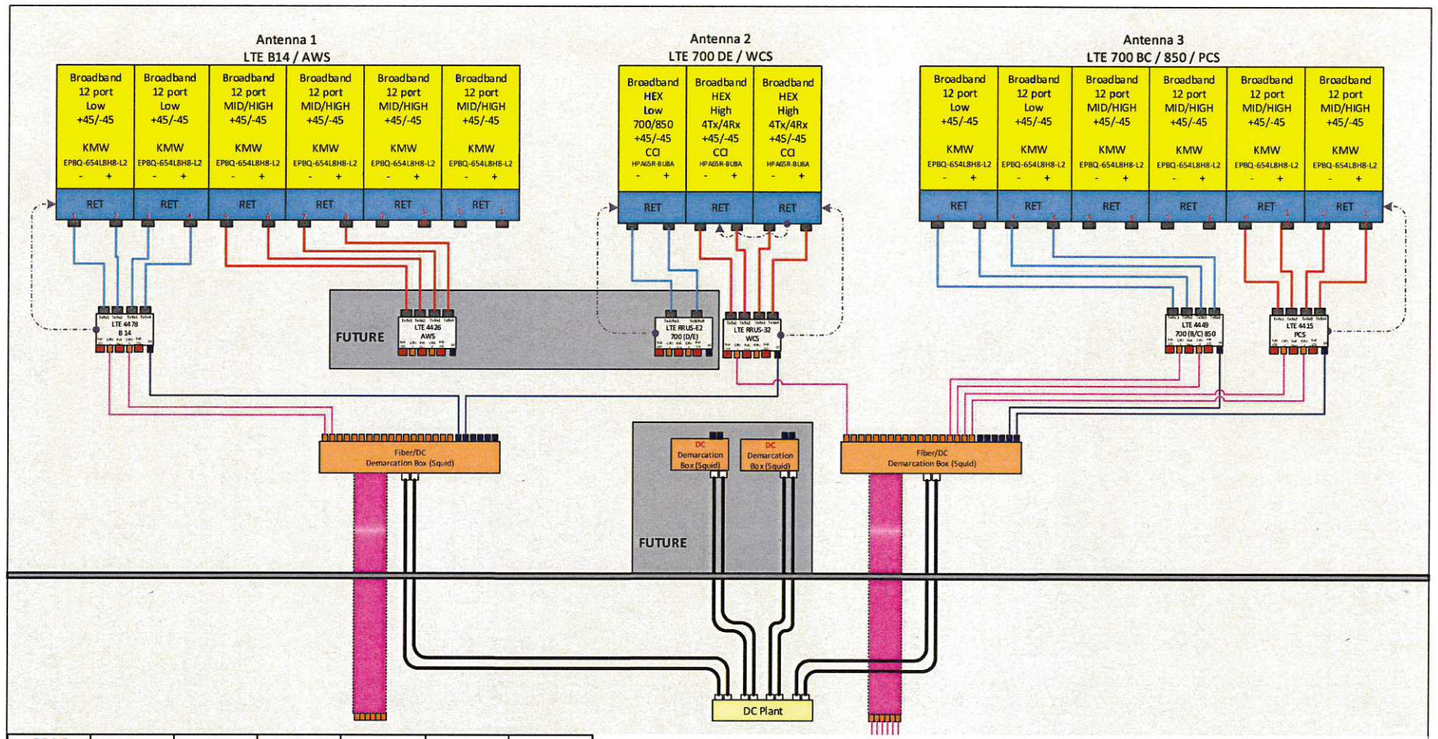

5216	A	B	C	D	E	F
	XMU2-3	XMU2-2	XMU2-1	XMU1-3	XMU1-2	XMU1-1

XMU 1	16	15	14	13	12	11	10	9	8	7	6	5	4	3	2	1
	PCS1 A	PCS2 A	700BC A	WCS A	PCS1 B	PCS2 B	700BC B	WCS B	DNU	PCS1 C	PCS2 C	700BC C	WCS C	XMU1-3	XMU1-2	XMU1-1
XMU 2	16	15	14	13	12	11	10	9	8	7	6	5	4	3	2	1
			850 A	B14 A			850 B	B14 B	DNU			850 C	B14 C	XMU2-3	XMU2-2	XMU2-1

RF PLUMBING DIAGRAM (1 / RF-1)

SCALE: N.T.S

NOTE:
1. CONTRACTOR TO CONFIRM ALL PARTS.
2. INSTALL ALL EQUIPMENT TO MANUFACTURER'S RECOMMENDATIONS

NOTE:

REFER TO THE FINAL RF DATA SHEET FOR FINAL ANTENNA SETTINGS.

STATE OF CONNECTICUT · DEREK J. CREASEY · LICENSED PROFESSIONAL ENGINEER

HDG HUDSON Design Group LLC
45 BEECHWOOD DRIVE
NORTH ANDOVER, MA 01845
TEL: (978) 557-5553
FAX: (978) 336-5586

SAI
12 INDUSTRIAL WAY
SALEM, NH 03079

SITE NUMBER: CT1323
SITE NAME: MOREHOUSE ROAD

515 MOREHOUSE ROAD
EASTON, CT 06612
FAIRFIELD COUNTY

at&t
500 ENTERPRISE DRIVE, SUITE 3A
ROCKY HILL, CT 06067

NO.	DATE	REVISIONS	BY	CHK	APP'D
2	12/06/18	ISSUED FOR CONSTRUCTION	SF	AT	DJC
1	10/18/18	ISSUED FOR CONSTRUCTION	SB	AT	DJC
A	10/09/18	ISSUED FOR REVIEW	EB	AT	DJC

SCALE: AS SHOWN | DESIGNED BY: AT | DRAWN BY: SF

AT&T

RF PLUMBING DIAGRAM (NSB)

SITE NUMBER	DRAWING NUMBER	REV
CT1323	RF-1	2

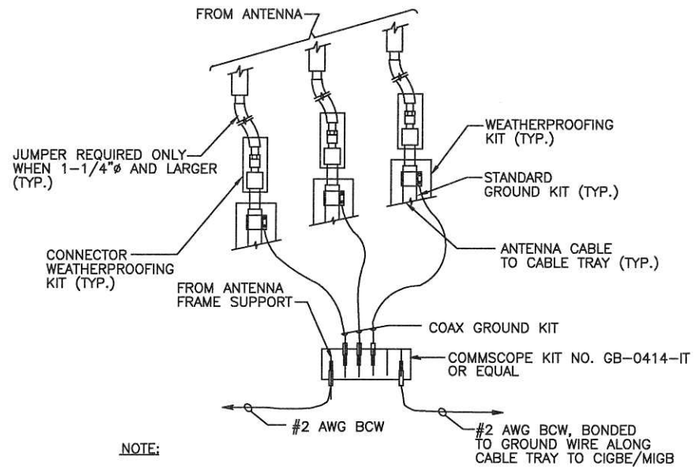

NOTE:

1. DO NOT INSTALL CABLE GROUND KIT AT A BEND AND ALWAYS DIRECT GROUND WIRE DOWN TO CIGBE.

GROUND WIRE TO GROUND BAR CONNECTION DETAIL (1 / G-1)

SCALE: N.T.S

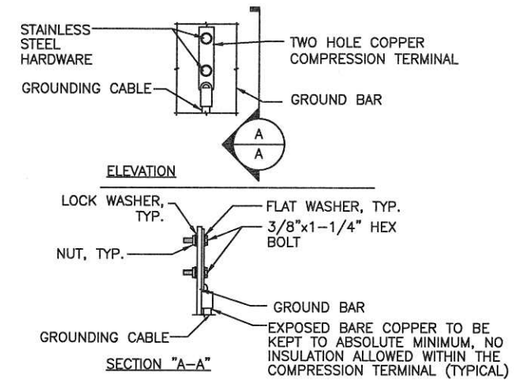

NOTE:

1. "DOUBLING UP" OR "STACKING" OF CONNECTION IS NOT PERMITTED.
2. OXIDE INHIBITING COMPOUND TO BE USED AT ALL LOCATION.
3. CADWELD DOWNLEADS FROM UPPER EGB, LOWER EGB, AND MGB

TYPICAL GROUND BAR CONNECTION DETAIL (3 / G-1)

SCALE: N.T.S

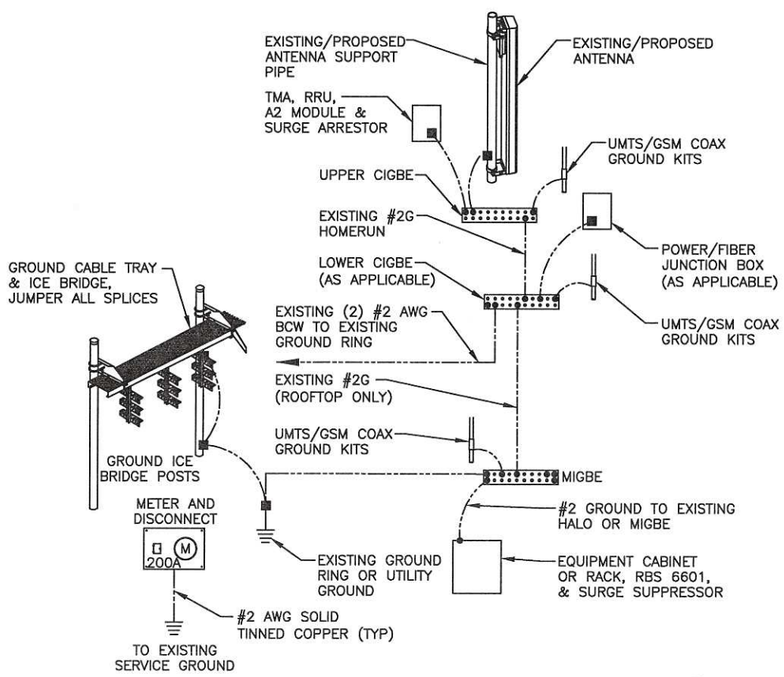

GROUNDING RISER DIAGRAM (2 / G-1)

SCALE: N.T.S

EACH GROUND CONDUCTOR TERMINATING ON ANY GROUND BAR SHALL HAVE AN IDENTIFICATION TAG ATTACHED AT EACH END THAT WILL IDENTIFY ITS ORIGIN AND DESTINATION.

SECTION "P" – SURGE PRODUCERS

CABLE ENTRY PORTS (HATCH PLATES) (#2)
GENERATOR FRAMEWORK (IF AVAILABLE) (#2)
TELCO GROUND BAR
COMMERCIAL POWER COMMON NEUTRAL/GROUND BOND (#2)
+24V POWER SUPPLY RETURN BAR (#2)
–48V POWER SUPPLY RETURN BAR (#2)
RECTIFIER FRAMES.

SECTION "A" – SURGE ABSORBERS

INTERIOR GROUND RING (#2)
EXTERNAL EARTH GROUND FIELD (BURIED GROUND RING) (#2)
METALLIC COLD WATER PIPE (IF AVAILABLE) (#2)
BUILDING STEEL (IF AVAILABLE) (#2)

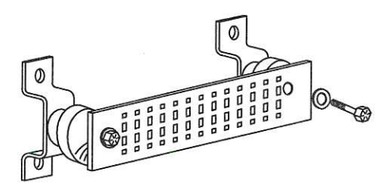

GROUND BAR - DETAIL (4 / G-1)

SCALE: N.T.S

STATE OF CONNECTICUT
DEREK J. CREASER
LICENSED PROFESSIONAL ENGINEER

HUDSON Design Group LLC
45 BEECHWOOD DRIVE
NORTH ANDOVER, MA 01845
TEL: (978) 557-5553
FAX: (978) 336-5586

SAI
12 INDUSTRIAL WAY
SALEM, NH 03079

SITE NUMBER: CT1323
SITE NAME: MOREHOUSE ROAD

515 MOREHOUSE ROAD
EASTON, CT 06612
FAIRFIELD COUNTY

at&t
500 ENTERPRISE DRIVE, SUITE 3A
ROCKY HILL, CT 06067

NO.	DATE	REVISIONS	BY	CHK	APP'D
2	12/06/18	ISSUED FOR CONSTRUCTION	SF	AT	DJC
1	10/18/18	ISSUED FOR CONSTRUCTION	SB	AT	DJC
A	10/09/18	ISSUED FOR REVIEW	EB	AT	DJC

SCALE: AS SHOWN | DESIGNED BY: AT | DRAWN BY: SF

AT&T

GROUNDING DETAILS (NSB)

SITE NUMBER	DRAWING NUMBER	REV
CT1323	G-1	2

2

July 16, 2018
December 3, 2018 (Rev.1)

SAI Communications
12 Industrial Way
Salem NH, 03079

RE:		
	Site Number:	CT1323 (NSB)
	FA Number:	10128143
	PACE Number:	MRCTB028433
	PT Number:	2051A0FKFQ
	Site Name:	MOREHOUSE ROAD
	Site Address:	515 Morehouse Road Easton, CT 06612

To Whom It May Concern:

Hudson Design Group LLC (HDG) has been authorized by SAI Communications to perform a mount analysis on the proposed AT&T antenna/RRH mounts to determine their capability of supporting the following loading:

- **(6) EPBQ-654L8H8-L2 Antennas (96.0"x21.0"x6.3" – Wt. = 86 lbs. /each)**
- **(3) HPA65R-BU8A Antennas (96.0"x11.7"x7.6" – Wt. = 54 lbs. /each)**
- **(3) RRUS-E2 RRH's (20.4"x18.5"x7.5" – Wt. = 53 lbs. /each)**
- **(3) RRUS-32 RRH's (27.2"x12.1"x7.0" – Wt. = 60 lbs. /each)**
- **(3) B14 4478 RRH's (18.1"x13.4"x8.3"– Wt. = 60 lbs. /each)**
- **(3) 4426 B66 RRH's (15.0"x13.2"x5.8" – Wt. = 49 lbs. /each)**
- **(3) 4415 B25 RRH's (15.0"x13.2"x5.4" – Wt. = 44 lbs. /each)**
- **(3) B5/B12 4449 RRH's (14.9"x13.1"x9.2" – Wt. = 74 lbs. /each)**
- **(4) Squid Surge Arrestors (24.0"x9.7" Φ – Wt. = 33 lbs. /each)**

**Proposed equipment shown in bold*

Fabrication drawings prepared by Sabre Industries Towers and Poles, P/N C10857001C-MC, dated January 20, 2017 were available for the proposed mounts.

Mount Analysis Methods:

- This analysis was conducted in accordance with EIA/TIA-222-G, Structural Standards for Steel Antenna Towers and Antenna Supporting Structures, the International Building Code 2015 with 2018 Connecticut State Building Code Amendments and AT&T Mount Technical Directive – R11.
- HDG considers this mount to be asymmetrical and has applied wind loads in 30 degree increments all around the mount. Per TIA-222-G Annex B, the max basic wind speed for this site is equal to 110 mph with a max basic wind speed with ice of 40 mph. Per the AT&T Mount Technical Directive and Appendix N of the Connecticut State Building Code, an ultimate wind speed of 130 mph converted to a nominal wind speed of 101 mph was used for this analysis.
- HDG considers this site to be exposure category C; tower is located near large, flat, open, terrain/grasslands.
- HDG considers this site to be topographic category 2; tower is located at the top or crest of an escarpment.

- The mount has been analyzed with load combinations consisting of 250 lbs. live load using a service wind speed of 30 mph wind on the worst case antenna. Analysis performed on each antenna pipe to determine worst case location; worst case location was antenna position 3.
- The mount has been analyzed with load combinations consisting of a 250 lbs. live load in a worst case location on the mount.

Based on our evaluation, we have determined that the new Sabre Industries C10857001C-MC mounts **ARE NOT CAPABLE** of supporting the proposed installation. HDG recommends the following modifications:

- **Install new Sector Frame Stabilizer Kit, SitePro1 SFS-V (or approved equal) (typ. of 1 per sector, total of 3).**
- **Install new 2" std. (2.38" O.D.) steel pipe braces secured to the proposed mount and tower (typ. of 2 per sector, total of 6).**
- **Install new 2.5" std. (2.88" O.D.) steel pipe masts secured to the proposed mount face (typ. of 2 per sector, total of 6).**

	Component	Controlling Load Case	Stress Ratio	Pass/Fail
Proposed Mount Rating	3	LC7	119%	**FAIL**
Modified Mount Rating	3	LC7	90%	**PASS**

Reference Documents:

- Fabrication drawings prepared by Sabre Industries Towers and Poles, P/N C10857001C-MC, dated January 20, 2017.

This determination was based on the following limitations and assumptions:

1. HDG is not responsible for any modifications completed prior to and hereafter which HDG was not directly involved.
2. All structural members and their connections are assumed to be in good condition and are free from defects with no deterioration to its member capacities. Contractor to perform pre-inspection prior to construction.
3. All antennas, coax cables and waveguide cables are assumed to be properly installed and supported as per the manufacturer's requirements.
4. The proposed mount has been adequately secured to the tower structure per the mount manufacturer's specifications.
5. All components pertaining to AT&T's mounts must be tightened and re-plumbed prior to the installation of new appurtenances.
6. HDG performed a localized analysis on the mount itself and not on the supporting tower structure.

Please feel free to contact our office should you have any questions.

Respectfully Submitted,
Hudson Design Group LLC

STATE OF CONNECTICUT
DANIEL HAMM
24178
LICENSED
PROFESSIONAL ENGINEER

Michael Cabral
Structural Dept. Head

Daniel P. Hamm, PE
Principal

HUDSON
Design Group LLC

Wind & Ice Calculations

Date: 12/3/2018
Project Name: MOREHOUSE ROAD
Project Number: CT1323/S2032
Designed By: JP **Checked By:** MSC

HUDSON Design Group LLC

2.6.5.2 Velocity Pressure Coeff:

$K_z = 2.01\,(z/z_g)^{2/\alpha}$

K_z= 1.348

z= 135 (ft)
z_g= 900 (ft)
α= 9.5

Kzmin ≤ Kz ≤ 2.01

Table 2-4

Exposure	Z_g	α	K_{zmin}	K_e
B	1200 ft	7.0	0.70	0.9
C	900 ft	9.5	0.85	1.0
D	700 ft	11.5	1.03	1.1

2.6.6.4 Topographic Factor:

Table 2-5

Topo. Category	K_t	f
2	0.43	1.25
3	0.53	2.0
4	0.72	1.5

$K_{zt} = [1+(K_e K_t/K_h)]^2$

$K_h = e^{(f*z/H)}$

K_{zt}= 1.165410934

(If Category 1 then K_{zt}=1.0)

Category= 2

K_h= 5.41
K_e= 1 (from Table 2-4)
K_t= 0.43 (from Table 2-5)
f= 1.25 (from Table 2-5)
z= 135
H= 100 (Ht. of the crest above surrounding terrain)
K_{zt}= 1.17
K_{iz} = 1.15 (from Sec. 2.6.8)

2.6.8 Design Ice Thickness

Max Ice Thickness = t_i = 0.75 in

$t_{iz} = 2.0*t_i*I*K_{iz}*(Kzt)^{0.35}$

t_{iz} = 1.82 in

Date: 12/3/2018
Project Name: MOREHOUSE ROAD
Project Number: CT1323/S2032
Designed By: JP Checked By: MSC

HUDSON Design Group LLC

2.6.7 Gust Effect Factor

2.6.7.1 Self Supporting Lattice Structures

Gh = 1.0 Latticed Structures > 600 ft

Gh = 0.85 Latticed Structures 450 ft or less

Gh = 0.85 + 0.15 [h/150 - 3.0] h= ht. of structure

h= 170 Gh= 0.85

2.6.7.2 Guyed Masts Gh= 0.85

2.6.7.3 Pole Structures Gh= 1.1

2.6.9 Appurtenances Gh= 1.0

2.6.7.4 Structures Supported on Other Structures
(Cantilivered tubular or latticed spines, pole, structures on buildings (ht. : width ratio > 5)

Gh= 1.35 Gh= 1.00

2.6.9.2 Design Wind Force on Appurtenances

State Code Ultimate Design Wind Speed: V_{ult} = 130 mph

Nomial Design Wind Speed, $V_{asd} = V_{ult}\sqrt{(0.6)}$ V_{asd} = 101 mph

V_{asd} per the AT&T Mount Technical Directive and Connecticut State Building Code, Latest Edition.
Per TIA-222-G, V_{min} = 90 mph V_{max} = 110 mph

$F = q_z*Gh*(EPA)_A$

$q_z = 0.00256*K_z*K_{zt}*K_d*V_{max}^2*I$

K_z= 1.348
K_{zt}= 1.2
K_d= 0.95
V_{asd}= 101 mph
$V_{max\ (ice)}$= 40 mph
V_{30}= 30 mph
I= 1.0

q_z= 38.75
$q_{z\ (ice)}$= 6.11
$q_{z\ (30)}$= 3.44

Table 2-2

Structure Type	Wind Direction Probability Factor, Kd
Latticed structures with triangular, square or rectangular cross sections	0.85
Tubular pole structures, latticed structures with other cross sections, appurtenances	0.95

Date: 12/3/2018
Project Name: MOREHOUSE ROAD
Project Number: CT1323/S2032
Designed By: JP Checked By: MSC

HUDSON Design Group LLC

Determine Ca:

Table 2-8

Force Coefficients (Ca) for Appurtenances				
Member Type		Aspect Ratio ≤ 2.5	Aspect Ratio = 7	Aspect Ratio ≥ 25
		Ca	Ca	Ca
Flat		1.2	1.4	2.0
Round	C < 32 (Subcritical)	0.7	0.8	1.2
	32 ≤ C ≤ 64 (Transitional)	$3.76/(C^{0.485})$	$3.37/(C^{0.415})$	$38.4/(C^{-1.0})$
	C > 64 (Supercritical)	0.5	0.6	0.6

Aspect Ratio is the overall length/width ratio in the plane normal to the wind direction.
(Aspect ratio is independent of the spacing between support points of a linear appurtenance,

Note: Linear interpolation may be used for aspect ratios other than those shown.

Ice Thickness = 1.82 in **Angle =** 0 (deg) **Equivalent Angle =** 180 (deg)

Appurtenances	Height	Width	Depth	Flat Area	Aspect Ratio	Ca	Force (lbs)	Force (lbs) (w/ Ice)	Force (lbs) (30 mph)
EPBQ-654L8H8-L2 Antenna	96.0	21.0	6.3	14.00	4.57	1.29	701	135	62
HPA65R-BU8A Antenna	96.0	11.7	7.6	7.80	8.21	1.44	435	93	39
B5/B12 4449 RRH	14.9	13.1	9.2	1.36	1.14	1.20	63	16	6
4415 B25 RRH	15.0	13.2	5.4	1.38	1.14	1.20	64	16	6
RRUS-32 RRH	27.2	12.1	7.0	2.29	2.25	1.20	106	25	9
RRUS-32 RRH (Shielded)	27.2	0.4	7.0	0.08	68.00	3.43	10	18	1
RRUS-E2 RRH	20.4	18.5	7.5	2.62	1.10	1.20	122	27	11
RRUS-E2 RRH (Shielded)	20.4	6.8	7.5	0.96	3.00	1.22	46	13	4
B14 4478 RRH	18.1	13.4	8.3	1.68	1.35	1.20	78	19	7
4426 B66 RRH	15.0	13.2	5.8	1.38	1.14	1.20	64	16	6
Surge Arrestor	24.0	9.7	9.7	1.62	2.47	0.70	44	11	4
2" Pipe	2.4	12.0		0.20	0.20	1.20	9	5	1
2.5" Pipe	2.9	12.0		0.24	0.24	1.20	11	5	1

Date: 12/3/2018
Project Name: MOREHOUSE ROAD
Project Number: CT1323/S2032
Designed By: JP Checked By: MSC

HUDSON Design Group LLC

WIND LOADS

Angle = 30 (deg) | Ice Thickness = 1.82 in. | Equivalent Angle = 210 (deg)

WIND LOADS WITH NO ICE:

Appurtenances	Height	Width	Depth	Flat Area (normal)	Flat Area (side)	Aspect Ratio	Aspect Ratio	Ca (normal)	Ca (side)	Force (lbs) (normal)	Force (lbs) (side)	Force (lbs) (angle)
EPBQ-654L8H8-L2 Antenna	96.0	21.0	6.3	14.00	4.20	4.57	15.24	1.29	1.67	701	273	594
HPA65R-BUBA Antenna	96.0	11.7	7.6	7.80	5.07	8.21	12.63	1.44	1.59	435	312	404
B5/B12 4449 RRH	14.9	13.1	9.2	1.96	0.95	1.14	1.62	1.20	1.20	63	44	58
4415 B25 RRH	15.0	13.2	5.4	1.98	0.56	1.14	2.78	1.20	1.21	64	26	55
RRUS-32 RRH	27.2	12.1	7.0	2.29	1.32	2.25	3.89	1.20	1.26	106	65	96
RRUS-32 RRH (Shielded)	27.2	6.1	7.0	1.14	1.32	4.50	3.89	1.29	1.26	57	65	59
RRUS-E2 RRH	20.4	18.5	7.5	2.62	1.06	1.10	2.72	1.20	1.21	122	50	104
RRUS-E2 RRH (Shielded)	20.4	9.3	7.5	1.31	1.06	2.21	2.72	1.20	1.21	61	50	58
B14 4478 RRH	18.1	13.4	8.3	1.68	1.04	1.35	2.19	1.20	1.20	78	48	71
4426 B66 RRH	15.0	13.2	5.8	1.98	0.60	1.14	2.59	1.20	1.20	64	28	55

WIND LOADS WITH ICE:

Appurtenances	Height	Width	Depth	Flat Area (normal)	Flat Area (side)	Aspect Ratio	Aspect Ratio	Ca (normal)	Ca (side)	Force (lbs) (normal)	Force (lbs) (side)	Force (lbs) (angle)
EPBQ-654L8H8-L2 Antenna	99.6	24.6	9.9	17.05	6.88	4.04	10.02	1.27	1.50	132	63	115
HPA65R-BUBA Antenna	99.6	15.3	11.2	10.62	7.78	6.49	8.86	1.38	1.46	89	70	84
B5/B12 4449 RRH	18.5	16.7	12.8	2.16	1.65	1.11	1.44	1.20	1.20	16	12	15
4415 B25 RRH	18.6	16.8	9.0	2.18	1.17	1.11	2.06	1.20	1.20	16	9	14
RRUS-32 RRH	30.8	15.7	10.6	3.37	2.28	1.96	2.90	1.20	1.22	25	17	23
RRUS-32 RRH (Shielded)	30.8	7.9	10.6	1.69	2.28	3.92	2.90	1.26	1.22	13	17	14
RRUS-E2 RRH	24.0	22.1	11.1	3.70	1.86	1.09	2.16	1.20	1.20	27	14	24
RRUS-E2 RRH (Shielded)	24.0	11.1	11.1	1.85	1.86	2.17	2.16	1.20	1.20	14	14	14
B14 4478 RRH	21.7	17.0	11.9	2.57	1.80	1.28	1.83	1.20	1.20	19	13	17
4426 B66 RRH	18.6	16.8	9.4	2.18	1.22	1.11	1.97	1.20	1.20	16	9	14

WIND LOADS AT 30 MPH:

Appurtenances	Height	Width	Depth	Flat Area (normal)	Flat Area (side)	Aspect Ratio	Aspect Ratio	Ca (normal)	Ca (side)	Force (lbs) (normal)	Force (lbs) (side)	Force (lbs) (angle)
EPBQ-654L8H8-L2 Antenna	96.0	21.0	6.3	14.00	4.20	4.57	15.24	1.29	1.67	62	24	53
HPA65R-BUBA Antenna	96.0	11.7	7.6	7.80	5.07	8.21	12.63	1.44	1.59	39	28	36
B5/B12 4449 RRH	14.9	13.1	9.2	1.96	0.95	1.14	1.62	1.20	1.20	5	4	5
4415 B25 RRH	15.0	13.2	5.4	1.98	0.56	1.14	2.78	1.20	1.21	6	2	5
RRUS-32 RRH	27.2	12.1	7.0	2.29	1.32	2.25	3.89	1.20	1.26	9	6	9
RRUS-32 RRH (Shielded)	27.2	6.1	7.0	1.14	1.32	4.50	3.89	1.29	1.26	5	6	5
RRUS-E2 RRH	20.4	18.5	7.5	2.62	1.06	1.10	2.72	1.20	1.21	11	4	9
RRUS-E2 RRH (Shielded)	20.4	9.3	7.5	1.31	1.06	2.21	2.72	1.20	1.21	5	4	5
B14 4478 RRH	18.1	13.4	8.3	1.68	1.04	1.35	2.19	1.20	1.20	7	4	6
4426 B66 RRH	15.0	13.2	5.8	1.98	0.60	1.14	2.59	1.20	1.20	6	3	5

Date: 12/3/2018
Project Name: MOREHOUSE ROAD
Project Number: CT1323/S2032
Designed By: JP Checked By: MSC

HUDSON Design Group LLC

WIND LOADS

Angle = 60 (deg) | Ice Thickness = 1.82 in. | Equivalent Angle = 240 (deg)

WIND LOADS WITH NO ICE:

Appurtenances	Height	Width	Depth	Flat Area (normal)	Flat Area (side)	Ratio (normal)	Ratio (side)	Ca (normal)	Ca (side)	Force (lbs) (normal)	Force (lbs) (side)	Force (lbs) (angle)
EPBQ-654L8H8-L2 Antenna	96.0	21.0	6.3	14.00	4.20	4.57	15.24	1.29	1.67	701	273	380
HPA65R-BU8A Antenna	96.0	11.7	7.6	7.80	5.07	8.21	12.63	1.44	1.59	435	312	348
B5/B12 4449 RRH	14.9	13.1	9.2	1.36	0.95	1.14	1.62	1.20	1.20	63	44	49
4415 B25 RRH	15.0	13.2	5.4	1.38	0.56	1.14	2.78	1.20	1.21	64	26	36
RRUS-32 RRH	27.2	12.1	7.0	2.29	1.32	2.25	3.89	1.20	1.26	106	65	75
RRUS-32 RRH (Shielded)	27.2	9.1	7.0	1.71	1.32	3.00	3.89	1.22	1.26	81	65	69
RRUS-E2 RRH	20.4	18.5	7.5	2.62	1.06	1.10	2.72	1.20	1.21	122	60	68
RRUS-E2 RRH (Shielded)	20.4	13.9	7.5	1.97	1.06	1.47	2.72	1.20	1.21	91	50	60
B14 4478 RRH	18.1	13.4	8.3	1.68	1.04	1.35	2.19	1.20	1.20	78	48	56
4426 B66 RRH	15.0	13.2	5.8	1.38	0.60	1.14	2.59	1.20	1.20	64	28	37

WIND LOADS WITH ICE:

Appurtenances	Height	Width	Depth	Flat Area (normal)	Flat Area (side)	Ratio (normal)	Ratio (side)	Ca (normal)	Ca (side)	Force (lbs) (normal)	Force (lbs) (side)	Force (lbs) (angle)
EPBQ-654L8H8-L2 Antenna	99.6	24.6	9.9	17.05	6.88	4.04	10.02	1.27	1.50	132	63	80
HPA65R-BU8A Antenna	99.6	15.3	11.2	10.62	7.78	6.49	8.86	1.38	1.46	89	70	75
B5/B12 4449 RRH	18.5	16.7	12.8	2.16	1.65	1.11	1.44	1.20	1.20	16	12	15
4415 B25 RRH	18.6	16.8	9.0	2.18	1.17	1.11	2.06	1.20	1.20	16	9	10
RRUS-32 RRH	30.8	15.7	10.6	3.37	2.28	1.96	2.90	1.20	1.22	25	17	19
RRUS-32 RRH (Shielded)	30.8	11.8	10.6	2.53	2.28	2.61	2.90	1.20	1.22	19	17	17
RRUS-E2 RRH	24.0	22.1	11.1	3.70	1.86	1.09	2.16	1.20	1.20	27	14	17
RRUS-E2 RRH (Shielded)	24.0	16.6	11.1	2.77	1.86	1.45	2.16	1.20	1.20	20	14	15
B14 4478 RRH	21.7	17.0	11.9	2.57	1.80	1.28	1.83	1.20	1.20	19	13	15
4426 B66 RRH	18.6	16.8	9.4	2.18	1.22	1.11	1.97	1.20	1.20	16	9	11

WIND LOADS AT 30 MPH:

Appurtenances	Height	Width	Depth	Flat Area (normal)	Flat Area (side)	Ratio (normal)	Ratio (side)	Ca (normal)	Ca (side)	Force (lbs) (normal)	Force (lbs) (side)	Force (lbs) (angle)
EPBQ-654L8H8-L2 Antenna	96.0	21.0	6.3	14.00	4.20	4.57	15.24	1.29	1.67	62	24	34
HPA65R-BU8A Antenna	96.0	11.7	7.6	7.80	5.07	8.21	12.63	1.44	1.59	39	28	30
B5/B12 4449 RRH	14.9	13.1	9.2	1.36	0.95	1.14	1.62	1.20	1.20	6	4	4
4415 B25 RRH	15.0	13.2	5.4	1.38	0.56	1.14	2.78	1.20	1.21	6	2	3
RRUS-32 RRH	27.2	12.1	7.0	2.29	1.32	2.25	3.89	1.20	1.26	9	6	7
RRUS-32 RRH (Shielded)	27.2	9.1	7.0	1.71	1.32	3.00	3.89	1.22	1.26	7	6	6
RRUS-E2 RRH	20.4	18.5	7.5	2.62	1.06	1.10	2.72	1.20	1.21	11	4	6
RRUS-E2 RRH (Shielded)	20.4	13.9	7.5	1.97	1.06	1.47	2.72	1.20	1.21	8	4	5
B14 4478 RRH	18.1	13.4	8.3	1.68	1.04	1.35	2.19	1.20	1.20	7	4	5
4426 B66 RRH	15.0	13.2	5.8	1.38	0.60	1.14	2.59	1.20	1.20	6	3	3

Date: 12/3/2018
Project Name: MOREHOUSE ROAD
Project Number: CT1323/S2032
Designed By: JP Checked By: MSC

HUDSON Design Group LLC

WIND LOADS

Angle = 90 (deg) | Ice Thickness = 1.82 in. | Equivalent Angle = 270 (deg)

WIND LOADS WITH NO ICE:

Appurtenances	Height	Width	Depth	Flat Area (normal)	Flat Area (side)	Ratio (normal)	Ratio (side)	Ca (normal)	Ca (side)	Force (lbs) (normal)	Force (lbs) (side)	Force (lbs) (angle)
EPBQ-654L8H8-L2 Antenna	96.0	21.0	6.3	14.00	4.20	4.57	15.24	1.29	1.67	701	273	273
HPA65R-BU8A Antenna	96.0	11.7	7.6	7.80	5.07	8.21	12.63	1.44	1.59	435	312	312
B5/B12 4449 RRH	14.9	13.1	9.2	1.36	0.95	1.14	1.62	1.20	1.20	83	44	44
4415 B25 RRH	15.0	13.2	5.4	1.38	0.56	1.14	2.78	1.20	1.21	64	26	26
RRUS-32 RRH	27.2	12.1	7.0	2.29	1.32	2.25	3.89	1.20	1.26	106	65	65
RRUS-32 RRH (Shielded)	27.2	0.4	7.0	0.08	1.32	68.00	3.89	3.43	1.26	10	65	65
RRUS-E2 RRH	20.4	18.5	7.5	2.62	1.06	1.10	2.72	1.20	1.21	122	50	50
RRUS-E2 RRH (Shielded)	20.4	6.8	7.5	0.96	1.06	3.00	2.72	1.22	1.21	46	50	50
B14 4478 RRH	18.1	13.4	8.3	1.68	1.04	1.35	2.19	1.20	1.20	78	49	49
4426 B66 RRH	15.0	13.2	5.8	1.38	0.60	1.14	2.59	1.20	1.20	64	28	28

WIND LOADS WITH ICE:

Appurtenances	Height	Width	Depth	Flat Area (normal)	Flat Area (side)	Ratio (normal)	Ratio (side)	Ca (normal)	Ca (side)	Force (lbs) (normal)	Force (lbs) (side)	Force (lbs) (angle)
EPBQ-654L8H8-L2 Antenna	99.6	24.6	9.9	17.05	6.88	4.04	10.02	1.27	1.50	132	63	63
HPA65R-BU8A Antenna	99.6	15.3	11.2	10.62	7.78	6.49	8.86	1.38	1.46	79	70	70
B5/B12 4449 RRH	18.5	16.7	12.8	2.16	1.65	1.11	1.44	1.20	1.20	16	12	12
4415 B25 RRH	18.6	16.8	9.0	2.18	1.17	1.11	2.06	1.20	1.20	16	9	9
RRUS-32 RRH	30.8	15.7	10.6	3.37	2.28	1.96	2.90	1.20	1.22	25	17	17
RRUS-32 RRH (Shielded)	30.8	4.0	10.6	0.87	2.28	7.63	2.90	1.42	1.22	8	17	17
RRUS-E2 RRH	24.0	22.1	11.1	3.70	1.86	1.09	2.16	1.20	1.20	27	14	14
RRUS-E2 RRH (Shielded)	24.0	10.4	11.1	1.74	1.86	2.30	2.16	1.20	1.20	13	14	14
B14 4478 RRH	21.7	17.0	11.9	2.57	1.80	1.28	1.83	1.20	1.20	19	13	13
4426 B66 RRH	18.6	16.8	9.4	2.18	1.22	1.11	1.97	1.20	1.20	16	9	9

WIND LOADS AT 30 MPH:

Appurtenances	Height	Width	Depth	Flat Area (normal)	Flat Area (side)	Ratio (normal)	Ratio (side)	Ca (normal)	Ca (side)	Force (lbs) (normal)	Force (lbs) (side)	Force (lbs) (angle)
EPBQ-654L8H8-L2 Antenna	96.0	21.0	6.3	14.00	4.20	4.57	15.24	1.29	1.67	62	24	24
HPA65R-BU8A Antenna	96.0	11.7	7.6	7.80	5.07	8.21	12.63	1.44	1.59	39	28	28
B5/B12 4449 RRH	14.9	13.1	9.2	1.36	0.95	1.14	1.62	1.20	1.20	6	4	4
4415 B25 RRH	15.0	13.2	5.4	1.38	0.56	1.14	2.78	1.20	1.21	5	2	2
RRUS-32 RRH	27.2	12.1	7.0	2.29	1.32	2.25	3.89	1.20	1.26	9	6	6
RRUS-32 RRH (Shielded)	27.2	0.4	7.0	0.08	1.32	68.00	3.89	3.43	1.26	1	6	6
RRUS-E2 RRH	20.4	18.5	7.5	2.62	1.06	1.10	2.72	1.20	1.21	11	4	4
RRUS-E2 RRH (Shielded)	20.4	6.8	7.5	0.96	1.06	3.00	2.72	1.22	1.21	4	4	4
B14 4478 RRH	18.1	13.4	8.3	1.68	1.04	1.35	2.19	1.20	1.20	7	4	4
4426 B66 RRH	15.0	13.2	5.8	1.38	0.60	1.14	2.59	1.20	1.20	6	3	3

Date: 12/3/2018
Project Name: MOREHOUSE ROAD
Project Number: CT1323/S2032
Designed By: JP Checked By: MSC

HUDSON Design Group LLC

WIND LOADS

Angle = 120 (deg) | Ice Thickness = 1.82 in. | Equivalent Angle = [redacted] (deg)

WIND LOADS WITH NO ICE:

Appurtenances	Height	Width	Depth	Flat Area (normal)	Flat Area (side)	Ratio (normal)	Ratio (side)	Ca (normal)	Ca (side)	Force (lbs) (normal)	Force (lbs) (side)	Force (lbs) (angle)
EPBQ-654L8H8-L2 Antenna	96.0	21.0	6.3	14.00	4.20	4.57	15.24	1.29	1.67	701	278	380
HPA65R-BU8A Antenna	96.0	11.7	7.6	7.80	5.07	8.21	12.63	1.44	1.59	455	312	343
B5/B12 4449 RRH	14.9	13.1	9.2	1.36	0.95	1.14	1.62	1.20	1.20	63	44	49
4415 B25 RRH	15.0	13.2	5.4	1.38	0.56	1.14	2.78	1.20	1.21	64	26	36
RRUS-32 RRH	27.2	12.1	7.0	2.29	1.32	2.25	3.89	1.20	1.26	106	65	75
RRUS-32 RRH (Shielded)	27.2	9.1	7.0	1.71	1.32	3.00	3.89	1.22	1.26	81	65	69
RRUS-E2 RRH	20.4	18.5	7.5	2.62	1.06	1.10	2.72	1.20	1.21	122	50	68
RRUS-E2 RRH (Shielded)	20.4	13.9	7.5	1.97	1.06	1.47	2.72	1.20	1.21	91	50	60
B14 4478 RRH	18.1	13.4	8.3	1.68	1.04	1.35	2.19	1.20	1.20	78	48	56
4426 B66 RRH	15.0	13.2	5.8	1.38	0.60	1.14	2.59	1.20	1.20	64	28	37

WIND LOADS WITH ICE:

Appurtenances	Height	Width	Depth	Flat Area (normal)	Flat Area (side)	Ratio (normal)	Ratio (side)	Ca (normal)	Ca (side)	Force (lbs) (normal)	Force (lbs) (side)	Force (lbs) (angle)
EPBQ-654L8H8-L2 Antenna	99.6	24.6	9.9	17.09	6.88	4.04	10.02	1.27	1.50	192	63	80
HPA65R-BU8A Antenna	99.6	15.3	11.2	10.62	7.78	6.49	8.86	1.38	1.46	89	70	75
B5/B12 4449 RRH	18.3	16.7	12.8	2.16	1.65	1.11	1.44	1.20	1.20	16	12	13
4415 B25 RRH	18.6	16.8	9.0	2.19	1.17	1.11	2.06	1.20	1.20	16	9	10
RRUS-32 RRH	30.8	15.7	10.6	3.37	2.28	1.96	2.90	1.20	1.22	25	17	19
RRUS-32 RRH (Shielded)	30.8	11.8	10.6	2.53	2.28	2.61	2.90	1.20	1.22	19	17	17
RRUS-E2 RRH	24.0	22.1	11.1	3.70	1.96	1.09	2.16	1.20	1.20	27	14	17
RRUS-E2 RRH (Shielded)	24.0	16.6	11.1	2.77	1.86	1.45	2.16	1.20	1.20	20	14	15
B14 4478 RRH	21.7	17.0	11.9	2.57	1.80	1.28	1.83	1.20	1.20	19	13	15
4426 B66 RRH	18.6	16.8	9.4	2.18	1.22	1.11	1.97	1.20	1.20	16	9	11

WIND LOADS AT 30 MPH:

Appurtenances	Height	Width	Depth	Flat Area (normal)	Flat Area (side)	Ratio (normal)	Ratio (side)	Ca (normal)	Ca (side)	Force (lbs) (normal)	Force (lbs) (side)	Force (lbs) (angle)
EPBQ-654L8H8-L2 Antenna	96.0	21.0	6.3	14.00	4.20	4.57	15.24	1.29	1.67	62	24	34
HPA65R-BU8A Antenna	96.0	11.7	7.6	7.80	5.07	8.21	12.63	1.44	1.59	39	28	30
B5/B12 4449 RRH	14.9	13.1	9.2	1.36	0.95	1.14	1.62	1.20	1.20	6	4	4
4415 B25 RRH	15.0	13.2	5.4	1.38	0.56	1.14	2.78	1.20	1.21	6	2	3
RRUS-32 RRH	27.2	12.1	7.0	2.29	1.32	2.25	3.89	1.20	1.26	9	6	7
RRUS-32 RRH (Shielded)	27.2	9.1	7.0	1.71	1.32	3.00	3.89	1.22	1.26	7	6	6
RRUS-E2 RRH	20.4	18.5	7.5	2.62	1.06	1.10	2.72	1.20	1.21	11	4	6
RRUS-E2 RRH (Shielded)	20.4	13.9	7.5	1.97	1.06	1.47	2.72	1.20	1.21	8	4	5
B14 4478 RRH	18.1	13.4	8.3	1.68	1.04	1.35	2.19	1.20	1.20	7	4	5
4426 B66 RRH	15.0	13.2	5.8	1.38	0.60	1.14	2.59	1.20	1.20	6	3	3

Date: 12/3/2018
Project Name: MOREHOUSE ROAD
Project Number: CT1323/S2032
Designed By: JP Checked By: MSC

HUDSON Design Group LLC

WIND LOADS

Angle = 150 (deg) | Ice Thickness = 1.82 in. | Equivalent Angle = 330 (deg)

WIND LOADS WITH NO ICE:

Appurtenances	Height	Width	Depth	Flat Area (normal)	Flat Area (side)	Ratio (normal)	Ratio (side)	Ca (normal)	Ca (side)	Force (lbs) (normal)	Force (lbs) (side)	Force (lbs) (angle)
EPBQ-654L8H8-L2 Antenna	96.0	21.0	6.3	14.00	4.20	4.57	15.24	1.29	1.67	701	273	594
HPA65R-BU8A Antenna	96.0	11.7	7.6	7.80	5.07	8.21	12.63	1.44	1.59	435	312	404
B5/B12 4449 RRH	14.9	13.1	9.2	1.36	0.95	1.14	1.62	1.20	1.20	69	44	58
4415 B25 RRH	15.0	13.2	5.4	1.38	0.56	1.14	2.78	1.20	1.21	64	26	55
RRUS-32 RRH	27.2	12.1	7.0	2.29	1.32	2.25	3.89	1.20	1.26	106	65	96
RRUS-32 RRH (Shielded)	27.2	6.1	7.0	1.14	1.32	4.50	3.89	1.29	1.26	57	65	59
RRUS-E2 RRH	20.4	18.5	7.5	2.62	1.06	1.10	2.72	1.20	1.21	122	50	104
RRUS-E2 RRH (Shielded)	20.4	9.3	7.5	1.31	1.06	2.21	2.72	1.20	1.21	61	50	58
B14 4478 RRH	18.1	13.4	8.3	1.68	1.04	1.35	2.19	1.20	1.20	78	48	71
4426 B66 RRH	15.0	13.2	5.8	1.38	0.60	1.14	2.59	1.20	1.20	64	28	55

WIND LOADS WITH ICE:

Appurtenances	Height	Width	Depth	Flat Area (normal)	Flat Area (side)	Ratio (normal)	Ratio (side)	Ca (normal)	Ca (side)	Force (lbs) (normal)	Force (lbs) (side)	Force (lbs) (angle)
EPBQ-654L8H8-L2 Antenna	99.6	24.6	9.9	17.05	6.88	4.04	10.02	1.27	1.50	132	63	115
HPA65R-BU8A Antenna	99.6	15.3	11.2	10.62	7.78	6.49	8.86	1.38	1.46	89	70	84
B5/B12 4449 RRH	18.5	16.7	12.8	2.16	1.65	1.11	1.44	1.20	1.20	16	12	15
4415 B25 RRH	18.6	16.8	9.0	2.18	1.17	1.11	2.06	1.20	1.20	16	9	14
RRUS-32 RRH	30.8	15.7	10.6	3.97	2.28	1.96	2.90	1.20	1.22	25	17	23
RRUS-32 RRH (Shielded)	30.8	7.9	10.6	1.99	2.28	3.92	2.90	1.26	1.22	13	17	14
RRUS-E2 RRH	24.0	22.1	11.1	3.70	1.86	1.09	2.16	1.20	1.20	27	14	24
RRUS-E2 RRH (Shielded)	24.0	11.1	11.1	1.85	1.86	2.17	2.16	1.20	1.20	14	14	14
B14 4478 RRH	21.7	17.0	11.9	2.57	1.80	1.28	1.83	1.20	1.20	19	13	17
4426 B66 RRH	18.6	16.8	9.4	2.18	1.22	1.11	1.97	1.20	1.20	16	9	14

WIND LOADS AT 30 MPH:

Appurtenances	Height	Width	Depth	Flat Area (normal)	Flat Area (side)	Ratio (normal)	Ratio (side)	Ca (normal)	Ca (side)	Force (lbs) (normal)	Force (lbs) (side)	Force (lbs) (angle)
EPBQ-654L8H8-L2 Antenna	96.0	21.0	6.3	14.00	4.20	4.57	15.24	1.29	1.67	62	23	53
HPA65R-BU8A Antenna	96.0	11.7	7.6	7.80	5.07	8.21	12.63	1.44	1.59	39	28	36
B5/B12 4449 RRH	14.9	13.1	9.2	1.36	0.95	1.14	1.62	1.20	1.20	6	4	5
4415 B25 RRH	15.0	13.2	5.4	1.38	0.56	1.14	2.78	1.20	1.21	6	2	5
RRUS-32 RRH	27.2	12.1	7.0	2.29	1.32	2.25	3.89	1.20	1.26	9	6	9
RRUS-32 RRH (Shielded)	27.2	6.1	7.0	1.14	1.32	4.50	3.89	1.29	1.26	5	6	5
RRUS-E2 RRH	20.4	18.5	7.5	2.62	1.06	1.10	2.72	1.20	1.21	11	4	9
RRUS-E2 RRH (Shielded)	20.4	9.3	7.5	1.31	1.06	2.21	2.72	1.20	1.21	5	4	5
B14 4478 RRH	18.1	13.4	8.3	1.68	1.04	1.35	2.19	1.20	1.20	7	4	6
4426 B66 RRH	15.0	13.2	5.8	1.38	0.60	1.14	2.59	1.20	1.20	6	3	5

Date: 12/3/2018
Project Name: MOREHOUSE ROAD
Project Number: CT1323/S2032
Designed By: JP **Checked By:** MSC

HUDSON Design Group LLC

ICE WEIGHT CALCULATIONS

Thickness of ice: 1.82 in.
Density of ice: 56 pcf

EPBQ-654L8H8-L2 Antenna

Weight of ice based on total radial SF area:		
Height (in):	96.0	
Width (in):	21.0	
Depth (in):	6.3	
Total weight of ice on object:		422 lbs
Weight of object:	86 lbs	
Combined weight of ice and object:		508 lbs

HPA65R-BU8A Antenna

Weight of ice based on total radial SF area:		
Height (in):	96.0	
Width (in):	11.7	
Depth (in):	7.6	
Total weight of ice on object:		281 lbs
Weight of object:	54 lbs	
Combined weight of ice and object:		335 lbs

B5/B12 4449 RRH

Weight of ice based on total radial SF area:		
Height (in):	14.9	
Width (in):	13.1	
Depth (in):	9.2	
Total weight of ice on object:		49 lbs
Weight of object:	74 lbs	
Combined weight of ice and object:		123 lbs

4415 B25 RRH

Weight of ice based on total radial SF area:		
Height (in):	15.0	
Width (in):	13.2	
Depth (in):	5.4	
Total weight of ice on object:		45 lbs
Weight of object:	44 lbs	
Combined weight of ice and object:		89 lbs

RRUS-32 RRH

Weight of ice based on total radial SF area:		
Height (in):	27.2	
Width (in):	12.1	
Depth (in):	7.0	
Total weight of ice on object:		80 lbs
Weight of object:	60 lbs	
Combined weight of ice and object:		140 lbs

RRUS-E2 RRH

Weight of ice based on total radial SF area:		
Height (in):	20.4	
Width (in):	18.5	
Depth (in):	7.5	
Total weight of ice on object:		82 lbs
Weight of object:	53 lbs	
Combined weight of ice and object:		135 lbs

B14 4478 RRH

Weight of ice based on total radial SF area:		
Height (in):	18.1	
Width (in):	13.4	
Depth (in):	8.3	
Total weight of ice on object:		59 lbs
Weight of object:	60 lbs	
Combined weight of ice and object:		119 lbs

4426 B66 RRH

Weight of ice based on total radial SF area:		
Height (in):	15.0	
Width (in):	13.2	
Depth (in):	5.8	
Total weight of ice on object:		45 lbs
Weight of object:	49 lbs	
Combined weight of ice and object:		94 lbs

Squid Surge Arrestor

Weight of ice based on total radial SF area:		
Depth (in):	24.0	
Diameter(in):	9.7	
Total weight of ice on object:		51 lbs
Weight of object:	33 lbs	
Combined weight of ice and object:		84 lbs

3/4" Round Bar

Per foot weight of ice:		
diameter (in):	0.75	
Per foot weight of ice on object:		6 plf

2" pipe

Per foot weight of ice:		
diameter (in):	2.38	
Per foot weight of ice on object:		9 plf

2-1/2" pipe

Per foot weight of ice:		
diameter (in):	2.88	
Per foot weight of ice on object:		10 plf

L 2-1/2x2-1/2x1/4 Angles

Weight of ice based on total radial SF area:		
Height (in):	2.5	
Width (in):	2.5	
Per foot weight of ice on object:		12 plf

HUDSON
Design Group LLC

NSB Mount Calculations
(Proposed Conditions)

Bentley

Current Date: 12/3/2018 12:32 PM
Units system: English
File name: W:\STRUCTURAL DEPARTMENT\ANALYSIS SOFTWARE\RAM Elements\RAM Projects\AT&T\CT\CT1323\Rev.1\CT1323 (NSB) (Rev.1).etz\

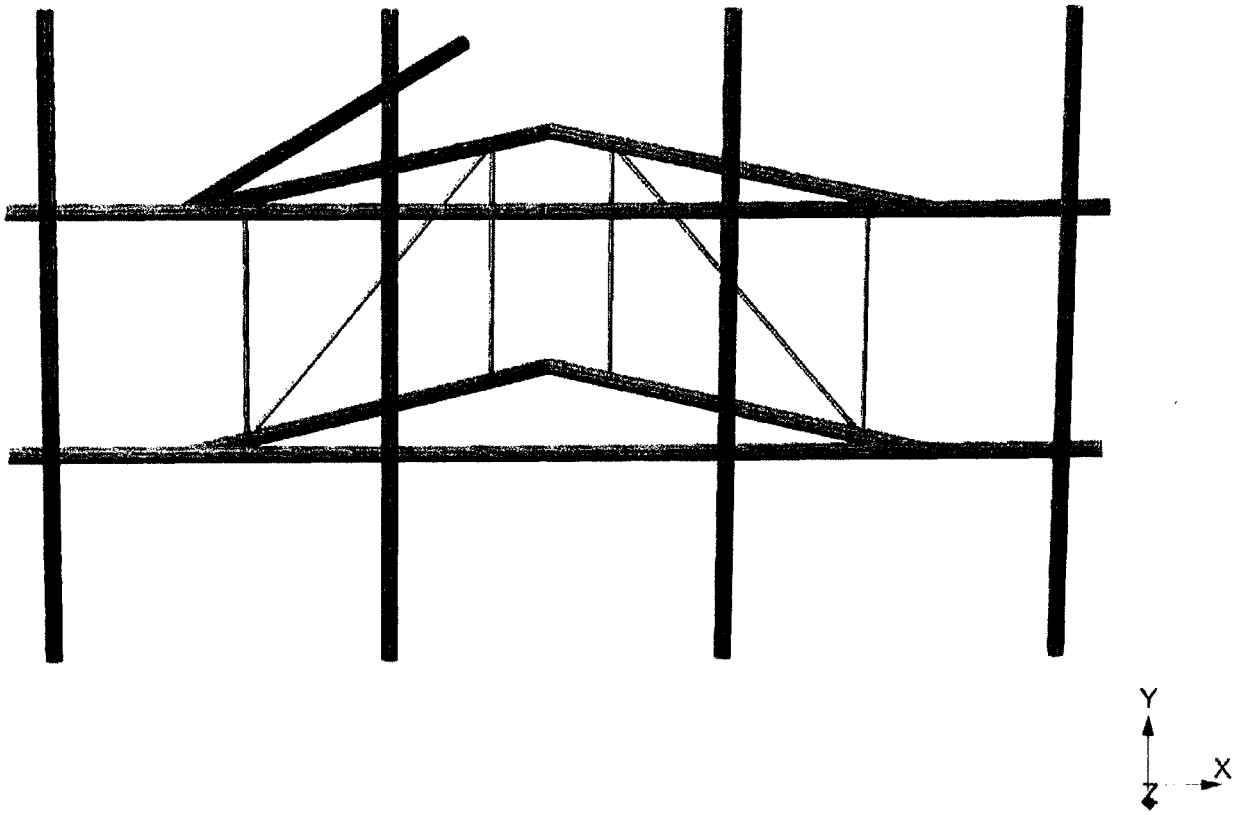

Bentley

Current Date: 12/3/2018 12:32 PM
Units system: English
File name: W:\STRUCTURAL DEPARTMENT\ANALYSIS SOFTWARE\RAM Elements\RAM Projects\AT&T\CT\CT1323\Rev.1\CT1323 (NSB) (Rev.1).etz\

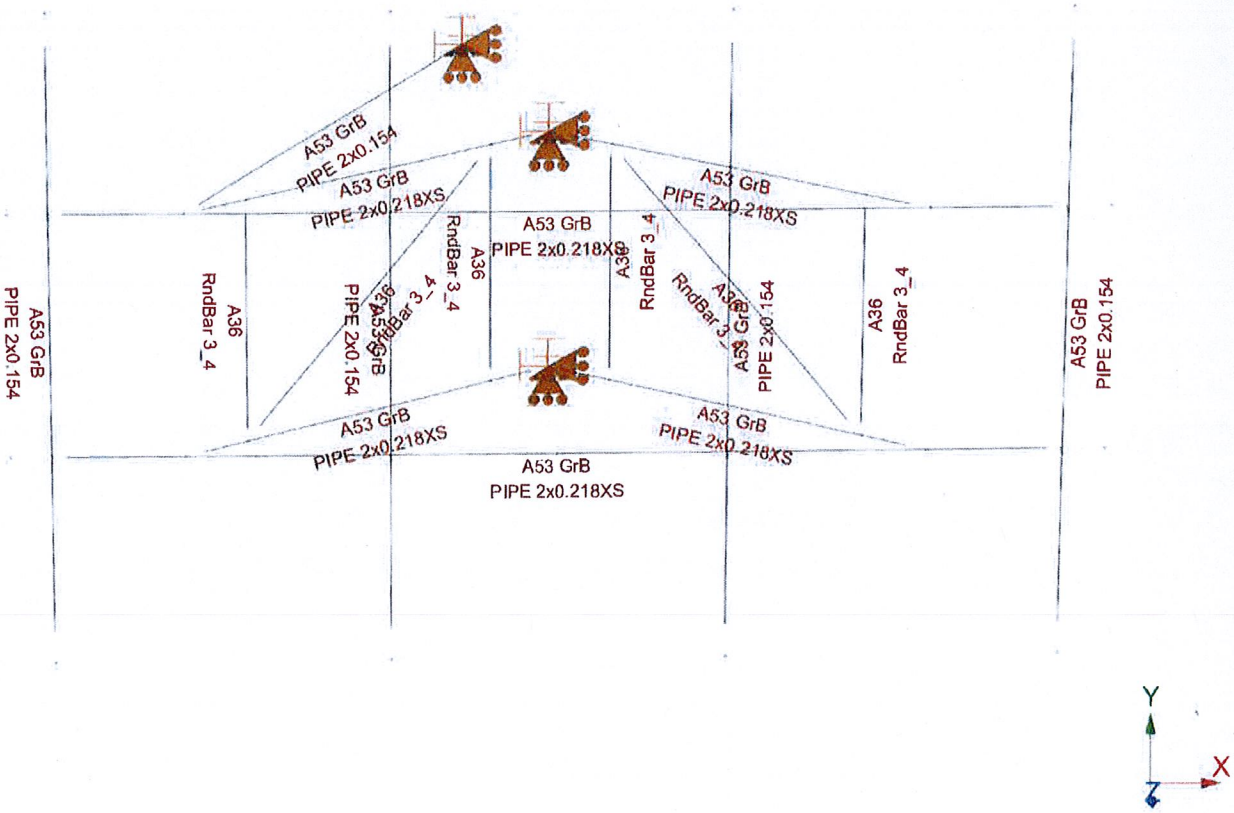

Bentley

Current Date: 12/3/2018 12:32 PM
Units system: English
File name: W:\STRUCTURAL DEPARTMENT\ANALYSIS SOFTWARE\RAM Elements\RAM Projects\AT&T\CT\CT1323\Rev.1\CT1323 (NSB) (Rev.1).etz\

Design status

- Not designed
- Error on design
- Design O.K.
- With warnings

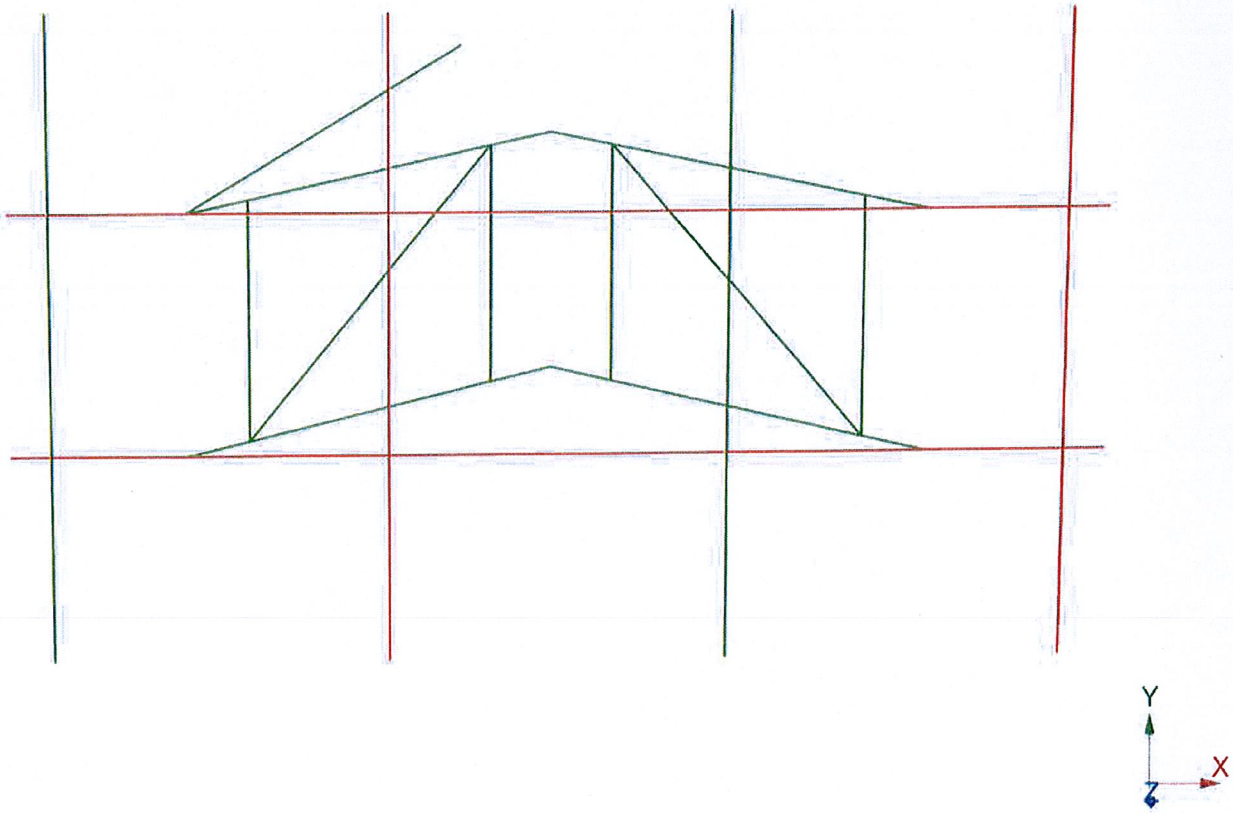

Bentley

Current Date: 12/3/2018 12:32 PM
Units system: English
File name: W:\STRUCTURAL DEPARTMENT\ANALYSIS SOFTWARE\RAM Elements\RAM Projects\AT&T\CT\CT1323\Rev.1\CT1323 (NSB) (Rev.1).etz\

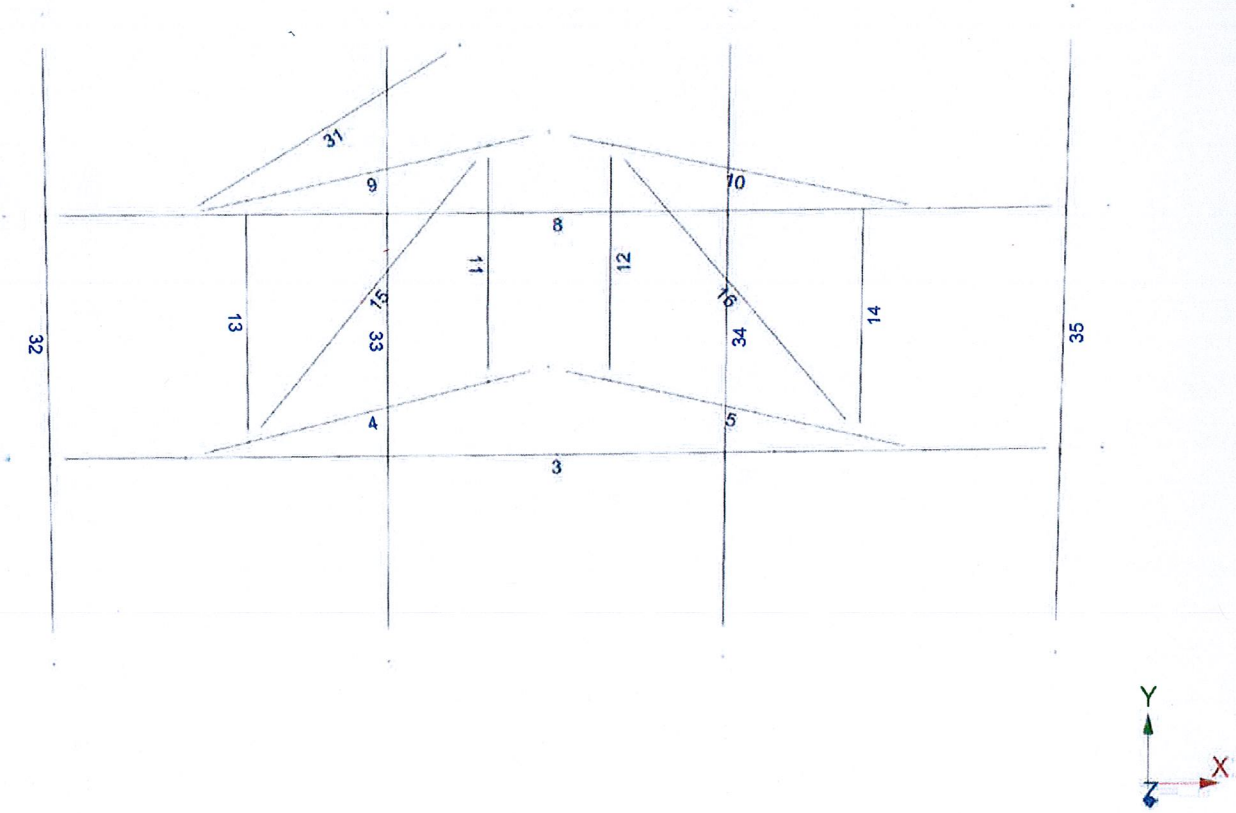

Bentley

Current Date: 12/3/2018 12:33 PM
Units system: English
File name: W:\STRUCTURAL DEPARTMENT\ANALYSIS SOFTWARE\RAM Elements\RAM Projects\AT&T\CT\CT1323\Rev.1\CT1323 (NSB) (Rev.1).e

Load data

GLOSSARY

Comb : Indicates if load condition is a load combination

Load Conditions

Condition	Description	Comb.	Category
D	Dead Load	No	DL
Wo	Wind Load (NO ICE)	No	WIND
W30	WL 30deg	No	WIND
W60	WL 60deg	No	WIND
W90	WL 90deg	No	WIND
W120	WL 120deg	No	WIND
W150	WL 150deg	No	WIND
Di	Ice Load	No	LL
WI0	WL ICE 0deg	No	WIND
WI30	WL ICE 30deg	No	WIND
WI60	WL ICE 60deg	No	WIND
WI90	WL ICE 90deg	No	WIND
WI120	WL ICE 120deg	No	WIND
WI150	WL ICE 150deg	No	WIND
WL0	WL 30 mph 0deg	No	WIND
WL30	WL 30 mph 30deg	No	WIND
WL60	WL 30 mph 60deg	No	WIND
WL90	WL 30 mph 90deg	No	WIND
WL120	WL 30 mph 120deg	No	WIND
WL150	WL 30 mph 150deg	No	WIND
LL1	250 lb Live Load on Left End	No	LL
LL2	250 lb Live Load on Center	No	LL
LL3	250 lb Live Load on Right End	No	LL
LLa1	250 lb Live Load on Antenna 1	No	LL
LLa2	250 lb Live Load on Antenna 2	No	LL
LLa3	250 lb Live Load on Antenna 3	No	LL
LLa4	250 lb Live Load on Antenna 4	No	LL

Distributed force on members

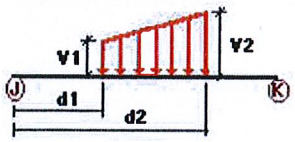

Condition	Member	Dir1	Val1 [Kip/ft]	Val2 [Kip/ft]	Dist1 [ft]	%	Dist2 [ft]	%
Wo	3	Z	-0.009	-0.009	0.00	Yes	100.00	Yes
	8	Z	-0.009	-0.009	0.00	Yes	100.00	Yes
	32	Z	-0.009	-0.009	0.00	Yes	100.00	Yes
	33	Z	-0.009	-0.009	0.00	Yes	100.00	Yes
	34	Z	-0.009	-0.009	0.00	Yes	100.00	Yes
	35	Z	-0.009	-0.009	0.00	Yes	100.00	Yes
W30	3	Z	-0.009	-0.009	0.00	Yes	100.00	Yes
	8	Z	-0.009	-0.009	0.00	Yes	100.00	Yes
	32	2	-0.009	-0.009	0.00	Yes	100.00	Yes
	33	2	-0.009	-0.009	0.00	Yes	100.00	Yes
	34	2	-0.009	-0.009	0.00	Yes	100.00	Yes
	35	2	-0.009	-0.009	0.00	Yes	100.00	Yes
W60	3	Z	-0.009	-0.009	0.00	Yes	100.00	Yes
	8	Z	-0.009	-0.009	0.00	Yes	100.00	Yes
	32	2	-0.009	-0.009	0.00	Yes	100.00	Yes
	33	2	-0.009	-0.009	0.00	Yes	100.00	Yes
	34	2	-0.009	-0.009	0.00	Yes	100.00	Yes
	35	2	-0.009	-0.009	0.00	Yes	100.00	Yes
W90	4	X	-0.009	-0.009	0.00	Yes	100.00	Yes
	5	X	-0.009	-0.009	0.00	Yes	100.00	Yes
	9	X	-0.009	-0.009	0.00	Yes	100.00	Yes
	10	X	-0.009	-0.009	0.00	Yes	100.00	Yes
	31	X	-0.009	-0.009	0.00	Yes	100.00	Yes
	32	x	-0.009	-0.009	0.00	Yes	100.00	Yes
	33	x	-0.009	-0.009	0.00	Yes	100.00	Yes
	34	x	-0.009	-0.009	0.00	Yes	100.00	Yes
	35	x	-0.009	-0.009	0.00	Yes	100.00	Yes
W120	3	Z	0.009	0.009	0.00	Yes	100.00	Yes
	8	Z	0.009	0.009	0.00	Yes	100.00	Yes
	32	3	0.009	0.009	0.00	Yes	100.00	Yes
	33	3	0.009	0.009	0.00	Yes	100.00	Yes
	34	3	0.009	0.009	0.00	Yes	100.00	Yes
	35	3	0.009	0.009	0.00	Yes	100.00	Yes
W150	3	Z	0.009	0.009	0.00	Yes	100.00	Yes
	8	Z	0.009	0.009	0.00	Yes	100.00	Yes
	32	3	0.009	0.009	0.00	Yes	100.00	Yes
	33	3	0.009	0.009	0.00	Yes	100.00	Yes
	34	3	0.009	0.009	0.00	Yes	100.00	Yes
	35	3	0.009	0.009	0.00	Yes	100.00	Yes
Di	3	Y	-0.009	-0.009	0.00	Yes	100.00	Yes
	4	Y	-0.009	-0.009	0.00	Yes	100.00	Yes
	5	Y	-0.009	-0.009	0.00	Yes	100.00	Yes
	8	Y	-0.009	-0.009	0.00	Yes	100.00	Yes
	9	Y	-0.009	-0.009	0.00	Yes	100.00	Yes
	10	Y	-0.009	-0.009	0.00	Yes	100.00	Yes
	11	Y	-0.006	-0.006	0.00	Yes	100.00	Yes
	12	Y	-0.006	-0.006	0.00	Yes	100.00	Yes
	13	Y	-0.006	-0.006	0.00	Yes	100.00	Yes
	14	Y	-0.006	-0.006	0.00	Yes	100.00	Yes
	15	Y	-0.006	-0.006	0.00	Yes	100.00	Yes
	16	Y	-0.006	-0.006	0.00	Yes	100.00	Yes
	31	Y	-0.009	-0.009	0.00	Yes	100.00	Yes
	32	Y	-0.009	-0.009	0.00	Yes	100.00	Yes
	33	Y	-0.009	-0.009	0.00	Yes	100.00	Yes
	34	Y	-0.009	-0.009	0.00	Yes	100.00	Yes
	35	Y	-0.009	-0.009	0.00	Yes	100.00	Yes

Concentrated forces on members

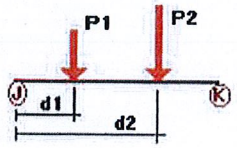

Condition	Member	Dir1	Value1 [Kip]	Dist1 [ft]	%
D	32	y	-0.033	2.00	No
		y	-0.033	6.00	No
	33	y	-0.043	1.00	No
		y	-0.043	7.00	No
		y	-0.074	3.00	No
		y	-0.044	5.00	No
	34	y	-0.027	1.00	No
		y	-0.027	7.00	No
		y	-0.06	3.00	No
		y	-0.053	5.00	No
	35	y	-0.043	1.00	No
		y	-0.043	7.00	No
		y	-0.06	3.00	No
		y	-0.049	5.00	No
Wo	32	z	-0.044	2.00	No
		z	-0.044	6.00	No
	33	z	-0.351	1.00	No
		z	-0.351	7.00	No
	34	z	-0.218	1.00	No
		z	-0.218	7.00	No
		z	-0.01	3.00	No
		z	-0.046	5.00	No
	35	z	-0.351	1.00	No
		z	-0.351	7.00	No
W30	32	2	-0.044	2.00	No
		2	-0.044	6.00	No
	33	2	-0.297	1.00	No
		2	-0.297	7.00	No
		2	-0.058	3.00	No
		2	-0.055	5.00	No
	34	2	-0.203	1.00	No
		2	-0.203	7.00	No
		2	-0.059	3.00	No
		2	-0.058	5.00	No
	35	2	-0.297	1.00	No
		2	-0.297	7.00	No
		2	-0.071	3.00	No
		2	-0.055	5.00	No
W60	32	2	-0.044	2.00	No
		2	-0.044	6.00	No
	33	2	-0.19	1.00	No
		2	-0.19	7.00	No
		2	-0.049	3.00	No
		2	-0.036	5.00	No
	34	2	-0.172	1.00	No
		2	-0.172	7.00	No
		2	-0.069	3.00	No
		2	-0.06	5.00	No
	35	2	-0.19	1.00	No
		2	-0.19	7.00	No
		2	-0.056	3.00	No
		2	-0.037	5.00	No
W90	32	x	-0.044	2.00	No
		x	-0.044	6.00	No

	33	x	-0.137	1.00	No
		x	-0.137	7.00	No
		x	-0.044	3.00	No
		x	-0.026	5.00	No
	34	x	-0.156	1.00	No
		x	-0.156	7.00	No
		x	-0.065	3.00	No
		x	-0.05	5.00	No
	35	x	-0.137	1.00	No
		x	-0.137	7.00	No
		x	-0.048	3.00	No
		x	-0.028	5.00	No
W120	32	3	0.044	2.00	No
		3	0.044	6.00	No
	33	3	0.19	1.00	No
		3	0.19	7.00	No
		3	0.049	3.00	No
		3	0.036	5.00	No
	34	3	0.172	1.00	No
		3	0.172	7.00	No
		3	0.069	3.00	No
		3	0.06	5.00	No
	35	3	0.19	1.00	No
		3	0.19	7.00	No
		3	0.056	3.00	No
		3	0.037	5.00	No
W150	32	3	0.044	2.00	No
		3	0.044	6.00	No
	33	3	0.297	1.00	No
		3	0.297	7.00	No
		3	0.058	3.00	No
		3	0.055	5.00	No
	34	3	0.203	1.00	No
		3	0.203	7.00	No
		3	0.059	3.00	No
		3	0.058	5.00	No
	35	3	0.297	1.00	No
		3	0.297	7.00	No
		3	0.071	3.00	No
		3	0.055	5.00	No
Di	32	y	-0.084	2.00	No
		y	-0.084	6.00	No
	33	y	-0.211	1.00	No
		y	-0.211	7.00	No
		y	-0.049	3.00	No
		y	-0.045	5.00	No
	34	y	-0.141	1.00	No
		y	-0.141	7.00	No
		y	-0.08	3.00	No
		y	-0.082	5.00	No
	35	y	-0.211	1.00	No
		y	-0.211	7.00	No
		y	-0.059	3.00	No
		y	-0.045	5.00	No
WI0	32	z	-0.011	2.00	No
		z	-0.011	6.00	No
	33	z	-0.068	1.00	No
		z	-0.068	7.00	No
	34	z	-0.047	1.00	No
		z	-0.047	7.00	No

		z	-0.018	3.00	No
		z	-0.013	5.00	No
	35	z	-0.068	1.00	No
		z	-0.068	7.00	No
WI30	32	2	-0.011	2.00	No
		2	-0.011	6.00	No
	33	2	-0.058	1.00	No
		2	-0.058	7.00	No
		2	-0.015	3.00	No
		2	-0.014	5.00	No
	34	2	-0.043	1.00	No
		2	-0.043	7.00	No
		2	-0.014	3.00	No
		2	-0.014	5.00	No
	35	2	-0.058	1.00	No
		2	-0.058	7.00	No
		2	-0.017	3.00	No
		2	-0.014	5.00	No
WI60	32	2	-0.011	2.00	No
		2	-0.011	6.00	No
	33	2	-0.041	1.00	No
		2	-0.041	7.00	No
		2	-0.013	3.00	No
		2	-0.01	5.00	No
	34	2	-0.038	1.00	No
		2	-0.038	7.00	No
		2	-0.017	3.00	No
		2	-0.015	5.00	No
	35	2	-0.041	1.00	No
		2	-0.041	7.00	No
		2	-0.015	3.00	No
		2	-0.011	5.00	No
WI90	32	x	-0.011	2.00	No
		x	-0.011	6.00	No
	33	x	-0.032	1.00	No
		x	-0.032	7.00	No
		x	-0.012	3.00	No
		x	-0.009	5.00	No
	34	x	-0.035	1.00	No
		x	-0.035	7.00	No
		x	-0.017	3.00	No
		x	-0.014	5.00	No
	35	x	-0.032	1.00	No
		x	-0.032	7.00	No
		x	-0.013	3.00	No
		x	-0.009	5.00	No
WI120	32	3	0.011	2.00	No
		3	0.011	6.00	No
	33	3	0.041	1.00	No
		3	0.041	7.00	No
		3	0.013	3.00	No
		3	0.01	5.00	No
	34	3	0.038	1.00	No
		3	0.038	7.00	No
		3	0.017	3.00	No
		3	0.015	5.00	No
	35	3	0.041	1.00	No
		3	0.041	7.00	No
		3	0.015	3.00	No
		3	0.011	5.00	No

Wl150	32	3	0.011	2.00	No
		3	0.011	6.00	No
	33	3	0.058	1.00	No
		3	0.058	7.00	No
		3	0.015	3.00	No
		3	0.014	5.00	No
	34	3	0.043	1.00	No
		3	0.043	7.00	No
		3	0.014	3.00	No
		3	0.014	5.00	No
	35	3	0.058	1.00	No
		3	0.058	7.00	No
		3	0.017	3.00	No
		3	0.014	5.00	No
WL0	32	z	-0.004	2.00	No
		z	-0.004	6.00	No
	33	z	-0.032	1.00	No
		z	-0.032	7.00	No
	34	z	-0.02	1.00	No
		z	-0.02	7.00	No
		z	-0.001	3.00	No
		z	-0.005	5.00	No
	35	z	-0.032	1.00	No
		z	-0.032	7.00	No
WL30	32	2	-0.004	2.00	No
		2	-0.004	6.00	No
	33	2	-0.027	1.00	No
		2	-0.027	7.00	No
		2	-0.006	3.00	No
		2	-0.005	5.00	No
	34	2	-0.018	1.00	No
		2	-0.018	7.00	No
		2	-0.006	3.00	No
		2	-0.006	5.00	No
	35	2	-0.027	1.00	No
		2	-0.027	7.00	No
		2	-0.007	3.00	No
		2	-0.005	5.00	No
WL60	32	2	-0.004	2.00	No
		2	-0.004	6.00	No
	33	2	-0.017	1.00	No
		2	-0.017	7.00	No
		2	-0.005	3.00	No
		2	-0.004	5.00	No
	34	2	-0.016	1.00	No
		2	-0.016	7.00	No
		2	-0.007	3.00	No
		2	-0.006	5.00	No
	35	2	-0.017	1.00	No
		2	-0.017	7.00	No
		2	-0.005	3.00	No
		2	-0.004	5.00	No
WL90	32	x	-0.004	2.00	No
		x	-0.004	6.00	No
	33	x	-0.013	1.00	No
		x	-0.013	7.00	No
		x	-0.004	3.00	No
		x	-0.003	5.00	No
	34	x	-0.014	1.00	No
		x	-0.014	7.00	No

		x	-0.006	3.00	No
		x	-0.005	5.00	No
	35	x	-0.013	1.00	No
		x	-0.013	7.00	No
		x	-0.005	3.00	No
		x	-0.003	5.00	No
WL120	32	3	0.004	2.00	No
		3	0.004	6.00	No
	33	3	0.017	1.00	No
		3	0.017	7.00	No
		3	0.005	3.00	No
		3	0.004	5.00	No
	34	3	0.016	1.00	No
		3	0.016	7.00	No
		3	0.007	3.00	No
		3	0.006	5.00	No
	35	3	0.017	1.00	No
		3	0.017	7.00	No
		3	0.005	3.00	No
		3	0.004	5.00	No
WL150	32	3	0.004	2.00	No
		3	0.004	6.00	No
	33	3	0.027	1.00	No
		3	0.027	7.00	No
		3	0.006	3.00	No
		3	0.005	5.00	No
	34	3	0.018	1.00	No
		3	0.018	7.00	No
		3	0.006	3.00	No
		3	0.006	5.00	No
	35	3	0.027	1.00	No
		3	0.027	7.00	No
		3	0.007	3.00	No
		3	0.005	5.00	No
LL1	8	y	-0.25	0.00	Yes
LL2	8	y	-0.25	50.00	Yes
LL3	8	y	-0.25	100.00	Yes
LLa1	35	y	-0.25	4.00	No
LLa2	34	y	-0.25	4.00	No
LLa3	33	y	-0.25	4.00	No
LLa4	32	y	-0.25	4.00	No

Self weight multipliers for load conditions

Condition	Description	Self weight multiplier			
		Comb.	MultX	MultY	MultZ
D	Dead Load	No	0.00	-1.00	0.00
Wo	Wind Load (NO ICE)	No	0.00	0.00	0.00
W30	WL 30deg	No	0.00	0.00	0.00
W60	WL 60deg	No	0.00	0.00	0.00
W90	WL 90deg	No	0.00	0.00	0.00
W120	WL 120deg	No	0.00	0.00	0.00
W150	WL 150deg	No	0.00	0.00	0.00
Di	Ice Load	No	0.00	0.00	0.00
WI0	WL ICE 0deg	No	0.00	0.00	0.00

WI30	WL ICE 30deg	No	0.00	0.00	0.00
WI60	WL ICE 60deg	No	0.00	0.00	0.00
WI90	WL ICE 90deg	No	0.00	0.00	0.00
WI120	WL ICE 120deg	No	0.00	0.00	0.00
WI150	WL ICE 150deg	No	0.00	0.00	0.00
WL0	WL 30 mph 0deg	No	0.00	0.00	0.00
WL30	WL 30 mph 30deg	No	0.00	0.00	0.00
WL60	WL 30 mph 60deg	No	0.00	0.00	0.00
WL90	WL 30 mph 90deg	No	0.00	0.00	0.00
WL120	WL 30 mph 120deg	No	0.00	0.00	0.00
WL150	WL 30 mph 150deg	No	0.00	0.00	0.00
LL1	250 lb Live Load on Left End	No	0.00	0.00	0.00
LL2	250 lb Live Load on Center	No	0.00	0.00	0.00
LL3	250 lb Live Load on Right End	No	0.00	0.00	0.00
LLa1	250 lb Live Load on Antenna 1	No	0.00	0.00	0.00
LLa2	250 lb Live Load on Antenna 2	No	0.00	0.00	0.00
LLa3	250 lb Live Load on Antenna 3	No	0.00	0.00	0.00
LLa4	250 lb Live Load on Antenna 4	No	0.00	0.00	0.00

Earthquake (Dynamic analysis only)

Condition	a/g	Ang. [Deg]	Damp. [%]
D	0.00	0.00	0.00
Wo	0.00	0.00	0.00
W30	0.00	0.00	0.00
W60	0.00	0.00	0.00
W90	0.00	0.00	0.00
W120	0.00	0.00	0.00
W150	0.00	0.00	0.00
Di	0.00	0.00	0.00
WI0	0.00	0.00	0.00
WI30	0.00	0.00	0.00
WI60	0.00	0.00	0.00
WI90	0.00	0.00	0.00
WI120	0.00	0.00	0.00
WI150	0.00	0.00	0.00
WL0	0.00	0.00	0.00
WL30	0.00	0.00	0.00
WL60	0.00	0.00	0.00
WL90	0.00	0.00	0.00
WL120	0.00	0.00	0.00
WL150	0.00	0.00	0.00
LL1	0.00	0.00	0.00
LL2	0.00	0.00	0.00
LL3	0.00	0.00	0.00
LLa1	0.00	0.00	0.00
LLa2	0.00	0.00	0.00
LLa3	0.00	0.00	0.00
LLa4	0.00	0.00	0.00

Bentley

Current Date: 12/3/2018 12:33 PM
Units system: English
File name: W:\STRUCTURAL DEPARTMENT\ANALYSIS SOFTWARE\RAM Elements\RAM Projects\AT&T\CT\CT1323\Rev.1\CT1323 (NSB) (Rev.1).e

Steel Code Check

Report: Summary - Group by member

Load conditions to be included in design :

LC1=1.2D+1.6Wo
LC2=1.2D+1.6W30
LC3=1.2D+1.6W60
LC4=1.2D+1.6W90
LC5=1.2D+1.6W120
LC6=1.2D+1.6W150
LC7=1.2D-1.6Wo
LC8=1.2D-1.6W30
LC9=1.2D-1.6W60
LC10=1.2D-1.6W90
LC11=1.2D-1.6W120
LC12=1.2D-1.6W150
LC13=0.9D+1.6Wo
LC14=0.9D+1.6W30
LC15=0.9D+1.6W60
LC16=0.9D+1.6W90
LC17=0.9D+1.6W120
LC18=0.9D+1.6W150
LC19=0.9D-1.6Wo
LC20=0.9D-1.6W30
LC21=0.9D-1.6W60
LC22=0.9D-1.6W90
LC23=0.9D-1.6W120
LC24=0.9D-1.6W150
LC25=1.2D+Di+Wi0
LC26=1.2D+Di+Wi30
LC27=1.2D+Di+Wi60
LC28=1.2D+Di+Wi90
LC29=1.2D+Di+Wi120
LC30=1.2D+Di+Wi150
LC31=1.2D+Di-Wi0
LC32=1.2D+Di-Wi30
LC33=1.2D+Di-Wi60
LC34=1.2D+Di-Wi90
LC35=1.2D+Di-Wi120
LC36=1.2D+Di-Wi150
LC37=0.9D
LC38=1.2D+1.6LL1
LC39=1.2D+1.6LL2
LC40=1.2D+1.6LL3
LC41=1.2D+WL0+LLa1
LC42=1.2D+WL30+LLa1
LC43=1.2D+WL60+LLa1
LC44=1.2D+WL90+LLa1
LC45=1.2D+WL120+LLa1
LC46=1.2D+WL150+LLa1
LC47=1.2D-WL0+LLa1
LC48=1.2D-WL30+LLa1
LC49=1.2D-WL60+LLa1
LC50=1.2D-WL90+LLa1
LC51=1.2D-WL120+LLa1
LC52=1.2D-WL150+LLa1
LC53=1.2D+WL0+LLa2

LC54=1.2D+WL30+LLa2
LC55=1.2D+WL60+LLa2
LC56=1.2D+WL90+LLa2
LC57=1.2D+WL120+LLa2
LC58=1.2D+WL150+LLa2
LC59=1.2D-WL0+LLa2
LC60=1.2D-WL30+LLa2
LC61=1.2D-WL60+LLa2
LC62=1.2D-WL90+LLa2
LC63=1.2D-WL120+LLa2
LC64=1.2D-WL150+LLa2
LC65=1.2D+WL0+LLa3
LC66=1.2D+WL30+LLa3
LC67=1.2D+WL60+LLa3
LC68=1.2D+WL90+LLa3
LC69=1.2D+WL120+LLa3
LC70=1.2D+WL150+LLa3
LC71=1.2D-WL0+LLa3
LC72=1.2D-WL30+LLa3
LC73=1.2D-WL60+LLa3
LC74=1.2D-WL90+LLa3
LC75=1.2D-WL120+LLa3
LC76=1.2D-WL150+LLa3
LC77=1.2D+WL0+LLa4
LC78=1.2D+WL30+LLa4
LC79=1.2D+WL60+LLa4
LC80=1.2D+WL90+LLa4
LC81=1.2D+WL120+LLa4
LC82=1.2D+WL150+LLa4
LC83=1.2D-WL0+LLa4
LC84=1.2D-WL30+LLa4
LC85=1.2D-WL60+LLa4
LC86=1.2D-WL90+LLa4
LC87=1.2D-WL120+LLa4
LC88=1.2D-WL150+LLa4

Description	Section	Member	Ctrl Eq.	Ratio	Status	Reference
	PIPE 2x0.154	**31**	LC6 at 0.00%	0.71	OK	Eq. H1-1a
		32	LC12 at 66.67%	0.36	OK	Eq. H1-1b
		33	LC7 at 68.75%	**1.01**	**N.G.**	Eq. H1-1b
		34	LC6 at 31.25%	0.76	OK	Eq. H1-1b
		35	LC7 at 68.75%	1.01	N.G.	Eq. H1-1b
	PIPE 2x0.218XS	**3**	LC7 at 83.75%	**1.24**	**N.G.**	Eq. H1-1a
		4	LC8 at 0.00%	0.51	OK	Eq. H1-1b
		5	LC6 at 100.00%	0.56	OK	Eq. H1-1b
		8	LC6 at 83.04%	1.11	N.G.	Eq. H1-1a
		9	LC12 at 0.00%	0.71	OK	Eq. H1-1a
		10	LC30 at 100.00%	0.54	OK	Eq. H1-1b
	RndBar 3_4	**11**	LC36 at 0.00%	0.53	OK	Eq. H1-1a
		12	LC29 at 100.00%	0.68	OK	Eq. H1-1a
		13	LC36 at 100.00%	0.63	OK	Eq. H1-1a
		14	LC26 at 0.00%	**0.88**	**OK**	Eq. H1-1a
		15	LC36 at 100.00%	0.42	OK	Eq. H1-1a
		16	LC26 at 100.00%	0.55	OK	Eq. H1-1a

Bentley

Current Date: 12/3/2018 12:33 PM
Units system: English
File name: W:\STRUCTURAL DEPARTMENT\ANALYSIS SOFTWARE\RAM Elements\RAM Projects\AT&T\CT\CT1323\Rev.1\CT1323 (NSB) (Rev.1).e

Geometry data

GLOSSARY

Cb22, Cb33	: Moment gradient coefficients
Cm22, Cm33	: Coefficients applied to bending term in interaction formula
d0	: Tapered member section depth at J end of member
DJX	: Rigid end offset distance measured from J node in axis X
DJY	: Rigid end offset distance measured from J node in axis Y
DJZ	: Rigid end offset distance measured from J node in axis Z
DKX	: Rigid end offset distance measured from K node in axis X
DKY	: Rigid end offset distance measured from K node in axis Y
DKZ	: Rigid end offset distance measured from K node in axis Z
dL	: Tapered member section depth at K end of member
Ig factor	: Inertia reduction factor (Effective Inertia/Gross Inertia) for reinforced concrete members
K22	: Effective length factor about axis 2
K33	: Effective length factor about axis 3
L22	: Member length for calculation of axial capacity
L33	: Member length for calculation of axial capacity
LB pos	: Lateral unbraced length of the compression flange in the positive side of local axis 2
LB neg	: Lateral unbraced length of the compression flange in the negative side of local axis 2
RX	: Rotation about X
RY	: Rotation about Y
RZ	: Rotation about Z
TO	: 1 = Tension only member 0 = Normal member
TX	: Translation in X
TY	: Translation in Y
TZ	: Translation in Z

Nodes

Node	X [ft]	Y [ft]	Z [ft]	Rigid Floor
2	6.50	0.00	0.00	0
3	-6.50	0.00	0.00	0
8	-4.40	0.00	0.00	0
9	4.40	0.00	0.00	0
10	0.00	0.00	-3.00	0
11	-3.6667	0.00	-0.50	0
12	3.6667	0.00	-0.50	0
13	0.7333	0.00	-2.50	0
14	-0.7333	0.00	-2.50	0
16	6.50	3.00	0.00	0
17	-6.50	3.00	0.00	0
22	-4.40	3.00	0.00	0
23	4.40	3.00	0.00	0
24	0.00	3.00	-3.00	0
25	-3.6667	3.00	-0.50	0
26	3.6667	3.00	-0.50	0
27	0.7333	3.00	-2.50	0
28	-0.7333	3.00	-2.50	0
33	-6.00	5.50	0.20	0
34	6.00	5.50	0.20	0
35	-6.00	-2.50	0.20	0
36	6.00	-2.50	0.20	0

42	2.00	5.50	0.20	0
43	2.00	-2.50	0.20	0
48	-2.00	5.50	0.20	0
49	-2.00	-2.50	0.20	0
51	-1.00	3.00	-6.50	0
55	0.00	0.00	0.00	0
56	2.60	0.00	0.00	0
57	-2.60	0.00	0.00	0

Restraints

Node	TX	TY	TZ	RX	RY	RZ
10	1	1	1	1	1	1
24	1	1	1	1	1	1
51	1	1	1	1	1	1

Members

Member	NJ	NK	Description	Section	Material	d0 [in]	dL [in]	lg factor
3	3	2		PIPE 2x0.218XS	A53 GrB	0.00	0.00	0.00
4	8	10		PIPE 2x0.218XS	A53 GrB	0.00	0.00	0.00
5	9	10		PIPE 2x0.218XS	A53 GrB	0.00	0.00	0.00
8	17	16		PIPE 2x0.218XS	A53 GrB	0.00	0.00	0.00
9	22	24		PIPE 2x0.218XS	A53 GrB	0.00	0.00	0.00
10	23	24		PIPE 2x0.218XS	A53 GrB	0.00	0.00	0.00
11	14	28		RndBar 3_4	A36	0.00	0.00	0.00
12	27	13		RndBar 3_4	A36	0.00	0.00	0.00
13	25	11		RndBar 3_4	A36	0.00	0.00	0.00
14	12	26		RndBar 3_4	A36	0.00	0.00	0.00
15	28	11		RndBar 3_4	A36	0.00	0.00	0.00
16	27	12		RndBar 3_4	A36	0.00	0.00	0.00
31	22	51		PIPE 2x0.154	A53 GrB	0.00	0.00	0.00
32	33	35		PIPE 2x0.154	A53 GrB	0.00	0.00	0.00
33	48	49		PIPE 2x0.154	A53 GrB	0.00	0.00	0.00
34	42	43		PIPE 2x0.154	A53 GrB	0.00	0.00	0.00
35	34	36		PIPE 2x0.154	A53 GrB	0.00	0.00	0.00

Orientation of local axes

Member	Rotation [Deg]	Axes23	NX	NY	NZ
32	45.00	0	0.00	0.00	0.00
33	45.00	0	0.00	0.00	0.00
34	45.00	0	0.00	0.00	0.00
35	45.00	0	0.00	0.00	0.00

Hinges

Member	Node-J				Node-K				TOR	AXL	Axial rigidity
	M33	M22	V3	V2	M33	M22	V3	V2			
15	0	0	0	0	0	0	0	0	0	0	Tension only
16	0	0	0	0	0	0	0	0	0	0	Tension only

HUDSON
Design Group LLC

NSB Mount Calculations
(Modified Conditions)

Bentley

Current Date: 12/3/2018 11:52 AM
Units system: English
File name: W:\STRUCTURAL DEPARTMENT\ANALYSIS SOFTWARE\RAM Elements\RAM Projects\AT&T\CT\CT1323\Rev.1\CT1323 (NSB) (Rev.1) (MOD).etz\

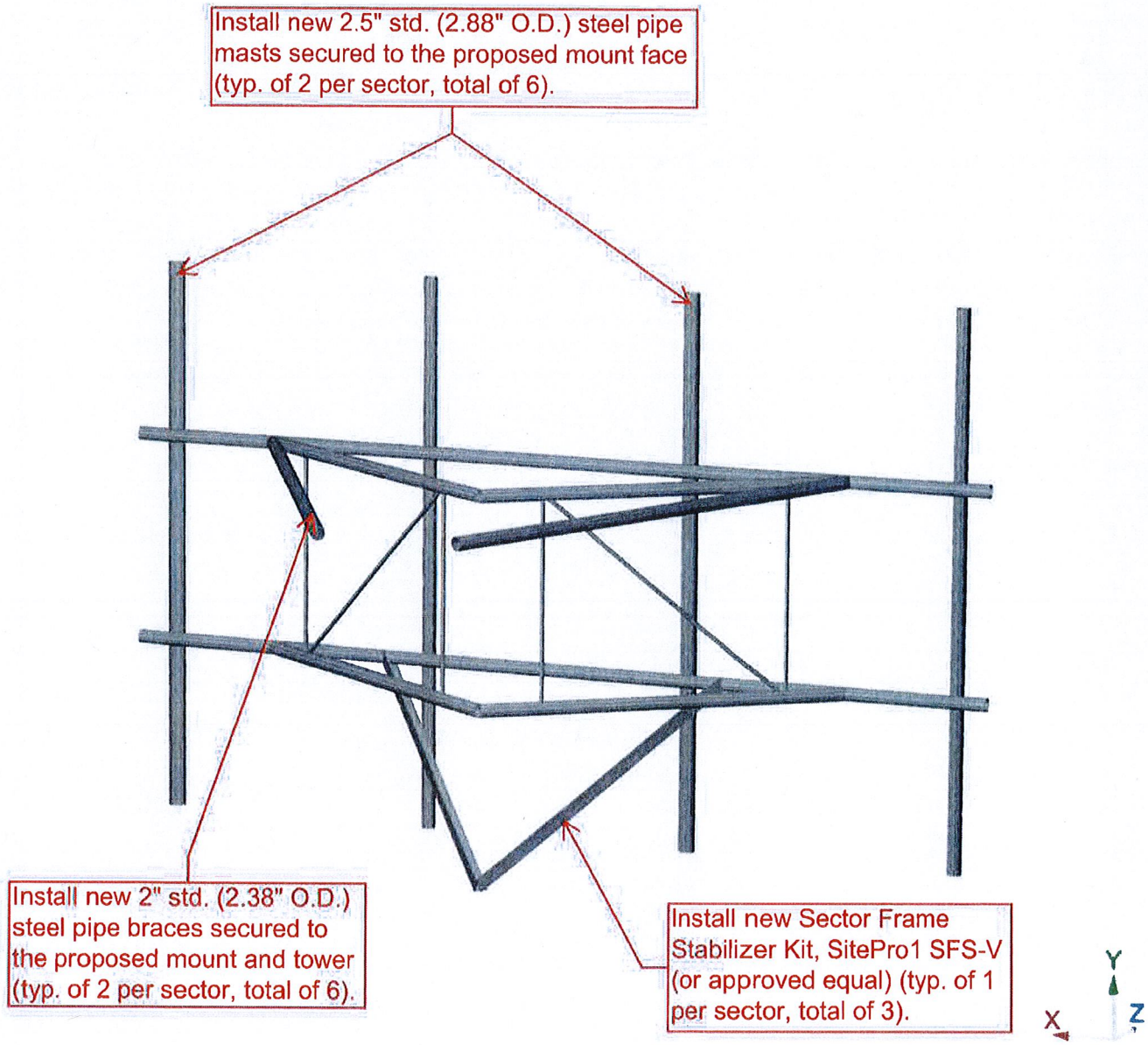

Bentley

Current Date: 12/3/2018 12:26 PM
Units system: English
File name: W:\STRUCTURAL DEPARTMENT\ANALYSIS SOFTWARE\RAM Elements\RAM Projects\AT&T\CT\CT1323\Rev.1\CT1323 (NSB) (Rev.1) (MOD).e

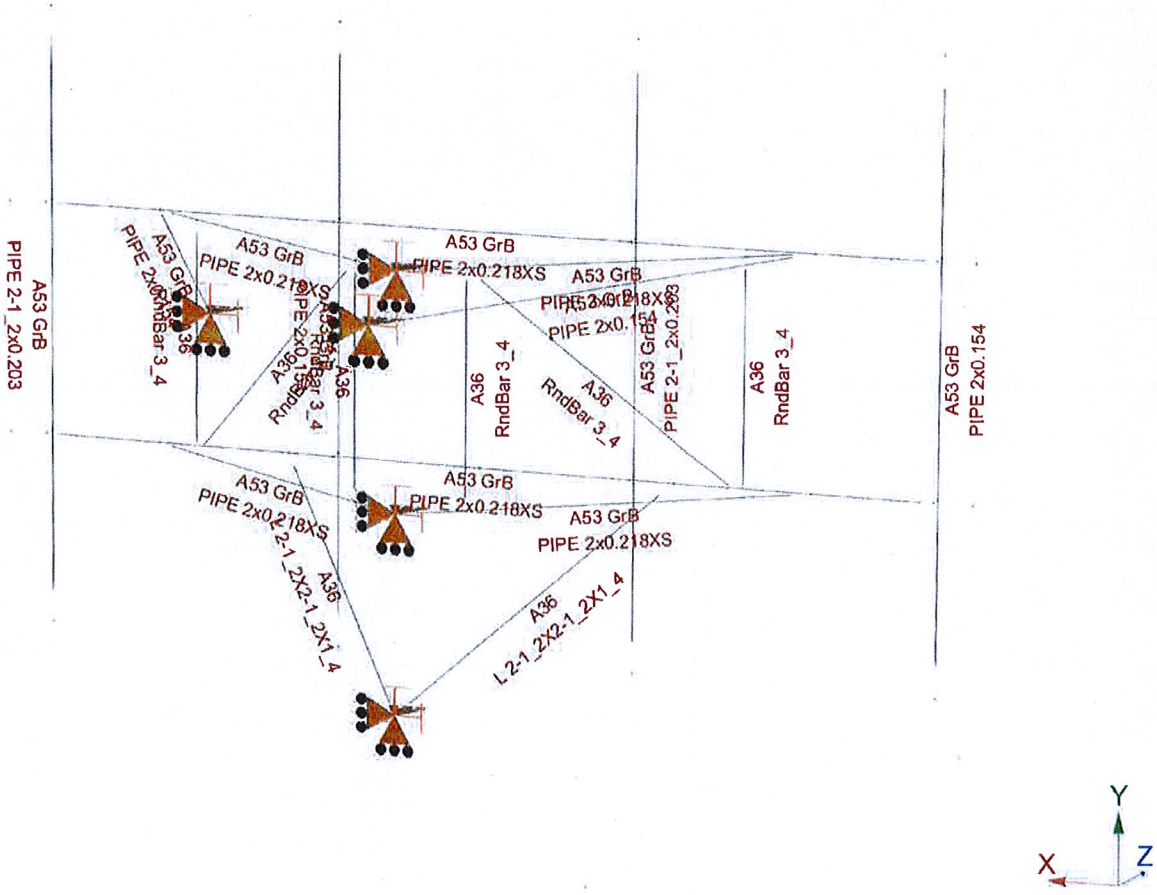

Bentley

Current Date: 12/3/2018 12:26 PM
Units system: English
File name: W:\STRUCTURAL DEPARTMENT\ANALYSIS SOFTWARE\RAM Elements\RAM Projects\AT&T\CT\CT1323\Rev.1\CT1323 (NSB) (Rev.1) (MOD).e

Design status

- Not designed
- Error on design
- Design O.K.
- With warnings

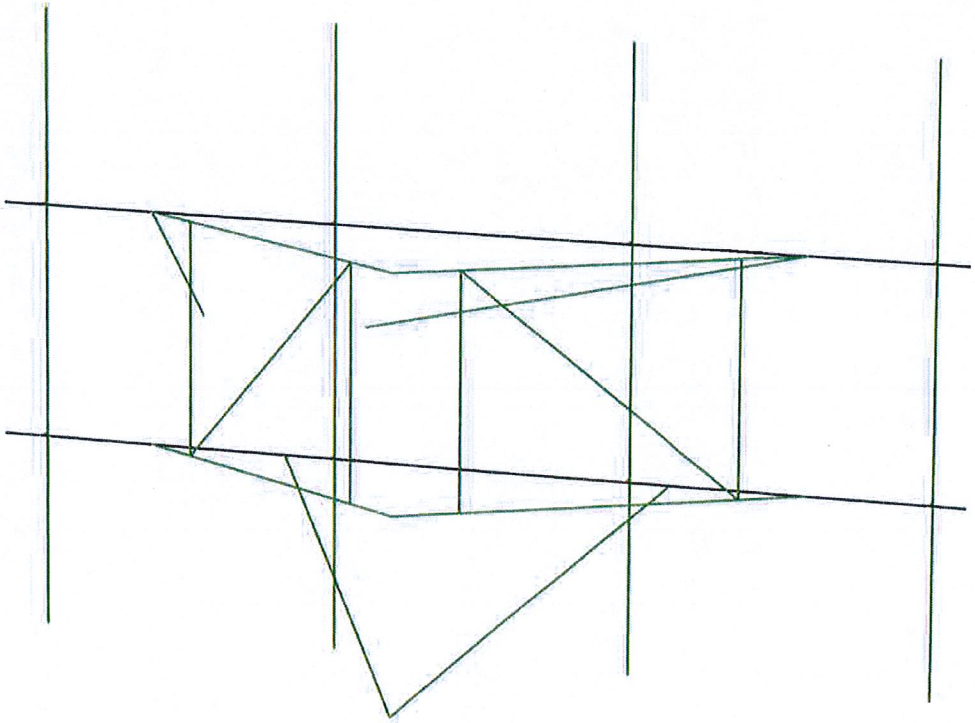

Bentley

Current Date: 12/3/2018 12:26 PM
Units system: English
File name: W:\STRUCTURAL DEPARTMENT\ANALYSIS SOFTWARE\RAM Elements\RAM Projects\AT&T\CT\CT1323\Rev.1\CT1323 (NSB) (Rev.1) (MOD).e

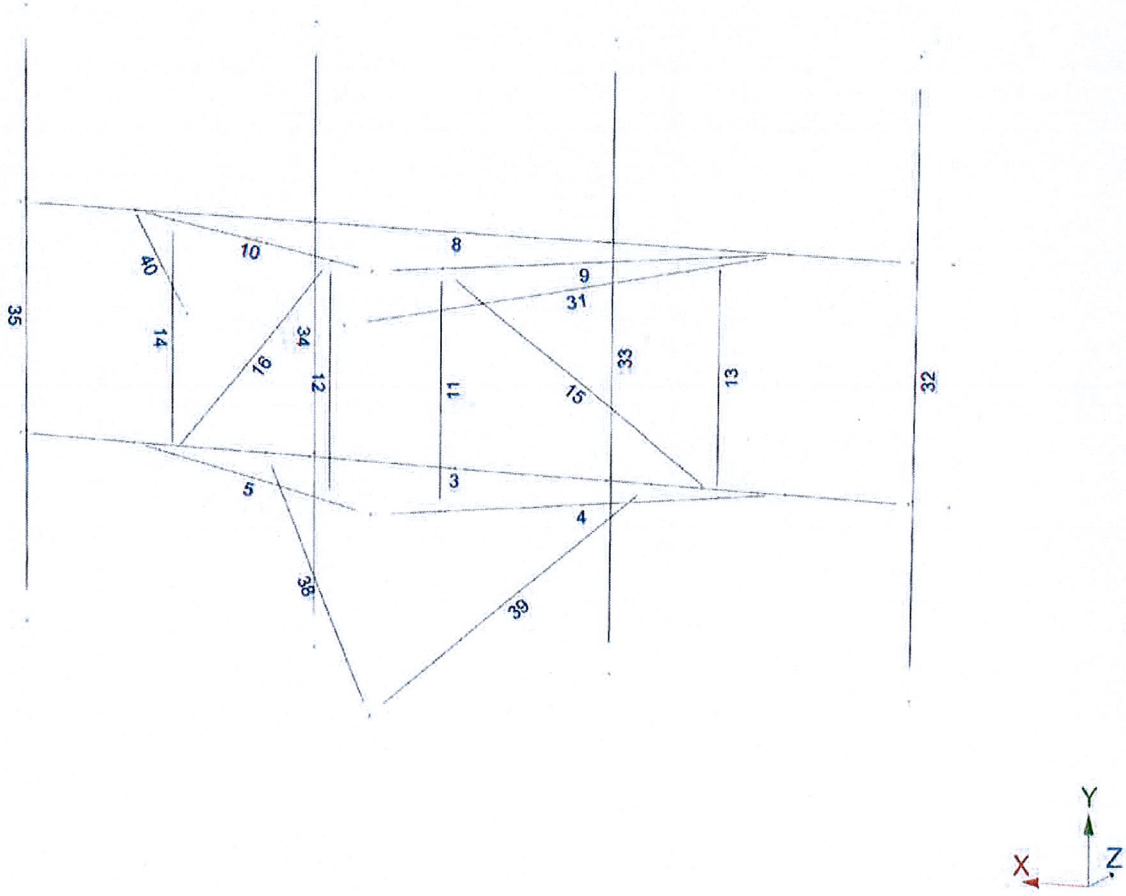

Current Date: 12/3/2018 12:27 PM
Units system: English
File name: W:\STRUCTURAL DEPARTMENT\ANALYSIS SOFTWARE\RAM Elements\RAM Projects\AT&T\CT\CT1323\Rev.1\CT1323 (NSB) (Rev.1) (MOD).etz\

Load data

GLOSSARY

Comb : Indicates if load condition is a load combination

Load Conditions

Condition	Description	Comb.	Category
D	Dead Load	No	DL
Wo	Wind Load (NO ICE)	No	WIND
W30	WL 30deg	No	WIND
W60	WL 60deg	No	WIND
W90	WL 90deg	No	WIND
W120	WL 120deg	No	WIND
W150	WL 150deg	No	WIND
Di	Ice Load	No	LL
WI0	WL ICE 0deg	No	WIND
WI30	WL ICE 30deg	No	WIND
WI60	WL ICE 60deg	No	WIND
WI90	WL ICE 90deg	No	WIND
WI120	WL ICE 120deg	No	WIND
WI150	WL ICE 150deg	No	WIND
WL0	WL 30 mph 0deg	No	WIND
WL30	WL 30 mph 30deg	No	WIND
WL60	WL 30 mph 60deg	No	WIND
WL90	WL 30 mph 90deg	No	WIND
WL120	WL 30 mph 120deg	No	WIND
WL150	WL 30 mph 150deg	No	WIND
LL1	250 lb Live Load on Left End	No	LL
LL2	250 lb Live Load on Center	No	LL
LL3	250 lb Live Load on Right End	No	LL
LLa1	250 lb Live Load on Antenna 1	No	LL
LLa2	250 lb Live Load on Antenna 2	No	LL
LLa3	250 lb Live Load on Antenna 3	No	LL
LLa4	250 lb Live Load on Antenna 4	No	LL

Distributed force on members

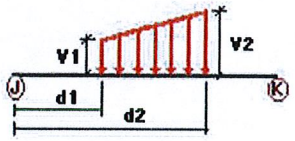

Condition	Member	Dir1	Val1 [Kip/ft]	Val2 [Kip/ft]	Dist1 [ft]	%	Dist2 [ft]	%
Wo	3	Z	-0.009	-0.009	0.00	Yes	100.00	Yes
	8	Z	-0.009	-0.009	0.00	Yes	100.00	Yes
	32	Z	-0.009	-0.009	0.00	Yes	100.00	Yes
	33	Z	-0.011	-0.011	0.00	Yes	100.00	Yes
	34	Z	-0.009	-0.009	0.00	Yes	100.00	Yes
	35	Z	-0.011	-0.011	0.00	Yes	100.00	Yes
W30	3	Z	-0.009	-0.009	0.00	Yes	100.00	Yes
	8	Z	-0.009	-0.009	0.00	Yes	100.00	Yes
	32	2	-0.009	-0.009	0.00	Yes	100.00	Yes
	33	2	-0.011	-0.011	0.00	Yes	100.00	Yes
	34	2	-0.009	-0.009	0.00	Yes	100.00	Yes
	35	2	-0.011	-0.011	0.00	Yes	100.00	Yes
W60	3	Z	-0.009	-0.009	0.00	Yes	100.00	Yes
	8	Z	-0.009	-0.009	0.00	Yes	100.00	Yes
	32	2	-0.009	-0.009	0.00	Yes	100.00	Yes
	33	2	-0.011	-0.011	0.00	Yes	100.00	Yes
	34	2	-0.009	-0.009	0.00	Yes	100.00	Yes
	35	2	-0.011	-0.011	0.00	Yes	100.00	Yes
W90	4	X	-0.009	-0.009	0.00	Yes	100.00	Yes
	5	X	-0.009	-0.009	0.00	Yes	100.00	Yes
	9	X	-0.009	-0.009	0.00	Yes	100.00	Yes
	10	X	-0.009	-0.009	0.00	Yes	100.00	Yes
	31	X	-0.009	-0.009	0.00	Yes	100.00	Yes
	32	x	-0.009	-0.009	0.00	Yes	100.00	Yes
	33	x	-0.011	-0.011	0.00	Yes	100.00	Yes
	34	x	-0.009	-0.009	0.00	Yes	100.00	Yes
	35	x	-0.011	-0.011	0.00	Yes	100.00	Yes
	40	X	-0.009	-0.009	0.00	Yes	100.00	Yes
W120	3	Z	0.009	0.009	0.00	Yes	100.00	Yes
	8	Z	0.009	0.009	0.00	Yes	100.00	Yes
	32	3	0.009	0.009	0.00	Yes	100.00	Yes
	33	3	0.011	0.011	0.00	Yes	100.00	Yes
	34	3	0.009	0.009	0.00	Yes	100.00	Yes
	35	3	0.011	0.011	0.00	Yes	100.00	Yes
W150	3	Z	0.009	0.009	0.00	Yes	100.00	Yes
	8	Z	0.009	0.009	0.00	Yes	100.00	Yes
	32	3	0.009	0.009	0.00	Yes	100.00	Yes
	33	3	0.011	0.011	0.00	Yes	100.00	Yes
	34	3	0.009	0.009	0.00	Yes	100.00	Yes
	35	3	0.011	0.011	0.00	Yes	100.00	Yes
Di	3	Y	-0.009	-0.009	0.00	Yes	100.00	Yes
	4	Y	-0.009	-0.009	0.00	Yes	100.00	Yes
	5	Y	-0.009	-0.009	0.00	Yes	100.00	Yes
	8	Y	-0.009	-0.009	0.00	Yes	100.00	Yes
	9	Y	-0.009	-0.009	0.00	Yes	100.00	Yes
	10	Y	-0.009	-0.009	0.00	Yes	100.00	Yes
	11	Y	-0.006	-0.006	0.00	Yes	100.00	Yes
	12	Y	-0.006	-0.006	0.00	Yes	100.00	Yes
	13	Y	-0.006	-0.006	0.00	Yes	100.00	Yes
	14	Y	-0.006	-0.006	0.00	Yes	100.00	Yes
	15	Y	-0.006	-0.006	0.00	Yes	100.00	Yes
	16	Y	-0.006	-0.006	0.00	Yes	100.00	Yes
	31	Y	-0.009	-0.009	0.00	Yes	100.00	Yes
	32	Y	-0.009	-0.009	0.00	Yes	100.00	Yes
	33	Y	-0.01	-0.01	0.00	Yes	100.00	Yes
	34	Y	-0.009	-0.009	0.00	Yes	100.00	Yes
	35	Y	-0.01	-0.01	0.00	Yes	100.00	Yes
	38	Y	-0.012	-0.012	0.00	Yes	100.00	Yes
	39	Y	-0.012	-0.012	0.00	Yes	100.00	Yes
	40	Y	-0.009	-0.009	0.00	Yes	100.00	Yes

Concentrated forces on members

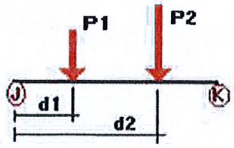

Condition	Member	Dir1	Value1 [Kip]	Dist1 [ft]	%
D	32	y	-0.033	2.00	No
		y	-0.033	6.00	No
	33	y	-0.043	1.00	No
		y	-0.043	7.00	No
		y	-0.074	3.00	No
		y	-0.044	5.00	No
	34	y	-0.027	1.00	No
		y	-0.027	7.00	No
		y	-0.06	3.00	No
		y	-0.053	5.00	No
	35	y	-0.043	1.00	No
		y	-0.043	7.00	No
		y	-0.06	3.00	No
		y	-0.049	5.00	No
Wo	32	z	-0.044	2.00	No
		z	-0.044	6.00	No
	33	z	-0.351	1.00	No
		z	-0.351	7.00	No
	34	z	-0.218	1.00	No
		z	-0.218	7.00	No
		z	-0.01	3.00	No
		z	-0.046	5.00	No
	35	z	-0.351	1.00	No
		z	-0.351	7.00	No
W30	32	2	-0.044	2.00	No
		2	-0.044	6.00	No
	33	2	-0.297	1.00	No
		2	-0.297	7.00	No
		2	-0.058	3.00	No
		2	-0.055	5.00	No
	34	2	-0.203	1.00	No
		2	-0.203	7.00	No
		2	-0.059	3.00	No
		2	-0.058	5.00	No
	35	2	-0.297	1.00	No
		2	-0.297	7.00	No
		2	-0.071	3.00	No
		2	-0.055	5.00	No
W60	32	2	-0.044	2.00	No
		2	-0.044	6.00	No
	33	2	-0.19	1.00	No
		2	-0.19	7.00	No
		2	-0.049	3.00	No
		2	-0.036	5.00	No
	34	2	-0.172	1.00	No

		2	-0.172	7.00	No
		2	-0.069	3.00	No
		2	-0.06	5.00	No
	35	2	-0.19	1.00	No
		2	-0.19	7.00	No
		2	-0.056	3.00	No
		2	-0.037	5.00	No
W90	32	x	-0.044	2.00	No
		x	-0.044	6.00	No
	33	x	-0.137	1.00	No
		x	-0.137	7.00	No
		x	-0.044	3.00	No
		x	-0.026	5.00	No
	34	x	-0.156	1.00	No
		x	-0.156	7.00	No
		x	-0.065	3.00	No
		x	-0.05	5.00	No
	35	x	-0.137	1.00	No
		x	-0.137	7.00	No
		x	-0.048	3.00	No
		x	-0.028	5.00	No
W120	32	3	0.044	2.00	No
		3	0.044	6.00	No
	33	3	0.19	1.00	No
		3	0.19	7.00	No
		3	0.049	3.00	No
		3	0.036	5.00	No
	34	3	0.172	1.00	No
		3	0.172	7.00	No
		3	0.069	3.00	No
		3	0.06	5.00	No
	35	3	0.19	1.00	No
		3	0.19	7.00	No
		3	0.056	3.00	No
		3	0.037	5.00	No
W150	32	3	0.044	2.00	No
		3	0.044	6.00	No
	33	3	0.297	1.00	No
		3	0.297	7.00	No
		3	0.058	3.00	No
		3	0.055	5.00	No
	34	3	0.203	1.00	No
		3	0.203	7.00	No
		3	0.059	3.00	No
		3	0.058	5.00	No
	35	3	0.297	1.00	No
		3	0.297	7.00	No
		3	0.071	3.00	No
		3	0.055	5.00	No
Di	32	y	-0.084	2.00	No
		y	-0.084	6.00	No
	33	y	-0.211	1.00	No
		y	-0.211	7.00	No
		y	-0.049	3.00	No
		y	-0.045	5.00	No
	34	y	-0.141	1.00	No
		y	-0.141	7.00	No
		y	-0.08	3.00	No
		y	-0.082	5.00	No
	35	y	-0.211	1.00	No

		y	-0.211	7.00	No
		y	-0.059	3.00	No
		y	-0.045	5.00	No
WI0	32	z	-0.011	2.00	No
		z	-0.011	6.00	No
	33	z	-0.068	1.00	No
		z	-0.068	7.00	No
	34	z	-0.047	1.00	No
		z	-0.047	7.00	No
		z	-0.018	3.00	No
		z	-0.013	5.00	No
	35	z	-0.068	1.00	No
		z	-0.068	7.00	No
WI30	32	2	-0.011	2.00	No
		2	-0.011	6.00	No
	33	2	-0.058	1.00	No
		2	-0.058	7.00	No
		2	-0.015	3.00	No
		2	-0.014	5.00	No
	34	2	-0.043	1.00	No
		2	-0.043	7.00	No
		2	-0.014	3.00	No
		2	-0.014	5.00	No
	35	2	-0.058	1.00	No
		2	-0.058	7.00	No
		2	-0.017	3.00	No
		2	-0.014	5.00	No
WI60	32	2	-0.011	2.00	No
		2	-0.011	6.00	No
	33	2	-0.041	1.00	No
		2	-0.041	7.00	No
		2	-0.013	3.00	No
		2	-0.01	5.00	No
	34	2	-0.038	1.00	No
		2	-0.038	7.00	No
		2	-0.017	3.00	No
		2	-0.015	5.00	No
	35	2	-0.041	1.00	No
		2	-0.041	7.00	No
		2	-0.015	3.00	No
		2	-0.011	5.00	No
WI90	32	x	-0.011	2.00	No
		x	-0.011	6.00	No
	33	x	-0.032	1.00	No
		x	-0.032	7.00	No
		x	-0.012	3.00	No
		x	-0.009	5.00	No
	34	x	-0.035	1.00	No
		x	-0.035	7.00	No
		x	-0.017	3.00	No
		x	-0.014	5.00	No
	35	x	-0.032	1.00	No
		x	-0.032	7.00	No
		x	-0.013	3.00	No
		x	-0.009	5.00	No
WI120	32	3	0.011	2.00	No
		3	0.011	6.00	No
	33	3	0.041	1.00	No
		3	0.041	7.00	No
		3	0.013	3.00	No

		3	0.01	5.00	No
	34	3	0.038	1.00	No
		3	0.038	7.00	No
		3	0.017	3.00	No
		3	0.015	5.00	No
	35	3	0.041	1.00	No
		3	0.041	7.00	No
		3	0.015	3.00	No
		3	0.011	5.00	No
WI150	32	3	0.011	2.00	No
		3	0.011	6.00	No
	33	3	0.058	1.00	No
		3	0.058	7.00	No
		3	0.015	3.00	No
		3	0.014	5.00	No
	34	3	0.043	1.00	No
		3	0.043	7.00	No
		3	0.014	3.00	No
		3	0.014	5.00	No
	35	3	0.058	1.00	No
		3	0.058	7.00	No
		3	0.017	3.00	No
		3	0.014	5.00	No
WL0	32	z	-0.004	2.00	No
		z	-0.004	6.00	No
	33	z	-0.032	1.00	No
		z	-0.032	7.00	No
	34	z	-0.02	1.00	No
		z	-0.02	7.00	No
		z	-0.001	3.00	No
		z	-0.005	5.00	No
	35	z	-0.032	1.00	No
		z	-0.032	7.00	No
WL30	32	2	-0.004	2.00	No
		2	-0.004	6.00	No
	33	2	-0.027	1.00	No
		2	-0.027	7.00	No
		2	-0.006	3.00	No
		2	-0.005	5.00	No
	34	2	-0.018	1.00	No
		2	-0.018	7.00	No
		2	-0.006	3.00	No
		2	-0.006	5.00	No
	35	2	-0.027	1.00	No
		2	-0.027	7.00	No
		2	-0.007	3.00	No
		2	-0.005	5.00	No
WL60	32	2	-0.004	2.00	No
		2	-0.004	6.00	No
	33	2	-0.017	1.00	No
		2	-0.017	7.00	No
		2	-0.005	3.00	No
		2	-0.004	5.00	No
	34	2	-0.016	1.00	No
		2	-0.016	7.00	No
		2	-0.007	3.00	No
		2	-0.006	5.00	No
	35	2	-0.017	1.00	No
		2	-0.017	7.00	No
		2	-0.005	3.00	No

		2	-0.004	5.00	No
WL90	32	x	-0.004	2.00	No
		x	-0.004	6.00	No
	33	x	-0.013	1.00	No
		x	-0.013	7.00	No
		x	-0.004	3.00	No
		x	-0.003	5.00	No
	34	x	-0.014	1.00	No
		x	-0.014	7.00	No
		x	-0.006	3.00	No
		x	-0.005	5.00	No
	35	x	-0.013	1.00	No
		x	-0.013	7.00	No
		x	-0.005	3.00	No
		x	-0.003	5.00	No
WL120	32	3	0.004	2.00	No
		3	0.004	6.00	No
	33	3	0.017	1.00	No
		3	0.017	7.00	No
		3	0.005	3.00	No
		3	0.004	5.00	No
	34	3	0.016	1.00	No
		3	0.016	7.00	No
		3	0.007	3.00	No
		3	0.006	5.00	No
	35	3	0.017	1.00	No
		3	0.017	7.00	No
		3	0.005	3.00	No
		3	0.004	5.00	No
WL150	32	3	0.004	2.00	No
		3	0.004	6.00	No
	33	3	0.027	1.00	No
		3	0.027	7.00	No
		3	0.006	3.00	No
		3	0.005	5.00	No
	34	3	0.018	1.00	No
		3	0.018	7.00	No
		3	0.006	3.00	No
		3	0.006	5.00	No
	35	3	0.027	1.00	No
		3	0.027	7.00	No
		3	0.007	3.00	No
		3	0.005	5.00	No
LL1	8	y	-0.25	0.00	Yes
LL2	8	y	-0.25	50.00	Yes
LL3	8	y	-0.25	100.00	Yes
LLa1	35	y	-0.25	4.00	No
LLa2	34	y	-0.25	4.00	No
LLa3	33	y	-0.25	4.00	No
LLa4	32	y	-0.25	4.00	No

Self weight multipliers for load conditions

Condition	Description	Self weight multiplier			
		Comb.	MultX	MultY	MultZ
D	Dead Load	No	0.00	-1.00	0.00
Wo	Wind Load (NO ICE)	No	0.00	0.00	0.00
W30	WL 30deg	No	0.00	0.00	0.00
W60	WL 60deg	No	0.00	0.00	0.00
W90	WL 90deg	No	0.00	0.00	0.00
W120	WL 120deg	No	0.00	0.00	0.00
W150	WL 150deg	No	0.00	0.00	0.00
Di	Ice Load	No	0.00	0.00	0.00
WI0	WL ICE 0deg	No	0.00	0.00	0.00
WI30	WL ICE 30deg	No	0.00	0.00	0.00
WI60	WL ICE 60deg	No	0.00	0.00	0.00
WI90	WL ICE 90deg	No	0.00	0.00	0.00
WI120	WL ICE 120deg	No	0.00	0.00	0.00
WI150	WL ICE 150deg	No	0.00	0.00	0.00
WL0	WL 30 mph 0deg	No	0.00	0.00	0.00
WL30	WL 30 mph 30deg	No	0.00	0.00	0.00
WL60	WL 30 mph 60deg	No	0.00	0.00	0.00
WL90	WL 30 mph 90deg	No	0.00	0.00	0.00
WL120	WL 30 mph 120deg	No	0.00	0.00	0.00
WL150	WL 30 mph 150deg	No	0.00	0.00	0.00
LL1	250 lb Live Load on Left End	No	0.00	0.00	0.00
LL2	250 lb Live Load on Center	No	0.00	0.00	0.00
LL3	250 lb Live Load on Right End	No	0.00	0.00	0.00
LLa1	250 lb Live Load on Antenna 1	No	0.00	0.00	0.00
LLa2	250 lb Live Load on Antenna 2	No	0.00	0.00	0.00
LLa3	250 lb Live Load on Antenna 3	No	0.00	0.00	0.00
LLa4	250 lb Live Load on Antenna 4	No	0.00	0.00	0.00

Earthquake (Dynamic analysis only)

Condition	a/g	Ang. [Deg]	Damp. [%]
D	0.00	0.00	0.00
Wo	0.00	0.00	0.00
W30	0.00	0.00	0.00
W60	0.00	0.00	0.00
W90	0.00	0.00	0.00
W120	0.00	0.00	0.00
W150	0.00	0.00	0.00
Di	0.00	0.00	0.00
WI0	0.00	0.00	0.00
WI30	0.00	0.00	0.00
WI60	0.00	0.00	0.00
WI90	0.00	0.00	0.00
WI120	0.00	0.00	0.00
WI150	0.00	0.00	0.00
WL0	0.00	0.00	0.00
WL30	0.00	0.00	0.00
WL60	0.00	0.00	0.00
WL90	0.00	0.00	0.00
WL120	0.00	0.00	0.00
WL150	0.00	0.00	0.00
LL1	0.00	0.00	0.00
LL2	0.00	0.00	0.00
LL3	0.00	0.00	0.00

LLa1	0.00	0.00	0.00
LLa2	0.00	0.00	0.00
LLa3	0.00	0.00	0.00
LLa4	0.00	0.00	0.00

Bentley

Current Date: 12/3/2018 12:27 PM
Units system: English
File name: W:\STRUCTURAL DEPARTMENT\ANALYSIS SOFTWARE\RAM Elements\RAM Projects\AT&T\CT\CT1323\Rev.1\CT1323 (NSB) (Rev.1) (MOD).etz\

Steel Code Check

Report: Summary - Group by member

Load conditions to be included in design :

LC1=1.2D+1.6Wo
LC2=1.2D+1.6W30
LC3=1.2D+1.6W60
LC4=1.2D+1.6W90
LC5=1.2D+1.6W120
LC6=1.2D+1.6W150
LC7=1.2D-1.6Wo
LC8=1.2D-1.6W30
LC9=1.2D-1.6W60
LC10=1.2D-1.6W90
LC11=1.2D-1.6W120
LC12=1.2D-1.6W150
LC13=0.9D+1.6Wo
LC14=0.9D+1.6W30
LC15=0.9D+1.6W60
LC16=0.9D+1.6W90
LC17=0.9D+1.6W120
LC18=0.9D+1.6W150
LC19=0.9D-1.6Wo
LC20=0.9D-1.6W30
LC21=0.9D-1.6W60
LC22=0.9D-1.6W90
LC23=0.9D-1.6W120
LC24=0.9D-1.6W150
LC25=1.2D+Di+WI0
LC26=1.2D+Di+WI30
LC27=1.2D+Di+WI60
LC28=1.2D+Di+WI90
LC29=1.2D+Di+WI120
LC30=1.2D+Di+WI150
LC31=1.2D+Di-WI0
LC32=1.2D+Di-WI30
LC33=1.2D+Di-WI60
LC34=1.2D+Di-WI90
LC35=1.2D+Di-WI120
LC36=1.2D+Di-WI150
LC37=0.9D
LC38=1.2D+1.6LL1
LC39=1.2D+1.6LL2
LC40=1.2D+1.6LL3
LC41=1.2D+WL0+LLa1
LC42=1.2D+WL30+LLa1
LC43=1.2D+WL60+LLa1
LC44=1.2D+WL90+LLa1
LC45=1.2D+WL120+LLa1
LC46=1.2D+WL150+LLa1
LC47=1.2D-WL0+LLa1
LC48=1.2D-WL30+LLa1
LC49=1.2D-WL60+LLa1
LC50=1.2D-WL90+LLa1
LC51=1.2D-WL120+LLa1
LC52=1.2D-WL150+LLa1

LC53=1.2D+WL0+LLa2
LC54=1.2D+WL30+LLa2
LC55=1.2D+WL60+LLa2
LC56=1.2D+WL90+LLa2
LC57=1.2D+WL120+LLa2
LC58=1.2D+WL150+LLa2
LC59=1.2D-WL0+LLa2
LC60=1.2D-WL30+LLa2
LC61=1.2D-WL60+LLa2
LC62=1.2D-WL90+LLa2
LC63=1.2D-WL120+LLa2
LC64=1.2D-WL150+LLa2
LC65=1.2D+WL0+LLa3
LC66=1.2D+WL30+LLa3
LC67=1.2D+WL60+LLa3
LC68=1.2D+WL90+LLa3
LC69=1.2D+WL120+LLa3
LC70=1.2D+WL150+LLa3
LC71=1.2D-WL0+LLa3
LC72=1.2D-WL30+LLa3
LC73=1.2D-WL60+LLa3
LC74=1.2D-WL90+LLa3
LC75=1.2D-WL120+LLa3
LC76=1.2D-WL150+LLa3
LC77=1.2D+WL0+LLa4
LC78=1.2D+WL30+LLa4
LC79=1.2D+WL60+LLa4
LC80=1.2D+WL90+LLa4
LC81=1.2D+WL120+LLa4
LC82=1.2D+WL150+LLa4
LC83=1.2D-WL0+LLa4
LC84=1.2D-WL30+LLa4
LC85=1.2D-WL60+LLa4
LC86=1.2D-WL90+LLa4
LC87=1.2D-WL120+LLa4
LC88=1.2D-WL150+LLa4

Description	Section	Member	Ctrl Eq.	Ratio	Status	Reference
	L 2-1_2X2-1_2X1_4	**38**	LC6 at 0.00%	**0.65**	**OK**	Sec. F1
		39	LC12 at 0.00%	0.38	OK	Eq. H2-1
	PIPE 2-1_2x0.203	**33**	LC1 at 68.75%	0.53	OK	Eq. H1-1b
		35	LC7 at 31.25%	**0.56**	**OK**	Eq. H1-1b
	PIPE 2x0.154	**31**	LC6 at 0.00%	0.36	OK	Eq. H1-1b
		32	LC38 at 31.25%	0.35	OK	Eq. H1-1b
		34	LC6 at 31.25%	**0.76**	**OK**	Eq. H1-1b
		40	LC12 at 0.00%	0.36	OK	Eq. H1-1a
	PIPE 2x0.218XS	**3**	LC7 at 83.75%	**0.90**	**With warnings**	Eq. H1-1a
		4	LC12 at 100.00%	0.35	OK	Eq. H1-1b
		5	LC30 at 100.00%	0.47	OK	Eq. H1-1b
		8	LC6 at 83.93%	0.89	With warnings	Eq. H1-1b
		9	LC31 at 100.00%	0.34	OK	Eq. H1-1b
		10	LC31 at 100.00%	0.45	OK	Eq. H1-1b
	RndBar 3_4	**11**	LC32 at 0.00%	0.38	OK	Eq. H1-1a
		12	LC31 at 100.00%	0.54	OK	Eq. H1-1a
		13	LC34 at 100.00%	0.50	OK	Eq. H1-1a
		14	LC26 at 0.00%	**0.79**	**OK**	Eq. H1-1a
		15	LC32 at 100.00%	0.35	OK	Eq. H1-1a
		16	LC29 at 100.00%	0.48	OK	Eq. H1-1a

Bentley

Current Date: 12/3/2018 12:27 PM
Units system: English
File name: W:\STRUCTURAL DEPARTMENT\ANALYSIS SOFTWARE\RAM Elements\RAM Projects\AT&T\CT\CT1323\Rev.1\CT1323 (NSB) (Rev.1) (MOD).etz\

Geometry data

GLOSSARY

Cb22, Cb33	: Moment gradient coefficients
Cm22, Cm33	: Coefficients applied to bending term in interaction formula
d0	: Tapered member section depth at J end of member
DJX	: Rigid end offset distance measured from J node in axis X
DJY	: Rigid end offset distance measured from J node in axis Y
DJZ	: Rigid end offset distance measured from J node in axis Z
DKX	: Rigid end offset distance measured from K node in axis X
DKY	: Rigid end offset distance measured from K node in axis Y
DKZ	: Rigid end offset distance measured from K node in axis Z
dL	: Tapered member section depth at K end of member
Ig factor	: Inertia reduction factor (Effective Inertia/Gross Inertia) for reinforced concrete members
K22	: Effective length factor about axis 2
K33	: Effective length factor about axis 3
L22	: Member length for calculation of axial capacity
L33	: Member length for calculation of axial capacity
LB pos	: Lateral unbraced length of the compression flange in the positive side of local axis 2
LB neg	: Lateral unbraced length of the compression flange in the negative side of local axis 2
RX	: Rotation about X
RY	: Rotation about Y
RZ	: Rotation about Z
TO	: 1 = Tension only member 0 = Normal member
TX	: Translation in X
TY	: Translation in Y
TZ	: Translation in Z

Nodes

Node	X [ft]	Y [ft]	Z [ft]	Rigid Floor
2	6.50	0.00	0.00	0
3	-6.50	0.00	0.00	0
8	-4.40	0.00	0.00	0
9	4.40	0.00	0.00	0
10	0.00	0.00	-3.00	0
11	-3.6667	0.00	-0.50	0
12	3.6667	0.00	-0.50	0
13	0.7333	0.00	-2.50	0
14	-0.7333	0.00	-2.50	0
16	6.50	3.00	0.00	0
17	-6.50	3.00	0.00	0
22	-4.40	3.00	0.00	0
23	4.40	3.00	0.00	0
24	0.00	3.00	-3.00	0
25	-3.6667	3.00	-0.50	0
26	3.6667	3.00	-0.50	0
27	0.7333	3.00	-2.50	0
28	-0.7333	3.00	-2.50	0
33	-6.00	5.50	0.20	0
34	6.00	5.50	0.20	0
35	-6.00	-2.50	0.20	0

36	6.00	-2.50	0.20	0
42	2.00	5.50	0.20	0
43	2.00	-2.50	0.20	0
48	-2.00	5.50	0.20	0
49	-2.00	-2.50	0.20	0
51	-1.00	3.00	-6.50	0
54	0.00	-2.50	-3.00	0
55	0.00	0.00	0.00	0
56	2.60	0.00	0.00	0
57	-2.60	0.00	0.00	0
58	1.00	3.00	-6.50	0

Restraints

Node	TX	TY	TZ	RX	RY	RZ
10	1	1	1	1	1	1
24	1	1	1	1	1	1
51	1	1	1	1	1	1
54	1	1	1	1	1	1
58	1	1	1	1	1	1

Members

Member	NJ	NK	Description	Section	Material	d0 [in]	dL [in]	Ig factor
3	3	2		PIPE 2x0.218XS	A53 GrB	0.00	0.00	0.00
4	8	10		PIPE 2x0.218XS	A53 GrB	0.00	0.00	0.00
5	9	10		PIPE 2x0.218XS	A53 GrB	0.00	0.00	0.00
8	17	16		PIPE 2x0.218XS	A53 GrB	0.00	0.00	0.00
9	22	24		PIPE 2x0.218XS	A53 GrB	0.00	0.00	0.00
10	23	24		PIPE 2x0.218XS	A53 GrB	0.00	0.00	0.00
11	14	28		RndBar 3_4	A36	0.00	0.00	0.00
12	27	13		RndBar 3_4	A36	0.00	0.00	0.00
13	25	11		RndBar 3_4	A36	0.00	0.00	0.00
14	12	26		RndBar 3_4	A36	0.00	0.00	0.00
15	28	11		RndBar 3_4	A36	0.00	0.00	0.00
16	27	12		RndBar 3_4	A36	0.00	0.00	0.00
31	22	51		PIPE 2x0.154	A53 GrB	0.00	0.00	0.00
32	33	35		PIPE 2x0.154	A53 GrB	0.00	0.00	0.00
33	48	49		PIPE 2-1_2x0.203	A53 GrB	0.00	0.00	0.00
34	42	43		PIPE 2x0.154	A53 GrB	0.00	0.00	0.00
35	34	36		PIPE 2-1_2x0.203	A53 GrB	0.00	0.00	0.00
38	54	56		L 2-1_2X2-1_2X1_4	A36	0.00	0.00	0.00
39	54	57		L 2-1_2X2-1_2X1_4	A36	0.00	0.00	0.00
40	23	58		PIPE 2x0.154	A53 GrB	0.00	0.00	0.00

Orientation of local axes

Member	Rotation [Deg]	Axes23	NX	NY	NZ
32	45.00	0	0.00	0.00	0.00
33	45.00	0	0.00	0.00	0.00
34	45.00	0	0.00	0.00	0.00
35	45.00	0	0.00	0.00	0.00
39	270.00	0	0.00	0.00	0.00

Hinges

	Node-J				Node-K						
Member	M33	M22	V3	V2	M33	M22	V3	V2	TOR	AXL	Axial rigidity
15	0	0	0	0	0	0	0	0	0	0	Tension only
16	0	0	0	0	0	0	0	0	0	0	Tension only